Mopar

® MARCA REG

parts catalog

PARTS DIVISION

CHRYSLER MOTORS CORPORATION

Bumper Quick Reference Guide

Mopar

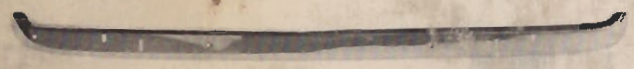

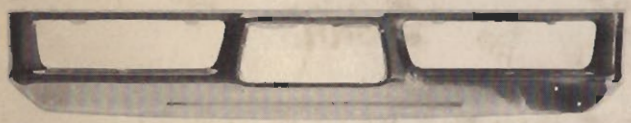


ORIGINAL EQUIPMENT CHRYSLER CORPORATION BUMPERS

BARRACUDA (PLYMOUTH)

YEAR	APPLICATIONS	POS.	CHRYSLER PART NO.	RECYCLED PART NO.
1974	All	F	3686050	300139
	All	R	3754152	300180
1973	All	F	3686050	300139
	All	R	3686550	300156
1972-1	All	F	3595035	300105
	All	R	3595037	300103
1970	All	F	2962275	300043
	All	R	3595037	300103
1969	All	F	2768602	300004
	All	R	2768602	300004

DART (DODGE)

YEAR	APPLICATIONS	POS.	CHRYSLER PART NO.	RECYCLED PART NO.
1974	All	F	3753150	300171
	2 DHT & 4D	R	3754104	300179
	Fast Back	R	3754052	300178
1973	All	F	3686025	300138
	2 DHT & 4D	R	3686526	300155
	Fast Back	R	3686500	300152
1972	All	F	3595032	300100
	2 DHT & 4D	R	3595034	300101
	Fast Back	R	3595028	300097
1971	All	F	3595032	300100
	2 DHT & 4D - up to 6-1-71	R	3464050	300067
	- aft. 6-1-71	R	3595034	300101
	Fast Back	R	3595028	300097
1970	All	F	3595032	300100
	All	R	3595027	300096
1969	All	F	2768625	300005
	All w/Guards	R	2856526	300007
	w/o Guards	R	2856525	300006

CHALLENGER (DODGE)

YEAR	APPLICATIONS	POS.	CHRYSLER PART NO.	RECYCLED PART NO.
1974	All	F	3686075	300140
	All	R	3754202	300141
1973	All	F	3686075	300140
	All	R	3686550	300157
1972-0	All	F	3595039	300135
	All	R	3595038	300134

SATELLITE-BELVEDERE (PLYMOUTH)

YEAR	APPLICATIONS	POS.	CHRYSLER PART NO.	RECYCLED PART NO.
1974	2 D, 2 DHT	F	3686100	300140
	4 D, Sta. Wag.	F	3753275	300172
	2 D, 2 DHT	R	3754202	300141
	4 D	R	3754300	300142
	Sta. Wag.	R	3754700	300143
1973	2 D, 2 DHT	F	3686100	300140
	4 D, Sta. Wag.	F	3686125	300142
	2 D, 2 DHT (up to 4-16-73)	R	3686600	300158
	(after 4-16-73)	R	3686602	300159
	4 D	R	3686625	300160
	Sta. Wag.	R	3686700	300163
1972	2 D, 2 DHT	F	3595100	300106
	4 D, Sta. Wag.	F	3595102	300107
	2 D, 2 DHT - (w/out Guards)	R	3595150	300115
	- (w/Guards)	R	3595151	300116
	4 D - (w/out Guards)	R	3595104	300108
	- (w/Guards)	R	3595105	300109
	Sta. Wag.	R	3595106	300110
1971	2 D, 2 DHT -	F	3595100	300106
	4 D, Sta. Wag.	F	3595102	300107
	2 D, 2 DHT - (w/out Guards)	R	3464200	300068
	- (w/Guards)	R	3464201	300069

ORIGINAL EQUIPMENT CHRYSLER CORPORATION BUMPERS

SATELLITE-BELVEDERE CONT'D.

YEAR	APPLICATIONS	POS.	CHRYSLER PART NO.	RECYCLED PART NO.
	4 D - (up to 6-1-71)			
	- (w/out Guards)	R	3464204	300070
	- (up to 6-1-71) (w/Guards)	R	3464205	300071
	4 D - (after 6-1-71)			
	(w/out Guards)	R	3595104	300108
	- (after 6-1-71) (w/Guards)	R	3595105	300109
	Sta. Wag. - (up to 6-1-71)	R	3464275	300072
	- (after 6-1-71)	R	3595106	300110
1970	All	F	2962450	300046
	All (exc. Sta. Wag.)	R	2962475	300047
	Sta. Wag.	R	2856595	300009
1969	All - (w/out Guards)	F	2856550	300008
	- (w/Guards)	R	2931125	300017

CORONET-CHARGER (DODGE)

1974	2 D, 2 DHT, Fast Back	F	3686150	300143
	4 D, Sta. Wag.	F	3753350	300173
	2 D, 2 DHT, Fast Back	R	3686650	300161
	4 D	R	3754402	300184
	Sta. Wag.	R	3754702	300192
1973	2 D, 2 DHT, Fast Back	F	3686150	300143
	4 D, Sta. Wag.	F	3686200	300144
	2 D, 2 DHT, Fast Back	R	3686650	300161
	4 D	R	3686675	300162
	Sta. Wag.	R	3686700	300163
1972	2 D, 2 DHT, Fast Back			
	- (up to 8-1-71)	F	3595107	300111
	- (after 8-1-71)	F	3595130	300114
	4 D, Sta. Wag.	F	3595108	300112
	2 D, 2 DHT, Fast Back	R	3595109	300113
	4 D	R	3595185	300117
	Sta. Wag.	R	3595106	300110
1971	2 D, 2 DHT, Fast Back	F	3595107	300111
	4 D, Sta. Wag.	F	3595108	300112
	2 D, 2 DHT, Fast Back	R	3595109	300113
	4 D - (up to 6-1-71)	R	3464400	300073
	- (after 6-1-74)	R	3464275	300072
	Sta. Wag. - (up to 6-1-71)	R	3464275	300072
	- (after 6-1-71)	R	3595106	300110
1970	All (exc. Charger) - Center	F	2962504	300048
	- Right	F	2962506	300049
	- Left	F	2962507	300050
	Charger	F	2962576	300052
	All - (exc. Sta. Wag. & Charger)	R	2962550	300051
	Charger	R	2856675	300012
	Sta. Wag.	R	2856595	300009
19	exc. Charger)	F	2856600	300010
	rger	F	2856650	300243
	(exc. Sta. Wag. & Charger)	R	2856625	300011
	harger	R	2856675	300012
	a. Wag.	R	2856595	300009

YMOUTH FURY

FURY CONT'D.

YEAR	APPLICATIONS	POS.	CHRYSLER PART NO.	RECYCLED PART NO.
1973	All - (up to 4-5-73)	F	3686251	300145
	- (after 4-5-73)	F	3686285	300146
	Fury I & II 2 D, 2 DHT, 4 D (exc. Sta. Wag.)	R	3686725	300164
	Fury III, Gran Cpe. & Sed. (exc. Sta. Wag.)	R	3686726	300165
	Sta. Wag.	R	3464550	300080
1972	All - (w/out Guards)	F	3595200	300118
	- (with/Guards)	F	3595201	300119
	Fury I & II 2 D, 2 DHT, 4 D (exc. Sta. Wag.)			
	- (w/out Guards)	R	3595250	300120
	- (w/Guards)	R	3595251	300121
	Fury III, Gran Cpe. & Sed. (exc. Sta. Wag.)			
	- (w/out Guards)	R	3595252	300122
	- (w/Guards)	R	3595253	300123
1971	Sta. Wag.	R	3464550	300080
	All - (w/out Guards)	F	2962650	300053
	- (w/Guards)		2962651	300054
	Fury I & II (exc. Sta. Wag.)	R	3464525	300076
	FuryIII (exc. Sta. Wag.)			
	- (w/out Guards)	R	3464528	300077
	-(w/Guards)	R	3464530	300079
	Sport Fury (exc. Sta. Wag.)	R	3464529	300078
	Sta. Wag. -(w/out Step Pads)	R	2931244	300022
	-(w/Step Pads)	R	2931245	300023
1970	All -(w/out Guards)	F	2962650	300053
	-(w/Guards)	F	2962651	300054
	Fury I & II -(exc. Sta. Wag.)	R	2962725	300055
	Fury III & Sport Fury -(exc. Sta. Wag.)	R	2962744	300056
	Sta. Wag. -(w/out Step Pads)	R	2931244	300022
	-(w/Step Pads)		2931245	300023
1969	All -(w/out Guards)	F	2931200	300018
	-(w/Guards)	F	2931201	300019
	All -(exc. Sta. Wag.)			
	-(w/out Guards)	R	2931225	300020
	-(w/Guards)	R	2931226	300021
	Sta. Wag. -(w/out Step Pads)	R	2931244	300022
	-(w/Step Pads)	R	2931245	300023

DODGE POLARA & MONACO

1974	All	F	3753470	300175
	All -(exc. Sta. Wag.)			
	-(w/out Guards)	R	3754502	300186
	-(w/Guards)	R	3754503	300187
	Sta. Wag. -(w/out Step Pads)	R	3754752	300193
	-(w/Step Pads)	R	3754762	300194
1973	Polara All	F	3686301	300147
	Monaco All	F	3686394	300148
	All - (exc. Sta. Wag.)	R	3686775	300166
	St Wag.	R	3464550	300080
1972	Polara	R	3595300	300124
		F	3595301	300125
		F	3595350	300
			3595351	30
			3400	300
			402	300
			403	300

ORIGINAL EQUIPMENT CHRYSLER CORPORATION BUMPERS

DODGE POLARA & MONACO CONT'D.

YEAR	APPLICATIONS	POS.	CHRYSLER PART NO.	RECYCLED PART NO.
	Sta. Wag.		3464550	300080
1971	All	F	3464860	300090
	All -(exc. Sta. Wag.)	R	3464900	300091
	Sta. Wag. -(w/out Step Pads)	R	2931244	300022
	-(w/Step Pads)	R	2931245	300023
1970	All	F	2962750	300057
	All -(exc. Sta. Wag.)	R	2962800	300058
	Sta. Wag. -(w/out Step Pads)	R	2931244	300022
	-(w/Step Pads)	R	2931245	300023
1969	All -(w/out Guards)	F	2931250	300024
	-(w/Guards)	F	2931251	300025
	All -(exc. Sta. Wag.)			
	-(w/out Guards)	R	2931275	300026
	-(w/Guards)	R	2931276	300027
	Sta. Wag. -(w/out Step Pads)	R	2931244	300022
	-(w/Step Pads)	R	2931245	300023

VALIANT (PLYMOUTH)

1974	All - (w/o Absorber)	F	3686002	300136
	- (w/Absorber)	F	3753100	300170
	2 DHT, 4 D	R	3754104	300179
	Fast Back	R	3754052	300178
1973	All	F	3686002	300136
	2 DHT	R	3686525	300154
	4 D	R	3686501	300153
	Fast Back	R	3686500	300152
1972	All	F	3595025	300095
	2 DHT	R	3595027	300096
	4 D - (w/o Guards)	R	3595030	300098
	- (w/Guards)	R	3595031	300099
	Fast Back	R	3595028	300097
1971	All	F	3595025	300095
	2 DHT - (up to 6-1-71)	R	2962325	300044
	- (aft. 6-1-71)	R	3595027	300096
	4 D - (w/o Guard)	R	3595030	300098
	- (up to 6-1-71) (w/Guard)	R	2962386	300045
	- (aft. 6-1-71) (w/Guard)	R	3595031	300099
	Fast Back	R	3595028	300097
1970	All	F	3595025	300095
	2 DHT	R	2962325	300044
	4 D - (w/o Guard)	R	2962385	300137
	- - (w/Guard)	R	2962386	300045
	Fast Back	R	3595028	300097
1969	All	R	3595028	300097
	All	R	3595028	300097

CHRYSLER

1974	All		375350	300176
	Newpor		75455	300188
	Ne			
	Sta. Wag			
1973	All			
	Newport			

CHRYSLER CONT'D.

	New Yorker (exc. Sta. Wag.)	R	3686850	300168
	Sta. Wag.	R	3464550	300080
1972	All -(w/out Guards)	F	3464600	300081
	-(w/Guards)	F	3464601	300082
	Newport -(exc. Sta. Wag.)			
	-(w/out Guards)	R	3595525	300131
	-(w/Guards)	R	3595526	300132
	New Yorker (exc. Sta. Wag.)			
	-(w/out Guards)	R	3595575	300133
	-(w/Guards)	R	3595576	300134
	Sta. Wag.	R	3464550	300080
1971	All (exc. 300 Models)			
	-(w/out Guards)	F	2931300	300028
	-(w/Guards)	F	3464702	300085
	300 Models -(w/out Guards)	F	3464700	300083
	-(w/Guards)	F	3464701	300084
	Newport (exc. Sta. Wag.)			
	-(w/out Guards)	R	3464690	300244
	-(w/Guards)	R	3464691	300245
	New Yorker (exc. Sta. Wag.)			
	-(w/out Guards)	R	2962885	300060
	-(w/Guards)	R	3464692	300226
	Sta. Wag. -(w/out Step Pads)	R	2931244	300022
	-(w/Step Pads)	R	2931245	300023
1970	Newport & New Yorker			
	-(exc. Brougham)			
	-(w/out Guards)	F	2931300	300028
	-(w/Guards)	F	2931301	300227
	300 Models	F	2962850	300225
	New Yorker Brougham			
	-(w/out Guards)	F	3464700	300083
	-(w/Guards)	F	3464701	300084
	Newport (exc. Sta. Wag.)	R	2962875	300059
	New Yorker & 300			
	(exc. Sta. Wag.)	R	2962885	300060
	Sta. Wag. -(w/out Step Pads)	R	2931244	300022
	-(w/Step Pads)	R	2931245	300023
1969	All (exc. 300 Models)			
	-(w/out Guards)	F	2931300	300028
	-(w/Guards)	F	2931301	300227
1969	300 Models-(w/out Guards)	F	2931325	300029
	-(w/Guards)	F	2931326	300030
	Newport (exc. Sta. Wag.)			
	-(w/out Guards)	R	2931375	300031
	-(w/Guards)	R	2931376	300032
	New Yorker & 300 Models			
	(exc. Sta. Wag.)	R	293137	33
	Sta. Wag. -(w/out Step Pads)	R	29312	22
	-(w/Step Pads)	R	29312	

IMPERIAL

1974	A			
	A			
1973				

ORIGINAL EQUIPMENT CHRYSLER CORPORATION BUMPERS

IMPERIAL CONT'D.

YEAR	APPLICATIONS		POS.	CHRYSLER PART NO.	RECYCLED PART NO.
1972	All	- Upper	F	3464726	300086
		- Lower	F	3464728	300087
		- Right End	F	3464730	300088
		- Left End	F	3464731	300089
	All		R	3595662	300135
1971	All		F	2962925	300061
	All	- Center	R	3464952	300094
		4 Dr. - Right End	R	2962936	300063
		4 Dr. - Left End	R	2962937	300064
		2 Dr. - Right End	R	2962938	300065
		2 Dr. - Left End	R	2962939	300066
1970	All		F	2962925	300061
	All	- Center	R	2962934	300062
		4 Dr. - Right End	R	2962936	300063
		4 Dr. - Left End	R	2962937	300064
		2 Dr. - Right End	R	2962938	300065
		2 Dr. - Left End	R	2962939	300066
1969	All		F	2962925	300061
	All	- Center	R	2931450	300034
		4 Dr. - Right End	R	2931452	300035
		4 Dr. - Left End	R	2931453	300036
		2 Dr. - Right End	R	2931454	300037
		2 Dr. - Left End	R	2931455	300246

CRICKET

1971 -72	Sedan & Sta. Wag.	F	72248413	300223
	Sedan	R	72248409	300222
	Sta. Wag.	R	72275121	300224

COLT

1974 -75	Sedan & Sta. Wag.		F	MBO-35657	300216
	Hardtop	- Center	F	MBO-35617	300213
		- Right End	F	MBO-35626	300215
		- Left End	F	MBO-35625	300214
	Sedan		R	MBO-35658	300217
	Sta. Wag.		R	MBO-35659	300218
	Hardtop	- Center	R	MBO-35723	300221
		- Right End	R	MBO-35696	300220
		- Left End	R	MBO-35695	300219
1973	All	- Center	R	MA-166904	300195
		- Right End	F	MA-166906	300197
		- Left End	F	MA-166905	300196

COLT CONT'D.

YEAR	APPLICATIONS		POS.	CHRYSLER PART NO.	RECYCLED PART NO.
	Sedan & Hardtop				
		- Center	R	MA-166924	300198
		- Right End	R	MA-166926	300200
		- Left End	R	MA-166925	300199
	Sta. Wag.	- Center	R	MA-166949	300201
		- Right End	R	MA-166951	300203
		- Left End	R	MA-166950	300202
1972 -71	All	- Center	F	MA-186033	300204
		- Right End	F	MA-186035	300206
		- Left End	F	MA-186034	300205
	Sedan	- Center	R	MA-186053	300207
		- Right End	R	MA-186055	300209
		- Left End	R	MA-186054	300208
	Sta. Wag.	- Center	R	MA-186977	300210
		- Right End	R	MA-186979	200212
		- Left End	R	MA-186978	300211

DODGE TRUCKS

1975 -70	B100 Van	- Chrome	F	2959527	300040
		- Painted	F	2959524	300039
		- Chrome	R	2959531	300042
		- Painted	R	2959528	300041
1970 -64	A100 Van	- Chrome	F	2508283	300003
		- Painted	F	2508239	300002
		- Chrome	R	2955510	300038
1975 -72	A, D & W 100-300				
		- Chrome	F	3492481	300075
		- Painted	F	3492480	300074
	Except Utiline				
		- Chrome	R	3492928	300093
		- Painted	R	3492926	300092
	Utiline Models				
		- Chrome	R	1786679	300001
		- Painted	R	1271910	300000
1971 -69	D & W 100-300				
		- Chrome	F	2909775	300014
		- Painted	F	2909773	300013
	Except Utiline				
		- Chrome	R	2909825	300016
		- Painted	R	2909823	300015
	Utiline Models				
		- Chrome	R	1786679	300001
		- Painted	R	1271910	300000

BATTERIES

PRO-RATA COST ADJUSTMENT GUIDE: 3 MOST POPULAR BATTERIES

Based on list prices in effect at time of publication – AUGUST, 1974

	GROUP 24–48 AMPS.			GROUP 24–59 AMPS.			GROUP 27–71 AMPS.		
	Part No. 2444 605			Part No. 2444 611			Part No. 2444 607		
Mos. Used	Consumer Cost	Less 15%	Dealer Cost	Consumer Cost	Less 15%	Dealer Cost	Consumer Cost	Less 15%	Dealer Cost
1	1.22	.18	1.04	1.30	.20	1.10	1.55	.23	1.32
2	2.44	.37	2.07	2.60	.39	2.21	3.10	.47	2.63
3	3.66	.55	3.11	3.90	.59	3.31	4.65	.70	3.95
4	4.88	.73	4.15	5.20	.78	4.42	6.20	.93	5.27
5	6.10	.90	5.20	6.50	.98	5.52	7.75	1.16	6.59
6	7.32	1.10	6.22	7.80	1.17	6.63	9.20	1.38	7.92
7	8.54	1.28	7.26	9.10	1.37	7.73	10.85	1.63	9.22
8	9.76	1.46	8.30	10.40	1.56	8.84	12.40	1.86	10.54
9	10.98	1.65	9.33	11.70	1.76	9.94	13.95	2.09	11.86
10	12.20	1.83	10.37	13.00	1.95	11.05	15.50	2.33	13.17
11	13.42	2.01	11.41	14.30	2.15	12.15	17.05	2.55	14.50
12	14.64	2.20	12.44	15.60	2.34	13.26	18.60	2.79	15.81
13	15.86	2.38	13.48	16.90	2.54	14.36	20.15	3.02	17.13
14	17.08	2.56	14.52	18.20	2.73	15.47	21.70	3.26	18.44
15	18.30	2.75	15.55	19.50	2.93	16.57	23.25	3.49	19.76
16	19.32	2.93	16.59	20.80	3.12	17.68	24.80	3.72	21.08
17	20.74	3.11	17.63	22.10	3.32	18.78	26.35	3.95	22.40
18	21.96	3.29	18.67	23.40	3.51	19.89	27.90	4.19	23.71
19	23.18	3.48	19.70	24.70	3.71	20.99	29.45	4.42	25.03
20	24.40	3.66	20.74	26.00	3.90	22.10	31.00	4.65	26.35
21	25.62	3.84	21.78	27.30	4.10	23.20	32.55	4.88	27.67
22	26.84	4.03	22.81+	28.60	4.29	24.31+	34.10	5.12	28.98+
23	28.06	4.21	23.85+	29.90	4.49	25.41+	35.65	5.35	30.30+
24	29.28	4.39	24.89+	31.20	4.68	26.52+	37.20	5.58	31.62+
25	30.50	4.58	25.92@	32.50	4.88	27.62@	38.75	5.81	32.94@
26	31.72	4.76	26.96#	33.80	5.07	28.73#	40.30	6.05	34.25#
27	32.94	4.94	28.00#	35.10	5.27	29.83#	41.85	6.28	35.57#
28	34.16	5.12	29.04#	36.40	5.46	30.94#	43.40	6.51	36.89#
29	35.38	**	**	37.70	**	**	44.95	**	**
30	36.60	**	**	39.00	**	**	46.50	**	**
31	37.82	**	**	40.30	**	**	48.05	**	**
32	39.04	**	**	41.60	**	**	49.60	**	**
33	40.26	**	**	42.90	**	**	51.15	**	**
34	41.48	**	**	44.20	**	**	52.70	**	**
35	42.70	**	**	45.50	**	**	54.25	**	**
36	43.78	**	**	46.91	**	**	55.97	**	**

\+ Indicates pro-rata cost will exceed outright purchase price in 25 lot purchases
@ Indicates pro-rata cost will exceed outright purchase price in 10–24 lot purchases
\# Indicates pro-rata cost will exceed outright purchase price in 2–9 lot purchase
** Indicates pro-rata cost will exceed outright purchase price on single battery purchase

COSTS SHOWN ARE FOR SUGGESTED USE ONLY. DEALERS MAY USE ALL OR PART OF THIS INFORMATION AS THEY SEE FIT.

SHOP ACTION 74

PARTS SALES & SERVICE DIVISION CHRYSLER MOTORS CORPORATION

BATTERY REPLACEMENT DATA 1974

PASSENGER CARS

Make and Year	Model	Group Size
AMERICAN MOTORS		
1973-74	232, 258, 304 C.I.D.	22F
	Optional	24
	360, 401 C.I.D.	24
1970-72	6 Cyl. & V8 304	22F
	All Others	24
1969	6 Cyl., V8 290	22F
1969	V8 343, 390	24
1956-68	All	24
BRONCO		
1973-74	200, 302, C.I.D. S/T	22F
	302 C.I.D. A/T	24F
	Optional	27F
1969-72	All	22F, 27F
1966-68	All	22F, 24F, 27F
BUICK		
1973-74	Century, 350 C.I.D.	74
	Others	77
	455 C.I.D.	77
1971-72	350 C.I.D.	74
	455 C.I.D.	77
1968-70	430 and 455 C.I.D.	27
1968-70	350 and 400 C.I.D.	24
1964-67	LeSabre	24
1963-67	Except 1964-67 LeSabre	27
1959-62	All	60
BUICK SPECIAL		
1972-74	Skylark	74
1967-71	V8	24
1966-71	V6 & 6	22F
1966	401 V8	27
1964-66	All Except 401 V8	24
1963	All—V8	24
1961-63	Except 1963 V8	22F
CADILLAC		
1973-74	All	77
1971-72	All Except Eldorado	27
1971-72	Eldorado	77
1965-71	Except 75 and Commercial	27
	75 and Commercial	60
1957-58	Brougham	27
1957-64	Except 1957-58 Brougham	60
CAMARO		
1973-74	6 Cyl.	72
	Optional	74
	8 Cyl.	74
1971-72	6 Cyl.	72
	V8	74
1967-70	6 Cyl., 302 and 307 C.I.D.	22F
	8 Cyl., Except 302 and 307 C.I.D.	24
CHECKER		
1973-74	Passenger & Taxi Cabs	30 HR
	Optional	74
	Limousines	30 HR
1960-72	All	24, 30HR
1958-59	A-9, A-10	27H, 30HR
CHEVROLET		
1973-74	6 Cyl.	72
	Optional	74
	8 Cyl.	74
1971-72	6 Cyl.	72
	V8	74
1963-70	8 Cyl. 327 to 454	24
1963-70	6 Cyl. 230 and 8 Cyl. 283, 307	22F, 24
1963-67	6 Cyl. 230 and 8 Cyl. 283 W/A/C	24
1955-62	All	24
CHEVY II — NOVA		
1973-74	6 Cyl.	72
	Optional	74
	8 Cyl.	74
1971-72	6 Cyl.	72
	V8	74
1967-70	327, 350 and 396	24
1962-70	Except 327, 350 and 396	22F
CHEVELLE		
1973-74	6 Cyl.	72
	Optional	74
	8 Cyl.	74
1971-72	6 Cyl.	72
	V8	74
1965-70	V8 327, 350, 396 and 400	24
1965-70	6 Cyl. and V8 283, 307	22F
1964	6 Cyl. 230 and 8 Cyl. 283-optional	24
1964	All	22F

Make and Year	Model	Group Size
CHRYSLER		
1973-74	400 C.I.D.	24
	440 C.I.D.	27
1972	360 and 400 C.I.D.	24, 27
	Imperial	27
1967-71	V8 383	24
1967-71	V8 440	27
1965-66	All	27
1964	300, 300K	27
1964	Newport Standard	24, 27
1963-64	New Yorker	27
1963	Newport & 300 Standard	24, 27
1961-62	Newport & Windsor	24
1961-62	Except Newport & Windsor	27
COMET		
1973-74	200 C.I.D. WO/A/C	22F
	200 C.I.D. W/A/C	24F
	250, 302 C.I.D.	22F
	Optional	24F
1972	All	22F, 27F
	W/A/C	27F
1971	All	22F, 24
1968	200 WO/A/C 302 & 390 Std. Trans.	22F
1968	200 W/A/C 390 Auto. Trans.	24F
1966-68	427 C.I.D.	27F
1965-67	All Except 427 C.I.D.	22F, 24F, 27F
1964	6 Cyl.	24F
1963-64	Taxi	29NF
1960-63	6 Cyl. Standard	22F, 24F
CORVAIR		
1965-69	All	22F
1960-64	All	53
CORVETTE		
1973-74	All	74
1971-72		74
1955-70	All	24
COUGAR		
1973-74	351 C.I.D. W/O Heated Backlite & A/C	24F
	Optional	27F
	351 C.I.D. W/Heated Backlite & A/C	27F
1972	351 C.I.D. S/T & 2 Bbl. Carb.	22F, 27F
	W/A/C	27F
	All Others	24F
1967-71	289, 302, 351, 390 C.I.D. S/T	22F, 24F
	351, 390 C.I.D. Auto. Trans. & 427	24F, 27F
	428 & 429 C.I.D.	27F
DODGE		
1973-74	All except 440 C.I.D.	24
	440 C.I.D.	27
	Challenger	24
	Dart	24
1960-72	Darts	24
1968-72	All Exc. 426, 440 C.I.D.	24, 27
1968-71	426, 440 C.I.D.	27
1965-67	All Exc. 383, 413, 426 & 440	24
1962	383, 413, 426 & 440 C.I.D.	27
1956-64	Except Taxi-Standard	24
	Taxi & Optional	27H
FAIRLANE (Torino)		
1973-74	250 C.I.D. WO/A/C	22F
	Optional	24F
	250 C.I.D. W/A/C	24F
	302 C.I.D. W/O Heated Backlite & A/C	22F
	302 C.I.D. W/Heated Backlite & A/C	24F
	351 C.I.D. W/O Heated Backlite & A/C	24F
	Optional	27F
	351 C.I.D. W/Heated Backlite & A/C	24F
	400, 429, 460 C.I.D., Police Taxi, & Trailer Towing Pkg.	24F
1971-72	250, 302, 351 C.I.D., 6 Cyl.	22F, 24F
	W/A/C	24F
	400 and 429	24F
1968-70	200 WO/A/C & 250 to 390 S/T	22F
1968-70	200 W/A/C, 351 & 390 Auto. Trans.	24F
1966-71	427, 428, 429 C.I.D.	27F
1965-67	All Standard Except 427 C.I.D.	22F, 24F
1965	Optional 427 C.I.D.	27F
1962-64	8 Cyl.	24F
1962-64	6 Cyl. Standard	22F, 24F

Make and Year	Model	Group Size
FALCON		
1965-70	All Standard	22F, 24F
1963-64	8 Cyl.	24F
1963-64	Taxi	29NF
1960-64	6 Cyl. Standard	22F, 24F
FORD		
1973-74	351 C.I.D.	24F
	400 C.I.D.	27F
	429, 460 C.I.D. Police & Trailer Towing Pkg.	27F
1965-72	400, 427, 428 & 429 C.I.D.	27F
1965-72	351, 352 & 390 W/Std. Trans.	22F, 27F
	Auto. Trans.	24F, 27F
1965-71	240, 289 & 302 All Except Selectaire A/C	22F, 24F, 27F
	W/Selectaire A/C	24F, 27F
1964	289 Eng.	24F
1963	260 Eng.	24F
1959-64	Optional	27F
1956-64	Except 260 Eng. & 289 Eng. Standard	29NF
IMPERIAL		
1973-74	400 C.I.D.	24
	440 C.I.D.	27
1953-73	All	27
JEEP		
1973-74	All	24
1966-72	All	24
LINCOLN & MARK IV		
1973-74	All	27F
1961-72	All	27F
1959-60	All	29NF
1952-55	All	2N
MAVERICK		
1973-74	200 C.I.D. WO/A/C	22F
	200 C.I.D. W/A/C	24F
	250, 302 C.I.D.	22F
	Optional	24F
1972	Optional and W/A/C	24F
1970-72	All	22F, 24F
MERCURY		
1973-74	351 C.I.D.	24F
	400 C.I.D.	27F
	351, 400 C.I.D. Optional	27F
	429, 460 C.I.D. Police & Trailer Towing Pkg.	27F
1965-72	400, 410, 427, 428, 429 C.I.D.	27F
1965-72	302, 351, 390 C.I.D. S/T	22F
	Optional, W/A/C or A/T	27F
1960-64	406, 427 C.I.D. S/T	27F, 29NF
1956-64	All Standard	29NF, 27F
1962-63	Meteor 6 Cyl. S/T	22F, 24F
	8 Cyl.	24F
MONTE CARLO		
1973-74	All	74
MONTEGO		
1973-74	250 C.I.D. WO/A/C	22F
	Optional	24F
	250 C.I.D. W/A/C, 302 C.I.D. W/O Heated Backlite & A/C	22F
	302 C.I.D. W/Heated Backlite & A/C	24F
	351 C.I.D. W/O Heated Backlite & A/C	24F
	Optional	27F
	351 C.I.D. W/Heated Backlite & A/C	24F
	400, 429, 460 C.I.D. Police, Taxi & Trailer Towing Pkg.	24F
1972	6 Cyl. S/T	22F
	Optional and W/A/C	27F
	6 Cyl. A/T	24F
1971-72	250, 302 C.I.D.	22F
	302 C.I.D. W/A/C and 351 C.I.D.	24F
	400, 429 C.I.D.	27F
MUSTANG		
1973-74	250 C.I.D.	22F
	302, 351 C.I.D.	24F
	Optional	27F
1969-71	428, 429 C.I.D.	27F
1967-72	351, 390 Std. Trans.	22F
	Auto. Trans. & 427 C.I.D. W/A/C	27F
1965-72	All Std., 6 Cyl. 289 & 302	22F, 27F

When more than one group size is shown, the first listing represents OE replacement and other sizes are optional.
Sealed Terminal batteries may be adapted to Top Terminal as follows: 72 to 22F or 24 74 to 24 77 to 27.

PASSENGER CARS continued

Make and Year	Model	Group Size
OLDSMOBILE		
1973-74	350 C.I.D.	74
	455 C.I.D.	77
	Omega 6 Cyl.	72
	Omega 350 C.I.D.	24
1974	All Toronado	74
1972-73	Toronado	77
1971-72	350 C.I.D.	74
	455 C.I.D.	77
1968-70	350 & 400 C.I.D.	24
1968-70	455 C.I.D.	27
1965-67	Jetstar 88 & Delmont	24
1965-67	All Except Jetstar 88 & Delmont	27
1954-64	All	60
OLDS F-85		
1966-71	L6-250 C.I.D.	22F
1964-71	All Except L6-250 C.I.D.	24
1961-63	All	22F
PINTO		
1973-74	All	22F
1971-72		22F
PLYMOUTH		
1973-74	All Except 440 C.I.D.	24
	440 C.I.D.	27
1968-72	All Except 426 & 440 C.I.D.	24, 27
PLYMOUTH continued		
1968-71	426 & 440 C.I.D.	27
1962-69	All 170 C.I.D.	24
1965-67	All Except 383, 413, 426 & 440 C.I.D.	24
	383, 413, 426 & 440 C.I.D.	27
1956-64	Except Taxi-Standard	24, 27
PONTIAC		
1973-74	6 Cyl.	72
	Optional	74
	8 Cyl. & 307 C.I.D.	74
	350 C.I.D. & Optional for 307 C.I.D.	24
1972	Ventura 6 Cyl.	72
	V8	74
1972	Firebird 6 Cyl.	22F
	W/A/C	24
1972	350 C.I.D. W/A/C & 400 C.I.D.	24
1971-72	455 & 350	74
1955-71	All	24, 74
1938-54	All	2E
STUDEBAKER		
1964-66	All	24
1963-64	Avanti	3EE
1956-63	Except Avanti	24
TEMPEST		
1972-74	455 C.I.D.	74
1961-72	6 Cyl. WO/A/C	22F
1963-72	6 Cyl. W/A/C & 8 Cyl. 350 and 400 C.I.D.	24
THUNDERBIRD		
1974	All	24F
1966-73	All	27F
Late 72		74
1966	390 C.I.D. WO/A/C	24F, 27F
	W/A/C	27F
1965	All W/Transistor Ign., or A/C	27F
1965	All W/Conventional Ign.	24F, 27F
1956-64	All Standard	29NF, 27F
VALIANT		
1960-74	All	
VEGA		
1971-74	All	72
WILLYS		
1958-67	All	24
1937-57	All	1

C.I.D. = Cubic Inch Displacement
WO/A/C = Without Air Conditioning
W/A/C = With Air Conditioning
S/T = Standard Transmission

FOREIGN CAR REPLACEMENT DATA

Make and Year	Model	Group Size
AUSTIN		
1973	Marina	*
1970-72	American	22NF
1967-69	1100, 1300, American	*22NF
1960-67	Mini, Mini Cooper	24
1962-64	A60	24, 27

*Special 12-Volt:
10 x 5½ x 9⅛. BCI Assembly No. 10.

AUSTIN-HEALEY

1958-69	Sprite, Sprite Mark I, II, III, IV	24
1963-67	3000 Mark II, III	24, 27

CAPRI

1970-74	All Models	*24F

*Special 12-Volt:
With lug type terminals.

CITROEN

1970-72	DS-21, SW-21, D-Special	24
1966-69	DS-19A, -21; SW-19A, -21	24
1963-67	AMI-6	22F
1961-67	DS-19, ID-19	24

COLT

1971-73	STD	24
	Optional	27

CRICKET

1973	Standard	24
	Optional	27
1971-72	STD	*42
	W/A/C	*53

*May Require Tray Modification & New Cable. OE Cable is special design.

DATSUN

1973-74	All	24
1968-73	510 Series and 1200	24
1968-71	510 Series and 1200	24
1961-70	310, 311, 312, 320, 410, 411, 520, 521 Series; SPL 311, SRL 311	53

FIAT

1962-73	600D, 1100D, 1100, Special 1200, 1500, Spider, 124, 850, 1100R, 128	24

FORD

1960-71	Consul 315, Anglia (106E) Cortina & Cortina Model C	*29NF

*New cables required. OE Battery has special terminal. See BCI replacement data book.

Make and Year	Model	Group Size
JAGUAR		
1962-73	XK-E (E-Type), XJ Sedan	*22F
1962-73	Mark X, 2.4, 3.4, 3.8 Mark II 3.8 "s", 4.2 Sedan, 340, 420, 420G	24F, 27
1969-72	220 D/8	24F, 27F, 30HR
1968-72	280 SL/8	1
1968-72	220, 230, 250, 280 Series	2
1962-72	XK-E (E-Type), XJ Sedan	*22F
1962-67	Mark X, 2.4, 3.4, 3.8 Mark II 3.8 "S", 4.2 Sedan, 340, 420, 420G	24F, 27

*Special 12-Volt:
9⅞ x 6²⁵⁄₃₂ x 8¹⁵⁄₁₆. BCI Assembly No. 10.

MERCEDES

1969-73	220 D/8	24F, 27F, 30HR
1968-73	280 SL/8	1
1968-72	220, 230, 250, 280 Series	2
1966-67	200, 220/8, 230, 230/8, 230S, 250/8, 250S	3
	250SE, SL, 280 Series	24F, 27F, 30HR
1964-67	230SL	24F, 27F, 30HR
1962-65	220 SEb	4, 27F, 29NF
1962-68	180Dc, 190Dc, 200D, 300SE	24F, 27F, 30HR
1962-65	180c, 190c, 220b, Sb	24F

1 Special 12-Volt:
10½ x 7 x 8½. BCI Assembly No. 15.
2 Special 12-Volt:
12 x 7 x 8. BCI Assembly No. 15.
3 Special 12-Volt:
8⅝ x 6⅞ x 8⅝. BCI Assembly No. 11.
4 Special 12-Volt:
12¹⁵⁄₁₆ x 7³⁄₃₂ x 8½. BCI Assembly No. 11.

M-G

1972-73	MGB, MGB-GT	(2) 17HF
1970-73	Midget	22NF
1961-71	Midget, Mark I, II, III	24
1964-67	Sports Sedan	*22NF
1963-71	MGB, MGB-GT	17L

*Special 12-Volt:
10 x 5½ x 9⅛. BCI Assembly No. 10.

OPEL

1966-74	Kadett, Opel 1900, GT	22F
1964-65	Kadett	17L

Make and Year	Model	Group Size
PORSCHE		
1970-74	914, 914-6	42
1969	912	22NF
1969-73	911 Series	(2) (1)
1966-68	911, 911L, 911S, 912	22NF

(1) Special 12-Volt:
8¾x6¼x6¾, BCI Assembly No. 15.

1966-71	912, 914, 914-6, 911 (Except 1969-71) 911L, 911S	22NF
1969-73	911 Series	*
1963-65	All models except Carrera	19

*Special 12-Volt:
8⅝ x 6⅞ x 6⅞. BCI Assembly No. 15.

RENAULT

1963-74	R8, R10, R16, R12	*22NF
1959-67	Dauphine, Caraville, Gordini	24

*Modify hold-down rod.

SAAB

1973-74	All	24F
1969-72	99	24
1971	V4	24F
1967-70	V4 and 3 Cyl.	22F

SIMCA

1962-71	All Models	24

SUNBEAM

1967-70	Arrow, Alpine GT, Coupe	24
1965-67	Minx	24, 27

TOYOTA

1972-73	Carina	24
1971-74	Celica	24F
	Crown	27
	W/A/C	24F
	Corolla 1600	24F
1970-74	Corolla	24
1968-74	Mark II	24
1968-72	Hi-Lux	24F
1968-69	Corolla	24F
	W/A/C	22NF
1967-72	Land Cruiser	27
1965-70	Crown	24F
1965-69	Corona	22NF

TRIUMPH

1958-73		24

VOLKSWAGEN

1967-74	All Models	42
1953-66	Type 1 and Type 3 passenger cars, Type 2 Station Wagon and Transporter	19L

VOLVO

1962-73	140 and 164 series	24
1962-73	P1800, 1800E, 544, 122S (B18 engine)	24

When more than one group size is shown, the first listing represents OE replacement and other sizes are optional.
Side Terminal batteries may be adapted to Top Terminal as follows: 72 to 22F or 24, 74 to 24, 77 to 27.

M-64 4-74

PARTS SALES & SERVICE DIVISION CHRYSLER MOTORS CORPORATION

PRINTED IN U.S.A.

BATTERY ELECTROLYTE PRICE LIST

FOR ALL BATTERY WHOLESALERS

EFFECTIVE MAY 6, 1974

SUPERSEDES ALL PREVIOUS PUBLISHED BATTERY ELECTROLYTE PRICE INFORMATION

ELECTROLYTE	PART NUMBER	DEPOT SHIP ANY QUANTITY DEALER * #1 NET EACH	DIRECT SHIPMENT PREPAID	
			200 Thru 599 Gallons Shipment * #2 Net Each	600 Gallon or more Shipment * #3 Net Each
6 Quart Container W/Dispenser	**2098 869**	**1.53**	**1.42**	**1.27**
5 Gallon Container W/Dispenser	**2098 868**	**3.89**	**3.73**	**3.25**

The above two items may be combined to meet minimum gallonage requirements for Quantity Shipments.

ORDERING INFORMATION

#1 NET Applies to any quantity when ordered for shipment from Parts Depot.
Transportation will be prepaid when qualified, as provided for in Schedule of Discounts and Terms of Purchase

#2 or 3 NET Applies when ordered in quantities specified for Direct Shipment.

Direct all orders to the Parts Depot serving your locality.

Orders qualifying for Direct Shipment must be separate orders and plainly marked "DIRECT SHIPMENT" in the Ship Via Space on the Parts Order Form.

Shipment will be made to the Order Accounts principal place of business only.

The Prices of Passenger Car Parts and Accessories listed herein do not include any provisions for Federal Excise Tax. The prices of Truck Parts and Truck Accessories include any applicable Federal Manufacturers' Excise Tax.

The Prices listed herein are supplied merely as trade information. Distributors, Wholesalers, Dealers or other persons handling the products listed herein are not required or expected to follow all or any such prices, it being expressly understood that they are absolutely unrestricted in such respects.

* PRICE REVISION

ALL PRICES AND SPECIFICATIONS ARE SUBJECT TO CHANGE WITHOUT NOTICE

SUPERSEDES
81-690-1064

Battery Catalog

Mopar





PARTS SALES & SERVICE DIVISION

CHRYSLER
MOTORS CORPORATION

10/73

81-610-1052

1974 PASSENGER CAR

ILLUSTRATION SECTION

NOVEMBER 1974

LOOSE LEAF PARTS CATALOG

PARTS SALES & SERVICE DIVISION CHRYSLER MOTORS CORPORATION

SUPERSEDES
81-690-1138
Printed in U.S.A.

81-690-1171

ILLUSTRATION INDEX

PAGE

A

Accelerator Pedal & Shaft 14-7
Air Conditioning Adapter Pkg.
Typical of Custom & Standard 24-6
Air Conditioning & Hose Routing
B, J, R, W 24-8
Air Conditioning Compressor 24-4
Air Conditioning Compressor & Mounting
Brackets 24-3
Air Conditioning Evaporator
B, J, R, W 24-5
Air Conditioning Hose Chart 24-10
Air Conditioning System
V, L 24-1
Air Conditioning - w/ATC
P, D, C, Y 24-2
Air Pump
8 Cylinder w/Air Cond. 25-3
Alarm System 8-13
Alternator 8-5
Automatic Choke
Electric 14-7
Automatic Transmission Oil Cooler System . 21-7

B

Battery Tray & Supports 13-3
Belt Chart 7-3
Body and Sheet Metal Index 23-1
Brake
Front Wheel 5-1
Rear Wheel 5-1
Rear Wheel Disc & Parking - Y . . . 5-6
Brake Lines 5-11
Brake Pedal & Bracket
R, W 5-9
P, D, C, Y - Power 5-9
Brake Pedal & Linkage
V, L, B, J, R, W. 5-8
Bumper Jack
Finger Type 13-18

C

Caliper, Disc Brake
Pin Type - All except V, L 5-3
Slider Type - V, L, R, W 5-3
Carburetor Air Cleaner
6 and 8 Cylinder 14-8
Carburetor - Typical
Carter
Series BBD 14-9
Thermo-Quad 14-10
Holley
1900 Series 14-11
2200 Series 14-12
Cleaner Air System - Typical
P, D, C, Y Shown 25-4
Clip Chart 23-82
Clutch
6 Cylinder. 6-1
6 and 8 Cylinder 6-1

PAGE

C - Continued

Clutch Pedal & Linkage
V, L 6-2
B, J, R, W. 6-3
Column Gearshift Controls
w/A230 3 Speed Man. Trans. 21-1

Cone & Rollers
w/Disc Brakes 22-3
w/Drum Brakes 22-3
Coolant Recovery System
B, J, P, D, C, Y 7-14
Cooling System
6 Cylinder 7-1
8 Cylinder 7-2
Cylinder
Front Wheel 5-2
Rear Wheel 5-2

D

Damper - Center Floor Pan
V, L, R, W 23-9
Deck Lids 23-26
Deck Lid Electric Latch
R, W (Typical of P, D, C, Y). 23-28
Deck Lid Hinges & Lock
V, L 4 Door Sedan 23-28
Deck Opening - Upper & Lower
V, L 23-24
P, D, C, Y. 23-25
Disc Brake System
B, J, R, W. 5-4
P, D, C, Y. 5-5
Distributor
6 Cylinder 8-2
8 Cylinder 8-3
Dome Lamps
P, D, C, Y 8-14
Station Wagon 8-14
Door Vent Wing & Glass
V, L 4 Door Sedan 23-62

E

Electrical System 8-1
Electric Seat Adjuster
Bench Type - P, D, C, Y 23-88
Electronic Ignition System 8-6
Engine Mountings
6 Cylinder
Front & Rear - V, L, R, W 9-5
8 Cylinder - Front
318 & 360 Engines 9-12
400 & 440 Engines 9-13
Engine Oiling
6 Cylinder 10-1
8 Cylinder 10-2
Exhaust Clamp, Brace & Support Chart. . . 11-2
Exhaust Gas Recirculation System
6 Cylinder 25-1
8 Cylinder 25-2
Exhaust Manifold w/Heat Controls
6 Cylinder 9-5

ILLUSTRATION INDEX - CONTINUED

PAGE

E - Continued

Exhaust System Chart 11-1
Expansion Valve
"H" Type 24-7
Exterior Views
See Group 23 Index 23-A
External Engine
6 Cylinder
198 & 225 Engines. 9-2
8 Cylinder
318 & 360 Engines. . . . . 9-2 thru 9-5
400 & 440 Engines. . . . . 9-8 thru 9-11

F

Fender
V, L 12-1
B, J 12-2
R 12-3
W 12-4
P, D, C, Y 12-5
Floor Console
V, L 23-8
B, J 23-8
Folding Rear Seat Back & Security Panel
V, L Fastback 23-89
Frame
V, L, B, J . . . . . 13-1 and 23-6
R, W, P, D, C, Y . . . . . 13-2 and 23-7
Fresh Air Side Cowl Vent & Control
P, D, C, Y 1-6
Front & Rear Door Inside Panel
V, L 4 Door Sedan 23-58
2 Door Hardtop & Fastback 23-60
B, J 2 Door Hardtop 23-64
R, W 4 Door Sedan & Station Wagon . 23-66 and 23-68
2 Door Sedan, 2 Door Hardtop & Fastback 23-70
P, D, C, Y
2 Door Hardtop 23-72
4 Door Hardtop . . . . . 23-74 and 23-78
4 Door Sedan & Station Wagon . . . 23-76 and 23-78
Front Bumper
V 13-4
L 13-5
B 13-7
J 13-8
R 2 Doors. 13-9
R 4 Doors & Station Wagon 13-10
W 2 Doors & Fastback. 13-11

PAGE

F - Continued

Front Bumper - Continued
W 4 Doors & Station Wagon 13-12
P 13-13
D 13-15
C 13-16
Y 13-17
Front Spring & Shock Absorber
Typical of V, L, B, J, R, W 2-4
P, D, C, Y 2-4
Front Suspension
V, L 2-1
R, W 2-2
P, D, C, Y. 2-3
Front Sway Bar
V, L, B, J 17-1
R, W 17-1
P, D, C, Y. 17-2
Fuel & ECS Tube Routing
B, J, R, W 14-2
P, D, C, Y 14-2
Fuel System - Typical
V, L 14-1
Fuel Tank Chart 14-3
Fusible Link Cables Chart 8-12

G

Grille
V, L 7-7
B, J 7-8
R 7-9
W 7-10
P, D 7-11
C, Y 7-12

H

Headlamp Bezel Chart 8-11
Heater
P, D, C, Y 1-4
Heater & Air Conditioning Controls
V, L, R, W 24-3
Heater & Fresh Air Duct
V, L 1-1
B, J 1-2
R, W 1-3
Heater Controls
C 1-5
Hood
Valiant 15-1
Dart 15-2
Barracuda & Challenger 15-2
Coronet & Charger 15-3
Satellite & Road Runner 15-3
Plymouth, Dodge, Chrysler & Imp. . 15-4
Sports Decor. 15-5
Hydraulic Brake System
All 5-6

I

Idler Pulley & Parts 7-6

ILLUSTRATION INDEX - CONTINUED

PAGE

I - Continued

Instrument Cluster
V, L 8-26
R, W
w/o Rallye Instrument Panel . . . 8-27
w/Rallye Instrument Panel 8-28
Instrument Panel
V, L 23-46
B, J 23-48
R, W 23-50
P, D, C, Y 23-52
Instrument Panel Carrier
P, D 23-54
C, Y 23-56
Insulators . . . . . 8-30 thru 8-32

Interior Views - Front & Rear
See Group 23 Index 23-A
Interlock & Seat Belt System 23-87
Internal Engine
6 Cylinder
198 & 225 Engines 9-4
8 Cylinder
318 & 360 Engines 9-6
400 & 440 Engines 9-7

L

Lamp-Bulb Types Chart 8-8
Lamps - Park, Tail, Stop, Turn Signal, Back-Up, License, Side Marker
V 8-15
L 8-16
B, J 8-17
R Except Station Wagon 8-18
W Except Station Wagon 8-19
R, W Station Wagon 8-20
P Except Station Wagon 8-21
D Except Station Wagon 8-22
C Except Station Wagon 8-23
P, D, C Station Wagon 8-24
Y 8-25

M

Manual Vent Window
P, D, C, Y
4 Door Sedan & Station Wagon . . 23-80
4 Door Hardtop 23-81
Master Cylinder
w/Drum Brakes 5-10
w/Disc Brakes 5-10
Imperial 5-11
Mirror
Chart 23-83
Remote Control - P, D, C, Y 23-84
Inside Rear View - P, D, C, Y 23-85

O

Oil Pump & Filter
6 Cylinder 10-3
318, 360 Engines 10-3

PAGE

O - Continued

Oil Pump & Filter - Continued
Sealed Can Type - 318, 360 Engine . 10-4
400, 440 Engines 10-4
O.S.A.C. Valve, T.I.C. Valve, Vapor Canister & Hose Routing (w/A/C)
B, J w/318 Engine 25-3

P

Parking Brake Controls
V, L 4-2
B, J, R, W 4-3
P, D, C, Y 4-3
Parking Brake Lever
V, L, B, J, P, D, C 4-1
C-S, Y 4-2
Power Brake Unit
V, L 5-7
B, J, R, W (Typical of P, D, C, Y) . . . 5-7
Power Steering Pump
w/Key Slotted Shaft
w/or w/o Oil Cooler 19-16
w/Threaded Hole Pump Shaft 19-17
w/Key Slotted Shaft 19-18
Propeller Shaft
Front 16-1
Axle End 16-1
Identification 16-2

Q

Quarter Inside Panel
V, L 2 Door Hardtop 23-16
B, J 2 Door Hardtop 23-18
R, W 2 Door Sedan & 2 Door Hardtop 23-19
P, D, C, Y 2 Door Hardtop 23-23
Quarter Window Area
V, L 2 Door Hardtop 23-17
Quarter Window Opening Frame
Charger SE Fastback 23-22
Quarter Window (Vent Type)
V, L Fastback 23-17

R

Radiator Grille Front Fillers
V, L, R, W 7-4
Radiator Yoke Area
P, D, C, Y 7-5
Rear Axle Differential & Carrier
7 1/4" Dia. 3-1
8 1/4" & 9 1/4" Dia. 3-2
8 3/4" Dia., w/Sure-Grip 3-3
8 3/4" Dia., w/o Sure-Grip 3-3
Rear Axle Housing & Carrier
8 3/4" Dia. Gear Type 3-4
Rear Bumper
V, L 13-6
B 13-7
J 13-8
R 2 Doors 13-9
R 4 Doors 13-10
R, W Station Wagon 13-11
W 2 Doors 13-12

ILLUSTRATION INDEX - CONTINUED

PAGE

R - Continued

Rear Bumper - Continued
W 4 Doors 13-13
P except Station Wagon 13-14
P, D, C Station Wagon 13-14
D except Station Wagon 13-15
C-L, C-M 13-16
C-H, C-S 13-17
Y 13-18
Rear Bumper Fillers - V, L, R, W 23-29
Rear Bumper Fillers Chart - P, D, C, Y . 23-30
Rear Quarter Panel
B, J 2 Door Hardtop 23-18
R, W
2 Door Hardtop, Fastback & 4 Door Sedan 23-20
Station Wagon 23-21
Rear Spring, Hangers & Shackles
V, L 17-4
B, J 17-5
R, W 17-6
P, D, C, Y 17-7
Rear Window Defogger
V, L (Typical of B, J, R, W, P, D, C, Y) 1-5
Retainers, Connectors, Plugs, Sleeves & Miscellaneous Parts 8-34
Roof Luggage Rack
R, W 23-44
P, D, C 23-45

S

2nd & 3rd Seat Back Cover Panel 23-88
Short Engine Assembly
6 Cylinder 9-1
8 Cylinder 9-1
Sockets . . . . . 8-35 and 8-36
Spare Tire Cover or Panel
R, W Station Wagon 23-22
Speed Control - R, W, P, D, C, Y 14-4
Starter - 3656 575 8-4
Steering Column
Floor Shift
V, L, B, J 19-1
V, L, R, W w/Soft Rim Wheel . . . 19-2
V, L, R, W w/Man. Trans. Col. Shift . . 19-4
B, J w/Auto. Trans. 19-6
P, D, C, Y
w/Tilt-Telescopic Strg. 19-8
w/o Tilt-Telescopic Strg. 19-10
Steering Column Gearshift Controls w/Automatic Transmission 19-11
Steering Gear & Linkage
V, L 19-11
B, J, R, W 19-12
Steering Gear (Chuck) Assembly
Standard 19-12
Power 19-14
Steering Wheel
3 Spokes 19-18
3 Spoke w/Center Padded Horn Button - V, L 19-19
w/Soft Rim - V, L, R, W 19-19

PAGE

S - Continued

Steering Wheel - Continued
2 Spoke - B, J 19-20
w/Tilt-Telescopic Strg. - P, D, C, Y . . 19-20
Sun Roof
Manual Type 23-40
Electric 23-42
Sway Bar - Rear Suspension
B, J 17-2
R, W 17-3

T

Tailgate (Two Way)
R, W 23-32
P, D, C 23-36
Tailgate, Weatherstriping
P, D, C 23-38
Tail Pipe Extensions 11-3
Tees & Valves 5-12
Terminal & Insulator Packages 8-33
Terminals 8-29
Throttle Controls
All w/400 & 440 Engines 14-6
Throttle Linkage
6 Cylinder - All except C, Y 14-5
V, L w/318 Engine. 14-5
Man. & Auto. Trans. - 318 & 360 Eng. 14-6
Tie Rods & Steering Linkage
V, L 2-5
B, J, R, W. 2-5
P, D, C, Y. 2-6
Transmission
Manual
3 Speed
6 Cylinder - A250 21-4
A-230 21-6
4 Speed - A833 21-8
Automatic
3 Speed - A727 & A904
Valve Body 21-1
Case & Extension. 21-2
Gear Train 21-4
Transmission Controls - Floor Shift
Manual 3 Speed - w/o Console . . . 21-2
Manual 4 Speed
V, L 21-2
B, J, R, W 21-3
Auto. 3 Speed - w/Console - V, L . . 21-6

U

Underbody
V, L 23-2
B, J 23-3
R, W 23-4
P, D, C, Y 23-5

V

Vacuum Hoses 5-13

ILLUSTRATION INDEX - CONTINUED

W	PAGE
Water Pump	
6 Cylinder	7-13
318,360 Engines	7-13
400,440 Engines	7-14
Wheel Chart	22-1
Wheel Cover Chart	22-2
Wheelhouse & Quarter Panel	
V,L	23-15

W - Continued	PAGE
Windshield Washer System	
Foot Operated	
V,L	23-10
B,J	23-10
R,W	23-11
P,D,C,Y	23-12
Windshield Wiper	
V,L	23-13
B,J (Typical of R,W,P,D,C,Y)	23-14

NOTES

1974 PASSENGER CAR

APPLICATION SECTION

NOVEMBER, 1974

LOOSE LEAF PARTS CATALOG

SERVICE & PARTS SALES DIVISION CHRYSLER MOTORS CORPORATION

PERSEDES
81-690-1137

81-690-1170

Printed in U.S.A.

This publication contains parts information for "K" Series-(1974) Vehicles.

In the event replacement parts not listed herein are required, orders may be submitted by providing a description of the desired part, the applicable part-type-code, the vehicle model, serial number, and when appropriate, the Trim Code.

The use of this Parts Catalog and the arrangement of information herein is explained in the General information Section.

INDEX TO INFORMATION PAGES

- ABBREVIATIONS ..... INF - 10
- ALPHABETICAL INDEX ..... INF - 3
- CODE PLATE INTERPRETATION ..... INF - 6
- BUILD DATE MO. AND YR. ..... INF - 6
- CARE LINE INFORMATION ..... INF - 6
- COLOR CODE OR COMBINED PART NUMBERS ..... INF - 2
- DATE CODE CORRELATION TABLES ..... INF - 9
- ENGINE IDENTIFICATION ..... INF - 8
- ENGINE IDENTIFICATION NUMBERS ..... INF - 9
- HOW TO LOCATE PARTS ..... INF - 2
- ILLUSTRATIONS ..... INF - 3
- MODEL CHART ..... INF - 7
- NUMERICAL INDEX ..... INF - 3
- PAGE NUMBERING ..... INF - 3
- PARTS CATALOG REVISION SERVICE ..... INF - 4
- PARTS PACKAGES ..... INF - 3
- PART TYPE CODE SYSTEM ..... INF - 2
- PRODUCT BULLETINS ..... INF - 4
- PRICE CLASS INFORMATION ..... INF - 6
- SPECIFYING INFORMATION ..... INF - 4
- STANDARD PARTS ..... INF - 3
- SYMBOLS USED IN THIS CATALOG ..... INF - 4
- TRANSMISSION IDENTIFICATION ..... INF - 8
- TRIM CODE AND BODY PAINT CODES ..... INF - 6
- VEHICLE IDENTIFICATION PLATE ..... INF - 5

GROUP	GROUP CONTENTS
INF	Information Section
PK	Packages
1	Accessories
2	Front Suspension
3	Axle-Rear
4	Brake-Parking
5	Brake-Service
6	Clutch
7	Cooling
8	Electrical
9	Engine-6 Cyl.
9	Engine-8 Cyl.
10	Engine Oiling
11	Exhaust
12	Fender
13	Frame
14	Fuel System
15	Hood
16	Prop. Shaft & U/Jt.
17	Springs & Shocks
18	Standard Parts
19	Steering-Manual
19	Steering-Power
21	Transmission-Manual
21	Transmission-Auto.
22	Wheels & Brk. Drum
23	Body-Exc. Soft Trim
IT	Interior Trim
24	Air Conditioning
25	Emission Controls
AL	Alphabetical Index
NU	Numerical Index

HOW TO LOCATE PARTS

This parts catalog is divided into groups (Part-Type-Codes). Tab indexes are provided with the catalog binder to separate the major groups and sections.

Page INF-1 lists the groups by subject and number. Association of the part being sought with its' major functional application will enable the user to determine the group in which the part will most likely be found. Example: Rear Axle Ring gear and Pinion. By Reference to INF-1, it will be determined that Rear Axle is Group 3.

Many different techniques can be used to determine the specific Part-Type-Code of a part. Some are by reference to:

1. The Illustration Section for the Group.
2. The Group Fly Page.
3. The Alphabetical index section at the end of the catalog.
4. The numerical index if the part number is known.

After establishing the Part-Type-Code, the part number can be located by reference to the code. Codes are listed by major group, then by numerical sequence within the group (See the following explanation of the Part-Type-Code system).

NOTE: Most parts are listed in the application section; however, in some instances the part numbers are listed in the illustration section to enhance specifying. Example: Exterior Ornamention.

PART TYPE CODE SYSTEM

To simplify the listing and location of individual parts, a system of Part Codes is used. To illustrate, Codes are defined as follows:

2- Indicates the Major Group: "Group 2 -- Front Suspension"
-03- Indicates the Sub-Group: "03 -- Steering Knuckle"
-3 Indicates the Code for the specific name of the part: "Knuckle, w/BUSHING"

Part Type Code 2-03-3 will always be "KNUCKLE, w/BUSHING."

COLOR CODED OR COMBINED PART NUMBERS

Appearing throughout this catalog are part numbers containing both letters and numbers. For example: F223 KX9 These are good serviceable part numbers. The combination of letters and numbers merely indicates the parts are keyed to the interior color of the vehicles on which they are used.

In addition, Right and Left part numbers are frequently combined on one line; e.g.: F222-3 KX9. Such numbers are interpreted as F222 KX9, Right side application, and F223 KX9 Left side. Right and Left Sides are always determined by their relationship to the driver when normally seated and looking forward.

INTERIOR TRIM

Refer to the Group 23 Trim section of the catalog for information relative to Interior Soft and Hard Trim, Rolled Stock, etc.

PAGE NUMBERING

Two-part page numbers are used throughout this catalog. The first part of the page designation indicates the major group or section. The second part indicates the actual page number in the group. For example:

1-1 indicates Group 1, Accessories, Page 1
2-1 indicates Group 2, Front Suspension, Page 1

In the maintenance of the Loose Leaf Parts Catalog Revision Service, it may become necessary to add information beyond the capacity of the page. In this event, an "A" page will be used. For example: It it becomes necessary, because of change, to add several part numbers to page 2-1 and space does not permit the addition, you will be given Page 2-1A. Page 2-1A should be filed immediately following page 2-1.

ILLUSTRATIONS

Refer to the Master Index in the Illustration Section and/or the special index at the beginning of groups 8 and 23 for the page reference for specific illustrations.

ALPHABETICAL INDEX

To locate a part by name, refer to the Alphabetical Index. This index indicates the Part Type Code in which various parts may be located.

NUMERICAL INDEX

A listing of all Part Numbers contained in the catalog application section. The numbers are in numerical sequence with reference to the Part-Type-Code under which the numbers are found.

PARTS PACKAGES

Service Parts Packages, containing all parts needed for a specific service operation, are listed in their respective groups with related parts. The listing will show adaptability and model application. The PARTS PACKAGE Section of the catalog contains a listing of most major packages found in the catalog with the package contents identified. The listing sequence is numerical within Part Type Code.

STANDARD PARTS

Important attaching standard parts such as bolts, nuts, etc., are generally listed under the major parts which they attach. Standard parts listed as Major Parts, such as fuses, bulbs, and bearings in the 100,000-499,999 part number series are assigned a Part Type Code and are so listed within their respective groups.

A comprehensive listing and description of the commonly used and serviced Standard Parts will be found in Group 18.

SPECIFYING INFORMATION

The following information is included in this Parts Catalog:

1. Part Type Code

2. Part Name

3. Part Number

4. Model Applications

5. Quantity used per vehicle

6. Effective points of series running changes by vehicle serial number, engine number or body number where applicable. When serial number effective points are not available, production effective dates are used. (Refer to the Body Codes Plate or the Federal Certification Label for the build date).

7. Description and dimensions necessary for proper identification of parts where necessary.

8. No. of Cyl. column
6 indicates 6 cylinder models
8 indicates 8 cylinder models
Blank indicates dual usage

9. Parts designated as CANADA are available only in Canada for vehicles sold in Canada.

SYMBOLS USED IN THIS PARTS CATALOG

The following symbols are used in the Parts Catalog and revisions thereto:

- Preceding a part number indicates parts which have been added and not previously published.

AR - Indicates the quantity required may vary or is to be determined by the user.

PRODUCT BULLETINS

PRODUCT BULLETINS are issued when important changes are made in production or when corrections are to be made in the Parts Catalog between regular revisions.

Use of the PRODUCT BULLETIN assures each catalog subscriber up to date information. All catalogs should be noted and changed accordingly to remain current between revisions.

PARTS CATALOG REVISION SERVICE

Subscribers to the Passenger Car Parts Catalog Revision Service will be periodically provided with revision copy incorporating latest information. Revision may be provided by Group or complete book copy.

Proper interfiling of the revision copy will insure the subscriber a complete up-to-date Parts Catalog.

VEHICLE IDENTIFICATION PLATE

All assembly plants use a uniform method for assigning vehicle serial numbers (VIN). This number consists of 13 digits and is shown on the Vehicle Identification Plate which is located on the instrument panel - visible thru the windshield. The VIN number (serial number) also appears on the Federal Certification Label located on the left front door frame. (Always specify the vehicle serial number when ordering parts by description). A listing and description of serial numbers follows:

VEHICLE IDENTIFICATION PLATE INTERPRETATION

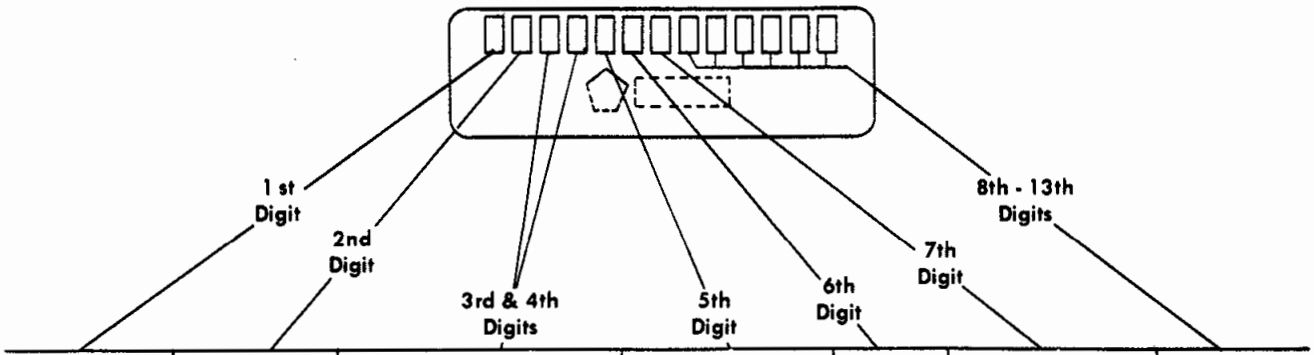

CAR LINE	SERIES	BODY TYPE	ENG. DISPLACE. in Cubic Inches	MODEL YEAR	ASSEMBLY PLANT	SEQUENCE NUMBER
V=Valiant L=Dart B=Barracuda J=Challenger R=Satellite W=Coronet Charger P=Fury D=Monaco C=Chrysler Y=Imperial	G=Dodge Taxi H=High K=Police L=Low M=Medium P=Premium S=Special T=Taxi	21=2 Dr. Sed. 23=2 Dr. H/Top 29=2 Dr. Sports H/Top or Fastback 41=4 Dr. Sed. 43=4 Dr. H/Top 45=2 Seat Wagon 46=3 Seat Wagon	B=198 (2) C=225 E=Spl. 6 Cyl. G=318 J=360-4 bbl. (1) K=360-2 bbl.(2) L=360-4 bbl. Hi Perf. M=400-2 bbl.(2) N=400-4 bbl.(2) P=400-4bbl. Hi.Perf.(2) T=440 U=440 Hi. Perf. Z=Spl. 8 Cyl.	4=1974	A=Lynch Rd. B=Hamtramck C=Jefferson D=Belvidere F=Newark G=St. Louis R=Windsor	100001

ENGINE NOTES:
(1) = With California Emission Package.
(2) = Not Available with California Emission Package.

NOTE: A derivative of the Vehicle Identification Number is also stamped on all Production Installed Engines and Transmissions; e.g.:

4	A	100001
Model Year	Assembly Plant	Vehicle Sequence Number

BODY CODE PLATE

The Body Code Plate is located on the Left Front Fender Side Shield or Wheel Housing on Compact, Sport and Intermediate Models and on the Left Side of the Upper Radiator Support on Full Size Cars.

CODE PLATE INTERPRETATION

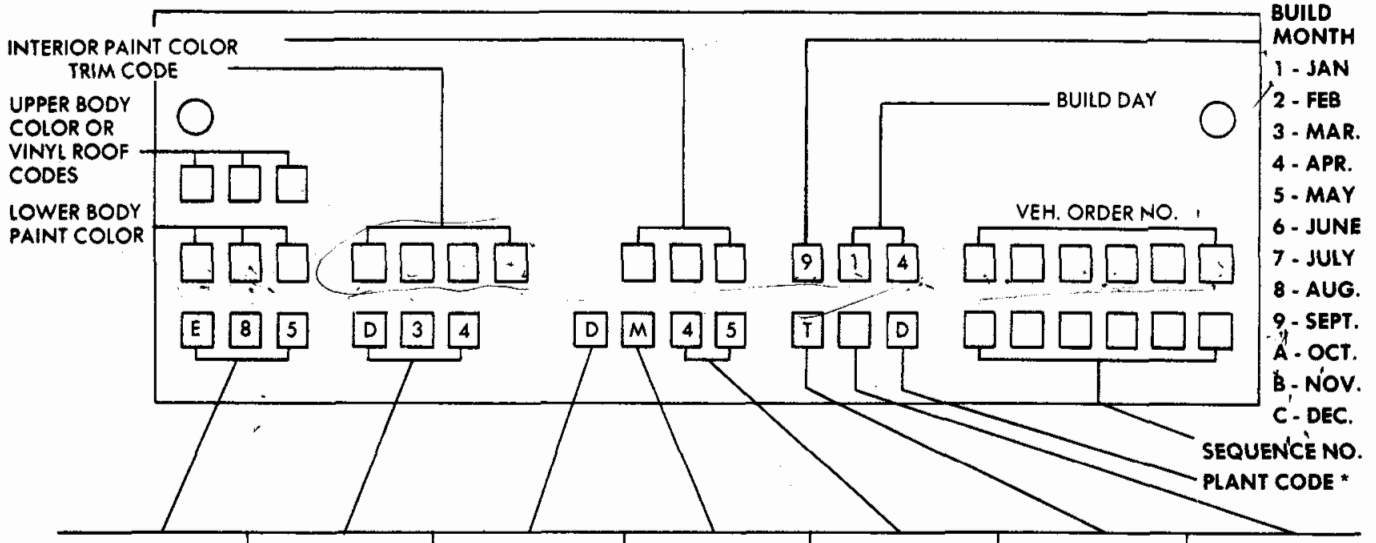

ENG. CODES	TRANS CODES	CAR LINE	SERIES	BODY TYPE	ENG. CODE	MODEL YEAR
E-22 = 198 (2)	D13 = 3 Spd. Man. (F/S)	V = VALIANT	G = DODGE TAXI	21 = 2 DR. SED.	B = 198 (2)	4 = 1974
E-24 = 225	D14 = Std. 3 Spd. Man. (C/S)	L = DART	H = HIGH	23 = 2 DR. H/TOP	C = 225	
E-25 = 225	D15 = H.D. 3 Spd. Man. (C/S)	B = BARRACUDA	K = POLICE	29 = 2 DR. SPORTS H/TOP OR FASTBACK	E = SPL. 6 CYL.	
E-44 = 318	D21 = 4 Spd. Man.	J = CHALLENGER	L = LOW	41 = 4 DR. SED.	G = 318	
E-56 = 360-4 bbl. (1)	D34 = Std. Auto.	R = SATELLITE	M = MEDIUM	43 = 4 DR. H/TOP	J = 360-4 bbl. (1)	
E-57 = 360-2 bbl. (2)	D35 = H.D. Auto.	W = CORONET CHARGER	P = PREMIUM	45 = 2 SEAT WGN.	K = 360-2 bbl. (2)	
E-58 = 360-4 bbl. Hi Perf.		P = FURY	S = SPECIAL	46 = 3 SEAT WGN.	L = 360-4 bbl.	
E-63 = 400-2 bbl. (2)		D = MONACO	T = TAXI		M = 400-2 bbl. (2)	
E-64 = 400-4 bbl. (2)		C = CHRYSLER			N = 400-4 bbl. (2)	
E-68 = 400-4 bbl. Hi. Perf. (2)		Y = IMPERIAL			P = 400-4 bbl. Hi. Perf. (2)	
E-85 = 440	F/S = FLOOR SHIFT				T = 440	
E-86 = 440 Hi Perf.	C/S = COLUMN SHIFT				U = 440 HI. PERF.	
					Z = SPL. 8 CYL.	

*ASSEMBLY PLANT: A - LYNCH ROAD; B - HAMTRAMCK; C - JEFFERSON; D - BELVIDERE; F - NEWARK; G - ST. LOUIS; R - WINDSOR

ENGINE CODE NOTES: (1) = With California Emission Package.
(2) = Not Available with California Emission Package.

MODEL CHART

BODY	CAR LINE (Make and Size)	SALES MODEL NAME	CAR LINE CODE	SERIES	BODY STYLE							ENGINE CODE												ASSY PLANT	SALES LOCATIONS
												198	225	225	318	360	360	360	400	400	400	440	440		
												1	1	1	2	4	2	4	2	4	4	4	4		
					21	23	29	41	43	45	46	22	24	25	44	56	57	58	63	64	68	85	86		
A	PLYMOUTH Compact 29 - 108" WB 23, 41 - 111" WB	Valiant	V	L				41				22	24		44									FR	UCI
		Duster					29					22	24		44									BG	UCI
		Valiant Scamp Special				23						22	24		44									B	C
		Valiant Scamp		H		23						22	24		44									BGF	UCI
		Valiant Brougham		P		23							24		44									BGF	UCI
		Valiant Brougham						41					24		44									FR	UCI
		Duster 360		S			29											58						BG	UCI
	DODGE Compact 29 - 108" WB 23, 41 - 111" WB	Dart Swinger Special	L	L		23						22	24		44									BGF	UCI
		Dart						41				22	24		44									FR	UCI
		Dart Sport					29					22	24		44									BG	UCI
		Dart 360 Sport		M			29											58						BG	UCI
		Dart Custom		H				41				22	24		44									FR	UCI
		Dart Swinger				23						22	24		44									BGF	UCI
		Dart Special Edition		P		23							24		44									BGF	UCI
		Dart Special Edition						41					24		44									FR	UCI
E	PLYMOUTH Specialty 108"WB	Barracuda	B	H		23									44			58						B	UCI
		'Cuda		S		23									44			58						B	UCI
	DODGE Specialty 110"WB	Challenger	J	H		23									44			58						B	UCI
B	PLYMOUTH Intermediate 2-Dr - 115" WB 4-Dr & Wagons - 117.5" WB	Satellite Police	R	K				41						25	44	56	57			64	68		86	A	UI
		Satellite Taxi		T				41						25	44									A	UCI
		Satellite		L		21							24		44	56	57			64	68			GR	UCI
								41					24		44	56	57			64	68			A	UCI
										45					44	56	57			64	68			R	UCI
		Road Runner		M		21									44			58			68		86	GR	UCI
		Satellite Sebring					23						24		44	56	57			64	68			GR	UCI
		Satellite Custom		H				41					24		44	56	57			64	68			A	UCI
										45	46				44	56	57			64	68			R	UCI
		Satellite Sebring Plus		P			23								44	56	57			64	68			GR	UCI
		Satellite Regent								45	46				44	56	57			64	68			R	UCI
	DODGE Intermediate 2-Dr - 115" WB 4-Dr & Wagons - 117.5" WB	Coronet Police	W	K				41						25	44	56	57			64	68		86	A	UI
		Coronet Taxi		T				41						25	44									A	UCI
		Dodge Taxi		G				41						25	44									A	U
		Coronet		L				41					24		44	56	57			64	68			A	UCI
										45					44	56	57			64	68			A	UCI
		Charger Coupe				21							24		44	56	57	58		64	68		86	AG	UCI
		Charger					23						24		44	56	57	58		64	68		86	AG	UCI
		Coronet Custom		H				41					24		44	56	57			64	68			A	UCI
										45	46				44	56	57			64	68			A	UCI
		Coronet Crestwood		P						45	46				44	56	57			64	68			A	UCI
		Charger SE					29								44	56	57			64	68		86	AG	UCI
C	PLYMOUTH Full Size 2- & 4-Dr - 121.5"WB Wagons - 124" WB	Fury Police	P	K				41								56	57		63	64	68		86	D	UI
										45						56			63			85		D	UI
		Fury Taxi		T				41								56	57		63					D	UI
		Fury I		L				41								56	57		63	64	68	85	86	D	UI
								41									57		63	64	68	85	86	D	C
		Fury II		M				41								56	57		63	64	68	85	86	D	UI
								41									57		63	64	68	85	86	D	C
						23											57		63	64	68	85	86	D	C
		Suburban								45						56			63			85		D	UI
										45							57		63			85		D	C
		Fury III		H		23		41	43							56	57		63	64	68	85	86	D	UI
						23		41	43								57		63	64	68	85	86	D	C
		Custom Suburban								45	46					56			63			85		D	UI
										45	46						57		63			85		D	C
		Fury Gran Coupe and Sedan		P		23			43							56	57		63	64	68	85	86	D	UI
						23			43								57		63	64	68	85	86	D	C
		Sport Suburban								45	46					56			63			85		D	UI
										45	46						57		63			85		D	C
	DODGE Full Size 2 - 4-Dr - 121.5"WB Wagons - 124" WB	Monaco Police	D	K				41								56	57		63	64	68		86	D	UI
		Monaco Taxi		T				41								56	57							D	UI
		Monaco Special		L		23		41									57		63	64	68	85	86	D	C
		Monaco		M		23		41								56	57		63	64	68	85	86	D	UI
						23		41									57		63	64	68	85	86	D	C
										45						56			63			85		D	UI
										45							57		63			85		D	C
		Monaco Custom		H		23		41	43							56	57		63	64	68	85	86	D	UI
						23		41	43								57		63	64	68	85	86	D	C
										45	46					56			63			85		D	UI
										45	46						57		63			85		D	C
		Monaco Brougham		P		23		41	43							56	57		63	64	68	85	86	D	UI
						23		41	43								57		63	64	68	85	86	D	C
										45	46					56			63			85		D	UI
										45	46						57		63			85		D	C
	CHRYSLER Full Size All - 124"WB	Newport	C	L		23		41	43							56			63	64		85	86	C	UCI
		Newport Custom		M		23		41	43							56			63	64		85	86	C	UCI
		New Yorker		H				41	43													85	86	C	UCI
		Town and Country		P						45	46											85	86	D	UCI
		New Yorker Brougham		S		23		41	43													85	86	C	UCI
	CHRYSLER Luxury 124"WB	Imperial Le Baron	Y	M		23			43													85	86	C	UCI

CODES

SALES LOCATION

U - Models Sold in U.S.
C - Models Sold in Canada
I - Models Sold Internationally

ASSEMBLY PLANT

A - Lynch Road
B - Hamtramck
C - Jefferson
D - Belvidere
F - Newark
G - St. Louis
R - Windsor

ENGINE V.I.N. IDENTIFICATION

Engine	V.I.N. Letter
E22	B
E24, E25	C
E44	G
E56	J
E57	K
E58	L
E63	M
E64	N
E68	P
E85	T
E86	U

Designates the base engine for pricing purposes.

Designates Limited Production Engine Availability.

ENGINE IDENTIFICATION NUMBERS

The following identification will be included on the Engine Serial Number Pad:

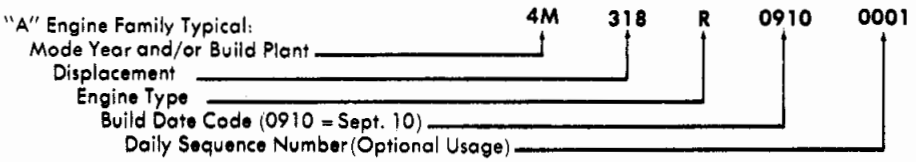

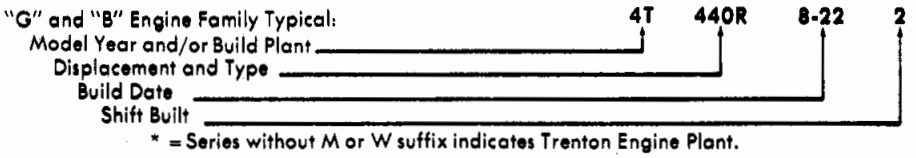

* = Series without M or W suffix indicates Trenton Engine Plant.

Engine Serial Number Codes Defined:

HP - High Performance
K - Series (1974)
LC - Low Compression
M - Mound Road Plant
P - Premium Fuel Recommended
R - Regular Fuel may be used
S - Special Engine
T - Trenton Plant
W - Windsor Plant

Engine Number Location:

Displacement	Serial Number Pad Located
198, 225	Right Side of Block below # 1 Spark Plug
318, 360	Left Front of Block below Cylinder Head
400	Right Side of Block adjacent to Distributor
440	Left Bank adjacent to Front Tappet Rail

CAUTION: Replacement Engine Assemblies are furnished with blank engine number pads. Dealers are governed by state and local regulations regarding the affixing of engine numbers to these engines. In states where license fees are based on displacement or taxable horsepower it will be necessary to change the vehicle registration if the replacement engine differs from the one it replaces.

MANUAL TRANSMISSION IDENTIFICATION (Example PP23044360001)

PLANT CODE	COMPONENT CODE	DATE CODE	SERIAL NUMBER
2 letters PP - New Process Gear Division PK - Kokomo	3 digits 230 - 230 trans. 250 - 250 trans. 833 - 833 trans.	4 digits Based on the calendar on Page INF-9	4 digits A sequential number beginning with 0001 for each day's production.

Location: Below centerline on Front Portion of Right Side.

AUTOMATIC TRANSMISSION IDENTIFICATION (Example 3681063W44360001)

PART NO.	CHANGE CODE	DATE CODE	SERIAL NUMBER
7 digits 3681063	1 digit W (Factory use only- of no significance to the field)	4 digits Based on the calendar on Page INF-9	4 digits A sequential number beginning with 0001 for each day's production.

Location: On Oil Pan Side Rail - Left Side.

NOTE: A derivative of the Vehicle Identification Number is also stamped on all production installed Engines and Transmissions; e.g.:

4	A	100001
Model Year	Assembly Plant	Vehicle Sequence Number

10000 DAY DATE CORRELATION TABLES:

1973 DAY NUMBER

DATE	JAN.	FEB.	MAR.	APR.	MAY	JUNE	JULY	AUG.	SEP.	OCT.	NOV.	DEC.
1	4175	4206	4234	4265	4295	4326	4356	4387	4418	4448	4479	4509
2	4176	4207	4235	4266	4296	4327	4357	4388	4419	4449	4480	4510
3	4177	4208	4236	4267	4297	4328	4358	4389	4420	4450	4481	4511
4	4178	4209	4237	4268	4298	4329	4359	4390	4421	4451	4482	4512
5	4179	4210	4238	4269	4299	4330	4360	4391	4422	4452	4483	4513
6	4180	4211	4239	4270	4300	4331	4361	4392	4423	4453	4484	4514
7	4181	4212	4240	4271	4301	4332	4362	4393	4424	4454	4485	4515
8	4182	4213	4241	4272	4302	4333	4363	4394	4425	4455	4486	4516
9	4183	4214	4242	4273	4303	4334	4364	4395	4426	4456	4487	4517
10	4184	4215	4243	4274	4304	4335	4365	4396	4427	4457	4488	4518
11	4185	4216	4244	4275	4305	4336	4366	4397	4428	4458	4489	4519
12	4186	4217	4245	4276	4306	4337	4367	4398	4429	4459	4490	4520
13	4187	4218	4246	4277	4307	4338	4368	4399	4430	4460	4491	4521
14	4188	4219	4247	4278	4308	4339	4369	4400	4431	4461	4492	4522
15	4189	4220	4248	4279	4309	4340	4370	4401	4432	4462	4493	4523
16	4190	4221	4249	4280	4310	4341	4371	4402	4433	4463	4494	4524
17	4191	4222	4250	4281	4311	4342	4372	4403	4434	4464	4495	4525
18	4192	4223	4251	4282	4312	4343	4373	4404	4435	4465	4496	4526
19	4193	4224	4252	4283	4313	4344	4374	4405	4436	4466	4497	4527
20	4194	4225	4253	4284	4314	4345	4375	4406	4437	4467	4498	4528
21	4195	4226	4254	4285	4315	4346	4376	4407	4438	4468	4499	4529
22	4196	4227	4255	4286	4316	4347	4377	4408	4439	4469	4500	4530
23	4197	4228	4256	4287	4317	4348	4378	4409	4440	4470	4501	4531
24	4198	4229	4257	4288	4318	4349	4379	4410	4441	4471	4502	4532
25	4199	4230	4258	4289	4319	4350	4380	4411	4442	4472	4503	4533
26	4200	4231	4259	4290	4320	4351	4381	4412	4443	4473	4504	4534
27	4201	4232	4260	4291	4321	4352	4382	4413	4444	4474	4505	4535
28	4202	4233	4261	4292	4322	4353	4383	4414	4445	4475	4506	4536
29	4203		4262	4293	4323	4354	4384	4415	4446	4476	4507	4537
30	4204		4263	4294	4324	4355	4385	4416	4447	4477	4508	4538
31	4205		4264		4325		4386	4417		4478		4539

1974 DAY NUMBER

DATE	JAN.	FEB.	MAR.	APR.	MAY	JUNE	JULY	AUG.	SEP.	OCT.	NOV.	DEC.
1	4540	4571	4599	4630	4660	4691	4721	4752	4783	4813	4844	4874
2	4541	4572	4600	4631	4661	4692	4722	4753	4784	4814	4845	4875
3	4542	4573	4601	4632	4662	4693	4723	4754	4785	4815	4846	4876
4	4543	4574	4602	4633	4663	4694	4724	4755	4786	4816	4847	4877
5	4544	4575	4603	4634	4664	4695	4725	4756	4787	4817	4848	4878
6	4545	4576	4604	4635	4665	4696	4726	4757	4788	4818	4849	4879
7	4546	4577	4605	4636	4666	4697	4727	4758	4789	4819	4850	4880
8	4547	4578	4606	4637	4667	4698	4728	4759	4790	4820	4851	4881
9	4548	4579	4607	4638	4668	4699	4729	4760	4791	4821	4852	4882
10	4549	4580	4608	4639	4669	4700	4730	4761	4792	4822	4853	4883
11	4550	4581	4609	4640	4670	4701	4731	4762	4793	4823	4854	4884
12	4551	4582	4610	4641	4671	4702	4732	4763	4794	4824	4855	4885
13	4552	4583	4611	4642	4672	4703	4733	4764	4795	4825	4856	4886
14	4553	4584	4612	4643	4673	4704	4734	4765	4796	4826	4857	4887
15	4554	4585	4613	4644	4674	4705	4735	4766	4797	4827	4858	4888
16	4555	4586	4614	4645	4675	4706	4736	4767	4798	4828	4859	4889
17	4556	4587	4615	4646	4676	4707	4737	4768	4799	4829	4860	4890
18	4557	4588	4616	4647	4677	4708	4738	4769	4800	4830	4861	4891
19	4558	4589	4617	4648	4678	4709	4739	4770	4801	4831	4862	4892
20	4559	4590	4618	4649	4679	4710	4740	4771	4802	4832	4863	4893
21	4560	4591	4619	4650	4680	4711	4741	4772	4803	4833	4864	4894
22	4561	4592	4620	4651	4681	4712	4742	4773	4804	4834	4865	4895
23	4562	4593	4621	4652	4682	4713	4743	4774	4805	4835	4866	4896
24	4563	4594	4622	4653	4683	4714	4744	4775	4806	4836	4867	4897
25	4564	4595	4623	4654	4684	4715	4745	4776	4807	4837	4868	4898
26	4565	4596	4624	4655	4685	4716	4746	4777	4808	4838	4869	4899
27	4566	4597	4625	4656	4686	4717	4747	4778	4809	4839	4870	4900
28	4567	4598	4626	4657	4687	4718	4748	4779	4810	4840	4871	4901
29	4568		4627	4658	4688	4719	4749	4780	4811	4841	4872	4902
30	4569		4628	4659	4689	4720	4750	4781	4812	4842	4873	4903
31	4570		4629		4690		4751	4782		4843		4904

ABBREVIATIONS

Abbreviations as used throughout this catalog are interpreted as follows:

ABS	ABSORBER
ACC	ACCESSORY
ACCEL	ACCELERATOR
A/CLNR	AIR CLEANER
A/COND	AIR CONDITIONING
ACTG	ACTUATING
ACTR	ACTUATOR
ADAPT	ADAPTOR-ADAPTATION
ADJ	ADJUSTING-ADJUSTOR-ADJUSTABLE-ADJUSTMENT
A/INL	AIR INLET
ALTR	ALTERNATOR
ALUM	ALUMINUM
AMP	AMPERE
AMPL	AMPLIFIER
AMTR	AMMETER
ANCH	ANCHOR
&	AND
A/OUT	AIR OUTLET
APPROX	APPROXIMATE, APPROXIMATELY
AR	AS REQUIRED
A/RATLR	ANTI RATTLER
A/REST	ARM REST
ARM	ARMATURE
A/SQK	ANTI SQUEAK
ASSY	ASSEMBLY
A/SUSP	AIR SUSPENSION
ATT	ATTACHING
A/TRANS	AUTOMATIC TRANSMISSION
AUTO	AUTOMATIC
AUX	AUXILIARY
BAL	BALANCE
BATT	BATTERY
BBL	BARREL
B/BRK	BOOSTER BRAKE
B/CRK	BELL CRANK
B.E.	BLACK ENAMEL
B/JNT	BALL JOINT
BLK	BLOCK
BLT	BUILT
BLWR	BLOWER
BMPR	BUMPER
BOLT & RET	BOLT & RETAINER
BOLT & WA	BOLT & WASHER
BR	BRASS
BRD	BOARD
BRG	BEARING
BRK	BRAKE
BRKT	BRACKET
BRKR	BREAKER
BRT	BRIGHT
BRZ	BRONZE
BSTR	BOOSTER
B/STUD	BALL STUD
BTM	BOTTOM
BTN	BUTTON
B/UP	BACK UP
BUSH	BUSHING
CAD	CADMIUM
CAN	CANADA-CANADIAN
CAP	CAPACITY
C.A.S.	CLEANER AIR SYSTEM
CARB	CARBURETOR
C/BAR	CROSS BAR
CBL	CABLE
C/BRD	CIRCUIT BOARD
C/BRKR	CIRCUIT BREAKER
CCW	COUNTERCLOCKWISE
C/E	COMMUTATOR END
CHAM	CHAMFERED
CHMBR	CHAMBER
CHR	CHROMIUM
C.I.	CUBIC INCH
C/IRON	CAST IRON
C/CASE	CRANKCASE
CK/SHFT	CRANKSHAFT
CL	CLEANER
CL/NUT	CLINCH NUT
C/LP	COURTESY LAMP
CLSR	CLOSURE
C/LTR	CIGAR OR CIGARETTE LIGHTER
C/MBR	CROSSMEMBER
COE	CAB OVER ENGINE
COL	COLUMN
COMB	COMBINATION
COMBN	COMBUSTION
COMP	COMPLETE, COMPONENT
COMPN	COMPRESSION
COMPR	COMPRESSOR
COMPT	COMPARTMENT
COMTR	COMMUTATOR
COND	CONDENSER
CONDT	CONDUIT
CONDTG	CONDITIONING
CONN	CONNECTING-CONNECTION-CONNECTOR
CONT	CONTINUED-CONTROL
CONT'D	CONTINUED
CONV	CONVERTER
COP	COPPER
CO/SHFT	COUNTERSHAFT
CO/WT	COUNTERWEIGHT
CP	CANDLEPOWER
C/PILLAR	CENTER PILLAR
CPLG	COUPLING
C/SHFT	CROSS SHAFT
CSTG	CASTING
CTR	CENTER
CU	CUBIC
CUSH	CUSHION
CUST	CUSTOM
CV	CONVERTIBLE
C/VAL	CONTROL VALVE
CVR	COVER
C/WT	COUNTERWEIGHT
CYL	CYLINDER
DBL	DOUBLE
D/CVR	DUST COVER
D/E	DRIVE END
DECAL	DECALCOMANIA
DEFL	DEFLECTOR
DEFR	DEFROSTER
DEG (o)	DEGREE
D/EXH	DUAL EXHAUST
DIA	DIAMETER
DIAG	DIAGONAL
DIAPH	DIAPHRAGM
DIFF	DIFFERENTIAL
DIM	DIMENSION
DIR	DIRECT-DIRECTIONAL
DIR CL	DIRECT CLUTCH
DIST	DISTRIBUTOR-DISTRIBUTING
DIV	DIVISION-DIVISIONAL
D/LINK	DRAG LINK
D/LP	DOME LAMP
DMPR	DAMPER
DOM	DOMESTIC
D/PINION	DRIVE PINION
DR	DOOR
D/R SHAFT	DOUBLE ROCKER SHAFT
DRV	DRIVE

ABBREVIATIONS (Cont'd.)

DRVN	DRIVEN
D/SEAL	DUST SEAL
D/SHLD	DUST SHIELD
D/SW	DIMMER SWITCH
ECC	ECCENTRIC
ECS	EVAPORATIVE EMISSION CONTROL SYSTEM
E.G.R.	EXHAUST GAS RECIRCULATION
ELECT	ELECTRIC
ELIM	ELIMINATOR
ENG	ENGINE
EQ	EQUIPMENT
ESC	ESCUTCHEON
ETC	ET CETERA
EVAP	EVAPORATION-EVAPORATOR
EX	EXTRA
EXH	EXHAUST
EXP	EXPORT
EXPN	EXPANSION
EXT	EXTENSION
EXTL	EXTERNAL
EXTR	EXTRUDED
F	FAHRENHEIT
FACT	FACTORY
F/AIR	FRESH AIR
FAST	FASTENING-FASTENER
F/AXLE	FRONT AXLE
F/BRD	FLOOR BOARD
F/CPLG	FLUID COUPLING
F/DR	FRONT DOOR
F/FILT	FUEL FILTER
F/FLR	FRONT FLOOR
F/GA	FUEL GAGE
F/IDLE	FAST IDLE
FIL HD	FILLISTER HEAD
FIN	FINISH
F/INJ	FUEL INJECTION
FLD	FIELD
FLEX	FLEXIBLE
FLG	FLANGE
FL. HD	FLAT HEAD
FLR	FLOOR
F/MLDG	FINISH MOULDING
FNDR	FENDER
F/PAN	FLOOR PAN
F/PUMP	FUEL PUMP
FREQ	FREQUENCY
FRT	FRONT
FT	FOOT-FEET
F/TANK	FUEL TANK
FTG	FITTING
F/TOP	FOLDING TOP
GA	GAUGE-GAGE
GALV	GALVANIZED
GARN	GARNISH
G/BOX	GLOVE BOX
GEN	GENERATOR
GLA	GLASS
G/MLDG	GARNISH MOULDING
GND	GROUND
GOV	GOVERNOR
GR	GEAR
G/REG	GENERATOR REGULATOR
GRL	GRILLE
GRMT	GROMMET
G/SHIFT	GEARSHIFT
GSKT	GASKET
GVW	GROSS VEHICLE WEIGHT
H/BRK	HAND BRAKE
H/C	HIGH COMPRESSION
HD	HEAD
H/D	HEAVY DUTY
HDL	HANDLE
H/LIN	HEAD LINING
HDLS	HEADLESS
HDR	HEADER
HEMI	HEMISPHERICAL
HEX	HEXAGON
HGE	HINGE
H/GUIDE	HYDRAGUIDE
H/LP	HEADLAMP
H/PERF	HIGH PERFORMANCE
H/REST	HEAD REST
HSG	HOUSING
H/SINK	HEAT SINK
H/SHLD	HEAT SHIELD
HTR	HEATER
HVY	HEAVY
HYD	HYDRAULIC
I/ARM	IDLER ARM
I.D.	INSIDE DIAMETER
IDENT	IDENTIFICATION
IGN	IGNITION
IN	INCH
INCL	INCLUSIVE-INCLUDES
IND	INDUSTRIAL
INDIC	INDICATOR
INL	INLET
INR	INNER
INS	INSULATING-INSULATION-INSULATOR
INST	INSTRUMENT-INSTRUCTION
INT	INTAKE
INTER	INTERMITTENTLY-INTERMEDIATE
INTL	INTERNAL
INTLK	INTERLOCK
I/PNL	INSTRUMENT PANEL
I/PULLEY	IDLER PULLEY
I/S	INSIDE
J/BLK	JUNCTION BLOCK
JNT	JOINT
K/DN	KICKDOWN
KILO	KILOMETER
KNU	KNUCKLE
K/UP	KICKUP
LBS	POUNDS
L/C	LOW COMPRESSION
LCF	LOW CAB FORWARD
L/COMPT	LUGGAGE COMPARTMENT
LEA	LEATHER
LGH	LENGTH
LHD	LEFT HAND DRIVE
L.H. THD	LEFT HAND THREAD
LIC	LICENSE
LIN	LINING-LINER
LK	LOCK
LKG	LOCKING
LK/NUT	LOCK NUT
LK/WA	LOCK WASHER
LOC	LOCATING
LP	LAMP
L.S.H.	LOW SECTION HEIGHT
LT	LEFT
LTR	LIGHTER
LUB	LUBRICANT-LUBRICATING
LUGG	LUGGAGE
LVR	LEVER
LWR	LOWER
M&I	MARINE & INDUSTRIAL
M/ADJ	MANUAL ADJUSTING
MAN	MANUAL
MANF	MANIFOLD
MAR	MARINE
MAX	MAXIMUM
MAX. PERF	MAXIMUM PERFORMANCE
M/BRK	MANUAL BRAKE
MBR	MEMBER
M/CYL	MASTER CYLINDER
MECH	MECHANISM
MED	MEDIUM
MEDAL	MEDALLION
MIL	MILITARY

ABBREVIATIONS (Cont'd.)

MIN	MINIMUM
MLDG	MOULDING
MOD	MODEL
M/MTRG	MAIN METERING
M.P.H.	MILES PER HOUR
MT	MOUNT
MTG	MOUNTING
MTR	MOTOR
M/TRANS	MANUAL TRANSMISSION
MTRG	METERING
NEG	NEGATIVE
NEUT	NEUTRAL
NI	NICKEL
NO. OR #	NUMBER
NOM	NOMINAL
NO	NITROGEN OXIDE EMISSION CONTROL
N/PLT	NAME PLATE
NUT & WA	NUT AND WASHER
O/CTR	OVER CENTER
O.D.	OUTSIDE DIAMETER
O/DRV	OVER DRIVE
O/GA	OIL GAUGE
OPER	OPERATING
OPNG	OPENING
OPP	OPPOSITE
OPT	OPTIONAL
O/PUMP	OIL PUMP
ORN	ORNAMENT
O/RUNN	OVERRUNNING
O/S	OUTSIDE
O/SIZE	OVERSIZE
OTR	OUTER
OUTL	OUTLET
OV	OVAL
O/W	OPTIONAL WITH
O/WRAP	OVERWRAP
OZ	OUNCE
P	PITCH
PACK	PACKING
PARK	PARKING
PART	PARTIAL, PARTITION
PASS	PASSENGER
P/BRK	POWER BRAKE
P/BTN	PUSH BUTTON
PC/BRD	PRINTED CIRCUIT BOARD
PED	PEDAL
PERF	PERFORMANCE
PIST	PISTON
PIV	PIVOT
PKG	PACKAGE
PL	PLAIN
P/LAMP	PARKING LAMP
PLR	PILLAR
PLT	PLATE-PLATED
PLUNG	PLUNGER
PL/WA	PLAIN WASHER
P/MTR	POTENTIOMETER
PNL	PANEL
PNTD	PAINTED
POS	POSITIVE
POLY	POLYESTER
P/PNL	POCKET PANEL
PRESS	PRESSURE
PRI	PRIMARY
PROD	PRODUCTION
P/ROD	PUSH ROD
PROP	PROPELLER
PRPG	PROPORTIONING
PSF	POUNDS PER SQUARE FOOT
PSI	POUNDS PER SQUARE INCH
P/STRG	POWER STEERING
PT	POINT
PTO	POWER TAKE-OFF
PWR	POWER
Q/PNL	QUARTER PANEL
QTR	QUARTER
Q/WDO	QUARTER WINDOW
R	RADIUS
R/A	REAR AXLE
R/AXLE	REAR AXLE
RAD	RADIATOR
R/CONT	REMOTE CONTROL
RC/SHFT	ROCKER SHAFT
RD	ROUND
R/DR	REAR DOOR
REC	RECEIVER
RECIR	RECIRCULATING
RECT	RECTANGULAR
RECTR	RECTIFIER
RED	REDUCTION
REFL	REFLECTOR
REG	REGULATOR
REINF	REINFORCEMENT
REL	RELEASE
REM	REMOTE
REQ	REQUIRED
RES	RESISTOR
RET	RETAINER
RETG	RETAINING
REV	REVERSE
REVERB	REVERBERATOR
R/FLR	REAR FLOOR
RHD	RIGHT HAND DRIVE
RHEO	RHEOSTAT
R.H. THD	RIGHT HAND THREAD
R/L	RIGHT AND LEFT
RPM	REVOLUTIONS PER MINUTE
R/QTR	REAR QUARTER
RR	REAR
RSVR	RESERVOIR
RT	RIGHT
R/WDO	REAR WINDOW
S/ABS	SHOCK ABSORBER
S/COMPT	SIDE COMPARTMENT
S/DEFL	STONE DEFLECTOR
SECT	SECTION
SER	SERIAL-SERVICE
S/EXH	SINGLE EXHAUST
S-FIN	SEMI-FINISHED
S/GR	STEERING GEAR
SHFT	SHIFT
SHLD	SHIELD
SIG	SIGNAL
S/KNU	STEERING KNUCKLE
SLD	SLIDE
SLDG	SLIDING
S/LP	STOP LAMP
SLTD	SLOTTED
SLV	SLEEVE
S/MBR	SIDE MEMBER
SOC	SOCKET
SOL	SOLENOID
SPD	SPEED
SPEEDO	SPEEDOMETER
SPKR	SPEAKER
SPL	SPECIAL
SPL. EQUIP	SPECIAL EQUIPMENT
SPRG	SPRING
S/PNL	SIDE PANEL
SP/SHLD	SPLASH SHIELD
SQ	SQUARE
S/R SHAFT	SINGLE ROCKER SHAFT
S/RAIL	SIDE RAIL
S/RING	SNAP RING
S/SHLD	SIDE SHIELD
S/SILL	SIDE SILL
S/SPD	SINGLE SPEED
STA	STATION-STATIONARY
STAB	STABILIZER
STD	STANDARD

ABBREVIATIONS (Cont'd.)

STGHT	STRAIGHT
STL	STEEL
STRG	STEERING
STRKR	STRIKER
STRNR	STRAINER
STRTR	STARTER
SUCT	SUCTION
SUPT	SUPPORT
SUSP	SUSPENSION
SW	SWITCH
SYNCH	SYNCHRONIZER
T	TEETH
TAP	TAPPING
T/BKL	TURN BUCKLE
T/BLK	TERMINAL BLOCK
T/COMP	TRIMMED COMPLETE
T/CONT	THROTTLE CONTROL
T/CONV	TORQUE CONVERTER
TEMP	TEMPERATURE
TERM	TERMINAL
T/GA	TEMPERATURE GAUGE
T/GATE	TAILGATE
THD	THREAD
THK	THICK
THERMO	THERMOSTAT
3RD	THIRD
THR	THRUST
THROT	THROTTLE
T.I.C.	THERMOSTATIC IGNITION CONTROL
T/LP	TAIL LAMP
TORQ	TORQUE
TORS	TORSION
TPI	THREADS PER INCH
T/PIPE	TAIL PIPE
T/PLT	TAPPING PLATE
T/PNL	TRIM PANEL
TPR	TAPER
TRANS	TRANSMISSION
TRANSF	TRANSFER
TRIMD	TRIMMED
TRUN	TRUNNION
T/SIG	TURN SIGNAL
TST	TAIL STOP & TURNING
T/STRIP	TACKING STRIP
TUB	TUBULAR
U/BODY	UNDERBODY
U/DRV	UNDERDRIVE
U/JNT	UNIVERSAL JOINT
UNIV	UNIVERSAL
UPR	UPPER
U/S	UNDERSIZE
U/SEAT	UNDERSEAT
U/W	USED WITH
V	VOLT
VAC	VACUUM
VAL	VALVE
V/DMPR	VIBRATION DAMPER
VENT	VENTILATOR-VENTILATING
VERT	VERTICAL
VOL. CONT	VOLUME CONTROL
V/REG	VOLTAGE REGULATOR
V/SPD	VARIABLE SPEED
V/WING	VENT WING
W	WATT
W/	WITH
WA	WASHER
WAG	WAGON
W.B.	WHEELBASE
W/BRG	WHEEL BEARING
W/CORD	WEATHERCORD
WDO	WINDOW
WHL	WHEEL
W/HSE	WHEELHOUSE
W/LIFT	WINDOW LIFT
W/O	WITHOUT
W/PUMP	WATER PUMP
W/REG	WINDOW REGULATOR
W/SHLD	WINDSHIELD
W/STRIP	WEATHERSTRIP
WT	WEIGHT
W/WASHER	WINDSHIELD WASHER
W/WPR	WINDSHIELD WIPER
X/MBR	X MEMBER

NOTES

NOTES

CODE	PART NAME AND PART NUMBER

PARTS PACKAGES

1-47-1 DEFOGGER PACKAGE
(BASIC) ..... Part No. 3502 097
Consists of:

1 -		Blower Assy.
1 -	2607 141	Plate, Blower Mt.
3 -	6027 964	Screw, Blower to Mt. Plate Mt.
4 -	6029 087	Screw, Blower & Plate Mt.
4 -		Nut, Blower & Plate Mt.
2 -		Nut, Outlet Duct & Bezel Mt.
1 -		Clamp, Flex Tube Mt.
1 -		Tube, Flex 16"
1 -	2837 219	Bezel, Inlet
1 -	2837 220	Grille, Inlet
4 -	9426 436	Screw, Inlet Bezel Mt.
1 -		Wiring Assy., Fuse Block to Acc. Feed
1 -	106 653	Fuse
1 -		Wiring Assy.
1 -	2837 748	Duct Assy. Outlet
1 -	2521 668	Bezel & Gasket Assy. Outlet
1 -	6029 087	Screw, Outlet Duct Mt.
1 -		Seal, Duct

1-47-1 DEFOGGER PACKAGE
(BASIC) ..... Part No. 3502 098
Consists of:

1 -		Blower Assy.
1 -	2607 141	Plate, Blower Mt.
3 -	6027 964	Screw, Blower to Mt. Plate Mt.
4 -	6029 087	Screw, Blower & Plate Mt.
4 -		Nut, Blower & Plate Mt.
2 -		Nut, Outlet Duct & Bezel Mt.
1 -		Clamp, Flex Tube Mt.
1 -		Tube, Flex 16"
1 -	2837 219	Bezel, Inlet
1 -	2837 220	Grille, Inlet
4 -	9426 436	Screw, Inlet Bezel Mt.
1 -		Wiring Assy. Fuse Block to Acc. Feed
1 -	106 653	Fuse
1 -		Wiring Assy. Motor
1 -	2607 754	Duct Assy. Outlet
1 -	3441 005	Bezel, Outlet
1 -		Seal, Outlet Bezel

1-47-1 DEFOGGER PACKAGE
(BASIC) ..... Part No. 3502 099
Consists of:

1 -		Blower Assy.
1 -	2607 141	Plate, Blower Mt.
3 -	6027 964	Screw, Blower to Mt. Plate Mt.
4 -	6029 087	Screw, Blower & Plate Mt.
1 -	2837 219	Bezel, Inlet
1 -	2837 220	Grille, Inlet
4 -	9426 436	Screw, Inlet Bezel Mt.
4 -	9419 662	Screw, Inlet Bezel Mt.
4 -		Nut, Blower & Plate Mt.
1 -	2485 738	Duct Assy., Outlet
1 -		Seal, Outlet Duct
1 -	6029 087	Screw, Outlet Duct Mt.
2 -		Nut & Wa., Outlet Duct & Bezel Mt.
1 -	2096 989	Tube, Flex 14.5"
1 -		Clamp, Flex Tube Ret.
1 -	2219 627	Bezel & Gasket Assy. Outlet
1 -		Wiring Assy.

1-47-1 DEFOGGER PACKAGE,
R/WINDOW (BASIC) ..... Part No. 3502 820
Consists of:

1 -		Blower Assy.
1 -	2607 141	Plate, Blower Mtg.
3 -	6027 964	Screw, Blower to Mt. Plate Mt.
4 -	6029 087	Screw, Blower & Plt. Mt. with Factory Installed Speaker
4 -	116 000	Nut, Blower & Plt. Mt.
2 -		Nut, Outlet Duct & Bezel Mt.
1 -		Clamp, Flex Tube Mt.
1 -		Tube, Flex 16"
1 -	2837 219	Bezel, Inlet
1 -	2837 220	Grille, Inlet
4 -	9426 436	Screw, Inlet Bezel Mt.
1 -		Wiring Assy., Fuse Block to Acc. Feed
1 -	106 653	Fuse
1 -		Wiring Assy.
1 -	2607 776	Duct Assy., Outlet
1 -	3502 240	Bezel Assy., Outlet
1 -	6029 087	Screw, Outlet Duct Mt.
1 -		Gasket, Bezel
1 -		Seal, Outlet Duct

1-47-1 DEFOGGER PACKAGE,
R/WINDOW (BASIC) ..... Part No. 3502 821
Consists of:

1 -		Blower Assy.
1 -	2607 141	Plate, Blower Mt.
3 -	6027 964	Screw, Blower to Mt. Plate Mt.
4 -	6029 087	Screw, Blower & Plate Mt. with Factory Installed Speaker
4 -		Nut, Blower & Plt. Mt.
2 -	116 000	Nut, Outlet Duct & Bezel Mt.
1 -		Clamp, Flex Tube Mt.
1 -		Tube, Flex 16"
1 -	2837 219	Bezel, Inlet
1 -	2837 220	Grille, Inlet
4 -	9426 436	Screw, Inlet Bezel Mt.
1 -		Wiring Assy., Fuse Block to Acc. Feed
1 -	106 653	Fuse
1 -		Wiring
1 -	3503 335	Duct Assy., Outlet
1 -	3502 240	Bezel Assy Outlet
1 -	6029 087	Screw, Outlet Duct Mt.
1 -		Gasket, Bezel
1 -		Seal, Outlet Duct

1-47-2 ADAPTER PACKAGE,
REAR WINDOW DEFOGGER ..... Part No. 3420 943
Consists of:

1-	3488 815	Name Plate Switch
1-	2820 455	Switch
1-	6008 060	Nut
1 -		Switch Wiring

1-47-2 ADAPTER PACKAGE,
REAR WINDOW DEFOGGER
w/DUAL SPEAKERS ..... Part No. 3441 426
Consists of:

1 -	2936 346	Adapter, Blower and Speaker
3 -	6027 964	Screw, Adapter Mtg.

Printed in U.S.A.
November, 1974

CODE	PART NAME AND PART NUMBER
1 - 2936 347	Plate, Blower Mtg.
2 -	Screw, Plate Mtg.
4 -	Screw, Blower Mtg.
1 - 2936 688	Bracket
2 - 6027 964	Screw, Bracket Mtg.

1-47-2 ADAPTER PACKAGE, REAR WINDOW DEFOGGER . . . . . Part No. 3579 234
Consists of:

1-	Wiring, Rr. Window Defogger Switch
1- 3488 235	Lamp & Bracket, Rr. Window Defogger
1- 3488 520	Switch, Rr. Window Defogger
1- 3488 526	Bezel
4- 6029 087	Screw

1-47-2 ADAPTOR PACKAGE, REAR WINDOW DEFOGGER . . . . . Part No. 3837 168
Consists of:

1 - 2947 411	Switch
1 -	Wiring Assy.
1 -	Decal, Sw. Nomenclature
1 -	Decal, Sw. Nomenclature
2 - 9416 049	Screw

1-47-2 ADAPTOR PACKAGE, REAR WINDOW DEFOGGER . . . . . Part No. 3837 169
Consists of:

1 -	Switch & Lamp Assy.
1 - 3746 510	Bezel, I/Pnl.
2 - 6024 654	Screw
2 - 9414 977	Nut
1 -	Wiring Assy., Switch

1-47-3 ADAPTOR PACKAGE, REAR WINDOW DEFOGGER . . . . . Part No. 3837 170
Consists of:

1 - 3746 706	Switch & Lamp Assy.
1 - 3746 571	Bezel, I/Pnl.
2 - 6024 654	Screw
2 - 9428 739	Nut
1 -	Wiring Assy.

1-74-1 DECK LID LUGGAGE RACK PACKAGE . . . . . Part No. 3419 498
Consists of:

1 -	Lugg. Rack
2 - 3445 415	Support, Inter. Tube
2 -	Support, Frt. Tube
2 - 3445 418	Pad, Frt. Tube Supp.
4 -	Screw w/1/4-20 x 2.225
4 - 6028 290	Washer, Ret. Support (Special)
4 - 6028 289	Washer, Sealing
4 - 6028 288	Washer, Insulating
4 -	Rivnut, 1/4-20
2 -	Nut and Washer, 5/16-18 3/4 O.D.
4 - 138 485	Washer, Int. Tooth Lock

1-74-1 ROOF LUGGAGE RACK PACKAGE . . . . . Part No. 3720 726
Consists of:

1-	Rail, Roof Lugg. Rack Side Rt./Lt.
5- 3720 139	Skidstrip, Roof Lugg. Rack
2- 3720 133	Bar, Roof Lugg. Rack Cross
8- 6028 674	Screw, Roof Lugg. Rack Cross Bar to Bracket
8- 2094 869	Nut, Roof Lugg. Rack Side Rail to Roof Panel
8-	Screw, Roof Lugg. Rack Side Rail Support to Roof Panel
2- 3720 130-1	Spacer, Roof Lugg. Rack to Side Rail Supt. Rt./Lt.

1-74-1 ROOF LUGGAGE RACK . . . . . Part No. 3767 464
Consists of:

1 - 3767 478-9	Support, Roof Lugg. Rack Side Rail Rr.
1 - 3767 480-1	Support, Roof Lugg. Rack Side Rail Frt.
1 - 3810 128-1	Bracket, Roof Lugg. Rack Cross Bar
2 - 3767 474	Rail, Roof Lugg. Rack Side
2 - 3720 135	Plate, Tapping
4 - 6029 960	Screw, Roof Lugg. Rack Cross Bar Brkt. to Rail
4 - 6029 973	Screw, Roof Lugg. Rack S/Rail Supt. to S/Rail
2 - 3767 467	Skid Strip, Roof Lugg. Rack Outer
2 - 3810 182	Skid Strip, Roof Lugg. Rack Interm.
1 - 3810 112	Skid Strip, Roof Lugg. Rack Ctr.
1 - 3767 465	Bar, Roof Lugg. Cross Rr.
1 - 3767 468-9	Spacer, Roof Lugg. Rack Side Rail Supt. Frt.
1 - 3767 470-1	Spacer, Roof Lugg. Rack Side Rail Supt. Rr.
1 - 3810 066	Spacer, Roof Lugg. Rack Ctr. Support
1 - 3767 482	Support, Roof Lugg. Rack Ctr. Lwr.
1 - 3810 158	Support, Roof Lugg. Rack Ctr. Upper
2 - 3767 484	Rail, Roof Rack Frt. Cross
4 - 6030 433	Screw, Roof Lugg. Rack Cross Bar Rr.
4 - 6030 433	Screw, Roof Lugg. Rack Frt. Cross Rail
1 - 6029 070	Screw, Roof Lugg. Rack Ctr. Upr. Support
2 - 6029 070	Screw, Roof Lugg. Rack Ctr. Lwr. Support
8 - 6029 070	Screw, Roof Lugg. Rack Side Rail
2 - 2094 869	Nut, Roof Lugg. Rack Ctr. Lwr. Support
8 - 2094 869	Nut, Roof Lugg. Rack Side Rail

1-87-2 SPEAKER AND CONTROL PACKAGE REAR COMPARTMENT . . . . . Part No. 3488 423
Consists of:

1 - 3488 325	Control, Rr. Comp. Speaker
1 - 3488 322	Bezel, Rr. Speaker Cont.
1 -	Nut, Rr. Speaker Cont. Mtg.
1 - 3488 323	Knob, Rr. Speaker Control
1 - 2580 038	Wiring, Rr. Speaker Control to Speaker Assy.
1 -	Speaker, Rr. Shelf Panel
1 -	Insulator, Radio Lead
1 - 2291 876	Grille, Rr. Compt. Speaker
1 - 1819 014	Bezel, Rr. Compt. Speaker
4 - 1206 14	Nut, Speaker Grille & Bezel Mtg.
1 - 3513 555	Wiring, Fader Switch

1-87-2 SPEAKER CONTROL PACKAGE RR. COMPT. . . . . Part No. 3488 424
Consists of:

1 - 3488 325	Control, Rr. Compt. Speaker
1 - 3488 322	Bezel, Rr. Speaker Control
1 - 6028 839	Nut, Rr. Speaker Control Mtg.
1 - 3488 323	Knob, Rr. Speaker Control
1 -	Wiring, Control to Speaker
1 - 2298 882	Insulator, Radio Lead
1 - 3488 209	Bracket and Seal Rr. Speaker Mtg.
1 - 3488 211	Speaker, Rr. Compt.
4 -	Nut and Lockwasher Speaker to Bracket Mtg.

Printed in U.S.A.
November, 1974

CODE	PART NAME AND PART NUMBER
4 - 9415 214	Screw, Speaker and Bracket to Front Support Mtg.
1 - 2826 GX9	Bezel and Grille, Rr. Speaker
4 - 9414 977	Nut, Bezel and Grille to Cover Mtg.
1 -	Jumper Wire
1 - 3513 555	Wiring, Fader Switch X

1-87-2 FRT. & RR. SPEAKER
STEREO PACKAGE . . . . . Part No. 3501 349
Consists of:

2 - 3501 280	Speaker Assy., Rr. Shelf
8 -	Screw, Rr. Shelf Speaker Mtg.
8 - 6022 701	Washer, Rr. Shelf Speaker Mtg.
2 - 3501 281	Speaker, Stereo Radio I/Pnl.
4 -	Screw, Radio Speaker to Cowl Ext. Mtg.
1 - 3764 703	Wiring Assy., Rr. Speaker

1-87-2 RR. COMPT. SPEAKER &
CONTROL PACKAGE . . . . . Part No. 3501 358
Consists of:

1 - 3746 726	Control Assy., Rr. Compt. Speaker
1 - 3488 323	Knob Assy., Rr. Compt. Speaker
1 - 2947 359	Knob Assy., Rr. Compt. Speaker (Rallye)
1 - 2947 484	Bezel, Rr. Compt. Speaker
1 - 2947 673	Bezel, Rr. Compt. Speaker (Rallye)
1 - 3488 754	Nut, Rr. Compt. Speaker
1 - 2298 882	Insulator, Radio Wiring
1 - 2427 603	Assy., Rr. Compt. Speaker
4 - 9415 956	Screw, Rr. Compt. Speaker Mtg.
1 - 2291 876	Grille, Rr. Compt. Speaker
1 - 1819 014	Bezel, Rr. Compt. Speaker
4 - 120 614	Nut, Rr. Compt. Speaker Mtg.
1 - 2580 038	Wiring Assy., Rr. Speaker Cont. to Speaker
1 - 1887 603	Nut, Rr. Compt. Speaker (Rallye)

1-87-2 RR. COMPT. SPEAKER &
CONTROL PACKAGE . . . . . Part No. 3501 359
Consists of:

1 - 3746 737	Control Assy., Rr. Compt. Speaker
1 - 3488 323	Knob Assy., Rr. Compt. Speaker
1 - 2947 484	Bezel, Rr. Compt. Speaker
1 - 3488 754	Nut, Rr. Compt. Speaker
1 - 3501 280	Speaker Assy., Rr. Shelf
4 -	Screw, Rr. Shelf Speaker Mtg.
4 - 6022 701	Washer, Rr. Shelf Speaker Mtg.
1 -	Wiring Assy., Fader Switch

1-87-2 FRT. & RR. SPEAKER
STEREO PACKAGE . . . . . Part No. 3501 363
Consists of:

8 - 6022 701	Washer, Rr. Speaker Mtg.
2 - 3501 281	Speaker, Stereo Radio I/Pnl.
4 -	Screw, Radio Speakers to Cowl Ext. Mtg.
1 - 3764 704	Wiring Assy., Rr. Speaker
2 - 3501 282	Speaker, Radio Rear Compt.
8 -	Nut & Lockwasher
1 - 3501 304	Brkt. & Seal, Rr. Speaker Mtg. (Rt.)
1 - 3501 305	Brkt. & Seal, Rr. Speaker Mtg. (Lt.)
8 -	Screw, Speaker & Brkt. Mtg.
1 -	Bezel & Grille Assy. (Rt.)
1 -	Bezel & Grille Assy. (Lt.)
8 - 9414 977	Nut, Bezel & Grille Assy. Mtg.

2-07-1 END PACKAGE, TIE ROD,
STEERING LINKAGE . . . . . Part No. 3004 794
3004 795
Consists of:

1 -	Bolt, Tie Rod Tube Clamp
1 -	Clamp, Tie Rod Tube
1 -	End, Tie Rod
1 - 9425 132	Nut, Tie Rod End Stud
1 -	Nut, Tie Rod Tube Clamp Bolt
1 -	C/Pin, Tie Rod End Stud Nut

END PACKAGE, TIE ROD,
STEERING LINKAGE . . . . . Part No.
3420 154
3420 155
Consists of:

1 - 181 610	Bolt, Tie Rod Tube Clamp
1 -	Clamp, Tie Rod Tube
1 -	C/Pin, Tie Rod End Stud Nut
1 -	End, Tie Rod
1 - 9425 132	Nut, Tie Rod End Stud

2-08-57 BALL JOINT PACKAGE,
FRONT SUSPENSION
UPPER . . . . . Part No. 2298 534
Consists of:

1 -	Ball Joint
1 -	Nut, Ball Joint Stud
1 -	Pin, Ball Joint Stud Nut Cotter
1 - 1825 487	Seal, Ball Joint
1 - 1672 960	Washer, Ball Joint Stud Nut

BALL JOINT PACKAGE,
FRONT SUSPENSION
UPPER . . . . . Part No. 2808 394
Consists of:

1 -	Ball Joint
1 - 128 027	Nut, Ball Joint Stud
1 -	Pin, Ball Joint Stud Nut Cotter
1 - 1825 761	Seal, Ball Joint
1 - 1672 960	Washer, Ball Joint Stud Nut

2-08-59 CAM and BUSHING
PACKAGE, FRONT
SUSPENSION UPPER
CONTROL ARM. . . . . Part No. 2448 099
Consists of:

2 -	Bushing, Arm
2 -	Bracket, Cam
2 -	Cam, Bracket Slotted
2 - 1825 449	Nut, Bracket Bolt
2 - 120 384	Washer, Bracket Cam
1 -	Sleeve

2-10-55 ARM STEERING KNUCKLE BALL JOINT HOUSING
PACKAGE . . . . . Part No. # 3683 972
3683 973
3683 984
3683 985
Consists of:

1-	Arm, Steering Knuckle Ball Joint Housing
1-	Nut, Steering Knuckle Ball Joint Stud
1-	Pin, Steering Knuckle Ball Joint Stud

2-10-61 SHAFT PACKAGE, FRONT SUSPENSION,
LOWER CONTROL ARM . . . . . Part No. 2808 579
2808 580

Printed in U.S.A.
November, 1974

CODE	PART NAME AND PART NUMBER
	Consists of:
	1 - 6024 484 Nut
	1 - Shaft
	1 - 2071 470 Washer
	SHAFT AND BUSHING PACKAGE, FRONT SUSPENSION LOWER CONTROL ARM . . . . . Part No. # 3837 082
	Consists of:
	1 - Shaft
	1 - 3402 766 Bushing
	1 - 6030 394 Nut
	SHAFT AND BUSHING PACKAGE, FRONT SUSPENSION LOWER CONTROL ARM . . . . . Part No. # 3837 083
	Consists of:
	1 - Shaft
	1 - 3722 569 Bushing
	1 - 6030 394 Nut
2-14-1	BOLT and SWIVEL PACKAGE, FRONT SUSPENSION TORSION BAR or SPRING, FRONT END ADJUSTING . . . . . Part No. 2275 468 2275 469
	Consists of:
	1 - Bolt
	1 - Swivel
	BOLT and SWIVEL PACKAGE, FRONT SUSPENSION, LOWER CONTROL ARM . . . . . Part No. # 3780 532
	Consists of:
	1 - Bolt
	1 - Swivel
3-19-1	GEAR AND PINION PACKAGE 2.76 to 1 . . . . . Part No. 3621 939
	Consists of:
	1 - Gear Set
	1 - 3507 575 Spacer
	1 - 2070 117 Washer, Flange
	1 - 6028 041 Nut, Flange
	1 - Sheet, Instruction
	GEAR and PINION, PACKAGE 2.71 to 1 . . . . . Part No. 3744 452
	2.94 to 1 . . . . . Part No. 3744 454
	3.21 to 1 . . . . . Part No. 3744 455
	3.55 to 1 . . . . . Part No. 3744 456
	Consists of:
	1- Gear Set
	1- 3507 575 Spacer, Brg. Adjuster
	GEAR AND PINION, PACKAGE 2.76 to 1 . . . . . Part No. 3744 487
	Consists of:
	1 - Gear Set
	1 - 2931 687 Spacer
	GEAR AND PINION,
	GEAR AND PINION, PACKAGE 2.71 to 1 . . . . . Part No. 3780 529
	3.23 to 1 . . . . . Part No. 3780 530
	3.55 to 1 . . . . . Part No. 3838 001
	Consists of:
	1 - Gear Set
	1 - 3507 678 Spacer
	GEAR AND PINION PACKAGE 2.45 to 1 . . . . . Part No. 3837 579
	Consists of:
	1 - Gear Set
	1 - 2800 484 Cone, Drive Pinion Rr. Brg.
	1 - 2800 485 Cup, Drive Pinion Rr. Brg.
	1 - 3507 575 Spacer, Adj.
	1 - 2070 316 Cone, Drive Pinion Frt. Brg.
	1 - 2070 317 Cup, Drive Pinion Frt. Brg.
	1 - 2881 041 Seal, Drive Pinion Frt. Brg.
	10 - Screw, Drive Gear
3-33-1	REPAIR PACKAGE, DRIVE SHAFT BRG. . . . . Part No. 3420 090
	Consists of:
	1 - 2070 993 Bearing
	1 - Collar
	1 - 2404 052 Seal
	2 - 2467 095 Gasket, Housing Brkt. Support Plate
	DRIVE SHAFT BEARING, Rt. . . . . Part No. 3420 094
	Consists of:
	1 - Retainer and Adjuster, Shaft
	1 - Brg., Rt.
	1 - Seal, Oil
	1 - Seal, Outer
	1 - Cone
	1 - 2467 103 Cup
	1 - Collar
	1 - 2070 933 Gasket, Retainer
	1 - 2881 314 Gasket, Housing Brake Support Plate
	REPAIR PACKAGE, DRIVE SHAFT BEARING . . . . . Part No. 3683 966
	Consists of:
	1 - Retainer and Adjuster Assy., Rt.
	1 - Seal, Oil
	1 - Seal, Outer
	1 - Cone
	1 - Cup
	1 - Collar
	1 - 2070 933 Gasket, Retainer
	1 - 2881 314 Gasket, Housing Brake Support Plate
	1 - Retainer, Lt.
	1 - Instruction Sheet
5-03-1	LINING PACKAGE, FOR BONDING . . . . . Part No. 3579 268
	Consists of:
	2 - Lining, Frt. Whl. Brk. Shoe Pri.
	2 - Lining, Frt. Whl. Brk. Shoe Sec.
	2 - Lining, Rear Whl. Brk. Shoe Pri.
	2 - Lining, Rear Whl. Brk. Shoe Sec.
5-03-3	BRAKE SHOE AND LINING PACKAGE DISC BRAKES . . . . . Part No. 3744 449
	Consists of:
	2- Shoe and Lining Frt. Whl. Disc Brk. Inner
	2- Shoe and Lining Frt. Whl. Disc Brk. Outer
	4- Bushing, Frt. Whl. Disc Brk. Loc. Pin Inner

Printed in U.S.A.
November, 1974

CODE	PART NAME AND PART NUMBER

5-03-3 BRAKE SHOE AND LINING PACKAGE
DISC BRAKES FRONT . . . . . Part No. 3780 549 3780 755
Consists of:
2 - Shoe and Lining Frt. Whl. Disc Brk. Inner
2 - Shoe and Lining Frt. Whl. Disc Brk. Outer
4 - 3580 824 Plate, Frt. Whl. Disc Brk. Retg.
4 - 3580 823 Spring, Frt. Whl. Disc Brk. Retg. Plt.

5-03-3 BRAKE SHOE AND LINING PACKAGE
DISC BRAKES FRONT . . . . . Part No. 3780 752
Consists of:
2 - Shoe and Lining, Frt. Whl. Disc Brk. Inner
2 - Shoe and Lining, Frt. Whl. Disc Brk. Outer
4 - 3580 822 Plate, Frt. and Rr. Whl. Disc Brk. Retg.
4 - 3580 823 Spring, Frt. and Rr. Whl. Disc Brk. Retg. Plt.
4 - 6029 930 Screw, Frt. and Rr. Whl. Disc Brk. Retg. Mtg.

5-03-3 BRAKE SHOE AND LINING PACKAGE
DISC BRAKES FRONT . . . . . Part No. 3780 754
Consists of:
2 - Shoe and Lining, Frt. Whl. Disc Brk. Outer
2 - Shoe and Lining, Frt. Whl. Disc Brk. Inner
1 - 3780 517 Bushing, Brk. Caliper Loc. Pin Pkg.

5-03-3 BRAKE SHOE AND LINING PACKAGE
RR. WHL. DISC BRAKES . . . . . Part No. 3780 751
Consists of:
2 - Shoe and Lining, Rr. Whl. Disc Brk. Inner
2 - Shoe and Lining, Rr. Whl. Disc Brk. Outer
4 - 3580 822 Plate, Frt. and Rr. Whl. Disc Brk. Retg.
4 - 3580 823 Spring, Frt. and Rr. Whl. Disc Brk. Retg. Plt.
4 - 6029 930 Screw, Frt. and Rr. Whl. Disc Brk. Retg. Mtg.

5-03-3 BRAKE SHOE AND LINING PACKAGE RR. WHL.
DISC PK/BRK. . . . . Part No. 3780 753
Consists of:
4 - Shoe, Rr. Whl. Disc Pkg./Brk.

5-03-3 BRAKE SHOE AND LINING,
PACKAGE REAR . . . . . Part No. 3621 986
Consists of:
2 - Shoe and Lining Primary
2 - Shoe and Lining A/Adj. Lever Pin Rt./Lt. Secondary
2 - 2944 844 Spring, Brk. Shoe Return

5-03-3 BRAKE SHOE and
LINING PACKAGE
RR. WHEEL. . . . . Part No. 3004 862
Consists of:
2 - Shoe and Linings, Primary
2 - Shoe and Linings, Secondary

5-03-3 BRAKE SHOE AND LINING
PACKAGE RR. . . . . Part No. 3579 295
Consists of:
2- Shoe and Lining Rr. Whl. Brk. Primary
2- Shoe and Lining Rr. Whl. Brk. w/Adj. Lever Secondary Rt./Lt.
2- - 2944 968 Spring, M/Adj. Screw Lock Whl. Brk.

CODE	PART NAME AND PART NUMBER

5-05-9 SEAL, BOOT AND BUSHING
PACKAGE . . . . . Part No. 3579 255
Consists of:
1- Boot, Piston
1- Seal, Piston
2- Bushing, Locating Pin - Outer
2- Bushing, Locating Pin - Inner
1- Lubricant (1 oz.)

5-05-9 BOOT and SEAL,
PACKAGE DISC BRAKE. . . . . Part No. 3780 533
Consists of:
1 - 3580 820 Seal, Frt. Whl. Disc Brk. Piston
1 - 3580 821 Boot, Frt. Whl. Disc Brk. Piston

5-05-41 PIN PACKAGE, DISC BRAKE
HSG. LOCATIONS . . . . . Part No. 3744 477
Consists of:
2- Pin, Frt. Whl. Disc Brk. Hsg. Loc.
2- Bushing, Frt. Whl. Disc Brk. Loc. Pin-Inner

5-05-45 FRONT WHEEL DISC BRAKE LOCATING PIN
BUSHING PACKAGE . . . . . Part No. 3004 864
Consists of:
2 - Bushing, Disc Brake Locating Pin Outer
2 - Bushing, Disc Brake Locating Pin Inner

5-39-1 REPAIR PACKAGE,
MASTER CYLINDER MAJOR . . . . . Part No. 3579 260
Consists of:
1 - Piston, Secondary
1 - Piston, Primary
1 - Spring, Residual Valve Secondary
1 - Valve, Residual Secondary
2 - Seat, Tube Primary & Secondary
1 - 2944 227 Gasket, Cover

5-39-1 REPAIR PACKAGE,
MASTER CYLINDER. . . . . Part No. 3744 423
Consists of:
1- Piston, Tdm. Brk. M/Cyl. Pri.
1- Piston, Tdm. Brk. M/Cyl. Sec.

5-39-1 REPAIR PACKAGE, MASTER CYLINDER
MAJOR . . . . . Part No. 3744 445
Consists of:
1 - Piston, Primary
1 - Piston, Secondary
1 - Spring, Residual Valve
1 - Valve, Residual
2 - Seat, Tube
1 - 2944 227 Gasket, Cover

5-39-1 REPAIR PACKAGE,
MASTER CYLINDER MAJOR . . . . . Part No. 3744 447
Consists of:
1 - Piston Assy., Tndm. Brk. M/Cyl. Secondary
1 - Piston Assy., Tndm. Brk. M/Cyl. Primary
2 - Insert, Brk. Tube Seat
1 - Spring, Residual Valve
1 - Valve, Residual

Printed in U.S.A.
November, 1974

CODE	PART NAME AND PART NUMBER

5-39-1 REPAIR PACKAGE, MASTER CYLINDER
MAJOR ..... Part No. 3744 467
Consists of:

1-		Piston, Tndm. Brk. M/Cyl. Pri.
1-		Piston, Tndm. Brk. M/Cyl. Sec.
1-	2944 227	Gasket, Tndm. Brk. M/Cyl. Reservoir Cover
1-		Valve, Tndm. Brk. M/Cyl. Residual
1-		Spring, Tndm. Brk. M/Cyl. Residual Valve
2-		Insert, Tndm. Brk. M/Cyl. Tube
1-	1828 388	Boot, Tndm. Brk. M/Cyl.
1-	3461 205	Retainer, Tndm. Brk. M/Cyl. Boot
1-	3461 212	Gasket, Tndm. Brk. M/Cyl. Retainer
1-	2074 960	Ring, Tndm. Brk. M/Cyl. Rod Retainer
1-	6029 516	Screw, Tndm. Brk. M/Cyl. Sec. Piston Stop
1-		Stop, Tndm. Brk. M/Cyl. Pri. Piston

5-39-1 REPAIR PACKAGE,
MASTER CYLINDER..... Part No. 3780 550
Consists of:

1 -		Piston Assy., Tndm. Brk. M/Cyl. Primary
1 -		Piston Assy., Tndm. Brk. M/Cyl. Secondary
1 -	3580 290	Gasket, Tndm. Brk. M/C Reservoir Cover
2 -	3580 313	Insert, Tndm. Brk. M/C Tube
1 -	3580 296	Stop, Tndm. Brk. M/C Pri. Piston

5-63-1 WHEEL CYLINDER SERVICE
PACKAGE ..... Part No. # 3780 524
Consists of:

2-		Cup, Whl. Brk. Cyl. Piston
1-		Expander, Whl. Brk. Cyl. Piston Cup
2-	2881 618	Boot, Whl. Brk. Cyl.

5-105-1 VALVE AND GROMMET
PACKAGE ..... Part No. 3420 973
Consists of:

1-		Valve, Vacuum Check
1-		Grommet, Vacuum Check Valve

5-105-1 VALVE AND GROMMET
PACKAGE ..... Part No. 3420 974
Consists of:

1-		Valve, Vacuum Check
1-	2467 576	Grommet, Check Valve

7-42-1 WATER PUMP
PACKAGE ..... Part No. 2808 679
Consists of:

1 -	1947 523	Gasket, Intermediate
1 -		Pump, Water

7-42-1 WATER PUMP
PACKAGE ..... Part No. # 3780 108
3780 109
Consists of:

1 -	2129 013	Gasket Body
1 -		Pump, Water

7-42-1 WATER PUMP PACKAGE
Part No. # 3780 127
Consists of:

1 -		Pump, Water
1 -	1737 705	Gasket, Water Pump Body

CODE	PART NAME AND PART NUMBER

7-42-4 REPAIR PACKAGE,
WATER PUMP ..... Part No. 2808 682
Consists of:

1 -	1947 521	Gasket Body
1 -	1947 523	Gasket, Intermediate
1 -	1947 671	Gasket Outlet Elbow
1 -	2532 493	Seal Body
1 -	2532 492	Seal
1 -		Shaft w/Slinger
1 -		Impellar

8-27-137 COLLAR and PIN
PACKAGE, SHAFT..... Part No. 2932 988
Consists of:

1 -	Collar
1 -	Pin, Collar
1 -	Thrust Washer

8-27-352 GEAR and PIN
PACKAGE, SHAFT..... Part No. 2084 653
Consists of:

1 -	Gear
1 -	Pin
1 -	Thrust Washer

8-29-17 BRUSH and WASHER
PACKAGE ..... Part No. 3420 893
Consists of:

2 -	Brush
2 -	Washer, Brush Mtg. Insulator

8-29-99 RETAINER, WASHER
and SLIP RING PACKAGE,
ROTOR GREASE ..... Part No. 2586 512
Consists of:

1 -	Slip Ring, Rotor
2 -	Retainer
1 -	Washer, Rotor Grease Ret.

8-29-129 CAPACITOR and
INSULATOR PACKAGE..... Part No. 2421 137
Consists of:

1 -	Capacitor and Bolt
1 -	Insulator, Heat Sink
1 -	Insulator, Capacitor Bolt
2 -	Lockwasher
2 -	Nut, Hex
1 -	Washer, Plain

8-32-2 HORN PACKAGE,
UNIVERSAL,
LOW NOTE ..... Part No. 2808 868
HIGH NOTE..... Part No. 2808 869
Consists of:

1 -	Bracket, Long
1 -	Bracket, Short
1 -	Horn
3 -	Lockwasher, Brkt. to Horn Mtg. Screw
3 -	Screw, Brkt. to Horn Mtg.
1 -	Screw and Washer, Brkt. to Car Mtg.

Printed in U.S.A.
November, 1974

CODE	PART NAME AND PART NUMBER

8-38-23 LAMP PACKAGE ..... Part No. 2864 325
Consists of:
1 - Lamp and Switch
1 - Lens
1 - 1522 44 Bulb

8-52-87 ACTUATOR and RETAINING RING PACKAGE, CLUTCH SHIFTING ..... Part No. 2275 556
Consists of:
2 - Actuator, Clutch Shifting
1 - Ret. Ring, Clutch Actuator

8-52-96 GEAR and SNAP RING PACKAGE, PINION SHAFT ..... Part No. 2275 557
Consists of:
1 - Gear, Pinion Shaft
1 - Snap Ring, Pinion Shaft Gear Ret.
1 - Washer, Pinion Shaft Gear Friction

8-52-98 THRUST WASHER and RETAINING RING PACKAGE, PINION SHAFT ..... Part No. 2275 558
Consists of:
1 - 6022 006 Ret. Ring, Pinion Shaft
2 - Washer, Pinion Shaft Thrust

8-52-121 THRUST WASHER PACKAGE, ARMATURE..... Part No. 3780 593
Consists of:
6 - Washer, Thrust

8-52-137 PLATE and BRUSH PACKAGE, BRUSH HOLDER..... Part No. 2932 812
Consists of:
1 - Brush and Terminal, Negative
1 - Plate, Brush Holder

8-52-140 SPRING PACKAGE, BRUSH..... Part No. 2084 666
Consists of:
4 - Spring, Brush

8-52-342 CONTACT and SPRING PACKAGE, SOLENOID SWITCH ..... Part No. 2932 814
Consists of:
1 - Contact, Solenoid Switch
2 - Spring
1 - Seal, Solenoid

8-52-345 SOLENOID PACKAGE ..... Part No. 2932 813
Consists of:
1 - Nut, Hex
1 - Seal, Solenoid
1 - Solenoid
3 - Washer

CODE	PART NAME AND PART NUMBER

8-52-354 STUD PACKAGE, TERMINAL RELAY ..... Part No. # 3579 193
Consists of:
1 - Nut, Hex
2- Stud
1- Washer

8-52-375 CORE and FORK PACKAGE Part No. 3620 733 3744 599
Consists of:
1 - Core
1 - Fork

9-01-5 GASKET PACKAGE, ENGINE UPPER..... Part No. 3780 187
Consists of:
2 - 3698 659 Gasket, Cylinder Head
2 - 2951 267 Gasket, Cylinder Head Cover
1 - 3491 023 Gasket, Cylinder Head Cover Oil Filler Pipe
2 - 2856 029 Gasket, Exhaust Pipe Flange
8 - 2205 958 Seal, Exhaust Valve Guide
8 - 3671 616 Seal, Intake Valve Guide

9-01-5 GASKET PACKAGE, ENGINE LOWER..... Part No. # 3780 188
Consists of:
1 - 2129 012 Gasket, Chain Case Cover
1 - 50 082 Gasket, Cylinder Water Outlet
2 - Gasket, Oil Pan, End
1 - 2129 013 Gasket, Water Pump Body
1 - 3577 870 Gasket, Fuel Pump Flange
1 - 1326 836 Gasket, Ignition Distributor
1 - 2899 532 Seal, Chaincase Cover Oil Seal
1 - 6027 245 O-Ring, Ignition Distributor Housing
1 - 2875 923 O-Ring, Ignition Distributor Housing

9-01-5 GASKET PACKAGE, ENGINE UPPER ..... Part No. 3683 818
Consists of:
2 - 3614 824 GASKET, Cylinder Head
2 - 2658 646 GASKET, Cylinder Head Cover
2 - 2465 391 GASKET, Exhaust Pipe Flange
2 - 2856 029 GASKET, Exhaust Pipe Flange
16 - 2121 686 SHIELD, Valve Stem Oil

9-01-5 GASKET PACKAGE, ENGINE LOWER ..... Part No. 3683 822
Consists of:
1 - 3577 870 GASKET, Fuel Pump Flange
1 - 500 82 GASKET, Cylinder Water Outlet Elbow
2 - 2658 685 GASKET, Oil Pan
1 - 1737 705 GASKET, Water Pump Body
2 - 1737 761 GASKET, Water Pump to Cylinder Block
1 - 2264 794 GASKET, Chain Case Cover
1 - 1326 836 GASKET, Ignition Distributor
1 - 618 622 GASKET, Oil Pressure Relief Valve Cap
1 - 1855 327 GASKET, Oil Pump Body
1 - 1855 328 SEAL, Oil Pump Body
1 - 2536 481 OIL SEAL, Chain Case Cover
1 - 6027 245 "O" RING, Ignition Distributor Housing

9-01-5 GASKET PACKAGE, ENGINE UPPER ..... Part No. 3683 827
Consists of:
1 - 2843 182 GASKET, Cylinder Head
1 - 2121 244 GASKET, Cylinder Head Cover

Printed in U.S.A.
November, 1974

CODE	PART NAME AND PART NUMBER
1 - 2899 250	GASKET, Cylinder Head Cover
1 - 2465 391	GASKET, Exhaust Pipe Flange
6 - 2205 958	SHIELD, Intake Valve Stem Oil
6 - 2205 959	SHIELD Exhaust Valve Stem Oil
1 - 1947 671	GASKET, Cylinder Water Outlet Elbow
9-01-5	GASKET PACKAGE,
	ENGINE LOWER ..... Part No. 3683 828
	Consists of:
1 - 1947 554	GASKET, Chain Case Cover
1 - 1947 521	GASKET, Water Pump Body
1 - 1947 523	GASKET, Water Pump Intermediate Plate
1 - 2121 404	GASKET, Oil Pump Body
1 - 618 622	GASKET, Oil Pressure Relief Valve Cap
1 - 3577 870	GASKET, Fuel Pump Flange
1 - 2465 391	GASKET, Exhaust Pipe Flange
1 - 2899 531	OIL SEAL, Chain Case Cover
9-10-2	OIL SEAL PACKAGE,
	CRANKSHAFT REAR
	BEARING NO. 5 CAP ..... Part No. 1326 091
	Consists of:
2 -	Oil Seal Bearing
1 -	Oil Seal Bearing Cap, Right
1 -	Oil Seal Bearing Cap, Left
9-11-1	OIL SEAL PACKAGE,
	CRANKSHAFT REAR
	BEARING ..... Part No. 3549 392
	Consists of:
2 -	Seal, Crankshaft Bearing Oil
1 -	Seal, Crankshaft Bearing Cap No. 5 Oil, Rt.
1 -	Seal, Crankshaft Bearing Cap No. 5 Oil, Lt.
9-11-1	OIL SEAL PACKAGE,
	CRANKSHAFT REAR
	BEARING ..... Part No. 3549 393
	Consists of:
2 -	Oil Seal, Crankshaft Bearing
2 -	Oil Seal, Crankshaft Rear Bearing Retainer
9-11-1	OIL SEAL PACKAGE,
	CRANKSHAFT REAR BEARING..... Part No. 3549 394
	Consists of:
2-	Oil Seal, Crankshaft Bearing
1- 2129 235	Oil Seal, Crankshaft Rear Bearing Retainer
9-11-1	OIL SEAL PACKAGE
	CRANKSHAFT REAR
	BEARING ..... Part No. 3549 395
	Consists of:
2 -	Oil Seal Crankshaft Bearing
1 -	Oil Seal Crankshaft Bearing Cap No. 5 Rt.
1 -	Oil Seal, Crankshaft Bearing Cap No. 5 Lt.
9-39-1	PACKAGE, VALVE
	GRIND GASKET ..... Part No. 3549 597
	Consists of:
2 - 3512 520	Gasket, Cylinder Head
2 -	Gasket, Cylinder Head Cover
2 -	Gasket, Intake Manifold
1 -	Gasket, Intake Manifold, Frt.
1 -	Gasket, Intake Manifold, Rear
16 - 2205 958	Shield, Valve Stem Oil
1 -	Sealer, Intake Manifold End Gasket
2 - 2856 029	Gasket, Exhaust Pipe Flange
9-39-1	PACKAGE, VALVE
	GRIND GASKET ..... Part No. 3549 595
	Consists of:
2 - 3863 493	Gasket, Cylinder Head
2 -	Gasket, Cylinder Head Cover
2 -	Gasket, Intake Manifold
1 -	Gasket, Intake Manifold, Frt.
1 -	Gasket, Intake Manifold, Rear
16 - 2205 958	Shield, Valve Stem Oil
2 - 2856 029	Gasket, Exhaust Pipe Flange
1 -	Sealer, Intake Manifold End Gasket
9-39-5	PACKAGE, INTAKE VALVE, Std.
	Part No. 3683 801
	Consists of:
1 -	VALVE, Intake, Std.
2 - 1614 666	LOCK, Intake Valve Spring Retainer
9-39-5	PACKAGE, INTAKE VALVE
	.005 o/S. ..... Part No. 3838 802
	Consists of:
1 -	VALVE, Intake, 005 o/s
2 - 1614 666	LOCK, Intake Valve Spring Retainer
9-39-5	PACKAGE, INTAKE VALVE
	.015 o/S. ..... Part No. 3683 803
	Consists of:
1 -	VALVE, Intake, .015 o/s
2 - 1614 666	LOCK, Intake Valve Spring Retainer
9-39-5	PACKAGE, INTAKE VALVE,
	.030 o/s ..... Part No. 3683 804
	Consists of:
1 -	VALVE, Intake .030 o/s.
2 - 1614 666	LOCK, Intake Valve Spring Retainer
9-39-5	PACKAGE, INTAKE VALVE, Std.
	Part No. 3549 975
	Consists of:
1 - 3577 836	VALVE, Intake Std.
2 - 381 875	LOCK, Intake Valve Spring Retainer
9-39-5	PACKAGE, INTAKE VALVE, .005 0/s
	Part No. 3549 976
	Consists of:
1 -	VALVE, Intake .005 o/s
2 - 381 875	LOCK, Intake Valve Spring Retainer
9-39-5	PACKAGE, INTAKE VALVE .015 0/s
	Part No. 3549 977
	Consists of:
1 -	VALVE, Intake .015 o/s
2 - 381 875	LOCK, Intake Valve Spring Retainer
9-39-5	PACKAGE, INTAKE VALVE, .030 0/s
	Part No. 3549 978
	Consists of:
1 -	VALVE, Intake .030 o/s
2 - 381 875	LOCK, Intake Valve Spring Retainer

Printed in U.S.A.
November, 1974

CODE	PART NAME AND PART NUMBER

9-41-1 PACKAGE, TAPPET CHAMBER SILENCER . . . . . Part No. 1879 747
Consists of:
1 - Silencer, Front
1 - Silencer, Rear

9-48-6 MANIFOLD PACKAGE, EXHAUST, LEFT . . . . . Part No. 3744 824
Consists of:
1 - 3751 067 Manifold, Exhaust Left
1 - 3751 175 Heater, Carburetor Air

9-48-6 MANIFOLD PACKAGE, EXHAUST, LEFT . . . . . Part No. 3744 821
Consists of:
1 - Manifold, Exhaust, Left
1 - 3671 790 Heater, Carburetor Air

9-48-6 MANIFOLD PACKAGE, EXHAUST, RIGHT . . . . . Part No. 3744 823
Consists of:
1 - Manifold, Exhaust, Right
1 - 3751 249 Cover, Exhaust Manifold Air Injection
1 - 6029 747 Screw, Exhaust Manifold Air Injection Cover
1 - 3671 142 Gasket, Exhaust Manifold Air Injection Cover

9-48-6 PACKAGE, EXHAUST MANIFOLD, REPLACEMENT . . . . . Part No. 3744 827
Consists of:
1 - Manifold, Exhaust Complete Assy.
1 - 3744 826 Package, Exhaust Manifold Mounting Parts
1 - 152 568 Stud, Intake to Exhaust Manifold
1 - 6025 020 Nut w/Washer, Intake to Exhaust Manifold
1 - 3751 635 Gasket, Intake to Exhaust Manifold

9-48-14 PACKAGE, EXHAUST MANIFOLD MOUNTING PARTS . . . . . Part No. 3744 826
Consists of:
10 - 3751 636 Washer, Intake and Exhaust Manifold Stud
2 - 6030 210 Nut, Exhaust Manifold Stud Upper Ends
2 - 3751 637 Washer, Exhaust Manifold Stud Upper Ends

9-50-1 PACKAGE, INTAKE MANIFOLD GASKET . . . . . Part No. 3420 027
Consists of:
2 - Gasket, Intake Manifold
1 - Gasket, Intake Manifold, Front
1 - Gasket, Intake Manifold, Rear
1 - Sealer, Intake Manifold End Gasket

9-50-1 PACKAGE, INTAKE MANIFOLD GASKET . . . . . Part No. 3514 187
Consists of:
2 - Gasket, Intake Manifold
1 - Gasket, Intake Manifold, Front
1 - Gasket, Intake Manifold, Rear
1 - Sealer, Intake Manifold End Gasket

9-50-1 PACKAGE, Intake and Exhaust Manifold Gasket Part No. 3683 826
1 - 1947 762 GASKET, Intake and Exhaust Manifold
1 - 3614 387 GASKET, Intake to Exhaust Manifold

CODE	PART NAME AND PART NUMBER

9-58-1 PACKAGE, MANIFOLD HEAT CONTROL VALVE . . . . . Part No. # 3683 945
Consists of:
1 - Shaft
1 - Plate
2 - Bushing
1 - Inertia Wheel
1 - 2946 083 Stop Valve
1 - Thermostat
2 - Seal, Valve Shaft
1 - 3462 514 Spring, Valve Shaft Damper

9-58-1 PACKAGE, MANIFOLD HEAT CONTROL VALVE . . . . . Part No. # 3683 947
Consists of:
1 - Plate, Valve
1 - Shaft, Valve
1 - 2946 083 Stop, Valve
1 - Inertia Wheel
1 - Thermostat, Valve
1 - 2951 626 Spring, Valve Shaft Damper
2 - Bushing, Valve Shaft
2 - Seal, Valve Shaft

9-58-1 PACKAGE, MANIFOLD HEAT CONTROL VALVE . . . . . Part No. # 3683 949
Consists of:
1 - Shaft
1 - Plate
2 - Bushing
1 - Inertia Wheel
1 - 2946 107 Stop Valve
1 - Thermostat
2 - Seal, Valve Shaft
1 - 3462 514 Spring, Valve Shaft Damper

9-58-1 PACKAGE, MANIFOLD HEAT CONTROL VALVE . . . . . Part No. # 3683 948
Consists of:
1 - Shaft
1 - Plate
2 - Bushing
1 - Inertia Wheel
1 - Thermostat
1 - 2951 626 Spring, Valve Shaft Damper
1 - 2946 083 Stop, Valve
2 - Seal, Valve Shaft

9-58-1 PACKAGE, MANIFOLD HEAT CONTROL VALVE . . . . . Part No. # 3683 946
Consists of:
1 - Shaft
1 - Plate
2 - Bushing
1 - Inertia Wheel
1 - 2946 083 Stop Valve
1 - Thermostat
2 - Seal, Valve Shaft
1 - 3462 514 Spring, Valve Shaft Damper

10-07-2 GASKET AND SEAL PACKAGE, OIL PUMP . . . . . Part No. 2084 355

Printed in U.S.A.
November, 1974

CODE	PART NAME AND PART NUMBER
	Consists of:
	3 - Gasket
	1 - Seal
10-07-3	SHAFT and ROTOR PACKAGE, OIL PUMP DRIVE ..... Part No. 2084 354 2084 415
	Consists of:
	1 - Rotor, Outer
	1 - Shaft, Drive
10-07-6	OIL PUMP PACKAGE ..... Part No. 2808 507
	Consists of:
	1 - 2121 404 Gasket
	1 - Pump
	OIL PUMP PACKAGE ..... Part No. # 3685 652
	Consists of:
	1 - Gasket
	1- Pump
10-07-10	BODY PACKAGE, OIL PUMP ..... Part No. # 3685 653
	Consists of:
	1- Body, Oil Pump
	1- 1855 328 Seal, Oil Pump Body
	1- Gasket, Oil Pump Body
	1- 2268 921 Gasket, Oil Pump Cover, Large
	1- Gasket, Oil Pump Cover, Small
	1- Oil Pump Drive Shaft
	1- Rotor, Oil Pump, Outer
10-07-3	DRIVE SHAFT AND ROTOR PACKAGE, OIL PUMP ..... Part No. # 3837 648
	Consists of:
	1 - 2268 921 Gasket, Oil Pump Cover
	1 - 2121 531 Rotor, Oil Pump Outer
	1 - 2121 530 *Shaft and Rotor Assembly, Oil Pump Drive*
10-24-1	GASKET PACKAGE, OIL PAN. ..... Part No. 3514 157
	Consists of:
	2 - Gasket, Oil Pan Side
	2 - Gasket, Oil Pan End
	GASKET PACKAGE, OIL PAN. ..... Part No. 2240 647
	Consists of:
	1 - Gasket, Oil Pan, Rt.
	1 - Gasket, Oil Pan, Lt.
	1 - Gasket, Oil Pan, Front
	1 - Gasket, Oil Pan, Rear
10-24-1	GASKET PACKAGE, OIL PAN. ..... Part No. 3549 388
	Consists of:
	2 - Gasket, Oil Pan
	1 - Gasket, Oil Pan, Front
	1 - Gasket, Oil Pan, Rear
10-26-8	CARTRIDGE, OIL FILTER ..... Part No. 2532 752
	Consists of:
	1 - Cartridge
	1 - 2532 753 Gasket, Filter Body
	1 - 2532 754 Gasket, Filter Cover
15-11-87	CABLE & SPRG. PIN, HOOD CORNER STUD ..... Part No. 3579 673
	Consists of:
	2- 6024 654 Screw
	2- *Cable & Sprg. Pin Assy.*
15-11-89	STUD & PIN, HOOD CORNER ..... Part No. 3685 951
	Consists of:
	2- *Stud*
	2- Bezel
	2- Gskt.
	2- 3579 673 Cable & Sprg. Pin
	2- 6024 654 Screw
	8- 6024 403 Screw, Hood Corner Stud
	4- 120 378 Nut, Hood Corner Stud
	2- 135 629 Washer
	2- 6023 054 Washer, Hood Cor. Stud. Upr.
	BEZEL ..... Part No. 3679 670
	Consists of:
	2- 3508 508 Pin
	2- Bezel
	2- Gskt.
	8- 6024 403 Screw
17-15-25	CLIP and CLAMP PACKAGE, REAR SPRING ALIGNMENT INSULATOR ..... Part No. 2808 399
	Consists of:
	1 - Clamp
	1 - Clip
	1 - 1829 929 Insulator
17-16-1	SHACKLE and BUSHING PACKAGE, REAR SPRING ..... Part No. 3004 822
	Consists of:
	4 - 1940 725 Bushing, Shackle
	2 - 118 615 Nut, Shackle Pin
	1 - Plate, Shackle
	1 - Shackle w/Pin
	SHACKLE and BUSHING PACKAGE, REAR SPRING ..... Part No. 3420 118
	Consists of:
	4 - 1400 269 Bushing, Shackle
	2 - 271 502 Nut, Shackle Pin
	1 - *Plate, Shackle*
	1 - Shackle w/Pin
	SHACKLE and BUSHING PACKAGE, REAR SPRING ..... Part No. # 3780 513
	Consists of:
	1 - Shackle w/Pin
	1 - Plate
	4 - Bushing
	2 - Nut
	1 - Insert
	SHACKLE and BUSHING PACKAGE, REAR SPRING ..... Part No. # 3780 514

CODE	PART NAME AND PART NUMBER

Consists of:

1 -		Shackle w/Pin
1 -		Plate
1 -		Sleeve
2 -		Insert
4 -		Bushing
2 -	271 502	Nut

SHACKLE and BUSHING PACKAGE,
REAR SPRING . . . . . Part No. # 3780 515
Consists of:

1 -		Shackle w/Pin
1 -		Plate
4 -		Bushing
2 -	271 502	Nut

SHACKLE and BUSHING PACKAGE,
REAR SPRING . . . . . Part No. # 3780 516
Consists of:

1 -		Shackle w/Pin
1 -		Plate
2 -		Bushing, Upper
2 -		Bushing, Lower
2 -		Nut

17-30-80 ATTACHING PACKAGE,
SWAY BAR REAR Part No. # 3879 239
Consists of:

1 -	3402 894	Link
1 -		Bushing
1 -	3402 897	Retainer
1 -	118 614	Nut
1 -	118 615	Nut
1 -	181 116	Bolt
2 -	2071 611	Retainer
2 -	2071 604	Insulator

19-01-4 "O"RING and SEAL PACKAGE
POWER STRG. GEAR . . . . . Part No. 3579 523
Consists of:

1 -	2537 153	OIL SEAL, Strg. Gear Shaft
1 -	2267 350	DUST SEAL, Strg. Gear Shaft
1 -	1822 671	"O" RING, Strg. Gear Piston Ring
1 -	1822 672	RING, Strg. Gear Piston
1 -	1822 406	RING, Strg. Gear Worm Seal
1 -	1486 205	"O" Ring, Strg. Gear Ferrule
1 -	1822 324	SEAL, Strg. Gear Worm Sleeve
2 -	1733 562	"O" RING, Strg. Gear Cyl. Head
1 -	1822 149	"O" RING, Strg. Gear Reaction Lower
1 -	1823 091	"O" RING, Strg. Gear Reaction Lower (Model Y Only)
1	2267129	SEAL, Strg. Gear Worm Shaft
1 -	1822 151	SEAL, Strg. Gear Reaction Upper
1 -	1733 593	SEAL, Strg. Gear Reaction Upper (Model Y Only)
1 -	1733 602	"O" RING, Strg. Gear Housing Head
1 -	1822 203	SEAL, Strg. Gear Shaft Adjusting Screw (Early Model Cars)
1 -	2948 859	SEAL, Strg. Gear Shaft Adjusting Screw (Late Model Cars)
1 -	1733 615	"O" RING, Strg. Gear Shaft Cover (Early Model Cars)
1 -	2537 716	(After Early Model Cars)
1 -	3643 009	(Late Model Cars)
1 -	1316 849	"O" RING, Strg. Gear Housing To Valve (Early Model Cars)
1 -	1823 150	(Late Model Cars)
2 -	1556 385	"O" RING, Strg. Gear Housing Port
1 -	1733 612	"O" RING, Strg. Gear Valve Housing
1 -	1536 268	"O" RING, Strg. Gear Pressure Control Valve
1 -	1733 724	GASKET, Strg. Gear Valve Plug
1 -	1618 611	GASKET, Strg. Gear Pressure Hose Adapter

19-01-4 "O"RING and SEAL PACKAGE,
POWER STRG. GEAR . . . . . Part No. 3579 524
Consists of:

1 -	2537 154	OIL SEAL, Strg. Gear Shaft
1 -	2267 351	DUST SEAL, Strg. Gear Shaft
1 -	1822 671	"O" RING, Strg. Gear Piston Ring
1 -	1822 672	RING, Strg. Gear Piston
1 -	1822 406	RING, Strg. Gear Worm Seal
1 -	1486 205	"O" RING, Strg. Gear Ferrule
1 -	1822 324	SEAL, Strg. Gear Worm Sleeve
2 -	1733 562	"O" RING, Strg. Gear Cyl. Head
1 -	1822 149	"O" RING, Strg. Gear Reaction
1 -	2267 129	SEAL, Strg. Gear Worm Shaft
1 -	1822 151	SEAL, Strg. Gear Reaction, Upper
1 -	1733 602	"O" RING, Strg. Gear Housing Head
1 -	1822 203	SEAL, Strg. Gear Shaft Adjusting Screw (Early Model Cars)
1 -	2948 859	SEAL (Late Model Cars)
1 -	1733 615	"O" RING, Strg. Gear Shaft Cover (Early Model Cars)
1 -	2537 716	(After Early Model Cars)
1 -	3643 009	(Late Model Cars)
1 -	1823 150	"O"RING, Strg. Gear Housing to Valve
2 -	1556 385	"O"RING, Strg. Gear Housing Port
1 -	1733 612	"O" RING, Strg. Gear Valve Housing
1 -	1536 268	"O" RING, Strg. Gear Pressure Control Valve
1 -	1733 724	GASKET, Strg. Gear Valve Plug
1 -	1618 611	GASKET, Strg. Gear Pressure Hose Adapter
1 -	2267 530	"O"RING, Strg. Gear Pressure Hose Adapter

19-14-85 REPAIR KIT, STRG. COLUMN
CHUCKLE. . . . . Part No. # 3685 635
Consists of:

1 -	Spring, Strg. Column Upper Bearing
1 -	Clamp, Strg. Column Lower Bearing
1 -	Screw, Strg. Column Lower Bearing Clamp

19-19-1 SEAL PACKAGE, STEERING
GEAR SHAFT COVER . . . . . Part No. 3004 995
Consists of:

1 -	2537 716	"O" Ring, Cover
1 -	1822 203	Seal, Shaft Adjusting Screw

19-19-40 WASHER PACKAGE,
STEERING GEAR SHAFT
ADJUSTING SCREW. . . . . Part No. 2279 961
Consists of:

3 -	Washer

19-27-2 ARM PACKAGE,
STEERING LINK GEAR . . . . . Part No. 3004 810
Consists of:

1 -	2835 840	Arm, Strg. Link Gear
1 -	128 005	Nut, Strg. Link Gear Arm

CODE	PART NAME AND PART NUMBER

19-27-2 ARM PACKAGE,
STEERING LINK GEAR ..... Part No. 3004 812
Consists of:
1 - 2835 841 Arm, Strg. Link Gear
1 - 128 025 Nut, Strg. Link Gear Arm

ARM PACKAGE,

19-27-2 STEERING LINK GEAR
Part No. 3004 813
Consists of:
1 - 2835 854 Arm Strg. Link Gear
1 - 9425 132 Nut, Strg. Link Gear Arm

19-27-45 BOLT PACKAGE,
STEERING LINK IDLER
ARM BRACKET END ..... Part No. 3004 804
Consists of:
1 - 6027 776 Bolt Strg. Link Idler Arm Bracket End
1 - 128 025 Nut, Strg. Link Idler Arm Bracket Bolt

BOLT PACKAGE
STEERING LINK IDLER
ARM BRACKET END ..... Part No. 3004 805
Consists of:
1 - 6027 777 Bolt, Strg. Link Idler Arm Bracket End
1 - 128 025 Nut, Strg. Link Idler Arm Bracket Bolt

19-54-2 PUMP PACKAGE,
POWER STEERING ..... Part No. 3004 799
Consists of:
1 - 2537 869 "O" Ring, Power Steering Pump Reservoir Flange
1 - 2891 129 Pump, Power Steering
1 - 2127 486 Seal, Power Steering Pump Oil Reservoir Mounting

PUMP PACKAGE,
POWER STEERING ..... Part No. 3004 800
Consists of:
1 - 2537 869 "O" Ring, Power Steering Pump Reservoir Flange
1 - 2891 130 Pump, Power Steering
1 - 2127 486 Seal, Power Steering Pump Oil Reservoir Mounting

19-54-54 PACKAGE, POWER STRG.
PUMP ROTATING
GROUP ..... Part No. 2537 995
Consists of:
1 - Cam
1 - 2537 951 Plate, Front
1 - 2537 627 Plate, Pressure
2 - 1738 681 Ring, Snap
12 - 2537 099 Roller
1 - Rotor

21-01-3 GASKET AND SEAL
PACKAGE, MANUAL
TRANSMISSION REPAIR..... Part No. # 3780 204
Consists of:
1 - 2464 059 GASKET, Extension
1 - 3515 383 Seal, Yoke
1 - 2801 692 Seal, Drive Pinion
1 - 2124 499 Gasket, Drive Pinion Bearing Brg. Ret.
1 - 2464 037 Gasket, Gearshift Housing
1 - 2801 893 Gasket, Drive Pinion Brg.

CODE	PART NAME AND PART NUMBER

3- 1536 267 Seal, Gearshift Lever Shaft Oil
1- 2464 053 Gasket, Gearshift Lever Detent Sprg. Ret.
1 - 2538 588 Seal, Speedometer Drive Pinion Adapter
1 - 6025 752 "O" Spring, Speedometer Drive Pinion Adapter
1- 2538 571 Ring, Speedometer Drive Pinion Adapter Seal
1 - 1302 807 Gasket, Back-up Light Switch
1 - 3515 027 Gasket, Switch

GASKET and SEAL
PACKAGE, MANUAL
TRANSMISSION ..... Part No. # 3780 205
Consists of:
1 - 3410 008 Gasket, Extension
1 - 3515 383 Seal, Yoke
1 - 2801 692 Seal, Drive Pinion
1 - 2124 499 Gasket, Drive Pinion Brg. Retainer
1 - 3410 030 Gasket, Gearshift Housing
1 - 3515 793 Retainer, Gearshift Lever "O" Ring Seal
1 - 1316 849 Seal, Gearshift Lever Shaft Oil
1 - 2538 588 Seal, Ring Speedometer Drive
2 - 6025 752 "O" Ring, Speedometer Drive Pinion Adapter
1 - 2538 571 Ring, Speedometer Drive Pinion Adapter Seal
1- 1302 807 Gasket, Back-up Light Switch

GASKET and SEAL
PACKAGE, MANUAL
TRANSMISSION REPAIR..... Part No. # 3780 206
Consists of:
1 - 3410 008 Gasket, Extension
1 - 3515 384 Seal, Yoke
1 - 2801 692 Seal, Drive Pinion
1 - 2124 499 Gasket, Drive Pinion Brg.
1 - 3410 030 Gasket, Gearshift Housing
1 - 1302 807 Gasket, Back-up Light Switch Gearshift Hsg.
2 - 1316 849 Seal, Gearshift Lever Shaft Oil
2- 3515 793 Retainer, Gearshift Lever "O" Ring Seal
1 - 6025 752 "O" Ring, Speedometer Drive Pinion Adapter
1 - 2538 588 Seal, Speedometer Drive Pinion Adapter
1 - 2538 571 Ring, Speedometer Seal Retainer

GASKET and SEAL
PACKAGE, MANUAL
TRANSMISSION ..... Part No. # 3780 208
Consists of:
1 - 1949 361 Gasket, Extension
1 - 3515 384 Seal, Yoke
1 - 2801 692 Seal, Drive Pinion
1- 1949 346 Gasket, Case Cover
1 - 2124 499 Gasket, Drive Pinion Ret.
1 - 1302 807 Gasket, Back-up Light Switch Gearshift Hsg.
2 - 1949 350 Seal, Gearshift Lever Shaft Oil
1 - 6025 752 Speedometer Drive Pinion Adapter
1 - 2538 588 Seal, Speedometer Drive Pinion Adapter
1 - 2538 571 Ring, Speedometer Seal Retainer

GASKET and SEAL
PACKAGE, AUTOMATIC
TRANSMISSION ..... Part No. # 3780 201
Consists of:
1 - 2466 842 Seal, Manual Valve Shaft
1 - 3515 138 Seal, Torque Conv. Impeller Hub
1 - 2204 709 Seal, Oil Pump Hsg.
1 - 3515 176 Seal, Frt. Clutch Piston, Inner
1 - 3515 177 Seal, Frt. Clutch Piston, Outer

Printed in U.S.A.
November, 1974

CODE	PART NAME AND PART NUMBER
1 - 2538 510	Seal, Rr. Clutch Piston, Inner
1 - 2538 695	Seal, Rr. Clutch Piston, Outer
2- 1556 385	Seal, Reverse Band Lever Shaft
1 - 2464 462	Seal, Reverse Servo Piston
1 - 3515 384	Seal, Yoke
1 - 2801 398	Gasket, Output Shaft Brg. Cover
1 - 2466 954	Gasket, Extension
1 - 2466 548	Seal, Throttle Lever Shaft
1 - 2205 299	Gasket, Oil Pan
1 - 1316 815	Seal, Oil Filler Tube
1 - 6025 752	"O" Ring, Speedometer Drive Pinion Adapter
1 - 2538 588	Seal, Speedometer Drive Pinion Adapter
	GASKET and SEAL PACKAGE, Automatic TRANSMISSION . . . . . Part No. # 3780 202
	Consists of:
1 - 2466 842	Seal, Manual Valve Shaft
1 - 3515 137	Seal, Torque Cover Impeller Hub
1 - 1942 021	Seal, Oil Pump Hsg.
1- 2124 846	Gasket, Oil Pump Hsg.
1 - 3410 226	Seal, Frt. Clutch Piston, Inner
1- 3410 225	Seal, Frt. Clutch Piston, Outer
1 - 1942 054	Seal, Rr. Clutch Piston, Inner
1 - 2124 835	Seal, Rr. Clutch Piston, Outer
1- 1672 358	Seal, Reverse Band Lever Shaft
1 - 3515 383	SEAL, Yoke
1 - 2466 954	Gasket, Extension
1 - 2801 398	Gasket, Output Shaft Brg. Cover
1 - 2466 548	Seal, Throttle Lever Shaft
1 - 2464 324	Gasket, Oil Pan
1 - 1316 815	Seal, Oil Filler Tube
1 - 6025 752	"O" Ring, Speedometer Drive Pinion Adapter
1 - 2538 588	Seal, Speedometer Drive Pinion Adapter
1 - 2538 571	Ring, Speedometer Seal Retainer
2 - 2124 813	Ring Seal, Reaction Shaft Support (Up To)
2 - 3515 321	Ring Seal, Reaction Shaft Support (After)
1 - 2464 481	Seal, Reverse Servo Piston
1 - 6028 864	Ring Seal, Kickdown Inner Piston
21-84-4	SHAFT or CABLE PACKAGE, SPEEDO-METER . . . . . Part No. 2448 294
	Consists of:
1 -	Cable
1 -	Tip
1 -	Die
21-118-6	ROTOR PACKAGE, FRONT OIL PUMP AUTOMATIC TRANS-MISSION . . . . . Part No. # 3780 238
	Consists of:
1 -	Rotor, Frt. Oil Pump, Inner
1 -	Rotor, Frt. Oil Pump, Outer
	ROTOR PACKAGE, FRONT OIL PUMP AUTOMATIC TRANSMISSION . . . . . Part No. # 3780 239
	Consists of:
1 -	Rotor, Frt. Oil Pump, Inner
1 -	Rotor, Frt. Oil Pump, Outer
21-138-2	REPAIR PACKAGE, GOVERNOR, AUTOMATIC TRANSMISSION . . . . . Part No. 3780 240
	Consists of:
1 -	Body, Gov.
1 - 1942 109	Ring, Support Seal
2 - 3743 520	Lock, Gov. Body Bolt
4 - 180 020	Bolt, Body
1 - 6022 817	Snap Ring, Body
1 - 3515 482	Weight, Inner
1 - 3515 491	Weight, Outer
1 - 3515 110	Spring, Weight
1 - 1636 464	Snap Ring, Inner
1 - 1636 465	Snap Ring, Outer
1 - 3515 479	Valve, Gov.
1 - 1556 082	Shaft, Gov. Valve
2 - 1638 461	Snap Ring, Gov. Valve Shaft
1 - 3743 519	Filter, Gov.
1 -	Sheet, Instruction
	REPAIR PACKAGE, GOVERNOR, AUTOMATIC TRANSMISSION . . . . . Part No. 3780 241
	Consists of:
1 -	Body, Gov.
2 - 1942 109	Ring, Gov. Support
2 - 3743 520	Lock, Body Bolt
4 - 180 020	Bolt, Body
1 - 6022 817	Snap Ring, Body
1 - 1636 461	Weight, Outer
1 - 3515 478	Weight, Inner
1 - 3515 085	Spring, Weight
1 - 1636 464	Snap Ring, Weight, Inner
1 - 1636 465	Snap Ring, Weight, Outer
1 - 3515 479	Valve, Gov.
1 - 1556 082	Shaft, Gov. Valve
2 - 1638 461	Snap Ring, Gov. Valve Shaft
1 - 3743 519	Filter, Gov.
1 -	Sheet, Instruction
	REPAIR PACKAGE, GOVERNOR, AUTOMATIC TRANSMISSION . . . . . Part No. 3780 242
	Consists of:
1 -	Body, Gov.
2 - 1942 109	Ring, Gov. Support Seal
2 - 3743 520	Lock, Gov. Body Bolt
4 - 6022 817	Snap Ring, Body
1 - 3515 478	Weight, Gov., Inner
1 - 1636 461	Weight, Gov., Outer
1 - 3515 110	Spring, Gov. Weight
1 - 1636 464	Snap Ring, Weight, Inner
1 - 1636 465	Snap Ring, Weight, Outer
1 - 3515 479	Valve, Gov.
1 - 1556 082	Shaft, Gov. Valve
2 - 1638 461	Snap Ring, Valve Shaft
1 - 3743 519	Filter, Gov.
1 -	Sheet, Instruction

Printed in U.S.A.
November, 1974

CODE	PART NAME AND PART NUMBER

REPAIR PACKAGE, GOVERNOR, AUTOMATIC TRANSMISSION ..... Part No. 3780 244
Consists of:

1 -		Body, Gov.
2 -	1942 109	Ring, Gov. Support Seal
2 -	3743 520	Lock, Body Bolt
4 -	180 020	Bolt, Body
1 -	6027 271	Snap Ring, Body
1 -	3515 491	Weight, Gov., Outer
1 -	3515 482	Weight, Gov., Inner
1 -	3515 110	Spring, Gov., Weight
1 -	1636 464	Snap Ring, Gov. Weight, Inner
1 -	1636 465	Snap Ring, Gov. Weight, Outer
1 -	3515 479	Valve, Gov.
1 -	1556 082	Shaft, Gov. Valve
2 -	1638 461	Snap Ring, Gov. Valve Shaft
1 -	3743 519	Filter, Gov.
1 -		Sheet, Instruction

REPAIR PACKAGE, GOVERNOR, AUTOMATIC TRANSMISSION ..... Part No. 3780 245
Consists of:

1 -		Body, Gov.
2 -	1942 109	Ring, Gov. Support Seal
2 -	3743 520	Lock, Body Bolt
4 -	180 020	Bolt, Body
1 -	6027 271	Snap Ring, Body
1 -	1636 461	Weight, Body, Outer
1 -	3515 478	Weight, Body, Inner
1 -	3515 085	Spring, Weight
1 -	1636 464	Snap Ring, Weight, Inner
1 -	1636 465	Snap Ring, Weight, Outer
1 -	3515 479	Valve, Gov.
1 -	1556 082	Shaft, Valve
2 -	1638 461	Snap Ring, Valve Shaft
1 -	3743 519	Filter, Gov.
1 -		Sheet, Instruction

21-139-67 VALVE PACKAGE, REGULATOR AUTOMATIC TRANSMISSION ..... Part No. 2240 685
Consists of:

1 -		Valve, Regulator
1 -	2124 734	Spring
1 -	2204 975	Retainer
1 -	2124 736	Screw
1 -	2124 737	Nut

22-06-1 BEARING PACKAGE FRT. WHL. OUTER w/10" BRAKES ..... Part No. 3838 020
Consists of:

1 -		Cone Frt. Whl. Outer Brg.
1 -		Cup Frt. Whl. Outer Brg.

BEARING PACKAGE, FRT. WHL. INNER ..... Part No. 3683 975
Consists of:

1 -	3580 892	Cone, Frt. Whl. Inner Brg.
1 -		Cup, Frt. Whl. Inner Brg.
1 -	3580 723	Seal Frt. Whl. Hub and Disc. Dust

CODE	PART NAME AND PART NUMBER

BEARING PACKAGE FRT. WHL. INNER ..... Part No. 3838 045
Consists of:

1 -	3580 892	Cone - Frt., Whl. Inner Brg.
1 -		Cup - Frt. Whl. Inner Brg.
1 -	3580 975	Seal - Seal Whl. Hub. Dust

BEARING PACKAGE FRT. WHL. OUTER ..... Part No. 3683 974

1 -	3580 888	Cone Frt. Whl. Outer Brg.
1 -		Cup Frt. Whl. Outer Brg.

BEARING PACKAGE, FRT. WHL. INNER ..... Part No. 3780 531

1 -	3699 676	Cone Frt. Whl. Inr. Brg.
1 -		Cup Frt. Whl. Inr. Brg.
1 -	3699 678	Seal Frt. Whl. Hub and Disc Dust
1 -	3461 895	Seal Assy. Frt. Whl. Hub Dust

23-41-34 GEAR and SEAL PACKAGE, ELECTRIC WINDOW REGULATOR MECHANISM ..... Part No. 2932 973
Consists of:

1 -		Gear Pinion
1 -		Seal
1 -		"O" Ring
1 -		Screw

23-49-1 REAR SEAT SHOULDER BELT PACKAGE ..... Part No. F803 JX9
Consists of:

1 -		Belt
1 -	3454-584-5	Reinforcement
2 -		Screw
2 -	6027 311	Bolt

Part No. F804 JX9
Consists of:

1 -		Belt
1 -	3454 578-9	Reinforcement
2 -		Screw
2 -	6027 311	Bolt

Part No. F805 JX9
Consists of:

1 -		Belt
1 -	2999 030	Reinforcement
1 -	2999 033	Grommet
2 -		Screw
1 -	6030 101	Bolt
1 -	6027 311	Bolt
1 -	6027 312	Bolt
1 -		Washer
1 -	6026 397	Washer
1 -	3729 157	Spacer

Part No. F806 JX9
Consists of:

1 -		Belt
1 -	6030 101	Bolt
1 -	6027 312	Bolt

Part No. F807 JX9
Consists of:

1 -		Belt
1 -	6030 101	Bolt

Printed in U.S.A.
November, 1974

CODE	PART NAME AND PART NUMBER
2 - 6027 311	Bolt
	Part No. F808 JX9
Consists of:	
1 -	Belt
1 - 3548 851	Reinforcement
2 -	Screw
2 - 6030 101	Bolt
23-54-156	GEAR W/PINION AND SEAL PACKAGE
	MECHANISM AND MOTOR T/GATE ELECTRIC WINDOW REGULATOR . . . . . Part No. 3744 280
Consists of:	
1-	Gear w/Pinion
1-	Seal
1- 1316 863	"O" - Ring
23-63-33	WEATHERSTRIP PACKAGE, FRONT DOOR ON FRONT EDGE OF GLASS. . . . . Part No. 2932 230
Consists of:	
1 -	Weatherstrip
4 - 3582 315	Slide
2 - 2861 744	Pin
23-64-1	FIELD KIT, REAR WINDOW INSTALLATION . . . . . Part No. 2807 425
Consists of:	
1 -	Cartridge
1 -	Primer
1 -	Spacer Dam
2 -	Spacer
2 -	Spacer
23-64-240	PIVOT PACKAGE, V/WING UPPER . . . . . Part No. 2932 436 2932 437
Consists of:	
2 -	Bracket
2 - 1909 944	Washer
2 - 6000 374	Screw
2 - 1909 917	Grommet
2 - 6000 379	Screw
2 - 1708 996	Grommet
2 - 1708 998	Clamp
	PIVOT PACKAGE, V/WING WINDOW UPPER . . . . . Part No. 3780 414 3780 415
Consists of:	
1 -	Pivot, Upper Rt.
1 -	Pivot, Upper Lt.
2 - 3759 890	Gasket
2 - 3759 080	Gasket
4 - 3759 081	Spacer
2 - 6029 824	Screw
	PIVOT PACKAGE, V/WING WINDOW LOWER . . . . . Part No. 3780 416 3780 417
Consists of:	
1 -	Pivot, Lower Rt.
1 -	Pivot, Lower Lt.
2 - 3759 890	Gasket
2 - 3759 080	Gasket
4 - 3759 081	Spacer
2 - 6029 824	Screw
	PIVOT PACKAGE, V/WING WINDOW UPPER . . . . . Part No. 3780 418 3780 419
Consists of:	
1 -	Pivot, Upper Rt.
1 -	Pivot, Upper Lt.
2 - 3759 890	Gasket
2 - 3759 080	Gasket
4 - 3759 081	Spacer
2 - 6029 824	Screw
	PIVOT PACKAGE, V/WING WINDOW LOWER . . . . . Part No. 3780 420 3780 421
Consists of:	
1 -	Pivot, Lower Rt.
1 -	Pivot, Lower Lt.
2 - 3759 890	Gasket
2 - 3759 080	Gasket
4 - 3759 081	Spacer
2 - 6029 824	Screw
23-64-272	FASTENER and BUSHING PACKAGE, QTR. WDO. GLASS BRACKET . . . . . Part No. 3744 734
Consists of:	
1 - 3759 193	Fastener
1 - 3696 693	Bushing
23-64-282	SLIDE PACKAGE, FRONT, REAR AND QTR. WDO. REGULATOR ARM
	Part No. 3744 735
Consists of:	
1 -	Base Slide
1 -	Retainer
1 -	Spring
23-66-75	FIELD KIT, WINDSHIELD INSTALLATION . . . . . Part No. 2807 425
Consists of:	
1 -	Cartridge
1 -	Primer
1 -	Spacer Dam
2 -	Spacer
2 -	Spacer
23-67-2	CAM RELEASE PACKAGE, WIPER PARKING. . . . . Part No. 2932 869
Consists of:	
1 -	Release, Wiper Parking Cam
1 -	Cam, Wiper Parking
1 -	Spring, Wiper Parking
1 -	Spring Washer, Wiper Drive Link
1 - 2983 017	Retainer, Wiper Link
	CAM RELEASE PACKAGE, WIPER PARKING Part No. 3879 325
Consists of:	
1 - 3431 761	Release, Wiper Parking Spring
1 -	Release, Wiper Parking Cam

Printed in U.S.A.
November, 1974

CODE	PART NAME AND PART NUMBER
1 -	Spring, Wiper Parking
1 -	Spring Washer, Wiper Drive Link
1 - 2983 017	Retainer, Wiper Link
1 -	Cam, Wiper Parking
23-67-10	INTERMEDIATE GEAR PACKAGE, W/SHIELD WIPER MOTOR . . . . . Part No. 3431 735
Consists of:	
1 -	Gear
1 -	Lubricant
1 -	Spring Washer
6 - 9416 684	Screw
6 - 427 254	Nut w/Washer
1 -	Cam
	REPAIR PACKAGE, WIPER MOTOR . . . . . Part No. 3837 118
Consists of:	
1 -	Bushing
1 -	Gasket
1 -	Gasket
1 -	Gear
1 -	Grease Pack
1 -	Latch
1 -	Switch Plate
23-67-20	GROMMET and SPACER PACKAGE, MOTOR MTG. . . . . Part No. 2932 708
Consists of:	
3 -	Grommet
3 -	Spacer
	GROMMET, EYELET and SEAL PACKAGE MOTOR MTG. . . . . Part No. 3837 117
Consists of:	
3 -	Grommet
3 -	Eyelet
1 -	Seal
23-67-106	ARMATURE PACKAGE, W/SHIELD WIPER MOTOR . . . . . Part No. 3431 510
Consists of:	
1 -	Armature
1 -	Spring Washer
2 -	Washer
	ARMATURE PACKAGE W/SHIELD WIPER MOTOR . . . . . Part No. 3635 030
Consists of:	
1-	Armature
1-	Spring Washer
2-	Washer
23-67-112	HOUSING PACKAGE, W/SHIELD WIPER MOTOR . . . . . Part No. 3431 509
Consists of:	
1 -	Housing
1 -	Spring Washer
2 -	Washer

CODE	PART NAME AND PART NUMBER
23-67-240	RESERVOIR and SEAL PACKAGE, W/SHIELD WASHER . . . . . Part No. 2809 011
Consists of:	
1 -	Reservoir
2 -	Seal
	RESERVOIR PACKAGE, W/SHIELD Washer . . . . . Part No. 3431 590
Consists of:	
1-	Reservoir
1- 2497 500	Cap
1-	Washer
1- 6015 776	Clip
	RESERVOIR PACKAGE, W/SHIELD Washer . . . . . Part No. 3431 691
Consists of:	
1-	Reservoir
1-	Washer
	RESERVOIR PACKAGE, w/SHIELD WASHER . . . . . Part No. 3431 965
Consists of:	
1 -	Reservoir
1 -	Seal
	RESERVOIR PACKAGE, W/Shield WASHER . . . . . Part No. 3431 968
Consists of:	
1 -	Reservoir
1 -	Seal
1 -	Cap w/Cover
23-67-252	PUMP and SEAL PACKAGE, W/SHIELD WASHER . . . . . Part No. 2809 013
Consists of:	
1 -	Pump
2 -	Seal
	PUMP and SEAL PACKAGE, W/SHIELD WASHER . . . . . Part No. 3431 964
Consists of:	
1 -	Pump
1 -	Seal
	PUMP and SEAL PACKAGE, W/SHIELD WASHER . . . . . Part No. 3431 969
Consists of:	
1 -	Pump
1 -	Seal
	FOOT PUMP and CHECK VALVE PACKAGE, W/SHIELD WASHER . . . . . Part No. 2932 868
Consists of:	
1 -	Pump and Spring
1 -	Washer
1 -	Check Valve

Printed in U.S.A.
November, 1974

CODE	PART NAME AND PART NUMBER
	PUMP PACKAGE, W/SHIELD WASHER ..... Part No. 3431 599
	Consists of:
1 -	Pump
1 - 2889 878	Washer
1 -	Pigtail
1 - 6015 776	Clip
24-01-1	BASIC PACKAGE
	SLIM LINE UNDER DASH Part No. 3879 309
	Consists of:
1 - 3879 494	Coil, Evaporator
1 - 3744 568	Valve, Expansion
1 - 3879 457	Case, Lower
1 - 3879 453	Case, Upper
1 - 3879 476	Adapter, Louver
1 - 3879 461	Bezel
3 - 3879 480	Louver
1 - 3879 482	Logo, Chrysler
1 - 3879 466	Panel, Control
1 - 3870 314	Switch
1 - 3838 063	Thermostat
2 - 3879 481	Knob
1 - 3879 483	Housing, Blower
1 - 3744 565	Motor, Blower
1 - 3879 487	Mount, Motor
1 - 3744 567	Blower Wheel w/Clip
2 - 3879 486	Ring, Venturi
1 -	Guard, Blower Housing
1 - 3744 576	Receiver Drier
1 - 3744 577	Clamp, Drier
1 - 3744 581	Hose, Drain 3/8" x 15"
1 - 3879 500	Hose, Flex 2-1/2" x 17"
1 - 3744 582	Coil, Condenser
4 - 3744 583	Bracket, Condenser
1 - 3870 317	Resistor Board
1 - 3879 485	Grille, Blower
1 - 3879 490	Harness, Wiring
1 - 3744 578	Hose, Suction
1 - 3879 497	Hose, Liquid
1 - 3744 580	Hose, Discharge
1 - 3744 584	Compressor
1 - 3744 585	Valve, Comp. 5/8"
1 - 3744 586	Valve, Comp. 1/2"
1 - 3744 587	Clutch, Magnetic 6"
1 - 3744 589	Pulley, Drive (225 Engine)
1 - 3744 590	Pulley, Drive (318, 360 Engine)
1 - 3744 592	Pulley, Idler
1 - 3744 595	Pulley, Smog Pump
24-01-1	BASIC PACKAGE
	IN DASH UNIT Part No. 3879 310
	Consists of:
1 - 3879 492	Coil, Evaporator
1 - 3744 568	Valve, Expansion
1 - 3879 455	Case, Lower
1 - 3879 451	Case, Upper
1 - 3879 445	Plenum
1 - 3502 007	Louver, Center
1 - 3441 362	Louver, Left
1 - 3879 471	Housing, Control
1 - 3879 469	Face Plate, Control
1 - 3870 314	Switch
1 - 3744 569	Thermostat 18"
2 - 3879 481	Knob, Control
1 - 3780 317	Resistor Board
1 - 3838 058	Harness Aux.
1 - 3838 062	Harness, Wiring
1 - 3870 312	Motor, 12 Volt Single Speed
2 - 3879 484	Blower Wheel w/Clip
1 - 3744 576	Receiver Drier
1 - 3744 577	Clamp, Receiver Drier
1 - 3780 322	Hose, Drain 1/2" x 20"
1 - 3879 500	Hose, Flex. 2-1/2" x 30"
1 - 3879 501	Hose, Flex. 3" x 15"
1 - 3879 499	Hose, Flex. 2-1/2" x 10"
1 - 3744 582	Coil, Condenser
4 - 3744 583	Bracket, Condenser
1 - 3744 584	Compressor
1 - 3744 585	Valve, Compressor 5/8"
1 - 3744 586	Valve, Compressor 1/2"
1 - 3744 578	Hose, Suction
1 - 3879 497	Hose, Liquid
1 - 3744 580	Hose, Discharge
1 - 3744 587	Clutch, Magnetic 6"
1 - 3744 589	Pulley, Drive (225 Engine)
1 - 3744 590	Pulley, Drive (318, 360 Engine)
1 - 3879 505	Pulley, Drive (400, 440 Engine)
1 - 3744 592	Pulley, Idler
1 - 3879 446	Box Glove
1 -	Bracket, Rt.
1 -	Bracket, Center
1 - 3879 447	Transition Hose, Center
1 - 3879 447	Transition Hose, Rt.
1 - 3879 448	Transition Hose, Lt.
24-01-1	BASIC PACKAGE,
	IN DASH UNIT Part No. 3837 329
	Consists of:
1 - 3879 495	Coil, Evaporator
1 - 3744 568	Valve, Expansion
1 - 3879 458	Case, Lower
1 - 3879 454	Case, Upper
1 - 3879 477	Plenum
1 - 3879 464	Transition Louver, Lt.
2 - 3879 465	Transition Louver, Center
1 - 3502 904	Louver, Rt.
2 - 3502 905	Louver, Lt.
1 - 3879 473	Housing, Control
1 - 3879 467	Panel, Control
1 - 3780 314	Switch
1 - 3879 488	Thermostat
2 - 3879 481	Knob, Control
1 - 3780 312	Motor, Blower
2 - 3879 484	Blower Wheel w/Clip
1 - 3744 576	Receiver Drier
1 - 3780 322	Hose, Drain 1/2" x 20"
1 - 3879 491	Harness, Wiring
1 - 3780 317	Resistor Board
1 - 3744 577	Clamp, Drier
1 - 3879 501	Hose, Flex. 3" x 15"
1 - 3879 502	Hose, Flex. 3" x 48"
2 -	Bracket, Vert. Mtg.
1 - 3744 582	Coil Condenser
4 - 3744 583	Bracket-Condenser
1 - 3838 058	Harness, Wiring Aux.
1 - 3744 578	Hose, Suction
1 - 3879 497	Hose, Liquid

Printed in U.S.A.
November, 1974

CODE	PART NAME AND PART NUMBER
1 - 3744 580	Hose, Discharge
1 - 3744 584	Compressor
1 - 3744 585	Valve, Comp. 5/8"
1 - 3744 586	Valve, Comp. 1/2"
1 - 3744 587	Clutch, Magnetic 6"
1 - 3744 589	Pulley, Drive (225 Engine)
1 - 3744 590	Pulley, Drive (318, 360 Engine)
1 - 3879 505	Pulley, Drive (400, 440 Engine)
1 - 3744 592	Pulley, Idler
24-25-2	PISTON RING
	PACKAGE ..... Part No. 2275 207
	Consists of:
1 -	Ring
1 - 1982 545	Gasket, Oil Sump
1 - 1990 584	Gasket, Cyl. Head
1 - 1990 598	Gasket, Valve Plate
24-25-3	PISTON and CONNECTING ROD
	PACKAGE ..... Part No. 2541 330
	Consists of:
1 -	Ball, Oil Pressure Relief
1 - 1990 584	Gasket, Cylinder Head
1 - 1990 598	Gasket, Valve Seat
1 -	Gasket, Oil Sump
1 -	Piston and Connecting Rod
1 -	Spring, Oil Pressure
	PISTON and CONNECTING ROD
	PACKAGE ..... Part No. 2932 972
	Consists of:
1 -	Piston and Connecting Rod
1 - 1982 545	Gasket, Oil Sump
1 - 1990 584	Gasket, Cylinder Head
1 - 1990 598	Gasket, Valve Seat
1 -	Ball, Oil Pressure Relief
1 -	Spring, Oil Pressure
24-25-70	CRANKSHAFT GAS
	SEAL PACKAGE. ..... Part No. 1426 501
	Consists of:
1 -	Seal, Crankshaft Gas
1 - 1982 542	Seal, Crankshaft Bearing Housing
24-25-93	VALVE PLATE
	PACKAGE ..... Part No. 2275 204
	Consists of:
1 - 1990 584	Gasket, Cylinder Head
1 - 1990 598	Gasket, Valve Plate
1 -	Plate, Valve
	VALVE PLATE
	PACKAGE ..... Part No. 2275 205
	Consists of:
1 - 1990 584	Gasket, Cylinder Head
1 - 1990 598	Gasket, Valve Plate
1 -	Plate, Valve
24-25-132	REPLACEMENT PACKAGE, COMPRESSOR E.T.R. VALVE ..... Part No. 3879 347
	Consists of:
1 - 3555 995	Valve
1 - 1997 446	Valve Gasket
24-25-154	CRANKSHAFT
	PACKAGE ..... Part No. 2815 762
	Consists of:
1 -	Crankshaft
1 - 1982 545	Gasket, Oil Sump
1 - 1990 584	Gasket, Cylinder Head
1 - 1990 598	Gasket, Valve Plate
1 - 1982 542	Seal, Bearing Housing
1 -	Seal, Gas
1 - 1747 982	Washer, Thrust
	CRANKSHAFT
	PACKAGE ..... Part No. 2815 755
	Consists of:
1 -	Crankshaft
1 - 1990 584	Gasket, Cylinder Head
1 - 1990 598	Gasket, Valve Plate
1 - 1982 545	Gasket, Oil Sump
1 - 1982 542	Seal, Bearing Housing
1 -	Seal, Gas
1 - 1747 982	Washer, Thrust
24-25-162	BEARING HOUSING
	PACKAGE ..... Part No. 3420 916
	Consists of:
1 -	Housing
1 - 1982 542	Seal
1 - 2019 681	Ball Bearing
	BEARING HOUSING
24-25-246	OIL PUMP
	PACKAGE ..... Part No. 2021 191
	Consists of:
1 -	Cover, Oil Pump
1 -	Rotor, Outer
1 -	Rotor, Inner
1 - 1747 988	Seal, Cover
1 -	Shaft

NOTES

Printed in U.S.A.
November, 1974

POLICE

R, W, P, D
4 Door Sedan
P
4 Door Station Wagon

NOTE: For Parts Not Listed in Police Section, Refer to 1974 Catalog.

CODE	PART NAME	ENG. TYPE OR CU. IN	V	B J	L	R	W	P	D	C (L M)	C (P)	C (H S)	Y	PART NUMBER
	GROUP 3 - AXLE—REAR													
	NOTE: For Parts refer to Rear Axle Section of the Parts Catalog.													
	GROUP 7 - COOLING													
7-14-4	**HOSE, Rad. Inlet w/ 225 Eng.**													
	Std.		—	—	—	1	1	—	—	—	—	—	—	# 3462 171
	GROUP 21 - TRANSMISSION													
	NOTE: For Parts Refer to Transmission Section of the Parts Catalog.													

NOTES

CARLINES J - Challenger, B - Barracuda; V - Valiant, L - Dart; R - Satellite, W - Coronet, - Charger; P - Plymouth, D - Dodge; C - Chrysler, Y - Imperial

AR Indicates use as required.
# Indicates parts not listed in any previous parts book.
Numerals in parentheses ( ) refer to notes.
★ Indicates change or addition.

Printed in U.S.A.
September 1973

NOTES

Printed in U.S.A.
September 1973

TAXI

R, W, P, D
4 Door Sedan

NOTE: For Parts Not Listed in Taxi Section, Refer to 1974 Catalog.

CODE	PART NAME	ENG. TYPE OR CU. IN	V	B J	L	R	W	P	D	C (L M)	C (P)	C (H S)	Y	PART NUMBER
GROUP 3 - AXLE—REAR														
	NOTE: For Parts Refer to Rear Axle Section of the Parts Catalog.													
GROUP 7 - COOLING														
7-14-4	HOSE, Rad. Inlet w/225 Eng. Std.		—	—	—	1	1	—	—	—	—	—	—	# 3462 171
GROUP 8 - ELECTRICAL														
8-12-2	**LAMP, Open Door Indicator**		—	—	—	1	1	1	1	—	—	—	—	2426 179
	SWITCH, Door Pillar, Rr.		—	—	2	—	—	—	—	—	—	—	—	3488 964
8-12-17	CONTACT, Socket		—	—	—	1	1	—	—	—	—	—	—	2256 966
8-15-32	**STRAP, Auto. Trans. Switch Wrg.**	6	—	—	—	1	1	—	—	—	—	—	—	2945 704
8-19-3	**WIRING, Open Door Indicator**		—	—	—	1	1	—	—	—	—	—	—	3588 645
GROUP 21 - TRANSMISSION														
	NOTE: For parts refer to transmission section of the parts catalog.													

NOTES

CARLINES
J - Challenger, B - Barracuda
V - Valiant, L - Dart
R - Satellite, W - Coronet, Charger
P - Plymouth, D - Dodge
C - Chrysler, Y - Imperial

AR Indicates use as required.
# Indicates parts not listed in any previous parts book.
Numerals in parentheses ( ) refer to notes.
★ Indicates change or addition.

Printed in U.S.A.
September 1973

CODE	PART NAME	MODEL CODES	SEE BOTTOM NOTE 21	23	27	29	41	43	45	46	PART NUMBER
	GROUP 23 - BODY										
23-47-6	**ADJUSTER, Frt. Seat Manual Bench**										
	New York Taxi	W-G	—	—	—	—	1	—	—	—	3670 578-9
23-47-15	SPACER, Frt. Seat Manual Adj.	W-G	—	—	—	—	2	—	—	—	2945 544

NOTES

TYPE LETTERS Indicates: J - Challenger, B - Barracuda, V - Valiant, L - Dart, R - Satellite, W - Coronet, P - Plymouth, D - Dodge, C - Chrysler, Y - Imperial

NUMERALS INDICATE: 21 - 2 DR. SED., 23 - 2 DR. H.T., 27 - CONV. CPE., 29 - FAST BACK, 41 - 4 DR. SED., 43 - 4 DR. H.T., 45 - 6 PASS. STA. WGN., 46 - 9 PASS. STA. WGN.

AR Indicates use as required.
# Indicates parts not listed in any previous parts book
Numerals in parentheses ( ) refer to notes.
★ Indicates change or addition.

Printed in U.S.A.
September 1973

Right and left part numbers are on same line, first number is right, second number is left.

1974 CHRYSLER CORPORATION

DU PONT

CHRYSLER • DODGE
IMPERIAL • PLYMOUTH

AUTOMOTIVE REFINISH COLORS

EXTERIOR COLORS

Usage	Mfr. Code and Color	LUCITE® CODE	CENTARI® CODE	DULUX® CODE
	A5			
C	Silver Frost Met.			
D	Dark Silver Met.			
I	Silver Frost Met.			
P	Silver Frost Met.	5542L	5542A	5542D
	B1			
C	Powder Blue			
D	Powder Blue			
I	Powder Blue			
P	Powder Blue	42857L	42857A	42857D
	B5			
C	Lucerne Blue			
D	Lucerne Blue			
I	Lucerne Blue			
P	Lucerne Blue	42858LH	42858AH	42858DH
	B8			
C	Starlight Blue Met.			
D	Starlight Blue Met.			
I	Starlight Blue Met.			
P	Starlight Blue Met.	42859LH	42859AH	42859DH
	E5			
D	Bright Red			
P	Rallye Red	5092LM	5092AM	5092DM
	E7			
C	Burnished Red Met.			
I	Burnished Red Met.	5253LM	5253AW	5253DH
	G2			
C	Frosty Green Met.			
D	Frosty Green Met.			
I	Frosty Green Met.			
P	Frosty Green Met.	42860LH	42860AH	42860DH

Usage	Mfr. Code and Color	LUCITE® CODE	CENTARI® CODE	DULUX® CODE
	G8			
C	Deep Sherwood Met.			
D	Deep Sherwood Met.			
I	Deep Sherwood Met.			
P	Deep Sherwood Met.	42861LH	42861AM	42861DH
	J6			
C	Avocado Gold Met.			
D	Avocado Gold Met.			
I	Avocado Gold Met.			
P	Avocado Gold Met.	42862LH	42862AH	42862DH
	L4			
C	Sahara Beige			
D	Parchment			
I	Sahara Beige			
P	Sahara Beige	5415L	5415A	5415D
	L6			
D	Aztec Gold Met.	5584LM	5584AW	5584DW
	L8			
C	Dark Moonstone Met.			
D	Dark Moonstone Met.			
I	Dark Moonstone Met.			
P	Dark Moonstone Met.	42863L	42863A	42863D
	T5			
C	Sienna Met.			
D	Sienna Met.			
I	Sienna Met.			
P	Sienna Met.	42864L	42864A	42864D
	T9			
C	Dark Chestnut Met.			
D	Dark Chestnut Met.			
I	Dark Chestnut Met.			
P	Dark Chestnut Met.	42865LM	42865AW	42865DM

Usage	Mfr. Code and Color	LUCITE® CODE	CENTARI® CODE	DULUX® CODE
	W1			
C	Spinnaker White			
D	Eggshell White			
I	Spinnaker White			
P	Spinnaker White	4996L	4996A	4996D
	X9			
C	Formal Black			
D	Black			
I	Formal Black			
P	Formal Black	99L	99A	93-005
	Y2			
C	Sunfire Yellow			
D	Yellow			
I	Sunfire Yellow			
P	Sunfire Yellow	5410L	5410AM	5410D
	Y4			
C	Golden Fawn			
D	Golden Fawn			
I	Golden Fawn			
P	Golden Fawn	42866L	42866A	42866DH
	Y5			
D	Yellow Blaze			
P	Yellow Blaze	42867LM	42867AM	42867DH
	Y6			
C	Golden Haze Met.			
D	Gold Met.			
I	Golden Haze Met.			
P	Golden Haze Met.	5549LH	5549AM	5549DH
	Y9			
C	Tahitian Gold Met.			
D	Dark Gold Met.			
I	Tahitian Gold Met.			
P	Tahitian Gold Met.	5551LH	5551AH	5551D

INTERIOR COLORS

9845L 4790L	C-D-I-P C-I White	Satin S.G.	42931LH 42924LH	C-D-I-P C-D-I-P Dark Chestnut	Satin S.G.	42927LH 42921LH	C-D-I-P C-D-I-P Dark Blue	Satin S.G.	42928LH 42922LH	D-P D-P Dark Green Met.	Satin S.G.

KEY: C—Chrysler, D—Dodge, I—Imperial, P—Plymouth.

LUCITE Acrylic Lacquer, CENTARI Acrylic Enamel and DULUX Enamel are Registered Trademarks of the Du Pont Company.
Suffixes shown are subject to change when formulations are finalized.

CHRYSLER CORP.

CHRYSLER CORPORATION

PRIOR YEARS COLOR INFORMATION

1971

Mfr. Paint Code	Color	Usage	Lucite® Code	Centari® Code	Dulux® Code	Mfr. Paint Code	Color	Usage	Lucite® Code	Centari® Code	Dulux® Code
A4	Gray Met.	C-D-I-P	5245L	5245A	5245D	L1	Beige	C-I-P	4998L	4998A	4998D
A8	Gray Met.	C-D-I-P	5246L	5246A	5246D	L5	Yellow	D-P	5267L	5267A	5267D
A9	Gray Met.	I	4980L	4980A	4980D	L6	Gold Met.	C-I	5130LH	5130AM	5130DH
B2	Blue Met.	C-D-I-P	5247L	5247A	5247D	M8	Burgundy Met.	I	5258LH	5258AM	5258DM
B5	Blue Met.	D-P	5251L	5251A	5251D	Q5	Turquoise Met.	C-D-I-P	5268LH	5268A	5268D
B7	Blue Met.	C-D-P	5249L	5249A	5249D	T2	Tan Met.	D-P	5259L	5259A	5259D
B9	Blue Met.	I	5250L	5250A	5250D	T8	Walnut Met.	C-D-I-P	5260LH	5260A	5260D
C7	Purple Met.	D-P	5182LM	5182AW	5182DH	V2	Red	D-P	5067LH	5067A	5067DH
C8	Indigo Met.	P	5265LH	5265AM	5265DH	W1	White	C-D-I-P	4996L	4996A	4996D
E5	Red	D-P	5092LM	5092AM	5092DM	W3	White	D-P	5262L	5262A	5262D
E7	Red Met.	C-D-I-P	5253LM	5253AW	5253DH	X9	Black	C-D-I-P	99L	99A	93-005
F3	Green Met.	C-D-I-P	5254L	5254A	5254DH	Y1	Yellow	C	5180L	5180A	5180D
F7	Green Met.	D-P	5255LH	5255AH	5255D	Y3	Yellow	D-P	5308LH	5308AH	5308DH
F9	Green Met.	C-I	5256LH	5256AH	5256DH	Y4	Gold	D-P	5263L	5263A	5263D
J4	Green Met.	C-D-I-P	5307LM	5307AW	5307DH	Y5	Gold Met.	C-I	5264L	5264A	5264D
J6	Green	D-P	5127L	5127A	5127D	Y8	Gold Met.	D-P	5309LH	5309AM	5309DH
K6	Bronze Met.	C-D-I-P	5257LM	5257AW	5257DH	Y9	Gold Met.	C-D-I-P	5266LH	5266AM	5266DM

1972

Mfr. Paint Code	Color	Usage	Lucite® Code	Centari® Code	Dulux® Code	Mfr. Paint Code	Color	Usage	Lucite® Code	Centari® Code	Dulux® Code
A4	Gray Met.	D-P	5245L	5245A	5245D	T6	Tan Met.	D-P	5421L	5421AM	5421D
A9	Dk. Gray Met.	C-D-I-P	4980L	4980A	4980D	T8	Dk. Tan Met.	C-D-I-P	5422L	5422AM	5422D
B1	Blue	C-D-I-P	5411L	5411A	5411D	V2	Red	D-P	5067LH	5067A	5067DH
B3	Blue	D-P	5351L	5351A	5351D	W1	White	C-D-I-P	4996L	4996A	4996D
B5	Blue Met.	C-D-I-P	5251L	5251A	5251D	X9	Black	C-D-I-P	99L	99A	93-005
B7	Dk. Blue Met.	C-D-I-P	5249L	5249A	5249D	Y1	Yellow	D-P	5180L	5180A	5180D
E5	Red	C-D-I-P	5092LM	5092AM	5092DM	Y2	Lt. Yellow	C-D-I-P	5410L	5410AM	5410D
F3	Lt. Green Met.	C-D-I-P	5254L	5254A	5254DH	Y4	Lt. Gold	C-D-I-P	5263L	5263A	5263D
F7	Dk. Green Met.	C-D-I-P	5255LH	5255AH	5255D	Y8	Gold Met.	C-D-I-P	5309LH	5309AM	5309DH
L4	Beige	C-D-I-P	5415L	5415A	5415D	Y9	Dk. Gold Met.	C-D-I-P	5266LH	5266AM	5266DM
Q5	Turquoise Met.	C-D-I-P	5268LH	5268A	5268D						

1973

Mfr. Paint Code	Color	Usage	Lucite® Code	Centari® Code	Dulux® Code	Mfr. Paint Code	Color	Usage	Lucite® Code	Centari® Code	Dulux® Code
A5	Dk. Silver Met.	C-D-I-P	5542L	5542A	5542D	L6	Red Gold Met.	D	5584L	5584AW	5584D
B1	Blue	C-D-I-P	5411L	5411A	5411D	Q5	Turquoise Met.	C-D-I-P	5268LH	5268A	5268D
B3	Blue	D-P	5351L	5351A	5351D	T6	Med. Tan Met.	D-P	5579L	5579AM	5579D
[illegible]		C-D-I-P	5574L	5574A	5574D	T8	Dk. Tan Met.	C-D-I-P	5422L	5422AM	5422D
[illegible]		C-D-I-P	5543L	[illegible]	[illegible]3D	T9	Dk. Chestnut Met.	D	42856L	42856AM	42856D
E5	[illegible]	D-P	5092LM	[illegible]	[illegible]	V2	Red	D-P	5067LH	5067A	5067DH
[illegible]	Red	C-I	5253LM	[illegible]	[illegible]	W1	White	C-D-I-P	4996L	4996A	4996D
F3	Pale Green	C-D-I-P	5544L	5544A	5544D	X9	Black	C-D-I-P	99L	99A	93-005
F3	Lt. Green	C-D-I-P	5555LH	5555AH	5555D	Y1	Yellow	D-P	5180L	5180A	5180D
F8	Dk. Green	C-D-I-P	5547LH	[illegible]AM	5547DM	Y2	Lt. Yellow	C-D-I-P	5410L	5410AM	5410D
K3	Copper Met.	C-I	5585L	[illegible]	5585D	Y3	Lt. Gold	C-D-I-P	5548LH	5548A	5548D
K6	Bronze Met.	D-P	5257LM	[illegible]	5257DH	Y6	Gold Met.	C-D-I-P	5549LH	5549AM	5549D
L4	Beige	C-D-I-P	5415L	[illegible]	5415D	Y9	Dk. Gold Met.	C-D-I-P	5551LH	5551AH	5551D

INTERIOR COLORS (Chrysler)



42930LH C-D-I-P S.G.
Light Parchment



42929LH C-D-I-P Satin
42923LH C-D-I-P S.G.
Light Gold

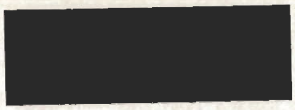

42932LH C-D-I-P Satin
42926LH C-D-I-P S.G.
Dark Green

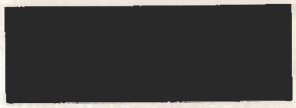

9844L C-D-I-P Satin
99L C-D-I-P S.G.
Black



9936LH C-D-I-P Satin
Dark Parchment



10036LM C-D-I-P Satin
Dark Gold

STRIPING COLORS

STOCK NO.	COLOR	USAGE	STOCK NO.	COLOR	USAGE
42933L	Medium Blue	C-D-P	42935LH	Yellow-Orange	P
42934L	Medium Green	C-D-P	4959LH	Red	D
10041L	Parchment	C-D-P	4996L	White	C-D-P
42936LH	Chestnut	C-D-P	99L	Black	C-D-P
42937LH	Brite Gold	C-D-P			

TRUNK COLORS

CHRYSLER	DODGE	PLYMOUTH
389-2076 Three-Tone Black & Gray	389-2076 Three-Tone Black & Gray	389-2076 Three-Tone Black & Gray

KEY: C—Chrysler, D—Dodge, I—Imperial, P—Plymouth

A-85583

DU PONT
AUTOMOTIVE REFINISH COLORS

LUCITE Acrylic Lacquer, CENTARI Acrylic Enamel and DULUX Enamel are Registered Trademarks of the Du Pont Company.
Suffixes shown are subject to change when Formulations are finalized.
Color chips reproduced on paper cannot be considered totally accurate color matches to either car makers' standards or Du Pont material.

1974 CHRYSLER CORPORATION

DODGE COLT
EXTERIOR COLORS

LUCITE® CENTARI® DULUX®

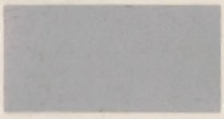

42620L — 42620D
10028 Silver Met.

LUCITE® CENTARI® DULUX®



8797L — —
10125 Sunburst Yellow

LUCITE® CENTARI® DULUX®

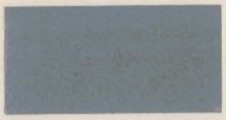

8822L — 8822D
10205 Pacific Blue Met. #2

LUCITE® CENTARI® DULUX®



8878LH 8878AH 8878DH
10217 Sea Green Met.



42621LM — 42621DH
10255 Brite Red

43246L — —
10267 White

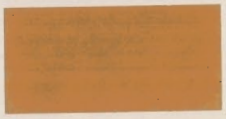

8800LH — —
10164 Sunset Orange



8879LH 8879AH 8879DH
10216 Spice Met.



42619LH — 42619DH
10221 Bright Yellow

DODGE TRUCK
EXTERIOR COLORS

CENTARI® DULUX® LUCITE®



42881A 42881D 42881L
DT-1417 White

CENTARI® DULUX® LUCITE®

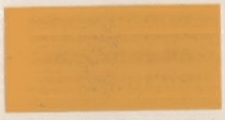

4320A 4320D 4320L
DT-2245 School Bus Yellow

CENTARI® DULUX® LUCITE®



42867AM 42867DH 42867LM
DT-2550 Brite Yellow

CENTARI® DULUX® LUCITE®



92144AH 93-92144H 2842LH
DT-3116 Brite Red Truck



7863A 7863D 7863L
DT-6397 Bahama Yellow



7864A 7864D 7864L
DT-6398 Bronze Met.

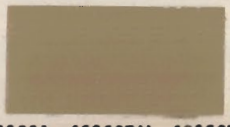

42866A 42866DH 42866L
DT-6442 Gold

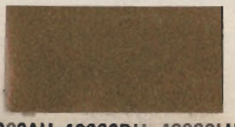

42880AH 42880DH 42880LH
DT-6443 Med. Gold Met.



7865A 7865D 7865L
DT-7704 Brt. Turquoise

42862AH 42862DH 42862LH
DT-7762 Avocado Met.

42879A 42879D 42879L
DT-7775 Lt. Green

42861AM 42861DH 42861LH
DT-7776 Dk. Green Met.

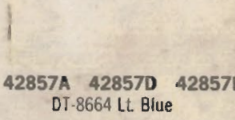

42857A 42857D 42857L
DT-8664 Lt. Blue

42858AH 42858DH 42858LH
DT-8665 Med. Blue Met.

DU PONT
AUTOMOTIVE REFINISH COLORS

LUCITE Acrylic Lacquer, CENTARI Acrylic Enamel and DULUX Enamel are Registered Trademarks of the Du Pont Company.
Color chips reproduced on paper cannot be considered totally accurate color matches to either car makers' standards or Du Pont material.

1974 CHRYSLER CORPORATION

DU PONT

CHRYSLER • DODGE
IMPERIAL • PLYMOUTH

AUTOMOTIVE REFINISH COLORS

EXTERIOR COLORS

Usage	Mfr. Code and Color	LUCITE* CODE	CENTARI* CODE	DULUX* CODE
	A5			
C	Silver Frost Met.			
D	Dark Silver Met.			
I	Silver Frost Met.			
P	Silver Frost Met.	5542L	5542A	5542D
	B1			
C	Powder Blue			
D	Powder Blue			
I	Powder Blue			
P	Powder Blue	42857L	42857A	42857D
	B5			
C	Lucerne Blue			
D	Lucerne Blue			
I	Lucerne Blue			
P	Lucerne Blue	42858LH	42858AH	42858DH
	B8			
C	Starlight Blue Met.			
D	Starlight Blue Met.			
I	Starlight Blue Met.			
P	Starlight Blue Met.	42859LH	42859AH	42859DH
	E5			
D	Bright Red			
P	Rallye Red	5092LM	5092AM	5092DM
	E7			
C	Burnished Red Met.			
I	Burnished Red Met.	5253LM	5253AW	5253DH
	G2			
C	Frosty Green Met.			
D	Frosty Green Met.			
I	Frosty Green Met.			
P	Frosty Green Met.	42860LH	42860AH	42860DH

Usage	Mfr. Code and Color	LUCITE* CODE	CENTARI* CODE	DULUX* CODE
	G8			
C	Deep Sherwood Met.			
D	Deep Sherwood Met.			
I	Deep Sherwood Met.			
P	Deep Sherwood Met.	42861LH	42861AM	42861DH
	J6			
C	Avocado Gold Met.			
D	Avocado Gold Met.			
I	Avocado Gold Met.			
P	Avocado Gold Met.	42862LH	42862AH	42862DH
	L4			
C	Sahara Beige			
D	Parchment			
I	Sahara Beige			
P	Sahara Beige	5415L	5415A	5415D
	L6			
D	Aztec Gold Met.			
		5584LM	5584AW	5584DW
	L8			
C	Dark Moonstone Met.			
D	Dark Moonstone Met.			
I	Dark Moonstone Met.			
P	Dark Moonstone Met.	42863L	42863A	42863D
	T5			
C	Sienna Met.			
D	Sienna Met.			
I	Sienna Met.			
P	Sienna Met.	42864L	42864A	42864D
	T9			
C	Dark Chestnut Met.			
D	Dark Chestnut Met.			
I	Dark Chestnut Met.			
P	Dark Chestnut Met.	42865LM	42865AW	42865DM

Usage	Mfr. Code and Color	LUCITE* CODE	CENTARI* CODE	DULUX* CODE
	W1			
C	Spinnaker White			
D	Eggshell White			
I	Spinnaker White			
P	Spinnaker White	4996L	4996A	4996D
	X9			
C	Formal Black			
D	Black			
I	Formal Black			
P	Formal Black	99L	99A	93-005
	Y2			
C	Sunfire Yellow			
D	Yellow			
I	Sunfire Yellow			
P	Sunfire Yellow	5410L	5410AM	5410D
	Y4			
C	Golden Fawn			
D	Golden Fawn			
I	Golden Fawn			
P	Golden Fawn	42866L	42866A	42866DH
	Y5			
D	Yellow Blaze			
P	Yellow Blaze	42867LM	42867AM	42867DH
	Y6			
C	Golden Haze Met.			
D	Gold Met.			
I	Golden Haze Met.			
P	Golden Haze Met.	5549LH	5549AM	5549DH
	Y9			
C	Tahitian Gold Met.			
D	Dark Gold Met.			
I	Tahitian Gold Met.			
P	Tahitian Gold Met.	5551LH	5551AH	5551D

INTERIOR COLORS

9845L 4790L	C-D-I-P C-I White	Satin S.G.	42931LH 42924LH	C-D-I-P C-D-I-P Dark Chestnut	Satin S.G.	42927LH 42921LH	C-D-I-P C-D-I-P Dark Blue	Satin S.G.	42928LH 42922LH	D-P D-P Dark Green Met.	Satin S.G.

KEY: C—Chrysler, D—Dodge, I—Imperial, P—Plymouth.

LUCITE Acrylic Lacquer, CENTARI Acrylic Enamel and DULUX Enamel are Registered Trademarks of the Du Pont Company.
Suffixes shown are subject to change when Formulations are finalized.

CHRYSLER CORPORATION

PRIOR YEARS COLOR INFORMATION

1971

Mfr. Paint Code	Color	Usage	Lucite® Code	Centari® Code	Dulux® Code	Mfr. Paint Code	Color	Usage	Lucite® Code	Centari® Code	Dulux® Code
A4	Gray Met.	C-D-I-P	5245L	5245A	5245D	L1	Beige	C-I-P	4998L	4998A	4998D
A8	Gray Met.	C-D-I-P	5246L	5246A	5246D	L5	Yellow	D-P	5267L	5267A	5267D
A9	Gray Met.	I	4980L	4980A	4980D	L6	Gold Met.	C-I	5130LH	5130AM	5130DH
B2	Blue Met.	C-D-I-P	5247L	5247A	5247D	M8	Burgundy Met.	I	5258LH	5258AM	5258DM
B5	Blue Met.	D-P	5251L	5251A	5251D	Q5	Turquoise Met.	C-D-I-P	5268LH	5268A	5268D
B7	Blue Met.	C-D-P	5249L	5249A	5249D	T2	Tan Met.	D-P	5259L	5259A	5259D
B9	Blue Met.	I	5250L	5250A	5250D	T8	Walnut Met.	C-D-I-P	5260LH	5260A	5260D
C7	Purple Met.	D-P	5182LM	5182AW	5182DH	V2	Red	D-P	5067LH	5067A	5067DH
C8	Indigo Met.	P	5265LH	5265AM	5265DH	W1	White	C-D-I-P	4996L	4996A	4996D
E5	Red	D-P	5092LM	5092AM	5092DM	W3	White	D-P	5262L	5262A	5262D
E7	Red Met.	C-D-I-P	5253LM	5253AW	5253DH	X9	Black	C-D-I-P	99L	99A	93-005
F3	Green Met.	C-D-I-P	5254L	5254A	5254DH	Y1	Yellow	C	5180L	5180A	5180D
F7	Green Met.	D-P	5255LH	5255AH	5255D	Y3	Yellow	D-P	5308LH	5308AH	5308DH
F9	Green Met.	C-I	5256LH	5256AH	5256DH	Y4	Gold	D-P	5263L	5263A	5263D
J4	Green Met.	C-D-I-P	5307LM	5307AW	5307DH	Y5	Gold Met.	C-I	5264L	5264A	5264D
J6	Green	D-P	5127L	5127A	5127D	Y8	Gold Met.	D-P	5309LH	5309AM	5309DH
K6	Bronze Met.	C-D-I-P	5257LM	5257AW	5257DH	Y9	Gold Met.	C-D-I-P	5266LH	5266AM	5266DM

1972

Mfr. Paint Code	Color	Usage	Lucite® Code	Centari® Code	Dulux® Code	Mfr. Paint Code	Color	Usage	Lucite® Code	Centari® Code	Dulux® Code
A4	Gray Met.	D-P	5245L	5245A	5245D	T6	Tan Met.	D-P	5421L	5421AM	5421D
A9	Dk. Gray Met.	C-D-I-P	4980L	4980A	4980D	T8	Dk. Tan Met.	C-D-I-P	5422L	5422AM	5422D
B1	Blue	C-D-I-P	5411L	5411A	5411D	V2	Red	D-P	5067LH	5067A	5067DH
B3	Blue	D-P	5351L	5351A	5351D	W1	White	C-D-I-P	4996L	4996A	4996D
B5	Blue Met.	C-D-I-P	5251L	5251A	5251D	X9	Black	C-D-I-P	99L	99A	93-005
B7	Dk. Blue Met.	C-D-I-P	5249L	5249A	5249D	Y1	Yellow	D-P	5180L	5180A	5180D
E5	Red	C-D-I-P	5092LM	5092AM	5092DM	Y2	Lt. Yellow	C-D-I-P	5410L	5410AM	5410D
F3	Lt. Green Met.	C-D-I-P	5254L	5254A	5254DH	Y4	Lt. Gold	C-D-I-P	5263L	5263A	5263D
F7	Dk. Green Met.	C-D-I-P	5255LH	5255AH	5255D	Y8	Gold Met.	C-D-I-P	5309LH	5309AM	5309DH
L4	Beige	C-D-I-P	5415L	5415A	5415D	Y9	Dk. Gold Met.	C-D-I-P	5266LH	5266AM	5266DM
Q5	Turquoise Met.	C-D-I-P	5268LH	5268A	5268D						

1973

Mfr. Paint Code	Color	Usage	Lucite® Code	Centari® Code	Dulux® Code	Mfr. Paint Code	Color	Usage	Lucite® Code	Centari® Code	Dulux® Code
A5	Dk. Silver Met.	C-D-I-P	5542L	5542A	5542D	L6	Red Gold Met.	D	5584L	5584AW	5584D
B1	Blue	C-D-I-P	5411L	5411A	5411D	Q5	Turquoise Met.	C-D-I-P	5268LH	5268A	5268D
B3	Blue	D-P	5351L	5351A	5351D	T6	Med. Tan Met.	D-P	5579L	5579AM	5579D
B5	Brt. Blue Met.	C-D-I-P	5574L	5574A	5574D	T8	Dk. Tan Met.	C-D-I-P	5422L	5422AM	5422D
B9	Dk. Blue Met.	C-D-I-P	5543L	5543A	5543D	T9	Dk. Chestnut Met.	P	42856L	42856AM	42856D
E5	Brt. Red	D-P	5092LM	5092AM	5092DM	V2	Red	D-P	5067LH	5067A	5067DH
E7	Red Met.	C-I	5253LM	5253AW	5253DH	W1	White	C-D-I-P	4996L	4996A	4996D
F1	Pale Green	C-D-I-P	5544L	5544A	5544D	X9	Black	C-D-I-P	99L	99A	93-005
F3	Lt. Green Met.	C-D-I-P	5555LH	5555AH	5555D	Y1	Yellow	D-P	5180L	5180A	5180D
F8	Dk. Green Met.	C-D-I-P	5547LH	5547AM	5547DM	Y2	Lt. Yellow	C-D-I-P	5410L	5410AM	5410D
K3	Copper Met.	C	5585L	5585AW	5585D	Y3	Lt. Gold	C-D-I-P	5548LH	5548A	5548D
K6	Bronze Met.	D-P	5257LM	5257AW	5257DH	Y6	Gold Met.	C-D-I-P	5549LH	5549AM	5549D
L4	Beige	C-D-I-P	5415L	5415A	5415D	Y9	Dk. Gold Met.	C-D-I-P	5551LH	5551AH	5551D

INTERIOR COLORS (Chrysler)



42930LH C-D-I-P S.G.
Light Parchment



42929LH C-D-I-P Satin
42923LH C-D-I-P S.G.
Light Gold

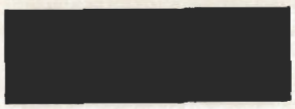

42932LH C-D-I-P Satin
42926LH C-D-I-P S.G.
Dark Green

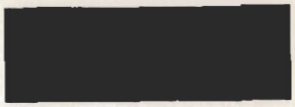

9844L C-D-I-P Satin
99L C-D-I-P S.G.
Black



9936LH C-D-I-P Satin
Dark Parchment



10036LM C-D-I-P Satin
Dark Gold

STRIPING COLORS

STOCK NO.	COLOR	USAGE	STOCK NO.	COLOR	USAGE
42933L	Medium Blue	C-D-P	42935LH	Yellow-Orange	P
42934L	Medium Green	C-D-P	4959LH	Red	D
10041L	Parchment	C-D-P	4996L	White	C-D-P
42936LH	Chestnut	C-D-P	99L	Black	C-D-P
42937LH	Brite Gold	C-D-P			

TRUNK COLORS

CHRYSLER	DODGE	PLYMOUTH
389-2076 Three-Tone Black & Gray	389-2076 Three-Tone Black & Gray	389-2076 Three-Tone Black & Gray

KEY: C—Chrysler, D—Dodge, I—Imperial, P—Plymouth

A-85583

DUPONT

AUTOMOTIVE REFINISH COLORS

LUCITE Acrylic Lacquer, CENTARI Acrylic Enamel and DULUX Enamel are Registered Trademarks of the Du Pont Company.
Suffixes shown are subject to change when Formulations are finalized.
Color chips reproduced on paper cannot be considered totally accurate color matches to either car makers standards or Du Pont material.

1974 CHRYSLER CORPORATION

DODGE COLT
EXTERIOR COLORS

LUCITE* CENTARI* DULUX*

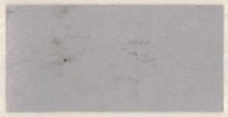

42620L — 42620D
10028 Silver Met.

LUCITE* CENTARI* DULUX*



8797L — —
10125 Sunburst Yellow

LUCITE* CENTARI* DULUX*



8822L — 8822D
10205 Pacific Blue Met. #2

LUCITE* CENTARI* DULUX*



8878LH 8878AH 8878DH
10217 Sea Green Met.



42621LM — 42621DH
10255 Brite Red

43246L — —
10267 White

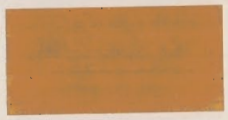

8800LH — —
10164 Sunset Orange



8879LH 8879AH 8879DH
10216 Spice Met.



42619LH — 42619DH
10221 Bright Yellow

DODGE TRUCK
EXTERIOR COLORS

CENTARI* DULUX* LUCITE*

42881A 42881D 42881L
DT-1417 White

CENTARI* DULUX* LUCITE*



4320A 4320D 4320L
DT-2245 School Bus Yellow

CENTARI* DULUX* LUCITE*



42867AM 42867DH 42867LM
DT-2550 Brite Yellow

CENTARI* DULUX* LUCITE*



92144AH 93-92144H 2842LH
DT-3116 Brite Red Truck



7863A 7863D 7863L
DT-6397 Bahama Yellow



7864A 7864D 7864L
DT-6398 Bronze Met.



42866A 42866DH 42866L
DT-6442 Gold



42880AH 42880DH 42880LH
DT-6443 Med. Gold Met.

7865A 7865D 7865L
DT-7704 Brt. Turquoise

42862AH 42862DH 42862LH
DT-7762 Avocado Met.

42879A 42879D 42879L
DT-7775 Lt. Green

42861AM 42861DH 42861LH
DT-7776 Dk. Green Met.

42857A 42857D 42857L
DT-8664 Lt. Blue

42858AH 42858DH 42858LH
DT-8665 Med. Blue Met.

DU PONT
AUTOMOTIVE REFINISH COLORS

LUCITE Acrylic Lacquer, CENTARI Acrylic Enamel and DULUX Enamel are Registered Trademarks of the Du Pont Company
Color chips reproduced on paper cannot be considered totally accurate color matches to either car makers' standards or Du Pont material.

LIMCO
SINCE 1902

1974 CHRYSLER CORPORATION COLORS

A5 — Silver Metallic
6700 4700

B1 — Light Blue
6827 4827

B5 — Medium Blue Metallic
6828 4828

B8 — Dark Blue Metallic
6835 4835

E5 — Red
6421 4421

E7 — Russet Metallic
6532 4532

G2 — Light Green Metallic
6829 4829

G8 — Dark Green Metallic
6836 4836

J6 — Avocado Metallic
6830 4830

L4 — Beige
6662 4662

L6 — Aztec Gold Metallic
6796 4796

L8 — Dark Moonstone Metallic
6831 4831

T5 — Sienna Metallic
6832 4832

T9 — Dark Chestnut Metallic
6897 4897

W1 — White
6293 4172

Y2 — Light Yellow
6225 4130

Y4 — Light Gold
6833 4833

Y5 — Brite Yellow
6834 4834

Y6 — Gold Metallic
6706 4706

Y9 — Dark Gold Metallic
6707 4707

Refer to Package Label or
Machine Mixing Formula
For Pricing Code

Limbacher Paint and Color Works, Inc.
MT. VERNON, NEW YORK 10550 CLEVELAND, OHIO 44107

1974 CHRYSLER CORPORATION COLORS

1974 CHRYSLER CORPORATION COLORS

LIMCO SINCE 1882

A5 Silver Metallic
6700 4700

B1 Light Blue
6827 4827

B5 Medium Blue Metallic
6828 4828

B8 Dark Blue Metallic
6835 4835

E5 Red
6421 4421

E7 Russet Metallic
6532 4532

G2 Light Green Metallic
6829 4829

G8 Dark Green Metallic
6836 4836

J6 Avocado Metallic
6830 4830

L4 Beige
6662 4662

L6 Aztec Gold Metallic
6796 4796

L8 Dark Moonstone Metallic
6831 4831

T5 Sienna Metallic
6832 4832

T9 Dark Chestnut Metallic
6897 4897

W1 White
6293 4172

Y2 Light Yellow
6225 4130

Y4 Light Gold
6833 4833

Y5 Brite Yellow
6834 4834

Y6 Gold Metallic
6706 4706

Y9 Dark Gold Metallic
6707 4707

Refer to Package Label or
Machine Mixing Formula
For Pricing Code

Limbacher Paint and Color Works, Inc.
MT. VERNON, NEW YORK 10550 CLEVELAND, OHIO 44107

1974 CHRYSLER CORPORATION COLORS

1974 CHRYSLER CORPORATION CAR COLOR REFERENCE CHART

Code	Valiant Barracuda	Fury	Plymouth Satellite	Dart Challenger	Dodge Coronet	Polara	Chrysler	Imperial
A5	SILVER FROST METALLIC			DARK SILVER METALLIC			SILVER FROST METALLIC	
B1	POWDER BLUE			POWDER BLUE			POWDER BLUE	
B5	LUCERNE BLUE METALLIC			LUCERNE BLUE METALLIC			LUCERNE BLUE METALLIC	
B8		STARLIGHT BLUE MET.				STARLIGHT BLUE METALLIC		
E5	RALLYE RED			BRIGHT RED				
E7	BURNISHED RED MET.		BURNISHED RED METALLIC				BURNISHED RED METALLIC	
G2	FROSTY GREEN METALLIC			FROSTY GREEN METALLIC			FROSTY GREEN METALLIC	
G8	DEEP SHERWOOD METALLIC			DEEP SHERWOOD METALLIC			DEEP SHERWOOD MET.	
J6	AVOCADO GOLD METALLIC			AVOCADO GOLD METALLIC			AVOCADO GOLD MET.	
L4	SAHARA BEIGE			PARCHMENT			SAHARA BEIGE	
L6					AZTEC GOLD MET.			
L8	DARK MOONSTONE METALLIC			DARK MOONSTONE METALLIC			DARK MOONSTONE MET.	
T5	SIENNA METALLIC			SIENNA METALLIC			SIENNA METALLIC	
T9		DK. CHESTNUT MET.				DARK CHESTNUT METALLIC		
W1	SPINNAKER WHITE			EGGSHELL WHITE			SPINNAKER WHITE	
Y2		SUNFIRE YELLOW				YELLOW	SUNFIRE YELLOW	
Y4	GOLDEN FAWN			GOLDEN FAWN			GOLDEN FAWN	
Y5	YELLOW BLAZE		YELLOW BLAZE					
Y6	GOLDEN HAZE METALLIC			GOLD METALLIC			GOLDEN HAZE MET.	
Y9	TAHITIAN GOLD METALLIC			DARK GOLD METALLIC			TAHITIAN GOLD MET.	

1974 CHRYSLER-IMPERIAL

R-M INMONT

RINSHED-MASON PRODUCTS

INMONT CORPORATION

5935 Milford Ave. • Detroit, Michigan 48210
1244 N. Lemon St. • Anaheim, California 92803

	CODE		CODE		CODE		CODE
Silver Frost Irid. A-2674, E-2674	A5	Powder Blue A-2744, E-2744	B1	Lucerne Blue Irid. A-2745, E-2745	B5	Starlight Blue Irid. A-2746, E-2746	B8
Burnished Red Irid. A-2405F, E-2405F	E7	Frosty Green Irid. A-2747, E-2747	G2	Deep Sherwood Irid. A-2748, E-2748	G8	Avocado Gold Irid. A-2749G, E-2749G	J6
Sahara Beige A-2538, E-2538	L4	Dark Moonstone Irid. A-2750, E-2750	L8	Sienna Irid. A-2751G, E-2751G	T5	Dark Chestnut Irid. A-2694D, E-2694D	T9
Spinnaker White A-2063, E-2063	W1	Sunfire Yellow A-1966, E-1966D	Y2	Golden Fawn A-2752, E-2752	Y4	Golden Haze Irid. A-2681G, E-2681G	Y6
Tahitian Gold Irid. A-2682D, E-2682D	Y9	Navajo Copper Irid. A-2693, E-2693	*K3	Formal Black A-946, P-403	X9		

*1973 Spring Color only

PAINT STRIPE COLORS

Color	Formula No.
Medium Blue	174Y22
Medium Green	174Y35
Brite Gold	174Y73
Parchment	173Y93
Black	A-946
White	A-2063
Chestnut	174Y84

TRUNK FINISHES

Three Tone - Black, Gray & White
837 Multiflek

1974 CHRYSLER-IMPERIAL
INTERIOR COLORS

Color	Formula No.
Dark Blue (Suede)	174Y21
Dark Blue (Semi)	174Y20
Light Gold (Suede)	174Y71
Light Gold (Semi)	174Y70
Dark Gold (Suede)	173Y72
*Dark Gold (Semi)	173Y70
Light Parchment (Suede)	174Y83
Light Parchment (Semi)	174Y82
Dark Parchment (Suede)	173Y92
*Medium Parchment (Semi)	173Y90
Dark Green (Suede)	174Y33
Dark Green (Semi)	174Y32
Dark Chestnut (Suede)	174Y81
Dark Chestnut (Semi)	174Y80
White (Suede)	171Y90
White (Semi)	173Y95
Black (Suede)	173Y40
Black (Semi)	A-946

* Chrysler only

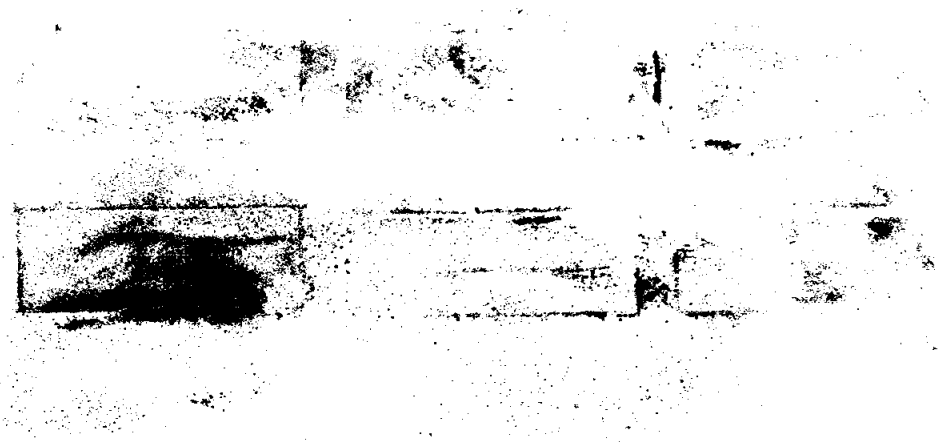

Ditzler Automotive Finishes PPG INDUSTRIES

1974 PLYMOUTH

VALIANT – BARRACUDA
SATELLITE – FURY

SPECIFY: DDL For DURACRYL® acrylic lacquer • DAR For DELSTAR® acrylic enamel • DQE For DITZCO® alkyd enamel

Paint Code	Paint Code	Paint Code	Paint Code
A-5 2513 Silver Frost Poly	E-7 2321 Burnished Red Poly	L-8 2633 Dark Moonstone Poly	Y-4 2635 Golden Fawn
B-1 2626 Powder Blue	G-2 2629 Frosty Green Poly	T-5 2634 Sienna Poly	Y-5 2636 Yellow Blaze
B-5 2627 Lucerne Blue Poly	G-8 2631 Deep Sherwood Poly	*T-9 2590 Dark Chestnut Poly	Y-6 2509 Golden Haze Poly
B-8 2628 Starlight Blue Poly	J-6 2632 Avocado Gold Poly	W-1 2033 Spinnaker White	Y-9 2510 Tahitian Gold Poly
E-5 2136 Rallye Red	L-4 2427 Sahara Beige	Y-2 81574 Sunfire Yellow	X-9 9300 Formal Black

*Also 1973 Color

STRIPPING COLORS

White	2033
Black	9000
Medium Blue	14682
Parchment	23740
Brite Gold	23994
Medium Green	44902

FIRST TWO DIGITS ARE ACCENT OR ROOF COLOR. SECOND TWO DIGITS ARE BASIC BODY COLOR.

FOR SPECIAL COLORS (CODED 999) FURNISH SPECIAL ORDER (SO) NUMBER AND SELLING DEALER WITH SERIAL NUMBER OF CAR.

CORPORATE IDENTITY COLORS
Corporate White 8367
Corporate Blue 12785

TRUNK SPATTER FINISH THREE TONE
(Black, White, Gray) – DS-1734
TWO TONE – (Black, White) DS-1768
STATION WAGON AIR DEFLECTOR
Black 9395 Gold 23802

BLUE ENGINE ENAMEL – DQE 14202
Painted grilles are painted in exterior colors.

LIGHT ARGENT	DX-8555
MEDIUM ARGENT	DDL-8933

1974 CRICKET (CANADA ONLY)

016 23654 Spice Poly	021 82064 Bright Yellow	025 81881 Sunburst Yellow	064 60624 Sunset Orange
017 44538 Sea Green Poly	Chip Not Available 0877 White	028 8938 Alpine Silver	065 14273 Pacific Blue Poly

(OVER)

1974 PLYMOUTH INTERIOR COLORS

SATIN OR FLAT COLORS

BARRACUDA

USED ON: (a) Instrument Panel. Glove box door-inner and outer. Check arm. Ash receiver face and handle. Stereo speaker grilles. Rear window defogger bezel. (b) Steering column and housing assembly, steering column collapsable can. Steering column lock control with floor mounted transmission control. (c) Garnish Mouldings — Upper windshield header. Backlight. Roofrail. Forward edge "C" Pillar.

Color Name	Ditzler Code DIA	Remarks
White	8849	(c)
Black	9388	(a), (b), (c)
Dark Blue	14643	(a), (c)
Dark Green Poly	44856	(a), (c)

FURY

USED ON: (a) Windshield garnish mouldings. Roof rails. Backlite moulding and cap. Rear window garnish mouldings — upper and lower. Wagon Parts — Tail gate roof header mouldings. Wheelhouse and tire cover mouldings. Radio speaker grill — rear quarter panel. Mouldings — Quarter window, roof rails, tailgate, roof header. Mouldings — 3rd seat back finish. Bezel — 3rd seat back latch release. Visor arms and brackets. (b) Rear shelf defogger bezel.

Color Name	Ditzler Code DIA	Remarks
Black	9388	(a), (b)
Dark Blue	14643	(a), (b)
Dark Gold	23765	(b)
Dark Parchment	23795	(b)
Light Parchment	23884	(a)
Light Gold	23885	(a)
Dark Chestnut	23886	(a)
Dark Green	44857	(a), (b)

SATELLITE

USED ON: (a) Instrument Panel — Defroster outlets, end cap, glove box door. Steering column and gear selector housing and spacer can and clip. Rear shelf defogger outlet bezel. Steering column lock control housing with floor mounted transmission. (b) Garnish Mouldings — Rear window, windshield upper inner, "C" Pillar, rear window side upper corners, roof rail. Lower "C" Pillar. Arm split back center front seat back hinge. (c) Roof rail quarter window moulding. "C" Pillar moulding and spare tire cover upper moulding. Headliner retainer roof rail and rear door. "D" Pillar speaker grill. Tailgate upper garnish mouldings — coachman. Quarter window belt moulding — coachman. (d) Floor pan assembly — panels, hinges, filler and mouldings.

Color Name	Ditzler Code DIA	Remarks
White	[illegible]	[illegible]
Black	[illegible]88	[illegible]
Dark [illegible]	14643	(a), (b)
Dark Gold	23765	(a)
Dark [illegible]	23795	(a), (d)
Light [illegible]	[illegible]884	(b), (c)
Light [illegible]	[illegible]885	(b)
Dark Chestnut	23886	(a), (b), (c), (d)
Dark Green Poly	44856	(a), (b), (c), (d)

VALIANT

USED ON: (a) Steering column. (b) Instrument panel, glove box door and check arm. Ash receiver face. Automatic gear selector quadrant and can assembly. Housing steering column lock control — floor shift only. Rear shelf defogger bezel. Folding back panel.(c) Roof rails, mouldings — Backlite upper.

Color Name	Ditzler Code DIA	Remarks
Black	9388	(a), (b), (c)
Dark Blue	14643	(b), (c)
Dark Gold	23765	(b)
Dark Parchment	23795	(b)
Light Parchment	23884	(c)
Light Gold	23885	(c)
Dark Green Poly	44856	(b), (c)

SEMI — GLOSS COLORS

FURY

USED ON: (a) Upper instrument panel. (b) Lower instrument panel, ash receiver face, glove box door. Steering column. Automatic gear selector quadrant and steering column collar. Wagon Parts — (c) Rear deck and seat panel assembly; floor with carpet, floor without carpet. Axle kick-up. Rear floor sill cover panels and filler mouldings. (d) Tailgate cover panels and frame.

Color Name	Ditzler Code DIA	Remarks
Ivory	8355	(b)
Black	9404	(a), (c), (d)
Black	9406	(a), (c), (d)
Dark Blue	14642	(c), (d)
Light Parchment	23938	(d)
Dark Chestnut	23939	(c), (d)
Dark Parchment	23998	(c)
Dark Gold	23999	(c)
Dark Green	44854	(c), (d)
Light Gold	82118	(d)

SATELLITE

USED ON: Inner tailgate (integral) and sill. Curved tailgate access hole.

Color Name	DITZLER Code DIA
Dark Blue	14642
Light Parchment	23938
Dark Chestnut	23939
Dark Green Poly	44855

VALIANT

USED ON: Upper and lower integral door garnish and upper inner frames. "B" and "A" pillars. Backlite mouldings.

Color Name	Ditzler Code DIA
Black	9406
Dark Blue	14642
Light Parchment	23938
Dark Green Poly	44855
Light Gold	82118

R-M
INMONT

RINSHED-MASON PRODUCTS

INMONT CORPORATION
5935 Milford Ave. • Detroit, Michigan 48210
1244 N. Lemon St. • Anaheim, California 92803

CODE	CODE	CODE	CODE
Silver Frost Irid. A5 A-2674, E-2674	Powder Blue B1 A-2744, E-2744	Lucerne Blue Irid. B5 A-2745, E-2745	Starlight Blue Irid. B8 A-2746, E-2746
Rallye Red E5 A-2303R, E-2303R	Burnished Red Irid. E7 A-2405F, E-2405F	Frosty Green Irid. G2 A-2747, E-2747	Deep Sherwood Irid. G8 A-2748, E-2748
Avocado Gold Irid. J6 A-2749G, E-2749G	Sahara Beige L4 A-2538, E-2538	Dark Moonstone Irid. L8 A-2750, E-2750	Sienna Irid. T5 A-2751G, E-2751G
Dark Chestnut Irid. *T9 A-2694D, E-2694D	Spinnaker White W1 A-2063, E-2063	Sunfire Yellow Y2 A-1966, E-1966D	Golden Fawn Y4 A-2752, E-2752
Yellow Blaze Y5 A-2753, E-2753	Golden Haze Irid. Y6 A-2681G, E-2681G	Tahitian Gold Irid. Y9 A-2682D, E-2682D	Formal Black X9 A-946, P-403

*Also 1973 Spring Color

PAINT STRIPE COLORS

Color	Formula No.
Medium Blue	174Y22
Medium Green	174Y35
Brite Gold	174Y73
Parchment	173Y93
Black	A-946
White	A-2063

TRUNK FINISHES

Belvedere Models:
Two Tone - Black & Gray
846 Multiflek

Fury Models:
Three Tone - Black, Gray & White
837 Multiflek

EXTERIOR TRIM COLORS

Color	Formula No.
Flat Black	168Y43
Argent Silver	168Y13

1974 PLYMOUTH

1974 PLYMOUTH

INTERIOR COLORS

NOTE: Alpha-Cryl formulae for the Suede Finishes incorporate No. 849 Suede Concentrate to produce approximately the same degree of texture as the original finish. Semi-Gloss Colors may be adjusted with No. 850 Universal Flatting Concentrate to obtain desired degree of gloss.

SUEDE FINISH

USED ON: Upper Instrument Panel and related parts.

SEMI GLOSS FINISH

USED ON: Lower Instrument Panel and related parts, Garnish Moldings.

Color	Formula No.
Dark Blue (Suede)	174Y21
Dark Blue (Semi)	174Y20
*Dark Green Irid. (Suede)	174Y31
*Dark Green Irid. (Semi)	174Y30
**Dark Green (Suede)	174Y33
**Dark Green (Semi)	174Y32
Light Gold (Suede)	174Y71
Light Gold (Semi)	174Y70
Dark Gold (Suede)	173Y72
**Dark Gold (Semi)	173Y70
Light Parchment (Suede)	174Y83
Light Parchment (Semi)	174Y82
Dark Parchment (Suede)	173Y92
**Medium Parchment (Semi)	173Y90
Dark Chestnut (Suede)	174Y81
Dark Chestnut (Semi)	174Y80
Black (Suede)	173Y40
Black (Semi)	A-946
White (Suede)	171Y90

*Valiant & Satellite Models only
**Fury Models only



Ditzler Automotive Finishes PPG INDUSTRIES

1974 DODGE

DART – CHALLENGER – CORONET
CHARGER – POLARA – MONACO

SPECIFY: DDL For DURACRYL® acrylic lacquer • DAR For DELSTAR® acrylic enamel • DQE For DITZCO® alkyd enamel

Paint Code		Paint Code		Paint Code		Paint Code	
A-5	2513 Dark Silver Poly	E-7	2321 Burnished Red Poly	*L-6	2591 Aztec Gold Poly	Y-2	81574 Yellow
B-1	2626 Powder Blue	G-2	2629 Frosty Green Poly	L-8	2633 Dark Moonstone Poly	Y-4	2635 Golden Fawn
B-5	2627 Lucerne Blue Poly	G-8	2631 Deep Sherwood Poly	T-5	2634 Sienna Poly	Y-5	2636 Yellow Blaze
B-8	2628 Starlight Blue Poly	J-6	2632 Avocado Gold Poly	T-9	2590 Dark Chestnut Poly	Y-6	2509 Gold Poly
E-5	2136 Bright Red	L-4	2427 Parchment	W-1	2033 Eggshell White	Y-9	2510 Dark Gold Poly
X-9	9300 Black						

*ALSO 1973 COLOR

STRIPPING COLORS

White	2033
Black	9000
Medium Blue	14682
Parchment	23740
Brite Gold	23994
Medium Green	44902
Yellow-Orange	60740
Red	71498

FIRST TWO DIGITS ARE ACCENT OR ROOF COLOR. SECOND TWO DIGITS ARE BASIC BODY COLOR

PAINTED GRILLES ARE PAINTED IN EXTERIOR COLORS.

FOR SPECIAL COLORS (CODED 999) FURNISH SPECIAL ORDER (SO) NUMBER AND SELLING DEALER WITH SERIAL NUMBER OF CAR.

MEDIUM ARGENT DDL-8933

CORPORATE IDENTITY COLORS

CORPORATE WHITE	8367
CORPORATE RED	71831

TRUNK SPATTER FINISH
3-TONE DS-1734
(Black, White, Gray)
2-TONE DS-1768
(Black, White)
BLUE ENGINE ENAMEL-
DQE-14202

STATION WAGON AIR-DEFLECTOR

BLACK	9395
GOLD	23802

LIGHT ARGENT DX-8555

1974 COLT

016	23654 Spice Poly	021	82064 Bright Yellow	025	81881 Sunburst Yellow	064	60624 Sunset Orange
017	44538 Sea Green Poly		Chip Not Available 0877 White	028	8938 Alpine Silver	065	14273 Pacific Blue Poly

(OVER)

1974 DODGE INTERIOR COLORS

SEMI GLOSS FINISH

CORONET – CHARGER

USED ON: Inner tailgate (integral) and sill. Curved tailgate access hole.

Color Name	Ditzler Code DIA
Dark Blue	14642
Light Parchment	23938
Dark Chestnut	23939
Dark Green Poly	44855

DART

USED ON: (a) Upper and lower integral door garnish and upper innner frames. "B" and "A" pillars. Backlite mouldings.

Color Name	Ditzler Code DIA
Black	9406
Dark Blue	14642
Light Parchment	23938
Dark Green Poly	44855
Light Gold	82118

POLARA – MONACO

USED ON: (a) Upper instrument panel. (b) Lower instrument panel, ash receiver face, glove box door. Steering column. Automatic gear selector quadrant and steering column collar. Wagon Parts – (c) Rear deck and seat panel assembly; floor with carpet, floor without carpet. Axle kick-up. Rear floor sill cover panels and filler mouldings. (d) Tailgate cover panels and frame.

Color Name	Ditzler Code DIA	Remarks
Ivory	8355	
Black	9404	
Black	9406	(a), (c), (d)
Dark Blue	14642	(c), (d)
Light Parchment	23938	(d)
Dark Chestnut	23939	(c), (d)
Dark Parchment	23998	(c)
Dark Gold	23999	(c)
Dark Green	44854	(c), (d)
Light Gold	82118	(d)

SATIN OR FLAT COLORS

CHALLENGER

USED ON: (a) Instrument Panel. Glove box door-inner and outer. Check arm. Ash receiver face and handle. Stereo speaker grilles. Rear [illegible]dow defogger bezel. (b) Steering column and housing [illegible] steering column collaspsable [illegible] Steering co[illegible] of with flo[illegible] tra[illegible] control [illegible]ings – Upper w[illegible] Backlight [illegible]il. F[illegible]dge "C" Pillar. [illegible]

Color Name	Ditzler Code DIA	Remarks
[illegible]	8849	(c)
Black	[illegible]	(a), (b), (c)
Dark Blue	[illegible]43	(a), (c)
Dark Green Poly	[illegible]56	[illegible], (c)

CORONET – CHARGER

USED ON: ,(a) Instrument Panel – Defroster outlets, end cap, glove box door. Steering column and gear selector housing and spacer can and clip. Rear shelf defogger outlet bezel. Steering column lock control housing with floor mounted transmission. (b) Garnish Mouldings – Rear window, windshield upper inner, "C" Pillar, rear window side upper corners, roof rail. Lower "C" Pillar. Arm split back center front seat back hinge. (c) Roof rail quarter window moulding. "C" Pillar moulding and spare tire cover upper moulding. Headliner retainer roof rail and rear door. "D" Pillar speaker grill. Tailgate upper garnish mouldings – coachman. Quarter window belt moulding – coachman. (d) Floor pan assembly – panels, hinges, filler and mouldings.

Color Name	Ditzler Code DIA	Remarks
White	8849	(b)
Black	9388	(a), (b)
Dark Blue	14643	(a), (b), (c)
Dark Gold	23765	(a)
Dark Parchment	23795	(a), (d)
Light Parchment	23884	(b), (c)
Light Gold	23885	(b)
Dark Chestnut	23886	(a), (b), (c), (d)
Dark Green Poly	44856	(a), (b), (c), (d)

DART

USED ON: (a) Steering column, (b) Instrument panel, glove box door and check arm. Ash receiver face. Automatic gear selector quadrant and can assembly. Housing steering column lock control – floor shift only. Rear shelf defogger bezel. Folding back panel. (c) Roof rails, mouldings – Backlite upper.

Color Name	Ditzler Code DIA	Remarks
Black	9388	(a), (b), (c)
Dark Blue	14643	(b), (c)
Dark Gold	23765	(b)
Dark Parchment	23795	(b)
Light Parchment	23884	(c)
Light Gold	23885	(c)
Dark Green Poly	44856	(b), (c)

POLARA – MONACO

USED ON: (a) Windshield garnish mouldings. Roof rails. Backlite moulding and cap. Rear window garnish mouldings – upper and lower. Wagon Parts – Tail gate roof header mouldings. Wheelhouse and tire cover mouldings. Radio speaker grill – rear quarter panel. Mouldings – Quarter window, roof rails, tailgate, roof header. Mouldings – 3rd seat back finish. Bezel – 3rd seat back latch release. Visor arms and brackets. (b) Rear shelf defogger bezel.

Color Name	Ditzler Code DIA	Remarks
Black	9388	(a), (b)
Dark Blue	14643	(a), (b)
Dark Gold	23765	(b)
Dark Parchment	23795	(b)
Light Parchment	23884	(a)
Light Gold	23885	(a)
Dark Chestnut	23886	(a)
Dark Green	44857	(a), (b)

R-M
INMONT

RINSHED-MASON PRODUCTS

INMONT CORPORATION
5935 Milford Ave. • Detroit, Michigan 48210
1244 N. Lemon St. • Anaheim, California 92803

CODE		CODE		CODE		CODE	
							
Dark Silver Irid. A-2674, E-2674	A5	Powder Blue A-2744, E-2744	B1	Lucerne Blue Irid. A-2745, E-2745	B5	Starlight Blue Irid. A-2746, E-2746	B8
						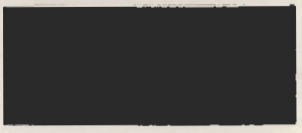	
Bright Red A-2303R, E-2303R	E5	Burnished Red Irid. A-2405F, E-2405F	E7	Frosty Green Irid. A-2747, E-2747	G2	Deep Sherwood Irid. A-2748, E-2748	G8
						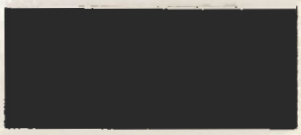	
Avocado Gold Irid. A-2749G, E-2749G	J6	Parchment A-2538, E-2538	L4	Aztec Gold Irid. A-2695G, E-2695G	*L6	Dark Moonstone Irid. A-2750, E-2750	L8
		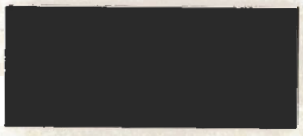					
Sienna Irid. A-2751G, E-2751G	T5	Dark Chestnut Irid. A-2694D, E-2694D	T9	Eggshell White A-2063, E-2063	W1	Yellow A-1966, E-1966D	Y2
							
Golden Fawn A-2752, E-2752	Y4	Yellow Blaze A-2753, E-2753	Y5	Gold Irid. A-2681G, E-2681G	Y6	Dark Gold Irid. A-2682D, E-2682D	Y9

Black X9
A-946, P-403

*Also 1973 Spring Color

PAINT STRIPE COLORS

Color	Formula No.
Medium Blue	174Y22
Medium Green	174Y35
Brite Gold	174Y73
Parchment	173Y93
Black	A-946
White	A-2663
Yellow-Orange	174Y74
Red	167Y53R

TRUNK FINISHES

Coronet Models:
Two Tone - Black & Gray
846 Multiflek

Polara Models:
Three Tone - Black, Gray & White
887 Multiflek

EXTERIOR TRIM COLORS

Color	Formula No.
Flat Black	168Y43
Argent Silver	168Y13

1974 DODGE

PRINTED IN U.S.A.

1974 DODGE

INTERIOR COLORS

NOTE: Alpha-Cryl formulae for the Suede Finishes incorporate No. 849 Suede Concentrate to produce approximately the same degree of texture as the original finish. Semi-Gloss Colors may be adjusted with No. 850 Universal Flatting Concentrate to obtain desired degree of gloss.

SUEDE FINISH

USAGE: Upper Instrument Panel and related parts.

SEMI GLOSS FINISH

USAGE: Lower Instrument Panel and related parts, Garnish Moldings.

Color	Formula No.
Dark Blue (Suede)	174Y21
Dark Blue (Semi)	174Y20
*Dark Green Irid (Suede)	174Y31
*Dark Green Irid. (Semi)	174Y30
**Dark Green (Suede)	174Y33
**Dark Green (Semi)	174Y32
Light Gold (Suede)	174Y71
Light Gold (Semi)	174Y70
Dark Gold (Suede)	173Y72
**Dark Gold (Semi)	173Y70
Light Parchment (Suede)	174Y83
Light Parchment (Semi)	174Y82
Dark Parchment (Suede)	173Y92
**Medium Parchment (Semi)	173Y90
Dark Chestnut (Suede)	174Y81
Dark Chestnut (Semi)	174Y80
Black (Suede)	173Y40
Black (Semi)	A-946
White (Suede)	171Y90

*Dart & Coronet Models only
**Polara Models only

Ditzler Automotive Finishes PPG INDUSTRIES

1974 CHRYSLER AND IMPERIAL

SPECIFY: DDL For DURACRYL® acrylic lacquer • DAR For DELSTAR® acrylic enamel • DQE For DITZCO® alkyd enamel

Paint Code		Paint Code		Paint Code	
		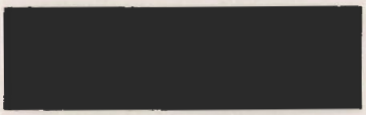			
A-5	2513 Silver Frost Poly	G-8	2631 Deep Sherwood Poly	T-9	2590 Dark Chestnut Poly
					
B-1	2626 Powder Blue	J-6	2632 Avocado Gold Poly	W-1	2033 Spinnaker White
					
B-5	2627 Lucerne Blue Poly	*K-3	2586 Navajo Copper Poly	Y-2	81574 Sunfire Yellow
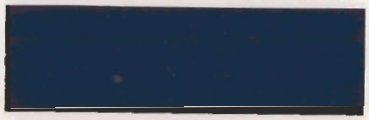		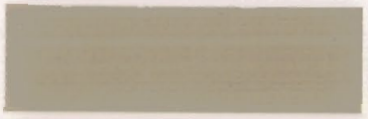			
B-8	2628 Starlight Blue Poly	L-4	2427 Sahara Beige	Y-4	2635 Golden Fawn
					
E-7	2321 Burnished Red Poly	L-8	2633 Dark Moonstone Poly	Y-6	2509 Golden Haze Poly
					
G-2	2629 Frosty Green Poly	T-5	2634 Sienna Poly	Y-9	2510 Tahitian Gold Poly

X-9 9300 Formal Black

*USED ON 1973 CHRYSLER ONLY

CORPORATE IDENTITY COLORS

CORPORATE WHITE	8367
CORPORATE BLUE	12785

FOR SPECIAL COLORS (CODED 999) FURNISH SPECIAL ORDER (SO) NUMBER AND SELLING DEALER WITH SERIAL NUMBER OF CAR.

FIRST TWO DIGITS ARE ACCENT OR ROOF COLORS. SECOND TWO DIGITS ARE BASIC BODY COLOR.

PAINTED GRILLES ARE PAINTED IN EXTERIOR COLORS.

STATION WAGON AIR-DEFLECTOR

BLACK	9395
GOLD	23802

TRUNK SPATTER FINISH

THREE TONE DS-1734
(BLACK, GRAY, WHITE)

BLUE ENGINE ENAMEL
DQE-14202

STRIPING COLORS

COLOR NAME	DITZLER CODE
WHITE	2033
BLACK	9000
MEDIUM BLUE	14682
PARCHMENT	23740
BRITE GOLD	23994
BROWN	23995
MEDIUM GREEN	44902
LIGHT ARGENT	DX-8555
MEDIUM ARGENT	DDL-8933

(OVER)

Printed in U.S.A.

PPG INDUSTRIES, Inc.

Form 7404

DITZLER AUTOMOTIVE FINISHES • DETROIT, MICH. 48235 • TORRANCE, CAL. 90509

1974 CHRYSLER INTERIOR COLORS

Satin or Flat Colors

USED ON: (a) Windshield garnish mouldings, roof rail, backlite moulding. (b) Rear shelf defogger bezel. (c) Visor arms and brackets. (d) Wagon Parts — Tailgate roof header mouldings. Wheelhouse and tire cover mouldings. Grille radio speaker — Quarter Trim panel. Mouldings — Quarter window roof rail and tailgate roof header.

Color Name	Ditzler DIA Code	Remarks
White	8849	(a), (c)
Black	9388	(a), (b), (c), (d)
Dark Blue	14643	(a), (b), (c), (d)
Dark Gold	23765	(b)
Dark Parchment	23795	(b)
Light Parchment	23884	(a), (c), (d)
Light Gold	23885	(a), (c), (d)
Dark Chestnut	23886	(a), (b), (c), (d)
Dark Green	44857	(a), (b), (c), (d)

Semi-Gloss Colors

USED ON: (a) On lower instrument panel, steering column, collar, auto gear selector quadrant. Ash receiver face and glove box door. (b) Wagon Parts — Tailgate curve panel. Tailgate frame. Side filler panel and rear sill. Rear deck and seat panel assembly mouldings.

Color Name	Ditzler DIA Code	Remarks
White	0852	
Ivory	8355	
Black	9404	(a)
Black (other integral parts)	9406	(b)
Dark Blue	14642	(b)
Light Parchment	23938	(b)
Dark Chestnut	23939	(b)
Dark Parchment	23998	(b)
Dark Gold	23999	(b)
Dark Green	44854	(b)
Light Gold	82118	(b)

INDEX
No. 20C

Ditzler Automotive Finishes PPG INDUSTRIES

1974 VOLKSWAGEN

SPECIFY: DDL For DURACRYL® acrylic lacquer • DAR For DELSTAR® acrylic enamel • DQE For DITZCO® alkyd enamel

Paint Code	Paint Code	Paint Code	Paint Code
L-10A 2686 Rallye Yellow	*L-30E 2698 Bahia Red	L-60A 2689 Tropical Green	L-91Z ~~X0003~~ 2691 Atlas White
**L-11E 82174 Sunshine Yellow	**L-30F 60763 Pumpkin Orange	**L-60F 44955 Avocado Green	L-95C 2692 Moss Green Poly
L-13H 2577 Ceylon Beige	L-31A 2688 African Red	L-61A 2690 Cliff Green	L-96B 2584 Alaska Blue Poly
*L-13M 2696 Saturn Yellow	*L-32K 2578 Phoenix Red	*L-64K 2582 Zambezi Green	L-96C 2693 Olive Green Poly
L-20A 2687 Chrome Yellow	L-50K 13454 Neptune Blue	*L-65K 2583 Ravenna Green	L-96M 2573 Marathon Blue Silver Poly
L-20B 2477 Bright Orange	*L-51P 2579 Olympic Blue	L-80Z 22897 Sahara Beige	L-97C 2694 Red Poly
*L-20E 2697 Amber	L-53H 2581 Orient Blue	L-90D 2247 Pastel White	L-98C 2695 Harvest Gold Poly
L-30B 2478 Kasan Red	L-54D 2376 Marina Blue	**L-90H 0892 Blizzard White	82176 Yosemite Yellow

ALL STATION WAGON TOPS ARE PAINTED L-90D PASTEL WHITE 2247.

**USED ON "THE THING" ONLY
* USED ON KARMIN GHIA

L-41 9300 Black

Printed in U.S.A.

PPG INDUSTRIES, Inc.

Form 7412

DITZLER AUTOMOTIVE FINISHES • DETROIT, MICH. 48235 • TORRANCE, CAL. 90509

1974
FORD MOTOR COMPANY
INTERIOR COLOR INFORMATION

DUPONT
REG U.S. PAT OFF
AUTOMOTIVE
REFINISH COLORS

FORD AND MERCURY

(FLAT COLORS)

Used On: **Lower Instrument Panel Cluster Housing, Steering Column Collar, Ash Tray, Top Forward Instrument Panel.**

(SEMI-GLOSS COLORS)

Used On: **Windshield Header Molding, A & B Pillar, Quarter Window and Door Window Moldings, Steering Column, Lower Instrument Panel, Console Lid, Radio Speaker Grille**

Trim Combination No.		Ford Paint Code	Color	Stock No.
All trim combination numbers ending with	"A"	1724-G	Black	99L
		2083-G	Black Met.	9354LH
All trim combination numbers ending with	"B"	4021-G	Med. Blue Met.	9941LH
		4036-G	Med. Blue Met.	10050LH
All trim combination numbers ending with	"C"	4020-G	Dk. Red Met.	9940LH
		4041-G	Med. Orange Met.	10054LM
		4055-G	Med. Copper Met.	42944LH
All trim combination numbers ending with	"G"	4029-G	Lt. Avocado	10047L
		4034-G	Med. Avocado	10049LH
All trim combination numbers ending with	"P"	4040-G	Med. Silver Blue Met.	10053L
		4039-G	Lt. Silver Blue Met.	10059LH
		4051-G	Med. Silver Met.	42940L
		4052-G	Lt. Silver Met.	42941L
		4054-G	Med. Silver Blue	42943L
All trim combination numbers ending with	"R"	4004-G	Med. Green Met.	9850L
		4044-G	Med. Green Met.	42938LH
All trim combination numbers ending with	"T"	4028-G	Lt. Beige	9971LH
		4037-G	Dark Beige	10051LH
All trim combination numbers ending with	"U"	4042-G	Lt. Tan	10055L
		4043-G	Medium Tan	10056L
All trim combination numbers ending with	"W"	3290-G	White	9664L
All trim combination numbers ending with	"Y"	4026-G	Light Gold	10054LM
		4027-G	Medium Gold	10046L
		4046-G	Medium Yellow	10058L
All trim combination numbers ending with	"Z"	4050-G	Medium Saddle Met.	42939LH
		4053-G	Medium Saddle	42942LH

Note: Use 45285 Flattening Compound to achieve the desired gloss.

(Continued on other side)

LINCOLN AND THUNDERBIRD

(FLAT COLORS)

Used On: **Top Forward Instrument Panel, End Finish Panel, Lower "A" Pillar, Access and Central Control Panel, Lower Steering Column Collar, Package Tray, Lower Backlite Molding**

(SEMI-GLOSS COLORS)

Used On: **Windshield Header Moldings, Roof Rail Moldings, "C" Pillar Moldings, Backlite Moldings, Lower Instrument Panel, Upper Steering Column Collar**

Trim Combination No.		Ford Paint Code	Color	Stock No.
All trim combination numbers ending with	"A"	1724-G	Black	99L
		2083-G	Black Met.	9354LH
All trim combination numbers ending with	"B"	4021-G	Medium Blue Met.	9941LH
All trim combination numbers ending with	"C"	4020-G	Dark Red Met.	9940LH
All trim combination numbers ending with	"H"	4022-G	Dark Cranberry	9942LM
All trim combination numbers ending with	"P"	4039-G	Light Silver Blue Met.	10059LH
		4040-G	Medium Silver Blue Met.	10053L
		4051-G	Medium Silver Met.	42940L
		4052-G	Light Silver Met.	42941L
All trim combination numbers ending with	"T"	4028-G	Light Beige	9971LH
		4037-G	Dark Beige	10051LH
All trim combination numbers ending with	"U"	4042-G	Light Tan	10055L
		4043-G	Medium Tan	10056L
All trim combination numbers ending with	"W"	3290-G	White	9664L
All trim combination numbers ending with	"Y"	4026-G	Light Gold	10054LM
		4027-G	Medium Gold	10046L
All trim combination numbers ending with	"Z"	4050-G	Medium Saddle Met.	42939LH
		4053-G	Medium Saddle	42942LH

Note: Use 45285 Flattening Compound to achieve the desired gloss.

Printed in U.S.A.

1974
GENERAL MOTORS CORPORATION
INTERIOR COLOR INFORMATION

DUPONT
REG U.S. PAT. OFF.
AUTOMOTIVE
REFINISH COLORS

CHEVROLET

(FLAT COLORS)

Used On: Upper Instrument Panel, Back Window Header, Compartment Front Panel, Windshield Lower Frame.

(SEMI-GLOSS COLORS)

Used On: Lower Instrument Panel, Windshield Side Garnish Molding, Rear Window Defogger Grille, Auxiliary Radio & Stereo Speaker Grille Assembly, Steering Column, Door Window Frames, Quarter Window Front Garnish Molding, Side Roof Rail, Rear Window Defogger Bezel, Rear Window Upper & Side Garnish Molding, Windshield Upper Garnish Molding.

Trim Combination No.	Color	Stock No.
701, 702, 703, 704, 705, 706, 707, 708, 709, 738, 747, 750, 751, 752, 753, 754, 755, 756, 764, 775, 776, 777, 778, 779, 786, 796, 802, 803, 805, 806, 808, 840, 861, 862, 869, 870, 871, 873, 883, 887, 891, 894, 980	Black (S.G.) Black (Flat)	99L 4428L
713, 714, 716, 722, 764, 765, 766, 780, 781, 815, 817, 819, 821, 841, 863, 870, 892, 981, 983, 990	Midnight Neutral (S.G.) Midnight Neutral (Flat) Light Neutral (S.G.)	9994LH 10012LH 9992L
723, 724, 726, 727, 728, 730, 745, 755, 756, 757, 758, 759, 786, 787, 830, 850, 851, 852, 853, 855, 879, 880, 881, 883, 887, 893, 982, 984	Dark Green (S.G.) Dark Green (Flat) Medium Green (S.G.)	42902LH 42914LH 42901LH
732, 734, 735, 737, 749, 771, 772, 785, 813, 843, 847, 897, 985, 998	Midnight Blue (S.G.) Midnight Blue (Flat)	9985LH 10007LH
718, 731, 740, 742, 773, 796, 797, 798, 799, 849, 858, 888, 890	Dark Saddle (S.G.) Dark Saddle (Flat) Medium Saddle (S.G.)	10004LH 9816L 10003L
783, 784, 896	Dark Taupe (S.G.) Dark Taupe (Flat) Medium Taupe (S.G.)	9998LH 10015LH 41905L
719, 720, 743, 744, 857	Dark Oxblood (S.G.) Dark Oxblood (Flat)	10000LH 10016LH
792, 884	Dark Red (S.G.) Dark Red (Flat)	42908LM 42917LM

CORVETTE

Trim Combination No.	Color	Stock No.
400, 404	Black (S.G.)	99L
413	Dark Blue (S.G.)	9984LH
408	Light Neutral (S.G.)	9992L
415, 416	Medium Saddle (S.G.)	10003L
425	Dark Oxblood (S.G.)	10000LH
406, 407	Silver Met. (S.G.)	42912LH

BUICK

(FLAT COLORS)

Used On: Upper Instrument Panel, Radio Speaker Grille, Rear Defogger Grille, Ash Tray, Glove Box Door.

(SEMI-GLOSS COLORS)

Used On: Lower Instrument Panel, Ash Tray, Steering Column, Console.

Trim Combination No.	Color	Stock No.
100, 112, 120, 140, 150, 160, 170, 172, 180, 192, 400, 410, 420, 430, 432, 620, 630, 632, 640, 660, 670, 680, 682	Dark Green (S.G.) Dark Green (Flat)	42902LH 42914LH
141, 151, 161, 171, 176, 181, 196, 401, 411, 421, 431, 436, 601, 621, 636, 641, 661, 671, 686	Midnight Blue (S.G.) Midnight Blue (Flat)	9985LH 10007LH
114, 115, 144, 154, 164, 174, 175, 194, 195, 404, 414, 424, 434, 435, 634, 635, 644, 654, 684, 685	Dark Saddle (S.G.) Dark Saddle (Flat)	10004LH 9816L
118, 119, 168, 178, 179, 188, 198, 199, 438, 439, 608, 618, 638, 639, 648, 668, 678, 688, 689	Black (S.G.) Black (Flat)	99L 4428L
103, 123, 182, 183, 193, 603, 613, 623, 633, 663, 673, 683	Midnight Neutral (S.G.) Midnight Neutral (Flat)	9994LH 10012LH
167, 177, 185, 187, 197, 427, 433, 437, 625, 627, 637, 647, 677, 687, 690	Dark Oxblood (S.G.) Dark Oxblood (Flat)	10000LH 10016LH
101, 116, 121	Dark Blue (S.G.) Dark Blue (Flat)	9984LH 10006LH

OLDSMOBILE

(FLAT COLORS)

Used On: Instrument Panel, Steering Column, Stereo Case, Package Shelf, Defogger Grille.

(SEMI-GLOSS COLORS)

Used On: Control Panel, Glove Box Door, Radio & Heater Hole Cover, Ash Tray, Steering Column, Window Frame, Rear Speaker Grille, Garnish Molding, Windshield Pillar, Carpet Retainer.

Trim Combination No.	Color	Stock No.
017, 020, 037, 040, 300, 307, 320, 327, 350, 360, 370, 377, 380, 390, 900, 907, 910, 917, 920, 930, 937, 940, 947, 950, 957, 960, 967, 980	Black (S.G.) Black (Flat) White (S.G.)	99L 4428L 9902L
022, 042, 312, 342, 352, 362, 382, 392, 902, 912, 932, 942, 952, 963, 972, 982	Dark Green (S.G.) Dark Green (Flat) Medium Green (S.G.)	42902LH 42914LH 42901LH
023, 043, 313, 343, 353, 363, 383, 393	Midnight Blue (S.G.) Midnight Blue (Flat)	9985LH 10007LH
025, 045, 345, 385, 395, 955, 965, 985	Dark Oxblood (S.G.) Dark Oxblood (Flat)	10000LH 10016LH
306, 326, 346, 366, 376, 956, 966	Midnight Neutral (S.G.) Midnight Neutral (Flat) Light Neutral (S.G.)	9994LH 10012LH 9992L
019, 049, 319, 349, 359, 369, 389, 399, 909, 919, 929, 939, 949, 959, 969, 979, 989, 999	Dark Saddle (S.G.) Dark Saddle (Flat) Medium Saddle (S.G.)	10004LH 9816L 10003L
903, 913, 933, 943, 953, 963, 973, 983	Dark Blue (S.G.) Dark Blue (Flat) Medium Blue (S.G.)	9984LH 10006LH 9983L

(Continued on other side)

PONTIAC

(FLAT COLORS)

Used On: **Instrument Panel, Radio Grille, Glove Box Door, Steering Column, Package Shelf and Valance, Compartment Front Panel Corner Escutcheons, Floor Console, Ash Tray, Air Conditioner Duct, Rear Window Defogger Grille.**

(SEMI-GLOSS COLORS)

Used On: **Floor Console, Window Pillars and Headers plus area above Belt, Steering Column, Garnish Moldings and Roof Rails.**

Trim Combination No.	Color	Stock No.
201, 206, 211, 222, 224, 229, 231, 238, 241, 242, 247, 251, 262, 269, 270, 280, 291, 292, 298, 501, 511, 521, 541, 577, 581, 943, 945, 961, 971	Dark Blue (S.G.)	9984LH
	Dark Blue (Flat)	10006LH
	Medium Blue (S.G.)	9985LH
213, 233, 253, 259, 263, 273, 283, 290, 293, 503, 563, 565, 573, 583, 593, 513, 533, 834, 936, 941, 951, 973	Dark Saddle (S.G.)	10004LH
	Dark Saddle (Flat)	9816L
	Medium Saddle (S.G.)	10003L
205, 235, 243, 245, 255, 265, 268, 275, 295, 505, 515, 525, 535, 545, 555, 965, 975	Midnight Neutral (S.G.)	9994LH
	Midnight Neutral (Flat)	10012LH
	Light Neutral (S.G.)	9992L
204, 207, 214, 226, 234, 237, 239, 244, 246, 254, 257, 264, 266, 274, 279, 284, 294, 299, 508, 523, 558, 564, 567, 569, 574, 584, 591, 594, 504, 514, 524, 571, 575, 964, 974, 979, 933, 939, 949, 952	Dark Green (S.G.)	42902LH
	Dark Green (Flat)	42914LH
	Medium Green (S.G.)	42901LH
209, 210, 212, 216, 219, 221, 223, 228, 229, 230, 232, 236	Black (S.G.)	99L
	Black (Flat)	4428L
237, 242, 246, 249, 252, 256, 261, 278, 285, 286, 292, 296, 502, 506, 512, 516, 522, 526, 532, 536, 542, 546, 551, 552, 556, 562, 566, 572, 576, 578, 586, 592, 596, 965, 999, 862, 930, 937, 950, 953, 957	White (S.G.)	9909L
217, 220, 267, 271, 276, 277, 287, 297, 509, 517, 547, 557, 559, 560, 579, 580, 582, 585, 587, 588, 589, 597, 977	Dark Oxblood (S.G.)	10000LH
	Dark Oxblood (Flat)	10016LH
528, 531, 538, 548, 240, 282, 288	Dark Taupe (S.G.)	9998LH
	Dark Taupe (Flat)	10015LH
	Medium Taupe (S.G.)	42905LH
200, 203, 208, 215, 550, 568, 590, 938, 944	Dark Red (S.G.)	42908LM
	Dark Red (Flat)	42917LM
	Medium Red (S.G.)	42907LH
513, 533, 543, 553	Dark Saddle (S.G.)	10004LH
	Dark Saddle (Flat)	9816L
	Medium Saddle (S.G.)	10003L
505, 514, 524, 534, 544, 554, 570, 571, 575	Dark Green (S.G.)	42902LH
	Dark Green (Flat)	42914LH
	Medium Green (S.G.)	42901LH

CADILLAC

(FLAT COLORS)

Used On: **Instrument Panel, Radio Speaker, Back Window Defogger Grille**

(SEMI-GLOSS COLORS)

Used On: **Windshield Upper Garnish Molding, Eldorado Rear Seat Back Compartment Shelf Molding, Seat Adjuster Track Covers, Carpet Retainer Covers, Side Roof Rail Moldings, Side and Back Window Molding, Front Seat Back Moldings, Center Arm Rest Finish Covers, Door Locking Knob Ferrules.**

Trim Combination No.	Color	Stock No.
010, 011, 051, 052, 053, 110, 211, 251	Black (S.G.)	99L
	Black (Flat)	4428L
311, 351, 352, 353, 354, 356, 357, 359, 411, 451, 452, 453, 454, 456, 457, 459, 510, 711, 719, 725, 743, 811	White (S.G.)	9625L
025, 026, 053, 066, 125, 126, 226, 325, 326, 353, 366, 425, 426, 453, 466, 525, 725, 825	Dark Blue (S.G.)	9984LH
	Dark Blue (Flat)	10006LH
030, 070, 230, 330, 357, 370, 430, 457, 470	Dark Green (S.G.)	42902LH
	Dark Green (Flat)	42914LH
	Medium Green (S.G.)	42901LH
043, 083, 283, 342, 383, 443, 483, 743	Dark Saddle (S.G.)	10004LH
	Dark Saddle (Flat)	42913LH
	Medium Saddle (S.G.)	10003L
044, 084, 244, 344, 384, 444, 484	Dark Maize (S.G.)	9800L
	Dark Maize (Flat)	9816L
	Medium Maize (S.G.)	9798L
046, 146, 346, 446, 546, 846	Dark Amber (S.G.)	42911LH
	Dark Amber (Flat)	42920LH
	Medium Amber (S.G.)	42904LH
047, 048, 087, 148, 347, 348, 387, 447, 448, 487, 548, 848	Terra Cotta (S.G.)	42909LH
	Terra Cotta (Flat)	42918LH
082, 382, 482	Medium Beige (S.G.)	9995L
088, 354, 388, 454, 488	Dark Red (S.G.)	10002LH
	Medium Red (S.G.)	10001LH
719	Dark Gray (S.G.)	9982LH
356, 456	Dark Lime (S.G.)	42903LH
	Dark Lime (Flat)	42915LH
359, 459	Dark Cranberry (S.G.)	42910LM
	Dark Cranberry (Flat)	42919LM

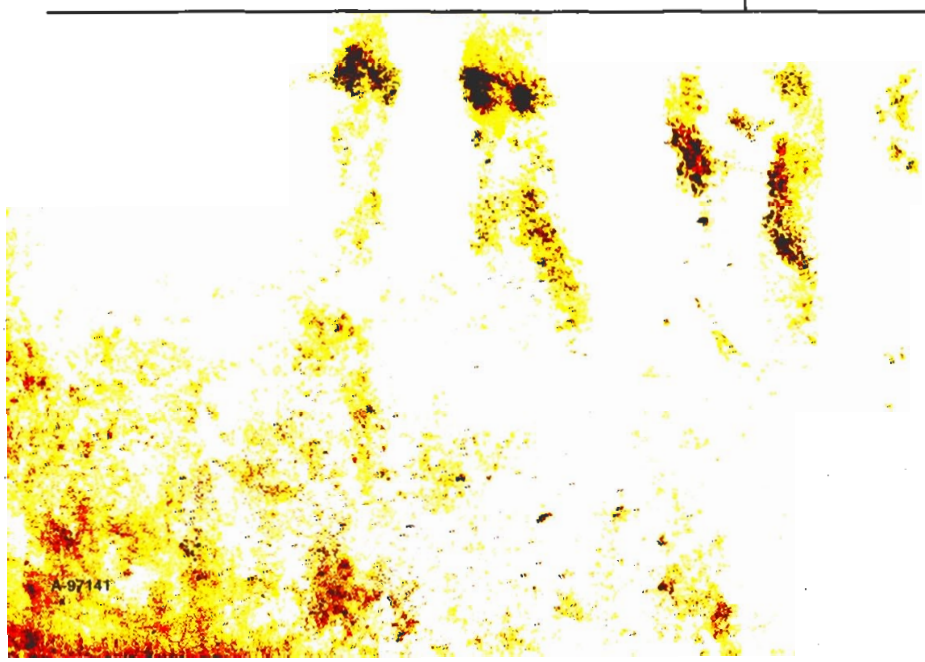

Printed in U.S.A.

Place Stamp Here

CHRYSLER MOTORS CORPORATION
CATALOG AND PUBLICATIONS DEPT.
P. O. BOX 1718
DETROIT, MICHIGAN 48231

Place Stamp Here

CHRYSLER MOTORS CORPORATION
CATALOG AND PUBLICATIONS DEPT.
P. O. BOX 1718
DETROIT, MICHIGAN 48231

Place Stamp Here

CHRYSLER MOTORS CORPORATION
CATALOG AND PUBLICATIONS DEPT.
P. O. BOX 1718
DETROIT, MICHIGAN 48231

CHRYSLER MOTORS CORPORATION
CATALOG AND PUBLICATIONS DEPT.
P. O. BOX 1718
DETROIT, MICHIGAN 48231

CHRYSLER PARTS CATALOG REVISION SERVICE

Catalog _____ _____ _____
YEAR AND MODEL PART TYPE CODE PAGE NO.

Suggestion: _____

DEALER CODE _____

FIRM NAME _____

ADDRESS _____

_____ _____
SIGNATURE

81-690-0524

CHRYSLER PARTS CATALOG REVISION SERVICE

Catalog _____ _____ _____
YEAR AND MODEL PART TYPE CODE PAGE NO.

Suggestion: _____

DEALER CODE _____

FIRM NAME _____

ADDRESS _____

_____ _____
SIGNATURE

81-690-0524

CHRYSLER PARTS CATALOG REVISION SERVICE

Catalog _____ _____ _____
YEAR AND MODEL PART TYPE CODE PAGE NO.

Suggestion: _____

DEALER CODE _____

FIRM NAME _____

ADDRESS _____

_____ _____
SIGNATURE

81-690-0524

CHRYSLER PARTS CATALOG REVISION SERVICE

Catalog _____ _____ _____
YEAR AND MODEL PART TYPE CODE PAGE NO.

Suggestion: _____

DEALER CODE _____

FIRM NAME _____

ADDRESS _____

_____ _____
SIGNATURE

81-690-0524

GROUP 1 - ACCESSORIES

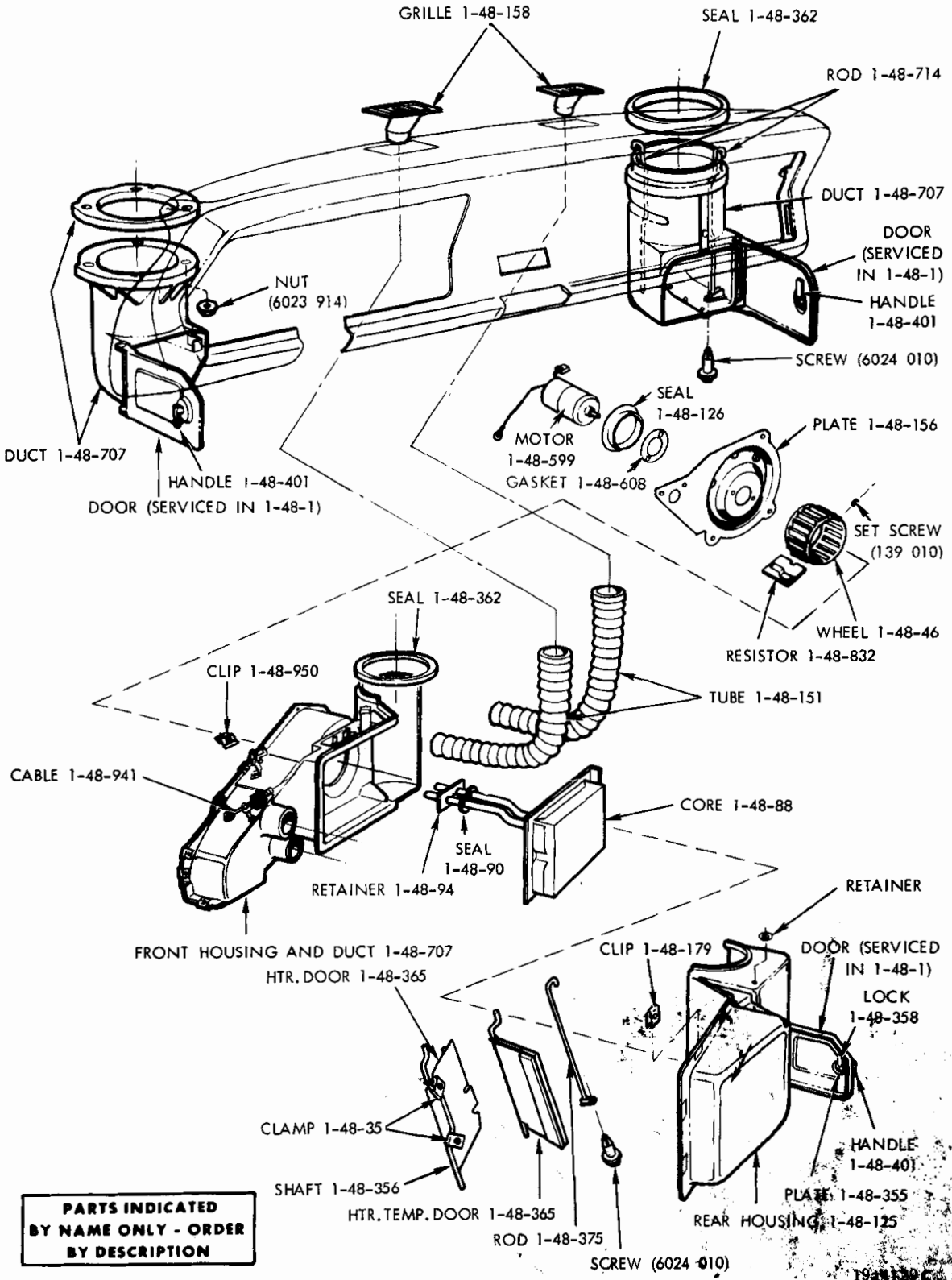

HEATER AND FRESH AIR DUCT - VALIANT AND DART

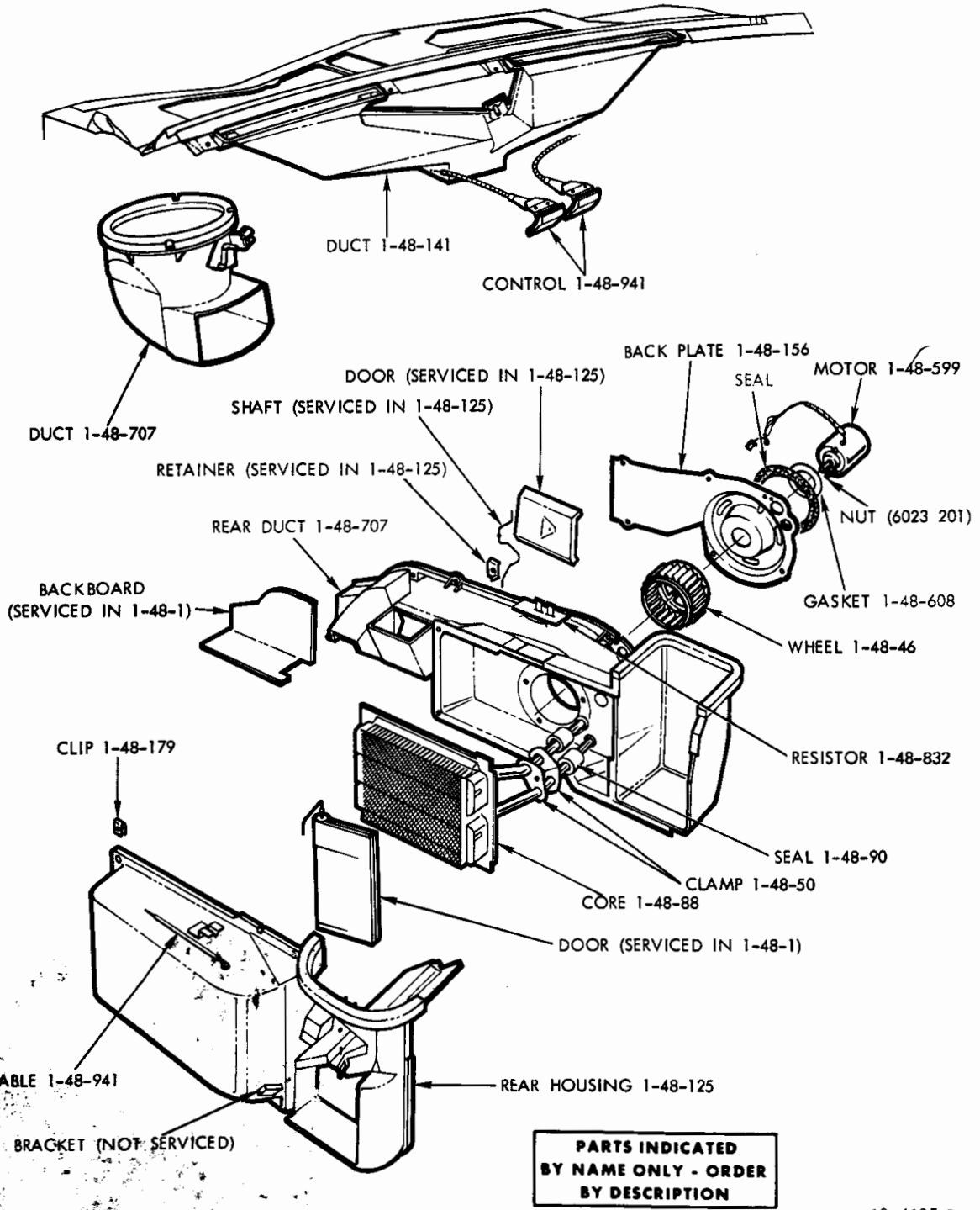

HEATER AND FRESH AIR DUCT - BARRACUDA AND CHALLENGER

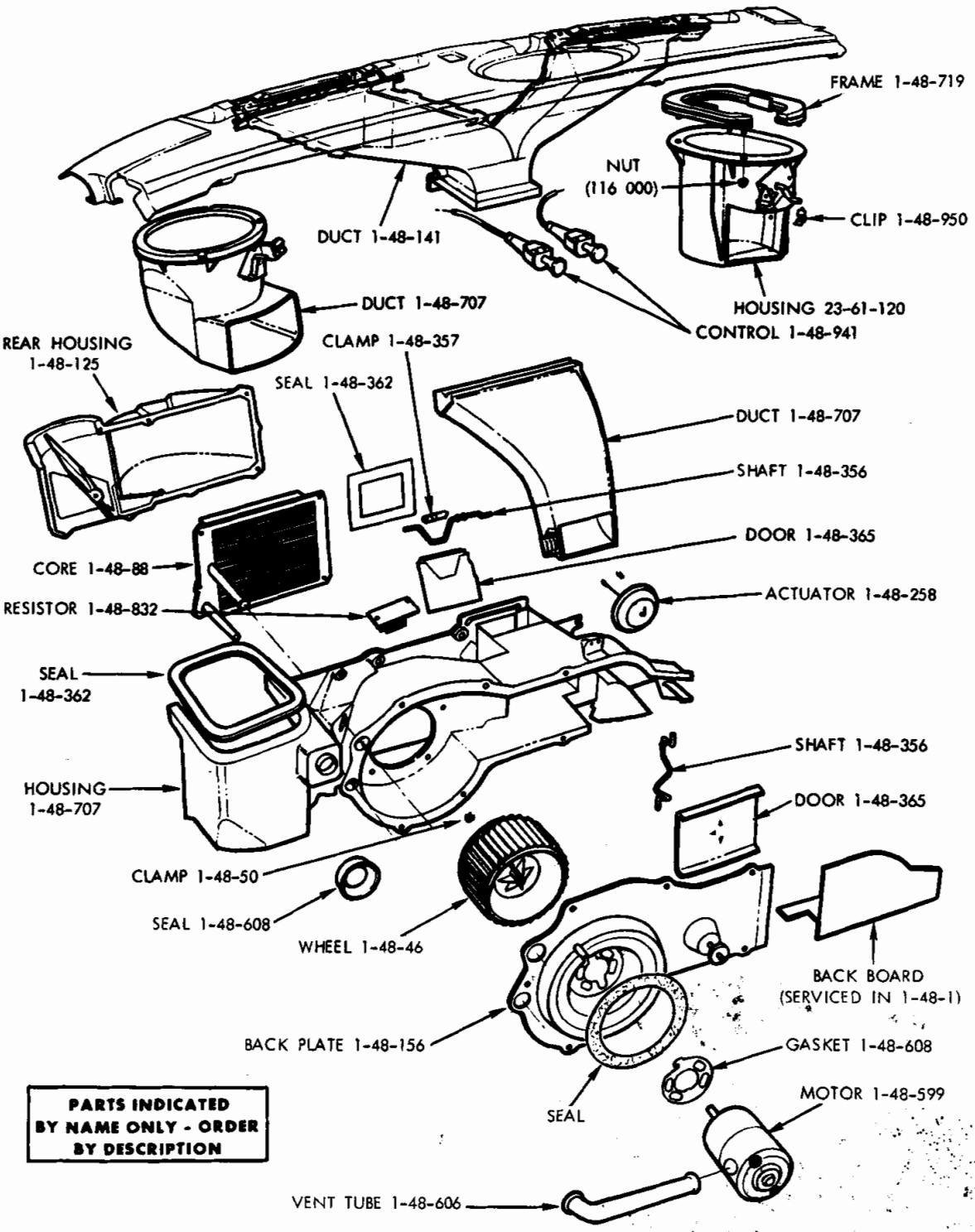

HEATER AND FRESH AIR DUCT - SATELLITE, CORONET AND CHARGER

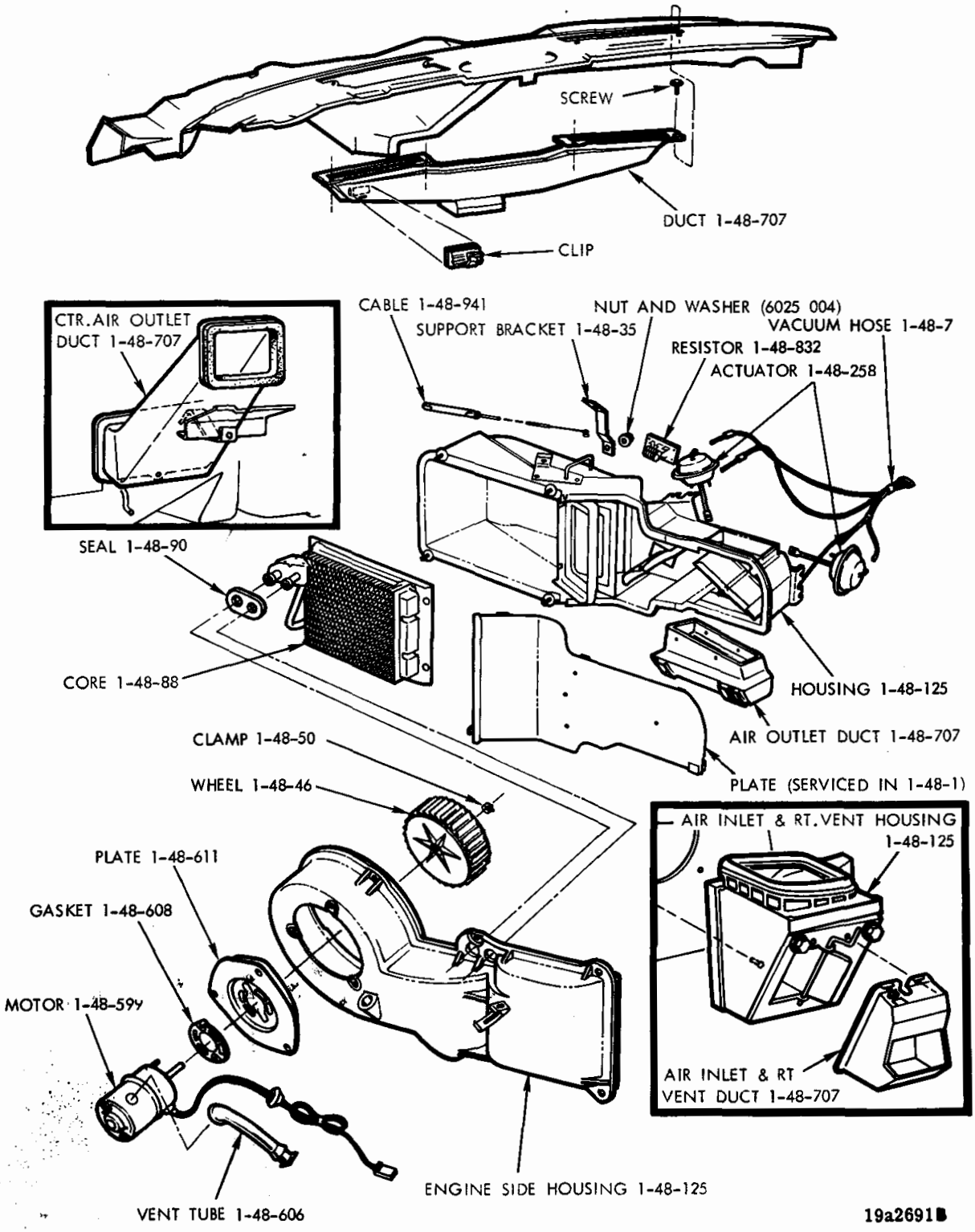

HEATER - PLYMOUTH, DODGE, CHRYSLER AND IMPERIAL

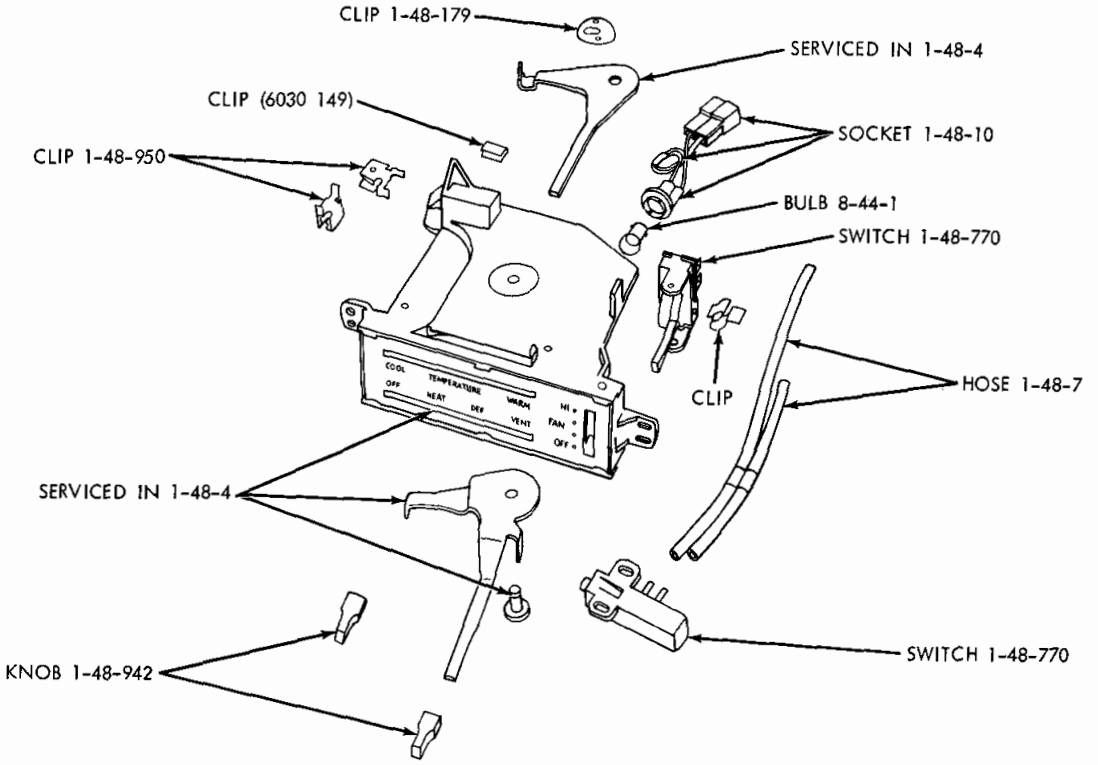

HEATER CONTROLS - CHRYSLER

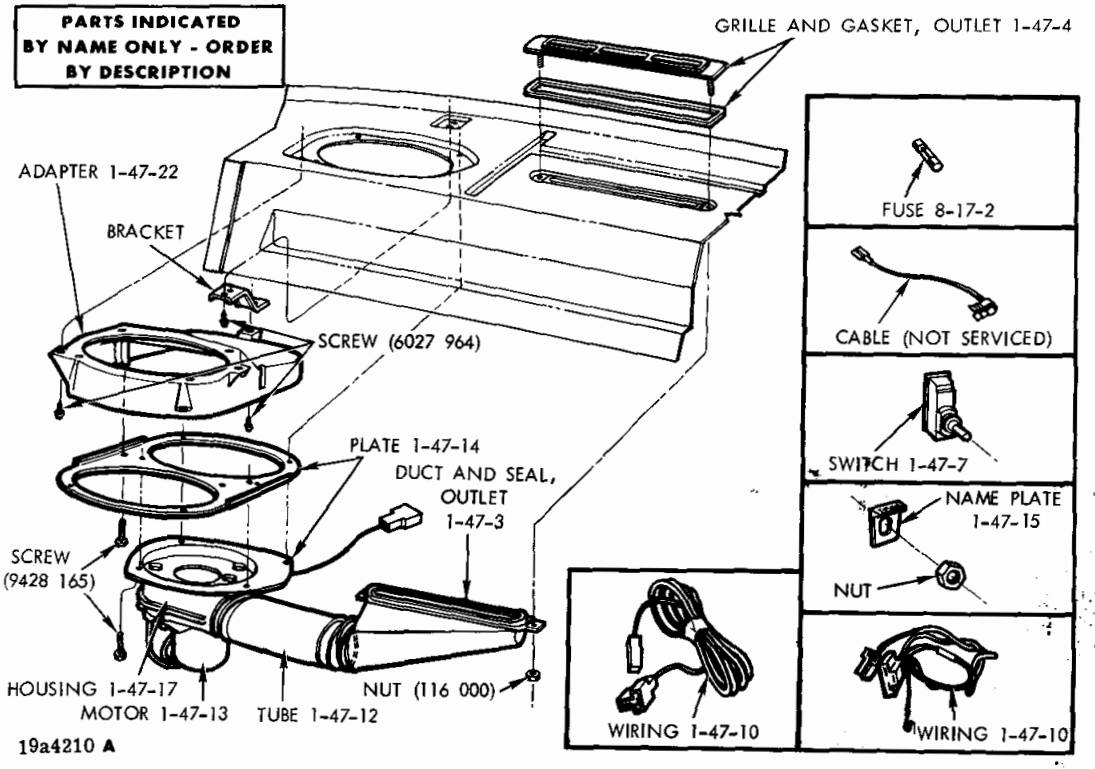

REAR WINDOW DEFOGGER - VALIANT AND DART (TYPICAL OF BARRACUDA, CHALLENGER, CHARGER, SATELLITE, CORONET, PLYMOUTH, DODGE, CHRYSLER AND IMPERIAL)

VENT, FRESH AIR SIDE COWL

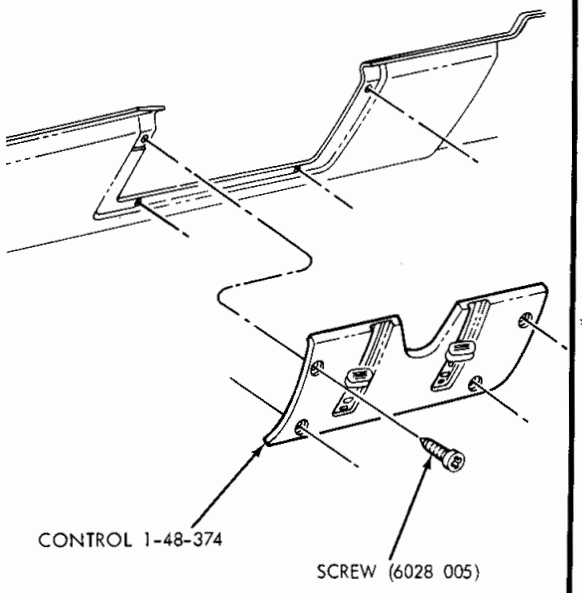

CONTROL, VENT

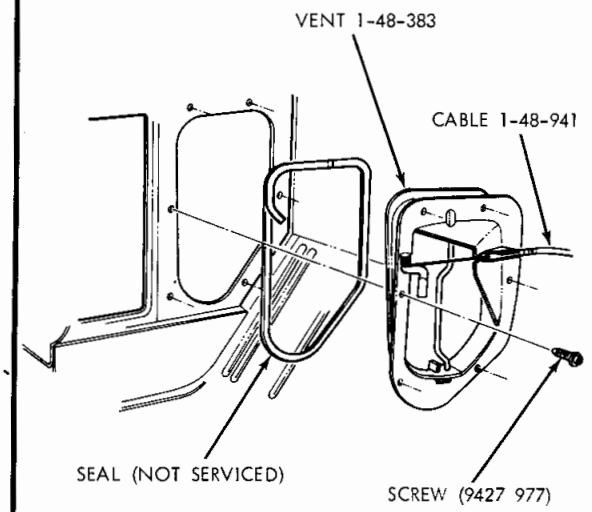

19a5028

FRESH AIR SIDE COWL VENT AND CONTROL - P,D,C,Y

NOTES

GROUP 1 - ACCESSORIES

ANTENNA, RADIO 1-88
DEFOGGER, REAR WINDOW 1-47
HEATER 1-48
MATS, CARPET PROTECTOR FLOOR 1-63
RACK, DEALER INSTALLED LUGGAGE. 1-74
RADIO 1-87

Printed in U.S.A.
November, 1974

CODE	PART NAME	ENG. TYPE OR CU. IN	V	B J	L	R	W	P	D	C (L M)	C (P)	C (H S)	Y	PART NUMBER
	NOTE: For Parts Not Listed See Respective Groups.													
1-47-1	**DEFOGGER PACKAGE BASIC, Rr. Window**													
	V, L 2 Dr. H.T. and 4 Dr.		1	—	1	—	—	—	—	—	—	—	—	3502 099
	V, L Fastback		1	—	1	—	—	—	—	—	—	—	—	3502 097
	B, J 2 Dr. H.T. R, W Exc. Wgn.		—	1	—	1	1	—	—	—	—	—	—	3502 098
	P, D, 2 Dr. H.T. C 4 Dr. Sedan		—	—	—	—	—	1	1	1	—	1	—	3502 820
	P, D, 4 Dr. 4 Dr. H.T. C, Y 2 Dr. H.T. 4 Dr. H.T.		—	—	—	—	—	1	1	1	—	1	—	3502 821
	NOTE: When Using Basic Package, Must Also Use Adapter Package													
1-47-2	ADAPTER PACKAGE, Rr. Window Defogger													
	Exc. Fastback w/Security Panel		1	—	1	—	—	—	—	—	—	—	—	3420 943
			—	1	—	—	—	—	—	—	—	—	—	3837 168
	Exc. Wgn.		—	—	—	1	1	—	—	—	—	—	—	3579 234
	Exc. Wgn.		—	—	—	—	—	1	1	—	—	—	—	3837 169
	Exc. Wgn.		—	—	—	—	—	—	—	1	—	1	1	3837 170
	W/RR. DUAL SPEAKERS		—	1	—	—	—	—	—	—	—	—	—	3441 426
1-47-3	DUCT, Rr. Window Defogger													
	V Fastback and L Fastback		1	—	1	—	—	—	—	—	—	—	—	2485 982
	V, L 2 Dr. H.T. & 4 Dr. Sed.		1	—	1	—	—	—	—	—	—	—	—	2485 738
	Duct, Outlet P,D 4 Dr. 4 Dr. H.T. C 2 Dr. H.T. 4 Dr. H.T. Y All		—	—	—	—	—	1	1	1	—	1	1	3503 335
	Duct, Outlet P,D 2 Dr. H.T. C 4 Dr. Sedan		—	—	—	—	—	1	1	1	—	1	—	2607 776
	Duct And Seal, Defogger Outlet B, J 2 Dr. H.T. R 2 Dr. 2 Dr. H.T. 4 Dr. W 2 Dr. 2 Dr. H.T. Fast Back 4 Dr.		—	1	—	1	1	—	—	—	—	—	—	2607 754
1-47-4	GRILLE and GASKET DEFOGGER OUTLET													
	V 2 Dr. H.T. L 2 Dr. H.T. and 4 Dr.		1	—	1	—	—	—	—	—	—	—	—	3502 243
	V Fast Back and 4 Dr. L Fast Back		1	—	1	—	—	—	—	—	—	—	—	3502 240
	GRILLE, Defogger Inlet V,L,B,J 2 Dr. H.T. R,W,P,D,C Exc. Wgn. Y All		1	1	1	1	1	1	1	1	—	1	1	2837 220
1-47-6	BEZEL, Defogger Inlet Exc. Wgn.		1	1	1	1	1	1	1	1	—	1	1	2837 219
	Defogger Outlet B,J,R,W													
	Exc. Wgn.		—	1	—	1	1	—	—	—	—	—	—	3502 237
	Defogger Outlet V Fastback L Fastback P,D,C Exc. Wgn. Y All		1	—	1	—	—	1	1	1	—	1	1	3502 240
1-47-7	SWITCH, Defogger		—	1	—	—	—	—	—	—	—	—	—	2947 411
	V, L		1	—	1	—	—	—	—	—	—	—	—	2820 455
	R,W Exc. Wgn.		—	—	—	1	1	—	—	—	—	—	—	3488 520
	SWITCH & LAMP, Rear Air Exc. Wgn.		—	—	—	—	—	1	1	1	—	1	1	3746 830
1-47-9	BEZEL, Defogger Switch Exc. Wgn.		—	—	—	1	1	—	—	—	—	—	—	3488 526
	Rear Air Switch Exc. Wgn.		—	—	—	—	—	1	1	—	—	—	—	3746 510
	Exc. Wgn.		—	—	—	—	—	—	—	1	—	1	—	3746 571
			—	—	—	—	—	—	—	—	—	—	1	3746 650
1-47-10	WIRING, Defogger Motor Exc. Wgn.		1	—	1	1	1	—	—	—	—	—	—	3588 249
1-47-12	TUBE, Flexible Blower To Duct		1	—	1	—	—	—	—	—	—	—	—	2096 989
	Defogger Flex. P, D, 4 Dr. & 4 Dr. H.T. C Exc. Wgn. Y All		1	1	1	—	—	1	1	1	1	1	1	2096 989
1-47-13	MOTOR, Defogger Blower Exc. Wgn.		1	1	1	1	1	1	1	1	—	1	1	3621 814
1-47-14	PLATE, Defogger Blower Mtg. Exc. Wgn.		1	1	1	1	1	1	1	1	—	1	1	2607 141
	Blower and Speaker Mtg.		—	1	—	—	—	—	—	—	—	—	—	2936 347
	Clamp, Rr. Window Defogger Blower Wheel Mtg. Exc. Wgn.		1	1	1	1	1	1	1	1	—	1	1	3502 734
1-47-15	NAME PLATE, Defogger Switch		1	—	1	—	—	—	—	—	—	—	—	3488 815

CODE	PART NAME	ENG. TYPE OR CU. IN	V	B J	L	R	W	P	D	C (L M)	C (P)	C (H S)	Y	PART NUMBER
1-47-16	WHEEL PACKAGE, Defogger Clamp and Blower Exc. Wgn.		1	1	1	1	1	1	1	1	—	1	1	3780 829
1-47-17	HOUSING, Defogger Blower Exc. Wgn.		1	1	1	1	1	1	1	1	—	1	1	3502 069
1-47-18	RESISTOR, Blower Motor Exc. Wgn.		1	1	1	1	1	1	1	1	—	1	1	2521 409
1-47-19	PACKAGE, Terminal & Insulator Rr. Wdo. Defgr. Blower Mtr. Exc. Wgn.		1	1	1	1	1	1	1	1	—	1	1	2298 882
1-47-22	ADAPTOR, Defogger Blower and Speaker		—	1	—	—	—	—	—	—	—	—	—	2936 346
1-47-25	SEAL, Rr. Wdo. Defgr. Blower Mtr. Mtg.		1	1	1	1	1	1	1	1	1	1	1	3502 748
	Gasket,		1	—	1	—	—	—	—	—	—	—	—	2485 429
1-47-27	REPAIR PACKAGE, Rear Window Defogger Electric Grid Fast Back		1	—	1	—	—	—	—	—	—	—	—	3744 970
	NOTE: The Following Heaters Are For Replacement Only Not For Field Installation.													
1-48-1	**HEATER,**													
	w/o A/Cond.		1	—	1	—	—	—	—	—	—	—	—	3502 286
	Complete, w/o A/Cond.		—	—	—	1	1	—	—	—	—	—	—	3502 303
	Complete, w/Upper Level Vent		—	—	—	1	1	—	—	—	—	—	—	3502 340
1-48-4	CONTROL, Heater		1	—	1	1	1	—	—	—	—	—	—	3502 783
	NOTE: For Additional Controls And Related Parts See Part Type Code 1-48-945, 24-24-161													
	w/Upper Level Vent		—	—	—	1	1	—	—	—	—	—	—	3502 777
	w/o Rallye I/Pnl.		—	1	—	—	—	—	—	—	—	—	—	2884 722
	w/Rallye I/Pnl.		—	1	—	—	—	—	—	—	—	—	—	2884 704
	w/Upper Level Vent		—	—	—	—	—	1	1	1	1	1	—	3503 304
1-48-7	HOSE, Htr. Control													
	NOTE: For Further Information See Part Type Code 24-28-24													
	Vac. w/Upper Level Vent		—	—	—	1	1	—	—	—	—	—	—	3502 536
	Vac. Ext. w/Upper Level Vent		—	—	—	1	1	1	1	1	1	1	—	3502 537
	Vac. w/Upper Level Vent		—	—	—	—	—	1	1	1	1	1	—	3503 381
	VALVE CHECK, Htr. Control Vac. Hose		—	—	—	1	1	1	1	1	1	1	—	3441 609
	TEE, Htr. Control Vac. Hose Conn. w/Upper Level Vent		—	—	—	1	1	1	1	1	1	1	—	3441 425
	HOSE, Htr. Control Vac. 25 Ft. Roll .112" I.D. (Sold By The Roll)		—	—	—	—	—	AR	AR	AR	AR	AR	—	3502 742
1-48-10	LAMP, Htr. Control and A/Cond.													
	NOTE: For Additional Lamps See Part Type Code 24-24-167													
			—	1	—	—	—	—	—	—	—	—	—	3488 924
	Contact, Htr. Cont. Lamp Socket		1	—	1	—	—	1	1	1	1	1	—	2256 966
	Socket, Htr. Control Lamp		1	—	1	1	1	1	1	1	1	1	—	1753 632
	Socket, Htr. Control Lamp Cable		—	—	—	—	—	1	1	1	1	1	—	3502 266
1-48-15	REPAIR KIT, Htr. Control Vacuum Hose		—	—	—	AR	AR	—	—	—	—	—	—	2275 215
1-48-35	CLAMP, Htr. Dr. Mtg.		2	—	2	—	—	—	—	—	—	—	—	3502 379
	Bracket, Htr. Support w/Upper Level Vent		—	—	—	—	—	1	1	1	1	1	—	3503 378
1-48-46	WHEEL, Htr. Blower Motor													
	NOTE: For Additional Wheels See Part Type Code 24-28-210													
			1	1	1	—	—	—	—	—	—	—	—	2277 597
			—	—	—	1	1	—	—	—	—	—	—	3420 614
	w/Upper Level Vent		—	—	—	—	—	1	1	1	1	1	—	3503 037
1-48-50	CLAMP, Htr, Blower Motor Wheel		1	1	1	1	1	1	1	1	1	1	—	2837 680
1-48-70	BEZEL, Htr. or A/Cond. Control													
	NOTE: For Additional Bezels See Part Type Code 1-87-22, 24-24-140													
			1	—	1	—	—	—	—	—	—	—	—	3501 609
	w/Rallye I/Pnl.		—	1	—	—	—	—	—	—	—	—	—	3431 043
1-48-88	CORE, Heater													
	NOTE: For Additional Cores See Part Type Code 24-01-24													
	w/or/w/o A/Cond.		1	—	1	—	—	—	—	—	—	—	—	3744 266
	w/o A/Cond.		—	1	—	—	—	—	—	—	—	—	—	3503 408
	w/o A/Cond.		—	—	—	1	1	—	—	—	—	—	—	3579 171
	w/Upper Level Vent		—	—	—	—	—	1	1	1	1	1	—	3780 746

CARLINES J - Challenger, B - Barracuda, V - Valiant, L - Dart, R - Satellite, W - Coronet - Charger, P - Plymouth, D - Dodge, C - Chrysler, Y - Imperial

AR Indicates use as required.

Numerals in parentheses ( ) refer to notes.

# Indicates parts not listed in any previous parts book.

★ Indicates change or addition.

Printed in U.S.A. November, 1974

CODE	PART NAME	ENG. TYPE OR CU. IN	V	B J	L	R	W	P	D	C (L M)	C (P)	C (H S)	Y	PART NUMBER
1-48-90	SEAL, Htr. Core Tube to Hsg.		1	—	1	—	—	—	—	—	—	—	—	2936 868
	Htr. Core to Temp. Dr. Shaft		1	—	1	—	—	—	—	—	—	—	—	2277 648
	Htr. Core Tubes		—	1	—	—	—	—	—	—	—	—	—	2936 604
	1.38" O.D.		—	—	—	1	1	—	—	—	—	—	—	3441 584
	1.25" O.D.		—	—	—	1	1	—	—	—	—	—	—	3441 585
	Htr. Air Inlet & Rt. Vent Cover to Dash w/Upper Level Vent		—	—	—	—	—	1	1	1	1	1	—	3503 013
	Htr. Core Tube To Dash w/A Cond.		—	—	—	—	—	1	1	1	1	1	1	3503 053
	Htr. Core Tube w/Upper Level Vent		—	—	—	—	—	2	2	2	2	2	—	3503 365
	WASHER, Htr. Core Tube Sealing to Dash		2	—	2	—	—	—	—	—	—	—	—	3502 080
1-48-94	RETAINER, Htr. Core Tubes Seal to Dash		1	—	1	—	—	—	—	—	—	—	—	2485 135
	Htr. Core Tube		1	—	1	—	—	—	—	—	—	—	—	2277 557
1-48-125	HOUSING, Htr. Rr.													
	NOTE: For Additional Housings See Part Type Code 24-28-128													
			1	—	1	—	—	—	—	—	—	—	—	3502 593
			—	1	—	—	—	—	—	—	—	—	—	2936 622
			—	—	—	1	1	—	—	—	—	—	—	3502 305
	w/Upper Level Vent		—	—	—	—	—	1	1	1	1	1	—	3503 343
	Housing Htr. Frt. w/Upper Level Vent		—	—	—	—	—	1	1	1	1	1	—	3503 340
	Housing Htr. Engine Side Partial w/Upper Level Vent		—	—	—	—	—	1	1	1	1	1	—	3503 526
	Housing Htr. Air Inlet & Rt. Vent w/Upper Level Vent		—	—	—	—	—	1	1	1	1	1	—	3503 302
1-48-126	SEAL, Htr. to Dash													
	NOTE: For Additional Seals See Part Type Code 24-28-92													
			1	—	1	—	—	—	—	—	—	—	—	3502 339
	w/Upper Level Vent		—	—	—	—	—	1	1	1	1	1	—	3503 379
	Htr. Blower Mtr. to Hsg. w/Upper Level Vent		—	—	—	—	—	1	1	1	1	1	—	3503 036
	Htr. Eng. Side Hsg. to Dash w/Upper Level Vent Up to 12-10-73		—	—	—	—	—	1	1	1	1	1	—	# 3503 032
	Htr. Eng. Side Hsg. to Dash Upper w/Upper Level Vent After 12-10-73		—	—	—	—	—	1	1	1	1	1	—	# 3503 595
	Htr. Eng. Side Hsg. to Dash Lower w/Upper Level Vent After 12-10-73		—	—	—	—	—	1	1	1	1	1	—	# 3503 596
1-48-132	NUT, Htr. Hsg. Mtg. Insert													
	Htr. Back Plate To Dist. Duct Mtg.		—	—	—	1	1	—	—	—	—	—	—	3579 191
	A/Cond. & Htr. Distr. Hsg. Mtg. to Frt. Hsg.		7	—	7	—	—	—	—	—	—	—	—	3579 191
1-48-141	DUCT, Htr. Defroster													
	NOTE: For Further Information See Part Type Code 24-28-72, 24-28-73, 24-28-78													
			—	1	—	—	—	—	—	—	—	—	—	2936 641
	Htr. Defroster		—	—	—	1	1	—	—	—	—	—	—	3502 051
	Outlet, Htr. Center Vent w/Upper Level Vent w/Wood Grain		—	—	—	1	1	—	—	—	—	—	—	3502 009
	Outlet, Htr. Center Vent w/ Upper Level Vent w/o Woodgrain		—	—	—	1	1	—	—	—	—	—	—	3502 010
	CAP, Htr. Ctr. Vent Outlet Mtg.		—	—	—	6	6	—	—	—	—	—	—	6027 455
	w/Upper Level Vent		—	—	—	6	6	—	—	—	—	—	—	6029 262
	CLIP, Htr. Defr. Tube Mtg.		2	—	2	—	—	—	—	—	—	—	—	6026 147
	CLIP, Htr. or A/C . Duct Mtg.		—	—	—	1	1	—	—	—	—	—	—	6003 421
1-48-151	TUBE, Htr. Defroster													
	NOTE: For Further Information See Part Type Code 24-28-24													
	Htr. Defroster		1	—	1	—	—	—	—	—	—	—	—	2837 168-9
	GUIDE, A/Cond. Defr. Tube Lt.		1	—	1	—	—	—	—	—	—	—	—	3502 677
1-48-156	BACKPLATE, Htr. Distribution Duct		—	1	—	—	—	—	—	—	—	—	—	2936 610
			—	—	—	1	1	—	—	—	—	—	—	3502 318
	Htr.		1	—	1	—	—	—	—	—	—	—	—	3502 293
	Htr. w/Upper Level Vent		—	—	—	—	—	1	1	1	1	1	—	3503 366

CARLINES J - Challenger, B - Barracuda, V - Valiant, L - Dart, R - Satellite, W - Coronet - Charger, P - Plymouth, D - Dodge, C - Chrysler, Y - Imperial

AR Indicates use as required.

Numerals in parentheses ( ) refer to notes.

Printed in U.S.A.

# Indicates parts not listed in any previous parts book.

★ Indicates change or addition.

November, 1974

CODE	PART NAME	ENG. TYPE OR CU. IN	V	B J	L	R	W	P	D	C (L M)	C (P)	C (H S)	Y	PART NUMBER
1-48-158	GRILLE, Htr. Defr. Outlet													
	Blue		1	—	1	—	—	—	—	—	—	—	—	P500-1 KB7
	Green		1	—	1	—	—	—	—	—	—	—	—	P500-1 KG6
	Gold		1	—	1	—	—	—	—	—	—	—	—	P500-1 JY7
	Black		1	—	1	—	—	—	—	—	—	—	—	P500-1 JX9
	Parchment		1	—	1	—	—	—	—	—	—	—	—	P500-1 JL5
1-48-179	CLIP, Htr. Frt. & Rr. Hsg. Mtg.		11	9	11	—	—	—	—	—	—	—	—	2521 336
	Htr. Control Lever Ret.		1	—	1	1	1	1	1	1	1	1	—	2820 453
	PIN, Htr. Control Pivot		1	—	1	1	1	—	—	—	—	—	—	3502 365
1-48-254	RETAINER, Htr. Control Cable		—	1	—	—	—	—	—	—	—	—	—	2076 405
1-48-258	ACTUATOR, Htr. Def. Dr. Vac.													
	NOTE: For Additional Actuators See Part Type Code 24-29-1													
	Htr. Dist. Duct. Vent. Dr. Vac. w/Upper Level Vent		—	—	—	1	1	—	—	—	—	—	—	3441 637
	Htr. Vent Dr. w/Upper Level Vent		—	—	—	—	—	1	1	1	1	1	—	3503 370
1-48-280	CONNECTOR, Htr. Control Vacuum													
	Htr. Control Vac. w/Upper Level Vent		—	—	—	—	—	1	1	1	1	1	—	2837 876
1-48-355	LOCKPLATE, Fresh Air Vent Dr.		1	—	1	—	—	—	—	—	—	—	—	2277 516
	Htr. Vent Door Hge.		1	—	1	—	—	—	—	—	—	—	—	2277 516
1-48-356	SHAFT, Htr. Dr.		1	—	1	—	—	—	—	—	—	—	—	3502 299
			—	—	—	1	1	—	—	—	—	—	—	3502 316
	w/Upper Level Vent		—	—	—	1	1	—	—	—	—	—	—	3502 372
	Htr. Dist. Duct Vent w/Upper Level Vent		—	—	—	1	1	—	—	—	—	—	—	3441 635
1-48-357	RETAINER, Htr. Vent Dr. Shaft													
	CLAMP, Htr. Dist. Duct Vent		—	—	—	1	1	—	—	—	—	—	—	3441 636
	CLAMP, Htr. Vent Door Mtg. w/Upper Level Vent		—	—	—	—	—	1	1	1	1	1	—	3441 636
1-48-358	LOCK, Htr. Vent Dr.		1	—	1	—	—	—	—	—	—	—	—	2277 515
	Fresh Air Vent Dr.		1	—	1	—	—	—	—	—	—	—	—	2277 515
1-48-362	SEAL, Fresh Air Vent Duct Mtg., Rt.		1	—	1	—	—	—	—	—	—	—	—	2277 669
	Htr. To Plenum Mtg.		1	—	1	—	—	—	—	—	—	—	—	2277 669
	Htr. To Dash		—	—	—	1	1	—	—	—	—	—	—	3502 082
	Htr. to Plenum		—	1	—	1	1	—	—	—	—	—	—	2936 605
	Htr. Ctr. Vent Duct w/Upper Level Vent		—	—	—	1	1	—	—	—	—	—	—	3441 630
	Htr. Defr. w/Upper Level Vent		—	—	—	—	—	1	1	1	1	1	—	3503 120
1-48-365	DOOR, Heater													
	NOTE: For Additional Doors See Part Type Code 24-28-90													
			1	—	1	—	—	—	—	—	—	—	—	3502 297
	Htr. Temp.		1	—	1	—	—	—	—	—	—	—	—	3502 348
	Door & Seal, Htr. Dist. Duct Vent		—	—	—	1	1	—	—	—	—	—	—	3441 631
	Door & Seal Htr.		—	—	—	1	1	—	—	—	—	—	—	3502 314
	Door & Seal, Htr. Temp.		—	—	—	1	1	—	—	—	—	—	—	3502 308
1-48-374	CONTROL, Vent		—	—	—	—	—	1	1	1	1	1	—	3503 307
1-48-375	ROD, Htr. to Plenum Mtg.		1	—	1	—	—	—	—	—	—	—	—	3502 253
1-48-383	VENT, Fresh Air Side Cowl Lt.		—	—	—	—	—	1	1	1	1	1	—	3502 985
1-48-401	HANDLE, Htr. Vent Dr.		1	—	1	—	—	—	—	—	—	—	—	2277 517
	Fresh Air Vent Dr.		1	—	1	—	—	—	—	—	—	—	—	2277 517
1-48-516	WIRING, Htr. Control													
	NOTE: For Additional Wiring See Part Type Code 24-24-124													
	w/Upper Level Vent		—	—	—	—	—	1	1	1	1	1	—	3764 670
1-48-555	HOSE, Htr. Core to Pump 50 Ft. Roll 5/8" I.D.													
	NOTE: For Further Information See Part Type Code 24-28-24													
	w/318, 360 Eng.		—	—	—	AR	AR	AR	AR	—	—	—	—	1315 466
	A/C Or ATC Htr. To Pump w/318, 360 Eng.		—	—	—	—	—	AR	AR	AR	AR	AR	—	1315 466

CARLINES J - Challenger, B - Barracuda, V - Valiant, L - Dart, R - Satellite, W - Coronet - Charger, P - Plymouth, D - Dodge, C - Chrysler, Y - Imperial

AR Indicates use as required.

Numerals in parentheses ( ) refer to notes.

Printed in U.S.A.

# Indicates parts not listed in any previous parts book.

★ Indicates change or addition.

November, 1974

CODE	PART NAME	ENG. TYPE OR CU. IN	V	B J	L	R	W	P	D	C (L M)	C (P)	C (H S)	Y	PART NUMBER
1-48-555	HOSE Cont'd.													
	Eng. to Htr. Core 50 ft. Roll 1/2" I.D.													
	Eng. to Htr. Core w/318, 360 Eng. w/Leece Neville Altr.		—	—	—	AR	AR	—	—	—	—	—	—	2936 388
	Engine To Valve w/Upper Level Vent w/360, 400, 440 Eng.		—	—	—	—	—	AR	AR	AR	AR	AR	—	2936 388
	A/Cond. And Htr. Eng. To Valve		AR	AR	AR	AR	AR	—	—	—	—	—	—	2936 388
	Preformed w/400, 440 Eng.		—	—	—	1	1	—	—	—	—	—	—	1595 160
	A/Cond. & Htr. Valve To Core		AR	—	AR	—	—	—	—	—	—	—	—	2936 388
	CLAMP, Htr. Hose to Core													
	Htr. Hose Screw Type w/Upper Level Vent Stainless Steel		—	—	—	6	6	6	6	—	—	—	—	3502 695
	A/Cond. or Htr. Hose Screw Type Stainless Steel		—	—	—	8	8	6	6	6	6	6	6	3502 695
1-48-557	SLEEVE, A/Cond. and/or Htr.													
	Valve to Pump Hose		—	1	—	1	1	—	—	—	—	—	—	2537 992
	A/Cond. and/or Htr. Hose w/318, 360 Eng.		1	—	1	—	—	1	1	1	1	1	—	2537 992
1-48-559	BRACKET, Htr. Hose Support w/198, 225 Eng.		1	—	1	1	1	—	—	—	—	—	—	3441 036
	A/Cond. and Htr., Hoses to Valve Cover w/225 Eng.		1	—	1	1	1	—	—	—	—	—	—	3441 036
	Htr. Hose Support w/318, 360 Eng.		1	1	1	1	1	1	1	1	1	1	—	3441 058
	Htr. Hose Support to Altr. w/400, 440 Eng.		—	—	—	1	1	1	1	1	1	1	—	2936 706
	CLAMP, A/C or Htr. Hose Screw Type (S/Steel)		—	—	—	8	8	—	—	—	—	—	—	3502 695
	w/Upper Level Vent		—	—	—	6	6	6	6	6	6	6	—	3502 695
1-48-572	NIPPLE, Eng. To Htr. Hose 1.70" Lgh. 3/8" Thd.		1	1	1	1	1	1	1	1	1	1	1	2936 298
	Htr. Hose To Pump 3" Lgh. 3/8" Thd.		—	—	—	1	1	1	1	1	1	1	—	2936 757
	REDUCER, Htr. Hose Nipple w/198, 225 Eng.		1	—	1	1	1	—	—	—	—	—	—	444 028
1-48-573	SHIELD, Htr. Hose w/400, 440 Eng. w/Leece-Neville Altr.		—	—	—	1	1	1	1	—	—	—	—	2951 014
1-48-599	MOTOR, Htr. Blower													
	NOTE: For Additional Motors See Part Type Code 24-28-195													
			1	1	1	—	—	—	—	—	—	—	—	3621 837
			—	—	—	1	1	—	—	—	—	—	—	3579 172
			—	—	—	—	—	1	1	1	1	1	1	3744 953
1-48-606	TUBE, Htr. Blower Motor Vent		—	—	—	1	1	—	—	—	—	—	—	3441 481
	Htr. Blower Motor Cooling w/Upper Level Vent		—	—	—	—	—	1	1	1	1	1	—	3503 040
	Htr. A/Cond. Or ATC Blower Motor Cooling		—	—	—	—	—	1	1	1	1	1	1	3503 040
1-48-608	GASKET, Htr. Blower Motor Mtg.		1	1	1	—	—	—	—	—	—	—	—	2277 834
			—	—	—	1	1	—	—	—	—	—	—	2485 429
	Seal, Htr. Blower Mtr. Vent Tube		—	—	—	1	1	—	—	—	—	—	—	3441 482
	Seal, Htr. Blower Mtr. Resistor Mtg. w/Upper Level Vent		—	—	—	—	—	1	1	1	1	1	—	3503 443
1-48-707	DUCT and DOOR, Fresh Air Vent													
	NOTE: For Additional Ducts See Part Type Code 24-28-73													
	Rt.		1	—	1	—	—	—	—	—	—	—	—	2277 770
	Fresh Air Vent Lt.		1	—	1	—	—	—	—	—	—	—	—	2607 807
	Duct Htr. Hsg. and Distribution		1	—	1	—	—	—	—	—	—	—	—	3502 287
	Duct and Hsg. Htr. Distribution w/Upper Level Vent		—	—	—	1	1	—	—	—	—	—	—	3502 711
	Duct and Hsg. Htr. Distribution w/o Upper Level Vent		—	—	—	1	1	—	—	—	—	—	—	3502 710

CARLINES: J - Challenger, B - Barracuda, V - Valiant, L - Dart, R - Satellite, W - Coronet - Charger, P - Plymouth, D - Dodge, C - Chrysler, Y - Imperial

AR Indicates use as required. Numerals in parentheses ( ) refer to notes.

# Indicates parts not listed in any previous parts book. ★ Indicates change or addition.

Printed in U.S.A. November, 1974

CODE	PART NAME	ENG. TYPE OR CU. IN	V	B J	L	R	W	P	D	C (L M)	C (P)	C (H S)	Y	PART NUMBER
1-48-707	DUCT and DOOR Cont'd.													
	Duct, Htr. Center Vent w/Upper Level Vent		—	—	—	1	1	—	—	—	—	—	—	3441 639
	Duct, Ctr. Air Outlet w/Upper Level Vent		—	—	—	—	—	1	1	1	1	1	—	3503 042
	Duct, Htr. Air Outlet w/Upper Level Vent		—	—	—	—	—	1	1	1	1	1	—	3503 372
	Duct, Htr. Air Inlet & Rt. Vent w/Upper Level Vent		—	—	—	—	—	1	1	1	1	1	—	3503 392
	Duct, Htr. or A/Cond. Defr.		—	—	—	—	—	1	1	1	1	1	1	3503 442
	Duct and Frt. Hsg. Htr. Distribution		—	1	—	—	—	—	—	—	—	—	—	2936 612
	Duct, Ventilation Complete Lt.		—	1	—	1	1	—	—	—	—	—	—	2936 642
	CLIP, Htr. Dist. Duct Back Board		9	5	9	5	5	—	—	—	—	—	—	6026 450
	CLIP, Htr. Dist. Duct Back Plate Mtg.		—	2	—	—	—	—	—	—	—	—	—	6026 450
	Htr. B/Plate Mtg. w/Upper Level Vent		—	—	—	—	—	4	4	4	4	4	—	6026 450
	CLIP, Htr. Ctr. Vent Duct to Bezel w/Upper Level Vent		—	—	—	2	2	—	—	—	—	—	—	6029 149
	CLIP, Htr. Air Dist. Duct w/Upper Level Vent		—	—	—	—	—	4	4	4	4	4	—	6029 645
	PLUG, Htr. Air Inlet & Rt. Vent Frame Mtg. w/Upper Level Vent		—	—	—	—	—	2	2	2	2	2	—	6029 645
1-48-714	ROD, F/Air Vent Duct Mtg. Rt.		2	—	2	—	—	—	—	—	—	—	—	2485 282
1-48-719	FRAME, Ventilation Rt.		—	—	—	1	1	—	—	—	—	—	—	2936 809
	Htr. Air Inlet & Rt. Vent Dr. Comp. w/Upper Level Vent		—	—	—	—	—	1	1	1	1	1	—	3503 383
1-48-720	HOOK, Ventilation Frame Mtg. Rt.		—	—	—	2	2	—	—	—	—	—	—	2936 812
1-48-770	SWITCH, Htr. Control Blower													
	NOTE: For Additional Switches See Part Type Code 24-24-5, 24-24-150													
			1	—	1	—	—	—	—	—	—	—	—	3502 685
			—	1	—	—	—	—	—	—	—	—	—	3502 678
			—	—	—	1	1	—	—	—	—	—	—	3502 686
	w/o Upper Level Vent		—	—	—	—	—	1	1	1	1	1	—	3503 327
	w/Upper Level Vent		—	—	—	—	—	1	1	1	1	1	—	3780 737
	Htr. Control Vac. w/o Upper Level Vent		—	—	—	—	—	1	1	1	1	1	—	3744 966
	Htr. Control Vac. w/Upper Level Vent		—	—	—	1	1	1	1	1	1	1	—	3431 285
1-48-783	INSULATOR, Wiring Terminal		—	—	—	AR	AR	AR	AR	AR	AR	AR	—	2497 481
	Htr. Blower Switch		—	—	—	—	—	AR	AR	AR	AR	AR	AR	2889 904
	PACKAGE, Terminal And Insulator Htr. Blower Mtr.		1	1	1	1	1	1	1	1	1	1	—	2298 882
1-48-832	RESISTOR, Htr. Blower Motor													
	NOTE: For Additional Resistors See Part Type Code 24-24-67													
	Htr. Blower Motor		1	1	1	—	—	—	—	—	—	—	—	2521 409
	Htr. Blower Motor		—	—	—	1	1	—	—	—	—	—	—	3441 822
	Htr. Blower Motor w/Upper Level Vent		—	—	—	—	—	1	1	1	1	1	—	3503 342
1-48-854	VALVE, Htr. Hose Water													
			1	1	1	—	—	—	—	—	—	—	—	3503 447
	NOTE: For Additional Valves See Part Type Code 24-01-36													
	w/Upper Level Vent		—	—	—	1	1	—	—	—	—	—	—	3579 173
	w/Upper Level Vent		—	—	—	—	—	1	1	1	1	1	—	3780 701
1-48-941	CONTROL CABLE													
	NOTE: For Additional Cables See Part Type Code 24-01-65													
	Htr. Control or Temp.		1	—	1	1	1	—	—	—	—	—	—	3502 563
	Htr. Vent Control		—	—	—	—	—	2	2	2	2	2	—	2809 041
	Htr. Control or Temp. w/Upper Level Vent		—	—	—	—	—	1	1	1	1	1	—	3502 565
	Htr. Temp.		—	1	—	—	—	—	—	—	—	—	—	2884 730
	Heat and Defroster		—	1	—	—	—	—	—	—	—	—	—	2884 731
	Control Cable Package Fresh Air Door Rt.		—	—	—	1	1	—	—	—	—	—	—	3579 200

CARLINES J - Challenger, B - Barracuda; V - Valiant, L - Dart; R - Satellite, W - Coronet - Charger; P - Plymouth, D - Dodge; C - Chrysler, Y - Imperial

AR Indicates use as required.

# Indicates parts not listed in any previous parts book.

Numerals in parentheses ( ) refer to notes.

★ Indicates change or addition.

Printed in U.S.A. November, 1974

CODE	PART NAME	ENG. TYPE OR CU. IN	V	B J	L	R	W	P	D	C (L M)	C (P)	C (H S)	Y	PART NUMBER
1-48-941	CONTROL CABLE Cont'd.													
	F/Air Vent Rt. Door		—	1	—	—	—	—	—	—	—	—	—	3579 200
	F/Air Vent Lt. Door		—	1	—	1	1	—	—	—	—	—	—	3579 200
1-48-942	KNOB, Htr. Cont.													
	NOTE: For Additional Knobs See Part Type Code 24-24-156													
	Htr. Cont.		2	—	2	2	2	—	—	—	—	—	—	2884 413
	Htr. Control Temp.		—	—	—	—	—	2	2	2	2	2	—	3503 315
	KNOB and CLIP, Htr. Control		—	2	—	—	—	—	—	—	—	—	—	3431 087
1-48-945	PLATE, I/Panel T/Pad Ret. Upper Vent Center w/Upper Level Vent		—	—	—	—	—	1	1	—	—	—	—	3590 370
			—	—	—	—	—	—	—	1	1	1	—	3590 377
1-48-950	CLIP, Mixed Air Door Cont. Cable													
	Htr. Vent Door Control		—	—	—	—	—	1	1	1	1	1	—	2884 656
	Htr. Vent Dr. Control Cable Mtg.		—	—	—	1	1	—	—	—	—	—	—	2884 656
	Htr. Control Cable		1	—	1	1	1	1	1	1	1	1	—	6028 590
	Htr. Control Cable Mtg.		2	—	2	2	2	2	2	2	2	2	—	6003 464
	Vent Control Cable Mtg.		—	—	—	—	—	2	2	2	2	2	—	6003 464
	Lt. Vent Cable		—	—	—	—	—	1	1	1	1	1	—	6003 464
	Htr. Air Inlet & Rt. Vent w/Upper Level Vent		—	—	—	—	—	1	1	1	1	1	—	6003 464
	Htr. Door Cable		1	—	1	1	1	—	—	—	—	—	—	6003 464
	Htr. Door Cable w/Upper Level Vent													
			—	—	—	1	1	1	1	1	1	1	—	6003 464
	Htr. Temp. Door Cable		1	—	1	1	1	—	—	—	—	—	—	6003 464
	Htr. Temp. Door Cable w/Upper Level Vent		—	—	—	1	1	1	1	1	1	1	—	6003 464
	Htr. B/Plate Mtg. w/Upper Level Vent		—	—	—	—	—	4	4	4	4	4	—	6026 450
	F/Air Vent Rt. Dr. Cont. Mtg.		—	1	—	—	—	—	—	—	—	—	—	6015 143
	Htr. Temp. Control Cable Mtg.		—	1	—	—	—	—	—	—	—	—	—	6015 143
	Ventilation Control Cable Mtg.		—	—	—	1	1	—	—	—	—	—	—	6015 143
	Htr. Dr. Control Cable Mtg.		1	—	1	1	1	—	—	—	—	—	—	6029 654
	Htr. Temp. Dr. Control Cable Mtg.		1	—	1	1	1	—	—	—	—	—	—	6029 654
	Htr. Control Cable Mtg.		2	—	2	2	2	—	—	—	—	—	—	6029 654
	RETAINER, Htr. Dist. Duct Vent Door Vac. Shaft w/Upper Level Vent		—	—	—	1	1	—	—	—	—	—	—	2197 678
	NUT, Htr. Control Temp. Cable Ret.		2	—	2	2	2	1	1	1	1	1	—	6029 889
1-57-1	**HITCH, Trailer Exc. Wgn.**		—	—	—	—	—	1	—	—	—	—	—	3754 493
	Exc. Wgn.		—	—	—	—	—	—	1	—	—	—	—	3754 547
			—	—	—	—	—	—	—	1	—	—	—	3754 595
			—	—	—	—	—	—	—	—	—	1	—	3754 649
1-57-2	COUPLER BALL, Trailer Hitch		1	—	1	1	1	1	1	1	1	1	—	3837 651
1-57-3	TOWBAR, Trailer Hitch													
	R 2 Dr. 2 Dr. H.T. W2 Dr. 2 Dr. H.T. & Fast Back		—	—	—	1	1	—	—	—	—	—	—	3837 661
	4 Dr. Sedan		—	—	—	1	1	—	—	—	—	—	—	3837 660
	Sta. Wgn.		—	—	—	1	1	—	—	—	—	—	—	3837 659
	4 Dr. & Dr. H.T.		—	—	—	—	—	1	1	1	—	1	1	3837 658
	Sta. Wgn.		—	—	—	—	—	1	1	—	1	—	—	3837 657
1-63-1	**CARPET PROTECTOR, Frt. Floor Mat**													
	Blue		—	—	—	1	1	—	—	—	—	—	—	M006-7 KB7
	Green		—	—	—	1	1	—	—	—	—	—	—	M006-7 KG7
	Parchment		—	—	—	1	1	—	—	—	—	—	—	M006-7 JL5
	Chestnut		—	—	—	1	1	—	—	—	—	—	—	M006-7 KT8
	Black		—	—	—	1	1	—	—	—	—	—	—	M006-7 JX9

CARLINES: J - Challenger, B - Barracuda, V - Valiant, L - Dart, R - Satellite, W - Coronet - Charger, P - Plymouth, D - Dodge, C - Chrysler, Y - Imperial

AR Indicates use as required.

Numerals in parentheses ( ) refer to notes.

# Indicates parts not listed in any previous parts book.

★ Indicates change or addition.

Printed in U.S.A.
November, 1974

CODE	PART NAME	ENG. TYPE OR CU. IN	V	B J	L	R	W	P	D	C (L M)	C (P)	C (H S)	Y	PART NUMBER
1-63-1	CARPET PROTECTOR Cont'd.													
	Gold		—	—	—	1	1	—	—	—	—	—	—	M006-7 JY7
	Blue		—	—	—	—	—	1	1	1	1	1	1	M020-1 KB7
	Green		—	—	—	—	—	1	1	1	1	1	1	M020-1 KG7
	Parchment		—	—	—	—	—	1	1	1	1	1	1	M020-1 KL5
	Chestnut		—	—	—	—	—	1	1	1	1	1	1	M020-1 KT8
	Black		—	—	—	—	—	1	1	1	1	1	1	M020-1 KX9
	Gold		—	—	—	—	—	1	1	1	1	1	1	M020-1 KY7
	CARPET PROTECTOR, Rr. Floor Mat													
	Blue		—	—	—	2	2	—	—	—	—	—	—	M308 KB7
	Green		—	—	—	2	2	—	—	—	—	—	—	M308 KG7
	Black		—	—	—	2	2	—	—	—	—	—	—	M308 JX9
	Gold		—	—	—	2	2	—	—	—	—	—	—	M308 JY7
	Parchment		—	—	—	2	2	—	—	—	—	—	—	M308 JL5
	Chestnut		—	—	—	2	2	—	—	—	—	—	—	M308 KT8
	Blue		—	—	—	—	—	1	1	—	—	—	—	M322-3 KB7
	Green		—	—	—	—	—	1	1	—	—	—	—	M322-3 KG7
	Parchment		—	—	—	—	—	1	1	—	—	—	—	M322-3 KL5
	Chestnut		—	—	—	—	—	1	1	—	—	—	—	M322-3 KT8
	Black		—	—	—	—	—	1	1	—	—	—	—	M322-3 KX9
	Gold		—	—	—	—	—	1	1	—	—	—	—	M322-3 KY7
	Blue		—	—	—	—	—	—	—	1	1	1	1	M324-5 KB7
	Green		—	—	—	—	—	—	—	1	1	1	1	M324-5 KG7
	Parchment		—	—	—	—	—	—	—	1	1	1	1	M324-5 KL5
	Chestnut		—	—	—	—	—	—	—	1	1	1	1	M324-5 KT8
	Black		—	—	—	—	—	—	—	1	1	1	1	M324-5 KX9
	Gold		—	—	—	—	—	—	—	1	1	1	1	M324-5 KY7
	NOTE: For Full Width Floor Mats See Accessories Catalog.													
1-74-1	**ROOF LUGGAGE RACK PACKAGE**													
	Sta. Wgn.		—	—	—	1	1	—	—	—	—	—	—	3720 726
	Sta. Wgn.		—	—	—	—	—	1	1	—	1	—	—	3767 464
	Deck Lid Lugg. Rack Package		—	1	—	1	1	—	—	—	—	—	—	3419 498
1-87-1	**RADIO PACKAGE**													
	AM Radio Push Button (Knob Type)		1	—	1	—	—	—	—	—	—	—	—	3501 582
	AM-FM Radio Push Button 5.5 Watt (Knob Type)		1	—	1	—	—	—	—	—	—	—	—	3501 583
	AM Radio Push Button (Knob Type)		—	1	—	—	—	—	—	—	—	—	—	2884 853
	AM-FM Multiplex Knob Type		—	1	—	—	—	—	—	—	—	—	—	3501 626
	AM Radio 2 Watt. (Knob Type)		—	—	—	1	1	—	—	—	—	—	—	3501 132
	AM-FM Radio 5.5 Watt (Knob Type)		—	—	—	1	1	—	—	—	—	—	—	3501 584
	AM-FM Multiplex Knob Type		—	—	—	1	1	—	—	—	—	—	—	3501 627
	AM Radio 2 Watt w/Fader		—	—	—	—	—	1	1	1	1	1	—	3501 338
	AM Radio & Jumper Wire Pkg. (Chassis) 4 Watt w/Fader		—	—	—	—	—	—	—	1	1	1	—	3837 190
	AM-FM Radio 4 Watt w/Fader		—	—	—	—	—	1	1	1	1	1	1	3501 339
	AM-FM Multiplex		—	—	—	—	—	1	1	—	—	—	—	3501 337
	AM-FM Multiplex Search Tune		—	—	—	—	—	—	—	1	1	1	1	3501 341
	AM-FM Multiplex w/8 Trk. Tape		—	—	—	—	—	1	1	1	1	1	1	3501 340
	NOTE: The Following Radios Are For Replacement Only Not For Field Installation													
	AM-FM Multiplex w/Input Socket "Less Knobs"		—	1	—	—	—	—	—	—	—	—	—	3501 501
	AM-FM Multiplex 5.5 Watt "Less Knobs"		—	—	—	1	1	—	—	—	—	—	—	3501 503
	AM Dual Audio w/8 Track Tape		—	—	—	—	—	1	1	1	1	1	—	3501 328
1-87-2	SPEAKER, Instrument Panel Radio		1	—	1	—	—	—	—	—	—	—	—	3501 613
			—	1	—	—	—	—	—	—	—	—	—	2884 778
			—	—	—	1	1	—	—	—	—	—	—	3501 020
			—	—	—	—	—	1	1	1	1	1	1	3501 277
	Inst. Panel Stereo		—	2	—	—	—	—	—	—	—	—	—	2884 438
	Instrument Panel Stereo		—	—	—	—	—	2	2	2	2	2	2	3501 281

CARLINES J - Challenger, B - Barracuda, V - Valiant, L - Dart, R - Satellite, W - Coronet - Charger, P - Plymouth, D - Dodge, C - Chrysler, Y - Imperial

AR Indicates use as required.

Numerals in parentheses ( ) refer to notes.

Printed in U.S.A.
November, 1974

# Indicates parts not listed in any previous parts book.

★ Indicates change or addition.

CODE	PART NAME	ENG. TYPE OR CU. IN	V	B J	L	R	W	P	D	C (L M)	C (P)	C (H S)	Y	PART NUMBER
1-87-2	SPEAKER Cont'd.													
	Rr. Compt. Radio		1	2	1	—	—	—	—	—	—	—	—	2427 603
	Rr. Compt. Exc. Wgn.		—	—	—	1	1	—	—	—	—	—	—	2580 690
	Rr. Shelf Radio Exc. Wgn. w/Single Rr. Speaker		—	—	—	—	—	1	1	1	—	1	1	3501 280
	Rr. Shelf Radio Exc. Wgn. w/Dual Rr. Speakers		—	—	—	—	—	2	2	2	—	2	2	3501 280
	Rr. Compt. Wgn.		—	—	—	1	1	—	—	—	—	—	—	3488 211
	Rr. Compartment Radio 5 1/2 x 7 1/2" Sta. Wgn. w/Single Rr. Speaker		—	—	—	—	—	1	1	—	1	—	—	3501 282
	Rr. Compartment Radio 5 1/2 x 7 1/2" Sta. Wgn. w/Dual Rr. Speakers		—	—	—	—	—	2	2	—	2	—	—	3501 282
	RR. SPEAKER AND CONTROL PACKAGE													
	Rr. Comp. Speaker and Control Package		1	1	1	—	—	—	—	—	—	—	—	3501 358
	Rr. Comp. Speaker and Control Package Exc. Wgn.		—	—	—	—	—	1	1	1	—	1	—	3501 359
	Frt. & Rr. Speaker Stereo Sta. Wgn.		—	—	—	—	—	1	1	—	1	—	—	3501 363
	Frt. & Rr. Speaker Stereo Package Exc. Wgn.		—	—	—	—	—	1	1	1	—	1	—	3501 349
	R, W Exc. Wgn.		—	—	—	1	1	—	—	—	—	—	—	3488 423
	R, W Wgn.		—	—	—	1	1	—	—	—	—	—	—	3488 424
1-87-5	SWITCH, Radio Foot Selector w/Cable		—	—	—	—	—	—	—	1	1	1	1	2822 329
1-87-7	GROMMET, Frt. Floor Carpet Radio Selector Switch		—	—	—	—	—	—	—	1	1	1	1	2292 474
1-87-17	NUT, Rr. Speaker Cont. Mtg. w/o Rallye I/Pnl.		—	1	—	—	—	—	—	—	—	—	—	2427 119
1-87-19	CROSSOVER, Mtg. Plate and Cover		—	1	—	—	—	—	—	—	—	—	—	2884 863
1-87-22	BEZEL, Radio													
	NOTE: For Additional Bezels See Part Type Code 1-48-70, 8-37-90, 23-33-135													
	AM Radio		1	—	1	—	—	—	—	—	—	—	—	2884 817
	COVER, W/O Radio		1	—	1	—	—	—	—	—	—	—	—	2884 773
	Bezel, I/Pnl. w/Radio Openings		—	1	—	—	—	—	—	—	—	—	—	2884 880
	Rear Speaker Control w/Rallye I/Pnl.		—	1	—	—	—	—	—	—	—	—	—	2947 673
	Frt. & Rr. Speaker Fader Cont.		1	1	1	—	—	—	—	—	—	—	—	2947 484
	Fader Control		—	—	—	1	1	—	—	—	—	—	—	3488 322
	BEZEL & GRILLE, Rr. Compt. Speaker Sta. Wgn.		—	—	—	1	1	—	—	—	—	—	—	2826 JX9
	Sta. Wgn.		—	—	—	—	—	1	1	—	1	—	—	W232-3 KX9
1-87-25	BRACKET, Rr. Seat Radio Speaker Grille Mtg.													
	BRACKET and SEAL, Rr. Speaker Mtg. Rt. Wgn.		—	—	—	1	1	—	—	—	—	—	—	3488 209
	Sta. Wgn.		—	—	—	—	—	1	1	—	1	—	—	3501 304-5
1-87-30	PLATE, Stereo Speaker and Grille Mtg.		—	2	—	—	—	—	—	—	—	—	—	2884 684
1-87-34	LAMP, Radio Illumination		—	—	—	—	—	1	1	1	1	1	1	3501 320
1-87-36	CLIP, Radio Lens Mtg.		—	—	—	—	—	4	4	4	4	4	4	3501 274
1-87-55	CARTRIDGE, Stereo Tape Demonstration (8 Track)		—	—	—	—	—	1	1	1	1	1	1	3501 332
1-87-58	CONTROL, Frt. and Rr. Speaker Fader		—	1	—	—	—	—	—	—	—	—	—	2947 444
	Frt. and Rr. Speaker Fader		1	—	1	—	—	—	—	—	—	—	—	2864 300
	Frt. and Rr. Speaker Stereo		—	1	—	—	—	—	—	—	—	—	—	2947 672
	Frt. and Rr. Speaker Fader w/Rallye I/Pnl.		—	1	—	—	—	—	—	—	—	—	—	2947 723
	Rr. Compt. Speaker		1	1	1	—	—	—	—	—	—	—	—	3746 726

CARLINES: J - Challenger, B - Barracuda, V - Valiant, L - Dart, R - Satellite, W - Coronet - Charger, P - Plymouth, D - Dodge, C - Chrysler, Y - Imperial

AR Indicates use as required.

Numerals in parentheses ( ) refer to notes.

# Indicates parts not listed in any previous parts book.

★ Indicates change or addition.

Printed in U.S.A.
November, 1974

CODE	PART NAME	ENG. TYPE OR CU. IN	V	B J	L	R	W	P	D	C (L M)	C (P)	C (H S)	Y	PART NUMBER
1-87-58	CONTROL Cont'd.													
	Rr. Compt. Speaker		—	—	—	—	—	1	1	1	1	1	—	3746 737
	Frt. and Rr. Speaker Fader		—	—	—	1	1	—	—	—	—	—	—	3488 325
1-87-61	BRACKET, Radio to Inst. Panel Mounting		—	—	—	—	—	1	1	1	1	1	1	3501 269
1-87-73	GROUND STRAP, Radio Noise Suppression		—	—	—	—	—	1	1	1	1	1	1	3501 362
1-87-180	KNOB, Radio Control (Primary)		2	—	2	—	—	—	—	—	—	—	—	2884 764
	Radio Control (Primary)		—	2	—	2	2	—	—	—	—	—	—	2884 776
	Radio Control (Secondary)		—	2	—	2	2	—	—	—	—	—	—	2884 775
	Radio Tone Control		2	—	2	—	—	—	—	—	—	—	—	2497 408
	Frt. & Rr. Speaker Fader Cont.		1	—	1	—	—	—	—	—	—	—	—	2820 186
	Radio Control (Primary)		—	—	—	—	—	2	2	2	—	—	—	3501 300
	Radio Control (Primary)		—	—	—	—	—	—	—	—	2	2	2	3501 301
	Radio Control (Secondary)		—	—	—	—	—	2	2	2	2	2	2	3501 273
	Fader or Stereo Control		—	1	—	—	—	—	—	—	—	—	—	2947 359
	Fader Control		—	—	—	1	1	—	—	—	—	—	—	3488 323
1-87-181	CLIP, Radio Knob Retaining (Primary)		—	—	—	—	—	2	2	2	2	2	2	3501 317
1-87-404	WIRING, Rr. Compt. Spkr. Exc. Wgn.		1	1	1	1	1	—	—	—	—	—	—	2580 038
	Rr. Radio Spkr. (Dual)		—	1	—	—	—	—	—	—	—	—	—	2983 583
	Stereo Tape and Rr. Spkr.		—	1	—	—	—	—	—	—	—	—	—	2983 312
	Stereo Tape I/Pnl.		—	1	—	—	—	—	—	—	—	—	—	2983 246
	Stereo		—	—	—	1	1	—	—	—	—	—	—	3513 099
	Fader Switch		—	—	—	1	1	—	—	—	—	—	—	3513 555
	Rr. Radio Spkr. Dual Stereo Exc. Wgn.		—	—	—	—	—	1	1	1	—	1	1	3764 703
	Radio Rr. Spkr., Stereo, Sta. Wgn. Only		—	—	—	—	—	1	1	—	1	—	—	3764 704
1-88-1	**ANTENNA PACKAGE, Radio**													
	Power Antenna		—	—	—	—	—	—	—	1	1	1	1	3501 336
	PACKAGE, Body & Cable (Antenna) "Less Mast"		1	1	1	1	1	—	—	—	—	—	—	3501 334
			—	—	—	—	—	1	1	1	1	1	—	3501 335
1-88-6	ADAPTER and GASKET, Manual B.		—	1	—	—	—	—	—	—	—	—	—	2983 162
	Manual J		—	1	—	—	—	—	—	—	—	—	—	2983 164
			1	—	1	—	—	—	—	—	—	—	—	3679 818
	4 Dr. and Wgn.		—	—	—	1	—	—	—	—	—	—	—	3513 034
	2 Dr. 2 Dr. H.T.		—	—	—	1	—	—	—	—	—	—	—	3679 806
	4 Dr. and Wgn.		—	—	—	—	1	—	—	—	—	—	—	3513 007
	2 Dr. 2 Dr. H.T. Fast Back		—	—	—	—	1	—	—	—	—	—	—	3513 037
			—	—	—	—	—	1	1	1	1	1	1	3501 293
	PLUG, Antenna Adapter Hole w/o Radio		1	1	1	1	1	—	—	—	—	—	—	3679 812
			—	—	—	—	—	1	1	1	1	1	1	3501 331
	RETAINER, Antenna Adapter Hole Plug w/o Radio		1	1	1	1	1	—	—	—	—	—	—	3679 815
1-88-12	Body and Cable Manual Antenna		1	—	1	—	—	—	—	—	—	—	—	2926 673
			—	1	—	—	—	—	—	—	—	—	—	2983 306
			—	—	—	1	1	—	—	—	—	—	—	3501 154
			—	—	—	—	—	1	1	1	1	1	—	3501 294
1-88-107	GASKET, Antenna Upr. Adapter Mtg.		1	1	1	—	—	—	—	—	—	—	—	2889 935
1-88-117	MOTOR and DRIVE, Power Antenna		—	—	—	—	—	—	—	1	1	1	1	3501 311
1-88-120	CAP NUT, Antenna Mtg.		1	1	1	1	1	—	—	—	—	—	—	2983 875
			—	—	—	—	—	1	1	1	1	1	1	3501 287
1-88-123	LOCKWASHER, Antenna Mtg.		—	—	—	—	—	1	1	1	1	1	1	3501 321
1-88-126	BRACKET, Pwr. Ant. to Reinf. Strut Mtg. Up to 4-8-74		—	—	—	—	—	—	—	1	1	1	1	# 3501 312
	Pwr. Anti. Mtg. After 4-8-74		—	—	—	—	—	—	—	1	1	1	1	# 3501 357
1-88-159	MAST, Manual Antenna 76.5"		1	1	1	1	1	1	1	1	1	1	1	2889 934
	Manual 31"		1	1	1	1	1	1	1	1	1	1	—	3513 745
	Power		—	—	—	—	—	—	—	1	1	1	1	3501 307

CARLINES J - Challenger, B - Barracuda, V - Valiant, L - Dart, R - Satellite, W - Coronet - Charger, P - Plymouth, D - Dodge, C - Chrysler, Y - Imperial

AR Indicates use as required.

Numerals in parentheses ( ) refer to notes.

Printed in U.S.A.

# Indicates parts not listed in any previous parts book.

★ Indicates change or addition.

November, 197

CODE	PART NAME	ENG. TYPE OR CU. IN	V	B J	L	R	W	P	D	C (L M)	C (P)	C (H S)	Y	PART NUMBER
1-88-160	ANTENNA MAST ADAPTER, INSULATOR and SPACER PACKAGE													
	INSULATOR, Power Antenna		—	—	—	—	—	—	—	1	1	1	1	3501 308
	TUBE, Power Antenna Mast		—	—	—	—	—	—	—	1	1	1	1	3501 310
1-88-162	CABLE, Power Antenna Lead In		—	—	—	—	—	—	—	1	1	1	1	3501 314
1-88-165	EXTENSION, Power Antenna		—	—	—	—	—	—	—	1	1	1	1	3501 309
1-88-170	COLLAR and CLIP, Manual Antenna		1	1	1	1	1	1	—	—	—	—	—	2983 242
	NOTE: For Antenna Switch See P.T.C. 8-42-1													
1-108-28	**SWITCH, W/S Pillar Spotlamp**													
	4 Dr. Sedan & Wgn.		—	—	—	1	1	1	1	—	—	—	—	1641 511
1-108-49	FUSE HOLDER, Spotlight Wrg.		—	—	—	—	—	1	1	—	—	—	—	2257 636

NOTES

CARLINES J - Challenger, B - Barracuda, V - Valiant, L - Dart, R - Satellite, W - Coronet - Charger, P - Plymouth, D - Dodge, C - Chrysler, Y - Imperial

AR Indicates use as required.

Indicates parts not listed in any previous parts book.

Numerals in parentheses ( ) refer to notes.

★ Indicates change or addition.

Printed in U.S.A.
November, 1974

'74 action accents

Mopar

PASSENGER CAR ACCESSORIES







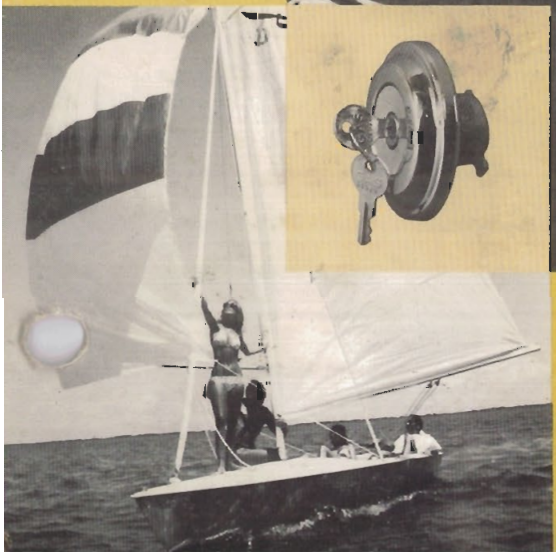





'74 Accessories Index

DESCRIPTION	PAGE
Air Conditioners	1
Air Deflector, Station Wagon	14
Antennas	2,3
Bumper Jack, Universal	24
Cassette Tape Players	7
Child Guard Door Safety Locks	8
Child Car Seat	8
Cigar Lighter	26
Clocks	23
Deck Lid Lock (Electric)	19
Digital Clock	23
Door Edge Protectors	18
Electric Window Safety Switch	8
Engine Block Heater	26
Fire Extinguisher	15
Floor Mats	13
Fuel Pressure Regulator	15
Fuel Tank Lock Cap	19
Glove Compartment Light	27
Hood Lock Packages	12
Hood Cable & Pin Package	12
Infant Safety Carrier	8
License Plate Frames	24
Litter Basket	19
Load Levelers	16
Luggage Racks & Covers	[illegible]
Luggage Hold-Down	[illegible]
Map & Courtesy Light	27

DESCRIPTION	PAGE
Mattress, Cargo Area	26
Mirrors	25
Mouldings, Vinyl	10
Paint Striping Tool	10
Patternique Car Mats	13
Power Brakes	9
Power Steering Conversion Pkgs.	9
Radios, Bezels & Antennas	2,3
Rear Door Safety Locks	8
Rear Compartment Speakers	4
Rear Window Defogger	14
Ride Levelers	16
Seat Cushion, Ventilated	24
Ski Rack, (Deck Lid)	22
Speed Control Packages	17
Speaker Packages	4,7
Splash Guards	15
Spoiler, Universal	12
Striping Packages	11
Strobe Stripe Kits	11
"Stereo 8" Tape Players–Auto	5
"Stereo [illegible] Tape Players [illegible] able	6
Tachometers	[illegible]
[illegible]	[illegible]
Trailer To[illegible]	[illegible]
[illegible]	[illegible]
[illegible]	[illegible]
Tru[illegible]	[illegible]
Vanity	[illegible]

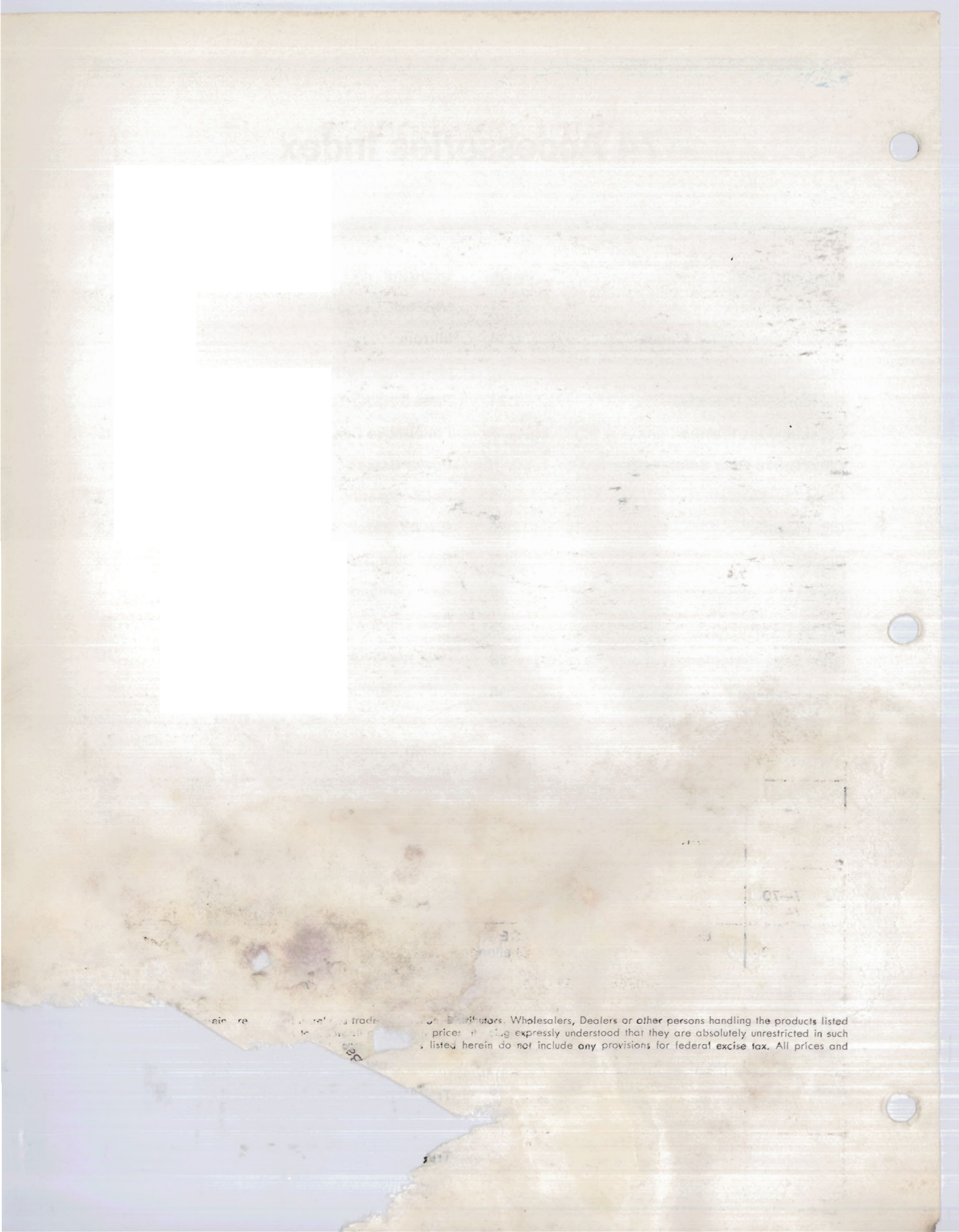

[illegible] trade [illegible] Distributors, Wholesalers, Dealers or other persons handling the products listed [illegible] prices [illegible] expressly understood that they are absolutely unrestricted in such [illegible] listed herein do not include any provisions for federal excise tax. All prices and

Air Conditioners

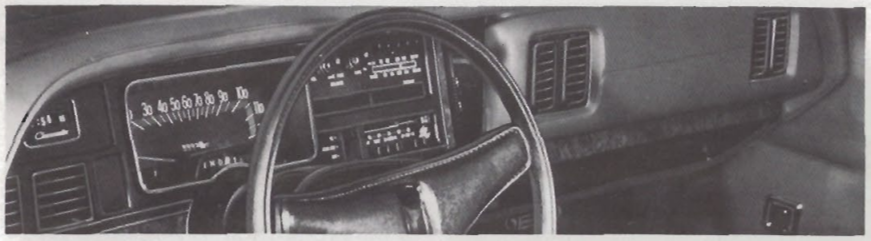

"DELUXE CUSTOM"
- "Factory air" look and distribution.
- Includes high-performance fan.
- Maximum cooling at high temperatures.

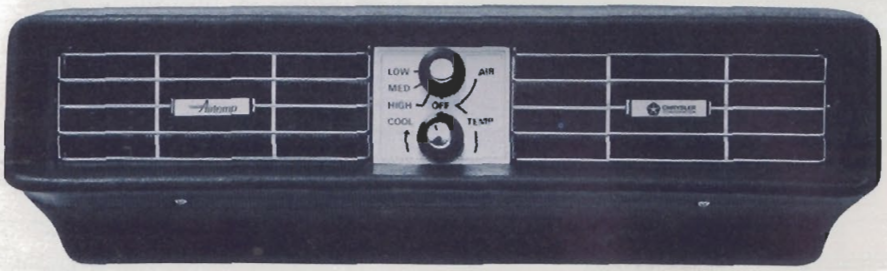

"STANDARD"
- Attractive design with large grills for improved air distribution.
- Ample cooling under hot weather driving conditions.
- Three speed fan and centrally located temperature controls.

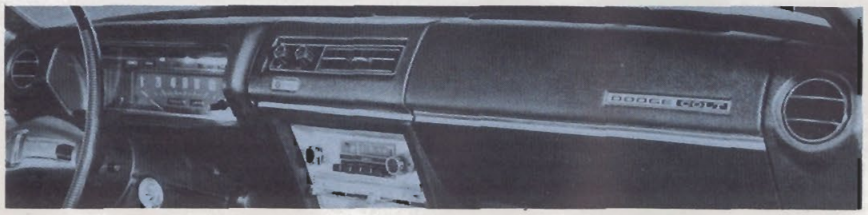

"COLT"
- Fast, efficient cooling
- Attractive custom styling
- Convenient air-temperature controls
- Three speed blower
- Evaporator fits under dash

YEAR	DESCRIPTION AND APPLICATION	PART NUMBER	INSTALLED PRICE
74	**"CUSTOM" AIR CONDITIONER BASIC UNIT** Fury, Monaco, Chrysler	3837 329	
74	**ENGINE ADAPTER PACKAGE** Fury, Monaco, Chrysler w/318 & 360 C.I.E. W/O Air Pump w/400 & 440 C.I.E. W/O Air Pump w/440 C.I.E. With Air Pump	 3744 878 3837 332 3837 333	
74-70 74	**"STANDARD" AIR CONDITIONER BASIC UNIT** Valiant, Dart, Barracuda & Challenger Satellite & Coronet	 2027 816 2027 816	
74-70 74	**ENGINE ADAPTER PACKAGE** Valiant, Dart, Barracuda & Ch ger w/198 & 225 C.I.E. w/318, 340, 360 & 383 C.I.E. w/400 & 440 C.I.E. Satellite & Coronet w/225 C.I.E. w/318 & 360 C.I.E. w/400 & 440 C.I.E.	 2027 8[illegible] 2027 818 2027 825	
74-70 74	**CONDENSER PACKAGE** Valiant, Dart, Barracuda & Ch[illegible] Satellite & Coronet	Kits	
74 74	**COLT** Air Conditioning Package (Comp., Adapter Pkg.—Colt		

Note: Air Conditioning Units listed above do not apply to models equipped wit[illegible]ole mount[illegible]l cassette

All prices and specifications are subject to change without notice.

Radios— Bezels— Antennas

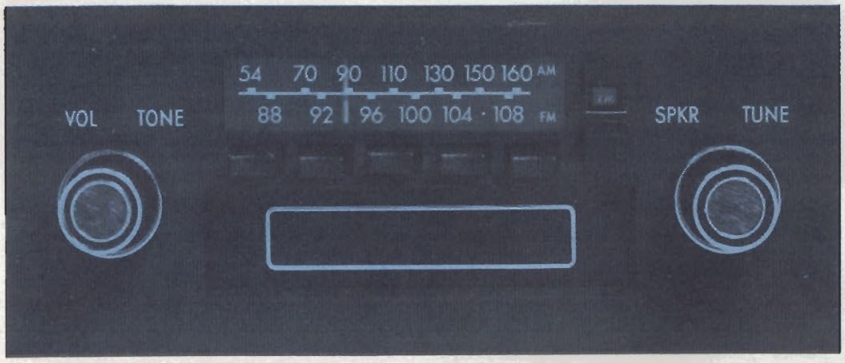

AM-FM STEREO RADIO W/TAPE PLAYER
Radio at its finest. Solid State AM-FM provides the broadest possible range of stations for your selection. Plus 8-track Stereo Tape Player.

RADIO		BEZEL		ANTENNA	
TYPE	NUMBER	DESCRIPTION	NUMBER	BODY & CABLE	MAST
'74 VALIANT & DART					
AM	3501 582	Black Woodgrain	2884 817 3501 602	3501 334	3513 745
AM-FM	3501 583	Black Woodgrain	2884 817 3501 602	3501 334	3513 745
'74 BARRACUDA & CHALLENGER					
AM	2884 853	All	2884 880	3501 334	3513 745
AM-FM Stereo	3501 626	All	2884 880	3501 334	3513 745
'74-73 COLT					
AM	MA-158353	Station Wgn.	Not req'd	MA-158356 (complete)	
AM	MA-158354	Hardtop & Sedan	Not req'd	Not req'd	

RADIO		BEZEL		ANTENNA		
TYPE	NUMBER	DESCRIPTION	NUMBER	BODY & CABLE	MAST	INSTALLED PRICE
'74 SATELLITE						
AM	3501 132	Road Run., Sebring Plus, Regent, w/Rallye Panel (Woodgrain)	3592 686			
FM	3501 584	Police, Taxi, Satellite (Silver)	3592 351	3501 334	3513 745	
-FM Stereo	3501 627 (1)	Sebring, Custom, (Woodgrain)	3592 353			
CORONET GER						
	3501	(Wood	36	34	3513 745	

pecifications are subject to change without notice.

Radios— Bezels— Antennas

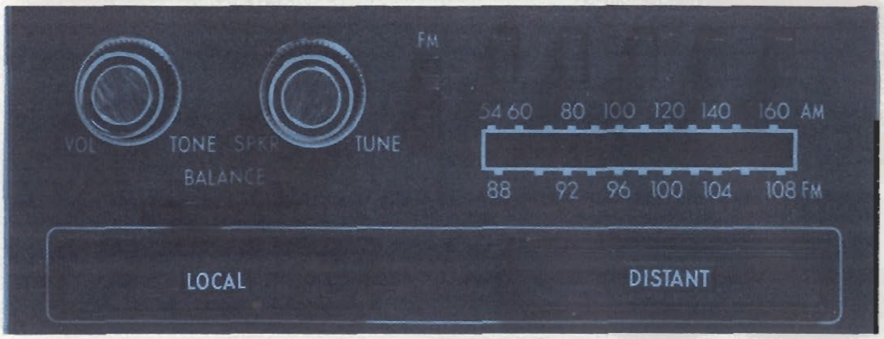

AM-FM STEREO RADIO W/SEARCH TUNE
Touch the automatic tuning bar . . . Mopar Search-Tune Radio magically selects the strongest AM-FM station in the area. If desired, this radio will search the entire tuning range for a program to suit the most discriminating taste.

RADIO		BEZEL		ANTENNA		
TYPE	NUMBER	DESCRIPTION	NUMBER	BODY & CABLE	MAST	INSTALLED PRICE
		'74 FURY & MONACO				
AM	3501 338	Ex. Sta. Wgn.—Black	3592 553			
AM-FM	3501 339	Sta. Wgn.—Black	3592 555			
AM-FM Stereo	3501 337 (1)	Exc. Sta. Wgn.—W/Grain	3592 557	3501 335	3513 745	
AM-FM Stereo Search Tune	3501 341 (1)	Sta. Wgn.—Woodgrain	3592 559			
AM-FM Stereo Tape Play.	3501 340 (1)					
		'74 CHRYSLER & IMPERIAL				
AM	3501 338	(Chrysler)				
AM-FM	3501 339	Exc. Sta. Wgn.—Suede	3592 485	3501 335	3513 745	
AM-FM Stereo	3501 337 (1)	Exc. Sta. Wgn.—W/Grain	3592 486			
AM-FM Stereo Search-Tune	3501 341 (1)	Sta. Wgn.—W/Grain	592 487			
AM-FM Stereo Tape Player	3501 340 (1)					

(1) These packages do not include speakers. Re

All prices and specifications are subject to change

Custom Speakers

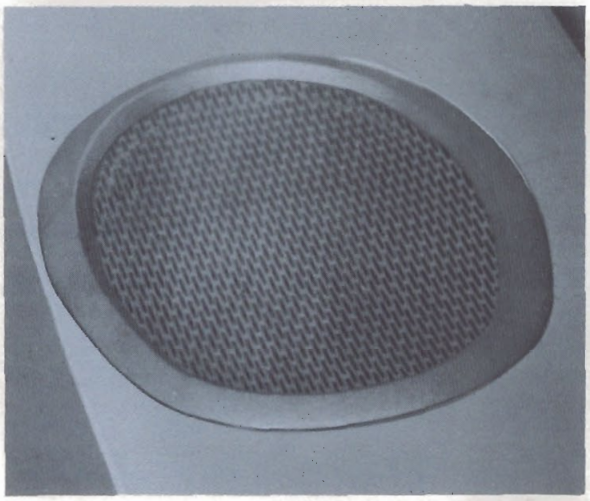

REAR COMPARTMENT & INSTRUMENT PANEL SPEAKERS

- Adds depth of sound and enjoyment for all passengers.
- Fader control lets you operate front and rear speakers separately or in unison.

YEAR	DESCRIPTION AND APPLICATION	PART NUMBER	INSTALLED PRICE
	REAR COMPARTMENT SPEAKER		
74-71	Valiant & Dart	3501 358	
74-70	Barracuda & Challenger	3501 358	
74-71	Satellite, Coronet & Charger (Except Station Wagons)	3488 423	
74-71	Satellite & Coronet Station Wagons	3488 424	
74	Fury, Monaco & Chrysler Sedans	3501 359	
	REAR COMPARTMENT & INSTR. PANEL SPEAKER PKGS. (Packages consist of 4 Speakers)		
74	Fury, Monaco, Chrysler Sedans (1)	3501 349	
	Fury, Monaco, Chrysler Sta. Wgn. (2)	3501 363	

(1) For production-type installation, use new Instrument Panel Cover, No. 3590386, and one of the following New Rear Shelf Panels:

(2) For production-type in[illegible] use new Instrument Panel Cover, No. 3590386.

[illegible]naco

[illegible] Do[illegible] ..... No. H102KX9
[illegible] ..... No. H126KX9
..... No. H132KX9

Chrysler

2 Doors & 4 Door H.T. ..... No. H100KX9
4 Door Sedan ..... No. H130KX9

[illegible]ations are subject to change without notice.

Stereo "8" Tape Players

Automotive Units



A-20



A-25



A-125

- Up to 80 minutes playing time per Cartridge.
- Automatic play from beginning to end.
- Tapes available for every musical taste and age.



A-225

DESCRIPTION	MODEL NUMBER	
AUTOMOTIVE TYPE UNITS (Without Speakers)		
Mini — 8 Watt	A-20	
Mini — 30 Watt	25	
Select-O-Matic	25	
Sound Master W/FM Radio	25	82
8-Track Demonstration Car... (Production Type)		3501 332

All prices and specifications are subject to c... notice.

Stereo "8" Tape Players

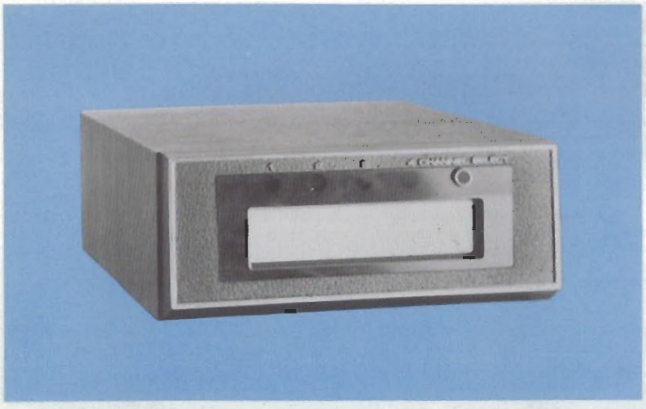

H-325

Home Units



H-430



H-440

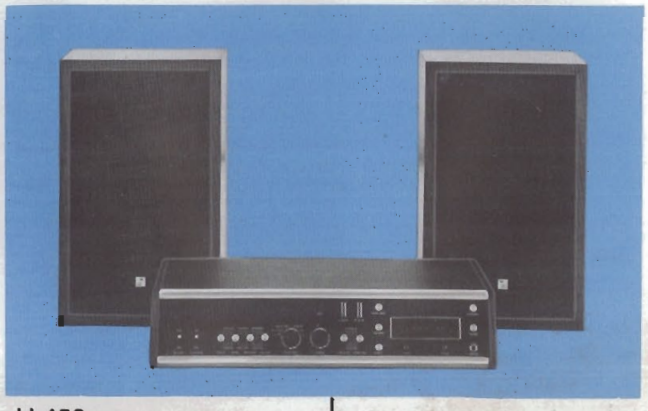

H-450



P-570

Portable Units



P-590

	MODEL NUMBER	PART NUMBER	INSTALLED PRICE
HOME —Player—for use with existing Ste...o		3744 984	
—W/AM-FM Stereo	H-430	3837 185	
—W/AM-FM Stereo & Turntable	H-440	3837 186	
—W/AM-FM Stereo & Record...	H-450	3837 187	
*PORTABLE UNITS (Operate on flashlite b... car battery or 120 V. household current)			
Deluxe—W/Detachable Second Speaker	P-570	3744 260	
...AM-FM Radio—W/Detachable Second Speaker	P-590	3744 261	

*...e Units Including Cigar Lighter Adapter.

All prices and specifications are subject to change without notice.

Automotive
Cassette Tape Players
Universal Speakers

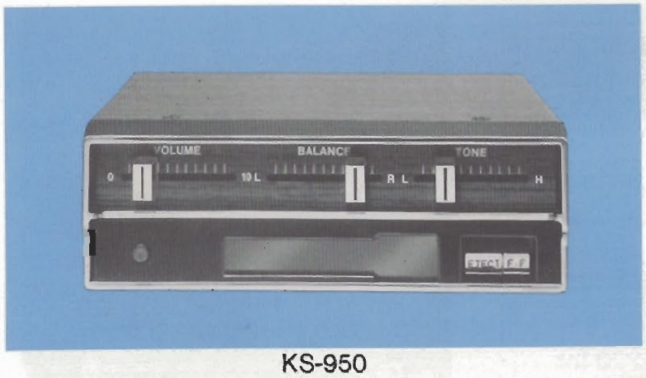

KS-950



A-52



A-152

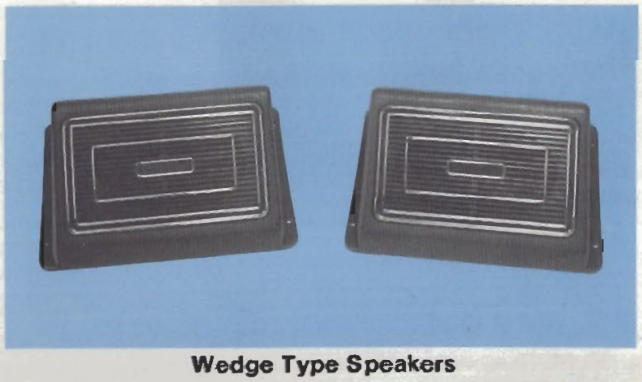

Wedge Type Speakers



Door Mount Speakers

DESCRIPTION	MODEL NUMBER	P... N...BER	INSTALLED PRICE
Cassette Tape Player — With FM Radio	KS-950 A-52	3837 148 3837 183 3837 184	
Demonstration Cartridge			
Speaker Packages 2 Speakers—Wedge Type 2 Speakers—Door or C 4 Speakers—Door or			

Safety



Infant Safety Carrier

INFANT SAFETY CARRIER

- Helps assure a safer ride for baby
- Carrier held in place by car seat belt.
- Special shoulder harness holds infant gently in carrier.
- Permits full freedom for arms and legs.
- Lightweight — permits carrying from car to home without disturbing child.
- For infants up to 20 lbs.

CHILD CAR SEAT

- Seat held in place with seat belts
- Use in front or rear seat
- Use as out-of-car play chair
- Conforms to Federal Motor Vehicle Safety Standards.
- Provides a margin of safety in case of sudden stops.
- Designed for children up to 45" tall and weighting 21 to 50 lbs.



Child Car Seat

ELECTRIC WINDOW LIFT OR TAILGATE SAFETY SWITCH

- Helps prevent children from opening and closing electric windows
- Locks electric windows in any desired position
- Driver controls windows at all times.



Safety Switch



Safety Lock

CHILD GUARD DOOR SAFETY LOCK

- Helps prevent children from opening rear doors while car is in motion.
- Combines two-door security with four-door convenience.
- Easily and quickly unlocked with a car key.

	APPLICATION	PART NUMBER	SUGGESTED LIST PRICE	INSTALLED PRICE
		3744 975	$11.95	
		3744 976	$24.95	
74-6	Ele... Safe...		$ 2.30	

e without notice.

Trim Mouldings

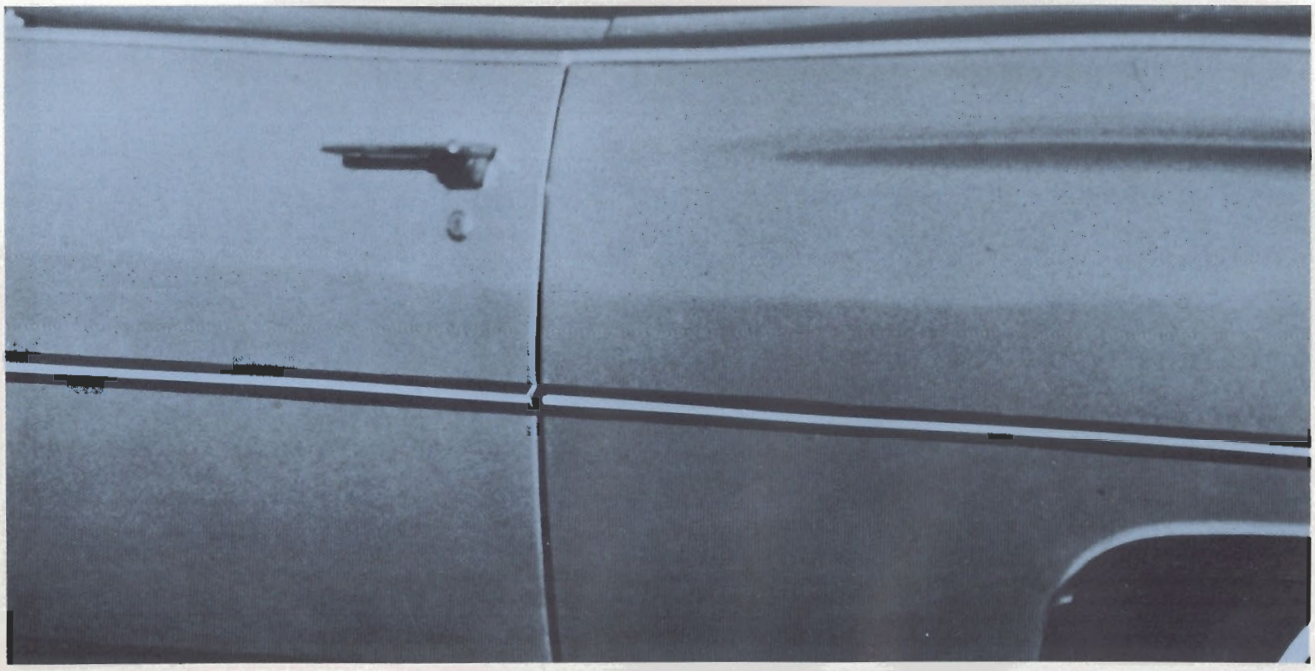

- No holes to drill.
- Plastic mouldings retain their shape with no denting.
- Not affected by heat or cold (after installation).
- Not affected by gasoline, salt, polishes, washings, etc.
- Mouldings contour easily to follow body lines of all makes and models.
- Ample material in kit for both sides of any car.

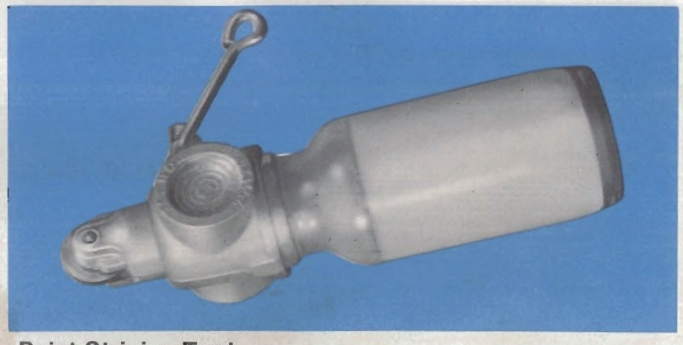

Paint Striping Tool

DESCRIPTION	ART NO.	SUG. LIS	RIPTION	PART NO.	SUG. LIST	INST. PRICE
Door & Panel Trim Moulding --All Models			op			
Black—Chrome Edge			rate			
Black W/Lt. Blue S						
Brown—Chrom						
Black W/Red						
Black W/Whi						
Black W/Lt.						

ject to change without notice.

Power Steering
Power Brakes



Power Steering
- Makes turning, parking maneuvering almost effortless

POWER BRAKES
- Makes every stop easier and emergency stops faster
- Reduced pedal effort
- Adds to driving pleasure and safety

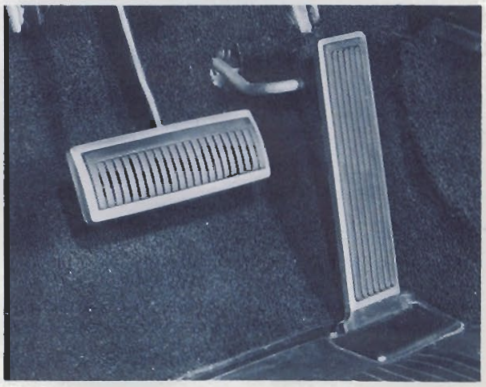

1974 POWER STEERING CONVERSION PACKAGES

Models	Engine	Transmission Manual	Transmission Auto	Axle	Alternator	Air Condition	Pump Pkg.	Chuck Pkg.
Valiant, Dart	6 cyl.	Note 1	All	All	All	All	3837 558	3685 650
	318	Note 1	All	Note 2	Note 3	All	3837 559	3685 650
	360	Note 1	All	Note 2	Note 3	All	3837 561	3685 650
Barracuda, Challenger	318	All	All	All	Note 3	Note 4	3837 560	3685 650
	360	All	All	Note 2	Note 3	Note 5	3837 562	3685 650
Satellite, Coronet, Charger	6 cyl.	Floor Shift	All	All	All	All	3685 643	3780 850
	6 cyl.	Column Shift	—	All	All	All	3685 643	3780 849
	318	Floor Shift	All except A-727	All	Note 3	Note 4	3685 647	3780 850
	318	Column Shift except Police, Taxi	—	All	Note 3	Note 4	3685 647	3780 849
	318	—	A-727	All	Note 3	Note 4	3685 648	3780 850
	318	Column Shift Police, Taxi	—	All	Note 3	Note 4	3685 648	3780 849
	360	Floor Shift	All	Note 2	Note 3	Note 5	3685 [illegible]	37[illegible]
	360	Column Shift	—	Note 2	Note 3	Note 5	368[illegible]	

1. For column shift applications "C" ring on steering column shaft must be removed.
2. With axle ratio of 3.54:1 and above, specify 1-2891241 cooler assembly and 2.75 inches
3. With Leece-Neville alternator, specify 1-2951898 belt.
4. Specify 1-2843221 belt.
5. Specify 1-2951898 belt.

POWER BRAKE PACKA[illegible]S

YEAR	DESCRIPTION AND A[illegible]	A[illegible] A-152	INSTALLED PRIC[illegible]
74-7[illegible]	g —Valia[illegible]		3501 620
74-73			
74-73			3744 979
			3420 879
			3514 400

All prices and s[illegible]ns are subject [illegible]nge without notice.

Strobe Stripes





STROBE STRIPE KITS
Strobe Stripes make it possible to customize any car with a bold, distinctive design theme for side panels, hoods or rear decks.

Each Kit of continuous graduated design stripes is made of tough weather resistant vinyls that are easy to apply with the strip-off technique.

PRE-ALIGNED STRIPES
The "Pre-Aligned stripe look" used by the leading manufacturers is now available for custom, in the field, installations.

The Double-band of contrasting wide and narrow stripes and the triple-band of graduated design stripes come in black. Both designs contain enough to trim both sides of any car.

DESCRIPTION	[illegible]RT [illegible]ER	SUGGESTED LIST PRICE	INSTALLED PRICE
Stro[illegible] 6" [illegible] 3"	NU. [illegible]	67 [illegible]	
S[illegible] 2-[illegible] Dis[illegible] 1-[illegible] nge[illegible]	44 440	$53.12	
	44 441	$63.58	
	3744 472	$63.58	

All prices and specifications [illegible]

Spoiler
Hood Locks

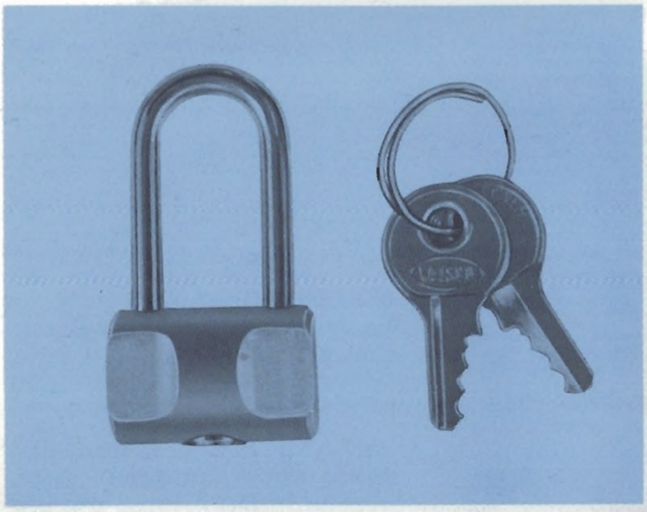

Padlock Pkg.

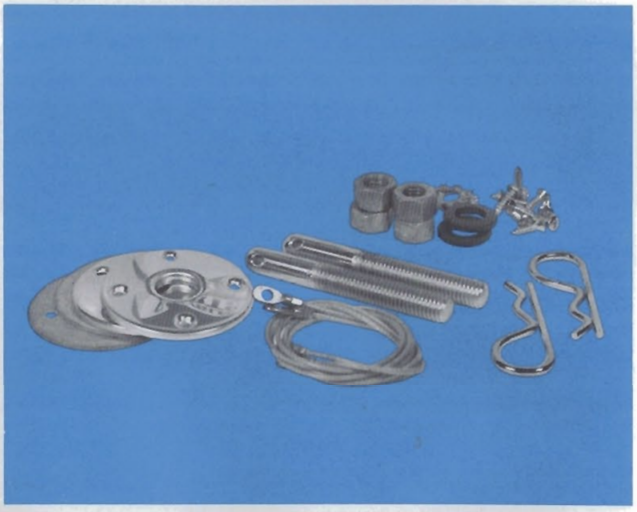

Hood Lock Pkg.

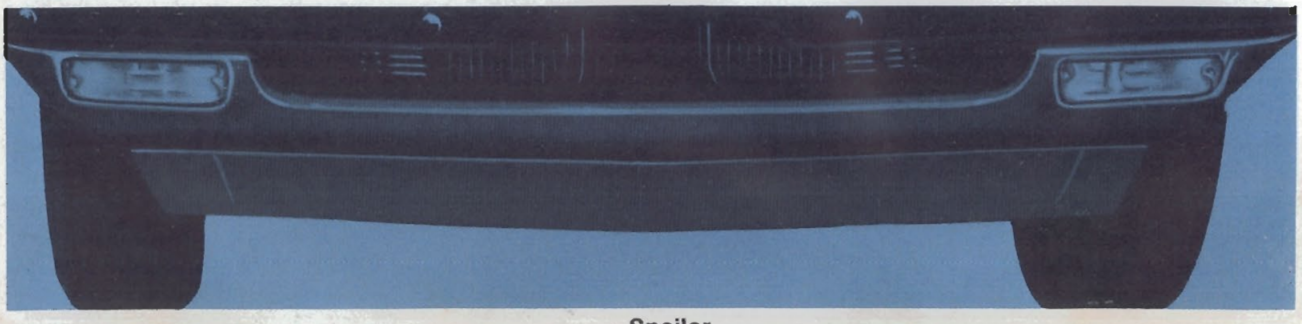

Spoiler



Cable & Pin Pkg.

YEAR	DESCRIPTION & APPLICATION	PART NO.	SUG. LIST
	Hood Padlock Pkg. Use w/Hood Locking Pkg.	3412 543	$ 2.40
	Hood Lock (Racing) Satell[illegible], Rd. Runner, GTX [illegible]unner, [illegible]harger	3685 951	$12.28
	Spoiler—All Mod[illegible] Stainless Steel Black Enam[illegible]	3621 [illegible] 3621 277	[illegible]32 [illegible]4
	Hood Cable[illegible] Consists		
	18" Cables		$ 5.08
	26" Cables		$ 4.75

All prices and specifications subject to change without notice.

Floor Mats
(Universal Type)

VINYL FLOOR MATS

- Carpet protection combined with beautiful styling
- Tough resilient vinyl resists punctures and scuffing.
- Ribbed sections trap moisture and dirt for easy cleaning.
- Wide color selection to harmonize with any interior
- One size door-to-door type, easily trimmed into twin mats to fit console or smaller vehicles.

PATTERNIQUE CAR MATS

- Black vinyl with indoor-outdoor Ozite carpet inserts.
- Color blends make them compatible with any interior
- Special design holds mats firmly in place.

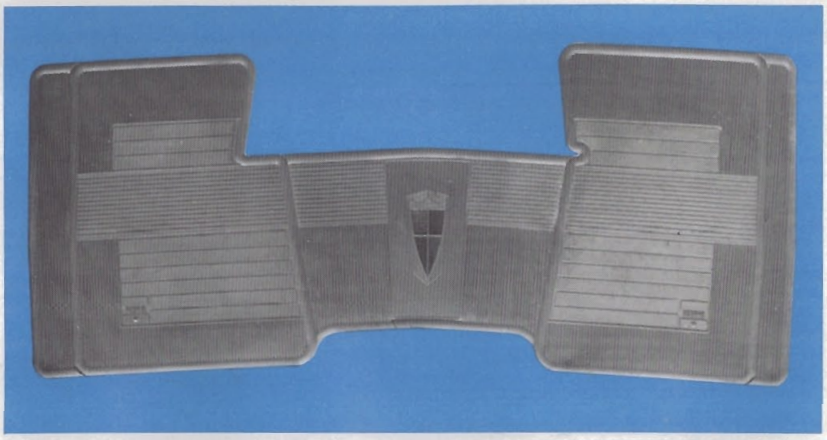

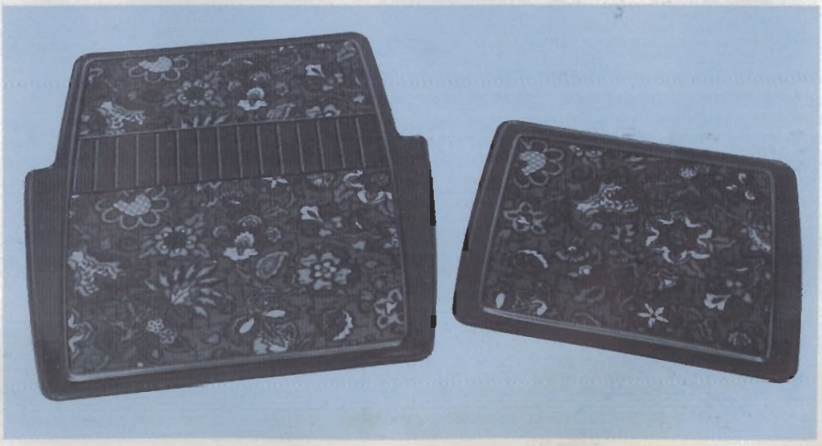

UNIVERSAL VINYL FLOOR MATS

MODELS AND DESCRIPTION	Colors And Part Numbers						SUG. LIST PRICE
	BLACK	CLEAR	BLUE	GREEN	...HMENT (BEIGE)	GOLD	
All Models except Colt							
Front	2932 564	2932 568	2932 565	374	780 728	3780 730	$ 8.81
Rear	2932 570	2932 574	2932 57[illegible]	37[illegible]	...0 729	3780 731	$ 7.21

PA...ERNI...A...

M...S AND D...		RED	GREEN-BLUE	GO... ROWN	SUG. LIST PRICE
...Twins					
Fu...		3549 926	3549 927	3549 928	$14.95
In...		...49 929	3549 930	3549 931	$11.35
Rear T...					
All C...		3549 932	3549 933	3549 934	$ 8.55

All prices and specifications ar... ...ject ... change without notice.

Air Deflector
Rear Window Defogger

STATION WAGON REAR WINDOW AIR DEFLECTOR

- Directs air stream across rear window to help keep it clean.
- Assures better ventilation and prevents dust from entering.
- May be painted to match roof.

REAR WINDOW DEFOGGER

- Removes rear window fog . . . frost.
- Contributes to safer driving in cold and humid weather.
- Helps to keep rear window clear of falling snow.

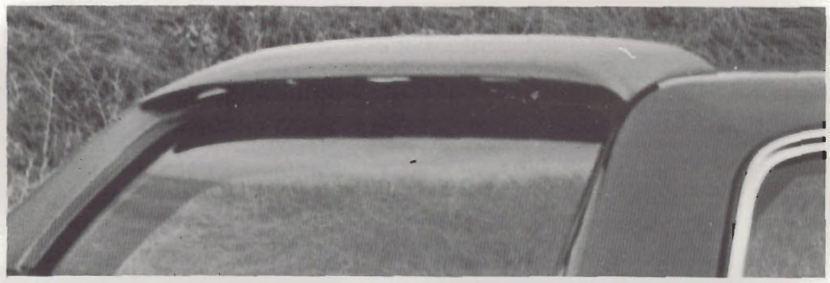

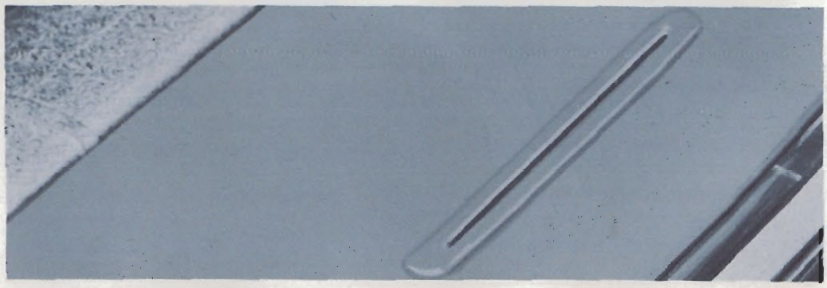

YEAR	DESCRIPTION AND APPLICATION	PART NUMBER	SUGGESTED LIST PRICE	INSTALLED PRICE
	STATION WAGON AIR DEFLECTOR			
74-71	Satellite & Coronet Station Wagons	3579 672		

	REAR WINDOW DEFOGGER	BASIC PACKAGE	ADAPTER PACKAGE	INSTALLED PRICE
	Valiant			
74	2 Door H.T. & 4 Door	3502 099	3420 943	
74-70	Fastback w/o Security Panel, 73-70 4 Door	3502 097	3420 943	
	Dart			
74-71	Fastback w/o Security Panel	3502 097	3420 943	
74-71	2 Door H.T. and 4 Door	3502 099	3420 943	
	Barracuda & Challenger			
74	All (1 & 2)	3502 098	3837 168	
	Satellite, Coronet & Charger			
74-71	Exc. Sta. Wgn.	3502 093	3579 234	
	Fury & Monaco			
74	2 Door H.T. (Note 1)	3502 820	169	
74	4 Door Sedan and 4 Door H.T. (Note 1)	3502 821	7 169	
	Chrysler & Imperial			
74	4 Door Se... (Note 1)	3502 820	3837 170	
	2 Door H.T. a... Door H.T. (Note 1)	3502 821		

REAR WINDOW DEFOG... ELECTRIC GRID REPAIR P...

...-73	All Models with Electric Grid	3744 97...	

(1) F... ...ls with dual rear speakers, also use Adapter pkg. 3441 426.
(2) For Ha...e Models, also use Plate Assy. 3488 384.

All prices and specifica... ...change without notice.

Splash Guards
Fire Extinguisher
Fuel Pressure Regulator

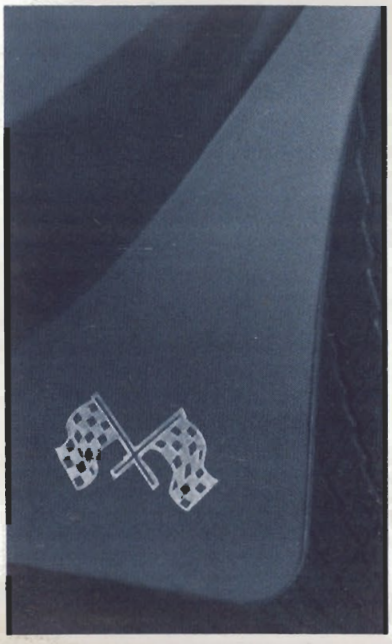

SPLASH GUARDS

- Protects against dirt, salt, and stone damage to paint.
- Heavy, vinyl construction with crossed racing flags.
- Easily installed.
- White guards may be painted to match car color.



FIRE EXTINGUISHER

Odorless dry chemical smothers electrical, oil, gas fires. For auto, home, boat, workshop, garage and trailer.

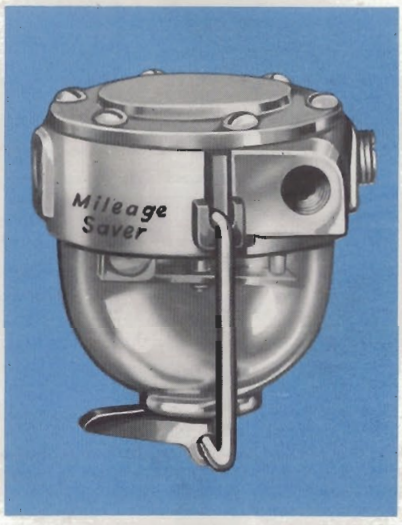

FUEL PRESSURE REGULATOR AND FUEL FILTER

A regulator that controls the high and fluctuating pressure of fuel pumps. Helps eliminate hard starting, rough idle and stalling caused by uneven fuel pressure. Also helps prevent flooding and vapor lock. Unit includes fuel filter.

YEAR	DESCRIPTION	PART NUMBER	SUGGESTED LIST PRICE	INSTALLED PRICE

Load Levelers
Ride Levelers



"LOAD LEVELER" STABILIZING UNIT

- Prevents rear end sag and whip.
- Combines a variable rate spring with a heavy duty shock absorber.
- Provides increased road clearance when car is heavily loaded.
- Reduces tail drag . . . improves stability on curves.
- Helps keep headlights on the road.



"RIDE LEVELER"

- Air valve adjustability for all loading conditions.
- Maintains design height by increasing air pressure for heavy loads.
- Extra capacity when required from any air pump.
- Helps to maintain headlight beam for safer night travel.

YEAR	DESCRIPTION AND APPLICATION	PART NUMBER	SUGG. LIST PRICE	INSTALLED PRICE
	"LOAD LEVELER" STABILIZING UNIT			
74-60 74-63	Valiant (Including 69-64 Barracuda) Dart	2421 075	$26.70	
74 [illegible] [illegible] 7[illegible]	Polara[illegible] Monaco—All Fury [illegible]tion Wagon Chrysle[illegible] [illegible]ation W[illegible]on	2462 179	$26.70	
	[illegible]—[illegible]. Station [illegible] [illegible]—All [illegible]—E[illegible]. Co[illegible] [illegible]ation Wago[illegible]	3[illegible]00 962	$26.70	
	Coronet & C[illegible] [illegible]	[illegible]038	$26.70	

Speed Control



- Set the control for any speed above 30 MPH and this automatic speed control device keeps car speed constant without using the accelerator pedal.
- Holds speed steady at all times —including up and down hills.
- Instantly disengages when brake pedal is depressed or lever is moved to "off" position
- Helps reduce driving fatigue.

YEAR	APPLICATION	ENGINE	STEERING TYPE	CO... PACK.	LEV... PAC...
74	Fury, Monaco. Chrysler,	360, 400, & 440	...ard	324 ...24	
All	Splash Guard Pkg. White				
All	Extinguisher Univ... Mount. B...				
All					

All prices

Door Edge Protectors

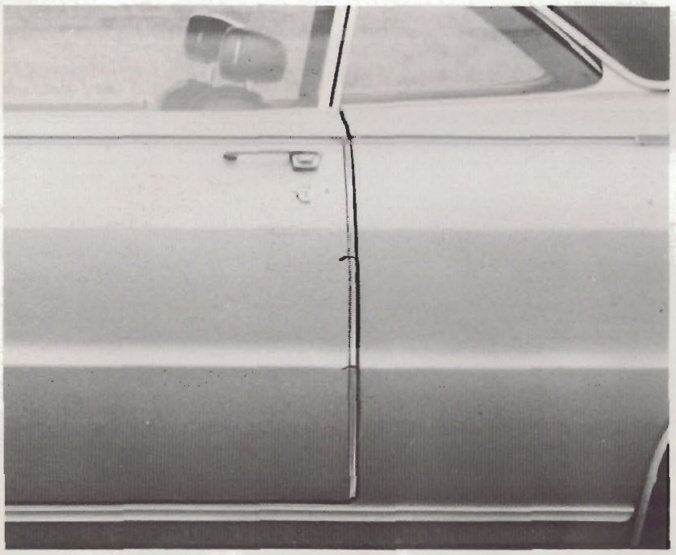

DOOR EDGE PROTECTORS

- Guard against chipped paint on door edges.
- Reduces costly touch-up operations.
- Rust-resistant stainless steel or flexible vinyl type.

YEAR	DESCRIPTION AND APPLICATION	PART NUMBER	SUGGESTED LIST PRICE	INSTALLED PRICE
	Door Edge Protectors-Stainless Steel			
74-67	Valiant & Dart—2 Door	3444 455	$4.22	
74-67	Valiant & Dart—4 Door	3444 458	7.26	
74-70	Barracuda	3446 424	4.22	
74-73	Satellite—2 Door	3680 785	4.22	
74-71	Satellite—4 Door & Sta. Wgn.	3505 029	7.26	
74-71	Coronet—4 Door	3504 816	7.26	
74-70	Challenger—2 Door	3504 469	4.22	
74-73	Charger—2 Door	3680 792	4.22	
74	Fury—2 Door	3810 013	4.22	
74	Fury—4 Door (w/o Overlay)	3810 048	7.26	
74	Fury—Sta. Wgn. (w/Overlay)	3810 049	7.26	
74	Monaco Door (w/o Overlay)	3810 051	7.26	
74	Mona Wgn. (w/Overlay)	3810 052	7.26	
74	Mon Door	3810 050	4.22	
73-72	Mon Wgn. (w/Overlay)	3680 263	7.26	
74	Chr Sta. Wgn.	3810 054	7.26	
74	Cr Door	3810 053	4.22	
74	erlay)	3810 056	7.26	
		3810 055	7.26	
		145	4.22	
		146	7.26	

(2) for 4 Doors
Vinyl Chrom.

notice.

Deck Lid Lock
Locking Cap
Litter Basket

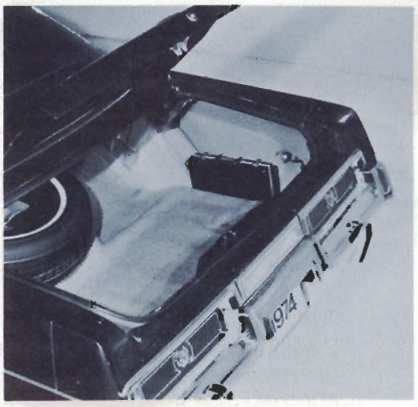

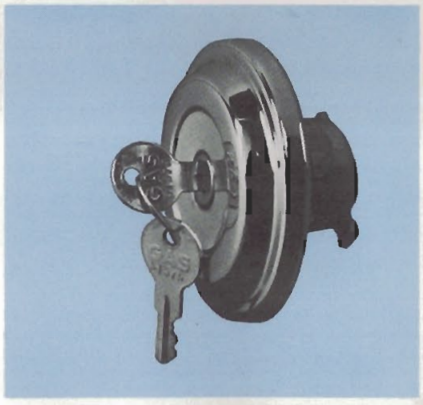



DECK LID LOCK—

- Permits opening deck lid from inside car.
- Switch mounts on instrument panel or hidden in glove compartment

FUEL TANK LOCKING CAP

- Prevents theft or malicious contamination of fuel.
- Sparkling chrome finish.

LITTER BASKET

- Helps keep car interior neat.
- Discourages highway littering.
- Weighted tip-resistant base.
- Ideal as storage space for small travel articles.

YEAR	DESCRIPTION AND APPLICATION	PART NUMBER	SUGGESTED LIST PRICE	INSTALLED PRICE
74-67	**ELECTRIC DECK LID LOCK PKG.** All U.S. produced Pass. Cars except Sta. Wgns.	3744 597	$18.70	
	FUEL TANK LOCKING CAPS Valiant and Dart			
74-72	All	3583 547	518	
71	All—Late prod. models		380	
73-[illegible]	[illegible]acuda—All	[illegible] 973		
74-[illegible]	[illegible] Coronet and Chars	3579 660	$2.67	
	Fire [illegible]	3419 439		
	[illegible]	[illegible]0 633	$8.48	

Tow Bar Kits
Heavy Duty—Class III

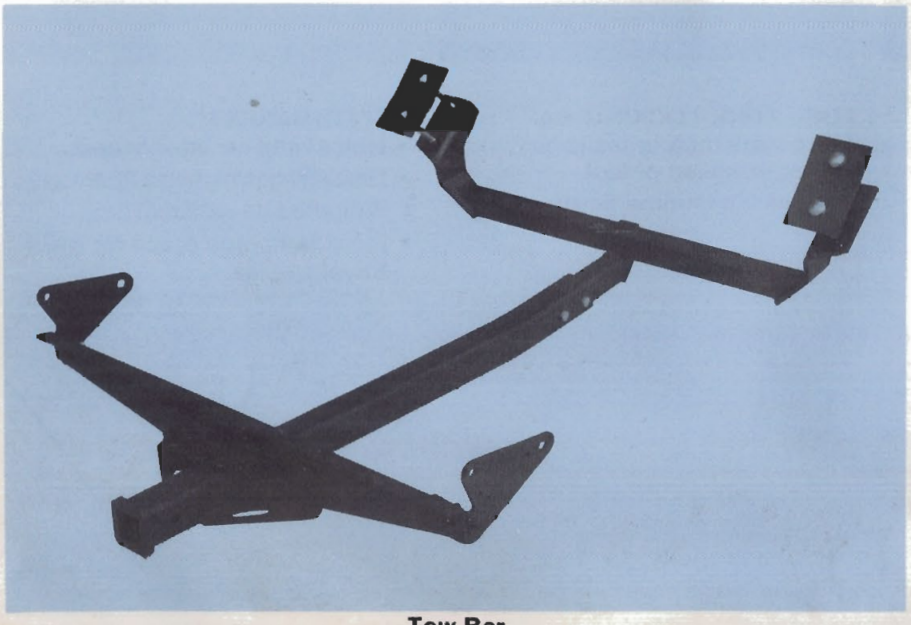

Tow Bar

- Designed to maximize weight distribution and improve sway control.
- Maximum road clearance.
- Heavy-duty construction

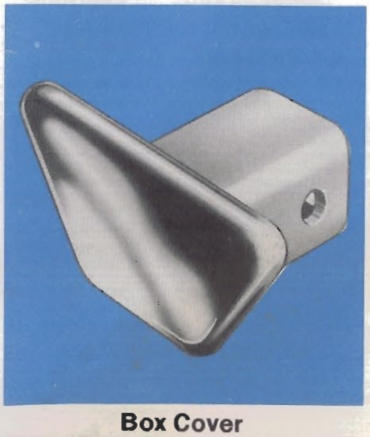

Box Cover

YEAR	DESCRIPTION AND APPLICATION	PART NUMBER	SUGGESTED LIST PRICE	INSTALLED PRICE
74	**REESE TOW BA** [illegible] not inc [illegible]			
	[illegible]	7 661 [illegible]		
	Colt—2 Door—'74 Cricket—2 Door [illegible]	[illegible]		
	Colt—4 Door—'74 Cricket—4 [illegible]	[illegible]		
	Door Edge Protectors—Vinyl			
	All—2 Door Models—Specify Two			

Trailer Hitches
Light Duty—Class I

- Ideal for towing camping trailers, small boat or utility trailers.
- For maximum trailer weight of 2000 lbs. and tongue weight of 200 lbs.

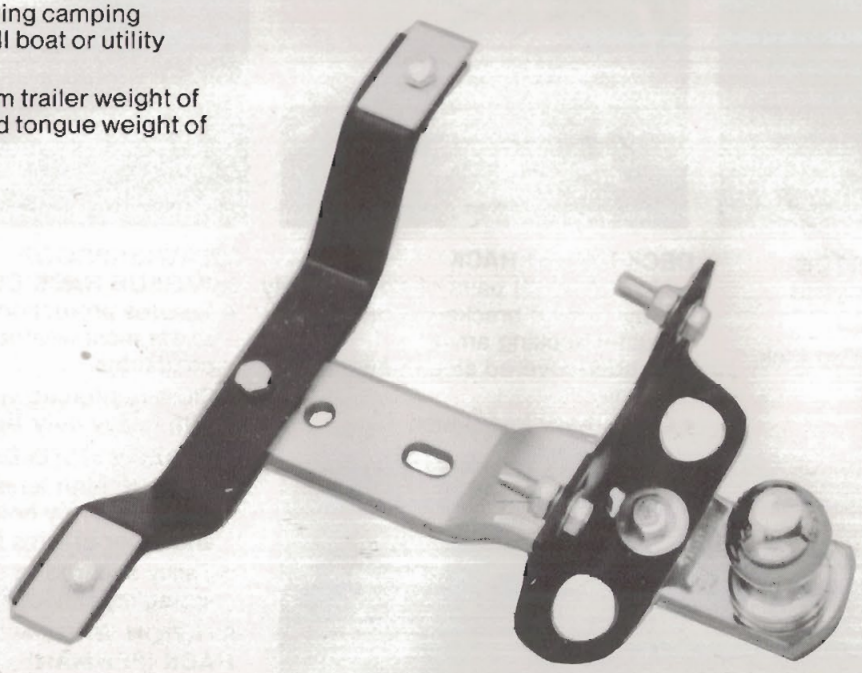

YEAR	DESCRIPTION AND APPLICATION	PART NUMBER	SUGGESTED LIST PRICE	INSTALLED PRICE
	TRAILER HITCHES (Include 1-7/8" Dia. Balls)			
	For maximum trailer weight of 2000 lbs. and tongue weight of 200 lbs.			
74	Valiant & Dart—exc. Fastback			
74	Valiant & Dart—Fastback			
74	Satellite—2 Door &			
74	Satellite—4 Door			
74	[illegible] & Coron			
74	—A			
74	Fury, [illegible]	3583 561	~~6.08~~ 5.95	
74-73	Chrysler, [illegible] All			
72				
71				
All		2275 970		

All prices and specifications are subject to change without notice.

Racks and Covers

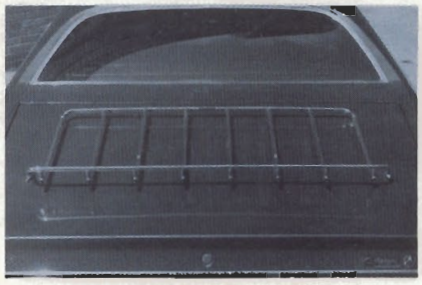

DECK LID LUGGAGE RACK
- Enhances Sport Car styling.
- Sparkling Chrome finish.
- Same as factory installed rack.

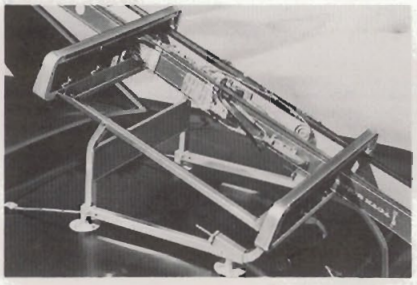

DECK LID SKI RACK
- Holds four (4) pairs of skis securely.
- Vinyl coated brackets protect skis.
- Built-in locking arms.
- Rubber-covered steel mounting straps.
- Quick, easy installation.

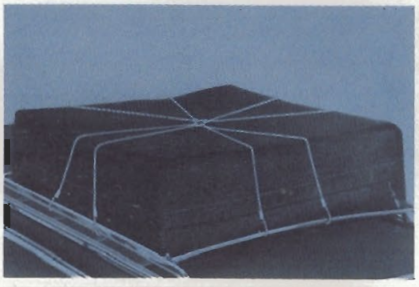

WEATHERPROOF LUGGAGE RACK COVER
- Assures protection for contents under most weather and driving conditions.
- Cloth reinforced vinyl cover with heavy duty zipper.

LUGGAGE HOLD-DOWN
- Eight (8) high tensile rubber cords securely hold luggage and other articles in rack.
- Easily secured to carrier by spring steel hooks.

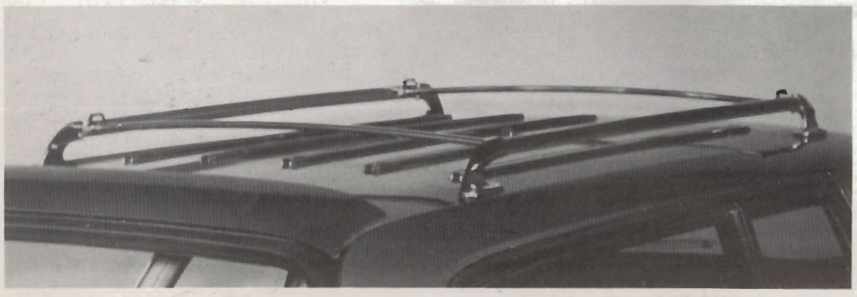

STATION WAGON LUGGAGE RACK (PERMANENT TYPE)
- Functional beauty.
- Custom styling.
- Ideal for vacation and camping trips.

YEAR	DESCRIPTION AND APPLICATION	PART NUMBER	SUGGESTED LIST PRICE	INSTALLED PRICE
74-70 74-73	**Deck Lid Luggage Rack** Barracuda & Challenger— Satellite, Coronet & Charger—2 Doors 43" x 17-1/2"	3419 498	$45.65	
All	**Deck Lid Ski Rack** All except Station Wagons	2809 970	34.97	
74-71	ther proof l ver For 3767 own)	3419 323	41.49	
All	Luggage H rd) All Mod	634	7.79	
74-7 74 74	Station Wagon Lu Rack W/Adjustable Rails Satellite & Coronet Station Wagon 50" x 35" I.D. Colt Fury, Monaco & Chrysler Sta. Wgns. 40"L x 43-1/2"W 50" x 41" I.D.		5 .37	

Tachometers
Clocks

TACHOMETERS

- Adds sports-car flair and style.
- Helps improve driving efficiency
- Precision-made for unsurpassed accuracy—factory calibrated.
- Precision D'Arsonval meters
- Complete self-contained units.





CLOCKS

- Time at a glance, night or day.
- Indirect lighting aids easy reading of dial.
- Designed to complement instrument panel styling.
- Automatic self regulator.

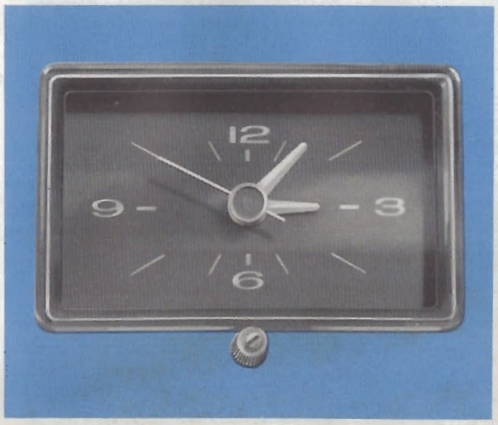



YEAR	DESCRIPTION AND APPLICATION	PART NUMBER	SUGGESTED LIST PRICE	INSTALLED PRICE
All	**Tachometer–Full Sweep** (Up to 10,000 RPM) All 6 & 8 Cylinder Models with 12 Volt Ignition (Including Transistorized)	3514 430	$47.79	
All	**Tachometer Hood Mounted** All 6 & 8 Cylinder Models with 12 Volt Ignition (Including Transistorized)	3420		
	Clocks (Standard)			
74-70	Barracuda, Challenger (S	2984		
74-71	Satellite, Coronet (Std. Pa	2985 416		
74	Monaco, Fury	3592 701		
74	Newport	3592 702		
	Digital Clock			
74	Fury, Gran Sedan, Spl. Suburban	3592 616		
	Monaco New Yorker, To	3592 698		

License Frames
Ventilated Cushions
Bumper Jack





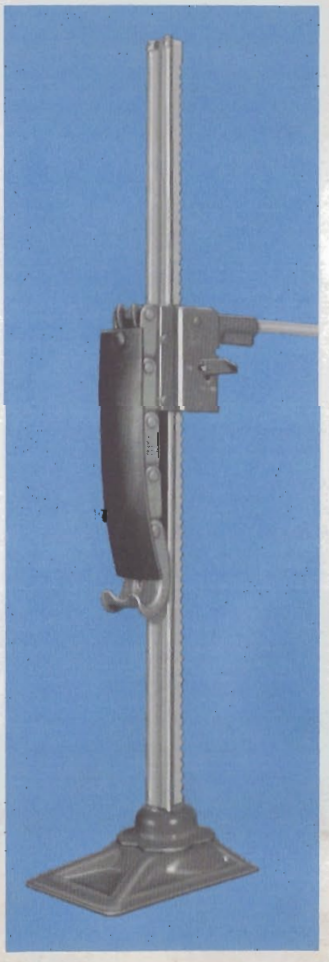

LICENSE PLATE FRAME
- Adds customized appearance to license plate.
- Lustrous stainless steel will not rust, chip or peel.

VENTILATED SEAT CUSHION
- Racing stripe design especially for bucket seats and jumbo type for others.
- Assures cool driving comfort on hot humid days.
- Colorful open mesh fiber cover.

UNIVERSAL BUMPER JACK
- Vinyl covered hook protects chrome bumper.
- Conforms to most bumper contours.
- Heavy duty constructed-rated as one ton unit.
- Fits same storage locations as original unit (in most vehicles).

DESCRIPTION AND APPLICATION	PART NUMBER	SUGGESTED LIST PRICE	INSTALLED PRICE
License Plate Frame All Models	2768 643	$ 4.01	
Ventilated Seat Cushion Racing Stripe—(For Bucket Seats) Blue W/Yellow & White Stripe	[illegible]		
Bumper Jack—Universal All except '74-'73 models, 69-67 Barracuda & 70-68 Charger Models.			

Mirrors



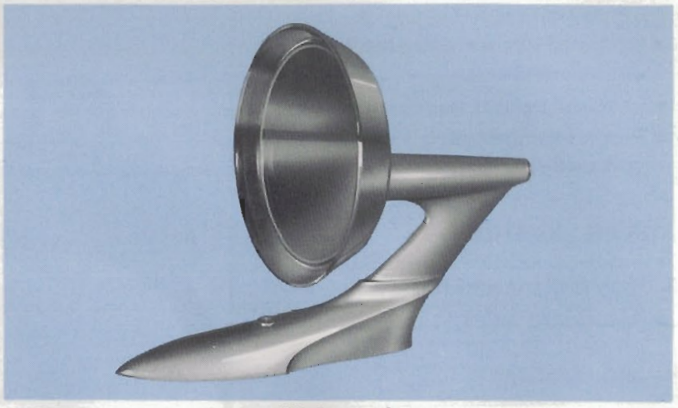

Universal

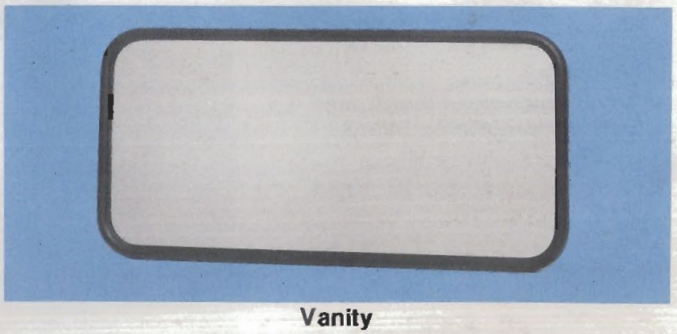

Vanity

TRAILER TOWING MIRROR

- Provides full, clear view of traffic behind and side of trailer.
- An essential aid to safer trailer towing.
- Installs in minutes—no drilling required.
- Fully adjustable—fits all cars and trucks—right or left side.

UNIVERSAL OUTSIDE REAR VIEW MIRROR

- Smartly designed mirror for door or fender mounting.
- Full rear vision.
- Clear polished glass.

VANITY MIRROR

- Designed for beauty and safety
- Glass bonded to soft vinyl frame.
- Adheres firmly to visor.
- Individually packaged in merchandising carton.

YEAR	DESCRIPTION AND APPLICATION	PART NUMBER	SUGGESTED LIST PRICE	INSTALLED CE
All	Universal Trailer Towing Mirr -(Chrome)	2933 961	$12.66	
All	Outside Rear Vi. Manual- Universal Type	3579 571	6.84*	
All	V A	3419 105	2.+	

s and specific

Engine Heater
Cigarette Lighter
Mattress

ENGINE BLOCK HEATER
- Helps to assure easy starting in cold weather.
- Quicker heater warm-up.
- Plugs into standard 110-115 volt outlet.

CIGAR LIGHTER
- Light-up safely—eliminate match glare and hazard.
- Ash-guard safety sleeve helps prevent damage to clothing and upholstery.

STATION WAGON MATTRESS
- Safe rest or play area for children while camping or traveling.
- 3-1/2" thick polyether foam with cloth-reinforced vinyl cover.
- Converts from 56"x45" to 84" x 45".
- Can be used with second seat up or down.

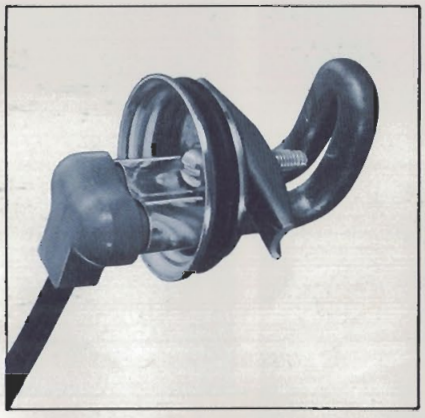



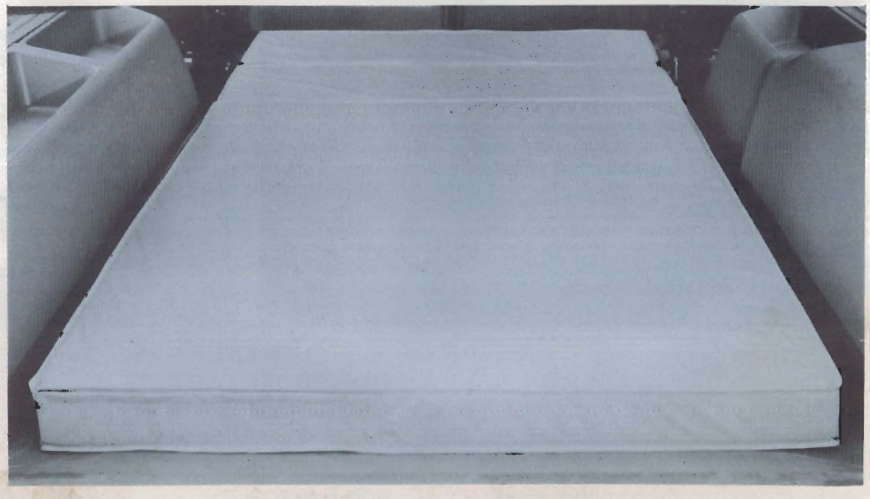

Y	SCRIPTI	ND APPLICATION	PART NUMBER	SUGGESTED LIST PRICE	INSTALLED PRICE
	ngine H Al'	eater	2932 74	$ 8.48	
		net	2947 219	22	
		ttress—Universal gons exc. Colt & Cricket	3410 3	06	

ecifications are subject to change without notice.

Convenience Lights



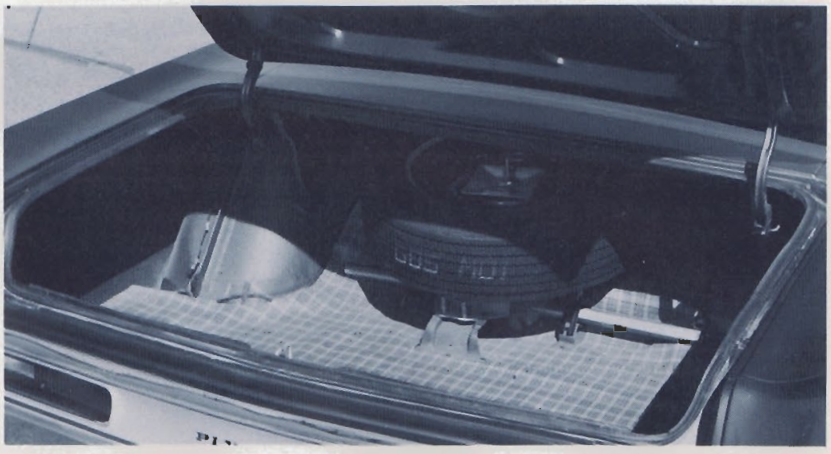

GLOVE COMPARTMENT LIGHT
- Brightly illuminates interior of compartment when door is opened.
- Serves as a convenient map light.

TRUNK COMPARTMENT LIGHT
- Invaluable at night for loading and unloading trunk.
- Automatically lights when lid is opened.

MAP AND COURTESY LIGHT
- Automatically illuminates front compartment when door is open.
- Permits easy, safe entry and exit at night.
- Manual switch also controls light for checking maps.

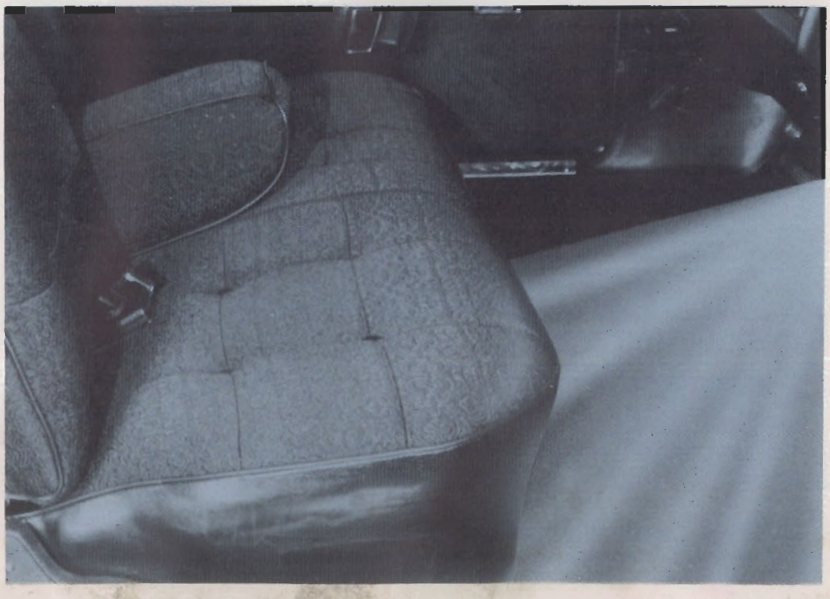

YEAR	DESCRIPTION AND APPLICATION	PART NUMBER	SUGGESTED LIST PRICE	INSTALLED PRICE
	Map & Courtesy Lamp Package			
74-71	Satellite, Coronet & Charger	3488 694		
74	Plymouth, Dodge & Chrysler	3488 988		
	Trunk Compartment Light Package*			
74-72	Valiant, Dart	3488 787	$3.10	
	Glove Compartment Light			
74-68	Valiant, Barracuda, Satellite, Dart, Coronet & Challenger	2864 325	2.8	

*Note: For Models not listed, service parts as listed in parts catalog.

*Price Symbol "A" Part.

Car Appearance and Maintenance Materials Index

DESCRIPTION	PAGE
Alternator Cement, 'Stic'	M-16
Anti-Freeze	M-5
Auto Glass Adhesive	M-16
Automatic Transmission Fluid—Regular	M-8
Automatic Transmission Fluid—Hi-Performance	M-12
Automatic Transmission Sealer	M-8
Auto Polish	M-13
Auto Wax Paste	M-15
Batteries	M-1,2,3
Battery Electrolyte	M-4
Battery Cad-Tip Analyzer	M-4
Belt Ease	M-18
Body Solder & Creme Hardener	M-24
Brake Fluid	M-8
Carpeting—Universal	M-19,20
Car Wash Liquid & Powder	M-13
Chrome Cleaner & Polish	M-13
Combustion Chamber Conditioner	M-6
Cooling System Materials	M-7
Creme Hardener, Body Solder	M-24
Distributor Cam Lubricant	M-10
"Door Ease" Lubricant	M-10
Engine Additives	M-6,7
Engine Cleaner	M-22
Engine Degreaser	M-14
Engine Oil	M-11
Engine Oil Supplement	M-6

DESCRIPTION	PAGE
Engine Paint	M-22
Fabric Cleaner	M-15
"Freon" Refrigerant	M-17
Frost & Ice Remover	M-5
Fuel Detergent	M-6
Gear Lubricant-Hypoid	M-11
Glass Adhesive & Sealer	M-16
Glass Cleaner	M-14
Gum & Sludge Remover	M-7
Hi-Performance Lubricants	M-12
"Kar Kleen"	M-14
Led Plate Sealant	M-17
Leather & Vinyl Cleaner	M-14
Leather & Vinyl Dye	M-22
"Lock Ease" Lubricant	M-10
Lubricants	M-9,10
"Lubriplate" Lubricant	M-10
Manifold Heat Control Solvent	M-7
Motor Oil	M-11
Motor Oil—Hi-Performance	M-12
Multi-Mileage Lubricant	M-9
Multi-Purpose "Vinyl" Cleaner	M-21
Multi-Purpose Dye & Dressing	M-23
Nylon Dye	M-23
"One Step" Polish	M-22
Overspray Remover	M-23
Paint, Splatter	M-24

Car Appearance and Maintenance Materials Index

DESCRIPTION	PAGE
Paint, Touch-Up	M-25-28
Parts Immersion Cleaner	M-18
"Perfect Seal" Sealing Compound	M-17
Polishing Cloth	M-14
Power Steering Fluid	M-8
Rear Axle Lubricant—Hi-Performance	M-12
Refrigerant, "Freon" 12	M-17
"Reviv-A-Color"	M-23
"Ruglyde" Rubber Lubricant	M-9
Rust Penetrant	M-10
Rust Remover	M-18
Rust Resistor	M-7
Sealer, Led Plate	M-17
Sealer, Starter Brush Plate	M-16
Sealer, Transmission	M-8
Sealer, Auto Glass	M-16
"Sil-Glyde" Lubricant	M-9
Silicone Rubber Sealer	M-17
Speedometer Cable Lubricant	M-9
Splatter Paint	M-24
Spot Remover	M-15
Stop Leak Nuggets	M-7
Super Oil Saver	M-6
"Super Glaze" Polish	M-15
Sure-Grip Lubricant	M-11
Tar & Road Oil Remover	M-15
Touch-Up Paint	M-25-28
Transmission Fluid	M-8
Transmission Lubricant—Hi-Performance	M-12
Transmission Sealer	M-8
Upholstery Cleaner	M-21
Upholstery Tint "Dynu"	M-21
Universal Carpeting	M-19,20
Vinyl Cleaner	M-21
Vinyl Moulding Adhesive	M-16
Vinyl Top Cleaner & Dressing	M-14
Wash & Wax Liquid	M-13
Water Pump Lubricant	M-7
Wax, Silicone Auto	M-15
Wax-Treated Polishing Cloth	M-14
Windshield Sealer	M-16
Windshield Washer Solvent	M-5

The Prices listed herein are supplied merely as trade information. Distributors, Wholesalers, Dealers or other persons handling the products listed herein are not required or expected to follow all or any such prices, it being expressly understood that they are absolutely unrestricted in such respects. The prices of passenger car parts and accessories listed herein do not include any provisions for federal excise tax. All prices and specifications are subject to change without notice.

Batteries







SUREPOWER
Economical all-around service. In the most popular price range, ideal for dependable starting power and long life.

EVERSTART
Used as original factory installed equipment, this battery meets the demands of the greatest number of drivers. Everstart Batteries provide top performance - gives more value per dollar.

SUPERCHARGER
The Supercharger is specifically engineered for super performance to provide all the extra power needed to operate extra electrical accessories and still top starting efficiency. The Supercharger is designed with a high impact polypropylene container.

Mopar batteries are designed and manufactured to rigid quality standards to provide maximum cranking power and long service life. They are available in most popular sizes for both six and twelve volt applications; see chart on following page for complete specifications.

"Formula 57" (U.S. patent No. 3,198,665) sharply reduces rate of self-discharge and provides protection against the damaging effects of oxidation in the dry-charge state and from sulfation after the electrolyte has been added.

High impact rubber and polypropylene containers — heavily reinforced at points of stress to withstand the extremes of temperature.

Rubber, glass and plastic Fiber separators.

Improved super fine material—for faster starting capability.

High impact one-piece cover on the Supercharger and Everstart lines and all 12 volt Surepower batteries. No more sealing compound problems. Self-discharge across exposed top cell connectors is eliminated.

All prices and specifications are subject to change without notice.

Specifications
Mopar Batteries

AUTOMOTIVE AND LIGHT COMMERCIAL

BCI Group Size & Max Dimensions (L-W-H)	Catalog Number	Battery Part Number	Battery Line	Total Number of Plates	*Reserve Capacity Minutes	**Cranking Performance Amps.	Ref. 20 HR Rating A.H.	Approx. Weight (Dry) lbs.	Qts. of Electrolyte Req'd	Mos. of Pro-Rata Service Adjustment When Used In		
										Passenger Cars & Trucks Thru One Ton (Mos.)	Farm & Indus. Tractors with Generators (Mos.)	Taxicabs, all Highway Vehicles Over One Ton and All Other Applications @ (Mos.)
12 VOLT												
22F 9-1/2 x 6-7/8 x 8-1/2	SC-22F A-22F	3837196 2098401	Supercharger Everstart	66 54	90 60	360 280	62 46	25 26	4.9 4.2	60 36	36 16	12 @@
24 10-1/4 x 6-3/4 x 9-1/8	SC-24 A-24-B A-24-A B-24	3837197 2444611 2444605 2098798	Supercharger Everstart Everstart Surepower	78 66 54 42	120 86 68 45	450 360 305 220	84 59 48 40	32 31 28 25	5.9 5.1 5.5 5.6	60 36 36 24	36 24 24 12	12 12 12 @@
24F 10-3/4 x 6-13/16 x 8-7/8	SC-24F A-24F B-24F	3837198 2444503 2642856	Supercharger Everstart Surepower	78 54 42	120 80 45	450 305 220	84 60 40	32 30 24	5.9 5.2 5.4	60 36 24	36 24 12	12 12 @
27 12 x 6-3/4 x 8-3/4	SC-27 A-27	3837199 2444607	Supercharger Everstart	90 78	167 102	515 420	95 71	38 36	7.0 5.9	60 36	36 24	12 12
27F 12-1/2 x 6-13/16 x 9-5/16	SC-27F A-27F	3837200 2444505	Supercharger Everstart	90 66	167 107	515 360	95 74	38 34	7.0 6.1	60 36	36 24	12 12
29NF 13 x 5-1/2 x 9	A-29NF	2098044	Everstart	66	80	300	56	30	5.6	36	24	12
42 9-9/16 x 6-27/32 x 7	A-42	2875994	Everstart	66	59	260	45	24	2.5	36	--	--
53 13-1/8 x 4-7/8 x 8-7/8	A-53	2098403	Everstart	54	60	280	46	27	4.3	36	16	@
60 13 x 6-1/4 x 8-7/8	A-60	2098050	Everstart	54	80	305	60	30	6.6	36	24	12
72 9-1/16 x 6-15/16 x 8-1/4	A-72	3620814	Everstart	54	69	280	53	23	4.2	36	24	12
74 10-1/4 x 6-15/16 x 8-13/16	A-74	3620815	Everstart	54	80	305	60	28	4.3	36	24	12
77 12-1/16 x 6-15/16 x 8-13/16	A-77	3620816	Everstart	66	107	360	74	32	6.2	36	24	12
6 VOLT												
1 8-7/8 x 6-7/8 x 8-3/4	A-1 B-1	2098013 2098808	Everstart Surepower	45 39	134 91	440 330	93 70	21 19	4.5 4.9	36 24	24 12	12 @
2 10-1/8 x 6-7/8 x 8-3/4	A-2	2098015	Everstart	45	134	430	93	23	5.4	36	24	12
19L 8-1/2 x 6-11/16 x 7-7/16	A-19L	3780335	Everstart	39	110	385	80	19	2.8	36	24	12

BCI - Battery Council International

@ Batteries (Except Golf Car) are warranted only for 90 days when used in electrically propelled vehicles.

@@ In these applications only the 90 day warranty will apply against defects in material and workmanship.

All prices and specifications are subject to change without notice.

Specifications
Mopar Batteries

COMMERCIAL AND FLEET HEAVY DUTY FOR TAXICABS, TRUCKS, BUS AND DIESEL

BCI Group Size & Max Dimensions (L-W-H)	Catalog Number	Battery Part Number	Battery Line	Total Number of Plates	*Reserve Capacity Minutes	**Cranking Performance Amps	Ref. 20 HR Rating A.H.	Approx. Weight (Dry) lbs.	Qts. of Electrolyte Req'd	Mos. of Pro-Rata Service Adjustment When Used In		
										All Highway Vehicles Over One Ton (Mos.)	Farm & Indust. Tractors With Generators (Mos.)	All Other Applications (Mos.)
12 VOLT												
3EE 19-5/16 x 4-5/16 x 8-3/4	F-3EE	3621834	Comm.	66	109	350	77	37	5.2	24	16	12
3ET 19-5/16 x 4-3/8 x 9-3/16	F-3ET	3621836	Comm.	78	147	440	95	43	7	24	16	12
4D 20-1/2 x 8-3/4 x 9-3/8	F-4D	1818947	Comm.	138	301	775	180	97	13.4	24	16	12
8D 20-1/2 x 11 x 9-5/8	F-8D	1818949	Comm.	174	393	975	225	122	15.6	24	16	12
24 10-1/4 x 6-3/4 x 9-1/8	F-24	2444613	Comm.	66	114	385	70	34	4.8	12	32	48 Passenger Cars 12 Taxicabs
30H 13-1/2 x 6-7/8 x 9-1/4	F-30H	2098146	Comm.	78	147	385	95	43	6.8	12	32	48 Passenger Cars 12 Taxicabs
6 VOLT												
3EH 19-1/4 x 4-5/16 x 9-3/4	F-3EH	3621835	Comm.	69	220	680	210	47	6	24	16	48 Passenger Cars 12 Taxicabs
1 8-7/8 x 6-7/8 x 8-3/4	A1-1	2098001	Comm.	45	153	410	105	24	4.7	18	32	48 Passenger Cars 12 Taxicabs
2 10-1/8 x 6-7/8 x 8-3/4	A1-2	2098003	Comm.	57	216	505	135	28	5.0	18	32	48 Passenger Cars 12 Taxicabs
3 11-3/4 x 7-1/8 x 9-3/8	F-3	1818942	Comm.	57	239	540	145	34	6.3	24	16	12
4 12-7/8 x 7-1/8 x 9-3/8	F-4	1818943	Comm.	69	272	620	160	37	7.1	24	16	12
5D 13-3/4 x 7-1/8 x 9-1/4	F-5D	1818944	Comm.	75	330	830	190	50	6.7	24	16	12
7D 16-1/8 x 7-1/8 x 9-3/8	F-7D	1818945	Comm.	87	393	965	225	63	8.3	24	16	12
MARINE BATTERY - 8 VOLT												
8-29/32 x 6-13/16 x 8-23/32	M81-74	3838050	Spec. Prod.	44	107	350	74	26	4.5	24	16	12
SNOWMOBILE - GARDEN TRACTORS - AUXILIARY POWER UNITS - 12 VOLTS												
LM-9 7-3/4 x 5-1/4 x 7-1/4	CLM-9	2642966	Spec. Prod.	54	37	220	32	17	2.0	24	16	12
22NF 9-7/16 x 5-1/2 x 8-15/16	C-22NF	3621833	Spec. Prod.	54	59	255	45	23	3.5	24	16	12
GOLF CAR - 6 VOLT												
GC2 10-1/4 x 7-1/8 x 10-1/4	GC-2W	2444817	Golf Car	51	--	--	80 min.	40	5.8	12	Capacity test amperes for 75 minutes to 5.25 volts at 80°F per BCI & AGCMA rating procedure.	
GC2W 10-3/8 x 7-3/16 x 11-7/32	GC-2HW	3744551	Golf Car	51	--	--	100 min.	47	6.6	12	Capacity test amperes for 75 minutes to 5.25 volts at 80°F per BCI & AGCMA rating procedure.	

* The number of minutes a new fully charged battery at 80°F (26.7°C) can be discharged at 25 amperes and maintain a voltage of 1.75 volts per cell or higher.

** The discharge load in amperes which a battery at 0°F (– 17.8°C) can deliver for 30 seconds and maintain a voltage of 1.2 volts per cell or higher.

All prices and specifications are subject to change without notice.

Battery Analyzer & Electrolyte

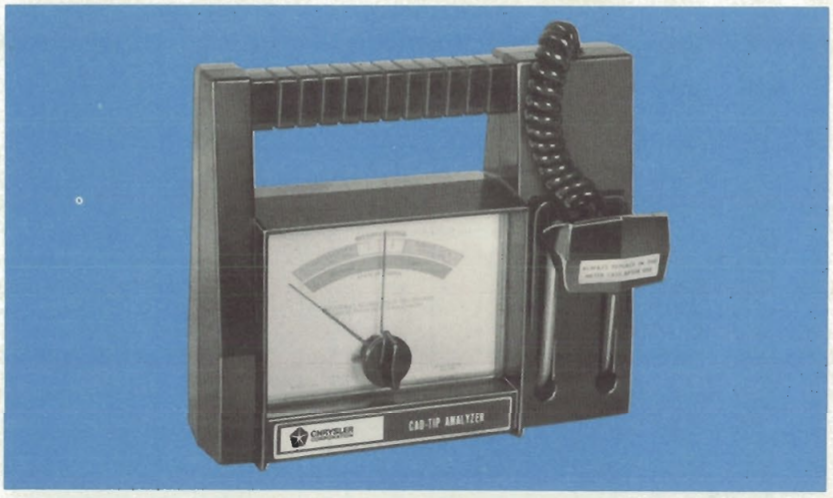

CAD-TIP BATTERY ANALYZER
Is especially designed to read cell voltages on new one-piece cover batteries, and will analyze the condition of any type battery within 1%.

The "Cad-Tip" Analyzer determines battery condition, in addition to its state of charge. The highly sensitive scale is easy to read . . . a variation of 5 or more scale divisions between individual cells indicates battery trouble.

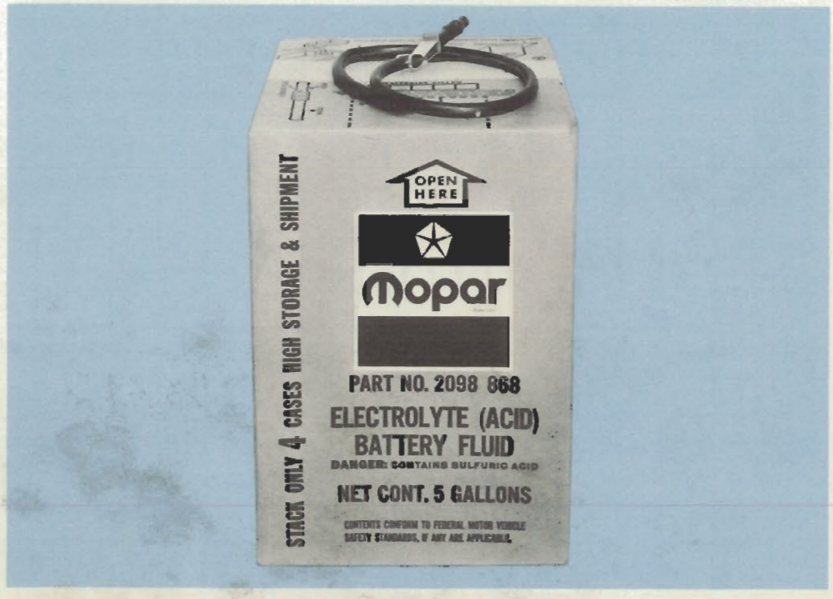

BATTERY ELECTROLYTE SPECIFIC GRAVITY 1.265
For efficient, fast and long lasting battery performance. Electrolyte requirements vary, but most batteries require four quarts.

The 5 gallon size "EZE-PAK" features a built-in dispensing hose, ready for immediate use. A clamp is also included for fast and simple battery acid dispensing.

Six quart (1.54 gallons) electrolyte package includes a pull-out flap with attached dispenser.

DESCRIPTION	SIZE	PART NUMBER	SUGGESTED LIST PRICE
Cad-Tip Battery Analyzer		2932 819	
Battery Electrolyte	1.54 Gal. 5 Gal.	2098 869 2098 868	

All prices and specifications are subject to change without notice.

Anti-Freeze
Ice Remover
Washer Solvent







PERMANENT TYPE
ANTI-FREEZE COOLANT
Assures maximum cooling system protection against winter freeze-up, overheating, seepage, clogging, foaming and corrosion. Contains special rust inhibitors to protect cooling system. Mopar Anti-Freeze reliability has been proven under the most severe driving and weather conditions.

FROST AND ICE REMOVER
Assures clear vision and safer driving by clearing frost and ice from windows quickly. Frees frozen locks, is harmless to paint, rubber plastic or metal.

WINDSHIELD WASHER SOLVENT
Assures clean windshields year 'round; prevents freezing in reservoir, in hoses or on windshield. Dissolves bug residue and road film. Harmless to paint, chrome and rubber.

DESCRIPTION	SIZE	PART NUMBER	SUGGESTED LIST PRICE
Anti-Freeze—(permanent type) (24 Quarts to a carton) (6 Gallons to a carton) 55 Gallons	 Quart Gallon Drum	 2932 530 2932 531 2932 532	 $ .70 2.65
Frost & Ice Remover—Aerosol	Pint	2525 006	1.44
Windshield Washer Solvent	Pint Quart	2421 783 2421 784	.91 1.39

All prices and specifications are subject to change without notice.

Engine Additives



SUPER OIL SAVER
A viscosity improver that increases the ability of any quality motor oil to provide better lubrication in all types of internal combustion engines.

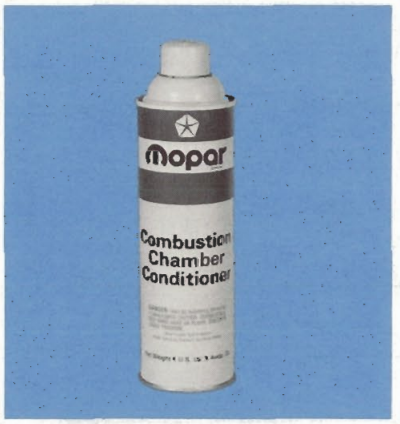

COMBUSTION CHAMBER CONDITIONER
Helps restore power and performance by removing deposits of gum, varnish and carbon from the combustion chamber, thus helps to eliminate deposit build-up problems such as pre-ignition, rough idle, poor compression and hard starting.

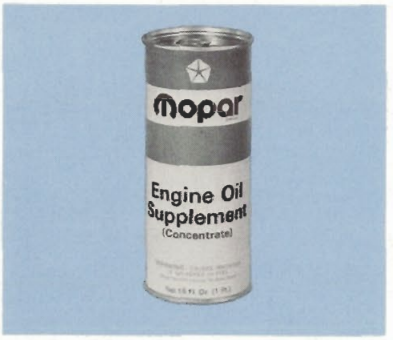

ENGINE OIL SUPPLEMENT CONCENTRATE
Should always be used when installing valve lifters or camshafts to eliminate the possibility of scuffing. It can also be used between oil changes to help keep engine clean.



ENGINE OIL SUPPLEMENT
Helps maintain new car efficiency, assures smooth performance and longer engine life. With present day close tolerances, high compression engines and extended oil drain recommendations, it is imperative that an oil containing the right chemicals be used to neutralize engine contaminants and keep the engine clean.

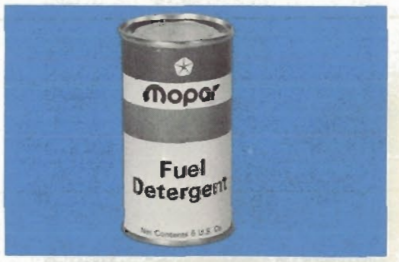

FUEL DETERGENT
Designed to clean out the combustion chamber and fuel system. Simply pour contents into fuel tank or into carburetor. When used with Combustion Chamber Conditioner, it provides upper cylinder lubrication, helps prevent valve sticking and plugs from fouling.

DESCRIPTION	SIZE	PART NUMBER	SUGGESTED LIST PRICE
Engine Additives			
Super Oil Saver	Pint	3837 188	$1.54
Combustion Chamber Conditioner	Pint	3419 126	1.61
	24 oz.	3419 145	2.08
(aerosol)—	20 oz.	2933 500	2.30
Engine Oil Supplement Concentrate	Pint	3419 130	1.49
Fuel Detergent	6 oz.	3419 127	.54
Engine Oil Supplement	Quart	3419 131	1.80

All prices and specifications are subject to change without notice.

Engine Additives



GUM & SLUDGE REMOVER
A fast-acting compound of solvents, dispersants and detergents that cleans oil lines and removes gum, carbon and sludge from oil rings, valve guides and lifters. Developed purposely to remove crankcase contaminates and for use on older cars as a cleaner and flush.



MANIFOLD HEAT CONTROL VALVE SOLVENT-PENETRATING FLUID
Formulated to keep the manifold control valve operating freely and efficiently. It penetrates lead and rust deposits that accumulate on the control valve. A small amount should be applied to both ends of the valve shaft every thirty days and whenever the car is lubricated.

COOLING SYSTEM MATERIALS



COOLING SYSTEM RUST RESISTOR & WATER PUMP LUBRICANT
Protects the cooling system from build-up of rust or scale particles by depositing a protective coating on inner walls. The water pump is continuously lubricated since the lubricant is heat resistant. Mixes freely with hard or soft water and all approved types of antifreeze.



COOLING SYSTEM STOP LEAK NUGGETS PACKAGE
Effectively seals and helps prevent radiator leaks in the entire cooling system. It will not clog air conditioning systems. It will mix with hard or soft water and all approved types of anti-freeze. Two nuggets in plastic bubble-pack display card.

WATER PUMP LUBRICANT
Use to eliminate noisy water pump squeak and chatter. This silicone lubricant is heat resistant and will not dissolve in cooling system coolant.

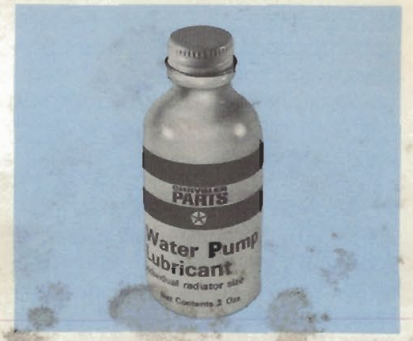

DESCRIPTION	SIZE	PART NUMBER	SUGGESTED LIST PRICE
Engine Additives (Cont'd)			
Gum & Sludge Remover	Quart	3419 133	$3.15
Manifold Heat Control Valve Solvent-Penetrating Fluid (aerosol)—	8 oz. 12 oz.	3419 128 3419 129	1.34 1.86
Cooling System Rust Resistor & Water Pump Lubricant	Pint	2421 778	.80
Cooling System Stop Leak Nuggets		3419 423	1.34
Water Pump Lubricant	2 oz.	2298 997	1.61

Fluids

DEXRON AUTOMATIC TRANSMISSION FLUID
Currently used in all transmissions as factory fill and recommended for all automatic transmissions and manual transmissions in extremely cold climates. It transmits maximum power with minimum friction. Heat resistant. Lubricates and protects gears, pumps and seals against undue wear. Mixes freely with all other qualified transmission fluids and will not form impurities or deposits. Colored for easy detection of transmission leakage.

TRANSMISSION SEALER
Specially formulated to keep seals pliable and to revitalize hard, shrunken seals. Protects transmission seals against deterioration and stops minor leaks.

BRAKE FLUID
A new, heavy-duty type brake fluid that is recommended for use in the brake systems of all Chrysler-built vehicles. It conforms to or exceeds S.A.E. and Federal specifications for high temperatures and complies with all states having regulations governing the sale and use of brake fluids for motor vehicles.

POWER STEERING FLUID
Especially compounded to assure maximum performance and efficiency in the power steering system. Assures long life of rubber parts under all pressure and temperatures encountered. Only this fluid should by used for power steering. Other lubricants, including those designed for use in engines and transmissions, may deteriorate some of the parts in the power steering system.

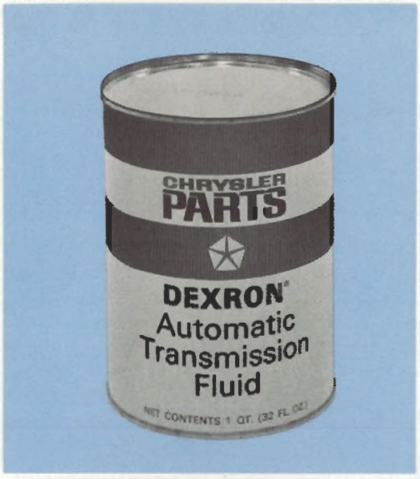





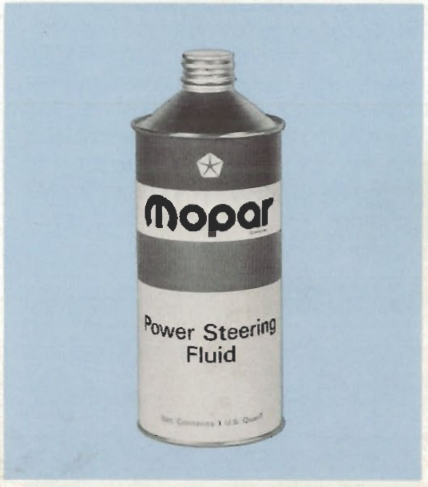

DESCRIPTION	SIZE	PART NUMBER	SUGGESTED LIST PRICE
Dexron Automatic Transmission Fluid	Pint	3549 659	$ .35*
	Quart	3549 660	.69*
	Gallon	3549 661	2.70*
	16 Gal.	3549 662	44.42*
	55 Gal.	3549 663	152.69*
Transmission Sealer	6 oz.	2298 923	.91*
Brake Fluid	12 oz.	2933 249	1.29*
	Quart	2933 250	3.20*
	Gallon	2933 251	11.53*
Drum	5 Gal.	2933 252	54.88*
Power Steering Fluid	Quart	2084 329	.80*

*Price Symbol "A" Part.

All prices and specifications are subject to change without notice.

Lubricants



MULTI-MILEAGE LUBRICANT
Multi-Mileage Lubricant has chemical properties which assure maximum lubrication and high resistance to the harmful effects of water, corrosion and extreme temperatures. It is recommended for lubricating ball joints, tie rod ends, torsion bars, wheel bearings, brake cables, clutch linkage and gearshift levers.

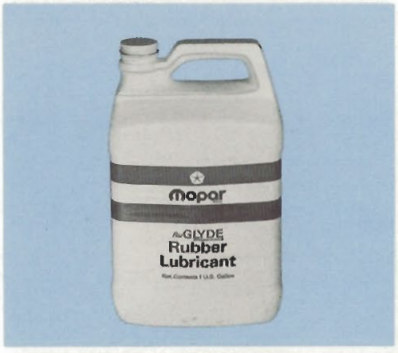

"RUGLYDE" (Clear Type)
A multi-purpose lubricant that lubricates rubber parts, eliminates squeaks and restores "new look" to floor mats, tires, etc. Ideal for mounting and demounting tires; protects tire beads and trim-seal edges. Will not affect paint.

"SIL-GLYDE" LUBRICATING COMPOUND
Effectively lubricates and eliminates squeaks from fan belts, weatherstrips, seals, bumpers, window channels and rubber gaskets. It also weatherproofs and prevents shorts in ignition system. Also protects battery terminals against corrosion.

SPEEDOMETER CABLE LUBRICANT
Especially formulated for efficient, long-lasting speedometer cable performance.





DESCRIPTION	SIZE	PART NUMBER	SUGGESTED LIST PRICE
Multi-Mileage Lubricant			
Cartridge	14-1/2 oz.	2525 035	$ .91*
Pail	35 lb.	3744 275	24.30*
RuGlyde (Clear Type)	Gallon	2084 326	4.11*
Speedometer Cable Lubricant	6 oz.	1243 632	.93*
Sil-Glyde—Tube	4 oz.	1881 923	2.11*
—Aerosol Can	16 oz.	1881 924	3.47*

*Price Symbol "A" Part.

Lubricants

DISTRIBUTOR CAM LUBRICANT
Specifically formulated for the efficient lubrication of distributor cam shaft. Easy to use, handy tube.

"LUBRIPLATE"
An all-purpose heavy duty lubricant that resists rust and corrosion. It is dripless, long-lasting and packaged in a handy, easy-to-use tube. Has many uses around the home.

"LOCK EASE"
This lock fluid assures smooth working locks. Long-wearing film protects locks against rust and wear. Slight pressure on spring panel forces fluid to all parts of lock.

"DOOR EASE" LUBRICANT
A stainless stick lubricant which stops squeaks and reduces friction. Ideal for car doors and other areas with rubber bumper cushions. Many household uses such as sticky drawers, windows, etc.

RUST PENETRANT
Quick-acting spray type solvent that frees troublesome nuts, bolts, hinges and clamps in seconds. Dissolves rust, corrosion, chemical deposits and many other elements that hinder disassembly. Has many household uses.







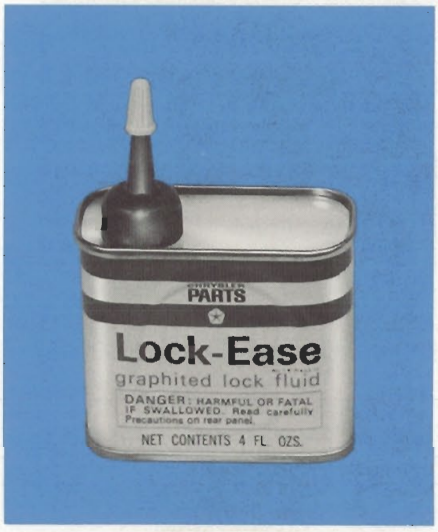



DESCRIPTION	SIZE	PART NUMBER	SUGGESTED LIST PRICE
Distributor Cam Lubricant	4 oz.	1473 595	$1.71*
Lubriplate—	2 oz.	3744 859	.54*
Lock Ease	4 oz.	2240 363	.74*
Door Ease Lubricant (Shop Size)	1.68 oz.	3744 990	
Rust Penetrant—Aerosol Can	Pint	2421 775	1.61*

*Price Symbol "A" Part.

All prices and specifications are subject to change without notice.

Lubricants



SURE-GRIP LUBRICANT #90
Part No. 2585 318 (quart), provides maximum protection against gear scoring, scuffing and wear under normal and extreme loading conditions. It is specially formulated for use in Sure-Grip plate disk type (Spicer-Dana) limited slip differentials in axles prior to 1969, and the 9-3/4 Dana axle used in high performance vehicles in 1969 and 1970; also in trucks equipped Spicer Anti-Spin differentials.



HYPOID GEAR LUBRICANT
Part No. 3744 994 (quart) and Part No. 3744 995 (120 lb. drum), provides optimum protection against gear scoring, scuffing and wear under normal and severe loading conditions. It is recommended for use in manual transmissions, steering gears and all axles equipped with conventional differentials. It is specially formulated for use in Sure-Grip, cone clutch type (Borg-Warner) limited slip differentials used in 1969 and 1970 cars. This lubricant is also recommended for use in all axles in 1971 and later cars.



MOTOR OIL
This oil meets the rigid specifications of the American Petroleum Institute (API), Service Classification SE and exceeds Federal and Military specifications for all vehicles. To cover all operating requirements, Mopar Motor Oil is available in viscosities and sizes shown below.

DESCRIPTION	SIZE	PART NUMBER	SUGGESTED LIST PRICE
Sure-Grip "90" Lubricant	qt.	2585 318	1.17*
Hypoid Gear Lubricant	qt.	3744 994	1.10*
Hypoid Gear Lubricant	120 lb.	3744 995	52.55*

CONTAINER SIZE & SAE GRADE		PART NUMBER	SUGGESTED LIST PRICE
SUPREME MOTOR OIL	SAE 20W-20 Qt.	2808 316	$ .67
	Gal.	2808 317	2.68
	55 Gal. Drum	2808 318	—
	SAE 30 Qt.	2808 319	.67
	Gal.	2808 320	2.68
	55 Gal. Drum	2808 321	—
	SAE 10W-30 Qt.	2808 325	.77
	Gal.	2808 326	3.09
	55 Gal. Drum	2808 327	—
	SAE 10W-40 Qt.	3685 658	.82
	Gal.	3685 659	3.30
	55 Gal. Drum	3685 660	—

*Price Symbol "A" Part.

All prices and specifications are subject to change without notice.

Hi-Performance Lubricants



HI-PERFORMANCE MOTOR OIL
This specially formulated Oil contains heavy duty additives that provide maximum lubrication and protection to bearings, cam lobes, tappets, piston rings, cylinder walls, etc., during Hi-Speed competitive events.

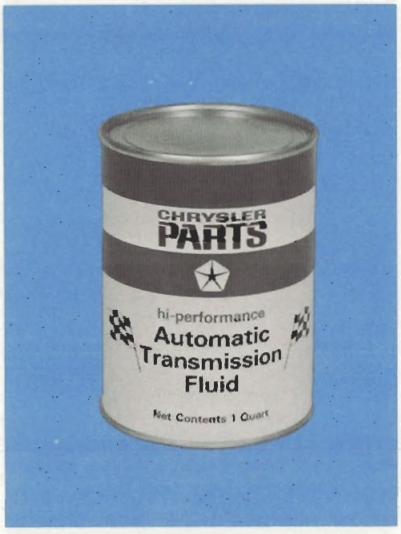

HI-PERFORMANCE AUTOMATIC TRANSMISSION FLUID
Developed for Hi-Speed competition to protect against scoring, scuffing, wear and seizure of vital transmission parts. Assures maximum lubrication and protection against power loss due to shifting drag and churning.



HI-PERFORMANCE MANUAL TRANSMISSION LUBRICANT
Helps prevent undue wear, increases heat resistance, resists foaming and decreases power loss due to shifting drag. Provides positive lubrication to all transmission components in Hi-Performance cars.

HI-PERFORMANCE REAR AXLE LUBRICANT
Provides maximum lubrication and better protection against scoring, excessive wear and overheating. Adds more usable horsepower for all Hi-Performance engines during Drag, Circuit and other high-speed competitive events.



DESCRIPTION	SIZE	PART NUMBER	SUGGESTED LIST PRICE
Hi-Performance Lubricants			
Motor Oil	Quart	2809 865	$1.44*
Automatic Transmission Fluid	Quart	2809 866	1.49*
Manual Transmission Lubricant	Quart	2809 863	1.86*
Rear Axle Lubricant	Quart	2809 864	1.86*

*Price Symbol "A" Part.

All prices and specifications are subject to change without notice.

Appearance Materials



AUTOMOBILE POLISH
This polish quickly and easily cleans and polishes all car finishes. It provides a gleaming, dry, glossy surface which repels dust and protects the paint finish.

CAR WASH LIQUID AND POWDER
Mixed with water as directed, a small quantity of these highly concentrated materials produces an extremely effective washing solution. No wiping required; just wash, rinse and allow to air dry. It leaves no ugly film or streaks when used as directed.

WASH & WAX LIQUID WITH DETERGENT
Quickly and effectively removes road grime and deposits a film of protective wax. This highly concentrated liquid mixes easily in warm or cold water. After use, the surface has a dry, nonsmearing, glossy finish.

CHROME CLEANER AND POLISH WITH SILICONES
Removes rust and tarnish from chrome, copper, stainless steel and nickel-plated parts. It leaves a clean, long-lasting, brilliantly polished surface which is highly resistant to corrosion and abrasion.

DESCRIPTION	SIZE	PART NUMBER	SUGGESTED LIST PRICE
Automobile Polish	Pint	2421 791	$1.02*
	Gallon	2448 767	5.28*
Car Wash Liquid	16 oz.	3419 384	1.02*
Car Wash Powder	15 lb.	2421 797	18.89*
Car Wash & Wax Liquid	Pint	2589 619	1.34*
Chrome Cleaner and Polish with Silicones	Pint	2525 429	1.02*

*Price symbol "A" Part.

All prices and specifications are subject to change without notice.

Appearance Materials





GLASS CLEANER—AEROSOL
Cleans and makes windows, lamp lenses and mirrors sparkle.

LEATHER AND VINYL CLEANER
Thoroughly cleans and renews leathers, vinyl and synthetic materials, leaving surface soft and pliable. Harmless to painted surfaces.



WAX-TREATED POLISHING CLOTH
A full 405 square inches of specially wax-treated, highly absorbent, heavy cotton flannel. Perfect for use on synthetic and other car finishes. Easily removes dust, dirt and road grime from body, glass and chrome. Excellent for furniture and many other household items.

ENGINE DEGREASER
A concentrated heavy-duty cleaner especially formulated to remove dirt, oil and grease deposits from engines, batteries, carburetors, firewalls, and tires; quickly, easily and effectively. Safer than steam cleaning—just spray on, let it soak, and hose off.



VINYL TOP CLEANER
Special formulation that thoroughly cleans vinyl tops, leaving a protective coating. Contains no abrasives. Harmless to skin, paint, rubber, chrome, etc. when used as directed.

"KAR KLEEN"
Quickly and safely restores original beauty of cloth, vinyl or leather upholstery and trim. Plastic brush top can on 12 oz. size for easy application and use. Also available in concentrated 32 oz. size for mixing up to 4 qts. of solution.

DESCRIPTION	SIZE	PART NUMBER	SUGGESTED LIST PRICE
Glass Cleaner—Aerosol	24 oz.	3514 198	$1.23*
Leather & Vinyl Cleaner	Pint	2421 788	1.76*
Wax Treated Polishing Cloth		1316 224	.91*
Engine Degreaser—Aerosol	Pint	3419 148	1.98*
Vinyl Top Cleaner	Gal.	3837 107	13.75*
Vinyl Top Cleaner	8 oz.	2932 280	2.51*
Vinyl Top Dressing	8 oz.	3514 191	2.99*
Kar Kleen— Brush top cap	12 oz.	2809 926	1.34*

*Price Symbol "A" Part.

All prices and specifications are subject to change without notice.

Maintenance Materials



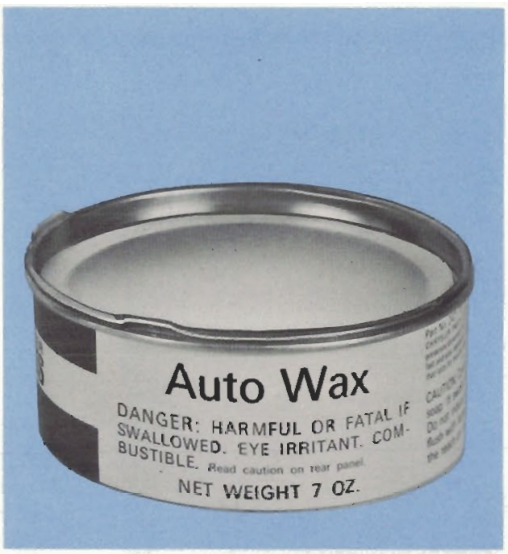

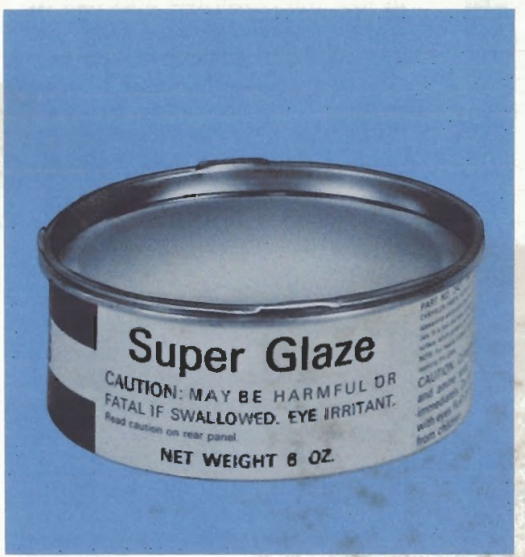



SPOT REMOVER AND FABRIC CLEANER
Removes stains and stubborn spots on clothing and fabrics. It is non-injurious to materials or fast colors.

SILICONE AUTO WAX (Paste)
One of the hardest and most waterproof waxes ever developed for the Do-It-Yourself trade. Easy to apply. A long-lasting protective coating for enamel or lacquer finishes.

"SUPER GLAZE"
Restores original luster and beauty to all finishes. The ideal follow-up for all polish jobs. Easy to use. Hand or power applied.

TAR AND ROAD OIL REMOVER
Colorless, stainless, quick-acting, non-injurious to car finish or chrome. Effectively loosens and removes tar and road oil on contact.

DESCRIPTION	SIZE	PART NUMBER	SUGGESTED LIST PRICE
Spot Remover & Fabric Cleaner	Pint	2421 785	$1.28*
	Gallon	2421 786	7.42*
Silicone Auto Wax (Paste)	7 oz.	2421 781	1.34*
Super Glaze	6 oz.	2421 795	2.03*
Tar & Road Oil Remover	Pint	2421 776	1.02*
	Gallon	2421 777	5.60*

*Price Symbol "A" Part.

Maintenance Materials



AUTO GLASS ADHESIVE AND SEALER (DURIBBON)
Assures permanent seal, elasticity, resistance to temperature changes and positive adhesion to glass, rubber and metal. Ideal for sealing leaking and squeaking windshield, rear window and side windows. Cures into a controlled vulcanized state, permanently adhering the weather strip to the glass.



"STIC" ALTERNATOR AND GENERAL—PURPOSE CEMENT
A high temperature non-conductive cement which forms a rubbery bond which is flexible even at low temperatures and has excellent resistance to water, oil and aliphatic hydrocarbons such as gasoline, naptha, etc. This cement may also be used as general purpose adhesive for vinyls, glass, leather, wood, metals and trim materials.



VINYL BODY SIDE MOULDING ADHESIVE
Formulated to repair vinyl inserts and side mouldings due to bond failure.

STARTER BRUSH PLATE SEALER AND ADHESIVE
Especially formulated for permanent sticking power. It blocks road moisture from entering the starting motor and also prevents water vapor from entering through the transmission bell housing. It has many uses outdoors, as well as indoors for bonding rigid and many flexible materials to rigid surfaces. May be painted when dry.

DESCRIPTION	SIZE	PART NUMBER	SUGGESTED LIST PRICE
Auto Glass Adhesive & Sealer	Pint	2298 825	$2.35*
Applicator Pkg. (Consists of 3-No. 2298 825 & 1 Applicator Gun)		2298 950	8.92*
Alternator Cement (Stic)	5 oz.	2299 314	1.39*
Starter Brush Plate Sealer	2-3/4 oz.	2421 838	.64*
Vinyl Moulding Adhesive	1 oz.	3549 956	.54*

*Price Symbol "A" Part.

All prices and specifications are subject to change without notice.

Maintenance Materials





SILICONE RUBBER SEALER
Seals connections, terminals and wire harness joints. Bonds glass, aluminum, steel, ceramics and some plastics. Affix name plates and emblems without screws. Approved by Chrysler Engineering Laboratory for use as a sealer at the junction of the engine cylinder block, the intake manifold and the cylinder head to prevent leakage of oil and water.

"PERFECT SEAL" SEALING COMPOUND
This sealing compound provides a non-drying sealing film for all types of gaskets, threaded and machined joints under all temperature extremes. Always ready for use in handy pressurized spray can. Helps prevent corrosion.





LED PLATE (ANTI-SEIZING SEALANT)
An anti-seize gasket sealer that maintains its sealing properties on those parts subject to severe temperature variations. Assures easy disassembly without damage to gaskets. An excellent pipe sealer and tapping compound. Impervious to air, water, steam, etc. Protects battery terminals against corrosion.

REFRIGERANT #12 "FREON"
Specially formulated to provide maximum cooling and prevent damage to seals and lines. Approved for use in all Chrysler Corporation Air Conditioners. Available in handy 15 oz. size or 30 lb. shop size.

DESCRIPTION	SIZE	PART NUMBER	SUGGESTED LIST PRICE
Silicone Rubber Sealer	2 oz.	3683 829	$ 1.80
"Perfect Seal" Compound (Aerosol Can)	15 oz.	3419 115	2.56
Led Plate (Anti-Seizing Sealant)	1 lb.	2275 437	2.08*
Refrigerant No. 12 "Freon"	15 oz.	2809 932	1.50
	30 lb.	3683 943	52.50

*Price Symbol "A" Part.

All prices and specifications are subject to change without notice.

Maintenance Materials



PARTS IMMERSION CLEANER
Quickly and effectively removes sludge and varnish deposits from engine parts; carburetors, transmission parts, etc. Handy basket for immersing, removing and draining parts is included in 4 gallon size.

RUST REMOVER
Effectively dissolves rust, tarnish and oxidation from chrome and other metals, and inhibits further rusting. Combines chemically with treated metal surfaces to form an excellent base for paint.

- Quickly removes rust and tarnish from bumpers and chrome parts.
- Eliminates rust stains on painted surfaces.
- No mixing, rubbing or scrubbing needed.
- Non-flammable—safe to handle—won't burn skin.



BELT-EASE
Spray on fan belts and other drive belts to silence squeaks, add traction and help increase belt life.



DESCRIPTION	SIZE	PART NUMBER	SUGGESTED LIST PRICE
Parts Immersion Cleaner—(With Basket)	4 Gal.	3419 146	$33.69
Parts Immersion Cleaner—Refill (W/out Basket)	5 Gal.	3419 147	35.50
Rust Remover	12 ozs.	3419 114	2.62
Belt Ease (aerosol)	5-1/2 oz.	3419 497	1.60

*Price Symbol "A" Part.

All prices and specifications are subject to change without notice.

Universal Carpeting

- Excellent for covering worn or torn floor covering.
- 20% Nylon for long-wearing toughness.
- Clear, Brilliant, light-fast colors.
- Molded for better fit.
- Readily cleanable with detergent or neutral solvents.
- Lustrous thick pile for sound and vibration insulation.
- Original equipment quality.

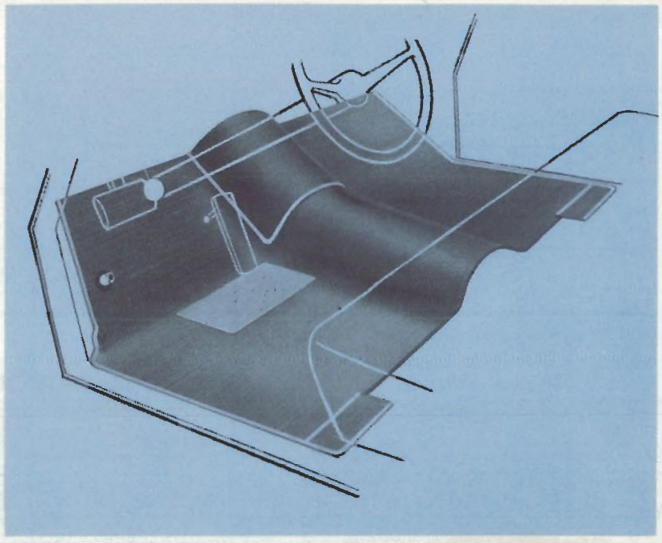

UNIVERSAL CARPETING	PRICE SYM.	SUGGESTED PRICE LIST
All Front Carpets	N.D.	$24.72
All Rear Carpets	N.D.	23.92

	FRONT	Black	Light Blue	Medium Blue	Dark Blue	Gray Blue	Brown	Gold
1970 - 65	Fury, Polara, Monaco, Chrysler & Imperial	3620900	3620901	3620902	3620903	3620904	3620905	3620906
1970 - 65	Belvedere, Satellite, Coronet & Charger	3620913	3620914	3620915	3620916	3620917	3620918	3620919
1970 - 66 1969 - 66	Valiant & Dart Barracuda	3620926	3620927	3620928	3620929	3620930	3620931	3620932
1970	Barracuda & Challenger	3620939	3620940	3620941	3620942	3620943	3620944	3620945
1964 - 62	Dodge "880" & Chrysler	3620952	3620953	3620954	3620955	3620956	3620957	3620958
1962 1964 - 62	Dart Fury, Polara & Monaco	3620965	3620966	3620967	3620968	3620969	3620970	3620971
1964 - 63	Imperial	3620991	3620992	3620993	3620994	3620995	3620996	3620997
1965 - 60 1962 - 61 1965 - 63	Valiant Lancer Dart	3621004	3621005	3621006	3621007	3621008	3621009	3621010

	FRONT	Medium Green	Dark Green	Orange	Bright Red	Dark Red	Tur-quoise
1970 - 65	Fury, Polara, Monaco, Chrysler & Imperial	3620907	3620908	3620909	3620910	3620911	3620912
1970 - 65	Belvedere, Satellite, Coronet & Charger	3620920	3620921	3620922	3620923	3620924	3620925
1970 - 66 1969 - 66	Valiant & Dart Barracuda	3620933	3620934	3620935	3620936	3620937	3620938
1970	Barracuda & Challenger	3620946	3620947	3620948	3620949	3620950	3620951
1964 - 62	Dodge "880" & Chrysler	3620959	3620960	3620961	3620962	3620963	3620964
1962 1964 - 62	Dart Fury, Polara & Monaco	3620972	3620973	3620974	3620975	3620976	3620977
1964 - 63	Imperial	3620998	3620999	3621000	3621001	3621002	3621003
1965 - 60 1962 - 61 1965 - 63	Valiant Lancer Dart	3621011	3621012	3621013	3621014	3621015	3621016

All prices and specifications are subject to change without notice.

Universal Carpeting

UNIVERSAL CARPETING	PRICE SYM.	SUGGESTED PRICE LIST
All Front Carpets	N.D.	$24.72
All Rear Carpets	N.D.	23.92

	REAR	Black	Light Blue	Medium Blue	Dark Blue	Gray Blue	Brown	Gold
70 - 69 70 - 69	Fury, Polara & Monaco, Sta. Wag. Chrysler & Imperial (Exc. 4 Dr. H.T.)	3621017	3621018	3621019	3621020	3621021	3621022	3621023
70 - 69	Fury, Polara, Monaco & Chrysler & Imperial 4 Dr. H.T.	3621030	3621031	3621032	3621033	3621034	3621035	3621036
68 - 65	Fury, Polara, Monaco, "880" Chrysler & Imperial	3621043	3621044	3621045	3621046	3621047	3621048	3621049
70 - 69	Fury, Polara & Monaco (Exc. 4 Dr. H.T. & Sta. Wag.)	3621056	3621057	3621058	3621059	3621060	3621061	3621062
70 - 65	Belvedere, Satellite, Coronet & Charger	3621069	3621070	3621071	3621072	3621073	3621074	3621075
70	Barracuda & Challenger	3621082	3621083	3621084	3621085	3621086	3621087	3621088
70 - 66 69 - 66	Valiant & Dart Barracuda	3621095	3621096	3621097	3621098	3621099	3621100	3621101
62 64 - 62	Dart Fury, Polara, Monaco, "880" Chrysler & Imperial	3621108	3621109	3621110	3621111	3621112	3621113	3621114
65 - 60 62 - 61 65 - 63	Valiant Lancer Dart	3621134	3621135	3621136	3621137	3621138	3621139	3621140

	REAR	Medium Green	Dark Green	Orange	Bright Red	Dark Red	Tur-quoise
70 - 69 70 - 69	Fury, Polara & Monaco, Sta. Wag. Chrysler & Imperial (Exc. 4 Dr. H.T.)	3621024	3621025	3621026	3621027	3621028	3621029
70 - 69	Fury, Polara, Monaco & Chrysler & Imperial 4 Dr. H.T.	3621037	3621038	3621039	3621040	3621041	3621042
68 - 65	Fury, Polara, Monaco, "880" Chrysler & Imperial	3621050	3621051	3621052	3621053	3621054	3621055
70 - 69	Fury, Polara & Monaco (Exc. 4 Dr. H.T. & Sta. Wag.)	3621063	3621064	3621065	3621066	3621067	3621068
70 - 65	Belvedere, Satellite, Coronet & Charger	3621076	3621077	3621078	3621079	3621080	3621081
70	Barracuda & Challenger	3621089	3621090	3621091	3621092	3621093	3621094
70 - 66 69 - 66	Valiant & Dart Barracuda	3621102	3621103	3621104	3621105	3621106	3621107
62 64 - 62	Dart Fury, Polara, Monaco, "880" Chrysler & Imperial	3621115	3621116	3621117	3621118	3621119	3621120
65 - 60 62 - 61 65 - 63	Valiant Lancer Dart	3621141	3621142	3621143	3621144	3621145	3621146

All prices and specifications are subject to change without notice.

Reconditioning Materials

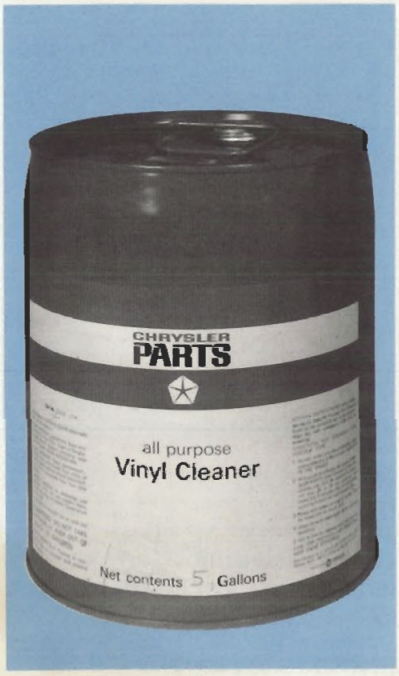

MULTI-PURPOSE CLEANER
Thoroughly cleans and renews vinyl upholstery, leaving surfaces soft and pliable. Harmless to painted surfaces.



UPHOLSTERY TINT (DY-NU)
Excellent for restoring color to faded and dull appearing wool or cotton upholstery and heavy-nap carpeting. May also be used in the home on any faded fabric.

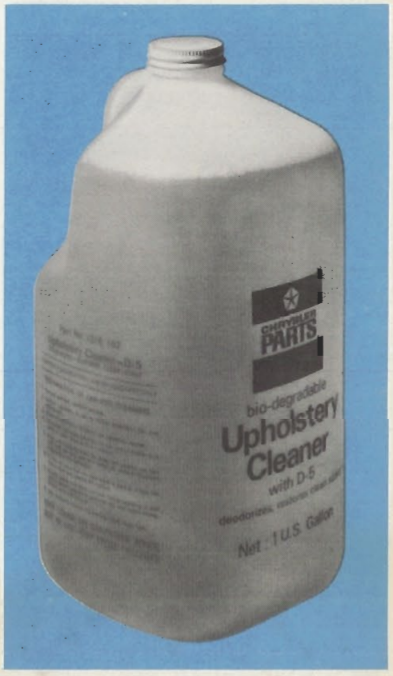

UPHOLSTERY CLEANER
Effectively cleans and restores stained and faded cloth upholstery when used together with Chrysler Parts Upholstery Tint. This cleaner will do an excellent job where upholstery is spotted or dirty.

DESCRIPTION	SIZE	PART NUMBER	SUGGESTED LIST PRICE
Multi-Purpose Cleaner	5 Gal.	2298 998 2298 532	$20.02
Upholstery Tint—Dynu			
Brown	Quart	3419 963	4.11*
Green	Quart	3419 965	4.11*
Dark Red	Quart	3419 978	4.11*
Yellow	Quart	3419 967	4.11*
Black	Quart	3419 970	4.11*
Turquoise	Quart	3419 971	4.11*
Blue	Quart	3419 972	4.11*
Aqua	Quart	3419 975	4.11*
Upholstery Cleaner	Gallon	1316 182	5.60*

*Price Symbol "A" Part.

All prices and specifications are subject to change without notice.

Reconditioning Materials



ENGINE PAINT
After thorough cleaning with Chrysler Engine Cleaner, Chrysler Parts Engine Paint may be sprayed or brushed on to renew the engine appearance.



"ONE STEP" POLISH
The quickest, easiest and most effective way to clean and restore color and lustre to all cars.





LEATHER AND VINYL DYE
Restores the beauty of all leather and vinyl trim by effectively covering stained, faded and scratched areas. Excellent for touching up.

ENGINE AND ENGINE COMPARTMENT CLEANER
A concentrated, heavy-duty cleaner containing detergents specially formulated to remove dirt, oil and grease deposits quickly, easily and effectively. Safer than steam cleaning—just spray on, let it soak, and hose off.

DESCRIPTION	SIZE	PART NUMBER	SUGGESTED LIST PRICE
Engine Paint—Gold	Quart	2421 098	$ 4.27*
Silver		2298 526	3.90*
"One Step" Polish	Gallon	2809 928	14.42*
Leather & Vinyl Dye— Black	Quart	1450 985	4.27*
White		1603 345	4.27*
Blue		1603 346	4.27*
Yellow		1879 727	4.27*
Brown		2298 530	4.27*
Engine and Engine Compartment Cleaner	16 oz.	3419 148	1.98*
	5 gal.	3419 149	15.69
	30 gal.	3419 150	86.76

*Price Symbol "A" Part.

All prices and specifications are subject to change without notice.

Reconditioning Materials



MULTI-PURPOSE DYE AND DRESSING
This product restores the finish of floor mats, tires, rubber surfaces, kick panels, package shelf, fibre board, underhood sheet metal, etc.



NYLON DYE
Beautifies and restores attractiveness of nylon upholstery and hard-finish convertible tops. Easily applied with spray gun—fast drying.



OVERSPRAY REMOVER
Excellent for removing overspray of Leather, Vinyl, and Multi-Purpose Dye and Dressing. Can also be used to effectively remove tar, road oil and undercoating from car finishes. Harmless to paint.



"REVIV-A-COLOR"
A clear, glossy-finish coating used to revive faded or dull appearing colors on engine wiring, rubber hoses, floor mats, tires and other rubber products. May also be used on engine blocks and engine compartment sheet metal where painting or dying is not required.

DESCRIPTION	SIZE	PART NUMBER	SUGGESTED LIST PRICE
Multi-Purpose Dye & Dressing—	Quart		
Med. Green		1653 408	$3.10*
Blue		1879 717	3.10*
Red		1879 719	3.10*
White		1879 720	3.10*
Turquoise		2298 524	3.10*
Gray		2298 538	3.10*
Orange	Quart	3683 918	3.10*
Black	Gallon	2298 525	7.04*
Nylon Dye—	Quart		
White		1653 402	4.70*
Red		1653 403	4.70*
Blue		1653 404	4.70*
Green		1653 405	4.70*
Black		1653 406	4.70*
Overspray Remover	Pint	2448 756	2.08*
	Gallon	2421 089	8.48*
"Reviv-A-Color"	Gallon	2421 097	7.48*

*Price Symbol "A" Part.

Reconditioning Materials

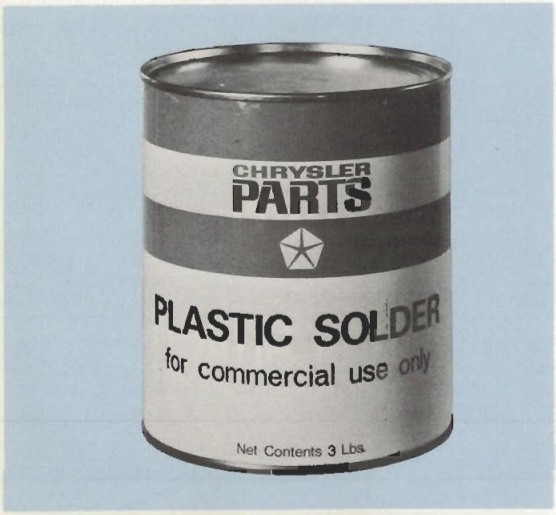



PLASTIC SOLDER
Recommended for all body repairs, even in high impact areas. When properly mixed with its chemical catalyst, "Chrysler Parts Creme Hardener," it produces a compound that provides smoothness, flexibility, ease of filing and sanding, low dust, feather edging and the finest painting surface of any material on the market. Due to its high adhesive and flexible characteristics, it has the ability to withstand impacts, road vibration, expansion and contraction caused by temperature variation.

PLASTIC SOLDER CREME HARDENER
A non-separating, homogenized, cream catalyst for activating Chrysler Parts Plastic Solder. Permits close control of curing time and ease of mixing.

SPLATTER PAINT
Especially formulated to renew the appearance of the trunk compartment. Areas such as floors, sides, metal, mats and cardboard may be sprayed.



DESCRIPTION	SIZE	PART NUMBER	SUGGESTED LIST PRICE
Plastic Solder—White			
(with 1 oz. Creme Hardener)	Quart	3621 440	$2.25*
(with 4 oz. Creme Hardener)	Gallon	3621 441	7.26*
Plastic Solder Creme Hardener			
Blue	1 oz.	3621 442	.75*
Blue	4 oz.	3621 443	2.10*
Splatter Paint			
Gray w/White	Gallon	2585 330	17.08

*Price Symbol "A" Part.

All prices and specifications are subject to change without notice.

Touch-Up Paint





APPLICATORS
Wide assortment of colors to match original finishes. Quickly, easily and effectively covers unsightly paint scratches, nicks and blemishes. Prevents spread of rust or corrosion. Rubbing compound in cap for removing fine scratches and to polish touched-up area after drying. One or more applicators may be ordered from your nearest Parts Depot.

SPRAY PAINT
For refinishing larger areas. Excellent for minor bump jobs. Cap painted same color as contents. Easy to apply, dries quickly and evenly.

DESCRIPTION	APPLICATION	PART NO.
Touch-Up Paint Applicator	1974-73 Colors	Specify Part Number from Following Pages
Applicator Merchandiser Assortments (Merchandiser consists of 24 Touch-Up Applicators & 1 Display Stand)	1974 Plymouth & Valiant 1974 Dart & Dodge 1974 Chrysler & Imperial	3837 149 3837 150 3837 151
Touch-Up Paint Spray Cans (Lacquer 6 oz. Aerosol Can)	1974-73 Colors	Specify Part Number from Following Pages
Spray Can Merchandiser Assortments (Merchandiser consists of 19 cans of assorted 1974 colors plus can of primer.)	1974 Plymouth & Valiant 1974 Dart & Dodge 1974 Chrysler & Imperial	3837 152 3837 153 3837 154
Primer All Models		3419 376
Auto & Marine Engine Lacquer or Primer All Models (15 oz. Aerosol Can)	All Models	Specify Part Number from Following Pages

See Following Pages for Individual 74-73 Colors

All prices and specifications are subject to change without notice.

1974 PASSENGER CAR TOUCH-UP PAINT

V=VALIANT B=BARRACUDA S=SATELLITE F=FURY D=DART CH=CHALLENGER C=CHARGER DC=CORONET DX=MONACO X=NOT USED

CODE	APPLI-CATOR Part No.	SPRAY CAN Part No.	BASIC COLOR (M)=Metallic	PLYMOUTH	DODGE	CHRYSLER	IMPERIAL
DY-2	2932 343	2932 342	Light Yellow	Sunfire Yellow (F)	Yellow (DX)	Sunfire Yellow	Sunfire Yellow
EW-1	3419 191	3419 190	White	Spinnaker White	Eggshell White	Spinnaker White	Spinnaker White
FE-5	3419 477	3419 476	Red	Rallye Red	Bright Red	X	X
GE-7	3744 097	3744 096	Russett (M)	Burnished Red (V-B-S)	Burnished Red (D-CH)	Burnished Red	Burnished Red
HL-4	3685 531	3685 530	Beige	Sahara Beige	Parchment	Sahara Beige	Sahara Beige
JA-5	3685 519	3685 518	Silver	Silver Frost (V-S-F)	Dark Silver (C-CH-DX)	Silver Frost	Silver Frost
JL-6	3780 727	3780 726	Aztec Gold (M)	Red Gold (S)	Aztec Gold (CH)	X	X
JY-6	3685 537	3685 536	Gold (M)	Golden Haze	Gold	Golden Haze	Golden Haze
JY-9	3685 539	3685 538	Dark Gold (M)	Tahitian Gold	Dark Gold	Tahitian Gold	Tahitian Gold
KB-1	3837 125	3837 124	Light Blue	Powder Blue	Powder Blue	Powder Blue	Powder Blue
KB-5	3837 127	3837 126	Medium Blue (M)	Lucerne Blue	Lucerne Blue	Lucerne Blue	Lucerne Blue
KB-8	3837 129	3837 128	Dark Blue (M)	Starlight Blue (F)	Starlight Blue (DX)	Starlight Blue	Starlight Blue
KG-2	3837 131	3837 130	Light Green (M)	Frosty Green	Frosty Green	Frosty Green	Frosty Green
KG-8	3837 133	3837 132	Dark Green (M)	Deep Sherwood	Deep Sherwood	Deep Sherwood	Deep Sherwood
KJ-6	3837 135	3837 134	Avocado (M)	Avocado Green	Avocado Green	Avocado Green	Avocado Green
KL-8	3837 137	3837 136	Dark Moonstone (M)	Dark Moonstone	Dark Moonstone	Dark Moonstone	Dark Moonstone
KT-5	3837 139	3837 138	Sienna (M)	Sienna	Sienna	Sienna	Sienna
KT-9	3780 570	3780 569	Dark Chestnut (M)	Dark Chestnut (F)	Dark Chestnut (DX)	Dark Chestnut	Dark Chestnut
KY-4	3837 141	3837 140	Light Gold	Golden Fawn	Golden Fawn	Golden Fawn	Golden Fawn
KY-5	3837 143	3837 142	Bright Yellow	Yellow Blaze (V-B-S)	Yellow Blaze (D-CH-C-DC)	X	X
TX-9	2809 785	2809 784	Black	Formal Black	Black	Formal Black	Formal Black

All prices and specifications are subject to change without notice.

1973 PASSENGER CAR TOUCH-UP PAINT

V=VALIANT B=BARRACUDA S=SATELLITE F=FURY D=DART CH=CHALLENGER C=CHARGER DC=CORONET DX=POLARA, MONACO

CODE	APPLI-CATOR Part No.	SPRAY CAN Part No.	BASIC COLOR (M)=Metallic	PLYMOUTH	DODGE	CHRYSLER	IMPERIAL
B-1	3621 503	3621 502	Light Blue	Blue Sky	Light Blue	Blue Sky	Blue Sky
B-5	3514 923	3514 922	Bright Blue (M)	True Blue	Bright Blue	True Blue	True Blue
E-5	3419 477	3419 476	Red	Rallye Red	Bright Red	X	X
F-3	3514 935	3514 934	Lt. Yellow Green (M)	Amber Sherwood	Light Green	Amber Sherwood	Amber Sherwood
Q-5	3419 457	3419 456	Brite Turquoise (M)	Coral Turquoise F	Turquoise DX	Coral Turquoise	Coral Turquoise
T-8	3621 523	3621 522	Med. Dark Tan (M)	Chestnut F	Dark Tan DX	Chestnut	Chestnut
W-1	3419 191	3419 190	White	Spinnaker White	Eggshell White	Spinnaker White	Spinnaker White
X-9	2809 785	2809 784	Black	Formal Black	Black	Formal Black	Formal Black
Y-1	3481 707	3481 706	Brite Yellow	Lemon Twist V-B-S	Top Banana DC-D-CH-C	X	X
Y-2	2932 343	2932 342	Yellow	Sun Fire Yellow F	Yellow DX	Sun Fire Yellow	Sun Fire Yellow
A-5	3685 519	3685 518	Silver (M)	Silver Frost	Dark Silver	Silver Frost	Silver Frost
B-9	3685 521	3685 520	Dark Blue (M)	Regal Blue F	Dark Blue DX	Regal Blue	Regal Blue
F-8	3685 525	3685 524	Dark Yellow Green (M)	Forest Green	Dark Green	Forest Green	Forest Green
K-6	3685 529	3685 528	Bronze (M)	Autumn Bronze	Bronze	X	X
L-4	3685 531	3685 530	Beige	Sahara Beige	Parchment	Sahara Beige	Sahara Beige
Y-3	3685 535	3685 534	Light Gold	Honey Gold	Light Gold	Honey Gold	Honey Gold
Y-6	3685 537	3685 536	Gold (M)	Golden Haze	Gold	Golden Haze	Golden Haze
Y-9	3685 539	3685 538	Dark Gold (M)	Tahitian Gold V-B	Dark Gold	Tahitian Gold	Tahitian Gold
				Golden Haze S-F			
E-7	3744 097	3744 096	Burnished Red	X	X	Burnished Red	Burnished Red
F-1	3744 099	3744 098	Mist Green	Mist Green	Pale Green	Mist Green	Mist Green
B-3	3621 505	3621 504	Super Blue	Basin Street V-B-S	Super Blue D-C-DC	X	X
T-6	3621 521	3621 520	Med. Tan (M)	Mohave S-F	Doeskin DC-DX-D-CH-C	X	X
F-5	3685 857	3685 856	Brite Yellow Green	X	Green Gold DX	X	X
J-3	3621 587	3621 586	Willow Green	Meadow Green S	X	X	X

X=NOT USED

PLYMOUTH CRICKET
1973 MODELS

CODE	APPLICATOR	SPRAY CAN	COLOR
108	X3683 517	X3683 516	Polar White
149	X3685 581	X3685 580	Phantom Mist (M)
154	X3685 583	X3685 582	Carib. Blue
155	X3744 871	X3744 870	Sure Fire Yellow
156	X3744 873	X3744 872	Sure Fire Red
157	X3744 875	X3744 874	Prairie Wind
161	X3744 900	X3744 899	Golden Glory (M)
162	X3744 952	X3744 951	Grasshopper (M)

DODGE COLT
1974-73 MODELS

CODE	APPLICATOR	SPRAY CAN	COLOR
025	3683 505	3683 504	Sunburst Yellow
064	3683 511	3683 510	Sunset Orange
065	3683 513	3683 512	Pacific Blue (M)
016	3685 571	3685 570	Spice Poly
017	3685 573	3685 572	Sea Green (M)
055	3744 894	3744 893	Red
003	3744 896	3744 895	Bright Yellow
028	3744 898	3744 897	Silver (M)
067	3837 193	3837 192	White - (74)
024	3683 503	3683 502	Cherry Blossom White - (73)

AUTO & MARINE ENGINE PAINT

15 oz. "SPRAY" CANS

PART NO.	COLOR	PART NO.	COLOR	PART NO.	COLOR
3419 365	Marine-1962-65 Marine Blue	3419 370	Turquoise (Non-Metallic)	3419 375	Black
3419 366	Marine-Nocturne Blue	3419 371	Turquoise (Metallic)	3419 376	Primer
3419 367	Marine-Airflow Blue	3419 372	Gold	3514 625	Blue
3419 368	Gray	3419 373	Orange		
3419 369	Red	3419 374	High Heat Aluminum		

Orders may be for one (1) or more applicator or can, to be shipped from depot stocks.

(M = Metallic)

1973 PASSENGER CAR TOUCH-UP PAINT

V=VALIANT B=BARRACUDA S=SATELLITE F=FURY D=DART CH=CHALLENGER C=CHARGER DC=CORONET DX=POLARA, MONACO

CODE	APPLICATOR Part No.	SPRAY CAN Part No.	BASIC COLOR (M)=Metallic	PLYMOUTH	DODGE	CHRYSLER	IMPERIAL
B-1	3621 503	3621 502	Light Blue	Blue Sky	Light Blue	Blue Sky	Blue Sky
B-5	3514 923	3514 922	Bright Blue (M)	True Blue	Bright Blue	True Blue	True Blue
E-5	3419 477	3419 476	Red	Rallye Red	Bright Red	X	X
F-3	3514 935	3514 934	Lt. Yellow Green (M)	Amber Sherwood	Light Green	Amber Sherwood	Amber Sherwood
Q-5	3419 457	3419 456	Brite Turquoise (M)	Coral Turquoise F	Turquoise DX	Coral Turquoise	Coral Turquoise
T-8	3621 523	3621 522	Med. Dark Tan (M)	Chestnut F	Dark Tan DX	Chestnut	Chestnut
W-1	3419 191	3419 190	White	Spinnaker White	Eggshell White	Spinnaker White	Spinnaker White
X-9	2809 785	2809 784	Black	Formal Black	Black	Formal Black	Formal Black
Y-1	3481 707	3481 706	Brite Yellow	Lemon Twist V-B-S	Top Banana DC-D-CH-C	X	X
Y-2	2932 343	2932 342	Yellow	Sun Fire Yellow F	Yellow DX	Sun Fire Yellow	Sun Fire Yellow
A-5	3685 519	3685 518	Silver (M)	Silver Frost	Dark Silver	Silver Frost	Silver Frost
B-9	3685 521	3685 520	Dark Blue (M)	Regal Blue F	Dark Blue DX	Regal Blue	Regal Blue
F-8	3685 525	3685 524	Dark Yellow Green (M)	Forest Green	Dark Green	Forest Green	Forest Green
K-6	3685 529	3685 528	Bronze (M)	Autumn Bronze	Bronze	X	X
L-4	3685 531	3685 530	Beige	Sahara Beige	Parchment	Sahara Beige	Sahara Beige
Y-3	3685 535	3685 534	Light Gold	Honey Gold	Light Gold	Honey Gold	Honey Gold
Y-6	3685 537	3685 536	Gold (M)	Golden Haze	Gold	Golden Haze	Golden Haze
Y-9	3685 539	3685 538	Dark Gold (M)	Tahitian Gold V-B	Dark Gold	Tahitian Gold	Tahitian Gold
				Golden Haze S-F			
E-7	3744 097	3744 096	Burnished Red	X	X	Burnished Red	Burnished Red
F-1	3744 099	3744 098	Mist Green	Mist Green	Pale Green	Mist Green	Mist Green
B-3	3621 505	3621 504	Super Blue	Basin Street V-B-S	Super Blue D-C-DC	X	X
T-6	3621 521	3621 520	Med. Tan (M)	Mohave S-F	Doeskin DC-DX-D-CH-C	X	X
F-5	3685 857	3685 856	Brite Yellow Green	X	Green Gold DX	X	X
J-3	3621 587	3621 586	Willow Green	Meadow Green S	X	X	X

X=NOT USED

PLYMOUTH CRICKET
1973 MODELS

CODE	APPLICATOR	SPRAY CAN	COLOR
108	X3683 517	X3683 516	Polar White
149	X3685 581	X3685 580	Phantom Mist (M)
154	X3685 583	X3685 582	Carib. Blue
155	X3744 871	X3744 870	Sure Fire Yellow
156	X3744 873	X3744 872	Sure Fire Red
157	X3744 875	X3744 874	Prairie Wind
161	X3744 900	X3744 899	Golden Glory (M)
162	X3744 952	X3744 951	Grasshopper (M)

DODGE COLT
1974-73 MODELS

CODE	APPLICATOR	SPRAY CAN	COLOR
025	3683 505	3683 504	Sunburst Yellow
064	3683 511	3683 510	Sunset Orange
065	3683 513	3683 512	Pacific Blue (M)
016	3685 571	3685 570	Spice Poly
017	3685 573	3685 572	Sea Green (M)
055	3744 894	3744 893	Red
003	3744 896	3744 895	Bright Yellow
028	3744 898	3744 897	Silver (M)
067	3837 193	3837 192	White - (74)
024	3683 503	3683 502	Cherry Blossom White - (73)

AUTO & MARINE ENGINE PAINT

15 oz. "SPRAY' CANS

PART NO.	COLOR	PART NO.	COLOR	PART NO.	COLOR
3419 365	Marine-1962-65 Marine Blue	3419 370	Turquoise (Non-Metallic)	3419 375	Black
3419 366	Marine-Nocturne Blue	3419 371	Turquoise (Metallic)	3419 376	
3419 367	Marine-Airflow Blue	3419 372	Gold	3514 625	
3419 368	Gray	3419 373	Orange		
3419 369	Red	3419 374	High Heat Aluminum		

Orders may be for one (1) or more applicator or can, to be shi n dep (M=Metallic)

PARTS SALES & SERVICE DIVISION

CHRYSLER
MOTORS CORPORATION

81-670-0414

ACCESSORIES PRICE LIST

The Prices of Passenger Car Parts and Accessories listed herein do not include any provisions for Federal Excise Tax. The prices of Truck Parts and Truck Accessories include any applicable Federal Manufacturers' Excise Tax.

IMPORTANT: - DIRECT ALL ORDERS TO THE PARTS DEPOT SERVING YOUR LOCALITY.

NOTE:
Material indicated with a minimum sales quantity is available only in the quantities shown. Orders not in multiples of the indicated minimum sales quantity will be adjusted automatically to the nearest multiple of the M.S.Q.

The Prices listed herein are supplied merely as trade information. Distributors, Wholesalers, Dealers or other persons handling the products listed herein are not required or expected to follow all or any such prices, it being expressly understood that they are absolutely unrestricted in such respects.

OCTOBER 1974

ACCESSORIES PRICE LIST

The Prices of Passenger Car Parts and Accessories listed herein do not include any provisions for Federal Excise Tax. The prices of Truck Parts and Truck Accessories include any applicable Federal Manufacturers' Excise Tax.

IMPORTANT: - DIRECT ALL ORDERS TO THE PARTS DEPOT SERVING YOUR LOCALITY.

NOTE:
Material indicated with a minimum sales quantity is available only in the quantities shown. Orders not in multiples of the indicated minimum sales quantity will be adjusted automatically to the nearest multiple of the M.S.Q.

The Prices listed herein are supplied merely as trade information. Distributors, Wholesalers, Dealers or other persons handling the products listed herein are not required or expected to follow all or any such prices, it being expressly understood that they are absolutely unrestricted in such respects.

MAY 6, 1974

INDEX

DESCRIPTION	PAGE
ADDITIVES	
Combustion Chamber Conditioner	73
Crankcase Conditioner	73
Engine Oil Supplement	73
Fuel Detergent	73
Gum & Sludge Remover	73
Heat Control Valve Solvent	75
Super Oil Saver	73
Hi-Performance Additive	73
ADHESIVE-GLASS	73
ADHESIVE-SILICONE RUBBER	73
ADHESIVE-VINYL	73
AIR CONDITIONING	5-11
AIR SHOCK ABSORBERS	53
ANALYZER-CAD, TIP-BATTERY	16
ANTENNAS	
Manual	23-24
Motorized	24
ANTI-FREEZE	3
AUTOMATIC SPEED CONTROL PKG.	33-36
AUTOMATIC STEP PACKAGE	69
BASKET-LITTER	37
BATTERIES	13-16
BATTERY ELECTROLYTE	16
BELT EASE	73
BELTS-SEAT	37
BELT-SEAT HARDWARE PACKAGE	37
BELT-SEAT HARNESS	37
BEZEL-INSTRUMENT PANEL RADIO	26-31
BODY PLASTIC SOLDER	76
BOWLING BAG	72
BRAKE CONTROL PKG.-TRAILER ELECTRIC	39
BRAKE FLUID	74
BRAKE PACKAGE-POWER	39
BUMPER GUARDS	47
BUMPER JACK - UNIVERSAL	48

DESCRIPTION	PAGE
CABLE & PIN PACKAGE - RACING HOOD	56
CAP-FUEL TANK LOCKING	41
CARPET UNIVERSAL	43-44
CARRIER - INFANT SAFETY	69
CARRY-ALL BAG	72
CARTRIDGE - STEREO & CASSETTE	21
CASSETTE MICROPHONE	22
CASSETTE TAPE PLAYER	22
CEMENT - ALTERNATOR	74
CHILD CAR SEAT	69
CHILD GUARD REAR DOOR-SAFETY LOCKS	53
CIGAR LIGHTER	52
CAR CARE MATERIAL	
Car Wash Powder & Liquid	73
Engine Cleaner & Degreaser	74
Fabric Cleaner	74
Glass Cleaner	74
Leather & Vinyl Cleaner	74
Multi-Purpose Cleaner	91
Parts Immersion Cleaner	74
Spot Remover	74
Tar & Road Oil Remover	75
Upholstery Cleaner	91
Vinyl Top Cleaner	74
CLOCKS	45
CLOTH-POLISH	
Wax Treated Polishing	75
COOLING SYSTEM MATERIALS	
Radiator Rust Resistor	76
Stop Leak	76
Water Pump Lubricant	75
CORD PACKAGE - LUGGAGE HOLD DOWN	68
COVERS - LUGGAGE	68
DECK LID LOCK PACKAGE - ELECTRIC	53
DEFLECTOR PACKAGE - REAR WINDOW	46
DEFOGGER - REAR WINDOW	49-51
DEFOGGER - REAR WINDOW - REPAIR PKG.	51

Mopar

INDEX

DESCRIPTION	PAGE
DOOR EDGE PROTECTORS	58-60
DYES	
Headliner Tint	91
Leather & Vinyl Dye	91
Multi-Purpose Dye & Dressing	91
Nylon Dye	91
Upholstery Tint	91
ENGINE BLOCK HEATER	46
FABRIC CLEANER	74
FIRE EXTINGUISHER	46
FRAME - LICENSE PLATE	46
FREON - 12 REFRIGERANT	89
FROST & ICE REMOVER	75
FUEL DETERGENT	73
GOLF CLUB COVERS	72
GRIP RAIL PACKAGE	46
GUARDS - FRONT & REAR BUMPER	47
GUARDS - SPLASH	48
GUM & SLUDGE REMOVER	73
HARDENER - BODY SOLDER CREME	76
HEADLINER TINT	91
HEATER	48
HEATER - ENGINE BLOCK	46
HITCH - TRAILER	71
HORN PACKAGE	48
INFANT SAFETY CARRIER	69
JACK - BUMPER UNIVERSAL	48
KAR KLEEN	74
LEATHER & VINYL DYE	91
LED PLATE	75
LICENSE PLATE FRAMES	46
LIGHTS	
Courtesy Lights	55
Glove Compartment Light	55
Map Light	55
Trunk Compartment Light	55
Underhood Light	55
Cargo Compartment	55
LOAD LEVELER	53
LOCKS	
Electric Deck Lid	53
Fuel Tank Locking Cap	41
Rear Door Safety Lock-Child Guard	53
Racing Hood Lock	56
Racing Hood Padlock	56
Hood Lock	48
LUBRICANTS	
Automatic Transmission Fluid	74
Distributor Cam Lubricant	75
Door Ease	74
Gear Lubricant	75
Hi-Performance	73
Lock Ease	75
Lubriplate	75
Motor Oil	77
Multi Mileage Lubricant	75
Power Steering Fluid	74
Ru-Glyde	76
Rust Penetrant	76
Sil-Glyde	75
Speedometer Cable Lubricant	75
Sure Grip Hypoid Lubricant	75
Water Pump Lubricant	75
LUGGAGE COVER & CORD PACKAGE	68
LUGGAGE RACKS	67
MATS - FLOOR - UNIVERSAL	56
MATTRESS - CARGO AREA	57
MICROPHONE - CASSETTE	22
MIRRORS	
Outside Mirror	57
Universal Mirror	57
Mirror - Trailer Towing	57
Vanity	57
MOTOR OIL	77
MOULDING KIT - DOOR & PANEL	57-58
MULTI-PURPOSE DYE & DRESSING	91
NYLON DYE	91
OIL FILLER & INDICATOR PACKAGE	58

INDEX

DESCRIPTION	PAGE
OILS	
Automatic Transmission Fluid	74
Brake Fluid	74
Crankcase Conditioner	73
Engine Oil Supplement	73
Motor Oil	77
Power Steering Fluid	74
Hi-Performance Additive	73
PAINT	
Engine Paint	91
Marine Paint	87
Paint Striping Tool	57
Touch-Up Paint Applicator	79-85
Splatter Paint	91
Spray Can	79-87
POLISH	
Chrome Polish	75
Liquid Auto Polish	75
One Step	75
Silicone Wax	75
Super Glaze	75
POWER BRAKE PACKAGE	39
POWER STEERING CONVERSION PACKAGE	61-66
POWER STEERING FLUID	74
PROTECTOR-DOOR EDGE	58-60
RACING HOOD CABLE & PIN PACKAGE	56
RACING HOOD LOCK PACKAGE	56
RACING HOOD PADLOCK PACKAGE	56
RACK - LUGGAGE	67
RADIATOR RUST RESISTOR	76
RADIATOR STOP LEAK	76
RADIOS & RELATED ITEMS	17-31
REMOVERS	
Frost & Ice Remover	75
Gum & Sludge Remover	73
Over Spray Remover	91
Rust Remover	75
Spot Remover	74
Tar & Road Oil Remover	75
RECONDITIONING MATERIAL - USED CAR	91
REGULATOR & FILTER-FUEL, PRESSURE	69
RETRACTOR - SEAT BELT	37

DESCRIPTION	PAGE
REVIVE-A-COLOR	91
RIDE LEVELERS	53
ROLL BAR ASSY - ROOF INNER	68
RU-GLYDE RUBBER LUBRICANT	76
RUST PENETRANT	76
RUST RESISTOR-RADIATOR	76
RUST - REMOVER	75
SEALING COMPOUND	76
SEALER - TRANSMISSION	76
SEAT - CHILD'S CAR	69
SEAT - CLUB CAB JUMP	69
SIL-GLYDE	75
SILICONE RUBBER ADHESIVE	73
SKI-CARRIER - DECK LID	67
SOLDER - PLASTIC BODY	76
SPEED CONTROL PKG. AUTOMATIC	33-36
SOLVENT	
Manifold Heat Control	75
Windshield Washer Solvent	76
SPEAKER - REAR SEAT	25
SPLASH GUARDS	48
SPOT REMOVER	74
STEP PACKAGE - AUTOMATIC	69
STEREO-TAPE PLAYER	21
STEREO-SPEAKERS	21
STOP LEAK - RADIATOR	76
STRIPING PACKAGE	57
SUPER GLAZE	75
SWITCH PACKAGE - WINDOW LIFT SAFETY	69
TACHOMETER PACKAGE	69
TAR & ROAD OIL REMOVER	75
TRAILER ELECTRIC BRAKE CONTROL PKG.	39
TRAILER HITCHES	71

INDEX

DESCRIPTION	PAGE
TRAILER TOW BAR KITS & COVER	70
TRANSMISSION FLUID	74
TRAVEL & RECREATION ACC'S.	72
UPHOLSTERY CLEANER	91
UPHOLSTERY TINT	91
VINYL ADHESIVE	73
VINYL AND LEATHER CLEANER	74
VINYL TOP CLEANER	74
WASH & WAX LIQUID	73
WASHER SOLVENT - WINDSHIELD	76
WATER PUMP LUBRICANT	75
WAX - SILICONE AUTO	75

WINTER ANTI FREEZE-SUMMER COOLANT

PERMANENT TYPE	Price Sym.	Part Number	List	Net Each	MINIMUM SALES QUANTITY CASE Qty.	MINIMUM SALES QUANTITY CASE Weight
*1 Quart (24 Quarts to case)	N.D.	2932 530		1.54	24	63 Lbs.
*1 Gallon (6 Gal. to Case)	N.D.	2932 531		5.94	6	62 Lbs.
*1 Drum (55 Gallons)	N.D.	2932 532		294.58	1	562 Lbs.

Direct all orders to the Parts Depot serving your locality.

ORDERS CANNOT BE ACCEPTED FOR LESS THAN CASE OR DRUM QUANTITIES.

IMPORTANT PRICES SHOWN SUPERSEDE THOSE IN MASTER PARTS PRICE LIST 81-690-0774 DATED AUGUST 5, 1974, PLEASE MARK YOUR RECORDS ACCORDINGLY.

Mopar

NOTES

WINTER ANTI FREEZE-SUMMER COOLANT

PERMANENT TYPE	Price Sym.	Part Number	List	Net Each	MINIMUM SALES QUANTITY CASE Qty.	MINIMUM SALES QUANTITY CASE Weight
1 Quart (24 Quarts to case)	N.D.	2932 530	1.39	.97	24	63 Lbs.
1 Gallon (6 Gal. to Case)	N.D.	2932 531	5.28	3.75	6	62 Lbs.
1 Drum (55 Gallons)	N.D.	2932 532	----	178.61	1	562 Lbs.

Direct all orders to the Parts Depot serving your locality.

ORDERS CANNOT BE ACCEPTED FOR LESS THAN CASE OR DRUM QUANTITIES.

IMPORTANT PRICES SHOWN SUPERSEDE THOSE IN MASTER PARTS PRICE LIST 81-690-0774 DATED JUNE 3, 1974. PLEASE MARK YOUR RECORDS ACCORDINGLY.

RADIOS

Description	Price Sym.	Part Number	Depot No. 1 Net Each	Direct Shipment No. 2 Net Each	Quantity For Direct Shipment
RADIO - LESS ANTENNA				Direct Shipment Shipping Point Center Line, Michigan	
BARRACUDA & CHALLENGER					
1970-4 AM . . . . . Note 1 . . .	N.D.	2884 853	42.91	37.33	
1970-4 AM-FM Stereo . . . . . Note 1 & 2 .	N.D.	3501 626	161.87	140.83	
FURY, MONACO, CHRYSLER & IMPERIAL					
1974 AM . . . . . Note 1 . . .	N.D.	3501 338	42.91	37.33	
1974 AM-FM . . . . . Note 1 . . .	N.D.	3501 339	99.44	86.51	
1974 AM-FM Stereo w/Tape Player . . . Note 1 & 2 .	N.D.	3501 340	282.48	245.76	
See Previous Page For Additional Radios For Fury, Monaco, Chrysler and Imperial					
Note 1: See Page 26 For Instrument Panel Bezel Required For Specified Radio.					
Note 2: Speakers are not included in Stereo and Tape Player Packages. Refer to Speaker Package listings for types and part numbers.					
The following Past Model Radios may be added to a qualifying order at the No. 2 Net but will not help qualify on order.					
CHRYSLER					
1971-73 Chrysler Am-FM Search Tuner . . . Note 1 & 2. .	N.D.	3501 134	133.20	115.88	
1970-73 Chrysler Am-FM . . . . . Note 1 . . .	N.D.	3420 560	110.96	95.76	
1973 Med & Hvy. Duty Conv. Cab					
1970-73 Conv. & Crew Cab.	N.D.	3489 160	34.95	-	
"340" & Swinger "340") AM-2 Watt. Note 1 . . .	N.D.	2884 854	36.30	-	
1970-72 Valiant & Dart (Ex. 1970 Duster "340" & Swinger "340") AM-FM . . .Note 1 . . .	N.D.	3501 565	82.39	-	

Mopar

IMPORT RADIOS & ANTENNAS

Description	Price Sym.	Part Number	List	Dealer Each
SIMCA RADIO AND ANTENNA PACKAGE				
S 1204 Models	N.D.	S 48190	62.22	46.67
SUN BEAM RADIO AND ANTENNA PACKAGE				
1968 and Prior Sunbeams All Models	N.D.	XR 80001	54.96	38.01
1969-71 Sunbeam Arrow and Alpine	N.D.	XR 80003	59.01	43.87
COLT RADIOS LESS ANTENNA				
*1971-3 Station Wagon	N.D.	MA 158353	66.25	49.69
*1971-3 Hardtop & Sedan	N.D.	MA 158354	66.25	49.69
#1974 Sedan & Hardtop	N.D.	MB 037915	66.25	49.69
#1974 Station Wagon	N.D.	MB 037916	66.25	49.69
ANTENNA PACKAGES				
1971-4 Colt Station Wagon (Not Required for Others)	N.D.	MA 158356	7.31	4.39
1971-3 Cricket	N.D.	X 3621 614	7.10	4.26
Simca S 1204 Models	Z	S 36836	8.28	4.97

*Price Revision
#New Part

ALL PRICES AND SPECIFICATIONS ARE SUBJECT TO CHANGE WITHOUT NOTICE

ANTENNAS

Description	Price Sym.	Part Number	List	Dealer Each	Wholesale Allowance
ANTENNAS					
BODY & CABLE PACKAGE					
1974 Valiant, Dart, Barracuda, Challenger, Satellite, Coronet & Charger	N.D.	3501 334	4.90	2.94	
1974 Fury, Monaco & Chrysler	N.D.	3501 335	4.90	2.94	
MAST ASSEMBLY					
*All Models w/2 Piece Antenna	A3	3513 745	4.25	2.55	.47
UNIVERSAL - COMPLETE					
Passenger Car and Truck Application - Fender Mtg.	N.D.	3838 093	4.95	2.97	

Description	Price Sym.	Part Number	List	Depot No. 1 Net Each	Direct Shipment No. 2 Net Each	Quantity For Direct Shipment
ANTENNA PACKAGE - MANUAL						
1970-3 Barracuda & Challenger	N.D.	2983 171	7.31	4.39	3.73	48 or More Assorted in Multiples of 6 of a Part Number Prepaid Center Line, Michigan
1969-73 Valiant & Dart						
1969-70 Belvedere, Satellite, Coronet & Charger	N.D.	2889 826	7.31	4.39	3.73	
1971-3 Satellite, Coronet & Charger	N.D.	3513 033	7.31	4.39	3.73	
1972-3 Fury, Gran, Polara, Monaco & Chrysler	N.D.	3588 365	10.26	6.15	5.23	
1969-71 Fury, Polara, Monaco & Chrysler	N.D.	2926 691	7.31	4.39	3.73	
1967-8 Fury, Polara, Monaco & Chrysler	N.D.	2889 827	7.31	4.39	3.73	
1967 Valiant, Barracuda, Dart, Belvedere, Coronet & Charger	N.D.	2771 983	5.95	3.57	3.01	

Mopar

ANTENNAS

Description	Price Sym.	Part Number	List	Dealer Each
ANTENNA PACKAGE - MOTORIZED				
1974 Chrysler & Imperial	N.D.	3501 336	30.54	21.38
ANTENNA PACKAGE - TRUCK				
1970-4 B100-200-300	N.D.	2958 849	7.45	4.47
1972-4 D & W100-200-300	N.D.	3621 892	7.45	4.47
1974 D & W500-600-800	N.D.	3837 147	7.45	4.47
Universal	N.D.	3838 093	4.95	2.97

LOCKING FUEL TANK CAPS

Description	Price Sym.	Part Number	List	Dealer Each	Wholesale Allowance
* CAP-FUEL TANK LOCKING					
VALIANT & DART					
1972-4 All 1971 All Late Prod. Models	A3	3583 547	6.35	3.81	.37
BARRACUDA					
1972-3 All	A3	3583 561	6.35	3.81	.37
SATELLITE, CORONET & CHARGER					
1973-4	A3	3583 561	6.35	3.81	.37
1971-2 1970 California Sedans	A3	3404 651	6.35	3.81	.37
FURY, GRAN, POLARA, MONACO, CHRYSLER & IMPERIAL					
1973-4 All 1972 (Exc. Station Wagon) 1971 (Exc. Station Wagon) Late Prod. Models	A3	3583 561	6.35	3.81	.37
1971-2 Station Wagon 1971 (Exc. Station Wagon) Early Prod. Models 1970 California Only	A3	3404 651	6.35	3.81	.37
1969-70 Valiant & Dart	A3	2823 888	5.25	3.15	.37
1969 Barracuda 1969-70 Charger	A3	2925 881	5.25	3.15	.37
1970 Challenger w/Hinge Type Cover Exc. California	A3	3404 683	6.35	3.81	.37
1968-70 Belvedere, Satellite, Coronet, Fury, Polara, Monaco, Chrysler & Imperial (Exc. Station Wagon)	A3	2534 323	5.25	3.15	.37
1961-68 Dodge Truck	A3	2158 315	5.25	3.15	.37
1972-3 Dodge Truck B, D & W100-200-300	A3	3744 501	6.75	4.05	.40

Mopar

NOTES

CLOCKS

	Description	Price Sym.	Part Number	List	Dealer Each
CLOCK - ELECTRIC					
1970-4	Barracuda & Challenger (Exc. Rallye)	N.D.	2984 951	-	14.40
1972-4	Satellite, Coronet & Coronet Custom	N.D.	2985 416	-	14.40
1974	Fury I, II & III, Suburban & Custom Suburban	N.D.	3592 701		14.40
1974	Newport	N.D.	3592 702		15.15
1974	Monaco, Fury Gran Coupe & Sedan & Sport Suburban ..... Digital	N.D.	3592 6.6		30.90
1974	New Yorker, Town & Country..... Digital	N.D.	3592 698		30.90
1972-3	Fury, Polara, Monaco	N.D.	3592 096	-	12.75
1971-3	Chrysler	N.D.	3592 151	-	14.20

Mopar

Description	Price Sym.	Part Number	List	Dealer Each	Wholesale Allowance
DEFLECTOR PACKAGE - STATION WAGON - REAR WINDOW					
*Roof Type - 1971-4 Satellite & Coronet	N.D.	3579 672	22.75	13.65	
ENGINE BLOCK HEATER					
1968-74 Chrysler Built Passenger Cars & Trucks Also Adaptable to Other Makes	A3	3780 741	11.42	6.85	.34
FIRE EXTINGUISHER (DRY CHEMICAL)					
Automotive, Marine & Household use					
Weight / Height / Dia. / Capacity: 2 lb. 13 oz. / 12-1/2" / 3" / 950 Grams	N.D.	3419 439	-	4.96	
FRAME PACKAGE - LICENSE TRIM					
1967-74 All Chrysler Built Passenger Cars	N.D.	2768 643	4.25	2.44	
GRIP RAIL PACKAGE - SWEPT LINE MODELS					
D & W100-200 With 8 Ft. Box Also Adaptable to 6 ft. Box	N.D.	3734 470	49.95	32.46	
FUEL PACER PACKAGE - UNIVERSAL					
#1974 Passenger Cars	N.D.	3740 920	21.75	16.30	

*Price Revision
#New Part

BUMPER GUARDS

	Description	Price Sym.	Part Number	List	Dealer Each
GUARD PACKAGE - BUMPER					
FRONT					
1970-2	Dart	N.D.	3481 805	15.75	9.07
1970-2	Challenger	N.D.	3481 807	13.19	7.58
1971-2	Satellite 4 Door Sedan & Station Wagon	N.D.	3620 328	16.61	9.45
1971-2	Coronet 4 Door Sedan & Station Wagon	N.D.	3620 332	16.61	9.45
1971-2	Charger	N.D.	3620 331	16.61	9.45
1971	Chrysler - All	N.D.	3620 337	18.15	10.36
1969	Fury & Sport Fury	N.D.	2933 651	17.94	10.19
*1971-4	Dodge Truck B100-200-300 Vans	N.D.	3621 996	26.95	17.51
*1972-4	Dodge Truck D & W100-200-300 Pick-up	N.D.	3621 995	26.95	17.51
REAR					
1971-2	Charger	N.D.	3620 333	16.61	9.45
1971	Fury (Exc. Sport Fury & Station Wagon)	N.D.	3620 335	17.94	10.19
1971	Polara & Monaco (Exc. Station Wagon)	N.D.	3620 336	17.94	10.19
1969	Fury & Sport Fury (Exc. Station Wagon)	N.D.	2933 652	17.94	10.19

Mopar

Description	Price Sym.	Part Number	List	Dealer Each	Wholesale Allowance
*GUARD - SPLASH - PAIR					
Passenger Cars . . . . . Black	A3	3579 660	3.10	1.86	.28
Passenger Cars . . . . . White	A3	3837 972	3.95	2.37	.35
Trucks - Pick Up & Van . . . . . Black	N.D.	3685 553	5.26	3.16	
Trucks - Pick Up & Van . . . . . White	A3	3837 973	6.35	3.81	.57
AUXILIARY HEATER - REAR COMPARTMENT					
1970-4 Dodge Truck - B100-200-300 Vans . . . . . Also Specify 1-3579 173 Shutoff (w/A/C Only)	N.D.	3489 928	-	79.55	
HOOD LOCK PACKAGE					
1970-74 Dodge Truck B100-200-300		3837 976	10.67	6.40	
HORN PACKAGE - CITY - COUNTRY					
New York City Approved					
1974 Passenger Cars	N.D.	3746 824	15.25	9.15	
1974 Dodge Trucks	N.D.	3738 247	15.25	9.15	

REAR WINDOW DEFOGGERS

Description	Price Sym.	Part Number	List	Dealer Each
REPAIR PACKAGE - REAR WINDOW DEFOGGER ELECTRIC GRID				
*1973-4 Valiant & Dart w/Electric Rear Window Defogger	N.D.	3744 970	13.15	7.89

Mopar

Description	Price Sym.	Part Number	List	Dealer Each	Wholesale Allowance
LIGHTER PACKAGE - CIGAR					
1969-74 Valiant & Dart 1972-4 Barracuda, Challenger, Satellite & Coronet	N.D.	2947 219	4.50	2.70	
1968-74 L.C.F. Models	N.D.	2906 125	4.81	2.88	
1970-1 Conv. & Crew Cab 1972-4 Med. & Heavy Duty Conv. Cabs	N.D.	2906 782	4.81	2.88	
1970-4 B-100-200-300 Vans	N.D.	2958 783	5.08	3.05	
1972-4 D & W 100-200-300	N.D.	3635 355	5.08	3.05	

Description	Price Sym.	Part Number	List	Dealer Each	Wholesale Allowance
MATTRESS - STATION WAGON					
1968-74 Universal 84" x 45" x 3-1/2" (Exc. Colt & Cricket)	N.D.	3419 383	42.66	30.81	
MIRROR - OUTSIDE REAR VIEW					
All Models					
Universal Type (Large Base)	A3	3579 571	7.40	4.44	.44
*1966 Chrysler Built Passenger Cars (Exc. New Yorker & Imperial)	A3	2802 254	5.75	3.45	.33
MIRROR PACKAGE - TRAILER TOWING					
Universal Type 5-1/2 x 7-1/2" Chrome Head, Fender Mtg., Right or Left	A3	2933 961	13.69	8.22	.84
MIRROR - VANITY					
All Makes & Models	N.D.	3419 105	2.08	1.25	-
MOULDING KIT - VINYL TOP TRIM					
All Models Black Only	A1	2933 488	21.59	13.46	2.05
PAINT STRIPING TOOL	N.D.	2933 491	-	2.67	
STRIPING PACKAGES - Black					
1-2 1/2" x 40' Roll Custom Prealigned	A2	3685 554	10.91	7.09	.37
1-1 1/4" x 80' Roll Triple Custom Prealigned	A2	3685 555	10.91	7.09	.37
6" Kit Strobe Stripes	A2	3685 556	7.21	4.69	.34
3" Kit Strobe Stripes	A2	3685 557	3.99	2.59	.12

Mopar

Description	Price Sym.	Part Number	List	Dealer Each	Wholesale Allowance
MOULDING - EXTERIOR SIDE					
Chrome - Black Stripe - 28' Roll w/4 Bullet Ends	A1	3685 584	27.05	17.86	1.84
Black - Red Stripe - 38' Roll	A1	3549 672	27.53	18.17	1.91
Black - White Stripe - 38' Roll	A1	3549 673	27.53	18.17	1.91
Chrome - Dk.Blue Stripe - 28' Roll w/4 Bullet Ends	A1	3685 592	27.05	17.86	1.84
Chrome - White Stripe - 28' Roll w/4 Bullet Ends	A1	3685 591	27.05	17.86	1.84
Chrome - Dk. Green Stripe - 28' Roll w/4 Bullet Ends	A1	3685 593	27.05	17.86	1.84
Chrome - Dk. Brown Stripe - 28' Roll w/4 Bullet Ends	A1	3685 594	27.05	17.86	1.84
OIL FILLER & INDICATOR PACKAGE					
1970-72 M300-M375-M400 Motor Home Chassis w/318 Engine	N.D.	3744 798	24.15	15.68	
1970-72 M300-M375-M400 Motor Home Chassis w/413 Engine	N.D.	3744 799	27.29	17.73	
• **PROTECTOR - DOOR EDGE - VINYL**					
Chrome	A3	3683 403	3.10	1.86	.09

*Price Revision

ALL PRICES AND SPECIFICATIONS ARE SUBJECT TO CHANGE WITHOUT NOTICE

Description	Price Sym.	Part Number	List	Dealer Each	Wholesale Allowance
REGULATOR & FILTER - FUEL PRESSURE					
(Mileage Saver)					
For most cars with 5/16" Fuel Lines	A3	2240 633	9.17	5.51	.55
SEAT - CHILD'S CAR					
1966 and Later Models with Seat Belts	N.D.	3744 976	24.95	18.70	
CARRIER-INFANT SAFETY					
1966 and Later Models with Seat Belts	N.D.	3744 975	14.40	9.38	
SWITCH - ELECTRIC WINDOW LIFT OR TAILGATE SAFETY					
1967-74 All Cars with Electric Windows	N.D.	2932 687	2.30	1.37	
TACHOMETER PACKAGE - UNIVERSAL					
All 6 & 8 Cyl. with 12 Volt Ignition					
(Full Sweep) Steering Column or Instrument Panel Mtg.	N.D.	3514 430	47.79	31.50	
(Hood Mounted)	N.D.	3420 740	62.41	40.58	
#TOP PACKAGE - CONVERTIBLE					
1974 Trail Duster & Ram Charger					
White - Prior to Serial #AAOAE 4X115173	N.D.	3879 395	215.00	161.25	
Black - Prior to Serial #AAOAE 4X115173	N.D.	3879 396	215.00	161.25	
White - After Serial #AAOAE 4X115173	N.D.	3879 676	215.00	161.25	
Black - After Serial #AAOAE 4X115173	N.D.	3879 677	215.00	161.25	
SEAT PACKAGE - CLUB CAB JUMP					
Includes All Attaching Parts					
1973 Dodge Truck Club Cab ..... Black	N.D.	3837 849		20.35	
Beige	N.D.	3837 850		20.35	
STEP PACKAGE - AUTOMATIC					
1972-4 Dodge Truck D & W 100-200-300	N.D.	3837 722	15.20	9.88	

#New Part

Mopar

Description	Price Sym.	Part Number	List	No. 1 Net Each	No. 2 Net Each
TRAILER TOW BAR KITS & COVER					10 or More Assorted Prepaid Elkhart, Indiana
1974 Satellite, Coronet & Charger - 2 Door & H.T. ..	N.D.	3837 661	79.95	63.96	60.76
1974 Satellite & Coronet - 4 Door Sedan & H.T.	N.D.	3837 660	79.95	63.96	60.76
1974 Satellite & Coronet Sta. Wag.	N.D.	3837 659	79.95	63.96	60.76
1974 Fury, Monaco, Chrysler & Imperial Sedans & H.T.	N.D.	3837 658	79.95	63.96	60.76
1974 Fury, Monaco & Chrysler - Sta. Wag.	N.D.	3837 657	79.95	63.96	60.76
1969-73 Fury, Gran, Polara, Monaco & Chrysler Sedans	N.D.	3744 902	79.95	63.96	60.76
1969-73 Fury, Gran, Polara, Monaco & Chrysler Sta. Wag.....	N.D.	3744 903	79.95	63.96	60.76
1971-3 Satellite, Coronet & Charger Sedans	N.D.	3744 904	79.95	63.96	60.76
1971-3 Satellite & Coronet Sta. Wag.	N.D.	3744 905	79.95	63.96	60.76
1972-3 Dodge Truck D100-200 with 131" & 149" Wheel Base	N.D.	3744 906	79.95	63.96	60.76
Box Cover Kit - All	N.D.	3744 907	5.45	4.25	

CAR CARE MATERIALS

Description	Carton Qty.	Price Sym.	Part Number	List	Net Each	Wholesale Allowance
ADDITIVES						
Combustion Chamber Conditioner . . . . . 15 Oz.	24	A3	3419 126	1.74	1.05	.05
Aerosol 20 Oz.	12	A3	2933 500	2.49	1.49	.08
*Crankcase Conditioner . . . . . 15 Oz.	24	A3	3419 130	1.85	1.11	.05
*Fuel Detergent . . . . . 6 Oz.	24	A3	3419 127	.70	.42	.02
*Engine Oil Supplement . . . . . Quart	24	A3	3419 131	2.25	1.35	.08
Gum & Sludge Remover . . . . . Quart	12	A3	3419 133	3.41	2.04	.12
Super Oil Saver . . . . . 15 Oz.	24	A3	3837 188	1.79	1.07	.17
HI-PERFORMANCE LUBRICANTS						
Man. Trans. Fluid . . . . . Quart	12	A3	2809 863	2.01	1.21	.06
Rear Axle . . . . . Quart	12	A3	2809 864	2.01	1.21	.06
Motor Oil . . . . . Quart	12	A3	2809 865	1.56	.93	.05
Auto. Trans. Fluid . . . . . Quart	12	A3	2809 866	1.68	1.01	.05
ADHESIVE - AUTO GLASS						
Pint Can	24	A3	2298 825	2.54	1.52	.17
ADHESIVE - SILICONE RUBBER . . . . . 2 Oz. Tube	12	A3	3683 829	1.95	1.16	.11
ADHESIVE - VINYL . . . . . 1 Oz. Tube		A3	3549 956	.58	.35	.02
BELT EASE . . . . . Aerosol 5-1/2 Oz.	12	A1	3419 497	1.73	1.14	.13
CAR WASH LIQUID & POWDER						
Liquid w/Wax . . . . . 16 Oz.	24	A3	2585 619	1.45	.87	.08
Powder . . . . . 15 Lb. Pail	1	A2	2421 797	20.42	13.28	.58

*Price Change

ALL PRICES AND SPECIFICATIONS ARE SUBJECT TO CHANGE WITHOUT NOTICE

Mopar

CAR CARE MATERIALS

Description	Carton Qty.	Price Sym.	Part Number	List	Net Each	Wholesale Allowance
CEMENT - ALTERNATOR ..... 5 Oz.	36	A3	2299 314	1.50	.90	.10
CLEANERS						
ENGINE (Spray Can) ..... 16 Oz.	12	A1	3419 148	2.14	1.44	.08
5 Gallon	1	A1	3419 149	24.69	16.46	.66
30 Gallon	1	A1	3419 150	121.93	81.21	3.19
GLASS ..... 24 Oz.	24	A3	3514 198	1.41	.85	.05
LEATHER & VINYL ..... 16 Oz.	12	A1	2421 788	1.91	1.26	.24
PART IMMERSION - 4 Gal. w/Basket	1	A3	3419 146	43.45	26.08	2.62
5 Gallon Refill	1	A3	3419 147	43.45	26.08	2.62
SPOT REMOVER & FABRIC ..... 16 Oz.	24	A1	2421 785	1.48	.98	.20
Gallon	4	A1	2421 786	8.31	5.56	1.16
VINYL TOP ..... 8 Oz.	12	A3	2932 280	2.71	1.63	.17
Gallon	6	A3	3837 107	14.87	8.93	.91
KAR KLEEN ..... 12 Oz.	12	A3	2809 926	1.45	.87	.05
DOOR EASE PACKAGE						
Part Number consists of Display Pkg. containing 6 sticks (shop size)	12	A1	2240 248	6.60	3.56	.39
Dressing - Vinyl Top ..... 8 Oz.	12	A3	3514 191	3.23	1.94	.19
FLUIDS						
* BRAKES ..... 12 Oz.	24	A1	2933 249	2.18	1.09	.19
Quart	12	A1	2933 250	5.37	2.69	.41
Gallon	6	A1	2933 251	19.37	9.69	1.46
5 Gallon	1	A1	2933 252	92.49	46.25	6.94
POWER STEERING ..... Quart	12	A3	2084 329	1.26	.75	.01
TRANSMISSION - AUTO ..... Pint	24	A3	3549 659	.37	.22	-
Quart	24	A3	3549 660	1.19	.71	-
Gallon	6	A1	3549 661	4.67	2.80	-
16 Gallon	1	A1	3549 662	76.53	44.16	.42
55 Gallon	1	A1	3549 663	278.00	151.80	2.82

CAR CARE MATERIALS

Description	Carton Qty.	Price Sym.	Part Number	List	Net Each	Wholesale Allowance
LUBRICANTS						
DISTRIBUTOR CAM . . . . . 4 Oz.	36	A3	1473 595	1.85	1.11	.10
GEAR . . . . SAE #80 . . . . . Quart	24	A3	2933 565	1.22	.73	.01
SAE #90 . . . . . Quart	24	A3	3744 994	1.69	1.01	.01
SAE #90 . . . . . 120 Lb. Drum	1	A3	3744 995	89.94	53.96	.03
*HEAT CONTROL VALVE SOLVENT . . . . . 8 Oz.	12	A3	3419 128	1.60	.96	.15
Aerosol 12 Oz.	12	A3	3419 129	2.20	1.32	.15
LOCK EASE . . . . . 4 Oz.	72	A1	2240 363	1.06	.69	.08
MULTI-MILEAGE . . . . . 14-1/2 Oz. Cartridge	50	A3	2525 035	1.38	.83	.16
35 Lb. Pail	1	A3	3744 275	45.36	27.21	2.58
MULTI-PURPOSE GREASE . . . . . 14 Oz. Cartridge	28	A3	2932 524	1.51	.91	.07
SPEEDOMETER CABLE . . . . . 6 Oz.	12	A3	1243 632	1.01	.60	.08
SURE GRIP . . . . . Quart	24	A3	2585 318	1.75	1.05	.01
SYL-GLYDE - PASTE . . . . . 4 Oz.	36	A1	1881 923	2.74	1.67	.17
FLUID-AEROSOL . . . . . 16 Oz.	36	A3	1881 924	3.95	2.37	.27
WATER PUMP . . . . . 2 Oz.	24	N.D.	2298 997	1.80	1.20	
LUBRI PLATE						
Display Included w/Carton of 12 Must Order in Multiples of 12	12	A3	3744 859	.70	.42	.03
POLISHES & WAX						
AUTOMOBILE . . . . . 16 Oz.	24	A1	2421 791	1.17	.77	.16
Gallon	4	A1	2448 767	6.38	4.26	.88
CHROME . . . . . 16 Oz.	24	A1	2525 429	1.17	.77	.14
ONE STEP . . . . . Gallon	4	A3	2809 928	15.60	9.35	.44
SUPER GLAZE . . . . . 6 Oz.	24	A3	2421 795	2.30	1.38	.04
POLISHING CLOTHS						
WAX TREATED	12	A3	1316 224	1.17	.70	.06
REMOVERS						
FROST & ICE . . . . . 16 Oz.	12	A2	2525 006	1.53	.99	.09
RUST . . . . . 12 Oz.	24	A3	3419 114	2.84	1.69	.18
TAR & ROAD OIL . . . . . 16 Oz.	24	A1	2421 776	1.17	.77	.15
Gallon	4	A1	2421 777	6.73	4.52	.93

CAR CARE MATERIALS

Description	Carton Qty.	Price Sym.	Part Number	List	Net Each	Wholesale Allowance
RUST PENETRANT (Spray Can) . . . . . 16 Oz.	12	A1	2421 775	1.74	1.15	.21
RUST RESISTOR - COOLING SYSTEM . . . . . 16 Oz.	24	A1	2421 778	.92	.62	.14
#RUST PROOFING MATERIAL . . . . . 16 Gal Drum	1	N.D.	3530 000	-	95.20	
RUGLYDE (Clear Type) . . . . . Gallon	4	A1	2084 326	4.95	2.67	.15
SEALING COMPOUND						
Aerosol . . . . . 15 Oz.	24	A3	3419 115	2.98	1.79	.13
SEALER-TRANSMISSION . . . . . 6 Oz.	24	A3	2298 923	1.92	1.15	.03
SOLDER PKG. - PLASTIC BODY FILLER						
With Blue Creme Hardener - White . . . . . Quart	12	A3	3621 440	4.50	2.70	.27
Gallon	4	A3	3621 441	14.60	8.76	.88
HARDENER - PLASTIC SOLDER CREME - BLUE						
Tube . . . . . 1 Oz.	12	A3	3621 442	.88	.53	.07
Tube . . . . . 4 Oz.	12	A3	3621 443	2.47	1.48	.27
SOLVENT - WINDSHIELD WASHER . . . . . 16 Oz.	24	A4	2421 783	.98	.59	.07
32 Oz.	24	A3	2421 784	1.50	.90	.10
STOP LEAK						
Stop Leak Nugget Pkg. . . . . (Free display with carton of 24)	24	A3	3419 423	1.45	.87	.22

#New Part

ALL PRICES AND SPECIFICATIONS ARE SUBJECT TO CHANGE WITHOUT NOTICE

RECONDITIONING MATERIAL

Description	Minimum Sales Qty.	Price Sym.	Part Number	List	Dealer Each	Wholesale Allowance
USED CAR AND TRUCK CONDITIONING MATERIALS						
Upholstery Tint - Gray ..... Quart	12	A3	1653 395	3.69	2.21	.01
Brown ..... Pint	12	A3	3419 963	4.95	2.97	.05
Green ..... Pint	12	A3	3419 965	4.95	2.97	.05
Black ..... Pint	12	A3	3419 970	4.95	2.97	.05
Turquoise ..... Pint	12	A3	3419 971	4.95	2.97	.05
Blue ..... Pint	12	A3	3419 972	4.95	2.97	.05
Aqua ..... Pint	12	A3	3419 975	4.95	2.97	.05
Dark Red ..... Pint	12	A3	3419 978	4.95	2.97	.05
Multi-Purpose Dye & Dressing - Med. Green ..... Quart	12	A3	1653 408	4.21	2.53	.07
Blue ..... Quart	12	A3	1879 717	4.21	2.53	.07
Red ..... Quart	12	A3	1879 719	4.21	2.53	.07
White ..... Quart	12	A3	1879 720	4.21	2.53	.07
Turquoise ..... Quart	12	A3	2298 524	4.21	2.53	.07
Black ..... Gallon	4	A1	2298 525	9.70	6.47	.32
Orange ..... Quart	12	A3	3683 918	4.21	2.53	.07
Headliner Tint - Blue ..... Quart	12	A3	1653 398	6.57	3.95	.18
White ..... Quart	12	A3	1879 728	6.57	3.95	.18
Black ..... Quart	12	A3	1879 730	6.57	3.95	.18
Red ..... Quart	12	A3	2298 527	6.57	3.95	.18
Leather & Vinyl Dye -						
White ..... Quart	12	A3	1603 345	6.57	3.95	.18
Blue ..... Quart	12	A3	1603 346	6.57	3.95	.18
Yellow ..... Quart	12	A3	1879 727	6.57	3.95	.18
Brown ..... Quart	12	A3	2298 530	6.57	3.95	.18
Nylon Dye - White ..... Quart	12	A3	1653 402	6.57	3.95	.18
Red ..... Quart	12	A3	1653 403	6.57	3.95	.18
Blue ..... Quart	12	A3	1653 404	6.57	3.95	.18
Green ..... Quart	12	A3	1653 405	6.57	3.95	.18
Black ..... Quart	12	A3	1653 406	6.57	3.95	.18
Upholstery Cleaner ..... Gallon	6	A3	1316 182	6.27	3.76	.07
Multi-Purpose Cleaner ..... 5 Gallon	1	A1	2298 532	21.37	14.23	.71
Overspray Remover ..... Pint	12	A3	2448 756	2.40	1.44	.10
Gallon	6	A3	2421 089	10.95	6.57	.14
Revive A-Color ..... Gallon	4	A3	2421 097	10.95	6.57	.14
Silver Engine Paint ..... Quart	12	A3	2298 526	4.95	2.97	.05
Gold Engine Paint ..... Quart	12	A3	2421 098	5.15	3.09	.08
Splatter Paint-Gray & White ..... Gallon	4	A3	2585 330	21.95	13.17	.26

ACCESSORIES PRICE LIST



NOTES

WINTER ANTI FREEZE-SUMMER COOLANT

PERMANENT TYPE	Price Sym.	Part Number	List	Net Each	MINIMUM SALES QUANTITY CASE Qty.	MINIMUM SALES QUANTITY CASE Weight
1 Quart (24 Quarts to case)	N.D.	2932 530	1.39	.97	24	63 Lbs.
1 Gallon (6 Gal. to Case)	N.D.	2932 531	5.28	3.75	6	62 Lbs.
1 Drum (55 Gallons)	N.D.	2932 532	----	178.61	1	562 Lbs.

Direct all orders to the Parts Depot serving your locality.

ORDERS CANNOT BE ACCEPTED FOR LESS THAN CASE OR DRUM QUANTITIES.

IMPORTANT PRICES SHOWN SUPERSEDE THOSE IN MASTER PARTS PRICE LIST 81-690-0774 DATED JUNE 3, 1974. PLEASE MARK YOUR RECORDS ACCORDINGLY.

Mopar

NOTES

AIR CONDITIONING

(DAYTON, OHIO)

ORDERING INFORMATION

DEPOT SHIPMENTS
NO. 1 NET

The No. 1 Net Price applies to indicated quantity of each A/C Basic Unit, A/C Adapter Package and/or Condenser Package when ordered for shipment from Parts Depot. Transportation will be Prepaid when qualified, as provided for in Schedule of Discounts and Terms of Purchase.

NO. 2 NET

The No. 2 Net Price applies to Single Orders for 3 to 9 Assorted A/C Basic Units or A/C Adapter and/or Condenser Packages. Such orders will be shipped Transportation Prepaid. Any Quantity of A/C Adapter or Condenser Packages ordered with a qualifying shipment of A/C Basic Units will be billed at the No. 2 Net Price, Transportation Prepaid. Destinations Alaska or Hawaii will be prepaid to port of exit only.

DIRECT SHIPMENT
NO. 3 NET

The No. 3 Net Price applies to Single Orders for Ten (10) or More Assorted A/C Basic Units or Ten (10) or More Assorted A/C Adapter and/or Condenser Packages indicated for Direct Shipment. Such orders will be shipped Transportation Prepaid. Any quantity of Adapter or Condenser Packages included in the qualifying A/C. Basic Unit Order will be billed at the No. 3 Net Price and shipped Transportation Prepaid. Destinations in Alaska or Hawaii will be Prepaid to port of exit only.

NOTE : A/C BASIC UNITS, A/C ADAPTER PACKAGES AND CONDENSER PACKAGES CANNOT BE COMBINED TO QUALIFY FOR QUANTITY PRICES.

Direct all orders to the Parts Depot serving your locality.

Orders qualifying for Direct Shipment must be separate orders and plainly marked "Direct Shipment" in the Ship VIA Space on the Parts Order form.

Shipment will be made to the ordering accounts principal place of business only.

Mopar

AIR CONDITIONING (AIRTEMP)

Description	Price Sym.	Part Number	List	No. 1 Net Each	No. 2 Net Each	No. 3 Net Each
				Depot Ship	3 to 9 Depot Ship	10 or More Assorted Prepaid Dayton, Ohio
AIR CONDITIONING UNITS						
BASIC UNITS						
1973-70 Fury, Monaco & Chrysler - Hang On . . .	N.D.	2027 820	170.12	136.11	129.37	120.03
Note: To Convert to a Custom Unit Specify (2) 2027 821 Spot Coolers						
1974-70 Valiant, Dart, Barracuda & Challenger - Hang-On	N.D.	2027 816	124.80	99.81	94.63	87.89
				Depot Ship	3 to 9 Assorted Depot Ship	10 or More Assorted Prepaid Dayton, Ohio
SPOT COOLER ADAPTER PACKAGE	N.D.	2027 821	11.04	8.81	8.30	7.78
ADAPTER PACKAGES - ABOVE BASICS						
1974-70 6 Cyl. 198-225 C.I.D.	N.D.	2027 817	72.28	57.81	54.70	51.07
1974-72 6 Cyl. 198-225 C.I.D. (Calif. Only) Note	N.D.	2027 823	88.45	70.75	66.95	62.50
1974-70 8 Cyl. 318-340-360 C.I.D.	N.D.	2027 818	72.28	57.81	54.70	51.07
1973 8 Cyl. 400-440 C.I.D.	N.D.	2027 825	72.28	57.81	54.70	51.07
1972 8 Cyl. 400-440 C.I.D. (Calif. Only) Note	N.D.	2027 824	88.45	70.75	66.95	62.50
CONDENSER PACKAGES						
1973-70 Fury, Monaco & Chrysler	N.D.	2027 814	29.81	23.85	22.81	21.78
1974-70 Valiant, Dart, Barracuda & Challenger . . .	N.D.	2027 787	29.81	23.85	22.81	21.78
				Dealer Each	Wholesale Allowance	
Note: For Calif. Usage, Specify the Following Parts.						
*1 - Belt	A1	2658 379	4.66	2.62	.55	
*1 - Bracket	B2	3698 952	1.88	1.22		
*2 - Nut & Washer	B3	6025 020	.50	.30		

RADIOS

Description	Price Sym.	Part Number	Depot No. 1 Net Each	Direct Shipment No. 2 Net Each	Quantity For Direct Shipment
RADIO - LESS ANTENNA				Direct Shipment Shipping Point Center Line, Michigan	
BARRACUDA & CHALLENGER					
*1970-4 AM ..... Note 1 ...	N.D.	2884 853	41.47	36.30	
1970-4 AM-FM Stereo ..... Note 1 ...	N.D.	3501 626	157.40	136.95	
FURY, MONACO, CHRYSLER & IMPERIAL					
1974 AM ..... Note 1 ...	N.D.	3501 338	41.74	36.30	
*1974 AM-FM ..... Note 1 ...	N.D.	3501 339	96.68	84.11	
1974 AM-FM Stereo w/Tape Player .... Note 1 ...	N.D.	3501 340	274.65	238.95	
See Previous Page For Additional Radios For Fury, Monaco, Chrysler and Imperial					
Note 1: See Page 26 For Instrument Panel Bezel Required For Specified Radio.					
The following Past Model Radios may be added to a qualifying order at the No. 2 Net but will not help qualify on order.					
CHRYSLER					
1971-73 Chrysler AM-FM Search Tuner .... Note 1 ...	N.D.	3501 134	133.20	115.88	
1970-73 Chrysler AM-FM ..... Note 1 ...	N.D.	3420 560	110.96	95.76	
1973 Med. & Hvy. Duty Conv. Cab					
1970-73 Conv. & Crew Cab	N.D.	3489 160	49.38	42.96	
1970-72 Valiant & Dart (Exc. 1970 Duster "340" & Swinger "340") AM-2 Watt. Note 1 ...	N.D.	2884 854	41.74	36.30	
1970-72 Valiant & Dart (Exc. 1970 Duster "340" & Swinger "340") AM-FM ... Note 1 ...	N.D.	3501 565	94.68	82.39	

Mopar

IMPORT RADIOS & ANTENNAS

Description	Price Sym.	Part Number	List	Dealer Each
RADIO AND ANTENNA PACKAGE				
Simca S 1000 and S 1118 Models	N.D.	S 48136	54.96	38.01
Simca S 1204 Models	N.D.	S 48190	62.22	46.67
1968 and Prior Sunbeams All Models	N.D.	XR 80001	54.96	38.01
1969-71 Sunbeam Arrow and Alpine	N.D.	XR 80003	59.01	43.87
RADIOS LESS ANTENNA				
* 1971-3 Colt Station Wagon	N.D.	MA 158353	62.55	46.50
* 1971-3 Colt Hardtop & Sedan	N.D.	MA 158354	62.55	46.50
ANTENNA PACKAGE				
1971-4 Colt Station Wagon (Not Required for Others)	N.D.	MA 158356	7.31	4.39
1971-3 Cricket	N.D.	X 3621 614	7.10	4.26
Simca S 1204 Models	Z	S 36836	7.10	4.26

ANTENNAS

Description	Price Sym.	Part Number	List	Dealer Each	Wholesale Allowance
ANTENNAS					
BODY & CABLE PACKAGE					
1974 Valiant, Dart, Barracuda, Challenger, Satellite, Coronet & Charger	N.D.	3501 334	4.90	2.94	
1974 Fury, Monaco & Chrysler	N.D.	3501 335	4.90	2.94	
MAST ASSEMBLY					
* All Models w/2 Piece Antenna	A3	3513 745	3.80	2.28	.31
UNIVERSAL - COMPLETE					
Passenger Car and Truck Application - Fender Mtg.	N.D.	3838 093	4.77	2.86	

Description	Price Sym.	Part Number	List	Depot No. 1 Net Each	Direct Shipment No. 2 Net Each	Quantity For Direct Shipment
ANTENNA PACKAGE - MANUAL						
1970-3 Barracuda & Challenger	N.D.	2983 171	7.31	4.39	3.73	48 or More Assorted in Multiples of 6 of a Part Number Prepaid Center Line, Michigan
1969-73 Valiant & Dart						
1969-70 Belvedere, Satellite, Coronet & Charger	N.D.	2889 826	7.31	4.39	3.73	
1971-3 Satellite, Coronet & Charger	N.D.	3513 033	7.31	4.39	3.73	
1972-3 Fury, Gran, Polara, Monaco & Chrysler	N.D.	3588 365	10.26	6.15	5.23	
1969-71 Fury, Polara, Monaco & Chrysler	N.D.	2926 691	7.31	4.39	3.73	
*1967-8 Fury, Polara, Monaco & Chrysler	N.D.	2889 827	7.31	4.39	3.73	
*1967 Valiant, Barracuda, Dart, Belvedere, Coronet & Charger	N.D.	2771 983	5.95	3.57	3.01	

ANTENNAS

Description	Price Sym.	Part Number	List	Dealer Each
ANTENNA PACKAGE - MOTORIZED				
1974 Chrysler & Imperial	N.D.	3501 336	30.54	21.38
1973 Chrysler**	N.D.	3679 819	29.74	20.82
* **Also Requires Map & Pwr. Ant. Switch Assy.	B2	3488 132	11.08	7.21
ANTENNA PACKAGE - TRUCK				
1970-4 B100-200-300	N.D.	2958 849	6.90	4.14
1972-4 D & W100-200-300	N.D.	3621 892	7.21	4.32
1974 D & W500-600-800	N.D.	3837 147	7.21	4.32
1972-3 Conv. Cab - Med. & Heavy Duty 1968-73 L.C.F. 1969-71 Conv. & Crew Cab	N.D.	3420 737	6.90	4.14

SPEAKER PACKAGES

	Description	Price Sym.	Part Number	Dealer Each
CUSTOMIZED SPEAKER PACKAGES				
1974	Valiant & Dart			
1974	Barracuda & Challenger - Rear Compt.	N.D.	3501 358	10.80
1971-4	Satellite, Coronet & Charger (Exc. Sta. Wag.) Rear Compt.	N.D.	3488 423	10.80
1971-4	Satellite & Coronet Sta. Wag. - Rear Compt.	N.D.	3488 424	10.80
1974	Fury, Monaco & Chrysler Sedans - Rear Compt.	N.D.	3501 359	14.05
1974	Fury, Monaco & Chrysler Sedans - Rear Compt. & Inst. Panel - 4 Speakers - Note 1	N.D.	3501 349	23.50
1974	Fury, Monaco & Chrysler Sta. Wag. - Inst. Panel - 4 Speakers - Note 2	N.D.	3501 363	36.25
1970-3	Barracuda & Challenger (Exc. Rallye)	N.D.	3501 182	10.80
1970-3	Barracuda & Challenger Rallye	N.D.	3501 183	10.80
1972-3	Fury, Gran, Polara & Monaco (Exc. Sta. Wag.)	N.D.	3501 555	10.80
1972-3	Fury, Gran, Polara & Monaco Sta. Wag.	N.D.	3501 556	10.80
1969-73	Chrysler (Exc. Sta. Wag.)	N.D.	2947 223	14.05
1970-3	Chrysler Sta. Wag.	N.D.	2947 883	14.05
1969-71	Fury, Polara & Monaco (Exc. Sta. Wag.)	N.D.	2947 220	10.68
1970-1	Fury, Polara & Monaco Sta. Wag.	N.D.	2947 882	10.68
1968-70	Valiant See Note			
1970	Dart Swinger "340"			
1968-9	Barracuda			
1968-70	Dart (Exc. Swinger "340")	N.D.	2864 332	9.87
1969-70	Belvedere, Satellite, Coronet & Charger	N.D.	2947 234	9.87

(1) For production-type installation, use new Instrument Panel Cover, No. 3590 386; and use one of the following new Rear Shelf Panels:

FURY & MONACO		CHRYSLER	
4 Door H.T.	No. H102KX9	2 Doors & 4 Door H.T.	No. H100KX9
4 Door Sedan	No. H126KX9	4 Door Sedan	No. H130KX9
2 Doors	No. H132KX9		

(2) For production-type installation, use new Instrument Panel Cover, No. 3590 386.

Mopar

1974 RADIO BEZELS

Description	Price Sym.	Part Number	Dealer Each
*RADIO BEZELS			
A Bezel is Required when Installing 1974 Radios			
BEZEL (Use with Radios 3501 582 & 3501 583)			
Valiant & Dart - All (Std. Black)	N.D.	2884 817	1.44
Valiant & Dart - All (Woodgrain)	B3	3501 602	9.85
BEZEL (Use with Radios 2884 853 & 3501 626)			
Barracuda & Challenger - All	N.D.	2884 880	1.98
BEZEL (Use with Radios 3501 132, 3501 584 & 3501 627)			
R/Runner, Sebring Plus, Regent/ Coronet, Charger, Crestwood & SE Rallye Type - Woodgrain	B2	3592 686	7.21
Police, Taxi/Satellite, Coronet & Charger - Silver	B2	3592 351	8.10
Sebring, Custom & Charger - Woodgrain	B2	3592 353	10.27
BEZEL (Use with Radios 3501 337, 3501 338, 3501 339, 3501 340 & 3501 341)			
Fury & Monaco (Exc. Sta. Wag.) - Black	B2	3592 553	7.21
Fury & Monaco Station Wagon - Black	B2	3592 555	7.21
Fury & Monaco (Exc. Sta. Wag.) - Woodgrain	B2	3592 557	7.84
Fury & Monaco Station Wagon - Woodgrain	B2	3592 559	7.84
Chrysler (Exc. Sta. Wag.) - Suede	B2	3592 485	7.04
Chrysler (Exc. Sta. Wag.) - Woodgrain	B2	3592 486	7.84
Chrysler Station Wagon - Woodgrain	B2	3592 487	7.84
BEZEL (Use with Radios 2958 844 & 3837 165)			
Dodge Truck B100-200-300 Black	B2	3730 856	2.15
Blue	B2	3730 857	2.15
Tan	B2	3730 858	2.15
Gold		3738 131	2.15
FACE PLATE (Use with Radios 3635 354 & 3837 166)			
Dodge Truck D & W 100-200-300-500-600-800	B2	3489 554	12.33

1973 RADIO BEZELS

Description	Price Sym.	Part Number	Dealer Each
*RADIO BEZELS			
A Bezel is Required when Installing 1973 Radios			
BEZEL (Use with Radios 3501 582 & 3502 583)			
Valiant & Dart - All (Std. Black)	N.D.	2884 817	1.44
Valiant & Dart - All (Woodgrain)	B3	3501 602	9.85
BEZEL (Use with Radio 2884 853)			
Barracuda & Challenger - All	N.D.	2884 880	1.98
BEZEL (Use with Radios 3501 132 & 3501 584)			
Sebring Plus, Regent & R. Runner w/Rallye Panel (Woodgrain)	B2	2985 158	7.21
Police, Taxi & Satellite (Silver)	B2	2985 364	8.10
Sebring & Custom (Woodgrain)	B2	2985 370	10.27
Coronet & Charger - All w/Rallye Panel (Woodgrain)	B2	2985 158	7.21
Police, Taxi, Coronet & Charger (Silver)	B2	2985 364	8.10
Coronet Custom & Charger (Woodgrain)	B2	2985 370	10.27
BEZEL (Use with Radios 3501 160 & 3501 533)			
Fury, Gran, Polara & Monaco - All	B2	3592 057	2.15
BEZEL (Use with Radios 3420 560 & 3501 133)			
Chrysler - All	B2	2985 564	7.84
BEZEL (Use with Radio 3501 134)			
Chrysler - All	B2	2985 566	7.84
BEZEL (Use with Radio 2958 844)			
Dodge Truck B-100-200-300 ... Black	B2	2958 813	2.15
Blue	B2	3635 295	2.15
Green	B2	3635 296	2.15
Tan	B2	3635 297	2.15
BEZEL (Use with Radio 3635 354)			
Dodge Truck D & W-100-200-300	B2	3489 554	12.33

1972 RADIO BEZELS & PANELS

Description	Price Sym.	Part Number	Dealer Each
*RADIO BEZELS & PANELS			
1972 MODELS			
A Bezel is Required when Installing 1972 Radios.			
BEZEL (Use with Radios 2884 854, 3501 565, 3501 582 & 3501 583)			
Valiant & Dart All (Std. Black)	N.D.	2884 817	1.44
BEZEL (Use with Radio 2884 853)			
Barracuda & Challenger All	N.D.	2884 880	1.98
BEZEL (Use with Radios 3501 132 & 3501 584)			
Satellite, Sebring Plus, Regent & Road Runner w/Rallye Panel Woodgrain	B2	2985 158	7.21
Police, Taxi & Satellite (Silvery)	B2	2985 364	8.10
Satellite, Sebring & Custom (Woodgrain)	B2	2985 370	10.27
Coronet & Charger w/Rallye Panel (Woodgrain)	B2	2985 158	7.21
Police, Taxi, Coronet & Charger (Silvery)	B2	2985 364	8.10
Coronet Custom & Charger (Woodgrain)	B2	2985 370	10.27
BEZEL (Use with Radio 3501 533)			
Fury & Gran	B2	3592 057	2.15
BEZEL (Use with Radios 3501 160 & 3501 533)			
Polara & Monaco	B2	3592 057	2.15
BEZEL (Use with Radios 2884 859, 3420 560 & 3501 133)			
Chrysler	B2	2985 564	7.84
BEZEL (Use with Radio 3501 134)			
Chrysler	B2	2985 566	7.84
BEZEL (Use with Radio 2958 844)			
Dodge Truck B100, 200, 300 — Black	B2	2958 813	2.15
Blue	B2	3489 459	2.15
Green	B2	3489 460	2.15
Tan	B2	3489 461	2.15
BEZEL (Use with Radio 3635 354)			
Dodge Truck D100, 200, 300 & W100, 200, 300	B2	3489 554	12.33

1971 RADIO BEZELS & PANELS

Description	Price Sym.	Part Number	Dealer Each
RADIO BEZELS & PANELS			
1971 MODELS			
A Bezel or Panel is Required when Installing 1971 Radios.			
BEZEL (Use with Radios 2884 854, 3501 565, 3501 582 & 3501 583)			
Valiant Duster, Scamp and Demon (Black)	N.D.	2884 817	1.44
Valiant Scamp and Demon (Woodgrain)	N.D.	2884 886	5.34
Swinger Special and Dart (Silver)	N.D.	2884 897	2.46
BEZEL (Use with Radio 2884 853)			
Barracuda	N.D.	2884 880	1.98
Challenger Rallye (Woodgrain)	N.D.	2884 880	1.98
*BEZEL (Use with Radios 3501 132 & 3501 584)			
Satellite Sebring plus, Brougham, Regent, Road Runner & GTX (Woodgrain)	B2	2985 158	7.21
Satellite (Silvery)	B2	2985 364	8.10
Satellite Sebring and Custom (Woodgrain)	B2	2985 370	10.27
Charger Super Bee, 500, S.E. & R/T			
Coronet Brougham & Crestwood (Woodgrain)	B2	2985 158	7.21
Coronet (Silvery)	B2	2985 364	8.10
Charger and Custom (Woodgrain)	B2	2985 370	10.27

1971 RADIO BEZELS & PANELS

Description	Price Sym.	Part Number	Dealer Each
*RADIO BEZELS & PANELS (Continued)			
1971 MODELS			
BEZEL (Use with Radios 3420 888, 3501 160 & 3501 533)			
Fury I & II	B3	3501 004	3.44
Fury (Exc. I & II)	B3	3501 005	5.27
BEZEL (Use with Radios 3501 160 & 3501 533)			
Polara Special	B3	3501 004	3.44
Polara & Monaco (Exc. Special)	B3	3501 005	5.27
BEZEL (Use with Radio 2884 859)			
Chrysler	B2	2985 564	7.84
BEZEL (Use with Radios 3420 560 & 3501 133)			
Chrysler	B2	2985 564	7.84
BEZEL (Use with Radio 3501 134)			
Chrysler	B2	2985 566	7.84
BEZEL (Use with Radio 2958 844)			
Dodge Truck B100, 200, 300 - Black	B2	2958 813	2.15
Blue	B2	3489 459	2.15
Green	B2	3489 460	2.15
Tan	B2	3489 461	2.15

AUTOMATIC SPEED CONTROL PACKAGES

APPLICABLE ONLY TO VEHICLES WITH AUTOMATIC TRANSMISSION AND POWER BRAKES

Year	Models	Type Engine	Steering Column Type	Control Package	Lever & Switch Package
1974	Fury, Monaco, Chrysler & Imperial	360, 400 & 440	Standard Tilt	3837 324 3837 324	3746 518 3746 680

	Price Sym.	Part Number	List	Dealer Each
* Control Package	N.D.	3837 324	44.21	33.16
*Lever & Switch Package	B2	3746 518 3746 680	34.36 34.36	22.34 22.34
* SPEED CONTROL PACKAGES - COMPLETE				
1974 Satellite, Coronet & Charger-8 Cyl. Engines	N.D.	3837 975	69.76	52.32
1974 Dodge Truck AD1, AW1, D1-2-3, & W1-2 8 Cyl. Engines	N.D.	3837 974	63.11	49.01
1974 Dodge Truck B1-2-3, CB3 & MC3 8 Cyl. Engine with Auto. Trans.	N.D.	3837 327	63.11	49.01

Mopar

AUTOMATIC SPEED CONTROL PACKAGES

APPLICABLE ONLY TO VEHICLES WITH AUTOMATIC TRANSMISSION AND POWER BRAKES

Year	Models	Type Engine	Steering Column Type	Basic Pkg.	Adapter Pkg.	Lever & Switch Pkg.	Speedo Cable	Wiring Assy.	Link Adapter Pkg.
1972-3	Fury,	318-360	Standard	3420 935	3620 703	3488 538	3592 367	2983 439	3620 807
	Polara	318-360	Tilt	3420 935	3620 703	3488 540	3592 367	2983 439	3620 807
	and	400-440	Standard	3420 935	3420 939	3488 538	3592 367	2983 439	3620 807
	Monaco	400-440	Tilt	3420 935	3420 939	3488 540	3592 367	2983 439	3620 807
1972-3	Chrysler	400-440	Standard	3420 935	3420 939	3488 538	3592 370	2983 310	3620 807
		400-440	Tilt & Telescoping	3420 935	3420 939	3488 539	3592 370	2983 310	3620 807
1972-3	Imperial	440	Standard	3420 935	3420 939	3488 538	3592 370	-	3620 807
		440	Tilt & Telescoping	3420 935	3420 939	3488 539	3592 370	-	3620 807

	Price Sym.	Part Number	List	Dealer Each	Wholesale Allowance
*Basic Package	N.D.	3420 935	38.80	29.10	
*Adapter Package	N.D.	3420 939	5.41	4.06	
	N.D.	3620 703	5.41	4.06	
*Lever & Switch Package	B2	3488 538	34.36	22.34	
	B2	3488 539	34.36	22.34	
	B2	3488 540	34.36	22.34	
*Speedometer Cable Assembly	A5	3592 367	4.97	2.49	.35
	A5	3592 370	4.97	2.49	.35
*Wiring Assembly	B3	2983 310	5.72	3.44	
	B3	2983 439	5.72	3.44	
*Link Adapter Package	B2	3620 807	1.50	.97	

*SPEED CONTROL PACKAGES - COMPLETE

1970-3	Dodge Truck - B100-200-300 Van with 318 or 360 C.I.E. - w/or w/o Power Brakes	N.D.	3579 242	63.11	49.01
1972-3	Dodge Truck D100-200-300 & W100-200	N.D.	3744 555	63.11	49.01
	On W100-200 Models Also Specify 1-3635 003 Cable	B2	3635 003	11.58	7.52

AUTOMATIC SPEED CONTROL PACKAGES

APPLICABLE ONLY TO VEHICLES WITH AUTOMATIC TRANSMISSION AND POWER BRAKES

Model Year	MODELS	Engine	Steering Column Type	Basic Pkg.	Adapter Pkg.	Cable & Bracket Pkg.	Lever & Switch Pkg.	Wiring Assy.	Speedo Cable Assy.
1971	Fury, Polara & Monaco	318-360	Standard	3420 935	3620 703	N.R.	2947 954	2983 439	2927 910
		318-360	Tilt	3420 935	3620 703	N.R.	2947 956	2983 439	2927 910
		383-440	Standard	3420 935	3420 939	N.R.	2947 954	2983 439	2927 910
		383-440	Tilt	3420 935	3420 939	N.R.	2947 956	2983 439	2927 910
1971	Chrysler	383-440	Standard	3420 935	3420 939	N.R.	2947 954	2983 310	2927 914
		383-440	Tilt & Telescoping	3420 935	3420 939	N.R.	3488 539	2983 310	2927 914
1971	Imperial	440	Standard	3420 935	3420 939	N.R.	2947 954	N.R.	2927 914
		440	Tilt & Telescoping	3420 935	3420 939	N.R.	3488 539	N.R.	2927 914
1970	Barracuda & Challenger	318	All			N.R.	N.R.	N.R.	N.R.
		383-440 (1)	All			N.R.	N.R.	N.R.	N.R.
1970	Belvedere, Satellite	318	All	3420 936		N.R.	N.R.	N.R.	N.R.
	Coronet &	383-440 (1)	All	3420 936	3420 939	N.R.	N.R.	N.R.	N.R.
1968-9	Charger	318	All	3420 564	Not	3420 568	N.R.	N.R.	2927 910
		383-440 (1)	All	3420 564	Available	3420 570	N.R.	N.R.	
1970	Fury	318	Standard	3420 935		N.R.	2947 500	2983 439	2927 910
		318	Tilt	3420 935		N.R.	2947 524	2983 439	2927 910
		383-440 (1)	Standard	3420 935	3420 939	N.R.	2947 500	2983 439	2927 910
		383-440 (1)	Tilt	3420 935	3420 939	N.R.	2947 524	2983 439	2927 910
1969	Fury	318	Chrysler Std.	3420 564			2926 589	2926 060	2927 910
		318	Saginaw Tilt	3420 564			2926 591	2926 060	2927 910
		383-440 (1)	Chrysler Std.	3420 564		3420 570	2926 589	2926 060	2927 910
		383-440 (1)	Saginaw Tilt	3420 564		3420 570	2926 591	2926 060	2926 910
1968	Fury	318	Chrysler Std.	3420 564			2857 525	N.R.	2889 779
		318	Tilt & Telescoping	3420 564			2889 162	N.R.	2889 779
		383-440	Chrysler Std.	3420 564		3420 570	2857 525	N.R.	2889 779
		383-440	Tilt & Telescoping	3420 564		3420 570	2889 162	N.R.	2889 779
1970	Polara & Monaco	318	Standard	3420 935		N.R.	2947 500	2983 439	2927 912
		318	Tilt	3420 935		N.R.	2947 524	2983 439	2927 912
		383-440 (1)	Standard	3420 935	3420 939	N.R.	2947 500	2983 439	2927 912
		383-440 (1)	Tilt	3420 935	3420 939	N.R.	2947 524	2983 439	2927 912
1969	Polara & Monaco	318	Chrysler Std.	3420 564			2926 589	2926 060	2927 912
		318	Saginaw Std.	3420 564			2926 590	2926 060	2927 912
		318	Saginaw Tilt	3420 564			2926 591	2926 060	2927 912
		383-440 (1)	Chrysler Std.	3420 564		3420 570	2926 589	2926 060	2927 912
		383-440 (1)	Saginaw Std.	3420 564		3420 570	2926 590	2926 060	2927 912
		383-440 (1)	Saginaw Tilt	3420 564		3420 570	2926 591	2926 060	2927 910
1968	Polara & Monaco	318	Chrysler Std.	3420 564			2857 525	N.R.	2889 780
		318	Tilt & Telescoping	3420 564			2889 162	N.R.	2889 780
		383-440	Chrysler Std.	3420 564		3420 570	2857 525	N.R.	2889 780
		383-440	Tilt & Telescoping	3420 564		3420 570	2889 162	N.R.	2889 780
1970	Chrysler	383-440 (1)	Standard	3420 935	3420 939	N.R.	2947 500	2983 310	2927 914
		383-440 (1)	Tilt & Telescoping	3420 935	3420 939	N.R.	2947 501	2983 310	2927 914
1969	Chrysler	383-440 (1)	Chrysler Std.	3420 564		3420 570	2926 590	2926 877	2927 914
		383-440 (1)	Tilt & Telescoping	3420 564		3420 570	2889 162	2926 877	2927 914
1968	Chrysler	383-440	Chrysler Std.	3420 564		3420 570	2857 525	N.R.	2881 781
		383-440	Saginaw Std.	3420 564		3420 570	2889 550	N.R.	2881 781
		383-440	Tilt & Telescoping	3420 564		3420 570	2889 162	N.R.	2881 781
1970	Imperial	440 (1)	Standard	3420 935	3420 939	N.R.	2947 500	N.R.	2927 914
		440 (1)	Tilt & Telescoping	3420 935	3420 939	N.R.	2947 501	N.R.	2927 914
1969	Imperial	440 (1)	Chrysler Std.	3420 564		3420 570	2926 590	N.R.	2927 914
		440 (1)	Tilt & Telescoping	3420 564		3420 570	2889 162	N.R.	2927 914

(1) EXCEPT 440 C.I.D. WITH 6 PACK

Mopar

AUTOMATIC SPEED CONTROL PACKAGES

PRICE SCHEDULE FOR PRIOR MODELS

Description	Price Sym.	Part Number	List	Dealer Each	Wholesale Allowance
*SPEED CONTROL PACKAGES					
Basic Package	N.D.	3420 564	40.37	30.28	
	N.D.	3420 935	38.80	29.10	
Adapter Package	N.D.	3420 939	5.41	4.06	
	N.D.	3620 703	5.41	4.06	
Lever & Switch Package	B2	2857 525	34.36	22.34	
	B2	2889 162			
	B2	2889 550			
	B2	2926 589			
	B2	2926 590			
	B2	2926 591			
	B2	2947 524			
	B2	3488 539			
Wiring Assembly	B3	2926 060	4.05	2.42	
	B3	2926 877	3.30	1.98	
	B3	2983 310	5.72	3.44	
	B3	2983 439	5.72	3.44	
Speedometer Cable Assembly	A5	2889 779	4.62	2.32	.34
	A5	2889 780	4.62	2.32	.34
	A5	2889 781	5.20	2.60	.37
	A5	2927 912	5.20	2.60	.37

*Price Revision

ALL PRICES AND SPECIFICATIONS ARE SUBJECT TO CHANGE WITHOUT NOTICE

Description	Price Sym.	Part Number	List	Dealer Each
BASKET - LITTER				
ALL MODELS	N.D.	2275 970	2.83	1.54
BASKET-LITTER WITH TISSUE DISPENSER & TRAY				
ALL MODELS - 6-1/4"x8"x8"	N.D.	3837 725	4.93	3.04
RETRACTOR PACKAGE - SEAT BELT				
For All Cars Equipped with Seat Belts	N.D.	2495 897	4.11	2.30
BELT PACKAGE - SHOULDER - REAR				
1969 Valiant & Dart (Exc. Conv. Coupe) Barracuda 2 Door Hardtop Belvedere, Satellite, Coronet & Charger (Exc. Conv. Coupe & Station Wagon)				
1968 Valiant, Barracuda 2 Door Hardtop, Dart 2 Door & 4 Door Sedan, 2 Door Hardtop, Belvedere, Satellite & Coronet 2 Door & 4 Door Sedan, 2 Door Hardtop Charger, 2 Door Spec. Hardtop Fury, Sport Fury & VIP (Exc. Conv. Cpe.) Polara & Monaco 4 Door Sedan, 2 Door & 4 Door Hardtop, Chrysler 2 Door & 4 Door Sedan, 4 Door Hardtop & Imperial 4 Door Sedan, 2 Door & 4 Door Hardtop ..... Black	N.D.	4780 DX9	11.21	7.29
1969 Fury, Sport Fury, Polara, Monaco, Chrysler & Imperial (Exc. Conv. Cpe. & Sta. Wag.) ..... Black	N.D.	4604 EX9	11.21	7.29
1968 Barracuda 2 Door Spec. Hardtop ..... Black	N.D.	4781 DX9	11.21	7.29

Mopar

NOTES

POWER BRAKES

	Description	Price Sym.	Part Number	List	Dealer Each	Wholesale Allowance
	BRAKE KIT - POWER					
*1973-4	Valiant & Dart With Drum Brakes	A3	3744 440	57.44	34.46	3.44
1973-4	Valiant & Dart With Disc Brakes	N.D.	3744 441	63.58	38.15	
1973-4	Barracuda, Challenger, Satellite, Coronet & Charger - All w/Disc Brakes	N.D.	3744 472	63.58	38.15	
*1971-2	Valiant & Dart w/10" Brake Drums	A3	3579 290	57.44	34.46	3.44
*1971-2	Barracuda, Challenger, Satellite, Coronet & Charger - All	A3	3579 292	57.44	34.46	3.44
1972	Fury, Polara & Monaco - All					
1971	Fury, Polara & Monaco Station Wagon					
*1971-2	Chrysler - All	A3	3549 942	57.44	34.46	3.44
1973-4	Dodge Truck B100-200 .....Note 1	N.D.	3744 916	54.20	32.52	
1970-2	Dodge Truck B100-200 Van	N.D.	3579 287	60.38	36.31	
1970-2	Dodge Truck B300 Van	N.D.	3579 288	60.38	36.31	
1973-4	Dodge Truck D100 ..... Note 2		3744 915	57.82	34.70	
1972-4	Dodge Truck W100 & 1972 D100 ... Note 3	N.D.	3621 965	57.82	34.70	
1972	Dodge Truck D & W 200-300	N.D.	3621 966	57.82	34.70	
*1969-70	Belvedere, Satellite, Coronet & Charger (Exc. 1969 Sta. Wag.)	A3	3004 622	54.14	32.49	3.25
*1969-70	Fury, Polara, Monaco & Chrysler	A3	3004 867	54.14	32.49	3.25
	Also Order the Following Pedals with the Above Kits.					
*Note 1	1973-4 B100 ..... All	B3	3637 754	10.57	6.35	
*Note 2	1973-4 D100 ..... w/Man. Trans.	B2	3496 928	12.02	7.81	
*Note 2	1973-4 D100 ..... w/Auto. Trans.	B2	3496 932	12.02	7.81	
*Note 3	1973-4 W100 / 1972 D100 ..... w/Auto. Trans.	B2	3496 934	12.02	7.81	
*Note 3	1973-4 W100 / D100 ..... w/Man. Trans.	B2	3491 618	12.02	7.81	
	BRAKE CONTROL PACKAGE - TRAILER ELECTRIC					
1954-74	Pass. Cars - All					
1970-74	Dodge Truck B100-200-300					
1963-74	Dodge Truck M & R 300-400					
1969-71	Dodge Truck D100-200-300					
1963-69	Dodge Truck A100	N.D.	3837 350	34.20	22.23	

*Price Revision

Mopar

NOTES

LOCKING FUEL TANK CAPS

Description	Price Sym.	Part Number	List	Dealer Each	Wholesale Allowance
* CAP-FUEL TANK LOCKING					
VALIANT & DART					
1972-4 All 1971 All Late Prod. Models	A3	3583 547	5.87	3.52	.33
BARRACUDA					
1972-3 All	A3	3583 561	5.87	3.52	.33
SATELLITE, CORONET & CHARGER					
1973-4	A3	3583 561	5.87	3.52	.33
1971-2 1970 California Sedans	A3	3404 651	5.87	3.52	.33
FURY, GRAN, POLARA, MONACO, CHRYSLER & IMPERIAL					
1973-4 All 1972 (Exc. Station Wagon) 1971 (Exc. Station Wagon) Late Prod. Models	A3	3583 561	5.87	3.52	.33
1971-2 Station Wagon 1971 (Exc. Station Wagon) Early Prod. Models 1970 California Only	A3	3404 651	5.87	3.52	.33
1971 Valiant & Dart Early Prod. Models 1970 California Only	A3	3404 661	5.87	3.52	.33
1969-70 Valiant & Dart	A3	2823 888	4.34	2.60	.30
1969 Barracuda 1969-70 Charger	A3	2925 881	4.34	2.60	.30
1971 Challenger w/Hinge Type Cover 1970 California Only w/Hinge Type Cover	A3	3404 668	6.44	3.86	.38
1970 Challenger w/Hinge Type Cover Exc. California	A3	3404 683	5.87	3.52	.33
1968-70 Belvedere, Satellite, Coronet, Fury, Polara, Monaco, Chrysler & Imperial (Exc. Station Wagon)	A3	2534 323	4.34	2.60	.30
1961-68 Dodge Truck	A3	2158 315	4.34	2.60	.30
1972-3 Dodge Truck B, D & W100-200-300	A3	3744 501	6.44	3.86	.38

Mopar

NOTES

CLOCKS

Description	Price Sym.	Part Number	List	Dealer Each
CLOCK - ELECTRIC				
1970-4 Barracuda & Challenger (Exc. Rallye)	N.D.	2984 951	-	12.75
1972-4 Satellite, Coronet & Coronet Custom	N.D.	2985 416	-	13.55
1974 Fury I, II & III, Suburban & Custom Suburban	N.D.	3592 701		12.75
1974 Newport	N.D.	3592 702		14.20
1974 Monaco, Fury Gran Coupe & Sedan & Sport Suburban Digital	N.D.	3592 616		28.95
1974 New Yorker, Town & Country Digital	N.D.	3592 698		28.95
1972-3 Fury, Polara, Monaco	N.D.	3592 096	-	12.75
1972-3 Chrysler	N.D.	3592 151	-	14.20
1971 Chrysler	N.D.	2985 850	-	13.90
1970 Challenger (Exc. Rallye)	N.D.	2984 952	-	11.82
1968-70 Belvedere, Satellite & Coronet	N.D.	2889 620	-	11.82
1970 Polara & Monaco	N.D.	2984 959		11.82
1969 Polara & Monaco	N.D.	2927 973		11.36

Mopar

Description	Price Sym.	Part Number	List	Dealer Each	Wholesale Allowance
DEFLECTOR PACKAGE - STATION WAGON - REAR WINDOW					
Roof Type - 1971-4 Satellite & Coronet	N.D.	3579 672	21.30	12.78	
ENGINE BLOCK HEATER					
*1968-74 Chrysler Built Passenger Cars & Trucks Also Adaptable to Other Makes	A3	3780 741	10.76	6.46	.33
FIRE EXTINGUISHER (DRY CHEMICAL)					
Automotive, Marine & Household use					
Weight / Height / Dia. / Capacity					
2 lb. 13 oz. / 12-1/2" / 3" / 950 Grams	N.D.	3419 439	-	4.96	
FRAME PACKAGE - LICENSE TRIM					
1967-74 All Chrysler Built Passenger Cars	N.D.	2768 643	4.01	2.30	
GRIP RAIL PACKAGE - SWEPT LINE MODELS					
D & W100-200 With 8 Ft. Box	N.D.	3734 470	49.95	32.46	

BUMPER GUARDS

	Description	Price Sym.	Part Number	List	Dealer Each
GUARD PACKAGE - BUMPER					
FRONT					
1971-2	Barracuda - All	N.D.	3620 326	13.19	7.58
1970-2	Dart	N.D.	3481 805	15.75	9.07
1970-2	Challenger	N.D.	3481 807	13.19	7.58
1971-2	Satellite 2 Door Hardtop	N.D.	3620 327	16.61	9.45
1971-2	Satellite 4 Door Sedan & Station Wagon	N.D.	3620 328	16.61	9.45
1971-2	Coronet 4 Door Sedan & Station Wagon	N.D.	3620 332	16.61	9.45
1971-2	Charger	N.D.	3620 331	16.61	9.45
1971	Chrysler - All	N.D.	3620 337	18.15	10.36
1969-70	Chrysler	N.D.	2933 655	18.15	10.36
1969	Fury & Sport Fury	N.D.	2933 651	17.94	10.19
1971-4	Dodge Truck B100-200-300 Vans	N.D.	3621 996	24.51	15.92
1972-4	Dodge Truck D & W100-200-300 Pick-up	N.D.	3621 995	24.51	15.92
REAR					
1971	Satellite 2 Door Hardtop	N.D.	3620 329	16.61	9.45
1971-2	Coronet 4 Door Sedan (Exc. Station Wagon)	N.D.	3620 334	16.61	9.45
1971-2	Charger	N.D.	3620 333	16.61	9.45
1971	Fury (Exc. Sport Fury & Station Wagon)	N.D.	3620 335	17.94	10.19
1971	Polara & Monaco (Exc. Station Wagon)	N.D.	3620 336	17.94	10.19
1971	Chrysler (Exc. Station Wagon)	N.D.	3620 338	18.15	10.36
1969	Fury & Sport Fury (Exc. Station Wagon)	N.D.	2933 652	17.94	10.19

Mopar

Description	Price Sym.	Part Number	List	Dealer Each	Wholesale Allowance
*GUARD - SPLASH - PAIR					
Passenger Cars . . . . . Black	A3	3579 660	2.89	1.73	.26
Passenger Cars . . . . . White	A3	3837 972	3.73	2.23	.33
Trucks - Pick Up & Van . . . . . Black	N.D.	3685 553	4.96	2.98	
Trucks - Pick Up & Van . . . . . White	A3	3837 973	5.90	3.54	.53
AUXILIARY HEATER - REAR COMPARTMENT					
1970-4 Dodge Truck - B100-200-300 Vans . . . . . Also Specify 1-3441 789 Shutoff (w/A/C Only)	N.D.	3489 928	-	79.55	
JACK - UNIVERSAL BUMPER					
1972 and Prior Model Passenger Cars & Compact Trucks (Exc. 1967-69 Barracuda & 1968-70 Charger)	N.D.	3549 587	11.70	7.01	
HOOD LOCK PACKAGE					
1970-74 Dodge Truck B100-200-300	N.D.	3837 976	10.40	6.24	
HORN PACKAGE - CITY - COUNTRY					
New York City Approved					
1974 Passenger Cars	N.D.	3746 824	15.25	9.15	
1974 Dodge Trucks	N.D.	3738 247	15.25	9.15	

LIGHTS CONVENIENCE

Description	Price Sym.	Part Number	List	Dealer Each
GLOVE BOX				
1968-74 Valiant, Barracuda, Dart, Satellite, Coronet & Challenger 1968-70 Belvedere	N.D.	2864 325	2.83	1.66
1969-73 Fury, Sport Fury, Polara & Monaco	N.D.	2947 285	2.08	1.25
1971-3 Chrysler	N.D.	3488 496	2.08	1.25
MAP & COURTESY				
1974 Fury, Monaco & Chrysler	N.D.	3488 988	4.08	2.45
1972-4 Satellite, Coronet & Charger built after January 1, 1972	N.D.	3488 694	7.05	4.23
1971-2 Satellite, Coronet & Charger built prior to January 1, 1972	N.D.	3488 425	4.96	2.98
1969 Valiant, Barracuda & Dart	N.D.	2947 269	4.11	2.47
TRUNK OR UNDERHOOD				
Trunk - 1972-4 - Valiant & Dart	N.D.	3488 787	3.10	1.76
***CARGO COMPARTMENT**				
1972-3 Dodge Truck D & W100-200-300	B2	3744 962	17.63	11.46

Mopar

Description	Price Sym.	Part Number	List	Dealer Each	Wholesale Allowance
*LOCKING PACKAGE - RACING HOOD					
1970 Barracuda & Coronet 1969-70 Dart Swinger and R/T, Super Bee, Road Runner & G.T.X. & Charger R/T					
1969 Coronet R/T	A1	3549 611	13.28	9.97	.30
1971 Duster	A1	3579 667	13.28	9.97	.30
1973-4 Satellite, Road Runner, GTX & Charger	A1	3685 951	13.28	9.97	.30
*CABLE & PIN PACKAGE - RACING HOOD					
Package Consists of 2 Cables, 2 Pins & 2 Screws					
18" Cables	A1	3579 674	5.14	3.84	.10
26" Cables	A1	3579 673	5.49	4.11	.12
*PADLOCK PACKAGE - RACING HOOD					
Use in Conjunction with above Hood Locking Packages	A1	3412 543	2.59	1.95	.13
*MATS - FLOOR - UNIVERSAL					
Design permits use as Door to Door or as Twin Mats.					
All Models (Exc. Colt & Cricket)					
FRONT Black	A2	2932 564	9.68	6.29	.78
Clear		2932 568			
Blue		2932 565			
Green		3744 112			
Parchment (Beige)		3780 728			
Gold		3780 730			
REAR Black	A2	2932 570	8.06	5.23	.65
Clear		2932 574			
Blue		2932 571			
Green		3744 113			
Parchment (Beige)		3780 729			
Gold		3780 731			
MATS - FLOOR - PATTERNIQUE - PAIR					
FRONT - 26" x 23" Red	N.D.	3549 926	14.95	9.72	
Green-Blue		3549 927			
Gold-Brown		3549 928			
FRONT - 25" x 19" Red	N.D.	3549 929	11.35	7.38	
Green-Blue		3549 930			
Gold-Brown		3549 931			
REAR - 16" x 18" Red	N.D.	3549 932	8.55	5.55	
Green-Blue		3549 933			
Gold-Brown		3549 934			

*Price Revision

ALL PRICES AND SPECIFICATIONS ARE SUBJECT TO CHANGE WITHOUT NOTICE

Description	Price Sym.	Part Number	List	Dealer Each	Wholesale Allowance
MATTRESS - STATION WAGON					
1968-73 Universal 84" x 45" x 3-1/2" (Exc. Colt & Cricket)	N.D.	3419 383	42.66	30.81	
*MIRROR - OUTSIDE REAR VIEW					
All Models					
Universal Type (Large Base)	A3	3579 571	7.40	4.44	.44
1966 Chrysler Built Passenger Cars (Exc. New Yorker & Imperial)	A3	2802 254	5.02	3.01	.29
*MIRROR PACKAGE - TRAILER TOWING					
Universal Type 5-1/2 x 7-1/2" Chrome Head Fender Mtg. Right or Left	A3	2933 961	13.69	8.22	.84
MIRROR - VANITY					
All Makes & Models	N.D.	3419 105	2.08	1.25	-
* MOULDING KIT - VINYL TOP TRIM					
All Models Black Only	A1	2933 488	21.59	13.46	2.05
PAINT STRIPING TOOL	N.D.	2933 491	-	2.67	
* STRIPING PACKAGES - Black					
1-2 1/2" x 40' Roll Custom Prealigned	A2	3685 554	10.91	7.09	.37
1-1 1/4" x 80' Roll Triple Custom Prealigned	A2	3685 555	10.91	7.09	.37
6" Kit Strobe Stripes	A2	3685 556	7.21	4.69	.34
3" Kit Strobe Stripes	A2	3685 557	3.99	2.59	.12

Mopar

Description	Price Sym.	Part Number	List	Dealer Each	Wholesale Allowance
* MOULDING - EXTERIOR SIDE					
Chrome - Black Stripe - 28' Roll w/4 Bullet Ends	A1	3685 584	27.05	17.86	1.84
Black - Red Stripe - 38' Roll	A1	3549 672	27.53	18.17	1.91
Black - White Stripe - 38' Roll	A1	3549 673	27.53	18.17	1.91
Chrome - Dk. Blue Stripe - 28' Roll w/4 Bullet Ends	A1	3685 592	27.05	17.86	1.84
#Chrome - White Stripe - 28' Roll w/4 Bullet Ends	A1	3685 591	27.05	17.86	1.84
#Chrome - Dk. Green Stripe - 28' Roll w/4 Bullet Ends	A1	3685 593	27.05	17.86	1.84
#Chrome - Dk. Brown Stripe - 28' Roll w/4 Bullet Ends	A1	3685 594	27.05	17.86	1.84
OIL FILLER & INDICATOR PACKAGE					
1970-72 M300-M375-M400 Motor Home Chassis w/318 Engine	N.D.	3744 798	24.15	15.68	
1970-72 M300-M375-M400 Motor Home Chassis w/413 Engine	N.D.	3744 799	27.29	17.73	
* PROTECTOR - DOOR EDGE - VINYL					
Chrome	A3	3683 403	2.84	1.69	.07

*Price Revision
#New Part

ALL PRICES AND SPECIFICATIONS ARE SUBJECT TO CHANGE WITHOUT NOTICE

Description	Price Sym.	Part Number	List	Dealer Each
RACK - LUGGAGE - ROOF				
1973-4 Satellite & Coronet Sta. Wag. 50" x 35" I.D.	N.D.	3720 726	54.37	38.05
1971-2 Satellite & Coronet Sta. Wag. 50" x 35" I.D.	N.D.	3720 308	54.37	38.05
1974 Fury, Monaco & Chrysler Sta. Wag.	N.D.	3767 464	65.69	45.98
1973 Fury, Polara, Monaco & Chrysler Sta. Wag. 50" x 41" I.D.				
1973-4 Dodge Truck B-100-200-300	N.D.	3720 731	65.69	45.98
1974 Colt - Sta. Wag.	N.D.	3744 974	48.50	33.95

	Price Sym.	Part Number	List	No. 1 Net	No. 2 Net 3 or More	Quantity For Direct Shipment
RACK - LUGGAGE - ROOF						
1969-70 Fury, Polara, Monaco & Chrysler Sta. Wag. 47-1/2" x 42-1/2"	N.D.	2933 973	68.18	47.26	38.44	3 or More Assorted Prepaid Center Line, Michigan
RACK - LUGGAGE - DECK LID						
1971-3 Charger SE (Fast Back)						
1968-70 Charger						
1968-9 Barracuda 2 Dr. H.T. & Conv. Cpe. 43" x 19-1/2"	N.D.	3419 382	41.91	29.34	24.93	
1973-4 Satellite, Coronet & Charger						
1970-4 Barracuda & Challenger 43" x 17-1/2"	N.D.	3419 498	45.65	31.96	27.16	
1971-2 Satellite, Coronet & Charger 2 Dr., 2 Dr. H.T. & Fastback 43" x 17-1/2"	N.D.	3620 518	45.65	31.96	27.16	
RACK - DECK LID SKI						
All Models (Exc. Sta. Wag.)	N.D.	2809 970	34.97	24.49	20.05	

Direct all orders to the Parts Depot Serving your Locality.

Orders qualifying for Direct Shipment must be separate orders and plainly marked "Direct Shipment" in the Ship VIA Space on the Parts Order form.

Shipment will be made to the ordering accounts principal place of business only.

Mopar

Description	Price Sym.	Part Number	List	Dealer Each
CORD PACKAGE - LUGGAGE HOLD DOWN				
All Cars with Roof Top Luggage Carriers	N.D.	2584 634	7.79	5.08
COVER & HOLD DOWN PACKAGE - LUGGAGE RACK				
Size 42-5/8" x 45-1/2" x 14" for #2933 973, #3720 307 & #3720 731 Racks	N.D.	3419 323	41.49	26.96
Size 45" x 75" x 14"	N.D.	2932 561	46.93	30.59
#Size 35" x 50" x 14" for #3720 308 & #3720 726 Racks	N.D.	3837 720	46.58	30.28
#Size 43" x 40" x 14" for #3767 464 Rack	N.D.	3837 721	44.40	26.86

*Price Revision

Description	Price Sym.	Part Number	List	Dealer Each	Wholesale Allowance
* REGULATOR & FILTER - FUEL PRESSURE					
(Mileage Saver)					
For most cars with 5/16" Fuel Lines	A3	2240 633	9.17	5.51	.55
SEAT - CHILD'S CAR					
1966 and Later Models with Seat Belts	N.D.	3744 976	24.95	18.70	
CARRIER-INFANT SAFETY					
1966 and Later Models with Seat Belts	N.D.	3744 975	14.40	9.38	
SWITCH - ELECTRIC WINDOW LIFT OR TAILGATE SAFETY					
1967-74 All Cars with Electric Windows	N.D.	2932 687	2.30	1.37	
TACHOMETER PACKAGE - UNIVERSAL					
All 6 & 8 Cyl. with 12 Volt Ignition					
(Full Sweep) Steering Column or Instrument Panel Mtg.	N.D.	3514 430	47.79	31.50	
(Hood Mounted)	N.D.	3420 740	62.41	40.58	
SEAT PACKAGE - CLUB CAB JUMP					
Includes All Attaching Parts					
1973 Dodge Truck Club Cab ..... Black	N.D.	3837 849		19.95	
Beige	N.D.	3837 850		19.95	
# STEP PACKAGE - AUTOMATIC					
1972-4 Dodge Truck D & W 100-200-300	N.D.	3837 722	15.20	9.88*	

*Price Revision

Mopar

Description	Price Sym.	Part Number	List	No. 1 Net Each	No. 2 Net Each
* TRAILER TOW BAR KITS & COVER					10 or More Assorted Prepaid Elkhart, Indiana
1974 Satellite, Coronet & Charger - 2 Door & H.T. ..	N.D.	3837 661	79.95	63.96	60.76
1974 Satellite & Coronet - 4 Door Sedan & H.T.	N.D.	3837 660	79.95	63.96	60.76
1974 Satellite & Coronet Sta. Wag.	N.D.	3837 659	79.95	63.96	60.76
1974 Fury, Monaco, Chrysler & Imperial Sedans & H.T.	N.D.	3837 658	79.95	63.96	60.76
1974 Fury, Monaco & Chrysler - Sta. Wag.	N.D.	3837 657	79.95	63.96	60.76
1969-73 Fury, Gran, Polara, Monaco, Chrysler & Imperial Sedans	N.D.	3744 902	79.95	63.96	60.76
1969-73 Fury, Gran, Polara, Monaco, Chrysler & Imperial Sta. Wag.....	N.D.	3744 903	79.95	63.96	60.76
1971-3 Satellite, Coronet & Charger Sedans	N.D.	3744 904	79.95	63.96	60.76
1971-3 Satellite & Coronet Sta. Wag.	N.D.	3744 905	79.95	63.96	60.76
1972-3 Dodge Truck D100-200 with 131" & 149" Wheel Base	N.D.	3744 906	79.95	63.96	60.76
Box Cover Kit - All	N.D.	3744 907	5.45	4.25	

Description	Class	Price Sym.	Part Number	List	Dealer Each	Wholesale Allowance
***TRAILER HITCH PACKAGES W/1-7/8 BALL**						
1974 Valiant & Dart (Exc. Fastback)	I	A1	3754 146	28.97	21.14	3.49
1974 Valiant & Dart Fastback	I	A1	3754 081	28.97	21.14	3.49
1974 Satellite 2 Door & H.T.	I	A1	3754 296	29.85	21.79	3.60
1974 Satellite 4 Door Sedan & H.T.	I	A1	3754 323	29.85	21.79	3.60
1974 Satellite & Coronet Sta. Wag.	I	A1	3754 743	28.97	21.14	3.49
1974 Coronet & Charger - 2 Door	I	A1	3754 392	29.85	21.79	3.60
1974 Coronet - 4 Door & H.T.	I	A1	3754 431	29.85	21.79	3.60
1974 Fury Sedan & H.T.	I	A1	3754 500	28.97	21.14	3.49
1974 Fury, Monaco & Chrysler Sta. Wag.	I	A1	3754 700	29.85	21.79	3.60
1974 Monaco Sedan & H.T.	I	A1	3754 550	28.97	21.14	3.49
1974 Newport Sedan & H.T.	I	A1	3754 600	28.97	21.14	3.49
1974 New Yorker Sedan & H.T.	I	A1	3754 650	29.85	21.79	3.60
***TRAILER HITCH PACKAGES - LESS BALL**						
1971-73 Colt Sedan	I	A1	3744 523	34.22	24.49	3.70
1971-73 Cricket	I	A1	3744 524	33.15	24.20	3.99
1970-73 Valiant Scamp, Dart (Exc. Demon & Sport)	I	A1	3744 518	22.44	16.38	2.70
1967-73 Valiant (Exc. Scamp, Dart Demon & Sport)	I	A1	3744 520	20.91	15.27	2.52
1973 Barracuda	I	A1	3744 522	21.37	15.58	2.55
1970-73 Challenger	I	A1	3744 513	32.08	23.42	3.87
1973 Satellite 2-Door	I	A1	3744 527	38.51	28.11	4.63
1971-72 Satellite 4-Door	I	A1	3744 525	34.22	24.98	4.11
1971-73 Coronet Sedans	I	A1	3744 514	29.48	21.52	3.55
1971-73 Charger	I	A1	3744 517	32.08	23.42	3.87
1973 Satellite & Coronet Sta. Wag.	I	A1	3744 940	20.91	15.27	2.52
1973 Satellite & Coronet Sta. Wag.						
1969-72 Satellite & Coronet Sta. Wag.	II	A1	3744 528	49.22	35.92	5.92
1973 Fury Sedans	I	A1	3744 526	42.79	31.23	5.15
1973 Fury Sedans	II	A1	3744 531	55.08	40.21	6.64
1973 Polara & Monaco Sedans	I	A1	3744 941	42.79	31.23	5.15
1973 Polara & Monaco Sedans	II	A1	3744 531	55.08	40.21	6.64
1972-73 Newport Sedans	I	A1	3744 515	41.72	30.46	5.03
1972-73 New Yorker Sedans	I	A1	3744 521	23.51	17.17	2.83
1967-73 Fury, Polara, Monaco & Chrysler Sta. Wag.	I	A1	3744 519	21.37	15.58	2.55
1967-73 Fury, Polara, Monaco & Chrysler Sta. Wag.	II	A1	3744 529	48.04	35.07	5.79
1972-73 Imperial	I	A1	3744 516	34.22	24.94	4.08
1972-73 Dodge Truck D & W 100-300 Exc. w/Step Bumper	II	A1	3744 532	48.04	35.07	5.79
1971-73 Dodge Truck B100-300	II		3744 530	35.14	25.65	4.23
TRAILER HITCH BALLS						
1-7/8" Dia. with 3/4" Shank - Chrome		A1	3744 508	6.17	4.51	.74
2" Dia. with 3/4" Shank - Chrome		A1	3744 509	6.48	4.73	.78
2-5/16" Dia. with 1" Shank - Painted		A1	3744 510	8.82	6.44	1.05

Mopar

Description	Price Sym.	Part Number	List	Dealer Each
TRAVEL & RECREATIONAL ACCESSORIES				
Bowling Bag	N.D.	3419 377	16.82	11.78
Carry-All Bag 16" x 13" x 5-1/2"	N.D.	3419 379	12.76	8.94

CAR CARE MATERIALS

Description	Carton Qty.	Price Sym.	Part Number	List	Net Each	Wholesale Allowance
* ADDITIVES						
Combustion Chamber Conditioner . . . . . 15 Oz.	24	A3	3419 126	1.74	1.05	.05
Aerosol 20 Oz.	12	A3	2933 500	2.49	1.49	.08
Crankcase Conditioner . . . . . 15 Oz.	24	A3	3419 130	1.61	.96	.05
Fuel Detergent . . . . . 6 Oz.	24	A3	3419 127	.61	.37	.01
Engine Oil Supplement . . . . . Quart	24	A3	3419 131	2.01	1.20	.07
Gum & Sludge Remover . . . . . Quart	12	A3	3419 133	3.41	2.04	.12
Super Oil Saver . . . . . 15 Oz.	24	A3	3837 188	1.79	1.07	.17
* HI-PERFORMANCE LUBRICANTS						
Man. Trans. Fluid . . . . . Quart	12	A3	2809 863	2.01	1.21	.06
Rear Axle . . . . . Quart	12	A3	2809 864	2.01	1.21	.06
Motor Oil . . . . . Quart	12	A3	2809 865	1.56	.93	.05
Auto. Trans. Fluid . . . . . Quart	12	A3	2809 866	1.68	1.01	.05
• ADHESIVE - AUTO GLASS						
Pint Can	24	A3	2298 825	2.54	1.52	.17
Applicator Package . . . . . Consists of: 3 - #2298 825 Pints 1 - Applicator Gun	4	A1	2298 950	9.65	6.43	.09
* ADHESIVE - SILICONE RUBBER . . . . . 2 Oz. Tube	12	A3	3683 829	1.95	1.16	.11
• ADHESIVE - VINYL . . . . . 1 Oz. Tube		A3	3549 956	.58	.35	.02
* BELT EASE . . . . . Aerosol 5-1/2 Oz.	12	A1	3419 497	1.73	1.14	.13
* CAR WASH LIQUID & POWDER						
Liquid w/Wax . . . . . 16 Oz.	24	A3	2585 619	1.45	.87	.08
Powder . . . . . 15 Lb. Pail	1	A2	2421 797	20.42	13.28	.58

Mopar

CAR CARE MATERIALS

Description	Carton Qty.	Price Sym.	Part Number	List	Net Each	Wholesale Allowance
* CEMENT - ALTERNATOR ..... 5 Oz.	36	A3	2299 314	1.50	.90	.10
* CLEANERS						
ENGINE (Spray Can) ..... 16 Oz.	12	A1	3419 148	2.14	1.44	.08
5 Gallon	1	A1	3419 149	18.05	12.05	.49
30 Gallon	1	A1	3419 150	103.73	69.13	2.65
GLASS ..... 24 Oz.	24	A3	3514 198	1.41	.85	.05
LEATHER & VINYL ..... 16 Oz.	12	A1	2421 788	1.91	1.26	.24
PART IMMERSION - 4 Gal. w/Basket	1	A3	3419 146	39.73	23.84	2.38
5 Gallon Refill	1	A3	3419 147	39.73	23.84	2.38
SPOT REMOVER & FABRIC ..... 16 Oz.	24	A1	2421 785	1.48	.98	.20
Gallon	4	A1	2421 786	8.31	5.56	1.16
VINYL TOP ..... 8 Oz.	12	A3	2932 280	2.71	1.63	.17
Gallon	6	A3	3837 107	14.87	8.93	.91
KAR KLEEN ..... 12 Oz.	12	A3	2809 926	1.45	.87	.05
* DOOR EASE PACKAGE						
Part Number consists of Display Pkg. containing 6 sticks (shop size)	12	A1	2240 248	4.09	2.21	.35
Dressing - Vinyl Top ..... 8 Oz.	12	A3	3514 191	3.23	1.94	.19
* FLUIDS						
BRAKES ..... 12 Oz.	24	A1	2933 249	1.94	.97	.14
Quart	12	A1	2933 250	4.69	2.35	.36
Gallon	6	A1	2933 251	17.00	8.50	1.28
5 Gallon	1	A1	2933 252	80.43	40.22	6.04
* POWER STEERING ..... Quart	12	A3	2084 329	.96	.57	-
• TRANSMISSION - AUTO ..... Pint	24	A3	3549 659	.37	.22	-
Quart	24	A3	3549 660	.82	.49	-
Gallon	6	A1	3549 661	3.26	1.96	.01
16 Gallon	1	A1	3549 662	53.10	30.64	.31
55 Gallon	1	A1	3549 663	182.56	99.72	1.91

CAR CARE MATERIALS

Description	Carton Qty.	Price Sym.	Part Number	List	Net Each	Wholesale Allowance
*LUBRICANTS						
DISTRIBUTOR CAM . . . . . 4 Oz.	36	A3	1473 595	1.85	1.11	.10
GEAR . . . . SAE #80 . . . . . Quart	24	A3	2933 565	1.22	.73	.01
SAE #90 . . . . . Quart	24	A3	3744 994	1.32	.79	.02
SAE #90 . . . . . 120 Lb. Drum	1	A3	3744 995	62.83	37.70	.01
HEAT CONTROL VALVE SOLVENT . . . . . 8 Oz.	12	A3	3419 128	1.45	.87	.15
Aerosol 12 Oz.	12	A3	3419 129	2.01	1.21	.15
LOCK EASE . . . . . 4 Oz.	72	A1	2240 363	.87	.57	.06
MULTI-MILEAGE . . . . . 14-1/2 Oz. Cartridge	50	A3	2525 035	1.09	.65	.06
35 Lb. Pail	1	A3	3744 275	28.91	17.34	1.64
MULTI-PURPOSE GREASE . . . . . 14 Oz. Cartridge	28	A3	2932 524	1.51	.91	.07
SPEEDOMETER CABLE . . . . . 6 Oz.	12	A3	1243 632	1.01	.60	.08
SURE GRIP . . . . . Quart	24	A3	2585 318	1.41	.85	.01
SYL-GLYDE - PASTE . . . . . 4 Oz.	36	A1	1881 923	2.28	1.39	.14
FLUID-AEROSOL . . . . . 16 Oz.	36	A3	1881 924	3.75	2.24	.15
WATER PUMP . . . . . 2 Oz.	24	N.D.	2298 997	1.61	1.07	-
* LUBRI PLATE						
Display Included w/Carton of 12 Must Order in Multiples of 12	12	A3	3744 859	.62	.38	.02
*POLISHES & WAX						
AUTOMOBILE . . . . . 16 Oz.	24	A1	2421 791	1.17	.77	.16
Gallon	4	A1	2448 767	6.38	4.26	.88
CHROME . . . . . 16 Oz.	24	A1	2525 429	1.17	.77	.14
ONE STEP . . . . . Gallon	4	A3	2809 928	15.60	9.35	.44
SUPER GLAZE . . . . . 6 Oz.	24	A3	2421 795	2.30	1.38	.04
*POLISHING CLOTHS						
WAX TREATED	12	A3	1316 224	1.17	.70	.06
• REMOVERS						
FROST & ICE . . . . . 16 Oz.	12	A2	2525 006	1.53	.99	.09
RUST . . . . . 12 Oz.	24	A3	3419 114	2.84	1.69	.18
TAR & ROAD OIL . . . . . 16 Oz.	24	A1	2421 776	1.17	.77	.15
Gallon	4	A1	2421 777	6.73	4.52	.93

Mopar

CAR CARE MATERIALS

Description	Carton Qty.	Price Sym.	Part Number	List	Net Each	Wholesale Allowance
*RUST PENETRANT (Spray Can) . . . . . 16 Oz.	12	A1	2421 775	1.74	1.15	.21
*RUST RESISTOR - COOLING SYSTEM . . . . . 16 Oz.	24	A1	2421 778	.92	.62	.14
*RUGLYDE (Clear Type) . . . . . Gallon	4	A1	2084 326	4.45	2.37	.10
*SEALING COMPOUND						
Aerosol . . . . . 15 Oz.	24	A3	3419 115	2.98	1.79	.13
*SEALER-TRANSMISSION . . . . . 6 Oz.	24	A3	2298 923	1.09	.65	.01
*SOLDER PKG. - PLASTIC BODY FILLER						
With Blue Creme Hardener - White . . . . . Quart	12	A3	3621 440	4.50	2.70	.27
Gallon	4	A3	3621 441	14.60	8.76	.88
•HARDENER - PLASTIC SOLDER CREME - BLUE						
Tube . . . . . 1 Oz.	12	A3	3621 442	.88	.53	.07
Tube . . . . . 4 Oz.	12	A3	3621 443	2.47	1.48	.27
* SOLVENT - WINDSHIELD WASHER . . . . . 16 Oz.	24	A4	2421 783	.98	.59	.07
32 Oz.	24	A3	2421 784	1.50	.90	.10
* STOP LEAK						
Stop Leak Nugget Pkg. . . . . (Free display with carton of 24)	24	A3	3419 423	1.45	.87	.22

RECONDITIONING MATERIAL

Description	Minimum Sales Qty.	Price Sym.	Part Number	List	Dealer Each	Wholesale Allowance
* USED CAR AND TRUCK CONDITIONING MATERIALS						
Upholstery Tint - Gray ..... Quart	12	A3	1653 395	2.94	1.76	.01
Brown ..... Pint	12	A3	3419 963	4.54	2.72	.05
Green ..... Pint	12	A3	3419 965	4.54	2.72	.05
Black ..... Pint	12	A3	3419 970	4.54	2.72	.05
Turquoise ..... Pint	12	A3	3419 971	4.54	2.72	.05
Blue ..... Pint	12	A3	3419 972	4.54	2.72	.05
Aqua ..... Pint	12	A3	3419 975	4.54	2.72	.05
Dark Red ..... Pint	12	A3	3419 978	4.54	2.72	.05
Multi-Purpose Dye & Dressing - Med. Green ..... Quart	12	A3	1653 408	3.52	2.11	.05
Blue ..... Quart	12	A3	1879 717	3.52	2.11	.05
Red ..... Quart	12	A3	1879 719	3.52	2.11	.05
White ..... Quart	12	A3	1879 720	3.52	2.11	.05
Turquoise ..... Quart	12	A3	2298 524	3.52	2.11	.05
Black ..... Gallon	4	A1	2298 525	7.91	5.27	.26
Headliner Tint - Blue ..... Quart	12	A3	1653 398	5.56	3.34	.15
White ..... Quart	12	A3	1879 728	5.56	3.34	.15
Black ..... Quart	12	A3	1879 730	5.56	3.34	.15
Red ..... Quart	12	A3	2298 527	5.56	3.34	.15
Leather & Vinyl Dye - Black ..... Quart	12	A3	1450 985	5.00	3.00	.07
White ..... Quart	12	A3	1603 345	5.00	3.00	.07
Blue ..... Quart	12	A3	1603 346	5.00	3.00	.07
Yellow ..... Quart	12	A3	1879 727	5.00	3.00	.07
Brown ..... Quart	12	A3	2298 530	5.00	3.00	.07
Nylon Dye - White ..... Quart	12	A3	1653 402	5.05	3.03	.12
Red ..... Quart	12	A3	1653 403	5.05	3.03	.12
Blue ..... Quart	12	A3	1653 404	5.05	3.03	.12
Green ..... Quart	12	A3	1653 405	5.05	3.03	.12
Black ..... Quart	12	A3	1653 406	5.05	3.03	.12
Upholstery Cleaner ..... Gallon	6	A3	1316 182	6.27	3.76	.07
Multi-Purpose Cleaner ..... 5 Gallon	1	A1	2298 532	21.37	14.23	.71
Overspray Remover ..... Pint	12	A3	2448 756	2.40	1.44	.10
Gallon	6	A3	2421 089	9.17	5.51	.12
Revive A-Color ..... Gallon	4	A3	2421 097	8.52	5.11	.11
Silver Engine Paint ..... Quart	12	A3	2298 526	4.34	2.60	.05
Gold Engine Paint ..... Quart	12	A3	2421 098	4.74	2.85	.07
Splatter Paint-Gray & White ..... Gallon	4	A3	2585 330	18.31	10.99	.22

Mopar

NOTES

NOTES

Mopar

NOTES

NOTES

Mopar

NOTES

WINTER ANTI FREEZE-SUMMER COOLANT

PERMANENT TYPE	Price Sym.	Part Number	List	1 to 23 Gallons No. 1 Net Each	24 to a Maximum of 186 Gallons No. 2 Net Each	MINIMUM SALES QUANTITY CASE Qty.	MINIMUM SALES QUANTITY CASE Weight
1 Quart (24 Quarts to case)	N.D.	2932 530	.70	.49	.47	24	63 Lbs.
1 Gallon (6 Gal. to Case)	N.D.	2932 531	2.65	1.88	1.80	6	62 Lbs.
1 Drum (55 Gallons)	N.D.	2932 532	----	90.20	90.20	1	562 Lbs.

NOTE: SUPERSEDES PRICES SHOWN IN MASTER PARTS PRICE LIST DATED 1-7-74

NO. 1-2 NET PRICES — **Applies to quantities indicated of Anti-Freeze in Case or Drum Quantity Multiples, shipped from Parts Depot. Transportation will be Prepaid when qualified, as provided for in Schedule of Discounts and Terms of Purchase.**

NO. 3-4 NET PRICES (WITHDRAWN) — **Quantities formerly specified to obtain #3 & 4 Net Prices are no longer available. A critical supply situation precludes supplier Direct Shipments.**

Direct all orders to the Parts Depot serving your locality.

ORDERS CANNOT BE ACCEPTED FOR LESS THAN CASE OR DRUM QUANTITIES.

Mopar

NOTES

AIR CONDITIONING

DALLAS, TEXAS

ORDERING INFORMATION

DEPOT SHIPMENTS
NO. 1 NET

The No. 1 Net Price applies to indicated quantity of each A/C Basic Unit, A/C Adapter Package and/or Condenser Package when ordered for shipment from Parts Depot. Transportation will be Prepaid when qualified, as provided for in Schedule of Discounts and Terms of Purchase.

NO. 2 NET

The No. 2 Net Price applies to Single Orders for 3 to 9 Assorted A/C Basic Units or A/C Adapter and/or Condenser Packages. Such orders will be shipped Transportation Prepaid. Any Quantity of A/C Adapter or Condenser Packages ordered with a qualifying shipment of A/C Basic Units will be billed at the No. 2 Net Price, Transportation Prepaid. Destinations Alaska or Hawaii will be prepaid to port of exit only.

DIRECT SHIPMENT
NO. 3 NET

The No. 3 Net Price applies to Single Orders for Ten (10) or More Assorted A/C Basic Units or Ten (10) or More Assorted A/C Adapter and/or Condenser Packages indicated for Direct Shipment. Such orders will be shipped Transportation Prepaid. Any quantity of Adapter or Condenser Packages included in the qualifying A/C. Basic Unit Order will be billed at the No. 3 Net Price and shipped Transportation Prepaid. Destinations in Alaska or Hawaii will be Prepaid to port of exit only.

NOTE : A/C BASIC UNITS, A/C ADAPTER PACKAGES AND CONDENSER PACKAGES CANNOT BE COMBINED TO QUALIFY FOR QUANTITY PRICES.

Direct all orders to the Parts Depot serving your locality.

Orders qualifying for Direct Shipment must be separate orders and plainly marked "Direct Shipment" in the Ship VIA Space on the Parts Order form.

Shipment will be made to the ordering accounts principal place of business only.

Mopar

AIR CONDITIONING

Description	Price Sym.	Part Number	List	No. 1 Net Each	No. 2 Net Each	No. 3 Net Each
				Depot Ship	3 to 9 Assorted Prepaid Dallas, Texas	10 or More Assorted Prepaid Dallas, Texas
AIR CONDITIONING UNITS						
BASIC UNITS						
1974 Fury, Monaco & Chrysler - (In-Dash). . . .	N.D.	3837 329	240.17	180.13	172.21	159.30
1974-71 Satellite, Coronet & Charger (In-Dash). . .	N.D.	3879 310	249.37	187.03	178.77	165.49
1974-71 Valiant & Dart (Slimline Under-Dash) . . .	N.D.	3879 309	240.17	180.13	172.21	159.30
				Depot Ship	3 to 9 Assorted Prepaid Dallas, Texas	10 or More Assorted Prepaid Dallas, Texas
ADAPTER PACKAGES - ABOVE UNITS						
1974-71 6 Cyl. 198-225 C.I.D.	N.D.	3879 316	53.60	40.20	37.10	35.70
1974-71 8 Cyl. 318-360 C.I.D.	N.D.	3879 317	53.60	40.20	37.10	35.70
1972 8 Cyl. 400 C.I.D.	N.D.	3621 888	53.60	40.20	37.10	35.70
1974 8 Cyl. 400-440 C.I.D.	N.D.	3879 333	53.60	40.20	37.10	35.70
1974 8 Cyl. 440 C.I.D. (Calif. Only)	N.D.	3837 333	53.60	40.20	37.10	35.70
				Depot Ship	3 to 9 Assorted Prepaid Dallas, Texas	10 or More Assorted Prepaid Dallas, Texas
BASIC UNITS						
1973-72 Colt - (In-Dash)	N.D.	3744 881	210.75	158.08	151.07	139.30
1974 Colt - (In-Dash)	N.D.	3879 312	228.91	171.68	164.19	151.25
				Depot Ship	3 to 9 Assorted Prepaid Dallas, Texas	10 or More Assorted Prepaid Dallas, Texas
ADAPTER PACKAGES - ABOVE UNITS						
1973-72 1600 CC Engine	N.D.	3744 882	53.60	40.20	37.10	35.70
1974 2000 CC Engine	N.D.	3879 313	65.16	48.87	45.11	43.40
1974 1600 CC Engine	N.D.	3879 344	65.16	48.87	45.11	43.40

AIR CONDITIONING

Description	Price Sym.	Part Number	List	No. 1 Net Each	No. 2 Net Each	No. 3 Net Each
				Depot Ship	3 to 9 Assorted Prepaid Dallas, Texas	10 or More Assorted Prepaid Dallas, Texas
AIR CONDITIONING UNITS						
BASIC UNITS						
1974-72 D & W 100-200-300, AW-100 (Slimline Under-Dash)	N.D.	3621 885	224.80	168.60	155.15	149.30
1974-72 D & W 100-200-300, AW-100 (In-Dash)	N.D.	3879 314	224.80	168.60	155.15	149.30
				Depot Ship	3 to 9 Assorted Prepaid Dallas, Texas	10 or More Assorted Prepaid Dallas, Texas
ADAPTER PACKAGES - ABOVE UNITS						
1974-72 6 Cyl. 225 C.I.D.	N.D.	3621 886	53.60	40.20	37.10	35.70
1973-72 6 Cyl. 225 C.I.D. (Calif. Only)	N.D.	3621 889	53.60	40.20	37.10	35.70
1974 8 Cyl. 318-360 C.I.D.	N.D.	3879 318	53.60	40.20	37.10	35.70
1973-72 8 Cyl. 318-360 C.I.D.	N.D.	3621 887	53.60	40.20	37.10	35.70
1974 8 Cyl. 440 C.I.D.	N.D.	3837 332	53.60	40.20	37.10	35.70
1974 8 Cyl. 440 C.I.D. (Calif. Only)	N.D.	3837 333	53.60	40.20	37.10	35.70
1973 8 Cyl. 400 C.I.D.	N.D.	3780 333	53.60	40.20	37.10	35.70
1972 8 Cyl. 400 C.I.D.	N.D.	3621 888	53.60	40.20	37.10	35.70

Mopar

AIR CONDITIONING

Description	Price Sym.	Part Number	List	No. 1 Net Each	No. 2 Net Each	No. 3 Net Each
				Depot Ship	3 to 9 Assorted Prepaid Dallas, Texas	10 or More Assorted Prepaid Dallas, Texas
AIR CONDITIONING UNITS						
#BASIC UNIT						
1974-71 B100-200-300 (In Dash)	N.D.	3879 315	240.17	180.13	172.21	159.30
				Depot Ship	3 to 9 Assorted Prepaid Dallas, Texas	10 or More Assorted Prepaid Dallas, Texas
ADAPTER PACKAGES - ABOVE UNIT						
1974-71 6 Cyl. 225 C.I.D.	N.D.	3744 877	53.60	40.20	37.10	35.70
1973-71 6 Cyl. 225 C.I.D. (Calif. Only)	N.D.	3744 879	53.60	40.20	37.10	35.70
1974-71 8 Cyl. 318-360 C.I.D.	N.D.	3744 878	53.60	40.20	37.10	35.70
1973 8 Cyl. 360 C.I.D. (Calif. Only)	N.D.	3780 332	53.60	40.20	37.10	35.70

AIR CONDITIONING

(DAYTON, OHIO)

ORDERING INFORMATION

DEPOT SHIPMENTS
NO. 1 NET

The No. 1 Net Price applies to indicated quantity of each A/C Basic Unit, A/C Adapter Package and/or Condenser Package when ordered for shipment from Parts Depot. Transportation will be Prepaid when qualified, as provided for in Schedule of Discounts and Terms of Purchase.

NO. 2 NET

The No. 2 Net Price applies to Single Orders for 3 to 9 Assorted A/C Basic Units or A/C Adapter and/or Condenser Packages. Such orders will be shipped Transportation Prepaid. Any Quantity of A/C Adapter or Condenser Packages ordered with a qualifying shipment of A/C Basic Units will be billed at the No. 2 Net Price, Transportation Prepaid. Destinations Alaska or Hawaii will be prepaid to port of exit only.

DIRECT SHIPMENT
NO. 3 NET

The No. 3 Net Price applies to Single Orders for Ten (10) or More Assorted A/C Basic Units or Ten (10) or More Assorted A/C Adapter and/or Condenser Packages indicated for Direct Shipment. Such orders will be shipped Transportation Prepaid. Any quantity of Adapter or Condenser Packages included in the qualifying A/C. Basic Unit Order will be billed at the No. 3 Net Price and shipped Transportation Prepaid. Destinations in Alaska or Hawaii will be Prepaid to port of exit only.

NOTE : A/C BASIC UNITS, A/C ADAPTER PACKAGES AND CONDENSER PACKAGES CANNOT BE COMBINED TO QUALIFY FOR QUANTITY PRICES.

Direct all orders to the Parts Depot serving your locality.

Orders qualifying for Direct Shipment must be separate orders and plainly marked "Direct Shipment" in the Ship VIA Space on the Parts Order form.

Shipment will be made to the ordering accounts principal place of business only.

Mopar

AIR CONDITIONING (AIRTEMP)

Description	Price Sym.	Part Number	List	No. 1 Net Each	No. 2 Net Each	No. 3 Net Each
				Depot Ship	3 to 9 Depot Ship	10 or More Assorted Prepaid Dayton, Ohio
AIR CONDITIONING UNITS						
BASIC UNITS						
1973-70 Fury, Monaco & Chrysler - Hang On . . .	N.D.	2027 820	170.12	136.11	129.37	120.03
Note: To Convert to a Custom Unit Specify (2) 2027 821 Spot Coolers						
1974-70 Valiant, Dart, Barracuda & Challenger - Hang-On	N.D.	2027 816	124.80	99.81	94.63	87.89
				Depot Ship	3 to 9 Assorted Depot Ship	10 or More Assorted Prepaid Dayton, Ohio
SPOT COOLER ADAPTER PACKAGE	N.D.	2027 821	11.04	8.81	8.30	7.78
ADAPTER PACKAGES - ABOVE BASICS						
1974-70 6 Cyl. 198-225 C.I.D.	N.D.	2027 817	72.28	57.81	54.70	51.07
1974-72 6 Cyl. 198-225 C.I.D. (Calif. Only) Note	N.D.	2027 823	88.45	70.75	66.95	62.50
1974-70 8 Cyl. 318-340-360 C.I.D.	N.D.	2027 818	72.28	57.81	54.70	51.07
1973 8 Cyl. 400-440 C.I.D..	N.D.	2027 825	72.28	57.81	54.70	51.07
1972-70 8 Cyl. 383-400-440 C.I.D.	N.D.	2027 819	72.28	57.81	54.70	51.07
1972 8 Cyl. 400-440 C.I.D. (Calif. Only) Note	N.D.	2027 824	88.45	70.75	66.95	62.50
CONDENSER PACKAGES						
1973-70 Fury, Monaco & Chrysler	N.D.	2027 814	29.81	23.85	22.81	21.78
1974-70 Valiant, Dart, Barracuda & Challenger . . .	N.D.	2027 787	29.81	23.85	22.81	21.78
				Dealer Each	Wholesale Allowance	
Note: For Calif. Usage, Specify the Following Parts.						
*1 - Belt	A1	2658 379	4.57	2.57	.53	
*1 - Bracket	B2	3698 952	1.71	1.11		
*2 - Nut & Washer	B3	6025 020	.45	.27		

NOTES

Mopar

NOTES

BATTERIES

DEPOT SHIPMENTS
NO. 1, 2 AND 3 NET

The No. 1, 2 and 3 Net Price applies to single orders of Batteries in quantities as indicated for applicable net, for shipment from Parts Depots. Transportation will be Prepaid when qualified, as provided for in Schedule of Discounts and Terms of Purchase.

DIRECT SHIPMENT
NO. 4 NET

The No. 4 Price applies to separate orders for Batteries in the quantity indicated for direct shipment from supplier.

Direct all orders to the Parts Depot serving your locality.

Orders qualifying for Direct Shipment must be separate orders and plainly marked "Direct Shipment" in the Ship VIA Space on the Parts Order form.

Shipment will be made to the ordering accounts principal place of business only.

Mopar

*BATTERIES

(DRY CHARGE)

BCI Group Size	Months Warranty	Part Number	Battery Line	20 Hour Rating in Ampere Hours	Price Sym.	List	Dealer No. 1 Net	Dealer Quantity Price		
								2 to 9 No. 2 Net	10-24 No. 3 Net	Quantity for Direct Shipment 25 or More No. 4 Net
PASSENGER CAR AND LIGHT COMMERCIAL - 12 VOLT										
	60	3837 196	Supercharger	62	N.D.	50.55	34.38	30.94	29.22	-
22F	36	2098 401	Everstart	46	N.D.	40.44	27.50	24.75	23.37	-
	60	3837 197	Supercharger	84	N.D.	55.93	38.03	34.24	32.34	27.97
24	36	2444 611	Everstart	59	N.D.	46.91	31.90	28.70	27.12	23.53
	36	2444 605	Everstart	48	N.D.	43.78	29.76	26.80	25.30	21.89
	24	2098 798	Surepower	40	N.D.	31.75	22.76	20.48	19.35	17.17
	60	3837 198	Supercharger	84	N.D.	55.93	38.03	34.24	32.34	-
24F	36	2444 503	Everstart	60	N.D.	46.91	31.90	28.70	27.12	-
	24	2642 856	Surepower	40	N.D.	31.75	22.76	20.48	19.35	-
	60	3837 199	Supercharger	95	N.D.	62.55	42.54	38.28	36.15	31.22
27	36	2444 607	Everstart	71	N.D.	55.97	38.05	34.25	32.35	27.98
	60	3837 200	Supercharger	95	N.D.	62.55	42.54	38.28	36.15	-
27F	36	2444 505	Everstart	74	N.D.	55.97	38.05	34.25	32.35	-
	36	2098 044	Everstart	56	N.D.	46.91	31.90	28.70	27.11	-
29NF	24	2098 800	Surepower	45	N.D.	31.75	22.76	20.48	17.17	-
42	36	2875 994	Everstart	45	N.D.	40.23	27.36	24.62	23.26	20.99
53	36	2098 403	Everstart	46	N.D.	40.44	27.50	24.75	23.37	20.14
60	36	2098 050	Everstart	60	N.D.	46.91	31.90	28.70	27.11	-
72	36	3620 814	Everstart	53	N.D.	44.52	30.27	27.24	25.74	-
74	36	3620 815	Everstart	60	N.D.	48.65	33.08	29.78	28.12	-
77	36	3620 816	Everstart	74	N.D.	56.71	38.56	34.70	32.78	-
PASSENGER CAR AND LIGHT COMMERCIAL - 6 VOLT										
	36	2098 013	Everstart	93	N.D.	31.80	21.62	19.46	18.38	15.90
1	24	2098 808	Surepower	70	N.D.	23.32	16.79	15.12	14.27	-
2	36	2098 015	Everstart	93	N.D.	36.36	24.72	22.25	20.01	18.18
19L	36	3780 335	Everstart	80	N.D.	31.80	21.62	19.46	18.38	-
COMMERCIAL & FLEET - 12 VOLT										
24	*	2444 613	Commercial	70	N.D.	55.97	38.05	34.25	32.35	27.98
30H	*	2098 146	Commercial	95	N.D.	64.46	43.83	39.44	37.26	35.76
COMMERCIAL & FLEET - 6 VOLT										
1	*	2098 001	Commercial	105	N.D.	36.57	24.87	22.38	21.14	-
2	*	2098 003	Commercial	135	N.D.	42.24	28.73	25.85	24.42	-
3	*	1818 942	Commercial	145	N.D.	52.21	35.50	31.95	30.18	-
4	*	1818 943	Commercial	160	N.D.	58.19	39.57	35.62	33.63	29.10

*Price Revision

*BATTERIES

(DRY CHARGE)

BCI Group Size	Months Warranty	Part Number	Battery Line	20 Hour Rating in Ampere Hours	Price Sym.	List	Dealer No. 1 Net	Dealer Quantity Price		
								2 to 9 No. 2 Net	10-24 No. 3 Net	Quantity for Direct Shipment 25 or More No. 4 Net
DIESEL APPLICATION - 12 VOLT										
4D	*	1818 947	Commercial	180	N.D.	119.92	81.56	73.41	69.32	62.67
8D	*	1818 949	Commercial	225	N.D.	140.92	95.82	86.24	81.45	75.49
DIESEL APPLICATION - 6 VOLT										
5D	*	1818 944	Commercial	190	N.D.	68.90	46.85	42.17	39.82	-
7D	*	1818 945	Commercial	225	N.D.	76.80	52.23	47.01	44.39	-
FARM TRACTOR APPLICATION - 12 VOLT										
3EE	32	3621 834	Commercial	77	N.D.	58.57	39.82	35.84	33.85	-
FARM TRACTOR APPLICATION - 6 VOLT										
3EH	32	3621 835	Commercial	210	N.D.	63.14	43.01	38.71	36.56	-
3ET	32	3621 836	Commercial	95	N.D.	55.40	37.66	33.90	32.01	-
SNOWMOBILE - GARDEN TRACTOR - 6 VOLT										
U-1	12	2642 966	Spec. Prod.	32	N.D.	35.66	24.24	21.81	20.61	-
22NF	12	3621 833	Spec. Prod.	45	N.D.	36.78	25.02	22.51	21.26	-
GOLF CAR - 6 VOLT										
GC2	12	2444 817	Golf Car	80 Minutes	N.D.	55.39	37.66	33.90	32.01	-
GC2H	24	3744 551	Golf Car	100 Minutes	N.D.	65.21	44.35	39.92	37.69	-
MARINE - 8 VOLT										
1	12	3838 050	Spec. Prod.	74	N.D.	45.22	30.74	27.66	26.13	-

The foregoing batteries without a No. 4 Net Price may be included with other batteries to qualify a 25 or More Direct Shipment Order. However, they will be billed at the No. 3 Net Price.

*Refer to Battery Catalog for determining the Pro-Rata Service Adjustment Months.

Mopar

BATTERY ELECTROLYTE DISPOSABLE CONTAINERS - SPECIFIC GRAVITY 1.265			
Part Number	Description	Price Sym.	Dealer Each
*2098 869	1.54 Gals. Electrolyte Container with Dispenser	N.D.	1.53
*2098 868	5 Gallon Electrolyte Container with Dispenser	N.D.	3.89

	Price Sym.	Part Number	List	Net Each
#ANALYZER - CAD TIP BATTERY	N.D.	3837 723	_	20.98

#New Part
*Price Revision

ALL PRICES AND SPECIFICATIONS ARE SUBJECT TO CHANGE WITHOUT NOTICE

RADIOS AND RELATED ITEMS

ORDERING INFORMATION

NO. 1 NET

The No. 1 Net Price applies to any quantity of Radios and Related Items when ordered for shipment from Parts Depot. Transportation will be Prepaid when qualified, as provided for in Schedule of Discounts and Terms of Purchase.

NO. 2 NET

The No. 2 Net Price applies when Radios and Related Items are ordered in quantities indicated for direct shipment.

Direct all orders to the Parts Depot serving your locality.

Orders qualifying for Direct Shipment must be separate orders and plainly marked "Direct Shipment" in the Ship VIA Space on the Parts Order form.

Shipment will be made to the ordering accounts principal place of business only.

Mopar

RADIOS

Description	Price Sym.	Part Number	Depot No. 1 Net Each	Direct Shipment No. 2 Net Each	Quantity For Direct Shipment
RADIO - LESS ANTENNA				Direct Shipment Shipping Point Quincy, Illinois	
VALIANT & DART					
1970-4 AM ..... Note 1 ...	N.D.	3501 582	41.74	36.30	
*1970-4 AM-FM ..... Note 1 ...	N.D.	3501 583	96.68	84.11	
SATELLITE, CORONET & CHARGER					
1971-4 AM ..... Note 1 ...	N.D.	3501 132	41.74	36.30	8 or More Assorted From One Shipping Point Prepaid
*1971-4 AM-FM ..... Note 1 ...	N.D.	3501 584	96.68	84.11	
1971-4 AM-FM Stereo ..... Note 1 ...	N.D.	3501 627	157.40	136.95	
FURY, MONACO, CHRYSLER & IMPERIAL					
1974 AM-FM Stereo ..... Note 1 ...	N.D.	3501 337	159.70	138.95	
1974 AM-FM Stereo Search Tuner ..... Note 1 ...	N.D.	3501 341	208.05	181.00	
See Next Page For Additional Radios for Fury, Monaco, Chrysler and Imperial					
DODGE TRUCK					
1967-74 Roof Mount-All Models-Includes Antenna	N.D.	3420 826	46.62	40.57	
1970-4 B100-200-300 AM ..... Note 1 ...	N.D.	2958 844	49.38	42.96	
1970-4 B100-200-300 AM-FM ..... Note 1 ...	N.D.	3837 165	98.44	85.64	
1972-4 D & W100-200-300					
1974 D & W500-600-800 AM ..... Note 1 ...	N.D.	3635 354	49.38	42.96	
1972-4 D & W100-200-300 AM					
1974 D & W500-600-800 AM-FM ..... Note 1 ...	N.D.	3837 166	98.44	85.64	
Note 1: See Page 26 For Instrument Panel Bezel Required with Specified Radio.					
The following Past Model Radios may be added to a qualifying order at the No. 2 Net but will not help qualify on order.					
FURY & GRAN					
1970-73 AM ..... Note 1 ...	N.D.	3501 160	41.74	36.30	
1970-73 AM-FM ..... Note 1 ...	N.D.	3501 533	94.68	82.39	
POLARA & MONACO					
1971-73 AM ..... Note 1 ...	N.D.	3501 160	41.74	36.30	
1971-73 AM-FM ..... Note 1 ...	N.D.	3501 533	94.68	82.39	
CHRYSLER					
1970-73 AM ..... Note 1 ...	N.D.	3501 133	59.73	51.95	

RADIOS

Description	Price Sym.	Part Number	Depot No. 1 Net Each	Direct Shipment No. 2 Net Each	Quantity For Direct Shipment
RADIO - LESS ANTENNA				Direct Shipment Shipping Point Center Line, Michigan	
BARRACUDA & CHALLENGER					
*1970-4 AM ..... Note 1 ...	N.D.	2884 853	41.47	36.30	
1970-4 AM-FM Stereo ..... Note 1 ...	N.D.	3501 626	157.40	136.95	
FURY, MONACO, CHRYSLER & IMPERIAL					
1974 AM ..... Note 1 ...	N.D.	3501 338	41.74	36.30	
*1974 AM-FM ..... Note 1 ...	N.D.	3501 339	96.68	84.11	
1974 AM-FM Stereo w/Tape Player .... Note 1 ...	N.D.	3501 340	274.65	238.95	
See Previous Page For Additional Radios For Fury, Monaco, Chrysler and Imperial					
Note 1: See Page 26 For Instrument Panel Bezel Required For Specified Radio.					
The following Past Model Radios may be added to a qualifying order at the No. 2 Net but will not help qualify on order.					
1971-73 Chrysler AM-FM Search Tuner .... Note 1 ...	N.D.	3501 134	133.20	115.88	
1970-73 Chrysler AM-FM ..... Note 1 ...	N.D.	3420 560	110.96	95.76	
1973 Med. & Hvy. Duty Conv. Cab					
1970-73 Conv. & Crew Cab	N.D.	3489 160	49.38	42.96	
1970-72 Valiant & Dart (Exc. 1970 Duster "340" & Swinger "340") AM-2 Watt. Note 1 ...	N.D.	2884 854	41.74	36.30	
1970-72 Valiant & Dart (Exc. 1970 Duster "340" & Swinger "340") AM-FM ... Note 1 ...	N.D.	3501 565	94.68	82.39	
1964-70 A-100 & Med. Duty Tilt Cab-Manual Tuning	N.D.	2824 859	41.60	36.11	

IMPORT RADIOS & ANTENNAS

Description	Price Sym.	Part Number	List	Dealer Each
RADIO AND ANTENNA PACKAGE				
Simca S 1000 and S 1118 Models	N.D.	S 48136	54.96	38.01
Simca S 1204 Models	N.D.	S 48190	62.22	46.67
1968 and Prior Sunbeams All Models	N.D.	XR 80001	54.96	38.01
1969-71 Sunbeam Arrow and Alpine	N.D.	XR 80003	59.01	43.87
RADIOS LESS ANTENNA				
1971-3 Colt Station Wagon	N.D.	MA 158353	59.01	43.87
1971-3 Colt Hardtop & Sedan	N.D.	MA 158354	59.01	43.87
1971-3 Cricket	N.D.	X 3621 613	58.69	44.02
ANTENNA PACKAGE				
1971-4 Colt Station Wagon (Not Required for Others)	N.D.	MA 158356	7.10	4.26
1971-3 Cricket	N.D.	X 3621 614	7.10	4.26
Simca S 1204 Models	Z	S 36836	7.10	4.26

8 TRACK STEREO TAPE PLAYERS

Description	Price Sym.	Model Number	Part Number	List	Dealer
STEREO 8 TAPE PLAYER - UNIVERSAL					
AUTOMOTIVE 8 TRACK UNITS HANG-ON TYPE W/O SPEAKERS					
Mini - 8 Watt	N.D.	A-20	3837 179	31.95	26.50
Mini - 30 Watt	N.D.	A-25	3744 980	59.95	41.95
Select-O-Matic	N.D.	A-125	3744 981	79.95	55.95
With FM Radio	N.D.	A-225	3744 982	109.95	77.00
*SPEAKER PACKAGES - STEREO					
4 Speakers - Door and/or Cowl Mtg.	N.D.		3514 400	22.32	16.74
2 Speakers - Door or Cowl Mtg.	N.D.		3420 879	11.70	8.78
2 Speakers - Wedge Type	N.D.		3744 979	15.20	11.40
HOME UNITS					
Use With Existing Stereo	N.D.	H-325	3744 984	49.95	36.00
w/AM-FM Stereo w/Speakers	N.D.	H-430	3837 185	169.95	127.45
w/AM-FM Stereo, Turn Table w/Speakers	N.D.	H-440	3837 186	199.95	150.00
w/AM-FM Radio & Recorder w/Speaker	N.D.	H-495-5	3744 986	229.95	160.95
PORTABLE UNITS					
Tape Player	N.D.	P-570	3744 260	79.95	58.50
w/AM-FM Radio	N.D.	P-590	3744 261	99.95	73.00
Portables Include Cigar Lighter Power Adapter					
STEREO TAPE DEMONSTRATION CARTRIDGE					
8 Track - 1974 Prod. Type	N.D.		3501 332	10.63	6.37

CASSETTE TAPE PLAYERS

Description	Price Sym.	Model Number	Part Number	List	Dealer Each
CASSETTE STEREO TAPE PLAYER					
All Automotive, Truck, Marine & Industrial Units With 12 Volt System					
Tape Player	N.D.	KS-950	3837 148	69.95	49.65
Tape Player	N.D.	A-52	3837 183	99.95	76.00
w/FM Radio	N.D.	A-152	3837 184	139.95	108.40
Also Specify and Use One of the Stereo Speaker Packages Listed on Page 21.					

	Price Sym.	Part Number	List	Dealer Each
CASSETTE TAPE PLAYER				
1971-74 All Models - For Replacement of Factory Installed Cassette Player ONLY (w/o Knobs, Microphone, Shroud Parts or Cables	N.D.	3501 045		91.26
CASSETTE MICROPHONE				
1971-74 All Models - Use w/3501 045 Cassette ONLY	N.D.	3501 534		9.50
CASSETTE TAPE DEMONSTRATION CARTRIDGE				
Cassette Tape-1972 Prod. Type	N.D.	3501 554	7.42	4.45
Cassette Tape-1973 Prod. Type	N.D.	3501 620	7.42	4.45

ANTENNAS

Description	Price Sym.	Part Number	List	Dealer Each	Wholesale Allowance
ANTENNAS					
BODY & CABLE PACKAGE					
1974 Valiant, Dart, Barracuda, Challenger, Satellite, Coronet & Charger	N.D.	3501 334	4.90	2.94	
1974 Fury, Monaco & Chrysler	N.D.	3501 335	4.90	2.94	
MAST ASSEMBLY					
* All Models w/2 Piece Antenna	A3	3513 745	3.73	2.24	.30
UNIVERSAL - COMPLETE					
Passenger Car and Truck Application - Fender Mtg.	N.D.	3838 093	4.77	2.86	

Description	Price Sym.	Part Number	List	Depot No. 1 Net Each	Direct Shipment No. 2 Net Each	Quantity For Direct Shipment
ANTENNA PACKAGE - MANUAL						
1970-3 Barracuda & Challenger	N.D.	2983 171	7.31	4.39	3.73	48 or More Assorted in Multiples of 6 of a Part Number Prepaid Center Line, Michigan
1969-73 Valiant & Dart						
1969-70 Belvedere, Satellite, Coronet & Charger	N.D.	2889 826	7.31	4.39	3.73	
1971-3 Satellite, Coronet & Charger	N.D.	3513 033	7.31	4.39	3.73	
1972-3 Fury, Gran, Polara, Monaco & Chrysler	N.D.	3588 365	10.26	6.15	5.23	
1969-71 Fury, Polara, Monaco & Chrysler	N.D.	2926 691	7.31	4.39	3.73	
*1967-8 Fury, Polara, Monaco & Chrysler	N.D.	2889 827	7.31	4.39	3.73	
*1967 Valiant, Barracuda, Dart, Belvedere, Coronet & Charger	N.D.	2771 983	5.95	3.57	3.01	

Mopar

ANTENNAS

Description	Price Sym.	Part Number	List	Dealer Each
ANTENNA PACKAGE - MOTORIZED				
1974 Chrysler & Imperial	N.D.	3501 336	30.54	21.38
1973 Chrysler**	N.D.	3679 819	29.74	20.82
1969-71 Chrysler**	N.D.	2926 690	29.74	20.82
**Also Requires Map & Pwr. Ant. Switch Assy.	B2	3488 132	10.07	6.55
ANTENNA PACKAGE - TRUCK				
1970-4 B100-200-300	N.D.	2958 849	6.90	4.14
1972-4 D & W100-200-300	N.D.	3621 892	7.21	4.32
1974 D & W500-600-800	N.D.	3837 147	7.21	4.32
1972-3 Conv. Cab - Med. & Heavy Duty 1968-73 L.C.F. 1969-71 Conv. & Crew Cab	N.D.	3420 737	6.90	4.14

SPEAKER PACKAGES

	Description	Price Sym.	Part Number	Dealer Each
CUSTOMIZED SPEAKER PACKAGES				
1974	Valiant & Dart			
1974	Barracuda & Challenger - Rear Compt.	N.D.	3501 358	10.80
1971-4	Satellite, Coronet & Charger (Exc. Sta. Wag.) Rear Compt.	N.D.	3488 423	10.80
1971-4	Satellite & Coronet Sta. Wag. - Rear Compt.	N.D.	3488 424	10.80
1974	Fury, Monaco & Chrysler Sedans - Rear Compt.	N.D.	3501 359	14.05
1974	Fury, Monaco & Chrysler Sedans - Rear Compt. & Inst. Panel - 4 Speakers - Note 1	N.D.	3501 349	23.50
1974	Fury, Monaco & Chrysler Sta. Wag. - Inst. Panel - 4 Speakers - Note 2	N.D.	3501 363	36.25
1970-3	Barracuda & Challenger (Exc. Rallye)	N.D.	3501 182	10.80
1970-3	Barracuda & Challenger Rallye	N.D.	3501 183	10.80
1972-3	Fury, Gran, Polara & Monaco (Exc. Sta. Wag.)	N.D.	3501 555	10.80
1972-3	Fury, Gran, Polara & Monaco Sta. Wag.	N.D.	3501 556	10.80
1969-73	Chrysler (Exc. Sta. Wag.)	N.D.	2947 223	14.05
1970-3	Chrysler Sta. Wag.	N.D.	2947 883	14.05
1969-71	Fury, Polara & Monaco (Exc. Sta. Wag.)	N.D.	2947 220	10.68
1970-1	Fury, Polara & Monaco Sta. Wag.	N.D.	2947 882	10.68
1968-70	Valiant See Note			
1970	Dart Swinger "340"			
1968-9	Barracuda			
1968-70	Dart (Exc. Swinger "340")	N.D.	2864 332	9.87
1969-70	Belvedere, Satellite, Coronet & Charger	N.D.	2947 234	9.87

(1) For production-type installation, use new Instrument Panel Cover, No. 3590 386; and use one of the following new Rear Shelf Panels:

FURY & MONACO		CHRYSLER	
4 Door H.T.	No. H102KX9	2 Doors & 4 Door H.T.	No. H100KX9
4 Door Sedan	No. H126KX9	4 Door Sedan	No. H130KX9
2 Doors	No. H132KX9		

(2) For production-type installation, use new Instrument Panel Cover, No. 3590 386.

1974 RADIO BEZELS

Description	Price Sym.	Part Number	Dealer Each
*RADIO BEZELS			
A Bezel is Required when Installing 1974 Radios			
BEZEL (Use with Radios 3501 582 & 3501 583)			
Valiant & Dart - All (Std. Black)	N.D.	2884 817	1.44
Valiant & Dart - All (Woodgrain)	B3	3501 602	8.95
BEZEL (Use with Radios 2884 853 & 3501 626)			
Barracuda & Challenger - All	N.D.	2884 880	1.98
BEZEL (Use with Radios 3501 132, 3501 584 & 3501 627)			
R/Runner, Sebring Plus, Regent/ Coronet, Charger, Crestwood & SE Rallye Type - Woodgrain	B2	3592 686	6.55
Police, Taxi/Satellite, Coronet & Charger - Silver	B2	3592 351	7.36
Sebring, Custom & Charger - Woodgrain	B2	3592 353	9.34
BEZEL (Use with Radios 3501 337, 3501 338, 3501 339, 3501 340 & 3501 341)			
Fury & Monaco (Exc. Sta. Wag.) - Black	B2	3592 553	6.55
Fury & Monaco Station Wagon - Black	B2	3592 555	6.55
Fury & Monaco (Exc. Sta. Wag.) - Woodgrain	B2	3592 557	7.13
Fury & Monaco Station Wagon - Woodgrain	B2	3592 559	7.13
Chrysler (Exc. Sta. Wag.) - Suede	B2	3592 485	6.40
Chrysler (Exc. Sta. Wag.) - Woodgrain	B2	3592 486	7.13
Chrysler Station Wagon - Woodgrain	B2	3592 487	7.13
BEZEL (Use with Radios 2958 844 & 3837 165)			
Dodge Truck B100-200-300 Black	B2	3730 856	1.95
Blue	B2	3730 857	1.95
Tan	B2	3730 858	1.95
Gold		3738 131	1.95
FACE PLATE (Use with Radios 3635 354 & 3837 166)			
Dodge Truck D & W 100-200-300-500-600-800	B2	3489 554	11.21

1973 RADIO BEZELS

Description	Price Sym.	Part Number	Dealer Each
*RADIO BEZELS			
A Bezel is Required when Installing 1973 Radios			
BEZEL (Use with Radios 3501 582 & 3502 583)			
Valiant & Dart - All (Std. Black)	N.D.	2884 817	1.44
Valiant & Dart - All (Woodgrain)	B3	3501 602	8.95
BEZEL (Use with Radio 2884 853)			
Barracuda & Challenger - All	N.D.	2884 880	1.98
BEZEL (Use with Radios 3501 132 & 3501 584)			
Sebring Plus, Regent & R. Runner w/Rallye Panel (Woodgrain)	B2	2985 158	6.55
Police, Taxi & Satellite (Silver)	B2	2985 364	7.36
Sebring & Custom (Woodgrain)	B2	2985 370	9.34
Coronet & Charger - All w/Rallye Panel (Woodgrain)	B2	2985 158	6.55
Police, Taxi, Coronet & Charger (Silver)	B2	2985 364	7.36
Coronet Custom & Charger (Woodgrain)	B2	2985 370	9.34
BEZEL (Use with Radios 3501 160 & 3501 533)			
Fury, Gran, Polara & Monaco - All	B2	3592 057	1.95
BEZEL (Use with Radios 3420 560 & 3501 133)			
Chrysler - All	B2	2985 564	7.13
BEZEL (Use with Radio 3501 134)			
Chrysler - All	B2	2985 566	7.13
BEZEL (Use with Radio 2958 844)			
Dodge Truck B-100-200-300 ... Black	B2	2958 813	1.95
Blue	B2	3635 295	1.95
Green	B2	3635 296	1.95
Tan	B2	3635 297	1.95
BEZEL (Use with Radio 3635 354)			
Dodge Truck D & W-100-200-300	B2	3489 554	11.21

1972 RADIO BEZELS & PANELS

Description	Price Sym.	Part Number	Dealer Each
*RADIO BEZELS & PANELS			
1972 MODELS			
A Bezel is Required when Installing 1972 Radios.			
BEZEL (Use with Radios 2884 854, 3501 565, 3501 582 & 3501 583)			
Valiant & Dart All (Std. Black)	N.D.	2884 817	1.44
BEZEL (Use with Radio 2884 853)			
Barracuda & Challenger All	N.D.	2884 880	1.98
BEZEL (Use with Radios 3501 132 & 3501 584)			
Satellite, Sebring Plus, Regent & Road Runner w/Rallye Panel Woodgrain	B2	2985 158	6.55
Police, Taxi & Satellite (Silvery)	B2	2985 364	7.36
Satellite, Sebring & Custom (Woodgrain)	B2	2985 370	9.34
Coronet & Charger w/Rallye Panel (Woodgrain)	B2	2985 158	6.55
Police, Taxi, Coronet & Charger (Silvery)	B2	2985 364	7.36
Coronet Custom & Charger (Woodgrain)	B2	2985 370	9.34
BEZEL (Use with Radio 3501 533)			
Fury & Gran	B2	3592 057	1.95
BEZEL (Use with Radios 3501 160 & 3501 533)			
Polara & Monaco	B2	3592 057	1.95
BEZEL (Use with Radios 2884 859, 3420 560 & 3501 133)			
Chrysler	B2	2985 564	7.13
BEZEL (Use with Radio 3501 134)			
Chrysler	B2	2985 566	7.13
BEZEL (Use with Radio 2958 844)			
Dodge Truck B100, 200, 300 — Black	B2	2958 813	1.95
Blue	B2	3489 459	1.95
Green	B2	3489 460	1.95
Tan	B2	3489 461	1.95
BEZEL (Use with Radio 3635 354)			
Dodge Truck D100, 200, 300 & W100, 200, 300	B2	3489 554	11.21

1971 RADIO BEZELS & PANELS

Description	Price Sym.	Part Number	Dealer Each
RADIO BEZELS & PANELS			
1971 MODELS			
A Bezel or Panel is Required when Installing 1971 Radios.			
BEZEL (Use with Radios 2884 854, 3501 565, 3501 582 & 3501 583)			
Valiant Duster, Scamp and Demon (Black)	N.D.	2884 817	1.44
Valiant Scamp and Demon (Woodgrain)	N.D.	2884 886	5.34
Swinger Special and Dart (Silver)	N.D.	2884 897	2.46
BEZEL (Use with Radio 2884 853)			
Barracuda	N.D.	2884 880	1.98
Challenger (Except Rallye)	N.D.	2884 878	1.98
Challenger Rallye (Woodgrain)	N.D.	2884 880	1.98
*BEZEL (Use with Radios 3501 132 & 3501 584)			
Satellite Sebring plus, Brougham, Regent, Road Runner & GTX (Woodgrain)	B2	2985 158	6.55
Satellite (Silvery)	B2	2985 364	7.36
Satellite Sebring and Custom (Woodgrain)	B2	2985 370	9.34
Charger Super Bee, 500, S.E. & R/T			
Coronet Brougham & Crestwood (Woodgrain)	B2	2985 158	6.55
Coronet (Silvery)	B2	2985 364	7.36
Charger and Custom (Woodgrain)	B2	2985 370	9.34

1971 RADIO BEZELS & PANELS

Description	Price Sym.	Part Number	Dealer Each
*RADIO BEZELS & PANELS (Continued)			
1971 MODELS			
BEZEL (Use with Radios 3420 888, 3501 160 & 3501 533)			
Fury I & II	B3	3501 004	3.13
Fury (Exc. I & II)	B3	3501 005	4.79
BEZEL (Use with Radios 3501 160 & 3501 533)			
Polara Special	B3	3501 004	3.13
Polara & Monaco (Exc. Special)	B3	3501 005	4.79
BEZEL (Use with Radio 2884 859)			
Chrysler	B2	2985 564	7.13
BEZEL (Use with Radios 3420 560 & 3501 133)			
Chrysler	B2	2985 564	7.13
BEZEL (Use with Radio 3501 134)			
Chrysler	B2	2985 566	7.13
BEZEL (Use with Radio 2958 844)			
Dodge Truck B100, 200, 300 - Black	B2	2958 813	1.95
Blue	B2	3489 459	1.95
Green	B2	3489 460	1.95
Tan	B2	3489 461	1.95

1970 RADIO BEZELS & PANELS

Description	Price Sym.	Part Number	Dealer Each
RADIO BEZELS, PANELS & PLATES			
1970 MODELS			
A Bezel, Panel or Plate is Required when Installing 1970 Radios.			
BEZEL (Use with Radios 2884 854, 3501 565, 3501 582 & 3501 583)			
Valiant w/Woodgrain	N.D.	2884 886	5.34
Valiant w/o Woodgrain	N.D.	2884 817	1.44
Dart & Swinger	N.D.	2884 897	2.46
BEZEL (Use with Radio 2884 853)			
Barracuda	N.D.	2884 880	1.98
Challenger (Exc. Rallye)	N.D.	2884 878	1.98
Challenger Rallye	N.D.	2884 880	1.98

Mopar

NOTES

AUTOMATIC SPEED CONTROL PACKAGES

APPLICABLE ONLY TO VEHICLES WITH AUTOMATIC TRANSMISSION AND POWER BRAKES

Year	Models	Type Engine	Steering Column Type	Control Package	Lever & Switch Package
1974	Fury, Monaco, Chrysler & Imperial	360, 400 & 440	Standard Tilt	3837 324 3837 324	3746 518 3746 680

	Price Sym.	Part Number	List	Dealer Each
* Control Package	N.D.	3837 324	44.21	33.16
* Lever & Switch Package	B2	3746 518 3746 680	31.24 31.24	20.31 20.31
* SPEED CONTROL PACKAGES - COMPLETE				
1974 Satellite, Coronet & Charger-8 Cyl. Engines	N.D.	3837 975	69.76	52.32
1974 Dodge Truck AD1, AW1, D1-2-3, & W1-2 8 Cyl. Engines	N.D.	3837 974	63.11	49.01
1974 Dodge Truck B1-2-3, CB3 & MC3 8 Cyl. Engine with Auto. Trans.	N.D.	3837 327	63.11	49.01

Mopar

AUTOMATIC SPEED CONTROL PACKAGES

APPLICABLE ONLY TO VEHICLES WITH AUTOMATIC TRANSMISSION AND POWER BRAKES

Year	Models	Type Engine	Steering Column Type	Basic Pkg.	Adapter Pkg.	Lever & Switch Pkg.	Speedo Cable	Wiring Assy.	Link Adapter Pkg.
1972-3	Fury,	318-360	Standard	3420 935	3620 703	3488 538	3592 367	2983 439	3620 807
	Polara	318-360	Tilt	3420 935	3620 703	3488 540	3592 367	2983 439	3620 807
	and	400-440	Standard	3420 935	3420 939	3488 538	3592 367	2983 439	3620 807
	Monaco	400-440	Tilt	3420 935	3420 939	3488 540	3592 367	2983 439	3620 807
1972-3	Chrysler	400-440	Standard	3420 935	3420 939	3488 538	3592 370	2983 310	3620 807
		400-440	Tilt & Telescoping	3420 935	3420 939	3488 539	3592 370	2983 310	3620 807
1972-3	Imperial	440	Standard	3420 935	3420 939	3488 538	3592 370	-	3620 807
		440	Tilt & Telescoping	3420 935	3420 939	3488 539	3592 370	-	3620 807

	Price Sym.	Part Number	List	Dealer Each	Wholesale Allowance
*Basic Package	N.D.	3420 935	38.80	29.10	
*Adapter Package	N.D.	3420 939	5.41	4.06	
	N.D.	3620 703	5.41	4.06	
*Lever & Switch Package	B2	3488 538	31.24	20.31	
	B2	3488 539	31.24	20.31	
	B2	3488 540	31.24	20.31	
*Speedometer Cable Assembly	A5	3592 367	4.87	2.44	.34
	A5	3592 370	4.87	2.44	.34
*Wiring Assembly	B3	2983 310	5.20	3.13	
	B3	2983 439	5.20	3.13	
*Link Adapter Package	B2	3620 807	1.36	.88	
*SPEED CONTROL PACKAGES - COMPLETE					
1970-3 Dodge Truck - B100-200-300 Van with 318 or 360 C.I.E. - w/or w/o Power Brakes	N.D.	3579 242	63.11	49.01	
1972-3 Dodge Truck D100-200-300 & W100-200	N.D.	3744 555	63.11	49.01	
On W100-200 Models Also Specify 1-3635 003 Cable	B2	3635 003	10.53	6.84	

AUTOMATIC SPEED CONTROL PACKAGES

APPLICABLE ONLY TO VEHICLES WITH AUTOMATIC TRANSMISSION AND POWER BRAKES

Model Year	MODELS	Engine	Steering Column Type	Basic Pkg.	Adapter Pkg.	Cable & Bracket Pkg.	Lever & Switch Pkg.	Wiring Assy.	Speedo Cable Assy.
1971	Fury, Polara & Monaco	318-360	Standard	3420 935	3620 703	N.R.	2947 954	2983 439	2927 910
		318-360	Tilt	3420 935	3620 703	N.R.	2947 956	2983 439	2927 910
		383-440	Standard	3420 935	3420 939	N.R.	2947 954	2983 439	2927 910
		383-440	Tilt	3420 935	3420 939	N.R.	2947 956	2983 439	2927 910
1971	Chrysler	383-440	Standard	3420 935	3420 939	N.R.	2947 954	2983 310	2927 914
		383-440	Tilt & Telescoping	3420 935	3420 939	N.R.	3488 539	2983 310	2927 914
1971	Imperial	440	Standard	3420 935	3420 939	N.R.	2947 954	N.R.	2927 914
		440	Tilt & Telescoping	3420 935	3420 939	N.R.	3488 539	N.R.	2927 914
1970	Barracuda & Challenger	318	All			N.R.	N.R.	N.R.	N.R.
		383-440 (1)	All			N.R.	N.R.	N.R.	N.R.
1970	Belvedere, Satellite	318	All	3420 936		N.R.	N.R.	N.R.	N.R.
	Coronet &	383-440 (1)	All	3420 936	3420 939	N.R.	N.R.	N.R.	N.R.
1968-9	Charger	318	All	3420 564	Not	3420 568	N.R.	N.R.	2927 910
		383-440 (1)	All	3420 564	Available	3420 570	N.R.	N.R.	
1970	Fury	318	Standard	3420 935		N.R.	2947 500	2983 439	2927 910
		318	Tilt	3420 935		N.R.	2947 524	2983 439	2927 910
		383-440 (1)	Standard	3420 935	3420 939	N.R.	2947 500	2983 439	2927 910
		383-440 (1)	Tilt	3420 935	3420 939	N.R.	2947 524	2983 439	2927 910
1969	Fury	318	Chrysler Std.	3420 564			2926 589	2926 060	2927 910
		318	Saginaw Tilt	3420 564			2926 591	2926 060	2927 910
		383-440 (1)	Chrysler Std.	3420 564		3420 570	2926 589	2926 060	2927 910
		383-440 (1)	Saginaw Tilt	3420 564		3420 570	2926 591	2926 060	2926 910
1968	Fury	318	Chrysler Std.	3420 564			2857 525	N.R.	2889 779
		318	Tilt & Telescoping	3420 564			2889 162	N.R.	2889 779
		383-440	Chrysler Std.	3420 564		3420 570	2857 525	N.R.	2889 779
		383-440	Tilt & Telescoping	3420 564		3420 570	2889 162	N.R.	2889 779
1970	Polara & Monaco	318	Standard	3420 935		N.R.	2947 500	2983 439	2927 912
		318	Tilt	3420 935		N.R.	2947 524	2983 439	2927 912
		383-440 (1)	Standard	3420 935	3420 939	N.R.	2947 500	2983 439	2927 912
		383-440 (1)	Tilt	3420 935	3420 939	N.R.	2947 524	2983 439	2927 912
1969	Polara & Monaco	318	Chrysler Std.	3420 564			2926 589	2926 060	2927 912
		318	Saginaw Std.	3420 564			2926 590	2926 060	2927 912
		318	Saginaw Tilt	3420 564			2926 591	2926 060	2927 912
		383-440 (1)	Chrysler Std.	3420 564		3420 570	2926 589	2926 060	2927 912
		383-440 (1)	Saginaw Std.	3420 564		3420 570	2926 590	2926 060	2927 912
		383-440 (1)	Saginaw Tilt	3420 564		3420 570	2926 591	2926 060	2927 910
1968	Polara & Monaco	318	Chrysler Std.	3420 564			2857 525	N.R.	2889 780
		318	Tilt & Telescoping	3420 564			2889 162	N.R.	2889 780
		383-440	Chrysler Std.	3420 564		3420 570	2857 525	N.R.	2889 780
		383-440	Tilt & Telescoping	3420 564		3420 570	2889 162	N.R.	2889 780
1970	Chrysler	383-440 (1)	Standard	3420 935	3420 939	N.R.	2947 500	2983 310	2927 914
		383-440 (1)	Tilt & Telescoping	3420 935	3420 939	N.R.	2947 501	2983 310	2927 914
1969	Chrysler	383-440 (1)	Chrysler Std.	3420 564		3420 570	2926 590	2926 877	2927 914
		383-440 (1)	Tilt & Telescoping	3420 564		3420 570	2889 162	2926 877	2927 914
1968	Chrysler	383-440	Chrysler Std.	3420 564		3420 570	2857 525	N.R.	2881 781
		383-440	Saginaw Std.	3420 564		3420 570	2889 550	N.R.	2881 781
		383-440	Tilt & Telescoping	3420 564		3420 570	2889 162	N.R.	2881 781
1970	Imperial	440 (1)	Standard	3420 935	3420 939	N.R.	2947 500	N.R.	2927 914
		440 (1)	Tilt & Telescoping	3420 935	3420 939	N.R.	2947 501	N.R.	2927 914
1969	Imperial	440 (1)	Chrysler Std.	3420 564		3420 570	2926 590	N.R.	2927 914
		440 (1)	Tilt & Telescoping	3420 564		3420 570	2889 162	N.R.	2927 914

(1) EXCEPT 440 C.I.D. WITH 6 PACK

Mopar

AUTOMATIC SPEED CONTROL PACKAGES

PRICE SCHEDULE FOR PRIOR MODELS

Description	Price Sym.	Part Number	List	Dealer Each	Wholesale Allowance
*SPEED CONTROL PACKAGES					
Basic Package	N.D.	3420 564	40.37	30.28	
	N.D.	3420 935	38.80	29.10	
Adapter Package	N.D.	3420 939	5.41	4.06	
	N.D.	3620 703	5.41	4.06	
Lever & Switch Package	B2	2857 525	31.24	20.31	
	B2	2889 162			
	B2	2889 550			
	B2	2926 589			
	B2	2926 590			
	B2	2926 591			
	B2	2947 524			
	B2	3488 539			
Wiring Assembly	B3	2926 060	3.68	2.20	
	B3	2926 877	3.00	1.80	
	B3	2983 310	5.20	3.13	
	B3	2983 439	5.20	3.13	
Speedometer Cable Assembly	A5	2889 779	4.53	2.27	.33
	A5	2889 780	4.53	2.27	.33
	A5	2889 781	5.10	2.55	.36
	A5	2927 912	5.10	2.55	.36

*Price Revision

Description	Price Sym.	Part Number	List	Dealer Each
BASKET - LITTER				
ALL MODELS	N.D.	2275 970	2.83	1.54
BASKET-LITTER WITH TISSUE DISPENSER & TRAY				
ALL MODELS - 6-1/4"x8"x8"	N.D.	3837 724	4.93	3.04
RETRACTOR PACKAGE - SEAT BELT				
For All Cars Equipped with Seat Belts	N.D.	2495 897	4.11	2.30
BELT PACKAGE - SHOULDER - REAR				
1969 Valiant & Dart (Exc. Conv. Coupe) Barracuda 2 Door Hardtop Belvedere, Satellite, Coronet & Charger (Exc. Conv. Coupe & Station Wagon)				
1968 Valiant, Barracuda 2 Door Hardtop, Dart 2 Door & 4 Door Sedan, 2 Door Hardtop, Belvedere, Satellite & Coronet 2 Door & 4 Door Sedan, 2 Door Hardtop Charger, 2 Door Spec. Hardtop Fury, Sport Fury & VIP (Exc. Conv. Cpe.) Polara & Monaco 4 Door Sedan, 2 Door & 4 Door Hardtop, Chrysler 2 Door & 4 Door Sedan, 4 Door Hardtop & Imperial 4 Door Sedan, 2 Door & 4 Door Hardtop - Black	N.D.	4780 DX9	11.21	7.29
1969 Fury, Sport Fury, Polara, Monaco, Chrysler & Imperial (Exc. Conv. Cpe. & Sta. Wag.) - Black	N.D.	4604 EX9	11.21	7.29
1968 Barracuda 2 Door Spec. Hardtop - Black	N.D.	4781 DX9	11.21	7.29

Mopar

NOTES

POWER BRAKES

	Description	Price Sym.	Part Number	List	Dealer Each	Wholesale Allowance
	BRAKE KIT - POWER					
*1973-4	Valiant & Dart With Drum Brakes	A3	3744 440	56.31	33.78	3.37
1973-4	Valiant & Dart With Disc Brakes	N.D.	3744 441	63.58	38.15	
1973-4	Barracuda, Challenger, Satellite, Coronet & Charger - All w/Disc Brakes	N.D.	3744 472	63.58	38.15	
*1971-2	Valiant & Dart w/10" Brake Drums	A3	3579 290	56.31	33.78	3.37
*1971-2	Barracuda, Challenger, Satellite, Coronet & Charger - All	A3	3579 292	56.31	33.78	3.37
1972	Fury, Polara & Monaco - All					
1971	Fury, Polara & Monaco Station Wagon					
*1971-2	Chrysler - All	A3	3549 942	56.31	33.78	3.37
1973-4	Dodge Truck B100-200 .....Note 1	N.D.	3744 916	54.20	32.52	
1970-2	Dodge Truck B100-200 Van	N.D.	3579 287	60.38	36.31	
1970-2	Dodge Truck B300 Van	N.D.	3579 288	60.38	36.31	
1973-4	Dodge Truck D100 ..... Note 2		3744 915	57.82	34.70	
1972-4	Dodge Truck W100 & 1972 D100 ... Note 3	N.D.	3621 965	57.82	34.70	
1972	Dodge Truck D & W 200-300	N.D.	3621 966	57.82	34.70	
*1969-70	Belvedere, Satellite, Coronet & Charger (Exc. 1969 Sta. Wag.)	A3	3004 622	53.08	31.85	3.00
*1969-70	Fury, Polara, Monaco & Chrysler	A3	3004 867	53.08	31.85	3.00
	Also Order the Following Pedals with the Above Kits.					
*Note 1	1973-4 B100 ..... All	B3	3637 754	9.61	5.77	
*Note 2	1973-4 D100 ..... w/Man. Trans.	B2	3496 928	10.93	7.10	
*Note 2	1973-4 D100 ..... w/Auto. Trans.	B2	3496 932	10.93	7.10	
*Note 3	1973-4 W100					
	1972 D100 ..... w/Auto. Trans.	B2	3496 934	10.93	7.10	
*Note 3	1973-4 W100					
	D100 ..... w/Man. Trans.	B2	3491 618	10.93	7.10	
	BRAKE CONTROL PACKAGE - TRAILER ELECTRIC					
1954-74	Pass. Cars - All					
1970-74	Dodge Truck B100-200-300					
1963-74	Dodge Truck M & R 300-400					
1969-71	Dodge Truck D100-200-300					
1963-69	Dodge Truck A100	N.D.	3837 350	34.20	22.23	

*Price Revision

Mopar

NOTES

LOCKING FUEL TANK CAPS

Description	Price Sym.	Part Number	List	Dealer Each	Wholesale Allowance
* CAP-FUEL TANK LOCKING					
VALIANT & DART					
1972-4 All 1971 All Late Prod. Models	A3	3583 547	5.75	3.45	.30
BARRACUDA					
1972-3 All	A3	3583 561	5.75	3.45	.30
SATELLITE, CORONET & CHARGER					
1973-4 1971-2 1970 California Sedans	A3	3583 561 3404 651	5.75 5.75	3.45 3.45	.30 .30
FURY, GRAN, POLARA, MONACO, CHRYSLER & IMPERIAL					
1973-4 All 1972 (Exc. Station Wagon) 1971 (Exc. Station Wagon) Late Prod. Models	A3	3583 561	5.75	3.45	.30
1971-2 Station Wagon 1971 (Exc. Station Wagon) Early Prod. Models 1970 California Only	A3	3404 651	5.75	3.45	.30
1971 Valiant & Dart Early Prod. Models 1970 California Only	A3	3404 661	5.75	3.45	.30
1969-70 Valiant & Dart	A3	2823 888	4.25	2.55	.30
1969 Barracuda 1969-70 Charger	A3	2925 881	4.25	2.55	.30
1971 Challenger w/Hinge Type Cover 1970 California Only w/Hinge Type Cover	A3	3404 668	6.31	3.78	.38
1970 Challenger w/Hinge Type Cover Exc. California	A3	3404 683	5.75	3.45	.30
1968-70 Belvedere, Satellite, Coronet, Fury, Polara, Monaco, Chrysler & Imperial (Exc. Station Wagon)	A3	2534 323	4.25	2.55	.30
1966-7 Belvedere & Satellite - All 1967-70 Coronet & Charger Station Wagon	A3	2660 899	4.51	2.70	.32
1967 Coronet & Charger (Exc. Station Wagon) 1967-70 Fury, Polara, Monaco & Chrysler Station Wagon	A3	2409 393	4.25	2.55	.30
1961-68 Dodge Truck	A3	2158 315	4.25	2.55	.30
1972-3 Dodge Truck B, D & W100-200-300	A3	3744 501	6.31	3.78	.38

Mopar

NOTES

UNIVERSAL CARPETING	Price Sym.	List	Dealer
All Front Carpets	N.D.	24.72	14.84
All Rear Carpets	N.D.	23.92	14.36

UNIVERSAL CARPETING

	FRONT	Black	Light Blue	Medium Blue	Dark Blue	Gray Blue	Brown	Gold	Medium Green	Dark Green	Orange	Bright Red	Dark Red
1965-70	Fury, Polara, Monaco, Chrysler & Imperial	3620 900	3620 901	3620 902	3620 903	3620 904	3620 905	3620 906	3620 907	3620 908	3620 909	3620 910	3620 911
1965-70	Belvedere, Satellite, Coronet & Charger	3620 913	3620 914	3620 915	3620 916	3620 917	3620 918	3620 919	3620 920	3620 921	3620 922	3620 923	3620 924
1966-71	Valiant & Dart												
1966-69	Barracuda	3620 926	3620 927	3620 928	3620 929	3620 930	3620 931	3620 932	3620 933	3620 934	3620 935	3620 936	3620 937
1970-71	Barracuda & Challenger	3620 939	3620 940	3620 941	3620 942	3620 943	3620 944	3620 945	3620 946	3620 947	3620 948	3620 949	3620 950
1962-64	Dodge "880" &Chrysler	3620 952	3620 953	3620 954	3620 955	3620 956	3620 957	3620 958	3620 959	3620 960	3620 961	3620 962	3620 963
1962	Dart												
1962-64	Fury, Polara & Monaco	3620 965	3620 966	3620 967	3620 968	3620 969	3620 970	3620 971	3620 972	3620 973	3620 974	3620 975	3620 976
1963-64	Imperial	3620 991	3620 992	3620 993	3620 994		3620 996	3620 997	3620 998	3620 999	3621 000	3621 001	3621 002
1960-65	Valiant												
1961-62	Lancer												
1963-65	Dart	3621 004	3621 005	3621 006	3621 007	3621 008	3621 009	3621 010	3621 011	3621 012	3621 013	3621 014	3621 015

ALL PRICES AND SPECIFICATIONS ARE SUBJECT TO CHANGE WITHOUT NOTICE

UNIVERSAL CARPETING	Price Sym.	List	Dealer
All Front Carpets	N.D.	24.72	14.84
All Rear Carpets	N.D.	23.92	14.36

UNIVERSAL CARPETING (CONT'D)

	REAR	Black	Light Blue	Medium Blue	Dark Blue	Gray Blue	Brown	Gold	Medium Green	Dark Green	Orange	Bright Red	Dark Red
1969-70	Fury, Polara & Monaco Station Wagon												
1969-70	Chrysler & Imperial (Exc. 4 Door Hardtop)	3621 017	3621 018	3621 019	3621 020	3621 021	3621 022	3621 023	3621 024	3621 025	3621 026	3621 027	3621 028
1969-70	Fury, Polara, Monaco, Chrysler & Imperial 4 Door Hardtop	3621 030	3621 031	3621 032	3621 033	3621 034	3621 035	3621 036	3621 037	3621 038	3621 039	3621 040	3621 041
1965-68	Fury, Polara, Monaco, "880" Chrysler & Imperial	3621 043	3621 044	3621 045	3621 046	3621 047	3621 048	3621 049	3621 050	3621 051	3621 052	3621 053	3621 054
1969-70	Fury, Polara & Monaco (Exc. 4 Door Hardtop & Sta. Wag.)	3621 056	3621 057	3621 058	3621 059	3621 060	3621 061	3621 062	3621 063	3621 064	3621 065	3621 066	3621 067
1965-70	Belvedere, Satellite, Coronet & Charger	3621 069	3621 070	3621 071	3621 072	3621 073	3621 074	3621 075	3621 076	3621 077	3621 078	3621 079	3621 080
1970-71	Barracuda & Challenger	3621 082	3621 083	3621 084	3621 085	3621 086	3621 087	3621 088	3621 089	3621 090	3621 091	3621 092	3621 093
1966-71	Valiant & Dart												
1966-69	Barracuda	3621 095	3621 096	3621 097	3621 098	3621 099	3621 100	3621 101	3621 102	3621 103	3621 104	3621 105	3621 106
1962	Dart												
1962-64	Fury, Polara, Monaco, "880" Chrysler & Imperial	3621 108	3621 109	3621 110	3621 111	3621 112	3621 113	3621 114	3621 115	3621 116	3621 117	3621 118	3621 119
1960-65	Valiant												
1961-62	Lancer												
1963-65	Dart	3621 134	3621 135	3621 136	3621 137	3621 138	3621 139	3621 140	3621 141	3621 142	3621 143	3621 144	3621 145

ALL PRICES AND SPECIFICATIONS ARE SUBJECT TO CHANGE WITHOUT NOTICE

CLOCKS

	Description	Price Sym.	Part Number	List	Dealer Each
CLOCK - ELECTRIC					
1970-4	Barracuda & Challenger (Exc. Rallye)	N.D.	2984 951	-	12.75
1972-4	Satellite, Coronet & Coronet Custom	N.D.	2985 416	-	13.55
1974	Fury I, II & III, Suburban & Custom Suburban	N.D.	3592 701		12.75
1974	Newport	N.D.	3592 702		14.20
1974	Monaco, Fury Gran Coupe & Sedan & Sport Suburban ..... Digital	N.D.	3592 616		28.95
1974	New Yorker, Town & Country ..... Digital	N.D.	3592 698		28.95
1972-3	Fury, Polara, Monaco	N.D.	3592 096	-	12.75
1972-3	Chrysler	N.D.	3592 151	-	14.20
1970-2 1968-9	Duster 340 & Demon 340 Barracuda	N.D.	2857 678		12.60
1971	Chrysler	N.D.	2985 850	-	13.90
1970	Challenger (Exc. Rallye)	N.D.	2984 952	-	11.82
1968-70	Belvedere, Satellite & Coronet	N.D.	2889 620	-	11.82
1970	Polara & Monaco	N.D.	2984 959		11.82
1969	Polara & Monaco	N.D.	2927 973		11.36

Mopar

Description	Price Sym.	Part Number	List	Dealer Each	Wholesale Allowance
DEFLECTOR PACKAGE - STATION WAGON - REAR WINDOW					
Roof Type - 1971-4 Satellite & Coronet	N.D.	3579 672	21.30	12.78	
#ENGINE BLOCK HEATER					
1968-74 Chrysler Built Passenger Cars & Trucks Also Adaptable to Other Makes	A3	3780 741	10.55	6.33	.30
FIRE EXTINGUISHER (DRY CHEMICAL)					
Automotive, Marine & Household use					
Weight Height Dia. Capacity					
2 lb. 13 oz. 12-1/2" 3" 950 Grams	N.D.	3419 439	-	4.96	
FRAME PACKAGE - LICENSE TRIM					
1967-74 All Chrysler Built Passenger Cars	N.D.	2768 643	4.01	2.30	
GRIP RAIL PACKAGE - SWEPT LINE MODELS					
D & W100-200 With 8 Ft. Box	N.D.	3734 470	49.95	32.46	

BUMPER GUARDS

Description		Price Sym.	Part Number	List	Dealer Each
GUARD PACKAGE - BUMPER					
FRONT					
1967-72	Valiant	N.D.	2809 825	14.15	8.17
1971-2	Barracuda - All	N.D.	3620 326	13.19	7.58
1970-2	Dart	N.D.	3481 805	15.75	9.07
1970-2	Challenger	N.D.	3481 807	13.19	7.58
1971-2	Satellite 2 Door Hardtop	N.D.	3620 327	16.61	9.45
1971-2	Satellite 4 Door Sedan & Station Wagon	N.D.	3620 328	16.61	9.45
1971-2	Coronet 4 Door Sedan & Station Wagon	N.D.	3620 332	16.61	9.45
1971-2	Charger	N.D.	3620 331	16.61	9.45
1970-1	Fury & Sport Fury	N.D.	3481 815	17.94	10.19
1970-1	Polara & Monaco	N.D.	3481 817	17.94	10.19
1971	Chrysler - All	N.D.	3620 337	18.15	10.36
1970	Barracuda (Exc. Cuda)	N.D.	3481 803	12.34	7.04
1969-70	Chrysler	N.D.	2933 655	18.15	10.36
1969	Fury & Sport Fury	N.D.	2933 651	17.94	10.19
1971-4	Dodge Truck B100-200-300 Vans	N.D.	3621 996	24.51	15.92
1972-4	Dodge Truck D & W100-200-300 Pick-up	N.D.	3621 995	24.51	15.92
REAR					
1970-2	Dart	N.D.	3481 804	12.54	7.21
1971	Satellite 2 Door Hardtop	N.D.	3620 329	16.61	9.45
1971-2	Coronet 4 Door Sedan (Exc. Station Wagon)	N.D.	3620 334	16.61	9.45
1971-2	Charger	N.D.	3620 333	16.61	9.45
1971	Fury (Exc. Sport Fury & Station Wagon)	N.D.	3620 335	17.94	10.19
1971	Polara & Monaco (Exc. Station Wagon)	N.D.	3620 336	17.94	10.19
1971	Chrysler (Exc. Station Wagon)	N.D.	3620 338	18.15	10.36
1969	Fury & Sport Fury (Exc. Station Wagon)	N.D.	2933 652	17.94	10.19

Mopar

Description	Price Sym.	Part Number	List	Dealer Each	Wholesale Allowance
*GUARD - SPLASH - PAIR					
Passenger Cars . . . . . Black	A3	3579 660	2.83	1.70	.24
Passenger Cars . . . . . White	A3	3837 972	3.66	2.19	.31
Trucks - Pick Up & Van . . . . . Black	N.D.	3685 553	4.96	2.98	
Trucks - Pick Up & Van . . . . . White	A3	3837 973	5.78	3.47	.49
AUXILIARY HEATER - REAR COMPARTMENT					
1970-4 Dodge Truck - B100-200-300 Vans . . . . . Also Specify 1-3441 789 Shutoff (w/A/C Only)	N.D.	3489 928	-	79.55	
JACK - UNIVERSAL BUMPER					
1972 and Prior Model Passenger Cars & Compact Trucks (Exc. 1967-69 Barracuda & 1968-70 Charger)	N.D.	3549 587	11.70	7.01	
HOOD LOCK PACKAGE					
1970-74 Dodge Truck B100-200-300	N.D.	3837 976	10.40	6.24	
HORN PACKAGE - CITY - COUNTRY					
New York City Approved					
1974 Passenger Cars	N.D.	3746 824	15.25	9.15	
1974 Dodge Trucks	N.D.	3738 247	15.25	9.15	

1974 REAR WINDOW DEFOGGERS

Description	Basic Packages Price Sym.	Basic Packages Part Number	Basic Packages Dealer Each	Adapter Packages Price Sym.	Adapter Packages Part Number	Adapter Packages Dealer Each
* DEFOGGER PACKAGE - REAR WINDOW						
(Exc. Conv. Cpe. & Sta. Wag.)						
VALIANT & DART						
1974 Fastback w/o Security Panel	N.D.	3502 097	19.00	N.D.	3420 943	2.72
1974 2 Door H.T. & 4 Door	N.D.	3502 099	19.00	N.D.	3420 943	2.72
BARRACUDA & CHALLENGER						
1974 All (Note 1 & 2)	N.D.	3502 098	19.00	N.D.	3837 168	3.80
SATELLITE, CORONET & CHARGER						
1974 All	N.D.	3502 098	19.00	N.D.	3579 234	3.80
FURY, GRAN & MONACO						
1974 2 Door H.T. (Note 1)	N.D.	3502 820	19.00	N.D.	3837 169	3.80
1974 4 Door & 4 Door H.T. (Note 1)	N.D.	3502 821	19.00	N.D.	3837 169	3.80
CHRYSLER & IMPERIAL						
1974 4 Door Sedan (Note 1)	N.D.	3502 820	19.00	N.D.	3837 170	3.80
1974 2 Door H.T. & 4 Door H.T. (Note 1)	N.D.	3502 821	19.00	N.D.	3837 170	3.80
Note 1: For Models with Dual Rear Speaker also specify and use ADAPTER PACKAGE	N.D.	3441 426	2.67			
Note 2: For Rallye Models also specify and use PLATE ASSEMBLY	N.D.	3488 384	3.47			

1971-73 REAR WINDOW DEFOGGERS

Description	Basic Packages Price Sym.	Basic Packages Part Number	Basic Packages Dealer Each	Adapter Packages Price Sym.	Adapter Packages Part Number	Adapter Packages Dealer Each
*DEFOGGER PACKAGE - REAR WINDOW (Exc. Conv. Cpe. & Sta. Wag.)						
VALIANT						
1971-3 Fastback & 4 Door w/o Security Panel	N.D.	3502 097	19.00	N.D.	3420 943	2.72
1971-3 2 Door H.T.	N.D.	3502 099	19.00	N.D.	3420 943	2.72
DART						
1971-3 Fastback w/o Security Panel	N.D.	3502 097	19.00	N.D.	3420 943	2.72
1971-3 2 Door H.T. & 4 Door	N.D.	3502 099	19.00	N.D.	3420 943	2.72
BARRACUDA & CHALLENGER						
1971-3 Note 1 & 2	N.D.	3502 098	19.00	N.D.	3420 912	3.80
SATELLITE, CORONET & CHARGER						
1971-3	N.D.	3502 098	19.00	N.D.	3579 234	3.80
FURY & GRAN						
1971-3 Note 1	N.D.	3502 097	19.00	N.D.	3420 944	3.80
POLARA & MONACO						
1971-3 Note 1	N.D.	3502 097	19.00	N.D.	3420 944	3.80
CHRYSLER						
1971-3 Note 1	N.D.	3502 097	19.00	N.D.	3579 235	3.80
IMPERIAL						
1971-3 Note 1	N.D.	3502 097	19.00	N.D.	3621 813	3.80
Note 1: For Models with Dual Rear Speaker also specify and use ADAPTER PACKAGE	N.D.	3441 426	2.67			
Note 2: For Rallye Models also specify and use PLATE ASSEMBLY	N.D.	3488 384	3.47			

REAR WINDOW DEFOGGERS

Description	Price Sym.	Part Number	List	Dealer Each
DEFOGGER PACKAGE - REAR WINDOW (COMPLETE)				
1970 Belvedere, Satellite & Coronet (Exc. Conv. Cpe., Fastback & Station Wagon)	N.D.	3441 320	-	17.20
REPAIR PACKAGE - REAR WINDOW DEFOGGER ELECTRIC GRID				
1973-4 Valiant & Dart w/Electric Rear Window Defogger	N.D.	3744 970	8.15	4.89

Mopar

Description	Price Sym.	Part Number	List	Dealer Each	Wholesale Allowance
LIGHTER PACKAGE - CIGAR					
*1969-74 Valiant & Dart 1972-4 Barracuda, Challenger, Satellite & Coronet	N.D.	2947 219	4.50	2.70	
1968-74 L.C.F. Models	N.D.	2906 125	4.81	2.88	
1970-1 Conv. & Crew Cab 1972-4 Med. & Heavy Duty Conv. Cabs	N.D.	2906 782	4.81	2.88	
1970-4 B-100-200-300 Vans	N.D.	2958 783	5.08	3.05	
1972-4 D & W 100-200-300	N.D.	3635 355	5.08	3.05	

Description	Price Sym.	Part Number	List	Dealer Each	Wholesale Allowance
*LOAD-LEVELERS					
1960-74 Valiant & 1964-69 Barracuda 1963-74 Dart	A1	2421 075	29.95	21.00	3.60
1973-4 Satellite, Coronet & Charger	A1	3837 038	29.95	21.00	3.60
1971-72 Satellite, Coronet & Charger - All 1966-70 Satellite, Coronet & Charger - All 1966-70 Fury - All 1965-74 Polara & Monaco - All 1971-74 Fury - Sta. Wag. 1970-74 Chrysler Sta. Wag. 1970 Chrysler Cv. Cpe. 1965-69 Chrysler - All	A1	2462 179	29.95	21.00	3.60
1971-74 Fury (Exc. Sta. Wag.) 1971-74 Chrysler - All 1970 Chrysler (Exc. Cv. Cpe. & Sta. Wag.)	A1	3400 962	29.95	21.00	3.60
1972-3 Dodge Truck D100-200	A1	3744 413	29.95	21.00	3.60
1970-3 Dodge Truck B100-200-300	A1	3744 414	29.95	21.00	3.60
1961-71 Dodge Truck 1/2 & 3/4 Ton (Exc. A100 Compact)	A1	2298 902	29.95	21.00	3.60
1951-54 Plymouth, Dodge, DeSoto & Chrysler	A1	2275 363	29.95	21.00	3.60
RIDE LEVELERS (AIR SHOCK ABSORBERS)					
1965-74 Valiant & Dart	A1	3744 909	63.95	44.75	8.03
1973-4 Satellite, Coronet & Charger	A1	3837 017	63.95	44.75	8.03
1968-72 Belvedere, Satellite, Coronet & Charger 1970-74 Barracuda & Challenger	A1	3744 910	63.95	44.75	8.03
1969-74 Polara & Monaco and 1974 Fury	A1	3744 911	63.95	44.75	8.03
1971-73 Fury & Gran 1970-74 Chrysler & Imperial	A1	3744 912	63.95	44.75	8.03
1972-74 Dodge Truck D100-200 (Exc. w/9000 G.V.W.)	A1	3744 920	63.95	44.75	8.03
LOCK - REAR DOOR CHILD GUARD SAFETY - PAIR				Order in Unit Pack Qty. Only.	
1967-74 4 Door Models (Exc. Imperial, Colt & Cricket)	N.D.	2809 730	5.08	2.93	
Note: Unit Pack 6 Pair Including Display Board					
LOCK PACKAGE - ELECTRIC DECK LID					
1967-74 Chrysler Built Pass. Cars (Exc. Sta. Wag.)	N.D.	3744 597	18.70	13.09	

Mopar

NOTES

LIGHTS CONVENIENCE

Description	Price Sym.	Part Number	List	Dealer Each
GLOVE BOX				
1968-74 Valiant, Barracuda, Dart, Satellite, Coronet & Challenger 1968-70 Belvedere	N.D.	2864 325	2.83	1.66
1969-73 Fury, Sport Fury, Polara & Monaco	N.D.	2947 285	2.08	1.25
1971-3 Chrysler	N.D.	3488 496	2.08	1.25
MAP & COURTESY				
1974 Fury, Monaco & Chrysler	N.D.	3488 988	4.08	2.45
1972-4 Satellite, Coronet & Charger built after January 1, 1972	N.D.	3488 694	7.05	4.23
1971-2 Satellite, Coronet & Charger built prior to January 1, 1972	N.D.	3488 425	4.96	2.98
1969 Valiant, Barracuda & Dart	N.D.	2947 269	4.11	2.47
1968 Valiant, Barracuda & Dart	N.D.	2864 322	7.74	4.49
1968 Fury & Sport Fury	N.D.	2864 323	4.81	2.78
TRUNK OR UNDERHOOD				
Trunk - 1967-71 - All (Exc. Valiant) Underhood - 1965-68 - All Passenger Cars	N.D.	2580 612	3.10	1.76
Trunk - 1972-4 - Valiant & Dart	N.D.	3488 787	3.10	1.76
***CARGO COMPARTMENT**				
1972-3 Dodge Truck D & W100-200-300	B2	3744 962	16.03	10.42

Mopar

Description	Price Sym.	Part Number	List	Dealer Each	Wholesale Allowance
*LOCKING PACKAGE - RACING HOOD					
1970 Barracuda & Coronet 1969-70 Dart Swinger and R/T, Super Bee, Road Runner & G.T.X. & Charger R/T 1969 Coronet R/T	A1	3549 611	13.02	9.77	.28
1971 Duster	A1	3579 667	13.02	9.77	.28
1973-4 Satellite, Road Runner, GTX & Charger	A1	3685 951	13.02	9.77	.28
*CABLE & PIN PACKAGE - RACING HOOD					
Package Consists of 2 Cables, 2 Pins & 2 Screws					
18" Cables	A1	3579 674	5.04	3.76	.10
26" Cables	A1	3579 673	5.38	4.03	.12
*PADLOCK PACKAGE - RACING HOOD					
Use in Conjunction with above Hood Locking Packages	A1	3412 543	2.54	1.91	.06
*MATS - FLOOR - UNIVERSAL					
Design permits use as Door to Door or as Twin Mats.					
All Models (Exc. Colt & Cricket)					
FRONT Black	A2	2932 564	9.49	6.17	.76
Clear		2932 568			
Blue		2932 565			
Green		3744 112			
Parchment (Beige)		3780 728			
Gold		3780 730			
REAR Black	A2	2932 570	7.90	5.13	.63
Clear		2932 574			
Blue		2932 571			
Green		3744 113			
Parchment (Beige)		3780 729			
Gold		3780 731			
MATS - FLOOR - PATTERNIQUE - PAIR					
FRONT - 26" x 23" Red	N.D.	3549 926	14.95	9.72	
Green-Blue		3549 927			
Gold-Brown		3549 928			
FRONT - 25" x 19" Red	N.D.	3549 929	11.35	7.38	
Green-Blue		3549 930			
Gold-Brown		3549 931			
REAR - 16" x 18" Red	N.D.	3549 932	8.55	5.55	
Green-Blue		3549 933			
Gold-Brown		3549 934			

Description	Price Sym.	Part Number	List	Dealer Each	Wholesale Allowance
MATTRESS - STATION WAGON					
1968-73 Universal 84" x 45" x 3-1/2" (Exc. Colt & Cricket)	N.D.	3419 383	42.66	30.81	
*MIRROR - OUTSIDE REAR VIEW					
All Models					
Universal Type (Large Base)	A3	3579 571	7.25	4.35	.41
1966 Chrysler Built Passenger Cars (Exc. New Yorker & Imperial)	A3	2802 254	4.92	2.95	.26
• MIRROR PACKAGE - TRAILER TOWING					
Universal Type 5-1/2 x 7-1/2" Chrome Head Fender Mtg. Right or Left	A3	2933 961	13.42	8.06	.77
MIRROR - VANITY					
All Makes & Models	N.D.	3419 105	2.08	1.25	-
* MOULDING KIT - VINYL TOP TRIM					
All Models Black Only	A1	2933 488	21.17	13.20	1.89
PAINT STRIPING TOOL	N.D.	2933 491	-	2.67	
* STRIPING PACKAGES - Black					
1-2 1/2" x 40' Roll Custom Prealigned	A2	3685 554	10.70	6.95	.34
1-1 1/4" x 80' Roll Triple Custom Prealigned	A2	3685 555	10.70	6.95	.34
6" Kit Strobe Stripes	A2	3685 556	7.07	4.60	.22
3" Kit Strobe Stripes	A2	3685 557	3.91	2.54	.12

Description	Price Sym.	Part Number	List	Dealer Each	Wholesale Allowance
* MOULDING - EXTERIOR SIDE					
Chrome - Black Stripe - 28' Roll w/4 Bullet Ends	A1	3685 584	26.52	17.51	1.70
Black - Red Stripe - 38' Roll	A1	3549 672	26.99	17.81	1.77
Black - White Stripe - 38' Roll	A1	3549 673	26.99	17.81	1.77
Chrome - Lt. Blue Stripe - 28' Roll w/4 Bullet Ends	A1	3685 592	26.52	17.51	1.70
Black - Light Green Stripe - 38' Roll	A1	3549 676	26.99	17.81	1.77
OIL FILLER & INDICATOR PACKAGE					
1970-72 M300-M375-M400 Motor Home Chassis w/318 Engine	N.D.	3744 798	24.15	15.68	
1970-72 M300-M375-M400 Motor Home Chassis w/413 Engine	N.D.	3744 799	27.29	17.73	
* PROTECTOR - DOOR EDGE - VINYL					
Chrome	A3	3683 403	2.78	1.66	.07

*Price Revision

DOOR EDGE PROTECTORS

Description	Price Sym.	Part Number	List	Dealer Each
* PROTECTOR-DOOR EDGE (STAINLESS STEEL)				
1967-74 Valiant & Dart ..... 2 Door	N.D.	3444 455	4.60	2.62
4 Door	N.D.	3444 458	7.90	4.52
1970-74 Barracuda	N.D.	3446 424	4.60	2.62
1970-74 Challenger	N.D.	3504 469	4.60	2.62
1973-74 Satellite ..... 2 Door	N.D.	3680 785	4.60	2.62
1971-74 Satellite ..... 4 Door	N.D.	3505 029	7.90	4.52
1971-74 Coronet ..... 4 Door	N.D.	3504 816	7.90	4.52
1973-74 Charger ..... 2 Door	N.D.	3680 792	4.60	2.62
1974 Fury ..... 2 Door	N.D.	3810 013	4.60	2.62
4 Door w/o Overlay	N.D.	3810 048	7.90	4.52
Station Wagon w/Overlay	N.D.	3810 049	7.90	4.52
1974 Monaco ..... 2 Door	N.D.	3810 050	4.60	2.62
4 Door w/o Overlay	N.D.	3810 051	7.90	4.52
Station Wagon w/Overlay	N.D.	3810 052	7.90	4.52
1974 Chrysler & Imperial .....2 Door	N.D.	3810 053	4.60	2.62
4 Door (Exc. Sta. Wag.)...	N.D.	3810 054	7.90	4.52
1974 Chrysler ..... Station Wagon w/Overlay	N.D.	3810 055	7.90	4.52
Station Wagon w/o Overlay	N.D.	3810 056	7.90	4.52
1971-74 Colt ..... 2 Door	N.D.	3685 145	4.60	2.62
4 Door	N.D.	3685 146	7.90	4.52
1972-74 Dodge Truck D & W100-200-300 . 2 Door	N.D.	3685 147	4.60	2.62
1971-74 Dodge Truck B100-200-300 - Van	N.D.	3620 533	4.60	2.62

SEE NEXT PAGE FOR AVAILABLE PRIOR MODEL.

Mopar

DOOR EDGE PROTECTORS

	Description	Price Sym.	Part Number	List	Dealer Each
* PROTECTOR-DOOR EDGE (STAINLESS STEEL) (Continued)					
1972-3	Fury . . . . . 2 Door w/o Overlay	N.D.	3570 056	4.60	2.62
	4 Door w/o Overlay	N.D.	3570 057	7.90	4.52
	Station Wagon w/Overlay	N.D.	3680 264	7.90	4.52
1972-3	Polara & Monaco . . . . . 2 Door	N.D.	3680 083	4.60	2.62
	4 Door w/o Overlay	N.D.	3680 082	7.90	4.52
	Station Wagon w/Overlay	N.D.	3680 263	7.90	4.52
1972-3	Chrysler . . . . . Station Wagon w/o Overlay	N.D.	3680 222	7.90	4.52
	Station Wagon w/Overlay	N.D.	3680 262	7.90	4.52
1972-3	Chrysler & Imperial . . . . . 2 Door	N.D.	3680 215	4.60	2.62
	4 Door (Exc. Sta. Wag.) . . .	N.D.	3680 214	7.90	4.52
1971-2	Satellite . . . . . 2 Door Hard Top	N.D.	3505 028	4.60	2.62
1971-2	Charger . . . . . 2 Door Hard Top	N.D.	3504 813	4.60	2.62
1969-71	Fury . . . . . 2 Door	N.D.	2964 464	4.60	2.62
	4 Door	N.D.	3445 264	7.90	4.52
1969-71	Polara & Monaco . . . . . 2 Door	N.D.	2964 466	4.60	2.62
1969-71	Chrysler . . . . . 2 Door	N.D.	3445 426	4.60	2.62
	Station Wagon	N.D.	3445 419	7.90	4.52
1964-70	Dodge Truck A100 & A108 . . . . . 2 Door	N.D.	2933 243	4.60	2.62
1967-71	Dodge Truck Conv. & Crew Cab . 2 Door . . . . . (For 4 Dr. Crew Cab use 2 of #2933 242)	N.D.	2933 242	4.60	2.62
1970	Belvedere & Satellite . . . . . 4 Door	N.D.	3444 461	6.75	3.86
1968-70	Belvedere & Satellite . . . . . 2 Door	N.D.	3444 456	4.05	2.30
	Station Wagon	N.D.	3444 461	6.75	3.86
1968-70	Coronet . . . . . 4 Door	N.D.	3444 464	6.75	3.86
1968-70	Charger	N.D.	3444 457	4.05	2.30
1969	Barracuda	N.D.	3444 454	4.05	2.30

1974 POWER STEERING CONVERSION PACKAGES

MODELS	Engine	PUMP PACKAGES Price Sym.	Part Number	Dealer Each	CHUCK & COUPLING PKGS. Price Sym.	Part Number	Dealer Each
DODGE TRUCK							
B100-200-300	225	N.D.	3837 563	40.90	N.D.	3837 553	64.55
B100-200-300	318-360	N.D.	3837 566	40.90	N.D.	3837 553	64.55
D100-200-300	225	N.D.	3837 564	40.90	N.D.	3579 534	64.55
D100-200-300	318-360	N.D.	3837 567	40.90	N.D.	3579 534	64.55
D100-200-300	440	N.D.	3837 554	40.90	N.D.	3579 534	64.55
W100-200-300	225	N.D.	3837 565	40.90	N.D.	3579 535	64.55
W100-200-300	318-360	N.D.	3837 568	40.90	N.D.	3579 535	64.55

Note 1: For models with air conditioning, use the applicable Pump & Chuck Package plus 1-2951 898 Belt Pump Drive.

Note 2: All W200 except 3500# and 4000# Front Axles also Specify: 1-3496 357 Bracket, 3-1935 737 Bolt, 3-6028 512 Nut, 3-6024 112 Washer, 4-6030 270 Bolt.

1974 POWER STEERING CONVERSION PACKAGES

MODELS	Engine	TRANSMISSION Manual	TRANSMISSION Auto	Axle	Belt	Belt	PUMP PACKAGES Price Sym.	PUMP PACKAGES Part Number	PUMP PACKAGES Dealer Each	CHUCK & COUPLING PKGS. Price Sym.	CHUCK & COUPLING PKGS. Part Number	CHUCK & COUPLING PKGS. Dealer Each
VALIANT & DART (For Manual Transmission Column Shift Applications "C" Ring on Steering Column Shaft must be Removed)	6 Cyl.	X	X	X	X	X	N.D.	3837 558	35.18	N.D.	3685 650	53.35
	318	X	X	Note 1	Note 2	X	N.D.	3837 559	35.18	N.D.	3685 650	53.35
	360	X	X	Note 1	Note 2	X	N.D.	3837 561	35.18	N.D.	3685 650	53.35
BARRACUDA & CHALLENGER	318	X	X	X	Note 2	Note 3	N.D.	3837 560	35.18	N.D.	3685 650	53.35
	360	X	X	Note 1	Note 2	Note 2	N.D.	3837 562	35.18	N.D.	3685 650	53.35
SATELLITE, CORONET & CHARGER	6 Cyl.	Floor Shift	X	X	X	X	N.D.	3685 643	35.18	N.D.	3780 850	55.52
	6 Cyl.	Column Shift		X	X	X	N.D.	3685 643	35.18	N.D.	3780 849	55.52
	318	Floor Shift	All Exc. A-727	X	Note 2	Note 3	N.D.	3685 647	35.18	N.D.	3780 850	55.52
	318	Column Shift Exc. Police & Taxi		X	Note 2	Note 3	N.D.	3685 647	35.18	N.D.	3780 849	55.52
	318		A-727	X	Note 2	Note 3	N.D.	3685 648	35.18	N.D.	3780 850	55.52
	318	Column Shift Police & Taxi		X	Note 2	Note 3	N.D.	3685 648	35.18	N.D.	3780 849	55.52
	360	Floor Shift	X	Note 1	Note 2	Note 2	N.D.	3685 648	35.18	N.D.	3780 850	55.52
	360	Column Shift		Note 1	Note 2	Note 3	N.D.	3685 648	35.18	N.D.	3780 849	55.52

Note 1: With Axle Ratio of 3.54:1 and Above Also Specify 1-#2891 241 Cooler Assy. and 2.75 inches of #3780 509 Hose

Note 2: For Cars Equipped with Leece-Neville Alternator Also Specify 1-#2951 898 Fan Belt

Note 3: For Cars Equipped with A/C Also Specify 1-#2843 221 or #2951 898 Fan Belt

ALL PRICES AND SPECIFICATIONS ARE SUBJECT TO CHANGE WITHOUT NOTICE

1973 POWER STEERING CONVERSION PACKAGES

MODELS	Alternator	Engine	PUMP PACKAGES Price Sym.	PUMP PACKAGES Part Number	PUMP PACKAGES Dealer Each	CHUCK & COUPLING PKGS. Price Sym.	CHUCK & COUPLING PKGS. Part Number	CHUCK & COUPLING PKGS. Dealer Each
VALIANT & DART								
All w & w/o A/C	Chrysler	198-225	N.D.	3685 611	35.18	N.D.	3685 618	53.39
All w/o A/C	Chrysler	318	N.D.	3685 612	35.18	N.D.	3685 618	53.39
All w/o A/C	Chrysler	340	N.D.	3685 613	35.18	N.D.	3685 618	53.39
BARRACUDA & CHALLENGER								
All w/o A/C *	Chrysler	318	N.D.	3685 632	35.18	N.D.	3685 619	53.39
All w/o A/C *	Chrysler	340	N.D.	3685 615	35.18	N.D.	3685 619	53.39
SATELLITE, CORONET & CHARGER								
All w & w/o A/C	Chrysler	225	N.D.	3685 630	35.18	N.D.	3685 617	55.52
All w/o A/C. *	Chrysler	318	N.D.	3685 633	35.18	N.D.	3685 617	55.52
All w/o A/C	Leece-Neville	318	N.D.	3685 616	35.18	N.D.	3685 617	55.52
All w/o A/C *	Chrysler	340				N.D.	3685 617	55.52
DODGE TRUCK								
B100-200-300 Van		225	N.D.	3579 531	40.90	N.D.	3579 519	64.55
B100-200-300 Van		318-360	N.D.	3579 544	40.90	N.D.	3579 519	64.55
D100-200-300 Pick-Up		225	N.D.	3579 530	40.90	N.D.	3579 534	64.55
D100-200-300 Pick-Up		318-360	N.D.	3579 533	40.90	N.D.	3579 534	64.55
D100-200-300 Pick-Up		400	N.D.	3685 625	40.90	N.D.	3579 534	64.55
W100-200-300 4 x 4		225	N.D.	3579 546	40.90	N.D.	3579 535	64.55
W100-200-300 4 x 4		318-360	N.D.	3579 545	40.90	N.D.	3579 535	64.55

*Note: For models with Air Conditioning with Chrysler alternator, use applicable pump & chuck packages plus one drive belt Part No. 2951 898. Use the existing pulley on the vehicle. Do Not use the pulley furnished in the package. Remove and discard the idler pulley.

Mopar

1972 POWER STEERING CONVERSION PACKAGES

MODELS	Alternator	Engine	PUMP PACKAGES Price Sym.	PUMP PACKAGES Part Number	PUMP PACKAGES Dealer Each	CHUCK & COUPLING PKGS. Price Sym.	CHUCK & COUPLING PKGS. Part Number	CHUCK & COUPLING PKGS. Dealer Each
VALIANT & DART								
All	Chrysler	198-225	N.D.	3579 542	35.18	N.D.	3579 514	53.39
All	Chrysler	318-340	N.D.	3685 612	35.18	N.D.	3579 514	53.39
BARRACUDA & CHALLENGER								
All	Chrysler	198-225	N.D.	3579 542	35.18			
All w/o Air Conditioning	Chrysler	318-340	N.D.	3579 539	35.18			
All	Chrysler	400-440	N.D.	3579 543	35.18			
SATELLITE, CORONET & CHARGER								
All	Chrysler	225	N.D.	3579 542	35.18	N.D.	3579 515	55.52
All w/o Air Conditioning	Chrysler	318-340	N.D.	3579 539	35.18	N.D.	3579 515	55.52
All w/Air Conditioning	Leece-Neville	318-340	N.D.	3579 540	35.18	N.D.	3579 515	55.52
All	Chrysler	400-440	N.D.	3579 543	35.18	N.D.	3579 515	55.52
For the Barracuda, Challenger, Satellite, Coronet, and Charger vehicles with air conditioning, use the applicable pump and chuck package plus one fan drive belt Part No. 2951 898. Also, use the existing pulley on the vehicle. DO NOT use the pulley furnished in the package.								
DODGE TRUCK								
B100-200-300 Van		225	N.D.	3579 531	40.90	N.D.	3579 519	64.55
B100-200-300 Van		318-360	N.D.	3579 544	40.90	N.D.	3579 519	64.55
D100-200-300 Pick-Up		225	N.D.	3579 530	40.90	N.D.	3579 534	64.55
D100-200-300 Pick-Up		318-360	N.D.	3579 533	40.90	N.D.	3579 534	64.55
D100-200-300 Pick-Up		400	N.D.	3579 532	40.90	N.D.	3579 534	64.55
W100-200-300 4 x 4		225	N.D.	3579 546	40.90	N.D.	3579 535	64.55
W100-200-300 4 x 4		318-360	N.D.	3579 545	40.90	N.D.	3579 535	64.55

1971 POWER STEERING CONVERSION PACKAGES

MODELS	Alternator	Engine	PUMP PACKAGES Price Sym.	PUMP PACKAGES Part Number	PUMP PACKAGES Dealer Each	CHUCK & COUPLING PKGS. Price Sym.	CHUCK & COUPLING PKGS. Part Number	CHUCK & COUPLING PKGS. Dealer Each
VALIANT & DART								
All	Chrysler	198-225				N.D.	3579 514	53.39
All	Chrysler	318-340	N.D.	3514 959	35.18	N.D.	3579 514	53.39
BARRACUDA & CHALLENGER								
All	Chrysler	198-225				N.D.	3579 516	53.39
All w/o A/C	Chrysler	318-340	N.D.	3514 960	35.18	N.D.	3579 516	53.39
All	Chrysler	383-440	N.D.	3579 509	35.18	N.D.	3579 516	53.39
SATELLITE, CORONET & CHARGER								
All	Leece-Neville	318	N.D.	3514 961	35.18	N.D.	3579 515	55.52
All	Chrysler	225				N.D.	3579 515	55.52
All	All	383-440	N.D.	3579 509	35.18	N.D.	3579 515	55.52
All w/o A/C	Chrysler	318	N.D.	3514 960	35.18	N.D.	3579 515	55.52
FURY, POLARA & MONACO								
All	Leece-Neville	318-360	N.D.	3514 961	35.18	N.D.	3514 999	55.52
All	All	383-440	N.D.	3514 957	35.18	N.D.	3514 999	55.52
All	Chrysler	225	N.D.		35.18	N.D.	3514 999	55.52
All	Chrysler	318-360	N.D.	3514 962	35.18	N.D.	3514 999	55.52
CHRYSLER								
All	Chrysler	360	N.D.	3514 962	35.18	N.D.	3514 999	55.52
All	All	383-440	N.D.	3514 957	35.18	N.D.	3514 999	55.52
DODGE TRUCK B100-200-300								
1971 Van		198-225	N.D.	3579 518	40.90	N.D.	3579 519	64.55
1971 Van		318-360	N.D.	3579 517	40.90	N.D.	3579 519	64.55

Mopar

POWER STEERING CONVERSION PACKAGES

	Description	Price Sym.	Part Number	Dealer Each
	OIL COOLER PACKAGE			
1970-1	Valiant & Dart - Use w/3514 959 Pump Pkg.	N.D.	3514 963	2.08
1970	Barracuda & Challenger - Use w/3514 956 Pump Pkg.			
1970	Belvedere, Satellite, Coronet & Charger Use w/3004 888 Pump Pkg.			
1969	Valiant, Barracuda & Dart w/273, 318 & 340 C.I.D. w/3.55-3.91 Axle Ratio			
1969	Belvedere, Satellite, Coronet & Charger w/383 & 440 C.I.D. w/3.54, 3.55, 3.91 & 4.10 Axle Ratio	N.D.	3004 938	2.08

Power Steering Field Installation Return Program

The following Manual Steering Gear Chucks removed from New Unlicensed Vehicles in inventory may be returned for credit provided the return shipment is made by the 15th of the month following the month in which installation of the replacing power steering package was made. Credit will be issued in the amount indicated, subject to inspection.

		Credit To be Issued
1974	Valiant, Dart, Barracuda, Challenger, Satellite & Coronet	
3643 016	All	11.91
1972-4	Dodge Truck B100-200-300	
2267 550		12.95

The above Chucks must be returned transportation prepaid to: Chrysler Corporation New Castle Machine Plant, 1817 "I" Avenue, New Castle, Indiana; 47362, attention "Production Control Department.

A properly executed "Material Return Authorization (MRA)" Form must accompany each return. Prior authorization to return the manual steering gear chuck is not required. Indicate in the "reason for submitting" column that the "manual steering gear chuck, Part No. (one of the above) was replaced with a CHRYSLER PARTS Power Steering Chuck & Coupling Package Part No. _____ on unlicensed vehicle serial no. _____ .

Manual Steering Gear Chucks other than these listed above will not be considered for credit and will be returned transportation collect.

The above supersedes all previously published information regarding Manual Steering Gear Chuck Returns.

Description	Price Sym.	Part Number	List	Dealer Each
RACK - LUGGAGE - ROOF				
1973-4 Satellite & Coronet Sta. Wag. 50" x 35" I.D.	N.D.	3720 726	54.37	38.05
1971-2 Satellite & Coronet Sta. Wag. 50" x 35" I.D.	N.D.	3720 308	54.37	38.05
1974 Fury, Monaco & Chrysler Sta. Wag.	N.D.	3767 464	65.69	45.98
1973 Fury, Polara, Monaco & Chrysler Sta. Wag. 50" x 41" I.D.				
1973-4 Dodge Truck B-100-200-300	N.D.	3720 731	65.69	45.98
1974 Colt - Sta. Wag.	N.D.	3744 974	48.50	33.95

	Price Sym.	Part Number	List	No. 1 Net	No. 2 Net 3 or More	Quantity For Direct Shipment
RACK - LUGGAGE - ROOF						
1969-70 Fury, Polara, Monaco & Chrysler Sta. Wag. 47-1/2" x 42-1/2"	N.D.	2933 973	68.18	47.26	38.44	3 or More Assorted Prepaid Center Line, Michigan
RACK - LUGGAGE - DECK LID						
1971-3 Charger SE (Fast Back)						
1968-70 Charger						
1968-9 Barracuda 2 Dr. H.T. & Conv. Cpe. 43" x 19-1/2"	N.D.	3419 382	41.91	29.34	24.93	
1973-4 Satellite, Coronet & Charger						
1970-4 Barracuda & Challenger 43" x 17-1/2"	N.D.	3419 498	45.65	31.96	27.16	
1971-2 Satellite, Coronet & Charger 2 Dr., 2 Dr. H.T. & Fastback 43" x 17-1/2"	N.D.	3620 518	45.65	31.96	27.16	
RACK - DECK LID SKI						
All Models (Exc. Sta. Wag.)	N.D.	2809 970	34.97	24.49	20.05	

Direct all orders to the Parts Depot Serving your Locality.

Orders qualifying for Direct Shipment must be separate orders and plainly marked "Direct Shipment" in the Ship VIA Space on the Parts Order form.

Shipment will be made to the ordering accounts principal place of business only.

Mopar

Description	Price Sym.	Part Number	List	Dealer Each
#ROLL BAR ASSY. - ROOF INNER				
1974 Trail Duster & Ram Charger	N.D.	3739 422	80.00	60.00
CORD PACKAGE - LUGGAGE HOLD DOWN				
All Cars with Roof Top Luggage Carriers	N.D.	2584 634	7.79	5.08
COVER & HOLD DOWN PACKAGE - LUGGAGE RACK				
Size 42-5/8" x 45-1/2" x 14" for #2933 973, #3720 307 & #3720 731 Racks	N.D.	3419 323	41.49	26.96
Size 45" x 75" x 14"	N.D.	2932 561	46.93	30.59
# Size 35" x 50" x 14" for #3720 308 & #3720 726 Racks	N.D.	3837 720	46.58	30.28
# Size 43" x 40" x 14" for #3767 464 Rack	N.D.	3837 721	44.40	26.86

Description	Price Sym.	Part Number	List	Dealer Each	Wholesale Allowance
* REGULATOR & FILTER - FUEL PRESSURE					
(Mileage Saver)					
For most cars with 5/16" Fuel Lines	A3	2240 633	8.99	5.40	.51
SEAT - CHILD'S CAR					
1966 and Later Models with Seat Belts	N.D.	3744 976	24.95	18.70	
CARRIER-INFANT SAFETY					
1966 and Later Models with Seat Belts	N.D.	3744 975	14.40	9.38	
SWITCH - ELECTRIC WINDOW LIFT OR TAILGATE SAFETY					
1967-74 All Cars with Electric Windows	N.D.	2932 687	2.30	1.37	
TACHOMETER PACKAGE - UNIVERSAL					
All 6 & 8 Cyl. with 12 Volt Ignition					
(Full Sweep) Steering Column or Instrument Panel Mtg.	N.D.	3514 430	47.79	31.50	
(Hood Mounted)	N.D.	3420 740	62.41	40.58	
SEAT PACKAGE - CLUB CAB JUMP					
Includes All Attaching Parts					
1973 Dodge Truck Club Cab ..... Black	N.D.	3837 849		19.95	
Beige	N.D.	3837 850		19.95	
# STEP PACKAGE - AUTOMATIC					
1972-4 Dodge Truck D & W 100-200-300	N.D.	3837 722	15.20	9.88	

*Price Revision

Mopar

Description	Price Sym.	Part Number	List	No. 1 Net Each	No. 2 Net Each
* TRAILER TOW BAR KITS & COVER					10 or More Assorted Prepaid Elkhart, Indiana
1974 Satellite, Coronet & Charger - 2 Door & H.T. ..	N.D.	3837 661	79.95	63.96	60.76
1974 Satellite & Coronet - 4 Door Sedan & H.T.	N.D.	3837 660	79.95	63.96	60.76
1974 Satellite & Coronet Sta. Wag.	N.D.	3837 659	79.95	63.96	60.76
1974 Fury, Monaco, Chrysler & Imperial Sedans & H.T.	N.D.	3837 658	79.95	63.96	60.76
1974 Fury, Monaco & Chrysler - Sta. Wag.	N.D.	3837 657	79.95	63.96	60.76
1969-73 Fury, Gran, Polara, Monaco, Chrysler & Imperial Sedans	N.D.	3744 902	79.95	63.96	60.76
1969-73 Fury, Gran, Polara, Monaco, Chrysler & Imperial Sta. Wag.....	N.D.	3744 903	79.95	63.96	60.76
1971-3 Satellite, Coronet & Charger Sedans	N.D.	3744 904	79.95	63.96	60.76
1971-3 Satellite & Coronet Sta. Wag.	N.D.	3744 905	79.95	63.96	60.76
1972-3 Dodge Truck D100-200 with 131" & 149" Wheel Base	N.D.	3744 906	79.95	63.96	60.76
Box Cover Kit - All	N.D.	3744 907	5.45	4.25	

	Description	Class	Price Sym.	Part Number	List	Dealer Each	Wholesale Allowance
	***TRAILER HITCH PACKAGES W/1-7/8 BALL**						
1974	Valiant & Dart (Exc. Fastback)	I	A1	3754 146	28.40	20.73	3.42
1974	Valiant & Dart Fastback	I	A1	3754 081	28.40	20.73	3.42
1974	Satellite 2 Door & H.T.	I	A1	3754 296	29.26	21.36	3.53
1974	Satellite 4 Door Sedan & H.T.	I	A1	3754 323	29.26	21.36	3.53
1974	Satellite & Coronet Sta. Wag.	I	A1	3754 743	28.40	20.73	3.42
1974	Coronet & Charger - 2 Door	I	A1	3754 392	29.26	21.36	3.53
1974	Coronet - 4 Door & H.T.	I	A1	3754 431	29.26	21.36	3.53
1974	Fury Sedan & H.T.	I	A1	3754 500	28.40	20.73	3.42
1974	Fury, Monaco & Chrysler Sta. Wag.	I	A1	3754 700	29.26	21.36	3.53
1974	Monaco Sedan & H.T.	I	A1	3754 550	28.40	20.73	3.42
1974	Newport Sedan & H.T.	I	A1	3754 600	28.40	20.73	3.42
1974	New Yorker Sedan & H.T.	I	A1	3754 650	29.26	21.36	3.53
	***TRAILER HITCH PACKAGES - LESS BALL**						
1971-73	Colt Sedan	I	A1	3744 523	33.55	24.49	4.04
1971-73	Cricket	I	A1	3744 524	32.50	23.73	3.92
1970-73	Valiant Scamp, Dart (Exc. Demon & Sport)	I	A1	3744 518	22.00	16.06	2.65
1967-73	Valiant (Exc. Scamp, Dart Demon & Sport)	I	A1	3744 520	20.50	14.97	2.47
1973	Barracuda	I	A1	3744 522	20.95	15.27	2.50
1970-73	Challenger	I	A1	3744 513	31.45	22.96	3.79
1973	Satellite 2-Door	I	A1	3744 527	37.75	27.56	4.55
1971-72	Satellite 4-Door	I	A1	3744 525	33.55	24.49	4.04
1971-73	Coronet Sedans	I	A1	3744 514	28.90	21.10	3.49
1971-73	Charger	I	A1	3744 517	31.45	22.96	3.79
1973	Satellite & Coronet Sta. Wag.	I	A1	3744 940	20.50	14.97	2.47
1973	Satellite & Coronet Sta. Wag.						
1969-72	Satellite & Coronet Sta. Wag.	II	A1	3744 528	48.25	35.22	5.81
1973	Fury Sedans	I	A1	3744 526	41.95	30.62	5.05
1973	Fury Sedans	II	A1	3744 531	54.00	39.42	6.51
1973	Polara & Monaco Sedans	I	A1	3744 941	41.95	30.62	5.05
1973	Polara & Monaco Sedans	II	A1	3744 531	54.00	39.42	6.51
1972-73	Newport Sedans	I	A1	3744 515	40.90	29.86	4.93
1972-73	New Yorker Sedans	I	A1	3744 521	23.05	16.83	2.78
1967-73	Fury, Polara, Monaco & Chrysler Sta. Wag.	I	A1	3744 519	20.95	15.27	2.50
1967-73	Fury, Polara, Monaco & Chrysler Sta. Wag.	II	A1	3744 529	47.10	34.38	5.67
1972-73	Imperial	I	A1	3744 516	33.55	24.45	4.00
1972-73	Dodge Truck D & W 100-300 Exc. w/Step Bumper	II	A1	3744 532	47.10	34.38	5.67
1971-73	Dodge Truck B100-300	II		3744 530	34.45	25.15	4.15
	TRAILER HITCH BALLS						
	1-7/8" Dia. with 3/4" Shank - Chrome		A1	3744 508	6.05	4.42	.73
	2" Dia. with 3/4" Shank - Chrome		A1	3744 509	6.35	4.64	.76
	2-5/16" Dia. with 1" Shank - Painted		A1	3744 510	8.65	6.31	1.03

Mopar

Description	Price Sym.	Part Number	List	Dealer Each
TRAVEL & RECREATIONAL ACCESSORIES				
Bowling Bag	N.D.	3419 377	16.82	11.78
Carry-All Bag 16" x 13" x 5-1/2"	N.D.	3419 379	12.76	8.94
Golf Club Covers (Set of 3)	N.D.	3419 380	7.42	5.20

CAR CARE MATERIALS

Description	Carton Qty.	Price Sym.	Part Number	List	Net Each	Wholesale Allowance
ADDITIVES						
Combustion Chamber Conditioner . . . . . 15 Oz.	24	A3	3419 126	1.71	1.03	.06
Aerosol 20 Oz.	12	A3	2933 500	2.44	1.46	.07
Crankcase Conditioner . . . . . 15 Oz.	24	A3	3419 130	1.58	.94	.05
Fuel Detergent . . . . . 6 Oz.	24	A3	3419 127	.60	.36	.02
Engine Oil Supplement . . . . . Quart	24	A3	3419 131	1.97	1.18	.07
Gum & Sludge Remover . . . . . Quart	12	A3	3419 133	3.34	2.00	.12
Super Oil Saver . . . . . 15 Oz.	24	A3	3837 188	1.75	1.05	.17
* HI-PERFORMANCE LUBRICANTS						
Man. Trans. Fluid . . . . . Quart	12	A3	2809 863	1.97	1.19	.05
Rear Axle . . . . . Quart	12	A3	2809 864	1.97	1.19	.05
Motor Oil . . . . . Quart	12	A3	2809 865	1.53	.91	.04
Auto. Trans. Fluid . . . . . Quart	12	A3	2809 866	1.65	.99	.05
* ADHESIVE - AUTO GLASS						
Pint Can	24	A3	2298 825	2.49	1.49	.16
Applicator Package . . . . . Consists of: 3 - #2298 825 Pints 1 - Applicator Gun	4	A1	2298 950	9.46	6.30	.08
• ADHESIVE - SILICONE RUBBER . . . . . 2 Oz. Tube	12	A3	3683 829	1.91	1.14	.11
* ADHESIVE - VINYL . . . . . 1 Oz. Tube		A3	3549 956	.57	.34	.02
* BELT EASE . . . . . Aerosol 5-1/2 Oz.	12	A1	3419 497	1.70	1.12	.13
• CAR WASH LIQUID & POWDER						
Liquid w/Wax . . . . . 16 Oz.	24	A3	2585 619	1.42	.85	.07
Powder . . . . . 15 Lb. Pail	1	A2	2421 797	20.02	13.02	.53

Mopar

CAR CARE MATERIALS

Description	Carton Qty.	Price Sym.	Part Number	List	Net Each	Wholesale Allowance
*CEMENT - ALTERNATOR ..... 5 Oz.	36	A3	2299 314	1.47	.88	.09
*CLEANERS						
ENGINE (Spray Can) ..... 16 Oz.	12	A1	3419 148	2.10	1.41	.08
5 Gallon	1	A1	3419 149	17.70	11.81	.47
30 Gallon	1	A1	3419 150	101.70	67.77	2.59
GLASS ..... 24 Oz.	24	A3	3514 198	1.38	.83	.05
LEATHER & VINYL ..... 16 Oz.	12	A1	2421 788	1.87	1.24	.23
PART IMMERSION - 4 Gal. w/Basket	1	A3	3419 146	38.95	23.37	2.33
5 Gallon Refill	1	A3	3419 147	38.95	23.37	2.33
SPOT REMOVER & FABRIC ..... 16 Oz.	24	A1	2421 785	1.45	.96	.20
Gallon	4	A1	2421 786	8.15	5.45	1.13
VINYL TOP ..... 8 Oz.	12	A3	2932 280	2.66	1.60	.15
Gallon	6	A3	3837 107	14.58	8.75	.83
KAR KLEEN ..... 12 Oz.	12	A3	2809 926	1.42	.85	.04
* DOOR EASE PACKAGE						
Part Number consists of Display Pkg. containing 6 sticks (shop size)	12	A1	2240 248	4.01	2.17	.23
Dressing - Vinyl Top ..... 8 Oz.	12	A3	3514 191	3.17	1.90	.17
*FLUIDS						
BRAKES ..... 12 Oz.	24	A1	2933 249	1.68	.84	.14
Quart	12	A1	2933 250	4.06	2.03	.31
Gallon	6	A1	2933 251	14.77	7.39	1.11
5 Gallon	1	A1	2933 252	69.94	34.97	5.24
* POWER STEERING ..... Quart	12	A3	2084 329	.94	.56	.01
* TRANSMISSION - AUTO ..... Pint	24	A3	3549 659	.37	.22	-
Quart	24	A3	3549 660	.80	.48	-
Gallon	6	A1	3549 661	3.20	1.92	-
16 Gallon	1	A1	3549 662	52.06	30.04	.30
55 Gallon	1	A1	3549 663	178.98	97.76	1.87

CAR CARE MATERIALS

Description	Carton Qty.	Price Sym.	Part Number	List	Net Each	Wholesale Allowance
*LUBRICANTS						
DISTRIBUTOR CAM . . . . . 4 Oz.	36	A3	1473 595	1.81	1.09	.11
GEAR . . . . SAE #80 . . . . . Quart	24	A3	2933 565	1.20	.72	.01
SAE #90 . . . . . Quart	24	A3	3744 994	1.29	.77	.01
SAE #90 . . . . . 120 Lb. Drum	1	A3	3744 995	61.60	36.96	.01
HEAT CONTROL VALVE SOLVENT . . . . . 8 Oz.	12	A3	3419 128	1.42	.85	.14
Aerosol 12 Oz.	12	A3	3419 129	1.97	1.19	.15
LOCK EASE . . . . . 4 Oz.	72	A1	2240 363	.85	.56	.06
MULTI-MILEAGE . . . . . 14-1/2 Oz. Cartridge	50	A3	2525 035	1.07	.64	.07
35 Lb. Pail	1	A3	3744 275	28.34	17.00	1.56
MULTI-PURPOSE GREASE . . . . . 14 Oz. Cartridge	28	A3	2932 524	1.48	.89	.06
SPEEDOMETER CABLE . . . . . 6 Oz.	12	A3	1243 632	.99	.59	.08
SURE GRIP . . . . . Quart	24	A3	2585 318	1.38	.83	.01
SYL-GLYDE - PASTE . . . . . 4 Oz.	36	A1	1881 923	2.24	1.36	.13
FLUID-AEROSOL . . . . . 16 Oz.	36	A3	1881 924	3.68	2.20	.24
WATER PUMP . . . . . 2 Oz.	24	N.D.	2298 997	1.61	1.07	
* LUBRI PLATE						
Display Included w/Carton of 12 Must Order in Multiples of 12	12	A3	3744 859	.61	.37	.03
*POLISHES & WAX						
AUTOMOBILE . . . . . 16 Oz.	24	A1	2421 791	1.15	.75	.16
Gallon	4	A1	2448 767	6.25	4.18	.86
CHROME . . . . . 16 Oz.	24	A1	2525 429	1.15	.75	.14
ONE STEP . . . . . Gallon	4	A3	2809 928	15.29	9.17	.41
SUPER GLAZE . . . . . 6 Oz.	24	A3	2421 795	2.25	1.35	.04
*POLISHING CLOTHS						
WAX TREATED	12	A3	1316 224	1.15	.69	.06
*REMOVERS						
FROST & ICE . . . . . 16 Oz.	12	A2	2525 006	1.50	.97	.08
RUST . . . . . 12 Oz.	24	A3	3419 114	2.78	1.66	.16
TAR & ROAD OIL . . . . . 16 Oz.	24	A1	2421 776	1.15	.75	.15
Gallon	4	A1	2421 777	6.60	4.43	.92

Mopar

CAR CARE MATERIALS

Description	Carton Qty.	Price Sym.	Part Number	List	Net Each	Wholesale Allowance
*RUST PENETRANT (Spray Can) . . . . . 16 Oz.	12	A1	2421 775	1.71	1.13	.20
*RUST RESISTOR - COOLING SYSTEM . . . . . 16 Oz.	24	A1	2421 778	.90	.61	.14
*RUGLYDE (Clear Type) . . . . . Gallon	4	A1	2084 326	4.36	2.32	.10
*SEALING COMPOUND						
Aerosol . . . . . 15 Oz.	24	A3	3419 115	2.92	1.75	.12
*SEALER-TRANSMISSION . . . . . 6 Oz.	24	A3	2298 923	1.07	.64	.02
*SOLDER PKG. - PLASTIC BODY FILLER						
With Blue Creme Hardener - White . . . . . Quart	12	A3	3621 440	3.50	2.10	.22
Gallon	4	A3	3621 441	9.75	5.85	.58
*HARDENER - PLASTIC SOLDER CREME - BLUE						
Tube . . . . . 1 Oz.	12	A3	3621 442	.86	.52	.07
Tube . . . . . 4 Oz.	12	A3	3621 443	2.42	1.45	.26
* SOLVENT - WINDSHIELD WASHER . . . . . 16 Oz.	24	A4	2421 783	.96	.58	.07
32 Oz.	24	A3	2421 784	1.47	.88	.09
• STOP LEAK						
Stop Leak Nugget Pkg. . . . . (Free display with carton of 24)	24	A3	3419 423	1.42	.85	.20

MOTOR OIL

Container Size & Minimum Sales Qty. Carton Quantity		SAE Grade and Part Numbers		Price Sym.	List	No. 1 Net Each Less Than 30 Gallons	No. 2 Net Each 30 to 179 Gallons	No. 3 Net Each 180 Gallons or More
*MOTOR OIL								
SUPREME		20-20W	30					
Quart	24	2808 316	2808 319	N.D.	.93	.52	.50	.46
Gallon	6	2808 317	2808 320	N.D.	3.72	2.04	1.99	1.83
55 Gal. Drum	1	2808 318	2808 321	N.D.	-	-	105.05	96.25
ALL WEATHER								
SUPREME		5W-20	10W-30					
Quart	24		2808 325	N.D.	1.06	.59	.57	.53
Gallon	6		2808 326	N.D.	4.25	2.32	2.27	2.11
55 Gal. Drum	1		2808 327	N.D.	-	-	120.45	111.65
			10W-40					
Quart	24		3685 658	N.D.	1.13	.63	.61	.57
Gallon	6		3685 659	N.D.	4.53	2.48	2.43	2.27
55 Gal. Drum	1		3685 660	N.D.	-	-	129.25	120.45

QUANTITY NEW PRICES

THE ABOVE GRADES OF MOTOR OIL MAY BE COMBINED WITH ONE ANOTHER IN CARTON OR DRUM MULTIPLES IN ORDER TO MEET GALLONAGE REQUIREMENTS TO QUALIFY FOR QUANTITY NET PRICES.

TRANSPORTATION WILL BE PREPAID WHEN QUALIFIED, AS PROVIDED FOR IN SCHEDULE OF DISCOUNTS AND TERMS OF PURCHASE DESTINATIONS IN ALASKA OR HAWAII, WHEN QUALIFIED WILL BE PREPAID TO PORT OF EXIT ONLY.

ORDERS CANNOT BE ACCEPTED FOR LESS THAN CARTON QUANTITIES.

THE ABOVE PRICES INCLUDE ANY APPLICABLE FEDERAL EXCISE TAX, BUT DO NOT INCLUDE ANY STATE OR LOCAL TAXES.

IMPORTANT: PRICES SHOWN SUPERSEDE THOSE IN MASTER PARTS PRICE LIST 81-690-0774 DATED JUNE 3, 1974. PLEASE MARK YOUR RECORDS ACCORDINGLY.

Mopar

NOTES

MOTOR OIL

Container Size & Minimum Sales Qty. Carton Quantity		SAE Grade and Part Numbers		Price Sym.	List	No. 1 Net Each Less Than 30 Gallons	No. 2 Net Each 30 to 179 Gallons	No. 3 Net Each 180 Gallons or More
*MOTOR OIL								
SUPREME		20-20W	30					
Quart	24	2808 316	2808 319	N.D.	.84	.47	.45	.41
Gallon	6	2808 317	2808 320	N.D.	3.36	1.84	1.79	1.63
55 Gal. Drum	1	2808 318	2808 321	N.D.	-	-	94.05	85.25
ALL WEATHER								
SUPREME		5W-20	10W-30					
Quart	24		2808 325	N.D.	.97	.54	.52	.48
Gallon	6		2808 326	N.D.	3.88	2.12	2.07	1.91
55 Gal. Drum	1		2808 327	N.D.	-	-	109.45	100.65
			10W-40					
Quart	24		3685 658	N.D.	1.04	.58	.56	.52
Gallon	6		3685 659	N.D.	4.16	2.28	2.23	2.07
55 Gal. Drum	1		3685 660	N.D.	-	-	118.25	109.45

QUANTITY NEW PRICES

THE ABOVE GRADES OF MOTOR OIL MAY BE COMBINED WITH ONE ANOTHER IN CARTON OR DRUM MULTIPLES IN ORDER TO MEET GALLONAGE REQUIREMENTS TO QUALIFY FOR QUANTITY NET PRICES.

TRANSPORTATION WILL BE PREPAID WHEN QUALIFIED, AS PROVIDED FOR IN SCHEDULE OF DISCOUNTS AND TERMS OF PURCHASE DESTINATIONS IN ALASKA OR HAWAII, WHEN QUALIFIED WILL BE PREPAID TO PORT OF EXIT ONLY.

ORDERS CANNOT BE ACCEPTED FOR LESS THAN CARTON QUANTITIES.

THE ABOVE PRICES INCLUDE ANY APPLICABLE FEDERAL EXCISE TAX, BUT DO NOT INCLUDE ANY STATE OR LOCAL TAXES.

Mopar

NOTES

TOUCH UP PAINT

Description	Price Sym.	Part Number	List	Dealer Each
* TOUCH-UP PAINT APPLICATORS AND SPRAY CANS				
1969-74 Models				
1970-74 Applicators	N.D.	Specify Part No. From Charts on Following Pages 84 Thru 91	1.25	.72
1970-74 Lacquer . . . . . 6 Oz. Can	N.D.		1.75	.99
Lacquer or Primer Marine Eng. . . . . 15 Oz. Can	N.D.		2.01	1.20
Lacquer Leveler . . . . . 6 Oz. Can	N.D.	1879 449	1.75	.99

* TOUCH-UP PAINT APPLICATOR AND SPRAY CAN MERCHANDISER				No. 1 Net Each	Direct Shipment No. 2 Std. Pack Net Each	Quantity for Direct Shipment
1974 Colors						
Merchandiser Consists of 24 Paint Applicators and 1 Display Stand						
Valiant & Plymouth Asstmt.	N.D.	3837 149	29.90	19.17	15.12	
Dodge & Dart Asstmt.	N.D.	3837 150	29.90	19.17	15.12	
Chrysler & Imperial Asstmt.	N.D.	3837 151	29.90	19.17	15.12	18 or More Merchandisers Assorted Prepaid Elk Grove, Illinois
Merchandiser Consists of 20 Spray Cans and 1 Display Stand						
Valiant & Plymouth Asstmt.	N.D.	3837 152	34.57	23.58	18.67	
Dodge & Dart Asstmt.	N.D.	3837 153	34.57	23.58	18.67	
Chrysler & Imperial Asstmt.	N.D.	3837 154	34.57	23.58	18.67	

Direct all orders to the Parts Depot serving your locality.

Orders qualifying for Direct Shipment must be separate orders and plainly marked "Direct Shipment" in the Ship VIA Space on the Parts Order form.

Shipment will be made to the ordering accounts principal place of business only.

Mopar

1974 PASSENGER CARS TOUCH-UP PAINT CHART

Code	Spray Can Part No.	Applicator Part No.	Color	Model Application
DY2	2932 342	2932 343	Yellow	Polara, Monaco, Fury, Chrysler & Imperial
EW1	3419 190	3419 191	White	All
FE5	3419 476	3419 477	Red	All (Exc. Chrysler & Imperial)
GE7	3744 096	3744 097	Russet (M)	Valiant, Barracuda, Dart, Challenger, Chrysler & Imperial
HL4	3685 530	3685 531	Beige	All
JA5	3685 518	3685 519	Silver (M)	All (Exc. Valiant, Barracuda, Dart & Challenger)
JL6	3780 726	3780 727	Aztec Gold (M)	Charger
JY6	3685 536	3685 537	Gold (M)	All
JY9	3685 538	3685 539	Dark Gold (M)	All
KB1	3837 124	3837 125	Light Blue	All
KB5	3837 126	3837 127	Medium Blue (M)	All
KB8	3837 128	3837 129	Dark Blue (M)	Fury, Polara, Monaco, Chrysler & Imperial
KG2	3837 130	3837 131	Light Green (M)	All
KG8	3837 132	3837 133	Dark Green (M)	All
KJ6	3837 134	3837 135	Avocado (M)	All
KL8	3837 136	3837 137	Dark Moonstone (M)	All
KT5	3837 138	3837 139	Sienna (M)	All
KT9	3780 569	3780 570	Chestnut (M)	Fury, Polara, Monaco, Chrysler & Imperial
KY4	3837 140	3837 141	Light Gold	All
KY5	3837 142	3837 143	Brite Yellow	All (Exc. Fury, Polara, Monaco, Chrysler & Imperial)
TX9	2809 784	2809 785	Black	All

(M) - Metallic

1973 PASSENGER CARS
TOUCH-UP PAINT CHART

Code	Spray Can Part No.	Applicator Part No.	Color	Model Application
TX9	2809 784	2809 785	Black	All
DY2	2932 342	2932 343	Yellow	Fury, Polara, Monaco, Chrysler & Imperial
EW1	3419 190	3419 191	White	All
FQ5	3419 456	3419 457	Brite Turquoise	Fury, Polara, Monaco, Chrysler & Imperial
FE5	3419 476	3419 477	Red	All (Exc. Chrysler & Imperial)
FY1	3481 706	3481 707	Brite Yellow	All (Exc. Chrysler & Imperial)
GB5	3514 922	3514 923	Brite Blue	All
GF3	3514 934	3514 935	Lt. Yellow Green	All
HB1	3621 502	3621 503	Lt. Blue	All
TB3	3621 504	3621 505	Super Blue	Valiant, Dart, Barracuda, Challenger Satellite & Coronet
HT6	3621 520	3621 521	Med. Tan	All
HT8	3621 522	3621 523	Med. Dk. Tan	Fury, Polara, Monaco, Chrysler & Imperial
JA5	3685 518	3685 519	Silver	All
JB9	3685 520	3685 521	Dk. Blue	Fury, Polara, Monaco, Chrysler & Imperial
JF8	3685 524	3685 525	Dk. Yellow Green	All
GK6	3685 528	3685 529	Bronze	Valiant, Dart, Coronet, Satellite & Barracuda
HL4	3685 530	3685 531	Beige	All
JY3	3685 534	3685 535	Lt. Gold	All
JY6	3685 536	3685 537	Gold	All
JY9	3685 538	3685 539	Dk. Gold	All
GE7	3744 096	3744 097	Burnished Red	Chrysler & Imperial
GF1	3744 098	3744 099	Mist Green	All
JK3	3744 991	3744 992	Copper (M)	All

(M) - Metallic

Mopar

1974 COLT
TOUCH-UP PAINT CHART

Code	Spray Can Part No.	Applicator Part No.	Color	Model Application
067	3837 192	3837 193	White	Colt
025	3683 504	3683 505	Sunburst Yellow	Colt
064	3683 510	3683 511	Sunset Orange	Colt
065	3683 512	3683 513	Pacific Blue (M)	Colt
016	3685 570	3685 571	Spice Poly	Colt
017	3685 572	3685 573	Sea Green (M)	Colt
055	3744 893	3744 894	Red	Colt
003	3744 895	3744 896	Bright Yellow	Colt
028	3744 897	3744 898	Silver (M)	Colt

1973 COLT & CRICKET

024	3683 502	3683 503	Cherry Blossom White	Colt
025	3683 504	3683 505	Sunburst Yellow	Colt
064	3683 510	3683 511	Sunset Orange	Colt
065	3683 512	3683 513	Pacific Blue (M)	Colt
016	3685 570	3685 571	Spice Poly	Colt
017	3685 572	3685 573	Sea Green (M)	Colt
055	3744 893	3744 894	Red	Colt
003	3744 895	3744 896	Bright Yellow	Colt
028	3744 897	3744 898	Silver (M)	Colt
108	X3683 516	X3683 517	Polar White	Cricket
149	X3685 580	X3685 581	Phantom Mist (M)	Cricket
154	X3685 582	X3685 583	Carib Blue	Cricket
155		X3744 871	Sure Fire Yellow	Cricket
156		X3744 873	Sure Fire Red	Cricket
157	X3744 874	X3744 875	Prairie Wind	Cricket
161	X3744 899	X3744 900	Golden Glory (M)	Cricket
162		X3744 952	Grasshopper (M)	Cricket

(M) - Metallic

1972 PASSENGER CARS TOUCH-UP PAINT CHART

Code	Spray Can Part No.	Applicator Part No.	Color	Model Application
X9	2809 784	2809 785	Black	All Models
Y2	2932 342	2932 343	Brite Yellow	Fury, Polara, Monaco, Chrysler & Imperial
A9	3419 154	3419 155	Dk. Formal Gray (M)	Fury, Chrysler & Imperial
W1	3419 190	3419 191	White	All Models
Q5	3419 456	3419 457	Brite Turquoise (M)	Fury, Polara, Monaco, Chrysler & Imperial
E5	3419 476	3419 477	Red	All (Exc. Fury & Imperial)
Y1	3481 706	3481 707	Super Yellow	All (Exc. Chrysler & Imperial)
Y4	3514 234	3514 235	Light Gold	All Models
Y9	3514 240	3514 241	Dark Gold (M)	All Models
V2	3514 912	3514 913	Brite Orange Red	Dodge
A4	3514 916	3514 917	Lt. Gun Metal (M)	All (Exc. Chrysler & Imperial)
B5	3514 922	3514 923	Brite Blue (M)	All (Exc. Chrysler & Imperial)
B7	3514 924	3514 925	Med. Dark Blue	All (Exc. Imperial)
E7	3514 932	3514 933	Med. Dk. Russet (M)	Fury, Polara, Monaco, Chrysler & Imperial
F3	3514 934	3514 935	Lt. Yellow Green (M)	All Models
F7	3514 936	3514 937	Med. Dk. Yellow Green (M)	All Models
Y8	3579 496	3579 497	Brite Gold (M)	All (Exc. Chrysler & Imperial)
B1	3621 502	3621 503	Light Blue	All Models
B3	3621 504	3621 505	Super Blue	Valiant, Dart, Barracuda, Challenger, Satellite & Coronet
L4	3621 510	3621 511	Beige	All (Exc. Barracuda & Challenger)
T6	3621 520	3621 521	Med. Tan (M)	All (Exc. Fury, Polara, Monaco, Chrysler & Imperial)
T8	3621 522	3621 523	Med. Dark Tan	All Models
J3	3621 586	3621 587	Willow Green	Dodge
016	3685 570	3685 571	Spice Poly	Colt
017	3685 572	3685 573	Sea Green Poly	Colt
146	X3685 574	X3685 575	Mood Indigo	Cricket
147	X3685 576	X3685 577	Ginger Poly	Cricket
140	X3685 578	X3685 579	Cedar Green Poly	Cricket
149	X3685 580	X3685 581	Phantom Mist Poly	Cricket
154	X3685 582	X3685 583	Carib Blue	Cricket

SEE FOLLOWING PAGES FOR PRIOR MODELS

(M) - Metallic

ALL PRICES AND SPECIFICATIONS ARE SUBJECT TO CHANGE WITHOUT NOTICE

Mopar

1971 PASSENGER CARS TOUCH-UP PAINT CHART

Code	Spray Can Part No.	Applicator Part No.	Color	Model Application
X9	2809 784	2809 785	Black	All Models
A9	3419 154	3419 155	Dk. Formal Grey (M)	Dodge & Imperial
L1	3419 174	3419 175	Beige	All Models
W1	3419 190	3419 191	White	All Models
Q5	3419 456	3419 457	Brite Turquoise (M)	All Exc. Chrysler & Imperial
E5	3419 476	3419 477	Red	All Exc. Chrysler & Imperial
C7	3481 704	3481 705	Purple	All Exc. Fury, Polara, Monaco, Chrysler & Imperial
Y1	3481 706	3481 707	Super Yellow	All Exc. Chrysler & Imperial
T8	3514 226	3514 227	Med. Dark Tan (M)	Fury, Polara, Monaco, Chrysler & Imperial
W3	3514 230	3514 231	Brite White	All Exc. Fury, Polara, Monaco, Chrysler & Imperial
Y5	3514 236	3514 237	Lt. Gold (M)	Fury, Polara, Monaco, Chrysler & Imperial
Y4	3514 234	3514 235	Lt. Gold	All Exc. Fury & Chrysler
Y9	3514 240	3514 241	Dark Gold (M)	All Models
V2	3514 912	3514 913	Brite Orange Red	Dodge
A4	3514 916	3514 917	Lt. Gunmetal (M)	All Models
A8	3514 918	3514 919	Med. Dk. Gunmetal (M)	Fury, Polara, Monaco, Chrysler & Imperial
B2	3514 920	3514 921	Blue (M)	All Models
B5	3514 922	3514 923	Brite Blue (M)	All Exc. Chrysler & Imperial
B7	3514 924	3514 925	Med. Dk. Blue (M)	All Exc. Imperial
B9	3514 926	3514 927	Dk. Blue (M)	Imperial
C8	3514 928	3514 929	Indigo (M)	All Exc. Polara & Monaco
E7	3514 932	3514 933	Med. Dk. Russet (M)	Fury, Polara, Monaco, Chrysler & Imperial
F3	3514 934	3514 935	Lt. Yellow Green (M)	All Models
F7	3514 936	3514 937	Med. Yellow Green (M)	All Models
F9	3514 938	3514 939	Dk. Yellow Green (M)	Chrysler & Imperial
K6	3514 940	3514 941	Med. Bronze (M)	All Models
L5	3514 942	3514 943	Bahama Yellow	All Models
M8	3514 944	3514 945	Maroon (M)	Imperial
T2	3514 946	3514 947	Lt. Tan (M)	All Exc. Fury, Polara, Chrysler & Imperial
J6	3579 490	3579 491	Avocado	All Exc. Fury, Chrysler & Imperial
Y3	3579 494	3579 495	Citron Yella	Polara, Monaco & Imperial
Y8	3579 496	3579 497	Brite Gold (M)	All Exc. Chrysler & Imperial
L6	3549 679	3549 698	Aztec Gold	Chrysler
J4	3579 488	3579 489	Brite Yellow Green (M)	All Exc. Valiant, Dart & Barracuda
024	3683 502	3683 503	Cherry Blossom White	Colt
025	3683 504	3683 505	Sunburst Yellow	Colt
026	3683 506	3683 507	Power Blue	Colt
027	3683 508	3683 509	Poppy Red	Colt
064	3683 510	3683 511	Sunset Orange	Colt
065	3683 512	3683 513	Pacific Blue Poly.	Colt
066	3683 514	3683 515	Jade Green Poly.	Colt
108	X3683 516	X3683 517	Polar White	Cricket
133	X3683 518	X3683 519	Tangerine	Cricket
135	X3683 520	X3683 521	Oasis Green	Cricket
137	X3683 522	X3683 523	Firebrand Red	Cricket
138	X3683 524	X3683 525	Safari Beige	Cricket
142	X3683 526	X3683 527	Sunset (M)	Cricket
143	X3683 528	X3683 529	Aztec Gold (M)	Cricket
144	X3683 530	X3683 531	Golden Olive (M)	Cricket
145	X3683 532	X3683 533	Electric Blue (M)	Cricket

(CONTINUED NEXT PAGE)

1970 PASSENGER CARS TOUCH-UP PAINT CHART

Code	Spray Can Part No.	Applicator Part No.	Color	Model Application
X9	2809 784	2809 785	Black	All Models
Y3	2932 336	2932 337	Light Gold	All Exc. Plymouth
Y2	2932 342	2932 343	Brite Yellow	Plymouth
R8	2932 344	2932 345	Dark Red	Polara, Monaco, Chrysler & Imperial
A4	3419 152	3419 153	Platinum	Plymouth, Polara, Monaco, Chrysler & Imperial
A9	3419 154	3419 155	Med. Dark Gray	Dodge & Imperial
B3	3419 156	3419 157	Pale Blue	All Models
B5	3419 158	3419 159	Brite Blue	All Exc. Polara, Monaco, Chrysler & Imperial
B7	3419 160	3419 161	Med. Dark Blue	All Models
F8	3419 170	3419 171	Med. Dark Green	All Models
F9	3419 172	3419 173	Dark Green	Chrysler & Imperial
L1	3419 174	3419 175	Beige	All Models
M9	3419 176	3419 177	Burgandy	Imperial
R6	3419 182	3419 183	Med. Brite Red	Plymouth, Dodge & Chrysler
W1	3419 190	3419 191	White	All Models
Y6	3419 441	3419 442	Med. Citron Gold	Fury, Polara, Monaco, Chrysler & Imperial
Q3	3419 454	3419 455	Light Peacock	Polara & Monaco
P6	3419 458	3419 459	Teal	Fury, Chrysler & Imperial
F4	3419 460	3419 461	Light Green	All Models
Y4	3419 462	3419 463	Light Citron Gold	All Models
K3	3419 466	3419 467	Lt. Burnt Orange	Plymouth
K5	3419 468	3419 469	Med. Burnt Orange	All Exc. Chrysler & Imperial
T3	3419 470	3419 471	Light Tan	Fury, Polara, Monaco, Chrysler & Imperial
T6	3419 472	3419 473	Med. Dark Tan	All Models
T8	3419 474	3419 475	Walnut	Imperial
E5	3419 476	3419 477	Light Brite Red	All Exc. Fury, Polara, Monaco, Chrysler & Imperial
J5	3481 702	3481 703	Lime Green	All Exc. Fury, Polara, Monaco, Chrysler & Imperial
C7	3481 704	3481 705	Purple	All Exc. Fury, Polara, Monaco, Chrysler & Imperial
Y1	3481 706	3481 707	Super Yellow	All Exc. Fury, Polara, Monaco, Chrysler & Imperial
Y2	3514 912	3514 913	Ceramic Red	Dodge
K2	3514 914	3514 915	Ceramic Orange	Plymouth
4L6	3549 679	3549 698	Aztec Gold	Chrysler
M3	3579 484	3579 485	Penta-Magenta	All Exc. Fury, Chrysler & Imperial
J6	3579 490	3579 491	Avocado	All Exc. Fury, Chrysler & Imperial

(CONTINUED OVER)

Mopar

1974 DODGE TRUCK TOUCH-UP PAINT CHART

Code	Dodge Truck Part No.	Spray Can Part No.	Color
TR3	3116	2809 984	Bright Red
EW1	1417	3419 190	White
JL3	6397	3685 855	Medium Gold
JK5	6398	3744 075	Bronze (M)
JQ1	7704	3744 076	Turquoise
KB1	8664	3837 124	Light Blue
KB5	8665	3837 126	Medium Blue (M)
KG8	7776	3837 132	Dark Green (M)
KJ6	7762	3837 134	Avocado (M)
KY4	6442	3837 140	Light Gold
KY5	2550	3837 142	Bright Yellow
KY8	6443	3837 157	Medium Gold (M)
KG4	7775	3837 158	Light Green
GG3	7681	3837 189	Light Green (M)
#KK4	5207	3837 719	Sunstone

1972-73 TRUCK TOUCH-UP PAINT

C70 72ES		2809 984	Brite Red
VAE 1W1		2809 986	White
AE2 GG3		3419 245	Light Green (M)
AE1 FY1		3514 219	Bright Yellow
AE1 GK4		3514 221	Med. Burnt Orange
AE2 GB3		3514 901	Light Blue (M)
AE1 GB3		3514 902	Light Blue
AE1 GB8		3514 903	Dark Blue
AE1 GG3		3514 905	Light Green
AE1 GG8		3514 906	Dark Green
AE2 GT4		3514 907	Medium Tan (M)
AE1 GT4		3514 908	Medium Tan
AE1 GL2		3514 909	Beige
AE1 JL3		3685 855	Bahama Yellow
AE2 JK5		3744 075	Medium Copper
AE1 JQ1		3744 076	Bright Turquoise

(M) - Metallic
#New Part

DODGE TRUCK TOUCH-UP PAINT CHART

Spray Can Part No.	Color
1971 TRUCK TOUCH-UP PAINT	
2809 982	Medium Turquoise
2809 984	Brite Truck Red
2809 986	Dodge Truck White
3419 245	Light Green
3514 218	Maroon
3514 219	Brite Yellow
3514 220	Brite Green
3514 221	Medium Burnt Orange
3514 901	Light Blue (M)
3514 902	Light Blue Straight
3514 903	Dark Blue
3514 905	Light Green
3514 906	Dark Green
3514 907	Medium Tan (M)
3514 908	Medium Tan Straight
3514 909	Beige
1969-70 TRUCK TOUCH-UP PAINT	
3514 218	Maroon
3514 219	Brite Yellow
3514 220	Brite Green
3514 221	Med. Burnt Orange
2809 972	Angus Black
2809 974	Dodge Truck Red
2809 975	Arctic Blue
2809 976	Pine Green
2809 978	Mojave Yellow
2809 981	Mustang Grey
2809 982	Desert Turquoise
2809 984	Toreador Red
2809 986	Dodge Truck White
3419 244	Medium Blue Met.
3419 245	Light Green Met.
3419 246	Light Tan Met.
3419 247	Medium Blue
3419 248	Medium Green Met.
3419 249	Medium Tan
3419 174	Beige
3579 500	Lime Green
AUTO AND MARINE ENGINE PAINT	
3419 365	Marine Blue
3419 366	Marine Nocturne Blue
3419 367	Marine Air Flow Blue
3419 368	Gray
3419 369	Red
3419 370	Turquoise (Non-Metallic)
3419 371	Torquoise (Metallic)
3419 372	Gold
3419 373	Orange
3419 374	High Heat Aluminum
3419 375	Black
3419 376	Primer
3514 625	Blue

(M) - Metallic

Mopar

NOTES

REFRIGERANT

Description	Price Sym.	Part Number	List	No. 1 Net Each	Direct Shipment No. 2 Net Each	Minimum Sales Qty. Unit Pack Quantity
*REFRIGERANT 12				In Carton Quantities	15 or More Assorted Cartons or Cylinders Prepaid Colwich, Kansas	
14 Oz. Can	N.D.	3837 730	1.78	.89	.71	24
30 Pound Cylinder	N.D.	3683 943	58.95	29.48	23.58	1

Direct all orders to the Parts Depot serving your locality.

Orders qualifying for Direct Shipment must be separate orders and plainly marked "Direct Shipment" in the Ship VIA on the Parts Order form.

Shipment will be made to the ordering account's principal place of business only.

IMPORTANT Prices shown supersede those in Master Parts Price List 81-690-0774 dated June 3, 1974. Please mark your records accordingly.

Mopar

NOTES

REFRIGERANT

Description	Price Sym.	Part Number	List	No. 1 Net Each	Direct Shipment No. 2 Net Each	Minimum Sales Qty. Unit Pack Quantity
REFRIGERANT 12				In Carton Quantities	15 or More Assorted Cartons or Cylinders Prepaid Colwich, Kansas	
#14 Oz. Can	N.D.	3837 730	1.58	.79	.62	24
30 Pound Cylinder	N.D.	3683 943	54.14	27.07	21.62	1

Direct all orders to the Parts Depot serving your locality.

Orders qualifying for Direct Shipment must be separate orders and plainly marked "Direct Shipment" in the Ship VIA on the Parts Order form.

Shipment will be made to the ordering account's principal place of business only.

Mopar

NOTES

RECONDITIONING MATERIAL

Description	Minimum Sales Qty.	Price Sym.	Part Number	List	Dealer Each	Wholesale Allowance
* USED CAR AND TRUCK CONDITIONING MATERIALS						
Upholstery Tint - Gray . . . . . Quart	12	A3	1653 395	2.88	1.73	.01
Brown . . . . . Pint	12	A3	3419 963	4.45	2.67	.05
Green . . . . . Pint	12	A3	3419 965	4.45	2.67	.05
Black . . . . . Pint	12	A3	3419 970	4.45	2.67	.05
Turquoise . . . . . Pint	12	A3	3419 971	4.45	2.67	.05
Blue . . . . . Pint	12	A3	3419 972	4.45	2.67	.05
Aqua . . . . . Pint	12	A3	3419 975	4.45	2.67	.05
Dark Red . . . . . Pint	12	A3	3419 978	4.45	2.67	.05
Multi-Purpose Dye & Dressing - Med. Green . . . . . Quart	12	A3	1653 408	3.45	2.07	.05
Blue . . . . . Quart	12	A3	1879 717	3.45	2.07	.05
Red . . . . . Quart	12	A3	1879 719	3.45	2.07	.05
White . . . . . Quart	12	A3	1879 720	3.45	2.07	.05
Turquoise . . . . . Quart	12	A3	2298 524	3.45	2.07	.05
Black . . . . . Gallon	4	A1	2298 525	7.75	5.17	.25
Gray . . . . . Quart	12	A3	2298 538	3.45	2.07	.05
Headliner Tint - Blue . . . . . Quart	12	A3	1653 398	5.45	3.27	.14
White . . . . . Quart	12	A3	1879 728	5.45	3.27	.14
Black . . . . . Quart	12	A3	1879 730	5.45	3.27	.14
Red . . . . . Quart	12	A3	2298 527	5.45	3.27	.14
Leather & Vinyl Dye - Black . . . . . Quart	12	A3	1450 985	4.90	2.94	.07
White . . . . . Quart	12	A3	1603 345	4.90	2.94	.07
Blue . . . . . Quart	12	A3	1603 346	4.90	2.94	.07
Yellow . . . . . Quart	12	A3	1879 727	4.90	2.94	.07
Brown . . . . . Quart	12	A3	2298 530	4.90	2.94	.07
Nylon Dye - White . . . . . Quart	12	A3	1653 402	4.95	2.97	.11
Red . . . . . Quart	12	A3	1653 403	4.95	2.97	.11
Blue . . . . . Quart	12	A3	1653 404	4.95	2.97	.11
Green . . . . . Quart	12	A3	1653 405	4.95	2.97	.11
Black . . . . . Quart	12	A3	1653 406	4.95	2.97	.11
Upholstery Cleaner . . . . . Gallon	6	A3	1316 182	6.15	3.69	.07
Multi-Purpose Cleaner . . . . . 5 Gallon	1	A1	2298 532	20.95	13.95	.69
Overspray Remover . . . . . Pint	12	A3	2448 756	2.35	1.41	.10
Gallon	6	A3	2421 089	8.99	5.40	.12
Revive A-Color . . . . . Gallon	4	A3	2421 097	8.35	5.01	.11
Silver Engine Paint . . . . . Quart	12	A3	2298 526	4.25	2.55	.05
Gold Engine Paint . . . . . Quart	12	A3	2421 098	4.65	2.79	.07
Splatter Paint-Gray & White . . . . . Gallon	4	A3	2585 330	17.95	10.77	.21

AIR CONDITIONING

(DAYTON, OHIO)

ORDERING INFORMATION

DEPOT SHIPMENTS
NO. 1 NET

The No. 1 Net Price applies to indicated quantity of each A/C Basic Unit, A/C Adapter Package and/or Condenser Package when ordered for shipment from Parts Depot. Transportation will be Prepaid when qualified, as provided for in Schedule of Discounts and Terms of Purchase.

NO. 2 NET

The No. 2 Net Price applies to Single Orders for 3 to 9 Assorted A/C Basic Units or A/C Adapter and/or Condenser Packages. Such orders will be shipped Transportation Prepaid. Any Quantity of A/C Adapter or Condenser Packages ordered with a qualifying shipment of A/C Basic Units will be billed at the No. 2 Net Price, Transportation Prepaid. Destinations Alaska or Hawaii will be prepaid to port of exit only.

DIRECT SHIPMENT
NO. 3 NET

The No. 3 Net Price applies to Single Orders for Ten (10) or More Assorted A/C Basic Units or Ten (10) or More Assorted A/C Adapter and/or Condenser Packages indicated for Direct Shipment. Such orders will be shipped Transportation Prepaid. Any quantity of Adapter or Condenser Packages included in the qualifying A/C. Basic Unit Order will be billed at the No. 3 Net Price and shipped Transportation Prepaid. Destinations in Alaska or Hawaii will be Prepaid to port of exit only.

NOTE : A/C BASIC UNITS, A/C ADAPTER PACKAGES AND CONDENSER PACKAGES CANNOT BE COMBINED TO QUALIFY FOR QUANTITY PRICES.

Direct all orders to the Parts Depot serving your locality.

Orders qualifying for Direct Shipment must be separate orders and plainly marked "Direct Shipment" in the Ship VIA Space on the Parts Order form.

Shipment will be made to the ordering accounts principal place of business only.

Mopar

AIR CONDITIONING (AIRTEMP)

Description	Price Sym.	Part Number	List	No. 1 Net Each	No. 2 Net Each	No. 3 Net Each
				Depot Ship	3 to 9 Depot Ship	10 or More Assorted Prepaid Dayton, Ohio
AIR CONDITIONING UNITS						
BASIC UNITS						
1973-70 Fury, Monaco & Chrysler - Hang On . . .	N.D.	2027 820	170.12	136.11	129.37	120.03
Note: To Convert to a Custom Unit Specify (2) 2027 821 Spot Coolers						
1974-70 Valiant, Dart, Barracuda & Challenger - Hang-On	N.D.	2027 816	124.80	99.81	94.63	87.89
				Depot Ship	3 to 9 Assorted Depot Ship	10 or More Assorted Prepaid Dayton, Ohio
SPOT COOLER ADAPTER PACKAGE	N.D.	2027 821	11.04	8.81	8.30	7.78
ADAPTER PACKAGES - ABOVE BASICS						
1974-70 6 Cyl. 198-225 C.I.D.	N.D.	2027 817	72.28	57.81	54.70	51.07
1974-72 6 Cyl. 198-225 C.I.D. (Calif. Only) Note	N.D.	2027 823	88.45	70.75	66.95	62.50
1974-70 8 Cyl. 318-340-360 C.I.D.	N.D.	2027 818	72.28	57.81	54.70	51.07
1973 8 Cyl. 400-440 C.I.D.	N.D.	2027 825	72.28	57.81	54.70	51.07
1972 8 Cyl. 400-440 C.I.D. (Calif. Only) Note	N.D.	2027 824	88.45	70.75	66.95	62.50
CONDENSER PACKAGES						
1973-70 Fury, Monaco & Chrysler	N.D.	2027 814	29.81	23.85	22.81	21.78
1974-70 Valiant, Dart, Barracuda & Challenger . . .	N.D.	2027 787	29.81	23.85	22.81	21.78
Note: For Calif. Usage, Specify the Following Parts.				Dealer Each	Wholesale Allowance	
1 - Belt	A1	2658 379	4.99	2.80	.58	
1 - Bracket	B2	3698 952	1.99	1.28		
1 - Nut & Washer	B3	6025 020	.53	.32		

RADIOS AND RELATED ITEMS

ORDERING INFORMATION

NO. 1 NET

The No. 1 Net Price applies to any quantity of Radios and Related Items when ordered for shipment from Parts Depot. Transportation will be Prepaid when qualified, as provided for in Schedule of Discounts and Terms of Purchase.

NO. 2 NET

The No. 2 Net Price applies when Radios and Related Items are ordered in quantities indicated for direct shipment.

Direct all orders to the Parts Depot serving your locality.

Orders qualifying for Direct Shipment must be separate orders and plainly marked "Direct Shipment" in the Ship VIA Space on the Parts Order form.

Shipment will be made to the ordering accounts principal place of business only.

Mopar

RADIOS

Description	Price Sym.	Part Number	Depot No. 1 Net Each	Direct Shipment No. 2 Net Each	Quantity For Direct Shipment
RADIO - LESS ANTENNA				Direct Shipment Shipping Point Quincy, Illinois	
VALIANT & DART					
*1970-4 AM . . . . . Note 1 . . .	N.D.	3501 582	42.91	37.33	
*1970-4 AM-FM . . . . . Note 1 . . .	N.D.	3501 583	99.44	86.51	
SATELLITE, CORONET & CHARGER					
*1971-4 AM . . . . . Note 1 . . .	N.D.	3501 132	42.91	37.33	8 or More Assorted From One Shipping Point Prepaid
*1971-4 AM-FM . . . . . Note 1 . . .	N.D.	3501 584	99.44	86.51	
*1971-4 AM-FM Stereo . . . . . Note 1 & 2 .	N.D.	3501 627	161.87	140.83	
FURY, MONACO, CHRYSLER & IMPERIAL					
*1974 AM-FM Stereo . . . . . Note 1 & 2 .	N.D.	3501 337	164.27	142.91	
*1974 AM-FM Stereo Search Tuner . . . Note 1 & 2 .	N.D.	3501 341	214.00	186.18	
See Next Page For Additional Radios for Fury, Monaco, Chrysler and Imperial					
*DODGE TRUCK					
1967-74 Roof Mount-All Models-Includes Antenna	N.D.	3420 826	47.93	41.70	
1970-4 B100-200-300 AM . . . . . Note 1 . . .	N.D.	2958 844	50.76	44.16	
1970-4 B100-200-300 AM-FM . . . . . Note 1 . . .	N.D.	3837 165	101.20	88.04	
1972-4 D & W100-200-300					
1974 D & W500-600-800 AM . . . . . Note 1 . . .	N.D.	3635 354	50.76	44.16	
1972-4 D & W100-200-300					
1974 D & W500-600-800 AM-FM . . . . Note 1 . . .	N.D.	3837 166	101.20	84.04	
Note 1: See Page 26 For Instrument Panel Bezel Required with Specified Radio.					
Note 2: Speakers are not included in Stereo and Tape Player Packages. Refer to Speaker Package listings for types and part numbers.					
The following Past Model Radios may be added to a qualifying order at the No. 2 Net but will not help qualify on order.					
FURY & GRAN					
1970-73 AM . . . . . Note 1 . . .	N.D.	3501 160	41.74	36.30	
1970-73 AM-FM . . . . . Note 1 . . .	N.D.	3501 533	94.68	82.39	
POLARA & MONACO					
1971-73 AM . . . . . Note 1 . . .	N.D.	3501 160	41.74	36.30	
1971-73 AM-FM . . . . . Note 1 . . .	N.D.	3501 533	94.68	82.39	
CHRYSLER					
1970-73 AM . . . . . Note 1 . . .	N.D.	3501 133	59.73	51.95	

RADIOS

Description	Price Sym.	Part Number	Depot No. 1 Net Each	Direct Shipment No. 2 Net Each	Quantity For Direct Shipment
RADIO - LESS ANTENNA				Direct Shipment Shipping Point Center Line, Michigan	
BARRACUDA & CHALLENGER					
*1970-4 AM . . . . . Note 1 . . .	N.D.	2884 853	42.91	37.33	
*1970-4 AM-FM Stereo . . . . . Note 1 & 2 .	N.D.	3501 626	161.87	140.83	
FURY, MONACO, CHRYSLER & IMPERIAL					
*1974 AM . . . . . Note 1 . . .	N.D.	3501 338	42.91	37.33	
*1974 AM-FM . . . . . Note 1 . . .	N.D.	3501 339	99.44	86.51	
*1974 AM-FM Stereo w/Tape Player . . . Note 1 & 2 .	N.D.	3501 340	282.48	245.76	
See Previous Page For Additional Radios For Fury, Monaco, Chrysler and Imperial					
Note 1: See Page 26 For Instrument Panel Bezel Required For Specified Radio.					
Note 2: Speakers are not included in Stereo and Tape Player Packages. Refer to Speaker Package listings for types and part numbers.					
The following Past Model Radios may be added to a qualifying order at the No. 2 Net but will not help qualify on order.					
CHRYSLER					
1971-73 Chrysler Am-FM Search Tuner . . . Note 1 & 2 . .	N.D.	3501 134	133.20	115.88	
1970-73 Chrysler Am-FM . . . . . Note 1 . . .	N.D.	3420 560	110.96	95.76	
*1973 Med & Hvy. Duty Conv. Cab					
*1970-73 Conv. & Crew Cab.	N.D.	3489 160	34.95	-	
"340" & Swinger "340") AM-2 Watt. Note 1 . . .	N.D.	2884 854	36.30	-	
*1970-72 Valiant & Dart (Ex. 1970 Duster "340" & Swinger "340") AM-FM . . .Note 1 . . .	N.D.	3501 565	82.39	-	

Mopar

IMPORT RADIOS & ANTENNAS

Description	Price Sym.	Part Number	List	Dealer Each
SIMCA RADIO AND ANTENNA PACKAGE				
S 1000 and S 1118 Models	N.D.	S 48136	54.96	38.01
S 1204 Models	N.D.	S 48190	62.22	46.67
SUN BEAM RADIO AND ANTENNA PACKAGE				
1968 and Prior Sunbeams All Models	N.D.	XR 80001	54.96	38.01
1969-71 Sunbeam Arrow and Alpine	N.D.	XR 80003	59.01	43.87
COLT RADIOS LESS ANTENNA				
1971-3 Station Wagon	N.D.	MA 158353	62.55	46.50
1971-3 Hardtop & Sedan	N.D.	MA 158354	62.55	46.50
#1974 Sedan & Hardtop	N.D.	MB 037915	66.25	49.69
#1974 Station Wagon	N.D.	MB 037916	66.25	49.69
ANTENNA PACKAGES				
1971-4 Colt Station Wagon (Not Required for Others)	N.D.	MA 158356	7.31	4.39
1971-3 Cricket	N.D.	X 3621 614	7.10	4.26
Simca S 1204 Models	Z	S 36836	7.10	4.26

#New Part

ALL PRICES AND SPECIFICATIONS ARE SUBJECT TO CHANGE WITHOUT NOTICE

8 TRACK STEREO TAPE PLAYERS

Description	Price Sym.	Model Number	Part Number	List	Dealer
STEREO 8 TAPE PLAYER - UNIVERSAL					
AUTOMOTIVE 8 TRACK UNITS					
HANG-ON TYPE W/O SPEAKERS					
*Mini - 8 Watt	N.D.	A-20	3837 179	37.35	31.00
*Mini - 30 Watt	N.D.	A-25	3744 980	65.65	45.94
*Select-O-Matic	N.D.	A-125	3744 981	86.60	60.63
* With FM Radio	N.D.	A-225	3744 982	121.95	85.35
# Quad-Matic	N.D.	A-255	3744 983	129.95	91.00
SPEAKER PACKAGES - STEREO					
4 Speakers - Door and/or Cowl Mtg.	N.D.		3514 400	22.32	16.74
2 Speakers - Door or Cowl Mtg.	N.D.		3420 879	11.70	8.78
2 Speakers - Wedge Type	N.D.		3744 979	15.20	11.40
HOME UNITS					
Use With Existing Stereo	N.D.	H-325	3744 984	49.95	36.00
w/AM-FM Stereo w/Speakers	N.D.	H-430	3837 185	169.95	127.45
w/AM-FM Stereo, Turn Table w/Speakers	N.D.	H-440	3837 186	199.95	150.00
w/AM-FM Radio & Recorder w/Speaker	N.D.	H-495-5	3744 986	229.95	160.95
PORTABLE UNITS					
Tape Player	N.D.	P-570	3744 260	79.95	58.50
w/AM-FM Radio	N.D.	P-590	3744 261	99.95	73.00
Portables Include Cigar Lighter Power Adapter					
STEREO TAPE DEMONSTRATION CARTRIDGE					
8 Track - 1974 Prod. Type	N.D.		3501 332	10.63	6.37

*Price Revision

Mopar

CASSETTE TAPE PLAYERS

Description	Price Sym.	Model Number	Part Number	List	Dealer Each
CASSETTE STEREO TAPE PLAYER					
All Automotive, Truck, Marine & Industrial Units With 12 Volt System					
Tape Player	N.D.	KS-950	3837 148	69.95	49.65
*Tape Player	N.D.	A-52	3837 183	121.95	85.38
*w/FM Radio	N.D.	A-152	3837 184	172.75	120.94
Also Specify and Use One of the Stereo Speaker Packages Listed on Page 21.					

	Price Sym.	Part Number	List	Dealer Each
CASSETTE TAPE PLAYER				
1971-74 All Models - For Replacement of Factory Installed Cassette Player ONLY (w/o Knobs, Microphone, Shroud Parts or Cables	N.D.	3501 045		91.26
CASSETTE MICROPHONE				
1971-74 All Models - Use w/3501 045 Cassette ONLY	N.D.	3501 534		9.50

*Price Revision

ALL PRICES AND SPECIFICATIONS ARE SUBJECT TO CHANGE WITHOUT NOTICE

ANTENNAS

Description	Price Sym.	Part Number	List	Dealer Each	Wholesale Allowance
ANTENNAS					
BODY & CABLE PACKAGE					
1974 Valiant, Dart, Barracuda, Challenger, Satellite, Coronet & Charger	N.D.	3501 334	4.90	2.94	
1974 Fury, Monaco & Chrysler	N.D.	3501 335	4.90	2.94	
MAST ASSEMBLY					
All Models w/2 Piece Antenna	A3	3513 745	3.80	2.28	.31
UNIVERSAL - COMPLETE					
Passenger Car and Truck Application - Fender Mtg.	N.D.	3838 093	4.77	2.86	

Description	Price Sym.	Part Number	List	Depot No. 1 Net Each	Direct Shipment No. 2 Net Each	Quantity For Direct Shipment
ANTENNA PACKAGE - MANUAL						
1970-3 Barracuda & Challenger	N.D.	2983 171	7.31	4.39	3.73	48 or More Assorted in Multiples of 6 of a Part Number Prepaid Center Line, Michigan
1969-73 Valiant & Dart						
1969-70 Belvedere, Satellite, Coronet & Charger	N.D.	2889 826	7.31	4.39	3.73	
1971-3 Satellite, Coronet & Charger	N.D.	3513 033	7.31	4.39	3.73	
1972-3 Fury, Gran, Polara, Monaco & Chrysler	N.D.	3588 365	10.26	6.15	5.23	
1969-71 Fury, Polara, Monaco & Chrysler	N.D.	2926 691	7.31	4.39	3.73	
1967-8 Fury, Polara, Monaco & Chrysler	N.D.	2889 827	7.31	4.39	3.73	
1967 Valiant, Barracuda, Dart, Belvedere, Coronet & Charger	N.D.	2771 983	5.95	3.57	3.01	

ANTENNAS

Description	Price Sym.	Part Number	List	Dealer Each
ANTENNA PACKAGE - MOTORIZED				
1974 Chrysler & Imperial	N.D.	3501 336	30.54	21.38
1973 Chrysler**	N.D.	3679 819	29.74	20.82
• **Also Requires Map & Pwr. Ant. Switch Assy.	B2	3488 132	11.63	7.57
ANTENNA PACKAGE - TRUCK				
1970-4 B100-200-300	N.D.	2958 849	6.90	4.14
1972-4 D & W100-200-300	N.D.	3621 892	7.21	4.32
1974 D & W500-600-800	N.D.	3837 147	7.21	4.32
1972-3 Conv. Cab - Med. & Heavy Duty 1968-73 L.C.F. 1969-71 Conv. & Crew Cab	N.D.	3420 737	6.90	4.14

SPEAKER PACKAGES

	Description	Price Sym.	Part Number	Dealer Each
CUSTOMIZED SPEAKER PACKAGES				
1974	Valiant & Dart			
1974	Barracuda & Challenger - Rear Compt.	N.D.	3501 358	10.80
1971-4	Satellite, Coronet & Charger (Exc. Sta. Wag.) Rear Compt.	N.D.	3488 423	10.80
1971-4	Satellite & Coronet Sta. Wag. - Rear Compt.	N.D.	3488 424	10.80
1974	Fury, Monaco & Chrysler Sedans - Rear Compt.	N.D.	3501 359	14.05
1974	Fury, Monaco & Chrysler Sedans - Rear Compt. & Inst. Panel - 4 Speakers - Note 1	N.D.	3501 349	23.50
1974	Fury, Monaco & Chrysler Sta. Wag. - Inst. Panel - 4 Speakers - Note 2	N.D.	3501 363	36.25
1970-3	Barracuda & Challenger (Exc. Rallye)	N.D.	3501 182	10.80
1970-3	Barracuda & Challenger Rallye	N.D.	3501 183	10.80
1972-3	Fury, Gran, Polara & Monaco (Exc. Sta. Wag.)	N.D.	3501 555	10.80
1972-3	Fury, Gran, Polara & Monaco Sta. Wag.	N.D.	3501 556	10.80
1969-73	Chrysler (Exc. Sta. Wag.)	N.D.	2947 223	14.05
1970-3	Chrysler Sta. Wag.	N.D.	2947 883	14.05
1969-71	Fury, Polara & Monaco (Exc. Sta. Wag.)	N.D.	2947 220	10.68
1970-1	Fury, Polara & Monaco Sta. Wag.	N.D.	2947 882	10.68
1968-70	Valiant See Note			
1970	Dart Swinger "340"			
1968-9	Barracuda			
1968-70	Dart (Exc. Swinger "340")	N.D.	2864 332	9.87
1969-70	Belvedere, Satellite, Coronet & Charger	N.D.	2947 234	9.87

(1) For production-type installation, use new Instrument Panel Cover, No. 3590 386; and use one of the following new Rear Shelf Panels:

FURY & MONACO		CHRYSLER	
4 Door H.T.	No. H102KX9	2 Doors & 4 Door H.T.	No. H100KX9
4 Door Sedan	No. H126KX9	4 Door Sedan	No. H130KX9
2 Doors	No. H132KX9		

(2) For production-type installation, use new Instrument Panel Cover, No. 3590 386.

Mopar

1974 RADIO BEZELS

Description	Price Sym.	Part Number	Dealer Each
*RADIO BEZELS			
A Bezel is Required when Installing 1974 Radios			
BEZEL (Use with Radios 3501 582 & 3501 583)			
Valiant & Dart - All (Std. Black)	N.D.	2884 817	1.68
Valiant & Dart - All (Woodgrain)	B3	3501 602	10.34
BEZEL (Use with Radios 2884 853 & 3501 626)			
Barracuda & Challenger - All	N.D.	2884 880	2.31
BEZEL (Use with Radios 3501 132, 3501 584 & 3501 627)			
R/Runner, Sebring Plus, Regent/ Coronet, Charger, Crestwood & SE Rallye Type - Woodgrain	B2	3592 686	7.57
Police, Taxi/Satellite, Coronet & Charger - Silver	B2	3592 351	8.51
Sebring, Custom & Charger - Woodgrain	B2	3592 353	10.78
BEZEL (Use with Radios 3501 337, 3501 338, 3501 339, 3501 340 & 3501 341)			
Fury & Monaco (Exc. Sta. Wag.) - Black	B2	3592 553	7.57
Fury & Monaco Station Wagon - Black	B2	3592 555	7.57
Fury & Monaco (Exc. Sta. Wag.) - Woodgrain	B2	3592 557	8.23
Fury & Monaco Station Wagon - Woodgrain	B2	3592 559	8.23
Chrysler (Exc. Sta. Wag.) - Suede	B2	3592 485	7.39
Chrysler (Exc. Sta. Wag.) - Woodgrain	B2	3592 486	8.23
Chrysler Station Wagon - Woodgrain	B2	3592 487	8.23
BEZEL (Use with Radios 2958 844 & 3837 165)			
Dodge Truck B100-200-300 ... Black	B2	3730 856	2.26
Blue	B2	3730 857	2.26
Tan	B2	3730 858	2.26
Gold		3738 131	2.26
FACE PLATE (Use with Radios 3635 354 & 3837 166)			
Dodge Truck D & W 100-200-300-500-600-800	B2	3489 554	12.95

1973 RADIO BEZELS

Description	Price Sym.	Part Number	Dealer Each
*RADIO BEZELS			
A Bezel is Required when Installing 1973 Radios			
BEZEL (Use with Radios 3501 582 & 3502 583)			
Valiant & Dart - All (Std. Black)	N.D.	2884 817	1.68
Valiant & Dart - All (Woodgrain)	B3	3501 602	10.34
BEZEL (Use with Radio 2884 853)			
Barracuda & Challenger - All	N.D.	2884 880	2.31
BEZEL (Use with Radios 3501 132 & 3501 584)			
Sebring Plus, Regent & R. Runner w/Rallye Panel (Woodgrain)	B2	2985 158	7.57
Police, Taxi & Satellite (Silver)	B2	2985 364	8.51
Sebring & Custom (Woodgrain)	B2	3592 353	10.78
Coronet & Charger - All w/Rallye Panel (Woodgrain)	B2	2985 158	7.57
Police, Taxi, Coronet & Charger (Silver)	B2	2985 364	8.51
Coronet Custom & Charger (Woodgrain)	B2	3592 353	10.78
BEZEL (Use with Radios 3501 160 & 3501 533)			
Fury, Gran, Polara & Monaco - All	B2	3592 057	2.26
BEZEL (Use with Radios 3420 560 & 3501 133)			
Chrysler - All	B2	2985 564	8.23
BEZEL (Use with Radio 3501 134)			
Chrysler - All	B2	2985 566	8.23
BEZEL (Use with Radio 2958 844)			
Dodge Truck B-100-200-300 Black	B2	2958 813	2.26
Blue	B2	3635 295	2.26
Green	B2	3635 296	2.26
Tan	B2	3635 297	2.26
BEZEL (Use with Radio 3635 354)			
Dodge Truck D & W-100-200-300	B2	3489 554	12.95

Mopar

1972 RADIO BEZELS & PANELS

Description	Price Sym.	Part Number	Dealer Each
*RADIO BEZELS & PANELS			
1972 MODELS			
A Bezel is Required when Installing 1972 Radios.			
BEZEL (Use with Radios 2884 854, 3501 565, 3501 582 & 3501 583)			
Valiant & Dart All (Std. Black)	N.D.	2884 817	1.68
BEZEL (Use with Radio 2884 853)			
Barracuda & Challenger All	N.D.	2884 880	2.31
BEZEL (Use with Radios 3501 132 & 3501 584)			
Satellite, Sebring Plus, Regent & Road Runner w/Rallye Panel Woodgrain	B2	2985 158	7.57
Police, Taxi & Satellite (Silvery)	B2	2985 364	8.51
Satellite, Sebring & Custom (Woodgrain)	B2	3592 353	10.78
Coronet & Charger w/Rallye Panel (Woodgrain)	B2	2985 158	7.57
Police, Taxi, Coronet & Charger (Silvery)	B2	2985 364	8.51
Coronet Custom & Charger (Woodgrain)	B2	3592 353	10.78
BEZEL (Use with Radio 3501 533)			
Fury & Gran	B2	3592 057	2.26
BEZEL (Use with Radios 3501 160 & 3501 533)			
Polara & Monaco	B2	3592 057	2.26
BEZEL (Use with Radios 2884 859, 3420 560 & 3501 133)			
Chrysler	B2	2985 564	8.23
BEZEL (Use with Radio 3501 134)			
Chrysler	B2	2985 566	8.23
BEZEL (Use with Radio 2958 844)			
Dodge Truck B100, 200, 300 — Black	B2	2958 813	2.26
Blue	B2	3635 295	2.26
Green	B2	3489 460	2.26
Tan	B2	3489 461	2.26
BEZEL (Use with Radio 3635 354)			
Dodge Truck D100, 200, 300 & W100, 200, 300	B2	3489 554	12.95

1971 RADIO BEZELS & PANELS

Description	Price Sym.	Part Number	Dealer Each
*RADIO BEZELS & PANELS			
1971 MODELS			
A Bezel or Panel is Required when Installing 1971 Radios.			
BEZEL (Use with Radios 2884 854, 3501 565, 3501 582 & 3501 583)			
Valiant Duster, Scamp and Demon (Black)	N.D.	2884 817	1.68
Swinger Special and Dart (Silver)	N.D.	2884 897	2.46
BEZEL (Use with Radio 2884 853)			
Barracuda Challenger Rallye (Woodgrain)	N.D.	2884 880	2.31
BEZEL (Use with Radios 3501 132 & 3501 584)			
Satellite Sebring plus, Brougham, Regent, Road Runner & GTX (Woodgrain)	B2	2985 158	7.57
Satellite (Silvery)	B2	2985 364	8.51
Satellite Sebring and Custom (Woodgrain)	B2	3592 353	10.78
Charger Super Bee, 500, S.E. & R/T Coronet Brougham & Crestwood (Woodgrain)	B2	2985 158	7.57
Coronet (Silvery)	B2	2985 364	8.51
Charger and Custom (Woodgrain)	B2	3592 353	10.78

Mopar

1971 RADIO BEZELS & PANELS

Description	Price Sym.	Part Number	Dealer Each
*RADIO BEZELS & PANELS (Continued)			
1971 MODELS			
BEZEL (Use with Radios 3420 888, 3501 160 & 3501 533)			
Fury I & II	B3	3501 004	3.61
Fury (Exc. I & II)	B3	3501 005	5.53
BEZEL (Use with Radios 3501 160 & 3501 533)			
Polara Special	B3	3501 004	3.61
Polara & Monaco (Exc. Special)	B3	3501 005	5.53
BEZEL (Use with Radio 2884 859)			
Chrysler	B2	2985 564	8.23
BEZEL (Use with Radios 3420 560 & 3501 133)			
Chrysler	B2	2985 564	8.23
BEZEL (Use with Radio 3501 134)			
Chrysler	B2	2985 566	8.23
BEZEL (Use with Radio 2958 844)			
Dodge Truck B100, 200, 300 - Black	B2	2958 813	2.26
Blue	B2	3635 295	2.26
Green	B2	3489 460	2.26
Tan	B2	3489 461	2.26

1970 RADIO BEZELS & PANELS

Description	Price Sym.	Part Number	Dealer Each
RADIO BEZELS, PANELS & PLATES			
1970 MODELS			
A Bezel, Panel or Plate is Required when Installing 1970 Radios.			
BEZEL (Use with Radios 2884 854, 3501 565, 3501 582 & 3501 583)			
*Valiant w/o Woodgrain	N.D.	2884 817	1.68
Dart & Swinger	N.D.	2884 897	2.46
*BEZEL (Use with Radio 2884 853)			
Barracuda Challenger Rallye	N.D.	2884 880	2.31

Mopar

NOTES

AUTOMATIC SPEED CONTROL PACKAGES

APPLICABLE ONLY TO VEHICLES WITH AUTOMATIC TRANSMISSION AND POWER BRAKES

Year	Models	Type Engine	Steering Column Type	Control Package	Lever & Switch Package
1974	Fury, Monaco, Chrysler & Imperial	360, 400 & 440	Standard Tilt	3837 324 3837 324	3746 518 3746 680

	Price Sym.	Part Number	List	Dealer Each
* Control Package	N.D.	3837 324	49.37	37.03
* Lever & Switch Package	B2 B2	3746 518 3746 680	36.08 36.08	23.46 23.46
* SPEED CONTROL PACKAGES - COMPLETE				
1974 Satellite, Coronet & Charger-8 Cyl. Engines	N.D.	3837 975	74.63	55.97
1974 Dodge Truck AD1, AW1, D1-2-3, & W1-2 8 Cyl. Engines	N.D.	3837 974	64.86	50.40
1974 Dodge Truck B1-2-3, CB3 & MC3 8 Cyl. Engine *with Auto. Trans.*	N.D.	3837 327	64.86	50.40

*Price Revision

ALL PRICES AND SPECIFICATIONS ARE SUBJECT TO CHANGE WITHOUT NOTICE

AUTOMATIC SPEED CONTROL PACKAGES

APPLICABLE ONLY TO VEHICLES WITH AUTOMATIC TRANSMISSION AND POWER BRAKES

Year	Models	Type Engine	Steering Column Type	Basic Pkg.	Adapter Pkg.	Lever & Switch Pkg.	Speedo Cable	Wiring Assy.	Link Adapter Pkg.
1972-3	Fury,	318-360	Standard	3420 935	3620 703	3488 538	3592 367	2983 439	3620 807
	Polara	318-360	Tilt	3420 935	3620 703	3488 540	3592 367	2983 439	3620 807
	and	400-440	Standard	3420 935	3420 939	3488 538	3592 367	2983 439	3620 807
	Monaco	400-440	Tilt	3420 935	3420 939	3488 540	3592 367	2983 439	3620 807
1972-3	Chrysler	400-440	Standard	3420 935	3420 939	3488 538	3592 370	2983 310	3620 807
		400-440	Tilt & Telescoping	3420 935	3420 939	3488 539	3592 370	2983 310	3620 807
1972-3	Imperial	440	Standard	3420 935	3420 939	3488 538	3592 370	-	3620 807
		440	Tilt & Telescoping	3420 935	3420 939	3488 539	3592 370	-	3620 807

	Price Sym.	Part Number	List	Dealer Each	Wholesale Allowance
Basic Package	N.D.	3420 935	38.80	29.10	
Adapter Package	N.D.	3420 939	5.41	4.06	
	N.D.	3620 703	5.41	4.06	
*Lever & Switch Package	B2	3488 538	36.08	23.46	
	B2	3488 539	36.08	23.46	
	B2	3488 540	36.08	23.46	
Speedometer Cable Assembly	A5	3592 367	5.20	2.60	.39
	A5	3592 370	5.20	2.60	.39
*Wiring Assembly	B3	2983 310	6.01	3.61	
	B3	2983 439	6.01	3.61	
•Link Adapter Package	B2	3620 807	1.58	1.02	

*SPEED CONTROL PACKAGES - COMPLETE

1970-3	Dodge Truck - B100-200-300 Van with 318 or 360 C.I.E. - w/or w/o Power Brakes	N.D.	3579 242	64.86	50.40
1972-3	Dodge Truck D100-200-300 & W100-200	N.D.	3744 555	64.86	50.40
	On W100-200 Models Also Specify 1-3635 003 Cable	B2	3635 003	12.16	7.90

*Price Revision

ALL PRICES AND SPECIFICATIONS ARE SUBJECT TO CHANGE WITHOUT NOTICE

AUTOMATIC SPEED CONTROL PACKAGES

APPLICABLE ONLY TO VEHICLES WITH AUTOMATIC TRANSMISSION AND POWER BRAKES

Model Year	MODELS	Engine	Steering Column Type	Basic Pkg.	Adapter Pkg.	Cable & Bracket Pkg.	Lever & Switch Pkg.	Wiring Assy.	Speedo Cable Assy.
1971	Fury, Polara & Monaco	318-360	Standard	3420 935	3620 703	N.R.	2947 954	2983 439	2927 910
		318-360	Tilt	3420 935	3620 703	N.R.	2947 956	2983 439	2927 910
		383-440	Standard	3420 935	3420 939	N.R.	2947 954	2983 439	2927 910
		383-440	Tilt	3420 935	3420 939	N.R.	2947 956	2983 439	2927 910
1971	Chrysler	383-440	Standard	3420 935	3420 939	N.R.	2947 954	2983 310	2927 914
		383-440	Tilt & Telescoping	3420 935	3420 939	N.R.	3488 539	2983 310	2927 914
1971	Imperial	440	Standard	3420 935	3420 939	N.R.	2947 954	N.R.	2927 914
		440	Tilt & Telescoping	3420 935	3420 939	N.R.	3488 539	N.R.	2927 914
1970	Barracuda & Challenger	318	All			N.R.	N.R.	N.R.	N.R.
		383-440 (1)	All			N.R.	N.R.	N.R.	N.R.
1970	Belvedere, Satellite	318	All	3420 936		N.R.	N.R.	N.R.	N.R.
	Coronet &	383-440 (1)	All	3420 936	3420 939	N.R.	N.R.	N.R.	N.R.
1968-9	Charger	318	All	3420 564	Not	3420 568	N.R.	N.R.	2927 910
		383-440 (1)	All	3420 564	Available	3420 570	N.R.	N.R.	
1970	Fury	318	Standard	3420 935		N.R.	2947 500	2983 439	2927 910
		318	Tilt	3420 935		N.R.	2947 524	2983 439	2927 910
		383-440 (1)	Standard	3420 935	3420 939	N.R.	2947 500	2983 439	2927 910
		383-440 (1)	Tilt	3420 935	3420 939	N.R.	2947 524	2983 439	2927 910
1969	Fury	318	Chrysler Std.	3420 564			2926 589	2926 060	2927 910
		318	Saginaw Tilt	3420 564			2926 591	2926 060	2927 910
		383-440 (1)	Chrysler Std.	3420 564		3420 570	2926 589	2926 060	2927 910
		383-440 (1)	Saginaw Tilt	3420 564		3420 570	2926 591	2926 060	2926 910
1968	Fury	318	Chrysler Std.	3420 564			2857 525	N.R.	2889 779
		318	Tilt & Telescoping	3420 564			2889 162	N.R.	2889 779
		383-440	Chrysler Std.	3420 564		3420 570	2857 525	N.R.	2889 779
		383-440	Tilt & Telescoping	3420 564		3420 570	2889 162	N.R.	2889 779
1970	Polara & Monaco	318	Standard	3420 935		N.R.	2947 500	2983 439	2927 912
		318	Tilt	3420 935		N.R.	2947 524	2983 439	2927 912
		383-440 (1)	Standard	3420 935	3420 939	N.R.	2947 500	2983 439	2927 912
		383-440 (1)	Tilt	3420 935	3420 939	N.R.	2947 524	2983 439	2927 912
1969	Polara & Monaco	318	Chrysler Std.	3420 564			2926 589	2926 060	2927 912
		318	Saginaw Std.	3420 564			2926 590	2926 060	2927 912
		318	Saginaw Tilt	3420 564			2926 591	2926 060	2927 912
		383-440 (1)	Chrysler Std.	3420 564		3420 570	2926 589	2926 060	2927 912
		383-440 (1)	Saginaw Std.	3420 564		3420 570	2926 590	2926 060	2927 912
		383-440 (1)	Saginaw Tilt	3420 564		3420 570	2926 591	2926 060	2927 910
1968	Polara & Monaco	318	Chrysler Std.	3420 564			2857 525	N.R.	2889 780
		318	Tilt & Telescoping	3420 564			2889 162	N.R.	2889 780
		383-440	Chrysler Std.	3420 564		3420 570	2857 525	N.R.	2889 780
		383-440	Tilt & Telescoping	3420 564		3420 570	2889 162	N.R.	2889 780
1970	Chrysler	383-440 (1)	Standard	3420 935	3420 939	N.R.	2947 500	2983 310	2927 914
		383-440 (1)	Tilt & Telescoping	3420 935	3420 939	N.R.	2947 501	2983 310	2927 914
1969	Chrysler	383-440 (1)	Chrysler Std.	3420 564		3420 570	2926 590	2926 877	2927 914
		383-440 (1)	Tilt & Telescoping	3420 564		3420 570	2889 162	2926 877	2927 914
1968	Chrysler	383-440	Chrysler Std.	3420 564		3420 570	2857 525	N.R.	2881 781
		383-440	Saginaw Std.	3420 564		3420 570	2889 550	N.R.	2881 781
		383-440	Tilt & Telescoping	3420 564		3420 570	2889 162	N.R.	2881 781
1970	Imperial	440 (1)	Standard	3420 935	3420 939	N.R.	2947 500	N.R.	2927 914
		440 (1)	Tilt & Telescoping	3420 935	3420 939	N.R.	2947 501	N.R.	2927 914
1969	Imperial	440 (1)	Chrysler Std.	3420 564		3420 570	2926 590	N.R.	2927 914
		440 (1)	Tilt & Telescoping	3420 564		3420 570	2889 162	N.R.	2927 914

(1) EXCEPT 440 C.I.D. WITH 6 PACK

Mopar

AUTOMATIC SPEED CONTROL PACKAGES

PRICE SCHEDULE FOR PRIOR MODELS

Description	Price Sym.	Part Number	List	Dealer Each	Wholesale Allowance
SPEED CONTROL PACKAGES					
Basic Package	N.D.	3420 564	40.37	30.28	
	N.D.	3420 935	38.80	29.10	
Adapter Package	N.D.	3420 939	5.41	4.06	
	N.D.	3620 703	5.41	4.06	
*Lever & Switch Package	B2	2857 525	34.36	22.34	
	B2	2889 162	36.08	23.46	
	B2	2889 550	36.08	23.46	
	B2	2926 589	36.08	23.46	
	B2	2926 590	36.08	23.46	
	B2	2926 591	36.08	23.46	
	B2	2947 524	36.08	23.46	
	B2	3488 539	36.08	23.46	
*Wiring Assembly	B3	2926 060	4.25	2.54	
	B3	2926 877	3.30	1.98	
	B3	2983 310	6.01	3.61	
	B3	2983 439	6.01	3.61	
* Speedometer Cable Assembly	A5 •	2889 779	4.62	2.32	.36
	A5	2889 780	4.62	2.32	.36
	A5	2889 781	5.50	2.75	.41
	A5	2927 912	5.50	2.75	.41

*Price Revision

ALL PRICES AND SPECIFICATIONS ARE SUBJECT TO CHANGE WITHOUT NOTICE

POWER BRAKES

	Description	Price Sym.	Part Number	List	Dealer Each	Wholesale Allowance
	BRAKE KIT - POWER					
1973-4	Valiant & Dart With Drum Brakes	A3	3744 440	57.44	34.46	3.44
1973-4	Valiant & Dart With Disc Brakes	N.D.	3744 441	63.58	38.15	
1973-4	Barracuda, Challenger, Satellite, Coronet & Charger - All w/Disc Brakes	N.D.	3744 472	63.58	38.15	
1971-2	Valiant & Dart w/10" Brake Drums	A3	3579 290	57.44	34.46	3.44
1971-2	Barracuda, Challenger, Satellite, Coronet & Charger - All	A3	3579 292	57.44	34.46	3.44
1972	Fury, Polara & Monaco - All					
1971	Fury, Polara & Monaco Station Wagon					
1971-2	Chrysler - All	A3	3549 942	57.44	34.44	3.44
1973-4	Dodge Truck B100-200 .....Note 1	N.D.	3744 916	54.20	32.52	
*1970-2	Dodge Truck B100-200 Van	N.D.	3579 287	64.00	38.49	
*1970-2	Dodge Truck B300 Van	N.D.	3579 288	64.00	38.49	
1973-4	Dodge Truck D100 ..... Note 2	N.D.	3744 915	57.82	34.70	
1972-4	Dodge Truck W100 & 1972 D100 ... Note 3	N.D.	3621 965	57.82	34.70	
1972	Dodge Truck D & W 200-300	N.D.	3621 966	57.82	34.70	
1969-70	Belvedere, Satellite, Coronet & Charger (Exc. 1969 Sta. Wag.)	A3	3004 622	54.14	32.49	3.25
1969-70	Fury, Polara, Monaco & Chrysler	A3	3004 867	54.14	32.49	3.25
	Also Order the Following Pedals with the Above Kits.					
*Note 1	1973-4 B100 ..... All	B3	3637 754	11.10	6.67	
*Note 2	1973-4 D100 ..... w/Man. Trans.	B2	3496 928	12.62	8.20	
*Note 2	1973-4 D100 ..... w/Auto. Trans.	B2	3496 932	12.62	8.20	
*Note 3	1973-4 W100					
	1972 D100 ..... w/Auto. Trans.	B2	3496 934	12.62	8.20	
*Note 3	1973-4 W100					
	D100 ..... w/Man. Trans.	B2	3491 618	12.62	8.20	
	BRAKE CONTROL PACKAGE - TRAILER ELECTRIC					
1954-74	Pass. Cars - All					
1963-74	Dodge Truck M & R 300-400					
1969-71	Dodge Truck D100-200-300					
1963-69	Dodge Truck A100	N.D.	3837 350	34.20	22.23	

*Price Revision

Mopar

NOTES

CLOCKS

	Description	Price Sym.	Part Number	List	Dealer Each
	CLOCK - ELECTRIC				
*	1970-4 Barracuda & Challenger (Exc. Rallye)	N.D.	2984 951	-	14.40
*	1972-4 Satellite, Coronet & Coronet Custom	N.D.	2985 416	-	14.40
*	1974 Fury I, II & III, Suburban & Custom Suburban	N.D.	3592 701		14.40
*	1974 Newport	N.D.	3592 702		15.15
*	1974 Monaco, Fury Gran Coupe & Sedan & Sport Suburban Digital	N.D.	3592 616		30.90
*	1974 New Yorker, Town & Country Digital	N.D.	3592 698		30.90
	1972-3 Fury, Polara, Monaco	N.D.	3592 096	-	12.75
	1972-3 Chrysler	N.D.	3592 151	-	14.20
	1971 Chrysler	N.D.	2985 850	-	13.90
	1968-70 Belvedere, Satellite & Coronet	N.D.	2889 620	-	11.82
	1970 Polara & Monaco	N.D.	2984 959		11.82
	1969 Polara & Monaco	N.D.	2927 973		11.36

*Price Revision

Mopar

Description	Price Sym.	Part Number	List	Dealer Each	Wholesale Allowance
DEFLECTOR PACKAGE - STATION WAGON - REAR WINDOW					
Roof Type - 1971-4 Satellite & Coronet	N.D.	3579 672	21.30	12.78	
ENGINE BLOCK HEATER					
*1968-74 Chrysler Built Passenger Cars & Trucks Also Adaptable to Other Makes	A3	3780 741	11.42	6.85	.34
FIRE EXTINGUISHER (DRY CHEMICAL)					
Automotive, Marine & Household use					
Weight Height Dia. Capacity					
2 lb. 13 oz. 12-1/2" 3" 950 Grams	N.D.	3419 439	-	4.96	
FRAME PACKAGE - LICENSE TRIM					
*1967-74 All Chrysler Built Passenger Cars	N.D.	2768 643	4.25	2.44	
GRIP RAIL PACKAGE - SWEPT LINE MODELS					
D & W100-200 With 8 Ft. Box	N.D.	3734 470	49.95	32.46	

*Price Revision

ALL PRICES AND SPECIFICATIONS ARE SUBJECT TO CHANGE WITHOUT NOTICE

BUMPER GUARDS

	Description	Price Sym.	Part Number	List	Dealer Each
GUARD PACKAGE - BUMPER					
FRONT					
1970-2	Dart	N.D.	3481 805	15.75	9.07
1970-2	Challenger	N.D.	3481 807	13.19	7.58
1971-2	Satellite 4 Door Sedan & Station Wagon	N.D.	3620 328	16.61	9.45
1971-2	Coronet 4 Door Sedan & Station Wagon	N.D.	3620 332	16.61	9.45
1971-2	Charger	N.D.	3620 331	16.61	9.45
1971	Chrysler - All	N.D.	3620 337	18.15	10.36
1969	Fury & Sport Fury	N.D.	2933 651	17.94	10.19
1971-4	Dodge Truck B100-200-300 Vans	N.D.	3621 996	24.51	15.92
1972-4	Dodge Truck D & W100-200-300 Pick-up	N.D.	3621 995	24.51	15.92
REAR					
1971-2	Charger	N.D.	3620 333	16.61	9.45
1971	Fury (Exc. Sport Fury & Station Wagon)	N.D.	3620 335	17.94	10.19
1971	Polara & Monaco (Exc. Station Wagon)	N.D.	3620 336	17.94	10.19
1969	Fury & Sport Fury (Exc. Station Wagon)	N.D.	2933 652	17.94	10.19

Mopar

Description	Price Sym.	Part Number	List	Dealer Each	Wholesale Allowance
*GUARD - SPLASH - PAIR					
Passenger Cars . . . . . Black	A3	3579 660	2.89	1.73	.26
Passenger Cars . . . . . White	A3	3837 972	3.73	2.23	.33
Trucks - Pick Up & Van . . . . . Black	N.D.	3685 553	4.96	2.98	
Trucks - Pick Up & Van . . . . . White	A3	3837 973	5.90	3.54	.53
AUXILIARY HEATER - REAR COMPARTMENT					
1970-4 Dodge Truck - B100-200-300 Vans . . . . . Also Specify 1-3441 789 Shutoff (w/A/C Only)	N.D.	3489 928	-	79.55	
JACK - UNIVERSAL BUMPER					
1972 and Prior Model Passenger Cars & Compact Trucks (Exc. 1967-69 Barracuda & 1968-70 Charger)	N.D.	3549 587	11.70	7.01	
HOOD LOCK PACKAGE					
*1970-74 Dodge Truck B100-200-300	N.D.	3837 976	10.67	6.40	
HORN PACKAGE - CITY - COUNTRY					
New York City Approved					
1974 Passenger Cars	N.D.	3746 824	15.25	9.15	
1974 Dodge Trucks	N.D.	3738 247	15.25	9.15	

1974 REAR WINDOW DEFOGGERS

Description	Basic Packages Price Sym.	Basic Packages Part Number	Basic Packages Dealer Each	Adapter Packages Price Sym.	Adapter Packages Part Number	Adapter Packages Dealer Each
*DEFOGGER PACKAGE - REAR WINDOW						
(Exc. Conv. Cpe. & Sta. Wag.)						
VALIANT & DART						
1974 Fastback w/o Security Panel	N.D.	3502 097	20.29	N.D.	3420 943	2.90
1974 2 Door H.T. & 4 Door	N.D.	3502 099	20.29	N.D.	3420 943	2.90
BARRACUDA & CHALLENGER						
1974 All (Note 1 & 2)	N.D.	3502 098	20.29	N.D.	3837 168	4.06
SATELLITE, CORONET & CHARGER						
1974 All	N.D.	3502 098	20.29	N.D.	3579 234	4.06
FURY, GRAN & MONACO						
1974 2 Door H.T. (Note 1)	N.D.	3502 820	20.29	N.D.	3837 169	4.06
1974 4 Door & 4 Door H.T. (Note 1)	N.D.	3502 821	20.29	N.D.	3837 169	4.06
CHRYSLER & IMPERIAL						
1974 4 Door Sedan (Note 1)	N.D.	3502 820	20.29	N.D.	3837 170	4.06
1974 2 Door H.T. & 4 Door H.T. (Note 1)	N.D.	3502 821	20.29	N.D.	3837 170	4.06
Note 1: For Models with Dual Rear Speaker also specify and use ADAPTER PACKAGE	N.D.	3441 426	2.94			
Note 2: For Rallye Models also specify and use PLATE ASSEMBLY	N.D.	3488 384	3.82			

Mopar

1971-73 REAR WINDOW DEFOGGERS

Description	Basic Packages Price Sym.	Basic Packages Part Number	Basic Packages Dealer Each	Adapter Packages Price Sym.	Adapter Packages Part Number	Adapter Packages Dealer Each
*DEFOGGER PACKAGE - REAR WINDOW						
(Exc. Conv. Cpe. & Sta. Wag.)						
VALIANT						
1971-3 Fastback & 4 Door w/o Security Panel	N.D.	3502 097	20.29	N.D.	3420 943	2.90
1971-3 2 Door H.T.	N.D.	3502 099	20.29	N.D.	3420 943	2.90
DART						
1971-3 Fastback w/o Security Panel	N.D.	3502 097	20.29	N.D.	3420 943	2.90
1971-3 2 Door H.T. & 4 Door	N.D.	3502 099	20.29	N.D.	3420 943	2.90
BARRACUDA & CHALLENGER						
1971-3 Note 1 & 2	N.D.	3502 098	20.29	N.D.	3420 912	4.06
SATELLITE, CORONET & CHARGER						
1971-3	N.D.	3502 098	20.29	N.D.	3579 234	4.06
FURY & GRAN						
1971-3 Note 1	N.D.	3502 097	20.29	N.D.	3420 944	4.06
POLARA & MONACO						
1971-3 Note 1	N.D.	3502 097	20.29	N.D.	3420 944	4.06
CHRYSLER						
1971-3 Note 1	N.D.	3502 097	20.29	N.D.	3579 235	4.06
IMPERIAL						
1971-3 Note 1	N.D.	3502 097	20.29	N.D.	3621 813	4.06
Note 1: For Models with Dual Rear Speaker also specify and use ADAPTER PACKAGE	N.D.	3441 426	2.94			
Note 2: For Rallye Models also specify and use PLATE ASSEMBLY	N.D.	3488 384	3.82			

*Price Revision

ALL PRICES AND SPECIFICATIONS ARE SUBJECT TO CHANGE WITHOUT NOTICE

Description	Price Sym.	Part Number	List	Dealer Each	Wholesale Allowance
***LOAD-LEVELERS**					
1960-74 Valiant & 1964-69 Barracuda 1963-74 Dart 1973-4 Satellite, Coronet & Charger 1971-72 Satellite, Coronet & Charger - All 1966-70 Satellite, Coronet & Charger - All 1966-70 Fury - All 1965-74 Polara & Monaco - All 1971-74 Fury - Sta. Wag. 1970-74 Chrysler Sta. Wag. 1970 Chrysler Cv. Cpe. 1965-69 Chrysler - All 1971-74 Fury (Exc. Sta. Wag.) 1970-74 Chrysler (Exc. Cv. Cpe. & Sta. Wag.) 1972-3 Dodge Truck D100-200 1970-3 Dodge Truck B100-200-300	A1 A1 A1 A1 A1 A1 A1 A1	2421 075 3837 038 3402 275 2462 179 3400 962 3744 413 3744 414	31.75 31.75 31.75 31.75 31.75 31.75 31.75	22.23 22.23 22.23 22.23 22.23 22.23 22.23	3.79 3.79 3.79 3.79 3.79 3.79 3.79
***RIDE LEVELERS (AIR SHOCK ABSORBERS)**					
1965-74 Valiant & Dart 1973-4 Satellite, Coronet & Charger 1968-72 Belvedere, Satellite, Coronet & Charger 1970-74 Barracuda & Challenger 1969-74 Polara & Monaco and 1974 Fury 1971-73 Fury & Gran 1970-74 Chrysler & Imperial 1972-74 Dodge Truck D100-200 (Exc. w/9000 G.V.W.)	A1 A1 A1 A1 A1 A1 A1	3744 909 3837 017 3744 910 3744 911 3744 912 3744 920	67.80 67.80 67.80 67.80 67.80 67.80	47.46 47.46 47.46 47.46 47.46 47.46	8.54 8.54 8.54 8.54 8.54 8.54
LOCK - REAR DOOR CHILD GUARD SAFETY - PAIR				Order in Unit Pack Qty. Only.	
1967-74 4 Door Models (Exc. Imperial, Colt & Cricket) Note: Unit Pack 6 Pair Including Display Board	N.D.	2809 730	5.08	2.93	
LOCK PACKAGE - ELECTRIC DECK LID					
1967-74 Chrysler Built Pass. Cars (Exc. Sta. Wag.)	N.D.	3744 597	18.70	13.09	

Mopar

NOTES

LIGHTS CONVENIENCE

	Description	Price Sym.	Part Number	List	Dealer Each
GLOVE BOX					
*1968-74	Valiant, Barracuda, Dart, Satellite, Coronet & Challenger				
1968-70	Belvedere	N.D.	2864 325	3.00	1.76
1969-73	Fury, Sport Fury, Polara & Monaco	N.D.	2947 285	2.08	1.25
1971-3	Chrysler	N.D.	3488 496	2.08	1.25
MAP & COURTESY					
1974	Fury, Monaco & Chrysler	N.D.	3488 988	4.08	2.45
1972-4	Satellite, Coronet & Charger built after January 1, 1972	N.D.	3488 694	7.05	4.23
1971-2	Satellite, Coronet & Charger built prior to January 1, 1972	N.D.	3488 425	4.96	2.98
TRUNK OR UNDERHOOD					
*Trunk - 1972-4 - Valiant & Dart		N.D.	3488 787	3.29	1.87
CARGO COMPARTMENT					
*1972-3	Dodge Truck D & W100-200-300	B2	3744 962	18.51	12.03

Mopar

Description	Price Sym.	Part Number	List	Dealer Each	Wholesale Allowance
LOCKING PACKAGE - RACING HOOD					
1970 Barracuda & Coronet 1969-70 Dart Swinger and R/T, Super Bee, Road Runner & G.T.X. & Charger R/T					
1969 Coronet R/T	A1	3549 611	13.28	9.97	.30
1971 Duster	A1	3579 667	13.28	9.97	.30
1973-4 Satellite, Road Runner, GTX & Charger	A1	3685 951	13.28	9.97	.30
CABLE & PIN PACKAGE - RACING HOOD					
Package Consists of 2 Cables, 2 Pins & 2 Screws					
18" Cables	A1	3579 674	5.14	3.84	.10
26" Cables	A1	3579 673	5.49	4.11	.12
PADLOCK PACKAGE - RACING HOOD					
Use in Conjunction with above Hood Locking Packages	A1	3412 543	2.59	1.95	.13
MATS - FLOOR - UNIVERSAL					
Design permits use as Door to Door or as Twin Mats.					
All Models (Exc. Colt & Cricket)					
FRONT Black	A2	2932 564	9.68	6.29	.78
Blue		2932 565			
Green		3744 112			
Parchment (Beige)		3780 728			
Gold		3780 730			
REAR Black	A2	2932 570	8.06	5.23	.65
Blue		2932 571			
Green		3744 113			
Parchment (Beige)		3780 729			
Gold		3780 731			
MATS - FLOOR - PATTERNIQUE - PAIR					
FRONT - 26" x 23" Red		3549 926	14.95	9.72	
FRONT - 25" x 19" Red	N.D.	3549 929	11.35	7.38	
Green-Blue		3549 930			
Gold-Brown		3549 931			
REAR - 16" x 18" Red	N.D.	3549 932	8.55	5.55	
Green-Blue		3549 933			
Gold-Brown		3549 934			

DOOR EDGE PROTECTORS

	Description	Price Sym.	Part Number	List	Dealer Each
* PROTECTOR-DOOR EDGE (STAINLESS STEEL)					
1967-74	Valiant & Dart ..... 2 Door	N.D.	3444 455	4.88	2.78
	4 Door	N.D.	3444 458	8.39	4.80
1970-74	Barracuda	N.D.	3446 424	4.88	2.78
1970-74	Challenger	N.D.	3504 469	4.88	2.78
1973-74	Satellite ..... 2 Door	N.D.	3680 785	4.88	2.78
1971-74	Satellite ..... 4 Door	N.D.	3505 029	8.39	4.80
1971-74	Coronet ..... 4 Door	N.D.	3504 816	8.39	4.80
1973-74	Charger ..... 2 Door	N.D.	3680 792	4.88	2.78
1974	Fury ..... 2 Door	N.D.	3810 013	4.88	2.78
	4 Door w/o Overlay	N.D.	3810 048	8.39	4.80
	Station Wagon w/Overlay	N.D.	3810 049	8.39	4.80
1974	Monaco ..... 2 Door	N.D.	3810 050	4.88	2.78
	4 Door w/o Overlay	N.D.	3810 051	8.39	4.80
	Station Wagon w/Overlay	N.D.	3810 052	8.39	4.80
1974	Chrysler & Imperial .....2 Door	N.D.	3810 053	4.88	2.78
	4 Door (Exc. Sta. Wag.)...	N.D.	3810 054	8.39	4.80
1974	Chrysler ..... Station Wagon w/Overlay	N.D.	3810 055	8.39	4.80
	Station Wagon w/o Overlay	N.D.	3810 056	8.39	4.80
1971-74	Colt ..... 2 Door	N.D.	3685 145	4.88	2.78
	4 Door	N.D.	3685 146	8.39	4.80
1972-74	Dodge Truck D & W100-200-300 . 2 Door	N.D.	3685 147	4.88	2.78
1971-74	Dodge Truck B100-200-300 - Van	N.D.	3620 533	4.88	2.78

SEE NEXT PAGE FOR AVAILABLE PRIOR MODEL.

DOOR EDGE PROTECTORS

Description	Price Sym.	Part Number	List	Dealer Each
* PROTECTOR-DOOR EDGE (STAINLESS STEEL) (Continued)				
1972-3 Fury . . . . . 2 Door w/o Overlay	N.D.	3570 056	4.88	2.78
4 Door w/o Overlay	N.D.	3570 057	8.39	4.80
Station Wagon w/Overlay	N.D.	3680 264	8.39	4.80
1972-3 Polara & Monaco . . . . . 2 Door	N.D.	3680 083	4.88	2.78
4 Door w/o Overlay	N.D.	3680 082	8.39	4.80
Station Wagon w/Overlay	N.D.	3680 263	8.39	4.80
1972-3 Chrysler. . . . . Station Wagon w/o Overlay	N.D.	3680 222	8.39	4.80
Station Wagon w/Overlay	N.D.	3680 262	8.39	4.80
1972-3 Chrysler & Imperial . . . . . 2 Door	N.D.	3680 215	4.88	2.78
4 Door (Exc. Sta. Wag.) . . .	N.D.	3680 214	8.39	4.80
1971-2 Satellite . . . . . 2 Door Hard Top	N.D.	3505 028	4.80	2.78
1971-2 Charger . . . . . 2 Door Hard Top	N.D.	3504 813	4.80	2.78
1969-71 Fury . . . . . 4 Door	N.D.	3445 264	8.39	4.80
1969-71 Polara & Monaco . . . . . 2 Door	N.D.	2964 466	4.88	2.78
1969-71 Chrysler . . . . . 2 Door	N.D.	3445 426	4.88	2.78
Station Wagon	N.D.	3445 419	8.39	4.80
1967-71 Dodge Truck Conv. & Crew Cab . 2 Door . . . . . (For 4 Dr. Crew Cab use 2 of #2933 242)	N.D.	2933 242	4.88	2.78
1970 Belvedere & Satellite . . . . . 4 Door	N.D.	3444 461	7.24	4.14
1968-70 Belvedere & Satellite . . . . . 2 Door	N.D.	3444 456	4.33	2.46
Station Wagon	N.D.	3444 461	7.24	4.14
1968-70 Charger	N.D.	3444 464	4.33	2.46
1969 Barracuda	N.D.	3444 457	4.33	2.46

1974 POWER STEERING CONVERSION PACKAGES

MODELS	Engine	PUMP PACKAGES Price Sym.	PUMP PACKAGES Part Number	PUMP PACKAGES Dealer Each	CHUCK & COUPLING PKGS. Price Sym.	CHUCK & COUPLING PKGS. Part Number	CHUCK & COUPLING PKGS. Dealer Each
DODGE TRUCK							
B100-200-300	225	N.D.	3837 563	40.90	N.D.	*3837 553	67.95
B100-200-300	318-360	N.D.	3837 566	40.90	N.D.	*3837 553	67.95
D100-200-300	225	N.D.	3837 564	40.90	N.D.	*3579 534	67.95
D100-200-300	318-360	N.D.	3837 567	40.90	N.D.	*3579 534	67.95
D100-200-300	440	N.D.	3837 554	40.90	N.D.	*3579 534	67.95
W100-200-300	225	N.D.	3837 565	40.90	N.D.	*3579 535	67.95
W100-200-300	318-360	N.D.	3837 568	40.90	N.D.	*3579 535	67.95

Note 1: For models with air conditioning, use the applicable Pump & Chuck Package plus 1-2951 898 Belt Pump Drive.

Note 2: All W200 except 3500# and 4000# Front Axles also Specify: 1-3496 357 Bracket, 3-1935 737 Bolt, 3-6028 512 Nut, 3-6024 112 Washer, 4-6030 270 Bolt.

1974 POWER STEERING CONVERSION PACKAGES

MODELS	Engine	TRANSMISSION Manual	TRANSMISSION Auto	Axle	Belt	Belt	PUMP PACKAGES Price Sym.	PUMP PACKAGES Part Number	PUMP PACKAGES Dealer Each	CHUCK & COUPLING PKGS. Price Sym.	CHUCK & COUPLING PKGS. Part Number	CHUCK & COUPLING PKGS. Dealer Each
*VALIANT & DART (For Manual Transmission Column Shift Applications "C" Ring on Steering Column Shaft must be Removed)	6 Cyl.	X	X	X	X	X	N.D.	3837 558	36.38	N.D.	3685 650	55.17
	318	X	X	Note 1	Note 2	X	N.D.	3837 559	36.38	N.D.	3685 650	55.17
	360	X	X	Note 1	Note 2	X	N.D.	3837 561	36.38	N.D.	3685 650	55.17
*BARRACUDA & CHALLENGER	318	X	X	X	Note 2	Note 3	N.D.	3837 560	36.38	N.D.	3685 650	55.17
	360	X	X	Note 1	Note 2	Note 2	N.D.	3837 562	36.38	N.D.	3685 650	55.17
*SATELLITE, CORONET & CHARGER	6 Cyl.	Floor Shift	X	X	X	X	N.D.	3685 643	36.38	N.D.	3780 850	57.12
	6 Cyl.	Column Shift		X	X	X	N.D.	3685 643	36.38	N.D.	3780 849	57.12
	318	Floor Shift	All Exc. A-727	X	Note 2	Note 3	N.D.	3685 647	36.38	N.D.	3780 850	57.12
	318	Column Shift Exc. Police & Taxi		X	Note 2	Note 3	N.D.	3685 647	36.38	N.D.	3780 849	57.12
	318		A-727	X	Note 2	Note 3	N.D.	3685 648	36.38	N.D.	3780 850	57.12
	318	Column Shift Police & Taxi		X	Note 2	Note 3	N.D.	3685 648	36.38	N.D.	3780 849	57.12
	360	Floor Shift	X	Note 1	Note 2	Note 2	N.D.	3685 648	36.38	N.D.	3780 850	57.12
	360	Column Shift		Note 1	Note 2	Note 3	N.D.	3685 648	36.38	N.D.	3780 849	57.12

Note 1: With Axle Ratio of 3.54:1 and Above Also Specify 1-#2891 241 Cooler Assy. and 2.75 inches of #3780 509 Hose

Note 2: For Cars Equipped with Leece-Neville Alternator Also Specify 1-#2951 898 Fan Belt

Note 3: For Cars Equipped with A/C Also Specify 1-#2843 221 or #2951 898 Fan Belt

*Price Revision

ALL PRICES AND SPECIFICATIONS ARE SUBJECT TO CHANGE WITHOUT NOTICE

1973 POWER STEERING CONVERSION PACKAGES

MODELS	Alternator	Engine	PUMP PACKAGES Price Sym.	PUMP PACKAGES Part Number	PUMP PACKAGES Dealer Each	CHUCK & COUPLING PKGS. Price Sym.	CHUCK & COUPLING PKGS. Part Number	CHUCK & COUPLING PKGS. Dealer Each
VALIANT & DART								
All w & w/o A/C	Chrysler	198-225	N.D.	3685 611	35.18	N.D.	3685 618	53.39
All w/o A/C	Chrysler	318	N.D.	3685 612	35.18	N.D.	3685 618	53.39
All w/o A/C	Chrysler	340	N.D.	3685 613	35.18	N.D.	3685 618	53.39
BARRACUDA & CHALLENGER								
All w/o A/C *	Chrysler	318	N.D.	3685 632	35.18	N.D.	3685 619	53.39
All w/o A/C *	Chrysler	340	N.D.	3685 615	35.18	N.D.	3685 619	53.39
SATELLITE, CORONET & CHARGER								
All w & w/o A/C	Chrysler	225	N.D.	3685 630	35.18	N.D.	3685 617	NS 5
All w/o A/C. *	Chrysler	318	N.D.	3685 633	35.18	N.D.	3685 617	NS 5
All w/o A/C	Leece-Neville	318	N.D.	3685 616	35.18	N.D.	3685 617	NS 5
DODGE TRUCK								
B100-200-300 Van		318-360	N.D.	3579 544	40.90	N.D.	3579 519	NS 5
D100-200-300 Pick-Up		225	N.D.	3579 530	40.90	N.D.	* 3579 534	67.95
D100-200-300 Pick-Up		318-360	N.D.	3579 533	NS 5	N.D.	* 3579 534	67.95
D100-200-300 Pick-Up		400	N.D.	3685 625	40.90	N.D.	* 3579 534	67.95
W100-200-300 4 x 4		225	N.D.	3549 546	NS 5	N.D.	* 3579 535	67.95
W100-200-300 4 x 4		318-360	N.D.	3579 545	40.90	N.D.	* 3579 535	67.95

*Note: For models with Air Conditioning with Chrysler alternator, use applicable pump & chuck packages plus one drive belt Part No. 2951 898. Use the existing pulley on the vehicle. Do Not use the pulley furnished in the package. Remove and discard the idler pulley.

*Price Revision

Mopar

1972 POWER STEERING CONVERSION PACKAGES

MODELS	Alternator	Engine	PUMP PACKAGES Price Sym.	PUMP PACKAGES Part Number	PUMP PACKAGES Dealer Each	CHUCK & COUPLING PKGS. Price Sym.	CHUCK & COUPLING PKGS. Part Number	CHUCK & COUPLING PKGS. Dealer Each
VALIANT & DART								
All	Chrysler	198-225	N.D.	3579 542	35.18	N.D.	3579 514	53.39
All	Chrysler	318-340	N.D.	3685 612	35.18	N.D.	3579 514	53.39
BARRACUDA & CHALLENGER								
All	Chrysler	198-225	N.D.	3579 542	35.18		3579 516	NS 5
All	Chrysler	400-440	N.D.	3579 543	35.18		3579 516	NS 5
SATELLITE, CORONET & CHARGER								
All	Chrysler	225	N.D.	3579 542	35.18	N.D.	3579 515	55.52
All w/o Air Conditioning	Chrysler	318-340		3579 539	NS 5	N.D.	3579 515	55.52
All w/Air Conditioning	Leece-Neville	318-340		3579 540	NS 5	N.D.	3579 515	55.52
All	Chrysler	400-440	N.D.	3579 543	35.18	N.D.	3579 515	55.52
For the Barracuda, Challenger, Satellite, Coronet, and Charger vehicles with air conditioning, use the applicable pump and chuck package plus one fan drive belt Part No. 2951 898. Also, use the existing pulley on the vehicle. DO NOT use the pulley furnished in the package.								
DODGE TRUCK								
B100-200-300 Van		318-360	N.D.	3579 544	40.90	N.D.	3579 519	NS 5
D100-200-300 Pick-Up		225	N.D.	3579 530	40.90	N.D.	*3579 534	67.95
D100-200-300 Pick-Up		318-360		3579 533	NS 5	N.D.	*3579 534	67.95
D100-200-300 Pick-Up		400	N.D.	3579 532	40.90	N.D.	*3579 534	67.95
W100-200-300 4 x 4		225		3579 546	NS 5	N.D.	*3579 535	67.95
W100-200-300 4 x 4		318-360	N.D.	3579 545	40.90	N.D.	*3579 535	67.95

*Price Revision

Description	Price Sym.	Part Number	List	Dealer Each
RACK - LUGGAGE - ROOF				
*1973-4 Satellite & Coronet Sta. Wag. 50" x 35" I.D.	N.D.	3720 726	58.10	40.67
*1971-2 Satellite & Coronet Sta. Wag. 50" x 35" I.D.	N.D.	3720 308	58.10	40.67
*1974 Fury, Monaco & Chrysler Sta. Wag.	N.D.	3767 464	70.23	49.16
*1973 Fury, Polara, Monaco & Chrysler Sta. Wag. 50" x 41" I.D.				
1973-4 Dodge Truck B-100-200-300	N.D.	3720 731	70.23	49.16
1974 Colt - Sta. Wag.	N.D.	3744 974	48.50	33.95

	Price Sym.	Part Number	List	No. 1 Net	No. 2 Net 3 or More	Quantity For Direct Shipment
RACK - LUGGAGE - ROOF						
1969-70 Fury, Polara, Monaco & Chrysler Sta. Wag. 47-1/2" x 42-1/2"	N.D.	2933 973	68.18	47.26	38.44	3 or More Assorted Prepaid Center Line, Michigan
RACK - LUGGAGE - DECK LID						
1971-3 Charger SE (Fast Back)						
1968-70 Charger						
1968-9 Barracuda 2 Dr. H.T. & Conv. Cpe. 43" x 19-1/2"	N.D.	3419 382	41.91	29.34	24.93	
1973-4 Satellite, Coronet & Charger						
1970-4 Barracuda & Challenger 43" x 17-1/2"	N.D.	3419 498	45.65	31.96	27.16	
1971-2 Satellite, Coronet & Charger 2 Dr., 2 Dr. H.T. & Fastback 43" x 17-1/2"	N.D.	3620 518	45.65	31.96	27.16	
RACK - DECK LID SKI						
All Models (Exc. Sta. Wag.)	N.D.	2809 970	34.97	24.49	20.05	

Direct all orders to the Parts Depot Serving your Locality.

Orders qualifying for Direct Shipment must be separate orders and plainly marked "Direct Shipment" in the Ship VIA Space on the Parts Order form.

Shipment will be made to the ordering accounts principal place of business only.

Mopar

Description	Price Sym.	Part Number	List	Dealer Each
CORD PACKAGE - LUGGAGE HOLD DOWN				
All Cars with Roof Top Luggage Carriers	N.D.	2584 634	7.79	5.08
COVER & HOLD DOWN PACKAGE - LUGGAGE RACK				
Size 45" x 75" x 14"	N.D.	2932 561	46.93	30.59
Size 35" x 50" x 14" for #3720 308 & #3720 726 Racks	N.D.	3837 720	46.58	30.28
Size 43" x 40" x 14" for #3767 464 Rack	N.D.	3837 721	44.40	26.86

Description	Price Sym.	Part Number	List	Dealer Each	Wholesale Allowance
REGULATOR & FILTER - FUEL PRESSURE					
(Mileage Saver)					
For most cars with 5/16" Fuel Lines	A3	2240 633	9.17	5.51	.55
SEAT - CHILD'S CAR					
1966 and Later Models with Seat Belts	N.D.	3744 976	24.95	18.70	
CARRIER-INFANT SAFETY					
1966 and Later Models with Seat Belts	N.D.	3744 975	14.40	9.38	
SWITCH - ELECTRIC WINDOW LIFT OR TAILGATE SAFETY					
1967-74 All Cars with Electric Windows	N.D.	2932 687	2.30	1.37	
TACHOMETER PACKAGE - UNIVERSAL					
All 6 & 8 Cyl. with 12 Volt Ignition					
(Full Sweep) Steering Column or Instrument Panel Mtg.	N.D.	3514 430	47.79	31.50	
(Hood Mounted)	N.D.	3420 740	62.41	40.58	
SEAT PACKAGE - CLUB CAB JUMP					
Includes All Attaching Parts					
*1973 Dodge Truck Club Cab Black	N.D.	3837 849		20.35	
Beige	N.D.	3837 850		20.35	
STEP PACKAGE - AUTOMATIC					
1972-4 Dodge Truck D & W 100-200-300	N.D.	3837 722	15.20	9.88	

Mopar

Description	Price Sym.	Part Number	List	No. 1 Net Each	No. 2 Net Each
TRAILER TOW BAR KITS & COVER					10 or More Assorted Prepaid Elkhart, Indiana
1974 Satellite, Coronet & Charger - 2 Door & H.T. ..	N.D.	3837 661	79.95	63.96	60.76
1974 Satellite & Coronet - 4 Door Sedan & H.T.	N.D.	3837 660	79.95	63.96	60.76
1974 Satellite & Coronet Sta. Wag.	N.D.	3837 659	79.95	63.96	60.76
1974 Fury, Monaco, Chrysler & Imperial Sedans & H.T.	N.D.	3837 658	79.95	63.96	60.76
1974 Fury, Monaco & Chrysler - Sta. Wag.	N.D.	3837 657	79.95	63.96	60.76
1969-73 Fury, Gran, Polara, Monaco, Chrysler & Imperial Sedans	N.D.	3744 902	79.95	63.96	60.76
1969-73 Fury, Gran, Polara, Monaco & Chrysler Sta. Wag.....	N.D.	3744 903	79.95	63.96	60.76
1971-3 Satellite, Coronet & Charger Sedans	N.D.	3744 904	79.95	63.96	60.76
1971-3 Satellite & Coronet Sta. Wag.	N.D.	3744 905	79.95	63.96	60.76
1972-3 Dodge Truck D100-200 with 131" & 149" Wheel Base	N.D.	3744 906	79.95	63.96	60.76
Box Cover Kit - All	N.D.	3744 907	5.45	4.25	

	Description	Class	Price Sym.	Part Number	List	Dealer Each	Wholesale Allowance
	TRAILER HITCH PACKAGES W/1-7/8 BALL						
#1974	Valiant & Dart (Exc. Fastback)	I	A1	3754 139	29.85	21.79	3.60
#1974	Valiant & Dart Fastback	I	A1	3754 085	29.85	21.79	3.60
1974	Satellite 2 Door & H.T.	I	A1	3754 296	29.85	21.79	3.60
#1974	Satellite 4 Door Sedan & H.T.	I	A1	3754 321	29.85	21.79	3.60
#1974	Satellite & Coronet Sta. Wag.	I	A1	3754 691	29.85	21.79	3.60
1974	Coronet & Charger - 2 Door	I	A1	3754 392	29.85	21.79	3.60
#1974	Coronet - 4 Door & H.T.	I	A1	3754 433	29.85	21.79	3.60
1974	Fury Sedan & H.T.	I	A1	3754 500	28.97	21.14	3.49
1974	Fury, Monaco & Chrysler Sta. Wag.	I	A1	3754 700	29.85	21.79	3.60
1974	Monaco Sedan & H.T.	I	A1	3754 550	28.97	21.14	3.49
1974	Newport Sedan & H.T.	I	A1	3754 600	28.97	21.14	3.49
1974	New Yorker Sedan & H.T.	I	A1	3754 650	29.85	21.79	3.60
	TRAILER HITCH PACKAGES - LESS BALL						
1971-73	Colt Sedan	I	A1	3744 523	34.22	24.49	3.70
1971-73	Cricket	I	A1	3744 524	33.15	24.20	3.99
1970-73	Valiant Scamp, Dart (Exc. Demon & Sport)	I	A1	3744 518	22.44	16.38	2.70
1967-73	Valiant (Exc. Scamp, Dart Demon & Sport)	I	A1	3744 520	20.91	15.27	2.52
1973-74	Barracuda	I	A1	3744 522	21.37	15.58	2.55
1970-74	Challenger	I	A1	3744 513	32.08	23.42	3.87
1973	Satellite 2-Door	I	A1	3744 527	38.51	28.11	4.63
1971-72	Satellite 4-Door	I	A1	3744 525	34.22	24.98	4.11
1971-73	Coronet Sedans	I	A1	3744 514	29.48	21.52	3.55
1971-73	Charger	I	A1	3744 517	32.08	22.42	3.87
1973	Satellite & Coronet Sta. Wag.	I	A1	3744 940	20.91	15.27	2.52
1973	Satellite & Coronet Sta. Wag.						
1969-72	Satellite & Coronet Sta. Wag.	II	A1	3744 528	49.22	35.92	5.92
1973	Fury Sedans	I	A1	3744 526	42.79	31.23	5.15
1973	Fury Sedans	II	A1	3744 531	55.08	40.21	6.64
1973	Polara & Monaco Sedans	I	A1	3744 941	42.79	31.23	5.15
1973	Polara & Monaco Sedans	II	A1	3744 531	55.08	40.21	6.64
1972-73	Newport Sedans	I	A1	3744 515	41.72	30.46	5.03
1972-73	New Yorker Sedans	I	A1	3744 521	23.51	17.17	2.83
1967-73	Fury, Polara, Monaco & Chrysler Sta. Wag.	I	A1	3744 519	21.37	15.58	2.55
1967-73	Fury, Polara, Monaco & Chrysler Sta. Wag.	II	A1	3744 529	48.04	35.07	5.79
1972-73	Imperial	I	A1	3744 516	34.22	24.94	4.08
1972-74	Dodge Truck D & W 100-300 Exc. w/Step Bumper	II	A1	3744 532	48.04	35.07	5.79
1971-74	Dodge Truck B100-300	II		3744 530	35.14	25.65	4.23
	TRAILER HITCH BALLS						
	1-7/8" Dia. with 3/4" Shank - Chrome		A1	3744 508	6.17	4.51	.74
	2" Dia. with 3/4" Shank - Chrome		A1	3744 509	6.48	4.73	.78
	2-5/16" Dia. with 1" Shank - Painted		A1	3744 510	8.82	6.44	1.05

#New Part

Mopar

Description	Price Sym.	Part Number	List	Dealer Each
TRAVEL & RECREATIONAL ACCESSORIES				
Bowling Bag	N.D.	3419 377	16.82	11.78
Carry-All Bag 16" x 13" x 5-1/2"	N.D.	3419 379	12.76	8.94

CAR CARE MATERIALS

Description	Carton Qty.	Price Sym.	Part Number	List	Net Each	Wholesale Allowance
ADDITIVES						
Combustion Chamber Conditioner . . . . . 15 Oz.	24	A3	3419 126	1.74	1.05	.05
Aerosol 20 Oz.	12	A3	2933 500	2.49	1.49	.08
Crankcase Conditioner . . . . . 15 Oz.	24	A3	3419 130	1.61	.96	.05
Fuel Detergent . . . . . 6 Oz.	24	A3	3419 127	.61	.37	.01
Engine Oil Supplement . . . . . Quart	24	A3	3419 131	2.01	1.20	.07
Gum & Sludge Remover . . . . . Quart	12	A3	3419 133	3.41	2.04	.12
Super Oil Saver . . . . . 15 Oz.	24	A3	3837 188	1.79	1.07	.17
HI-PERFORMANCE LUBRICANTS						
Man. Trans. Fluid . . . . . Quart	12	A3	2809 863	2.01	1.21	.06
Rear Axle . . . . . Quart	12	A3	2809 864	2.01	1.21	.06
Motor Oil . . . . . Quart	12	A3	2809 865	1.56	.93	.05
Auto. Trans. Fluid . . . . . Quart	12	A3	2809 866	1.68	1.01	.05
ADHESIVE - AUTO GLASS						
Pint Can	24	A3	2298 825	2.54	1.52	.17
ADHESIVE - SILICONE RUBBER . . . . . 2 Oz. Tube	12	A3	3683 829	1.95	1.16	.11
ADHESIVE - VINYL . . . . . 1 Oz. Tube		A3	3549 956	.58	.35	.02
BELT EASE . . . . . Aerosol 5-1/2 Oz.	12	A1	3419 497	1.73	1.14	.13
CAR WASH LIQUID & POWDER						
Liquid w/Wax . . . . . 16 Oz.	24	A3	2585 619	1.45	.87	.08
Powder . . . . . 15 Lb. Pail	1	A2	2421 797	20.42	13.28	.58

Mopar

CAR CARE MATERIALS

Description	Carton Qty.	Price Sym.	Part Number	List	Net Each	Wholesale Allowance
CEMENT - ALTERNATOR ..... 5 Oz.	36	A3	2299 314	1.50	.90	.10
CLEANERS						
*ENGINE (Spray Can) ..... 16 Oz.	12	A1	3419 148	2.14	1.44	.08
5 Gallon	1	A1	3419 149	24.69	16.46	.66
30 Gallon	1	A1	3419 150	121.93	81.21	3.19
GLASS ..... 24 Oz.	24	A3	3514 198	1.41	.85	.05
LEATHER & VINYL ..... 16 Oz.	12	A1	2421 788	1.91	1.26	.24
*PART IMMERSION - 4 Gal. w/Basket	1	A3	3419 146	43.45	26.08	2.62
5 Gallon Refill	1	A3	3419 147	43.45	26.08	2.62
SPOT REMOVER & FABRIC ..... 16 Oz.	24	A1	2421 785	1.48	.98	.20
Gallon	4	A1	2421 786	8.31	5.56	1.16
VINYL TOP ..... 8 Oz.	12	A3	2932 280	2.71	1.63	.17
Gallon	6	A3	3837 107	14.87	8.93	.91
KAR KLEEN ..... 12 Oz.	12	A3	2809 926	1.45	.87	.05
* DOOR EASE PACKAGE						
Part Number consists of Display Pkg. containing 6 sticks (shop size)	12	A1	2240 248	6.60	3.56	.39
Dressing - Vinyl Top ..... 8 Oz.	12	A3	3514 191	3.23	1.94	.19
FLUIDS						
BRAKES ..... 12 Oz.	24	A1	2933 249	1.94	.97	.14
Quart	12	A1	2933 250	4.69	2.35	.36
Gallon	6	A1	2933 251	17.00	8.50	1.28
5 Gallon	1	A1	2933 252	80.43	40.22	6.04
* POWER STEERING ..... Quart	12	A3	2084 329	1.26	.75	.01
* TRANSMISSION - AUTO ..... Pint	24	A3	3549 659	.37	.22	-
Quart	24	A3	3549 660	1.19	.71	-
Gallon	6	A1	3549 661	4.67	2.80	-
16 Gallon	1	A1	3549 662	76.53	44.16	.42
55 Gallon	1	A1	3549 663	278.00	151.80	2.82

CAR CARE MATERIALS

Description	Carton Qty.	Price Sym.	Part Number	List	Net Each	Wholesale Allowance
LUBRICANTS						
DISTRIBUTOR CAM . . . . . 4 Oz.	36	A3	1473 595	1.85	1.11	.10
*GEAR . . . . SAE #80 . . . . . Quart	24	A3	2933 565	1.22	.73	.01
SAE #90 . . . . . Quart	24	A3	3744 994	1.69	1.01	.01
SAE #90 . . . . . 120 Lb. Drum	1	A3	3744 995	89.94	53.96	.03
HEAT CONTROL VALVE SOLVENT . . . . . 8 Oz.	12	A3	3419 128	1.45	.87	.15
Aerosol 12 Oz.	12	A3	3419 129	2.01	1.21	.15
*LOCK EASE . . . . . 4 Oz.	72	A1	2240 363	1.06	.69	.08
*MULTI-MILEAGE . . . . . 14-1/2 Oz. Cartridge	50	A3	2525 035	1.38	.83	.16
35 Lb. Pail	1	A3	3744 275	45.36	27.21	2.58
MULTI-PURPOSE GREASE . . . . . 14 Oz. Cartridge	28	A3	2932 524	1.51	.91	.07
SPEEDOMETER CABLE . . . . . 6 Oz.	12	A3	1243 632	1.01	.60	.08
*SURE GRIP . . . . . Quart	24	A3	2585 318	1.75	1.05	.01
*SYL-GLYDE - PASTE . . . . . 4 Oz.	36	A1	1881 923	2.74	1.67	.17
FLUID-AEROSOL . . . . . 16 Oz.	36	A3	1881 924	3.95	2.37	.27
*WATER PUMP . . . . . 2 Oz.	24	N.D.	2298 997	1.80	1.20	
LUBRI PLATE						
Display Included w/Carton of 12 Must Order in Multiples of 12	12	A3	3744 859	.70	.42	.03
POLISHES & WAX						
AUTOMOBILE . . . . . 16 Oz.	24	A1	2421 791	1.17	.77	.16
Gallon	4	A1	2448 767	6.38	4.26	.88
CHROME . . . . . 16 Oz.	24	A1	2525 429	1.17	.77	.14
ONE STEP . . . . . Gallon	4	A3	2809 928	15.60	9.35	.44
SUPER GLAZE . . . . . 6 Oz.	24	A3	2421 795	2.30	1.38	.04
POLISHING CLOTHS						
WAX TREATED	12	A3	1316 224	1.17	.70	.06
REMOVERS						
FROST & ICE . . . . . 16 Oz.	12	A2	2525 006	1.53	.99	.09
RUST . . . . . 12 Oz.	24	A3	3419 114	2.84	1.69	.18
TAR & ROAD OIL . . . . . 16 Oz.	24	A1	2421 776	1.17	.77	.15
Gallon	4	A1	2421 777	6.73	4.52	.93

Mopar

CAR CARE MATERIALS

Description	Carton Qty.	Price Sym.	Part Number	List	Net Each	Wholesale Allowance
RUST PENETRANT (Spray Can) . . . . . 16 Oz.	12	A1	2421 775	1.74	1.15	.21
RUST RESISTOR - COOLING SYSTEM . . . . . 16 Oz.	24	A1	2421 778	.92	.62	.14
*RUGLYDE (Clear Type) . . . . . Gallon	4	A1	2084 326	4.95	2.67	.15
SEALING COMPOUND						
Aerosol . . . . . 15 Oz.	24	A3	3419 115	2.98	1.79	.13
*SEALER-TRANSMISSION . . . . . 6 Oz.	24	A3	2298 923	1.92	1.15	.03
SOLDER PKG. - PLASTIC BODY FILLER						
With Blue Creme Hardener - White . . . . . Quart	12	A3	3621 440	4.50	2.70	.27
Gallon	4	A3	3621 441	14.60	8.76	.88
HARDENER - PLASTIC SOLDER CREME - BLUE						
Tube . . . . . 1 Oz.	12	A3	3621 442	.88	.53	.07
Tube . . . . . 4 Oz.	12	A3	3621 443	2.47	1.48	.27
SOLVENT - WINDSHIELD WASHER . . . . . 16 Oz.	24	A4	2421 783	.98	.59	.07
32 Oz.	24	A3	2421 784	1.50	.90	.10
STOP LEAK						
Stop Leak Nugget Pkg. . . . . (Free display with carton of 24)	24	A3	3419 423	1.45	.87	.22

*Price Revision

ALL PRICES AND SPECIFICATIONS ARE SUBJECT TO CHANGE WITHOUT NOTICE

REFRIGERANT

Description	Price Sym.	Part Number	List	No. 1 Net Each	Direct Shipment No. 2 Net Each	Minimum Sales Qty. Unit Pack Quantity
*REFRIGERANT 12				In Carton Quantities	15 or More Assorted Cartons or Cylinders Prepaid Colwich, Kansas	
14 Oz. Can	N.D.	3837 730	1.98	.99	.79	24
30 Pound Cylinder	N.D.	3683 943	64.38	32.19	25.75	1

Direct all orders to the Parts Depot serving your locality.

Orders qualifying for Direct Shipment must be separate orders and plainly marked "Direct Shipment" in the Ship VIA on the Parts Order form.

Shipment will be made to the ordering account's principal place of business only.

IMPORTANT Prices shown supersede those in Master Parts Price List 81-690-0774 dated August 5, 1974. Please mark your records accordingly.

Mopar

NOTES

Marketing Bulletin

SUBJECT WHOLESALE ALLOWANCE CREDITS

NUMBER 74-21
April 18, 1974

TO: ALL CHRYSLER MOTORS CORPORATION DEALERS

We are pleased to inform you that we have just passed another milestone in our concerted effort to expedite credits to our Dealership accounts.

Effective immediately, all Wholesale Allowance Credits will be issued on Credit Shippers that can be cross-referenced to the original documents. Credit Shippers will be accumulated and printed on the Weekly Credit Summary Invoice and identified with a printout that reads "Wholesale Compensation".

Due to field limitations on the Wholesale Allowance Computer Program, the maximum amount of credit that can be printed is $999.99, so if a total monthly wholesale allowance credit amounts to over $1,000.00 it will be printed as two credits.

EXAMPLE:

Total monthly wholesale allowance credit amount is $1,285.76.
Credit Invoices will print out . . .

$999.99 "Wholesale Allowance"
$285.77 "Wholesale Allowance"

Computerization of credits substantially reduces processing time, provides credit shippers and weekly credit summary invoices for easy cross-reference, and makes our credit policy compatible with our order processing procedure.

We will continue our efforts to provide improved service to you, our customers.

K. I. Okenquist

K. I. OKENQUIST
Marketing Manager

KIO/wsd

Marketing Bulletin

SUBJECT: '74 MOPAR ACCESSORY PROGRAM

NUMBER: MB 73-18

September 18, 1973

Designed to complement and accent the beauty of Chrysler Corporation 1974 Models, Mopar presents a broad, new line of custom accessories to help increase sales and profits in your dealership. The following elements are included in the enclosed '74 Mopar Accessory Kit:

- OWNER'S GLOVE BOX FOLDER - (81-670-0401)
  This attractive, full-color folder is included in every Owners Manual and Warranty Package to stimulate sales to your most important customer -- the new car buyer.

- ACCESSORIES WALL CHART - (81-670-0417)
  Highlighting the '74 action-accents theme, this full-color wall chart should be displayed in your showroom or other high-traffic area to remind your customers about the many custom accessories you can supply.

- SALESMAN'S POCKET PRICE LIST - (81-670-0415)
  A handy, pocket-sized list of major accessories with write-in space for "installed" prices. A quick reference guide for all new car salesmen.

- PARTS MANAGER'S ACCESSORY CATALOG - (81-670-0414)
  An illustrated, loose-leaf reference guide designed to simplify ordering -- shows product features, model application, part numbers and suggested list prices where established.

There's your "PLUS-PROFIT" Package for the '74 model year -- Review the many new accessories such as:

- "Deluxe-Custom" Air Conditioning (in-dash mount) for Fury, Monaco and Chrysler.

- AM-FM Multiplex Stereo Radio for Barracuda, Challenger, Satellite, Coronet, Charger -- also including tape player, if desired, for Fury, Monaco, Chrysler and Imperial.

- Auto, Home, Portable Stereo and Cassette Tape Players plus a wide variety of custom and universal speaker packages.

- Power Steering and Power Brake Conversion Packages for all models.
- Increasingly popular Speed Control Units for Fury, Monaco, Chrysler and Imperial. Also "B" body applications will be announced soon.
- New Electric Deck Lid Lock.
- Complete line of Trailer Hitches and Tow Bar Kits.
- Electronic Digital Clock famed for accuracy.
- Vinyl Floor Mats in new colors.
- A complete assortment of other X-TRA Profit Makers.

Be prepared to install or deliver these fast-moving Mopar Accessories for your customers -- ORDER an assortment Today and increase your Total Profit on every new car sale!

K. I. OKENQUIST
MARKETING MANAGER

KIO:FTW/mu

Encls: Owner's Glove Box Folder (81-670-0401)
Accessories Wall Chart (81-670-0417)
Salesman's Pocket Price List (81-670-0415)
Parts Manager's Accessory Catalog (81-670-0414)

GROUP 2 - FRONT SUSPENSION

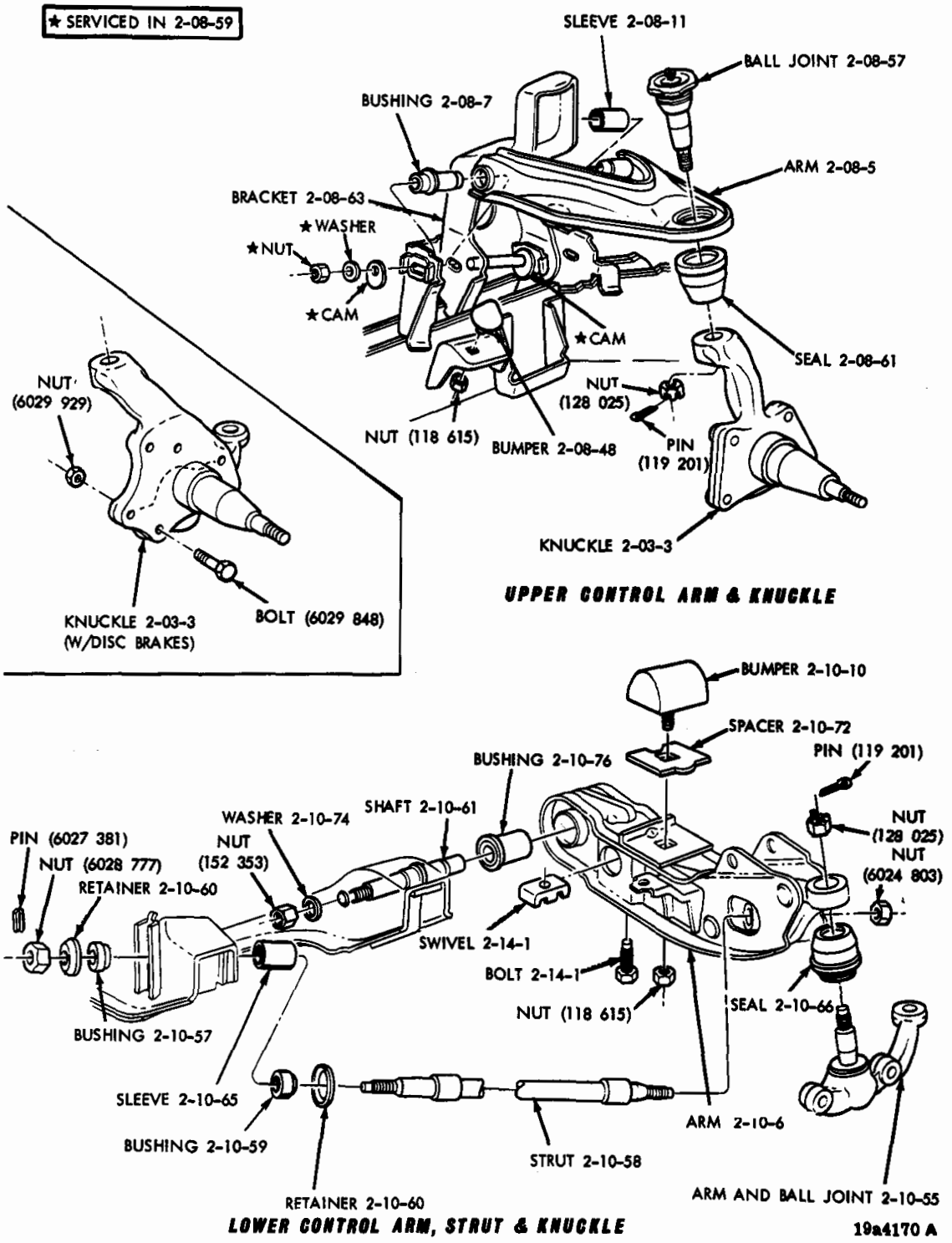

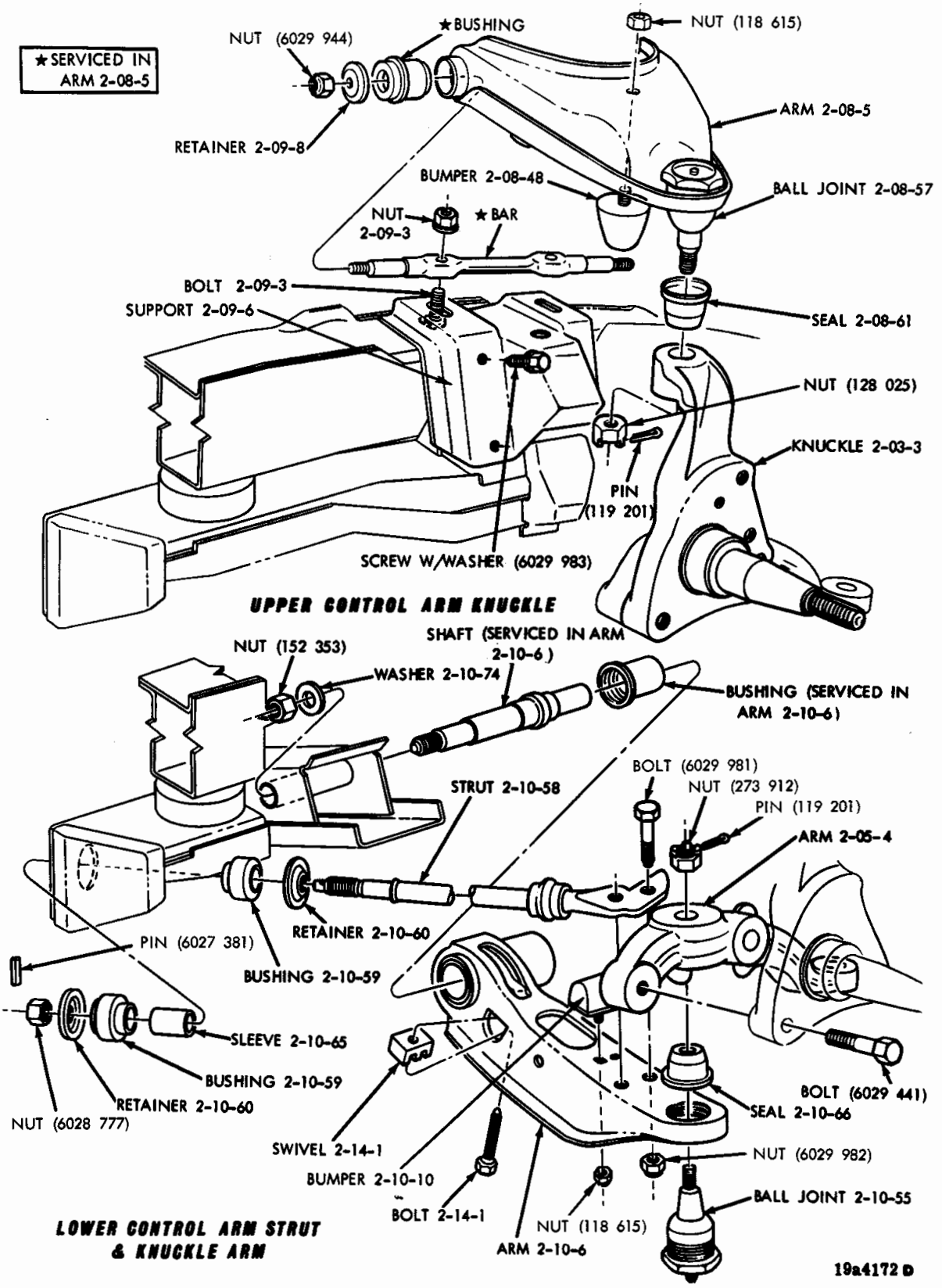
★SERVICED IN ARM 2-08-5
NUT (6029 944)
★BUSHING
NUT (118 615)
ARM 2-08-5
RETAINER 2-09-8
BUMPER 2-08-48
BALL JOINT 2-08-57
NUT 2-09-3
★BAR
BOLT 2-09-3
SUPPORT 2-09-6
SEAL 2-08-61
NUT (128 025)
KNUCKLE 2-03-3
PIN (119 201)
SCREW W/WASHER (6029 983)
UPPER CONTROL ARM KNUCKLE
NUT (152 353)
SHAFT (SERVICED IN ARM 2-10-6)
WASHER 2-10-74
BUSHING (SERVICED IN ARM 2-10-6)
BOLT (6029 981)
NUT (273 912)
PIN (119 201)
STRUT 2-10-58
ARM 2-05-4
RETAINER 2-10-60
PIN (6027 381)
BUSHING 2-10-59
SLEEVE 2-10-65
BUSHING 2-10-59
RETAINER 2-10-60
NUT (6028 777)
BOLT (6029 441)
SEAL 2-10-66
SWIVEL 2-14-1
NUT (6029 982)
BUMPER 2-10-10
BALL JOINT 2-10-55
BOLT 2-14-1
NUT (118 615)
ARM 2-10-6
LOWER CONTROL ARM STRUT & KNUCKLE ARM
19a4172 D

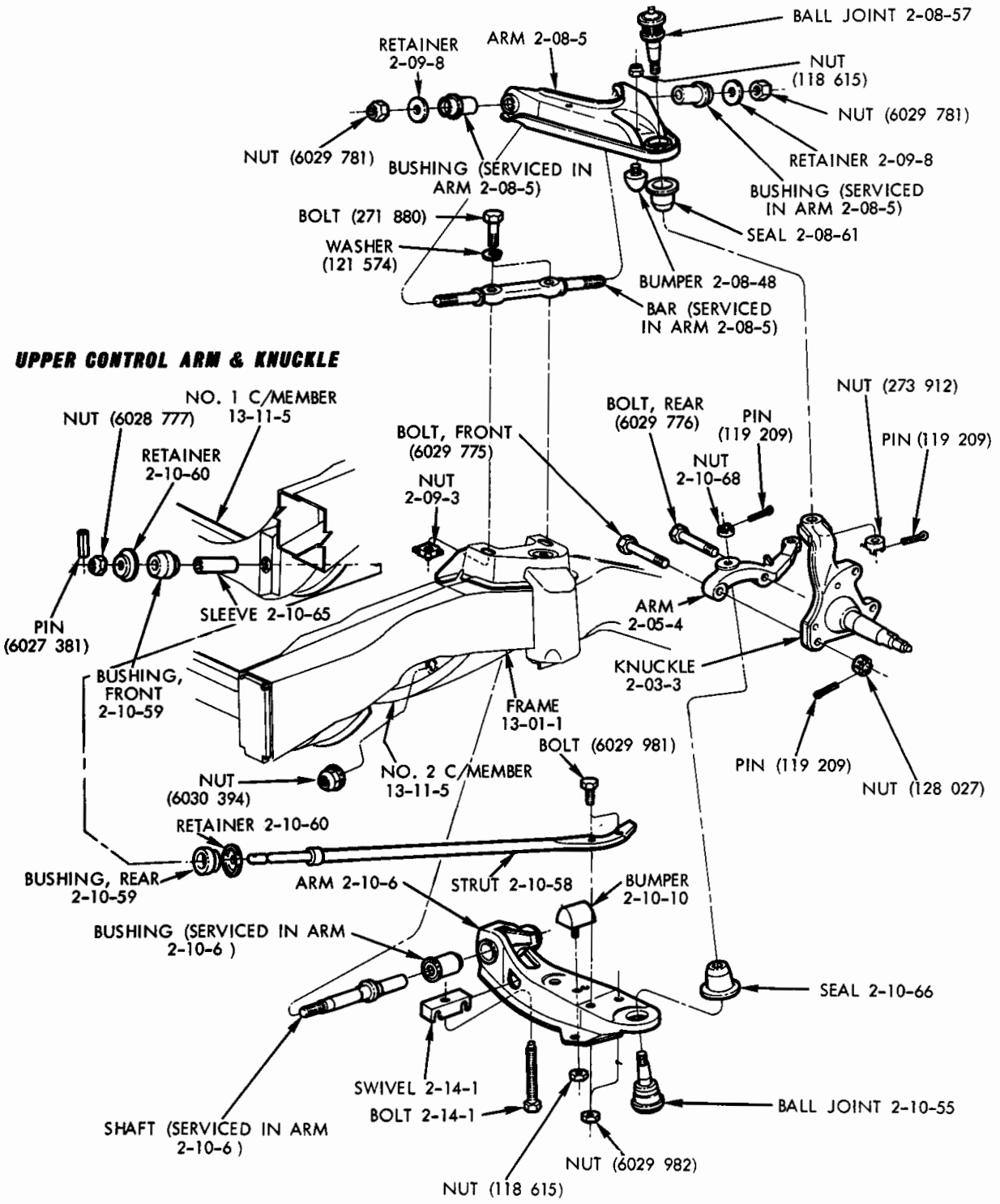
BALL JOINT 2-08-57
RETAINER 2-09-8
ARM 2-08-5
NUT (118 615)
NUT (6029 781)
NUT (6029 781)
BUSHING (SERVICED IN ARM 2-08-5)
RETAINER 2-09-8
BUSHING (SERVICED IN ARM 2-08-5)
BOLT (271 880)
SEAL 2-08-61
WASHER (121 574)
BUMPER 2-08-48
BAR (SERVICED IN ARM 2-08-5)
UPPER CONTROL ARM & KNUCKLE
NUT (273 912)
NO. 1 C/MEMBER 13-11-5
NUT (6028 777)
BOLT, REAR (6029 776)
PIN (119 209)
BOLT, FRONT (6029 775)
PIN (119 209)
RETAINER 2-10-60
NUT 2-10-68
NUT 2-09-3
ARM 2-05-4
SLEEVE 2-10-65
PIN (6027 381)
KNUCKLE 2-03-3
BUSHING, FRONT 2-10-59
FRAME 13-01-1
BOLT (6029 981)
PIN (119 209)
NUT (128 027)
NUT (6030 394)
NO. 2 C/MEMBER 13-11-5
RETAINER 2-10-60
BUSHING, REAR 2-10-59
ARM 2-10-6
STRUT 2-10-58
BUMPER 2-10-10
BUSHING (SERVICED IN ARM 2-10-6)
SEAL 2-10-66
SWIVEL 2-14-1
BOLT 2-14-1
BALL JOINT 2-10-55
SHAFT (SERVICED IN ARM 2-10-6)
NUT (6029 982)
NUT (118 615)
LOWER CONTROL ARM & STRUT

19a4560

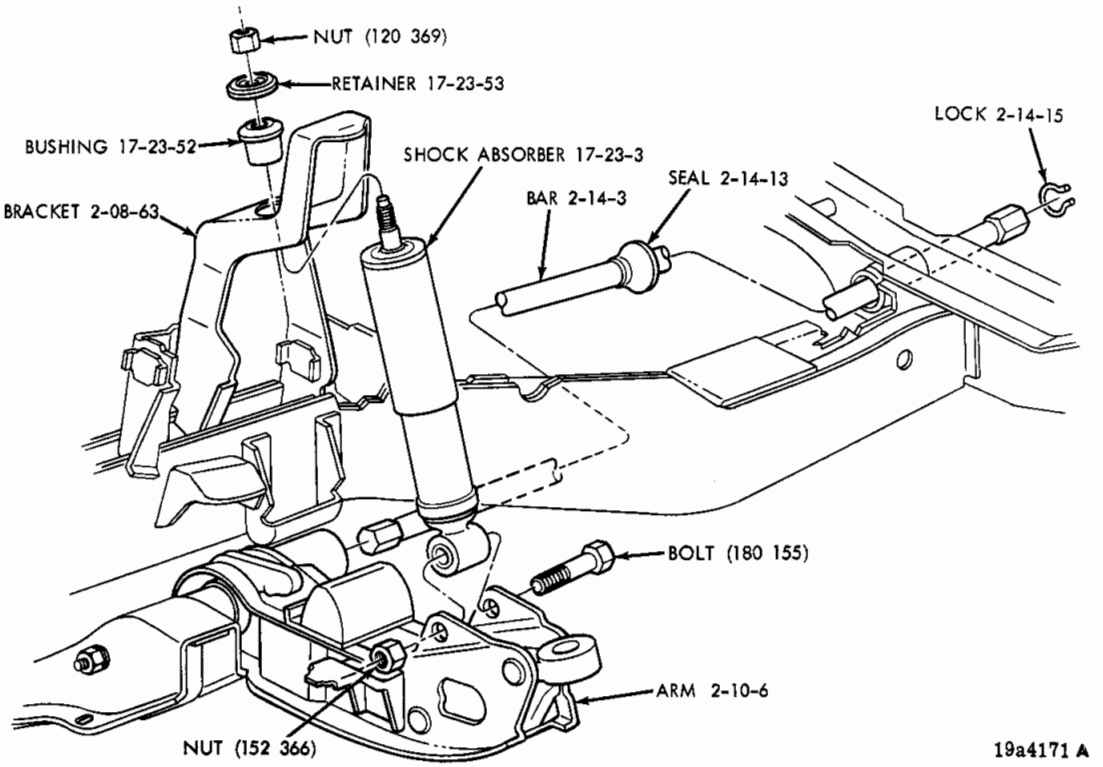

FRONT SPRING AND SHOCK ABSORBER (TYPICAL OF V, L, B, J, R, W)

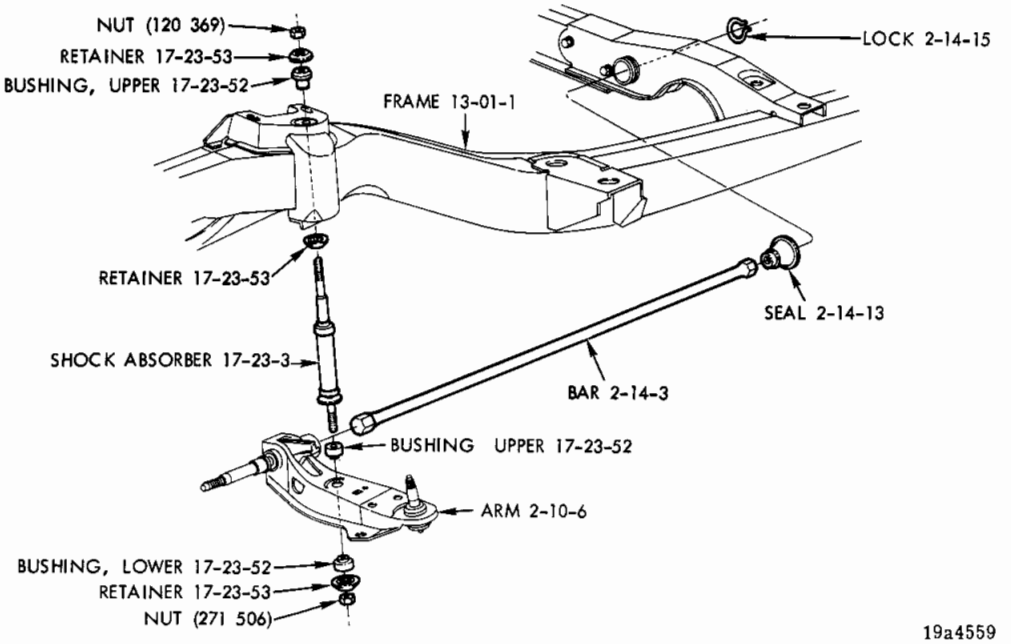

FRONT SPRING AND SHOCK ABSORBER - P, D, C, Y

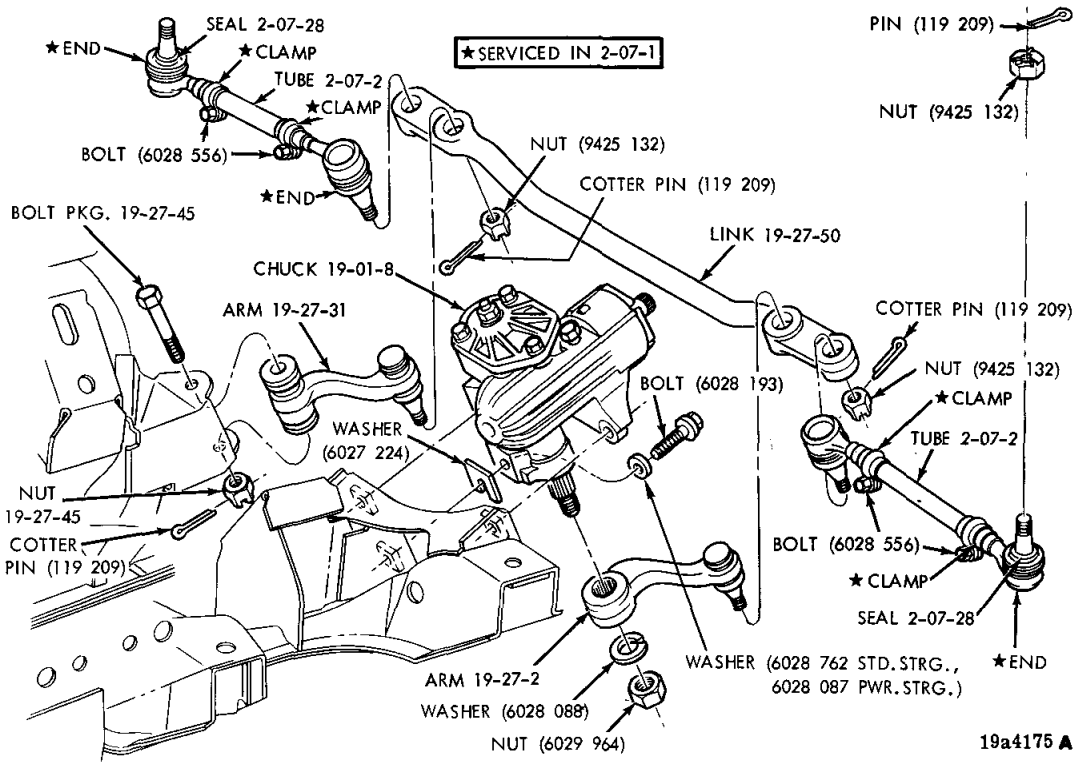

TIE RODS AND STEERING LINKAGE - V, L

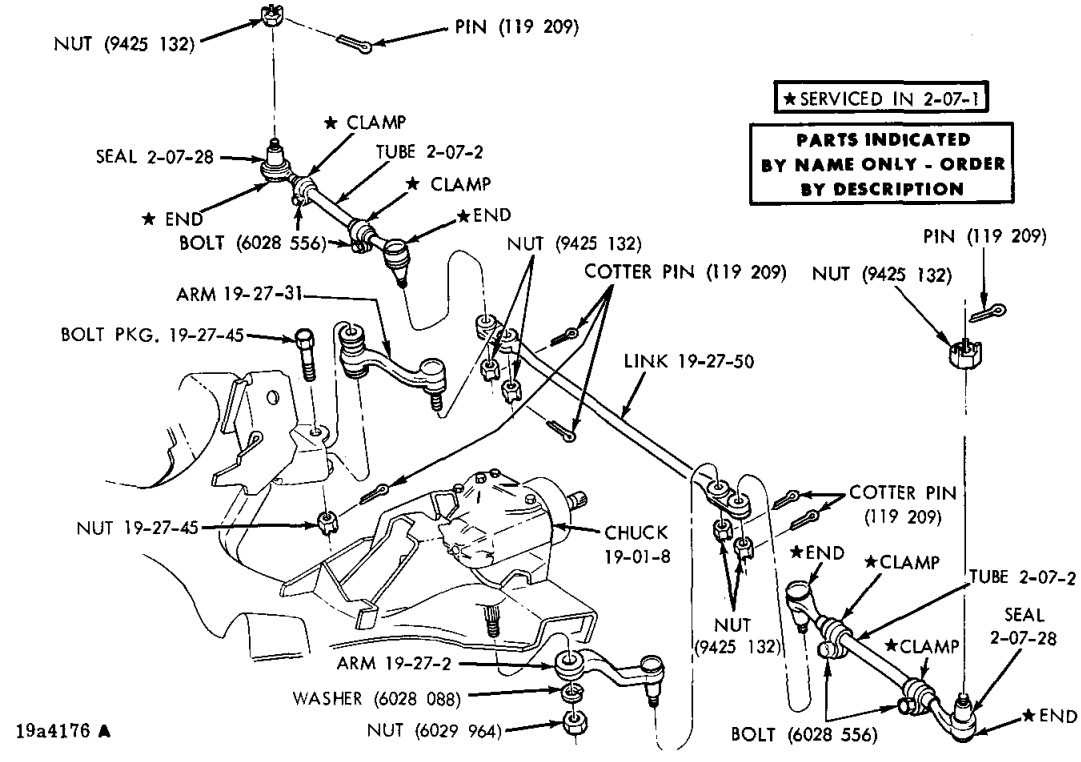

TIE RODS AND STEERING LINKAGE - B, J, R, W

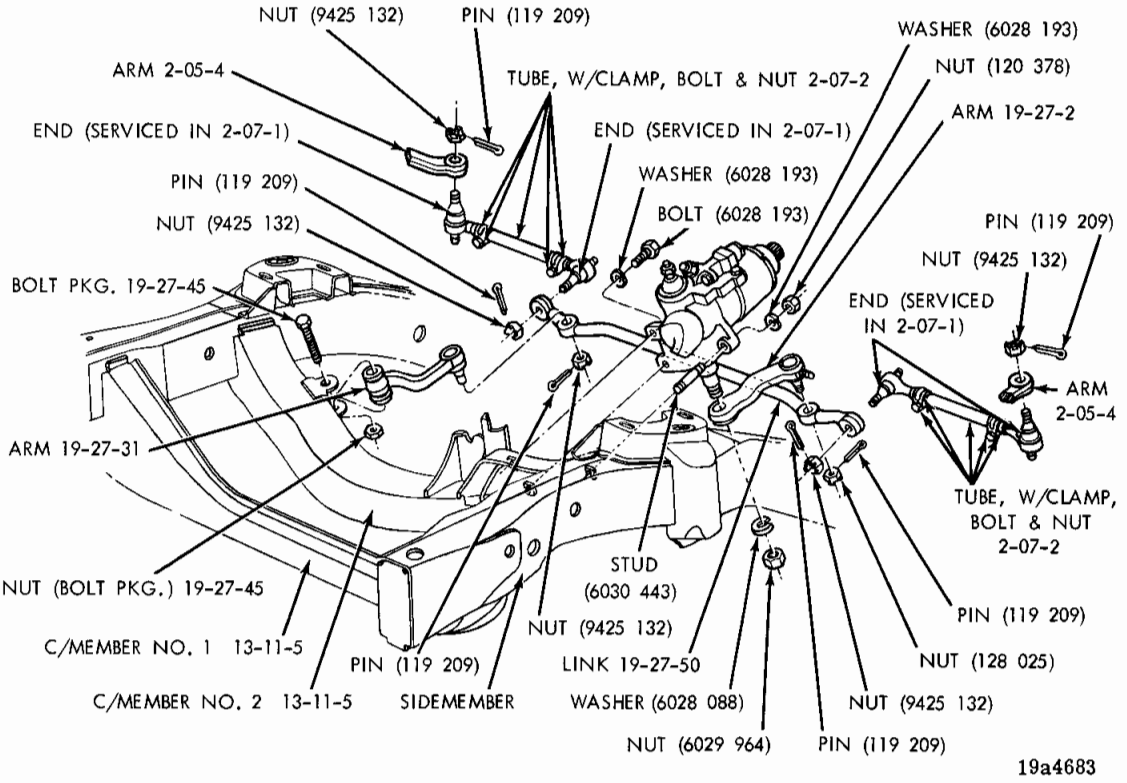

TIE RODS AND STEERING LINKAGE - P, D, C, Y

NOTES

GROUP 2 - FRONT SUSPENSION

ARM, FRONT WHEEL LOWER CONTROL. 2-10
ARM, FRONT WHEEL UPPER CONTROL 2-08
ARM, STEERING KNUCKLE 2-05
SUPPORT, FRONT WHEEL UPPER CONTROL ARM PIVOT 2-09
ROD, STEERING KNUCKLE TIE 2-07
TORSION BAR OR SPRING, FRONT SUSPENSION 2-14

Printed in U.S.A.
November, 1974

CODE	PART NAME	ENG. TYPE OR CU. IN	V	B J	L	R	W	P	D	C (L M)	C (P)	C (H S)	Y	PART NUMBER
2-03-3	**KNUCKLE, Steering w/Drum Brakes, All**	6	2	—	2	—	—	—	—	—	—	—	—	3402 739
	w/Disc Brakes		1	1	1	—	—	—	—	—	—	—	—	3402 628-9
	w/Disc Brakes		—	—	—	1	1	—	—	—	—	—	—	3402 640-1
	w/Disc Brakes, Up To 3-25-74	8	—	—	—	—	—	1	1	1	1	1	1	3722 424-5
	After 3-25-74	8	—	—	—	—	—	1	1	1	1	1	1	# 3815 596-7
	BOLT, Steering Knuckle to Knuckle Arm Front		—	—	—	—	—	2	2	2	2	2	2	6029 775
	Rear		—	—	—	—	—	2	2	2	2	2	2	6029 776
	OILER, Steering Knuckle, Ball Joint Housing		2	2	2	2	2	2	2	2	2	2	—	9411 010
2-05-4	**ARM, Steering Linkage Knuckle**		—	—	—	1	1	—	—	—	—	—	—	3402 850-1
	All		—	—	—	—	—	1	1	1	1	1	1	3402 978-9
2-07-1	**END PACKAGE, Steering Knuckle Tie Rod Inner, L.H. Thd.**		2	2	2	2	2	—	—	—	—	—	—	3420 155
	Outer, R.H. Thd.		2	2	2	2	2	—	—	—	—	—	—	3420 154
	Inner		—	—	—	—	—	2	2	2	2	2	2	3004 795
	Outer		—	—	—	—	—	2	2	2	2	2	2	3004 794
2-07-2	TUBE		2	2	2	—	—	—	—	—	—	—	—	2072 437
			—	—	—	2	2	—	—	—	—	—	—	3402 581
	TUBE, w/CLAMP, BOLT, and NUT		—	—	—	—	—	2	2	2	2	2	2	3402 805
2-07-17	OILER, Tie Rod End Cover		4	4	4	4	4	4	4	4	4	4	4	6030 099
2-07-28	SEAL, Tie Rod Dust		4	4	4	4	4	4	4	4	4	4	4	2835 896
2-08-5	**ARM, Front Wheel Upper Control, w/Disc Brakes**		1	—	1	—	—	—	—	—	—	—	—	3402 702-3
	w/Drum Brakes		1	—	1	—	—	—	—	—	—	—	—	3722 460-1
	All		—	1	—	—	—	—	—	—	—	—	—	1857 856-7
	w/o Rear Isolators		—	—	—	1	1	—	—	—	—	—	—	3722 690-1
	w/Rear Isolators		—	—	—	1	1	—	—	—	—	—	—	3722 420-1
	w/o Rear Isolators	8	—	—	—	—	—	1	1	—	—	—	—	3815 402-3
	w/Rear Isolators	8	—	—	—	—	—	1	1	—	—	—	—	3402 778-9
	All	8	—	—	—	—	—	—	—	1	1	1	1	3402 778-9
2-08-7	BUSHING, Arm		4	4	4	—	—	—	—	—	—	—	—	2071 204
	Pivot Bar, w/Rear Isolators		—	—	—	4	4	—	—	—	—	—	—	3402 552
	w/o Rear Isolators		—	—	—	4	4	—	—	—	—	—	—	3722 565
	All		—	—	—	—	—	—	—	4	4	4	4	3402 783
	w/Rear Isolators	8	—	—	—	—	—	4	4	—	—	—	—	3402 783
	w/o Rear Isolators	8	—	—	—	—	—	4	4	—	—	—	—	3722 568
2-08-11	SLEEVE, Arm, w/Drum Brakes		2	—	2	—	—	—	—	—	—	—	—	1857 840
2-08-48	BUMPER, Arm (also Specify 1 of 9416107 Nut)		2	2	2	2	2	2	2	2	2	2	2	2535 204
2-08-57	BALL JOINT PACKAGE, UPPER		2	2	2	2	2	—	—	—	—	—	—	2298 534
		8	—	—	—	—	—	2	2	2	2	2	2	2808 394
2-08-59	CAM and BUSHING PACKAGE		2	2	2	—	—	—	—	—	—	—	—	2448 099
2-08-61	SEAL, BALL JOINT UPPER		2	2	2	2	2	—	—	—	—	—	—	2269 127
		8	—	—	—	—	—	2	2	2	2	2	2	3722 449
2-08-63	BRACKET, Side Rail Arm Mounting		1	—	1	—	—	—	—	—	—	—	—	2260 300-1
	Rt.		—	1	—	—	—	—	—	—	—	—	—	2467 982
	Lt.		—	1	—	—	—	—	—	—	—	—	—	2204 185
	Upper Control Arm Mounting		—	—	—	1	1	—	—	—	—	—	—	3642 702-3
2-08-70	REINFORCEMENT, Arm Mounting Bracket to Fender Shield Brace	8	—	1	—	—	—	—	—	—	—	—	—	2962 030-1
2-08-71	NUT, Arm Cam Bolt		4	4	4	—	—	—	—	—	—	—	—	1825 449
2-08-72	OILER, Upper Ball Joint		2	2	2	2	2	2	2	2	2	2	2	6030 099
2-09-3	**BOLT, Arm Pivot Bar To Support, Up To 4-22-74**		—	—	—	4	4	—	—	—	—	—	—	3402 650
	After 4-22-74		—	—	—	4	4	—	—	—	—	—	—	# 3815 473
	NUT, Arm Pivot Bar to Support, Up to 10-2-73		—	—	—	4	4	—	—	—	—	—	—	2228 701
	After 10-2-73		—	—	—	4	4	—	—	—	—	—	—	6030 585
	NUT, Arm Pivot Bar Bolt		—	—	—	—	—	4	4	4	4	4	4	3402 799
2-09-6	SUPPORT, Upper Control Arm Pivot		—	—	—	1	1	—	—	—	—	—	—	3402 644-5

CARLINES J - Challenger, B - Barracuda, V - Valiant, L - Dart, R - Satellite, W - Coronet - Charger, P - Plymouth, D - Dodge, C - Chrysler, Y - Imperial

AR Indicates use as required.

Numerals in parentheses ( ) refer to notes.

Printed in U.S.A. November, 1974

# Indicates parts not listed in any previous parts book.

★ Indicates change or addition.

CODE	PART NAME	ENG. TYPE OR CU. IN	V	B J	L	R	W	P	D	C (L M)	C (P)	C (H S)	Y	PART NUMBER
2-09-8	RETAINER, Arm Bushing, Front Wheel													
	Upper Control		—	—	—	4	4	—	—	—	—	—	—	3402 553
			—	—	—	—	—	4	4	4	4	4	4	3402 787
2-10-6	**ARM, w/SHAFT and BALL JOINT, Front**													
	Wheel Lower Control		1	—	1	—	—	—	—	—	—	—	—	2948 572-3
	w/Shaft and Ball Joint	8	—	1	—	—	—	—	—	—	—	—	—	3402 934-5
	w/Shaft and Ball Joint, w/Rear Isolators		—	—	—	1	1	—	—	—	—	—	—	3722 636-7
	w/Shaft and Ball Joint, w/o Rear Isolators		—	—	—	1	1	—	—	—	—	—	—	3815 406-7
	w/Shaft, w/Ball Joint, All	8	—	—	—	—	—	1	1	1	1	1	1	3815 642-3
2-10-10	BUMPER, Arm		2	—	2	—	—	—	—	—	—	—	—	2535 027
	All		—	2	—	—	—	—	—	—	—	—	—	2948 716
	All		—	—	—	2	2	2	2	2	2	2	2	3402 776
2-10-19	PLATE, Bumper Support	8	—	—	—	—	—	—	—	—	—	—	2	2071 640
2-10-55	ARM and BALL JOINT, LOWER		1	—	1	—	—	—	—	—	—	—	—	3683 972-3
	All		—	1	—	—	—	—	—	—	—	—	—	3837 092-3
	BALL JOINT PACKAGE, LOWER, All		—	—	—	2	2	—	—	—	—	—	—	3837 087
	All		—	—	—	—	—	2	2	2	2	2	2	3837 088
2-10-58	STRUT, Arm, All		2	—	2	—	—	—	—	—	—	—	—	3402 709
	All		—	2	—	—	—	—	—	—	—	—	—	2462 585
	All, Up to 10-19-73		—	—	—	2	2	—	—	—	—	—	—	3402 863
	After 10-19-73		—	—	—	2	2	—	—	—	—	—	—	3815 471
	All		—	—	—	—	—	2	2	2	2	2	2	3402 764
	PIN		2	2	2	2	2	2	2	2	2	2	2	6027 381
2-10-59	BUSHING, Lower Control Arm Strut, Front		2	—	2	—	—	—	—	—	—	—	—	3905 035
	All		—	2	—	—	—	—	—	—	—	—	—	2462 740
	Except Police and Taxi		—	—	—	2	2	—	—	—	—	—	—	3905 035
	Police and Taxi		—	—	—	2	2	—	—	—	—	—	—	2462 740
	H.D.		—	—	—	2	2	—	—	—	—	—	—	2462 740
	All		—	—	—	—	—	2	2	2	2	2	2	3722 465
	Rear		2	—	2	—	—	—	—	—	—	—	—	3905 036
	All		—	2	—	—	—	—	—	—	—	—	—	2462 741
	Except Police and Taxi		—	—	—	2	2	—	—	—	—	—	—	3905 036
	Police and Taxi		—	—	—	2	2	—	—	—	—	—	—	2462 741
	H.D.		—	—	—	2	2	—	—	—	—	—	—	2462 741
	All		—	—	—	—	—	2	2	2	2	2	2	3722 466
2-10-60	RETAINER, Arm Strut Bushing, Front		4	—	4	—	—	—	—	—	—	—	—	2948 412
	Except Police and Taxi, Std.		—	—	—	4	4	—	—	—	—	—	—	2948 412
	Police and Taxi		—	—	—	4	4	—	—	—	—	—	—	2207 322
	Except Police and Taxi, H.D.		—	—	—	4	4	—	—	—	—	—	—	2207 322
	All		—	4	—	—	—	—	—	—	—	—	—	2207 322
	All		—	—	—	—	—	4	4	4	4	4	4	3722 467
	All, Rear		—	—	—	2	2	—	—	—	—	—	—	3815 472
2-10-61	SHAFT PACKAGE, Arm		2	—	2	—	—	—	—	—	—	—	—	2808 580
	All		—	2	—	—	—	—	—	—	—	—	—	2808 579
	Police and Taxi	8	—	—	—	—	—	2	2	—	—	—	—	3837 083
	w/o Rear Isolators	8	—	—	—	—	—	2	2	—	—	—	—	3837 083
	w/Rear Isolators	8	—	—	—	—	—	2	2	—	—	—	—	3837 082
	All	8	—	—	—	—	—	—	—	2	2	2	2	3837 082
2-10-64	OILER, Ball Joint Lower		2	2	2	2	2	2	2	2	2	2	2	6030 099
2-10-65	SLEEVE, Strut Bushing		2	—	2	—	—	—	—	—	—	—	—	2948 657
			—	2	—	—	—	—	—	—	—	—	2	2535 463
	Std.		—	—	—	2	2	—	—	—	—	—	—	2948 657
	Police and Taxi		—	—	—	2	2	—	—	—	—	—	—	2535 463
	H.D.		—	—	—	2	2	—	—	—	—	—	—	2535 463
	All		—	—	—	—	—	2	2	2	2	2	2	3722 468

CARLINES: J - Challenger, B - Barracuda, V - Valiant, L - Dart, R - Satellite, W - Coronet - Charger, P - Plymouth, D - Dodge, C - Chrysler, Y - Imperial

AR Indicates use as required.

\# Indicates parts not listed in any previous parts book.

Numerals in parentheses ( ) refer to notes.

★ Indicates change or addition.

Printed in U.S.A.
November, 1974

CODE	PART NAME	ENG. TYPE OR CU. IN	V	B J	L	R	W	P	D	C (L M)	C (P)	C (H S)	Y	PART NUMBER
2-10-66	SEAL, Ball Joint		2	2	2	—	—	—	—	—	—	—	—	2269 215
	All		—	—	—	2	2	—	—	—	—	—	—	3402 540
	All		—	—	—	—	—	2	2	2	2	2	2	3402 950
2-10-68	NUT, Ball Joint Stud	8	—	—	—	—	—	2	2	2	2	2	2	1671 405
2-10-72	SPACER, Arm Bumper, w/E70 x 14 Tires		2	—	2	—	—	—	—	—	—	—	—	3402 699
2-10-74	WASHER, Arm Shaft		2	2	2	2	2	—	—	—	—	—	—	2071 470
2-10-76	BUSHING, Arm Shaft		2	2	2	—	—	—	—	—	—	—	—	1858 024
	w/Rear Isolators		—	—	—	2	2	—	—	—	—	—	—	3402 847
	w/o Rear Isolators		—	—	—	2	2	—	—	—	—	—	—	3722 566
	w/o Rear Isolators	8	—	—	—	—	—	2	2	—	—	—	—	3722 569
	w/Rear Isolators	8	—	—	—	—	—	2	2	2	2	2	2	3402 766
2-14-1	**BOLT and SWIVEL PACKAGE, ANCHOR ADJUSTING, TORSION BAR**		2	—	2	—	—	—	—	—	—	—	—	2275 469
	All	8	—	2	—	—	—	—	—	—	—	—	—	2275 468
	All	8	—	—	—	—	—	2	2	2	2	2	2	3780 532
	BOLT, Anchor Adjusting Torsion Bar		—	—	—	2	2	—	—	—	—	—	—	3402 524
	NOTE: The anchor end of torsion bars or springs, are stamped with the last 3 digits of the part number. Numbers ending with an even digit designate a torsion bar or spring for the right side of the car, with an odd digit for the left side. Example 890-Right side, 891-Left side.													
	STANDARD													
2-14-3	BAR or SPRING, Torsion All	6	1	—	1	—	—	—	—	—	—	—	—	2535 890-1
	318 Eng., w/o Air Cond.	8	1	—	1	—	—	—	—	—	—	—	—	2535 890-1
	318 Eng., w/Air Cond.	8	1	—	1	—	—	—	—	—	—	—	—	2535 892-3
	360 Eng.,	8	1	—	1	—	—	—	—	—	—	—	—	2535 892-3
	All		—	1	—	—	—	—	—	—	—	—	—	1857 774-5
	All		—	—	—	1	1	—	—	—	—	—	—	3402 660-1
	Except Sta. Wgn.	8	—	—	—	—	—	1	1	—	—	—	—	2269 622-3
	Except Sta. Wgn.	8	—	—	—	—	—	—	—	1	1	1	1	2269 624-5
	Sta. Wgn.	8	—	—	—	—	—	1	1	—	1	—	—	3402 962-3
	HEAVY DUTY													
	All		1	—	1	—	—	—	—	—	—	—	—	2535 892-3
	All		—	1	—	—	—	—	—	—	—	—	—	1857 778-9
	All, w/o Rear Isolators		—	—	—	1	1	—	—	—	—	—	—	3402 660-1
	All, w/Rear Isolators		—	—	—	1	1	—	—	—	—	—	—	3402 664-5
	Except Sta. Wgn.	8	—	—	—	—	—	1	1	1	1	1	1	3402 962-3
	Sta. Wgn.	8	—	—	—	—	—	1	1	—	1	—	—	3402 964-5
2-14-11	SWIVEL, Anchor Adjusting Bolt, Front		—	—	—	2	2	—	—	—	—	—	—	3402 691
2-14-13	SEAL, Rear End Anchor		2	2	2	—	—	—	—	—	—	—	—	2071 173
	All		—	—	—	2	2	—	—	—	—	—	—	3402 575
	All		—	—	—	—	—	2	2	2	2	2	2	2269 250
2-14-15	LOCK, Rear End Anchor		2	2	2	2	2	—	—	—	—	—	—	1671 446
	All		—	—	—	—	—	2	2	2	2	2	2	1639 171

NOTES

CARLINES
J - Challenger, B - Barracuda, V - Valiant, L - Dart, R - Satellite, W - Coronet - Charger, P - Plymouth, D - Dodge, C - Chrysler, Y - Imperial

AR Indicates use as required.
# Indicates parts not listed in any previous parts book.
Numerals in parentheses ( ) refer to notes.
★ Indicates change or addition.

Printed in U.S.A.
November, 1974

GROUP 3 - AXLE - REAR

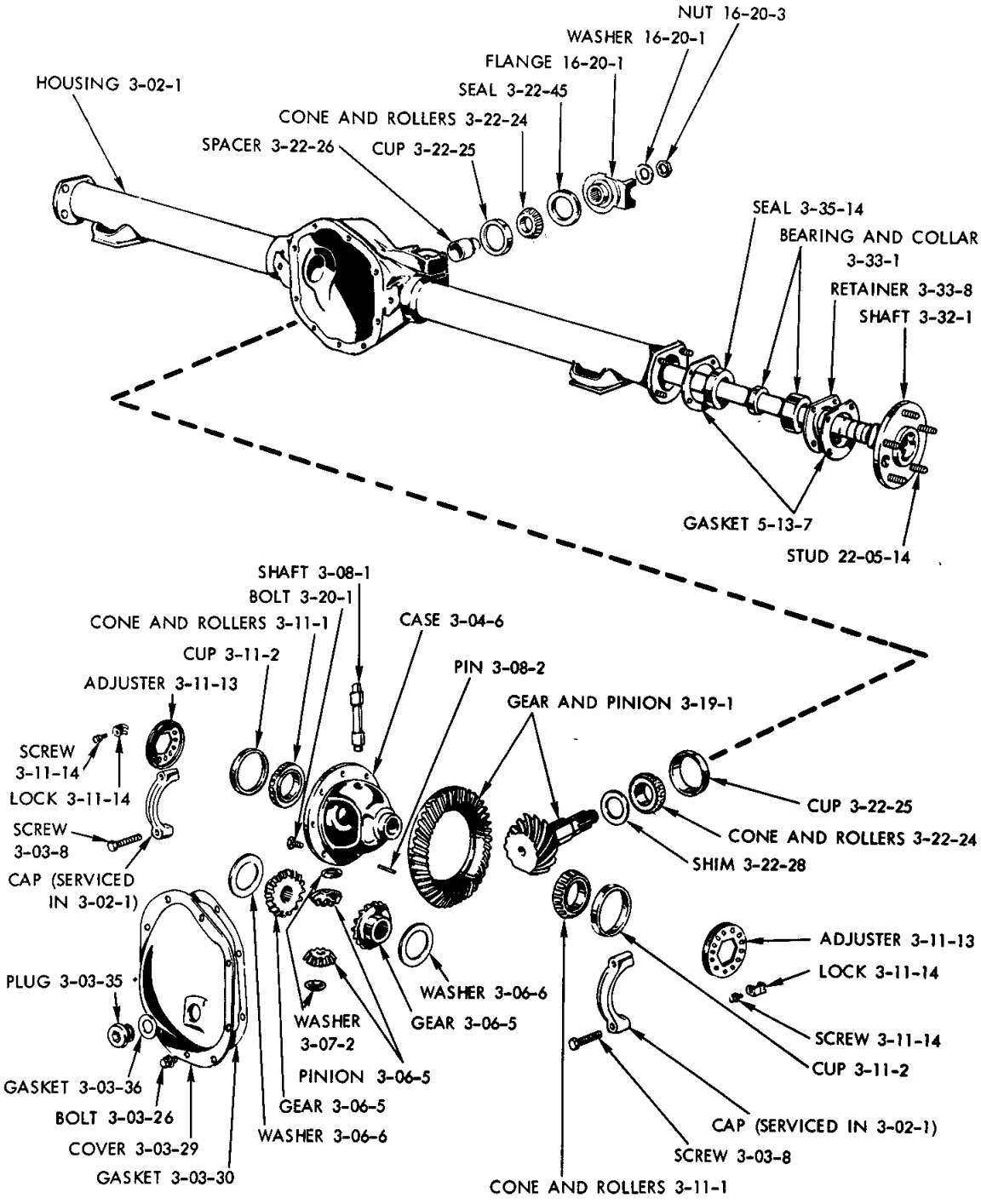

19a4145 C

REAR AXLE DIFFERENTIAL AND CARRIER - 7 1/4" DIA.

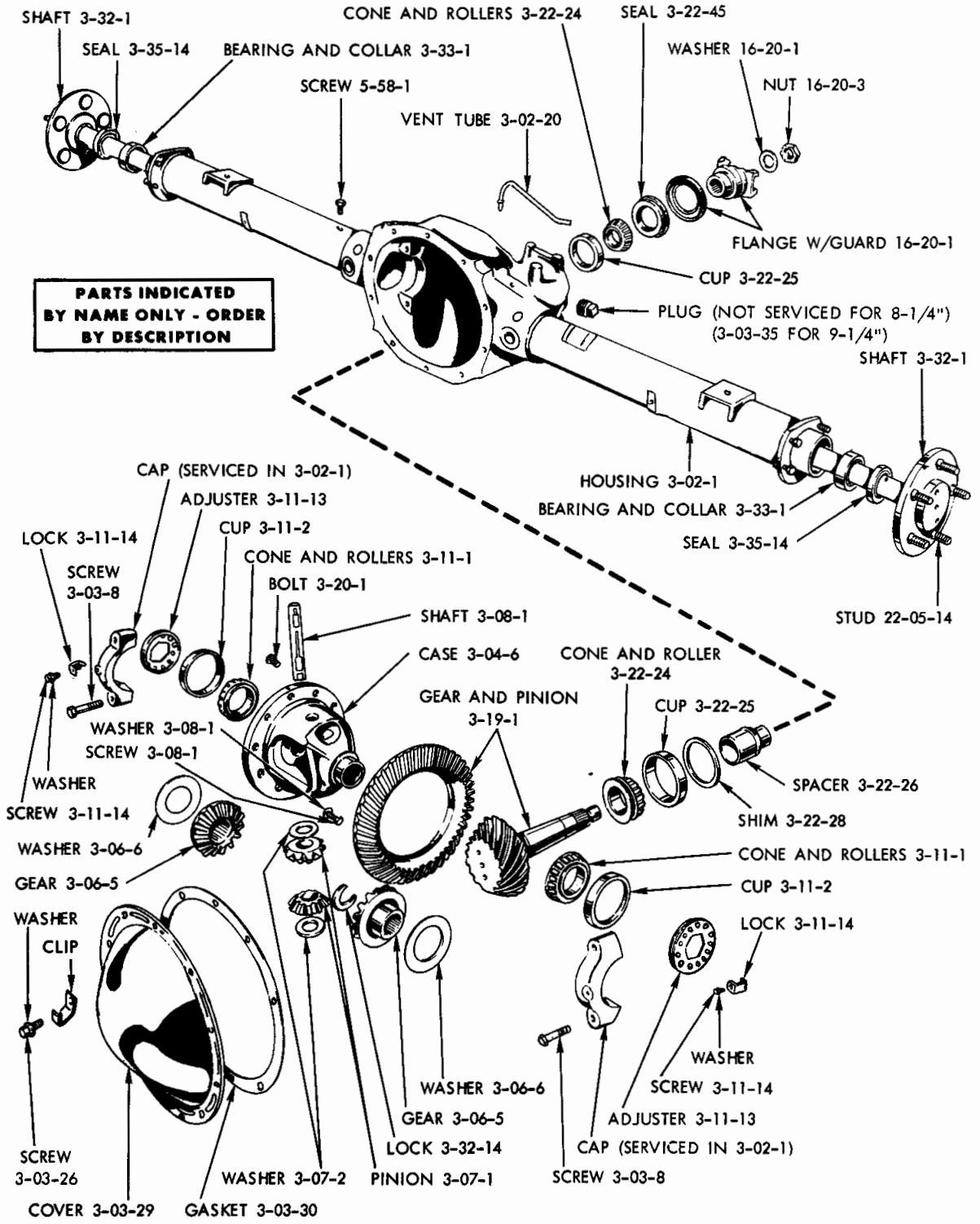

19a4146 **D**

REAR AXLE DIFFERENTIAL AND CARRIER - 8 1/4" AND 9 1/4" DIA.

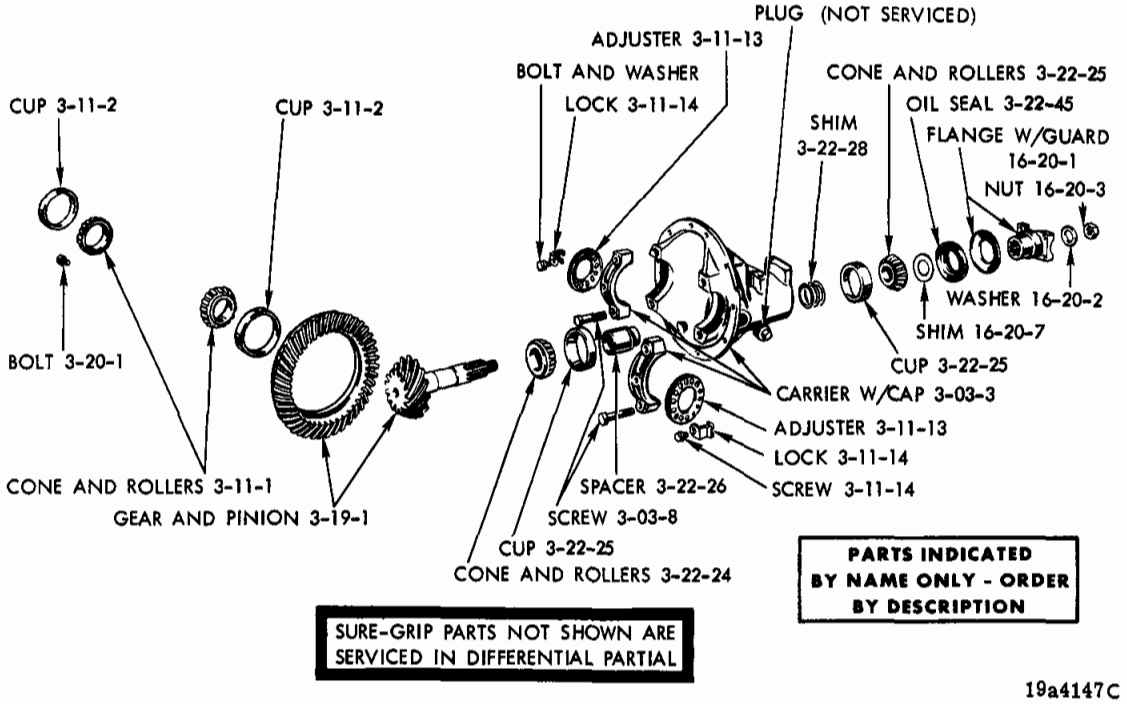

REAR AXLE DIFFERENTIAL AND CARRIER - 8 3/4" DIA. WITH SURE-GRIP

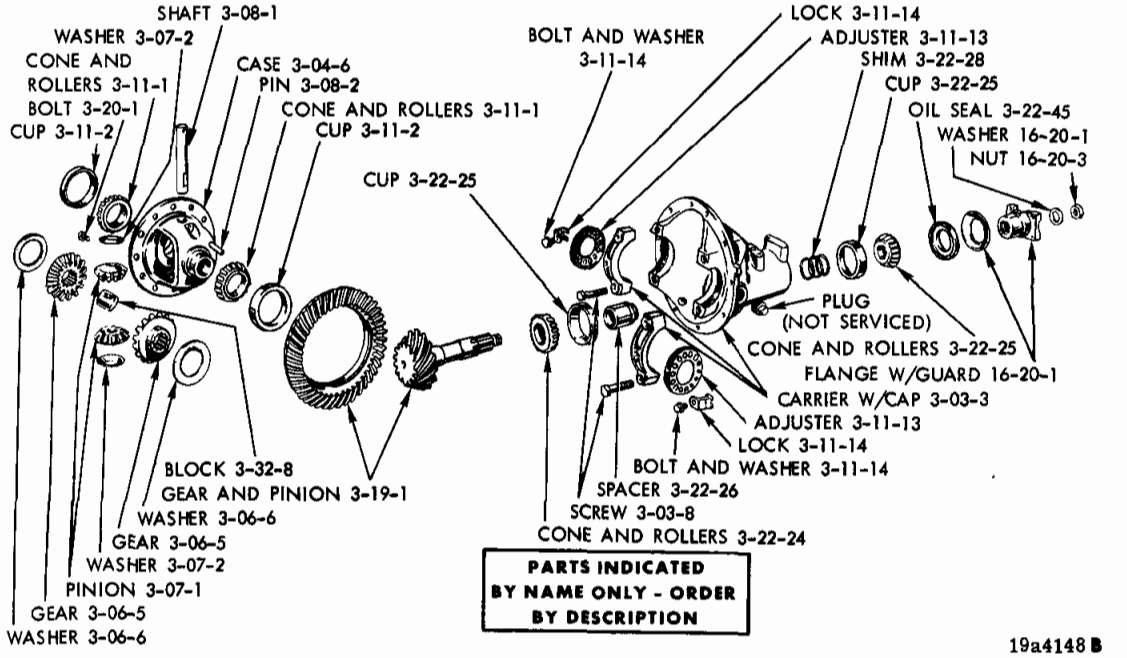

REAR AXLE DIFFERENTIAL AND CARRIER - 8 3/4" DIA. WITHOUT SURE-GRIP

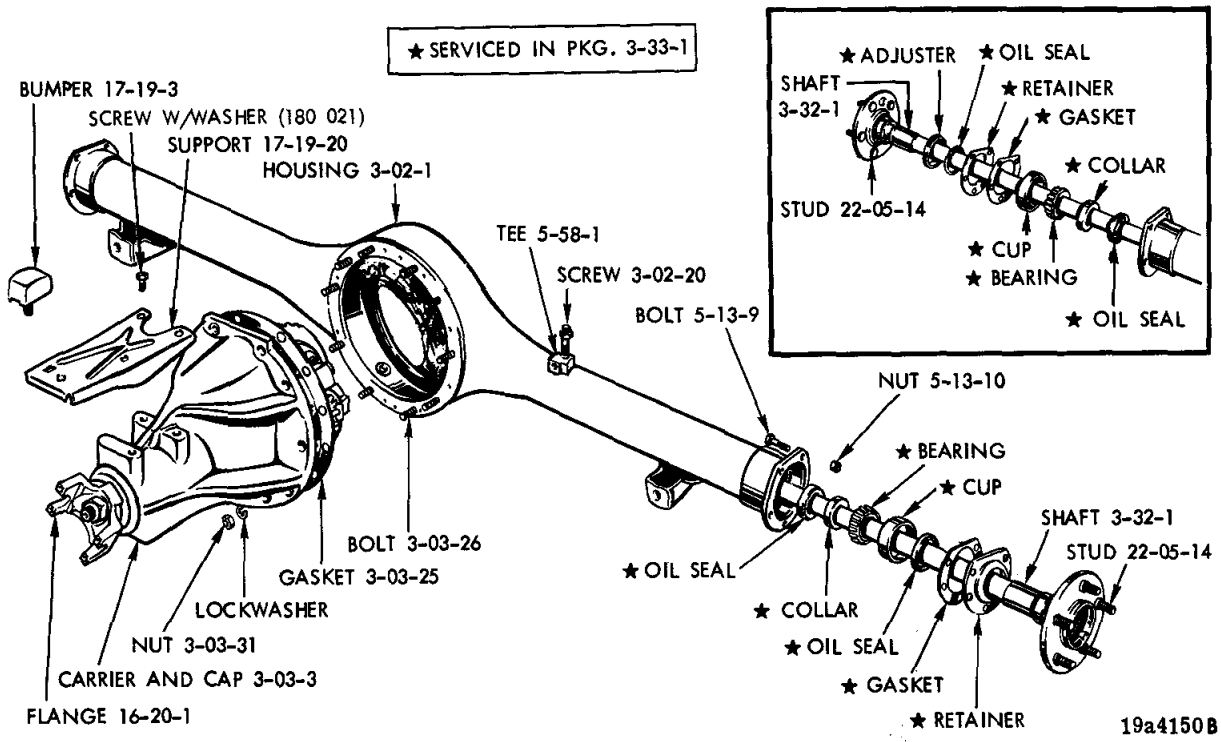

REAR AXLE HOUSING AND CARRIER - 8 3/4" DIA. GEAR TYPE

NOTES

GROUP 3 - REAR AXLE

BEARING, DIFFERENTIAL 3-11
BEARING, DRIVE PINION 3-22
BEARING, DRIVE SHAFT 3-33
BOLT OR SCREW, DRIVE GEAR 3-20
CASE, DIFFERENTIAL 3-04
DIFFERENTIAL AND CARRIER 3-03
GEAR AND PINION SET, DRIVE 3-19
GEAR, DIFFERENTIAL SIDE 3-06
HOUSING 3-02
OIL SEAL, DRIVE SHAFT 3-35
PINION, DIFFERENTIAL 3-07
SHAFT, DIFFERENTIAL PINION 3-08
SHAFT, DRIVE 3-32

Printed in U.S.A.
November, 1974

CODE	PART NAME	ENG. TYPE OR CU. IN	V	B J	L	R	W	P	D	C (L M)	C (P)	C (H S)	Y	PART NUMBER
	NOTE: The 7 1/4" diameter gear axle has a 1 3/8" diameter stem and is embossed with carrier part number 3507 880 or 3507 881 below the yoke. It also has a separate cover and uses (9) nine cover screws.													
	NOTE: The 8 3/4" diameter gear axle with 1 7/8" diameter pinion shaft has carrier part number 2881 488 or 2881 489 embossed 2 inches below the yoke. It has a banjo type housing with a welded on cover. It has (10) ten nuts that fasten the carrier assembly to the housing.													
	NOTE: The 8 1/4" diameter gear axle has a 1 5/8" diameter pinion shaft and carrier part number 2852904 or 2852905 embossed on it. It has a separate cover and uses (10) ten cover screws													
	NOTE: The 9 1/4" diameter gear axle has carrier part number 3507890, 3507891 or 3723199 embossed on it.													
	NOTE: Differential and Carriers have a metal tag bolted on them giving the ratio of the rear axle.													
3-02-1	**HOUSING, ADJUSTER, LOCKS and SCREWS PACKAGE, Rear Axle 7 1/4" dia. Gear,**													
	w/o Sure-Grip, w/9" Brakes, 53 7/32" Lgh.		1	—	1	—	—	—	—	—	—	—	—	3683 958
	HOUSING, w/7 1/4" dia. Gear, w/10" Brakes, w/and w/o Sure-Grip, 51 23/64" Lgh.		1	—	1	—	—	—	—	—	—	—	—	3507 899
	w/8 1/4" Dia. Gear, 51 13/32" Lgh.		1	—	1	—	—	—	—	—	—	—	—	3723 106
	w/8 3/4" dia. Gear, 56 27/64" Lgh.		—	1	—	—	—	—	—	—	—	—	—	2852 882
	w/8 3/4" dia. Gear Axle, One Piece Housing Type, Except Wgn.		—	—	—	1	1	—	—	—	—	—	—	3507 629
	w/8 1/4" dia. Gear Axle, R, W, Except Wgn., 57 51/64" Lgh.		—	—	—	1	1	—	—	—	—	—	—	3723 054
	w/8 1/4" dia. Gear, R, W, Wgn. w/2.94 to 1 Ratio w/o Sure-Grip, P, D, C, w/and w/o Sure-Grip		—	—	—	1	1	1	1	1	1	1	—	3723 247
	w/9 1/4" dia. Gear, Used with 62" Track, 57 3/4" Lgh.		—	—	—	1	1	—	—	—	—	—	—	3723 296
	Used w/63.40 and 63.68" Track 59 17/64 Lgh.		—	—	—	1	1	1	1	1	1	1	1	3507 702
	NUT, Hsg. to carrier bolt, w/8 3/4" Dia. Gear		10	10	10	10	10	10	10	10	10	10	10	6028 915
3-02-20	SCREW, Rr. Axle Brake Tube Tee Vent, w/8 3/4" dia. Gear		—	1	—	1	1	—	—	—	—	—		2404 119
	VENT, Rr. Axle Tube, w/8 1/4" dia. Gear		1	—	1	1	1	1	1	1	1	1	—	# 3723 238

NOTES

CARLINES J - Challenger, B - Barracuda, V - Valiant, L - Dart, R - Satellite, W - Coronet - Charger, P - Plymouth, D - Dodge, C - Chrysler, Y - Imperial

AR Indicates use as required.

# Indicates parts not listed in any previous parts book.

Numerals in parentheses ( ) refer to notes.

★ Indicates change or addition.

Printed in U.S.A.
November, 1974

3-03-1 DIFFERENTIAL, w/CARRIER and HOUSING

NOTE: Differential with Carrier and Tubes and Differential, with Carrier are shown below in chart form by ratio. The chart also includes other information such as Gear size and Stem size.

NOTE: The Differential with Carrier and Housing does not include Axle Shafts.

NOTE: Component Parts for Cone and Spring type Carriers are not serviced separately. For replacement refer to Code 3-03-2 Differential, partial.

NOTE: All 8 3/4" Diameter Gear Axles have 29 Tooth Splines.

RATIO	GEAR DIA.	STEM DIA.	WITH OR W/O SURE GRIP	MODEL	REMARKS	SERVICE NO.
2.76 to 1	7 1/4"	1 3/8"	w/o	V, L	w/9" Brakes	3507 906
2.76 to 1	7 1/4"	1 3/8"	w/o	V, L	w/10" Brakes, UP TO Approx. Dec. 1, 1973	3723 051
2.76 to 1	7 1/4"	1 3/8	w/o	V, L	w/10" Brakes, AFTER Approx. Dec. 1, 1973	3723 256
2.76 to 1	7 1/4"	1 3/8"	With	V, L	w/10" Brakes	3723 052
3.23 to 1	7 1/4"	1 3/8"	w/o	V, L	w/9" brakes	3507 907
2.45 to 1	8 1/4"	1 5/8"	w/o	V, L		3723 568
2.45 to 1	8 1/4"	1 5/8"	w/o	R, W, Except Wgn.		3723 570
2.71 to 1	8 1/4"	1 5/8"	With	V, L		3723 557
2.71 to 1	8 1/4"	1 5/8"	w/o	V, L		3507 634
2.71 to 1	8 1/4"	1 5/8"	w/o	R, W	w/7260 Yoke	3723 057
2.71 to 1	8 1/4"	1 5/8	With	P, D, C		3723 263
2.71 to 1	8 1/4"	1 5/8"	w/o	P, D, C		3723 262
2.94 to 1	8 1/4"	1 5/8"	w/o	V, L		3723 299
2.94 to 1	8 1/4"	1 5/8"	w/o	R, W, Except Wgn.	w/7260 Yoke	3723 055
2.94 to 1	8 1/4"	1 5/8"	w/o	R, W, Wgn., P, D		3723 559
3.21 to 1	8 1/4"	1 5/8"	w/o	V, L		3723 098
3.21 to 1	8 1/4"	1 5/8"	With	V, L		3723 099
3.21 to 1	8 1/4"	1 5/8"	w/o	R, W, Except Wgn.		3723 059
3.55 to 1	8 1/4"	1 5/8"	w/o	V, L		3723 102
3.55 to 1	8 1/4"	1 5/8"	With	V,L		3723 103
2.71 to 1	9 1/4"	1 7/8"	w/o	R, W, Except Wgn.	w/7290 Yoke	3723 272
2.71 to 1	9 1/4"	1 7/8"	w/o	R, W, Wgn., P, D, C.	w/7290 Yoke	3507 623
2.71 to 1	9 1/4"	1 7/8"	With	P, D, C	w/7290 Yoke	3723 109
3.21/3.23 to 1	9 1/4"	1 7/8"	w/o	R, W, Except Wgn.	w/7290 Yoke	3723 273
3.21/3.23 to 1	9 1/4"	1 7/8"	With	R, W, Except Wgn.	w/7290 Yoke	3723 274
3.21/3.23 to 1	9 1/4"	1 7/8"	w/o		w/7290 Yoke	3507 625
3.21/3.23 to 1	9 1/4"	1 7/8	With		w/7290 Yoke	3723 110
3.55 to 1	9 1/4"	1 7/8"	With	R, W	w/7290 Yoke	3723 275
	DIFFERENTIAL w/CARRIER, W/O HOUSING					
2.76 To 1	8 3/4"	1 7/8"	w/o	B, J, R, W		3507 940
3.23 to 1	8 3/4"	1 7/8"	With	B, J, R, W		3507 448
3.23 to 1	8 3/4"	1 7/8"	w/o	B, J		3507 941
3.23 to 1	8 3/4"	1 7/8"	w/o	V, L	Used w/7290 Yoke	3723 072
3.55 To 1	8 3/4"	1 7/8"	With	B, J, R, W		3507 449

NOTES

CODE	PART NAME	ENG. TYPE OR CU. IN	V	B J	L	R	W	P	D	C (L M)	C (P)	C (H S)	Y	PART NUMBER
3-03-2	DIFFERENTIAL, Partial, w/7 1/4" dia. Gear. w/Sure-Grip, w/o Gear and Pinion Set		1	—	1	—	—	—	—	—	—	—	—	2881 342
	w/8 1/4" dia. Gear, w/Sure-Grip, w/o Gear and Pinion Set, Cone and Spring Type Clutch, Except 2.45 to 1 Ratio		1	—	1	1	1	1	1	1	1	1	—	3432 598
	w/8 3/4" dia. Gear, w/Sure Grip, w/o Gear and Pinion Set B2, J2, Cone and Spring Type Clutch		—	1	—	1	1	—	—	—	—	—	—	2881 343
	w/9 1/4" dia. Gear, w/Sure-Grip		—	—	—	1	1	1	1	1	1	1	1	3723 014
3-03-3	CARRIER, w/CAPS, w/8 3/4" dia. Gear, w/ and w/o Sure-Grip		—	1	—	1	1	—	—	—	—	—	—	2881 098
3-03-8	SCREW, Differential Brg. Cap, w/7 1/4" Dia. Gear		4	—	4	—	—	—	—	—	—	—	—	3507 572
	w/8 3/4" Dia. Gear, w/ and w/o Sure-Grip, 1/2"-13 x 2" 39/64" Lgh.		—	4	—	4	4	—	—	—	—	—	—	3432 695
	w/8 1/4" dia. Gear		4	—	4	4	4	4	4	4	4	4	—	3432 695
	w/9 1/4" dia. Gear		—	—	—	4	4	4	4	4	4	4	4	3432 695
3-03-25	GASKET, Carrier, w/8 3/4" dia. Gear		—	1	—	1	1	—	—	—	—	—	—	1673 367
3-03-26	BOLT, Hsg. to Carrier, w/8 3/4" dia. Gear		—	10	—	10	10	—	—	—	—	—	—	1115 927
	Carrier Cover, w/7 1/4" dia. Gear		9	—	9	—	—	—	—	—	—	—	—	6030 737
	w/8 1/4" dia. Gear		—	—	—	10	10	10	10	10	10	10	—	6022 271
3-03-29	COVER, Carrier, w/7 1/4" dia. Gear,		1	—	1	—	—	—	—	—	—	—	—	3507 879
	w/8 1/4" Dia. Gear, 1 5/8" Dia. Stem		1	—	1	1	1	1	1	1	1	1	—	2852 921
	w/9 1/4" Dia. Gear		—	—	—	1	1	1	1	1	1	1	1	3507 690
	SCREW, w/7 1/4" dia. Gear		9	—	9	—	—	—	—	—	—	—	—	6022 271
	w/8 1/4" dia. Gear		10	—	10	10	10	10	10	10	10	10	—	6022 271
	w/9 1/4" dia. Gear		—	—	—	12	12	12	12	12	12	12	12	6022 271
3-03-30	GASKET, Carrier Cover, w/9 1/4" Dia. Gear		—	—	—	1	1	1	1	1	1	1	1	3507 691
3-03-31	NUT, Hsg. To Carrier Bolt, w/8 3/4" Dia. Gear		—	10	—	10	10	—	—	—	—	—	—	6028 915
3-03-35	PLUG, Carrier Cover Filler, w/7 1/4" Dia. Gear, 7/8" - 18		1	—	1	—	—	—	—	—	—	—	—	1392 371
	w/9 1/4" dia. Gear		—	—	—	1	1	1	1	1	1	1	1	1392 371
3-03-36	GASKET, Carrier Cover Filler Plug, w/7 1/4" dia. Gear		1	—	1	—	—	—	—	—	—	—	—	2070 122
	w/9 1/4" dia. Gear		—	—	—	1	1	1	1	1	1	1	1	2070 122
3-04-6	**CASE, DIFFERENTIAL, w/o Sure-Grip,**													
	w/7 1/4" dia. Gear		1	—	1	—	—	—	—	—	—	—	—	3621 981
	w/o Sure-Grip, w/8 3/4" dia. Gear		—	1	—	1	1	—	—	—	—	—	—	3621 998
	w/o Sure-Grip, w/8 1/4" Dia. Gear, Except 2.45 to 1 Ratio		1	—	1	1	1	1	1	1	1	1	—	2881 423
	w/2.45 to 1 Ratio, Cst. No. 3432436		1	—	1	1	1	—	—	—	—	—	—	3432 435
	w/o Sure-Grip, w/9 1/4" dia. Gear		—	—	—	1	1	1	1	1	1	1	1	3507 633
3-06-5	**GEAR, Side, w/o Sure-Grip,** w/7 1/4" Dia. Gear		2	—	2	—	—	—	—	—	—	—	—	2404 194
	w/o Sure-Grip, w/8 3/4" dia. Gear Lgh. of Hub 2 7/16		—	2	—	2	2	—	—	—	—	—	—	3507 588
	w/o Sure-Grip, w/8 1/4" dia. Gear, 1 5/8" Dia. Stem		2	—	2	2	2	2	2	2	2	2	—	2852 908
	w/o Sure-Grip, w/9 1/4" dia. Gear		—	—	—	2	2	2	2	2	2	2	2	3507 605
3-06-6	WASHER, Thrust, w/7 1/4" dia. Gear, w/o Sure-Grip		2	—	2	—	—	—	—	—	—	—	—	2404 196
	w/8 3/4" dia. Gear w/o Sure-Grip		—	2	—	2	2	—	—	—	—	—	—	1633 960

CODE	PART NAME	ENG. TYPE OR CU. IN	V	B J	L	R	W	P	D	C (L M)	C (P)	C (H S)	Y	PART NUMBER
3-06-6	WASHER Cont'd.													
	w/8 1/4" dia. Gear, 1 5/8" dia., Stem w/o Sure-Grip		2	—	2	2	2	2	2	2	2	2	—	2852 911
	w/9 1/4" dia. Gear, w/o Sure-Grip		—	—	—	2	2	2	2	2	2	2	2	3507 639
3-07-1	**PINION, Differential, w/o Sure-Grip, w/7 1/4" Dia. Gear**		2	—	2	—	—	—	—	—	—	—	—	2404 195
	w/o Sure-Grip, w/8 1/4" dia. Gear		2	—	2	2	2	2	2	2	2	2	—	2852 909
	w/o Sure-Grip, w/8 3/4" dia. Gear		—	2	—	2	2	—	—	—	—	—	—	3507 606
	w/o Sure-Grip, w/9 1/4" dia. Gear		—	—	—	2	2	2	2	2	2	2	2	3507 606
3-07-2	WASHER, w/7 1/4" Dia. Gear, w/o Sure-Grip		2	—	2	—	—	—	—	—	—	—	—	2404 197
	w/o Sure-Grip, w/8 3/4" Dia. Gear		—	2	—	2	2	—	—	—	—	—	—	3507 641
	w/o Sure-Grip, w/8 1/4" dia. Gear		2	—	2	2	2	2	2	2	2	2	—	2852 912
	w/o Sure-Grip, w/9 1/4" dia. Gear		—	—	—	2	2	2	2	2	2	2	2	3507 641
3-08-1	**SHAFT, Differential Pinion w/o Sure-Grip, w/7 1/4" dia. Gear**		1	—	1	—	—	—	—	—	—	—	—	2404 198
	w/o Sure-Grip, w/8 3/4" Dia. Gear		—	1	—	1	1	—	—	—	—	—	—	1633 928
	w/o Sure-Grip, w/9 1/4" Dia. Gear		—	—	—	1	1	1	1	1	1	1	1	1633 928
	w/o Sure-Grip, w/8 1/4" dia. Gear		1	—	1	1	1	1	1	1	1	1	—	2852 913
3-08-2	PIN or SCREW, Lock, w/7 1/4" Dia. Gear, w/o Sure-Grip		1	—	1	—	—	—	—	—	—	—	—	152 229
	w/8 1/4" dia. Gear, w/o Sure-Grip, (Specify 1 of 121 367 Lockwasher)		1	—	1	1	1	1	1	1	1	1	—	6028 045
	w/9 1/4" dia. Gear, w/o Sure-Grip, (Specify 1 of 121 367 Lockwasher)		—	—	—	1	1	1	1	1	1	1	1	6028 045
	w/8 3/4" dia. Gear, w/o Sure-Grip		—	1	—	1	1	—	—	—	—	—	—	455 313
3-11-1	**CONE, w/ROLLERS, Differential, w/7 1/4" dia. Gear**		2	—	2	—	—	—	—	—	—	—	—	1937 771
	w/8 3/4" Dia. Gear, 2" I.D. w/ and w/o Sure-Grip		—	2	—	2	2	—	—	—	—	—	—	2852 729
	w/8 1/4" dia. Gear, 1 5/8" dia. Stem, 1 25/32" I.D.		2	—	2	2	2	2	2	2	2	2	—	2881 194
	w/9 1/4" dia. Gear		—	—	—	2	2	2	2	2	2	2	2	3723 149
3-11-2	CUP, w/7 1/4" dia. Gear 2 57/64" O.D.		2	—	2	—	—	—	—	—	—	—	—	1937 770
	w/8 3/4" dia. Gear, 3 17/64" O.D., w/ and w/o Sure-Grip		—	2	—	2	2	—	—	—	—	—	—	2852 728
	w/8 1/4" Dia. Gear, 1 5/8" Dia. Stem, 2 57/64" O.D.		2	—	2	2	2	2	2	2	2	2	—	2881 193
	w/9 1/4" dia. Gear		—	—	—	2	2	2	2	2	2	2	2	3723 148
3-11-13	ADJUSTER, w/8 3/4" Dia. Gear, w/ and w/o Sure-Grip		—	2	—	2	2	—	—	—	—	—	—	601 864
	w/7 1/4" dia. Gear, w/1 3/8" dia. Gear, w/Large Hex Shaped Center Hole		2	—	2	—	—	—	—	—	—	—	—	3507 876
	w/8 1/4" dia. Gear, 1 5/8" dia. Stem, w/Large Hex Shaped Center Hole		2	—	2	2	2	2	2	2	2	2	—	3507 876
	w/9 1/4" dia. Gear		—	—	—	2	2	2	2	2	2	2	2	3507 723
3-11-14	LOCK, Adj., w/8 3/4" dia. Gear, w/ and w/o Sure-Grip		—	2	—	2	2	—	—	—	—	—	—	308 247
	w/7 1/4" dia. Gear, w/1 3/8" dia. Gear		2	—	2	—	—	—	—	—	—	—	—	3507 722
	w/8 1/4" dia. Gear, 1 5/8" dia. Stem		2	—	2	2	2	2	2	2	2	2	—	2852 917
	w/9 1/4" dia. Gear		—	—	—	2	2	2	2	2	2	2	2	3507 722
	SCREW, Adj. Lock, w/8 3/4" Dia. Gear		—	2	—	2	2	—	—	—	—	—	—	6022 271
	w/7 1/4" Dia. Gear		2	—	2	—	—	—	—	—	—	—	—	6022 271
	w/8 1/4" Dia. Gear		2	—	2	2	2	2	2	2	2	2	—	6022 271
	w/9 1/4" dia. Gear		—	—	—	2	2	2	2	2	2	2	2	6022 271

CARLINES: J - Challenger, B - Barracuda, V - Valiant, L - Dart, R - Satellite, W - Coronet - Charger, P - Plymouth, D - Dodge, C - Chrysler, Y - Imperial

AR Indicates use as required.

# Indicates parts not listed in any previous parts book.

Numerals in parentheses ( ) refer to notes.

★ Indicates change or addition.

Printed in U.S.A.
November, 1974

3-19-1 GEAR and PINION SET, Drive

NOTE: Differential Gear and Pinions are serviced by MATCHED SET numbers only. They are catalogued below in charted form by ratio. The chart includes other information such as Gear and Pinion numbers which generally are stamped on the item, and may be used as reference to confirm the correct Gear and Pinion Set they are contained in. The SET NUMBER must be ordered for replacement of either Gear or Pinion.

NOTE: Gear and Pinion Service Sets in some instances replace two or more original equipment sets. Therefore there may be two or more Gear and Pinion numbers applicable to a given Service Package as shown below.

RATIO	GEAR DIA.	STEM DIA.	GEAR NO.	PINION NO.	MODEL	SERVICE SET SET NO.
2.76 to 1 pkg.	7 1/4"	1 3/8"	2800 275	3507 747	V,L	3621 939
3.23 to 1	7 1/4"	1 3/8"	2467 264	3507 771	V,L	3507 772
2.45 to 1 Pkg.	8 1/4"	1 5/8"	2852 923	3507 912	V,L	3837 579
2.45 to 1 Pkg.	8 1/4"	1 5/8"	2852 923	3507 912	R,W, Except Wgn.	3837 579
2.71 to 1 Pkg.	8 1/4"	1 5/8"	2852 928 or	3507 913 or		
———	——	——	2852 928	3723 042	V,L,R,W,P,D,C	3744 452
2.94 to 1 Pkg.	8 1/4"	1 5/8"	2852 933 or	3507 914 or		
———	——	——	2852 933	3723 043	V,L,R,W,P,D	3744 454
3.21 to 1 Pkg.	8 1/4"	1 5/8"	2852 938 or	3507 915 or		
———	——	——	2852 938	3723 044	V,L,R,W	3744 455
3.55 to 1 Pkg.	8 1/4"	1 5/8"	2852 943 or	3507 916 or		
———	——	——	2852 943	3723 045	V,L	3744 456
2.76 To 1 Pkg.	8 3/4"	1 7/8"	2070 684	3507 394	B,J,R,W	3744 487
3.23 To 1	8 3/4"	1 7/8"	2800 270	3507 396	B,J,R,W	3507 457
3.55 To 1	8 3/4"	1 7/8"	2881 325	3507 397	B, J, R, W	3507 458
2.71 to 1 Pkg.	9 1/4"	1 7/8"	3507 644	3507 664	R,W,P,D,C,Y	3780 529
3.21/3.23 to 1	9 1/4"	1 7/8"	3723 142	3723143	R,W,P,D,C,Y	3723 153
3.21/3.23 to 1	9 1/4"	1 7/8"	3507 646	3507 666	R,W,P,D,C,Y	3780 530
3.55 to 1	9 1/4"	1 7/8"	3507 647	3507 667	R,W	3507698
3.55 to 1 Pkg.	9 1/4"	1 7/8"	3507 647	3507 667	R,W	3838 001

3837 3837

NOTES

CARLINES J - Challenger B - Barracuda V - Valiant L - Dart R - Satellite W - Coronet - Charger P - Plymouth D - Dodge C - Chrysler Y - Imperial

AR Indicates use as required.

# Indicates parts not listed in any previous parts book.

Numerals in parentheses ( ) refer to notes.

★ Indicates change or addition.

Printed in U.S.A.
November, 1974

CODE	PART NAME	ENG. TYPE OR CU. IN	V	B J	L	R	W	P	D	C (L M)	C (P)	C (H S)	Y	PART NUMBER
3-20-1	**BOLT or SCREW, Drive Gear, w/7 1/4" dia. Gear, 3/8"-24, w/3.91 dia. Shoulder**		8	—	8	—	—	—	—	—	—	—	—	2931 799
	w/8 1/4" dia. Gear, 3/8"-24		10	—	10	10	10	10	10	10	10	10	—	2931 799
	w/8 3/4" Dia. Gear, 3/8"-24, w/ and w/o Sure-Grip		—	12	—	12	12	—	—	—	—	—	—	2931 799
	9 1/4" dia. Gear		—	—	—	12	12	12	12	12	12	12	12	3723 018
3-22-24	**CONE, w/ROLLERS, Frt. Drive Pinion Brg.,**													
	w/7 1/4" Dia. Gear, 1 3/8" dia. Stem		1	—	1	—	—	—	—	—	—	—	—	2070 316
	Rr.		1	—	1	—	—	—	—	—	—	—	—	2070 318
	Frt., w/8 3/4" dia. Gear, 1 5/16" I.D., w/ and w/o Sure-Grip		—	1	—	1	1	—	—	—	—	—	—	1820 552
	Rr., w/ and w/o Sure-Grip		—	1	—	1	1	—	—	—	—	—	—	2852 731
	Frt., w/8 1/4" Dia. Gear, 1 5/8" Dia. Stem		1	—	1	1	1	1	1	1	1	1	—	2070 316
	Rr.		1	—	1	1	1	1	1	1	1	1	—	2800 484
	Frt., w/9 1/4" dia. Gear		—	—	—	1	1	1	1	1	1	1	1	1820 552
	Rr.		—	—	—	1	1	1	1	1	1	1	1	2852 731
3-22-25	CUP, Frt. Brg., w/7 1/4" dia. Gear, 1 3/8" dia. Stem		1	—	1	—	—	—	—	—	—	—	—	2070 317
	Rr.		1	—	1	—	—	—	—	—	—	—	—	2070 319
	Frt., w/8 3/4" dia. Gear, 2 11/16" O.D., w/ and w/o Sure-Grip		—	1	—	1	1	—	—	—	—	—	—	1820 551
	Rr., w/ and w/o Sure-Grip		—	1	—	1	1	—	—	—	—	—	—	2852 732
	Frt., w/8 1/4" dia. Gear, 1 5/8" dia. Stem		1	—	1	1	1	1	1	1	1	1	—	2070 317
	Rr.		1	—	1	1	1	1	1	1	1	1	—	2800 485
	Frt., w/9 1/4" dia. Gear		—	—	—	1	1	1	1	1	1	1	1	1820 551
	Rr.		—	—	—	1	1	1	1	1	1	1	1	2852 732
3-22-26	SPACER, Frt. Brg. w/7 1/4" dia. Gear 1 3/8" dia. Stem, Collapsible Type, 31/64" Lgh.		1	—	1	—	—	—	—	—	—	—	—	3507 575
	w/8 3/4" dia. Gear, Collapsible Type, w/ and w/o Sure-Grip, 2 63/64" Lgh.		—	1	—	1	1	—	—	—	—	—	—	2931 687
	w/8 1/4" dia. Gear, 1 5/8" dia. Stem, 31/64" Lgh., Collapsible Type		1	—	1	1	1	1	1	1	1	1	—	3507 575
	w/9 1/4" dia. Gear		—	—	—	1	1	1	1	1	1	1	1	3507 678
3-22-28	SHIM, Rr. Brg., w/7 1/4" dia. Gear, 1 3/8" dia. Stem, w/3 Inside Tabs .020" thk.		AR	—	AR	—	—	—	—	—	—	—	—	3723 020
	.021" thk.		AR	—	AR	—	—	—	—	—	—	—	—	3723 021
	.022" thk.		AR	—	AR	—	—	—	—	—	—	—	—	3723 022
	.023" thk.		AR	—	AR	—	—	—	—	—	—	—	—	3723 023
	.024" thk.		AR	—	AR	—	—	—	—	—	—	—	—	3723 024
	.025" thk.		AR	—	AR	—	—	—	—	—	—	—	—	3723 025
	.026" thk.		AR	—	AR	—	—	—	—	—	—	—	—	3723 026
	.027" thk.		AR	—	AR	—	—	—	—	—	—	—	—	3723 027
	.028" thk.		AR	—	AR	—	—	—	—	—	—	—	—	3723 028
	.029" thk.		AR	—	AR	—	—	—	—	—	—	—	—	3723 029
	.030" thk.		AR	—	AR	—	—	—	—	—	—	—	—	3723 030
	.031" thk.		AR	—	AR	—	—	—	—	—	—	—	—	3723 031
	.032" thk.		AR	—	AR	—	—	—	—	—	—	—	—	3723 032
	.033" thk.		AR	—	AR	—	—	—	—	—	—	—	—	3723 033
	.034" thk.		AR	—	AR	—	—	—	—	—	—	—	—	3723 034
	.035" thk.		AR	—	AR	—	—	—	—	—	—	—	—	3723 035
	.036" thk.		AR	—	AR	—	—	—	—	—	—	—	—	3723 036
	.037" thk.		AR	—	AR	—	—	—	—	—	—	—	—	3723 037
	.038" thk.		AR	—	AR	—	—	—	—	—	—	—	—	3723 038

CARLINES J - Challenger, B - Barracuda, V - Valiant, L - Dart, R - Satellite, W - Coronet - Charger, P - Plymouth, D - Dodge, C - Chrysler, Y - Imperial

AR Indicates use as required.

# Indicates parts not listed in any previous parts book.

Numerals in parentheses ( ) refer to notes.

★ Indicates change or addition.

Printed in U.S.A.
November, 1974

CODE	PART NAME	ENG. TYPE OR CU. IN	V	B J	L	R	W	P	D	C (L M)	C (P)	C (H S)	Y	PART NUMBER
3-22-28	SHIM Cont'd.													
	Frt., w/8 3/4" dia. Gear													
	.020" thk.		—	1	—	1	1	—	—	—	—	—	—	2931 818
	Rr., w/8 3/4" and 9 1/4" dia. Gear, 2 45/64" O.D., w/3 Inside Tabs													
	.020" thk.	8	—	AR	—	AR	AR	AR	AR	AR	AR	AR	AR	3432 320
	.021" thk.	8	—	AR	—	AR	AR	AR	AR	AR	AR	AR	AR	3432 321
	.022" thk.	8	—	AR	—	AR	AR	AR	AR	AR	AR	AR	AR	3432 322
	.023" thk.	8	—	AR	—	AR	AR	AR	AR	AR	AR	AR	AR	3432 323
	.024" thk.	8	—	AR	—	AR	AR	AR	AR	AR	AR	AR	AR	3432 324
	.025" thk.	8	—	AR	—	AR	AR	AR	AR	AR	AR	AR	AR	3432 325
	.026" thk.	8	—	AR	—	AR	AR	AR	AR	AR	AR	AR	AR	3432 326
	.027" thk.	8	—	AR	—	AR	AR	AR	AR	AR	AR	AR	AR	3432 327
	.028" thk.	8	—	AR	—	AR	AR	AR	AR	AR	AR	AR	AR	3432 328
	.029" thk.	8	—	AR	—	AR	AR	AR	AR	AR	AR	AR	AR	3432 329
	.030" thk.	8	—	AR	—	AR	AR	AR	AR	AR	AR	AR	AR	3432 330
	.031" thk.	8	—	AR	—	AR	AR	AR	AR	AR	AR	AR	AR	3432 331
	.032" thk.	8	—	AR	—	AR	AR	AR	AR	AR	AR	AR	AR	3432 332
	.033" thk.	8	—	AR	—	AR	AR	AR	AR	AR	AR	AR	AR	3432 333
	.034" thk.	8	—	AR	—	AR	AR	AR	AR	AR	AR	AR	AR	3432 334
	.035" thk.	8	—	AR	—	AR	AR	AR	AR	AR	AR	AR	AR	3432 335
	.036" thk.	8	—	AR	—	AR	AR	AR	AR	AR	AR	AR	AR	3432 336
	.037" thk.	8	—	AR	—	AR	AR	AR	AR	AR	AR	AR	AR	3432 337
	.038" thk.	8	—	AR	—	AR	AR	AR	AR	AR	AR	AR	AR	3432 338
	Rr., w/8 1/4" dia. Gear, 3 3/32" O.D.													
	.060" thk.		1	—	1	1	1	1	1	1	1	1	—	2931 960
	.061" thk.		1	—	1	1	1	1	1	1	1	1	—	2931 961
	.062" thk.		1	—	1	1	1	1	1	1	1	1	—	2931 962
	.063" thk.		1	—	1	1	1	1	1	1	1	1	—	2931 963
	.064" thk.		1	—	1	1	1	1	1	1	1	1	—	2931 964
	.065" thk.		1	—	1	1	1	1	1	1	1	1	—	2931 965
	.066" thk.		1	—	1	1	1	1	1	1	1	1	—	2931 966
	.067" thk.		1	—	1	1	1	1	1	1	1	1	—	2931 967
	.068" thk.		1	—	1	1	1	1	1	1	1	1	—	2931 968
	.069" thk.		1	—	1	1	1	1	1	1	1	1	—	2931 969
	.070" thk.		1	—	1	1	1	1	1	1	1	1	—	2931 970
	.071" thk.		1	—	1	1	1	1	1	1	1	1	—	2931 971
	.072" thk.		1	—	1	1	1	1	1	1	1	1	—	2931 972
	.073" thk.		1	—	1	1	1	1	1	1	1	1	—	2931 973
	.074" thk.		1	—	1	1	1	1	1	1	1	1	—	2931 974
	.075" thk.		1	—	1	1	1	1	1	1	1	1	—	2931 975
	.076" thk.		1	—	1	1	1	1	1	1	1	1	—	2931 976
	.077" thk.		1	—	1	1	1	1	1	1	1	1	—	2931 977
	.078" thk.		1	—	1	1	1	1	1	1	1	1	—	2931 978
3-22-45	OIL SEAL, Frt. Brg., w/7 1/4" Dia. Gear 1 3/8" Dia. Stem, 3 5/32" O.D.		1	—	1	—	—	—	—	—	—	—	—	2881 041
	Frt., w/8 3/4" Dia. Gear, w/ and w/o Sure-Grip, 3 3/8" O.D.		—	1	—	1	1	—	—	—	—	—	—	2931 862
	Frt., w/9 1/4" dia. Gear		—	—	—	1	1	1	1	1	1	1	1	2931 862
	Frt., w/8 1/4" Dia. Gear, 1 5/8" Dia. Stem, 3 5/32" O.D.		1	—	1	1	1	1	1	1	1	1	—	2881 041
3-32-1	**SHAFT, Drive, w/7 1/4" Dia. Gear, 1 3/8" dia. Stem, 27 15/16" lgh., w/9" Brakes, w/o Studs**		2	—	2	—	—	—	—	—	—	—	—	2404 442
	w/10" Brakes		2	—	2	—	—	—	—	—	—	—	—	3507 883
	w/8 1/4" dia. Gear, 1 5/8" dia.		2	—	2	—	—	—	—	—	—	—	—	3723 100
	w/8 3/4" dia. Gear, 29 31/32" lgh., w/o Studs		—	2	—	—	—	—	—	—	—	—	—	3432 780
	w/8 3/4" dia. Gear, except Sta. Wgn., 30 5/8" lgh.		—	—	—	2	2	—	—	—	—	—	—	3432 830

CARLINES: J - Challenger, B - Barracuda, V - Valiant, L - Dart, R - Satellite, W - Coronet - Charger, P - Plymouth, D - Dodge, C - Chrysler, Y - Imperial

AR Indicates use as required.

Numerals in parentheses ( ) refer to notes.

# Indicates parts not listed in any previous parts book.

★ Indicates change or addition.

Printed in U.S.A.
November, 1974

CODE	PART NAME	ENG. TYPE OR CU. IN	V	B J	L	R	W	P	D	C (L M)	C (P)	C (H S)	Y	PART NUMBER
3-32-1	SHAFT Cont'd.													
	w/8 3/4" dia. Gear, R, W, Sta., Wgn., 31 21/64" Lgh.		—	—	—	2	2	—	—	—	—	—	—	3432 786
	w/8 1/4" dia. Gear, 1 5/8" dia. Stem, w/1.62" dia. Journal, R, W, except Sta. Wgn. 27T, 30 63/64" Lgh.		—	—	—	2	2	—	—	—	—	—	—	2931 864
	w/8 1/4" dia. Gear, 1 5/8" dia. Stem, R,W, Wgn., P,D,C, Except Wgn., 31 37/64" Lgh.		—	—	—	2	2	2	2	2	2	2	—	3507 172
	w/9 1/4" dia. Gear, R, W, Wgn. 31 41/64" Lgh.		—	—	—	2	2	2	2	2	2	2	2	3507 686
	R, W, except Wgn., 30 15/16" Lgh.		—	—	—	2	2	—	—	—	—	—	—	3723 297
	RETAINER, w/8 3/4" dia. Gear, Use on 3/8"-16 Thrd., 51/64" O.D.		—	2	—	2	2	—	—	—	—	—	—	6026 648
3-32-8	BLOCK, Thrust, w/8 3/4" dia. Gear, w/o Sure-Grip		—	1	—	1	1	—	—	—	—	—	—	2467 268
3-32-14	LOCK, Drive Shaft, w/8 1/4" and 9 1/4" Dia. Gear		2	—	2	2	2	2	2	2	2	2	2	2852 883
3-33-1	**CONE, COLLAR, CUP, SEALS, GASKETS and RETAINER PACKAGE,** Drive Shaft, w/8 3/4" dia. Gear,		—	2	—	2	2	—	—	—	—	—	—	3683 966
	CONE, CUP, COLLAR, GASKETS, SEALS, RETAINER and ADJUSTER PACKAGE, w/8 3/4" dia. Gear, Rt.		—	1	—	1	1	—	—	—	—	—	—	3420 094
	BEARING, COLLAR, SEAL and GASKETS PACKAGE, w/7 1/4" dia. Gear 1 3/8" dia. Stem, w/9" Brakes		2	—	2	—	—	—	—	—	—	—	—	3420 090
	BEARING, w/COLLAR, w/7 1/4" dia. Gear, w/10" Brakes, 2 7/8" O.D.		2	—	2	—	—	—	—	—	—	—	—	3420 091
	w/8 1/4" dia. Gear, 1 5/8" dia. Stem, 2 17/32" O.D.		2	—	2	2	2	2	2	2	2	2	—	3744 495
	w/9 1/4" dia. Gear		—	—	—	2	2	2	2	2	2	2	2	3744 495
3-33-2	CUP, w/8 3/4" dia. Gear, 2 7/8" O.D.		—	2	—	2	2	—	—	—	—	—	—	2467 103
3-33-6	LOCK, Brg. Adj., w/8 3/4" dia. Gear		—	1	—	1	1	—	—	—	—	—	—	2467 166
3-33-8	RETAINER, Brg., w/7 1/4" Dia. Gear w/o Slot on Outer Edge, w/9" Brakes		2	—	2	—	—	—	—	—	—	—	—	2467 096
	w/Slot on Outer Edge, w/10" Brakes		2	—	2	—	—	—	—	—	—	—	—	2800 437
3-33-10	GASKET, Brg. Retainer, w/8 3/4" dia. Gear, 4 5/8" O.D.		—	2	—	2	2	—	—	—	—	—	—	2070 933
	4 1/4" Width		—	2	—	2	2	—	—	—	—	—	—	2881 314
3-35-14	**OIL SEAL, Drive Shaft, w/7 1/4" dia. Gear, Inner** Steel and Rubber, w/9" Brakes		2	—	2	—	—	—	—	—	—	—	—	3432 691
	w/10" Brakes		2	—	2	—	—	—	—	—	—	—	—	2852 948
	w/8 1/4" and 9 1/4" dia. Gear, 2 37/64" O.D.		2	—	2	2	2	2	2	2	2	2	2	2931 875

NOTES

CARLINES
J - Challenger
B - Barracuda
V - Valiant
L - Dart
R - Satellite
W - Coronet - Charger
P - Plymouth
D - Dodge
C - Chrysler
Y - Imperial

AR Indicates use as required.
# Indicates parts not listed in any previous parts book.
Numerals in parentheses ( ) refer to notes.
★ Indicates change or addition.

Printed in U.S.A.
November, 1974

NOTES

GROUP 4 - BRAKE-PARKING

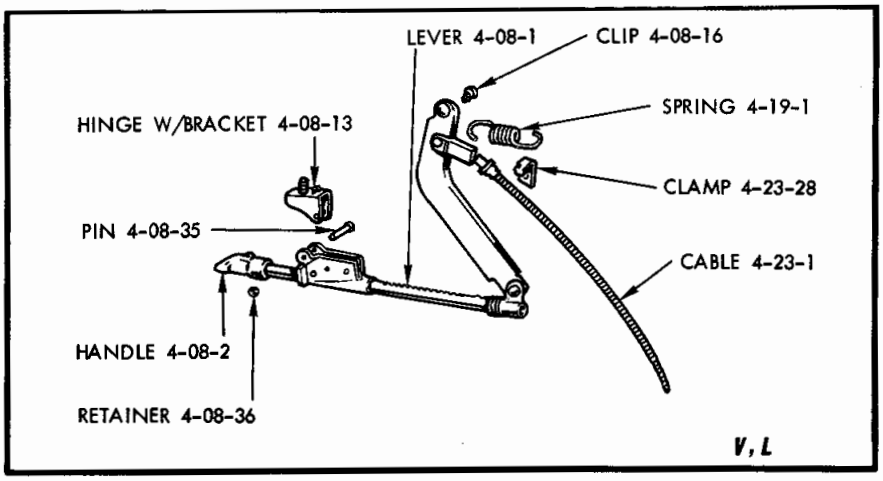

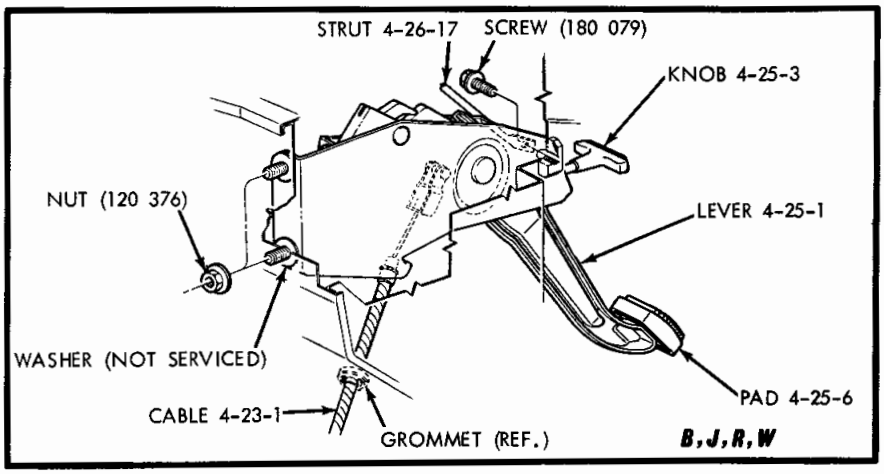

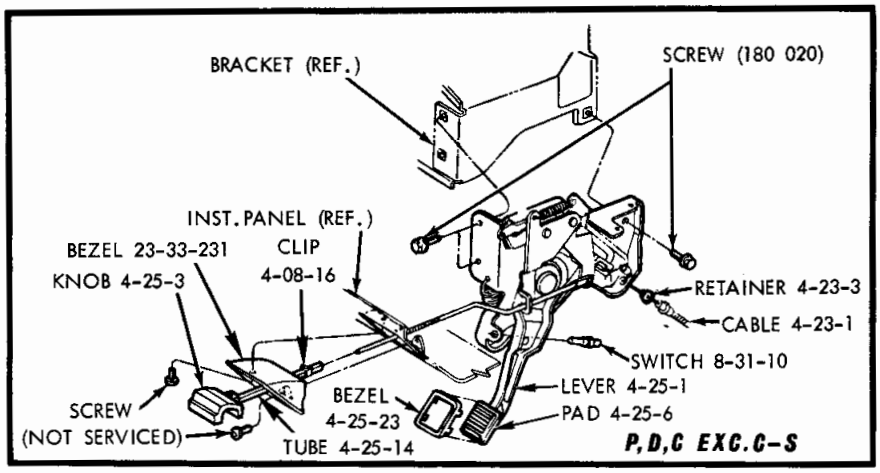

19a4684 A

PARKING BRAKE LEVER

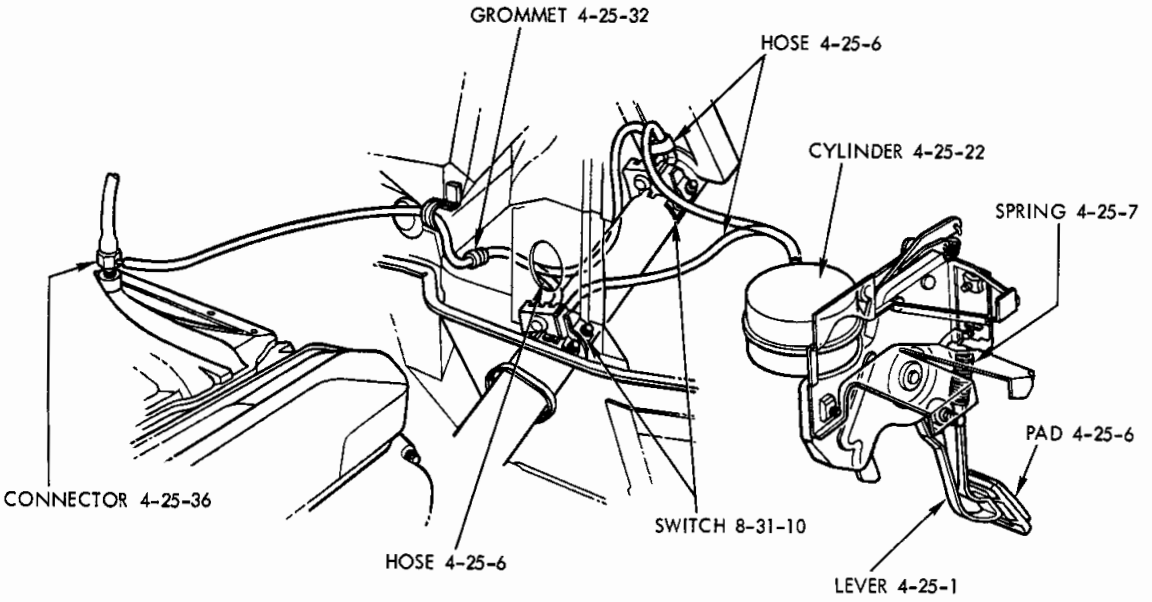

PARKING BRAKE LEVER AND VACUUM LINES - C-S, Y

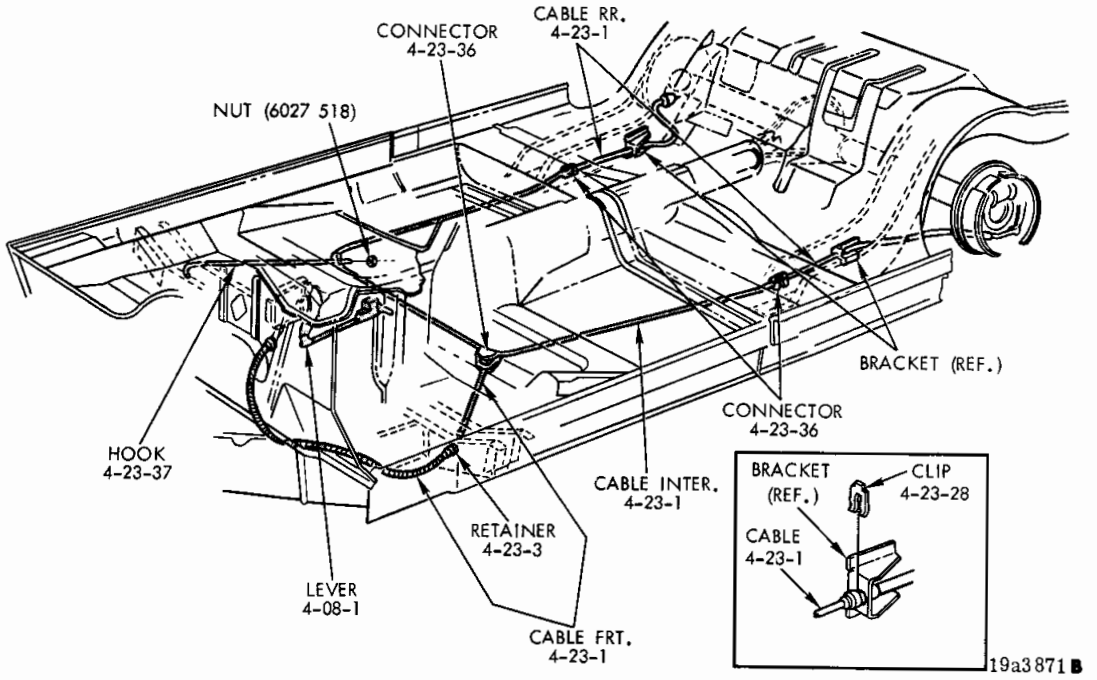

PARKING BRAKE CONTROLS - V, L

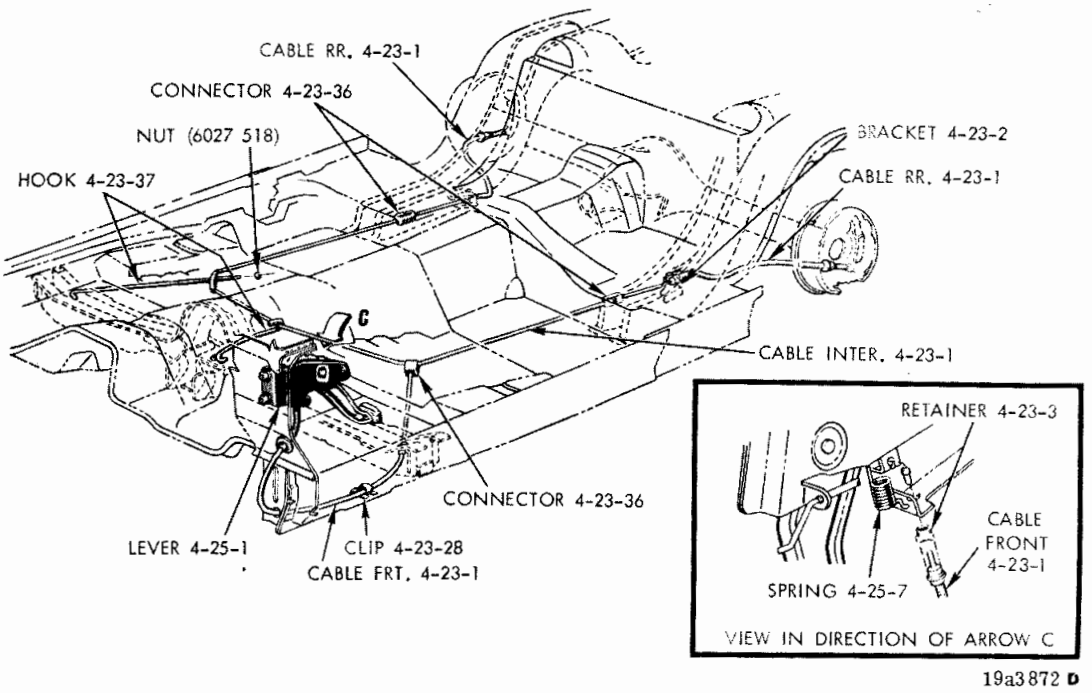

19a3872 D

PARKING BRAKE CONTROLS - B, J, R, W

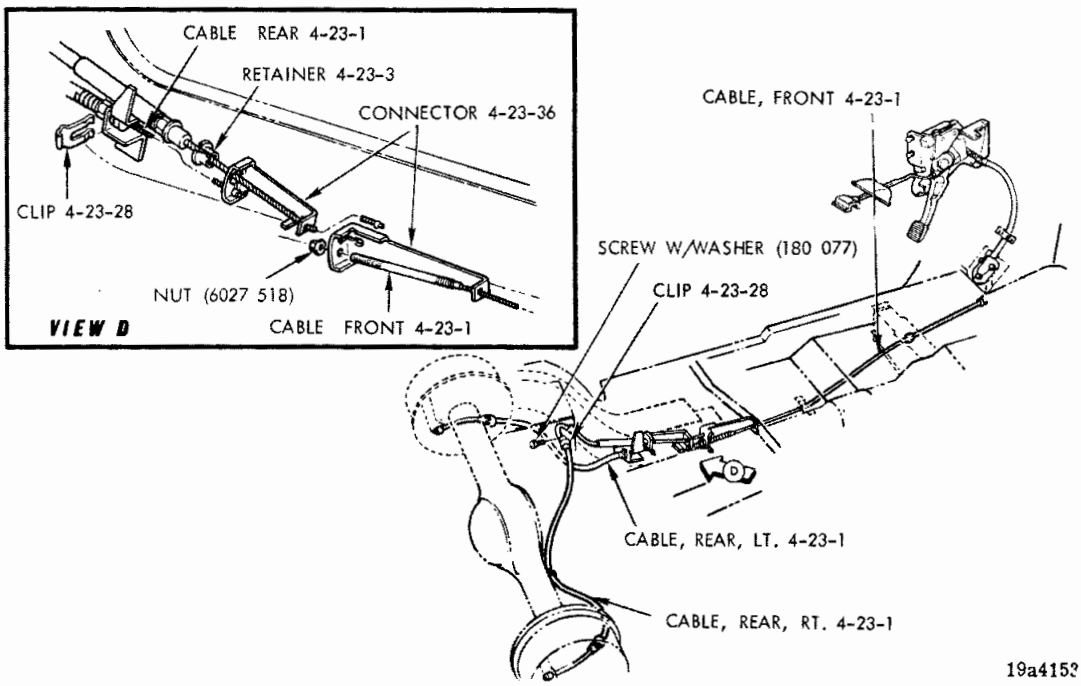

19a4152 A

PARKING BRAKE CONTROLS - P, D, C, Y

NOTES

GROUP 4 - PARKING BRAKE

CABLES 4-23
LEVER, FOOT OPERATED 4-25
LEVER, HAND OPERATED 4-08
PLATE, HAND LEVER SUPPORT 4-09
SPRAG, TRANSMISSION 4-10
SPRING, HAND LEVER RETURN 4-19

Printed in U.S.A.
November, 1974

CODE	PART NAME	ENG. TYPE OR CU. IN	V	B J	L	R	W	P	D	C (L M)	C (P)	C (H S)	Y	PART NUMBER
4-08-1	**LEVER, Parking Brake (Hand Operated)**		1	—	1	—	—	—	—	—	—	—	—	3575 622
4-08-2	HANDLE, Hand Brake		1	—	1	—	—	—	—	—	—	—	—	2823 549
4-08-13	HINGE, w/BRACKET, and BOLT		1	—	1	—	—	—	—	—	—	—	—	2534 964
4-08-16	CLIP, Linkage Spring		—	2	—	2	2	—	—	—	—	—	—	3580 309
	Release Rod Adjusting, All	8	—	—	—	—	—	1	1	—	—	—	—	3748 418
	Except C-S	8	—	—	—	—	—	—	—	1	1	1	—	3748 418
4-08-35	PIN, Lever Hinge		1	—	1	—	—	—	—	—	—	—	—	1732 198
	Lever Handle to Pull Rod		1	—	1	—	—	—	—	—	—	—	—	455 106
4-08-36	RETAINER		1	—	1	—	—	—	—	—	—	—	—	2197 678
4-09-1	**PLATE, Hand Brake Support**		1	—	1	—	—	—	—	—	—	—	—	3439 154
4-10-8	**SHAFT, Trans. Park Sprag**		1	1	1	1	1	1	1	1	1	1	1	2466 892
4-10-10	SPRAG, Trans. Park Lock		1	1	1	1	1	1	1	1	1	1	1	2801 157
4-10-11	SPRING, Trans. Park Sprag		1	1	1	1	1	1	1	1	1	1	1	2466 909
4-10-32	PLUG, Trans. Park Sprag		1	1	1	1	1	1	1	1	1	1	1	2538 042
	Pin, Park Sprag Plug		1	1	1	1	1	1	1	1	1	1	1	9417 504
4-10-33	SNAP-RING, Park Sprag Plug		1	1	1	1	1	1	1	1	1	1	1	2538 034
4-10-35	ROD, Trans. Park Sprag													
	Std.		1	1	1	1	1	1	1	—	—	—	—	2466 906
	Heavy Duty		1	1	1	1	1	1	1	—	—	—	—	2466 894
	All	8	—	—	—	—	—	—	—	1	1	1	1	2466 894
4-10-40	E-Ring, Trans. Park Sprag Retainer		1	1	1	1	1	1	1	1	1	1	1	1626 749
4-19-1	**SPRING, Parking Brake Lever Return**		1	—	1	—	—	—	—	—	—	—	—	1556 693
4-23-1	**CABLE, Parking Brake, Front, All**		1	—	1	—	—	—	—	—	—	—	—	3575 624
	All		—	1	—	1	1	—	—	—	—	—	—	3575 588
	Except Sta. Wgn.		—	—	—	—	—	1	1	—	—	—	—	3642 283
	Sta. Wgn.		—	—	—	—	—	1	1	—	—	—	—	3642 284
	All		—	—	—	—	—	—	—	1	1	1	1	3642 284
	CABLE, Parking Brake, Intermediate,													
	2D H.T., 4D.		1	—	1	—	—	—	—	—	—	—	—	3575 584
	Fast-Back		1	—	1	—	—	—	—	—	—	—	—	3467 906
	B		—	1	—	—	—	—	—	—	—	—	—	3642 281
	J		—	1	—	—	—	—	—	—	—	—	—	3642 282
	Except 4 D., and Sta. Wgn.		—	—	—	1	1	—	—	—	—	—	—	3467 906
	4 D., and Sta. Wgn.		—	—	—	1	1	—	—	—	—	—	—	3467 905
	CABLE, Parking Brake, Rear, All		2	—	2	—	—	—	—	—	—	—	—	3580 988
	All		—	2	—	—	—	—	—	—	—	—	—	3467 944
	w/10" Brakes		—	—	—	2	2	—	—	—	—	—	—	3467 944
	w/11" Brakes		—	—	—	2	2	—	—	—	—	—	—	3467 945
	All		—	—	—	—	—	1	1	1	1	1	—	3575 606-7
4-23-2	BRACKET, Center Floor Pan Cable Guide		—	—	—	—	—	1	1	1	1	1	1	2574 185
	Rear Side Rail Cable		2	2	2	2	2	—	—	—	—	—	—	3570 345
	Center Floor Pan Brake Cable		—	1	—	—	—	—	—	—	—	—	—	3569 625
	BRACKET, w/NUT, Center Floor Pan Brake Cable	8	—	—	—	—	—	1	1	1	1	1	1	3756 482
4-23-3	RETAINER, Cable Lower		1	1	1	1	1	1	1	1	1	1	1	3467 939
	Cable Rear		—	—	—	—	—	1	1	1	1	1	1	3467 939
4-23-4	SEAL, Front Floor Pan Cable		—	—	—	—	—	1	1	1	1	1	1	2259 118
4-23-6	NUT, Cable Adjusting		1	1	1	1	1	1	1	1	1	1	1	6027 518
	SUPPORT, Rear Side Rail Cable		—	—	—	—	—	1	1	1	1	1	1	3615 755
4-23-24	PIN, Cable Upper Clevis		1	—	1	—	—	—	—	—	—	—	—	2265 269
4-23-28	CLAMP, Brake Cable		1	—	1	—	—	—	—	—	—	—	—	2534 926
	CLIP, Rear Cable To Cable Support		2	2	2	2	2	—	—	—	—	—	—	2201 467
	All		—	—	—	—	—	1	1	1	1	1	1	2201 467
	Cable, Rear		—	—	—	—	—	1	1	1	1	1	1	3642 287
	Linkage Spring, w/Disc Brakes		—	2	2	2	—	—	—	—	—	—	—	# 3580 309
4-23-36	CONNECTOR Front to Inter-Cable		1	1	1	1	1	—	—	—	—	—	—	3575 593
	Brake Cable		2	2	2	2	2	—	—	—	—	—	—	2071 094
	Brake Cable		—	—	—	—	—	1	1	1	1	1	1	3575 605
	Brake Cable Adjuster		—	—	—	—	—	1	1	1	1	1	1	3575 604

CARLINES J - Challenger, B - Barracuda, V - Valiant, L - Dart, R - Satellite, W - Coronet - Charger, P - Plymouth, D - Dodge, C - Chrysler, Y - Imperial

AR Indicates use as required.

Numerals in parentheses ( ) refer to notes.

Printed in U.S.A.

# Indicates parts not listed in any previous parts book.

★ Indicates change or addition.

November, 1974

CODE	PART NAME	ENG. TYPE OR CU. IN	V	B J	L	R	W	P	D	C (L M)	C (P)	C (H S)	Y	PART NUMBER
4-23-37	HOOK, Inter. Cable		1	—	1	—	—	—	—	—	—	—	—	3575 591
	Inter. Cable Middle		—	1	—	—	—	—	—	—	—	—	—	3467 903
			—	—	—	1	1	—	—	—	—	—	—	3642 276
	Inter. Cable Adjusting		—	1	—	1	1	—	—	—	—	—	—	3467 918
4-25-1	**LEVER, Parking Brake, (Foot Operated)**		—	1	—	1	1	—	—	—	—	—	—	3575 631
	All, Up To 5-15-74	8	—	—	—	—	—	1	1	—	—	—	—	3748 421
	After 5-15-74		—	—	—	—	—	1	1	—	—	—	—	# 3748 673
	Except C-S	8	—	—	—	—	—	—	—	1	1	1	—	3748 421
	C-S, Up To 5-15-74	8	—	—	—	—	—	—	—	—	—	1	—	3748 432
	After 5-15-74	8	—	—	—	—	—	—	—	—	—	1	—	# 3748 674
	All, Up To 5-15-74	8	—	—	—	—	—	—	—	—	—	—	1	3748 432
	After 5-15-74	8	—	—	—	—	—	—	—	—	—	—	1	# 3748 674
4-25-3	KNOB, Lever Release		—	1	—	1	1	—	—	—	—	—	—	2823 521
	All	8	—	—	—	—	—	1	1	—	—	—	—	3748 416
	Except C-S	8	—	—	—	—	—	—	—	1	1	1	—	3748 416
	Pin, Lever Knob		—	1	—	1	1	—	—	—	—	—	—	455 919
	WASHER, Knob Silencing	8	—	—	—	—	—	1	1	1	1	1	—	3748 437
4-25-6	PAD, Pedal, All		—	1	—	1	1	1	1	1	1	1	1	2467 514
4-25-7	SPRING, Pedal Return		—	1	—	1	1	—	—	—	—	—	—	3748 431
	All	8	—	—	—	—	—	1	1	1	1	1	1	3748 407
	Auxiliary Release Lever, C-S	8	—	—	—	—	—	—	—	—	—	1	—	3748 425
	All	8	—	—	—	—	—	—	—	—	—	—	1	3748 425
	Lever Pawl Return, Up to 4-1-74	8	—	—	—	—	—	1	1	1	1	1	1	3748 409
	After 4-1-74	8	—	—	—	—	—	1	1	1	1	1	1	3748 443
	Lever Release Arm Return, All	8	—	—	—	—	—	1	1	—	—	—	—	3748 412
	Except C-S	8	—	—	—	—	—	—	—	1	1	1	—	3748 412
4-25-9	BUMPER, Pedal Stop, All		—	1	—	1	1	—	—	—	—	—	—	2467 567
4-25-10	BUSHING, Lever Release Rod All		—	1	—	1	1	—	—	—	—	—	—	2260 223
4-25-14	TUBE, Lever Release Knob, All	8	—	—	—	—	—	1	1	—	—	—	—	3748 417
	Except C-S	8	—	—	—	—	—	—	—	1	1	1	—	3748 417
4-25-20	VALVE, Vacuum Release, C-S	8	—	—	—	—	—	—	—	—	—	1	—	3748 429
	All	8	—	—	—	—	—	—	—	—	—	—	1	3748 429
4-25-22	CYLINDER, Lever Vacuum, C-S	8	—	—	—	—	—	—	—	—	—	1	—	3748 426
	All	8	—	—	—	—	—	—	—	—	—	—	1	3748 426
4-25-23	BEZEL, Pedal Pad, All		—	—	—	—	—	1	1	1	1	1	1	2467 513
4-25-26	HOSE, Vacuum Release Valve, C-S	8	—	—	—	—	—	—	—	—	—	1	—	3575 650
	All	8	—	—	—	—	—	—	—	—	—	—	1	3575 650
	Release Valve to Manifold, C-S, w/Tilt and Tel. Strg. Col.	8	—	—	—	—	—	—	—	—	—	1	—	3748 442
	All, w/o Tilt and Tel. Strg. Col.	8	—	—	—	—	—	—	—	—	—	—	1	3748 442
	C-S, w/Tilt and Tel. Strg. Col.	8	—	—	—	—	—	—	—	—	—	1	—	2467 937
	All w/Tilt and Tel. Strg. Col.	8	—	—	—	—	—	—	—	—	—	—	1	2467 937
4-25-32	GROMMET, Vacuum Hose, C-S	8	—	—	—	—	—	—	—	—	—	1	—	2277 767
	All	8	—	—	—	—	—	—	—	—	—	—	1	2277 767
4-25-36	CONNECTOR, Vacuum Hose, C-S	8	—	—	—	—	—	—	—	—	—	1	—	3575 649
	All		—	—	—	—	—	—	—	—	—	—	1	3575 649
4-26-1	**LEVER, Parking Brake Operating, w/PIN, 10" Brakes**		1	1	1	1	1	—	—	—	—	—	—	2881 660-1
	11" Brakes		—	—	—	1	1	1	1	1	1	1	—	3580 754-5
4-26-3	LEVER, w/Pin (Located in the Rear Wheel)													
	9" Brakes		1	—	1	—	—	—	—	—	—	—	—	3461 698-9
4-26-17	STRUT, LEVER, 9" Brakes		2	—	2	—	—	—	—	—	—	—	—	2781 581
	10" Brakes		2	2	2	2	2	—	—	—	—	—	—	2409 823
	11" Brakes		—	—	—	1	1	1	1	1	1	1	—	3580 750-1
4-26-18	SPRING, Lever Strut, 9" Brakes		2	—	2	—	—	—	—	—	—	—	—	2072 646
	10" Brakes		2	2	2	2	2	—	—	—	—	—	—	2533 822
	11" Brakes		—	—	—	2	2	2	2	2	2	2	—	2533 822
4-26-26	WASHER, Lever Pin		2	2	2	2	2	2	2	2	2	2	—	2072 643
4-26-27	LOCK, Lever Pin Washer		2	2	2	2	2	2	2	2	2	2	—	2072 644

CARLINES J - Challenger, B - Barracuda, V - Valiant, L - Dart, R - Satellite, W - Coronet - Charger, P - Plymouth, D - Dodge, C - Chrysler, Y - Imperial

AR Indicates use as required.

Numerals in parentheses ( ) refer to notes.

# Indicates parts not listed in any previous parts book.

★ Indicates change or addition.

Printed in U.S.A.
November, 1974

NOTES

GROUP 5 - BRAKE-SERVICE

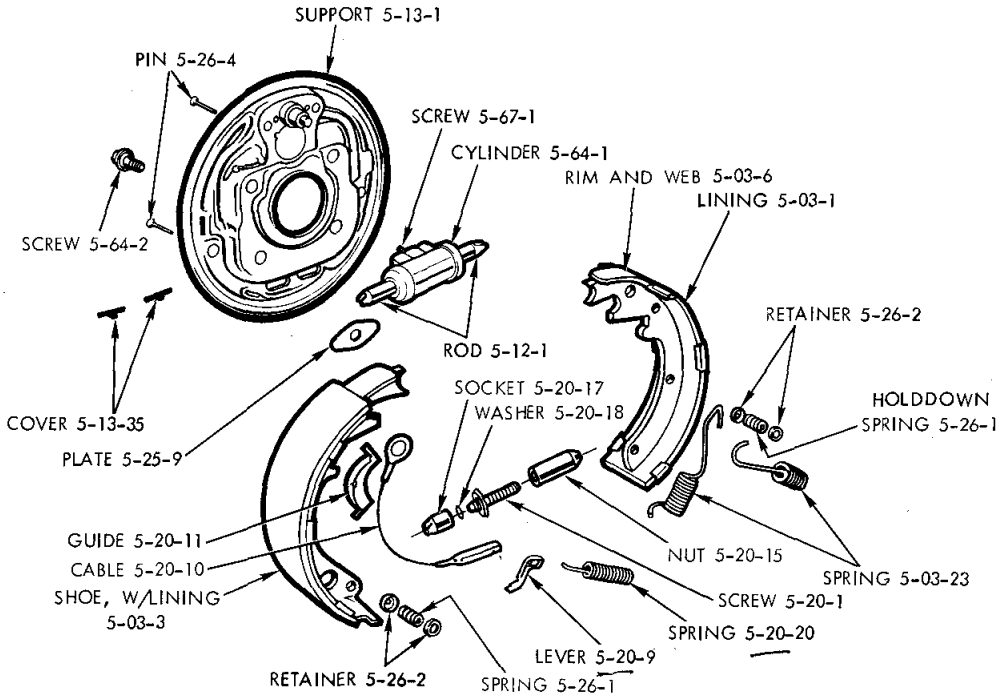

FRONT WHEEL BRAKE

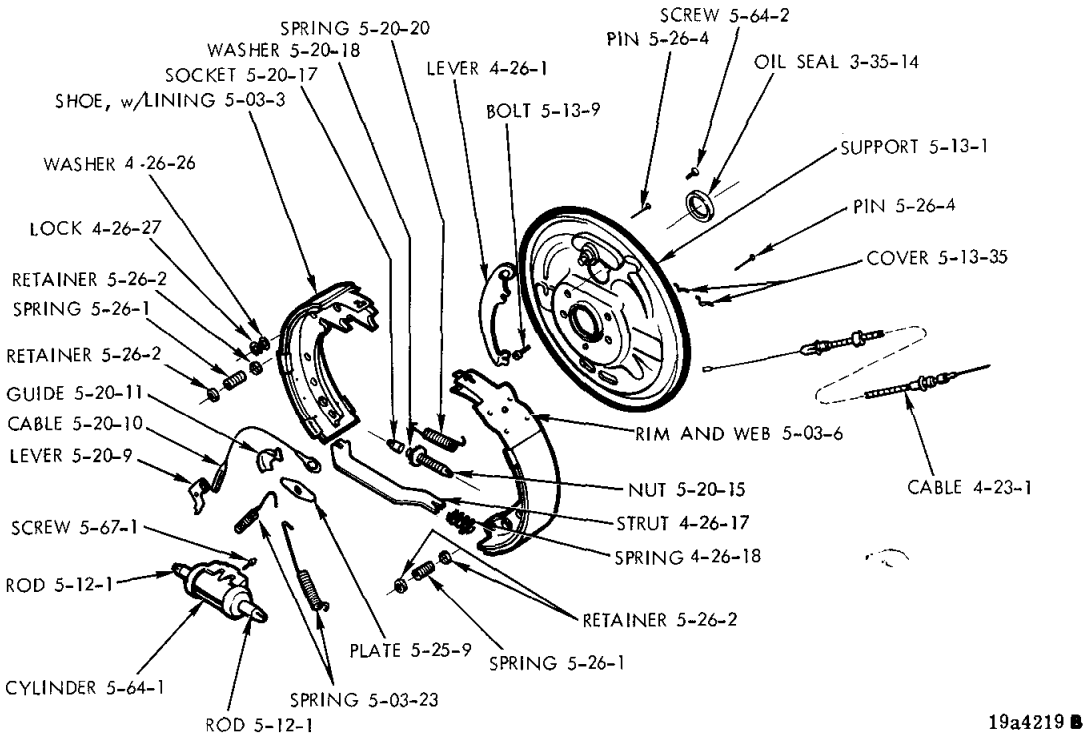

REAR WHEEL BRAKE

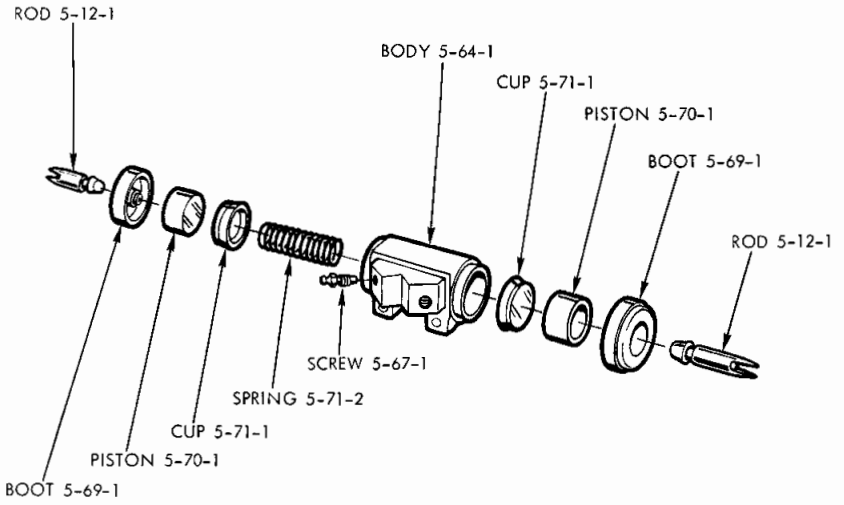

19a2879 **A**

FRONT WHEEL CYLINDER

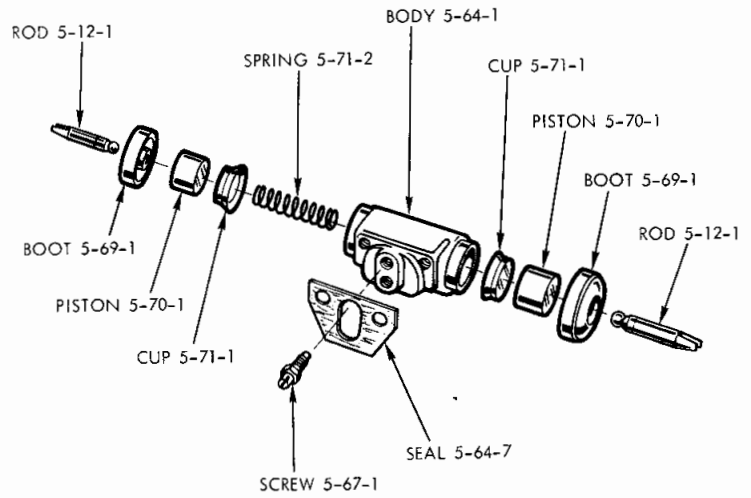

19a1099 **A**

REAR WHEEL CYLINDER

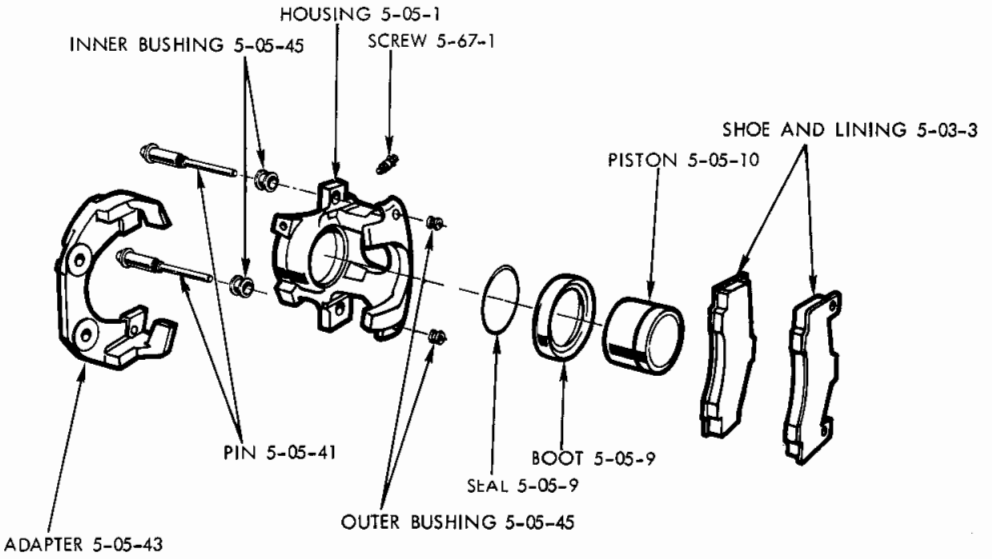

19a2432 D

PIN TYPE DISC BRAKE CALIPER - ALL EXCEPT V, L

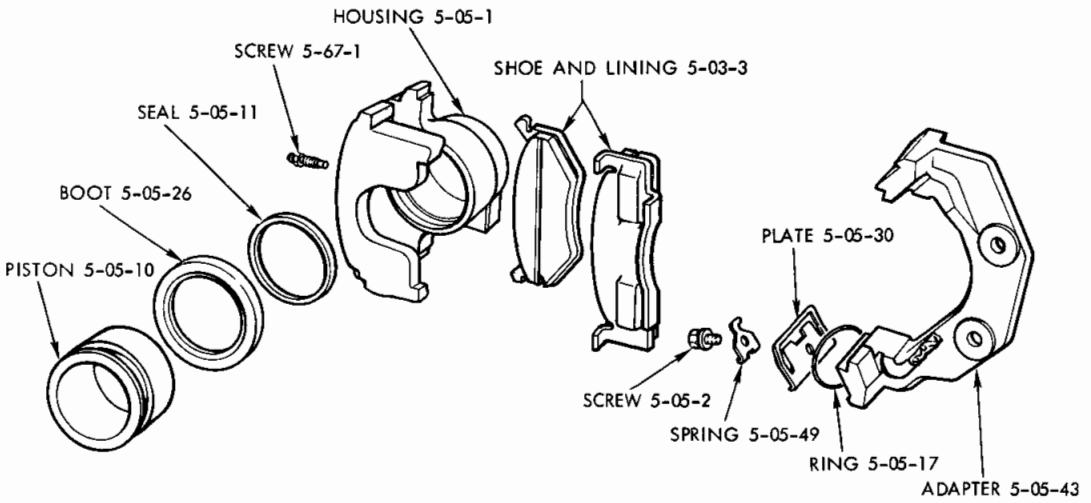

19a4293 B

SLIDER TYPE DISC BRAKE CALIPER - V, L, R, W

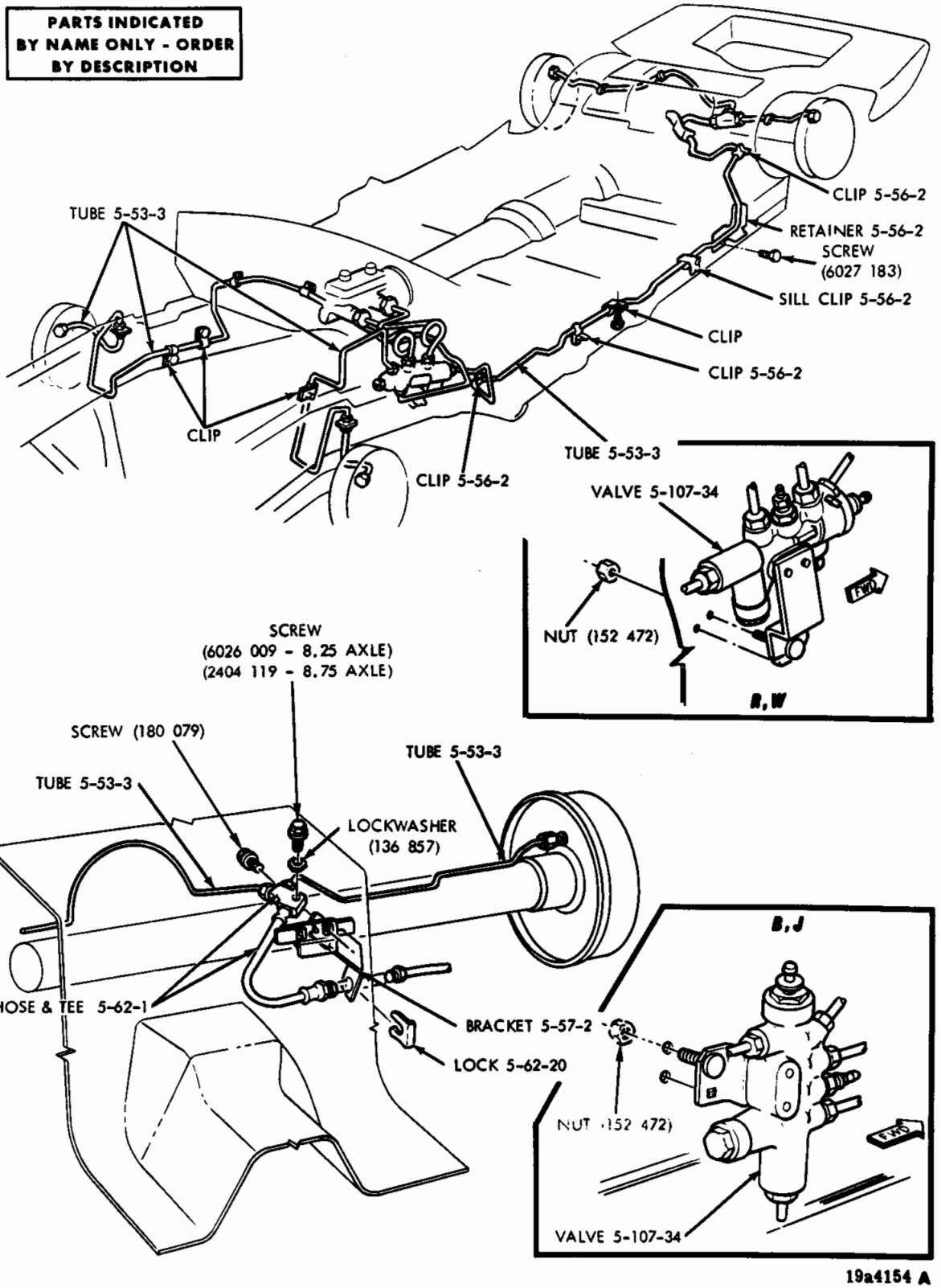

DISC BRAKE SYSTEM - B, J, R, W

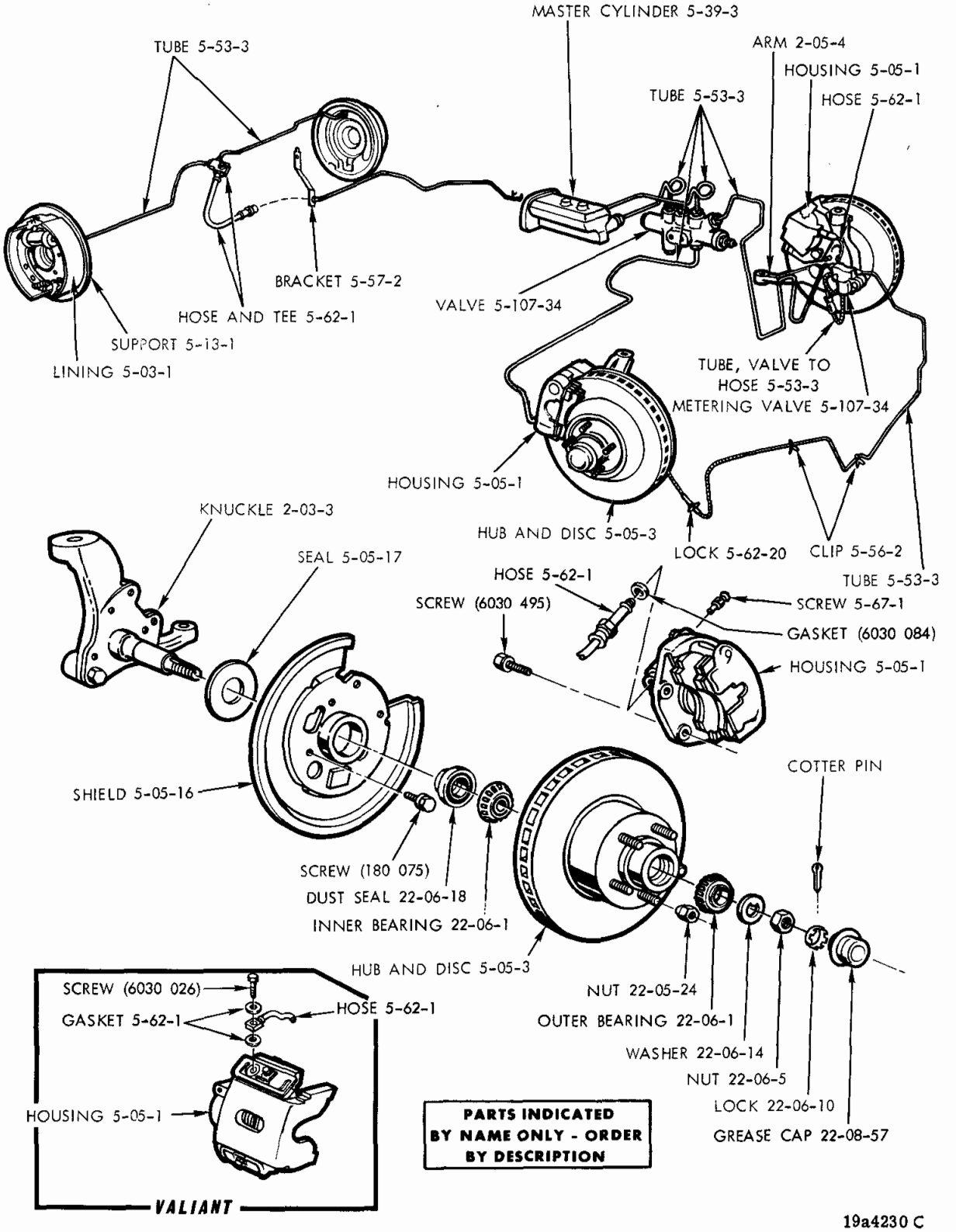
MASTER CYLINDER 5-39-3
TUBE 5-53-3
ARM 2-05-4
HOUSING 5-05-1
TUBE 5-53-3
HOSE 5-62-1
BRACKET 5-57-2
VALVE 5-107-34
HOSE AND TEE 5-62-1
SUPPORT 5-13-1
LINING 5-03-1
TUBE, VALVE TO
HOSE 5-53-3
METERING VALVE 5-107-34
HOUSING 5-05-1
HUB AND DISC 5-05-3
LOCK 5-62-20
CLIP 5-56-2
TUBE 5-53-3
KNUCKLE 2-03-3
SEAL 5-05-17
HOSE 5-62-1
SCREW (6030 495)
SCREW 5-67-1
GASKET (6030 084)
HOUSING 5-05-1
SHIELD 5-05-16
COTTER PIN
SCREW (180 075)
DUST SEAL 22-06-18
INNER BEARING 22-06-1
HUB AND DISC 5-05-3
NUT 22-05-24
OUTER BEARING 22-06-1
WASHER 22-06-14
NUT 22-06-5
LOCK 22-06-10
GREASE CAP 22-08-57
SCREW (6030 026)
GASKET 5-62-1
HOSE 5-62-1
HOUSING 5-05-1
VALIANT
PARTS INDICATED
BY NAME ONLY - ORDER
BY DESCRIPTION
19a4230 C

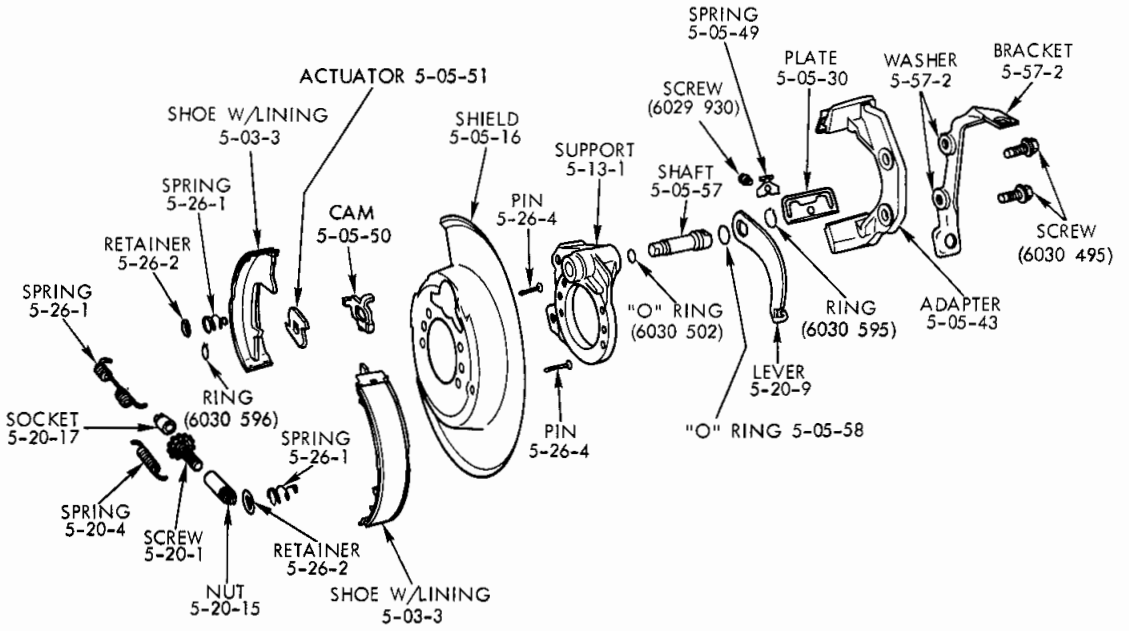

19a4725A

REAR WHEEL DISC BRAKE AND PARKING BRAKE - Y

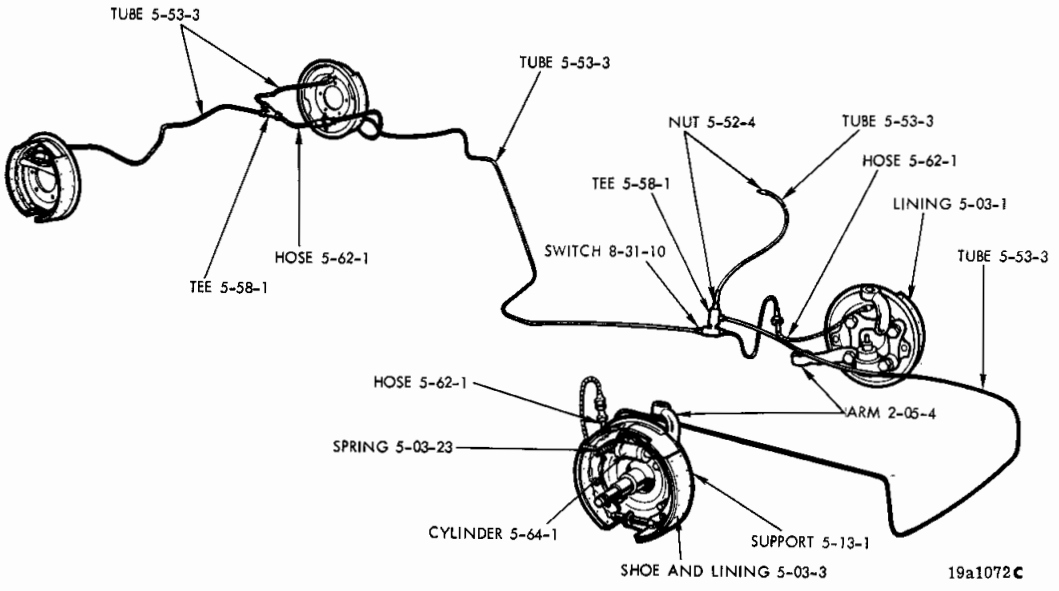

19a1072C

HYDRAULIC BRAKE SYSTEM - ALL

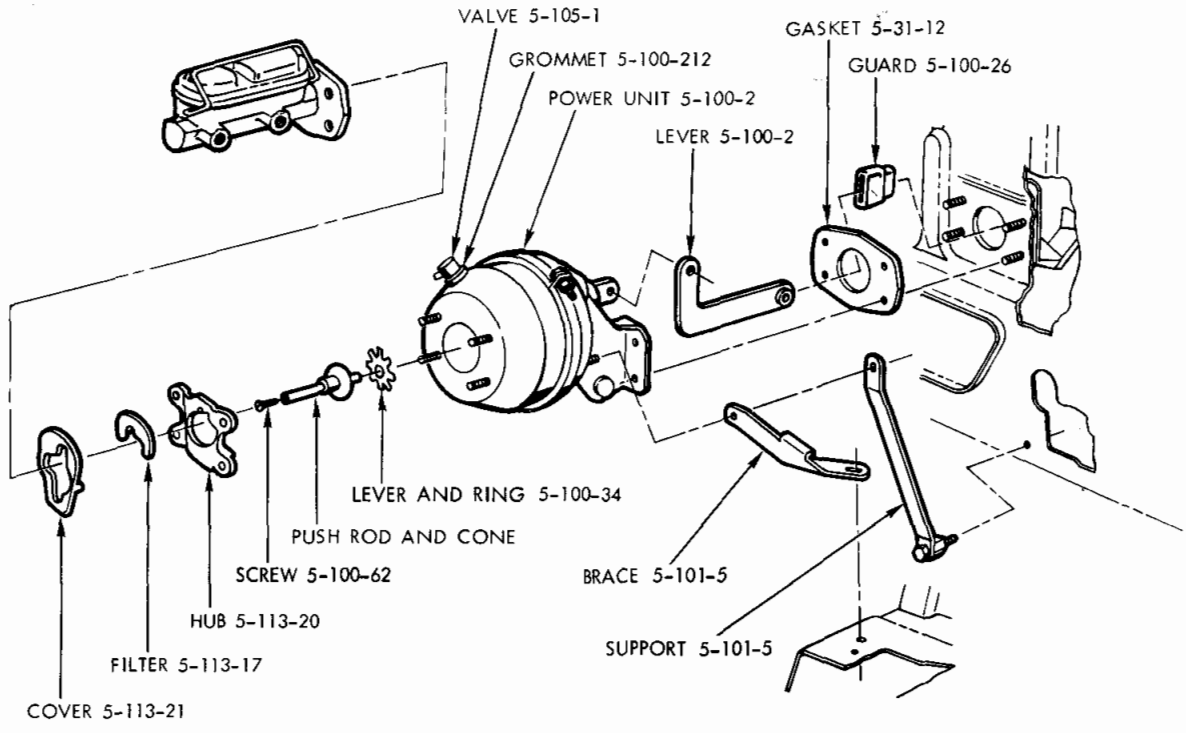

POWER BRAKE UNIT - V, L

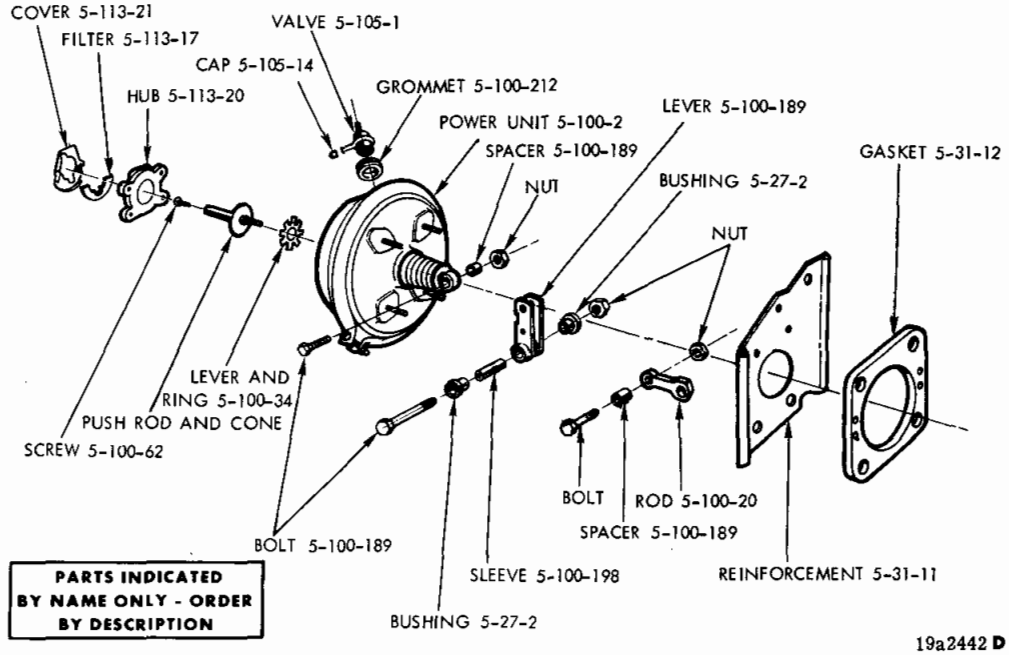

POWER BRAKE UNIT - B, J, R, W
(TYPICAL OF P, D, C, Y)

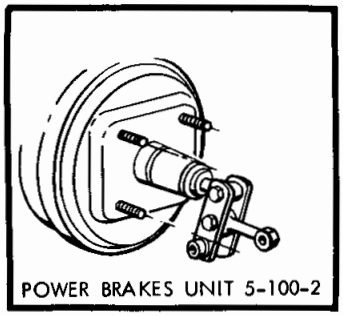

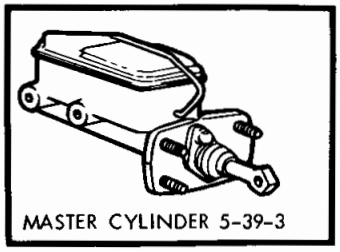

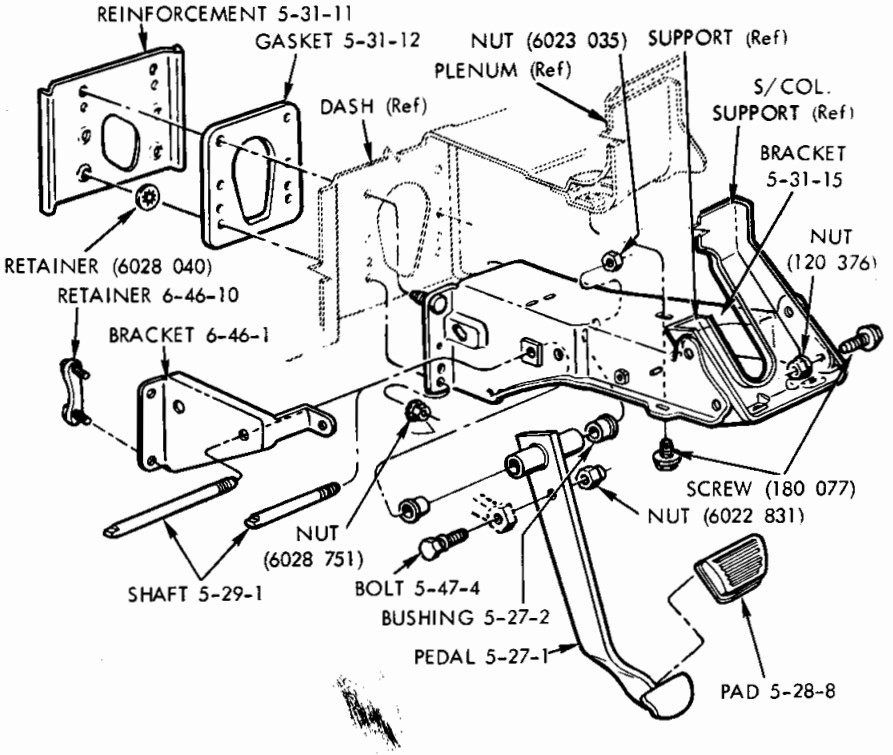

PARTS INDICATED BY NAME ONLY - ORDER BY DESCRIPTION

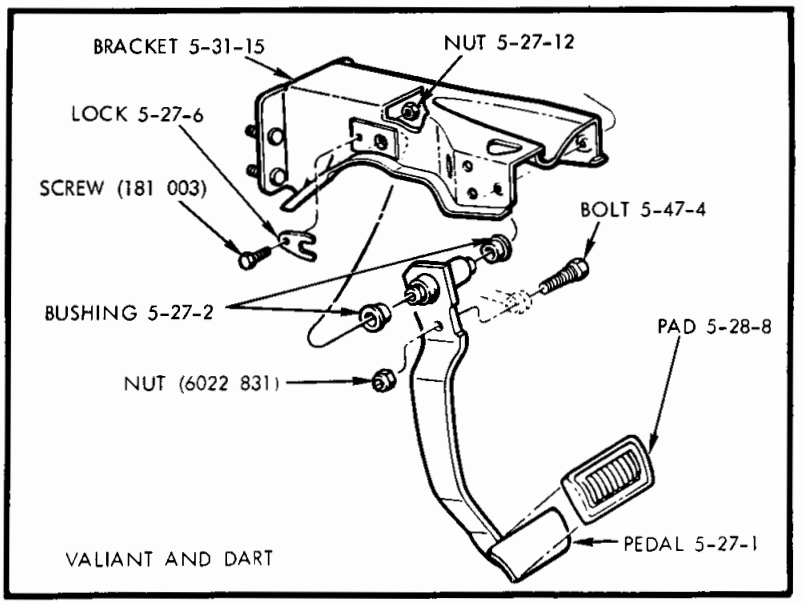

19a3378 B

BRAKE PEDAL AND LINKAGE - V, L, B, J, R, W

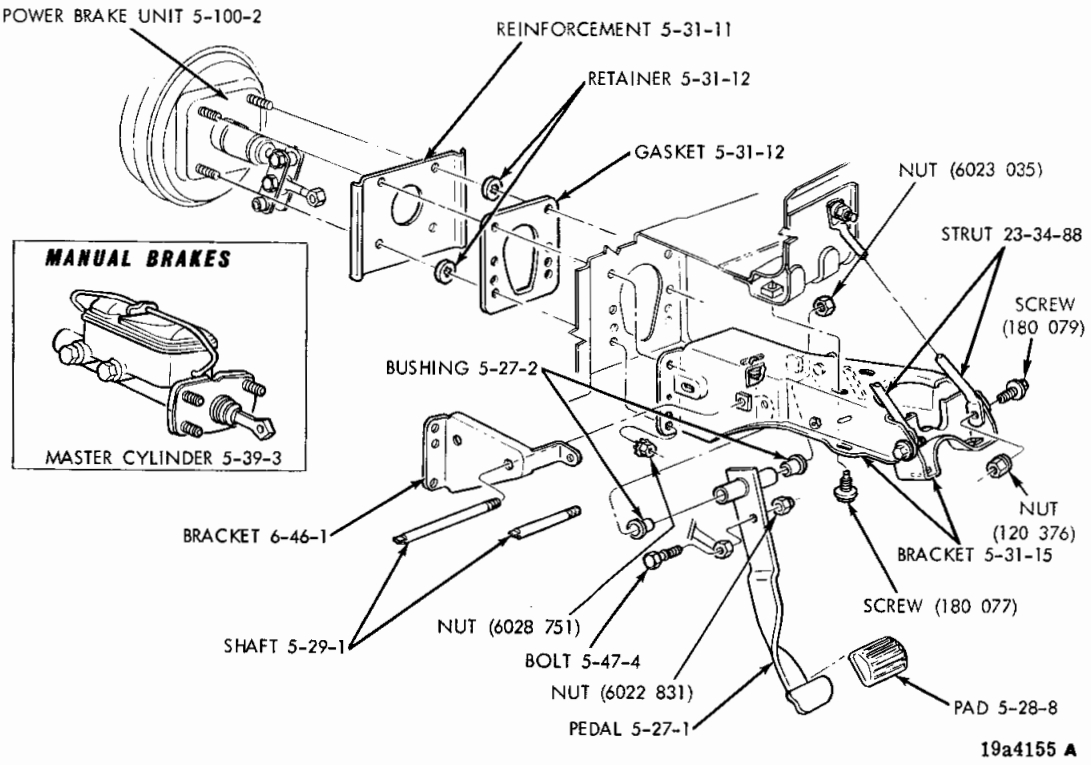

BRAKE PEDAL AND BRACKET - R, W

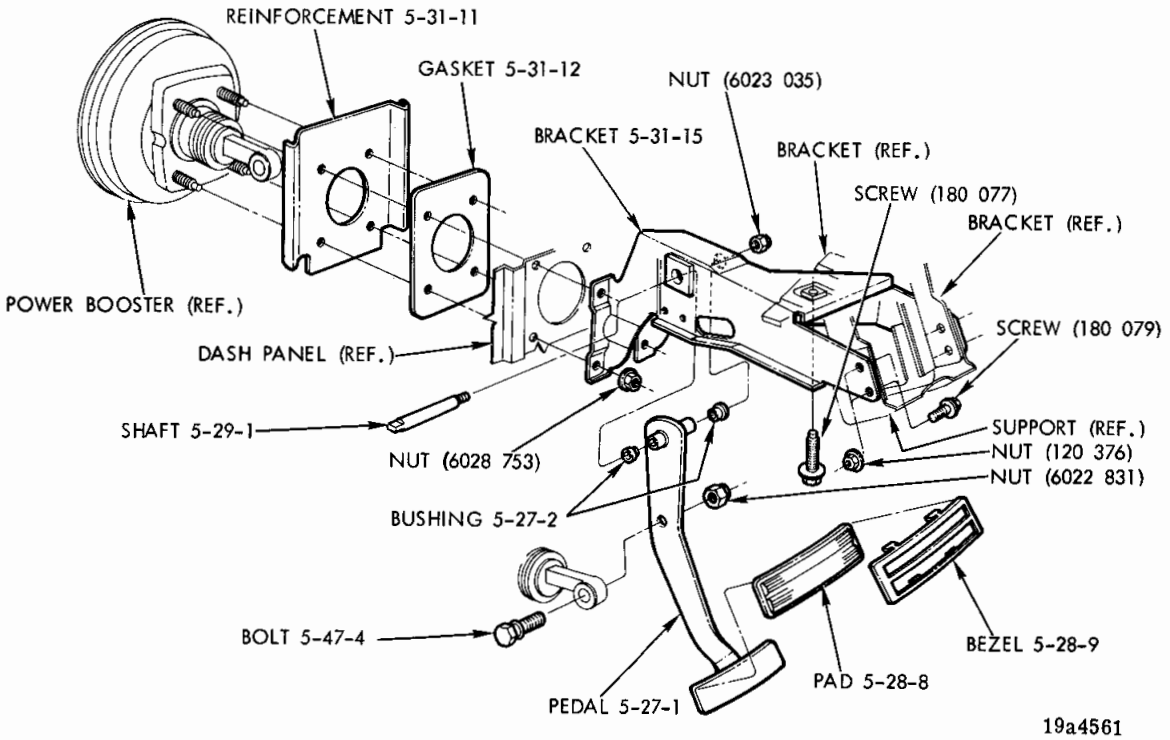

BRAKE PEDAL AND BRACKET - POWER - P, D, C, Y

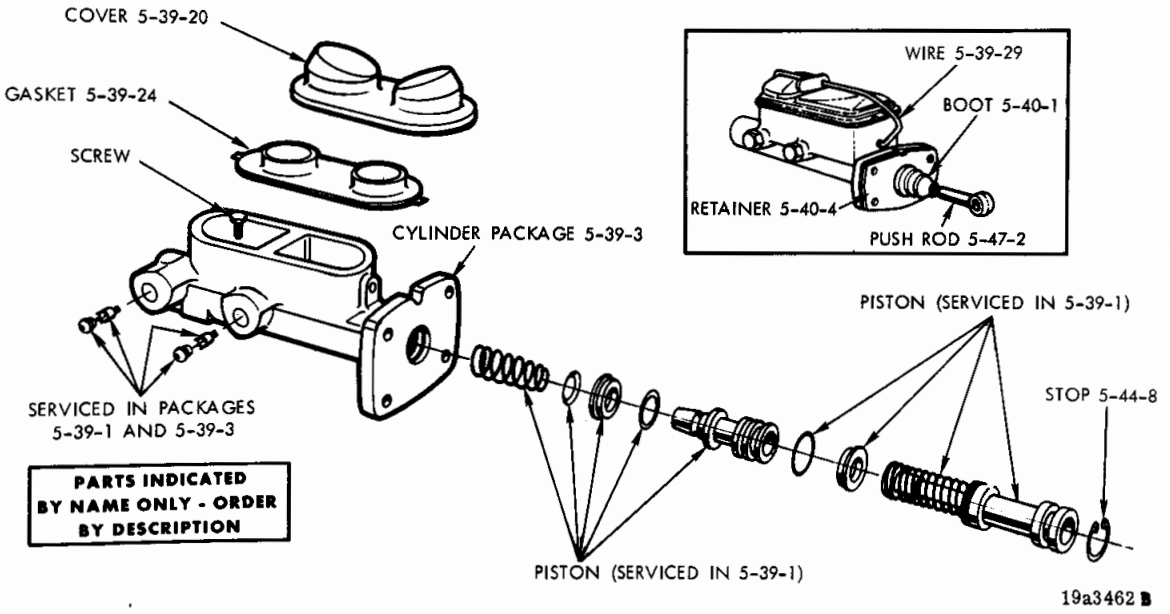

MASTER CYLINDER WITH DRUM BRAKES

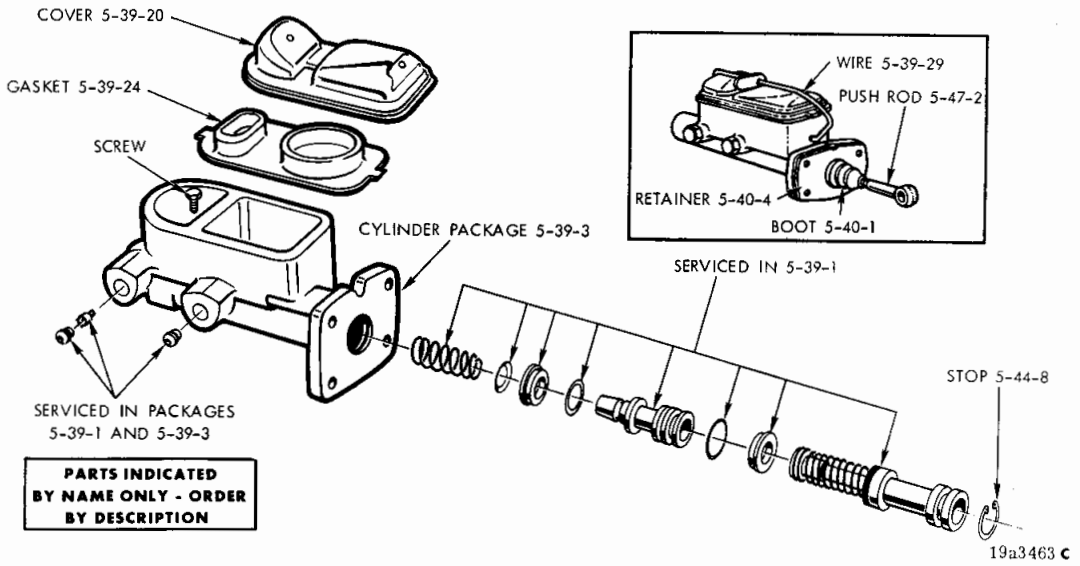

MASTER CYLINDER WITH DISC BRAKES

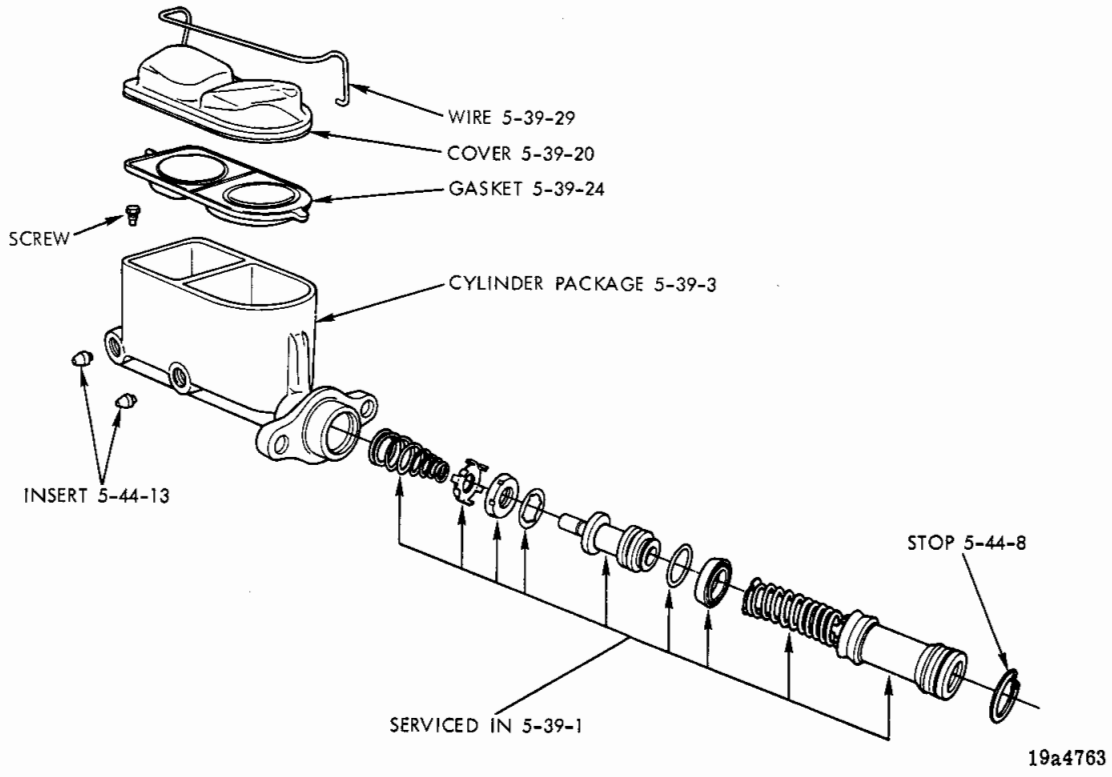

MASTER CYLINDER - IMPERIAL

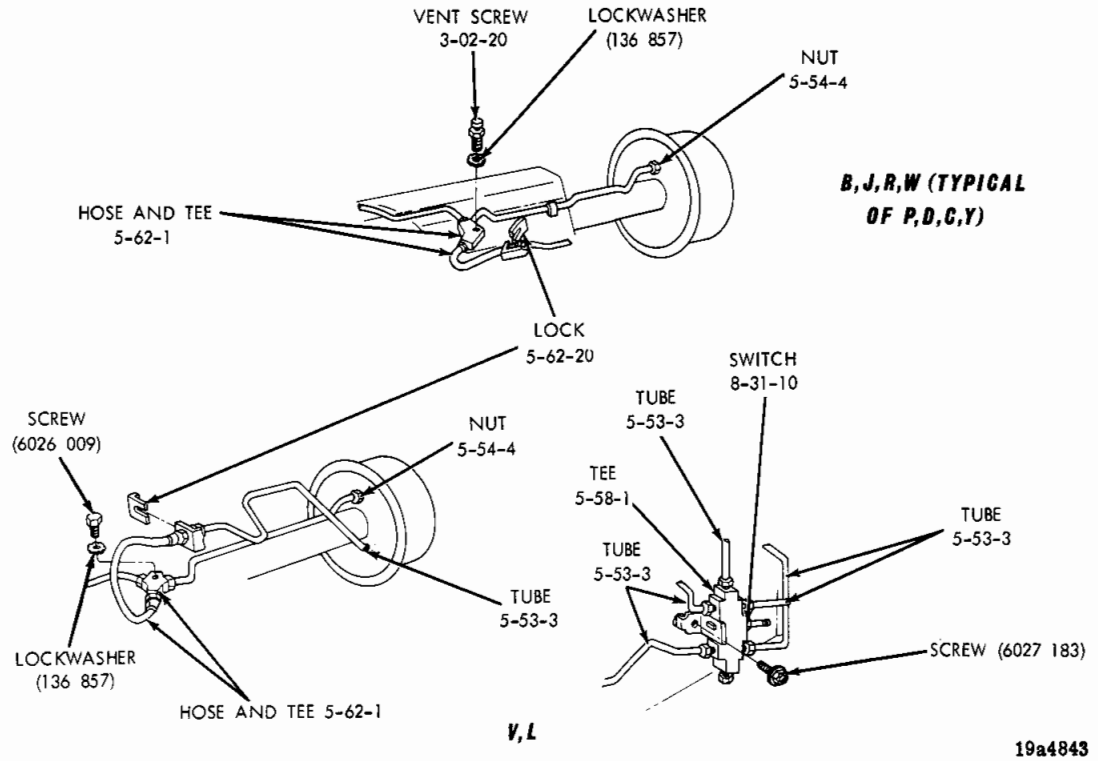

BRAKE LINES

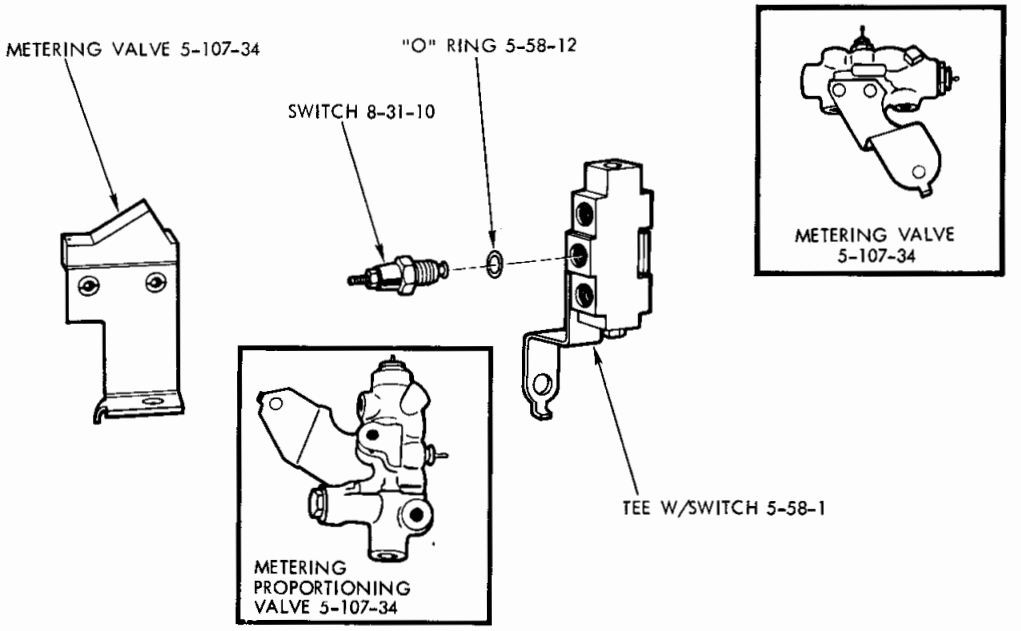

19a5023

TEE AND VALVES

NOTES

VACUUM HOSES - 5-111-17

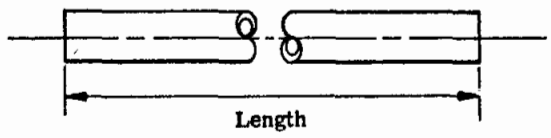

CAR LINE	ENGINE	LENGTH (STRAIGHT HOSE)
V, L	198, 225, 318	14.00 Inches
B, J, R, W	225, 318	17.50 Inches
B, J, R, W	360 4BBL	16.50 Inches
P, D, C	400-2BBL	19.00 Inches
P, D, C, Y	440*	12.00 Inches

* With air injection pump (California Only)

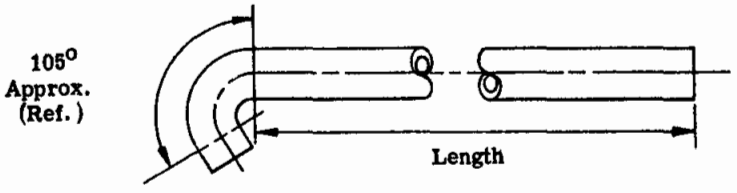

CAR LINE	ENGINE	LENGTH (PREFORMED HOSE)
V, L	360-4BBL	12.50 Inches
R, W	400-4BBL, 440	15.00 Inches
P, D, C, Y	360-2 & 4BBL, 400-4BBL, 440	18.00 Inches

Hose replacement, refer to chart for proper application by car line and engine for proper hose length. (Note: On preformed hose, cut straight section of hose for proper length.)

NOTES

GROUP 5 - SERVICE BRAKE

ADJUSTER, BRAKE SHOE 5-20
AIR CLEANER, POWER BRAKE 5-113
BOOT, MASTER CYLINDER 5-40
BOOT, WHEEL CYLINDER 5-69
BRACKET, TUBE 5-57
BRACKET, PEDAL 5-31
BRACKET, POWER UNIT MOUNTING 5-101
BRAKES, DISC 5-05
CASE, TRAILER BRAKE CONTROLLER 5-124
CLIP, TUBE 5-56
CONNECTOR, POWER BOOSTER VACUUM 5-105
CUP, WHEEL CYLINDER PISTON 5-71
FLUID 5-01
GUIDE, SHOE 5-25
HOSE, FLEXIBLE 5-62
HOSE, POWER BOOSTER VACUUM 5-111
INSERT, WHEEL CYLINDER TUBE 5-66
MASTER CYLINDER 5-39
PAD, PEDAL 5-28
PEDAL AND BUSHING 5-27
PISTON, MASTER CYLINDER 5-44
PISTON, WHEEL CYLINDER 5-70
POWER BRAKE 5-100
PUSH ROD, MASTER CYLINDER 5-47
PUSH ROD, WHEEL CYLINDER 5-12
REPAIR PACKAGE, WHEEL CYLINDER 5-63
SCREW, WHEEL CYLINDER BLEEDER 5-67
SHAFT, PEDAL 5-29
SHOE AND LINING 5-03
SPRING, SHOE GUIDE 5-26
SUPPORT, WHEEL BRAKE 5-13
TEE, BRAKE TUBE 5-58
TUBE, BOOSTER CYLINDER 5-107
TUBE, FRONT WHEEL 5-55
TUBE, MASTER CYLINDER 5-52
TUBE, REAR AXLE 5-54
TUBING AND COVER 5-53
VALVE, POWER BRAKE HOSE CHECK 5-110
WHEEL CYLINDER 5-64

Printed in U.S.A.
November, 1974

CODE	PART NAME	ENG. TYPE OR CU. IN	V	B J	L	R	W	P	D	C (L M)	C (P)	C (H S)	Y	PART NUMBER
5-01-2	**FLUID, Brake Hi Temp.**													
	12 oz.		AR	AR	AR	AR	AR	AR	AR	AR	AR	AR	AR	2933 249
	1 Quart		AR	AR	AR	AR	AR	AR	AR	AR	AR	AR	AR	2933 250
	1 Gallon		AR	AR	AR	AR	AR	AR	AR	AR	AR	AR	AR	2933 251
	5 Gallon		AR	AR	AR	AR	AR	AR	AR	AR	AR	AR	AR	2933 252
	FLUID, Brake Heavy Duty,													
	1 Gallon	CANADA	AR	AR	AR	AR	AR	AR	AR	AR	AR	AR	AR	3455 132
	5 Gallon	CANADA	AR	AR	AR	AR	AR	AR	AR	AR	AR	AR	AR	3455 133
	Super Heavy Duty,													
	12 oz.	CANADA	AR	AR	AR	AR	AR	AR	AR	AR	AR	AR	AR	2458 412
	1 Gallon	CANADA	AR	AR	AR	AR	AR	AR	AR	AR	AR	AR	AR	2458 413
	5 Gallon	CANADA	AR	AR	AR	AR	AR	AR	AR	AR	AR	AR	AR	2458 414
5-03-1	**LINING PACKAGE, Wheel Brake Shoe For Bonding**													
	9" Brakes		1	—	1	—	—	—	—	—	—	—	—	3579 268
5-03-3	SHOE AND LINING PACKAGE FRONT (For One Axle)													
	10 x 2 1/2" Brakes		1	—	1	—	—	—	—	—	—	—	—	362 1985
	SHOE and LINING PACKAGE, REAR (For One Axle)													
	9 x 2" Brakes		1	—	1	—	—	—	—	—	—	—	—	3579 295
	10 x 2 1/2" Brakes		1	1	1	1	1	—	—	—	—	—	—	3621 985
	11 x 2" Brakes w/Auto. Adj.		—	—	—	—	—	1	1	—	—	—	—	3420 953
	11 x 2 1/2" Brakes w/Auto. Adj.		1	1	1	1	1	1	1	1	1	1	—	3621 986
	11 x 2 1/2" Brakes w/Man. Adj. w/Taxi Lining		—	—	—	1	1	1	1	—	—	—	—	3004 862
	SHOE and LINING PACKAGE (Axle Set) Front & Rear													
	For Disc Brakes Frt. Slider Type 4176778		1	—	1	1	1	—	—	—	—	—	—	3780 752
	For Disc Brakes Frt.		—	1	—	—	—	—	—	—	—	—	—	3780 754
	For Pwr. Disc Brakes Frt. Pin Type Caliper		—	—	—	1	1	—	—	—	—	—	—	3780 754
	For H/Duty Pwr. Disc Brakes Frt. Pin Type Caliper		—	—	—	1	1	—	—	—	—	—	—	3744 449
	For Pwr. Disc Brakes Frt. Taxi		—	—	—	1	1	—	—	—	—	—	—	3879 211
	For Pwr. Disc Brakes Frt.		—	—	clear →			1	1	1	1	1	1	3780 549
	For H/Duty Pwr. Disc Brakes Frt.		—	—	HD →			1	1	1	1	1	—	3780 755
	For Disc. Brakes Frt. Taxi		—	—	—	—	—	1	1	1	—	1	—	3879 221
	For Rr. Whl. Disc Brakes		—	—	—	—	—	—	—	—	—	—	1	3780 751
	For Rr. Whl. Disc Parking Brakes		—	—	—	—	—	—	—	—	—	—	2	3838 044
5-03-6	RIM and WEB, Front Wheel Brakes													
	10" Brakes		4	—	4	—	—	—	—	—	—	—	—	2880 529
	RIM and WEB, Front w/Auto. Adj. Lever Pin													
	10" Brakes		1	—	1	—	—	—	—	—	—	—	—	2944 678-9
	RIM and WEB, Rear Wheel Brakes													
	9" x 2" Brakes		4	—	4	—	—	—	—	—	—	—	—	2880 632
	10 x 2 1/2" Brakes		4	4	4	4	4	—	—	—	—	—	—	2880 529
	11 x 2" Brakes		—	—	—	—	—	4	4	—	—	—	—	2880 584
	11 x 2 1/2" Brakes		—	—	—	4	4	4	4	4	4	4	—	2880 585
	RIM and WEB, Rr. w/Auto. Adj. Lever Pin													
	9 x 2" Brakes		1	—	1	—	—	—	—	—	—	—	—	2944 684-5
	10 x 2 1/2" Brakes		1	1	1	1	1	—	—	—	—	—	—	2944 678-9
	11 x 2" Brakes		—	—	—	—	—	1	1	—	—	—	—	2944 688-9
	11 x 2 1/2" Brakes		—	—	—	1	1	1	1	1	1	1	—	2944 690-1
5-03-23	SPRING, Brake Shoe Return FRONT and REAR													
	9" Brakes		4	—	4	—	—	—	—	—	—	—	—	2881 676
	10" Brakes (Primary)		4	2	4	2	2	—	—	—	—	—	—	2267 044
	10" Brakes (Secondary)		4	2	4	2	2	—	—	—	—	—	—	2260 835
	11 x 2" Rr. Brakes		—	—	—	4	4	4	4	4	4	4	—	2260 789
	11 2 1/2" Rr. Brakes		—	—	—	4	4	4	4	—	—	—	—	2768 024

CARLINES: J - Challenger, B - Barracuda, V - Valiant, L - Dart, R - Satellite, W - Coronet - Charger, P - Plymouth, D - Dodge, C - Chrysler, Y - Imperial

AR Indicates use as required.

Numerals in parentheses ( ) refer to notes.

# Indicates parts not listed in any previous parts book.

★ Indicates change or addition.

Printed in U.S.A.
November, 1974

CODE	PART NAME	ENG. TYPE OR CU. IN	V	B J	L	R	W	P	D	C (L M)	C (P)	C (H S)	Y	PART NUMBER
5-05-1	**HOUSING, Frt. Whl. Disc Brake**													
	(Partl.) Slider Type		1	—	1	—	—	—	—	—	—	—	—	3699 968-9
	E Body (Partl.)		—	1	—	—	—	—	—	—	—	—	—	3580 852-3
	B Body (Partl.) Pin Type Caliper		—	—	—	1	1	—	—	—	—	—	—	3580 854-5
	Slider Type Caliper	Rt.	—	—	—	1	1	—	—	—	—	—	—	3699 968
		Lt.	—	—	—	1	1	—	—	—	—	—	—	3699 969
	C Body (Partl.)		—	—	—	—	—	1	1	1	1	1	1	3699 892-3
	C Body (Partial) Rear		—	—	—	—	—	—	—	—	—	—	2	3699 969
5-05-2	SCREW, Frt. Whl. Disc Brake Hsg. Ret. Mtg. Slider Type		4	—	4	4	4	4	4	4	4	4	4	6029 930
	Rr. Whl.		—	—	—	—	—	—	—	—	—	—	4	6029 930
	SCREW & WASHER to Knuckle Mtg.		4	4	4	4	4	—	—	—	—	—	—	6028 323
			—	—	—	—	—	4	4	4	4	4	4	6030 495
5-05-3	HUB w/DISC, Frt. Whl.		2	2	2	2	2	—	—	—	—	—	—	3780 527
			—	—	—	—	—	2	2	2	2	2	2	3780 528
5-05-7	DISC, Rr. Whl. Brk.-Fl		—	—	—	—	—	—	—	—	—	—	2	3699 699
5-05-8	SPRING, Frt. Whl. Dis													
	Outer Shoe		—	2	—	2	2	—	—	—	—	—	—	3461 894
5-05-9	SEAL, Boot and Bush ackage													4016123
	Pin Type Caliper		—	2	—	2	2	—	—	—	—	—	—	3579 255 1
	Boot and Seal Package		—	—	—	—	—	2	2	2	2	2	2	3780 533
5-05-10	PISTON, Frt. Whl. Disc Brake Slider Type		2	—	2	2	2	—	—	—	—	—	—	3580 795
	Pin Type Caliper		—	2	—	2	2	—	—	—	—	—	—	2925 201
			—	—	—	—	—	2	2	2	2	2	2	3580 819
	Rr. Whl. Disc Brk.		—	—	—	—	—	—	—	—	—	—	2	3580 795
5-05-11	SEAL, Frt. Whl. Disc Brake Piston Slider Type		2	—	2	2	2	—	—	—	—	—	—	3580 796
			—	—	—	—	—	2	2	2	2	2	2	3580 820
	Rr. Whl.		—	—	—	—	—	—	—	—	—	—	2	3580 796
5-05-16	SHIELD, Frt. Whl. Disc Brake Splash Rt.		1	1	1	—	—	—	—	—	—	—	—	3580 827
	Lt.		1	1	1	—	—	—	—	—	—	—	—	3580 826
			—	—	—	1	1	—	—	—	—	—	—	3580 826-7
	Rt. Up to April 1974		—	—	—	—	—	1	1	1	1	1	1	3699 880
	Rt. After April 1974		—	—	—	—	—	1	1	1	1	1	1	3766 668
	Lt. Up to April 1974		—	—	—	—	—	1	1	1	1	1	1	3699 881
	Lt. Up To April 1974		—	—	—	—	—	1	1	1	1	1	1	3766 669
	Rr. Whl. Disc Pk./Brk. Splash		—	—	—	—	—	—	—	—	—	—	2	3699 733
5-05-17	SEAL, Frt. Whl. Brake Support To Steering Knuckle		2	—	2	—	—	—	—	—	—	—	—	2944 704
	Frt. Whl. Disc Brake Splash Shield to Knuckle		2	2	2	2	2	2	2	2	2	2	2	2944 704
	O' RING, Frt. Whl. Disc Brake Hsg. To Adapter Up To 12-17-73 Slider Type		2	—	2	2	2	2	2	2	2	2	2	6030 293
	RUBBER BAND, Frt. Whl. Disc Brk. Hsg. To Adapter After 12-17-73 Slider Type		2	—	2	2	2	2	2	2	2	2	2	3766 519
	O'RING, Rr. Whl. Disc Brk. Hsg. To Adapter Up to 12-17-73		—	—	—	—	—	—	—	—	—	—	2	6030 293
	RUBBER BAND, Rr. Whl. Disc Brk. Hsg. To Adapter After 12-17-73		—	—	—	—	—	—	—	—	—	—	2	3766 519
5-05-26	BOOT, Frt. Whl. Disc Brake Piston, Slider Type		2	—	2	2	2	—	—	—	—	—	—	3580 797
			—	—	—	—	—	2	2	2	2	2	2	3780 533
	Rr. Whl.		—	—	—	—	—	—	—	—	—	—	2	3580 797
5-05-30	PLATE, Frt. Whl. Disc Brake Retg. Slider Type		4	—	4	4	4	4	4	4	4	4	4	3580 824
	Rr. Whl.		—	—	—	—	—	—	—	—	—	—	4	3580 824

CARLINES: J - Challenger, B - Barracuda, V - Valiant, L - Dart, R - Satellite, W - Coronet - Charger, P - Plymouth, D - Dodge, C - Chrysler, Y - Imperial

AR Indicates use as required.

Numerals in parentheses ( ) refer to notes.

# Indicates parts not listed in any previous parts book.

★ Indicates change or addition.

Printed in U.S.A. November, 1974

CODE	PART NAME	ENG. TYPE OR CU. IN	V	B J	L	R	W	P	D	C (L M)	C (P)	C (H S)	Y	PART NUMBER
5-05-37	NUT, Master Cyl. to Brake Tee Frt. Tube 3/16" Tubing 7/16"-24 Thd. 9/16" o'All Lgh. 7/16" - Hex. Head Red Marking		—	1	—	—	—	—	—	—	—	—	—	2852 044
	Tee To Lt. or Rt. Hose Tube Tee		1	—	1	—	—	—	—	—	—	—	—	2852 044
	To Brake Valve Frt. Tube		—	1	—	—	—	—	—	—	—	—	—	2852 044
5-05-41	PIN AND BUSHING PACKAGE, Disc Brake Hsg. Locations, Pin Type Caliper		—	2	—	2	2	—	—	—	—	—	—	3744 477
5-05-43	ADAPTER, Frt. Whl. Disc Brake Slider Type		1	—	1	1	1	—	—	—	—	—	—	3580 778-9
	Pin Type Caliper		—	2	—	2	2	—	—	—	—	—	—	3580 839
	Up to March 25, 1974		—	—	—	—	—	2	2	2	2	2	2	3699 992
	After March 25, 1974, Rt.		—	—	—	—	—	1	1	1	1	1	1	3766 662
	After March 25, 1974, Lt.		—	—	—	—	—	1	1	1	1	1	1	3766 663
	Rr. Whl. Disc Brake		—	—	—	—	—	—	—	—	—	—	1	3580 778-9
5-05-45	BUSHING PACKAGE, Locating Pin Inner and Outer, Pin Type Caliper		—	2	—	2	2	—	—	—	—	—	—	3004 864
5-05-49	SPRING, Frt. Whl. Disc Brake Retg. Plate, Slider Type		4	—	4	4	4	4	4	4	4	4	4	3580 823
	Rr. Whl.		—	—	—	—	—	—	—	—	—	—	4	3580 823
5-05-50	CAM, Rr. Whl. Disc Pk./Brk.		—	—	—	—	—	—	—	—	—	—	2	3766 550
5-05-51	ACTUATOR, Rr. Whl. Disc Pk./Brk. Cam		—	—	—	—	—	—	—	—	—	—	2	3766 551
5-05-55	COVER, Rr. Whl. Disc Brk. Bridge		—	—	—	—	—	—	—	—	—	—	2	3699 850
5-05-56	RETAINER, Rr. Whl. Disc Brk. Bridge													
	Cover		—	—	—	—	—	—	—	—	—	—	2	3699 849
	Rr. Whl. Brk. Disc to Axle Shaft		—	—	—	—	—	—	—	—	—	—	6	6026 430
5-05-57	SHAFT, Rr. Whl. Disc Pk./Brk.		—	—	—	—	—	—	—	—	—	—	2	3766 515
5-05-58	"O" RING, Rr. Whl. Disc Brk. Shaft Inner		—	—	—	—	—	—	—	—	—	—	2	1855 328
5-12-1	**ROD, Wheel Brake Cyl. Piston**		4	4	4	4	4	4	4	4	4	4	—	3633 898
5-13-1	**SUPPORT, Frt. Wheel Brake** 10" Brakes		2	—	2	—	—	—	—	—	—	—	—	3699 607
	SUPPORT, Rr. Wheel Brake 9" Brakes		1	—	1	—	—	—	—	—	—	—	—	2880 568-9
	10 x 2 1/2" Brakes		2	2	2	2	2	—	—	—	—	—	—	3699 601
	11 x 2" Brakes		—	—	—	—	—	2	2	—	—	—	—	3699 602
	11 x 2 1/2" Brakes		—	—	—	2	2	2	2	2	2	2	—	3699 603
	Rr. Whl. Disc Pk./Brk. Fin		—	—	—	—	—	—	—	—	—	—	2	3699 731
5-13-7	GASKET, Axle Hsg. Brake Support Plate 7/64" Thk. 2.74" I.D. w/9 x 2" Brakes w/7 1/4" Axle		4	—	4	—	—	—	—	—	—	—	—	2467 095
	7/64" Thk. 2.87" I.D. w/7 1/4" Axle w/10 x 2 1/2" Brakes Outer		2	—	2	—	—	—	—	—	—	—	—	2070 933
	Rr. Axle Drive Shaft Brg. Ret. w/8 3/4" Axle 7/64" Thk. 2.87" I.D.		—	2	—	2	2	—	—	—	—	—	—	2070 933
5-13-9	BOLT, Frt. Wheel Brake Mtg. Upper		4	—	4	—	—	—	—	—	—	—	—	6029 354
	Lower		4	—	4	—	—	—	—	—	—	—	—	6029 848
	LOCKWASHER, Frt. Whl. Brk. Mtg. Bolt Upper		4	—	4	—	—	—	—	—	—	—	—	6028 748
	Rr. Whl. Brake Mtg. w/Teeth w/8 3/4" Axle		—	10	—	10	10	—	—	—	—	—	—	2404 164
	Rr. Whl. Brake Mtg. w/7 1/4" Axle w/10 x 2 1/2" Brakes		10	—	10	—	—	—	—	—	—	—	—	3507 259
	w/7 1/4" Axle w/9 x 2" Brakes		8	—	8	—	—	—	—	—	—	—	—	3507 259
	w/8 1/4/8 3/8" Axle		8	—	8	8	8	8	8	8	8	8	—	3507 259
	w/9 1/4" Axle		—	—	—	—	—	8	8	8	8	8	8	3723 151
	w/9 1/4" Axle Sta. Wgn.		—	—	—	8	8	—	—	—	—	—	—	3723 151

CARLINES: J - Challenger, B - Barracuda, V - Valiant, L - Dart, R - Satellite, W - Coronet - Charger, P - Plymouth, D - Dodge, C - Chrysler, Y - Imperial

AR Indicates use as required.

Numerals in parentheses ( ) refer to notes.

Printed in U.S.A.

# Indicates parts not listed in any previous parts book.

★ Indicates change or addition.

November, 1974

CODE	PART NAME	ENG. TYPE OR CU. IN	V	B J	L	R	W	P	D	C (L M)	C (P)	C (H S)	Y	PART NUMBER
5-13-10	NUT, Frt. Whl. Brake Mtg. Bolt													
	Upper		4	—	4	—	—	—	—	—	—	—	—	6030 473
	Lower		4	—	4	—	—	—	—	—	—	—	—	6029 929
	Rr. Whl. Brake Mtg. Bolt Rt. w/8 3/4" Axle		—	1	—	1	1	—	—	—	—	—	—	2404 168
5-13-35	COVER, Whl. Brake Adj. Screw Hole		8	4	8	4	4	4	4	4	4	4	—	2072 614
	Rr. Whl. Disc Pk./Brk. Adj. Screw Hole		—	—	—	—	—	—	—	—	—	—	2	3699 705
5-20-1	**SCREW, Wheel Brake**													
	Man. Adj.		—	—	—	2	2	2	2	—	—	—	—	2265 201
	Auto. Adj.		2	1	2	1	1	1	1	1	1	1	—	2881 686-7
	Rr. Whl. Disc Pk./Brk. Man. Adj.		—	—	—	—	—	—	—	—	—	—	2	2072 651
5-20-4	SPRING, Man. Adj. Screw Lock		—	—	—	2	2	2	2	—	—	—	—	2944 844
	Rr. Whl. Disc Pk./Brk.		—	—	—	—	—	—	—	—	—	—	2	3766 513
5-20-9	LEVER, Auto. Adj.		4	2	4	2	2	2	2	2	2	2	—	3461 665
	Rr. Whl. Disc Pk./Brk. Up To 10-19-73		—	—	—	—	—	—	—	—	—	—	2	3699 737
	After 10-19-73		—	—	—	—	—	—	—	—	—	—	2	3766 556
5-20-10	CABLE, Auto. Adj.													
	9" Brakes		2	—	2	—	—	—	—	—	—	—	—	3461 662
	10" Brakes		4	2	4	2	2	—	—	—	—	—	—	3461 663
	11" Brakes		—	—	—	2	2	2	2	2	2	2	—	3461 664
	Rr. Whl. Disc Pk./Brk.		—	—	—	—	—	—	—	—	—	—	1	3699 734-5
5-20-11	GUIDE, Auto. Adj. Cable		4	2	4	2	2	2	2	2	2	2	—	2260 793
5-20-15	NUT, Auto. Adj. Pivot Screw													
	Auto. Adj.		2	1	2	1	1	1	1	1	1	1	—	2944 692-3
	Rr. Whl. Disc Pk./Brk. Man. Adj. Screw Lock		—	—	—	—	—	—	—	—	—	—	2	2072 730
	NUT, Screw Lock, Man. Adj.		—	—	—	2	2	2	2	—	—	—	—	2260 671
5-20-17	BUTTON, Auto. Adj.		4	2	4	2	2	2	2	2	2	2	—	2944 586
	SOCKET, Man. Adj. Screw		—	—	—	2	2	2	2	—	—	—	—	2265 068
	Socket, Rr. Whl. Disc Pk./Brk.													
	Man. Adj. Screw		—	—	—	—	—	—	—	—	—	—	2	2072 725
5-20-18	WASHER, Auto. Adj. Button		4	2	4	2	2	2	2	2	2	2	—	6027 559
5-20-20	SPRING, Auto. Adj. Lever		4	2	4	2	2	2	2	2	2	2	—	2944 580-1
	9" Brakes		2	—	2	—	—	—	—	—	—	—	—	2880 593
	10" Brakes		4	2	4	2	2	—	—	—	—	—	—	2880 525
	11" Brakes		—	—	—	2	2	2	2	2	2	2	—	2880 555
	SPRING, Auto. Adj. Cable		4	2	4	2	2	2	2	2	2	2	—	3461 660
5-25-9	**PLATE, Brake Shoe Guide**													
	9" Brakes		2	—	2	—	—	—	—	—	—	—	—	2881 675
	10" Brakes		4	2	4	2	2	—	—	—	—	—	—	2267 045
	11" Brakes		—	—	—	2	2	2	2	2	2	2	—	2260 788
5-26-1	**SPRING, Brake Shoe Hold Down**													
	9", 10" and 11" Brakes		8	4	8	4	4	4	4	4	4	4	—	2260 791
	Rr. Whl. Disc Pk./Brk. Shoe Hold Down		—	—	—	—	—	—	—	—	—	—	4	3699 718
	Rr. Whl. Disc Pk./Brk. Shoe Return		—	—	—	—	—	—	—	—	—	—	2	3699 719
5-26-2	RETAINER, Hold Down Spring													
	9", 10" and 11" Brakes		8	4	8	4	4	4	4	4	4	4	4	2260 792
5-26-4	PIN, Hold Down Spring													
	2 1/8" Lgh. Fig. 12 Stamped on Head		—	—	—	—	—	4	4	—	—	—	—	2405 720
	2 11/32" Lgh. Fig. 1 Stamped on Head		8	4	8	4	4	4	4	4	4	4	—	2260 548
	Rr. Whl. Disc Pk./Brk. Shoe Hold Down		—	—	—	—	—	—	—	—	—	—	4	3699 717
5-27-1	**PEDAL, Brake**													
	w/Man. Trans. w/198, 225, 318 Eng.		1	—	1	—	—	—	—	—	—	—	—	3748 031
	w/Man. Trans. w/360 Eng.		1	—	1	—	—	—	—	—	—	—	—	3748 033
	w/Auto. Trans.		1	—	1	—	—	—	—	—	—	—	—	3748 032
	w/Man. Trans.		—	1	—	1	1	—	—	—	—	—	—	3748 028
	w/Auto. Trans.		—	1	—	1	1	—	—	—	—	—	—	3748 055
	w/Pwr. Brakes		—	—	—	—	—	1	1	1	1	1	—	3748 046

CARLINES: J - Challenger, B - Barracuda, V - Valiant, L - Dart, R - Satellite, W - Coronet - Charger, P - Plymouth, D - Dodge, C - Chrysler, Y - Imperial

AR Indicates use as required.

# Indicates parts not listed in any previous parts book.

Numerals in parentheses ( ) refer to notes.

★ Indicates change or addition.

Printed in U.S.A.
November, 1974

CODE	PART NAME	ENG. TYPE OR CU. IN	V	B J	L	R	W	P	D	C (L M)	C (P)	C (H S)	Y	PART NUMBER
5-27-1	PEDAL Cont'd.													
	w/Trailer Brake Controller Up To 9-12-73		—	—	—	—	—	—	—	—	—	—	1	3748 046
	w/o Trailer Brake Controller After 9-12-73		—	—	—	—	—	—	—	—	—	1	1	3748 079
5-27-2	SLEEVE, Brake Pedal													
	w/198, 225, 318 Eng. w/Man., w/Auto. Trans.		1	—	1	—	—	—	—	—	—	—	—	2073 634
	V,L w/360 Eng., w/Man. Trans.		1	—	1	—	—	—	—	—	—	—	—	2883 461
	BUSHING, Brake Pedal Hub w/198, 225, 318 Eng. w/Man., w/Auto. Trans.		2	—	2	—	—	—	—	—	—	—	—	2467 771
	w/360 Eng., w/Auto. Trans.		2	—	2	—	—	—	—	—	—	—	—	2467 771
	w/360 Eng. w/Man. Trans.		2	—	2	—	—	—	—	—	—	—	—	2883 482
			—	2	—	2	2	2	2	2	2	2	2	2467 770
5-27-6	LOCK, Brake Pedal Sleeve w/198, 225, 318 Eng. w/Man. Trans.		1	—	1	—	—	—	—	—	—	—	—	2781 105
	w/360 Eng. w/Auto. Trans.		1	—	1	—	—	—	—	—	—	—	—	2781 105
	w/360 Eng. w/Man. Trans.		1	—	1	—	—	—	—	—	—	—	—	2883 463
5-27-12	NUT, Brake Pedal Sleeve Lock		1	—	1	—	—	—	—	—	—	—	—	6030 345
5-28-8	**PAD, Brake Pedal**													
	w/Auto Trans.		1	1	1	1	1	1	1	1	1	1	1	3575 101
	w/Man. Trans.		1	1	1	1	1	—	—	—	—	—	—	3467 530
5-28-9	BEZEL, Brake Pedal Pad V-P, L-P		1	—	1	—	—	—	—	—	—	—	—	3748 047
	D-P, C, Y All		—	—	—	—	—	—	1	1	1	1	1	3748 047
5-29-1	**SHAFT, Brake Pedal Pivot**													
	w/Auto. Trans.		—	1	—	1	1	—	—	—	—	—	—	3467 022
	w/Man. Trans.		—	1	—	1	1	—	—	—	—	—	—	3467 023
			—	—	—	—	—	1	1	1	1	1	1	3748 021
5-31-11	**REINFORCEMENT, Brake Pedal Bracket**													
	Power Brakes		—	1	—	1	1	—	—	—	—	—	—	2950 686
	Man. Disc Brakes		—	1	—	1	1	—	—	—	—	—	—	3575 105
			—	—	—	—	—	1	1	1	1	1	1	3748 020
5-31-12	GASKET, Bracket Reinforcement		1	—	1	—	—	—	—	—	—	—	—	3461 212
	Pedal, Bracket Reinforcement		—	—	—	—	—	1	1	1	1	1	1	3748 023
			—	1	—	1	1	—	—	—	—	—	—	2950 883
	RETAINER, Brake Bracket Reinf. & Gasket		—	2	—	2	2	—	—	—	—	—	—	6028 040
5-31-15	BRACKET, Brake Pedal													
	w/198, 225, 318 Eng. w/Man. Trans.		1	—	1	—	—	—	—	—	—	—	—	3575 191
	w/360 Eng. w/Man. Trans.		1	—	1	—	—	—	—	—	—	—	—	3575 193
	w/Power Disc Brakes		—	1	—	—	—	—	—	—	—	—	—	3467 952
	w/Man. Disc Brakes		—	1	—	—	—	—	—	—	—	—	—	3467 951
	w/o Mtg. Studs		—	—	—	1	1	—	—	—	—	—	—	3748 041
	w/Man. Disc Brakes w/Mtg. Studs		—	—	—	1	1	—	—	—	—	—	—	3748 039
			—	—	—	—	—	1	1	1	1	1	1	3748 014
5-34-1	**SPRING, Brake Petal Return** Up to May, 1974		—	—	—	1	1	—	—	—	—	—	—	3748 076
	After May, 1974		—	—	—	1	1	—	—	—	—	—	—	3748 085
5-36-1	**BRACKET, Brake Petal Return**													
	Spring, Taxi		—	—	—	1	1	—	—	—	—	—	—	3748 086
			—	—	—	—	—	1	1	1	1	1	1	3748 077
5-39-1	**MASTER CYLINDER REPAIR PACKAGE WITH DISC BRAKES**													
	w/Manual Disc Brakes		1	—	1	—	—	—	—	—	—	—	—	3744 445
	w/Power Disc Brakes		1	—	1	—	—	—	—	—	—	—	—	3744 423
	w/Manual Disc Brakes (Major) Up To 11-1-73		—	1	—	1	1	—	—	—	—	—	—	3744 467
	w/Manual Disc Brakes After 11-1-73		—	1	—	1	1	—	—	—	—	—	—	3838 013
	w/Power Disc Brakes		—	1	—	1	1	—	—	—	—	—	—	3579 260

CARLINES J - Challenger, B - Barracuda, V - Valiant, L - Dart, R - Satellite, W - Coronet - Charger, P - Plymouth, D - Dodge, C - Chrysler, Y - Imperial

AR Indicates use as required.

# Indicates parts not listed in any previous parts book.

Numerals in parentheses ( ) refer to notes.

★ Indicates change or addition.

Printed in U.S.A.
November, 1974

CODE	PART NAME	ENG. TYPE OR CU. IN	V	B J	L	R	W	P	D	C (L M)	C (P)	C (H S)	Y	PART NUMBER
5-39-1	MASTER CYLINDER REPAIR PACKAGE Cont'd.													
	w/Disc Brakes		—	—	—	—	—	1	1	1	1	1	—	3744 447
	w/Power Disc Brakes		—	—	—	—	—	—	—	—	—	—	1	3780 550
	WITH DRUM BRAKES													
	w/Manual Brakes		1	—	1	—	—	—	—	—	—	—	—	3744 445
5-39-3	MASTER CYINDER WITH DISC BRAKES													
	w/Manual Disc Brakes		1	—	1	—	—	—	—	—	—	—	—	3580 146
	w/Power Disc Brakes		1	—	1	—	—	—	—	—	—	—	—	3580 112
	w/Manual Disc Brakes		—	1	—	1	1	—	—	—	—	—	—	3580 184
	w/Manual Disc Brake Export		—	—	—	—	1	—	—	—	—	—	—	3580 184
	w/Power Disc Brakes		—	1	—	1	1	—	—	—	—	—	—	3461 176
	w/Disc Brakes		—	—	—	—	—	1	1	1	1	1	—	3580 093
			—	—	—	—	—	—	—	—	—	—	1	3580 280
	WITH DRUM BRAKES													
	10" Brakes		1	—	1	—	—	—	—	—	—	—	—	3580 209
5-39-11	BOLT, Master Cyl. Mtg. w/Man. Disc Brakes		—	AR	—	AR	AR	—	—	—	—	—	—	2260 046
5-39-18	GASKET, Master Cyl. Mtg.													
	w/Man. & Man. Disc Brakes		1	1	1	1	1	—	—	—	—	—	—	3461 212
	Power Brake Mtg. to Dash w/Pwr. Disc Brakes		1	—	1	—	—	—	—	—	—	—	—	3461 212
5-39-20	COVER, Master Cyl.													
	w/Man. Drum		1	—	1	—	—	—	—	—	—	—	—	3461 046
	w/Disc Brakes		1	1	1	1	1	—	—	—	—	—	—	2944 225
	w/Disc Brakes Up To Jan. 1974		—	—	—	—	—	1	1	1	1	1	—	3580 098
	w/Disc Brakes After Jan. 1974		—	—	—	—	—	1	1	1	1	1	—	3580 323
	w/Disc Brakes		—	—	—	—	—	—	—	—	—	—	1	3580 283
5-39-24	GASKET, Master Cyl. Cover													
	Use w/3461046 Cover		1	—	1	—	—	—	—	—	—	—	—	3461 047
	Use w/2944 225 Cover		1	1	1	1	1	—	—	—	—	—	—	2944 227
	Use w/3580098 Cover		—	—	—	—	—	1	1	1	1	1	—	3580 183
			—	—	—	—	—	—	—	—	—	—	1	3580 290
5-39-29	WIRE, Master Cyl. Cover Bail													
	w/Drum Brakes		1	—	1	—	—	—	—	—	—	—	—	3461 202
	w/Disc Brakes		1	1	1	1	1	—	—	—	—	—	—	3461 201
	w/Disc Brakes		—	—	—	—	—	1	1	1	1	1	—	3580 194
			—	—	—	—	—	—	—	—	—	—	1	3580 289
5-40-1	**BOOT, Master Cyl.**													
	w/Disc Brakes		1	1	1	1	1	—	—	—	—	—	—	1828 388
	w/Man. Drum Brakes		1	—	1	—	—	—	—	—	—	—	—	1828 388
5-40-4	RETAINER, Master Cyl. Boot													
	w/Man. & Man. Disc Brakes		1	1	1	1	1	—	—	—	—	—	—	3461 205
5-44-6	**SPRING, Master Cyl. Piston**													
			1	1	1	1	1	—	—	—	—	—	—	2944 222
5-44-8	STOP, Master Cyl. Primary Piston													
	w/Manual Disc Brakes		—	1	—	1	1	—	—	—	—	—	—	3580 190
	w/Pwr. Disc Brakes		—	1	—	1	1	—	—	—	—	—	—	6029 170
	w/Power Disc Brakes		1	—	1	—	—	—	—	—	—	—	—	6029 663
	w/10" Drum Brakes		1	—	1	—	—	—	—	—	—	—	—	6029 170
	w/Disc Brakes		—	—	—	—	—	1	1	1	1	1	—	6029 170
	w/Power Disc Brakes		—	—	—	—	—	—	—	—	—	—	1	3580 296
5-44-9	SCREW, Master Cyl. Secondary Piston Stop		1	1	1	1	1	1	1	1	1	1	—	6029 516
			—	—	—	—	—	—	—	—	—	—	1	3580 314
5-44-13	INSERT, Master Cyl. Piston Tube		—	—	—	—	—	—	—	—	—	—	2	3580 313
5-47-2	**ROD, Master Cyl. Push**													
	w/Man. Drum Brakes (Pri. Piston)		1	—	1	—	—	—	—	—	—	—	—	3580 119
	w/Man. Disc Brakes (Pri. Piston)		1	—	1	—	—	—	—	—	—	—	—	3580 119
	w/Man. Disc Brakes (Pri. Piston)		—	1	—	1	1	—	—	—	—	—	—	2944 196

CARLINES J - Challenger, B - Barracuda; V - Valiant, L - Dart; R - Satellite, W - Coronet - Charger; P - Plymouth, D - Dodge; C - Chrysler, Y - Imperial

AR Indicates use as required.

# Indicates parts not listed in any previous parts book.

Numerals in parentheses ( ) refer to notes.

★ Indicates change or addition.

Printed in U.S.A. November, 1974

CODE	PART NAME	ENG. TYPE OR CU. IN	V	B J	L	R	W	P	D	C (L M)	C (P)	C (H S)	Y	PART NUMBER
5-47-10	RING, Master Cyl. Piston Push Rod													
	w/Man. Drum Brake		1	—	1	—	—	—	—	—	—	—	—	2074 960
	w/Man. Disc Brakes		1	1	1	1	1	—	—	—	—	—	—	2074 960
5-52-4	**NUT, Master Cyl. Brake Tube**													
	To Brake Tee													
	Tube													
	FRT., 3/16" Tubing 1/2"-20 Thd.													
	3/4" O' All Lgh. 9/16" Hex Head													
	Violet Marking		AR	AR	AR	—	—	—	—	—	—	—	—	6026 887
	FRT., 3/16" Tubing 1/2"-20 Thd.													
	3/4" O' All Lgh. 9/16" Hex. Head													
	Black Marking		1	—	1	—	—	—	—	—	—	—	—	6026 436
	NUT, Master Cyl. to Metering													
	Val. Frt. Tube		—	—	—	—	—	1	1	1	1	1	1	6026 436
	FRT. Tube		—	—	—	—	—	1	1	1	1	1	1	6026 887
	RR. Tube		—	—	—	—	—	1	1	1	1	1	1	6026 888
	NUT, Master Cyl. to Brake Valve													
	Frt. Tube		1	1	1	—	—	—	—	—	—	—	—	6026 887
	Tube Frt. w/Disc Brakes		—	—	—	1	1	—	—	—	—	—	—	6026 887
	Tube Frt. w/Disc Brakes		—	—	—	1	1	—	—	—	—	—	—	6026 436
	RR. Tube		1	1	1	—	—	—	—	—	—	—	—	6026 888
	Tube Rr. w/Disc Brakes		—	—	—	1	1	—	—	—	—	—	—	6026 888
	Mtrg. Valve to Rr. Hose Tube		—	—	—	—	—	1	1	1	1	1	1	6026 888
	Brk. Valve to Rr. Hose Tube		—	2	—	2	2	—	—	—	—	—	—	6026 888
5-53-3	**TUBING, Brake 25 Foot Roll**													
	3/16" O.D.		1	1	1	1	1	1	1	1	1	1	1	1843 251
	1/4" O.D.		1	1	1	1	1	1	1	1	1	1	1	1843 252
	5/16" O.D.		1	1	1	1	1	1	1	1	1	1	1	1843 253
	3/8" O.D.		1	1	1	1	1	1	1	1	1	1	1	1843 254
5-53-4	COVER, Brake Tubing 25 Foot Roll													
	3/16" O.D. Tubing		1	1	1	1	1	1	1	1	1	1	1	1843 257
	1/4" O.D. Tubing		1	1	1	1	1	1	1	1	1	1	1	1843 258
5-54-4	**NUT, Rear Axle Brake Tube**													
	Rear Axle Brake Tube 3/16"													
	Tubing 3/8"-24 Thd. 9/16" o'All													
	Lgh. 3/8" Hex. Head		—	2	—	—	—	—	—	—	—	—	—	137 396
	Brk. Valve to Rt. Hose Tube Std.		—	1	—	1	1	—	—	—	—	—	—	2643 974
	Brk. Valve To Rt. and Lt. Hose Tube		—	1	—	1	1	—	—	—	—	—	—	2643 974
	Metering Valve To Rr. Hose Tube		—	—	—	—	—	1	1	1	1	1	1	2643 974
5-55-1	**TUBE, Brake Frt. Whl. Brake Hose to Whl. Cyl.**													
	w/10" Drum Brakes		1	—	1	—	—	—	—	—	—	—	—	3699 618-9
	NUT, Tube Cyl. End		2	—	2	—	—	—	—	—	—	—	—	6029 159
5-56-2	**CLIP, Brake Tube**													
	Brake Tee To Rr. Hose Tube Frt. Reinf.		1	—	1	—	—	—	—	—	—	—	—	2123 341
	Rr. Reinf.		1	—	1	—	—	—	—	—	—	—	—	2883 929
	Brake Tee to Rr. Hose Tube Frt.		2	—	2	—	—	—	—	—	—	—	—	2123 341
	Brake Tee to Rr. Hose Tube Rr.		3	—	3	—	—	—	—	—	—	—	—	2123 341
	Brake Tee to Rr. Hose Tube (Barb Type)		1	—	1	—	—	—	—	—	—	—	—	2207 933
	Metering Valve to Rt. Hose Tube		—	—	—	—	—	1	1	1	1	1	1	3404 625
	Master Cyl. to Brake Valve Tube		1	1	1	—	—	1	1	1	1	1	1	2465 517
	S Type Lt. To Rt. Tube		—	—	—	—	—	1	1	1	1	1	1	2925 705
	Tube Sill		—	—	—	1	1	—	—	—	—	—	—	3466 386
	RETAINER, Tube Lt.		—	—	—	1	1	—	—	—	—	—	—	3466 384
	Brk. Valve to Rr. Hose Tube		—	1	—	3	3	—	—	—	—	—	—	2123 341
5-57-2	**BRACKET, Frt. Whl. Brake Hose to Knuckle**													
	w/Drum Brakes		1	—	1	—	—	—	—	—	—	—	—	3580 986-7
	BRACKET, Frt. Whl. Brake Hose to Frame													
	w/Disc Brakes		—	—	—	—	—	2	2	2	2	2	2	3699 899
	Brake Tube Rr. Hose		—	—	—	—	—	1	1	1	1	1	1	3726 542

CARLINES: J - Challenger, B - Barracuda, V - Valiant, L - Dart, R - Satellite, W - Coronet - Charger, P - Plymouth, D - Dodge, C - Chrysler, Y - Imperial

AR Indicates use as required.

Numerals in parentheses ( ) refer to notes.

Printed in U.S.A.

November, 1974

# Indicates parts not listed in any previous parts book.

★ Indicates change or addition.

CODE	PART NAME	ENG. TYPE OR CU. IN	V	B J	L	R	W	P	D	C (L M)	C (P)	C (H S)	Y	PART NUMBER
5-57-2	BRACKET Cont'd.													
	Brake Tube Rr. Hose		—	1	—	—	—	—	—	—	—	—	—	3466 396
	Brake Tube Rr. Hose		1	—	1	—	—	—	—	—	—	—	—	3466 397
	Brake Tube Rr. Hose		—	—	—	1	1	—	—	—	—	—	—	3404 975
	Rr. Whl. Disc Pk./Brk. Cable & Hose Mtg. w/Washers Up To 2-4-74		—	—	—	—	—	—	—	—	—	—	2	3699 747
	After 2-4-74		—	—	—	—	—	—	—	—	—	—	2	3766 521
	w/o Washers		—	—	—	—	—	—	—	—	—	—	2	3699 746
	WASHER, Rr. Whl. Disc Pk./Brk. Cable & Hose Mtg. Brkt.		—	—	—	—	—	—	—	—	—	—	4	3699 745
5-58-1	**TEE, Brake Tube w/Warning Switch**													
	w/o Screw		1	—	1	—	—	—	—	—	—	—	—	3420 021
	Brake Tube Proportioning w/Disc Brakes		1	—	1	—	—	—	—	—	—	—	—	3549 947
	CLIP, Brake Tee Brkt. Wiring		—	—	—	1	1	—	—	—	—	—	—	6015 833
	NOTE: For Further Information See P.T.C. 5-107-34													
5-58-9	Switch, Brake System Indicator													
	NOTE: For Further Information See P.T.C. 8-31-10													
5-58-12	"O" RING, Brake Valve to Indicator		1	1	1	1	1	—	—	—	—	—	—	2881 984
	Metering Valve to Indicator		—	—	—	—	—	1	1	1	1	1	1	2881 984
5-62-1	**HOSE, Frt. Whl. Brake Flexible**													
	w/Drum Brakes		2	—	2	—	—	—	—	—	—	—	—	3461 736
	w/Disc Brakes		2	—	2	—	—	—	—	—	—	—	—	3461 733
	w/Disc Brakes		—	—	—	2	2	—	—	—	—	—	—	3461 734
	w/Disc Brakes		—	2	—	—	—	2	2	2	2	2	2	3461 737
	HOSE and TEE, Rear Axle Brake		1	1	1	1	1	—	—	—	—	—	—	3466 798
	Up to July 1974		—	—	—	—	—	1	1	1	1	1	1	3461 741
	After July 1974		—	—	—	—	—	1	1	1	1	1	1	3766 601
	HOSE, Rr. Whl. Disc Brk. Inlet		—	—	—	—	—	—	—	—	—	—	2	3461 738
	Gasket, Frt. Whl. Disc Brake Inlet Hose		4	2	4	4	4	2	2	2	2	2	2	6030 084
	Gasket, Rr. Whl. Disc Brake Inlet Hose		—	—	—	—	—	—	—	—	—	—	2	6030 084
5-62-20	LOCK, Frt. or Rr. Axle Brake Hose		AR	AR	AR	AR	AR	AR	AR	AR	AR	AR	AR	2208 893
	Rr. Whl. Disc Pk./Brk. Cable to Brkt.												2	2208 893
5-63-1	**WHEEL CYLINDER REPAIR PACKAGE**													
	Rr. 10 and 11" Brakes		2	2	2	2	2	2	2	2	2	2	—	3780 524
5-64-1	**CYLINDER, Frt. Whl. Brake Complete**													
	10" Brakes		1	—	1	—	—	—	—	—	—	—	—	3744 938-9
	CYLINDER, Rr. Whl. Brake Complete													
	9" Brakes		2	—	2	—	—	—	—	—	—	—	—	2881 600
	10" and 11" Brakes (Less P/Rods)		2	2	2	2	2	2	2	2	2	2	—	3780 525
5-64-2	SCREW, Whl. Brake Cyl. Mtg. w/10 and 11" Brakes		8	4	8	4	4	4	4	4	4	4	—	6028 921
5-64-7	SEAL, Rr. Whl. Brake Cyl. to Support		2	2	2	2	2	2	2	2	2	2	—	2534 663
5-66-6	**INSERT, Wheel Cyl. Tube**		2	2	2	2	2	2	2	2	2	2	—	2072 678
5-67-1	**SCREW, Frt. Wheel Brk. Cyl. Bleeder**													
	w/o Disc Brakes Up to March 1974		2	—	2	—	—	—	—	—	—	—	—	2881 619
	After March 1974		2	—	2	—	—	—	—	—	—	—	—	3766 675
	w/Disc Brakes		2	2	2	2	2	2	2	2	2	2	2	2781 019
	Rr. Whl. Brake		—	—	2	2	2	2	2	2	2	2	—	3699 754
	Rr. Whl. Brake Up to March 1974		2	2	—	—	—	—	—	—	—	—	—	3699 754
	After March 1974		2	2	—	—	—	—	—	—	—	—	—	3766 675
5-69-1	**BOOT, Rr. Whl. Cyl.**													
	9" Brakes		4	—	4	—	—	—	—	—	—	—	—	2881 604
	10" and 11" Brakes		4	4	4	4	4	4	4	4	4	4	—	2881 618

CARLINES: J - Challenger, B - Barracuda, V - Valiant, L - Dart, R - Satellite, W - Coronet - Charger, P - Plymouth, D - Dodge, C - Chrysler, Y - Imperial

AR Indicates use as required.

Numerals in parentheses ( ) refer to notes.

# Indicates parts not listed in any previous parts book.

★ Indicates change or addition.

Printed in U.S.A. November, 1974

CODE	PART NAME	ENG. TYPE OR CU. IN	V	B J	L	R	W	P	D	C (L M)	C (P)	C (H S)	Y	PART NUMBER
5-70-1	**PISTON, Frt. Whl. Brake Cyl.**													
	10" Brakes		4	—	4	—	—	—	—	—	—	—	—	# 3780 787
	PISTON, Rr. Whl. Brake Cyl.													
	9" Brakes		4	—	4	—	—	—	—	—	—	—	—	2072 656
	10" and 11" Brakes		4	4	4	4	4	4	4	4	4	4	—	2260 843
5-71-1	**CUP, Frt. Whl. Brake Cyl. Piston**													
	10" Brakes Up to March 19, 1974		4	—	4	—	—	—	—	—	—	—	—	2260 838
	After March 19, 1974		4	—	4	—	—	—	—	—	—	—	—	3766 679
	CUP, Rr. Whl. Brake Cyl. Piston													
	9" Brakes Up to March 19, 1974		4	—	4	—	—	—	—	—	—	—	—	3780 791
	After March 19, 1974		4	—	4	—	—	—	—	—	—	—	—	3766 687
5-71-2	SPRING, Frt. Whl. Cyl. Piston													
	10" Brakes		2	—	2	—	—	—	—	—	—	—	—	2260 839
	SPRING, Rr. Whl. Cyl. Piston													
	9" Brakes		2	—	2	—	—	—	—	—	—	—	—	2072 637
	Expander, Frt. Whl. Brk. Cyl. Piston Cup, w/10" Brakes		2	—	2	—	—	—	—	—	—	—	—	3766 678
5-100-1	**POWER BRAKE PACKAGE**													
	For Field Installation													
	Disc		1	—	1	—	—	—	—	—	—	—	—	3744 441
	Drum		1	—	1	—	—	—	—	—	—	—	—	3744 440
	Power Disc		—	1	—	1	1	—	—	—	—	—	—	3744 472
5-100-2	POWER UNIT, WITH DISC BRAKES													
	W/Drum or Disc Brakes		1	—	1	—	—	—	—	—	—	—	—	3580 339
			—	1	—	1	1	—	—	—	—	—	—	3579 272
	Less Linkage		—	1	—	1	1	—	—	—	—	—	—	3580 225
	Sta. Wgn.		—	—	—	—	—	1	1	—	1	—	—	3580 252
	Exc. Sta. Wgn.		—	—	—	—	—	1	1	1	—	1	—	3837 077
			—	—	—	—	—	—	—	—	—	—	1	3580 303
5-100-20	ROD, Push Brake Pedal To Booster Linkage		1	—	1	—	—	—	—	—	—	—	—	3461 010
	Master Cyl. Output Push w/Disc Brakes													
	P,D,C Exc. Sta. Wgn.		—	1	—	1	1	1	1	1	—	1	—	2944 499
	Brk. Pedal to P/Brk. Lnkg.		—	1	—	1	1	—	—	—	—	—	—	3580 224
	Pedal Push w/Disc & P/Brakes		—	1	—	1	1	—	—	—	—	—	—	3580 136
5-100-26	BOOT, Pedal Linkage to Firewall w/Disc Brakes		1	—	1	—	—	—	—	—	—	—	—	2643 731
	Push Rod, w/Disc Brakes		—	1	—	1	1	—	—	—	—	—	—	3461 005
	Plunger to P/Rod w/Disc Brakes Exc. Wgn.		—	1	—	1	1	1	1	1	—	1	—	3461 001
	Push Rod P,D,C Sta. Wgn.													
	Y All		—	—	—	—	—	1	1	—	1	—	1	3580 298
	Push Rod P,D,C Exc. Wgn.		—	—	—	—	—	1	1	1	—	1	—	3633 324
5-100-32	RETAINER													
	Push Rod to Plunger w/Disc Brakes		1	—	1	—	—	—	—	—	—	—	—	2401 166
5-100-34	LEVER, w/Reaction Ring w/Disc Brakes		1	—	1	—	—	—	—	—	—	—	—	2944 019
5-100-62	SCREW, Master Cyl. Push Rod Exc. Wgn.		1	1	1	1	1	1	1	1	—	1	—	2660 776
5-100-189	HUB and LEVER, w/Disc Brakes		1	—	1	—	—	—	—	—	—	—	—	3461 262
	P/Brk. Lnkg. M/Ross		—	1	—	1	1	—	—	—	—	—	—	3580 135
	P/Brk. Lnkg. Bendix		—	1	—	1	1	—	—	—	—	—	—	3580 223
	BOLT, P/Brake Lever Hub		—	1	—	1	1	—	—	—	—	—	—	6029 291
	SPACER, P/Brk. Lnkg. to Ped. Brkt.		—	1	—	1	1	—	—	—	—	—	—	6029 295
5-100-192	WASHER, Linkage Pivot Pin Spring		—	4	—	4	4	—	—	—	—	—	—	6027 520
	Linkage Clevis Pin Spring		—	4	—	4	4	—	—	—	—	—	—	6027 520
5-100-194	PIN													
	Power Brake Push Rod Clevis		1	2	1	2	2	—	—	—	—	—	—	2075 006
	Power Brake Linkage Clevis		—	2	—	2	2	—	—	—	—	—	—	2075 006
	Power Brake Hub Linkage Clevis		1	—	1	—	—	—	—	—	—	—	—	3461 281
	Power Brake Linkage Lever Clevis		1	—	1	—	—	—	—	—	—	—	—	3461 282

CARLINES: J - Challenger, B - Barracuda, V - Valiant, L - Dart, R - Satellite, W - Coronet - Charger, P - Plymouth, D - Dodge, C - Chrysler, Y - Imperial

AR Indicates use as required.

Numerals in parentheses ( ) refer to notes.

# Indicates parts not listed in any previous parts book.

★ Indicates change or addition.

Printed in U.S.A.
November, 1974

CODE	PART NAME	ENG. TYPE OR CU. IN	V	B J	L	R	W	P	D	C (L M)	C (P)	C (H S)	Y	PART NUMBER
5-100-197	SILENCER, Valve Body Rr.		—	1	—	1	1	1	1	1	1	1	1	3461 008
5-100-198	SLEEVE, Power Brake Lever Hub		—	1	—	1	1	—	—	—	—	—	—	2534 227
5-100-199	RETAINER, Valve Silencer		—	1	—	1	1	—	—	—	—	—	—	3461 290
	P,D,C Exc. Wgn.		—	—	—	—	—	1	1	1	—	1	—	3461 290
	P, D, C Wgn. Y All		—	—	—	—	—	1	1	—	1	—	1	3580 300
5-100-206	SEAL and PLATE, P, D, C Wgn. Y All		—	—	—	—	—	1	1	—	1	—	1	3580 299
	P, D, C Exc. Wgn.		—	—	—	—	—	1	1	1	—	1	—	2401 894
5-100-212	GROMMET, Vacuum Connector to Frt. Hsg.		1	1	1	1	1	—	—	—	—	—	—	2467 576
	P,D,C Exc. Sta. Wgn.		—	—	—	—	—	1	1	1	—	1	—	2467 576
5-101-1	**BRACKET, P/Brake Mtg. Rt.**		1	—	1	—	—	—	—	—	—	—	—	3461 280
	Lt.		1	—	1	—	—	—	—	—	—	—	—	3461 279
5-101-5	SUPPORT, Power Brake to Dash Pnl.		1	—	1	—	—	—	—	—	—	—	—	3580 231
	BRACE, Power Brake to Fender Shield		1	—	1	—	—	—	—	—	—	—	—	2823 603
5-105-1	**VALVE AND GROMMET PACKAGE**													
	P/Brake Vacuum Connector w/Disc Brakes Midland Ross		1	1	1	1	1	1	1	1	1	1	1	3420 974
	w/Disc Brakes Bendix		—	1	—	1	1	—	—	—	—	—	—	3420 973
	P, D, C w/Auto Trans. Exc. Wgn. Bendix		—	—	—	—	—	1	1	1	—	1	—	3420973
5-105-14	CAP, Manif. Vac. Hose & Check Valve P, D, C, Exc. Sta. Wgn.		1	1	1	1	1	1	1	1	—	1	—	2944 127
5-107-34	**VALVE, Metering Brake Tube** w/Disc Brakes Sta. Wgn.		—	—	—	1	1	—	—	—	—	—	—	3726 541
	P, D, C, Wgn.		—	—	—	—	—	1	1	—	1	—	—	3726 517
	Metering Proportioning		—	1	—	—	—	—	—	—	—	—	—	3583 607
	Metering Proportioning w/Disc Brakes Exc. Sta. Wgn.		—	—	—	1	1	—	—	—	—	—	—	3726 539
	Metering Proportioning w/Disc Brakes Taxi		—	—	—	1	1	—	—	—	—	—	—	3580 348
	Metering Proportioning P, D, C Exc. Wgn.		—	—	—	—	—	1	1	1	—	1	—	4026629 3726 516
	Metering Proportioning		—	—	—	—	—	—	—	—	—	—	1	3726 536
	TUBE & NUT P/Brake Vac. w/400, 440 Eng. u/w Calif. Emission Pkg.		—	—	—	—	—	1	1	1	1	1	1	3580 148
	O'RING, P/Brake to Vac. Line Conn. Tube w/400, 440 Eng. u/w/Calif. Emission Pkg.		—	—	—	—	—	1	1	1	1	1	1	3580 159
	CAP, P/Brake Conn. Aux. Tube 1/8" I.D. (Rubber) w/400, 440 Eng. u/w Emission Pkg.		—	—	—	AR	AR	AR	AR	AR	AR	AR	AR	3580 170
	3/16" I.D. (Rubber)		—	—	—	AR	AR	AR	AR	AR	AR	AR	AR	3580 171
	1/4" I.D. (Rubber)		—	—	—	AR	AR	AR	AR	AR	AR	AR	AR	3580 172
	CLIP, Brk. Valve Wiring		—	—	—	—	—	1	1	1	1	1	1	6015 829
	NOTE: For Further Information See P.T.C. 5-58-1													
5-107-35	SLEEVE, Brk. Valve to Lt. Hose Tube		—	—	—	1	1	—	—	—	—	—	—	3642 275
5-107-36	SEAL, Brake Tube Metering Valve		—	—	—	—	—	1	1	1	1	1	—	3466 782
5-107-37	BOLT, Brake Valve Mtg.		—	—	—	1	1	—	—	—	—	—	—	3726 546
5-110-18	**CONNECTOR, Power Brake Vac. Line**													
	1 Way, w/o A/Cond.		1	1	1	1	1	—	1	—	—	—	—	1944 154
	2 Way 1.87 Lgh., .122 Tube Dia.		—	1	—	1	1	—	—	—	—	—	—	1944 092
	2 Way 1.87 or 2.12 Lgh. .247 Tube Dia.		1	—	1	—	—	—	—	—	—	—	—	2405 466
	2 Way 2.12 Lgh. .184 Tube Dia.		1	1	1	1	1	—	—	—	—	—	—	3461 304
	3 Way 2.12 Lgh. .184, .247 Tube Dia.		1	1	1	1	1	—	—	—	—	—	—	3461 323
	3 Way 2.12 Lgh. .184 Tube Dia.		1	—	1	1	1	—	—	—	—	—	—	3580 201
	3 Way w/440 Eng. C-S 2.12 Lgh. .184, .247 Tube Dia.		—	—	1	—	—	—	—	—	—	1	—	3461 323

CARLINES J - Challenger, V - Valiant, B - Barracuda, L - Dart, R - Satellite, W - Coronet - Charger, P - Plymouth, D - Dodge, C - Chrysler, Y - Imperial

AR Indicates use as required.

Numerals in parentheses ( ) refer to notes.

# Indicates parts not listed in any previous parts book.

★ Indicates change or addition.

Printed in U.S.A. November, 1974

CODE	PART NAME	ENG. TYPE OR CU. IN	V	B J	L	R	W	P	D	C (L M)	C (P)	C (H S)	Y	PART NUMBER
5-110-18	CONNECTOR Cont'd.													
	3 Way 2.12 Lgh. .184, .122 Tube Dia.		—	1	—	1	1	1	1	1	1	1	—	3461 311
	4 Way C-S, 2.12 Lgh. .184, .122, .247 Tube Dia.		—	—	—	—	—	—	—	—	—	1	—	3461 324
	4 Way 2.12 Lgh. .184, .122, .184 Tube Dia.		—	—	—	1	1	1	1	1	1	1	—	3580 202
	5 Way C-S, Y		—	—	—	—	—	—	—	—	—	1	1	3580 228
	6 Way 2.12 Lgh., .184, .247, .122, Tube Dia.		1	1	1	1	1	1	1	1	1	1	1	3580 401
	Vac. Tube w/400, 440 Eng. u/w Calif. Emission Pkg. 1.56" Lgh. 3/8"-18 x 5/8"-18 Thd.		—	—	—	—	—	1	1	1	1	1	1	3580 133
5-111-17	**HOSE, Brake Booster to Intake Manifold**													
	Lgh. 16 Inch		1	—	1	—	—	1	1	1	1	1	1	2883 083
	w/Lgh. 18 Inch		—	—	—	—	—	1	1	1	1	1	1	3580 335
	HOSE, .215" I.D. Neoprene 50 Ft. Roll		—	—	—	—	—	—	—	AR	AR	AR	AR	3837 042
	HOSE, Flex. Vac. .34 I.D. (Sold By The Inch)		AR	AR	AR	AR	AR	AR	AR	AR	AR	AR	AR	883 031
5-111-19	CLAMP, P/Brk. Vac. Hose		2	2	2	2	2	2	2	2	2	2	2	6028 961
5-113-17	**FILTER, P/Brake Plunger to Push Rod**													
	Boot P,D,C Exc. Wgn.		—	1	—	1	1	1	1	1	1	1	—	3580 310
	Push Rod Boot		—	1	—	1	1	1	1	1	1	1	1	3461 291
	Bstr. Hub		—	1	—	1	1	—	—	—	—	—	—	3580 311
	Frt. Hsg. Air Inlet, Midland Ross		1	—	1	—	—	—	—	—	—	—	—	2467 575
5-113-20	HUB, Air Intake		1	—	1	—	—	—	—	—	—	—	—	2467 578
5-113-21	COVER, Air Int. And Filter		1	—	1	—	—	—	—	—	—	—	—	3461 268
5-124-2	**CONTROLLER, Comp. Trailer Brake**		—	—	—	1	1	1	1	1	1	1	1	3746 745
5-124-3	PAD, TRAILER BRAKE CONTROLLER		—	—	—	1	1	1	1	1	1	1	1	3746 748
5-124-4	STRAP, Trailer Brake Controller Mtg.		—	—	—	1	1	1	1	1	1	1	1	3746 768
5-124-5	RESISTOR, Limiting Trailer Brake Controller		—	—	—	1	1	1	1	1	1	1	1	3837 160

NOTES

CARLINES
J - Challenger, B - Barracuda, V - Valiant, L - Dart, R - Satellite, W - Coronet - Charger, P - Plymouth, D - Dodge, C - Chrysler, Y - Imperial

AR Indicates use as required.
# Indicates parts not listed in any previous parts book.
Numerals in parentheses ( ) refer to notes.
★ Indicates change or addition.

Printed in U.S.A.
November, 1974

GROUP 6 - CLUTCH

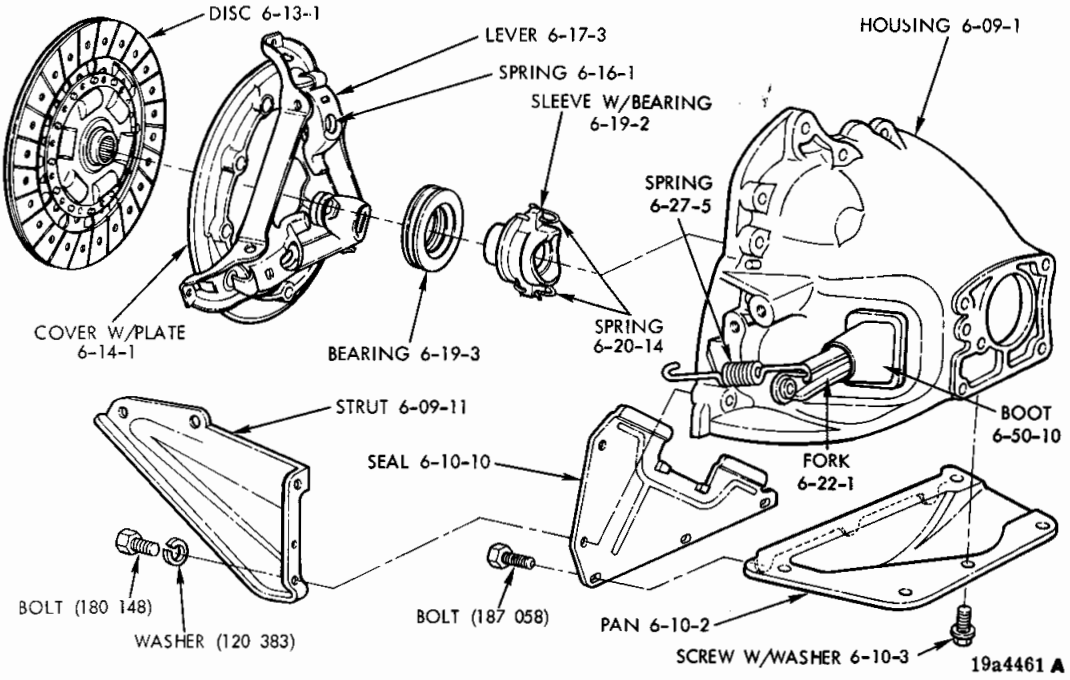

CLUTCH - 6 CYLINDER

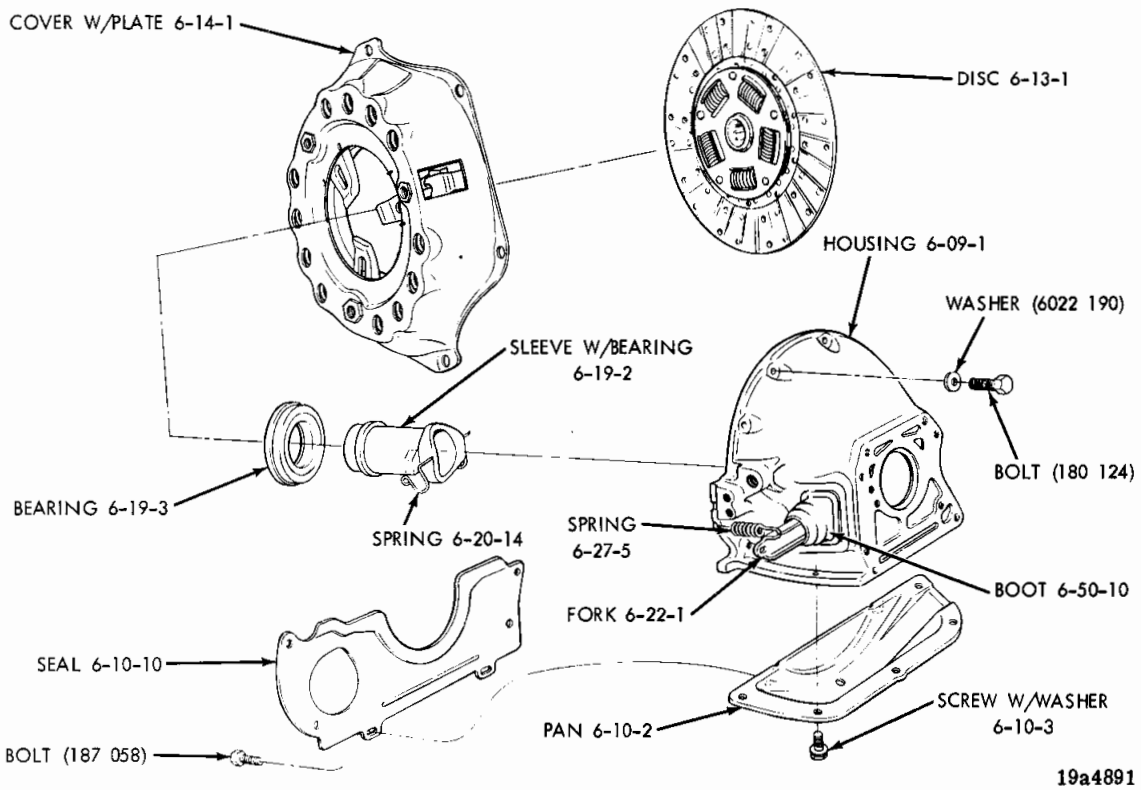

CLUTCH - 6 AND 8 CYLINDER

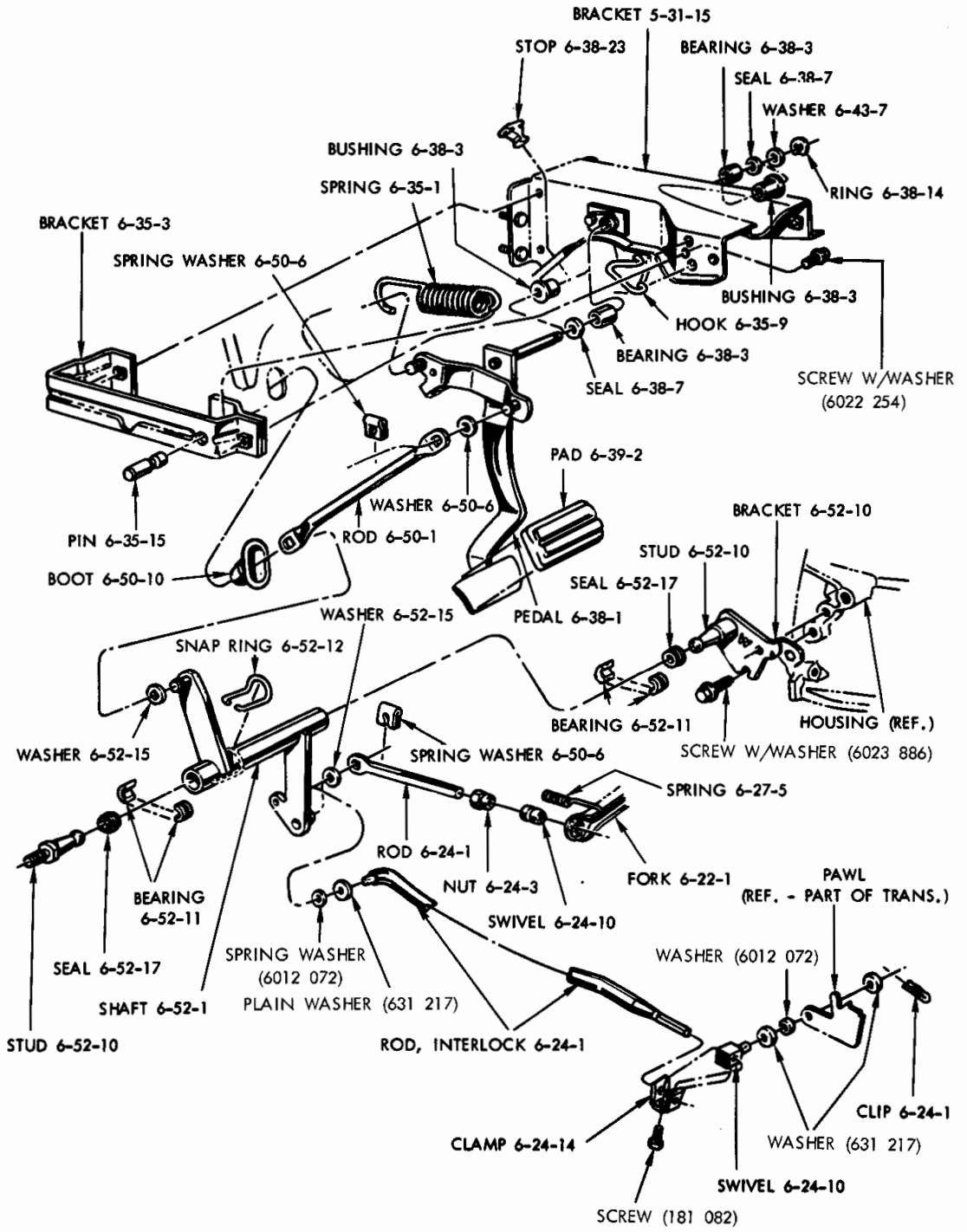

19a4158

CLUTCH PEDAL AND LINKAGE - V, L

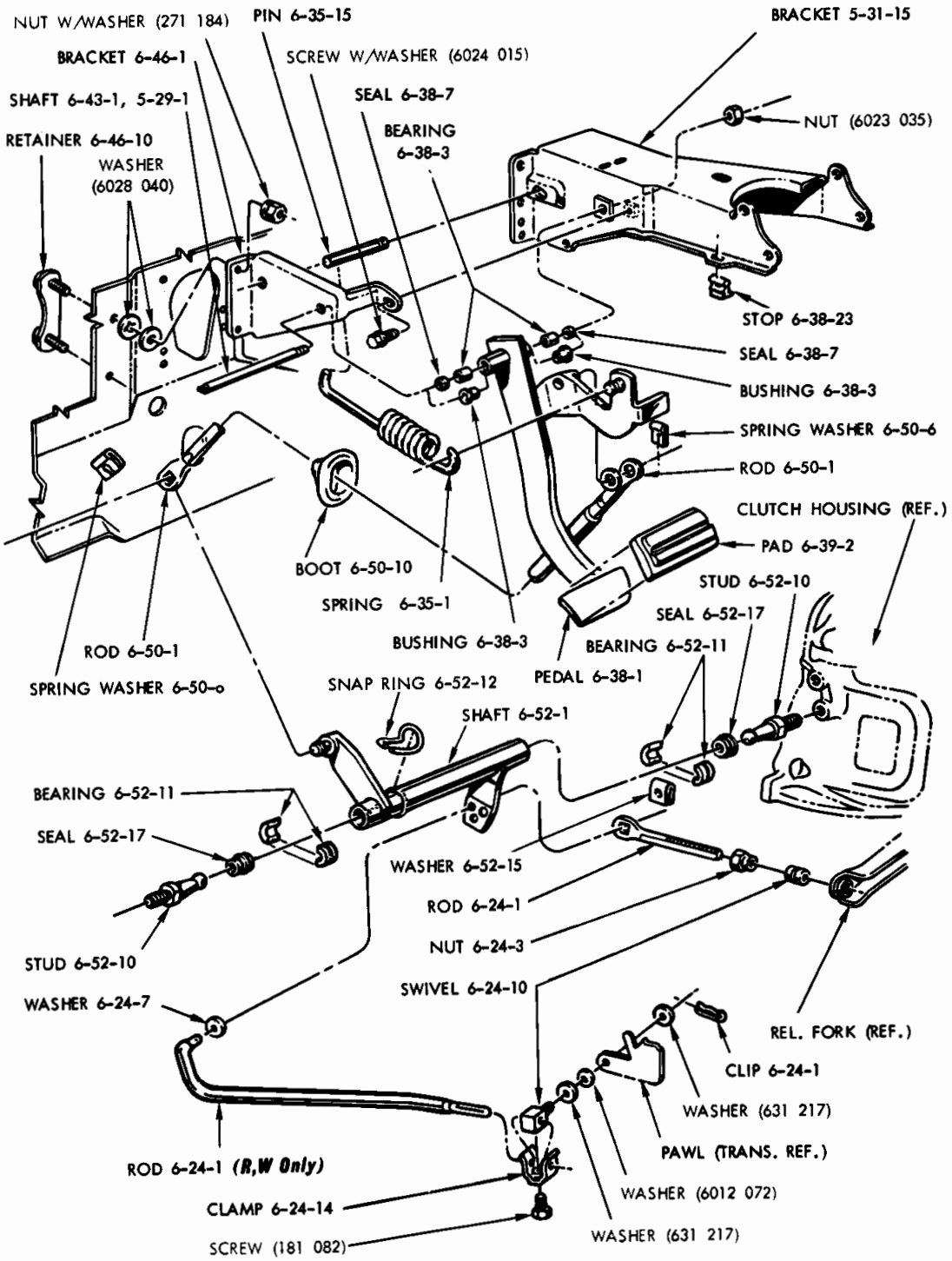

19a4159B

CLUTCH PEDAL AND LINKAGE - B, J, R, W

NOTES

GROUP 6 - CLUTCH

BEARING, RELEASE 6-19
BRACKET, PEDAL 6-46
COVER AND PRESSURE PLATE 6-14
DISC, DRIVEN 6-13
FORK RELEASE 6-22
HOUSING 6-09
LEVER, RELEASE 6-17
PAD, PEDAL 6-39
PAN, HOUSING 6-10
PEDAL 6-38
ROD, PEDAL 6-50
ROD, RELEASE 6-24
SHAFT, PEDAL 6-43
SHAFT, TORQUE 6-52
SPRING, PRESSURE PLATE 6-16
SPRING, RELEASE FORK RETURN 6-27
SPRING, RELEASE OVER-CENTER 6-35
SPRING, RELEASE BEARING RETURN 6-20

Printed in U.S.A.
November, 1974

CODE	PART NAME	ENG. TYPE OR CU. IN	V	B J	L	R	W	P	D	C (L M)	C (P)	C (H S)	Y	PART NUMBER
6-09-1	**HOUSING, Clutch, w/3 Speed Trans.**	6	1	—	1	1	1	—	—	—	—	—	—	2658 955
	318, 360 Eng.	8	1	1	1	1	1	—	—	—	—	—	—	3743 077
	400 Eng., 4 Bbl. Carb., Hi/Perf., w/4 Speed Trans.	8	—	—	—	1	1	—	—	—	—	—	—	2892 511
	SCREW, w/WASHER, Housing to Cyl. Block	6	3	—	3	3	3	—	—	—	—	—	—	6023 187
	BOLT, Cyl. Block to Housing	6	2	—	2	2	2	—	—	—	—	—	—	9418 208
6-09-11	STRUT, Housing to Cylinder Block	6	1	—	1	1	1	—	—	—	—	—	—	2468 197
6-10-2	**PAN, Clutch Housing All**	6	1	—	1	1	1	—	—	—	—	—	—	2129 885
	318, 360 Eng.	8	1	1	1	1	1	—	—	—	—	—	—	2843 892
	400 Eng., 4 Bbl. Carb., Hi/Perf. w/4 Speed Trans.	8	—	—	—	1	1	—	—	—	—	—	—	2899 035
6-10-3	SCREW, w/WASHER, Pan Attaching		AR	AR	AR	AR	AR	—	—	—	—	—	—	1947 953
6-10-10	SEAL, Housing Dust Pan	6	1	—	1	1	1	—	—	—	—	—	—	2463 173
	318, 360 Eng.	8	1	1	1	1	1	—	—	—	—	—	—	2892 911
6-13-1	**DISC, Clutch 9 1/4"**	6	1	—	1	1	1	—	—	—	—	—	—	2448 336
	10"	6	1	—	1	1	1	—	—	—	—	—	—	2908 473
	10 1/2" 318, Eng., Up To 5-15-74	8	1	1	1	1	1	—	—	—	—	—	—	3681 630
	After 5-15-74	8	1	1	1	1	1	—	—	—	—	—	—	# 3743 424
	11", 360 Eng., 4 Bbl. Carb. Hi/Perf.	8	1	1	1	—	—	—	—	—	—	—	—	3410 160
	11", 360 and 400 Eng., 4 Bbl. Carb. Hi/Perf., 4 Speed Trans.	8	—	—	—	1	1	—	—	—	—	—	—	3410 160
6-14-1	**COVER, w/PLATE, Clutch Pressure, 9-1/4"**	6	1	—	1	1	1	—	—	—	—	—	—	2530 377
	10", All	6	1	—	1	1	1	—	—	—	—	—	—	2239 683
	10 1/2", 318 Eng.	8	1	1	1	1	1	—	—	—	—	—	—	3681 615
	11", 360 Eng.	8	1	1	1	1	1	—	—	—	—	—	—	3743 400
	11", 400 Eng., 4 Bbl. Carb. Hi/Perf. w/4 Speed Trans.	8	—	—	—	1	1	—	—	—	—	—	—	3515 690
6-14-2	BOLT, Clutch Eye, 318 Eng.	8	3	3	3	3	3	—	—	—	—	—	—	3410 993
6-14-10	SCREW, Cover to Flywheel, 7/8" Lgh.	6	AR	—	AR	AR	AR	—	—	—	—	—	—	307 555
	13/16" Lgh., Flange Head	6	AR	—	AR	AR	AR	—	—	—	—	—	—	6029 060
	1" Lgh.		AR	AR	AR	AR	AR	—	—	—	—	—	—	314 926
	1" Lgh., Indented Head		—	—	—	AR	AR	—	—	—	—	—	—	6029 071
6-19-2	**SLEEVE, w/BEARING, Clutch Release All**		1	1	1	1	1	—	—	—	—	—	—	2405 077
6-19-3	BEARING, w/o Sleeve, All		1	1	1	1	1	—	—	—	—	—	—	658 998
6-20-14	**SPRING, Clutch Release Bearing Return**		2	2	2	2	2	—	—	—	—	—	—	2073 687
6-22-1	**FORK, w/SPRING, Clutch Release**		1	—	1	—	—	—	—	—	—	—	—	3515 737
			—	1	—	1	1	—	—	—	—	—	—	2643 702
6-22-4	SEAL, Fork, All		1	1	1	1	1	—	—	—	—	—	—	3515 300
6-22-15	PIVOT, Fork, All		1	—	1	—	—	—	—	—	—	—	—	2800 848
	225, 318, 360 Eng.		—	1	—	1	1	—	—	—	—	—	—	2409 680
	400 Eng., 4 Bbl., Carb. Hi/Perf. w/4 Speed Trans.	8	—	—	—	1	1	—	—	—	—	—	—	2892 263
6-22-19	SPRING, Pivot, All		1	—	1	—	—	—	—	—	—	—	—	2823 559
	All		—	1	—	1	1	—	—	—	—	—	—	2072 901
6-24-1	**ROD, Clutch Release All,** Up to 2-14-74		1	—	1	—	—	—	—	—	—	—	—	2781 108
	After 2-14-74		1	—	1	—	—	—	—	—	—	—	—	3748 078
	All		—	1	—	—	—	—	—	—	—	—	—	2534 240
	225, 318, 360 Eng.		—	—	—	1	1	—	—	—	—	—	—	2534 240
	400 Eng., 4 Bbl. Carb. Hi/Perf. w/4 Speed Trans.	8	—	—	—	1	1	—	—	—	—	—	—	3467 235
	ROD, Interlock,	6	1	—	1	—	—	—	—	—	—	—	—	2925 598
6-24-3	NUT, Fork Rod Adjusting		1	1	1	1	1	—	—	—	—	—	—	1407 347
	Release Interlock		AR	—	AR	—	—	—	—	—	—	—	—	631 217
6-24-10	SWIVEL, Interlock	6	1	—	1	—	—	—	—	—	—	—	—	2404 859
	Release Fork Rod Adjusting		1	1	1	1	1	—	—	—	—	—	—	2401 740
6-24-14	CLAMP, Interlock	6	1	—	1	—	—	—	—	—	—	—	—	2204 274

CARLINES J - Challenger, B - Barracuda, V - Valiant, L - Dart, R - Satellite, W - Coronet - Charger, P - Plymouth, D - Dodge, C - Chrysler, Y - Imperial

AR Indicates use as required.

Numerals in parentheses ( ) refer to notes.

# Indicates parts not listed in any previous parts book.

★ Indicates change or addition.

Printed in U.S.A.
November, 1974

CODE	PART NAME	ENG. TYPE OR CU. IN	V	B J	L	R	W	P	D	C (L M)	C (P)	C (H S)	Y	PART NUMBER
6-27-5	**SPRING, Clutch Release Fork**													
	Return	6	1	—	1	—	—	—	—	—	—	—	—	3515 761
	318, 360 Eng.	8	1	—	1	—	—	—	—	—	—	—	—	3515 762
	All		—	1	—	1	1	—	—	—	—	—	—	3515 761
6-35-1	**SPRING, Clutch Release Over-Center**	6	1	—	1	—	—	—	—	—	—	—	—	2266 784
	318 Eng.	8	1	—	1	—	—	—	—	—	—	—	—	2461 515
	360 Eng.	8	1	—	1	—	—	—	—	—	—	—	—	2883 468
	All	6	—	—	—	1	1	—	—	—	—	—	—	3575 119
	318 Eng.	8	—	1	—	1	1	—	—	—	—	—	—	2950 921
	360, Eng.	8	—	1	—	1	1	—	—	—	—	—	—	3748 058
	400 Eng., 4 Bbl. Carb., H/Perf. w/4 Speed Trans.	8	—	1	—	1	1	—	—	—	—	—	—	2950 923
6-35-3	BRACKET, Spring, 360 Eng.	8	1	—	1	—	—	—	—	—	—	—	—	2883 464
6-35-9	HOOK, Spring		1	—	1	—	—	—	—	—	—	—	—	2266 777
6-35-15	PIN, Spring Anchor, 360 Eng.	8	1	—	1	—	—	—	—	—	—	—	—	2883 467
	All		—	1	—	1	1	—	—	—	—	—	—	3467 535
6-38-1	**PEDAL, Clutch, 9 1/4" Clutch**	6	1	—	1	—	—	—	—	—	—	—	—	3467 082
	10" Clutch	6	1	—	1	—	—	—	—	—	—	—	—	3748 052
	318 Eng.	8	1	—	1	—	—	—	—	—	—	—	—	3748 052
	360 Eng.	8	1	—	1	—	—	—	—	—	—	—	—	3748 056
	All	8	—	1	—	—	—	—	—	—	—	—	—	3575 177
	9 1/4" Clutch	6	—	—	—	1	1	—	—	—	—	—	—	3575 176
	10" Clutch	6	—	—	—	1	1	—	—	—	—	—	—	3575 177
	All	8	—	—	—	1	1	—	—	—	—	—	—	3575 177
6-38-3	BEARING, Pedal, 360 Eng.	8	2	—	2	—	—	—	—	—	—	—	—	2883 462
	All		—	2	—	2	2	—	—	—	—	—	—	1946 377
	BUSHING, Pedal		2	—	2	2	2	—	—	—	—	—	—	2467 770
6-38-7	SEAL, Pedal Bearing, 360 Eng.	8	2	—	2	—	—	—	—	—	—	—	—	2883 479
6-38-14	RING, Shaft Lock		1	—	1	—	—	—	—	—	—	—	—	6030 373
6-38-23	STOP, Pedal, All		1	1	1	1	1	—	—	—	—	—	—	2266 820
6-39-2	**PAD, Clutch Pedal**		1	1	1	1	1	—	—	—	—	—	—	3467 530
6-43-1	**SHAFT, Clutch Pedal All**		—	—	—	1	1	—	—	—	—	—	—	3467 024
6-43-7	WASHER, Shaft Ring		1	—	1	—	—	—	—	—	—	—	—	2073 632
6-43-13	SEAL, Pedal Bearing		—	2	—	2	2	—	—	—	—	—	—	1730 019
6-46-1	**BRACKET, Clutch Pedal**		—	1	—	1	1	—	—	—	—	—	—	3467 203
6-46-10	RETAINER, Bracket Stud		—	1	—	1	1	—	—	—	—	—	—	2950 680
6-50-1	**ROD, Clutch Pedal**		1	—	1	—	—	—	—	—	—	—	—	2781 147
	All		—	1	—	—	—	—	—	—	—	—	—	2950 696
	All		—	—	—	1	1	—	—	—	—	—	—	3748 048
	PIN, Pedal Rod		1	1	1	1	1	—	—	—	—	—	—	6027 996
6-50-6	WASHER, Torque Shaft Dampener		2	2	2	2	2	—	—	—	—	—	—	2405 086
	Pedal Rod Pin Spring		1	—	1	—	—	—	—	—	—	—	—	2405 085
	Torque Shaft Spring		2	—	2	—	—	—	—	—	—	—	—	2405 085
	Pedal Dampener		1	1	1	1	1	—	—	—	—	—	—	2405 086
	Pedal Linkage Spring		—	3	—	3	3	—	—	—	—	—	—	2405 085
6-50-10	BOOT, Pedal Rod		1	1	1	1	1	—	—	—	—	—	—	2266 783
6-52-1	**SHAFT, w/PINS, Clutch Torque**	6	1	—	1	—	—	—	—	—	—	—	—	2950 251
	All	8	1	—	1	—	—	—	—	—	—	—	—	2950 238
	318, 360 Eng.	8	—	1	—	—	—	—	—	—	—	—	—	2950 914
	w/9 1/4" Clutch	6	—	—	—	1	1	—	—	—	—	—	—	2950 901
	w/10" Clutch	6	—	—	—	1	1	—	—	—	—	—	—	3575 140
	318, 360 Eng.	8	—	—	—	1	1	—	—	—	—	—	—	2950 914
	400 Eng., 4 Bbl. Carb., H/Perf. 4 Speed Trans.	8	—	—	—	1	1	—	—	—	—	—	—	2950 913
6-52-10	BRACKET, Shaft Engine	6	1	—	1	—	—	—	—	—	—	—	—	3575 159
	All	8	1	—	1	—	—	—	—	—	—	—	—	3575 157
	Frame Torque Shaft		—	1	—	—	—	—	—	—	—	—	—	3466 470
	All		—	—	—	1	1	—	—	—	—	—	—	3642 849
	STUD, Shaft Engine		1	—	1	1	—	—	—	—	—	—	—	2461 765
	Shaft Frame		1	1	1	1	1	—	—	—	—	—	—	2461 766

CARLINES: J - Challenger, B - Barracuda, V - Valiant, L - Dart, R - Satellite, W - Coronet - Charger, P - Plymouth, D - Dodge, C - Chrysler, Y - Imperial

AR Indicates use as required.

# Indicates parts not listed in any previous parts book.

Numerals in parentheses ( ) refer to notes.

★ Indicates change or addition.

Printed in U.S.A
November, 19

CODE	PART NAME	ENG. TYPE OR CU. IN	V	B J	L	R	W	P	D	C (L M)	C (P)	C (H S)	Y	PART NUMBER
6-52-11	BEARING, Shaft Pivot		4	4	4	4	4	—	—	—	—	—	—	2265 938
	PIN, Shaft Bearing Stop		1	—	1	—	—	—	—	—	—	—	—	455 919
6-52-12	RING, Shaft Pivot Snap		1	1	1	1	1	—	—	—	—	—	—	2401 910
6-52-17	SEAL, Torque Shaft		2	2	2	2	—	—	—	—	—	—	—	2265 942

NOTES

CARLINES J - Challenger, B - Barracuda, V - Valiant, L - Dart, R - Satellite, W - Coronet - Charger, P - Plymouth, D - Dodge, C - Chrysler, Y - Imperial

AR Indicates use as required.

# Indicates parts not listed in any previous parts book.

Numerals in parentheses ( ) refer to notes.

★ Indicates change or addition.

Printed in U.S.A.
November, 1974

GROUP 7 - COOLING

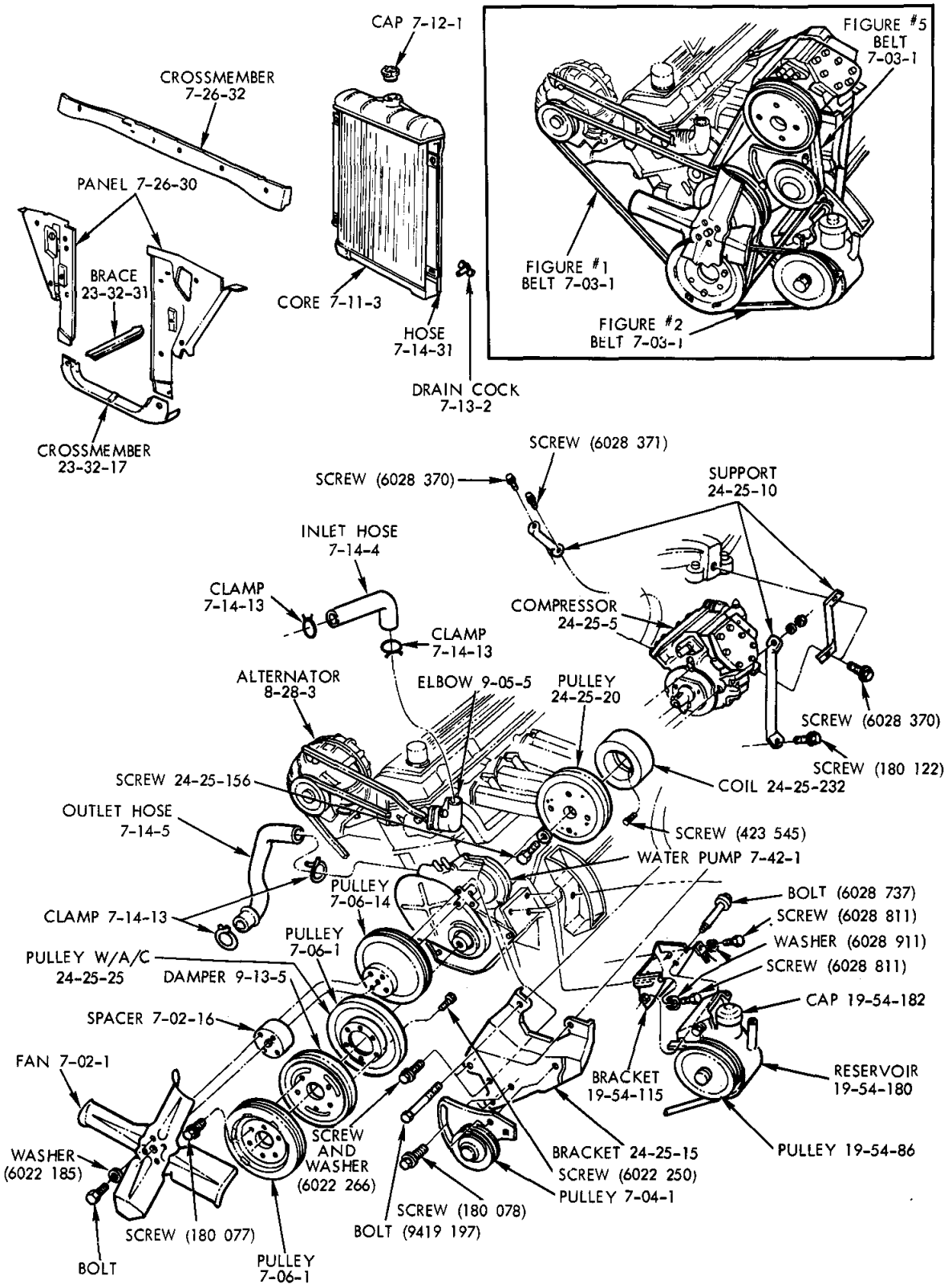

19a3948C

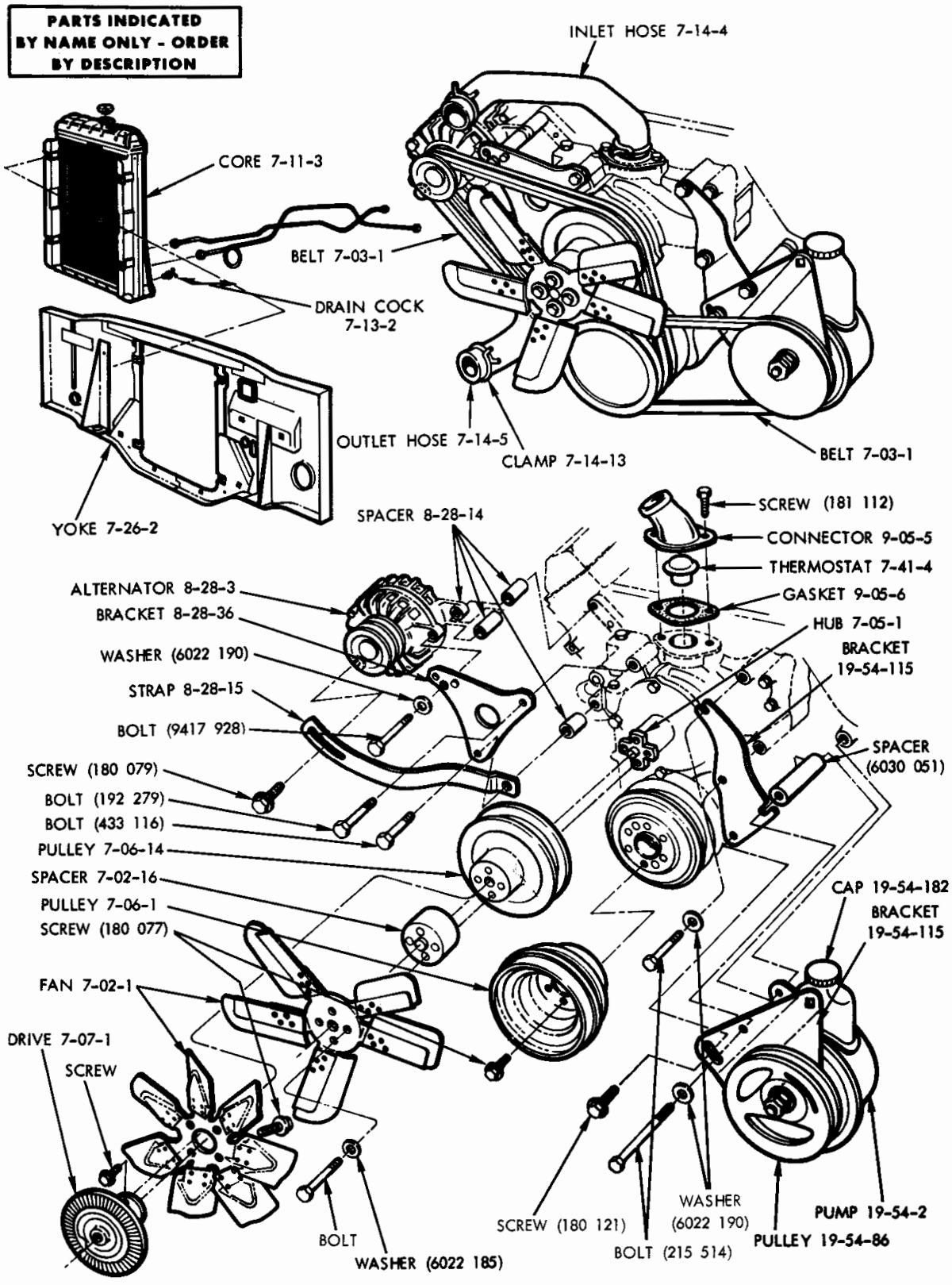

COOLING SYSTEM - 8 CYLINDER

Figure 1

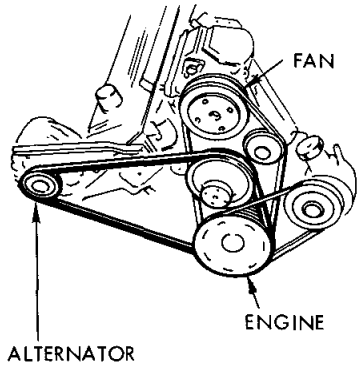

Figure 2

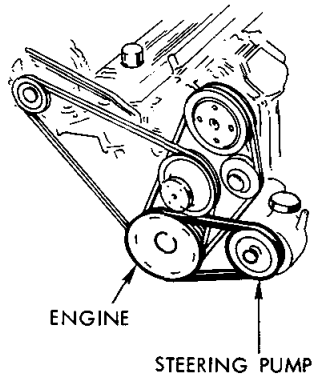

Figure 3

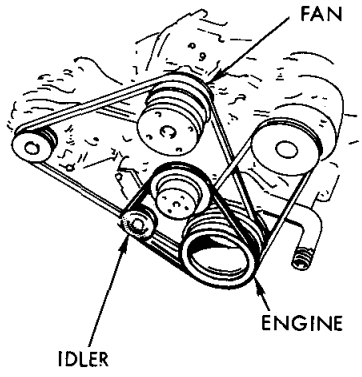

Figure 4

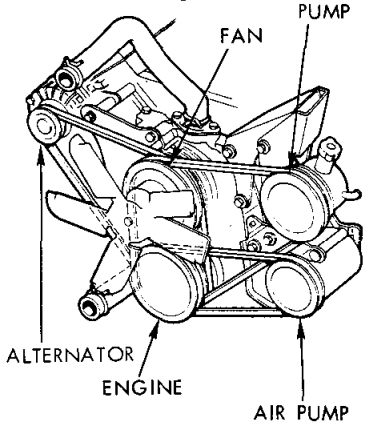

Figure 4A

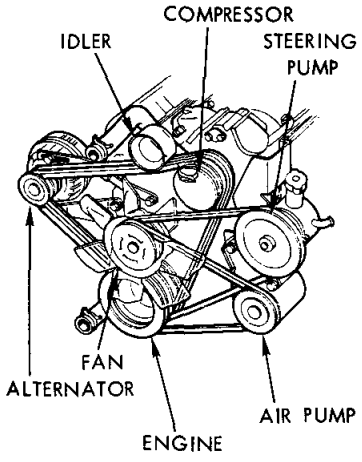

Figure 5

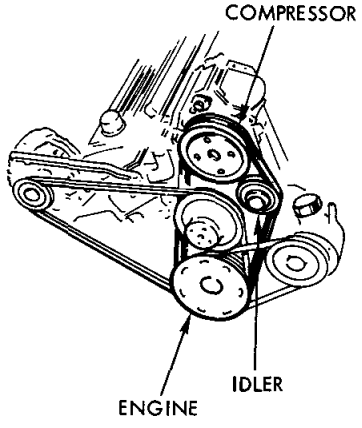

Figure 6

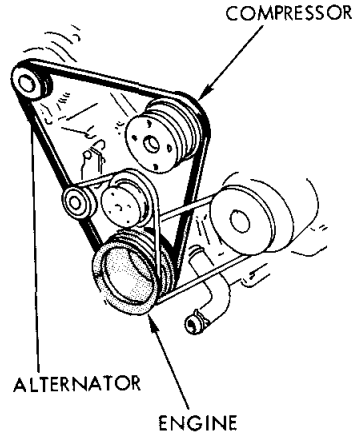

Figure 7

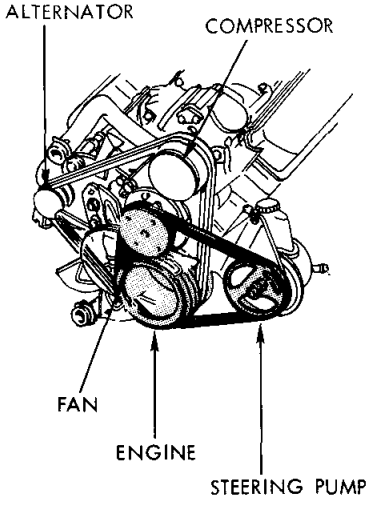

19a4392 B

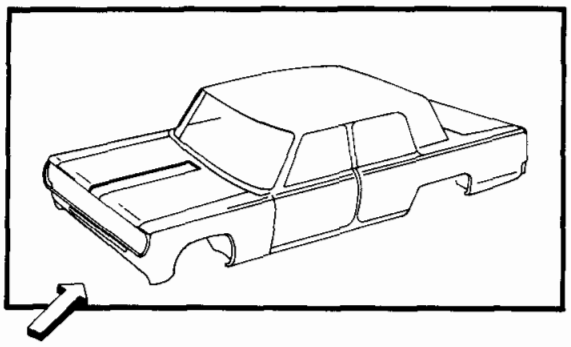

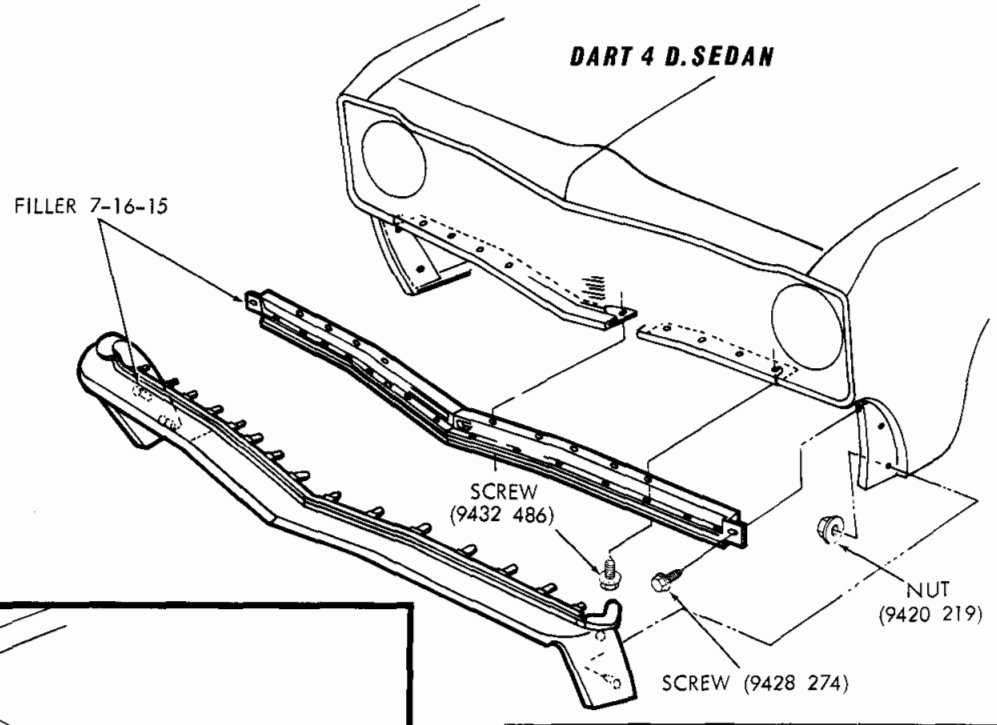

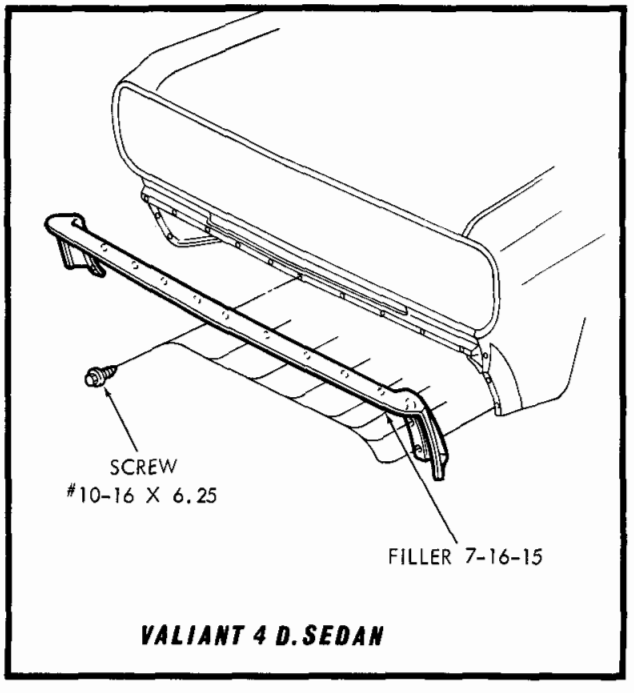

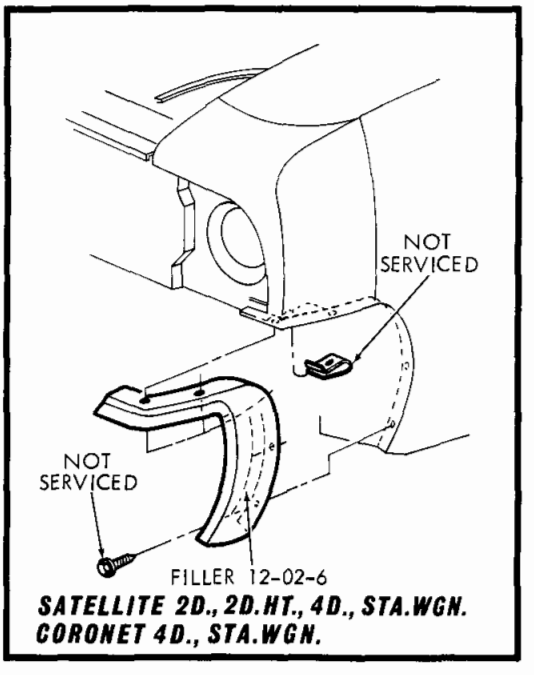

19a4914

RADIATOR GRILLE FRONT FILLERS - V, L, R, W

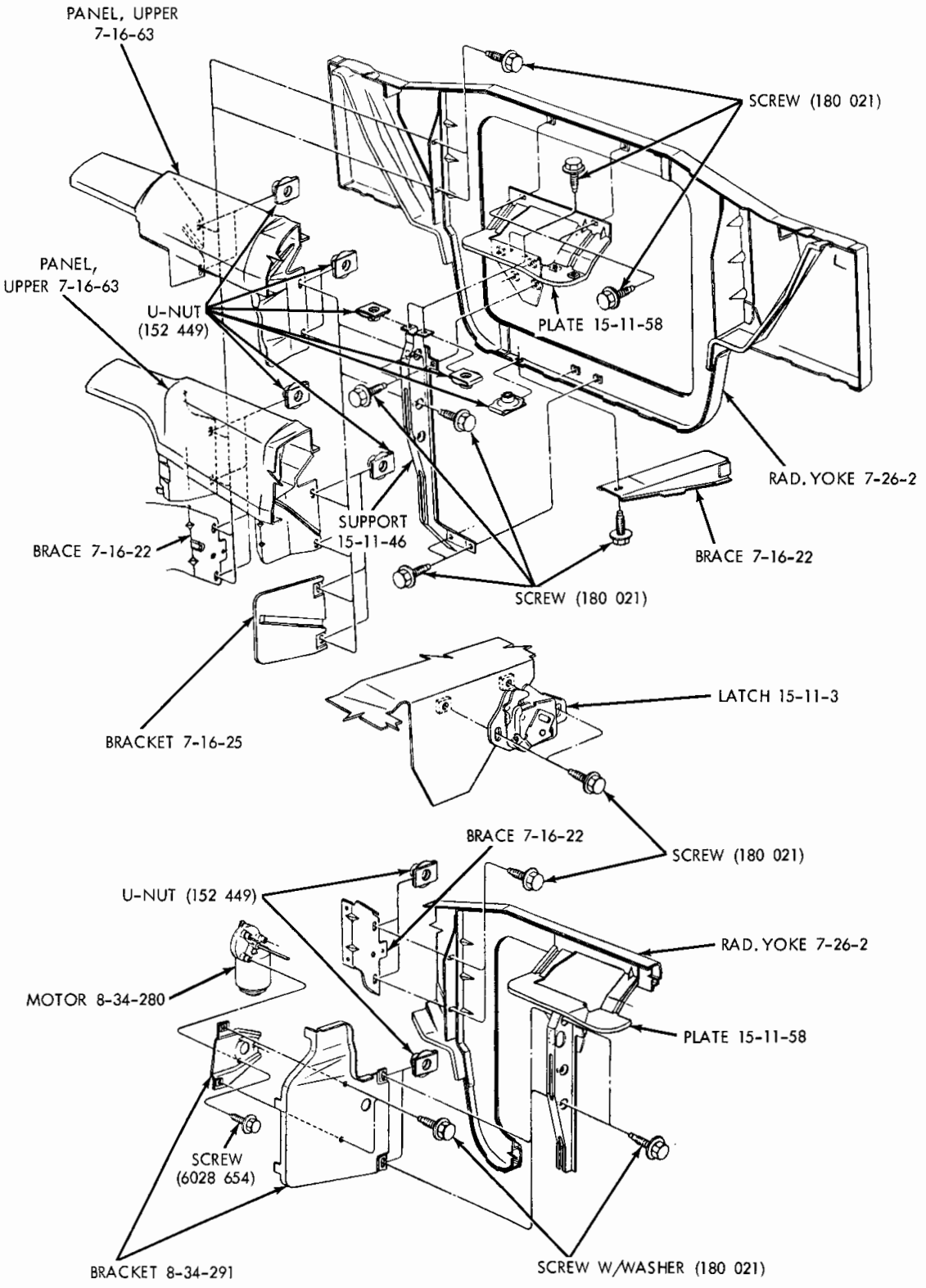

19a4693

RADIATOR YOKE AREA - P, D, C, Y

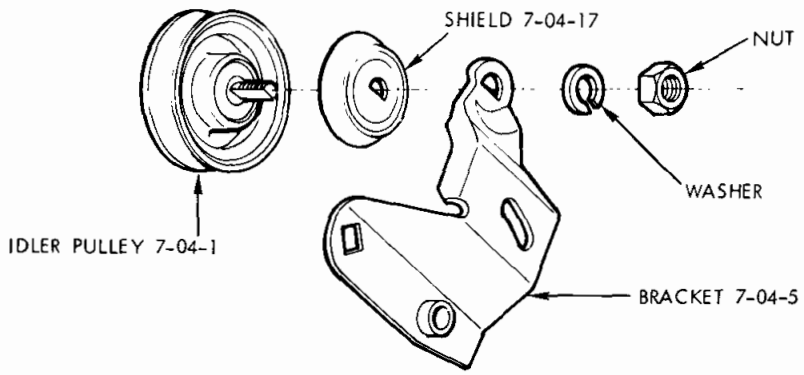

8 CYLINDER
318-360 ENGINE

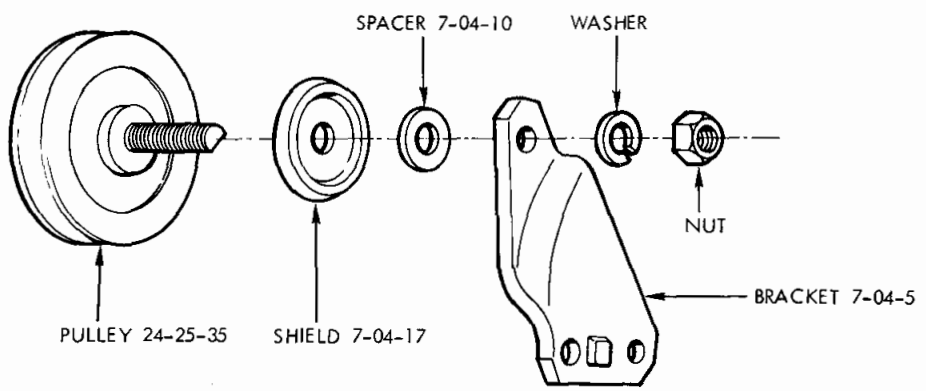

6 CYLINDER
225 ENGINE

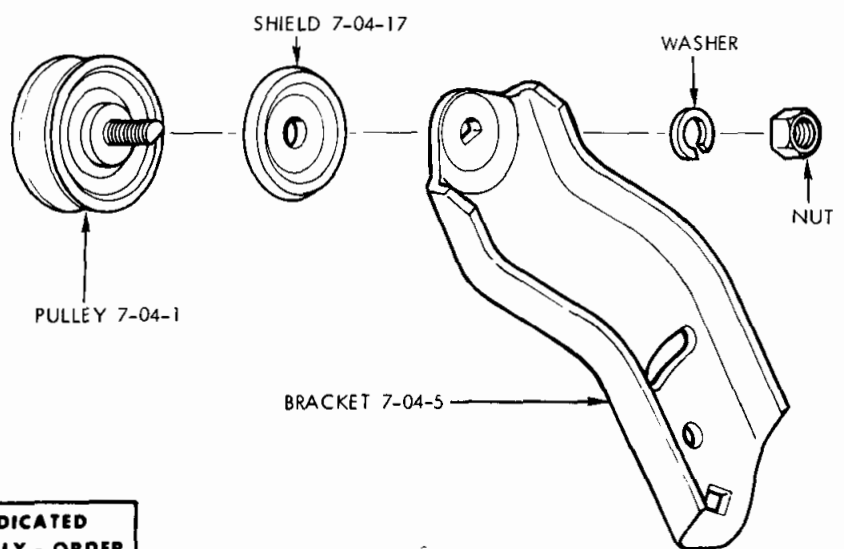

PARTS INDICATED BY NAME ONLY - ORDER BY DESCRIPTION

8 CYLINDER
400-440 ENGINE

19a3376 D

IDLER PULLEY AND PARTS

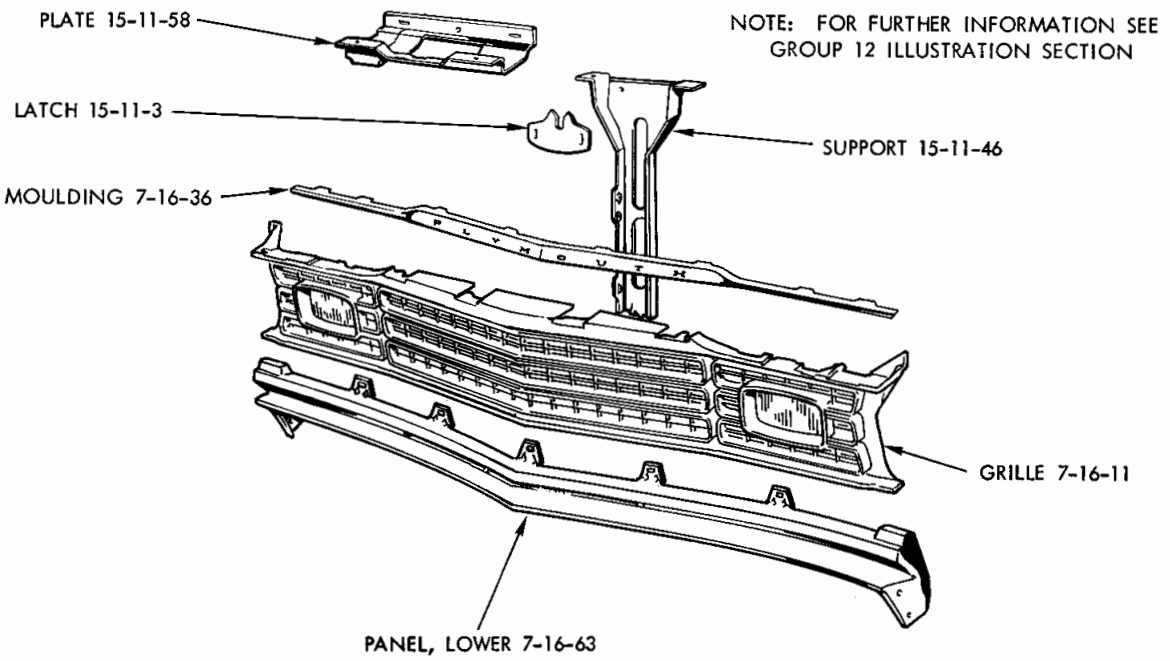

GRILLE - VALIANT

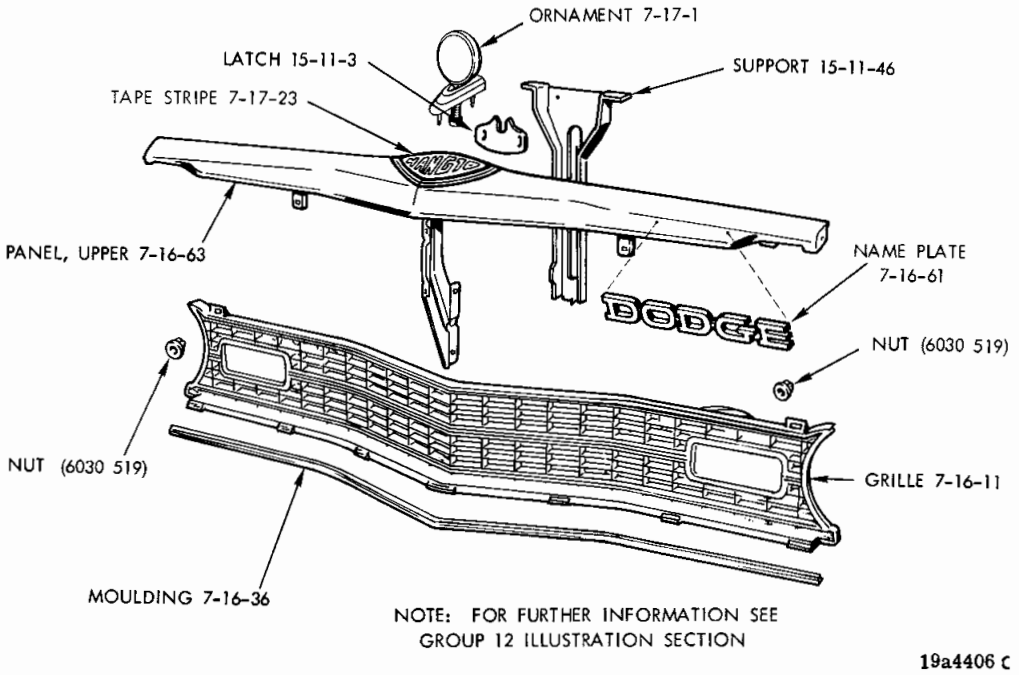

GRILLE - DART

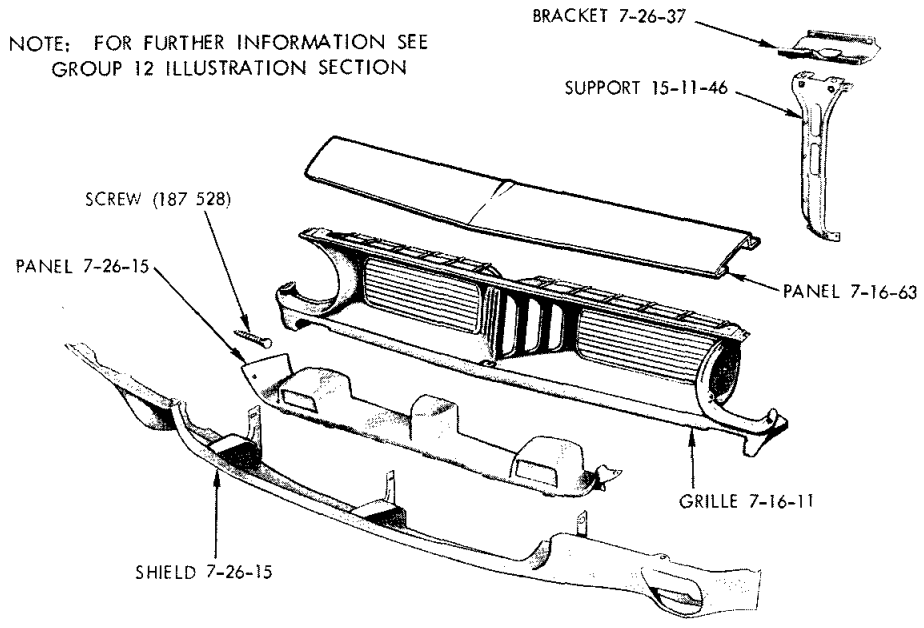

GRILLE - BARRACUDA

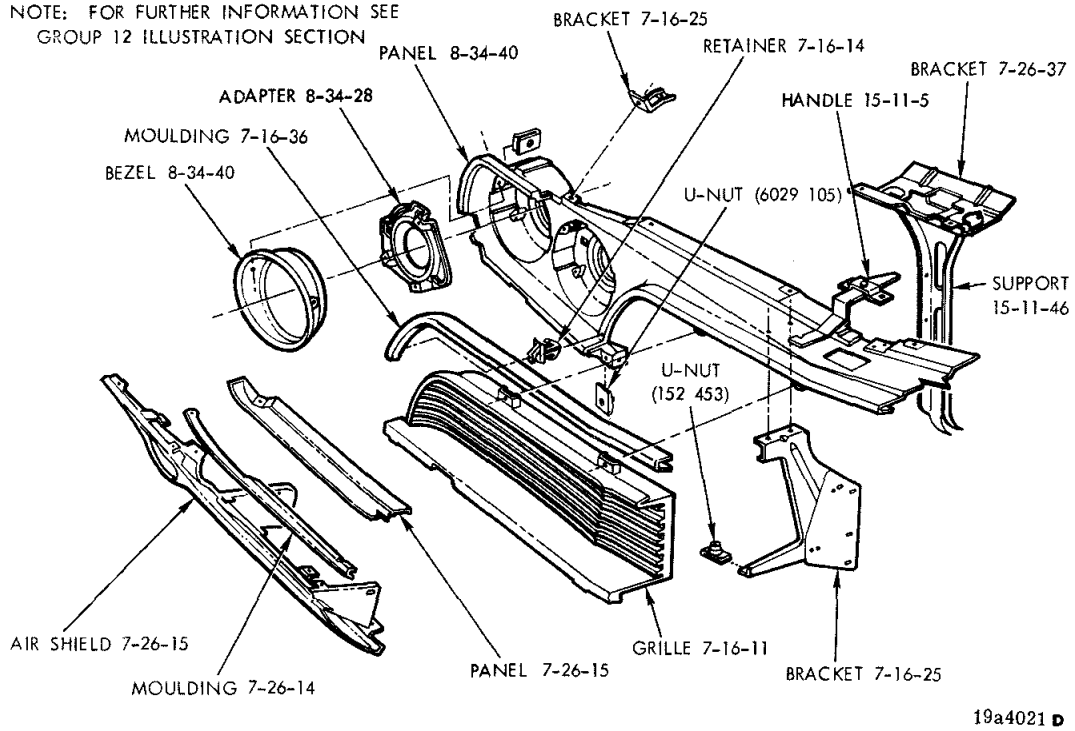

GRILLE - CHALLENGER AND RALLYE

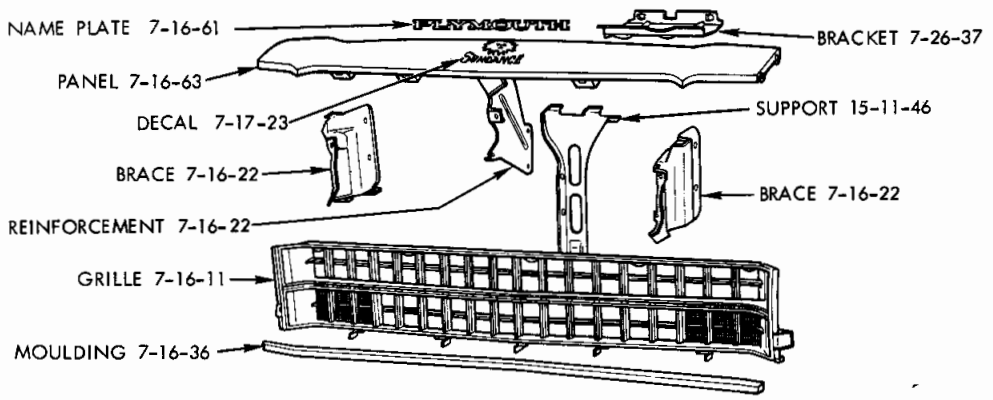

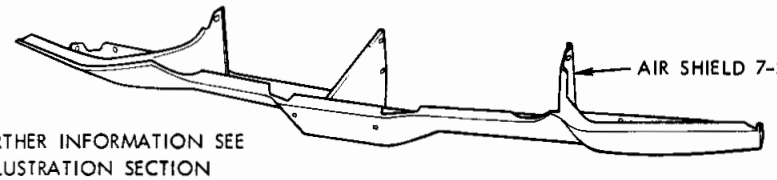

NOTE: FOR FURTHER INFORMATION SEE GROUP 12 ILLUSTRATION SECTION

19a4380 B

GRILLE - SATELLITE 2 DOOR MODELS

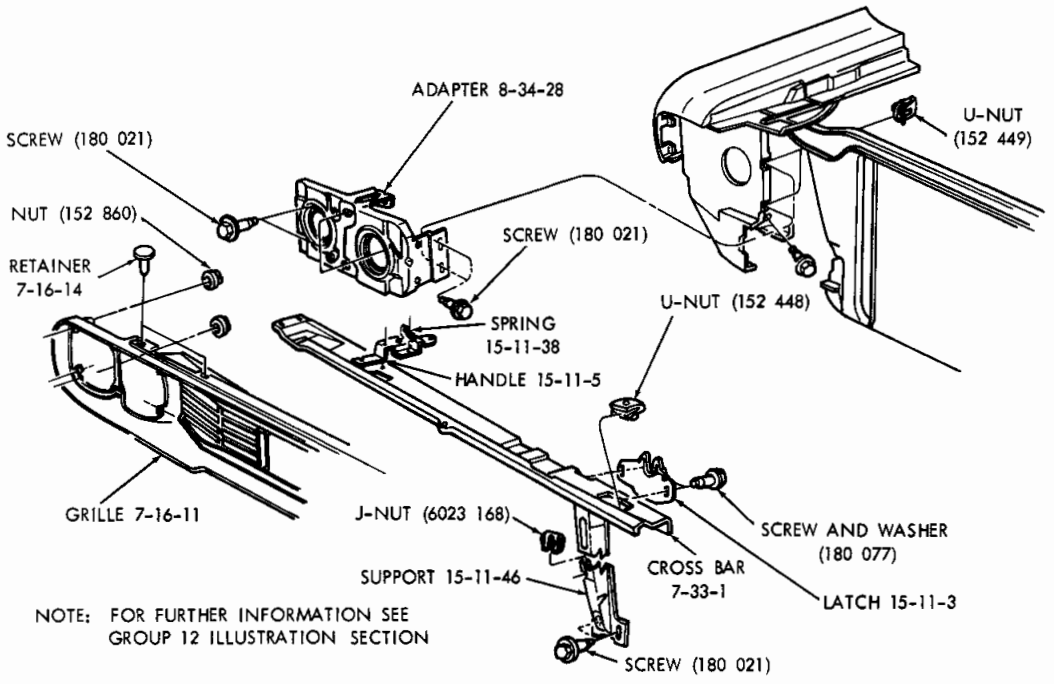

NOTE: FOR FURTHER INFORMATION SEE GROUP 12 ILLUSTRATION SECTION

19a4886A

GRILLE - SATELLITE 4 DOOR SEDAN AND STATION WAGON

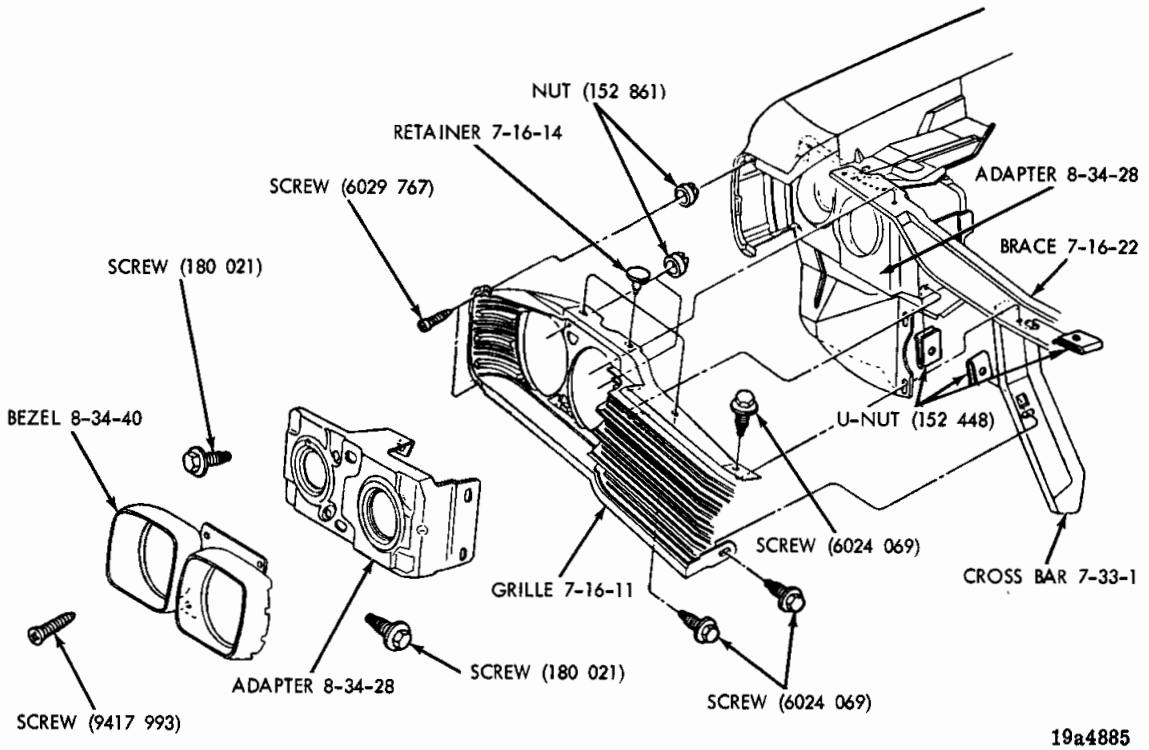

GRILLE - CORONET 4 DOOR SEDAN AND STATION WAGON

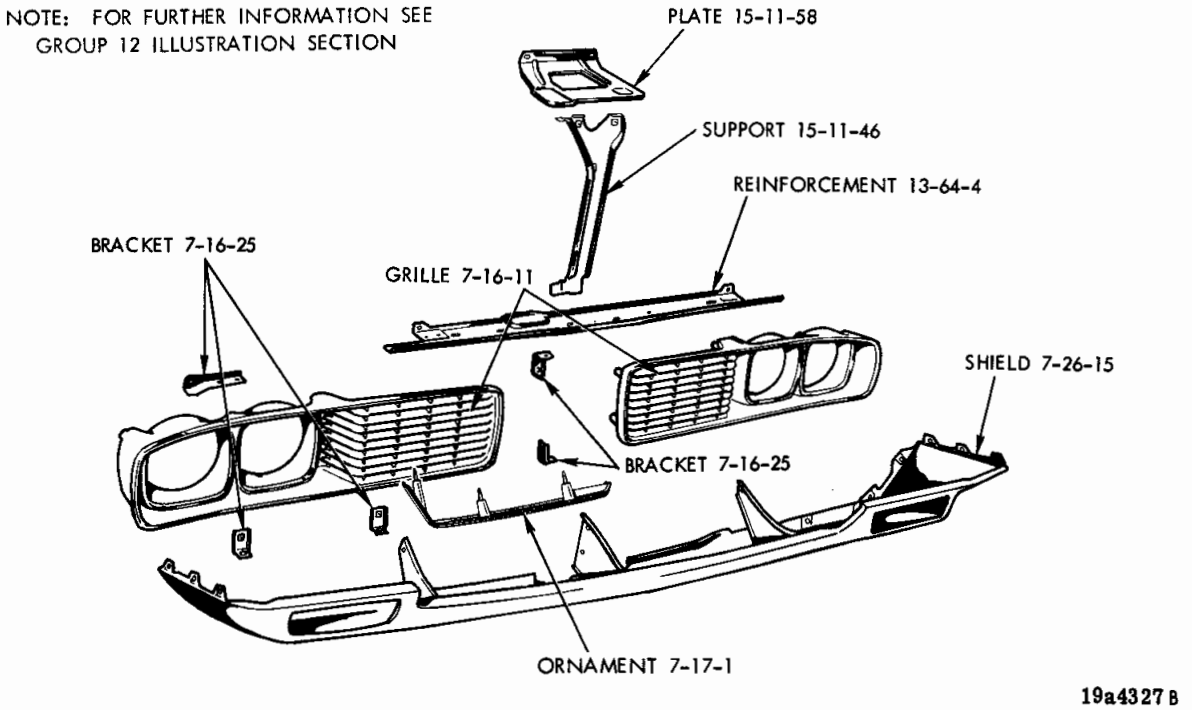

GRILLE - CHARGER

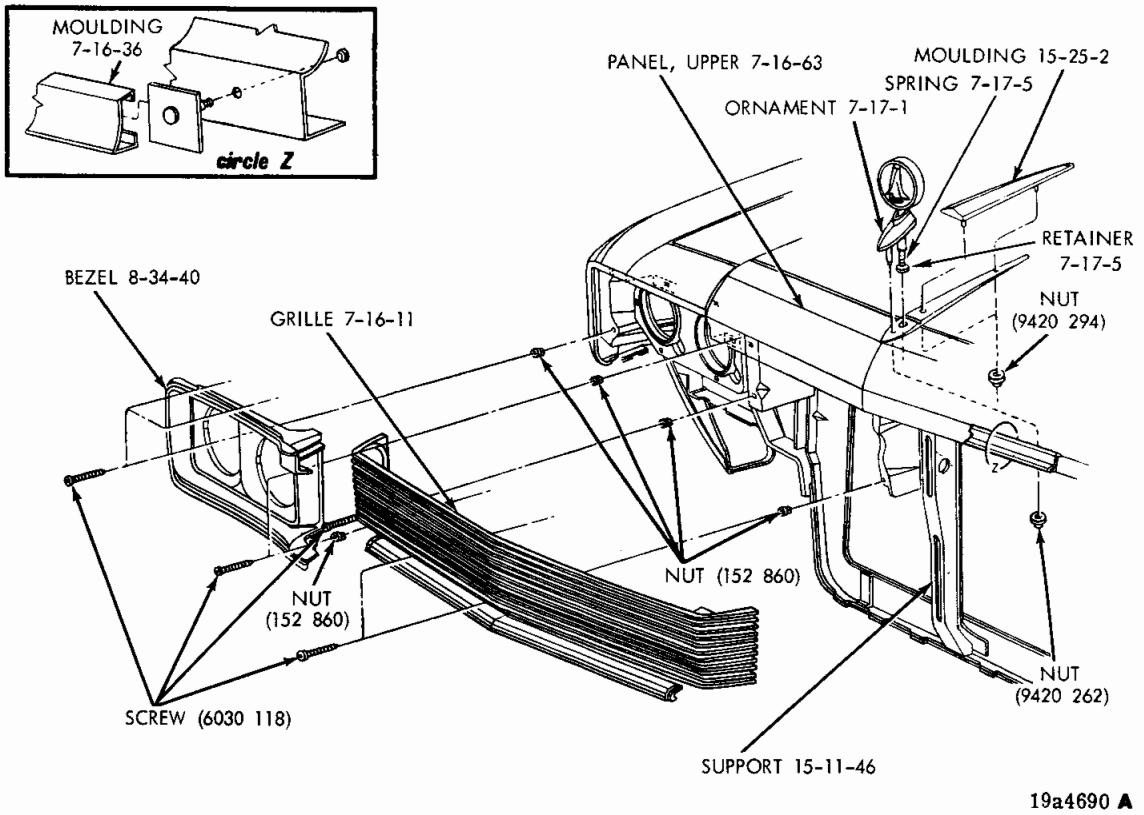

19a4690 A

GRILLE - PLYMOUTH

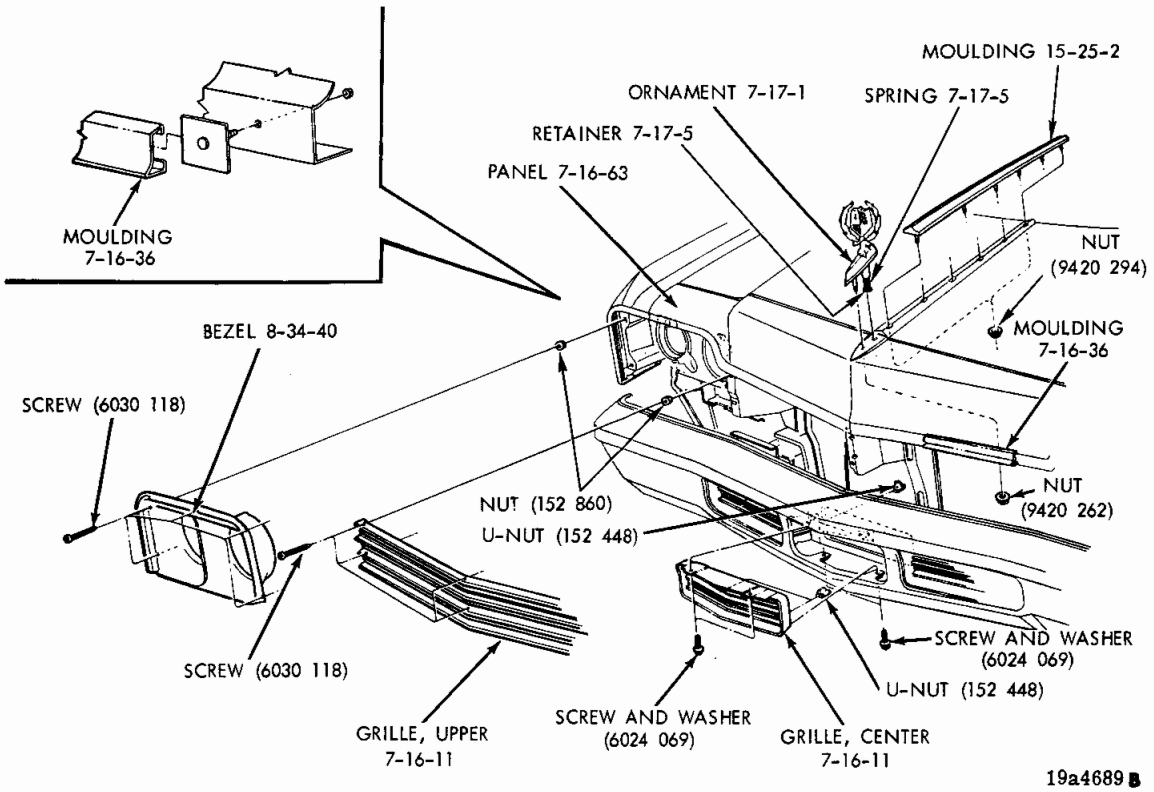

19a4689 B

GRILLE - DODGE

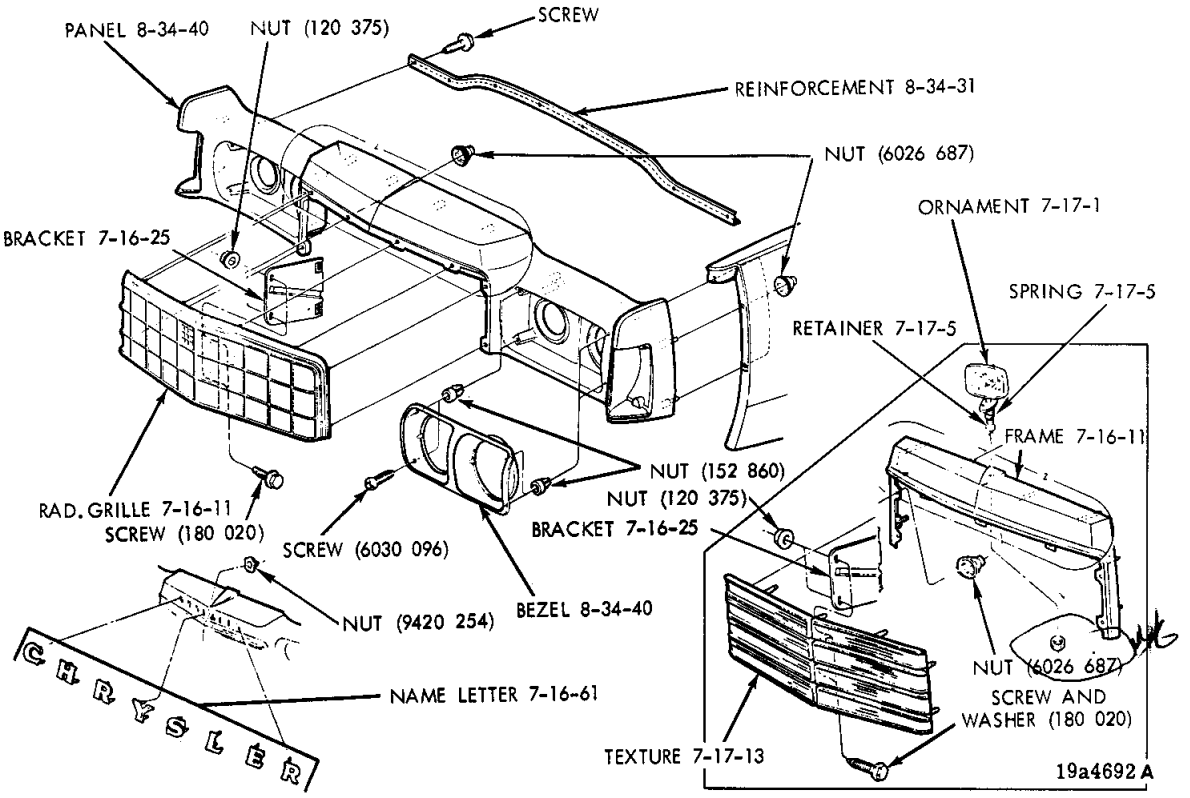

GRILLE - CHRYSLER

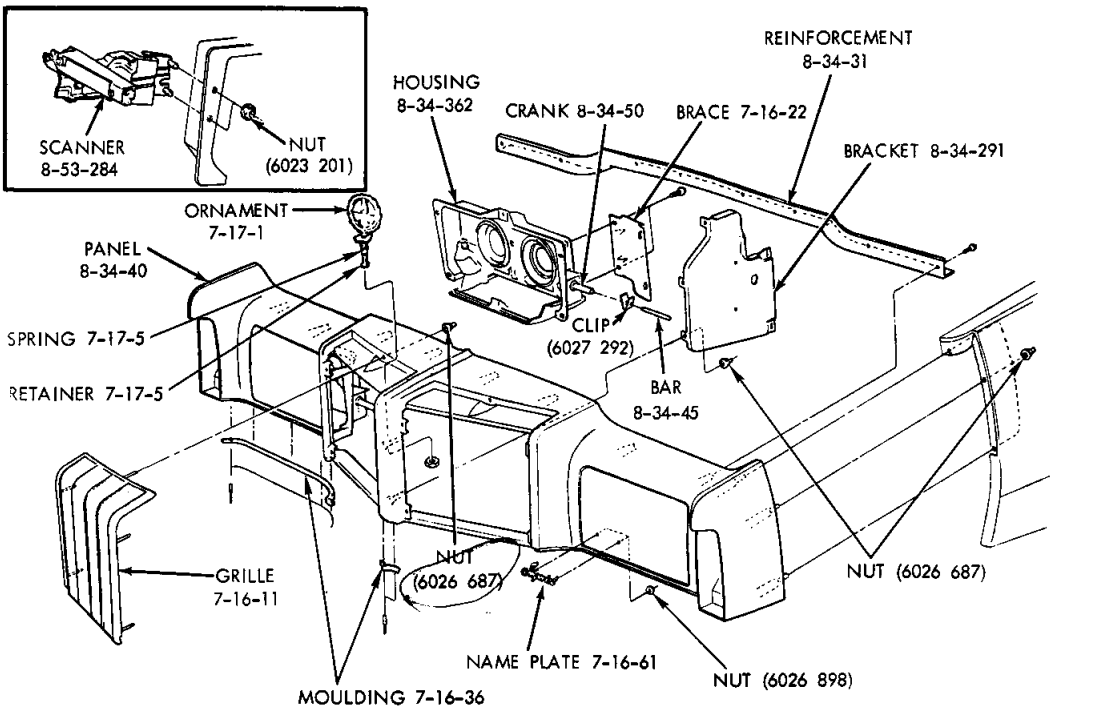

GRILLE - IMPERIAL

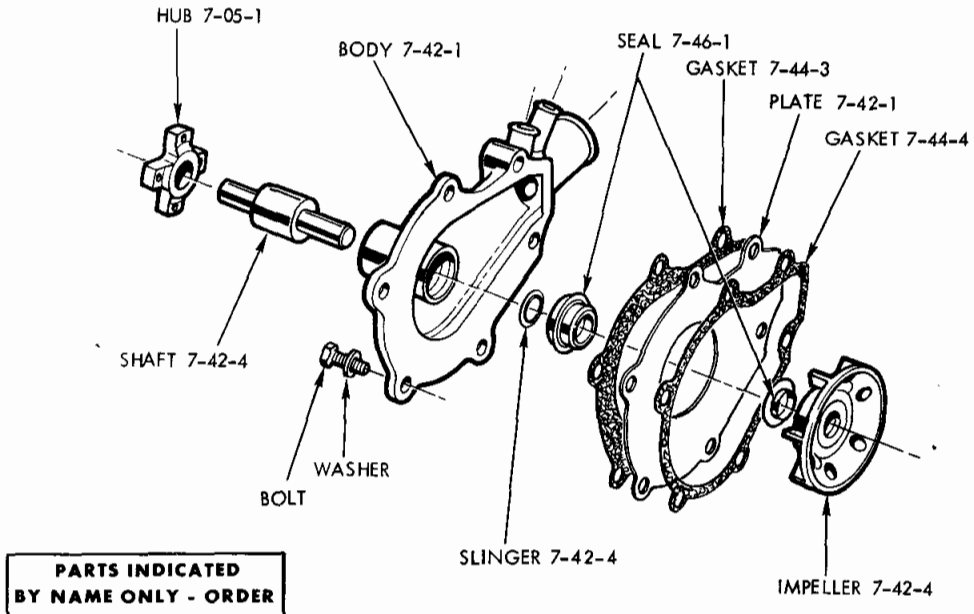

WATER PUMP - 6 CYLINDER

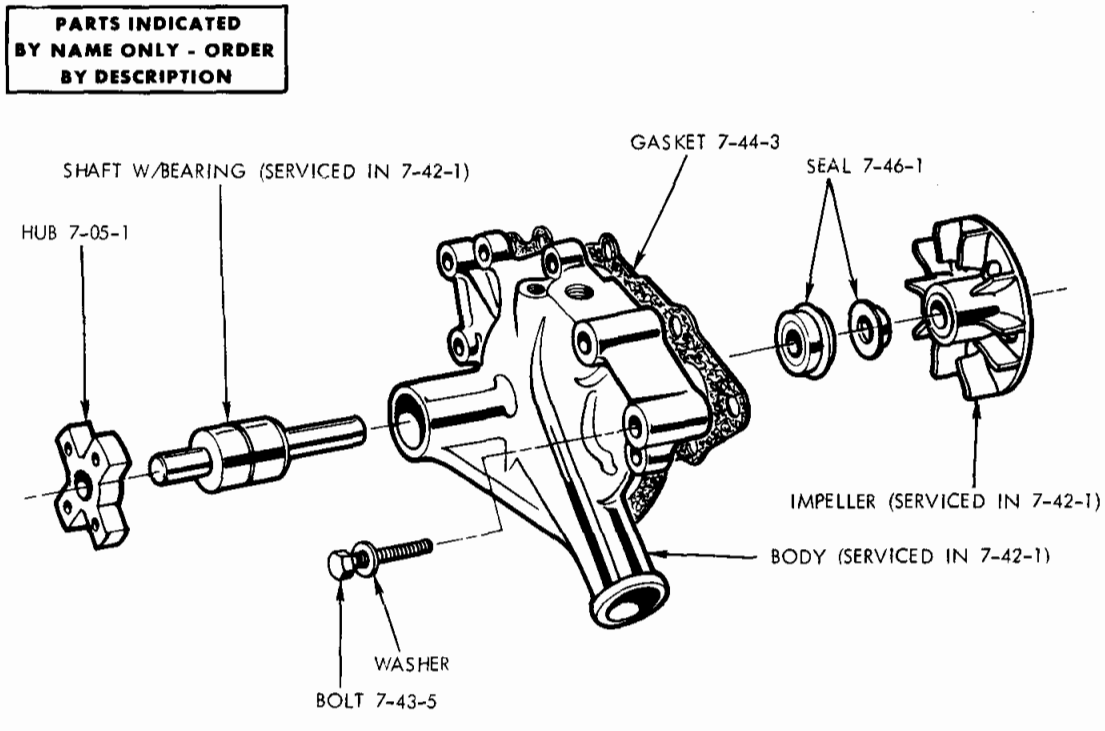

WATER PUMP - 318, 360 ENGINES

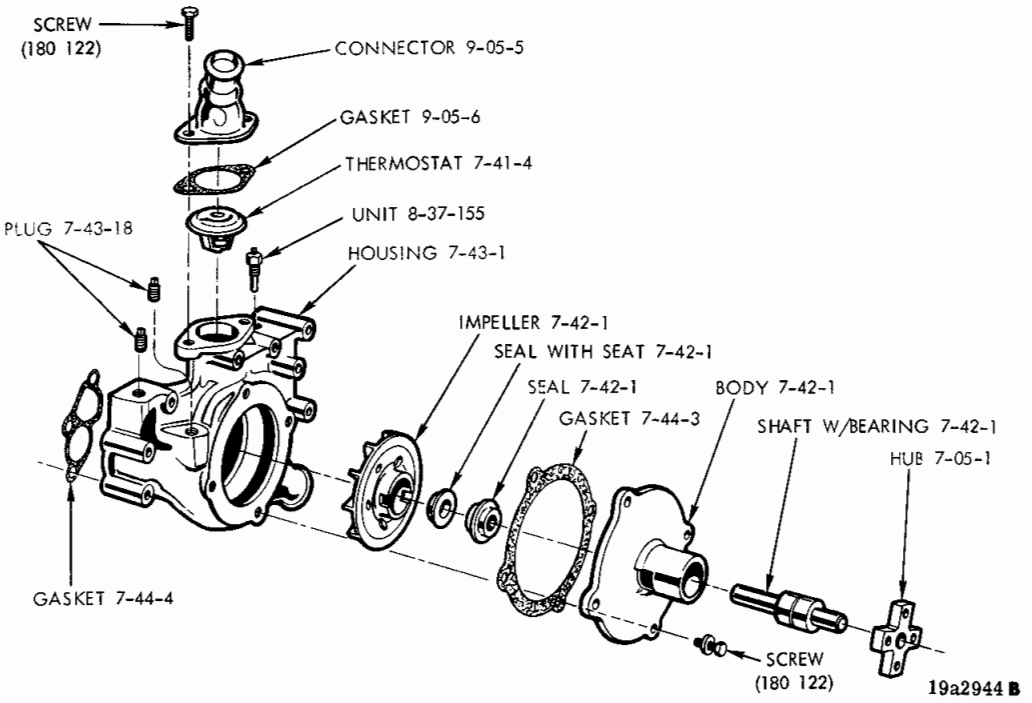

WATER PUMP - 400, 440 ENGINES

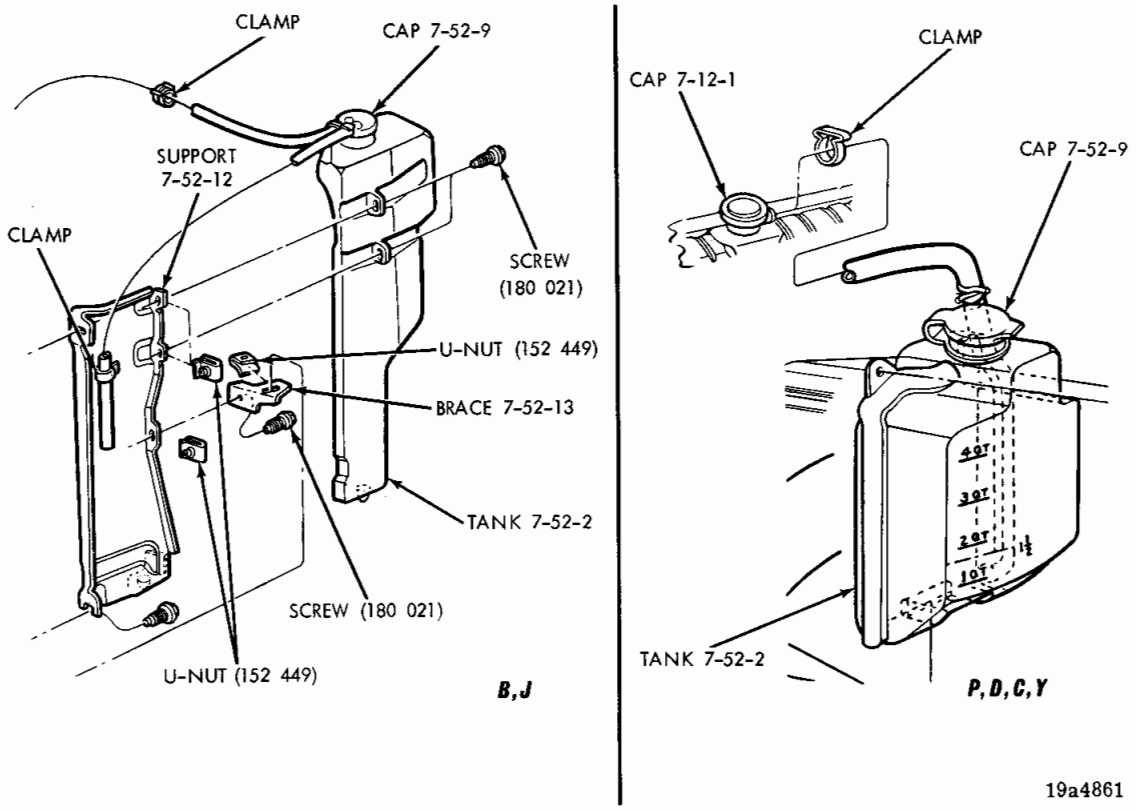

COOLANT RECOVERY SYSTEM - B, J, P, D, C, Y

GROUP 7 - COOLING

BAR, RADIATOR CROSS 7-33
BELT, FAN AND ACCESSORY DRIVE 7-03
CAP, RADIATOR FILLER 7-12
DRAIN COCK, RADIATOR 7-13
FAN 7-02
GASKET, WATER PUMP BODY 7-44
GRILLE, RADIATOR 7-16
HOUSING, WATER PUMP 7-43
HUB, FAN PULLEY 7-05
HOSE, RADIATOR 7-14
MEDALLION OR ORNAMENT, GRILLE 7-17
NIPPLE, WATER PUMP BY-PASS 7-48
PUMP, WATER 7-42
PULLEY, FAN AND ALTERNATOR IDLER 7-04
PULLEY, FAN DRIVE 7-06
RADIATOR 7-11
SEAL, WATER PUMP 7-46
SHROUD, RADIATOR FAN 7-08
TANK, WATER RECOVERY 7-52
THERMOSTAT 7-41
VISCOUS DRIVE, FAN 7-07
YOKE, RADIATOR 7-26

Printed in U.S.A.
November, 1974

CODE	PART NAME	ENG. TYPE OR CU. IN	V	B J	L	R	W	P	D	C (L M)	C (P)	C (H S)	Y	PART NUMBER
7-02-1	**FAN, STANDARD**													
	w/198, 225 Eng. 4 Blades 17 1/2" Dia.		1	—	1	1	1	—	—	—	—	—	—	3462 185
	w/225 Eng. 7 Blades 18" Dia.		—	—	1	—	—	1	1	—	—	—	—	2863 224
	w/318 Eng. 4 Blades 18 1/2" Dia.		1	1	1	1	1	—	—	—	—	—	—	2863 214
	w/318, 360, 400, 440 Eng.													
	7 Blades 20" Dia. Aluminum		1	1	1	1	1	1	1	1	1	1	—	3462 149
	w/360 Eng. 5 Blades 20" Dia.													
	Flex. Blades		—	—	—	1	1	1	1	1	1	1	—	3462 190
	w/400, 440 Eng. 5 Blades													
	20" Dia.													
	Flex. Blades		—	—	—	1	1	1	1	1	1	1	—	3462 190
	w/400, 440 Eng. 7 Blades 20" Dia.													
	Aluminum		—	—	—	—	—	1	1	1	1	1	—	3462 149
	Fan, A/Conditioning													
	w/225 Eng. 7 Blades 18" Dia.		1	—	1	—	—	—	—	—	—	—	—	2863 213
	w/318 Eng. 5 Blades													
	20" Dia. Flex. Blades		1	1	1	—	—	—	—	—	—	—	—	3462 190
	w/318 Eng. 5 Blades 20" Dia.													
	w/Manual Trans. Flex Blades		—	—	—	1	1	—	—	—	—	—	—	3462 190
	w/318 Eng. 7 Blades 20" Dia.													
	w/H/Duty Auto. Trans.		—	—	—	1	1	—	—	—	—	—	—	3462 186
	w/360, 400, 440 Eng. 7 Blades													
	20" Dia.		—	—	—	1	1	1	1	1	1	1	1	3462 186
	w/318 7 Blades 20" Dia. w/Std.													
	Duty Auto. Trans. Aluminum		—	—	—	1	1	—	—	—	—	—	—	3462 149
	Fan, Maximum Cooling													
	w/198, 225 Eng. 7 Blades 18" Dia.		1	—	1	1	1	—	—	—	—	—	—	2863 224
	w/318 Eng. w/H/Duty Auto. Trans. 7													
	Blades 20" Dia. Aluminum		—	—	—	1	1	—	—	—	—	—	—	3462 149
	w/360 Eng. 7 Blades													
	20" Dia. Aluminum		—	—	—	—	—	—	—	1	1	1	—	3462 149
	Fan, Intermediate Cooling													
	w/318, 360, 400, 440 Eng. 7 Blades													
	20" Dia. Aluminum		—	—	—	1	1	—	1	1	1	1	—	3462 149
7-02-16	SPACER, Fan													
	w/198, 225, 318 Eng. Lgh. 1.06"		1	1	1	1	1	—	—	—	—	—	—	1851 959
	w/198, 225 Eng. Lgh. 1.30"		1	—	1	—	—	—	—	—	—	—	—	1851 961
	w/225 Eng. Lgh. 2.00"		—	—	—	1	1	—	—	—	—	—	—	1825 956
	w/318, 360, 400, 440 Eng. Lgh. 2.38"		1	1	1	1	1	1	1	1	1	1	—	2120 130
	NOTE: See Illustration In Group 7													
7-03-1	**BELT, Fan**													
	Engine To Alternator To Fan													
	(See Fig. 1)													
	w/198, 225 Eng. O.S. Lgh. 56.76"		1	—	1	1	1	—	—	—	—	—	—	3671 682
	w/318, 360 Eng. w/Leece-Neville Alt.													
	Dual O.S. Lgh. 59.62"		—	—	—	1	1	1	1	—	—	—	—	3830 190
	w/318, 360 Eng. w/o A/Cond. O.S.													
	Lgh. 47.76"		1	1	1	1	1	—	—	—	—	—	—	3671 524
	w/318, 360 Eng.													
	w/50 amp. Altr. O.S. Lgh.													
	47.76"		—	—	—	1	1	1	1	—	—	—	—	3671 524
	w/400 Eng. w/Leece Neville Altr.													
	Dual O.S. Lgh. 64.38"		—	—	—	1	1	1	1	—	—	—	—	3671 515
	w/400, 440 Eng. w/41 amp. Altr. O.S.													
	Lgh. 46.00"		—	—	—	1	1	1	1	1	1	1	—	2843 221
	w/440 Eng. w/Leece-Neville Altr.													
	Dual O.S. Lgh. 65.50"		—	—	—	—	—	1	1	—	—	—	—	3671 517
	Engine To Power Steering Pump													
	(See Fig. 2)													
	w/198 Eng. w/Max. Cooling													
	O.S. Lgh. 40.00"		1	—	1	—	—	—	—	—	—	—	—	3512 025

CARLINES J - Challenger, B - Barracuda, V - Valiant, L - Dart, R - Satellite, W - Coronet - Charger, P - Plymouth, D - Dodge, C - Chrysler, Y - Imperial

AR Indicates use as required.

Numerals in parentheses ( ) refer to notes.

Printed in U.S.A.

# Indicates parts not listed in any previous parts book.

★ Indicates change or addition.

November, 1974

CODE	PART NAME	ENG. TYPE OR CU. IN	V	B J	L	R	W	P	D	C (L M)	C (P)	C (H S)	Y	PART NUMBER
7-03-1	BELT Cont'd.													
	w/198 Eng. w/o Max. Cooling													
	O.S. Lgh. 39.00"		1	—	1	—	—	—	—	—	—	—	—	3671 259
	w/225 Eng. w/A/Cond. w/Interm. Cooling													
	O.S. Lgh. 40.00"		1	—	1	1	1	—	—	—	—	—	—	3512 025
	w/225 Eng. w/o A/Cond.													
	O.S. Lgh. 39.00"		1	—	1	1	1	—	—	—	—	—	—	3671 259
	w/318, 360 Eng. w/2.71/2.76													
	3.21/3.23 Axle O.S. Lgh. 37.00"		1	1	1	1	1	—	—	—	—	—	—	3675 427
	w/318 Eng. O.S. Lgh. 37.00"		—	1	—	—	—	—	—	—	—	—	—	3675 427
	w/318 Eng. w/50 Amp.													
	Altr. O.S. Lgh. 37.00"		—	—	—	1	1	—	—	—	—	—	—	3675 427
	w/360 Eng. w/50 & 65 Amp. H/D													
	Altr. O.S. Lgh. 37.00"		—	—	—	—	—	1	1	1	1	1	—	3675 427
	w/318, 360 Eng. w/3.54/3.55 Axle													
	O.S. Lgh. 38.00"		1	1	1	1	1	—	—	—	—	—	—	2951 984
	w/400, 440 Eng. w/o A/Cond. w/41, 50 &													
	65 amp. H/Duty Alt. O.S. Lgh. 43.50"		—	—	—	1	1	1	1	1	1	1	—	2951 920
	Engine To Fan													
	(See Fig. 3)													
	w/318, 360 Eng. w/A/Cond. w/Manual													
	Strg. O.S. Lgh. 37.50"		1	1	1	—	—	—	—	—	—	—	—	3462 911
	w/318, 360 Eng. w/50 Amp. Altr. w/Manual Strg. w/A/Cond.													
	O.S. Lgh. 37.50"		—	—	—	1	1	—	—	—	—	—	—	3462 911
	w/318, 360 Eng. w/Leece Neville Altr.													
	w/Manual Strg. O.S. Lgh. 37.50"		—	—	—	1	1	—	—	—	—	—	—	3462 911
	w/400, 440 Eng. w/A/Cond. w/Manual													
	Strg. O.S. Lgh. 44.00"		—	—	—	1	1	—	—	—	—	—	—	2951 202
	w/400 Eng. w/Leece Neville Altr.													
	w/Manual Strg. O.S. Lgh. 44.00"		—	—	—	1	1	—	—	—	—	—	—	2951 202
	Air Pump, w/Calif. Emission Pkg.													
	(See Fig. 4)													
	Drive, w/440 Eng. O.S. Lgh. 42.00"		—	—	—	—	—	1	1	1	1	1	—	3418 952
	AIR PUMP & FAN DRIVE w/Calif. Emission Pkg.													
	(See Fig. 4A)													
	w/440 Eng. w/A/Cond.		—	—	—	—	—	1	1	1	1	1	1	2658 379
	Engine To Compressor													
	(See Fig. 5)													
	w/225 Eng. w/A/Cond. O.S. Lgh. 55.40"		1	—	1	1	1	—	—	—	—	—	—	3769 978
	Engine To Alternator To Compressor													
	(See Fig.6)													
	w/318, 360 Eng. w/A/Cond. w/ Leece Neville Altr. Dual O.S. Lgh.													
	59.62"		—	—	—	1	1	1	1	—	—	—	—	3830 190
	w/318, 360 Eng. w/A/Cond. Dual O.S. Lgh. 54.26"		1	1	1	1	1	—	—	—	—	—	—	3462 974
	w/318, 360 Eng. w/A/Cond. Dual													
	w/65 Amp. Altr. O.S. Lgh. 54.26"		—	—	—	1	1	1	1	—	—	—	—	3462 974
	w/400 Eng. w/A/Cond. w/Leece Neville Altr. Dual O.S. Lgh.													
	64.50"		—	—	—	1	1	1	1	—	—	—	—	3671 515
	w/400, 440 Eng. w/A/Cond.													
	w/60 and 65 Amp. H/Duty Altr. Dual													
	O.S. Lgh. 58.00"		—	—	—	1	1	1	1	1	1	1	—	3751 382
	w/400, 440 Eng. w/A/Cond. Dual													
	O.S. Lgh. 58.00"		—	—	—	1	1	—	—	1	1	1	1	3751 382

CARLINES J - Challenger, B - Barracuda, V - Valiant, L - Dart, R - Satellite, W - Coronet - Charger, P - Plymouth, D - Dodge, C - Chrysler, Y - Imperial

AR Indicates use as required.

Numerals in parentheses ( ) refer to notes.

# Indicates parts not listed in any previous parts book.

★ Indicates change or addition.

Printed in U.S.A.
November, 1974

CODE	PART NAME	ENG. TYPE OR CU. IN	V	B J	L	R	W	P	D	C (L M)	C (P)	C (H S)	Y	PART NUMBER
7-03-1	BELT Cont'd.													
	w/440 Eng. w/A/Cond. w/Leece-Neville Altr. Dual O.S. Lgh. 65.76"		—	—	—	—	—	1	1	—	—	—	—	3671 517
	Fan & P/Strg. Pump Drive (See Fig. 7)													
	w/318 Eng. w/A/Cond. w/3.54/3.55 Axle O.S. Lgh. 46.00"		1	—	1	—	—	—	—	—	—	—	—	2843 221
	w/318, 360 Eng. w/A/Cond. w/2.71/2.76 w/2.93/2.94 Axle O.S. Lgh. 44.75"		1	—	1	1	1	—	—	—	—	—	—	2951 304
	w/318, 360 Eng. w/A/Cond. O.S. Lgh. 44.75"		—	1	—	—	—	1	1	1	1	1	—	2951 304
	w/318 Eng. w/A/Cond. w/Leece-Neville Altr. O.S. Lgh. 44.75"		—	—	—	1	1	—	—	—	—	—	—	2951 304
	w/360 Eng. w/A/Cond. w/3.21/3.23 Axle O.S. Lgh. 44.75"		—	1	—	—	—	—	—	—	—	—	—	2951 304
	w/318, 360 Eng. w/A/Cond. w/3.54/3.55 Axle O.S. Lgh. 45.50"		1	1	1	1	1	—	—	—	—	—	—	2951 898
	w/400 Eng. w/P/Strg. w?A/Cond. w/2.71/2.76 Axle		—	—	—	1	1	—	—	—	—	—	—	2658 379
	w/400, 440 Eng. w/A/Cond.		—	—	—	1	1	1	1	—	—	—	—	2658 379
	w/440 Eng. u/w Calif. Emission Pkg. O.S. Lgh. 50.75"		—	—	—	—	—	1	1	1	1	1	1	3751 387
	w/400, 440 Eng. w/A/Cond. w/3.54/3.55 Axle O.S. Lgh. 49.75"		—	—	—	1	1	—	—	—	—	—	—	3698 905
	w/400, 440 Eng. W/A/Cond. O.S. Lgh. 49.75"		—	—	—	—	—	1	1	1	1	1	—	3698 905
	w/440 Eng. u/w Calif. Emission Pkg.		—	—	—	—	—	—	—	—	—	—	1	3698 905
7-04-1	**PULLEY, Idler, Fan and Alternator**													
	w/318, 360, 440 Eng. w/Manual Strg. w/A/Cond. 1 Groove		1	1	1	1	1	—	—	—	—	—	—	3830 196
	w/318, 360, 400 Eng. w/Manual Strg. w/Leece Neville Altr. 1 Groove		—	—	—	1	1	—	—	—	—	—	—	3830 196
	FAN IDLER BRACKET w/318, 360 Eng. w/Manual Strg. w/A/Cond.		1	1	1	1	1	—	—	—	—	—	—	3830 228
	w/318, 360 Eng. w/Manual Strg. w/A/Cond. w/H/Duty 65 Amp. Altr.		—	—	—	1	1	—	—	—	—	—	—	3830 228
	w/318, 360 Eng. w/Manual Strg. w/Leece Neville Altr.		—	—	—	1	1	—	—	—	—	—	—	3830 223
	w/318, 360 Eng. w/A/Cond. w/Manual Strg. w/Leece Neville Altr. w/H/Duty Auto. Trans.		—	—	—	1	1	—	—	—	—	—	—	3830 223
	w/360 Eng. w/A/Cond. w/Manual Strg. w/Leece Neville Altr.		—	—	—	1	1	—	—	—	—	—	—	3820 223
	w/400 Eng. w/Manual Strg. w/Leece Neville Altr.		—	—	—	1	1	—	—	—	—	—	—	3830 219
	w/440 Eng. w/Manual Strg. w/A/Cond.		—	—	—	1	1	—	—	—	—	—	—	3830 219
	PULLEY & BRG. w/318, 360, 400, 440 Eng. w/Leece Neville Altr. 2 Groove		—	—	—	1	1	1	1	—	—	—	—	3830 162
7-04-5	BRACKET, Fan Belt Idler Pulley													
	w/318, 360 Eng. w/A/Cond. w/Manual Strg. w/H/Duty 65 Amp. Altr.		1	1	1	1	1	—	—	—	—	—	—	3830 226
	w/318, 360 Eng. w/Leece Neville Altr. w/Manual Strg.		—	—	—	1	1	—	—	—	—	—	—	3830 225
	w/318, 360 Eng. w/A/Cond. w/Manual Strg. w/Leece Neville Altr. w/H/Duty Auto. Trans.		—	—	—	1	1	—	—	—	—	—	—	3830 225

CARLINES: J - Challenger, B - Barracuda, V - Valiant, L - Dart, R - Satellite, W - Coronet - Charger, P - Plymouth, D - Dodge, C - Chrysler, Y - Imperial

AR Indicates use as required.

\# Indicates parts not listed in any previous parts book.

Numerals in parentheses ( ) refer to notes.

★ Indicates change or addition.

Printed in U.S.A.
November, 1974

CODE	PART NAME	ENG. TYPE OR CU. IN	V	B J	L	R	W	P	D	C (L M)	C (P)	C (H S)	Y	PART NUMBER
7-04-5	BRACKET Cont'd.													
	w/360 Eng. w/A/Cond. w/Manual Strg. w/Leece Neville Altr.		—	—	—	1	1	—	—	—	—	—	—	3830 225
	w/400 Eng. w/Manual Strg. w/Leece Neville Altr.		—	—	—	1	1	—	—	—	—	—	—	3751 079
	w/440 Eng. w/Manual Strg. w/A/Cond.		—	—	—	1	1	—	—	—	—	—	—	3751 079
	ALTR. I/PULLEY w/318 Eng. w/Leece Neville Altr.		—	—	—	1	1	—	—	—	—	—	—	3698 807
	w/440 Eng. w/Leece Neville Altr. u/w/Calif. Emission Pkg.		—	—	—	—	—	1	1	—	—	—	—	3830 309
	w/400, 440 Eng. w/Leece Neville Altr.		—	—	—	1	1	1	1	—	—	—	—	3769 956
	ALTR. BELT IDLER PULLEY w/318, 360 400, 440 Eng. w/Leece Neville Altr. Up To 2-19-74		—	—	—	1	1	1	1	—	—	—	—	3769 127
	After 2-19-74		—	—	—	1	1	1	1	—	—	—	—	# 3830 212
	ALTR. BELT IDLER MTG. FRT. w/400, 440 Eng. w/Leece Neville Altr.		—	—	—	1	1	1	1	—	—	—	—	3751 165
	Rr. w/400 Eng. w/Leece Neville Altr.		—	—	—	1	1	1	1	—	—	—	—	3698 948
	Rr. w/400, 440 Eng. w/Leece Neville Altr.		—	—	—	—	—	1	1	—	—	—	—	3698 950
7-04-6	BOLT, w/Pump Body Fan Idler Pulley Mtg. w/318, 360 Eng. w/Manual Strg. w/A/Cond. 3/8 x 5.75"		1	1	1	1	1	—	—	—	—	—	—	6029 696
	w/318, 360 Eng. w/Manual Strg. w/Leece Neville Altr. 3/8 x 5.75"		—	—	—	1	1	—	—	—	—	—	—	6029 696
7-04-9	SUPPORT, Idler Pulley Bracket w/440 Eng. w/Manual Strg. w/A/Cond.		—	—	—	1	1	—	—	—	—	—	—	3698 652
	w/400 Eng. w/Man. Strg. w/L/N Altr.		—	—	—	1	1	—	—	—	—	—	—	3698 652
	Altr. Idler w/400 Eng. w/Leece Neville Altr.		—	—	—	1	1	1	1	—	—	—	—	# 3830 312
	Altr. Idler w/440 Eng. w/Leece Neville Altr.		—	—	—	—	—	1	1	—	—	—	—	3830 311
	Altr. I/Pulley Brkt. To Int. Manifold w/318, 360 Eng. w/Leece Neville Altr.		—	—	—	1	1	1	1	—	—	—	—	3577 786
7-04-10	SPACER, Fan I/Pulley Brkt. w/318, 360 Eng. w/Manual Strg. w/A/Cond.		1	1	1	1	1	—	—	—	—	—	—	6029 584
	w/318, 360 Eng. w/Manual Strg. w/A/Cond. w/65 Amp. H/Duty Altr.		—	—	—	1	1	—	—	—	—	—	—	6029 584
	Altr. Belt Idler Mtg. Frt. To Rear w/400, 440 Eng. w/ Leece Neville Altr.		—	—	—	2	2	2	2	—	—	—	—	6030 396
	Rr. Altr. Mtg. Brkt. To Altr. I/Pulley Brkt. w/318, 360 Eng. w/Leece Neville Altr.		—	—	—	1	1	1	1	—	—	—	—	6030 396
7-04-17	SHIELD, Fan Idler Pulley Brg. w/318, 360, 400, 440 Eng. w/A/Cond. w/Manual Strg.		2	2	2	2	2	—	—	—	—	—	—	3769 685
	w/318, 360, 400 Eng. w/Manual Strg. w/Leece Neville Altr.		—	—	—	2	2	—	—	—	—	—	—	3769 685
	w/318, 360 Eng. w/Manual Strg. w/A/Cond. w/65 Amp. H/Duty Altr.		—	—	—	2	2	—	—	—	—	—	—	3769 685
	w/318, 360 Eng. w/A/Cond. w/Manual Strg. w/Leece Neville Altr. w/H/Duty Auto. Trans.		—	—	—	1	1	—	—	—	—	—	—	3769 685

CARLINES: J - Challenger, B - Barracuda, V - Valiant, L - Dart, R - Satellite, W - Coronet - Charger, P - Plymouth, D - Dodge, C - Chrysler, Y - Imperial

AR Indicates use as required.

\# Indicates parts not listed in any previous parts book.

Numerals in parentheses ( ) refer to notes.

★ Indicates change or addition.

Printed in U.S.A.
November, 1974

CODE	PART NAME	ENG. TYPE OR CU. IN	V	B J	L	R	W	P	D	C (L M)	C (P)	C (H S)	Y	PART NUMBER
7-04-17	SHIELD Cont'd.													
	Altr. I/Pulley Brg. w/318, 360 Eng. w/Leece Neville Altr.		—	—	—	2	2	2	2	—	—	—	—	3769 685
	w/400, 440 Eng. w/Leece Neville Altr.		—	—	—	1	1	1	1	—	—	—	—	3769 685
7-05-1	**HUB, Fan Pulley Exc. 400, 440 Eng.**		1	1	1	1	1	1	1	1	1	1	—	3671 525
	w/400, 440 Eng.		—	—	—	1	1	1	1	1	1	1	1	3751 812
7-06-1	**PULLEY, Fan Drive**													
	w/318 Eng. w/Man. Strg. w/H Duty Auto. Trans. w/50 Amp. Altr. 1 Groove		—	—	—	1	1	—	—	—	—	—	—	3769 134
	w/360 Eng. w/Man. Strg. 1 Groove		1	1	1	—	—	—	—	—	—	—	—	3769 134
	w/360 Eng. w/Man. Strg. w/50 Amp. Altr. 1 Groove		—	—	—	1	1	—	—	—	—	—	—	3769 134
	w/318 Eng. w/Pwr. Strg. 2 Groove		1	1	1	—	—	—	—	—	—	—	—	3614 378
	w/318 Eng. w/Pwr. Strg. w/Std. Duty Auto. Trans. 2 Groove		—	—	—	1	1	—	—	—	—	—	—	3614 378
	w/360 Eng. w/Pwr. Strg. 2 Groove		1	1	1	—	—	—	—	—	—	—	—	3769 135
	w/318 Eng. w/Pwr. Strg. w/H/Duty Auto. Trans. w/50 Amp. Altr. 2 Groove		—	—	—	1	1	—	—	—	—	—	—	3769 135
	w/360 Eng. w/Pwr. Strg. w/50, And 65 Amp. Altr. 2 Groove		—	—	—	1	1	1	1	1	1	1	—	3769 135
	w/318 Eng. w/A/Cond. 3 Groove		1	1	1	—	—	—	—	—	—	—	—	3769 141
	w/318 Eng. w/A/Cond. w/Std. Duty Auto Trans. 3 Groove		—	—	—	1	1	—	—	—	—	—	—	3769 141
	w/318, 360 Eng. w/Leece Neville Altr. 3 Groove		—	—	—	1	1	1	1	—	—	—	—	3614 377
	w/318 Eng. w/A/Cond. w/H/Duty Auto Trans. 3 Groove		—	—	—	1	1	—	—	—	—	—	—	3614 377
	w/360 Eng. w/A/Cond. 3 Groove		1	1	1	1	1	1	1	1	1	1	—	3614 377
	w/400, 440 Eng. w/Pwr. Strg. w/41, 50 and 65 Amp. H/Duty Altr. 2 Groove		—	—	—	1	1	1	1	1	1	1	—	3769 148
	w/440 Eng. w/50 Amp. Altr. u/w Calif. Emission Pkg. 3 Groove		—	—	—	—	—	1	1	1	1	1	—	3769 984
	w/400, 440 Eng. w/A/Cond. 4 Groove		—	—	—	1	1	—	—	1	1	1	1	3614 382
	w/400, 440 Eng. w/Leece-Neville Altr. 4 Groove		—	—	—	1	1	1	1	—	—	—	—	3614 382
	w/400, 440 Eng. w/Manual Strg. w/41 and 65 Amp. H/Duty Altr. 1 Groove		—	—	—	1	1	—	—	—	—	—	—	3769 134
	Pwr. Strg. Pump Drive													
	w/198, 225 Eng. 1 Groove		1	—	1	1	1	—	—	—	—	—	—	2205 518
7-06-14	PULLEY, Fan													
	w/198, 225 Eng. w/o A/Cond. 1 Groove		1	—	1	1	1	—	—	—	—	—	—	2202 666
	w/225 Eng. w/A/Cond. 2 Groove		1	—	1	1	1	—	—	—	—	—	—	2406 039
	w/318 Eng. w/A/Cond. 1 Groove		1	1	1	—	—	—	—	—	—	—	—	3769 132
	w/318, 360 Eng. w/Leece Neville Altr. 1 Groove		—	—	—	1	1	1	1	—	—	—	—	3751 126
	w/318 Eng. w/A/Cond. w/H/Duty Auto. Trans. 1 Groove		—	—	—	1	1	—	—	—	—	—	—	3751 126
	w/318 Eng. w/A/Cond. w/Std. Duty Auto. Trans.		—	—	—	1	1	—	—	—	—	—	—	3769 132
	w/360 Eng. w/A/Cond. 1 Groove		1	1	1	1	1	1	1	1	1	1	—	3751 126
	w/318 Eng. w/o A/Cond. 1 Groove		1	1	1	—	—	—	—	—	—	—	—	2951 836
	w/318 Eng. w/Man. Trans. 1 Groove		—	—	—	1	1	—	—	—	—	—	—	2951 836
	w/318 Eng. w/H/Duty Auto. Trans. w/50 Amp. Altr. 1 Groove		—	—	—	1	1	—	—	—	—	—	—	3769 130

CARLINES: J - Challenger, B - Barracuda, V - Valiant, L - Dart, R - Satellite, W - Coronet - Charger, P - Plymouth, D - Dodge, C - Chrysler, Y - Imperial

AR Indicates use as required.

Numerals in parentheses ( ) refer to notes.

Printed in U.S.A.

# Indicates parts not listed in any previous parts book.

★ Indicates change or addition.

November, 1974

CODE	PART NAME	ENG. TYPE OR CU. IN	V	B J	L	R	W	P	D	C (L M)	C (P)	C (H S)	Y	PART NUMBER
7-06-14	PULLEY Cont'd.													
	w/360 Eng. w/o A/Cond. 1 Groove		1	1	1	1	1	—	—	—	—	—	—	3769 130
	w/360 Eng. w/50 Amp. Altr. 1 Groove		—	—	—	1	1	1	1	1	1	1	—	3769 130
	w/400, 440 Eng. w/Leece Neville Altr. 1 Groove		—	—	—	1	1	1	1	—	—	—	—	3698 907
	w/400, 440 Eng. W/A/Cond. 1 Groove		—	—	—	1	1	—	—	1	1	1	—	3698 907
	w/440 Eng. w/50 Amp. Altr. u/w Calif. Emission Pkg. 2 Groove		—	—	—	—	—	1	1	1	1	1	—	3769 983
	w/400, 440 Eng. w/A/Cond. u/w Calif. Emission Pkg. w/Leece Neville Altr. 2 Groove		—	—	—	—	—	1	1	1	1	1	1	3698 917
	w/440 Eng. w/o Calif. Emission Pkg. 1 Groove		—	—	—	—	—	—	—	—	—	—	1	3698 907
	w/400, 440 Eng. w/41, 50 and 65 Amp. H/Duty Altr. 1 Groove		—	—	—	1	1	1	1	—	—	—	—	3769 145
	w/400, 440 Eng. w/o A/Cond. 1 Groove		—	—	—	—	—	—	—	1	1	1	—	3769 145
7-07-1	**DRIVE, Fan Fluid or Thermal**													
	w/318, 360, 400, 440 Eng. w/Max. Cooling w/o A/Cond. 7 1/4" Dia.		1	1	1	1	1	—	—	—	—	—	—	3769 614
	w/318, 360, 400, 440 Eng. w/A Cond. w/Std. & H/Duty Auto. Trans. w/Max. Cooling 7 1/4" Dia.		1	1	1	1	1	—	—	—	—	—	—	3769 616
	w/360, 400, 440 Eng. w/A Cond. w/2.71/2.76 Axle 7 1/4" Dia.		—	—	—	—	—	1	1	1	1	1	—	3769 623
	w/360, 400, 440 Eng. w/A/Cond. w/Max. Cooling w/2.71/2.76, 3.23 Axle 7 1/4" Dia.		—	—	—	—	—	1	1	1	1	1	1	3769 617
	w/360, 400, 440 Eng. w/o A/Cond. w/Interm. Cooling w/Max. Cooling 7 1/4" Dia.		—	—	—	—	—	1	1	1	1	1	—	3769 618
7-08-2	**SHROUD, Radiator Core Fan**													
	w/19" Core Std.		—	1	—	—	—	—	—	—	—	—	—	3691 920
	w/225 Eng. w/19" Core w/Interm. Cooling		—	—	—	1	1	—	—	—	—	—	—	3691 920
	w/318 Eng. w/19" Core w/o Interm. Cooling		—	—	—	1	1	—	—	—	—	—	—	3691 920
	w/318 Eng. w/19" Core w/o Interm. Cooling		1	—	1	—	—	—	—	—	—	—	—	3691 916
	w/198, 225 Eng. w/26" Core w/Max. Cooling		1	—	1	—	—	—	—	—	—	—	—	3691 918
	w/225 Eng. w/22" Core w/Intermediate Cooling		1	—	1	—	—	—	—	—	—	—	—	3691 917
	w/225 Eng. w/28" Core w/Max. Cooling		—	—	—	1	1	—	—	—	—	—	—	3691 919
	w/360 Eng. w/26" Core Std.		1	—	1	—	—	—	—	—	—	—	—	3691 909
	w/318 Eng. w/26" Core w/Interm. Cooling		1	—	1	—	—	—	—	—	—	—	—	3691 909
	w/318 Eng. w/26" Core w/A/Cond.		—	1	—	—	—	—	—	—	—	—	—	3691 905
	w/360 Eng. w/26" Core Std.		—	1	—	—	—	—	—	—	—	—	—	3691 905
	w/318 Eng. w/28" Core w/A/Cond.		—	—	—	1	1	—	—	—	—	—	—	3673 819
	w/360, 400, 440 Eng. w/28" Core Std.		—	—	—	1	1	—	—	—	—	—	—	3673 819
	w/28" Core Std.		—	—	—	—	—	1	1	1	1	1	1	3691 921

NOTES

CARLINES: J - Challenger, B - Barracuda, V - Valiant, L - Dart, R - Satellite, W - Coronet - Charger, P - Plymouth, D - Dodge, C - Chrysler, Y - Imperial

AR Indicates use as required.

Numerals in parentheses ( ) refer to notes.

Printed in U.S.A.

# Indicates parts not listed in any previous parts book.

★ Indicates change or addition.

November, 1974

	Models	Year	Eng. (Cu. In.)	CORE Width (Inches)	Added Remarks	Core Stamped Number	Service Part Number
7-11-3 CORE, Radiator							
	V, L	74	198, 225	19	w/A/Trans.	3692 973	3692 973
	V, L	74	198, 225	19	w/Man. Trans.	3692 972	3692 973
	V, L	74	198, 225	26	w/Max. Cooling w/Man. Trans.	3692 917	3692 917
	V, L	74	225	22	w/A/Cond.	3692 905	3692 905
	R, W	74	225	19	Exc. Max. Cooling	3692 908	3692 908
	R, W	74	225	28	w/Max. Cooling	3692 911	3692 911
	R, W	74	225	28	w/Interm. Cooling	3692 942	3692 942
	V, L	74	225	22	w/Interm. Cooling	3692 905	3692 905
	V, L	74	318	19	w/M/Trans.	3692 913	3692 914
	V, L	74	318	19	w/A/Trans.	3692 914	3692 914
	R, W	74	318	22	w/M/Trans. w/A/Cond.	3692 905	3692 905
	R, W	74	318	22	w/Interm. Cooling w/Man. Trans.	3692 905	3692 905
	B, J	74	360	26	w/o A/Cond.	3692 932	3692 935
	B, J	74	318, 360	26	w/A/Cond.	3692 935	3692 935
	V, L	74	318	26	w/A/Cond. w/Interm. Cooling	3692 915	# 3692 923
	V, L	74	318, 360	26	w/Man. Trans.	3692 912	3692 912
	V, L	74	318, 360	26	w/Max. Cooling	3692 912	3692 912
	B, J	74	318	19	w/o A/Cond.	3692 926	3692 926
	B, J	74	318, 360	26	w/Max. Cooling	3692 925	3692 925
	R, W	74	318	19	w/o Interm Cooling	3692 934	3692 934
	R, W	74	318	28	w/Interm. Cooling	3692 942	3692 942
	R, W	74	318, 360	28	w/Interm. Cooling	3692 942	3692 942
	R, W	74	318	28	w/A/Cond.	3692 927	3692 942
	R, W	74	360	28	w/o Inter. Cooling	3692 927	3692 942
	R, W	74	360	28	w/o A/Cond.	3692 927	3692 942
	R, W	74	318, 360	28	w/Max. Cooling w/A/Cond.	3692 944	3692 944
	V, L	74	360	26	w/M/Trans.	3692 916	3692 923
	V, L	74	360	26	w/A/Cond.	3692 923	3692 923
	P, D	74	318, 360	28	w/Max. Cooling	3692 954	3692 954
	P, D	74	318, 360	28	w/A/Cond. w/Interm. Cooling	3692 983	# 3692 983
	P, D, C	74	318, 360	28	w/Max. Cooling	3692 984	# 3692 984
	P, D	74	318, 360	28	w/A/Cond. w/Interm. Cooling	3692 946	3692 977
	P, D	74	360	28	w/o Interm. Cooling	3692 945	3692 977

	Models	Year	Eng. (Cu. In.)	CORE Width (Inches)	Added Remarks	Core Stamped Number	Service Part Number
7-11-3 CORE Cont'd.							
	P, D	74	318, 360	28	w/o Interm. Cooling	3692 982	# 3692 982
	C	74	360	28	w/o A/Cond.	3692 982	# 3692 982
	C	74	360	28	w/A/Cond.	3692 985	# 3692 985
	C	74	360	28	w/A/Cond.	3692 977	3692 977
	R, W	74	400	28	w/A/Cond.	3692 947	3692 947
	R, W	74	440	28	w/o A/Cond.	3692 947	3692 947
	R, W	74	400	28	w/Interm. Cooling	3692 947	3692 947
	R, W	74	400, 440	28	w/A/Cond. w/Max. Cooling	3692 953	3692 953
	P, D, C	74	400, 440	28	w/o Interm. Cooling w/o A/Cond.	3692 962	3692 963
	P, D, C	74	400, 440	28	w/A/Cond.	3692 963	3692 963
	C	74	400, 440	28	w/A/Cond.	3692 976	3692 976
	P, D, C, Y	74	400, 440	28	w/Max. Cooling	3692 971	3692 971
	Y	74	440	28	w/o Max. Cooling	3692 968	3692 971
	Y	74	440	28	w/o Max. Cooling	3692 978	3692 978

NOTES

CODE	PART NAME	ENG. TYPE OR CU. IN	V	B J	L	R	W	P	D	C (L M)	C (P)	C (H S)	Y	PART NUMBER
7-11-4	PLUG, Radiator Top Tank		1	1	1	1	1	1	1	1	1	1	1	444 625
7-12-1	**CAP, Radiator Filler Pressure**		1	1	1	1	1	1	1	1	1	1	1	# 3781 830
	w/Coolant Reserve System		1	1	1	1	1	1	1	1	1	1	1	3673 891
7-13-2	**COCK, Rad. Drain**		1	1	1	1	1	1	1	1	1	1	1	1686 198
7-14-4	**HOSE, Radiator Inlet.**													
	w/198, 225 Eng. w/o A/Cond. w/o Max. Cooling		1	—	1	—	—	—	—	—	—	—	—	3462 192
	w/198, 225 Eng. w/A/Cond. w/Max. Cooling		1	—	1	—	—	—	—	—	—	—	—	3462 163
	w/225 Eng. w/o A/Cond. w/o Max. Cooling R, W, L-H		—	—	—	1	1	—	—	—	—	—	—	3462 156
	w/225 Eng. Std. Police/Taxi		—	—	—	1	1	—	—	—	—	—	—	3462 171
	w/225 Eng. w/Max. Cooling R, W, L-H		—	—	—	1	1	—	—	—	—	—	—	3462 171
	w/318 Eng. w/o A/Cond.		—	1	—	—	—	—	—	—	—	—	—	3462 166
	w/318 Eng. w/41 Amp. Altr.		—	—	—	1	1	—	—	—	—	—	—	3462 166
	w/318 Eng. w/o A/Cond.		1	—	1	—	—	—	—	—	—	—	—	3462 196
	w/360 Eng. Std.		1	1	1	1	1	—	—	—	—	—	—	3780 662
	w/318 Eng. w/A/Cond.		1	1	1	1	1	—	—	—	—	—	—	3780 662
	w/360 Eng. Std.		—	—	—	—	—	1	1	1	1	1	—	3462 152
	w/400 Eng. w/Leece-Neville Altr.		—	—	—	1	1	—	—	—	—	—	—	3462 195
	w/400 Eng. w/50 Amp. Altr.		—	—	—	1	1	—	—	—	—	—	—	3462 176
	w/400, 440 Eng. w/Leece-Neville Altr.		—	—	—	—	—	1	1	—	—	—	—	3769 216
	w/400, 440 Eng. Std.		—	—	—	—	—	—	—	1	1	1	1	3462 177
	w/400, 440 Eng. w/60 Amp. Altr.		—	—	—	—	—	1	1	—	—	—	—	3462 177
	w/440 Eng. Std.		—	—	—	1	1	—	—	—	—	—	—	3462 176
7-14-5	HOSE, Radiator Outlet													
	w/198, 225 Eng. Std. Up to 6-3-74		1	—	1	—	—	—	—	—	—	—	—	3462 188
	w/198, 225 Eng. Std. After 6-3-74		1	—	1	—	—	—	—	—	—	—	—	3462 194
	w/225 Eng. Std.		—	—	—	1	1	—	—	—	—	—	—	3462 189
	w/318, 360 Eng. Std.		1	—	1	—	—	—	—	—	—	—	—	3462 197
	w/318, 360 Eng. Std. Up to 3-13-74		—	1	—	1	1	—	—	—	—	—	—	3462 167
	w/318, 360 Eng. Std. After 3-13-74		—	1	—	1	1	—	—	—	—	—	—	# 3870 103
	w/360 Eng. Std.		—	—	—	—	—	1	1	1	1	1	—	3462 155
	w/400, 440 Eng. Std.		—	—	—	1	1	—	—	—	—	—	—	3462 151
	w/400, 440 Eng. Std.		—	—	—	—	—	1	1	1	1	1	1	3462 170
7-14-9	HOSE, Water Pump By-Pass													
	w/198, 225 Eng. 50 Ft. Roll 5/8" I.D.		AR	—	AR	AR	AR	—	—	—	—	—	—	1315 466
	w/318, 360 Eng. (Preformed)		1	1	1	1	1	1	1	1	1	1	—	3462 688
7-14-13	CLIP, Rad. Over Flow Drain Hose		AR	—	AR	—	—	—	—	—	—	—	—	2578 045
	Rad. Core Coolant Reserve Tank O/Flow Tube Att.		—	1	—	—	—	—	—	—	—	—	—	3443 548
	CLAMP, Rad. Hose w/198, 225 Eng. Up To 10-31-73		4	—	4	4	4	—	—	—	—	—	—	105 479
	w/198, 225 Eng. After 10-31-73		4	—	4	4	4	—	—	—	—	—	—	3870 062
	CLAMP, Radiator Outlet Hose Exc. 198, 225 Eng. Up To 10-31-73		2	2	2	2	2	2	2	2	2	2	2	870 469
	Exc. 198, 225 Eng. After 10-31-73 Optional w/3870 063		2	2	2	2	2	2	2	2	2	2	2	3870 060
	Exc. 198, 225 Eng. After 10-31-73 Optional w/3870 060		2	2	2	2	2	2	2	2	2	2	2	3870 063
	CLAMP, Rad. Inlet Hose Exc. 198, 225 Eng. Up To 10-31-73		2	2	2	2	2	2	2	2	2	2	2	105 479
	Exc. 198, 225 Eng. After 10-31-73		2	2	2	2	2	2	2	2	2	2	2	3870 062
	CLAMP, Rad. Hose S/Steel Screw Type Fits Hose From 1/8" To 1/4"		AR	AR	AR	AR	AR	AR	AR	AR	AR	AR	AR	3683 823
	5/16" To 1/2"		AR	AR	AR	AR	AR	AR	AR	AR	AR	AR	AR	2448 761
	3/8" To 5/8"		AR	AR	AR	AR	AR	AR	AR	AR	AR	AR	AR	2448 770

CARLINES: J - Challenger, B - Barracuda, V - Valiant, L - Dart, R - Satellite, W - Coronet - Charger, P - Plymouth, D - Dodge, C - Chrysler, Y - Imperial

AR Indicates use as required.

Numerals in parentheses ( ) refer to notes.

Printed in U.S.A.

# Indicates parts not listed in any previous parts book.

★ Indicates change or addition.

November, 1974

CODE	PART NAME	ENG. TYPE OR CU. IN	V	B J	L	R	W	P	D	C (L M)	C (P)	C (H S)	Y	PART NUMBER
7-14-13	CLIP Cont'd.													
	1" To 1 1/4"		AR	AR	AR	AR	AR	AR	AR	AR	AR	AR	AR	2448 762
	1/4" To 1 1/2"		AR	AR	AR	AR	AR	AR	AR	AR	AR	AR	AR	3683 824
	1 1/2" To 2"		AR	AR	AR	AR	AR	AR	AR	AR	AR	AR	AR	2448 763
	1" To 2 1/4"		AR	AR	AR	AR	AR	AR	AR	AR	AR	AR	AR	2448 764
7-14-31	HOSE, Radiator Overflow 25 Ft. Roll (9/32" Sold by the Roll)		AR	AR	AR	AR	AR	AR	AR	AR	AR	AR	AR	1904 950
7-16-11	**GRILLE, Radiator**													
	Valiant, Duster, and Scamp Exc. V-P		1	—	—	—	—	—	—	—	—	—	—	3672 929
	Valiant V-P		1	—	—	—	—	—	—	—	—	—	—	3691 638
	Barracuda And Cuda		—	1	—	—	—	—	—	—	—	—	—	3672 673
	Challenger w/o Grille Paint Treatment		—	1	—	—	—	—	—	—	—	—	—	3573 216
	Challenger w/Grille Paint Treatment		—	1	—	—	—	—	—	—	—	—	—	3573 589
	Dart Exc. L-P		—	—	1	—	—	—	—	—	—	—	—	3691 476
	Dart L-P		—	—	1	—	—	—	—	—	—	—	—	3691 649
	Roadrunner		—	—	—	1	—	—	—	—	—	—	—	3672 209
	SATELLITE, SEBRING, SEBRING PLUS													
	2 Dr. and 2 Dr. H.T.		—	—	—	1	—	—	—	—	—	—	—	3672 209
	Satellite, Custom And Regent													
	4 Dr. And Wgn.		—	—	—	1	—	—	—	—	—	—	—	3691 459
	Coronet, Custom, And Crestwood													
	4 Dr. And Wgn.		—	—	—	—	1	—	—	—	—	—	—	3691 277
	Charger		—	—	—	—	1	—	—	—	—	—	—	3672 318-9
	Charger S-E		—	—	—	—	1	—	—	—	—	—	—	3672 322-3
	Plymouth		—	—	—	—	—	1	—	—	—	—	—	3691 156
	Dodge, Upper		—	—	—	—	—	—	1	—	—	—	—	3691 520
	Dodge, Lower Center		—	—	—	—	—	—	1	—	—	—	—	3691 161
	Chrysler Newport And Newport Custom		—	—	—	—	—	—	—	1	—	—	—	3691 204
	Imperial		—	—	—	—	—	—	—	—	—	—	1	3691 586-7
	FRAME, Chrysler		—	—	—	—	—	—	—	—	1	1	—	3691 208
7-16-14	RETAINER, Radiator Grille													
	Lower Panel Mldg. V-P		6	—	—	—	—	—	—	—	—	—	—	6002 782
	Bumper Filler B		—	1	—	—	—	—	—	—	—	—	—	3672 584-5
	Bumper Filler J		—	1	—	—	—	—	—	—	—	—	—	3672 750-1
	Rad. Grille Panel Inter. Mtg. Reinf. B		—	2	—	—	—	—	—	—	—	—	—	3443 220
	Panel Outer Mtg. Reinf. B		—	2	—	—	—	—	—	—	—	—	—	3443 220
	Grille Mldg. J		—	8	—	—	—	—	—	—	—	—	—	6003 309
	Grille 4 Dr. & Wgn.		—	—	—	4	6	—	—	—	—	—	—	2998 430
	Grille Mldg. 4 Dr. & Wgn.		—	—	—	—	8	—	—	—	—	—	—	3691 466
	Lower Grille to Bumper		—	—	—	—	—	4	—	—	—	—	—	3672 835
	RETAINER PACKAGE, Grille Spacer		—	—	—	—	—	—	—	—	—	—	1	# 3879 387
	CLIP, Damper		—	—	—	—	—	—	6	—	—	—	—	# 3691 726
7-16-15	FILLER, Rad. Grille Bumper B		—	1	—	—	—	—	—	—	—	—	—	3672 586
	J		—	1	—	—	—	—	—	—	—	—	—	3672 582
	Rad. Grille Fender Bumper J		—	1	—	—	—	—	—	—	—	—	—	3672 792-3
	Rad. Grille Lower Panel		1	—	—	—	—	—	—	—	—	—	—	3691 382
	Rad. Grille		—	—	1	—	—	—	—	—	—	—	—	3691 576
	Rad. Yoke A/Shld. Baffle Bmpr. w/A/Cond.		—	—	—	—	—	2	2	—	—	—	—	3691 622
	Rad. Yoke Side Shld. Bmpr. w/A/Cond.		—	—	—	—	—	—	—	2	2	2	2	3691 616
7-16-21	DAMPER, Rad. Grille		—	—	—	—	—	4	—	—	—	—	—	3691 729
7-16-22	BRACE, Radiator Grille Panel Vertical Lock Support		—	—	1	—	—	—	—	—	—	—	—	3691 698
	Upper Panel H/Lamp Panel 2 Dr. 2 Dr. H.T.		—	—	—	1	—	—	—	—	—	—	—	3672 226-7
	Rad. C/Bar. Hood Lk. Vert. Supt. 4 Dr. & Wgn.		—	—	—	—	1	—	—	—	—	—	—	3691 290

CARLINES: J - Challenger, B - Barracuda, V - Valiant, L - Dart, R - Satellite, W - Coronet - Charger, P - Plymouth, D - Dodge, C - Chrysler, Y - Imperial

AR Indicates use as required.

Numerals in parentheses ( ) refer to notes.

Printed in U.S.A.

# Indicates parts not listed in any previous parts book.

★ Indicates change or addition.

November, 1974

CODE	PART NAME	ENG. TYPE OR CU. IN	V	B J	L	R	W	P	D	C (L M)	C (P)	C (H S)	Y	PART NUMBER
7-16-22	BRACE Cont'd.													
	Rad. Yoke Frame C/Mbr.		—	—	—	—	—	2	2	2	2	2	2	3691 322
	Rad. Grille Pnl. Hsg. Yoke Brkt.		—	—	—	—	—	—	—	—	—	—	1	3691 438-9
	Rad. Grille Pnl. Yoke Brkt.		—	—	—	—	—	—	—	1	1	1	—	3691 686-7
	REINFORCEMENT, Vertical Lock													
	Support 2 Dr. 2 Dr. H.T.		—	—	—	1	—	—	—	—	—	—	—	3672 220
7-16-25	BRACKET, Radiator Grille													
	H/Lamp Mtg. Pnl. Fender Flange													
	Ext. J		—	2	—	—	—	—	—	—	—	—	—	3573 634
	Vertical Lock Support B		—	1	—	—	—	—	—	—	—	—	—	3574 097
	Panel Vertical Lock Support J		—	1	—	—	—	—	—	—	—	—	—	3573 911
	Bumper Inner Charger													
	And Charger S-E		—	—	—	—	2	—	—	—	—	—	—	3672 332
	Bumper Intermediate Charger													
	And Charger S-E		—	—	—	—	2	—	—	—	—	—	—	3672 330
	Bumper Outer Charger And													
	Charger S-E		—	—	—	—	1	—	—	—	—	—	—	3442 310-1
	Vertical Lock Support		—	—	—	—	—	—	—	1	1	1	—	3691 205
	REINFORCEMENT, Vertical													
	Lock Supt. Brkt. Horn Mtg. B		—	1	—	—	—	—	—	—	—	—	—	3574 091
7-16-36	MOULDING, Radiator Grille													
	Upper		1	—	—	—	—	—	—	—	—	—	—	3672 452
	Lower Panel V-P		1	—	—	—	—	—	—	—	—	—	—	3691 641
	Upper Panel Exc. L-P		—	—	1	—	—	—	—	—	—	—	—	3672 439
	L-P		—	—	1	—	—	—	—	—	—	—	—	3781 012
	Lower		—	—	1	—	—	—	—	—	—	—	—	3672 438
	Barracuda And Cuda		—	2	—	—	—	—	—	—	—	—	—	3573 484
	Panel H/Lamp Mtg. J		—	1	—	—	—	—	—	—	—	—	—	3573 596
	Grille Panel 2 Dr. 2 Dr. H.T.		—	—	—	1	—	—	—	—	—	—	—	3672 494
	Center R-H 2 Dr. H.T.		—	—	—	1	—	—	—	—	—	—	—	# 3691 753
	Center R-P 2 Dr. H.T.		—	—	—	1	—	—	—	—	—	—	—	3672 488
	Lower 2 Dr. 2 Dr. H.T.		—	—	—	1	—	—	—	—	—	—	—	3672 212
	Lower 4 Dr. & Wgn.		—	—	—	—	1	—	—	—	—	—	—	3691 279
	Upper Panel		—	—	—	—	—	1	—	—	—	—	—	3780 993
	Lower		—	—	—	—	—	1	—	—	—	—	—	3691 455
	Panel		—	—	—	—	—	—	1	—	—	—	—	3780 930
	Panel Outer		—	—	—	—	—	—	—	—	—	—	1	3691 536-7
	Panel Center		—	—	—	—	—	—	—	—	—	—	1	3691 538
7-16-61	NAME/PLATE, Rad. Grille													
	"Challenger"		—	1	—	—	—	—	—	—	—	—	—	3573 505
	Upper Panel - "Dodge"		—	—	1	—	—	—	—	—	—	—	—	3613 151
	Upper Panel R-L 2 Dr., R-H, R-P 2 Dr. H.T.		—	—	—	1	—	—	—	—	—	—	—	3444 927
	Panel		—	—	—	—	—	—	—	—	—	—	1	2949 735
	NAME LETTER, Rad. Grille Upper Pnl.													
	"P"		—	—	—	—	—	1	—	—	—	—	—	3749 638
	"L"		—	—	—	—	—	1	—	—	—	—	—	3749 639
	"Y"		—	—	—	—	—	1	—	—	—	—	—	3749 640
	"M"		—	—	—	—	—	1	—	—	—	—	—	3749 641
	"O"		—	—	—	—	—	1	—	—	—	—	—	3749 642
	"U"		—	—	—	—	—	1	—	—	—	—	—	3749 643
	"T"		—	—	—	—	—	1	—	—	—	—	—	3749 644
	"H"		—	—	—	—	—	1	—	—	—	—	—	3749 645
	"D"		—	—	—	—	—	—	1	—	—	—	—	3691 552
	"O"		—	—	—	—	—	—	1	—	—	—	—	3691 553
	"D" Center		—	—	—	—	—	—	1	—	—	—	—	3691 554
	"G"		—	—	—	—	—	—	1	—	—	—	—	3691 555
	"E"		—	—	—	—	—	—	1	—	—	—	—	3691 556
	Rad. Grille "C"		—	—	—	—	—	—	—	1	1	1	—	3691 499
	"H"		—	—	—	—	—	—	—	1	1	1	—	3691 500
	"R"		—	—	—	—	—	—	—	2	2	2	—	3691 501
	"Y"		—	—	—	—	—	—	—	1	1	1	—	3691 502

CARLINES
J - Challenger, B - Barracuda, V - Valiant, L - Dart, R - Satellite, W - Coronet - Charger, P - Plymouth, D - Dodge, C - Chrysler, Y - Imperial

AR Indicates use as required.
Numerals in parentheses ( ) refer to notes.
Printed in U.S.A.
# Indicates parts not listed in any previous parts book.
★ Indicates change or addition.
November, 1974

CODE	PART NAME	ENG. TYPE OR CU. IN	V	B J	L	R	W	P	D	C (L M)	C (P)	C (H S)	Y	PART NUMBER
7-16-61	NAME/PLATE Cont'd.													
	"S"		—	—	—	—	—	—	—	1	1	1	—	3691 503
	"L"		—	—	—	—	—	—	—	1	1	1	—	3691 504
	"E"		—	—	—	—	—	—	—	1	1	1	—	3691 505
7-16-63	PANEL, Radiator Grille													
	Lower		1	—	—	—	—	—	—	—	—	—	—	3691 375
	Upper B		—	1	—	—	—	—	—	—	—	—	—	3621 796
	Upper		—	—	1	—	—	—	—	—	—	—	—	3672 978
	Upper Complete, 2 Dr., 2 Dr. H.T.		—	—	—	1	—	—	—	—	—	—	—	3672 207
	Upper		—	—	—	—	—	1	—	—	—	—	—	3691 357
	Upper		—	—	—	—	—	—	1	—	—	—	—	3691 352
7-16-68	EXTENSION, Rad. Grille Lower													
	Panel End 2 Dr. H.T. Fastback		1	—	—	—	—	—	—	—	—	—	—	3672 734-5
7-17-1	**ORNAMENT, Radiator Grille Medallion or**													
	NOTE: For Additional Ornaments See Part Type Code 15-03-18													
	Upper Panel L-P		—	—	1	—	—	—	—	—	—	—	—	3691 655
	Charger S-E		—	—	—	—	1	—	—	—	—	—	—	3672 658-9
	Upper Panel P-P		—	—	—	—	—	1	—	—	—	—	—	3691 403
	Upper Panel Monaco		—	—	—	—	—	—	1	—	—	—	—	3691 414
	Grille Frame		—	—	—	—	—	—	—	—	1	1	—	3691 535
	Grille Panel		—	—	—	—	—	—	—	—	—	—	1	3691 541
7-17-2	BASE, Rad. Grille Medallion And													
	4 Dr. & Wgn.		—	—	—	1	—	—	—	—	—	—	—	3691 692
7-17-5	RETAINER Rad. Grille Upper Panel Ornament L-P, D-P		—	—	1	—	—	—	1	—	—	—	1	3672 780
	Frame Orna. P-P		—	—	—	—	—	1	—	—	1	1	—	3672 780
	Spring, Rad. Grille Upper Panel Orn. L-P		—	—	1	—	—	—	—	—	—	—	—	3672 672
	Frame Orna. P-P		—	—	—	—	—	1	—	—	1	1	—	3672 672
	Panel Orna. D-P		—	—	—	—	—	—	1	—	—	—	1	3672 672
7-17-13	TEXTURE, Rad. Grille		—	—	—	—	—	—	—	—	1	1	—	3691 207
7-17-23	DECAL, Rad. Grille Upper Panel - "Road Runner"		—	—	—	1	—	—	—	—	—	—	—	3672 656
	Upper Panel R-H 2 Dr. H.T. (SUNDANCE)		—	—	—	1	—	—	—	—	—	—	—	3691 741
	TAPE STRIPE, Rad. Grille Upper Panel (HANG-TEN) Fastback		—	—	1	—	—	—	—	—	—	—	—	3691 733
7-26-2	**YOKE, Radiator Complete Up To 1-2-74**		—	—	—	—	—	1	1	1	1	1	1	3752 450
	After 1-2-74		—	—	—	—	—	1	1	1	1	1	1	3752 700
7-26-9	SEAL, Rad. A/Cond. Air w/225, 318, 360, 400, 440 Eng.		—	—	—	1	1	—	—	—	—	—	—	3672 921
	Rad. Yoke Bottom Tank		—	—	—	—	—	1	1	1	1	1	1	3691 583
7-26-14	MOULDING, Radiator Air Shield J		—	1	—	—	—	—	—	—	—	—	—	3573 513
7-26-15	SHIELD, Radiator Air B		—	1	—	—	—	—	—	—	—	—	—	2998 544
	J		—	1	—	—	—	—	—	—	—	—	—	3573 598
	2 Dr. and 2 Dr. H.T.		—	—	—	1	—	—	—	—	—	—	—	3672 231
	w/225, 318, 360, 400, 440 Eng. w/A/Cond. w/Interm. Cooling 4 Dr. & Wgn. Rubber		—	—	—	1	—	—	—	—	—	—	—	# 3691 588
	Charger And Charger S-E		—	—	—	—	1	—	—	—	—	—	—	3672 354
	w/225, 318, 360, 400, 440 Eng. w/A/Cond. w/Interm. Cooling 4 Dr. & Wgn.		—	—	—	—	1	—	—	—	—	—	—	3691 589
	Rad. Yoke		—	—	—	—	—	1	1	—	—	—	1	3691 694-5
	Rad. Yoke Air		—	—	—	—	—	1	1	—	—	—	—	3691 609
	Rad. Yoke Air		—	—	—	—	—	—	—	1	1	1	1	3691 610
	BAFFLE, Rad. A/Cond. Air w/225, 318, 360, 400, 440 Eng. 2 Dr. 2 Dr. H.T., Fast Back		—	—	—	2	2	—	—	—	—	—	—	3672 916
	Rad. Yoke Side Shield Upper		—	—	—	—	—	—	—	—	—	—	1	3691 660-1

CARLINES J - Challenger, B - Barracuda, V - Valiant, L - Dart, R - Satellite, W - Coronet - Charger, P - Plymouth, D - Dodge, C - Chrysler, Y - Imperial

AR Indicates use as required. Numerals in parentheses ( ) refer to notes. Printed in U.S.A.

# Indicates parts not listed in any previous parts book. ★ Indicates change or addition. November, 1974

CODE	PART NAME	ENG. TYPE OR CU. IN	V	B J	L	R	W	P	D	C (L M)	C (P)	C (H S)	Y	PART NUMBER
7-26-15	SHIELD Cont'd.													
	PANEL, Radiator A/Shld. Trim B		—	1	—	—	—	—	—	—	—	—	—	3672 933
	Ext. Pnl. J Plastic		—	1	—	—	—	—	—	—	—	—	—	3573 495
7-26-16	RETAINER, Rad. Yoke A/Shield To Supt.		—	—	—	—	—	1	1	1	1	1	1	6030 441
	Rad. Yoke Shield		—	—	—	—	—	4	4	—	—	—	4	6030 441
7-26-30	PANEL, Rad. Yoke Side w/19 and 22" Core w/198, 225, 318 Eng. Rt.		1	—	1	—	—	—	—	—	—	—	—	3691 180
	w/19 and 22" Core w/198, 225, 318 Eng. Lt.		1	—	1	—	—	—	—	—	—	—	—	3691 179
	w/26" Core w/198, 225 Eng. w/Max. Cooling		1	—	1	—	—	—	—	—	—	—	—	3691 184-5
	w/26" Core w/318, Eng. w/Interm. Cooling		1	—	1	—	—	—	—	—	—	—	—	3691 184-5
	w/26" Core w/360 Eng. Std.		1	—	1	—	—	—	—	—	—	—	—	3691 184-5
	w/22" Core w/o A/Cond. w/318 Eng.		—	1	—	—	—	—	—	—	—	—	—	3443 306-7
	w/19 And 22" Core		—	—	—	1	1	—	—	—	—	—	—	3672 160-1
	w/26" Core w/A/Cond. w/318 Eng.		—	1	—	—	—	—	—	—	—	—	—	3443 310-1
	w/26" Core w/360 Eng. Std.		—	1	—	—	—	—	—	—	—	—	—	3443 310-1
	w/28" Core Right		—	—	—	1	1	—	—	—	—	—	—	3672 248
	w/28" Core Left		—	—	—	1	1	—	—	—	—	—	—	3672 253
7-26-32	C/MEMBER, Radiator Yoke Side Pnl.		1	—	1	—	—	—	—	—	—	—	—	3672 198
	B, J, W, R2 Dr. 2 Dr. H.T.		—	1	—	1	1	—	—	—	—	—	—	3672 723
7-26-37	BRACKET, Radiator Yoke C/Mbr. J		—	1	—	—	—	—	—	—	—	—	—	3573 624
	B, R 2 Dr. 2 Dr. H.T.		—	1	—	1	—	—	—	—	—	—	—	3443 877
7-26-38	BAFFLE, Rad. Yoke A/Shield w/318, 360, 400, 440 Eng. w/A/Cond.		—	—	—	—	—	1	1	—	—	—	—	3691 624-5
	Rad. Yoke Side Shield w/A/Cond.		—	—	—	—	—	—	—	1	1	1	1	3691 626-7
	Rad. Air Shield Bumper w/A/Cond.		—	—	—	—	—	—	—	1	1	1	—	3691 634
			—	—	—	—	—	—	—	—	—	—	1	3691 635
	Yoke Bumper Reinf. w/A/Cond.		—	—	—	—	—	—	—	1	1	1	—	# 3691 770-1
			—	—	—	—	—	—	—	—	—	—	1	# 3691 746-7
7-26-44	REINFORCEMENT PACKAGE, Rad. Yoke		—	—	—	—	—	1	1	1	1	1	1	# 3879 394
7-31-1	**SHIELD, No 1 C/Mbr. To No. 2**													
	C/Mbr. Splash CANADA		—	—	—	—	—	1	1	—	—	—	—	3726 304
7-33-1	**Cross Bar, Radiator Grille**													
	W, 4 Dr. and Wgn.		—	—	—	—	1	—	—	—	—	—	—	3691 285
	Horn Mtg. R, 4 Dr. and Wgn.		—	—	—	1	—	—	—	—	—	—	—	3752 522
7-41-4	**THERMOSTAT**													
	195 Degree w/198, 225 Eng.		1	—	1	1	1	—	—	—	—	—	—	3780 112
	195 Degree w/318, 360, 400, 440 Eng.		1	1	1	1	1	1	1	1	1	1	1	3514 181
7-42-1	**WATER PUMP PACKAGE**													
	w/198, 225 Eng.		1	—	1	1	1	—	—	—	—	—	—	2808 679
	w/318 Eng.		1	1	1	1	1	—	—	—	—	—	—	3780 108
	w/360 Eng.		1	1	1	1	1	1	1	1	1	1	—	3780 109
	w/400, 440 Eng.		—	—	—	1	1	1	1	1	1	1	1	3780 127
7-42-4	WATER PUMP Repair Pkg. w/198, 225 Eng.		1	—	1	1	1	—	—	—	—	—	—	2808 682
7-43-1	**HOUSING, w/PUMP**													
	w/400, 440 Eng. Std.		—	—	—	1	1	1	1	1	1	1	1	3769 192
7-43-5	SCREW, w/Pump Body													
	w/318, 360 Eng. 3/8" x 5"		1	1	1	1	1	1	1	1	1	1	—	9421 897
	w/318, 360 Eng. 3/8" x 5 1/4"		3	3	3	3	3	3	3	3	3	3	—	6028 166
	w/Pump Hsg. Idler Pulley Mtg. Brkt. w/318, 360 Eng. w/Leece Neville Altr. 3/8 x 5 1/4"		—	—	—	1	1	1	1	—	—	—	—	6028 166
	w/Pump Body Fan Idler Pulley Mtg. 3/8" x 5.38"		1	1	1	1	1	—	—	—	—	—	—	9411 859

CARLINES J - Challenger, B - Barracuda, V - Valiant, L - Dart, R - Satellite, W - Coronet - Charger, P - Plymouth, D - Dodge, C - Chrysler, Y - Imperial

AR Indicates use as required.

# Indicates parts not listed in any previous parts book.

Numerals in parentheses ( ) refer to notes.

★ Indicates change or addition.

Printed in U.S.A.
November, 1974

CODE	PART NAME	ENG. TYPE OR CU. IN	V	B J	L	R	W	P	D	C (L M)	C (P)	C (H S)	Y	PART NUMBER
7-43-5	SCREW Cont'd.													
	3/8" x 5.75" SCREW & WASHER, W/P Body w/318, 360 Eng.		1	1	1	1	1	—	—	—	—	—	—	6029 696
	3/8-16 x 2.00"		1	1	1	1	1	1	1	—	—	—	—	6027 880
7-43-8	CAP, w/Pump Body Htr. Hole w/198, 225, 318 Eng.		1	—	1	1	1	—	—	—	—	—	—	2128 425
7-43-18	PLUG, w/Pump Hsg. Htr. Hole w/400, 440 Eng.		—	—	—	2	2	—	—	—	—	—	—	1859 127
7-44-3	**GASKET, w/Pump Body**													
	w/198, 225 Eng.		1	—	1	1	1	—	—	—	—	—	—	1947 521
	w/318, 360 Eng.		1	1	1	1	1	1	1	1	1	1	—	2129 013
	w/400, 440 Eng.		—	—	—	1	1	1	1	1	1	1	1	1737 705
7-44-4	GASKET-w/Pump Hsg To Cyl. Blk													
	w/400, 440 Eng.		—	—	—	2	2	2	2	2	2	2	2	1737 761
	w/198, 225 Eng. Inter. Plate		1	—	1	1	1	—	—	—	—	—	—	1947 523
7-46-1	**SEAL, Water Pump, Assy.**													
	w/198, 225, 318, 360 Eng.		1	1	1	1	1	1	1	—	—	—	—	2951 838
	Seal, Water Pump Body w/198, 225, 318, 360, 400, 440 Eng.		1	1	1	1	1	1	1	1	1	1	1	295 1010
7-48-19	**CLAMP, w/Pump By Pass Hose w/318, 360 Eng.**		2	2	2	2	2	2	2	2	2	2	—	2448 762
7-48-22	NIPPLE, w/Pump By-Pass													
	w/198, 225 Eng.		1	—	1	1	1	—	—	—	—	—	—	1947 643
	w/318, 360 Eng.		1	1	1	1	1	1	1	1	1	1	—	2402 903
7-52-2	**TANK, Rad. Core Coolant Reserve**		1	—	1	—	—	—	—	—	—	—	—	3691 923
			—	1	—	—	—	—	—	—	—	—	—	3691 900
			—	—	—	1	1	—	—	—	—	—	—	3673 834
			—	—	—	—	—	1	1	1	1	1	1	3691 925
7-52-6	TUBE, Rad. Core Filler Neck Coolant R/Tank Cap		—	1	—	1	1	1	1	1	1	1	1	3574 155
	C/R Tank Cap O/Flow		—	—	—	1	1	—	—	—	—	—	—	3574 155
7-52-9	CAP, Rad. Core Coolant R/Tank		1	—	1	—	—	1	1	1	1	1	1	3691 964
			—	1	—	1	1	—	—	—	—	—	—	3574 152
7-52-11	BRACKET, Rad. Core Coolant R/Tank Retainer		—	—	—	1	1	—	—	—	—	—	—	3673 899
7-52-12	SUPPORT, Rad. Core Coolant R/Tank		—	1	—	—	—	—	—	—	—	—	—	3691 903
7-52-13	BRACE, Rad. Core Coolant R/Tank Supt.		—	1	—	—	—	—	—	—	—	—	—	3691 904

NOTES

CARLINES J - Challenger, B - Barracuda, V - Valiant, L - Dart, R - Satellite, W - Coronet - Charger, P - Plymouth, D - Dodge, C - Chrysler, Y - Imperial

AR Indicates use as required.

Numerals in parentheses ( ) refer to notes.

Printed in U.S.A.
November, 1974

# Indicates parts not listed in any previous parts book.

★ Indicates change or addition.

NOTES

GROUP 8 - ELECTRICAL

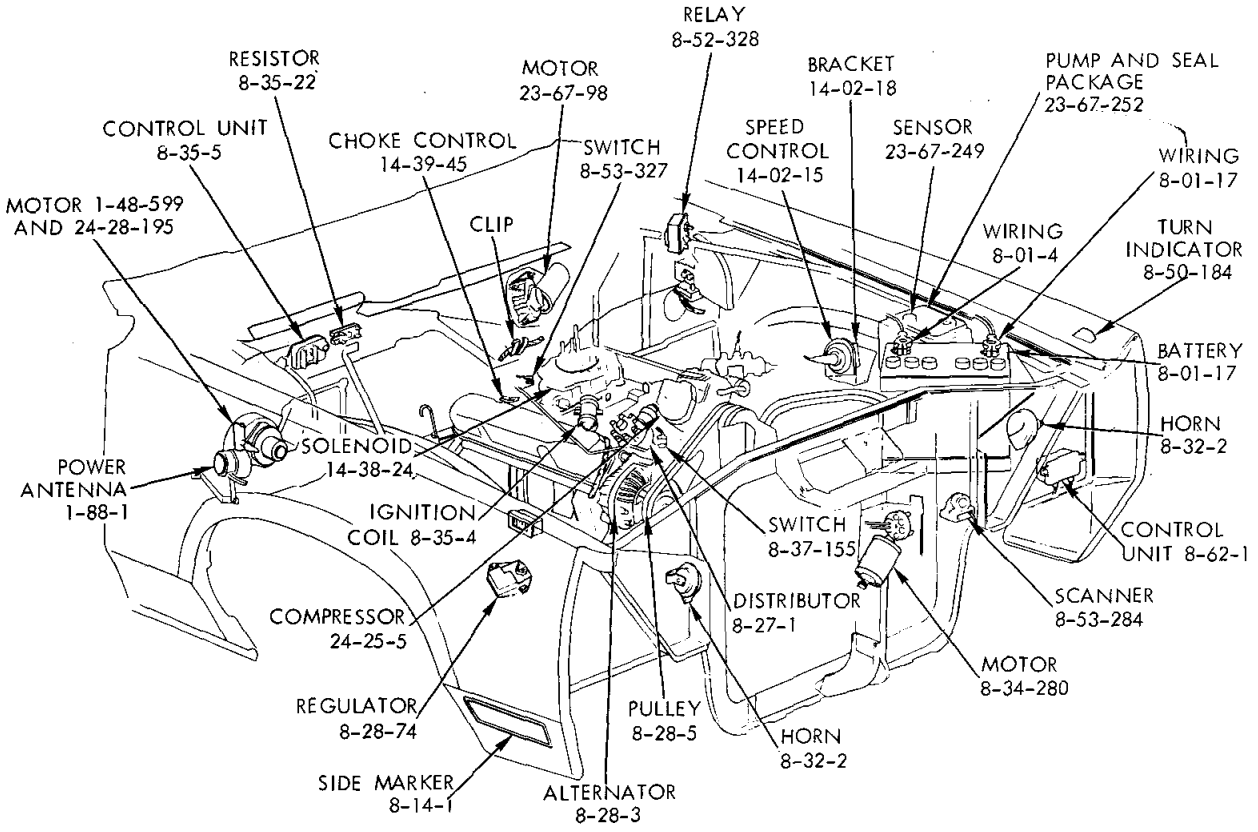

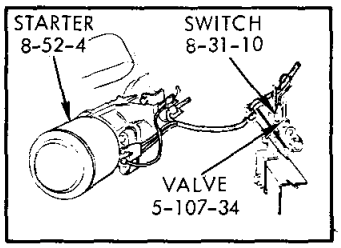

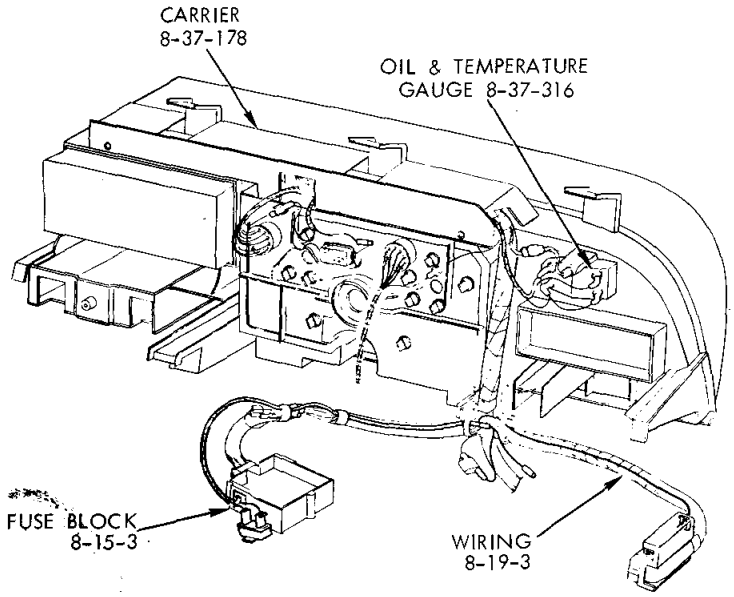

19a4828

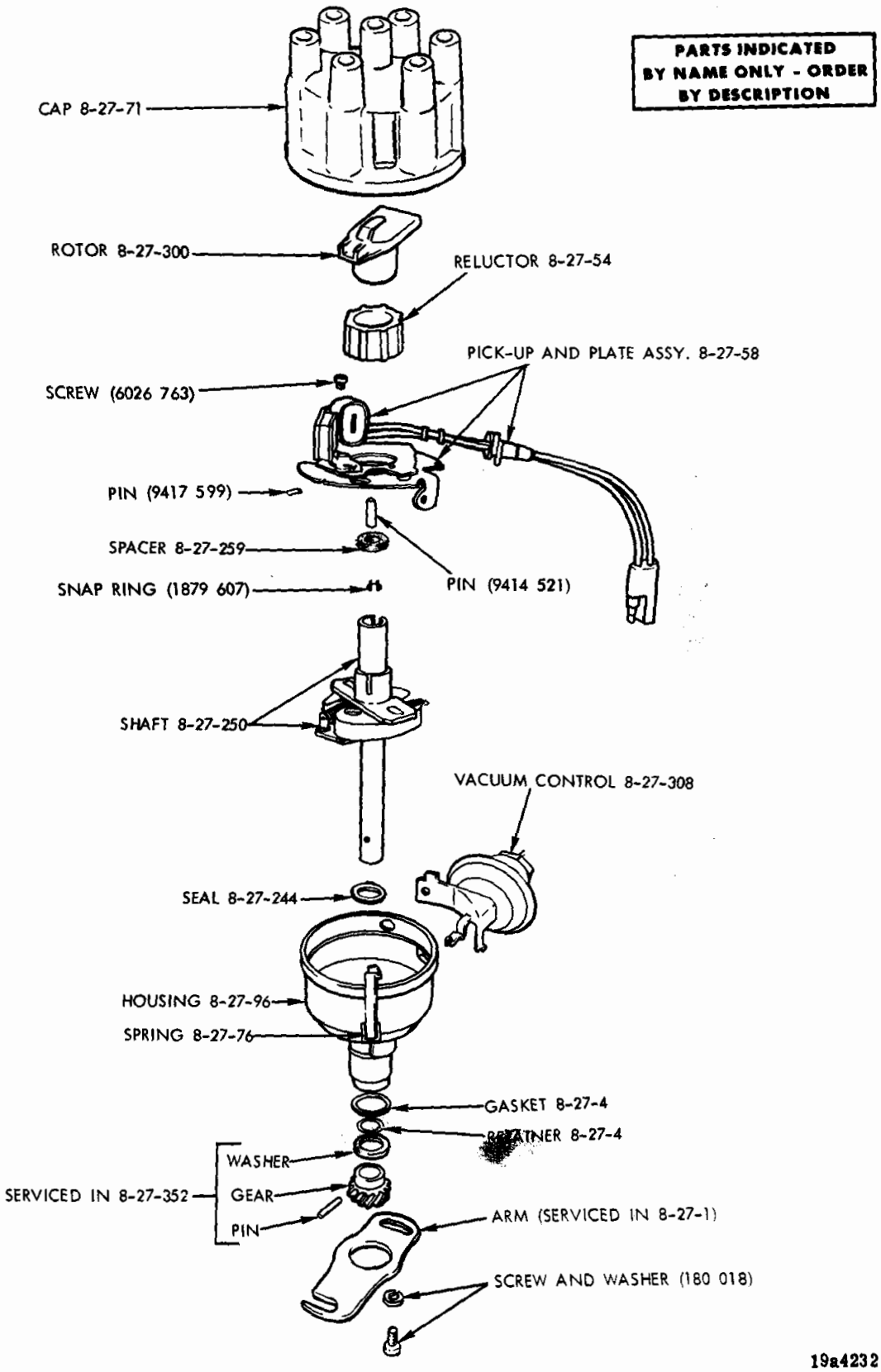

DISTRIBUTOR - 6 CYLINDER

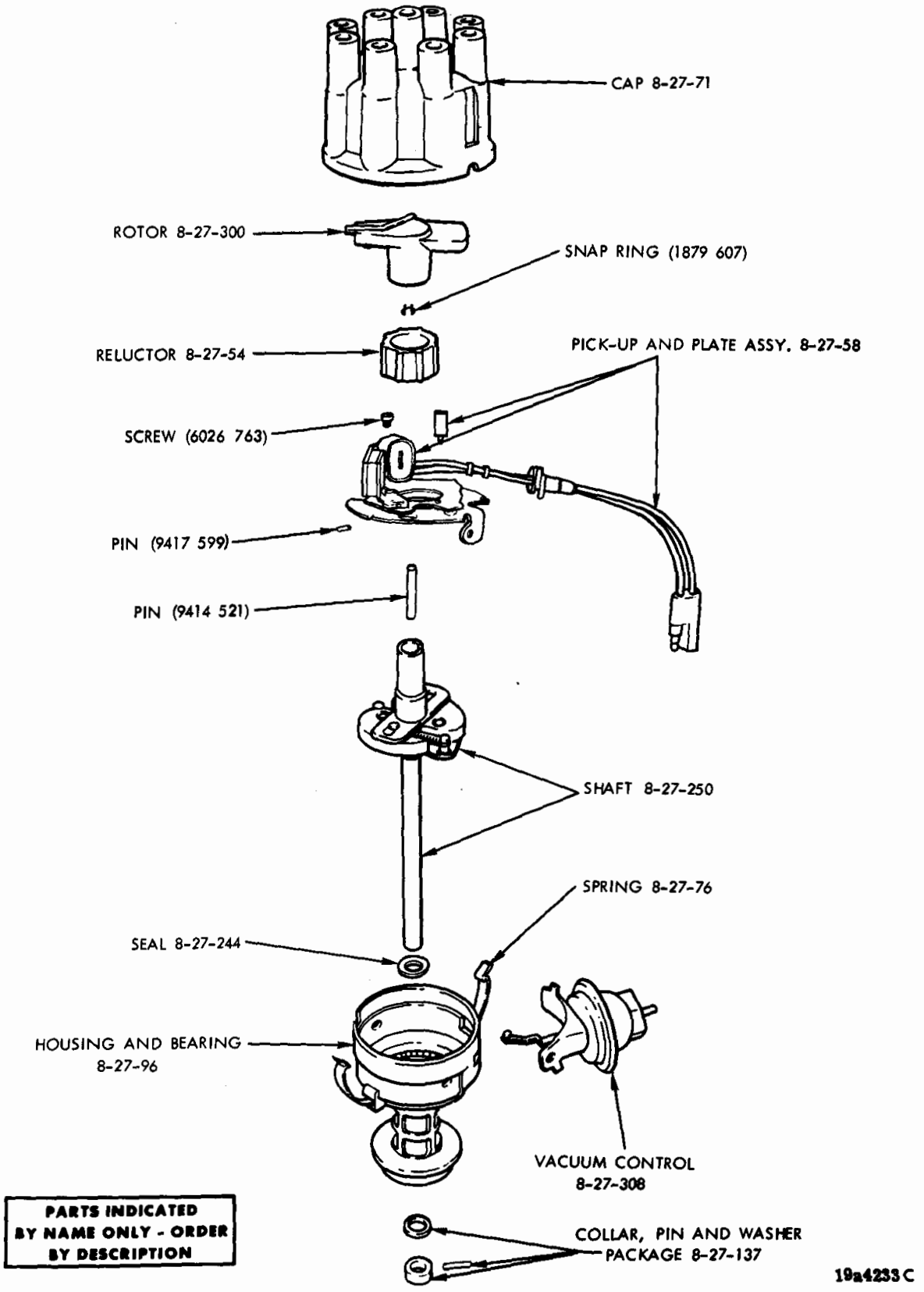

DISTRIBUTOR - 8 CYLINDER

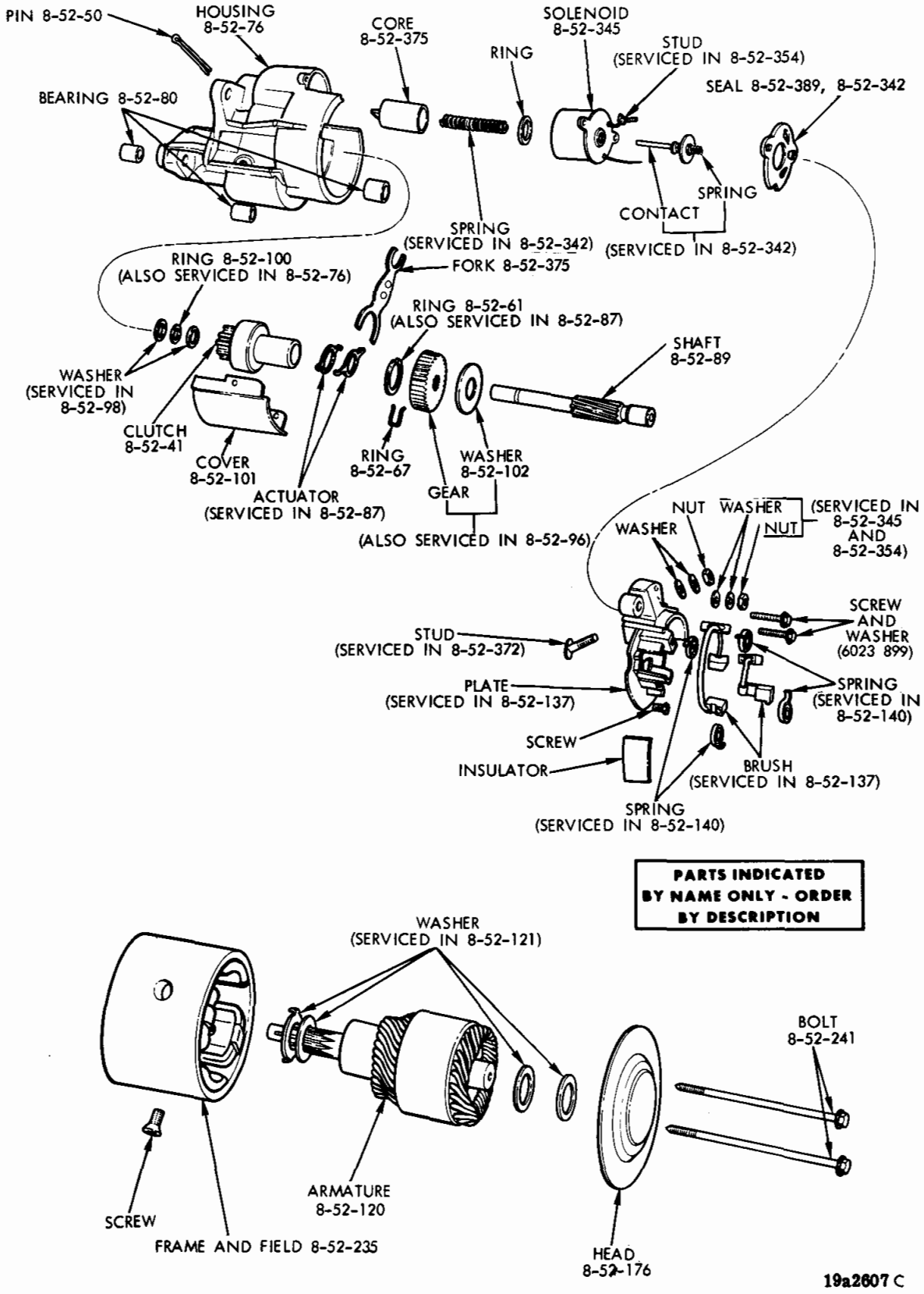

STARTER - 3656 575

PARTS INDICATED BY NAME ONLY - ORDER BY DESCRIPTION

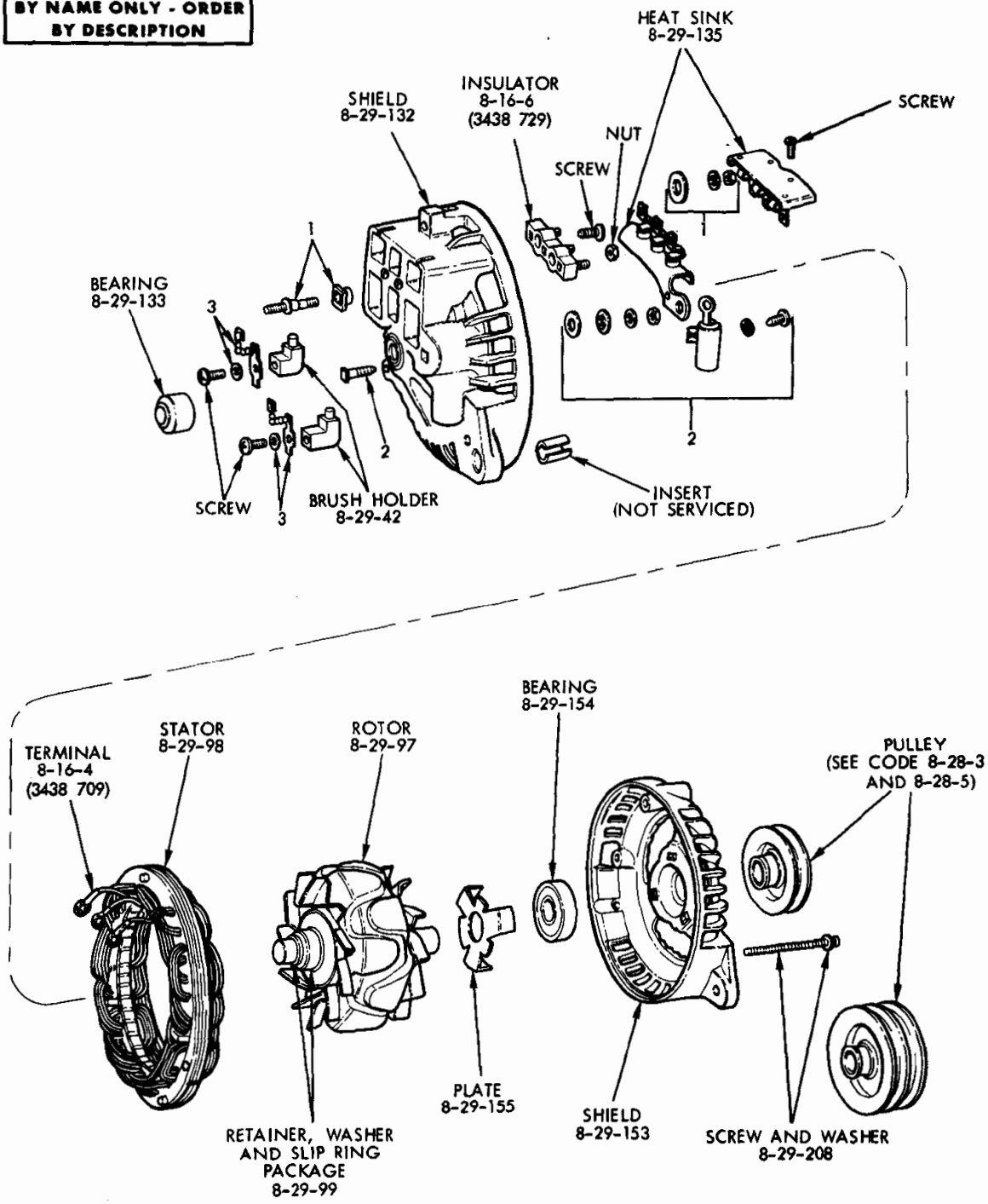

1 - BATTERY TERMINAL PACKAGE 8-29-137
2 - CAPICATOR, STUD AND INSULATOR PACKAGE 8-29-129
3 - BRUSH PACKAGE 8-29-17

19a3791 C

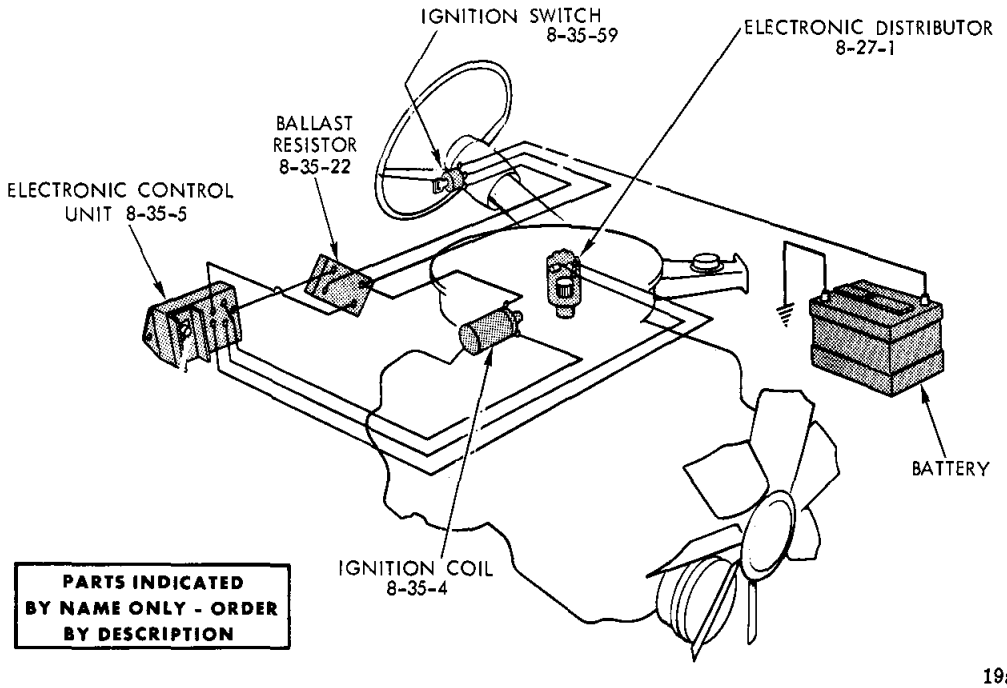

ELECTRONIC IGNITION SYSTEM

NOTES

NOTES

LAMP CHART

BULB TYPES

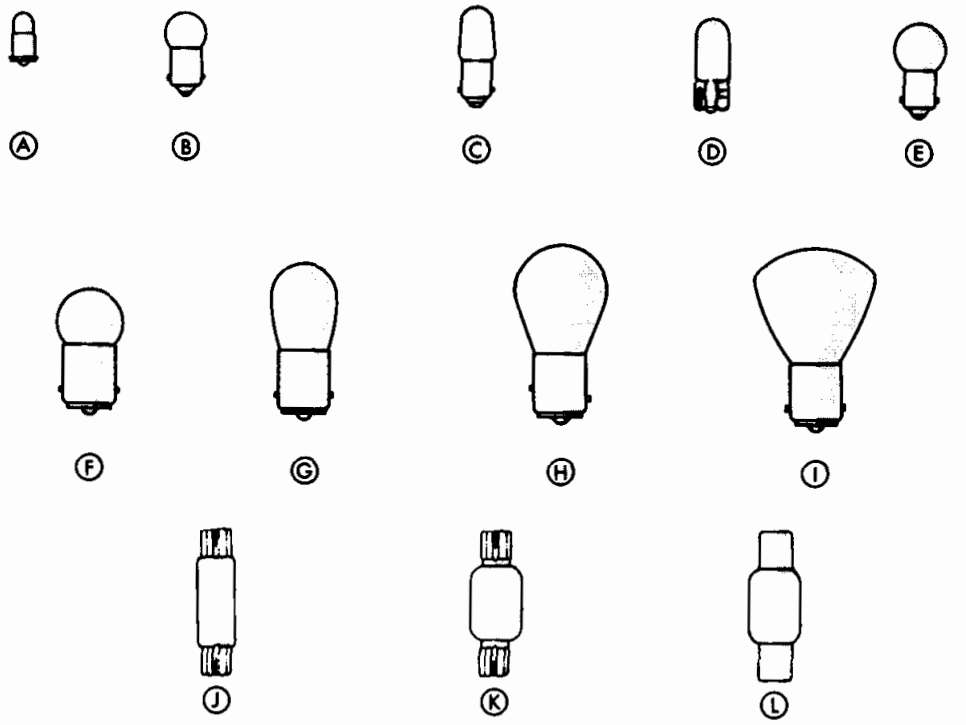

FILAMENT TYPES

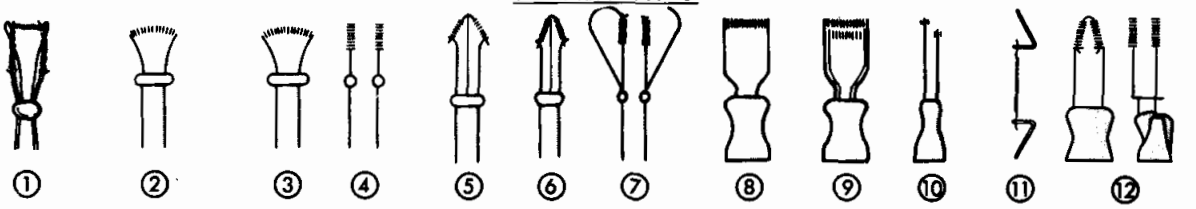

BASE TYPES



MINIATURE BAYONET
SINGLE CONTACT

BAYONET
SINGLE CONTACT

BAYONET
DOUBLE CONTACT



TYPE - INDEXING BAYONET
DOUBLE CONTACT



TYPE - END CONTACT DOUBLE WEDGE

19a13770

LAMP - BULB TYPES CHART

LAMP - BULB TYPES CHART

TYPE	BASE CONTACT	FILAMENT	C-POWER	TRADE NO.	VOLTS	PART NUMBER
A	Single	1	.5	330	14.0	9423 277
B	Single	5	1.	53	14.5	131 282
	Single	1	1.	53x	14.4	152 280
	Single	5	.7	1445	14.4	274 004
	Single	2	1.	51	7.5	115 273
	Single	5	2.	363	14.0	273 987
C	Single	5	.85	1813	14.4	274 148
	Single	5	1.4	1815	14.0	193 065
	Single	5	3.	1816	13.0	152 240
	Single	1	2.	1891	14.0	152 244
	Single	1	.75	1892	14.4	274 020
	Single	1	2.	1893	14.0	9416 927
D	Wedge	5	2.	158	14.0	9415 969
	Single Wedge	1	1.	161	14.0	9417 561
	Single Wedge	5	3.	168	14.0	9425 542
	Single Wedge	1	2.	194	14.0	9421 330
	Single	2	1.6	256	14.0	9420 536
E	Single	5	2.	57	14.0	127 934
	Single	2	1.6	257	14.0	9412 348
	Single	1	2.	1895	14.0	9417 863
	Single	1	2.	1895A	14.0	9427 794
	Single	2	2.	55	7.0	125 588
F	Single	2	4.	67	13.5	142 450
	Double	2	4.	68	13.5	142 451
	Single	2	6.	89	13.0	142 452
	Double	2	6.	90	13.0	142 453
	Single	5	--	97A	13.5	9427 795
	Single	3-4	4.	1155	13.5	9417 865
	Single	2	4.	67AF	13.5	9420 830
	Double	2	4.	64	6.0	142 311
	Double	2	6.	82	6.5	142 312
	Single	2	6.	81	6.0	142 306
	Single	2	3.	63	6.0	142 303
G	Single	8	15.	1003	12.8	151 577
	Double	8	15.	1004	12.8	151 578
	Double	2	15.	210	6.2	151 559
	Single	2	15.	209	6.5	151 579
H	Single	2	15.	93	12.8	142 454
	Double	2	15.	94	12.8	142 455
	Double	8	32.	1034	12.8	151 567
	Double	8	16.32	1034A	12.0	9418 772
	Double	8	19.	1034NA	12.8	9422 798
	Single	10	21.	1129	6.0	142 308
	Double	10	21.	1130	6.0	142 449
	Single	8	32.	1073	12.8	151 576
	Single	8	4.	1095	14.0	9418 903

CONTINUED ON NEXT PAGE

LAMP - BULB TYPES CHART - CONTINUED

TYPE	BASE CONTACT	FILAMENT	C-POWER	TRADE NO.	VOLTS	PART NUMBER
H	Single	8	21.	1141	12.8	142 456
Cont'd.	Double	8	21.	1142	12.8	142 457
	Double	8	--	1142IF	12.8	147 680
	Single	8	32.	1156	12.8	9417 866
	Double	8	32.	1157	12.8	9417 867
	Double	8	32.	1157A	12.8	9419 780
	Double	8	32.	1157NA	12.8	9423 295
	Double	2	10.	91	13.0	113 238
	Single	2	15.	87	6.0	142 304
	Double	2	21.	1130	6.0	142 447
	Double	9-10	21.3	1154	6.0	145 416
	Double	2	15.	88	6.75	142 446
I	Single	5	50.	1195	12.5	193 096
	Single	2	50.	1293	12.5	9427 336
	Double	12	32.	1000	62.	142 307
J	End Contact	11	6.	562	13.5	9427 943
	Double Wedge	11	4.	704	13.5	9428 704
K	Double Wedge	11	6.	550	13.5	9423 841
	Double Wedge	11	12.	551	12.8	9428 310
L	Festoon Cap	11	12.	211-1	12.8	9422 525
	Festoon Cap - Double	11	12.	211-2	12.8	9431 808

REFER TO TEXT CODE 8-44-1 FOR LOCATION CHART

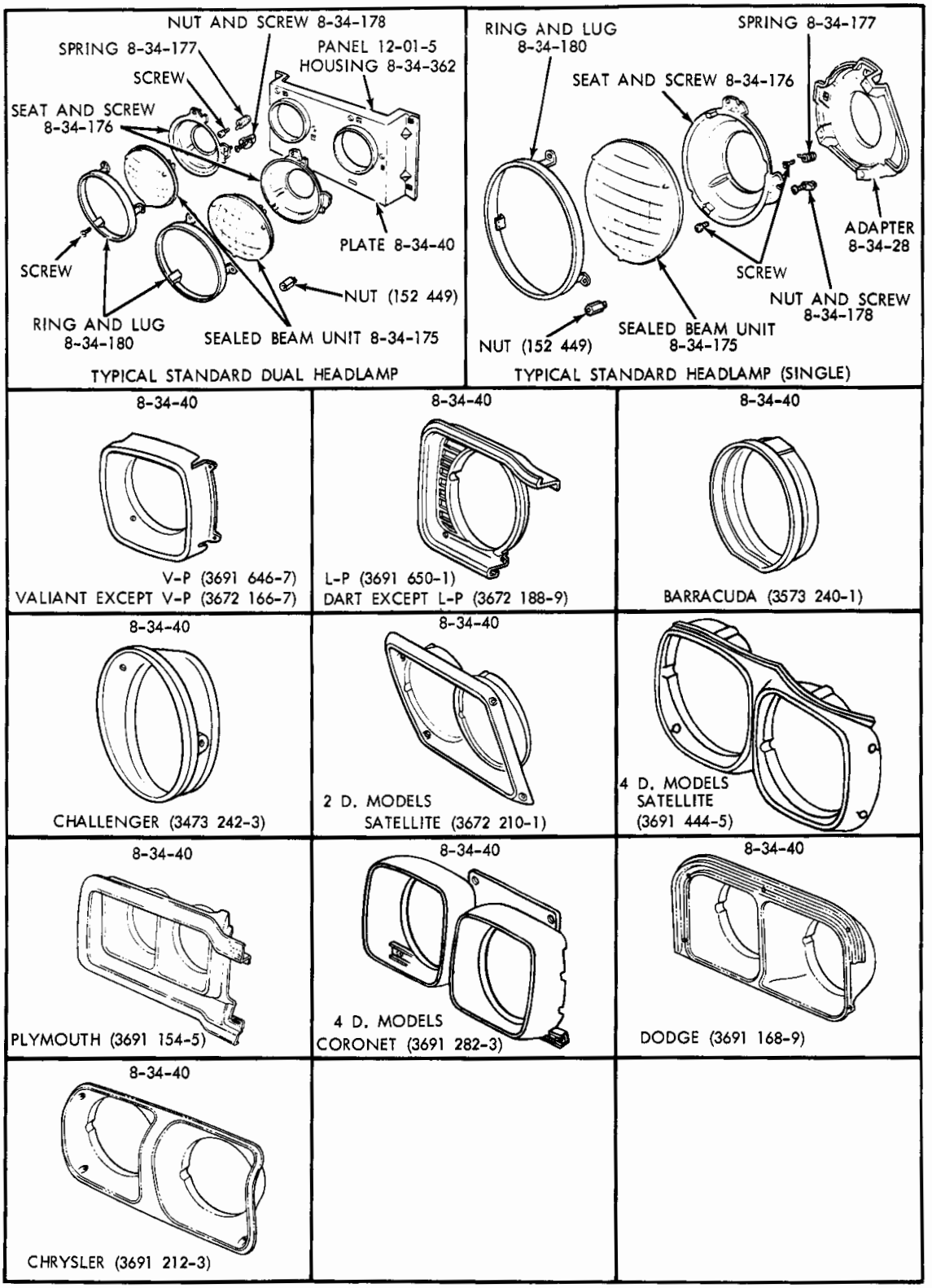

NOTE: FOR PLATE, PANELS AND HEADLAMP DOORS SEE PART TYPE CODE 8-34-40 19a4674 A

HEADLAMP BEZEL CHART

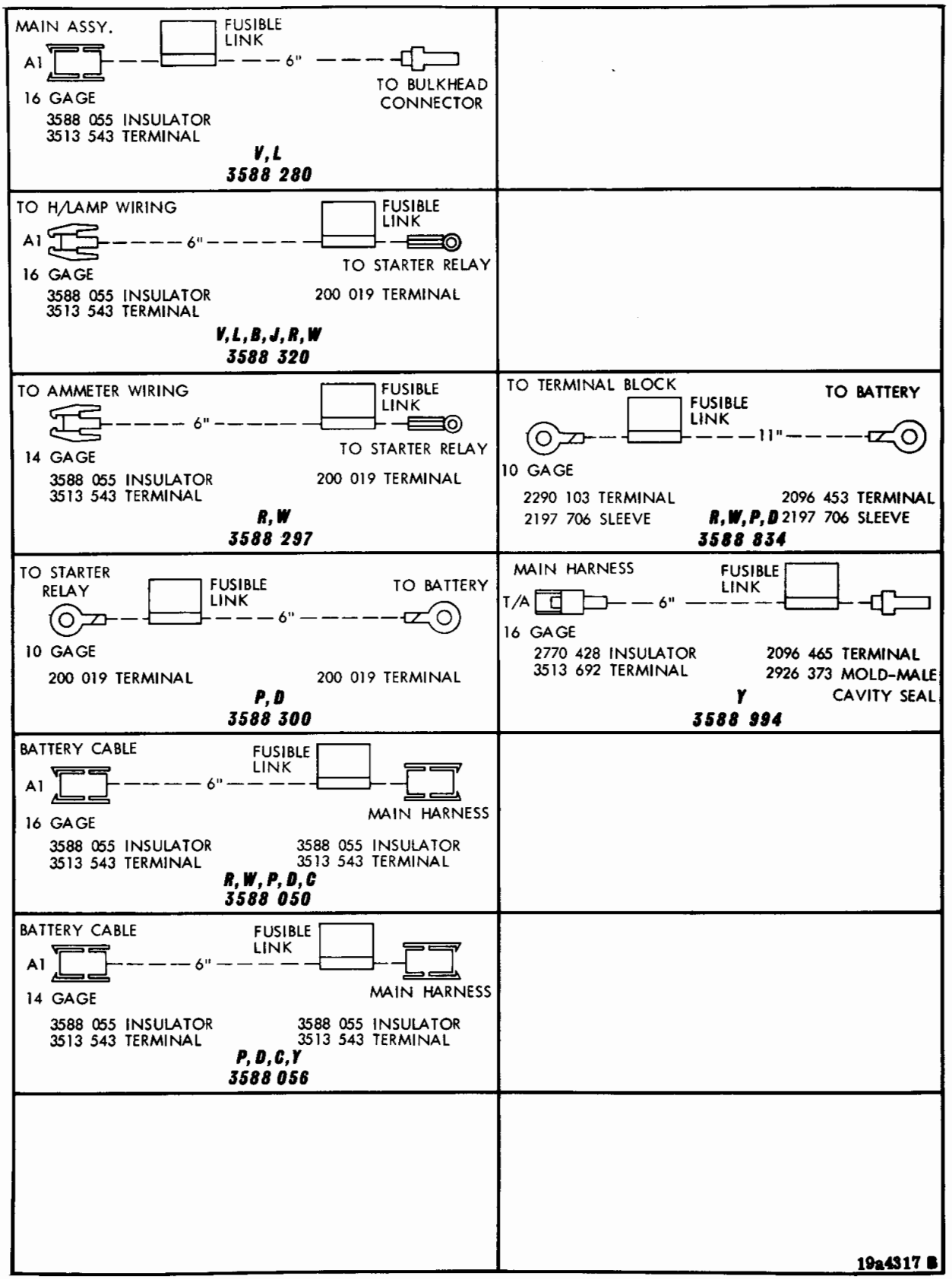

FUSIBLE LINK CABLES CHART

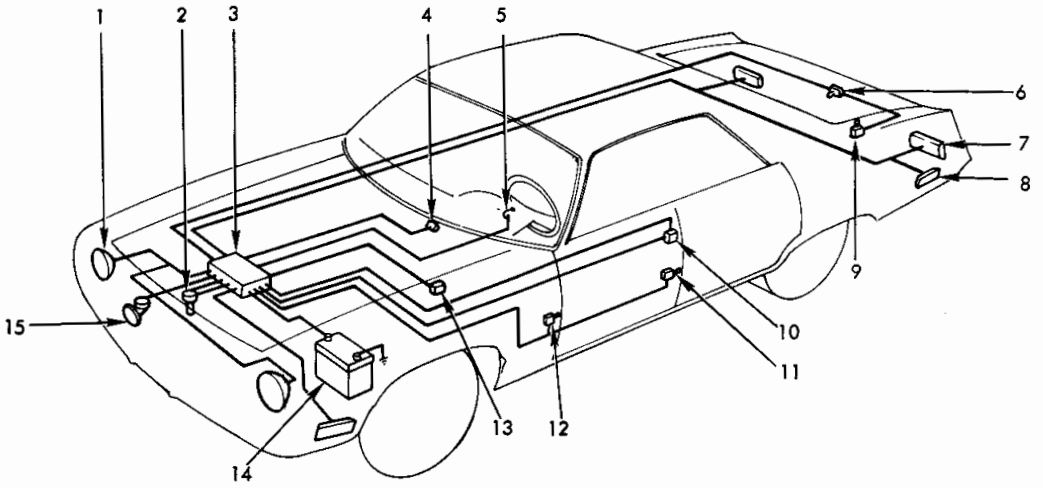

1 HEADLAMP 8-34-1
2 HOOD LATCH SOLENOID 15-11-3
3 ELECTRONIC CONTROL UNIT 8-62-1
4 LOCK-ALARM SWITCH 8-62-4
5 IGNITION SWITCH 8-35-59
6 DECK LID LATCH SWITCH 8-62-4
7 TAIL LAMP 8-55-7
8 REAR SIDE MARKER 8-14-1
9 DECK LID AJAR SWITCH 8-62-4
10 DOOR KEY CYLINDER 8-62-4
11 REAR DOOR JAMB SWITCH 8-62-4
12 FRONT DOOR JAMB SWITCH 8-62-4
13 HOOD AJAR SWITCH 8-62-4
14 BATTERY
15 HORN 8-32-2

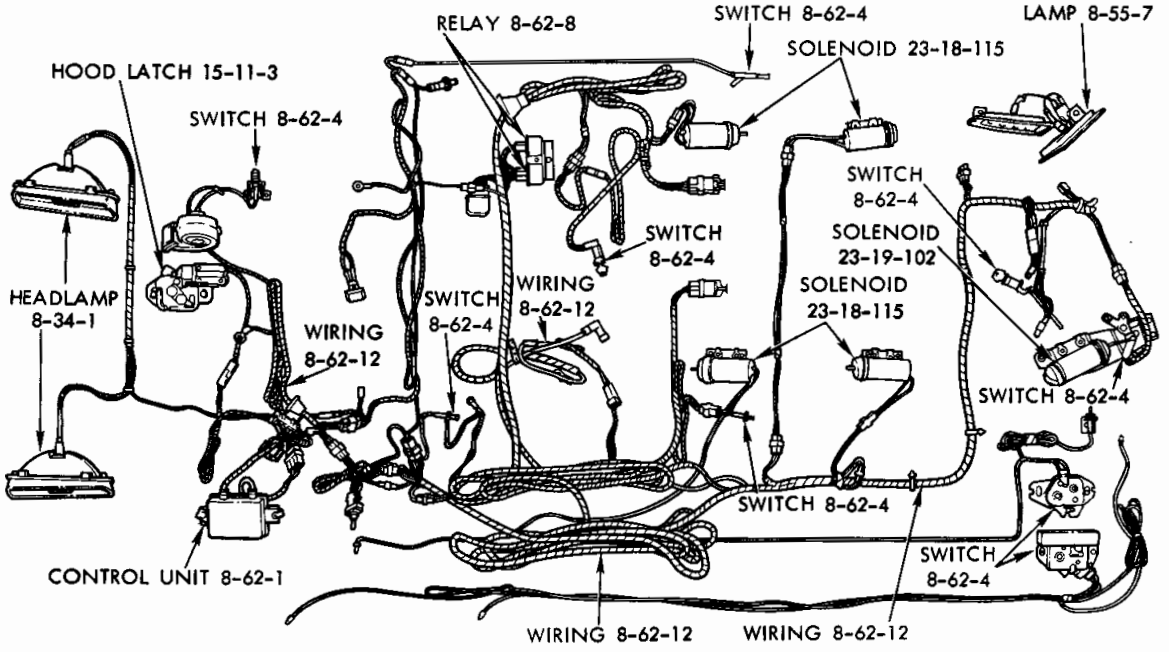

19a4382 A

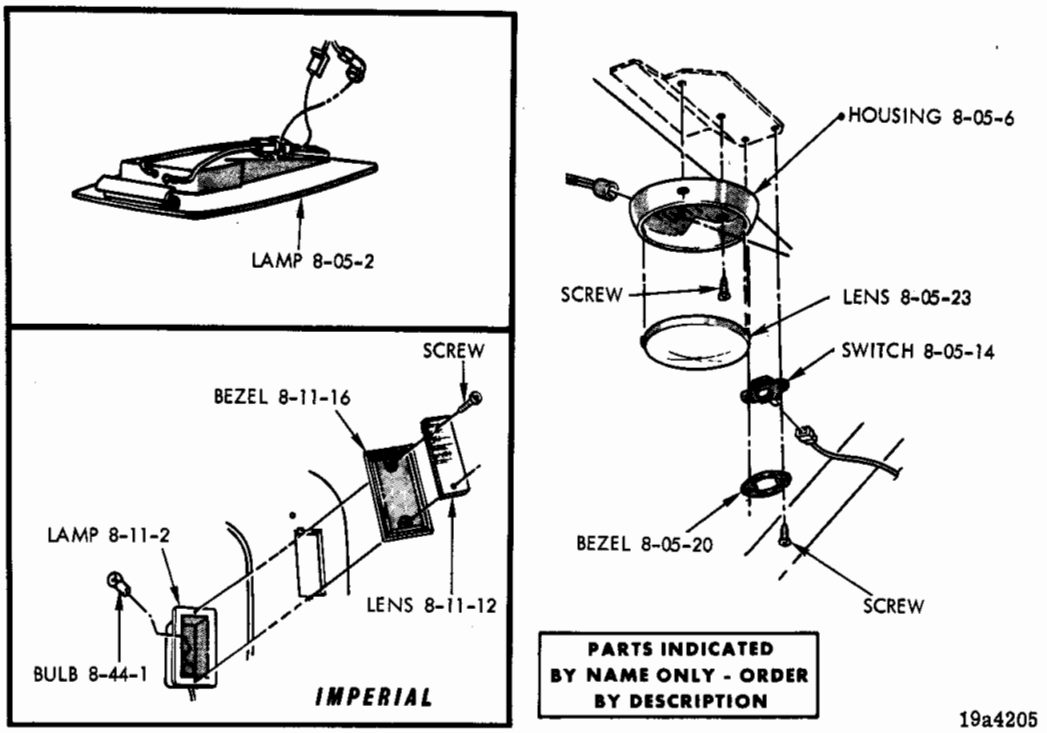

DOME LAMPS - P, D, C, Y

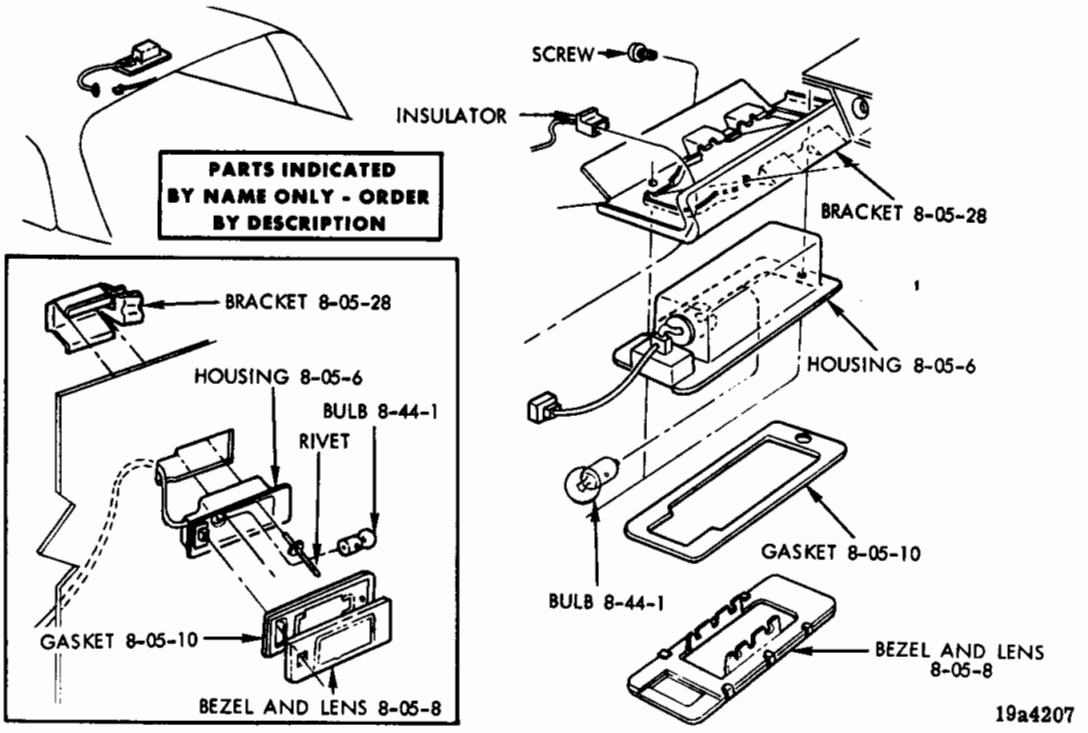

DOME LAMP - STATION WAGON

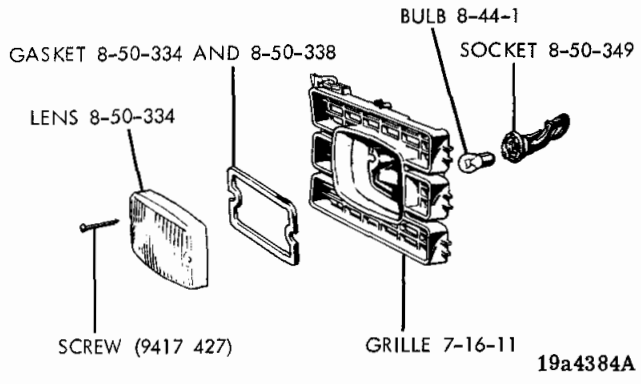

PARKING AND TURN SIGNAL

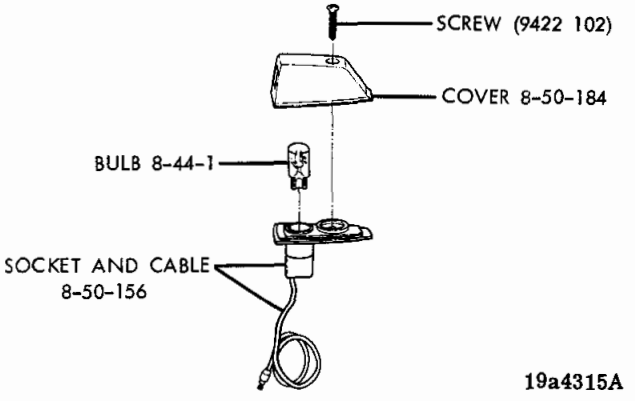

FENDER TURN INDICATOR

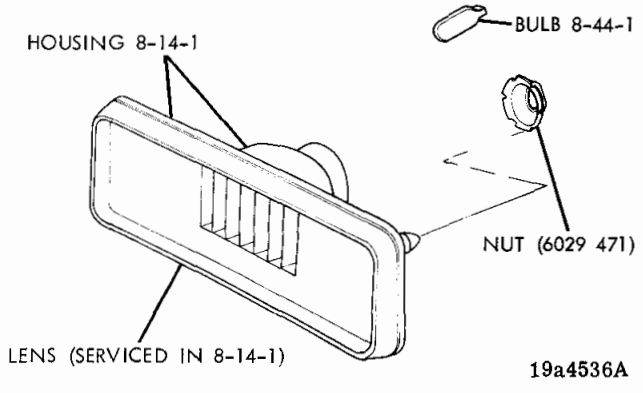

FENDER SIDE MARKER

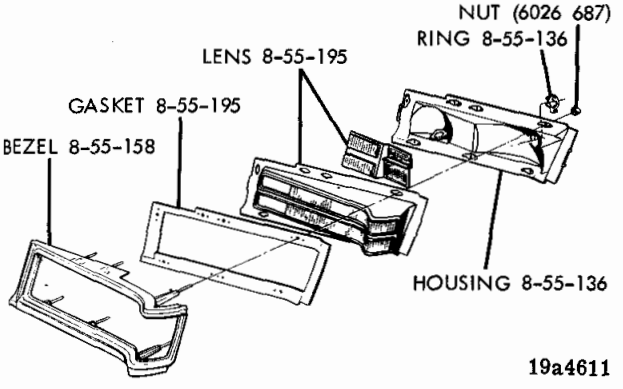

TAIL, STOP, T/S & B/UP - EXC. FASTBACK

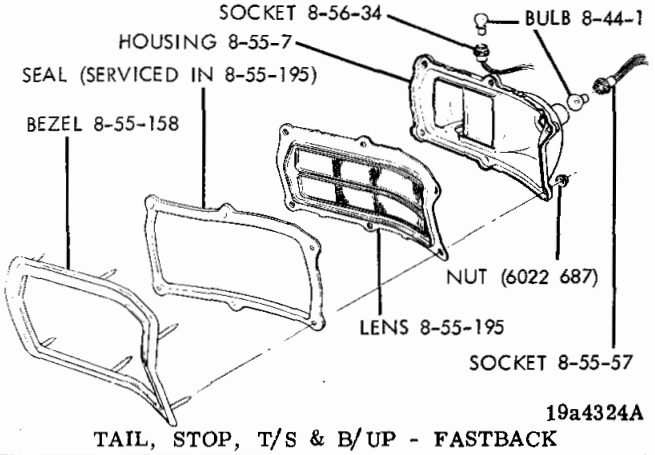

TAIL, STOP, T/S & B/UP - FASTBACK

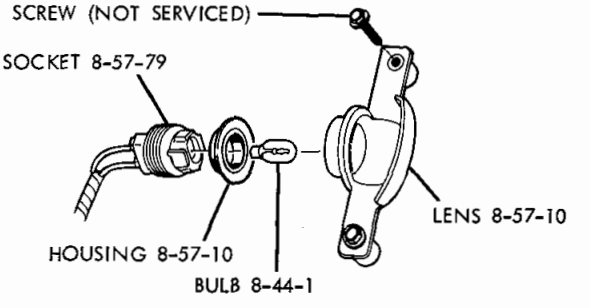

REAR BUMPER LICENSE

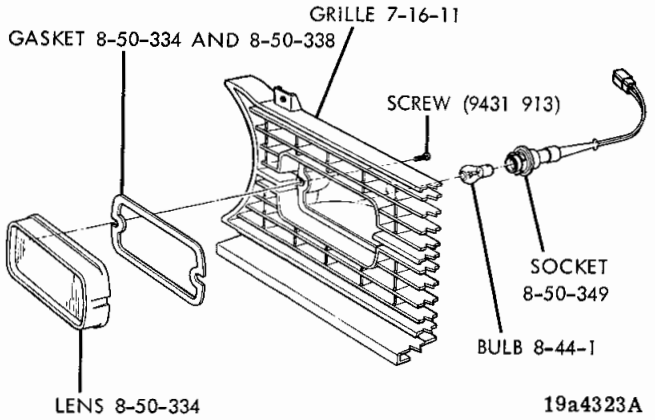

PARKING AND TURN SIGNAL

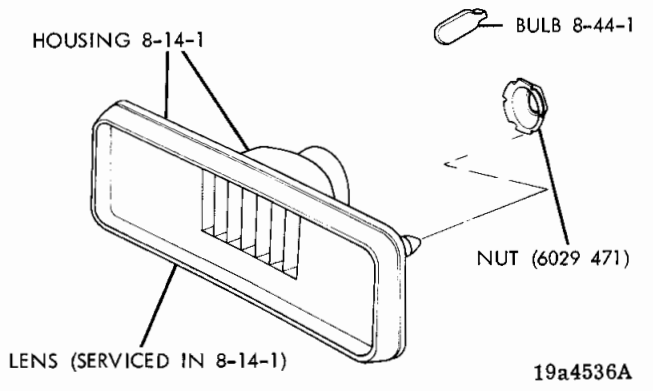

FENDER SIDE MARKER

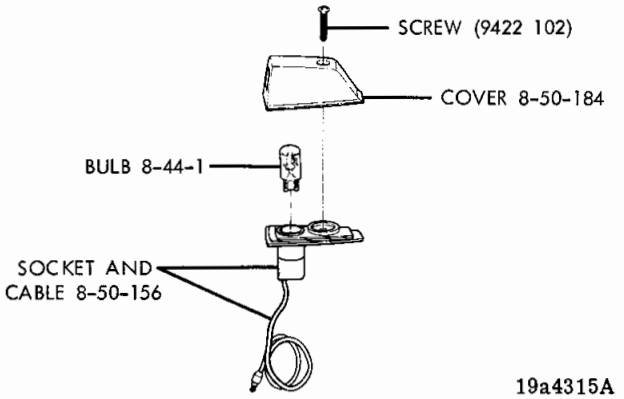

FENDER TURN INDICATOR

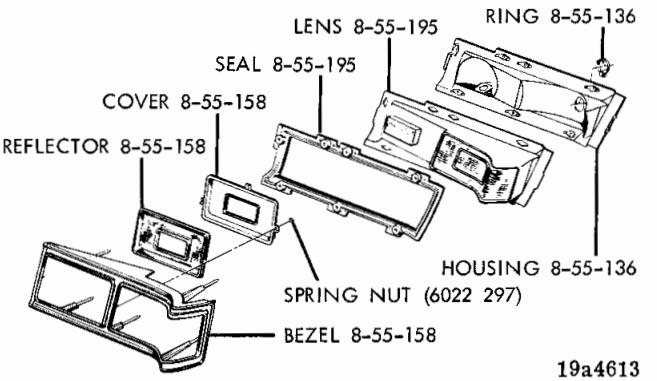

TAIL, STOP, T/S & B/UP - EXC. FASTBACK

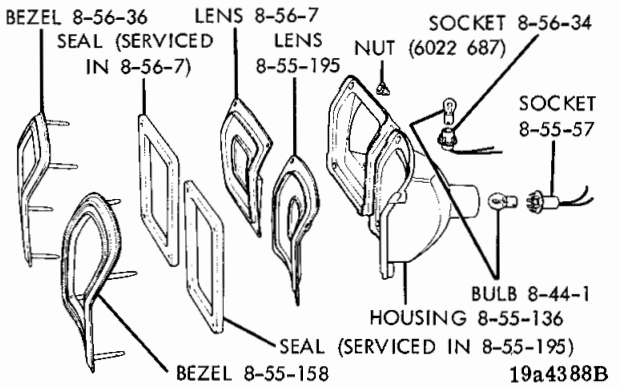

TAIL, STOP, T/S & B/UP - FASTBACK

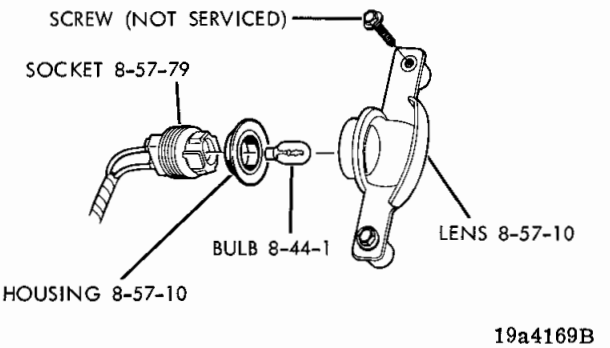

REAR BUMPER LICENSE

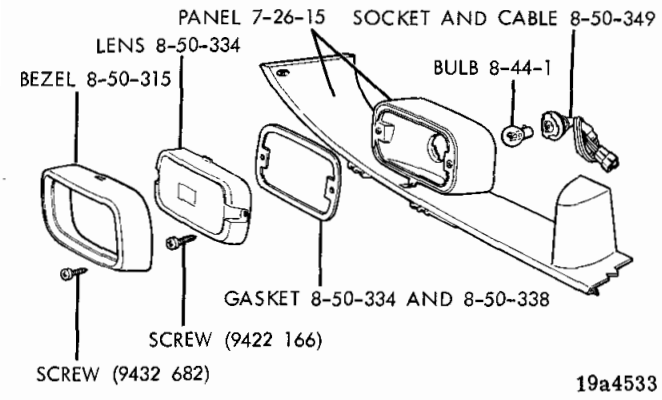

PARKING AND TURN SIGNAL - B

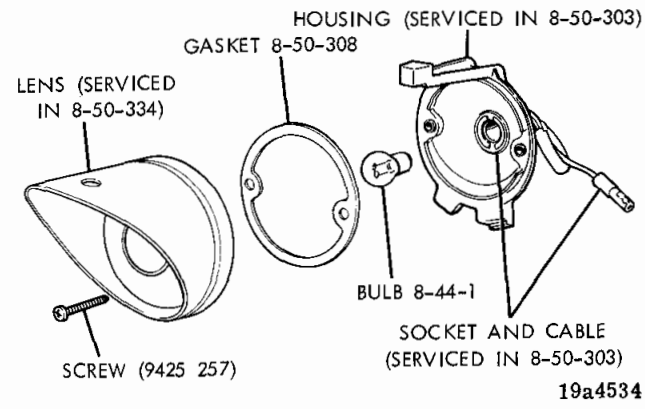

PARKING AND TURN SIGNAL - J

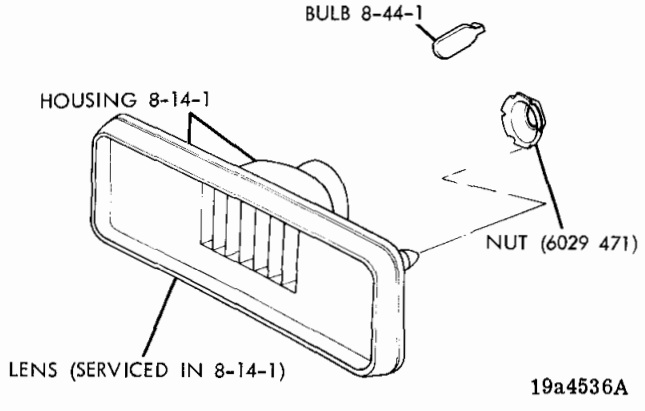

FENDER SIDE MARKER - B, J

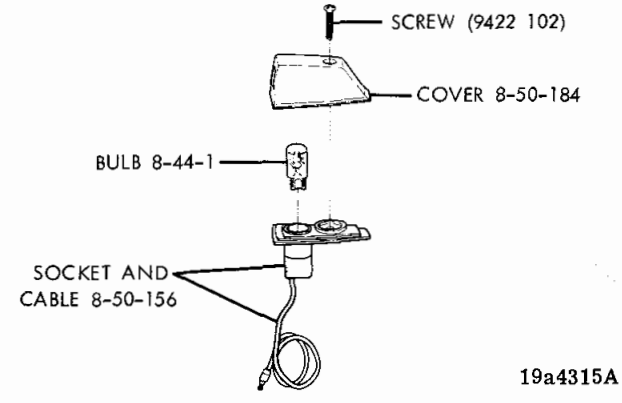

FENDER TURN INDICATOR - B, J

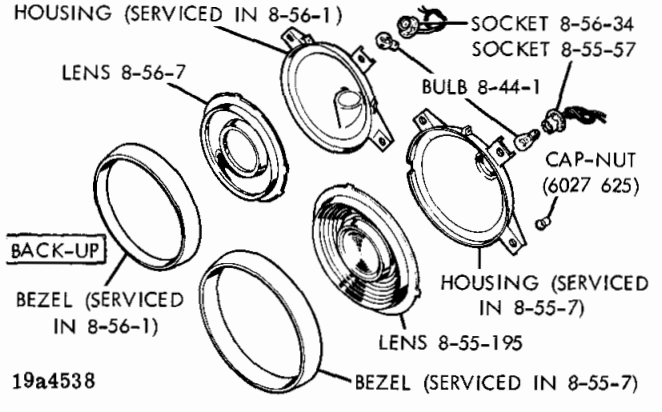

TAIL, STOP, TURN SIGNAL & BACK-UP - B

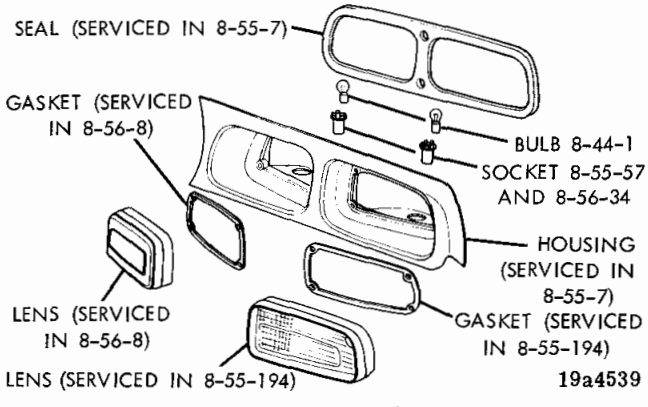

TAIL, STOP, TURN SIGNAL & BACK-UP - J

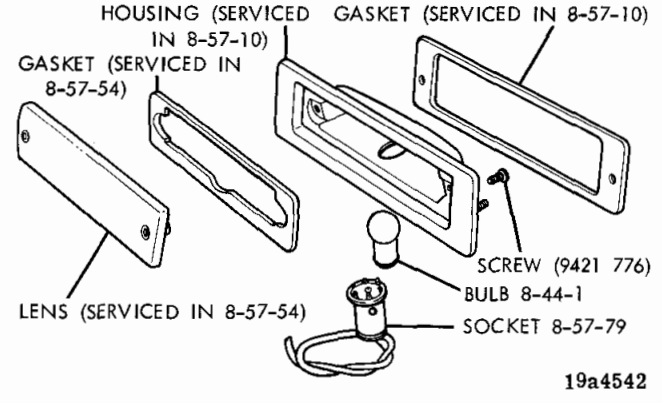

LWR. DECK PNL. LICENSE - B

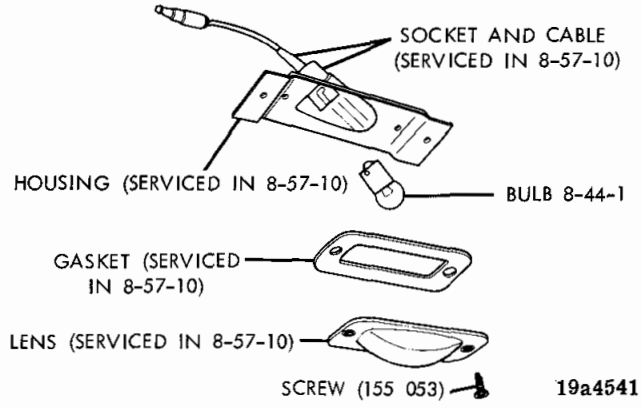

REAR BUMPER LICENSE - J

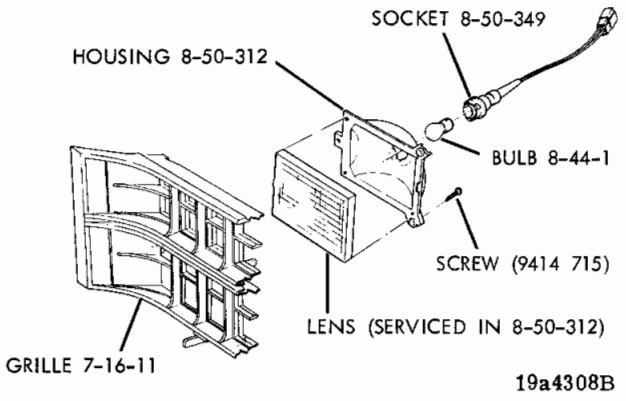

PARKING AND TURN SIGNAL - 2 DOOR MODELS

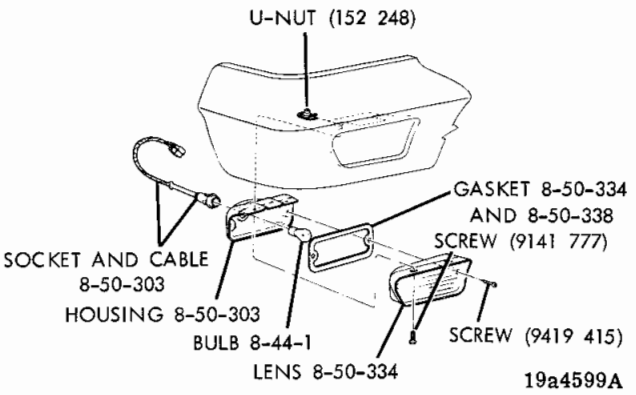

PARKING AND TURN SIGNAL - 4 DOOR

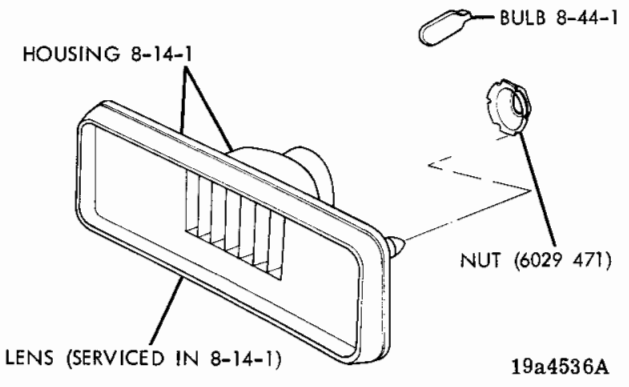

SIDE MARKER AND REFLECTOR

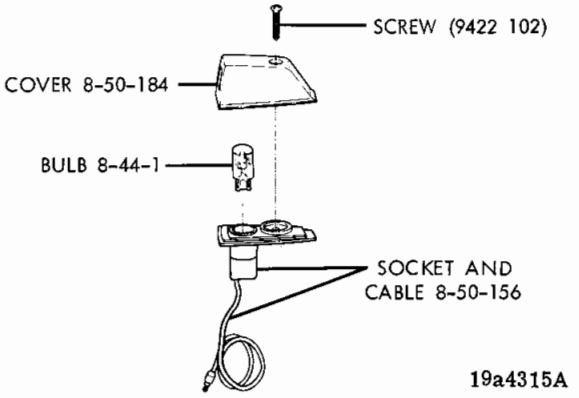

FENDER TURN INDICATOR

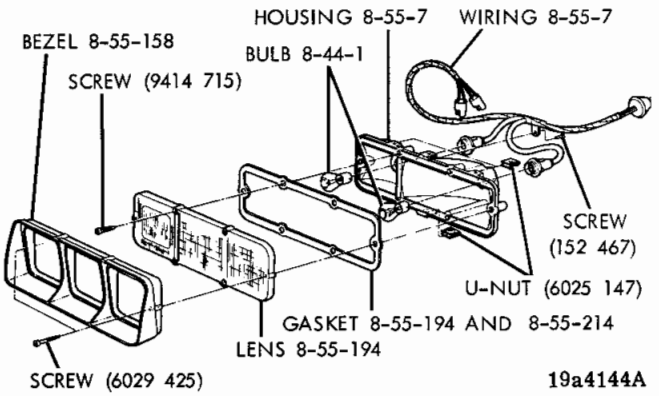

TAIL, STOP, T/S & B/UP - 2 DOOR MODELS

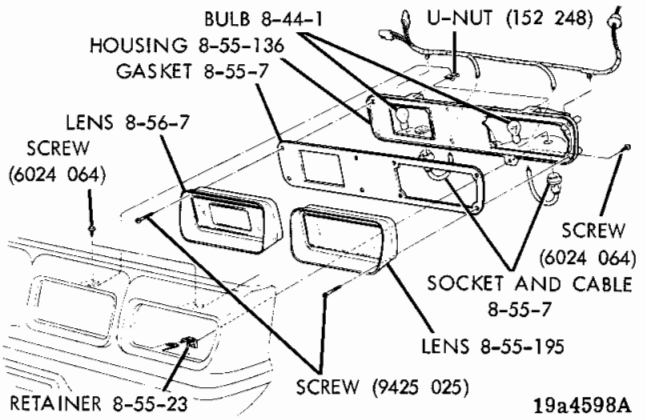

TAIL, STOP, T/S & B/UP - 4 DOOR

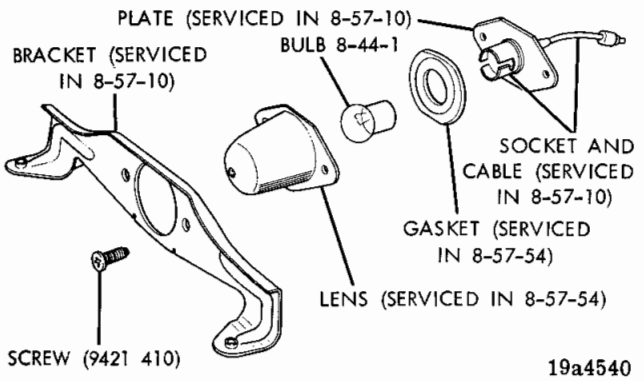

REAR BUMPER LICENSE - 2 DOOR MODELS

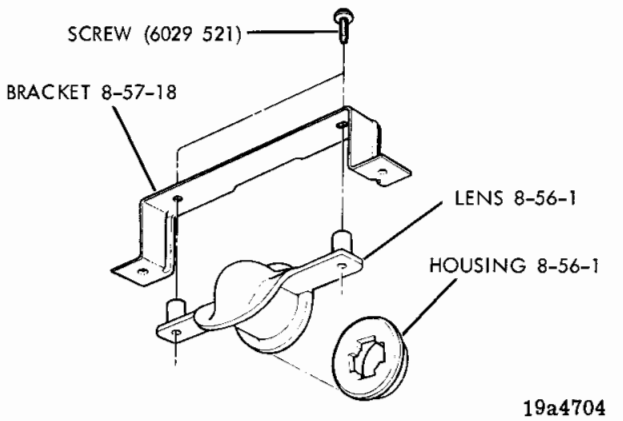

REAR BUMPER LICENSE - 4 DOOR

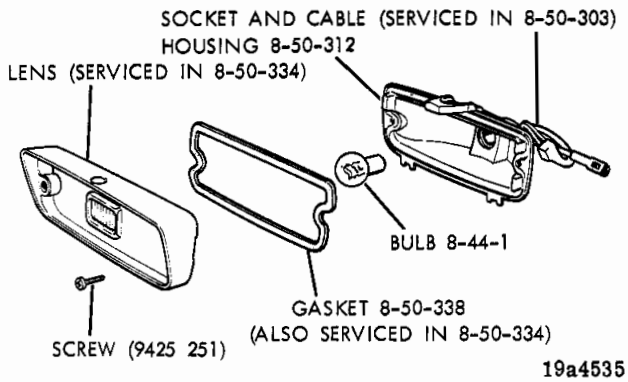

PARKING AND TURN SIGNAL - 2 DOOR MODELS

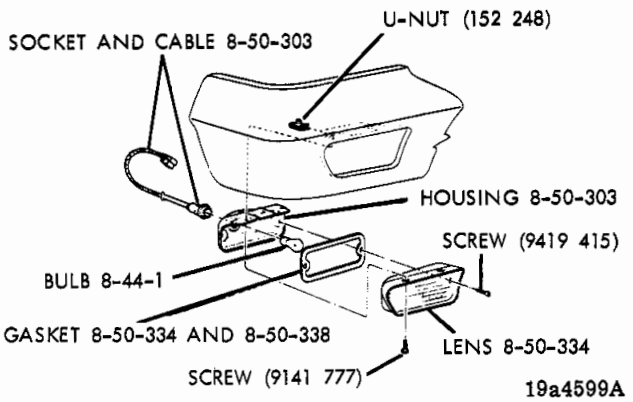

PARKING AND TURN SIGNAL - 4 DOOR MODELS

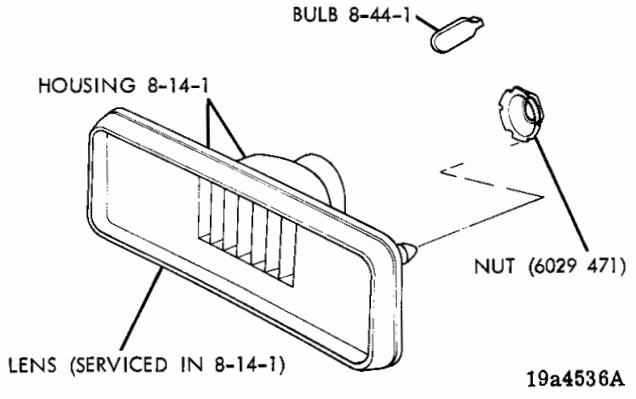

SIDE MARKER AND REFLECTOR

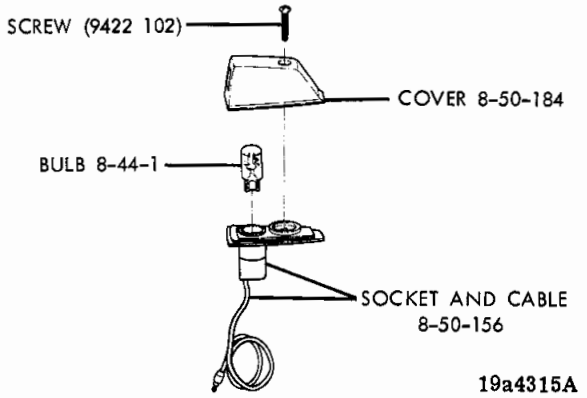

FENDER TURN INDICATOR

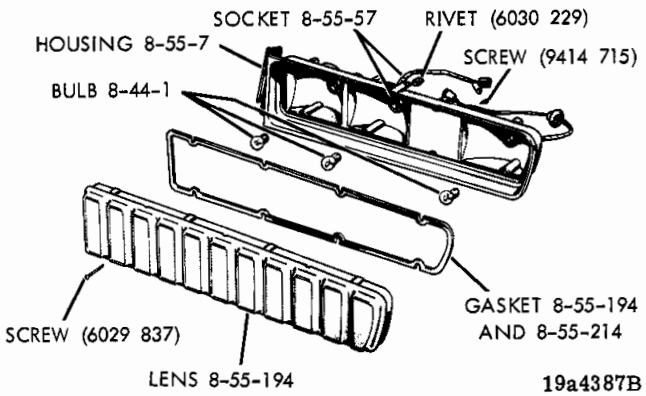

TAIL, STOP, T/S & B/UP - 2 DOOR MODELS

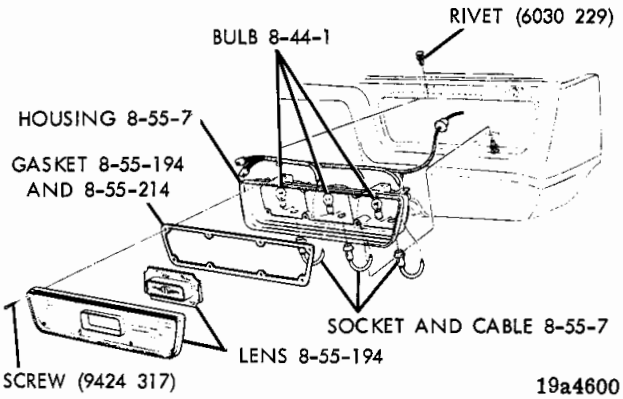

TAIL, STOP, T/S & B/UP - 4 DOOR MODELS

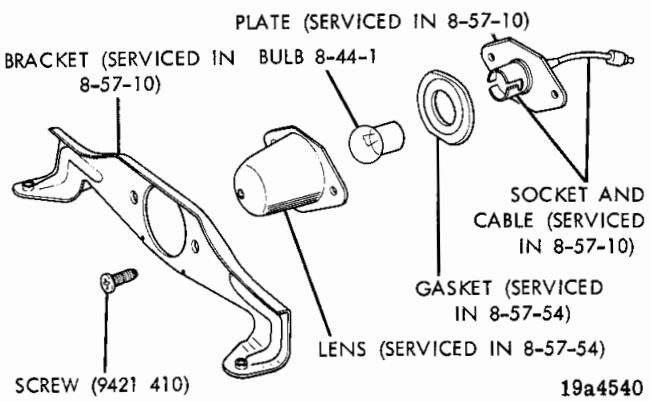

REAR BUMPER LICENSE - 2 DOOR MODELS

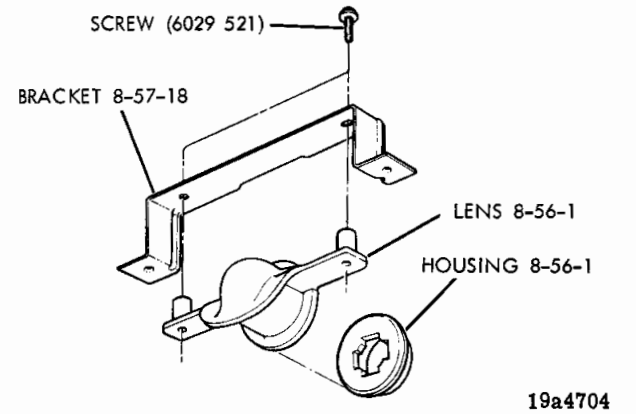

REAR BUMPER LICENSE - 4 DOOR MODELS

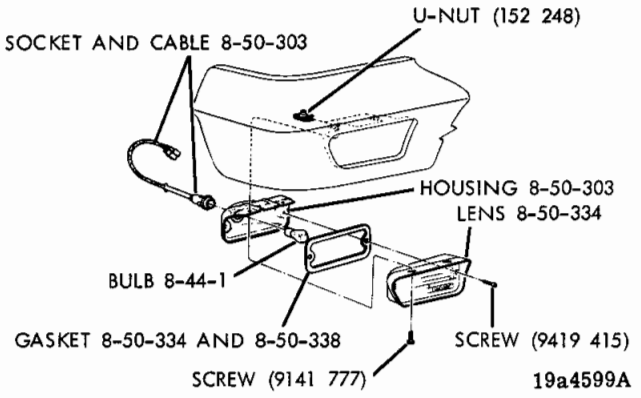

PARKING AND TURN SIGNAL - R, W

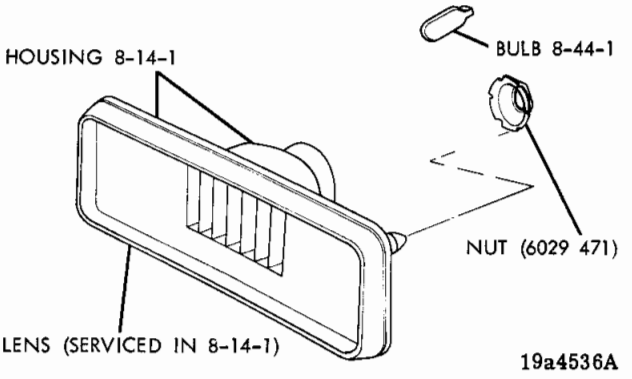

FENDER SIDE MARKER - R, W

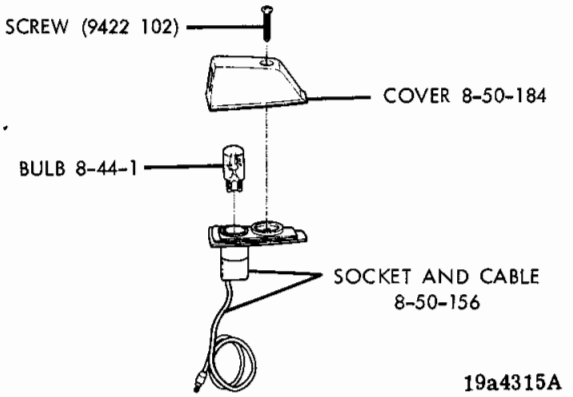

FENDER TURN INDICATOR - R, W

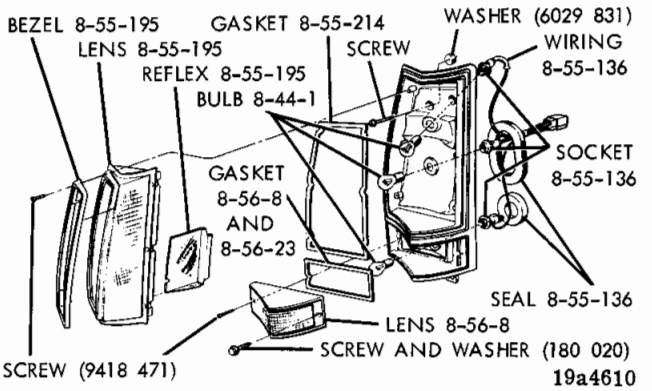

QTR. PNL. TAIL, STOP, T/S, SIDE MARKER & B/UP - W

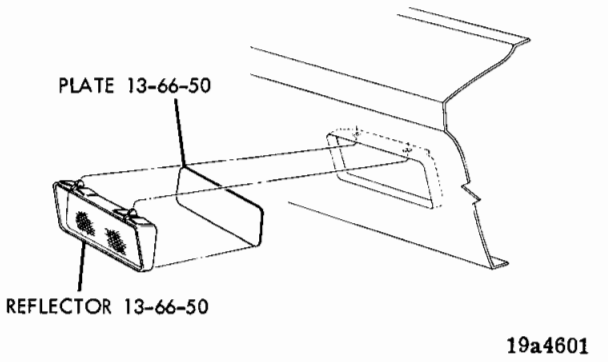

REAR BUMPER REFLECTOR AND PLATE - R, W

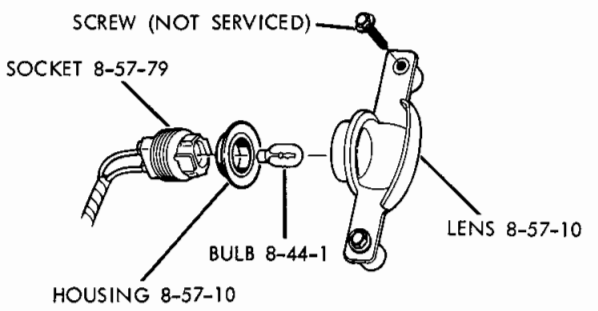

REAR BUMPER LICENSE - R, W

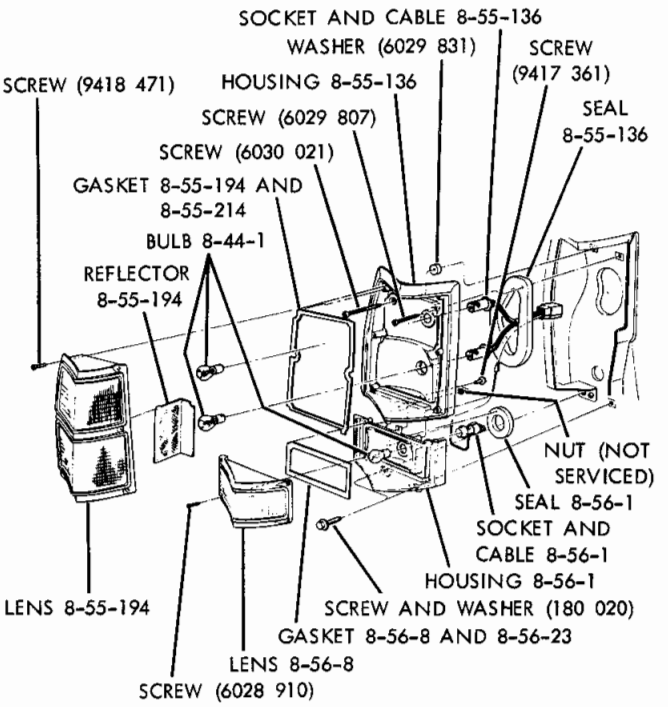

QTR. PNL. TAIL, STOP, T/S, SIDE MARKER & B/UP - R

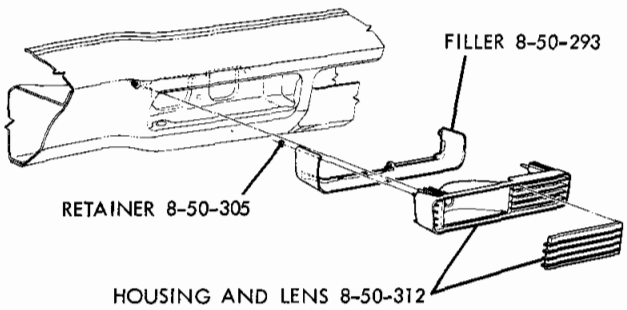

19a4607

PARKING AND TURN SIGNAL

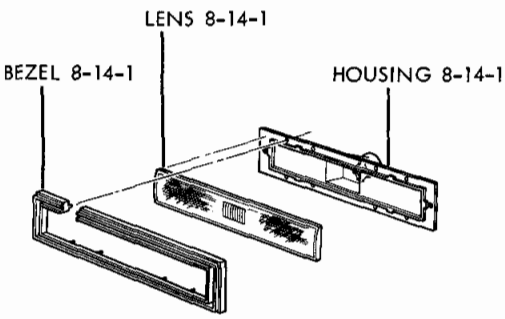

19a4439

FENDER SIDE MARKER

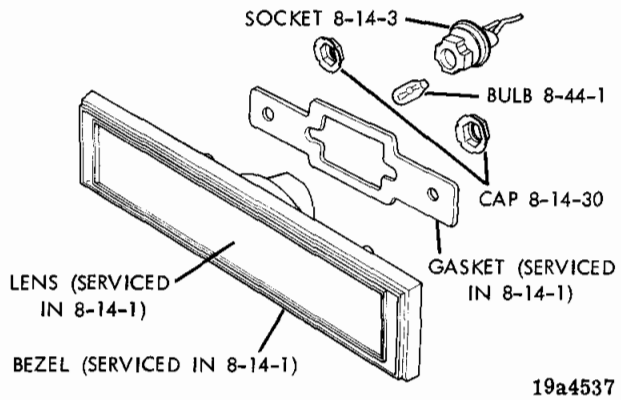

19a4537

QUARTER PANEL SIDE MARKER

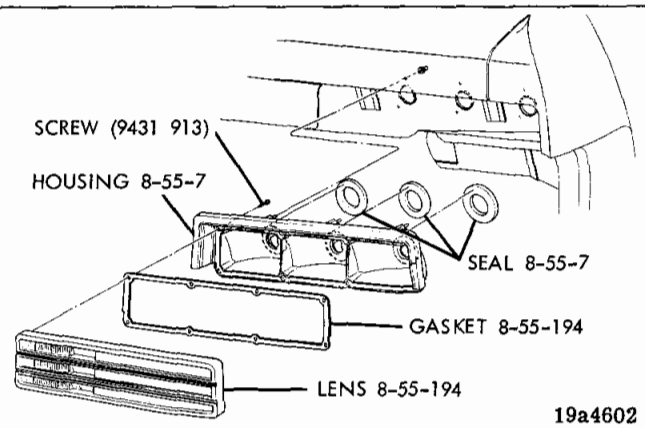

19a4602

TAIL, STOP, TURN SIGNAL AND BACK-UP

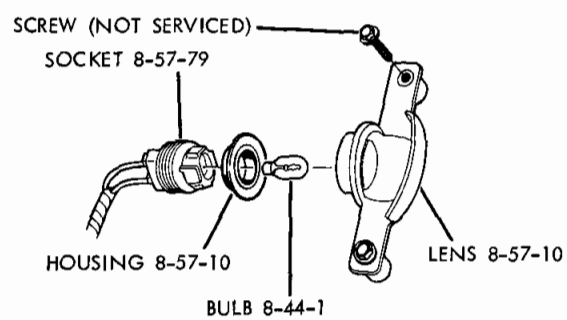

19a4169B

REAR BUMPER LICENSE

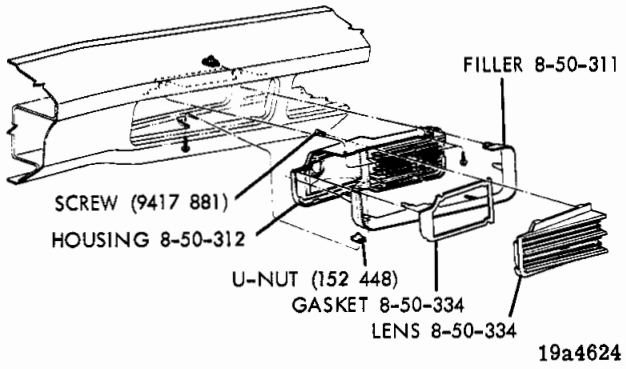

PARKING AND TURN SIGNAL

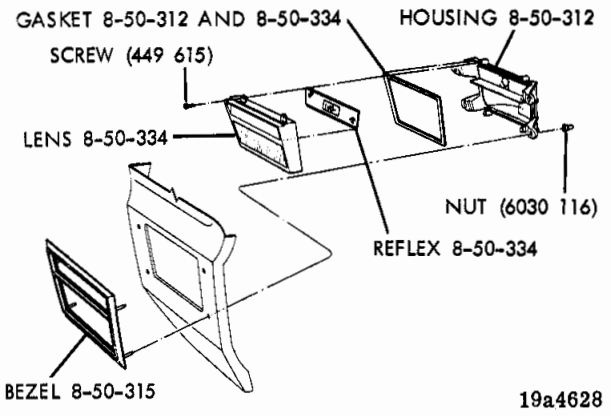

FENDER CORNERING AND SIDE MARKER

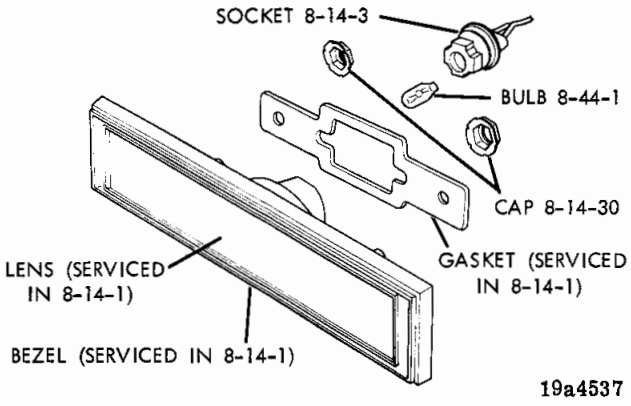

QUARTER PANEL SIDE MARKER

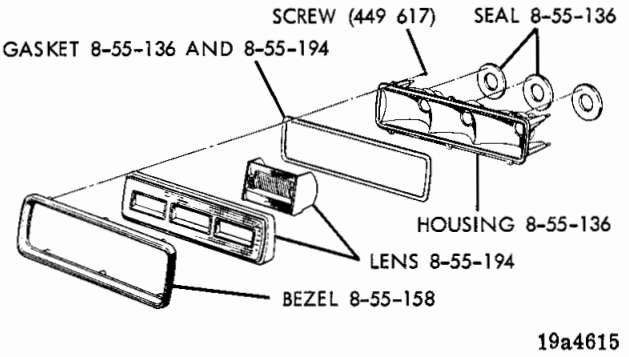

TAIL, STOP, T/S & B/UP - D-L, D-M

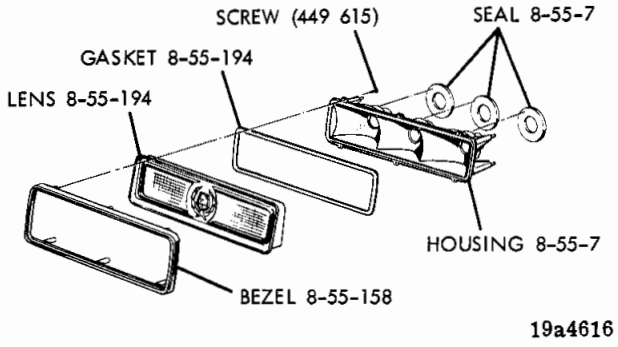

TAIL, STOP AND TURN SIGNAL - D-P

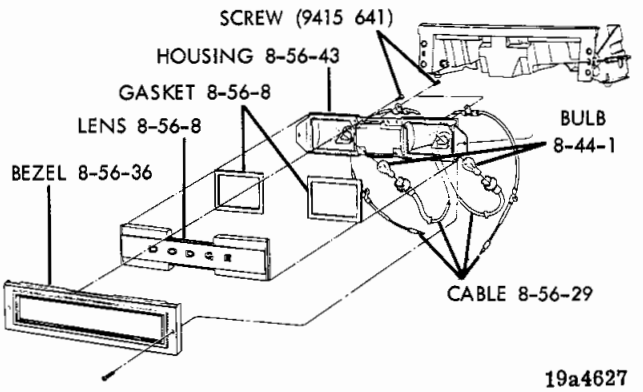

BACK-UP - D-P

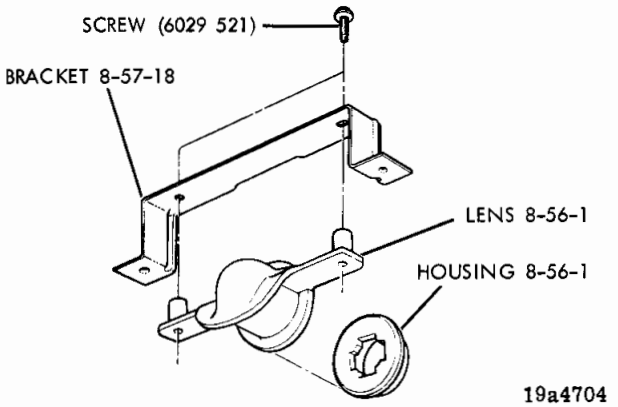

REAR BUMPER LICENSE

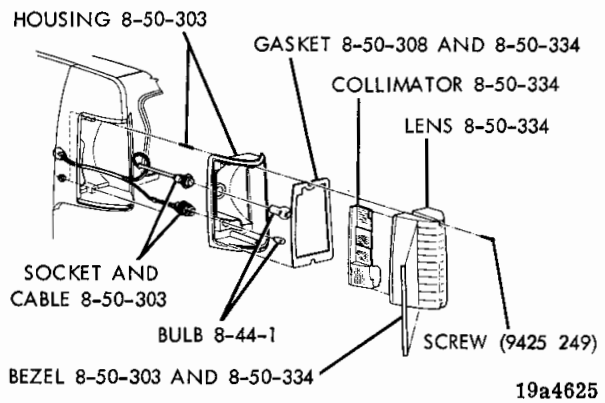

19a4625

PARKING, TURN SIGNAL AND SIDE MARKER

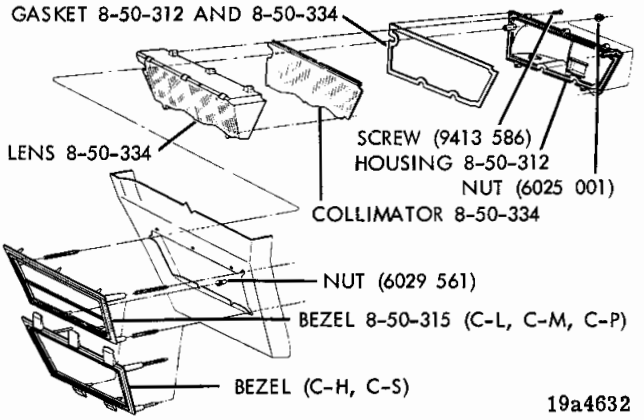

19a4632

FENDER CORNERING

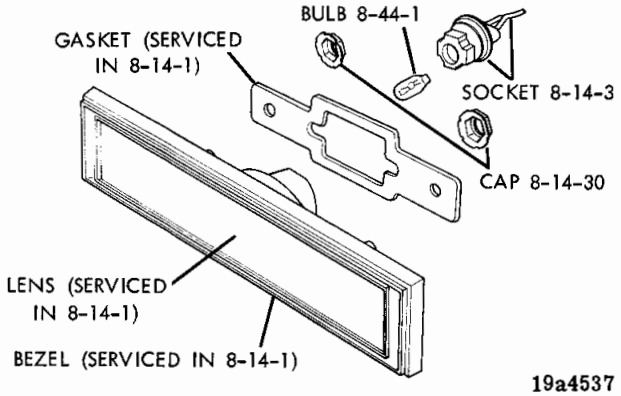

19a4537

QUARTER PANEL SIDE MARKER - C-L, C-M

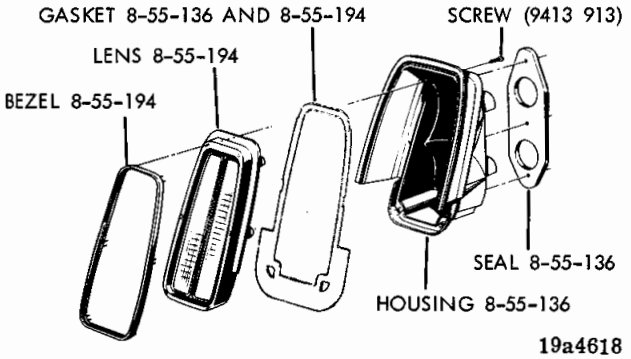

19a4618

QTR. PNL. TAIL, STOP, TURN SIGNAL - C-L, C-M

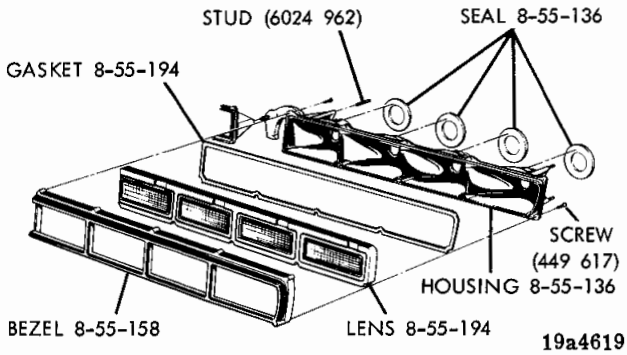

19a4619

TAIL, STOP, T/S & B/UP - C-H, C-S

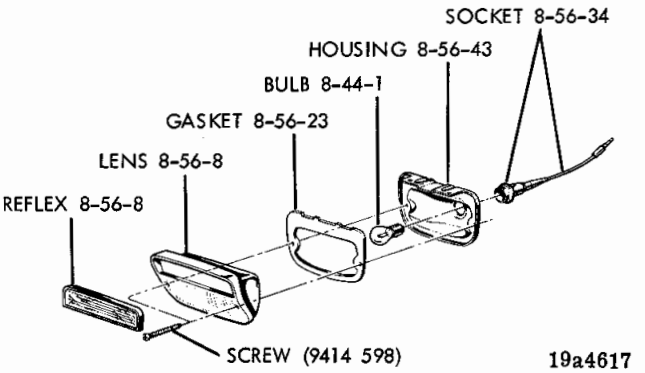

19a4617

REAR BUMPER BACK-UP - C-L, C-M

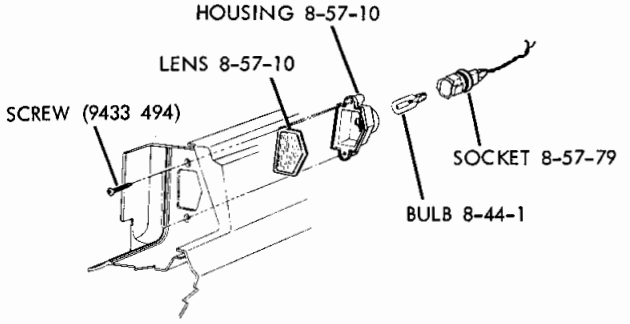

19a4633

REAR BUMPER LICENSE - C-L, C-M

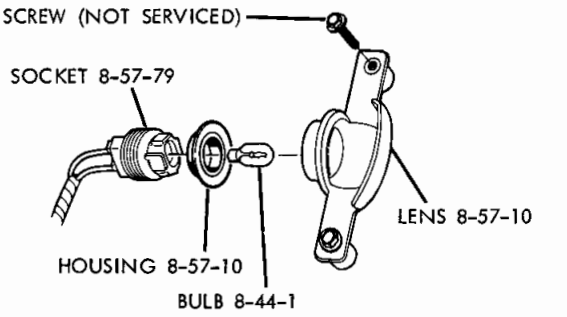

19a4169B

REAR BUMPER LICENSE - C-H, C-S

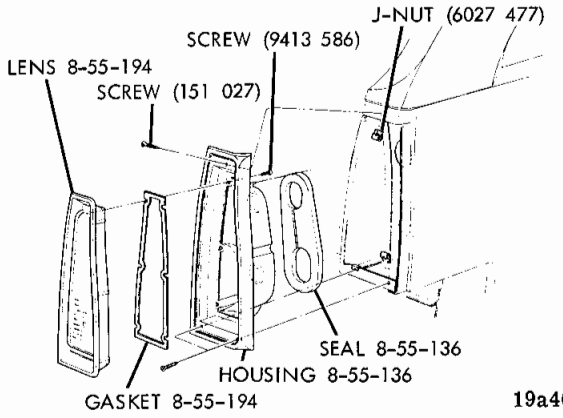

TAIL, STOP AND TURN SIGNAL - P

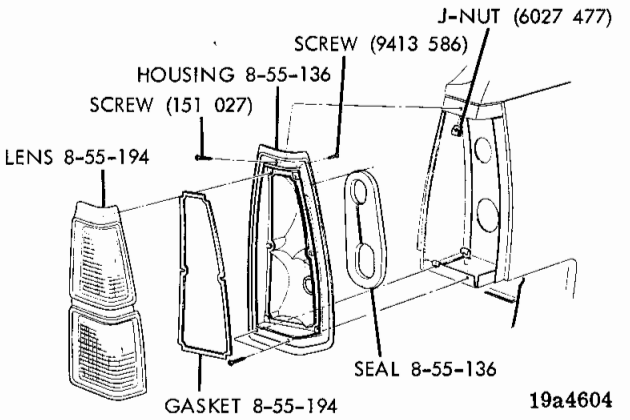

TAIL, STOP AND TURN SIGNAL - D

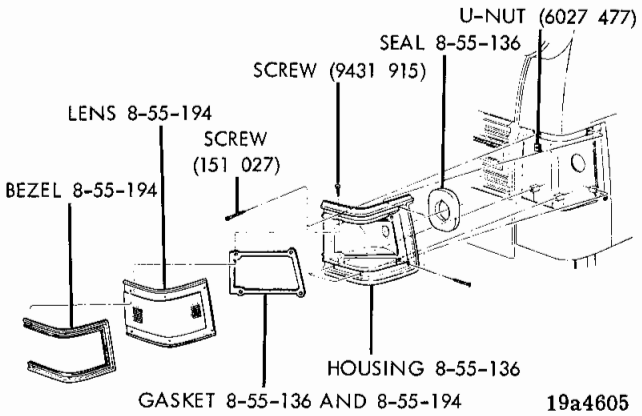

TAIL, STOP AND TURN SIGNAL - C

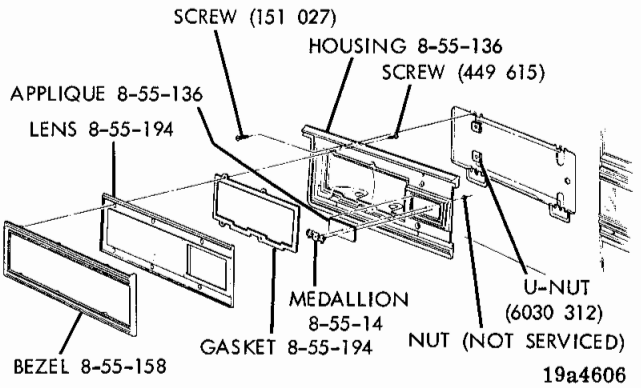

TAILGATE TAIL, STOP AND TURN SIGNAL - C

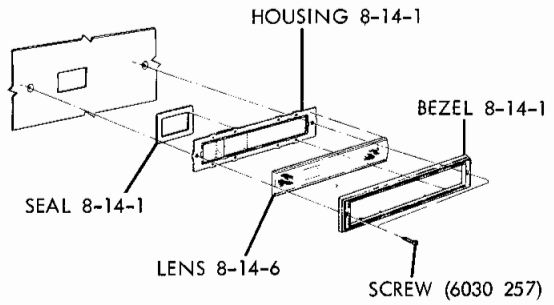

QUARTER PANEL SIDE MARKER - P, D, C

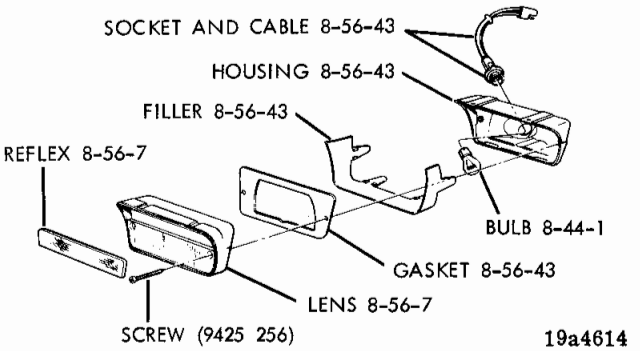

REAR BUMPER BACK-UP - P, D, C

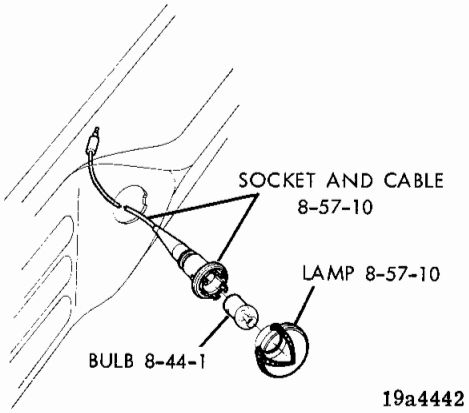

REAR BUMPER LICENSE - P, D, C

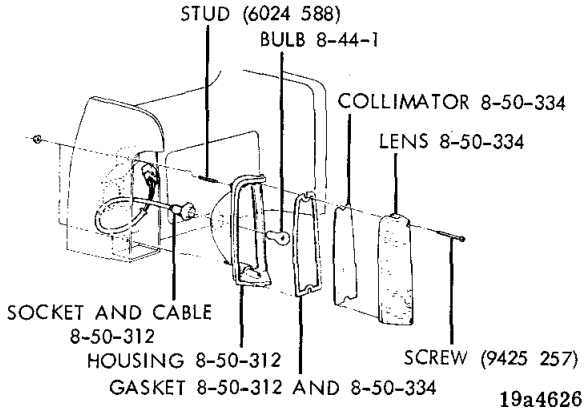

FENDER PARK AND TURN SIGNAL

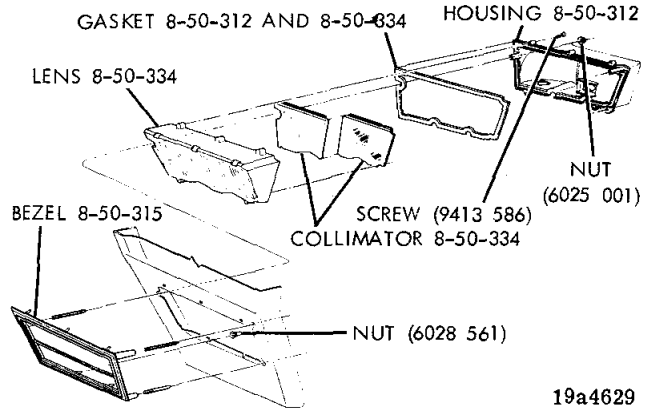

FENDER CORNERING AND SIDE MARKER

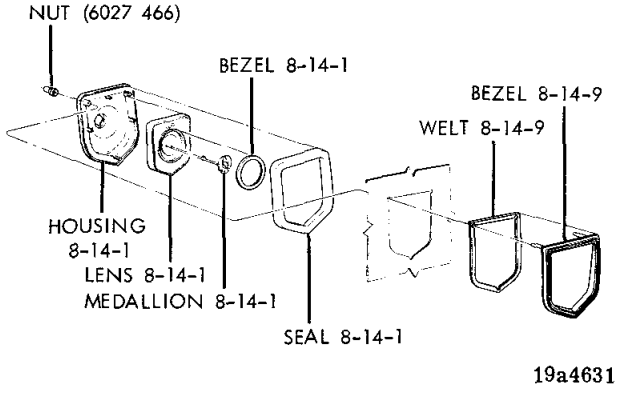

QUARTER PANEL SIDE MARKER

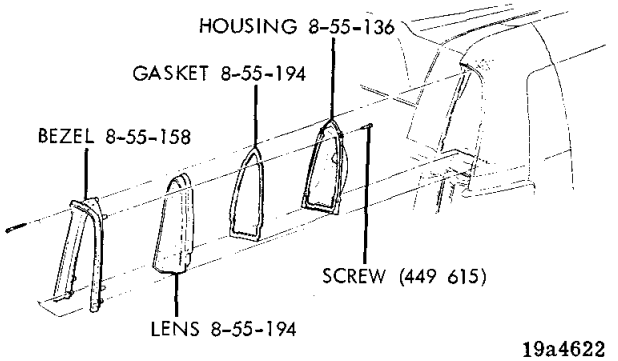

QUARTER PANEL EXT. TAIL, STOP, TURN SIGNAL

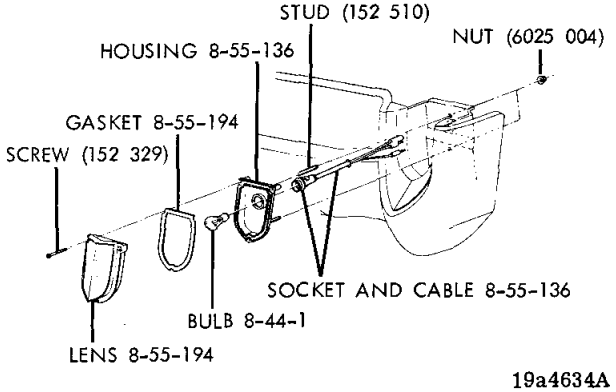

REAR BUMPER TAIL, STOP AND TURN SIGNAL

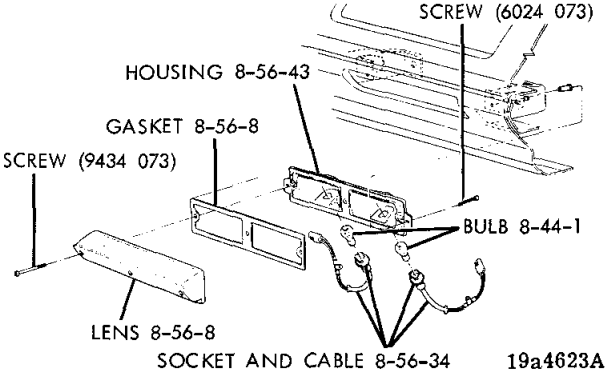

REAR BUMPER BACK-UP

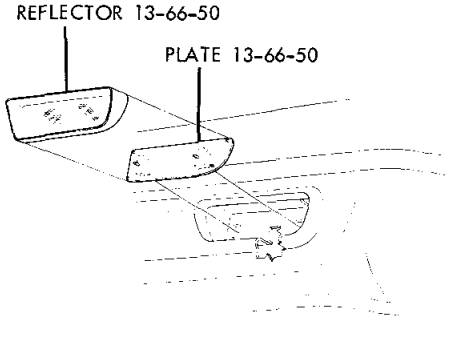

REAR BUMPER REFLEX AND PLATE

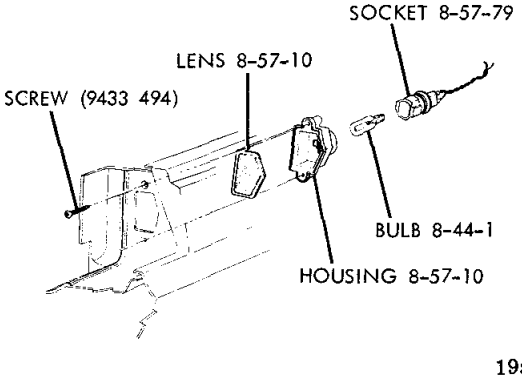

REAR BUMPER LICENSE

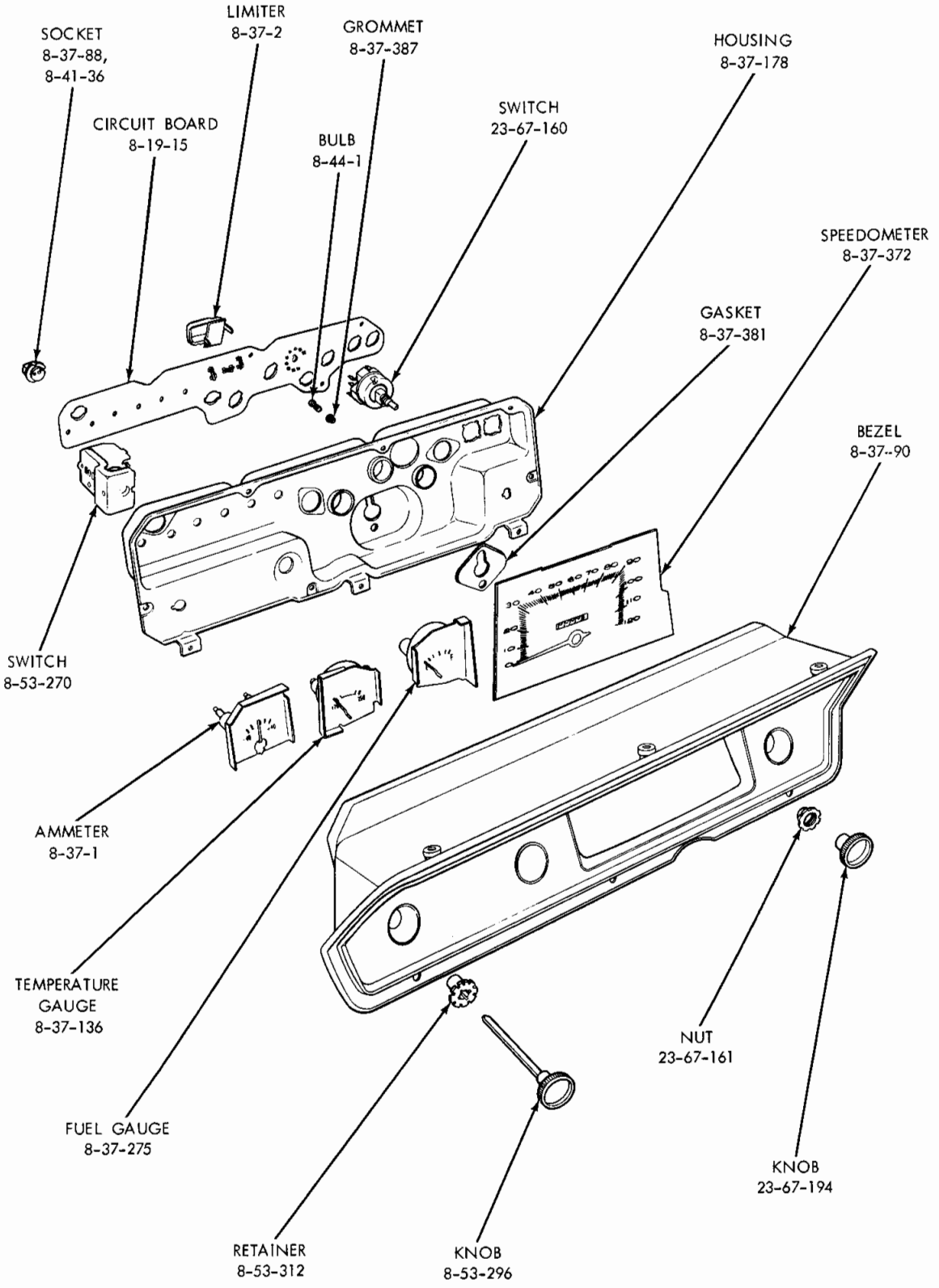

INSTRUMENT CLUSTER - V, L

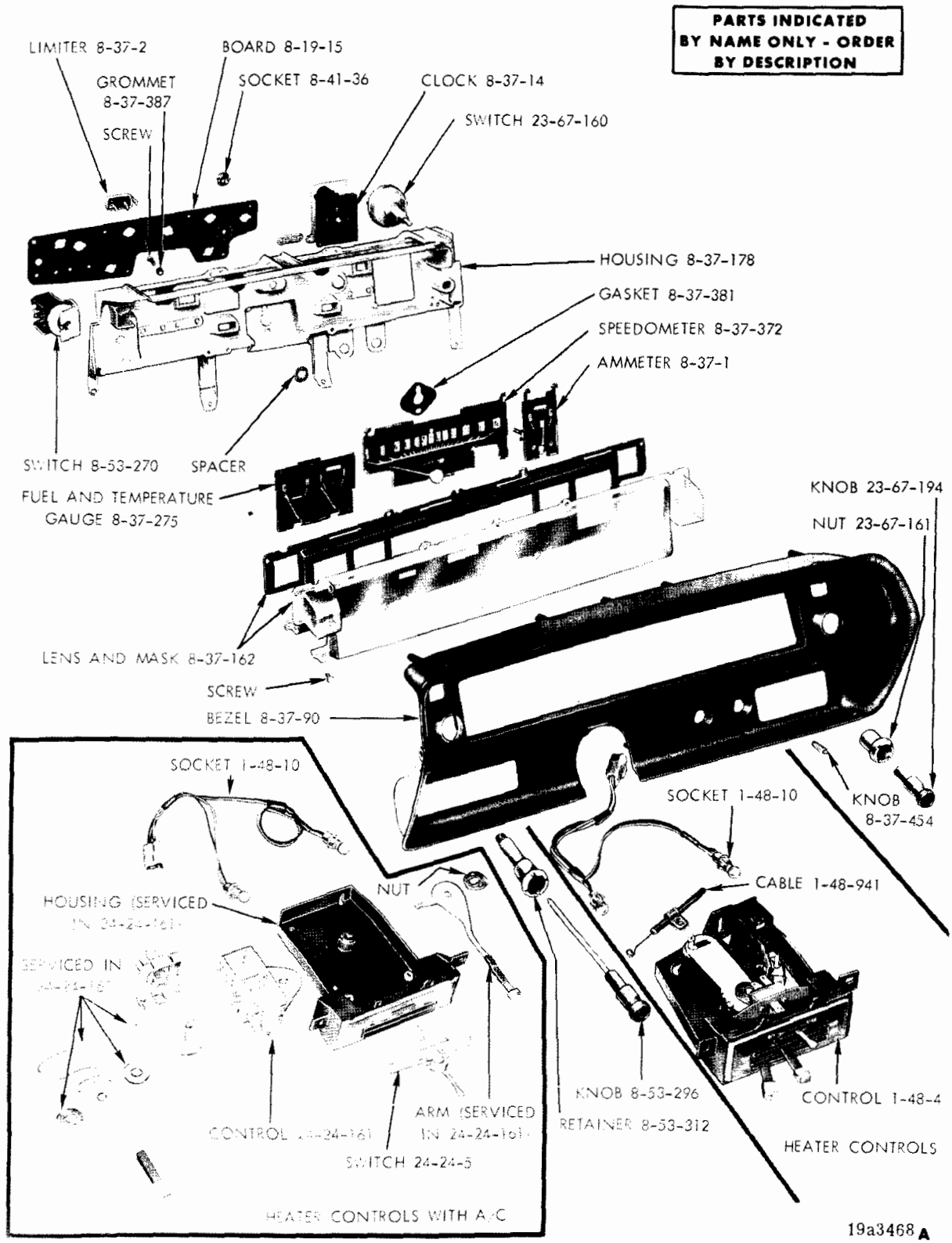

INSTRUMENT CLUSTER - R, W
WITHOUT RALLYE INSTRUMENT PANEL

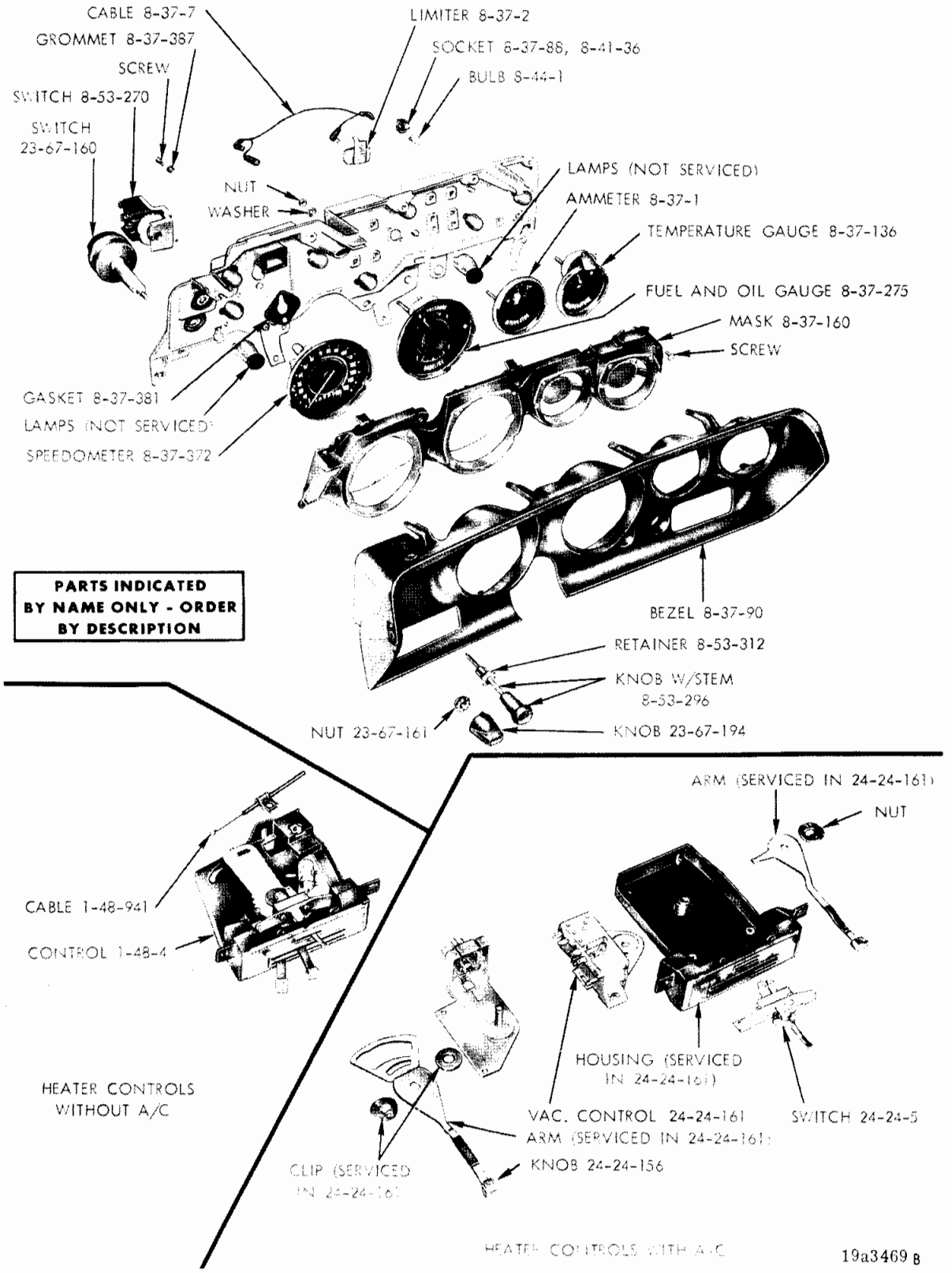

INSTRUMENT CLUSTER - R, W
WITH RALLYE INSTRUMENT PANEL

 2996 872	 2771 917	 2496 532	 2983 410	 2580 061
 3513 544	 2893 754	 2926 722	 3513 482	 2983 411
	 2926 617	 2983 409	 2889 435	 2983 882
 2889 434	 2983 412	 3513 586	 2427 529	
 1842 009	 870 821	 2291 588	 903 895	
	 2197 945	 2822 565	 2427 725	 2427 848
	 2257 443-4	 3513 637	 2496 541	 3438 709

19a4459 **A**

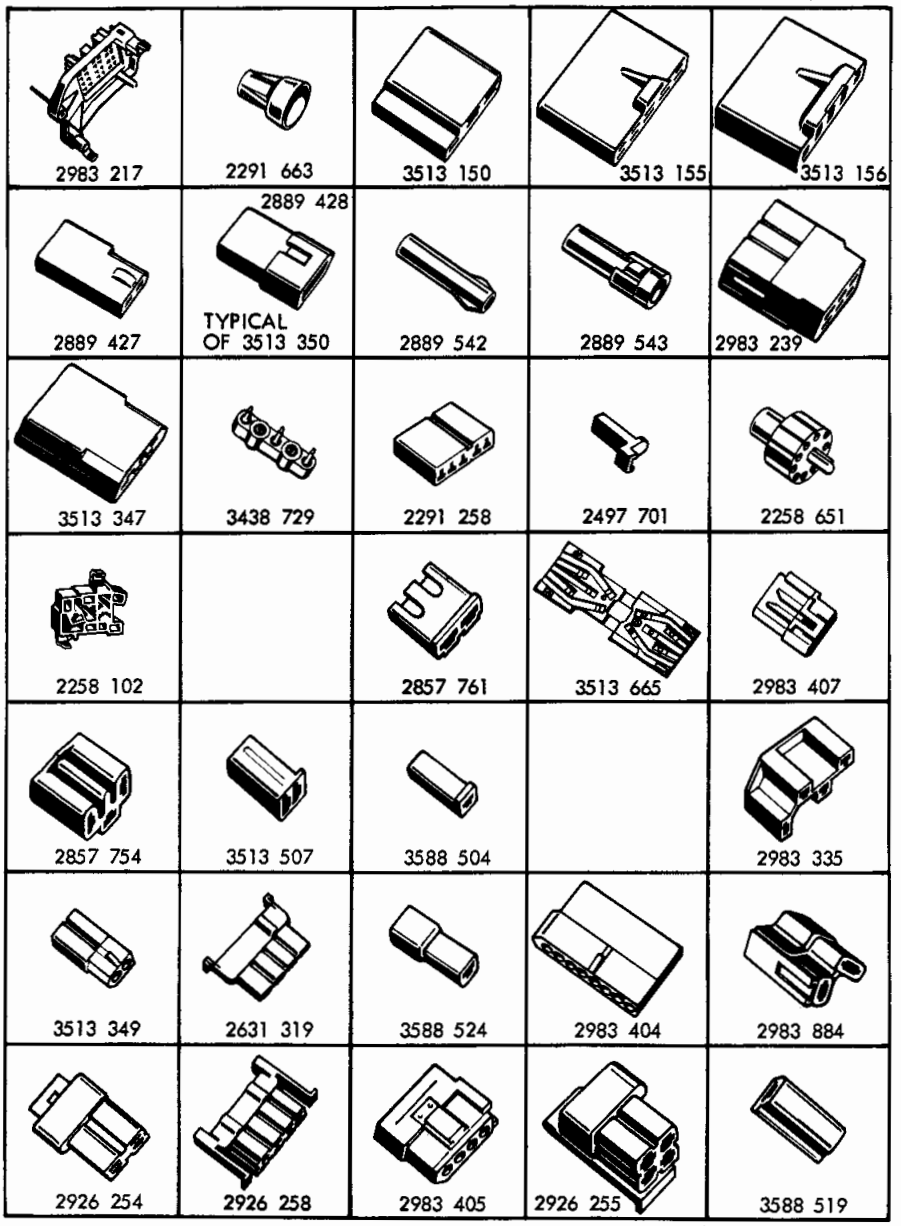

19a4460 **A**

INSULATORS

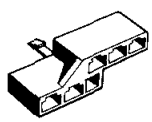 3513 477	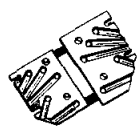 2926 204	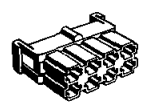 2631 317	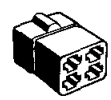 3588 514
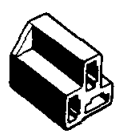 2889 650	 3588 523	 3588 518	 2926 374
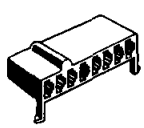 3513 154	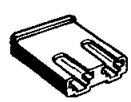 3588 517	 3588 520	
 3513 545	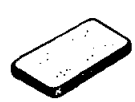 2926 051	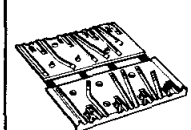 3513 664	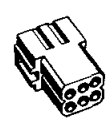 3513 348
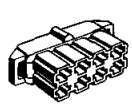 2427 192	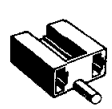 3588 525	 3588 515	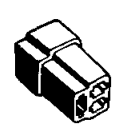 3588 522
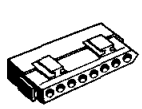 2983 403	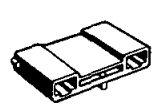 3588 399	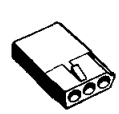 2983 408	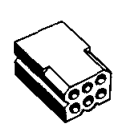 2983 237

19a4477 B

 3513 350	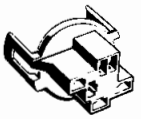 2889 597	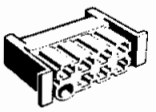 2926 256	 3513 696
 2926 171	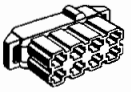 2427 191	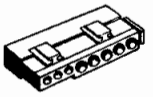 2983 401	 3513 755
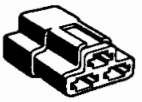 3588 442	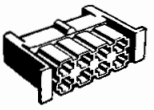 2926 257	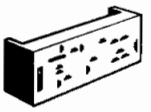 RELAY BANK INSULATOR 3764 715	

19a4478 *A*

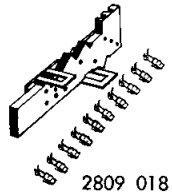 2809 018	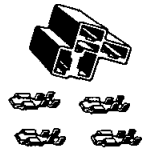 2809 034	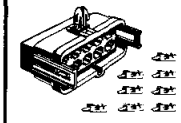 2585 030	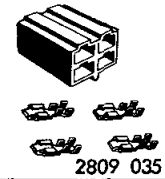 2809 035	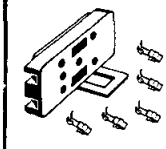 2809 016
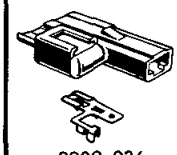 2809 036	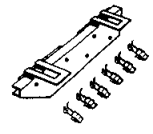 2809 017	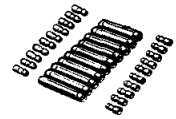 1843 444	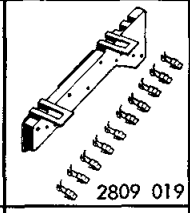 2809 019	
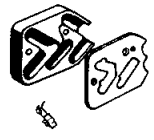 2495 235	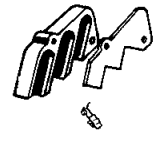 2495 234	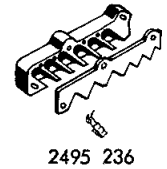 2495 236	 2495 517	
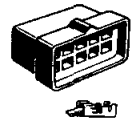 2495 541	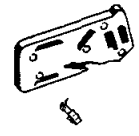 2584 842	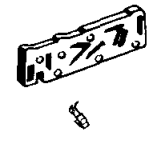 2427 529	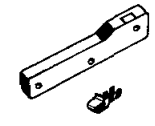 2584 953	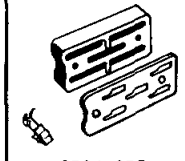 2584 958
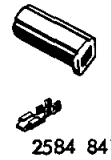 2584 841	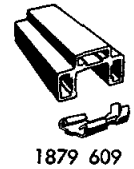 1879 609	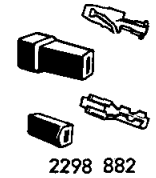 2298 882	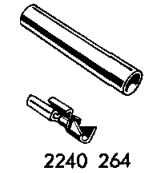 2240 264	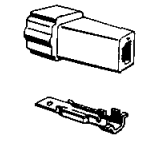 2240 536
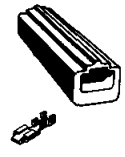 2084 421	 2084 424	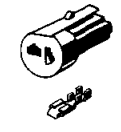 2495 239		

19a4466A

TERMINAL AND INSULATOR PACKAGES

 CONNECTOR 2926 651	 RETAINER 3588 345	 PLUG 2497 346	
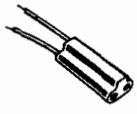 MOLD AND CABLE 2580 267	 MOLD AND CABLE 2580 064	 MOLD AND CABLE 2580 065	 CONNECTOR 2631 340
	 SLEEVE 930 304	 PLUG 665 151	 SLEEVE 1264 933
 CONNECTOR 1842 003	 CONNECTOR 611 898		 PLUG AND WIRING 2233 028
 TY STRAP 2945 704			

19a4490 B

RETAINERS, CONNECTORS, PLUGS, SLEEVES
AND MISCELLANEOUS PARTS

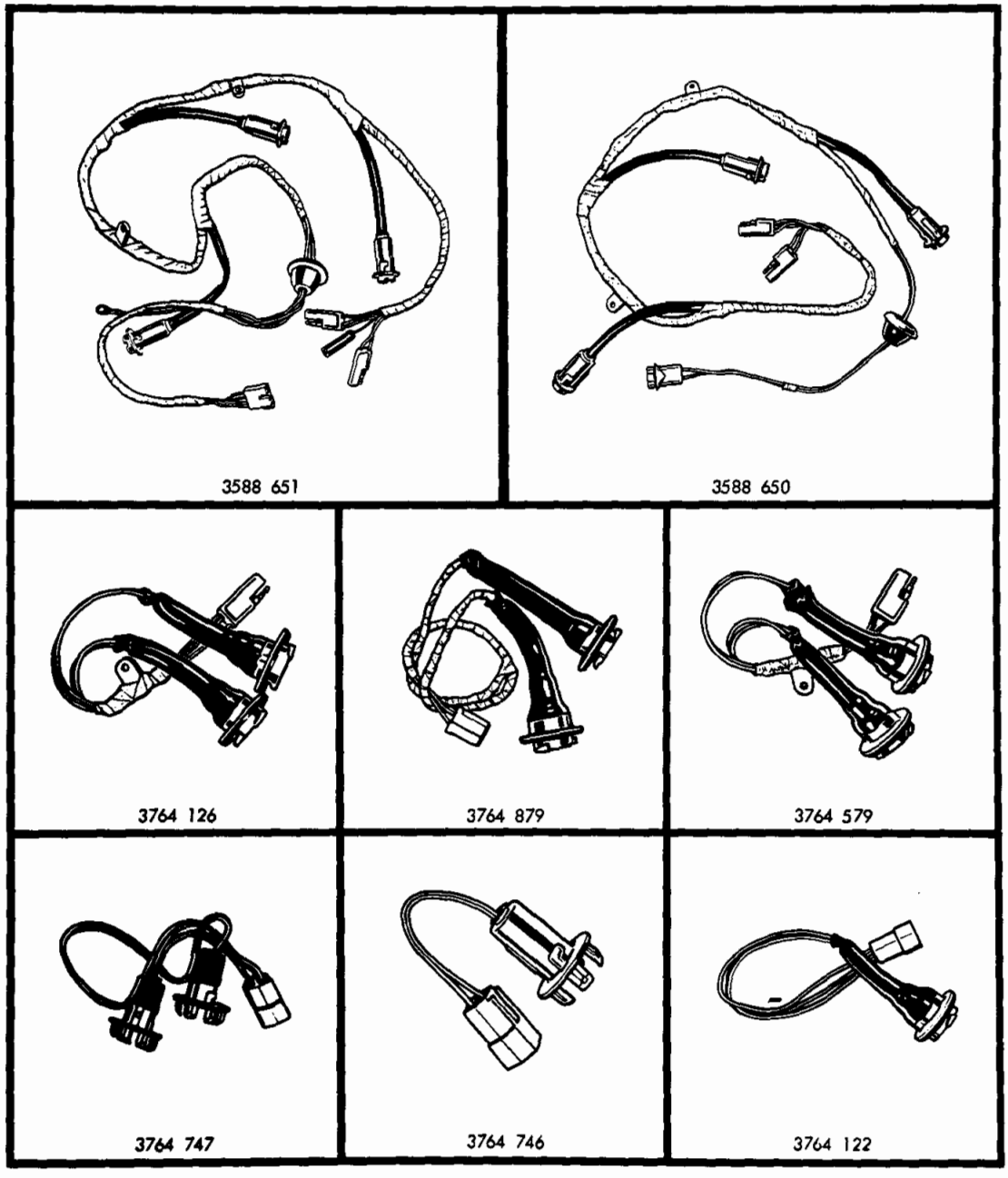
3588 651
3588 650
3764 126
3764 879
3764 579
3764 747
3764 746
3764 122

19a4994

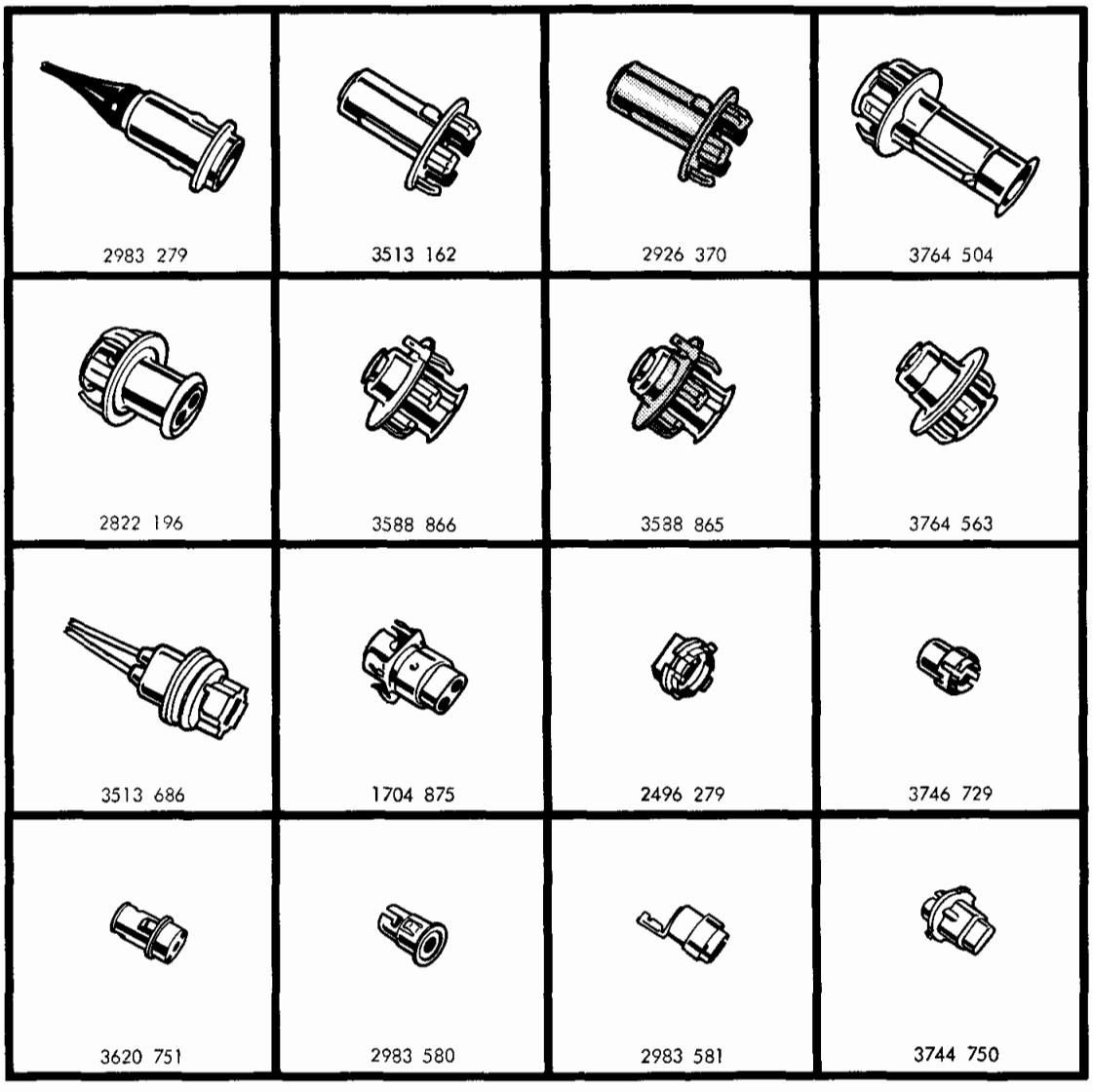

19a4995

SOCKETS

GROUP 8 - ELECTRICAL

ALTERNATOR 8-28
ALTERNATOR COMPONENTS 8-29
BLOCK, TERMINAL 8-21
BULBS 8-44
CABLE, BATTERY AND STARTER 8-01
CABLES AND PLUGS, IGNITION 8-36
CABLE AND CONNECTIONS 8-16
COIL AND SWITCH, IGNITION 8-35
DISTRIBUTOR, IGNITION 8-27
DOME LAMP AND SWITCH 8-05
FUSES 8-17
GAUGES, INSTRUMENT PANEL 8-37
HEADLAMP 8-34
HORN 8-32
HORN CONTROLS 8-33
LAMP, BACK-UP 8-56
LAMP, GLOVE COMPARTMENT 8-38
LAMP, LICENSE 8-57
LAMP, HIGH BEAM INDICATOR 8-39
LAMP, IGNITION 8-40
LAMP, INSTRUMENT PANEL 8-41
LAMP, MAP AND COURTESY 8-42
LAMP, PARKING BRAKE SIGNAL 8-31
LAMP, PARKING AND TURN SIGNAL 8-50
LAMP, QUARTER OR COURTESY 8-11
LAMP, SIDE MARKER 8-14
LAMP, TAIL, STOP AND TURN SIGNAL 8-55
LAMP, TRUNK 8-13
LICENSE MOUNTING PARTS 8-47
LIGHTER 8-20
SECURITY ALARM SYSTEM 8-62
STARTER 8-52
SWITCH, DOOR LAMP 8-12
SWITCHES, MISCELLANEOUS 8-53
SWITCH, STOP LAMP 8-58
WIRING, CHASSIS AND BODY 8-15
WIRING, INSTRUMENT PANEL 8-19

Printed in U.S.A.
November, 1974

CROSS REFERENCE ON ELECTRICAL PRODUCTION ITEMS

*NOTE: Order Service Part No. Only	Production No.	Service No.
WIRING	3513 084	3513 085
	3513 091	DNS
	3588 461	3588 462
	3764 751	3837 351
	3746 826	3488 887
	3764 019	DNS
	3764 072	DNS
	3764 112	3744 988
	3764 143	DNS
	3764 158	DNS
	3764 186	3764 187
	3764 204	3764 205
	3764 206	3764 207
	3764 269	DNS
	3764 294	DNS
	3764 295	DNS
	3764 296	DNS
	3764 297	DNS
	3764 304	3764 355
	3764 313	DNS
	3764 318	DNS
	3764 328	3738 423
	3764 330	3764 331
	3764 359	DNS
	3764 525	3764 887
	3764 620	3764 891
	3764 768	3764 892
	3764 862	DNS
	3764 906	3588 830
	3764 987	3764 986
	3843 181	3843 182
	3843 270	3843 286
RELAYS	3513 206	3579 204
	3588 589	3620 860
	3746 872	3838 094
	3746 873	3838 094
	3746 881	3838 096
	3746 882	3838 096
	3764 351	3764 343
	3764 511	3780 596
	3764 581	3780 596
	3764 766	3780 305
	3764 767	3780 305
	3764 812	3488 889
	3764 817	3764 047
	3843 385	3764 343
CIRCUIT BREAKERS	2926 324	3620 840
	3513 738	3620 839
	3588 362	3620 861
	3588 456	3620 840
	3588 548	3620 861
	3764 693	3837 155
	3764 695	3837 155
	3843 178	3879 301
	3843 179	3879 301

CODE	PART NAME	ENG. TYPE OR CU. IN	V	B J	L	R	W	P	D	C (L M)	C (P)	C (H S)	Y	PART NUMBER
8-01-4	**CABLE, Ground, Battery and Eng.**	6	1	—	1	1	1	—	—	—	—	—	—	3588 942
	w/318 and 360 Eng.	8	1	1	1	1	1	—	—	—	—	—	—	3764 298
	w/400 and 440 Eng.	8	—	—	—	1	1	1	1	1	1	1	1	3588 944
	except 400 and 440 Eng.	8	—	—	—	—	—	1	1	1	—	—	—	2983 778
8-01-7	CLIP, Battery Cable, Starting Motor Mtg. Bolt	8	—	—	—	—	—	1	1	1	1	1	1	6015 636
8-01-11	BOLT, Battery Cable Clamp		2	2	2	2	2	2	2	2	2	2	2	1622 535
8-01-12	NUT, Battery Cable Clamp Bolt		2	2	2	2	2	2	2	2	2	2	2	1622 536
8-01-17	CABLE, Positive, Battery to Starter to Starter Relay	6	1	—	1	—	—	—	—	—	—	—	—	2983 649
		8	1	—	1	—	—	—	—	—	—	—	—	3764 903
		8	—	1	—	—	—	—	—	—	—	—	—	3764 166
	w/85 Amp. L/N Altr.	6	—	—	—	1	1	—	—	—	—	—	—	3588 830
	w/400 and 440 Eng., w/o 85 Amp. L/N Altr.,	8	—	—	—	1	1	—	—	—	—	—	—	3588 772
	w/318 and 360 w/o H/Perf., Eng., w/85 Amp L/N Altr.,	8	—	—	—	1	1	—	—	—	—	—	—	3588 831
	w/318 and 360 w/o H/per., Eng., w/86 Amp. Motorola Altr.	8	—	—	—	1	1	—	—	—	—	—	—	3588 831
	w/400 Eng., w/85 Amp. L/N Altr.	8	—	—	—	1	1	—	—	—	—	—	—	3588 830
	w/400 Eng., w/86 Amp. Motorola Altr.	8	—	—	—	1	1	—	—	—	—	—	—	3588 830
	w/318 and 360 Eng., w/o 85 Amp. L/N Altr.	8	—	—	—	1	1	—	—	—	—	—	—	3588 773
	w/o 85 Amp. L/N Altr., w/o Calif. Emission Pkg.	8	—	—	—	—	—	1	1	—	—	—	—	3588 849
	w/o Calif. Emission Pkg.	8	—	—	—	—	—	—	—	1	1	1	1	3588 849
	WIRING, Battery and Auto. Trans., w/85 Amp. L/N Altr.	8	—	—	—	—	—	1	1	—	—	—	—	3764 278
	w/86 Amp. Motorola Altr.	8	—	—	—	—	—	1	1	—	—	—	—	3764 278
	w/o 85 Amp. L/N Altr., w/Calif. Emission Pkg.	8	—	—	—	—	—	1	1	—	—	—	—	3588 793
	w/Calif. Emission Pkg.	8	—	—	—	—	—	—	—	1	1	1	1	3588 793
8-01-23	SCREW and WASHER, Battery Ground Cable, w/318and 360 Eng.	8	1	1	1	1	1	1	1	—	—	—	—	6030 012
	BOLT, to Body		1	1	1	1	1	2	2	2	2	2	2	6028 505
	BOLT, to Eng. Mtg.	6	1	—	1	1	1	—	—	—	—	—	—	6028 811
	LOCKWASHER, to Eng. Mtg. Bolt	6	1	—	1	1	1	—	—	—	—	—	—	6028 911
8-01-28	TERMINAL, Battery Ground Cable		1	1	1	1	1	1	1	—	—	—	—	3588 724
8-01-30	ISOLATOR and BRACKET, Battery, w/Heavy Duty Trailer Towing Pkg.		—	—	—	1	1	—	—	—	—	—	—	3746 758
	w/Heavy Duty Trailer Towing Pkg.	8	—	—	—	—	—	1	1	1	1	1	1	3746 761
8-05-2	**LAMP, Dome**	8	—	—	—	—	—	1	1	1	1	1	—	3488 934
	Reading	8	—	—	—	—	—	—	—	—	—	—	2	3488 971
8-05-6	HOUSING, Dome Lamp		1	1	1	1	1	—	—	—	—	—	—	2292 994
	w/SWITCH, Sta. Wgn. Rr.		—	—	—	1	1	—	—	—	—	—	—	2161 308
	Sta. Wgn. Rr.	8	—	—	—	—	—	1	1	—	1	—	—	3488 849
	Except 2 D.H.T.		—	—	—	—	—	1	1	—	—	—	—	2292 994
8-05-8	BEZEL and LENS, Sta. Wgn., Rr.		—	—	—	1	1	—	—	—	—	—	—	3488 842
	BEZEL, Sta. Wgn. Rr.		—	—	—	—	—	1	1	—	1	—	—	3488 954
8-05-9	TRIM PLATE, Dome Lamp Bezel, 4 D.H.T.	8	—	—	—	—	—	1	1	—	—	—	—	3592 788
8-05-10	GASKET, Sta. Wgn. Rr.		—	—	—	1	1	—	—	—	—	—	—	3488 845
8-05-12	SOCKET, Dome Lamp		1	1	1	1	1	—	—	—	—	—	—	1704 875
	except Sta. Wgn.	8	—	—	—	—	—	1	1	—	—	—	—	1704 875
8-05-14	SWITCH, Dome Lamp	8	—	—	—	—	—	1	1	—	—	—	—	3488 574
8-05-20	BEZEL, Switch	8	—	—	—	—	—	1	1	—	—	—	—	3488 575
	PLATE, Reading Lamp Mtg.	8	—	—	—	—	—	—	—	—	—	—	2	3488 974

CARLINES J - Challenger, B - Barracuda, V - Valiant, L - Dart, R - Satellite, W - Coronet - Charger, P - Plymouth, D - Dodge, C - Chrysler, Y - Imperial

AR Indicates use as required. *Numerals in parentheses ( ) refer to notes.* *Printed in U.S.A.*

# Indicates parts not listed in any previous parts book. ★ Indicates change or addition. November, 1974

CODE	PART NAME		ENG. TYPE OR CU. IN	V	B J	L	R	W	P	D	C (L M)	C (P)	C (H S)	Y	PART NUMBER
8-05-23	LENS, Dome Lamp			1	1	1	1	1	—	—	—	—	—	—	2292 995
	4 D., 4 D.H.T. and Sta. Wgn.		8	—	—	—	—	—	1	1	—	—	—	—	2292 995
	Sta. Wgn.	Rr.	8	—	—	—	—	—	1	1	—	1	—	—	3488 958
8-05-28	BRACKET, Dome Lamp, Rr., Sta. Wgn.			—	—	—	1	1	—	—	—	—	—	—	2086 597
	Dome Lamp Mtg., except Sta. Wgn.			—	—	—	1	1	—	—	—	—	—	—	3488 492
	Sta. Wgn.			—	—	—	1	1	—	—	—	—	—	—	3488 197
	Sta. Wgn., up to 4-8-74	Rr.	8	—	—	—	—	—	1	1	—	1	—	—	3488 844
	Sta. Wgn., after 4-8-74	Rr.	8	—	—	—	—	—	1	1	—	1	—	—	3592 956
	Forward Dome Lamp Mtg.,														
	4 D., 4 D.H.T. and Sta. Wgn.		8	—	—	—	—	—	1	1	—	—	—	—	3488 987
	Sta. Wgn.		8	—	—	—	—	—	1	1	—	1	—	—	3488 940
	except Sta. Wgn.		8	—	—	—	—	—	1	1	1	—	1	—	3488 937
8-05-31	CONTACT, Socket			AR	AR	AR	AR	AR	AR	AR	—	—	—	—	2256 966
8-05-32	CORE, Socket, Rr., Sta. Wgn.			—	—	—	1	1	—	—	—	—	—	—	2161 316
8-11-6	**SWITCH, Arm Rest Courtesy Lamp**	**Rr. Qtr.**	8	—	—	—	—	—	—	—	—	—	—	2	3746 702
	SWITCH, Arm Rest Courtesy Lamp														
	4 D.H.T.	Rr. Dr.	8	—	—	—	—	—	—	—	—	—	—	2	3746 702
8-11-8	SOCKET and BRACKET, Courtesy Lamp														
	Up to 1-21-74		8	—	—	—	—	—	2	2	—	—	—	—	3513 600
	After 1-21-74		8	—	—	—	—	—	2	2	—	—	—	—	3764 349
8-11-12	LENS, Door Courtesy Lamp, C-S		8	—	—	—	—	—	—	—	—	—	4	4	3488 962
8-11-29	CONTACT, INSULATOR and SPRING														
	PACKAGE, Courtesy Lamp		8	—	—	—	—	—	2	2	—	—	—	—	2983 168
	Courtesy Lamp		8	—	—	—	—	—	2	2	—	—	—	—	2983 167
8-12-2	**SWITCH, Dr. Pillar, 2 Term**	**Frt.**		2	—	2	2	2	—	—	—	—	—	—	2947 844
	Dr. Pillar, Taxi	Rr.		—	—	2	—	—	—	—	—	—	—	—	3488 964
	Dr. Pillar, 2 Term	Frt.	8	—	2	—	—	—	2	2	2	2	2	2	3746 717
	Dr. Pillar, 2 Term	Rr.		—	—	—	2	2	2	2	2	2	2	2	3746 717
	Dr. Ajar Ind. Lamp		8	—	—	—	—	—	4	4	4	4	4	4	3746 736
	T/Gate Ajar Warning, Sta. Wgn.			—	—	—	1	1	1	1	—	1	—	—	3746 869
	Open Door Indicator, Taxi			—	—	—	1	1	—	—	—	—	—	—	2426 179
8-12-17	CONTACT, Socket, Taxi			—	—	—	1	1	—	—	—	—	—	—	2256 966
8-13-1	**LAMP PACKAGE, Trunk**			1	—	1	—	—	—	—	—	—	—	—	3488 787
	LAMP and SWITCH		8	—	1	—	—	—	—	—	—	—	—	—	3488 436
	except Sta. Wgn.			—	—	—	1	1	—	—	—	—	—	—	2947 286
	except Sta. Wgn.		8	—	—	—	—	—	1	1	1	—	1	1	2947 517
8-13-2	SWITCH			1	—	1	—	—	—	—	—	—	—	—	2580 611
8-13-3	SOCKET, w/BRKT.			1	—	1	—	—	—	—	—	—	—	—	2096 857
8-13-4	CONTACT, INSULATOR and SPRING PACKAGE, Socket			1	—	1	—	—	—	—	—	—	—	—	2584 972
	FRONT														
8-14-1	**LAMP, Side Marker**			2	2	2	2	2	—	—	—	—	—	—	3587 436
	w/o Cornering Lamp		8	—	—	—	—	—	2	2	—	—	—	—	3587 394
	REAR														
				2	2	2	—	—	—	—	—	—	—	—	3587 440
	except Sta. Wgn.			—	—	—	2	2	—	—	—	—	—	—	3587 440
	except Sta. Wgn.		8	—	—	—	—	—	2	2	2	—	2	—	3587 397
	Sta. Wgn.		8	—	—	—	—	—	2	2	—	2	—	—	3728 412
			8	—	—	—	—	—	—	—	—	—	—	2	3728 554
8-14-3	SOCKET	Frt.		2	2	2	2	2	—	—	2	2	2	—	3513 686
	w/WIRE, Except Sta. Wgn.	Rr.		2	2	2	2	2	—	—	—	—	—	—	3588 314
	w/WIRE	Rr.	8	—	—	—	—	—	2	2	2	2	2	2	3588 314
8-14-9	BEZEL	Rr.	8	—	—	—	—	—	—	—	—	—	—	2	3728 552
8-14-30	CAP, Side Marker Lamp Mtg. Stud, except Sta. Wgn., Rr.		8	—	—	—	—	—	4	4	4	—	2	—	2423 737
8-15-2	**WIRING, H/Lamp and Eng. Comp't.**														
	up to 10-12-73			1	—	1	—	—	—	—	—	—	—	—	3764 187
	after 10-12-73			1	—	1	—	—	—	—	—	—	—	—	3764 986
	WIRING, Eng. Comp't.		6	1	—	1	—	—	—	—	—	—	—	—	3764 184
			8	1	—	1	—	—	—	—	—	—	—	—	3764 185
			8	—	1	—	—	—	—	—	—	—	—	—	3764 188

CARLINES J - Challenger, B - Barracuda, V - Valiant, L - Dart, R - Satellite, W - Coronet - Charger, P - Plymouth, D - Dodge, C - Chrysler, Y - Imperial

AR Indicates use as required.

Numerals in parentheses ( ) refer to notes.

# Indicates parts not listed in any previous parts book.

★ Indicates change or addition.

Printed in U.S.A.
November, 1974

CODE	PART NAME	ENG. TYPE OR CU. IN	V	B J	L	R	W	P	D	C (L M)	C (P)	C (H S)	Y	PART NUMBER
8-15-2	WIRING Cont'd.													
	w/41 and 50 Amp. Altr.	6	—	—	—	1	1	—	—	—	—	—	—	3764 136
	w/318 and 440 Eng., w/85 Amp. L/N Altr., up to 12-03-73	8	—	—	—	1	1	—	—	—	—	—	—	3764 137
	w/318, 360 w/Perf. and 400 Eng., w/85 Amp. L/N Altr., after 12-3-73	8	—	—	—	1	1	—	—	—	—	—	—	3764 300
	w/318, 360 w/o H/Perf. and 400 Eng., w/86 Amp. Motorola Altr., after 12-3-73	8	—	—	—	1	1	—	—	—	—	—	—	3764 300
	w/60 Amp. Altr.	6	—	—	—	1	1	—	—	—	—	—	—	3764 271
	w/60 Amp. Altr.	8	—	—	—	1	1	—	—	—	—	—	—	3764 272
	w/Heavy Duty 65 Amp. Altr., w/Battery Isol., Except 440 Eng.	8	—	—	—	1	1	—	—	—	—	—	—	3764 926
	w/318 and 360 Eng., w/50 Amp. Altr.	8	—	—	—	1	1	—	—	—	—	—	—	3764 955
	w/400 and 440 Eng., w/41 and 50 Amp. Altr.	8	—	—	—	1	1	—	—	—	—	—	—	3764 134
	except 400 and 440 Eng.	8	—	—	—	—	—	1	1	1	—	—	—	3764 267
	w/85 Amp. L/N Altr.	8	—	—	—	—	—	1	1	—	—	—	—	3764 210
	w/400 and 440 Eng.	8	—	—	—	—	—	1	1	1	1	1	1	3764 268
	WIRING, Eng., w/360 Eng. w/85 Amp. L/N Altr., up to 12-03-73	8	—	—	—	—	—	1	1	—	—	—	—	3764 843
	w/360 Eng., w/85 Amp. L/N Altr., after 12-3-73	8	—	—	—	—	—	1	1	—	—	—	—	3764 303
	w/360 Eng., w/86 Amp. Motorola Altr., after 12-3-73	8	—	—	—	—	—	1	1	—	—	—	—	3764 303
	w/400 and 440 Eng., w/85 Amp. L/N Altr., up to 12-03-73	8	—	—	—	—	—	1	1	—	—	—	—	3764 842
	w/400 and 440 Eng., w/85 Amp. L/N Altr., after 12-3-73	8	—	—	—	—	—	1	1	—	—	—	—	3764 302
	w/400 and 440 Eng., w/86 Amp. Motorola Altr., after 12-3-73	8	—	—	—	—	—	1	1	—	—	—	—	3764 302
	WIRING, H/Lamp to Bulkhead, w/Turn Signal Ind. Hood or Fender Mtd., B	8	—	1	—	—	—	—	—	—	—	—	—	3764 116
	w/Turn Signal Ind. Hood or Fender Mtd., J	8	—	1	—	—	—	—	—	—	—	—	—	3764 118
	except 4 D. and Sta. Wgn.		—	—	—	1	—	—	—	—	—	—	—	# 3764 358
	4 D. and Sta. Wgn.		—	—	—	1	—	—	—	—	—	—	—	# 3764 357
			—	—	—	—	1	—	—	—	—	—	—	# 3764 357
	WIRING, H/Lamp and Dash Panel	8	—	—	—	—	—	1	—	—	—	—	—	3764 125
	w/o 85 Amp. L/N Altr.	8	—	—	—	—	—	1	1	—	—	—	—	3764 205
	w/85 Amp. L/N Altr., up to 12-03-73	8	—	—	—	—	—	1	1	—	—	—	—	3764 210
	w/85 Amp. L/N Altr., after 12-03-73	8	—	—	—	—	—	1	1	—	—	—	—	3764 355
	w/86 Amp. Motorola Altr.	8	—	—	—	—	—	1	1	—	—	—	—	# 3764 355
		8												
		8	—	—	—	—	—	—	—	1	1	1	—	3764 207
		8	—	—	—	—	—	—	—	—	—	—	1	3764 209
	WIRING, Altr., w/86 Amp. Altr.	8	—	—	—	1	1	—	—	—	—	—	—	# 3764 332
	w/86 Amp. Altr.	8	—	—	—	—	—	1	1	—	—	—	—	# 3764 339
	WIRING, Auto. Trans.		1	1	1	1	1	1	1	1	1	1	1	2926 502
	WIRING, Auto. Trans. Switch and Battery	8	—	—	—	—	—	1	1	1	1	1	1	3764 277
8-15-3	BASE and BUSS BAR, Fuse Block		1	—	1	—	—	—	—	—	—	—	—	# 3764 678
			—	1	—	1	1	—	—	—	—	—	—	3588 665
		8	—	—	—	—	—	1	1	1	1	1	1	3764 852
8-15-4	WIRING, Body, except Fastback		1	—	1	—	—	—	—	—	—	—	—	3764 159
	Fastback		1	—	1	—	—	—	—	—	—	—	—	3764 954
	B	8	—	1	—	—	—	—	—	—	—	—	—	3588 868
	J	8	—	1	—	—	—	—	—	—	—	—	—	3588 291

CARLINES J - Challenger, B - Barracuda, V - Valiant, L - Dart, R - Satellite, W - Coronet - Charger, P - Plymouth, D - Dodge, C - Chrysler, Y - Imperial

AR Indicates use as required.

Numerals in parentheses ( ) refer to notes.

Printed in U.S.A.

# Indicates parts not listed in any previous parts book.

★ Indicates change or addition.

November, 1974

CODE	PART NAME	ENG. TYPE OR CU. IN	V	B J	L	R	W	P	D	C (L M)	C (P)	C (H S)	Y	PART NUMBER
8-15-4	WIRING Cont'd.													
	except Sta. Wgn.		—	—	—	1	1	—	—	—	—	—	—	3764 811
	Sta. Wgn.		—	—	—	1	1	—	—	—	—	—	—	3764 331
	except Sta. Wgn.	8	—	—	—	—	—	1	—	—	—	—	—	3764 886
	except Sta. Wgn., w/o Trailer Towing Wiring Frt.	8	—	—	—	—	—	1	1	—	—	—	—	3764 919
	except Sta. Wgn., w/Trailer Towing Wiring Frt.	8	—	—	—	—	—	1	1	1	—	1	1	3764 714
	Sta. Wgn., w/o Trailer Towing Wiring, up to 10-31-73	8	—	—	—	—	—	1	1	—	1	—	—	3764 251
	Sta. Wgn., w/o Trailer Towing Wiring, after 10-31-73	8	—	—	—	—	—	1	1	—	1	—	—	3764 319
	Sta. Wgn., w/Trailer Towing Wiring	8	—	—	—	—	—	1	1	—	1	—	—	3764 534
	up to 10-31-73	8	—	—	—	—	—	1	1	—	1	—	—	3764 534
	Sta. Wgn., w/Trailer Towing Wiring, after 10-31-73	8	—	—	—	—	—	1	1	—	1	—	—	3764 981
	except Sta. Wgn., except D-P	8	—	—	—	—	—	—	1	—	—	—	—	3764 887
	except Sta. Wgn., D-P	8	—	—	—	—	—	—	1	—	—	—	—	3764 888
		8	—	—	—	—	—	—	—	1	—	—	—	3764 529
	Frt.	8	—	—	—	—	—	—	—	1	—	1	—	3764 920
	Frt.	8	—	—	—	—	—	—	—	—	—	—	1	3764 889
	Up to 3-7-74	8	—	—	—	—	—	—	—	—	—	1	—	3764 890
	After 3-7-74	8	—	—	—	—	—	—	—	—	—	1	—	# 3764 334
		8	—	—	—	—	—	—	—	—	—	—	1	3764 513
	Rr. Bumper, Sta. Wng.	8	—	—	—	—	—	1	1	—	1	—	—	3764 672
	City Country Horn		1	1	1	1	1	1	1	1	1	1	1	3764 969
8-15-9	WIRING, Trailer Towing		1	—	1	—	—	—	—	—	—	—	—	3764 939
	Rr.		1	—	1	1	1	1	1	1	1	1	1	3764 795
	Sta. Wgn.		—	—	—	1	1	—	—	—	—	—	—	3764 940
	except Sta. Wgn.		—	—	—	1	1	—	—	—	—	—	—	3764 190
	Battery Isolator (Trailer Towing)	8	—	—	—	—	—	1	1	1	1	1	1	3764 877
	Trailer Towing to Body		—	—	—	1	1	1	1	1	1	1	1	3764 876
	(Inst. Panel)		—	—	—	1	1	—	—	—	—	—	—	3764 755
	up to 12-03-73	8	—	—	—	1	1	—	—	—	—	—	—	3764 164
	Ammeter, w/85 Amp. L/N Altr., after 12-03-73	8	—	—	—	1	1	—	—	—	—	—	—	3764 301
	Ammeter, w/86 Amp. Motorola Altr., after 12-03-73	8	—	—	—	1	1	—	—	—	—	—	—	3764 301
	(Inst. Panel)	8	—	—	—	—	—	1	1	1	1	1	—	3764 756
8-15-10	RELAY and BRACKET, Trailer Towing Stop Lamp		—	—	—	2	2	2	2	2	2	2	2	3764 047
8-15-13	COVER, Fuse Block Base, up to 1-02-74		1	—	1	—	—	1	1	1	1	1	1	3764 595
	after 1-02-74		1	—	1	—	—	1	1	1	1	1	1	3764 309
8-15-17	WIRING, Brake System Warning Lamp Switch		1	—	1	—	—	—	—	—	—	—	—	2822 623
			—	1	—	1	1	1	1	1	1	1	1	3513 655
	Seat Belt Warning System		—	—	—	1	1	—	—	—	—	—	—	3764 078
		8	—	1	—	—	—	—	—	—	—	—	—	3764 710
	Seat Belt Interlock, w/Manual Trans.		1	—	1	—	—	—	—	—	—	—	—	3764 743
	Seat Belt Interlock Body (Bench Seat Straight)		1	—	1	—	—	—	—	—	—	—	—	3764 712
	Seat Belt Interlock Body (Bucket Seat)		1	—	1	—	—	—	—	—	—	—	—	3764 711
	Seat Belt Interlock Body (Bucket Seat Straight)		1	—	1	1	1	—	—	—	—	—	—	3764 706
	Seat Belt Interlock Inst. Panel w/Manual Trans.		—	1	—	1	1	—	—	—	—	—	—	3764 644
	Seat Belt Body, (Bucket Seat), w/Center Frt. Cushion, w/Folding Arm Rest		—	—	—	1	1	—	—	—	—	—	—	3764 705
	Seat Belt Interlock Body (Bench Seat-Straight)		1	—	1	1	1	—	—	—	—	—	—	3764 706

CARLINES: J - Challenger, B - Barracuda, V - Valiant, L - Dart, R - Satellite, W - Coronet - Charger, P - Plymouth, D - Dodge, C - Chrysler, Y - Imperial

AR Indicates use as required.

Numerals in parentheses ( ) refer to notes.

Printed in U.S.A.

# Indicates parts not listed in any previous parts book.

★ Indicates change or addition.

November, 1974

CODE	PART NAME	ENG. TYPE OR CU. IN	V	B J	L	R	W	P	D	C (L M)	C (P)	C (H S)	Y	PART NUMBER
8-15-17	WIRING Cont'd.													
	Seat Interlock Body, (Bucket Seat, w/Center Frt. Cushion, w/Folding Arm Rest		1	—	1	—	—	—	—	—	—	—	—	3764 915
	Seat Belt Body, (Bench Seat Straight)		—	—	—	1	1	—	—	—	—	—	—	3764 707
	Seat Belt (Bucket Seat Straight)	8	—	—	—	—	—	1	1	1	1	1	—	3764 550
	Seat Belt (50-50 Split Bench Seat)	8	—	—	—	—	—	1	1	1	1	1	1	# 3764 289
	Seat Belt (Bench Seat Straight)	8	—	—	—	—	—	1	1	1	1	1	—	3764 791
	Door Ajar, Except Sta. Wgn.	8	—	—	—	—	—	1	1	1	—	1	1	3764 891
	Door Ajar, Sta. Wgn.	8	—	—	—	—	—	1	1	—	1	—	—	3764 892
8-15-22	GROMMET, Trailer Towing Wiring		1	—	1	1	1	1	1	1	1	1	1	3764 942
8-15-23	WIRING, H/Lamp Switch Title Lamp, w/Time Delay Relay	8	—	—	—	—	—	1	1	1	1	1	1	3764 730
8-15-26	WIRING, Ammeter to Eng. Comp't. Wiring, w/60 Amp. Altr.		1	—	1	—	—	—	—	—	—	—	—	3764 270
	Ammeter, w/Heavy Duty 60 Amp. Altr.	8	—	—	—	1	1	—	—	—	—	—	—	3764 163
	Ammeter, w/85 Amp. L/N Altr., up to 12-03-73	8	—	—	—	1	1	—	—	—	—	—	—	3764 164
	Ammeter, w/85 Amp. L/N Altr., after 12-03-73	8	—	—	—	1	1	—	—	—	—	—	—	3764 301
	Ammeter, w/86 Amp. Motorola Altr., after 12-03-73	8	—	—	—	1	1	—	—	—	—	—	—	3764 301
	Ammeter, w/Heavy Duty 65 Amp. Altr., w/Battery Isolator	8	—	—	—	1	1	—	—	—	—	—	—	3764 927
8-15-27	CABLE, Fusible Link, Main Wiring to Bulkhead Connector		1	—	1	—	—	—	—	—	—	—	—	3588 280
	Starter Relay to H/Lamp Wiring		1	1	1	1	1	—	—	—	—	—	—	3588 320
	Ammeter Wiring to Starter Relay		—	—	—	1	1	—	—	—	—	—	—	3588 297
	Battery Cable to Main Harness		—	—	—	1	1	1	1	1	1	1	—	3588 050
	Terminal Block to Battery		—	—	—	1	1	1	1	—	—	—	—	3588 834
	Battery Cable to Main Harness	8	—	—	—	—	—	1	1	1	1	1	1	3588 056
8-15-28	BRACKET, Fuse Block Mtg.	8	—	—	—	—	—	1	1	1	1	1	1	3764 591
8-15-32	CLIP and BUSS BAR, Fuse Block Fuse, 2 Way		1	—	1	—	—	—	—	1	1	1	1	3764 668
	CLIP, Fuse Block Ret.		—	2	—	2	2	—	—	—	—	—	—	2983 634
	CLIP and BUSS BAR, Fuse Block		—	2	—	2	2	—	—	—	—	—	—	2926 247
	CLIP, Cyl. Head Cover Wiring		AR	AR	AR	AR	AR	AR	AR	AR	AR	AR	AR	6015 818
	STRAP, Switch Wiring		AR	AR	AR	AR	AR	AR	AR	AR	AR	AR	AR	2945 704
8-15-35	WIRING, Transistor Regulator		1	1	1,	1	1	1	1	1	1	1	1	2983 727
8-15-38	WIRING, Oil Gauge and Temp.	8	—	—	—	—	—	1	1	—	—	—	—	3764 658
8-15-40	WIRING, Auto. H/Lamp Sentinel and Dimmer	8	—	—	—	—	—	—	—	—	—	—	1	3764 898
	JUMPER, H/Lamp Dimmer and Sentinel Nomenc. Lighting	8	—	—	—	—	—	—	—	1	1	1	1	3746 602
8-15-46	WIRING, Elect Ignition Control		1	1	1	1	1	1	1	1	1	1	1	3588 421
8-15-53	WIRING, Accessory Lamp, w/Time Delay Relay		1	—	1	—	—	—	—	—	—	—	—	3764 785
	Map, Ignition Switch and Title Lamp	8	—	1	—	—	—	—	—	—	—	—	—	3588 667
	Strg. Column Switch Jumper, w/Tilt Tel. Strg. Wheel		—	—	—	—	—	1	1	1	1	1	1	3764 808
	Resistor Jumper, except 440 Eng.	8	—	—	—	1	1	—	—	—	—	—	—	3764 182
	Additional Dome Lamp, 4 D. and 4 D.H.T.	8	—	—	—	—	—	1	1	—	—	—	—	3764 912
	Dome Lamp Sta. Wgn.	8	—	—	—	—	—	1	1	—	1	—	—	3764 913
	Dome Lamp, except Sta. Wgn.	8	—	—	—	—	—	1	1	1	—	1	1	3764 911
	Additional Dome Lamp, Sta. Wgn.	8	—	—	—	—	—	1	1	—	—	—	—	3764 914
	Dome Lamp, except Sta. Wgn.	8	—	—	—	—	—	1	1	1	—	1	—	3764 911
	Dome and Rr. Lamp, Sta. Wgn.		—	—	—	1	1	—	—	—	—	—	—	3513 572

CARLINES J - Challenger, B - Barracuda, V - Valiant, L - Dart, R - Satellite, W - Coronet - Charger, P - Plymouth, D - Dodge, C - Chrysler, Y - Imperial

AR Indicates use as required.

# Indicates parts not listed in any previous parts book.

Numerals in parentheses ( ) refer to notes.

★ Indicates change or addition.

Printed in U.S.A.
November, 1974

CODE	PART NAME	ENG. TYPE OR CU. IN	V	B J	L	R	W	P	D	C (L M)	C (P)	C (H S)	Y	PART NUMBER
8-15-53	WIRING Cont'd.													
	Courtesy Lamp	8	—	—	—	—	—	1	1	—	—	—	—	3764 734
	Cornering Lamp Jumper, w/Tilt-Tel. Strg. Wheel	8	—	—	—	—	—	—	1	1	1	1	1	2983 686
	Rr. Courtesy Lamp, except 2 D.H.T., C-S, up to 12-12-73	8	—	—	—	—	—	—	—	—	—	1	1	3764 543
	Rr. Courtesy Lamp, except 2D, 4 H.T., C-S, after 12-12-73	8	—	—	—	—	—	—	—	—	—	1	1	3764 317
	2 D.H.T., C-S, up to 12-12-73	8	—	—	—	—	—	—	—	—	—	1	1	3764 540
	20 H.T., C-S, after 12-1-73	8	—	—	—	—	—	—	—	—	—	1	1	3764 315
	Roof Light, 4 D. and 4 D.H.T.	8	—	—	—	—	—	1	1	—	—	—	—	3764 929
	H/Lamp Switch Title Lamp to Inst. Panel Harness, w/o H/Lamp Sentinel	8	—	—	—	—	—	—	—	1	1	1	1	3746 750
8-15-55	NUT, Wrg. Vol. Regulator, w/85 Amp. L/N Altr.		—	—	—	—	—	1	1	—	—	—	—	3764 095

NOTES

CARLINES J - Challenger, B - Barracuda, V - Valiant, L - Dart, R - Satellite, W - Coronet - Charger, P - Plymouth, D - Dodge, C - Chrysler, Y - Imperial

AR Indicates use as required.

Numerals in parentheses ( ) refer to notes.

# Indicates parts not listed in any previous parts book.

★ Indicates change or addition.

Printed in U.S.A.
November, 1974

CODE		PART NUMBER
	NOTE: For a More Practical and Economical Method of Servicing only the More Complicated Assemblies Will Be Stocked For Service. These Will Be Found in Their Respective Groups.	
	On the More Simple Assemblies, the Required Length and Size of Cables, Terminals, etc. Should be specified. For Visual Chart of Insulator and Terminal Packages see group 8 Illustration Section.	
8-16-1	**CONNECTOR and TERMINAL PACKAGE, Headlamp Cable**	1879 609
	TERMINAL and INSULATOR PACKAGE	
	6 Pole, Male and Female	2448 822
	8 Pole, Female	2084 424
	Male and Female	2298 882
	Female, Miniature	2084 421
	Female, Miniature	2240 264
	Male, Miniature	2240 536
	Electric Vent-Wing Motor Wiring	2495 239
	Window Lift Switch, 3 Way	2495 234
	Window Lift Switch, 5 Way, Imperial	2495 235
	Window Lift Switch, 5 Way, P, D, C	2584 954
	Window Lift Switch, 6 Way, w/Lockout Switch	2495 236
	Window Lift Switch, 6 Way, w/o Lockout Switch	2495 237
	Window Lift Switch, 10 Way	2584 843
	Power Vent Switch, 5 Way	2584 953
	Turn Signal Switch Wiring, Female	2495 541
	Turn Signal Switch, Male	2585 030
	Printed Circuit Board	2495 517
	Single Cable, Bullet Type	1843 444
	Seat Adj. Switch, 6 Way	2584 842
	A/Cond. Vac. Switch	2584 841
	Window Lift Switch, 5 Way	2809 016
	Frt. Door Window Lift Switch, Left, 7 Way	2809 017
	Frt. Door Window Lift Switch, Right, 10 Way	2809 018
	Frt. Door Window Lift Switch, Left, 10 Way	2809 019
	Windshield Wiper Switch, Female	2809 039
	Headlamp Switch, 5 Way, Female	2809 038
	Fusible Link, Female	2809 037
	Map Lamp Take-Off Wiring	2809 036
	Auto. Pilot, 4 Way	2809 035
	Windshield Wiper Switch, 4 Way	2809 034
	w/CABLE, Fuel Gauge Tank Unit	2230 985
8-16-3	CABLE, No. 8 Brown, 100 Ft. Spool	2275 220
	No. 16 Blue, w/Stripe, 100 Ft. Spool	2421 455
	No. 12 Red, 100 Ft. Spool	1752 491
	No. 14 Green, 100 Ft. Spool	1752 490
	No. 16 Blue, 100 Ft. Spool	1752 489
	No. 18 Yellow, 100 Ft. Spool	1752 488
	No. 10 Black, 100 Ft. Spool	1752 492
	WIRE and Spool Triple Conductors, No. 14 Gauge, Red, Green and Black, 100 Ft. Spool	2298 769
	WIRE and Spool Double CONDUCTOR, No. 14 Gauge, Green and Black, 100 Ft. Spool	2298 770
8-16-4	TERMINAL, Female Side Type	1842 009
	Printed Circuit Board Wiring, Female	2291 259
	Cold Crimp, Female	2291 588
	Printed Circuit Wiring, Female	2258 118
	Miniature Blade Wiring, Female	2580 061
	Fuse Block, w/CLIP, Male	2291 838
	Wiring, 1.025" Long, 203 Hole Eyelet, No. 12 Wire	2290 069
	Wiring, .910" Long, Snap-On No. 8 Stud Spade, No. 12 Wire	2258 591
	Wiring, .77" Long, Female K-Type	1704 562
	Wiring, 1.36" Long, No. 6 Eyelet, No. 8 Wire	2258 590
	Wiring, .553" Long, EWL Term. Block, No. 14 Wire	2427 529
	Wiring, .570" Long, for Nail Hd. Term. Sending Unit, No. 18 Wire	2427 736
	Wiring, 1.625" Long, 47 Hole Eyelet, No. 6 Wire	2197 947

CODE		PART NUMBER
8-16-4	TERMINAL Cont'd.	
	Wiring, .697" Long, Female Hair Pin, No. 12 Wire	2427 848
	Wiring, Fuse Clip	2290 207
	Wiring, .083" Pin Female Type	3513 613
	w/INSULATOR and CABLE, Glove Box Lamp, No. 16 Red	2257 443
	w/INSULATOR and CABLE, Glove Box Lamp, No. 14 Brown	**2257 444**
	Cable Connector	870 821
	Electric Window Lift Safety Switch Wiring	903 895
	Printed Circuit Board Clip	2427 725
	Inst. Gage Clip	2427 725
	Turn Signal Switch and Horn Wiring	2496 532
	Battery to Starter Cable	**2197 945**
	Ignition Coil Feed Cable	2496 541
	Block, Single Post	2771 917
	Courtesy Lamp Bulb Ret	2822 565
	Rr. Compt. Dome Lamp Bulb Ret	2822 565
	Dome Lamp Wiring, Female, .093 Pin Type	2889 434
	Dome Lamp Wiring, Male, .093 Pin Type	**2889 435**
	Circuit Breaker Feed and Rr. Dome Lamp Hsg. Ground	2926 050
	A/Cond. and Heater Control Lamp and Socket	1842 012
	Cluster Wiring Ground	2926 594
	Concealed H/Lamp Motor Ground	3764 192
	Reading Lamp Ground Wire	2926 607
	Frt. Seat Elect Adjr. Motor Lt.	**2926 174**
	Cluster Lamp Wiring	2926 617
	Wiring Fuse Clip	2926 722
	Body Wiring, 6 Way Male, Imperial	2983 237
	Body Wiring, 6 Way Female, Imperial	2983 239
	Wiring, .093 Pin Male	2983 409
	Power Door Locks and Security Alarm System Wiring	**3588 819**
	Door Lock Wiring	3588 819
	Wiring, .093 Pin Female	2983 410
	Wiring, .125 Pin Male	2983 411
	Wiring, .125 Pin Female	2983 412
	Alternator Wiring	2983 508
	Strg. Wheel Horn Wire	**2996 872**
	Frt. Fender Side Marker Lamp	2983 754
	Dr. Switch Wiring Insulator, .060 Pin Male	3513 756
	Frt. Fender Side Marker Lamp Socket	2983 882
	NOx Emission Switch Wiring	3513 482
	Side Marker Socket Wiring	3513 586
	License Lamp	**3513 586**
	Concealed H/Lamp Relay Wiring	3513 637
	Wiring, .156 Dia., Male	3513 543
	Wiring, .156 Dia., Female	3513 544
	Seat Belt Interlock Edgeboard	3764 556
	Altr. Stator	3438 709
	Stop Lamp Switch Wiring	**3764 570**
	w/INSULATOR, Trailer Tow Wrg.	3764 908
8-16-5	SLEEVE, Wiring Terminal, Black	1264 933
	Starting Motor Terminal	930 304
	Starting Motor Terminal	1188 502
8-16-6	INSULATOR, Alternator Battery Terminal	2258 754
	Printed Circuit Board Wiring Terminal, 5 Pole, Female	**2291 258**
	Printed Circuit Wiring Terminal, 11 Way	2258 651
	Headlamp Switch, 7 Pole, Female	2258 102
	Neutral Safety Cable Terminal	2497 701
	Back-Up Lamp Switch Wiring	2770 859
	A/Cond. and Heater Vac. Control Switch Wiring, 3 Way	2857 754
	Terminal Wiring, 2 Way	**2857 761**
	Terminal Wiring, 2 Way, w/Calif. Emission Pkg.	3588 517

CODE		PART NUMBER
8-16-6	INSULATOR Cont'd.	
	Starter and Ignition Switch Wiring	2889 597
	Dome Lamp Wiring Terminal, 2 Way, Female	2889 427
	Dome Lamp Wiring Terminal, 2 Way, Male	2889 428
	Ignition Lamp Time Delay Relay	2889 650
	Dome Lamp Wiring Terminal, Female	2889 542
	Dome Lamp Wiring Terminal, Male	2889 543
	Qtr. Courtesy Lamp	2926 051
	Bulkhead Disconnect, 8 Pole, Upper	2427 191
	Bulkhead Disconnect, 8 Pole, Lower	2427 192
	Terminal Wiring, 8 Pole, Male, w/Center Ridge	2631 318
	Terminal Wiring, 8 Pole, Male, w/Upper Ridge	2631 319
	Terminal Wiring, 8 Pole, Male, w/Lower Ridge	2631 317
	Bulkhead Connector Wiring Terminal, 4 Pole, Male, w/Lower Ridge on Lt. Side	2926 254
	Bulkhead Connector Wiring Terminal, 4 Pole, Male, w/Lower Ridge on Rt. Side	2926 255
	Bulkhead Connector Wiring Terminal, 8 Pole, Male, w/Upper Ridge	2926 256
	Bulkhead Connector Wiring Terminal, 8 Pole, Male, w/Center Ridge	2926 257
	Bulkhead Connector Wiring Terminal, 8 Pole, Male, w/Upper and Lower Ridge	2926 258
	Seat Adj. Wiring Terminal, 8 Way	2926 374
	w/Lift Switch Wiring Terminal, 5 Way	3513 665
	w/Lift Switch Wiring Terminal, 10 Way	2926 171
	Power Vent Switch Terminal, 5 Way, Lt. Frt. Door	2926 204
	Frt. Dr. w/Lift or V/Wing Switch Wiring	2926 172
	Cornering Lamp Switch Wiring Terminal, 3 Way, Male	2983 407
	Bulkhead	2983 217
	Wiring Terminal, 6 Way Male	2983 237
	Wiring Terminal, 6 Way Female	2983 239
	Ignition Switch Wiring Terminal, 8 Way, Male	2983 401
	Ignition Switch Wiring Terminal, 8 Way, Female	2983 402
	Speed Control Switch Wiring Terminal, 4 Way, Male	2983 405
	Speed Control Switch Wiring Terminal, 4 Way, Female	2983 406
	Turn Signal Switch Wiring Terminal, 8 Way, Male	2983 403
	Wiring Terminal, 8 Way, Female	2983 404
	Wiring Terminal, 3 Way, Female	2983 408
	Low Fuel Relay, 4 Way, Female	2983 335
	Turn Signal Fuse Cable Wiring Terminal, 2 Way Male	2983 884
	Concealed H/Lamp Relay	2291 663
	Ammeter and Oil Ind. Dial	2809 009
	Dr. Switch Wiring, .060 Dia. Pin Male, 3 Way	2983 514
	Inst. Cluster Lamp Socket	1838 911
	Tailgate Switch Wiring, Female	3513 150
	Relay Bank Wiring	3764 715
	ATC Control Wiring, 8 Way	3513 154
	ATC Control Wiring, 5 Way, 1.360" Length	3513 155
	ATC Control Wiring, 5 Way, 1.249" Length	3513 156
	Wiring, 6 Way Female	3513 347
	Wiring, 6 Way Male	3513 348
	A/Cond. and Heater Switch	3513 477
	NOx Emission Thermal Switch Wiring, 2 Way Female	3513 507
	Wiring Terminal, 2 Way Male	3513 350
	Road Lamp Relay Wiring Terminal, 4 Way Female	3513 550
	Bulkhead	3513 632
	Wiring Terminal, .156 Dia., Male	3513 545
	Wiring Terminal, .156 Dia., Female	3588 781
	Fusible Link Wiring, .156 Dia. Male	3588 780
	Altr. Stator Terminal Stud	3438 729
	Foot Dimmer Switch	3513 696
	Elect. Ignition Ballast Resistor	3588 525

CODE		PART NUMBER
8-16-6	INSULATOR Cont'd.	
	Seat Belt Relay Buzzer	3588 399
	Seat Belt Interlock Edgeboard, 9 Way	3764 557
	Seat Belt Interlock Edgeboard, 8 Way	3764 572
	Alternator Battery Term.	3588 946
	Elect. Ignition Control	3513 755
	W/Lift Switch Terminal, Lt. Frt. Dr., 10 Way	3513 664
	Gear Selector Lamp Wiring, Male	3513 346
	Gear Selector Lamp Wiring, Female	3513 345
	Terminal Wiring, 3 Way Male	3588 442
	Rr. Comp't. Dome Lamp Wiring Terminal, Male	3513 346
	Terminal Wiring, Single Female	3588 519
	Terminal Wiring, Single Female, w/Calif. Emission Pkg.	3588 518
	Terminal Wiring, Single Male	3588 524
	Terminal Wiring, Male and Female, w/Calif. Emission Pkg.	3588 520
	Terminal Wiring, One Way-Female	3764 857
	Terminal Wiring, One Way-Male	3764 856
	Terminal Wiring, 2 Way Female	3588 523
	Terminal Wiring, 2 Way Male	3588 504
	Terminal Wiring, 3 Way Female	3588 516
	Terminal Wiring, 3 Way Male	3588 522
	Terminal Wiring, 4 Way Female	3588 515
	Terminal Wiring, 4 Way Male	3588 514
	Terminal Wiring, 8 Way-Female	3588 945
	Terminal Wiring, 9 Way Female (Side Cowl)	3764 639
	Eng. Comp't. Wiring Locking	3588 848
	Terminal Wiring, 6 Way Male, (Side Cowl) (3 Large Cavities)	3764 640
	W/Lift Wiring Terminal	3588 982
	Terminal Wiring, 6 Way Male, (Side Cowl) (1 Large Cavity	3764 641
	Stop Lamp Switch Wiring	3764 099
8-16-8	CONNECTOR, 2 Way Polarized, Female	1842 003
	Dist. Female, Calif.	3588 727
	Dist., Male, Calif.	3588 742
	Dist., 2 Way, Calif.	3588 743
	Single Cable	611 898
	Back-Up Lamp Switch Wiring, w/Manual Trans.	2631 340
	Self Stripping	2926 651
	3 Way Socket	3764 654
	Ignition Coil, Black	3764 904
	Ignition Coil, Red	3764 905
	7 Way Trailer Towing	3764 941
8-16-10	PLUG, Cable Connector, No. 12 Cable	665 151
	w/WIRING, Molded 2 Pole, Male and Female	2233 028
	w/WIRING, Molded 4 Pole, 2 Male and 2 Female	2497 346
	w/WIRING, Molded 2 Pole, Male and Female	2231 119
	BOOT, Trailer Towing	3764 930
8-16-16	MOLD and CABLE, Single Female	2580 064
	Single Male	2580 065
	Dual Female	2580 267
8-16-19	RETAINER, Transistor Regulator Conn.	3588 345

8-17-2 **FUSES**	AMP.	SIZE	PART NO.
All Models	1	5/8	149 559
All Models	2	5/8	148 086
All Models	2	1-1/4	145 511
All Models	3	5/8	445 635
All Models	3	1-1/4	106 652
All Models	4	1-1/4	148 511
All Models	4		147 682
All Models	5	5/8	126 049
All Models	5	1-1/4	142 630
All Models	6	3/4	147 683

CARLINES J - Challenger B - Barracuda V - Valiant L - Dart R - Satellite W - Coronet - Charger P - Plymouth D - Dodge C - Chrysler Y - Imperial

AR Indicates use as required.
# Indicates parts not listed in any previous parts book.
Numerals in parentheses ( ) refer to notes.
★ Indicates change or addition.

Printed in U.S.A.
November, 1974

8-17-2 FUSES	AMP.	SIZE	PART NO.
All Models	7-1/2	7/8	150 866
All Models	7-1/2	1-1/4	455 107
All Models	9	7/8	147 684
All Models	10	5/8	142 864
All Models	10	1-1/4	117 142
All Models	14	1-1/16	147 685
All Models	15	1-1/4	120 151
All Models	20	5/8	106 650
All Models	20	1-1/4	106 653
All Models	30	1-1/4	120 114
All Models	30	1-7/16	147 686
All Models	60	55/64	2258 284

NOTES

CODE	PART NAME	ENG. TYPE OR CU. IN	V	B J	L	R	W	P	D	C (L M)	C (P)	C (H S)	Y	PART NUMBER
8-17-23	FUSE HOLDER,													
	Auto. H/Lamp Sentinel and Dimmer	8	—	—	—	—	—	—	—	—	—	—	1	2257 682
	Trailer Towing		—	—	—	1	1	1	1	1	1	1	1	3588 889
8-17-30	CIRCUIT BREAKER, 30 Amp.,													
	w/Electric Heated Rr. Window		1	—	1	—	—	—	—	—	—	—	—	3764 198
	30 Amp., w/Power Windows		—	—	—	1	1	1	1	1	1	1	1	3620 840
	30 Amp., w/Trailer Towing Wiring Harness		—	—	—	1	1	1	1	1	1	1	1	3764 198
	15 Amp., Sta. Wgn., w/Auto. Lock T/Gate		—	—	—	1	1	—	—	—	—	—	—	3620 861
	40 Amp.		1	—	1	1	1	1	1	1	1	1	1	3764 199
	15 Amp.	8	—	—	—	—	—	1	1	1	1	1	1	3837 155
	5 Amp.	8	—	—	—	—	—	—	—	—	—	—	1	2983 415
8-19-3	**WIRING, Inst. Panel**		1	—	1	—	—	—	—	—	—	—	—	3764 208
	w/o Rallye Inst. Panel	8	—	1	—	—	—	—	—	—	—	—	—	3764 200
	w/Rallye Inst. Panel	8	—	1	—	—	—	—	—	—	—	—	—	3764 201
	w/o Rallye Inst. Panel		—	—	—	1	1	—	—	—	—	—	—	3764 202
	w/Rallye Inst. Panel		—	—	—	1	1	—	—	—	—	—	—	3764 203
	w/o ATC		—	—	—	—	—	1	1	—	—	—	—	3764 894
	w/ATC		—	—	—	—	—	1	1	—	—	—	—	3764 893
	w/H/Lamp Sentinel, w/A/Cond.-w/ATC	8	—	—	—	—	—	—	—	1	1	1	1	3764 235
	w/o H/Lamp Sentinel, w/o A/Cond.	8	—	—	—	—	—	—	—	1	1	1	—	3764 236
	w/A/Cond.-w/ATC, w/o H/Lamp Sentinel	8	—	—	—	—	—	—	—	1	1	1	1	3764 238
	w/A/Cond. w/Frt. Heater	8	—	—	—	—	—	—	—	1	1	1	—	3764 237
	Dash Panel, up to 10-12-73	8	—	1	—	—	—	—	—	—	—	—	—	3764 189
	Dash Panel, after 10-12-73	8	—	1	—	—	—	—	—	—	—	—	—	3764 991
	Elect. Brake Control-(Inst. Panel)		—	—	—	1	1	—	—	—	—	—	—	3764 042
	Frt. Door Ash Receiver Lamp, C-S Rt.	8	—	—	—	—	—	—	—	—	—	1	1	3764 714
	City Country Horn (Inst. Panel)		1	1	1	1	1	1	1	1	1	1	1	3764 973
	Open Dr. Ind., Taxi		—	—	—	1	1	—	—	—	—	—	—	3588 645
8-19-7	WIRING EXTENSION, H/Lamp Switch, 3 Way		—	AR	—	AR	AR	AR	AR	AR	AR	AR	AR	2231 105
8-19-10	RETAINER, Inst. Panel Wiring Harness		—	—	—	1	1	—	—	—	—	—	—	3513 189
8-19-15	PRINTED CIRCUIT BOARD		1	—	1	—	—	—	—	—	—	—	—	2771 222
	w/o Rallye Inst. Panel		—	—	—	1	1	—	—	—	—	—	—	2985 415
		8	—	—	—	—	—	1	1	—	—	—	—	3592 604
	w/Illum. and Signal Lamps	8	—	—	—	—	—	—	—	1	1	1	1	3592 456
	w/Illum. and Gages	8	—	—	—	—	—	—	—	1	1	1	1	3592 457
8-19-18	SCREW, Mtg.		4	—	4	—	—	—	—	—	—	—	—	451 322
	SCREW and WASHER, to Hsg.		—	—	—	6	6	—	—	2	2	2	6	6027 175
	PLAINWASHER, Mtg. Screw		4	—	4	—	—	—	—	—	—	—	—	9419 854
8-19-83	LAMP, Ash Receiver		1	—	1	—	—	—	—	—	—	—	—	3488 923
		8	—	1	—	—	—	—	—	—	—	—	—	3488 925
			—	—	—	1	1	—	—	—	—	—	—	3488 926
	Rt.	8	—	—	—	—	—	—	1	1	1	1	—	3746 704
8-19-87	INSULATOR, GASKET, and CLIP, Bulkhead Connector		AR	—	AR	—	—	—	—	—	—	—	—	2631 315
8-19-88	SPACER, Bulkhead Insulator		—	—	—	1	1	—	—	—	—	—	—	2983 216
8-20-1	**CIGAR LIGHTER PACKAGE, Inst. Panel**		1	—	1	1	1	—	—	—	—	—	—	2947 219
8-20-3	CIRCUIT BREAKER, Rr. Door Arm Rest Cigar Lighter 4 D. and 4 D.H.T. C-S	8	—	—	—	—	—	—	—	—	—	2	2	1887 222
	Rr. Qtr. Panel Arm Rest Cigar Lighter, 2 D.H.T., C-S	8	—	—	—	—	—	—	—	—	—	2	2	1887 222
	Frt. Door Arm Rest Cigar Lighter, C-S Rt.	8	—	—	—	—	—	—	—	—	—	1	1	1887 222
8-20-8	KNOB, Inst. Panel Cigar Lighter		1	1	1	1	1	—	—	—	—	—	—	2290 188
		8	—	—	—	—	—	1	1	1	—	—	—	3746 606
		8	—	—	—	—	—	—	—	—	1	1	1	3746 607

CARLINES J - Challenger, B - Barracuda, V - Valiant, L - Dart, R - Satellite, W - Coronet - Charger, P - Plymouth, D - Dodge, C - Chrysler, Y - Imperial

AR Indicates use as required.

Numerals in parentheses ( ) refer to notes.

Printed in U.S.A.

# Indicates parts not listed in any previous parts book.

★ Indicates change or addition.

November, 1974

CODE	PART NAME	ENG. TYPE OR CU. IN	V	B J	L	R	W	P	D	C (L M)	C (P)	C (H S)	Y	PART NUMBER
8-20-8	KNOB Cont'd.													
	Rr. Door Arm Rest Cigar Lighter, 4 D. and 4 D.H.T., C-S	8	—	—	—	—	—	—	—	—	—	2	2	2290 188
	Rr. Qtr. Panel Arm Rest Cigar Lighter 2 D.H.T. C-S	8	—	—	—	—	—	—	—	—	—	2	2	2290 188
	Frt. Dr. Arm Rest Cigar Lighter, C-S Rt.	8	—	—	—	—	—	—	—	—	—	1	1	2290 188
8-20-9	ELEMENT, Inst. Panel Cigar Lighter		1	1	1	1	1	1	1	1	1	1	1	3004 190
	Rr. Door Arm Rest Cigar Lighter, 4 D. and 4 D.H.T., C-S	8	—	—	—	—	—	—	—	—	—	2	2	3004 190
	Rr. Qtr. Panel Arm Rest Cigar Lighter, 2 D.H.T., C-S	8	—	—	—	—	—	—	—	—	—	2	2	3004 190
	Frt. Door Arm Rest Cigar Lighter, C-S Rt.	8	—	—	—	—	—	—	—	—	—	1	1	3004 190
8-20-10	SHELL and CLAMP, Inst. Panel Cigar Lighter		1	1	1	1	1	—	—	—	—	—	—	2932 727
		8	—	—	—	—	—	1	1	—	—	—	—	3780 594
		8	—	—	—	—	—	—	—	1	1	1	1	3780 595
	Rr. Door Arm Rest Cigar Lighter, 4 D. and 4 D.H.T., C-S	8	—	—	—	—	—	—	—	—	—	2	2	3780 595
	Rr. Qtr. Panel Arm Rest Cigar Lighter, 2 D.H.T., C-S	8	—	—	—	—	—	—	—	—	—	2	2	3780 595
	Frt. Dr. Arm Rest Cigar Lighter, C-S Rt.	8	—	—	—	—	—	—	—	—	—	1	1	3780 595
8-20-16	BEZEL, Inst. Panel Cigar Lighter Mtg.	8	—	—	—	—	—	—	—	1	1	1	1	3746 629
8-21-1	**TERMINAL BLOCK, Ammeter Wiring,** w/85 Amp. L/N Altr., up 1-16-74		—	—	—	2	2	1	1	—	—	—	—	1842 267
	Ammeter Wiring, w/85 Amp. L/N Altr., after 1-16-74		—	—	—	2	2	1	1	—	—	—	—	3764 326
	Altr. Battery Feed, up to 1-16-74	8	—	—	—	—	—	1	1	1	1	1	1	1842 267
	Altr. Battery Feed, after 1-16-74	8	—	—	—	—	—	1	1	1	1	1	1	3764 326
8-26-1	**SOLENOID, Siren**		—	—	—	1	1	1	1	1	1	1	—	2836 252

NOTES

CARLINES J - Challenger, B - Barracuda; V - Valiant, L - Dart; R - Satellite, W - Coronet - Charger; P - Plymouth, D - Dodge; C - Chrysler, Y - Imperial

AR Indicates use as required.

Numerals in parentheses ( ) refer to notes.

# Indicates parts not listed in any previous parts book.

★ Indicates change or addition.

Printed in U.S.A.
November, 1974

8-27-1 DISTRIBUTOR ASSEMBLY

Models	Cyl.	Eng. (cu. in.)	Trans.	Chart Reference Number	Distributor Identification Stamped Complete	Replacement Assy's (Partial) Less (Cap & Rotor)
V,L	6	198	All	2	3656 859	3656 861
V,L, w/o Calif. Emission Pkg.	6	225	Auto.	4	3755 042	3755 043
V,L, w/Calif. Emission Pkg.	6	225	Auto.	8	3755 470	3755 471
V,L, w/o Calif. Emission Pkg.	6	225	Manual	3	3755 037	3755 038
V,L, w/Calif. Emission Pkg.	6	225	Manual	7	3755 467	3755 468
R,W	6	225	Manual	3	3755 037	3755 038
R,W	6	225	Auto	4	3755 042	3755 043
L, Export Only	6	225	Manual	5	3755 044	3755 045
L, Export Only	6	225	Auto.	6	3755 053	3755 054
V,L,B,J,R except R-M, W, D Exp.	8	318	All	1	3656 763	3656 764
R-M	8	318	Auto.	1	3656 763	3656 764
R-M	8	318	Manual	16	3755 821	3755 822
R,W,P,D, w/2 Bbl. Carb., w/o H/Perf.	8	360	All	17	3755 841	3755 842
V,L,B,J,R,W, w/H/Perf.	8	360	All	10	3755 486	3755 487
R,W,P,D,C, w/1-4 Bbl. Carb., w/o H/Perf.	8	360	All	9	3755 475	3755 476
R,W,P,D,C, w/o H/Perf	8	400	All	15	3755 681	3755 682
R,W, w/1-4 Bbl. Carb., w/H/Perf.	8	400	Auto.	12	3755 512	3755 513
R,W, w/1-4 Bbl. Carb., w/H/Perf.,	8	400	Manual	211	3755 508	3755 509
P,D, w/1-4 Bbl. Carb., w/H/Perf., w/o Calif. Emission Pkg.	8	400	All	12	3755 512	3755 513
P,D, w/1-4 Bbl. Carb., w/H/Perf., w/Calif. Emission Pkg.	8	400	All	11	3755 508	3755 509
R,W,P,D,C, w/H/Perf.	8	440	All	13	3755 518	3755 519
P,D,C,Y, Std., w/o Calif. Emission Pkg.	8	440	All	13	3755 518	3755 519
P,D,C,Y, Std., w/Calif. Emission Pkg.	8	440	All	14	3755 522	3755 523

NOTES

CARLINES J - Challenger, B - Barracuda, V - Valiant, L - Dart, R - Satellite, W - Coronet - Charger, P - Plymouth, D - Dodge, C - Chrysler, Y - Imperial

AR Indicates use as required.

Numerals in parentheses ( ) refer to notes.

# Indicates parts not listed in any previous parts book.

★ Indicates change or addition.

Printed in U.S.A.
November, 1974

CODE	PART NAME	ENG. TYPE OR CU. IN	V	B J	L	R	W	P	D	C (L M)	C (P)	C (H S)	Y	PART NUMBER
8-27-96	HOUSING, Dist	6	1	—	1	1	1	—	—	—	—	—	—	3656 863
	except 400 and 440 Eng.	8	1	1	1	1	1	1	1	—	—	—	—	3780 748
	w/400 and 440 Eng.	8	—	—	—	1	1	1	1	1	1	1	1	3780 747
	PIN (3/32 x 3/8)		1	1	1	1	1	1	1	1	1	1	1	9417 599
8-27-121	"O" RING, Dist. Hsg.		1	1	1	1	1	1	1	1	1	1	1	2875 923
8-27-244	SEAL, Dist., Hsg.		1	1	1	1	1	1	1	1	1	1	1	2875 028
8-27-259	SPACER, Dist. Cam		1	1	1	1	1	1	1	1	1	1	1	2642 988

NOTES

CARLINES J - Challenger, B - Barracuda, V - Valiant, L - Dart, R - Satellite, W - Coronet - Charger, P - Plymouth, D - Dodge, C - Chrysler, Y - Imperial

AR Indicates use as required.

# Indicates parts not listed in any previous parts book.

Numerals in parentheses ( ) refer to notes.

★ Indicates change or addition.

Printed in U.S.A.
November, 1974

DISTRIBUTOR COMPONENT PARTS

For Model Application See Code 8-27-1

		DISTRIBUTOR ASSEMBLIES				
	Distributor Identification Stamped	3656 763	3656 859	3755 037	3755 042	3755 044
	Replacement Assy's (Partial) (Less Cap and Rotor)	3656 764	3656 861	3755 038	3755 043	3755 045
CODE	REMARKS	1	2	3	4	5
8-27-4	GASKET, Dist. Mtg. Oil Ret.	1326 836	2095 630	2095 630	2095 630	2095 630
	GASKET, Dist. Mtg.	———	2095 740	2095 740	2095 740	2095 740
8-27-26	CLAMP	1947 612	———	———	———	———
8-27-54	RELUCTOR	3656 017	3656 862	3656 862	3656 862	3656 862
	PIN (3/32 x 9/16)	9414 521	9414 521	9414 521	9414 521	9414 521
8-27-58	PICK-UP and PLATE	3656 738	3656 866	3656 866	3656 866	3656 866
8-27-71	CAP	2444 507	2642 986	2642 986	2642 986	2642 986
8-27-76	SPRING, Cap Att.	1838 508	1838 508	1838 508	1838 508	1838 508
8-27-137	COLLAR and PIN PACKAGE, Shaft	2932 988	———	———	———	———
8-27-250	GOVERNOR	3656 765	3755 034	3755 039	3755 039	3755 051
8-27-300	ROTOR	1838 516	1838 516	1838 516	1838 516	1838 516
8-27-308	VACUUM CONTROL	3656 766	3755 036	3755 041	3755 036	3755 048
8-27-352	GEAR and PIN PACKAGE	———	2084 653	2084 653	2084 653	2084 653

For Model Application See Code 8-27-1

		DISTRIBUTOR ASSEMBLIES				
	Distributor Identification Stamped	3755 053	3755 467	3755 470	3755 475	3755 486
	Replacement Assy's (Partial) (Less Cap and Rotor)	3755 054	3755 468	3755 471	3755 476	3755 487
CODE	REMARKS	6	7	8	9	10
8-27-4	GASKET, Dist. Mtg. Oil Ret	2095 630	2095 630	2095 630	1326 836	1326 836
	GASKET, Dist. Mtg.	2095 740	2095 740	2095 740	———	———
8-27-26	CLAMP	———	———	———	1947 612	1947 612
8-27-54	RELUCTOR	3656 862	3656 862	3656 862	3656 017	3656 017
	PIN (3/32 x 9/16)	9414 521	9414 521	9414 521	9414 521	9414 521
8-27-58	PICK-UP and PLATE	3656 866	3656 866	3656 866	3656 738	3656 738
8-27-71	CAP	2642 986	2642 986	2642 986	2444 507	2444 507
8-27-76	SPRING, Cap Att.	1838 508	1838 508	1838 508	1838 508	1838 508
8-27-137	COLLAR and PIN PACKAGE, Shaft	———	———	———	2932 988	2932 988
8-27-250	GOVERNOR	3755 051	3755 469	3755 469	3755 367	3755 488
8-27-300	ROTOR	1838 516	1838 516	1838 516	1838 516	1838 516
8-27-308	VACUUM CONTROL	3755 055	3755 041	3755 036	3755 474	3755 474
8-27-352	GEAR and PIN PACKAGE	2084 653	2084 653	2084 653	———	———

For Model Application See Code 8-27-1

		DISTRIBUTOR ASSEMBLIES				
	Distributor Identification Stamped		3755 508	3755 512	3755 518	3755 522
	Replacement Assy's (Partial) (Less Cap and Rotor)		3755 509	3755 513	3755 519	3755 523
CODE	REMARKS		11	12	13	14
8-27-4	GASKET, Dist. Mtg. Oil Ret.		1326 836	1326 836	1326 836	1326 836
8-27-26	CLAMP		1947 613	1947 613	1947 613	1947 613
8-27-54	RELUCTOR		3656 017	3656 017	3656 017	3656 017
	PIN (3/32 x 9/16)		9414 521	9414 521	9414 521	9414 521
8-27-58	PICK-UP and PLATE		3656 738	3656 738	3656 738	3656 738
8-27-71	CAP		2444 507	2444 507	2444 507	2444 507
8-27-76	SPRING, Cap Att.		1838 508	1838 508	1838 508	1838 508
8-27-137	COLLAR and PIN PACKAGE, Shaft		2932 988	2932 988	2932 988	2932 988
8-27-250	GOVERNOR		3755 156	3755 227	3755 159	3755 524
8-27-300	ROTOR		1838 516	1838 516	1838 516	1838 516
8-27-308	VACUUM CONTROL		3755 511	3755 505	3755 505	3755 505

For Model Application See Code 8-27-1

		DISTRIBUTOR ASSEMBLIES				
	Distributor Identification Stamped	3755 681	3755 821	3755 841		
	Replacement Assy's (Partial) (Less Cap and Rotor)	3755 682	3755 822	3755 842		
CODE	REMARKS	15	16	17		
8-27-4	GASKET, Dist. Mtg. Oil Ret	1326 836	1326 836	1326 836		
8-27-26	CLAMP	1947 613	1947 612	1947 612		
8-27-54	RELUCTOR	3656 017	3656 017	3656 017		
	PIN (3/32 x 9/16)	9414 521	9414 521	9414 521		
8-27-58	PICK-UP and PLATE	3656 738	3656 738	3656 738		
8-27-71	CAP	2444 507	2444 507	2444 507		
8-27-76	SPRING, Cap Att.	1838 508	1838 508	1838 508		

CARLINES J - Challenger, B - Barracuda, V - Valiant, L - Dart, R - Satellite, W - Coronet - Charger, P - Plymouth, D - Dodge, C - Chrysler, Y - Imperial

AR Indicates use as required.

Numerals in parentheses ( ) refer to notes.

# Indicates parts not listed in any previous parts book.

★ Indicates change or addition.

Printed in U.S.A.
November, 1974

DISTRIBUTOR COMPONENT PARTS

For Model Application See Code 8-27-1

DISTRIBUTOR ASSEMBLIES

CODE	Distributor Identification Stamped Replacement Assy's (Partial) (Less Cap and Rotor) REMARKS	3755 681 3755 682 15	3755 821 3755 822 16	3755 841 3755 842 17		
8-27-137	COLLAR and PIN PACKAGE, Shaft	2932 988	2932 988	2932 988		
8-27-250	GOVERNOR	3755 683	3755 823	3755 843		
8-27-300	ROTOR	1838 516	1838 516	1838 516		
8-27-308	VACUUM CONTROL	3755 505	3656 766	3755 474		

NOTES

CODE	PART NAME	ENG. TYPE OR CU. IN	V	B J	L	R	W	P	D	C (L M)	C (P)	C (H S)	Y	PART NUMBER

NOTE: Service Alternators consist of an Alternator and Pulley. In most cases a double grooved Pulley type may be used as a service replacement for a single groove type; If not desirable, the Pulley from the original unit may be transferred to the new alternator.

All Alternators are stamped with a production assembly number which may or may not be the serviced Alternator. Part Type Code 8-28-3 below lists the Alternator stamped production number cross-reference to the applicable service number. The SERVICED PART NUMBER must be ordered in all cases.

For component parts of Alternators refer to part type code 8-29-0 in which component parts are charted in code sequence in columns for the Alternator number appearing at the top of each column.

LEECE-NEVILLE ALTERNATORS and REGULATORS and COMPONENTS are not stocked in Chrysler Parts Depots. Order replacement parts for these units by description from your nearest Leece-Neville Distributor or Leece-Neville, 1374 E. 51st Street, Cleveland, Ohio 44103.

8-28-3 ALTERNATOR

STAMPED NO.	PULLEY	GROOVES	AMP NO.											
3755 403	2444 478	S	34	1	1	1	1	1	1	1	1	1	1	1	3780 588
3755 404	2444 478	S	41	1	1	1	1	1	1	1	1	1	1	1	3780 588
3755 406	2444 478	S	50	1	1	1	1	1	1	1	1	1	1	1	3780 588
3755 411	3656 571	D	50	1	1	1	1	1	1	1	1	1	1	1	3780 588
3755 192	2444 478	S	65	1	1	1	1	1	1	1	1	1	1	1	3755 191
3755 191	3656 571	D	65	1	1	1	1	1	1	1	1	1	1	1	3755 191
3755 413	3656 571	D	60	1	1	1	1	1	1	1	1	1	1	1	3780 589
3755 585	3755 796	D	86	1	1	1	1	1	1	1	1	1	1	1	3755 585

	BOLT, Altr. Mtg., 3/8-16-4 1/4		AR	AR	AR	AR	AR	AR	AR	AR	AR	AR	AR	433 116
	BOLT, Altr. Mtg., 3/8-16-4 1/2		AR	AR	AR	AR	AR	AR	AR	AR	AR	AR	AR	433 119
	BOLT, Altr. Mtg., 3/8-16-6		AR	AR	AR	AR	AR	AR	AR	AR	AR	AR	AR	9417 928
	BOLT, Altr. Mtg., 3/8-16-5 1/2		AR	AR	AR	AR	AR	AR	AR	AR	AR	AR	AR	9423 789
	BOLT, Altr. Mtg., 3/8-16-4 7/8		AR	AR	AR	AR	AR	AR	AR	AR	AR	AR	AR	9428 486
	BOLT, Altr. Mtg., 3/8-16-5 1/4		AR	AR	AR	AR	AR	AR	AR	AR	AR	AR	AR	9422 790
	NUT, 3/8-16-9/16		AR	AR	AR	AR	AR	AR	AR	AR	AR	AR	AR	9417 668
8-28-5	PULLEY, Altr., 2.50" Single Groove													
	Pulley		1	1	1	1	1	1	1	1	1	1	1	2444 478
	2.75" Double Groove Pulley		1	1	1	1	1	1	1	1	1	1	1	3656 571
8-28-14	SPACER, Alternator, w/318 and													
	360 Eng., w/A/Cond.	8	1	1	1	1	1	—	—	—	—	—	—	6029 381
	w/400 and 440 Eng., w/o													
	A/Cond.	8	—	—	—	1	1	1	1	1	1	1	—	6029 381
	w/A/Cond., w/400 and 440 Eng.	8	—	—	—	1	1	1	1	1	1	1	—	6029 507
		8	—	—	—	—	—	—	—	—	—	—	1	6029 507
	w/85 Amp. L/N Altr.,													
	except 400 and 440 Eng.	8	—	—	—	—	—	1	1	—	—	—	—	6029 697
	w/360 Eng., w/A/Cond.	8	—	—	—	—	—	1	1	—	—	—	—	6029 381
	Altr. Adj. Strap to Water													
	Pump Hsg., w/400 and 440													
	Eng., w/o A/Cond.	8	—	—	—	1	1	1	1	1	1	1	—	2206 450
8-28-15	STRAP, Altr. Adj., w/Heater													
	Hose Shield	6	1	—	1	1	1	—	—	—	—	—	—	3512 553
	w/o Air Cond., w/318 and 360													
	Eng.	8	1	1	1	1	1	—	—	—	—	—	—	3512 498
	w/o Air Cond., w/400 and 440													
	Eng.	8	—	—	—	1	1	1	1	1	1	1	—	2951 018
	w/o Air Cond., w/360													
	Eng.	8	—	—	—	—	—	1	1	—	—	—	—	3512 498
8-28-32	SUPPORT, Altr. Adj. Strap,													
	to Intake Manifold, w/85 Amp.													
	L/N Altr., w/400 Eng.	8	—	—	—	1	1	1	1	—	—	—	—	3769 901
	to Intake Manifold, w/86 Amp.													
	Motorola Altr., w/400 Eng.	8	—	—	—	1	1	1	1	—	—	—	—	3769 901
	to Intake Manifold, w/85 Amp.													
	L/N Altr., w/440 Eng.	8	—	—	—	—	—	1	1	—	—	—	—	3769 901
	to Intake Manifold, w/86 Amp.													
	Motorola Altr., w/440 Eng.	8	—	—	—	—	—	1	1	—	—	—	—	3769 901

CARLINES: J - Challenger, B - Barracuda, V - Valiant, L - Dart, R - Satellite, W - Coronet - Charger, P - Plymouth, D - Dodge, C - Chrysler, Y - Imperial

AR Indicates use as required. Numerals in parentheses ( ) refer to notes. Printed in U.S.A.

# Indicates parts not listed in any previous parts book. ★ Indicates change or addition. November, 1974

CODE	PART NAME	ENG. TYPE OR CU. IN	V	B J	L	R	W	P	D	C (L M)	C (P)	C (H S)	Y	PART NUMBER
8-28-35	BLOCK, Altr. Mtg., w/A/Cond., w/400 Eng.	8	—	—	—	1	1	1	1	1	—	—	—	2951 296
8-28-36	BRACKET, Altr. and Coil Mtg.	6	1	—	1	1	1	—	—	—	—	—	—	3671 680
	Altr. Mtg., w/o A/Cond., except 400 and 440 Eng.	8	1	1	1	1	1	1	1	—	—	—	—	2951 834
	w/85 Amp. L/N Altr. except 400 and 440 Eng.	8	—	—	—	1	1	1	1	—	—	—	—	3751 677
	w/86 Amp. Motorola Altr., except 400 and 440 Eng.	8	—	—	—	1	1	1	1	—	—	—	—	3751 677
	w/85 Amp. L/N Altr., w/400 Eng Rear	8	—	—	—	1	1	1	1	—	—	—	—	3751 823
	w/86 Amp. Motorola Altr., w/400 Eng. Rr.	8	—	—	—	1	1	1	1	—	—	—	—	3751 823
	w/85 Amp. L/N Altr., w/440 Eng. Rear	8	—	—	—	—	—	1	1	—	—	—	—	3751 823
	w/86 Amp. Motorola Altr., w/440 Eng. Rr.	8	—	—	—	—	—	1	1	—	—	—	—	3751 823
	w/A/Cond., w/400 and 440 Eng.	8	—	—	—	1	1	1	1	1	1	1	1	3769 936
	w/o A/Cond., w/400 and 440 Eng.	8	—	—	—	1	1	1	1	1	1	1	—	2951 640
	Altr. Adj., w/A/Cond., except 400 and 440 Eng.	8	1	1	1	1	1	1	1	—	—	—	—	2951 868
	w/85 Amp. L/N Altr., Except 400 and 440 Eng.	8	—	—	—	1	1	1	1	—	—	—	—	3751 678
	w/86 Amp. Motorola Altr., except 400 and 440 Eng.	8	—	—	—	1	1	1	1	—	—	—	—	3751 678
	w/A/Cond., w/400 and 440 Eng.	8	—	—	—	1	1	1	1	1	1	1	—	2951 746
	Alt. Mtg. & Adj. w/85 Amp. L/N Altr., w/400 Eng. Frt.		—	—	—	1	1	1	1	—	—	—	—	3751 824
	w/86 Amp. Motorola Altr., w/400 Eng. Frt.	8	—	—	—	1	1	1	1	—	—	—	—	3751 824
	w/85 Amp. L/N Altr., w/440 Eng Frt.	8	—	—	—	—	—	1	1	—	—	—	—	3751 822
	w/86 Amp. Motorola Altr., w/440 Eng. Frt.	8	—	—	—	—	—	1	1	—	—	—	—	3751 822
8-28-38	SPACER, Altr. to Cyl. Head, w/o A/Cond., w/318 and 360 Eng.	8	1	1	1	1	1	—	—	—	—	—	—	6029 592
	w/A/Cond., w/440 Eng.,	8	—	—	—	1	1	1	1	1	1	1	—	6029 591
	w/o A/Cond., Except 400 and 440 Eng.	8	—	—	—	—	—	1	1	—	—	—	—	6029 592
	w/o A/Cond., w/400 and 440 Eng.	8	—	—	—	1	1	1	1	1	1	1	—	6029 380
	Altr. Mtg. Block, w/A/Cond., w/400 Eng.	8	—	—	—	1	1	1	1	1	—	—	—	6029 589
	Altr. Mtg. Brkt., Rr. Altr. Ear, w/o A/Cond., w/318 and 360 Eng.	8	1	1	1	1	1	—	—	—	—	—	—	6029 507
	w/o A/Cond., Except 400 and 440 Eng.	8	—	—	—	—	—	1	1	—	—	—	—	6029 507
8-28-74	REGULATOR, Altr. Voltage, except 100 Amp. Altr.		1	1	1	1	1	1	1	1	1	1	1	3755 970
	used w/100 Amp. Altr.		1	1	1	1	1	1	1	1	1	1	1	3755 850
	SCREW and WASHER, Mtg., (1/4-20 x 5/8)		2	2	2	2	2	2	2	2	2	2	2	6029 513
	SCREW, Mtg., w/65 Amp. L/N Altr., (1/4-20 x 3/4)		—	—	—	2	2	2	2	—	—	—	—	6022 834
8-28-77	RELAY, Altr. Field, w/86 Amp. Motorola Altr.		1	1	1	1	1	1	1	1	1	1	1	# 3874 165

NOTES

CARLINES J - Challenger, B - Barracuda, V - Valiant, L - Dart, R - Satellite, W - Coronet - Charger, P - Plymouth, D - Dodge, C - Chrysler, Y - Imperial

AR Indicates use as required.

Numerals in parentheses ( ) refer to notes.

# Indicates parts not listed in any previous parts book.

★ Indicates change or addition.

Printed in U.S.A.
November, 1974

For Model Application See Code 8-28-3.

ALTERNATOR COMPONENT PARTS

CODE	REMARKS	Alternator Assemblies 3755 191, 3755 192		3755 403, 3755 404, 3755 406		
8-29-17	**BRUSH and WASHER PACKAGE**	3420 893		3420 893		
8-29-42	BRUSH HOLDER (Axial)	2095 038		2095 038		
	BRUSH HOLDER (Radial)	3438 159		3438 159		
8-29-97	ROTOR	3755 185		3755 356		
8-29-98	STATOR	3755 461		3438 754		
8-29-99	RETAINER, WASHER and SLIP RING PACKAGE, Rotor Grease	3744 889		3744 889		
8-29-129	CAPACITOR, STUD and INSULATOR PACKAGE	3620 793		3620 793		
8-29-132	END SHIELD, Rectifier	3755 183		3755 362		
8-29-133	BEARING, Rectifier End Shield	3755 184		3755 184		
8-29-135	HEAT SINK, Rectifier, Positive	3755 115		3438 727		
	HEAT SINK, Rectifier, Negative	3755 114		3438 721		
8-29-137	BATTERY TERMINAL PACKAGE, Positive Heat Sink	3620 794		3620 794		
8-29-153	END SHIELD, Drive	3656 443		3656 443		
8-29-154	BEARING, Drive End Shield	3656 444		3656 444		
8-29-155	PLATE, Drive End Shield Brg. Ret.	2095 012		2095 012		
8-29-208	SCREW, Frame (3 Req.)	3656 470		3656 470		

For Model Application See Code 8-28-3

CODE	REMARKS	Alternator Assemblies 3755 411	3755 413	3755 585		
8-29-17	BRUSH and WASHER PACKAGE	3420 893	3420 893	———		
	BRUSH and INSULATOR PACKAGE	———	———	3838 079		
8-29-42	BRUSH HOLDER (Axial)	2095 038	2095 038	———		
	BRUSH HOLDER (Radial)	3438 159	3438 159	———		
	BRUSH HOLDER	———	———	3755 773		
8-29-97	ROTOR	3755 356	3755 357	3755 784		
8-29-98	STATOR	3438 754	3438 768	3879 401		
8-29-99	RETAINER, WASHER and SLIP RING PACKAGE, Rotor Grease	3744 889	3744 889	———		
	SLIP RING and GREASE RETAINER PACKAGE	———	———	3838 080		
8-29-129	CAPACITOR, STUD and INSULATOR PACKAGE	3620 793	3620 793	3838 078		
8-29-132	END SHIELD, Rectifier	3755 362	3755 362	3755 612		
8-29-133	BEARING, Rectifier End Shield	3755 184	3755 184	3838 074		
8-29-135	HEAT SINK, Rectifier, Positive	3438 727	3438 727	3755 631		
	HEAT SINK, Rectifier, Negative	3438 721	3438 721	3755 627		
8-29-137	BATTERY TERMINAL PACKAGE, Positive, Heat Sink	3620 794	3620 794	3838 076		
8-29-153	END SHIELD, Drive	3656 443	3656 443	3755 596		
8-29-154	BEARING, Drive End Shield	3656 444	3656 444	3755 951		
8-29-155	PLATE, Drive End Shield Brg. Ret.	2095 012	2095 012	———		
8-29-156	RETAINER, Drive End Shield Brg.	———	———	3755 737		
8-29-208	SCREW, Frame (3 Req.)	3656 470	3656 470	———		
	SCREW, Frame (4 Req.)	———	———	6030 547		
8-29-209	ISOLATOR, Drive End Shield	———	———	3838 081		

NOTES

CARLINES J - Challenger, B - Barracuda, V - Valiant, L - Dart, R - Satellite, W - Coronet - Charger, P - Plymouth, D - Dodge, C - Chrysler, Y - Imperial

AR Indicates use as required.

# Indicates parts not listed in any previous parts book.

Numerals in parentheses ( ) refer to notes.

★ Indicates change or addition.

Printed in U.S.A.
November, 1974

CODE	PART NAME	ENG. TYPE OR CU. IN	V	B J	L	R	W	P	D	C (L M)	C (P)	C (H S)	Y	PART NUMBER
8-31-8	**HOUSING, Brake Warning Ind. Lamp, w/Rallye Inst. Panel**	8	—	1	—	—	—	—	—	—	—	—	—	2984 207
8-31-10	SWITCH, Brake System Ind. Lamp		1	—	1	—	—	—	—	—	—	—	—	2822 023
	w/Disc Brakes		—	1	—	1	1	1	1	1	1	1	1	3488 449
	SWITCH, Parking Brake Ind. Lamp		1	—	1	—	—	—	—	—	—	—	—	2889 053
			—	1	—	1	1	1	1	1	1	1	—	2291 852
8-31-11	BRACKET, Brake Ind. Lamp Switch Mtg.		1	—	1	—	—	—	—	—	—	—	—	2822 599
	SCREW, Mtg.		1	—	1	—	—	—	—	—	—	—	—	9415 921
	NUT and WASHER, Mtg.		1	—	1	—	—	—	—	—	—	—	—	6023 215
8-31-16	SOCKET, Brake Warning Ind. Lamp, on Printed Circuit Board		1	—	1	1	1	—	—	—	—	—	—	2496 279
	Dual Brake Warning Lamp		—	1	—	—	—	—	—	—	—	—	—	1753 632
8-31-18	CONTACT, Dual Brake Warning Lamp Socket		—	1	—	1	1	1	1	1	1	1	—	2256 966
8-32-2	**HORN PACKAGE, High Note**		1	1	1	1	1	1	1	1	1	1	1	2808 869
	Low Note		1	1	1	1	1	1	1	1	1	1	1	2808 868
	w/BRKT., R-M		—	—	—	1	—	—	—	—	—	—	—	3488 646
	DUAL HORN PACKAGE, R except R-M, P except P-P, D except D-P		1	—	1	1	1	1	1	—	—	—	—	3746 915
	w/BRKT., City Country (NYC)		1	1	1	1	1	1	1	1	1	1	1	3746 822
	HORN PACKAGE, City Country (NYC)		1	1	1	1	1	1	1	1	1	1	1	3746 824
	For Horn Button, Pad and Ring, Strg. Wheel Ornament, Cap, etc. See PTC 19-30-0.													
8-33-90	**SWITCH, Horn, w/3 Spoke Wheel**		1	—	1	—	—	—	—	—	—	—	—	3746 664
	w/Base Strg. Wheel		1	—	1	—	—	—	—	—	—	—	—	2822 126
	w/Horn Ring		—	—	—	1	1	1	1	—	—	—	—	3746 664
	w/o Horn Ring		—	—	—	1	1	1	1	1	1	1	1	3746 703
	w/2 Spoke Wheel	8	—	1	—	—	—	—	—	—	—	—	—	2822 126
	w/Tough Sport Strg. Wheel		1	—	1	1	1	—	—	—	—	—	—	2822 126
	City/Country Horn		1	1	1	1	1	1	1	1	1	1	1	3746 817
	SWITCH, Horn Rim, w/Tilt Tel. Strg. Wheel	8	—	—	—	—	—	1	1	1	1	1	1	3467 181
8-33-91	BEZEL, City and Country Horn Sw.		1	1	1	1	1	1	1	1	1	1	1	3746 818
8-33-114	CABLE, Horn Ground		—	—	—	—	—	1	1	1	1	1	1	2857 741
	Horn Jumper, City Country Horn		—	—	—	—	1	—	—	1	1	1	1	3764 967
	NUT, to Strg. Column Mtg.		—	—	—	—	—	1	1	1	1	1	1	6027 403
8-33-118	CONTACT, Horn Ring and Feed Cable	8	—	1	—	—	—	—	—	—	—	—	—	2984 051
	Strg. Wheel Horn, w/Tilt-Tel. Strg. Wheel	8	—	—	—	—	—	1	1	1	1	1	1	2996 892
8-33-119	SPRING, Horn Contact Eyelet, w/Tilt-Tel. Strg. Wheel	8	—	—	—	—	—	1	1	1	1	1	1	2996 897
8-33-121	RING and FEED CABLE, Horn Contact		1	—	1	1	1	—	—	—	—	—	—	2822 187
	RING, Horn Switch Contact		1	—	1	1	1	1	1	1	1	1	1	2947 874
8-33-164	RELAY, Horn		1	1	1	1	1	—	—	—	—	—	—	3764 532
			—	—	—	—	—	1	1	1	1	1	1	3764 643
	RELAY, City Country (NYC)		1	1	1	1	1	1	1	1	1	1	1	3837 178
8-33-168	BRACKET, Horn Relay		1	—	1	—	—	—	—	—	—	—	—	3764 775
8-34-1	**HEADLAMP, Single, Rt. Way Shift, B**		1	1	1	—	—	—	—	—	—	—	—	2898 560-1
	Single, Lt. Way Shift, B		1	1	1	—	—	—	—	—	—	—	—	2898 562-3
	Hi-Beam, J		—	1	—	1	1	1	1	1	1	1	1	3443 176-7
	Hi-Lo Beam, Rt. Way Shift, J		—	1	—	1	1	1	1	1	1	1	1	3573 784-5
	Hi-Lo Beam, Lt. Way Shift, J		—	1	—	1	1	1	1	1	1	1	1	3443 174-5
8-34-28	ADAPTER, H/Lamp, B	8	—	2	—	—	—	—	—	—	—	—	—	3573 490
	J	8	—	4	—	—	—	—	—	—	—	—	—	3573 493
	4 D. and Sta. Wgn.		—	—	—	2	2	—	—	—	—	—	—	3691 453
	2 D. and 2 D.H.T.		—	—	—	2	—	—	—	—	—	—	—	3672 292
	except 4 D. and Sta. Wgn.,		—	—	—	—	2	—	—	—	—	—	—	3442 358
8-34-29	PIN, H/Lamp Door Idler	8	—	—	—	—	—	—	—	—	—	—	2	3691 429
8-34-31	REINFORCEMENT, H/Lamp Mtg. Panel	8	—	—	—	—	—	—	—	1	1	1	1	3691 424

CARLINES: J - Challenger, B - Barracuda, V - Valiant, L - Dart, R - Satellite, W - Coronet - Charger, P - Plymouth, D - Dodge, C - Chrysler, Y - Imperial

AR Indicates use as required.

# Indicates parts not listed in any previous parts book.

Numerals in parentheses ( ) refer to notes.

★ Indicates change or addition.

Printed in U.S.A.
November, 1974

CODE	PART NAME	ENG. TYPE OR CU. IN	V	B J	L	R	W	P	D	C (L M)	C (P)	C (H S)	Y	PART NUMBER
8-34-40	BEZEL, H/Lamp, except V-P		1	—	—	—	—	—	—	—	—	—	—	3672 166-7
	V-P		1	—	—	—	—	—	—	—	—	—	—	3691 646-7
	B	8	—	1	—	—	—	—	—	—	—	—	—	3573 240-1
	J	8	—	2	—	—	—	—	—	—	—	—	—	3573 242-3
	except L-P		—	—	1	—	—	—	—	—	—	—	—	3672 188-9
	L-P		—	—	1	—	—	—	—	—	—	—	—	3691 650-1
	4 D. and Sta. Wgn.		—	—	—	1	—	—	—	—	—	—	—	3691 444-5
	except 4 D. and Sta. Wgn.		—	—	—	1	—	—	—	—	—	—	—	3672 210-1
	4 D. and Sta. Wgn.		—	—	—	—	1	—	—	—	—	—	—	3691 282-3
		8	—	—	—	—	—	1	—	—	—	—	—	3691 154-5
		8	—	—	—	—	—	—	1	—	—	—	—	3691 168-9
		8	—	—	—	—	—	—	—	1	1	1	—	3691 212-3
	PANEL, H/Lamp Mtg., J	8	—	1	—	—	—	—	—	—	—	—	—	3574 132
		8	—	—	—	—	—	—	—	1	—	—	—	3691 209
		8	—	—	—	—	—	—	—	—	1	1	—	3691 214
		8	—	—	—	—	—	—	—	3758220	—	—	1	3691 426
	PLATE, H/Lamp Mtg.		—	—	—	—	—	2	2	—	—	—	—	3691 105
	DOOR, H/Lamp	8	—	—	—	—	—	—	—	—	—	—	1	3691 430-1
	BUSHING, H/Lamp Dr. Drive End	8	—	—	—	—	—	—	—	—	—	—	2	6030 477
	BUSHING, H/Lamp Dr. Idler End	8	—	—	—	—	—	—	—	—	—	—	2	6030 264
8-34-45	BAR, H/Lamp Door Torsion,	8	—	—	—	—	—	—	—	—	—	—	1	2998 888
8-34-50	CRANK, H/Lamp Door	8	—	—	—	—	—	—	—	—	—	—	2	2998 890
8-34-52	BUMPER, H/Lamp Door Hsg., Inboard	8	—	—	—	—	—	—	—	—	—	—	4	3574 200
	H/Lamp Door, Upper	8	—	—	—	—	—	—	—	—	—	—	4	3574 200
8-34-58	DECAL, H/Lamp Door	8	—	—	—	—	—	—	—	—	—	—	1	2998 799
8-34-60	SHIELD, H/Lamp, except 4 D. and Sta. Wgn.		—	—	—	—	1	—	—	—	—	—	—	3672 324-5
8-34-63	RETAINER, H/Lamp Shield, except 4 D. and Sta. Wgn.		—	—	—	—	1	—	—	—	—	—	—	3672 650-1
8-34-128	RING, H/Lamp Door Actuator Pin Ret.	8	—	—	—	—	—	—	—	—	—	—	2	1922 183
8-34-175	SEALED BEAM UNIT, H/Lamp, B		2	2	2	—	—	—	—	—	—	—	—	152 291
	Exp., B		2	2	2	—	—	—	—	—	—	—	—	152 338
	High Beam, J		—	2	—	2	2	2	2	2	2	2	2	152 285
	High and Low Beam, J		—	2	—	2	2	2	2	2	2	2	2	152 600
	High and Low Beam, Exp., J		—	2	—	2	2	2	2	2	2	2	2	152 287
8-34-176	SEAT and SCREW, H/Lamp Sealed Beam Unit, B, Up to 1-17-74		1	1	1	—	—	—	—	—	—	—	—	2898 568-9
	B, After 1-17-74		1	1	1	—	—	—	—	—	—	—	—	# 3781 424-5
	High Beam, J		—	1	—	1	1	—	—	—	—	—	—	3443 120-1
	High and Low Beam, J		—	1	—	1	1	—	—	—	—	—	—	3443 124-5
	High Beam	8	—	—	—	—	—	1	1	1	1	1	1	3691 514-5
	High and Low Beam	8	—	—	—	—	—	1	1	1	1	1	1	3691 516-7
8-34-177	SPRING, Sealed Beam Unit Mtg. Seat Adj., B		2	2	2	—	—	—	—	—	—	—	—	2445 845
	J		—	4	—	4	4	4	4	4	4	4	4	2445 845
8-34-178	SCREW and NUT, H/Lamp Adj., B		4	4	4	—	—	—	—	—	—	—	—	3574 085
	J		—	8	—	8	8	8	8	—	—	—	—	3574 085
		8	—	—	—	—	—	—	—	8	8	8	8	3691 599
8-34-180	RING and LUG, Sealed Beam Unit Ret. B 3 Tabs		2	2	2	—	—	—	—	—	—	—	—	2426 312
	J 3 Tabs		—	4	—	4	4	4	4	4	4	4	4	2449 525
8-34-280	MOTOR, Concealed H/Lamp	8	—	—	—	—	—	—	—	—	—	—	1	3431 438
	SCREW, Mtg.	8	—	—	—	—	—	—	—	—	—	—	3	6028 654
8-34-282	RELAY, H/Lamp Cover	8	—	—	—	—	—	—	—	—	—	—	1	3764 576
8-34-291	BRACKET, H/Lamp Door Motor Mtg.	8	—	—	—	—	—	—	—	—	—	—	2	3758228 3691 435
	Rad. Grille H/Lp. Dr. Mtr. Mtg.	8	—	—	—	—	—	—	—	—	—	—	1	3672 868
8-34-296	SPRING, H/Lamp Door Ret., D-P	8	—	—	—	—	—	—	2	—	—	—	2	3574 075
		8	—	—	—	—	—	—	—	—	—	—	2	3672 875

CARLINES: J - Challenger, B - Barracuda, V - Valiant, L - Dart, R - Satellite, W - Coronet - Charger, P - Plymouth, D - Dodge, C - Chrysler, Y - Imperial

AR Indicates use as required. Numerals in parentheses ( ) refer to notes. Printed in U.S.A.

# Indicates parts not listed in any previous parts book. ★ Indicates change or addition. November, 1974

CODE	PART NAME	ENG. TYPE OR CU. IN	V	B J	L	R	W	P	D	C (L M)	C (P)	C (H S)	Y	PART NUMBER
8-34-362	HOUSING, H/Lamp Door	8	—	—	—	—	—	—	—	—	—	—	2	3691 428
8-35-4	**COIL, Ignition**		1	1	1	1	1	1	1	1	1	1	1	2495 531
	CONED WASHER, Mtg., (1/4), w/440 Eng.	8	—	—	—	2	2	—	—	—	—	—	—	6022 181
8-35-5	CONTROL UNIT, Elect. Ignition,		1	1	1	1	1	1	1	1	1	1	1	# 3874 020
	SCREW and WASHER, Mtg., (1/4-20-5/8)		2	2	2	2	2	2	2	2	2	2	2	6029 513
	NUT, Connector-Push-On		1	1	1	1	1	1	1	1	1	1	1	6027 499
8-35-22	RESISTOR, Ignition Coil Primary		1	1	1	1	1	1	1	1	1	1	1	3656 199
8-35-25	CAPACITOR, Ignition Coil Batt. Terminal, w/318 and 360 Eng.	8	1	—	1	1	1	1	1	1	—	—	—	3501 598
8-35-41	BRACKET, Ignition Coil Mtg., on Coil	6	1	—	1	1	1	—	—	—	—	—	—	1688 207
	Mtg., on Coil, except 400 and 440 Eng.	8	1	1	1	1	1	1	1	1	—	—	—	2642 670
	Mtg., on Coil, w/400 and 440 Eng.	8	—	—	—	1	1	1	1	1	1	1	1	1688 207
8-35-52	SCREW and WASHER, Coil Mtg., (5/16-18 x 5/8)		1	1	1	1	—	1	1	1	1	1	1	6026 919
	SCREW, Mtg. Brkt. to Coil, (10-32 x 1 1/2)		1	1	1	1	1	1	1	1	1	1	1	132 930
	SCREW and WASHER, Ballast Resistor Mtg. (1/4-20-1 1/4)		1	1	1	1	1	1	1	1	1	1	1	6029 621
8-35-59	SWITCH, Ignition and Starter w/o Tilt-Tel Strg. Wheel	8	1	1	1	1	1	—	—	3749292				2947 486
	w/Tilt-Tel Strg. Wheel	8	—	—	—	—	—	1	1	1	1	1	1	2947 486
	SWITCH, Ignition Key Buzzer w/o Tilt-Tel Strg. Wheel	8	1	1	1	1	1	—	—	—	3747116			2947 488
	w/Tilt-Tel Strg. Wheel	8	—	—	—	—	—	1	1	1	1	1	1	2947 488
	SCREW		3	3	3	3	3	3	3	3	3	3	3	3488 431
8-35-65	BRACKET, Elect. Ignition Control Mtg., to Dash	8	—	1	—	—	—	—	—	—	—	—	—	6028 281
8-35-67	CLIP, Switch Ret., w/Tilt-Tel. Strg. Wheel	8	—	—	—	—	—	1	1	1	1	1	1	3513 750
8-36-1	**CABLE SET, Ignition**	6	1	—	1	1	1	—	—	—	—	—	—	3467 367
	except 400 and 440 Eng.	8	1	1	1	1	1	1	1	1	—	—	—	3780 744
	w/400 and 440 Eng.	8	—	—	—	1	1	1	1	1	1	1	1	3780 743
	CABLE, Spark Plug, No. 1 and 6 Cable	6	2	—	2	2	2	—	—	—	—	—	—	3744 973
	except No. 1 and 6 Cable	6	4	—	4	4	4	—	—	—	—	—	—	3755 432
	except 400 and 440 Eng., No. 1-2-3-4 Cable	8	4	4	4	4	4	4	4	4	—	—	—	3755 428
	except 400 and 440 Eng., No. 5-6-8 Cable	8	3	3	3	3	3	3	3	3	—	—	—	3656 495
	except 400 and 440 Eng., No. 7 Cable	8	1	1	1	1	1	1	1	1	—	—	—	3656 655
	w/400 and 440 Eng., No. 1-3 Cable	8	—	—	—	2	2	2	2	2	2	2	2	3656 503
	w/400 and 440 Eng., No. 2-4 Cable	8	—	—	—	2	2	2	2	2	2	2	2	3656 697
	w/400 and 440 Eng., No. 5 Cable	8	—	—	—	1	1	1	1	1	1	1	1	3656 504
	w/400 and 440 Eng., No. 6 Cable	8	—	—	—	1	1	1	1	1	1	1	1	3755 005
	w/400 and 440 Eng., No. 7 Cable	8	—	—	—	1	1	1	1	1	1	1	1	3656 505
	w/400 and 440 Eng., No. 7 Cable	8	—	—	—	1	1	—	—	—	—	—	—	3755 005
	w/400 and 440 Eng., No. 8 Cable	8	—	—	—	—	—	1	1	1	1	1	1	3656 511
8-36-4	BRACKET, Spark Plug Wire, w/400 and 440 Eng. Frt. Rt. Inter	8	—	—	—	1	1	1	1	1	1	1	1	3656 696
	w/400 and 440 Eng., to Cyl. Head Cover Lt.	8	—	—	—	1	1	1	1	1	1	1	1	3698 911
	w/400 and 440 Eng. Frt. Rt.	8	—	—	—	1	1	—	—	—	—	—	—	3751 082
	w/400 Eng. Frt. Rt.		8	—	—	—	—	1	1	1	—	—	—	3698 653
	w/400 and 440 Eng. Frt. Lt.	8	—	—	—	1	1	1	1	1	1	1	1	3698 653
														3512 724

CARLINES J - Challenger, B - Barracuda, V - Valiant, L - Dart, R - Satellite, W - Coronet - Charger, P - Plymouth, D - Dodge, C - Chrysler, Y - Imperial

AR Indicates use as required.

Numerals in parentheses ( ) refer to notes.

Printed in U.S.A.

# Indicates parts not listed in any previous parts book.

★ Indicates change or addition.

November, 1974

CODE	PART NAME	ENG. TYPE OR CU. IN	V	B J	L	R	W	P	D	C (L M)	C (P)	C (H S)	Y	PART NUMBER
8-36-4	BRACKET Cont'd.													
	w/440 Eng., Rr. Lt.	8	—	—	—	—	—	1	1	1	1	1	1	3698 498
8-36-14	SEPARATOR, Spark Plug Cable,													
	w/318 and 360 Eng.	8	1	1	1	1	1	—	—	—	—	—	—	1841 499
	except 400 and 440 Eng., Four Wire Rr.	8	2	2	2	2	2	2	2	2	—	—	—	2875 604
	except 400 and 440 Eng., Two Wire Rr.	8	2	2	2	2	2	2	2	2	—	—	—	2875 605
	w/400 and 440 Eng., Four Wire	8	—	—	—	5	5	5	5	5	5	5	5	2875 719
	w/360 Eng.	8	—	—	—	—	—	1	1	1	—	—	—	1841 499
8-36-49	CABLE, Ignition Coil Secondary	6	1	—	1	1	1	—	—	—	—	—	—	3656 514
	except 400 and 440 Eng.	8	1	1	1	1	1	1	1	1	—	—	—	3656 515
	w/400 and 440 Eng.	8	—	—	—	1	1	1	1	1	1	1	1	3656 513
8-36-92	GROMMET, Spark Plug Cable Positioning, w/400 and 440 Eng.	8	—	—	—	1	1	2	2	2	2	2	2	2098 980
8-36-96	NIPPLE, Coil Secondary Cable, Coil End		1	1	1	1	1	1	1	1	1	1	1	2095 768
	Dist. End		1	1	1	1	1	1	1	1	1	1	1	2095 766
	Spark Plug Cable, Dist. End		AR	AR	AR	AR	AR	AR	AR	AR	AR	AR	AR	2095 766
8-36-114	SPARK PLUG, Champion N14Y	6	6	—	6	6	6	—	—	—	—	—	—	2098 381
	Chrysler Parts Brand No. 66P	6	6	—	6	6	6	—	—	—	—	—	—	3420 751
	Champion N13Y, w/318 Eng.	8	8	8	8	8	8	—	—	—	—	—	—	3438 413
	Chrysler Parts Brand No. 65P	8	8	8	8	8	8	—	—	—	—	—	—	3420 758
	Champion N-12Y, w/360 Eng.	8	8	8	8	8	8	8	8	—	—	—	—	2098 360
	Champion J-11Y, w/400 w/H/Perf., and 440 Eng.	8	—	—	—	8	8	8	8	8	8	8	8	2642 913
	Chrysler Parts Brand No. 34P	8	—	—	—	8	8	8	8	8	8	8	8	3420 752
	Champion N13Y, w/318 Eng., Export	8	—	—	—	—	—	—	8	—	—	—	—	3438 413
	Chrysler Parts Brand No. 65P	8	—	—	—	—	—	—	8	—	—	—	—	3420 758
	Champion J-13Y, w/400 Eng., w/o H/Perf.	8	—	—	—	8	8	8	8	8	—	—	—	2642 475
	Chrysler Parts Brand No. 35P	8	—	—	—	8	8	8	8	8	—	—	—	3420 750
8-36-115	GASKET, Spark Plug, Thread-on	8	AR	AR	AR	AR	AR	AR	AR	AR	AR	AR	AR	2642 919
8-36-117	COVER, Spark Plug	6	6	—	6	6	6	—	—	—	—	—	—	2098 981
8-36-124	HEAT SHIELD, Spark Plug	8	1	—	1	—	—	—	—	—	—	—	—	3671 989
	w/400 and 440 Eng. Rt.	8	—	—	—	1	1	—	—	—	—	—	—	2951 347
	Lt.	8	—	—	—	1	1	—	—	—	—	—	—	3614 991
	w/400 and 440 Eng.	8	—	—	—	—	—	2	2	2	2	2	2	2951 347
8-36-136	TUBE, Spark Plug	6	6	—	6	6	6	—	—	—	—	—	—	2121 245
8-36-137	SEAL, Spark Plug Tube	6	6	—	6	6	6	—	—	—	—	—	—	1947 708
8-37-1	**AMMETER**		1	—	1	—	—	—	—	—	—	—	—	3592 196
	w/o Rallye Inst. Panel	8	—	1	—	—	—	—	—	—	—	—	—	2984 121
	w/Rallye Inst. Panel	8	—	1	—	—	—	—	—	—	—	—	—	2984 179
	w/o Rallye Inst. Panel		—	—	—	1	1	—	—	—	—	—	—	2985 396
	w/Rallye Inst. Panel, w/o Electric Clock		—	—	—	1	1	—	—	—	—	—	—	2985 219
	w/Rallye Inst. Panel, w/Electric Clock		—	—	—	1	1	—	—	—	—	—	—	2985 221
	w/o Rallye Inst. Panel, w/Certified Speedometer		—	—	—	1	1	—	—	—	—	—	—	3592 133
	w/o Gage Alert	8	—	—	—	—	—	1	1	—	—	—	—	3592 600
	w/Gage Alert	8	—	—	—	—	—	1	1	—	—	—	—	3592 637
	w/o Gage Alert	8	—	—	—	—	—	—	—	1	1	1	—	3592 450
	w/Gage Alert	8	—	—	—	—	—	—	—	1	1	1	1	3592 645
8-37-2	REGULATOR or LIMITER, Inst. Voltage		1	—	1	—	—	1	1	1	1	1	1	2258 413
		8	—	1	—	—	—	—	—	—	—	—	—	2209 216
	w/o Rallye Inst. Panel		—	—	—	1	1	—	—	—	—	—	—	2258 413
	w/Rallye Inst. Panel		—	—	—	1	1	—	—	—	—	—	—	2985 707
8-37-5	SHUNT, Ammeter, w/o Rallye Inst. Panel, w/Cert. Speed		—	—	—	1	1	—	—	—	—	—	—	2238 053
8-37-7	WIRING, Voltage Regulator to Gauges, w/Rallye Inst. Panel, w/o Electric Clock		—	—	—	1	1	—	—	—	—	—	—	3513 283

CARLINES: J - Challenger, B - Barracuda, V - Valiant, L - Dart, R - Satellite, W - Coronet - Charger, P - Plymouth, D - Dodge, C - Chrysler, Y - Imperial

AR Indicates use as required. Numerals in parentheses ( ) refer to notes. Printed in U.S.A.

# Indicates parts not listed in any previous parts book. ★ Indicates change or addition. November, 1974

CODE	PART NAME	ENG. TYPE OR CU. IN	V	B J	L	R	W	P	D	C (L M)	C (P)	C (H S)	Y	PART NUMBER
8-37-7	WIRING Cont'd.													
	CABLE, Voltage Regulator, to Fuel and Temp. Gage, w/o Rallye and Temp. Gauge, w/o Rallye	8	—	1	—	—	—	—	—	—	—	—	—	2822 012
	CABLE and SOCKET, Oil and Temp. Gage Lamp	8	—	—	—	—	—	1	1	—	—	—	—	3592 737
	WIRING, Clock Illumination	8	—	—	—	—	—	1	1	1	1	1	—	3764 799
8-37-14	CLOCK, w/o Rallye Inst. Panel	8	—	1	—	—	—	—	—	—	—	—	—	2984 951
	w/Rallye Inst. Panel	8	—	1	—	—	—	—	—	—	—	—	—	2985 947
	w/Rallye Inst. Panel		—	—	—	1	1	—	—	—	—	—	—	2985 226
	w/o Rallye Inst. Panel		—	—	—	1	1	—	—	—	—	—	—	2985 416
	Conventional	8	—	—	—	—	—	1	1	—	—	—	—	3592 701
	Elect. Digital Clock	8	—	—	—	—	—	1	1	—	—	—	—	3592 616
	Conventional	8	—	—	—	—	—	—	—	1	1	1	—	3592 702
	Electronic Digital Clock	8	—	—	—	—	—	—	—	1	1	1	1	3592 698
8-37-15	LAMP, Switch Title, w/Inst. Panel Floor Lamp Time Delay	8	—	1	—	—	—	—	—	—	—	—	—	3488 930
	except Sta. Wgn. w/Rr. Window Defogger		—	—	—	1	1	—	—	—	—	—	—	3488 927
	Rr. Heated Backlite Ind.		—	—	—	1	1	—	—	—	—	—	—	3746 673
	Rr. Heated Backlite		—	—	—	1	1	—	—	—	—	—	—	3488 927
	Tail Gate Window Lift, Sta. Wgn.		—	—	—	1	1	—	—	—	—	—	—	3488 927
	Tailgate Door Unlock Sta. Wgn.		—	—	—	1	1	—	—	—	—	—	—	3488 927
	Tailgate Ajar Ind., Sta. Wgn.		—	—	—	1	1	—	—	—	—	—	—	3746 001
	Inst. Panel Cigar Lighter	8	—	—	—	—	—	1	1	—	—	—	—	3746 829
	Inst. Panel Cigar Lighter	8	—	—	—	—	—	—	—	1	1	1	1	3746 617
8-37-57	BRACKET, Seat Belt Interlock and Buzzer Mtg.		1	—	1	—	—	—	—	—	—	—	—	3746 715
	Seat Belt Interlock, Buzzer and Flasher Mtg.	8	—	—	—	—	—	1	1	1	1	1	1	3746 663
8-37-58	NUT, Ammeter Wiring, w/60 Amp. Alternator		1	—	1	1	1	—	—	—	—	—	—	3588 997
8-37-59	WIRING, Rr. Heated Backlite, (Inst. Panel)		1	—	1	—	—	—	—	—	—	—	—	3764 708
	except Sta. Wgn., (Inst. Panel)		—	—	—	1	1	—	—	—	—	—	—	3764 752
8-37-60	FUSE HOLDER, Rr. Heated Backlite, Wiring		—	—	—	1	1	—	—	—	—	—	—	3588 889
8-37-61	TUBING, Heat Shrinkable, w/Rr. Heated Backlite		1	—	1	1	1	—	—	—	—	—	—	3588 998
8-37-63	SWITCH and LAMP, Rr. Heated Backlite		1	—	1	—	—	—	—	—	—	—	—	3488 901
	SWITCH, Rr. Heated Backlite		—	—	—	1	1	—	—	—	—	—	—	3746 670
8-37-64	BEZEL, Rr. Heated Backlite Switch		1	—	1	—	—	—	—	—	—	—	—	3488 903
			—	—	—	1	1	—	—	—	—	—	—	3746 658
8-37-65	INSULATOR, Rr. Heated Backlite Wiring, Fastback		1	—	1	—	—	—	—	—	—	—	—	3588 882
8-37-66	LOCATOR, Rr. Heated Backlite Wiring Clip and Insulator, Fastback		1	—	1	—	—	—	—	—	—	—	—	3588 979
8-37-67	COVER, Rr. Heated Backlite Bus Bar, 4 D		—	—	—	1	1	—	—	—	—	—	—	3767 443
8-37-68	KNOB, Rr. Heated Backlite Switch, Fastback		1	—	1	—	—	—	—	—	—	—	—	2426 764
8-37-69	BUZZER, Key in Warning and Seat Belt System		1	1	1	—	—	1	1	1	1	1	1	3780 458
	Key in Warning Seat Belt and H/Lamp on		—	—	—	1	1	—	—	—	—	—	—	3764 784
8-37-70	RELAY and BRACKET, Rr. Heated Backlite		1	—	1	1	1	—	—	—	—	—	—	3746 691

CODE	PART NAME	ENG. TYPE OR CU. IN	V	B J	L	R	W	P	D	C (L M)	C (P)	C (H S)	Y	PART NUMBER
8-37-70	RELAY and BRACKET Cont'd.													
	Screw, Rr. Heated Backlite Mtg.		1	—	1	1	1	—	—	—	—	—	—	6030 015
8-37-75	LAMP, Reverse Indicator													
	w/4 Speed Manual Trans.		1	—	1	—	—	—	—	—	—	—	—	3488 654
	w/4 Speed Manual Trans.		—	1	—	1	1	—	—	—	—	—	—	3488 497
	Fasten Seat Belts	8	—	1	—	—	—	—	—	—	—	—	—	3592 269
	Seat Belt Warning		—	—	—	1	1	—	—	—	—	—	—	3488 673
	Seat Belt Warning w/Tough Sports Strg. Wheel		—	—	—	1	1	—	—	—	—	—	—	3488 837
8-37-88	SOCKET, Low Oil Pressure Ind.													
	Lamp		1	—	1	—	—	—	—	—	—	—	—	2496 279
	w/o Rallye Inst. Panel		—	—	—	1	1	—	—	—	—	—	—	2496 279
	Revere Ind. Lamp		1	1	1	1	1	—	—	—	—	—	—	2983 580
	Seat Belt Warning Lamp		—	—	—	1	1	—	—	—	—	—	—	2983 581
	Lock Door Ind. Lamp	8	—	—	—	—	—	1	1	—	—	—	—	2097 003
	Low Fuel Ind., Lamp	8	—	—	—	—	—	1	1	—	—	—	—	2097 003
		8	—	—	—	—	—	—	—	1	1	1	—	2496 279
	Switch Title Lamp Wiring	8	—	—	—	—	—	1	1	—	—	—	—	3746 729
8-37-90	BEZEL, Speed and Inst. Cluster, up to approx. 1-22-74		1	—	1	—	—	—	—	—	—	—	—	3592 670
	after approx. 1-22-74		1	—	1	—	—	—	—	—	—	—	—	3592 959
	w/o Rallye Inst. Panel	8	—	1	—	—	—	—	—	—	—	—	—	3592 744
	w/Rallye Inst. Panel	8	—	1	—	—	—	—	—	—	—	—	—	3592 266
	w/Rallye Inst. Panel, w/o Radio		—	—	—	1	1	—	—	—	—	—	—	3592 685
	w/Rallye Inst. Panel, w/Radio		—	—	—	1	1	—	—	—	—	—	—	3592 686
	w/o Radio R-K, R-T, R-L, W-K, W-T, W-L		—	—	—	1	1	—	—	—	—	—	—	3592 350
	w/Radio R-K, R-T, R-L, W-K, W-T, W-L		—	—	—	1	1	—	—	—	—	—	—	3592 351
	w/o Radio R-H, W-H		—	—	—	1	1	—	—	—	—	—	—	3592 352
	w/Radio R-H, W-H		—	—	—	1	1	—	—	—	—	—	—	3592 353
	w/CONTROLS, except Sta. Wgn., w/o Radio, P-K, P-T, P-L, P-M, D-K, D-T, D-L, D-M	8	—	—	—	—	—	1	1	—	—	—	—	3592 552
	w/CONTROLS, Sta. Wgn., w/o Radio, P-K, P-M, D-K, D-M	8	—	—	—	—	—	1	1	—	—	—	—	3592 554
	w/CONTROLS, except Sta. Wgn., w/Radio, P-K, P-T, P-L, P-M, D-K, D-T, D-L, D-M	8	—	—	—	—	—	1	1	—	—	—	—	3592 553
	w/CONTROLS, Sta. Wgn., w/Radio, P-K, P-M, D-K, D-M	8	—	—	—	—	—	1	1	—	—	—	—	3592 555
	w/CONTROLS, except Sta. Wgn., w/o Radio, P-H, P-P, D-H, D-P	8	—	—	—	—	—	1	1	—	—	—	—	3592 556
	w/CONTROLS, Sta. Wgn., w/o Radio, P-H, P-P, D-H, D-P	8	—	—	—	—	—	1	1	—	—	—	—	3592 558
	w/CONTROLS, except Sta. Wgn., w/Radio, P-H, P-P, D-H, D-P	8	—	—	—	—	—	1	1	—	—	—	—	3592 557
	w/CONTROLS, Sta. Wgn., w/Radio, P-H, P-P, D-H, D-P	8	—	—	—	—	—	1	1	—	—	—	—	3592 559
	w/o CONTROLS	8	—	—	—	—	—	1	1	—	—	—	—	3592 662
	w/CONTROLS, w/o Radio	8	—	—	—	—	—	—	—	1	—	—	—	3592 482
	w/CONTROLS, w/o Radio	8	—	—	—	—	—	—	—	—	1	—	—	3592 484
	w/CONTROLS, w/o Radio	8	—	—	—	—	—	—	—	—	—	1	—	3592 483
	w/CONTROLS, w/Radio	8	—	—	—	—	—	—	—	1	—	—	—	3592 485
	w/CONTROLS, w/Radio	8	—	—	—	—	—	—	—	—	1	—	—	3592 487
	w/CONTROLS, w/Radio	8	—	—	—	—	—	—	—	—	—	1	—	3592 486
	w/CONTROLS, w/Radio	8	—	—	—	—	—	—	—	—	—	—	1	3592 542
	w/CONTROLS, w/o Radio	8	—	—	—	—	—	—	—	—	—	—	1	3592 543
	G/Sel. and Warning Lamps, up to approx. 1-22-74	8	—	—	—	—	—	—	—	1	—	—	—	3592 464
	after approx. 1-22-74	8	—	—	—	—	—	—	—	1	—	—	—	3593 020

CARLINES J - Challenger, B - Barracuda, V - Valiant, L - Dart, R - Satellite, W - Coronet - Charger, P - Plymouth, D - Dodge, C - Chrysler, Y - Imperial

AR Indicates use as required.

Numerals in parentheses ( ) refer to notes.

Printed in U.S.A.

# Indicates parts not listed in any previous parts book.

★ Indicates change or addition.

November, 1974

CODE	PART NAME	ENG. TYPE OR CU. IN	V	B J	L	R	W	P	D	C (L M)	C (P)	C (H S)	Y	PART NUMBER
8-37-90	BEZEL Cont'd.													
	G/Sel and Warning Lamps, up to approx. 1-22-74	8	—	—	—	—	—	—	—	—	1	1	—	3592 465
	after approx. 1-22-74	8	—	—	—	—	—	—	—	—	1	1	—	3593 021
	G/Sel and Warning Lamps, w/o Warning Signal-Inst. Gage	8	—	—	—	—	—	—	—	—	1	—	—	3593 001
	Speedometer, G/Sel. and Warning Lamps, up to approx. 1-22-74	8	—	—	—	—	—	—	—	—	—	—	1	3592 536
	after approx. 1-22-74	8	—	—	—	—	—	—	—	—	—	—	1	3593 018
8-37-93	CONTACT, Socket		AR	AR	AR	—	—	AR	AR	AR	AR	AR	—	2256 966
8-37-112	REINFORCEMENT, Inst. Cluster Bezel, w/Rallye Inst. Panel		—	—	—	1	1	—	—	—	—	—	—	2985 239
8-37-136	TEMPERATURE Gauge		1	—	1	—	—	—	—	—	—	—	—	3592 195
	w/o Rallye Inst. Panel	8	—	1	—	—	—	—	—	—	—	—	—	2984 120
	w/Rallye Inst. Panel	8	—	1	—	—	—	—	—	—	—	—	—	2984 180
	w/Rallye Inst. Panel, w/o Electric Clock		—	—	—	1	1	—	—	—	—	—	—	2985 217
	w/Rallye Inst. Panel, w/Electric Clock		—	—	—	1	1	—	—	—	—	—	—	2985 223
	w/o Gage Alert	8	—	—	—	—	—	—	—	1	1	1	—	3592 448
	w/Gage Alert	8	—	—	—	—	—	—	—	1	1	1	1	3592 644
8-37-141	SPINNER, Inst. Gauge Pointer, w/o Electric Clock, w/Rallye Inst. Panel		—	—	—	1	1	—	—	—	—	—	—	2985 198
8-37-142	SPACER, Inst. Gauge Mtg.		6	—	6	—	—	—	—	—	—	—	—	2984 084
8-37-145	CONTROL UNIT, Seat Belt Interlock w/Auto. Trans., up to 11-1-73		1	1	1	1	1	1	1	1	1	1	1	3746 653
	w/Auto. Trans. After 11-01-73		1	1	1	1	1	1	1	1	1	1	1	3501 374
	Canada		1	1	1	1	1	1	1	1	1	1	1	3501 371
	w/Manual Trans., up to 10-28-73		1	1	1	1	1	—	—	—	—	—	—	3746 810
	w/Manual Trans., after 10-28-73		1	1	1	1	1	—	—	—	—	—	—	3501 374
8-37-155	SENDING UNIT, Temp. Gauge		1	1	1	1	1	—	—	1	1	1	1	2426 458
	w/Oil and Temperature Gauge	8	—	—	—	—	—	1	1	—	—	—	—	2426 458
	SWITCH, Eng. Temp., Hi-Stat, w/o Oil and Temperature Gauge	8	—	—	—	—	—	1	1	—	—	—	—	3746 524
8-37-160	MASK, Speed and Inst. Cluster, w/Rallye Inst. Panel, w/Electric Clock		—	—	—	1	1	—	—	—	—	—	—	2985 234
	w/Rallye Inst. Panel, w/o Electric Clock		—	—	—	1	1	—	—	—	—	—	—	2985 185
8-37-162	LENS, Cluster, w/o Rallye Inst. Panel	8	—	1	—	—	—	—	—	—	—	—	—	2984 110
	w/MASK, w/Rallye Inst. Panel	8	—	1	—	—	—	—	—	—	—	—	—	2985 953
	w/MASK, w/o Rallye Inst. Panel		—	—	—	1	1	—	—	—	—	—	—	3514 398
	w/Gearshift Ind. Dial	8	—	—	—	—	—	1	1	—	—	—	—	3592 647
	w/Gearshift Ind. Dial	8	—	—	—	—	—	—	—	1	1	1	1	3592 459
8-37-170	CLIP, Speed and Inst. Cluster Lens to Hsg.		—	AR	—	AR	AR	—	—	—	—	—	—	2889 588
	Inst. Gage Ret.	8	—	—	—	—	—	—	—	6	6	6	6	3592 458
	Bezel or Lens Ret.	8	—	—	—	—	—	AR	AR	7	7	7	7	3592 462
8-37-178	HOUSING, Speed and Inst. Cluster		1	—	1	—	—	—	—	—	—	—	—	3592 201
	w/o Rallye Inst. Panel	8	—	1	—	—	—	—	—	—	—	—	—	2984 111
	w/Rallye Inst. Panel	8	—	1	—	—	—	—	—	—	—	—	—	2984 866
	w/o Rallye Inst. Panel		—	—	—	1	1	—	—	—	—	—	—	3592 749
	w/Rallye Inst. Panel w/Electric Clock		—	—	—	1	1	—	—	—	—	—	—	2985 834
	w/Rallye Inst. Panel, w/o Electric Clock		—	—	—	1	1	—	—	—	—	—	—	2985 833
		8	—	—	—	—	—	1	1	—	—	—	—	3592 615
	CARRIER, Speed and Inst. Cluster and Controls	8	—	—	—	—	—	1	1	—	—	—	—	3592 575
	HOUSING, Speed and Inst. Cluster	8	—	—	—	—	—	—	—	1	1	1	1	3592 455

CARLINES J - Challenger, B - Barracuda, V - Valiant, L - Dart, R - Satellite, W - Coronet - Charger, P - Plymouth, D - Dodge, C - Chrysler, Y - Imperial

AR Indicates use as required.

Numerals in parentheses ( ) refer to notes.

Printed in U.S.A.

# Indicates parts not listed in any previous parts book.

★ Indicates change or addition.

November, 1974

CODE	PART NAME		ENG. TYPE OR CU. IN	V	B J	L	R	W	P	D	C (L M)	C (P)	C (H S)	Y	PART NUMBER
8-37-178	HOUSING Cont'd.														
	CARRIER, Speed and Inst. Cluster and Controls		8	—	—	—	—	—	—	—	1	1	1	1	3592 478
8-37-180	GASKET, Carrier to Bezel		8	—	—	—	—	—	1	1	—	—	—	—	3592 631
8-37-184	COVER, Carrier Wiring		8	—	—	—	—	—	1	1	—	—	—	—	3764 673
			8	—	—	—	—	—	—	—	1	1	1	1	3764 674
8-37-191	SEAL, Warning and Indicator Lamp Light, up to 9-01-73		8	—	—	—	—	—	1	1	—	—	—	—	3592 630
	after 9-01-73		8	—	—	—	—	—	1	1	—	—	—	—	3592 779
	Carrier to Spot Cooler Opening		8	—	—	—	—	—	—	—	1	1	1	1	3592 498
8-37-192	NAME PLATE, Speed and Inst. Cluster, Exp.		8	—	—	—	—	—	—	1	—	—	—	—	3592 783
8-37-275	FUEL GAUGE			1	—	1	—	—	—	—	—	—	—	—	3592 194
	w/Rallye Inst. Panel		8	—	1	—	—	—	—	—	—	—	—	—	2984 178
	w/o Rallye Inst. Panel		8	—	1	—	—	—	—	—	—	—	—	—	2984 119
	w/Temp. Gauge, w/o Rallye Inst. Panel			—	—	—	1	1	—	—	—	—	—	—	2985 393
	w/Oil Gauge, w/Rallye Inst. Panel w/o Electric Clock			—	—	—	1	1	—	—	—	—	—	—	2985 211
	w/Oil Gauge, w/Rallye Inst. Panel, w/Electric Clock			—	—	—	1	1	—	—	—	—	—	—	2985 214
	w/o Gage Alert		8	—	—	—	—	—	1	1	—	—	—	—	3592 599
	w/Gage Alert		8	—	—	—	—	—	1	1	—	—	—	—	3592 636
	w/o Gage Alert		8	—	—	—	—	—	—	—	1	1	1	—	3592 449
	w/Gage Alert		8	—	—	—	—	—	—	—	1	1	1	1	3592 643
8-37-316	OIL GAUGE, w/Rallye Inst. Panel		8	—	1	—	—	—	—	—	—	—	—	—	2984 181
	w/Temp. Gage		8	—	—	—	—	—	1	1	—	—	—	—	3592 655
8-37-372	SPEEDOMETER	Mile		1	—	1	—	—	—	—	—	—	—	—	3837 352
		Kilo	6	1	—	1	—	—	—	—	—	—	—	—	3837 353
		Kilo	8	1	—	1	—	—	—	—	—	—	—	—	3837 354
	w/o Rallye Inst. Panel	Mile	8	—	1	—	—	—	—	—	—	—	—	—	2984 964
	w/o Rallye Inst. Panel	Kilo	8	—	1	—	—	—	—	—	—	—	—	—	2984 965
	w/Rallye Inst. Panel	Mile	8	—	1	—	—	—	—	—	—	—	—	—	3592 724
	w/Rallye Inst. Panel	Kilo	8	—	1	—	—	—	—	—	—	—	—	—	3592 725
	w/Rallye Inst. Panel	Mile		—	—	—	1	1	—	—	—	—	—	—	3592 758
	w/Rallye Inst. Panel	Kilo		—	—	—	1	1	—	—	—	—	—	—	3592 732
	w/o Rallye Inst. Panel	Mile		—	—	—	1	1	—	—	—	—	—	—	2985 446
	w/o Rallye Inst. Panel	Kilo		—	—	—	1	1	—	—	—	—	—	—	2985 447
	w/o Rallye Inst. Panel	Certified		—	—	—	1	1	—	—	—	—	—	—	2985 448
	SPEEDOMETER and LABEL PACKAGE	Mile	8	—	—	—	—	—	1	1	—	—	—	—	3592 759
	SPEEDOMETER	Kilo	8	—	—	—	—	—	1	1	—	—	—	—	3592 586
	SPEEDOMETER	Certified	8	—	—	—	—	—	1	1	—	—	—	—	3592 763
	SPEEDOMETER and LABEL PACKAGE, Up to 5-15-74	Mile		—	—	—	—	—	—	—	1	1	1	—	3592 760
	SPEEDOMETER and LABEL PACKAGE, After 5-15-74	Mile		—	—	—	—	—	—	—	1	1	1	—	#3593 134
	SPEEDOMETER and LABEL PACKAGE, Up to 5-15-74	Certified		—	—	—	—	—	—	—	1	1	1	—	# 3592 764
	SPEEDOMETER and LABEL PACKAGE, After 5-15-74	Certified		—	—	—	—	—	—	—	1	1	1	—	# 3593 135
		Kilo	8	—	—	—	—	—	—	—	1	1	1	1	3592 522
	SPEEDOMETER and LABEL PACKAGE, Up to 5-15-74	Mile		—	—	—	—	—	—	—	—	—	—	1	3592 760
	SPEEDOMETER and LABEL PACKAGE, After 5-15-74	Mile		—	—	—	—	—	—	—	—	—	—	1	# 3593 136
	LABEL, Speedometer Replacement			1	1	1	1	1	1	1	1	1	1	1	3592 750
8-37-381	GASKET, Speed to Hsg. Mtg.			1	1	1	1	1	—	—	—	—	—	—	2209 213
8-37-386	SPACER, Speed to Hsg. Mtg. Screw			2	—	2	—	—	—	—	—	—	—	—	2984 633
				—	2	—	2	2	2	2	2	2	2	2	2209 215
	Speed Dial		8	—	—	—	—	—	3	3	—	—	—	—	3592 739
8-37-387	GROMMET, Speed Hsg. Mtg. Screw			2	2	2	2	2	—	—	—	—	—	—	2209 214
	Speed to Hsg.		8	—	—	—	—	—	1	1	1	1	1	1	3592 738

CARLINES J - Challenger, B - Barracuda, V - Valiant, L - Dart, R - Satellite, W - Coronet - Charger, P - Plymouth, D - Dodge, C - Chrysler, Y - Imperial

AR Indicates use as required.

# Indicates parts not listed in any previous parts book.

Numerals in parentheses ( ) refer to notes.

★ Indicates change or addition.

Printed in U.S.A.
November, 1974

CODE	PART NAME	ENG. TYPE OR CU. IN	V	B J	L	R	W	P	D	C (L M)	C (P)	C (H S)	Y	PART NUMBER
8-37-452	RESET, Clock, w/o Rallye Inst. Panel	8	—	1	—	—	—	—	—	—	—	—	—	2984 139
8-37-454	KNOB, Clock Reset, w/o Rallye Inst. Panel	8	—	1	—	—	—	—	—	—	—	—	—	2984 219
	w/Rallye Inst. Panel	8	—	1	—	—	—	—	—	—	—	—	—	2985 949
			—	—	—	1	1	1	1	1	1	1	—	3592 155
	Odometer Reset, w/Rallye Inst. Panel	8	—	1	—	—	—	—	—	—	—	—	—	2985 943
	Trip Odometer Reset Cable	8	—	—	—	—	—	—	—	1	1	1	1	2290 654
8-37-459	NUT, Clock Reset Knob Mtg.		—	1	—	1	1	1	1	1	1	1	—	2257 804
8-37-504	TACHOMETER, w/Rallye Inst. Panel	8	—	1	—	—	—	—	—	—	—	—	—	2984 185
			—	—	—	1	1	—	—	—	—	—	—	2985 170
8-37-545	CABLE, Tachometer Eng., w/Rallye Inst. Panel	8	—	1	—	—	—	—	—	—	—	—	—	3764 174
8-38-3	**LENS, Glove Comp't. Lamp**		1	1	1	—	—	—	—	—	—	—	—	2822 583
8-38-23	LAMP PACKAGE		1	1	1	1	1	1	1	1	1	1	—	2864 325
	LAMP and SWITCH		1	—	1	—	—	1	1	1	1	1	1	2864 315
		8	—	1	—	—	—	—	—	—	—	—	—	2947 924
			—	—	—	1	1	—	—	—	—	—	—	2291 781
8-39-15	**SOCKET, H/Beam Indicator Lamp**		1	—	1	—	—	—	—	—	—	—	—	2496 279
		8	—	1	—	—	—	—	—	—	—	—	—	2097 003
	w/o Rallye Inst. Panel		—	—	—	1	1	—	—	—	—	—	—	2496 279
	w/Rallye Inst. Panel		—	—	—	1	1	—	—	—	—	—	—	2097 003
8-40-5	**LAMP, Ignition and Starter Switch, Std. Column, w/Time Delay**		1	1	1	1	1	—	—	—	—	—	—	3488 479
	w/Time Delay, Std. Column, w/o Tilt-Tel. Strg. Wheel	8	—	—	—	—	—	1	1	1	1	1	1	3488 479
	w/Tilt-Tel. Strg. Wheel	8	—	—	—	—	—	1	1	1	1	1	1	3488 169
	SCREW, Mtg., Std. Column		1	1	1	1	1	1	1	1	1	1	1	6023 088
	SCREW, Mtg. w/Tilt-Tel. Strg. Wheel	8	—	—	—	—	—	1	1	1	1	1	1	6029 130
8-40-10	RELAY, Ignition Lamp Thermal Time Delay		1	1	1	1	1	1	1	1	1	1	1	2889 565
8-40-21	PLUG, Ignition Switch Lamp Opening, w/o Time Delay Black		1	1	1	1	1	—	—	—	—	—	—	P609 JX9
	w/o Time Delay, w/o Tilt-Tel. Strg. Wheel Black	8	—	—	—	—	—	1	1	1	1	1	—	P609 JX9
8-41-25	**SHIELD, Inst. Cluster Light**		1	—	1	—	—	—	—	—	—	—	—	3592 344
8-41-35	DIFFUSER, Console Gear Sel. Lamp		1	—	1	—	—	—	—	—	—	—	—	2427 533
8-41-36	SOCKET, Inst. Lamp, on Printed Circuit Board		3	—	3	—	—	—	—	—	—	—	—	2496 279
	w/o Rallye Inst. Panel		—	—	—	3	3	—	—	—	—	—	—	2496 279
	Inst. Panel Lamp, w/o Rallye Inst. Panel		—	—	—	1	1	—	—	—	—	—	—	2097 003
	w/Rallye Inst. Panel		—	—	—	7	7	—	—	—	—	—	—	2097 003
	Cluster Lamp, w/o Rallye Inst. Panel	8	—	3	—	—	—	—	—	—	—	—	—	3620 751
	w/Rallye Inst. Panel	8	—	4	—	—	—	—	—	—	—	—	—	3620 751
8-41-37	SPRING, Socket	8	—	AR	—	—	—	—	—	—	—	—	—	1838 939
8-41-39	CONTACT, Socket	8	—	AR	—	—	—	—	—	—	—	—	—	2256 966
8-41-41	PANEL, Inst. Cluster Lamp, w/o Rallye Inst. Panel	8	—	1	—	—	—	—	—	—	—	—	—	2984 126
	w/Rallye Inst. Panel	8	—	1	—	—	—	—	—	—	—	—	—	2984 187
8-42-1	**LAMP, Map and Courtesy**		1	1	1	—	—	—	—	—	—	—	—	2864 016
	LAMP and SWITCH, Power Antenna	8	—	—	—	—	—	—	—	1	1	1	1	3746 643
	LAMP, Power Antenna Switch	8	—	—	—	—	—	—	—	1	1	1	1	3746 642
8-42-2	LAMP PACKAGE, Map and Courtesy, w/Seat Belt Warning Lamp,		—	—	—	1	1	—	—	—	—	—	—	3488 694
		8	—	—	—	—	—	1	1	1	1	1	1	3488 988
8-42-25	SWITCH		1	1	1	—	—	—	—	—	—	—	—	2864 243
8-42-29	BEZEL, Switch		1	1	1	—	—	—	—	—	—	—	—	3488 816

CARLINES J - Challenger, B - Barracuda, V - Valiant, L - Dart, R - Satellite, W - Coronet - Charger, P - Plymouth, D - Dodge, C - Chrysler, Y - Imperial

AR Indicates use as required.

Numerals in parentheses ( ) refer to notes.

Printed in U.S.A.

# Indicates parts not listed in any previous parts book.

★ Indicates change or addition.

November, 1974

8-44-1 BULB, Location

NOTE: ■ Included in Inst. Cluster Lighting
NOTE: * Included in Heater Control Lighting
NOTE: Refer to Bulb Ill. for Bulb Identification
NOTE: ** Included in Headlight Switch Lighting
NOTE: All Bulbs are Brass or Wedge Base. Aluminum Base Bulbs are NOT Approved and NOT to be Used

REMARKS	CARLINE	V-L	B-J	R-W	P-D-C-Y	SERVICE NO.
EXTERIOR LIGHT BULBS						
SIDE MARKER		168	168	168	168	9425 542
PARKING and TURN SIGNAL LAMP	B	1157NA	1157NA	———	1157NA	9423 295
except 4 D. and Sta. Wgn.		———	———	1157NA	———	9423 295
4 D. and Sta. Wgn.		———	———	1157	———	9417 867
TAIL, STOP and TURN SIGNAL LAMP		1157	1157	1157	1157	9417 867
FENDER TURN SIGNAL IND.	P,D,C	168	168	168	168	9425 542
LICENSE LAMP	Y	168	———	———	168	9425 542
		———	67	———	———	142 450
except 4 D. and Sta. Wgn.		———	———	67	———	142 450
4 D. and Sta. Wgn.		———	———	168	———	9425 542
except Sta. Wgn.	P,D,C	———	———	———	168	9425 542
Sta. Wgn.	P,D,C	———	———	———	67	142 450
BACK-UP LAMP	P,D,C	———	———	———	1156	9417 866
	Y	———	———	———	1141	142 456
CORNERING LAMP	D,C,Y	———	———	———	1156	9417 866
INTERIOR LIGHT BULBS						
SPEEDOMETER and INST. CLUSTER		158	———	———	158	9415 969
w/o Rallye Inst. Panel		———	1816	———	———	152 240
w/Rallye Inst. Panel		———	1893	———	———	9416 927
w/o Rallye Inst. Panel		———	———	158	———	9415 969
w/o Rallye Inst. Panel		———	———	57	———	127 934
w/Rallye Inst. Panel		———	———	57	———	127 934
HIGH BEAM INDICATOR		158	———	———	158	9415 969
w/o Rallye Inst. Panel		———	57	———	———	127 934
w/Rallye Inst. Panel		———	1895	———	———	9417 863
w/o Rallye Inst. Panel		———	———	158	———	9415 969
w/Rallye Inst. Panel		———	———	57	———	127 934
BRAKE INDICATOR		158	———	———	158	9415 969
w/o Rallye Inst. Panel		———	57	———	———	127 934
w/Rallye Inst. Panel		———	1895	———	———	9417 863
w/o Rallye Inst. Panel		———	———	158	———	9415 969
w/Rallye Inst. Panel		———	———	57	———	127 934
REVERSE 4 Speed Trans. Ind.		53	53	53	———	131 282
OIL PRESSURE IND.		158	———	———	158	9415 969
w/o Rallye Inst. Panel		———	57	———	———	127 934
w/o Rallye Inst. Panel		———	———	158	———	9415 969
CLOCK		———	■	■	———	———
		———	———	———	158	9415 969
HEATER and A/COND. CONTROLS		1892	———	1892	———	2740 020
		———	161	———	———	9417 561
		———	———	———	363	273 987
RADIO		1893	———	———	———	9416 927
		———	———	———	168	9425 542
RADIO AM		———	1816	1816	———	152 240
RADIO AM-FM STEREO		———	1815	———	———	193 065
		———	———	1816	———	152 240
RADIO 8 TRACK STEREO		———	———	———	1893	9416 927
TRANS. GEAR SELECTOR		161	———	———	———	9417 561
		———	———	———	■	———
TRANS. GEAR SELECTOR-COLUMN		———	161	161	———	9417 561
TRANS. GEAR SELECTOR-CONSOLE		———	57	57	———	127 934
ASH TRAY LAMP		161	161	161	———	9417 561
		———	———	———	*	———
SWITCH CALLOUTS		■	■	———	———	———
ACCESSORY SWITCH		1445	———	———	———	2740 004
		———	———	161	———	9417 561

CARLINES J - Challenger, B - Barracuda; V - Valiant, L - Dart; R - Satellite, W - Coronet - Charger; P - Plymouth, D - Dodge; C - Chrysler, Y - Imperial

AR Indicates use as required.
# Indicates parts not listed in any previous parts book.
Numerals in parentheses ( ) refer to notes.
★ Indicates change or addition.

Printed in U.S.A.
November, 1974

	REMARKS	CARLINE	V-L	B-J	R-W	P-D-C-Y	SERVICE NO.
8-44-1	BULB Cont'd.						
	TURN SIGNAL INDICATOR		158	———	———	158	9415 969
	w/o Rallye Inst. Panel		———	57	———	———	127 934
	w/Rallye Inst. Panel		———	1895	———	———	9417 863
	w/o Rallye Inst. Panel		———	———	158	———	9415 969
	w/Rallye Inst. Panel		———	———	57	———	127 934
	IGNITION LAMP		1445	1445	1445	1445	274 004
	GLOVE COMPARTMENT		1891	1891	1891	1891	152 244
	DOME LAMP		1004	1004	1004	———	151 578
			———	———	———	211-2	9431 808
	FASTEN BELTS		1445	———	———	———	274 004
			———	———	1816	———	152 240
			———	———	———	158	9415 969
	MAP AND COURTESY LAMP		89	89	———	———	142 452
			———	———	562	———	9427 943
		C,Y	———	———	———	562	9427 943
	COURTESY LAMP	P,D	———	———	———	90	142 453
	READING LAMP	C,Y	———	———	———	1003	151 577
	DOOR COURTESY LAMP	C,Y	———	———	———	211-2	9431 808
	DOOR AJAR		———	———	———	158	9415 969
	TRUNK AND UNDERHOOD LAMP		1004	1004	1004	———	151 578
			1003	1003	1003	1003	151 577
	SWITCH COURTESY		———	161	———	———	9417 561
	STEREO INDICATOR		———	1445	1445	———	274 004
	HEATER RR. WINDOW SWITCH		———	———	161	———	9417 561
	CIGAR LIGHTER	P,D	———	———	———	158	9415 969
		C,Y	———	———	———	161	9417 561
	HEADLIGHT AND WIPER/WASHER SWITCH	P,D	———	———	———	1815	193 065
	HEADLIGHT SWITCH	C,Y	———	———	———	1815	193 065
	HEADLIGHT SWITCH, w/Acc. Add.	C,Y	———	———	———	161	9417 561
	REAR UNLOCK SWITCH	P,D	———	———	———	1892	274 020
	WIPER/WASHER SWITCH	C,Y	———	———	———	158	9415 969
	REAR DEFROST SWITCH	P,D	———	———	———	1892	274 020
		C,Y	———	———	———	161	9417 561
	REAR WINDOW SWITCH						
	ANTENNA SWITCH	C,Y	———	———	———	161	9417 561
	HOT TEMPERATURE IND.	P,D	———	———	———	158	9415 969
	WASHER FLUID IND.	P,D	———	———	———	158	9415 969

NOTES

CODE	PART NAME		ENG. TYPE OR CU. IN	V	B J	L	R	W	P	D	C (L M)	C (P)	C (H S)	Y	PART NUMBER
8-47-2	**LICENSE FRAME ATTACHING PARTS PACKAGE**			1	1	1	1	1	1	1	1	1	1	1	2768 643
8-47-8	BRACKET, License Plate														
		Rr.		1	—	1	—	—	—	—	—	—	—	—	3754 071
		Frt.		1	—	—	—	—	—	—	—	—	—	—	3686 366
			8	—	1	—	—	—	—	—	—	—	—	—	3686 367
	4 D., w/o Non Shock Absorbing Bumper Supports	Frt.		—	—	1	—	—	—	—	—	—	—	—	3753 025
	Except 4 D. and Fastback	Frt.		—	—	1	—	—	—	—	—	—	—	—	3686 374
	4 D., w/Non Shock Absorbing Bumper Support	Frt.		—	—	1	—	—	—	—	—	—	—	—	3686 374
	4 D.	Rr.		—	—	—	1	—	—	—	—	—	—	—	3754 335
	2 D.H.T. and Fastback	Frt.		—	—	—	—	1	—	—	—	—	—	—	3686 370
	except 4 D. and Sta. Wgn.	Rr.		—	—	—	—	1	—	—	—	—	—	—	3686 653
	4 D.	Rr.		—	—	—	—	1	—	—	—	—	—	—	3754 427
			8	—	—	—	—	—	—	1	—	—	—	—	3753 028
			8	—	—	—	—	—	—	—	—	—	—	1	3753 027
	SUPPORT	Rr.	8	—	—	—	—	—	—	—	1	—	—	1	3756 451
8-47-67	SPRING, License Plate Mtg. Panel, B		8	—	1	—	—	—	—	—	1	—	—	1	1960 131
	except 4 D. and Sta. Wgn.			—	—	—	—	1	—	—	—	—	—	—	1960 131
	4 D.			—	—	—	1	1	—	—	—	—	—	—	3464 216-7
8-47-68	PANEL, License Plate Mtg., B		8	—	1	—	—	—	—	—	—	—	—	—	3615 134
	to Rr. Bumper 4 D.			—	—	—	1	1	—	—	—	—	—	—	3754 326
	except 4 D. and Sta. Wgn.			—	—	—	1	1	—	—	—	—	—	—	3464 244
			8	—	—	—	—	—	—	—	1	—	—	—	3756 434
8-47-69	HINGE, License Plate Mtg., except 4 D. and Sta. Wgn.			—	—	—	1	1	—	—	—	—	—	—	2931 031
			8	—	—	—	—	—	—	—	—	—	—	1	3756 436
8-47-76	PIN, License Plate Mtg. Panel, B		8	—	1	—	—	—	—	—	1	—	—	1	1960 127
	4 D.			—	—	—	2	2	—	—	—	—	—	—	3464 215
	except 4 D. and Sta. Wgn.			—	—	—	—	1	—	—	—	—	—	—	1960 127
8-47-126	BUTTON, License Plate, .62" Length			AR	AR	AR	AR	AR	AR	AR	AR	AR	AR	AR	2094 618
	.95" Length			AR	AR	AR	AR	AR	AR	AR	AR	AR	AR	AR	1943 547
	BUMPER, Mtg. Support		8	—	—	—	—	—	—	—	2	—	—	2	2898 762
8-50-64	**HOUSING, Turn Signal Indicator Lamp, w/Rallye Inst. Panel**	**Rt.**	8	—	1	—	—	—	—	—	—	—	—	—	2984 696
		Lt.	8	—	1	—	—	—	—	—	—	—	—	—	2984 695
8-50-82	SWITCH and KNOB, Turn Signal and Hazard Warning w/o Tilt-Tel. Strg. Wheel			1	1	1	1	1	—	—	—	—	—	—	3488 805
			8	—	—	—	—	—	1	1	1	1	1	1	3488 805
	w/Tilt-Tel. Strg. Wheel		8	—	—	—	—	—	1	1	1	1	1	1	3575 246
8-50-84	SCREW, Truss Head Cross Recess w/Tilt-Tel. Strg. Wheel		8	—	—	—	—	—	1	1	1	1	1	1	3467 385
	Oval Head Cross Recess, w/Tilt-Tel. Strg. Wheel		8	—	—	—	—	—	2	2	2	2	2	2	3467 402
	Binding Head Cross Recess, w/Tilt-Tel. Strg. Wheel		8	—	—	—	—	—	3	3	3	3	3	3	3467 814
	w/L/WASHER, w/Tilt Tel. Strg. Wheel		8	—	—	—	—	—	2	2	2	2	2	2	3467 431
8-50-95	KNOB, Hazard Warning w/Tilt-Tel. Strg. Wheel		8	—	—	—	—	—	1	1	1	1	1	1	3620 866
	SCREW		8	—	—	—	—	—	1	1	1	1	1	1	9433 331
8-50-126	CAM, Turn Signal Switch Cancelling			1	1	1	1	1	—	—	—	—	—	—	2258 704
	w/o Tilt-Tel. Strg. Wheel		8	—	—	—	—	—	1	1	1	1	1	1	2258 704
8-50-129	LEVER and KNOB, Turn Signal			1	—	1	—	—	—	—	—	—	—	—	3746 683
			8	—	1	—	—	—	—	—	—	—	—	—	2947 953
	w/o Auto. Speed Control			—	—	—	1	1	—	—	—	—	—	—	3746 683
	w/Auto. Speed Control			—	—	—	1	1	—	—	—	—	—	—	3746 518

CARLINES
J - Challenger
B - Barracuda
V - Valiant
L - Dart
R - Satellite
W - Coronet - Charger
P - Plymouth
D - Dodge
C - Chrysler
Y - Imperial

AR Indicates use as required.
Numerals in parentheses ( ) refer to notes.
Printed in U.S.A.

# Indicates parts not listed in any previous parts book.
★ Indicates change or addition.
November, 1974

CODE	PART NAME	ENG. TYPE OR CU. IN	V	B J	L	R	W	P	D	C (L M)	C (P)	C (H S)	Y	PART NUMBER
8-50-129	LEVER and KNOB Cont'd.													
	w/Auto. Speed Control, w/o Tilt-Tel. Strg. Wheel	8	—	—	—	—	—	1	1	1	1	1	1	3746 518
	w/Auto. Speed Control, w/Tilt-Tel. Strg. Wheel	8	—	—	—	—	—	1	1	1	1	1	1	3746 680
	w/o Auto. Speed Control, w/o Tilt-Tel. Strg. Wheel	8	—	—	—	—	—	1	1	1	1	1	1	3746 683
	w/o Auto. Speed Control, w/Tilt-Tel. Strg. Wheel	8	—	—	—	—	—	1	1	1	1	1	1	2947 951
	LEVER, Hazard Warning Switch, w/Tilt-Tel. Strg. Wheel	8	—	—	—	—	—	1	1	1	1	1	1	3575 254
	SCREW, Mtg.		1	1	1	1	1	1	1	1	1	1	1	6028 283
8-50-156	SOCKET, Turn Signal Ind. Lamp		2	—	2	—	—	—	—	—	—	—	—	2496 279
			—	2	—	—	—	—	—	—	—	—	—	2097 003
	w/o Rallye Inst. Panel		—	—	—	2	2	—	—	—	—	—	—	2496 279
	w/Rallye Inst. Panel		—	—	—	2	2	—	—	—	—	—	—	2097 003
	On Printed Circuit Board		—	—	—	—	—	AR	AR	AR	AR	AR	AR	3744 750
	Fender Turn Signal Ind. Lamp,		2	2	2	2	2	2	2	2	2	2	—	3588 746
8-50-184	COVER, Turn Signal Ind. Lamp		2	2	2	2	2	2	2	2	2	2	—	3679 255
8-50-186	FLASHER, Turn Signal, Hazard Warning and Vari Load		1	1	1	1	1	1	1	1	1	1	1	2932 877
	2 Lamp, R except Sta. Wgn.		1	1	1	1	1	—	—	—	—	—	—	3837 161
	3 Lamp, R Sta. Wgn.		—	—	—	1	1	1	1	1	1	1	1	3837 162
8-50-191	CLIP, Flasher Mtg.		1	1	1	1	1	1	1	1	1	1	1	2947 896
8-50-293	FILLER, Lamp	8	—	—	—	—	—	1	—	—	—	—	—	3728 582-3
8-50-303	LAMP, Parking and Turn Signal													
	J	8	—	1	—	—	—	—	—	—	—	—	—	3587 496-7
	4 D. and Sta. Wgn.		—	—	—	1	1	—	—	—	—	—	—	3728 208-9
		8	—	—	—	—	—	1	—	—	—	—	—	3728 108-9
	w/Side Marker Lamp	8	—	—	—	—	—	—	—	1	1	1	—	3728 064-5
8-50-305	RETAINER, Lamp Hsg. Filler	8	—	—	—	—	—	10	—	—	—	—	—	2197 678
8-50-308	GASKET, Parking and Turn Signal Lamp, J	8	—	2	—	—	—	—	—	—	—	—	—	3403 010
		8	—	—	—	—	—	—	—	2	2	2	—	3728 424
8-50-311	FILLER Parking and Turn Signal Lamp Hsg.	8	—	—	—	—	—	—	1	—	—	—	—	3728 570-1
8-50-312	HOUSING and LENS, Parking and Turn Signal Lamp, 2 D., and 2 D.H.T.		—	—	—	2	—	—	—	—	—	—	—	3679 343
	HOUSING, except 4 D and Sta. Wgn.		—	—	—	—	1	—	—	—	—	—	—	3728 630-1
	HOUSING and LENS	8	—	—	—	—	—	1	—	—	—	—	—	3728 598-9
	HOUSING	8	—	—	—	—	—	—	1	—	—	—	—	3728 382-3
	HOUSING	8	—	—	—	—	—	—	—	—	—	—	2	3728 363
	HOUSING, Cornering and Side Marker Lamp	8	—	—	—	—	—	—	1	—	—	—	—	3728 018-9
	HOUSING, Cornering Lamp	8	—	—	—	—	—	—	—	1	1	1	—	3728 050-1
	HOUSING, Cornering and Side Marker Lamp	8	—	—	—	—	—	—	—	—	—	—	1	3728 428-9
8-50-314	ADAPTER, Cornering and Side Marker Lamp Bezel Mtg.	8	—	—	—	—	—	—	—	2	2	2	2	3728 613
8-50-315	BEZEL, Parking and Turn Signal Lamp, B	8	—	1	—	—	—	—	—	—	—	—	—	3587 386-7
	Cornering and Side Marker Lamp	8	—	—	—	—	—	—	2	—	—	—	—	3728 516
		8	—	—	—	—	—	—	—	1	1	—	1	3728 550-1
		8	—	—	—	—	—	—	—	—	—	1	—	3728 544-5
8-50-334	LENS and GASKET Package, Parking and Turn Signal Lamp		2	—	—	—	—	—	—	—	—	—	—	3744 252
	B	8	—	1	—	—	—	—	—	—	—	—	—	3621 680-1
	J, Exp. Only Clear	8	—	1	—	—	—	—	—	—	—	—	—	3420 554-5
	J Amber	8	—	1	—	—	—	—	—	—	—	—	—	3420 552-3

CARLINES J - Challenger V - Valiant R - Satellite P - Plymouth C - Chrysler
B - Barracuda L - Dart W - Coronet - Charger D - Dodge Y - Imperial

AR Indicates use as required. Numerals in parentheses ( ) refer to notes. Printed in U.S.A.

# Indicates parts not listed in any previous parts book. ★ Indicates change or addition. November, 1974

CODE	PART NAME	ENG. TYPE OR CU. IN	V	B J	L	R	W	P	D	C (L M)	C (P)	C (H S)	Y	PART NUMBER
8-50-334	LENS and GASKET Cont'd.													
	except L-P		—	—	2	—	—	—	—	—	—	—	—	3621 877
	L-P		—	—	2	—	—	—	—	—	—	—	—	3837 159
	2 D., 2 D.H.T. and Fastback		—	—	—	—	1	—	—	—	—	—	—	3514 272-3
	4 D. and Sta. Wgn.		—	—	—	1	1	—	—	—	—	—	—	3780 554-5
		8	—	—	—	—	—	—	1	—	—	—	—	3744 856-7
	w/Side Marker Lamp	8	—	—	—	—	—	—	—	1	1	1	—	3780 564-5
		8	—	—	—	—	—	—	—	—	—	—	2	3780 719
	Cornering and Side Marker Lamp	8	—	—	—	—	—	—	1	—	—	—	—	3780 710-1
		8	—	—	—	—	—	—	—	1	1	1	—	3780 562-3
		8	—	—	—	—	—	—	—	—	—	—	1	3780 712-3
8-50-338	GASKET, Parking and Turn Signal Lamp Lens		2	—	—	—	—	—	—	—	—	—	—	3679 225
	B	8	—	2	—	—	—	—	—	—	—	—	—	3587 380
			—	—	2	—	—	—	—	—	—	—	—	3679 215
	4 D. and Sta. Wgn.		—	—	—	2	2	—	—	—	—	—	—	3728 207
	2 D., 2 D.H.T. and Fastback		—	—	—	—	2	—	—	—	—	—	—	3478 600
8-50-349	SOCKET, Parking and Turn Signal Lamp													
	w/Cable		2	—	2	—	—	—	—	—	—	—	—	3764 122
	B	8	—	2	—	—	—	—	—	—	—	—	—	3764 561
	w/CABLE, B	8	—	2	—	—	—	—	—	—	—	—	—	3764 123
			—	—	—	1	—	1	1	—	—	—	—	3764 863
	Cornering Lamp	8	—	—	—	—	—	—	1	—	—	—	—	3764 864
	Cornering Lamp	8	—	—	—	—	—	—	—	1	1	1	1	3764 865
8-50-354	CONTACT, Insulator and Spring Package, Socket, J		—	AR	—	AR	AR	—	—	AR	AR	AR	AR	2983 167
			AR	—	AR	—	—	—	—	—	—	—	—	2983 168
	B		—	AR	—	—	—	—	—	—	—	—	—	2983 169
8-50-410	RELAY, Fuel Pacer		1	—	1	—	—	—	—	—	—	—	—	# 3764 343
8-50-411	SWITCH, Fuel Pacer Vac.		1	—	1	—	—	—	—	—	—	—	—	# 3764 945
8-50-412	WIRING, Fuel Pacer, Used w/Factory Installed System		1	—	1	—	—	—	—	—	—	—	—	# 3764 444
	WIRING, Fuel Pacer Wrg. Jumper, Used w/Field Installed System		1	—	1	—	—	—	—	—	—	—	—	# 3740 921
8-50-413	HOSE, Fuel Pacer Vac., Eng. to Switch		1	—	1	—	—	—	—	—	—	—	—	# 3780 507
8-52-4	**STARTING MOTOR, up to 12-18-73**		1	1	1	1	1	1	1	1	1	1	1	3656 575
	after 12-18-73		1	1	1	1	1	1	1	1	1	1	1	3755 900
8-52-39	SEAL, Cyl. Block to Starter Motor	6	1	—	1	1	1	—	—	—	—	—	—	2892 915
	Std. Duty Auto. Trans.	6	—	—	—	1	1	—	—	—	—	—	—	2892 914
	w/400 and 440 Eng., w/Auto. Trans.	8	—	—	—	1	1	1	1	1	1	1	1	2892 915
	w/360 Eng., w/Heavy Duty Auto. Trans.	8	—	—	—	—	—	1	1	—	—	—	—	2892 915
8-52-42	SWITCH, Clutch Starter, w/Manual Trans.		1	—	1	—	—	—	—	—	—	—	—	3514 431
	w/Manual Trans.		—	1	—	1	1	—	—	—	—	—	—	3514 432
8-52-86	LINK PACKAGE, Clutch Starter Switch Actuator, w/Manual Trans.		1	1	1	1	1	—	—	—	—	—	—	3514 257
8-52-328	RELAY, Starter		1	1	1	1	1	1	1	1	1	1	1	2444 442
	SCREW, Mtg., (1/4-20 x 5/8)		2	2	2	2	2	2	2	2	2	2	2	6029 513
8-52-346	SCREW and WASHER, Starter Solenoid Terminal (32 x 9/32)		1	1	1	1	1	1	1	1	1	1	1	3656 573
8-52-389	SEAL, Starter Solenoid		1	1	1	1	1	1	1	1	1	1	1	2875 558

NOTES

CARLINES J - Challenger, B - Barracuda, V - Valiant, L - Dart, R - Satellite, W - Coronet - Charger, P - Plymouth, D - Dodge, C - Chrysler, Y - Imperial

AR Indicates use as required.

Numerals in parentheses ( ) refer to notes.

Printed in U.S.A.
November, 1974

# Indicates parts not listed in any previous parts book.

★ Indicates change or addition.

STARTING MOTOR COMPONENT PARTS

For Model Application See Code 8-52-4

CODE	REMARKS	STARTER ASSEMBLIES 3656 575	3755 900
8-52-5	SCREW and WASHER, Mtg.	6023 899	6023 899
	STUD, Mtg.	2095 875	2095 875
8-52-41	CLUTCH, w/FORK PKG. 3620 733	2444 658	2444 658
8-52-50	PIN, Shifting Fork Pivot	2095 133	2095 133
8-52-61	RING, Clutch Actuator Ret.	2095 130	2095 130
8-52-67	SNAP RING, Pinion Shaft Gear Ret.	2095 117	2095 117
8-52-76	HOUSING and BEARING, Gear	2875 551	3755 261
8-52-80	BEARING, Pinion Hsg.	3656 382	3656 382
	BEARING, Gear Hsg.	3656 383	3656 383
8-52-87	ACTUATOR and RETAINING RING PACKAGE, Clutch Shifting	2275 556	2275 556
8-52-89	SHAFT, Pinion	2095 118	2095 118
8-52-96	GEAR and SNAP RING PACKAGE, Pinion Shaft	2275 557	2275 557
8-52-98	THRUST WASHER and RETAINING RING PACKAGE, Pinion Shaft	2275 558	2275 558
8-52-100	RING, Pinion Shaft Ret.	6022 006	6022 006
8-52-101	COVER, Gear Hsg.	2095 116	2095 116
8-52-102	WASHER, Pinion Shaft Gear	2095 114	2095 114
8-52-120	ARMATURE	3837 325	3837 325
8-52-121	THRUST WASHER PACKAGE, Armature	3780 593	3837 340
8-52-137	PLATE and BRUSH PACKAGE, Brush Holder	3837 328	3838 097
8-52-140	SPRING PACKAGE, Brush	2084 666	———
8-52-176	HEAD, Commutator End	2095 076	2095 076
8-52-235	FRAME and FIELD ASSY.	3656 558	3656 558
8-52-241	SCREW, Thru (2 req.)	3656 540	3656 540
8-52-342	CONTACT and SPRING PACKAGE, Solenoid Switch	2932 814	2932 814
8-52-345	SOLENOID PACKAGE	3837 337	3837 337
8-52-354	STUD PACKAGE, Solenoid Battery and Terminal Relay	3579 193	3579 193
8-52-375	CORE and SHIFTING FORK PACKAGE, w/2444 658 Clutch	3620 733	3620 733

NOTES

CODE	PART NAME	ENG. TYPE OR CU. IN	V	B J	L	R	W	P	D	C (L M)	C (P)	C (H S)	Y	PART NUMBER
8-53-150	**SWITCH, Foot Dimmer**		1	1	1	1	1	1	1	1	1	1	1	1881 938
	Panel Lamp Dimmer		—	1	—	—	—	—	—	—	—	—	—	3420 865
	Auto. H/Lamp Dimmer	8	—	—	—	—	—	—	—	—	—	—	1	2661 835
	SCREW, Foot Dimmer Switch Mtg.		2	2	2	2	2	2	2	2	2	2	2	6029 568
8-53-270	SWITCH, H/Lamp Inst. Lamp and Dome Lamp		1	—	1	—	—	—	—	—	—	—	—	2809 087
			—	—	—	1	1	1	1	1	1	1	1	3514 427
	SWITCH, H/Lamp	8	—	1	—	—	—	—	—	—	—	—	—	2947 305
	CONTROL, H/Lamp Sentinel	8	—	—	—	—	—	—	—	1	1	1	1	3746 586
	CONTROL, H/Lamp Dimmer and Sentinel	8	—	—	—	—	—	—	—	—	—	—	1	3746 584
8-53-271	NUT, Switch Mtg., w/H/Lamp Sentinel	8	—	—	—	—	—	—	—	1	1	1	1	3746 587
	NUT, H/Lamp Switch Mtg.	8	—	—	—	—	—	—	—	1	1	1	1	3488 122
8-53-274	ESCUTCHEON, H/Lamp Switch Mtg.	8	—	—	—	—	—	1	1	—	—	—	—	3746 527
8-53-279	BRACKET, H/Lamp Switch, w/Auto. H/Lamp Dimmer and H/Lamp Sentinel	8	—	—	—	—	—	—	—	1	1	1	1	3746 632
	H/Lamp Switch Ind. Lamp	8	—	—	—	—	—	—	—	1	1	1	1	3746 667
	H/Lamp Switch or H/Lamp Sw. and Control Mtg.	8	—	—	—	—	—	—	—	1	1	1	1	3746 589
8-53-283	RELAY and BRACKET, H/Lamp Delay		—	—	—	—	—	—	—	1	1	1	—	# 3879 349
	H/Lamp Sentinel and Dimmer	8	—	—	—	—	—	—	—	—	—	—	1	3746 637
8-53-284	SCANNER	8	—	—	—	—	—	—	—	—	—	—	1	2947 065
8-53-285	COVER, Scanner	8	—	—	—	—	—	—	—	—	—	—	1	2947 866
8-53-286	BRACKET, Scanner, Mtg.	8	—	—	—	—	—	—	—	—	—	—	1	3746 815
8-53-287	SPRING, Scanner Mtg.	8	—	—	—	—	—	—	—	—	—	—	1	2947 066
8-53-289	PLATE, TRIM PLATE and REINFORCEMENT, w/Rr. Window Defogger, w/Rallye Inst. Panel	8	—	1	—	—	—	—	—	—	—	—	—	3488 384
	PLATE, Switch Mtg. Reinf., w/o Rallye Inst. Panel	8	—	1	—	—	—	—	—	—	—	—	—	3488 783
	w/Rallye Inst. Panel	8	—	1	—	—	—	—	—	—	—	—	—	3488 784
	PLATE, Switch Mtg.	8	—	—	—	—	—	1	1	—	—	—	—	3746 526
8-53-294	BEZEL and TRIM PLATE, Switch Mtg., w/Rallye Inst. Panel, w/o Rr. Window Defogger	8	—	1	—	—	—	—	—	—	—	—	—	3488 379
	w/TRIM PLATE, w/Rallye Inst. Panel, w/Rr. Window Defogger	8	—	1	—	—	—	—	—	—	—	—	—	3488 381
	w/o Rallye Inst. Panel	8	—	1	—	—	—	—	—	—	—	—	—	3488 392
8-53-296	KNOB and STEM, H/Lamp, Inst. Lamp and Dome Lamp Switch		1	—	1	—	—	—	—	—	—	—	—	2820 135
	Panel Lamp Dimmer Switch	8	—	1	—	—	—	—	—	—	—	—	—	2947 380
	w/Stem, H/Lamp, Inst. Lamp and Dome Lamp Switch, w/o Rallye Inst. Panel		—	—	—	1	1	—	—	—	—	—	—	3488 621
	w/STEM, H/Lamp, Inst. Lamp and Dome Lamp Switch, w/Rallye Inst. Panel		—	—	—	1	1	—	—	—	—	—	—	3488 267
	w/SHAFT, H/Lamp Switch	8	—	—	—	—	—	1	1	1	—	—	—	3746 576
	Auto. H/Lamp Sentinel Control	8	—	—	—	—	—	—	—	1	1	1	1	3488 118
	Auto. H/Lamp Dimmer Control	8	—	—	—	—	—	—	—	—	—	—	1	3488 120
	w/SHAFT, H/Lamp Switch, w/H/Lamp Sentinel	8	—	—	—	—	—	—	—	1	—	—	—	3746 579
	w/SHAFT, H/Lamp Switch, w/H/Lamp Sentinel and Dimmer	8	—	—	—	—	—	—	—	—	—	—	1	3746 578
	w/SHAFT, H/Lamp Switch	8	—	—	—	—	—	—	—	—	1	1	1	3746 603
	w/SHAFT, H/Lamp Switch, w/H/Lamp Sentinel	8	—	—	—	—	—	—	—	—	1	1	1	3746 604
	Auto. H/Lamp Sentinel Control	8	—	—	—	—	—	—	—	1	1	1	1	3488 118

CARLINES J - Challenger, B - Barracuda, V - Valiant, L - Dart, R - Satellite, W - Coronet - Charger, P - Plymouth, D - Dodge, C - Chrysler, Y - Imperial

AR Indicates use as required.

Numerals in parentheses ( ) refer to notes.

Printed in U.S.A.

# Indicates parts not listed in any previous parts book.

★ Indicates change or addition.

November, 1974

CODE	PART NAME		ENG. TYPE OR CU. IN	V	B J	L	R	W	P	D	C (L M)	C (P)	C (H S)	Y	PART NUMBER
8-53-296	KNOB and STEM Cont'd.														
	Auto. H/Lamp Sentinel and Dimmer Switch		8	—	—	—	—	—	—	—	—	—	—	1	3488 120
8-53-297	OVERLAY and SEAL, H/Lamp Switch Lens		8	—	—	—	—	—	—	—	1	1	1	1	3746 596
	H/Lamp Sentinel		8	—	—	—	—	—	—	—	1	1	1	1	3746 597
	H/Lamp Sentinel and Dimmer Switch		8	—	—	—	—	—	—	—	—	—	—	1	3746 598
8-53-301	AMPLIFIER, Auto. H/Lamp Sentinel		8	—	—	—	—	—	—	—	1	1	1	1	3746 640
8-53-304	PHOTOCELL, Auto. H/Lamp Sentinel		8	—	—	—	—	—	—	—	1	1	1	1	2586 764
8-53-308	SPACER, H/Lamp Sentinel Photocell Mtg.		8	—	—	—	—	—	—	—	1	1	1	1	2820 409
8-53-312	RETAINER, H/Lamp, Inst. Lamp and Dome Lamp Switch			1	—	1	—	—	1	1	1	1	1	1	3488 691
	w/Rallye Inst. Panel			—	—	—	1	1	—	—	—	—	—	—	3488 691
	w/o Rallye Inst. Panel			—	—	—	1	1	—	—	—	—	—	—	3488 040
8-53-327	SWITCH, Oil Pressure, used with	Ind. Light	6	1	—	1	1	1	—	—	—	—	—	—	3004 105
		Ind. Light used with	8	1	1	1	1	1	1	1	1	1	1	1	3488 617
	SENDING UNIT	Oil Gauge		—	1	—	1	1	1	1	—	—	—	—	3488 609
8-55-7	**LAMP, Tail, Stop and Turn Signal**														
	w/B/Up Lamp, Fastback			1	—	—	—	—	—	—	—	—	—	—	3780 336-7
	B		8	—	2	—	—	—	—	—	—	—	—	—	3587 270
	w/B/Up Lamp J		8	—	1	—	—	—	—	—	—	—	—	—	3587 316-7
	w/B/Up Lamp, Fastback			—	—	1	—	—	—	—	—	—	—	—	3780 338-9
	w/B/Up Lamp, 2 D. and 2 D.H.T., R-L, R-H w/o Spring Special, R-P			—	—	—	1	—	—	—	—	—	—	—	3679 052-3
	w/B/Up Lamp, R-M, R-H 2 D.H.T. w/Spring Special			—	—	—	1	—	—	—	—	—	—	—	3679 178-9
	w/B/Up Lamp, 2 D. and 2 D.H.T.			—	—	—	—	1	—	—	—	—	—	—	3679 150-1
	w/B/Up Lamp, Fastback			—	—	—	—	1	—	—	—	—	—	—	3679 208-9
	w/B/Up Lamp, 4 D.			—	—	—	—	1	—	—	—	—	—	—	3728 200-1
	w/B/Up Lamp, except Sta. Wgn.		8	—	—	—	—	—	1	—	—	—	—	—	3728 118-9
	w/B/Up Lamp, except Sta. Wgn., D-P		8	—	—	—	—	—	—	1	—	—	—	—	3728 214-5
8-55-14	MEDALLION, T/Gate Tail, Stop and Turn Signal Lamp Hsg.		8	—	—	—	—	—	—	—	—	2	—	—	3728 148
8-55-23	REINFORCEMENT, Tail Lamp Opening														
	B	Rt.	8	—	1	—	—	—	—	—	—	—	—	—	3615 988
	w/P/NUT, B		8	—	1	—	—	—	—	—	—	—	—	—	3615 990
	w/P/NUT, Sta. Wgn., Upper Frt.	Lt.	8	—	—	—	—	—	1	—	—	—	—	—	3500 477
	(Also See P.T.C. 23-34-179 For Models not listed in 8-55-23)														
8-55-33	RETAINER, Lamp Mtg., 4 D.			—	—	—	2	—	—	—	—	—	—	—	3672 835
8-55-57	SOCKET														
	Fastback			2	—	2	—	—	—	—	—	—	—	—	2926 370
	B		8	—	2	—	—	—	—	—	—	—	—	—	3588 866
	J		8	—	4	—	—	—	—	4	4	—	—	—	2926 370
	except 4 D. and Sta. Wgn.			—	—	—	—	1	—	—	—	—	—	—	3588 650-1
	Sta. Wgn.		8	—	—	—	—	—	4	—	—	2	—	—	2926 370
	w/Cable, Sta. Wgn.		8	—	—	—	—	—	2	2	—	—	—	—	3764 747
	except Sta. Wgn.		8	—	—	—	—	—	4	—	—	—	6	—	2822 196
	w/Cable		8	—	—	—	—	—	—	—	—	2	—	—	3764 746
			8	—	—	—	—	—	—	—	—	—	—	2	3764 561
	T/Gate Tail, Stop and Turn Signal Lamp		8	—	—	—	—	—	—	—	—	2	—	—	3764 879

CARLINES J - Challenger, B - Barracuda, V - Valiant, L - Dart, R - Satellite, W - Coronet - Charger, P - Plymouth, D - Dodge, C - Chrysler, Y - Imperial

AR Indicates use as required.

# Indicates parts not listed in any previous parts book.

Numerals in parentheses ( ) refer to notes.

★ Indicates change or addition.

Printed in U.S.A.
November, 1974

CODE	PART NAME	ENG. TYPE OR CU. IN	V	B J	L	R	W	P	D	C (L M)	C (P)	C (H S)	Y	PART NUMBER
8-55-63	CONTACT, INSULATOR and SPRING PACKAGE, Socket		AR	AR	AR	AR	AR	AR	AR	AR	—	—	AR	2983 167
	Except Sta. Wgn.	8	—	—	—	—	—	AR	—	—	—	—	AR	2983 169
	T/Gate Tail, Stop and Turn Signal Lamp Wrg.	8	—	—	—	—	—	—	—	—	AR	—	—	2983 169
8-55-136	HOUSING, Tail, Stop and Turn Signal Lamp, except Fastback, Up to 6-1-74		1	—	—	—	—	—	—	—	—	—	—	3728 184-5
	Except Fastback, After 6-1-74		1	—	—	—	—	—	—	—	—	—	—	# 3728 678-9
	Except Fastback		—	—	1	—	—	—	—	—	—	—	—	3728 184-5
	Fastback		—	—	1	—	—	—	—	—	—	—	—	# 3728 674-5
	Sta. Wgn.		—	—	—	1	—	—	—	—	—	—	—	3728 494-5
	4 D.		—	—	—	1	—	—	—	—	—	—	—	3728 472-3
	Sta. Wgn.		—	—	—	—	1	—	—	—	—	—	—	3728 394-5
	Sta. Wgn.	8	—	—	—	—	—	1	—	—	—	—	—	3728 134-5
	except Sta. Wgn., except D-P	8	—	—	—	—	—	—	1	—	—	—	—	3728 004-5
	Sta. Wgn.	8	—	—	—	—	—	—	1	—	—	—	—	3728 162-3
		8	—	—	—	—	—	—	—	1	—	—	—	3728 036-7
		8	—	—	—	—	—	—	—	—	1	—	—	3728 188-9
	T/Gate Tail, Stop and Turn Signal Lamp	8	—	—	—	—	—	—	—	—	1	—	—	3728 224-5
	Deck Opening Lwr. Panel Tail, Stop, Turn Signal and Back-Up Lamp	8	—	—	—	—	—	—	—	—	—	1	—	3728 466-7
	Rear Bumper Tail, Stop and Turn Signal Lamp	8	—	—	—	—	—	—	—	—	—	—	2	3728 328
	Qtr. Panel Ext. Tail, Stop and Turn Signal Lamp	8	—	—	—	—	—	—	—	—	—	—	2	3728 340
8-55-158	BEZEL, Fastback		1	—	—	—	—	—	—	—	—	—	—	3679 314-5
	except Fastback, up to 11-17-73		1	—	—	—	—	—	—	—	—	—	—	3728 180-1
	except Fastback, after 11-17-73		1	—	—	—	—	—	—	—	—	—	—	3728 654-5
	Fastback		—	—	1	—	—	—	—	—	—	—	—	3679 310-1
	L-H, L-P		—	—	1	—	—	—	—	—	—	—	—	3728 406-7
	except Fastback, L-L		—	—	1	—	—	—	—	—	—	—	—	3728 400-1
	2 D, 2 D.H.T., R-L, R-H w/o Spring Special, R-P		—	—	—	2	—	—	—	—	—	—	—	3679 060
	R-M, R-H 2 D.H.T. w/Spring Special		—	—	—	2	—	—	—	—	—	—	—	3679 180
	except Sta. Wgn., except D-P	8	—	—	—	—	—	—	1	—	—	—	—	3728 010-1
	except Sta. Wgn., D-P	8	—	—	—	—	—	—	1	—	—	—	—	3728 218-9
		8	—	—	—	—	—	—	—	—	—	1	—	3728 086-7
		8	—	—	—	—	—	—	—	—	—	—	1	3728 348-9
		8	—	—	—	—	—	—	—	—	1	—	—	3728 232-3
8-55-194	LENS and GASKET PACKAGE, J	8	—	1	—	—	—	—	—	—	—	—	—	3621 606-7
	2 D. and 2 D.H.T.		—	—	—	2	—	—	—	—	—	—	—	3620 873
	Sta. Wgn.		—	—	—	1	—	—	—	—	—	—	—	3621 880-1
	4 D.		—	—	—	—	1	—	—	—	—	—	—	3780 556-7
	2 D. and 2 D.H.T.		—	—	—	—	1	—	—	—	—	—	—	3621 894-5
	Fastback		—	—	—	—	1	—	—	—	—	—	—	3621 896-7
	except Sta. Wgn.	8	—	—	—	—	—	1	—	—	—	—	—	3744 860-1
	Sta. Wgn.	8	—	—	—	—	—	1	—	—	—	—	—	3780 706-7
	Sta. Wgn.	8	—	—	—	—	—	—	1	—	—	—	—	3780 306-7
	except Sta. Wgn., except D-P	8	—	—	—	—	—	—	1	—	—	—	—	3744 956-7
	except Sta. Wgn., D-P	8	—	—	—	—	—	—	2	—	—	—	—	3744 960-1
		8	—	—	—	—	—	—	—	1	—	—	—	3744 864-5
	Sta. Wgn.	8	—	—	—	—	—	—	—	—	1	—	—	3780 704-5
	w/B/Up Lamp	8	—	—	—	—	—	—	—	—	—	1	—	3744 958-9
		8	—	—	—	—	—	—	—	—	—	—	2	3780 702
	Tailgate, Tail, Stop and Turn Signal Lamp	8	—	—	—	—	—	—	—	—	1	—	—	3780 716-7
	Qtr. Panel Ext. Tail, Stop and Turn Signal Lamp	8	—	—	—	—	—	—	—	—	—	—	2	3780 709

CARLINES: J - Challenger, B - Barracuda, V - Valiant, L - Dart, R - Satellite, W - Coronet - Charger, P - Plymouth, D - Dodge, C - Chrysler, Y - Imperial

AR Indicates use as required.

Numerals in parentheses ( ) refer to notes.

Printed in U.S.A.

# Indicates parts not listed in any previous parts book.

★ Indicates change or addition.

November, 1974

CODE	PART NAME	ENG. TYPE OR CU. IN	V	B J	L	R	W	P	D	C (L M)	C (P)	C (H S)	Y	PART NUMBER
8-55-195	LENS, Fastback		1	—	—	—	—	—	—	—	—	—	—	3679 246-7
	except Fastback		1	—	—	—	—	—	—	—	—	—	—	3728 484-5
	B	8	—	2	—	—	—	—	—	—	—	—	—	3587 272
	Fastback		—	—	1	—	—	—	—	—	—	—	—	3679 236-7
	except Fastback		—	—	1	—	—	—	—	—	—	—	—	3728 032-3
	4 D.		—	—	—	1	—	—	—	—	—	—	—	3728 478-9
	Sta. Wgn.		—	—	—	—	1	—	—	—	—	—	—	3679 188-9
8-55-214	GASKET, Lens													
	4 D.		—	—	—	2	—	—	—	—	—	—	—	3728 476
	Sta. Wgn.		—	—	—	2	—	—	—	—	—	—	—	3679 200
	2 D. and 2 D.H.T.		—	—	—	2	—	—	—	—	—	—	—	3679 058
	4 D.		—	—	—	—	2	—	—	—	—	—	—	3728 509
	Sta. Wgn.		—	—	—	—	2	—	—	—	—	—	—	3679 186
	except 4 D. and Sta. Wgn.		—	—	—	—	2	—	—	—	—	—	—	3679 158
8-55-300	CONTACT, Socket	8	—	—	—	—	—	AR	—	—	—	AR	—	2256 966
8-56-1	**LAMP, Back-Up**													
	B	8	—	2	—	—	—	—	—	—	—	—	—	3587 276
	Sta. Wgn.		—	—	—	1	—	—	—	—	—	—	—	3728 286-7
8-56-2	SWITCH, B/Up Lamp, w/Manual Trans.		1	1	1	1	1	—	—	—	—	—	—	3488 270
	NOTE: (Switch w/Auto. Trans. See Part Type Code 21-113-24)													
8-56-7	LENS, B	8	—	2	—	—	—	—	—	—	—	—	—	3587 278
	Fastback		—	—	1	—	—	—	—	—	—	—	—	3679 238-9
	4 D.		—	—	—	2	—	—	—	—	—	—	—	3728 482
8-56-8	LENS and GASKET PACKAGE													
	J	8	—	1	—	—	—	—	—	—	—	—	—	3621 604-5
	Sta. Wgn.		—	—	—	1	—	—	—	—	—	—	—	3780 558-9
	Sta. Wgn.		—	—	—	—	1	—	—	—	—	—	—	3780 560-1
	Sta. Wgn.	8	—	—	—	—	—	1	1	—	1	—	—	3780 720-1
	except Sta. Wgn., D-P	8	—	—	—	—	—	—	2	—	—	—	—	3780 703
		8	—	—	—	—	—	—	—	1	—	—	—	3780 302-3
		8	—	—	—	—	—	—	—	—	—	—	1	3780 718
8-56-23	GASKET, Lamp Lens, Sta. Wgn.		—	—	—	2	—	—	—	—	—	—	—	3728 498
	Sta. Wgn.		—	—	—	—	2	—	—	—	—	—	—	3728 535
		8	—	—	—	—	—	—	—	2	—	—	—	3728 304
8-56-27	CONTACT, INSULATOR and SPRING PACKAGE, Socket		AR	AR	AR	AR	AR	AR	AR	AR	AR	AR	AR	2584 972
8-56-29	CABLE, Lamp, except Sta. Wgn., D-P Rt.	8	—	—	—	—	—	—	1	—	—	—	—	3764 646
	Lt.	8	—	—	—	—	—	—	1	—	—	—	—	3764 599
8-56-34	SOCKET, Fastback		2	—	2	—	—	—	—	—	—	—	—	3588 865
	B	8	—	2	—	—	—	—	—	—	—	—	—	3588 865
	J	8	—	2	—	—	—	—	—	—	—	—	—	3513 162
	except Sta. Wgn., except D-P	8	—	—	—	—	—	—	2	—	—	—	—	3513 162
	except Sta. Wgn.	8	—	—	—	—	—	2	—	—	—	—	—	3764 563
	w/Wiring, except Sta. Wgn.	8	—	—	—	—	—	1	—	—	—	—	—	3764 126
	w/BOOT	8	—	—	—	—	—	—	—	1	—	—	—	2983 279
		8	—	—	—	—	—	—	—	—	2	—	—	3764 504
	w/CABLE	8	—	—	—	—	—	—	—	—	—	—	1	3764 579
8-56-36	BEZEL, Lamp, Fastback		—	—	1	—	—	—	—	—	—	—	—	3679 338-9
	except Sta. Wgn., D-P	8	—	—	—	—	—	—	1	—	—	—	—	3728 441
8-56-40	GASKET, Lamp													
	except Sta. Wgn., D-P, Ctr.	8	—	—	—	—	—	—	1	—	—	—	—	3728 634
8-56-43	HOUSING, Sta. Wgn.	8	—	—	—	—	—	1	1	—	1	—	—	3728 274-5
	except Sta. Wgn., D-P		—	—	—	—	—	—	1	—	—	—	—	3728 438
		8	—	—	—	—	—	—	—	1	—	—	—	3728 464-5
			—	—	—	—	—	—	—	—	—	—	1	3728 357
8-56-46	GASKET, Switch Mtg., w/Manual Trans.		1	1	1	1	1	—	—	—	—	—	—	1302 807
8-57-10	**LAMP, License**		1	—	1	—	—	—	—	—	—	—	—	3728 578
	B	8	—	1	—	—	—	—	—	—	—	—	—	3403 830
	J	8	—	1	—	—	—	—	—	3	1	2	9	2575 059
	4 D.		—	—	—	1	1	—	—	—	—	—	—	3728 578

CARLINES: J - Challenger, B - Barracuda, V - Valiant, L - Dart, R - Satellite, W - Coronet - Charger, P - Plymouth, D - Dodge, C - Chrysler, Y - Imperial

AR Indicates use as required.

Numerals in parentheses ( ) refer to notes.

Printed in U.S.A.

# Indicates parts not listed in any previous parts book.

★ Indicates change or addition.

November, 1974

CODE	PART NAME	ENG. TYPE OR CU. IN	V	B J	L	R	W	P	D	C (L M)	C (P)	C (H S)	Y	PART NUMBER
8-57-10	LAMP Cont'd.													
	except 4 D. and Sta. Wng.		—	—	—	1	1	—	—	—	—	—	—	3679 307
	Sta. Wgn.		—	—	—	1	1	—	—	—	—	—	—	3679 240
	Sta. Wgn.	8	—	—	—	—	—	1	1	—	1	—	—	2930 916
	except Sta. Wgn.	8	—	—	—	—	—	1	1	—	—	1	—	3728 578
		8	—	—	—	—	—	—	—	2	—	—	2	3728 524
8-57-18	BRACKET, License Lamp, 4 D		—	—	—	1	1	—	—	—	—	—	—	3728 611
8-57-30	HOUSING, License Lamp	8	—	—	—	—	—	—	—	1	—	—	1	3728 526
8-57-54	LENS and GASKET PACKAGE,													
	B	8	—	1	—	—	—	—	—	—	—	—	—	3420 839
	except 4 D. and Sta. Wgn.		—	—	—	1	1	—	—	—	—	—	—	3620 734
8-57-79	SOCKET, V except 2 D.H.T.,													
	L Fastback		1	—	1	—	—	—	—	—	—	—	—	3513 686
	B	8	—	1	—	—	—	—	—	—	—	—	—	2983 679
	4 D. and Sta. Wgn.		—	—	—	1	1	—	—	—	—	—	—	3513 686
	except Sta. Wgn.	8	—	—	—	—	—	1	1	2	—	1	2	3513 686
8-57-89	CONTACT, INSULATOR and SPRING PACKAGE, Socket, J		—	AR	—	AR	AR	—	—	—	—	—	—	2584 972
8-58-60	**SWITCH, Stop Lamp, Heavy Duty**		—	—	—	1	1	—	—	—	—	—	—	2809 033
	Medium Duty		1	1	1	1	1	1	1	1	1	1	1	2926 275
	Heavy Duty	8	—	—	—	—	—	1	1	1	1	1	1	2926 270
	w/SPEED CONTROL		—	—	—	1	1	1	1	1	1	1	1	2947 798
8-58-69	STRIKER, Switch	8	—	—	—	—	—	1	1	1	1	1	1	3746 690
8-58-79	BRACKET, Switch Mtg.		1	—	1	—	—	—	—	—	—	—	—	2771 857
			—	1	—	1	1	—	—	—	—	—	—	3488 490
		8	—	—	—	—	—	1	1	1	1	1	1	3746 644
8-62-1	**CONTROL UNIT, Alarm System**	8	—	—	—	—	—	1	1	1	1	1	1	3746 722
	SCREW, Mtg.	8	—	—	—	—	—	1	1	1	1	1	1	6030 503
8-62-2	BUMPER, Control Unit Mtg. Brkt.	8	—	—	—	—	—	1	1	1	1	1	1	2276 749
8-62-4	SWITCH, T/Gate Alarm System,													
	Sta. Wgn.	8	—	—	—	—	—	1	1	—	1	—	—	3746 736
	SWITCH, Door Key Cylinder	8	—	—	—	—	—	2	2	2	2	2	2	3488 888
	SWITCH, Hood Open	8	—	—	—	—	—	1	1	1	1	1	1	3488 868
	SWITCH, Lock Alarm System	8	—	—	—	—	—	1	1	1	1	1	1	3488 892
	SWITCH, Trunk Open	8	—	—	—	—	—	1	1	1	—	1	1	3488 878
	SWITCH PACKAGE, Key Cylinder (Alarm System)	8	—	—	—	—	—	1	1	1	1	1	1	3837 351
	SWITCH and BRACKET, Trunk Latch, w/o Power Deck Lid Release	8	—	—	—	—	—	1	1	1	—	1	1	3488 886
	SWITCH and CLIP, Elect. Trunk Latch, w/Power Deck Lid Release	8	—	—	—	—	—	1	1	1	—	1	1	3488 887
8-62-7	STRIKER, T/Gate Switch Alarm System, Sta. Wgn.	8	—	—	—	—	—	1	1	—	1	—	—	3746 727
8-62-8	RELAY and BRACKET, Alarm System	8	—	—	—	—	—	1	1	1	1	1	1	3488 889
8-62-10	BRACKET and STUD, Trunk Opening Switch, except Sta. Wgn.	8	—	—	—	—	—	1	1	1	—	1	1	3746 676
	BRACKET, Control Unit Mtg.	8	—	—	—	—	—	1	1	1	1	1	1	3746 812
8-62-11	PLATE and TUBE, Deck Lid I/S. Panel Locking Mtg.	8	—	—	—	—	—	1	1	—	—	—	—	3796 818
8-62-12	WIRING, Security Alarm System	8	—	—	—	—	—	1	1	1	1	1	1	3764 248
	Concealed H/Lamp Relay	8	—	—	—	—	—	—	—	—	—	—	1	3764 246
	Inst. Panel T/Gate, w/Power T/Gate Window Regular, Sta. Wgn.	8	—	—	—	—	—	1	1	—	—	—	—	3764 243
	Inst. Panel T/Gate, w/Power T/Gate Window Regular, w/o Auto. Temp. Control	8	—	—	—	—	—	—	—	—	1	—	—	3764 243
	w/Power T/Gate Window Regular, w/Auto. Temp. Control	8	—	—	—	—	—	—	—	—	1	—	—	3764 244

CARLINES: J - Challenger, B - Barracuda, V - Valiant, L - Dart, R - Satellite, W - Coronet - Charger, P - Plymouth, D - Dodge, C - Chrysler, Y - Imperial

AR Indicates use as required.

Numerals in parentheses ( ) refer to notes.

Printed in U.S.A.

# Indicates parts not listed in any previous parts book.

★ Indicates change or addition.

November, 1974

CODE	PART NAME	ENG. TYPE OR CU. IN	V	B J	L	R	W	P	D	C (L M)	C (P)	C (H S)	Y	PART NUMBER
8-62-12	WIRING Cont'd.													
	Security Alarm System (City Country Horn) (NYC)	8	—	—	—	—	—	1	1	1	1	1	1	3764 968

NOTES

GROUP 9 - ENGINE
6 CYLINDER

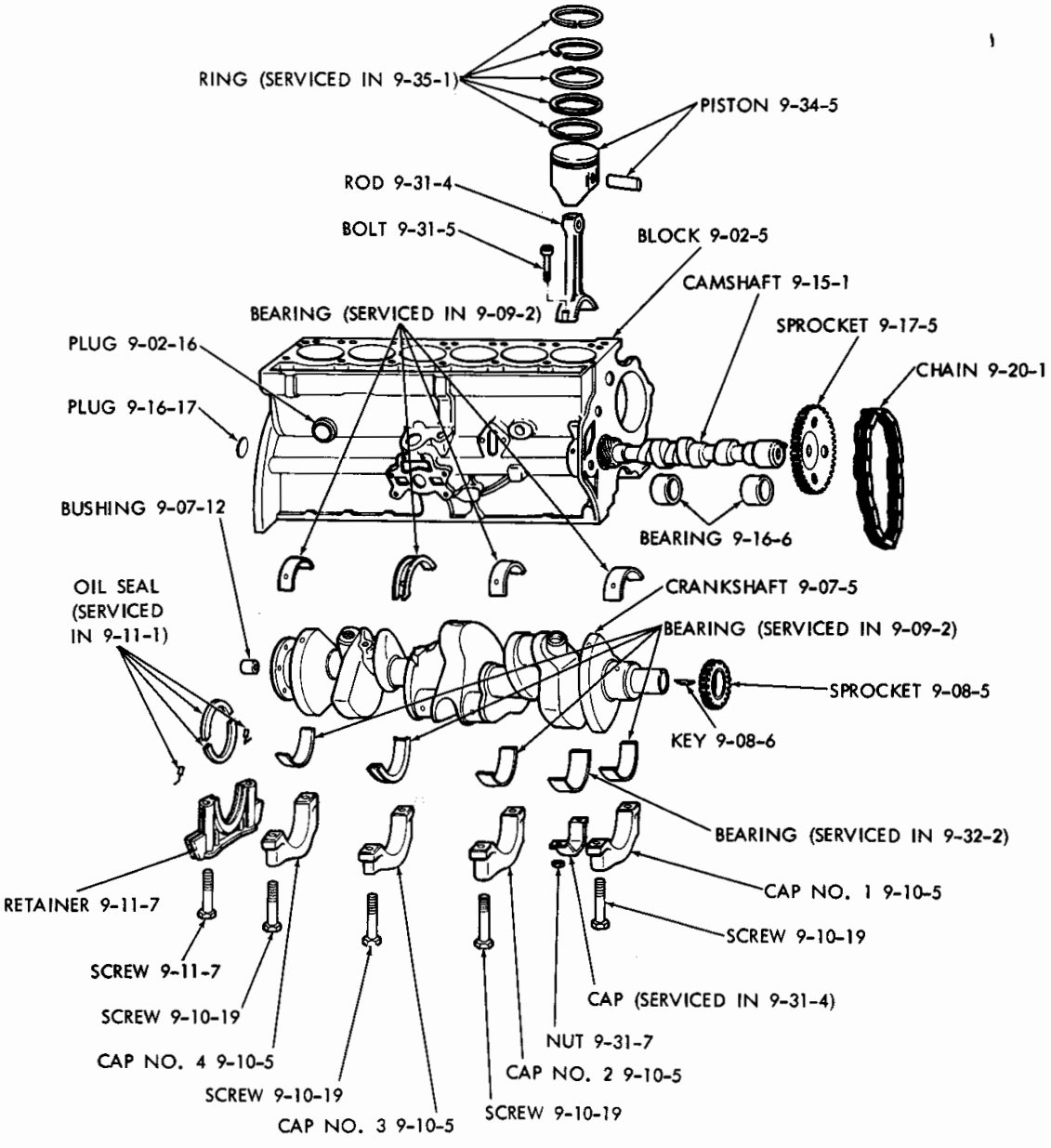

PARTS INDICATED BY NAME ONLY - ORDER BY DESCRIPTION

19a4524 **A**

SHORT ENGINE ASSEMBLY - 6 CYLINDER

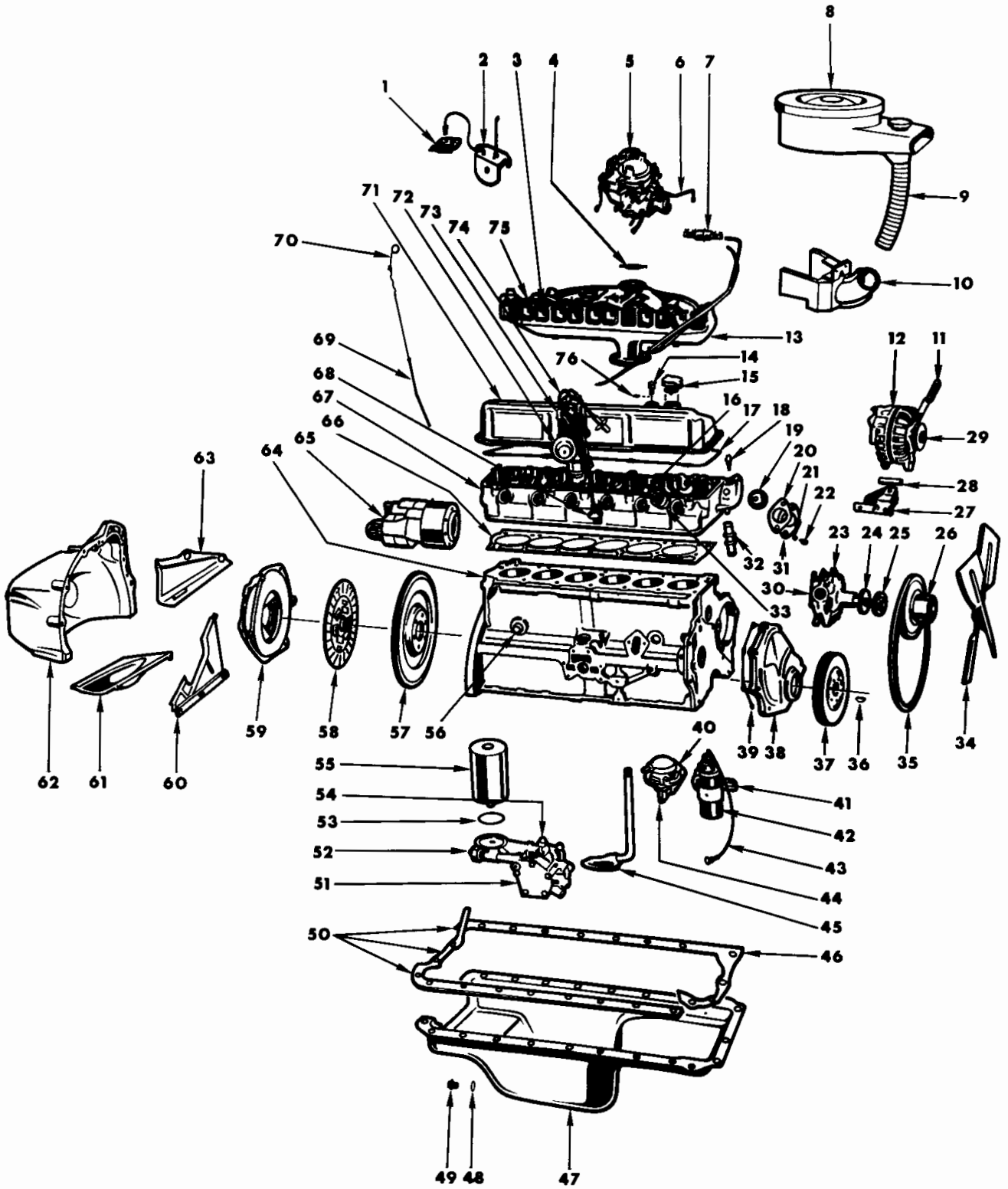

EXTERNAL ENGINE - 198, 225 6 CYLINDER ENGINES

EXTERNAL ENGINE - 198 AND 225 6 CYLINDER ENGINE

Ref. No.	Name	Part Type Code
1	Choke Control (Electric)	14-39-45
2	Choke	14-39-45
3	Gasket (Serviced in 9-50-1)	
4	Gasket	14-30-2
5	Carburetor	14-30-1
6	Tube	14-89-2
7	Fuel Filter	14-67-1
8	Air Cleaner	14-29-2
9	Connector	14-29-38
10	Heater	14-62-1
11	Strap	8-28-15
12	Alternator	8-28-3
13	Manifold	9-48-6
14	Valve	10-02-62
15	Air Cleaner	10-01-21
16	Spark Plug	8-36-114
17	Gasket	9-03-29
18	Sending Unit	8-37-155
19	Thermostat	7-41-4
20	Gasket	9-05-6
21	Washer	
22	Screw (Part No.	180 124)
23	Pump Package	7-42-1
24	Hub	7-05-1
25	Spacer	7-02-16
26	Pulley	7-06-14
27	Bracket	8-28-36
28	Spacer	Not Serviced
29	Pulley	8-28-5
30	Gasket	7-44-4
31	Elbow	9-05-5
32	Hose, Water Pump By-Pass	7-14-9
33	Tube	8-36-136
34	Fan	7-02-1
35	Belt	7-03-1
36	Key	9-08-5
37	Damper	9-13-5
38	Cover	9-23-5
39	Gasket	9-23-17
40	Gasket	14-74-1
41	Bracket	8-35-41
42	Coil	8-35-4
43	Cable	8-36-49
44	Pump Package	14-73-1
45	Strainer, w/Pipe	10-23-7
46	Gasket	10-24-1
47	Pan	10-24-4
48	Gasket	10-24-38
49	Plug	10-24-37
50	Gasket (Serviced in 10-24-1)	
51	Pump	10-07-6
52	Cap	10-22-40
53	Gasket (Serviced in 10-26-6)	
54	Gasket	10-07-11
55	Filter	10-26-6
56	Plug	
57	Flywheel	9-45-1
58	Disc	6-13-1
59	Cover, w/Plate	6-14-1
60	Seal	6-10-10
61	Pan	6-10-2
62	Housing	6-09-1
63	Strut	6-09-11
64	Block	9-02-5
65	Starter	8-52-4
66	Gasket	9-03-5
67	Head	9-03-4
68	Cover	8-36-117
69	Tube	10-03-7
70	Indicator	10-03-4
71	Cover	9-03-28
72	Distributor	8-27-1
73	Cap	8-27-71
74	Cable Set	8-36-1
75	Manifold	9-48-7
76	Grommet	10-02-61

PARTS INDICATED BY NAME ONLY - ORDER BY DESCRIPTION

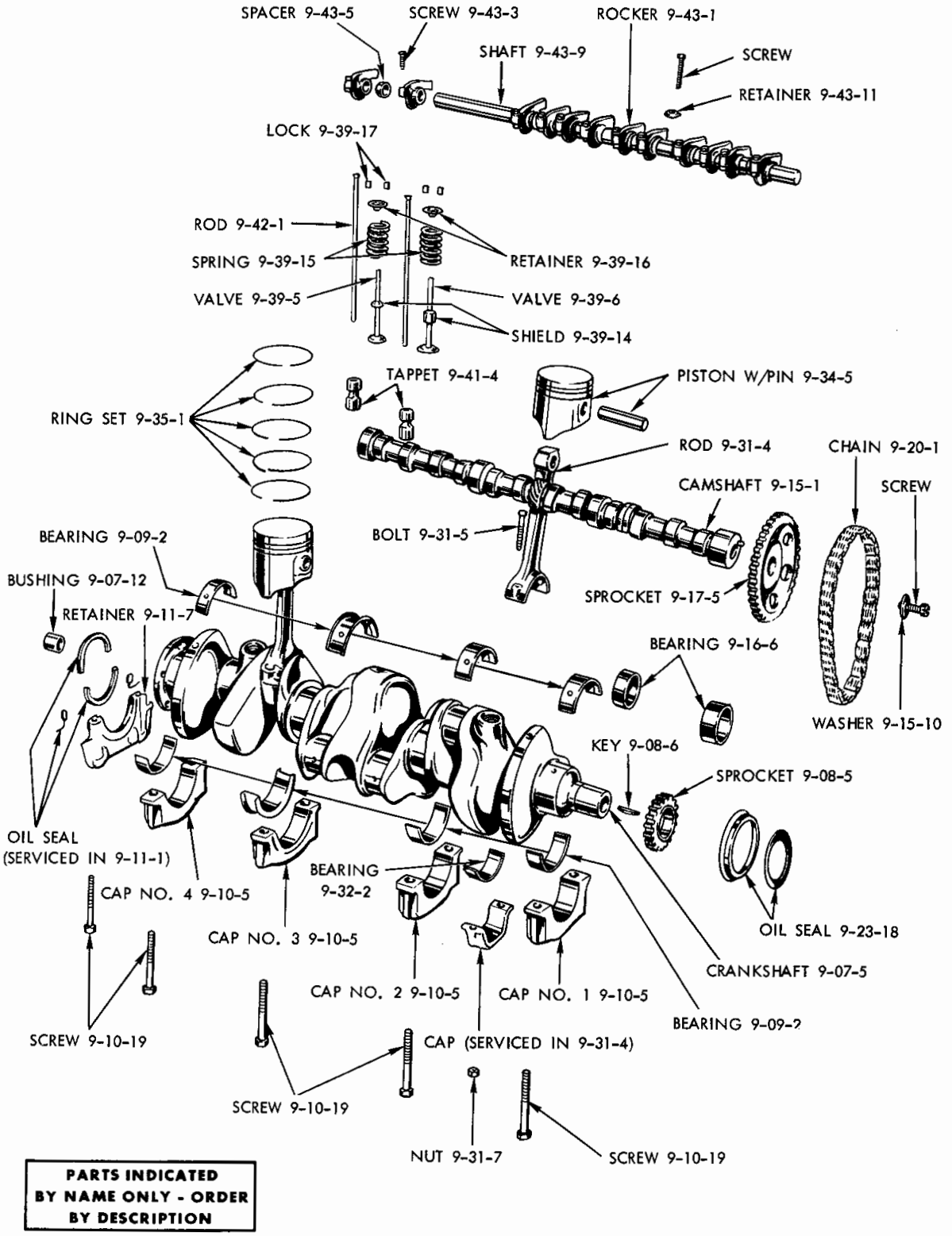
SPACER 9-43-5
SCREW 9-43-3
ROCKER 9-43-1
SHAFT 9-43-9
SCREW
RETAINER 9-43-11
LOCK 9-39-17
ROD 9-42-1
SPRING 9-39-15
RETAINER 9-39-16
VALVE 9-39-5
VALVE 9-39-6
SHIELD 9-39-14
TAPPET 9-41-4
PISTON W/PIN 9-34-5
RING SET 9-35-1
ROD 9-31-4
CHAIN 9-20-1
CAMSHAFT 9-15-1
SCREW
BEARING 9-09-2
BOLT 9-31-5
BUSHING 9-07-12
SPROCKET 9-17-5
RETAINER 9-11-7
BEARING 9-16-6
WASHER 9-15-10
KEY 9-08-6
SPROCKET 9-08-5
OIL SEAL
(SERVICED IN 9-11-1)
BEARING
9-32-2
CAP NO. 4 9-10-5
OIL SEAL 9-23-18
CAP NO. 3 9-10-5
CRANKSHAFT 9-07-5
CAP NO. 2 9-10-5
CAP NO. 1 9-10-5
BEARING 9-09-2
SCREW 9-10-19
CAP (SERVICED IN 9-31-4)
SCREW 9-10-19
NUT 9-31-7
SCREW 9-10-19
PARTS INDICATED
BY NAME ONLY - ORDER
BY DESCRIPTION

19a4507 *A*

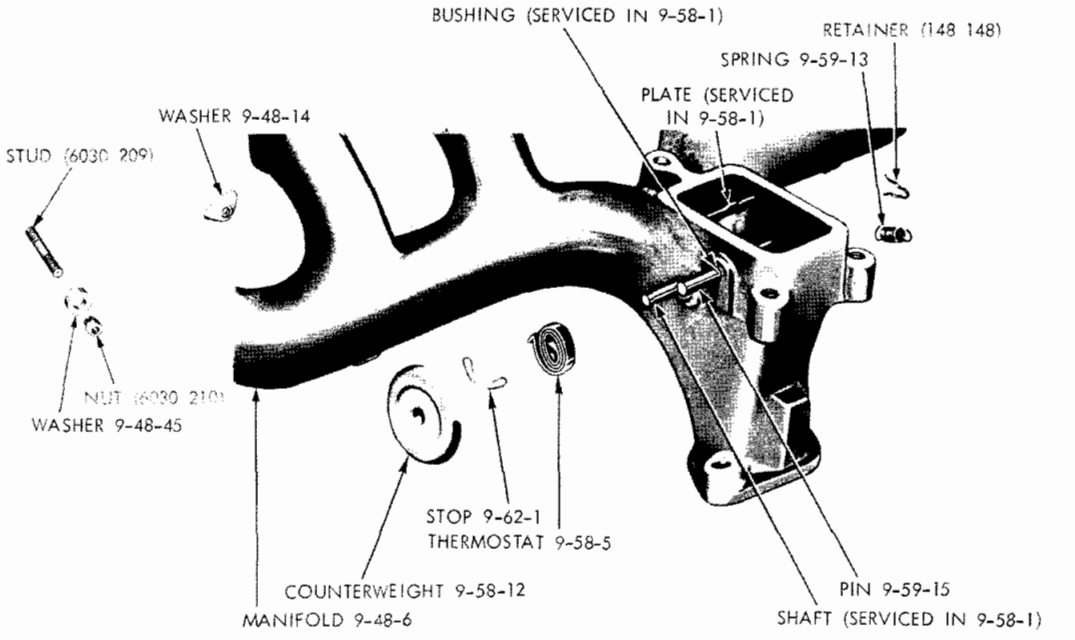

EXHAUST MANIFOLD WITH HEAT CONTROLS - 6 CYLINDER ENGINES

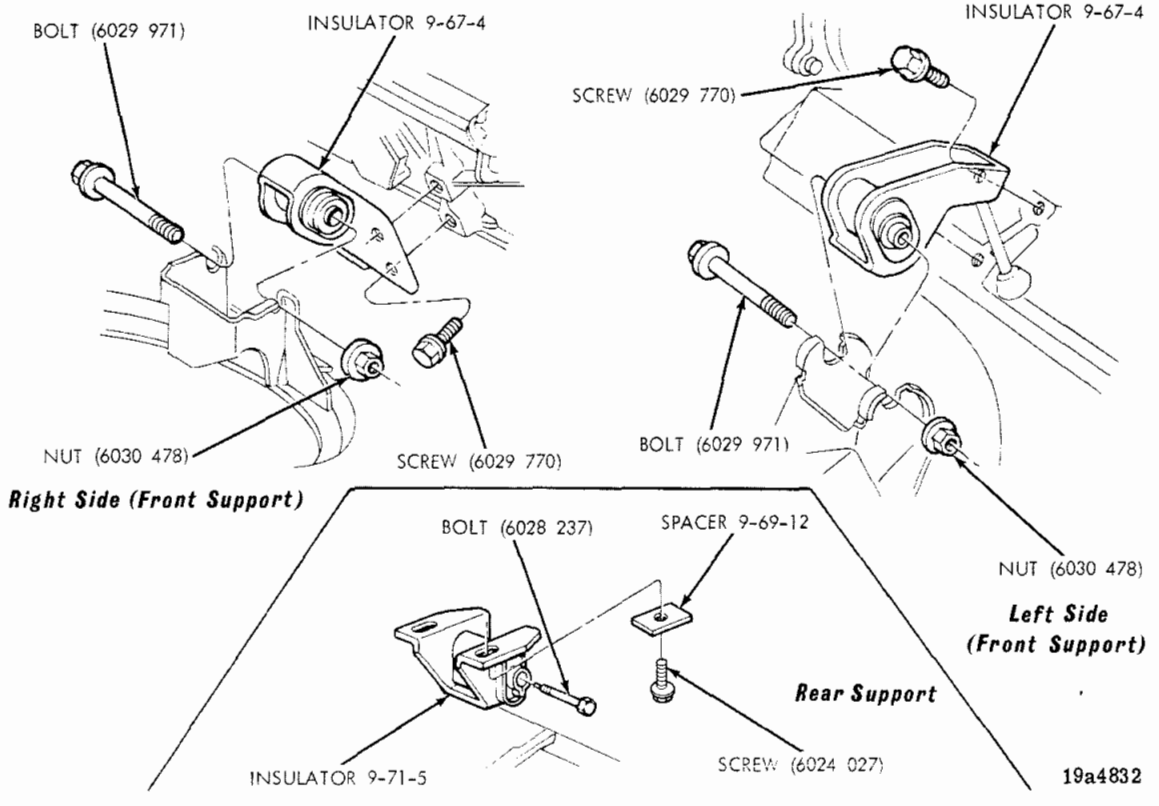

ENGINE MOUNTINGS - FRONT AND REAR - 6 CYLINDER V, L, R, W

NOTES

GROUP 9 - ENGINE (6 CYLINDER)

BEARING, CAMSHAFT 9-16
BEARING PACKAGE, CONNECTING ROD 9-32
BEARING PACKAGE, CRANKSHAFT 9-09
BLOCK, CYLINDER 9-02
BRACKET, ENGINE REAR SUPPORT INSULATOR 9-69
CAMSHAFT 9-15
CAP, CRANKSHAFT BEARING 9-10
CHAIN, TIMING 9-20
COVER, CHAIN CASE 9-23
CONVERTER, TORQUE 9-46
CRANKSHAFT 9-07
DAMPER, CRANKSHAFT VIBRATION 9-13
ELBOW OR CONNECTOR, CYLINDER HEAD WATER OUTLET 9-05
ENGINE ASSEMBLY 9-01
FLYWHEEL 9-45
GASKET, MANIFOLD 9-50
HEAD, CYLINDER 9-03
INSULATOR, ENGINE FRONT SUPPORT 9-67
INSULATOR, ENGINE REAR SUPPORT 9-71
MANIFOLD 9-48
PISTON AND PIN 9-34
RING SET, PISTON 9-35
ROCKER, VALVE 9-43
ROD, CONNECTING 9-31
ROD, VALVE PUSH 9-42
SEAL, CRANKSHAFT REAR BEARING OIL 9-11
SPROCKET, CAMSHAFT 9-17
SPROCKET, CRANKSHAFT 9-08
STOP, MANIFOLD HEAT CONTROL VALVE 9-62
SUPPORT, ENGINE FRONT 9-64
TAPPET, VALVE 9-41
THERMOSTAT, MANIFOLD HEAT CONTROL VALVE 9-58
VALVE, EXHAUST AND INTAKE 9-39
VALVE, MANIFOLD HEAT CONTROL 9-59

Printed in U.S.A.
November, 1974

IMPORTANT

SIX CYLINDER ENGINES

NOTE: The following symbols are used in connection with engine numbers. Engine numbers without symbols indicate "Standard Cylinders and Crankshaft Bearings"

The Letter "A" immediately following the engine identification number indicates Bore .020" (.508 MM) Larger than Standard.

The Letter "B" immediately following the engine identification number indicates Main and Connecting Rod Bearings .010" (.245 MM) Smaller than Standard.

The Letters "AB" immediately following the engine identification number indicates Cylinder Bore .020" (.508 MM.) Larger than Standard. Main and Connecting Rod Bearings .010" (.254 MM.) Smaller than Standard.

The Letters in the circular pads at either end of the engine number are for the use of factory inspectors only and should not be connected with engine number.

Always mention Serial Numbers when ordering major assemblies.

CODE	PART NAME AND DESCRIPTION	PER CAR	Cu. In. Displacement & Piston Bore Size	
			198	225
			3.40	3.40

SIX CYLINDER ENGINES

NOTE: (1) When a complete overhaul engine gasket set is required for the 6 cylinder engine use upper and lower Engine Gasket Sets part type Code 9-01-5 and Oil Seal Package Part Type Code 9-11-1 and Intake and Exhaust Manifold Gasket Set Part Type Code 9-50-1 and also Oil Pan Gasket Set Part Type Code 10-24-1.

NOTE: (2) When a valve grinding gasket set is required for the 6 cylinder engine use upper Engine Gasket Set Part Type Code 9-01-5 and Intake and Exhaust Manifold Gasket Set Part Type Code 9-50-2.

9-01-5	**GASKET SET, Engine**			
	Upper (See Note 1 and 2)	1	3683 827	3683 827
	Lower (See Note 1)	1	3683 828	3683 828
9-01-24	SHORT ENGINE			
	NOTE: Short Engine Assemblies Consist of: The Cylinder Block with Pistons and Rings, Crankshaft and Bearings, Connecting Rods and Bearings.			
	w/Std. Compression,	1	3462 601	———
	w/Std. Compression,	1	———	3462 605
	w/Low Compression, Export	1	———	3462 607
9-02-5	**BLOCK, CYLINDER, w/Pistons and Rings**	1	2951 694	2951 694
	w/Low Compression, Export	1	———	2951 693
9-02-7	DOWEL, Cylinder Block to Clutch			
	Housing or Torque Converter	2	1122 532	1122 532
	Eccentric, .007" Over Center	AR	1736 347	1736 347
	Eccentric, .014" Over Center	AR	1736 348	1736 348
	Eccentric, .021" Over Center	AR	1736 353	1736 353
	DOWEL, Cylinder Block to Cylinder Head	2	141 195	141 195
	DOWEL, Cylinder Block to Chain Case Cover	2	141 195	141 195
9-02-16	PLUG, Cylinder Block Water Hole	AR	2406 356	2406 356
	.065 O/S	AR	2406 575	2406 575
	PLUG, Cylinder Block Oil Gallery 3/8" pipe	1	6028 668	6028 668
9-02-50	HEATER, Engine Jacket	1	2863 477	2863 477
	"O" Ring	AR	6027 513	6027 513
9-02-62	CORD, Engine Jacket Heater	1	3614 282	3614 282
9-03-4	**HEAD, Cylinder**	1	3671 476	3671 476
9-03-5	GASKET, Cylinder Head	1	2843 182	2843 182
9-03-10	BOLT, Cylinder Head	14	1947 687	1947 687
9-03-18	PLUG, Cylinder Head Heater Hole, w/o Heater	1	1859 127	1859 127
9-03-28	COVER, Cylinder Head	1	3769 672	3769 672
9-03-29	GASKET, Cylinder Head Cover	1	2899 250	2899 250
9-05-5	**ELBOW, Cylinder HEAD Water Outlet**	AR	2121 524	2121 524
9-05-6	GASKET, Cylinder Water Outlet Elbow	1	1947 671	1947 671
9-07-5	**CRANKSHAFT**	1	2951 979	2899 582
9-07-12	BUSHING, Crankshaft Trans. Drive Pinion Pilot	1	53 298	53 298

CODE	PART NAME AND DESCRIPTION	PER CAR	Cu. In. Displacement & Piston Bore Size	
			198	225
			3.40	3.40

SIX CYLINDER ENGINES

9-08-5	**SPROCKET, Crankshaft**	1	2128 912	2128 912
	Key	1	6029 411	6029 411
	NOTE: When .001 thicker wall Crankshaft Main Bearings are used for Engines in Production a Maltese Cross is stamped on the Model Part of the Cylinder Block			
	NOTE: Crankshaft Bearing Package Consist of one upper and one lower Bearing.			
9-09-2	**BEARING PACKAGE, CRANKSHAFT, No. 1 Std.**	1	2240 368	2240 368
	Nos. 2 and 4 Std.	2	2240 376	2240 376
	No. 3 Std.	1	2240 372	2240 372
	No. 1 .001 U/S	1	2240 369	2240 369
	Nos. 2 and 4 .001 U/S	2	2240 377	2240 377
	No. 3 .001 U/S	1	2240 373	2240 373
	No. 1 .002 U/S	1	2240 370	2240 370
	Nos. 2 and 4 .002 U/S	2	2240 378	2240 378
	No. 3 .002 U/S	1	2240 374	2240 374
	No. 1 .003 U/S	1	2275 381	2275 381
	Nos. 2 and 4 .003 U/S	2	2275 383	2275 383
	No. 3 .003 U/S	1	2275 385	2275 385
	No. 1 .010 U/S	1	2240 371	2240 371
	Nos. 2 and 4 .010 U/S	2	2240 379	2240 379
	No. 3 .010 U/S	1	2240 375	2240 375
	No. 1 .012 U/S	1	2275 382	2275 382
	Nos. 2 and 4 .012 U/S	2	2275 384	2275 384
	No. 3 .012 U/S	1	2275 386	2275 386
9-10-5	**CAP, Crankshaft Bearing, Nos. 1 and 2**	2	2084 403	2084 403
	No. 3	1	2084 405	2084 405
	No. 4	1	2084 404	2084 404
9-10-19	SCREW, Crankshaft Bearing Cap	8	1618 695	1618 695
9-11-1	**OIL SEAL PACKAGE, Crankshaft Rear Bearing** 4049266	1	~~3549 393~~	~~3549 393~~
9-11-7	RETAINER, Crankshaft Bearing Oil Seal			
	Lower	1	1947 557	1947 557
	Screw	2	9418 004	9418 004
9-13-5	**DAMPER, CRANKSHAFT Vibration**	1	2806 211	2806 211
9-15-1	**CAMSHAFT**	1	3512 639	3512 639
9-16-6	**BEARING, Camshaft**			
	No. 1 (Up To 11-28-73)	1	2121 725	2121 725
	No. 1 (After 11-28-73)	1	# 3830 601	# 3830 601
	No. 2	1	1821 772	1821 772
	No. 3	1	2121 726	2121 726
	No. 4	1	2121 727	2121 727
	No. 1 .010 O/S (Up To 11-28-73)	1	2205 510	2205 510
	No. 1 .010 O/S (After 11-28-73)	1	# 3830 602	# 3830 602
	No. 2 .010 O/S	1	2205 512	2205 512
	No. 3 .010 O/S	1	2205 514	2205 514
	No. 4 .010 O/S	1	2205 516	2205 516
9-16-17	PLUG, Camshaft Rear Bearing	1	2402 905	2402 905
	Oversize	AR	2463 041	2463 041
9-17-5	**SPROCKET, Camshaft**	1	2806 945	2806 945
	Dowel	1	141 195	141 195
	Washer, Retainer Screw	1	6023 053	6023 053
9-20-1	**CHAIN, Timing**	1	3514 866	3514 866
9-23-5	**COVER, w/Timing Indicator, Chain Case**	1	# 3769 960	# 3769 960
	Screw, w/Washer	1	6024 246	6024 246
	Screw w/Washer	6	6028 581	6028 581
9-23-17	GASKET, Chain Case Cover	1	1947 554	1947 554
9-23-18	OIL SEAL, Chain Case Cover (Up To 4/19/74)	1	3751 233	3751 233
	(After 4/19/74)	1	# 3830 108	# 3830 108
	NOTE: Connecting Rod Includes Bearing Cap, Bolt, Nut, Lockwasher and Bushing, but does not include Bearing.			
9-31-4	**ROD, Connecting**	6	2951 262	2406 657
9-31-5	BOLT, Connecting Rod Bearing Cap	12	1944 865	1944 865

1974 PASSENGER CAR PARTS CATALOG

CODE	PART NAME AND DESCRIPTION	PER CAR	Cu. In. Displacement & Piston Bore Size 198 3.40	225 3.40

SIX CYLINDER ENGINES

9-31-7	NUT, Connecting Rod Bearing	12	1737 695	1737 695
	NOTE: When .001 thicker wall Connecting Rod Bearings are used for Engines in Production, A Maltese Cross is stamped on the model part of the Cylinder Block			
	NOTE: Connecting Rod Bearing Packages Consist of one Upper and one Lower Bearing.			
9-32-2	**BEARING PACKAGE, CONNECTING ROD**		3879901	
	Std.	6	2421 356	2421 356
	.001 U/S.	6	2421 357	2421 357
	.002 U/S	6	2421 358	2421 358
	.003 U/S	6	2421 359	2421 359
	.010 U/S	6	2421 360	2421 360
	.012 U/S	6	2421 361	2421 361
	NOTE: The following Pistons include Pin and Retaining Rings			
9-34-5	**PISTON, W/PIN**			
	Std.	6	2084 384	2084 384
	.005 O/S	6	2084 385	2084 385
	.020 O/S	6	2084 386	2084 386
	.040 O/S	6	2084 387	2084 387
	.060 O/S	6	2298 546	2298 546
	Std., Low Compression, Export	6	2084 388	2084 388
	.005 O/S, Low Compression, Export	6	2084 389	2084 389
	.020 O/S, Low Compression, Export	6	2084 390	2084 390
9-35-1	**RING SET, Piston (Complete All Pistons)**			
	Std. to .009 O/S	1	2448 735	2448 735
	.020 to .029 O/S	1	2275 440	2275 440
	.040 to .049 O/S	1	2275 441	2275 441
	RING SET, Piston (For One Piston)			
	Std. to .009 O/S	6	3780 001	3780 001
	.020 to .029 O/S	6	3780 002	3780 002
	.040 to .049 O/S	6	3780 003	3780 003
9-39-5	**VALVE, Intake**			
	Std.	6	1947 623	1947 623
	.005 O/S	6	2121 578	2121 578
	.015 O/S	6	2121 579	2121 579
	.030 O/S	6	2121 580	2121 580
9-39-6	VALVE, Exhaust			
	Std.	6	1947 624	1947 624
	.005 O/S	6	2121 581	2121 581
	.015 O/S	6	2121 582	2121 582
	.030 O/S	6	2121 583	2121 583
9-39-14	SHIELD, Intake Valve Stem Oil	6	2205 958	2205 958
	Exhaust Valve Stem Oil	6	2205 959	2205 959
9-39-15	SPRING, Valve	12	1739 534	1739 534
9-39-16	RETAINER, Valve Spring	12	2402 045	2402 045
9-39-17	LOCK, Intake Valve Spring Retainer	12	381 875	381 875
	Exhaust Valve Spring Retainer	12	1614 666	1614 666
9-39-21	SPACER, Valve Spring	AR	1859 144	1859 144
9-41-4	**TAPPET, Valve**			
	Std.	12	2469 501	2469 501
	.001 O/S	12	2469 502	2469 502
	.008 O/S	12	2469 503	2469 503
	.030 O/S	12	2469 504	2469 504
9-42-1	**ROD, Valve Push**	12	2120 514	2120 514
9-43-1	**ROCKER, Valve**	12	1947 594	1947 594
9-43-3	SCREW, Valve Rocker Adjusting	12	1855 238	1855 238
9-43-5	SPACER, Valve Rocker	6	2120 694	2120 694
9-43-9	SHAFT, Valve Rocker	1	1947 614	1947 614
9-43-11	RETAINER, Valve Rocker Shaft, End and			
	Intermediate	6	1947 616	1947 616
	Center	1	1947 617	1947 617

CARLINES: J - Challenger, B - Barracuda, V - Valiant, L - Dart, R - Satellite, W - Coronet - Charger, P - Plymouth, D - Dodge, C - Chrysler, Y - Imperial

AR Indicates use as required.
# Indicates parts not listed in any previous parts book.
Numerals in parentheses ( ) refer to notes.
★ Indicates change or addition.

Printed in U.S.A.
November, 1974

CODE	PART NAME AND DESCRIPTION		PER CAR	Cu. In. Displacement & Piston Bore Size	
				198	225
				3.40	3.40
	SIX CYLINDER ENGINES				
9-43-19	PLUG, Valve Rocker Shaft		2	1324 268	1324 268
9-45-1	**FLYWHEEL, w/Ring Gear**		1	2863 402	2863 402
9-45-2	GEAR, Flywheel Ring, Starter		1	2121 196	2121 196
	GEAR, Torque Converter Starter Ring		1	2121 196	2121 196
	GEAR, Torque Converter Starter Ring w/Heavy Duty Auto. Trans.		1	———	1941 648
9-46-4	**TORQUE CONVERTER, w/o Torque Converter Pilot Bushing**		1	2801 762	2801 762
	w/Heavy Duty Eng., R, W, P, D		1	———	2843 586
	Plug, Drain		1	6030 035	6030 035
9-46-8	PLATE, Torque Converter Drive		1	2801 745	2801 745
	w/Heavy Duty Eng.		1	———	2204 719
9-46-21	SCREW, Torque Converter Drive Plate to Crankshaft		6	1949 424	1949 424
	SCREW, Drive Plate to Torque Converter		4	1949 765	1949 765
9-46-31	COOLER, Radiator Core Oil				
		Maximum lgh. O/Dia			
		7.37" x 1.00"	AR	2998 999	2998 999
		7.37" x 1.25"	AR	2998 998	2998 998
		11.37" x 1.00"	AR	2998 997	2998 997
		13.37" x 1.25"	AR	2998 996	2998 996
		16.37" x 1.25"	AR	2998 995	2998 995
		13.37" x 1.50"	AR	2998 994	2998 994
		11.37" x 1.50"	AR	2998 993	2998 993
9-46-33	BRACKET, Trans. Oil Cooler Tube, V,L		1	3577 169	3577 169
	R,W		1	———	3577 170
9-46-43	NUT, Trans. Oil Cooler Tube (Trans. End)		2	1941 667	1941 667
	(Radiator End)		2	1941 667	1941 667
9-46-44	CONNECTOR, Trans. Oil Cooler Tube		AR	118 749	118 749
9-46-130	SEAL, Trans. Torque Converter Impeller Hub w/Std. Duty Auto. Trans.		1	3515 138	3515 138
	w/Heavy Duty 727 Auto. Trans.		1	———	3515 137
9-46-229	SPRING, Torque Converter Overrunning Clutch Roller		8	1942 187	1942 187
9-48-6	**MANIFOLD PACKAGE, Exhaust**		1	3744 827	3744 827
	w/2 Bbl. Carb., Export			———	2658 349
	Stud		2	6024 380	6024 380
9-48-7	MANIFOLD, Intake		1	3769 990	3769 990
	w/2 bbl Carb., Export		1	———	2806 816
	STUD, Intake to Exhaust Manifold		1	152 568	152 568
	BOLT, Intake to Exhaust Manifold		2	6030 003	6030 003
	NUT, Intake to Exhaust Manifold		1	6025 020	6025 020
	Washer, Intake to Exhaust Manifold Bolt		AR	6022 185	6022 185
	STUD, Intake Manifold		1	6030 209	6030 209
9-48-8	CONNECTOR, Intake Manifold Vacuum Control				
	O.D. .028 Center Tube		AR	2658 625	2658 625
	O.D. .125 Center Tube		AR	1858 955	1858 955
	O.D. .1875 Side Tube		AR	3614 059	3614 059
	O.D. .125 and .1875 Side Tubes		AR	3614 063	3614 063
	O.D. .1875 Side Tube and O.D. .025 Center Tube		AR	3614 064	3614 064
9-48-9	PLUG, Intake Manifold Vacuum Control Hole		1	1859 127	1859 127
9-48-12	STUD, Intake and Exhuast Manifold		AR	6030 209	6030 209
9-48-14	WASHER, Intake and Exhaust Manifold Stud		AR	2121 223	2121 223
			10	3751 636	3751 636
	PARTS PACKAGE, Exhaust Manifold Mounting		1	3744 826	3744 826
9-48-44	NUT, Exhaust Manifold Stud Upper Ends		2	6030 210	6030 210
9-48-45	WASHER, Exhaust Manifold Stud Upper Ends		2	3751 637	3751 637
9-48-126	TUBE, Exhaust Manifold Heat, w/2 bbl Carb., Export		1	———	2536 774

CODE	PART NAME AND DESCRIPTION	PER CAR	Cu. In. Displacement & Piston Bore Size	
			198	225
			3.40	3.40
	SIX CYLINDER ENGINES			
9-50-1	**GASKET SET, Intake and Exhaust Manifold**	1	3744 831	3744 831
9-50-2	GASKET, Intake and Exhaust Manifold	1	1947 762	1947 762
9-50-3	GASKET, Intake to Exhaust Manifold	1	3751 635	3751 635
9-58-1	**HEAT CONTROL VALVE PACKAGE, Manifold**	1	3683 949	3683 949
	w/2 Bbl. Carb., Export	1	———	3004 664
9-58-5	THERMOSTAT, Exhaust Manifold Heat Control Valve, w/2 bbl. Carb. Export	1	———	2899 951
9-58-12	COUNTER WEIGHT, Exhaust Manifold Heat Control Valve, w/2 Bbl. Carb. Export	1	———	2468 307
9-58-14	LOCK, Exhaust Manifold Heat Control Valve Counterweight, w/2 Bbl. Carb., Export	1	———	1409 594
9-59-13	**SPRING, Exhaust Manifold Heat Control Valve Shaft**	1	3462 514	3462 514
	w/2 Bbl. Carb. Export	1	———	1558 897
9-59-15	PIN, Exhaust Heat Control Valve Shaft Spring	1	1639 597	1639 597
9-62-1	**STOP, Exhaust Manifold Heat Control Valve**	1	2946 107	2946 107
	w/2 Bbl. Carb., Export	1	———	2465 203
9-62-2	PIN, Exhaust Manifold Heat Control Valve Stop, w/2 bbl. Carb., Export	1	———	2129 146
9-64-24	**BRACKET, Engine Front Support Insulator, Right**	1	3726 198	3726 198
9-67-4	**INSULATOR, Engine Front Support**			
	Right, V,L	1	3726 220	3726 220
	Right, R, W	1	———	3726 218
	Left, V, L	1	3642 821	3642 821
	Left, R, W	1	———	3642 827
	SCREW, w/Washer, Insulator to Cylinder Block, V, L, R, W	AR	6029 770	6029 770
	BOLT, Engine Front Support Insulator to Frame, V, L, R, W, Up to 11-15-73	2	6029 971	6029 971
	After 11-15-73	2	6030 549	6030 549
	NUT, Engine Front Support Insulator to Frame Bolt, V, L, R, W	2	6030 478	6030 478
9-69-12	**SPACER, Engine Rear Support Insulator Bracket**	2	3410 700	3410 700
9-71-5	**INSULATOR, Engine Rear Support**		3642 831	3642 831
	BOLT, Engine Rear Support Insulator to Crossmember	1	6028 237	6028 237
	WASHER	1	9417 098	9417 098

NOTES

GROUP 9 - ENGINE

8 CYLINDER

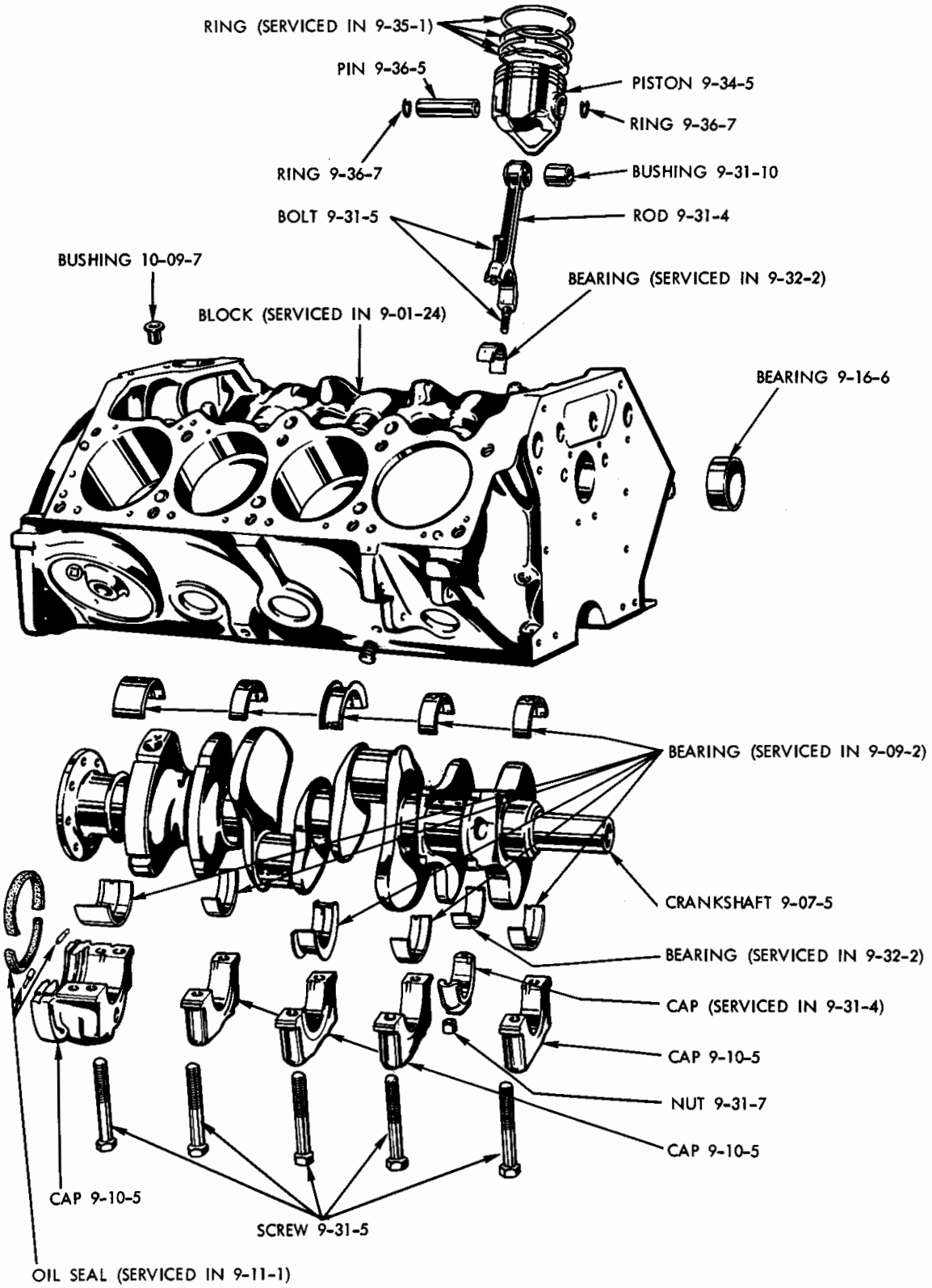

19a4525

SHORT ENGINE ASSEMBLY - 8 CYLINDER

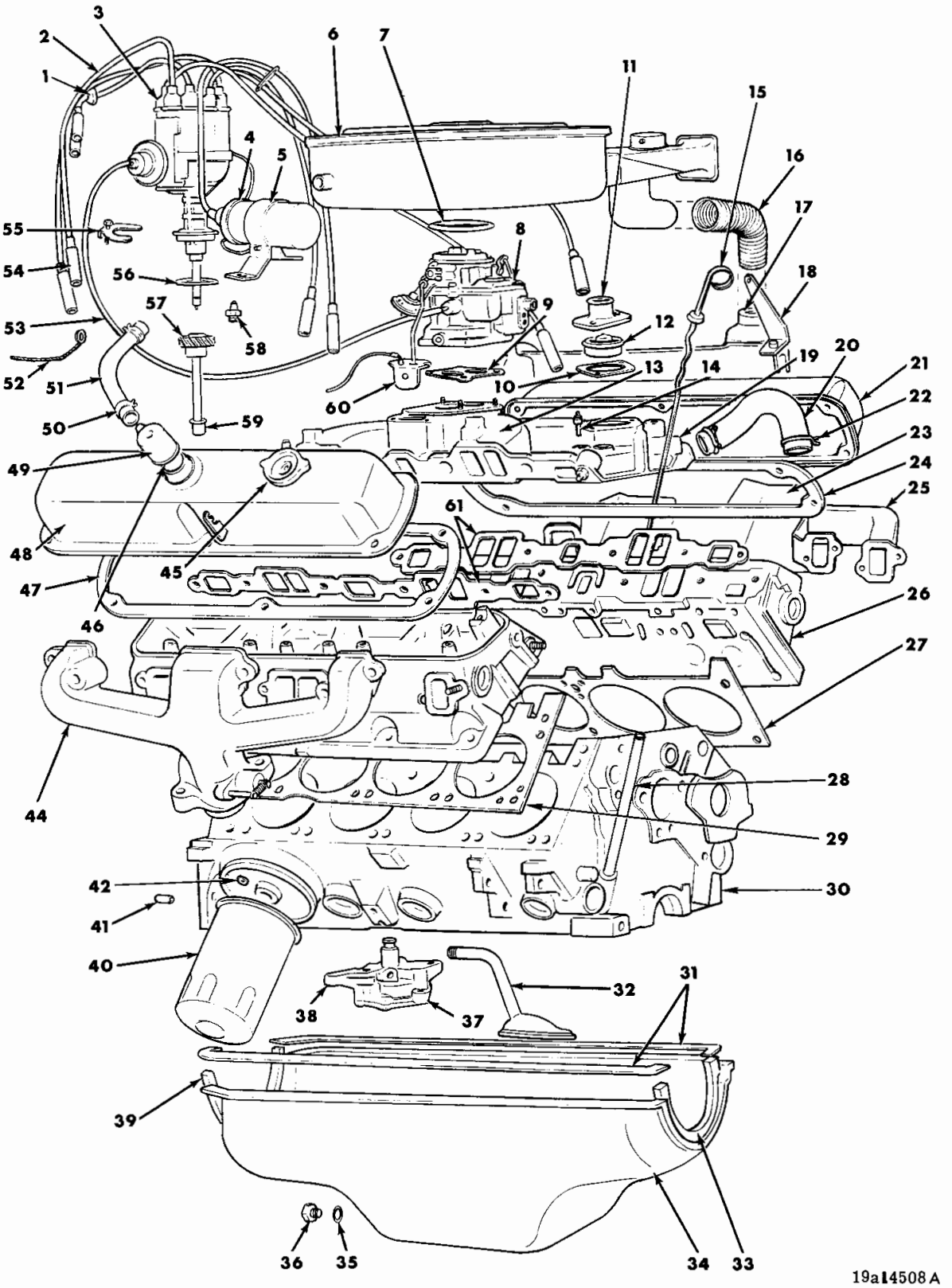

ENGINE EXTERNAL PARTS - 318 AND 360 ENGINES

ENGINE EXTERNAL PARTS - 318 AND 360 ENGINES

Ref. No.	Name	Part Type Code
1	Grommet	8-36-92
2	Cable Set	8-36-1
3	Distributor	8-27-1
4	Coil	8-35-4
5	Bracket	8-35-41
6	Air Cleaner	14-29-2
7	Gasket	14-29-5
8	Carburetor	14-30-1
9	Gasket	14-30-2
10	Gasket, Water Outlet Connector	9-05-6
11	Connector	9-05-5
12	Thermostat	7-41-4
13	Manifold	9-48-7
14	Sending Unit	8-37-155
15	Indicator	10-03-4
16	Connector	14-29-38
17	Heater	14-62-1
18	Bracket	14-06-10
19	Nipple	7-48-22
20	By-Pass Hose	7-14-9
21	Cover	9-03-28
22	Clamp	
23	Gasket	9-50-5
24	Gasket	9-03-29
25	Manifold	9-48-6
26	Head	9-03-4
27	Gasket	9-03-5
28	Tube	10-03-7
29	Gasket	9-03-5
30	Block (Serviced in 9-01-24)	
31	Gasket	10-24-1
32	Strainer w/Pipe	10-23-7
33	Gasket	10-24-1
34	Pan	10-24-4
35	Gasket	10-24-38
36	Plug	10-24-37
37	Cover	10-07-7
38	Pump	10-07-6
39	Gasket	10-24-1
40	Filter	10-26-6
41	Dowel	9-02-7
42	Plug	9-02-17
43		
44	Manifold	9-48-6
45	Cap	10-01-54
46	Grommet	10-01-23
47	Gasket	9-03-29
48	Cover	9-03-28
49	Air Cleaner	10-01-21
50	Clamp	10-01-40
51	Hose	10-02-53
52	Cable	Not Serviced
53	Tube	8-27-320
54	Nipple	8-36-96
55	Clamp	8-27-26
56	Gasket	8-27-4
57	Shaft	10-09-1
58	Sending Unit	8-53-327
59	Bushing	10-09-7
60	Choke	14-39-45
61	Gasket (Serviced in 9-50-1)	

PARTS INDICATED BY NAME ONLY - ORDER BY DESCRIPTION

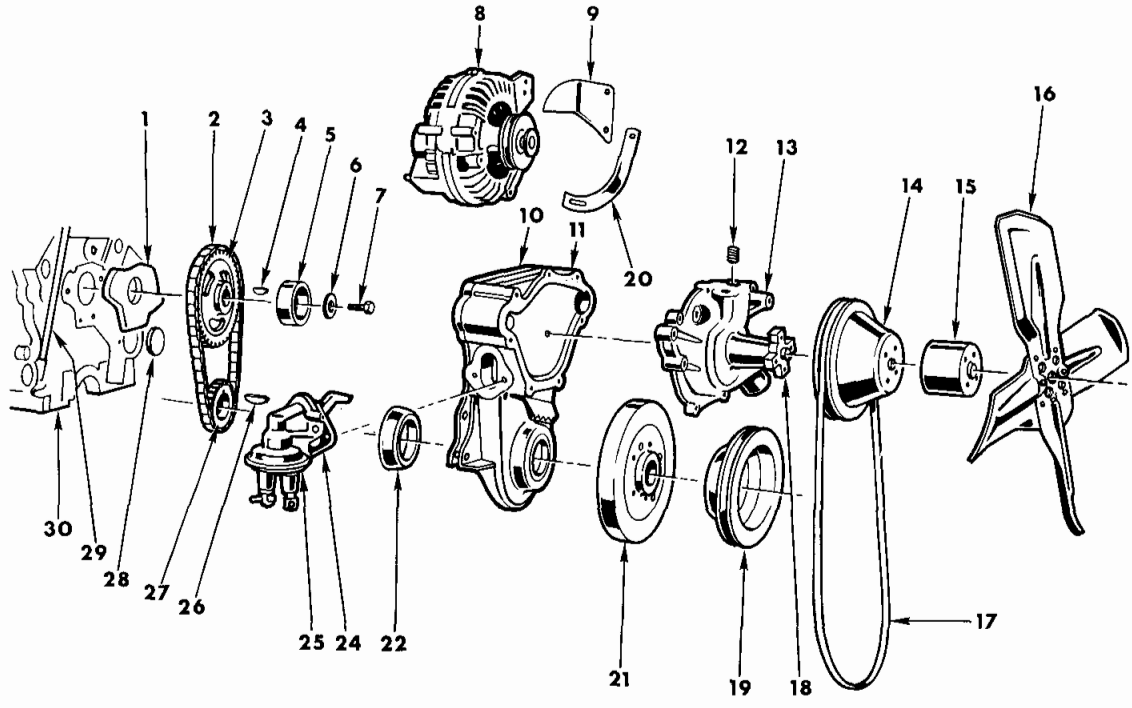

19a13307 C

ENGINE FRONT EXTERNAL PARTS - 318 AND 360 ENGINES

Ref. No.	Name	Part Type Code	Ref. No.	Name	Part Type Code
1	Plate	9-15-6	16	Fan	7-02-1
2	Chain	9-20-1	17	Belt	7-03-1
3	Sprocket	9-17-5	18	Hub	7-05-1
4	Key	9-17-5	19	Pulley	7-06-1
5	Eccentric	9-15-2	20	Strap	8-28-15
6	Washer	9-15-10	21	Damper	9-13-5
7	Screw		22	Oil Seal	9-23-18
8	Alternator	8-28-3	23		
9	Bracket	8-28-36	24	Gasket	14-74-1
10	Gasket	9-23-17	25	Pump	14-73-1
11	Cover	9-23-5	26	Key	9-08-5
12	Nipple	7-48-22	27	Sprocket	9-08-5
13	Pump	7-42-1	28	Plug	9-02-16
14	Pulley	7-06-14	29	Tube	10-03-7
15	Spacer	7-02-16	30	Block (Serviced in 9-01-24)	

PARTS INDICATED BY NAME ONLY - ORDER BY DESCRIPTION

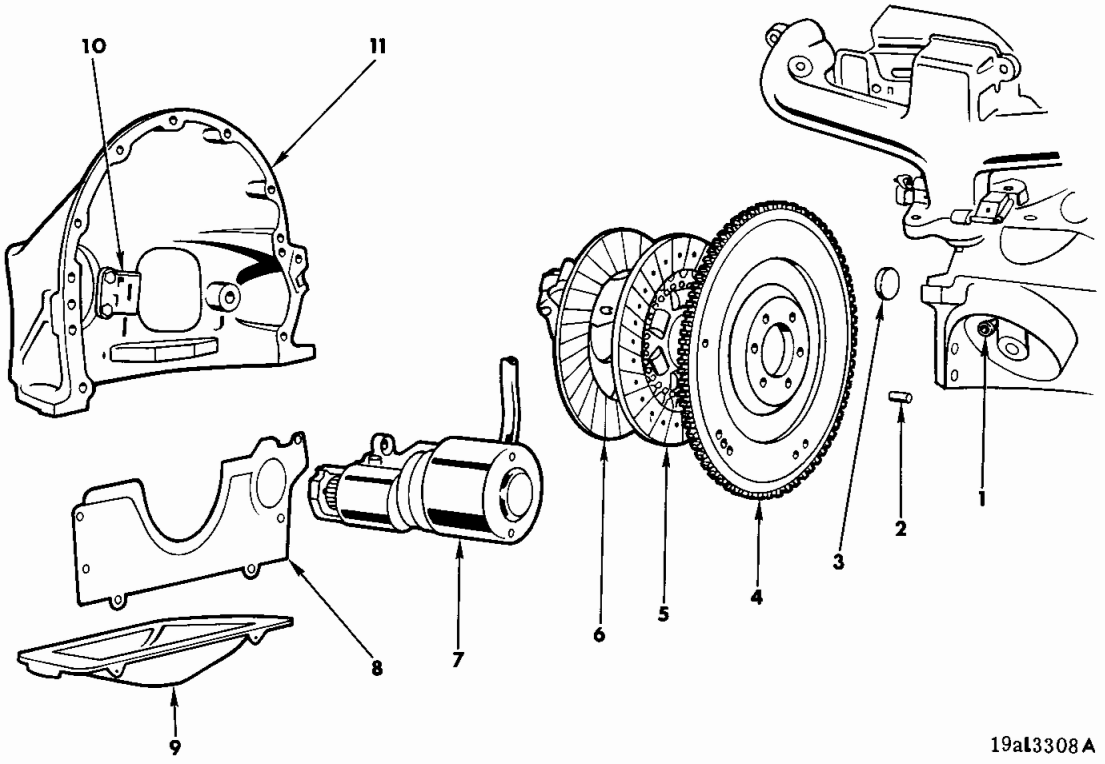

REAR EXTERNAL PARTS - 318,360 ENGINES
WITH MANUAL TRANSMISSION

Ref. No.	Name	Part Type Code	Ref. No.	Name	Part Type Code
1	Plug	9-02-17	7	Starting Motor	8-52-4
2	Dowel	9-02-7	8	Seal	6-10-10
3	Plug	9-16-17	9	Pan	6-10-2
4	Flywheel	9-45-1	10	Pivot	6-22-15
5	Disc	6-13-1	11	Housing	6-09-1
6	Plate	6-14-1			

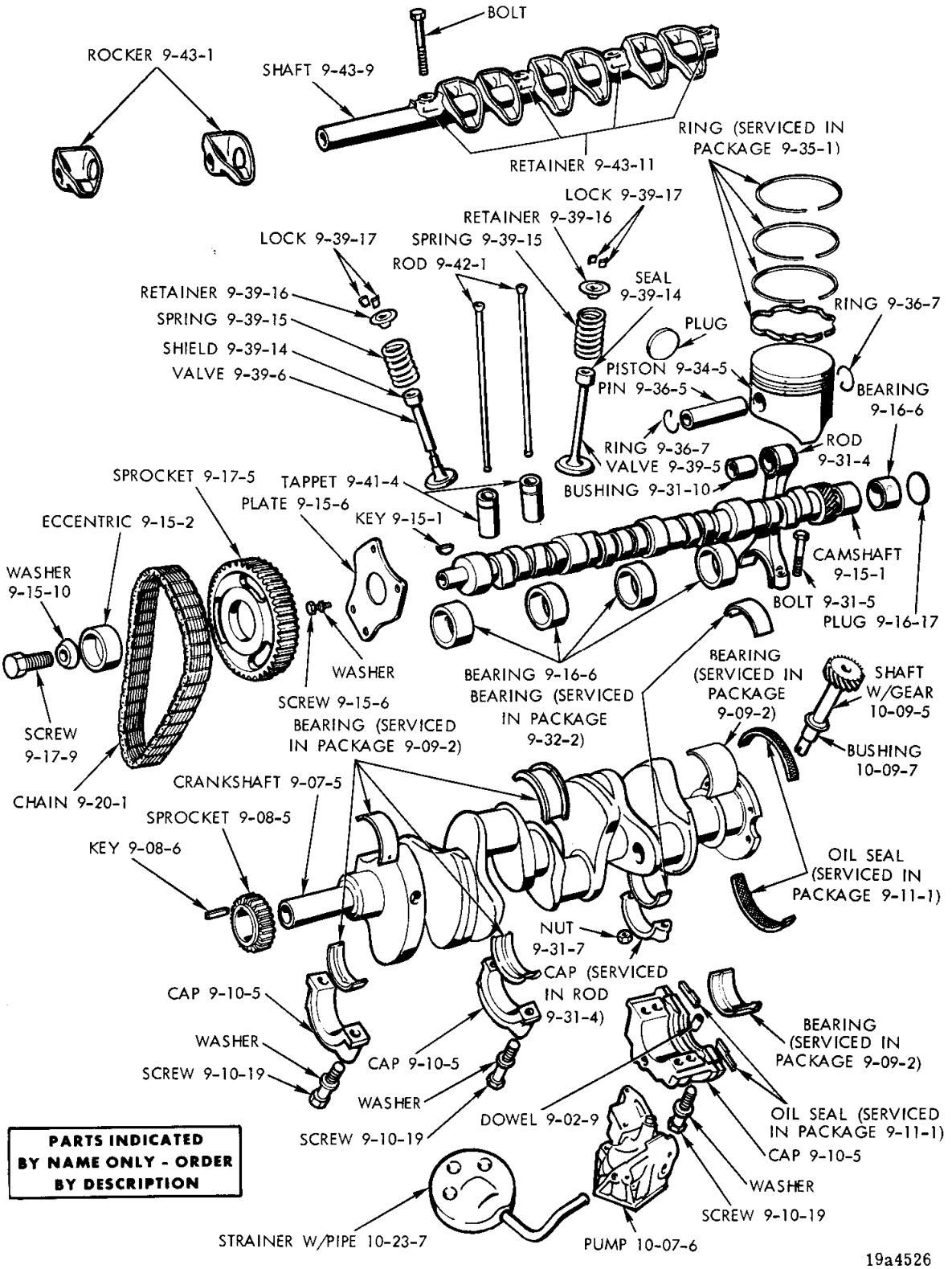
BOLT
ROCKER 9-43-1
SHAFT 9-43-9
RETAINER 9-43-11
RING (SERVICED IN PACKAGE 9-35-1)
LOCK 9-39-17
RETAINER 9-39-16
SPRING 9-39-15
ROD 9-42-1
SEAL 9-39-14
RETAINER 9-39-16
SPRING 9-39-15
SHIELD 9-39-14
VALVE 9-39-6
PLUG
RING 9-36-7
PISTON 9-34-5
PIN 9-36-5
BEARING 9-16-6
RING 9-36-7
VALVE 9-39-5
ROD 9-31-4
BUSHING 9-31-10
SPROCKET 9-17-5
TAPPET 9-41-4
PLATE 9-15-6
KEY 9-15-1
ECCENTRIC 9-15-2
CAMSHAFT 9-15-1
WASHER 9-15-10
BOLT 9-31-5
PLUG 9-16-17
WASHER
SCREW 9-15-6
BEARING (SERVICED IN PACKAGE 9-09-2)
BEARING 9-16-6
BEARING (SERVICED IN PACKAGE 9-32-2)
BEARING (SERVICED IN PACKAGE 9-09-2)
SHAFT W/GEAR 10-09-5
BUSHING 10-09-7
SCREW 9-17-9
CHAIN 9-20-1
CRANKSHAFT 9-07-5
SPROCKET 9-08-5
KEY 9-08-6
OIL SEAL (SERVICED IN PACKAGE 9-11-1)
NUT 9-31-7
CAP (SERVICED IN ROD 9-31-4)
CAP 9-10-5
WASHER
SCREW 9-10-19
CAP 9-10-5
WASHER
SCREW 9-10-19
BEARING (SERVICED IN PACKAGE 9-09-2)
DOWEL 9-02-9
OIL SEAL (SERVICED IN PACKAGE 9-11-1)
CAP 9-10-5
WASHER
SCREW 9-10-19
PARTS INDICATED BY NAME ONLY - ORDER BY DESCRIPTION
STRAINER W/PIPE 10-23-7
PUMP 10-07-6
19a4526

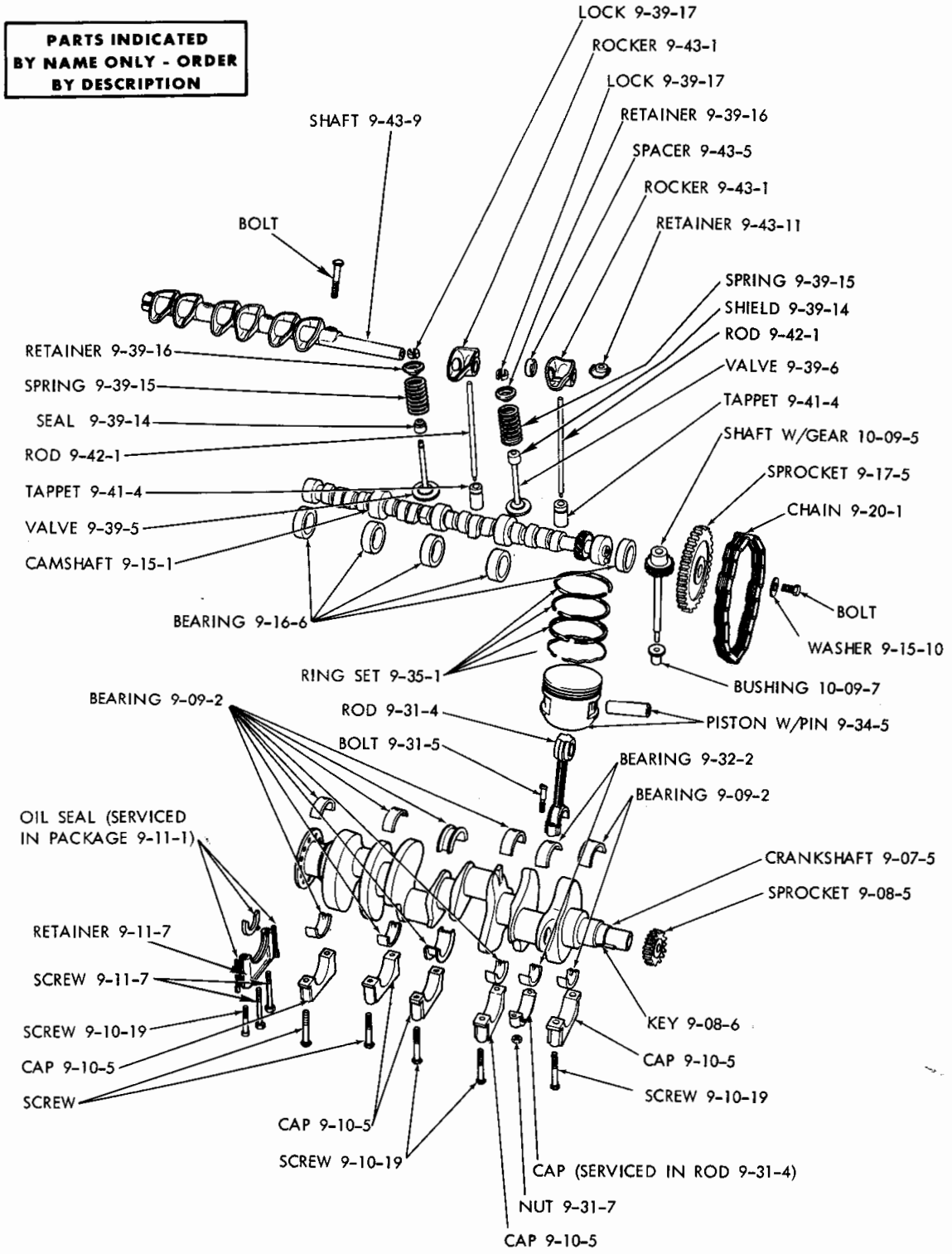
PARTS INDICATED BY NAME ONLY - ORDER BY DESCRIPTION
LOCK 9-39-17
ROCKER 9-43-1
LOCK 9-39-17
RETAINER 9-39-16
SPACER 9-43-5
ROCKER 9-43-1
RETAINER 9-43-11
SHAFT 9-43-9
BOLT
SPRING 9-39-15
SHIELD 9-39-14
ROD 9-42-1
VALVE 9-39-6
TAPPET 9-41-4
SHAFT W/GEAR 10-09-5
SPROCKET 9-17-5
CHAIN 9-20-1
RETAINER 9-39-16
SPRING 9-39-15
SEAL 9-39-14
ROD 9-42-1
TAPPET 9-41-4
VALVE 9-39-5
CAMSHAFT 9-15-1
BEARING 9-16-6
BOLT
WASHER 9-15-10
RING SET 9-35-1
BUSHING 10-09-7
BEARING 9-09-2
ROD 9-31-4
PISTON W/PIN 9-34-5
BOLT 9-31-5
BEARING 9-32-2
BEARING 9-09-2
OIL SEAL (SERVICED IN PACKAGE 9-11-1)
CRANKSHAFT 9-07-5
SPROCKET 9-08-5
RETAINER 9-11-7
SCREW 9-11-7
SCREW 9-10-19
CAP 9-10-5
SCREW
KEY 9-08-6
CAP 9-10-5
SCREW 9-10-19
CAP 9-10-5
SCREW 9-10-19
CAP (SERVICED IN ROD 9-31-4)
NUT 9-31-7
CAP 9-10-5

19a4527 A

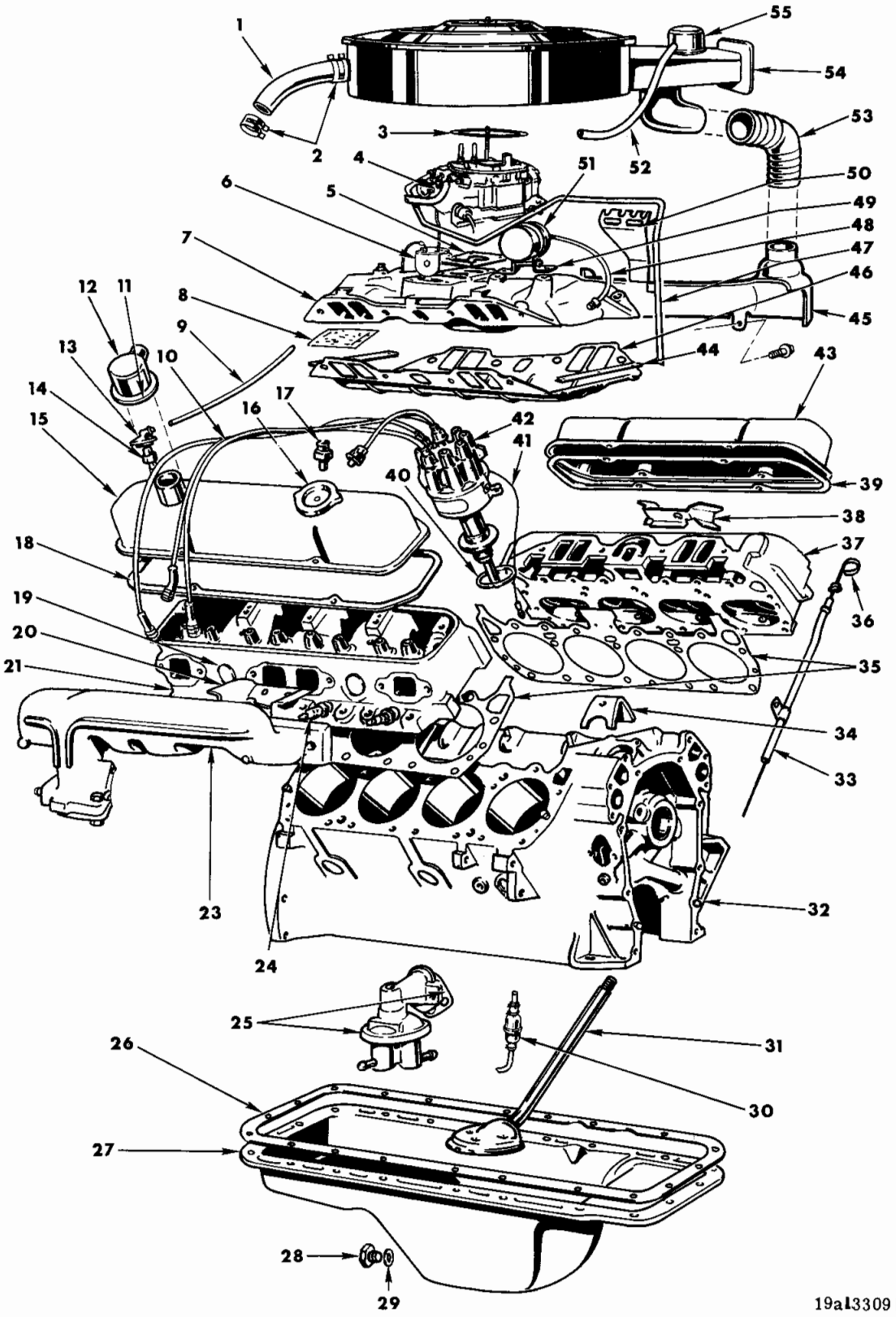

EXTERNAL PARTS - 400 AND 440 ENGINES

EXTERNAL PARTS - 400 AND 440 ENGINES

Ref. No.	Name	Part Type Code
1	Hose	10-01-62
2	Clamp	10-01-40
3	Gasket	14-29-5
4	Carburetor	14-30-1
5	Gasket	14-30-2
6	Choke	14-39-45
7	Manifold	9-48-7
8	Silencer Package	9-41-1
9	Hose	10-02-53
10	Cable Set	8-36-1
11	Grommet	10-01-23
12	Cleaner	10-01-21
13	Grommet	10-02-61
14	Valve	10-02-62
15	Cover	9-03-28
16	Cap	10-01-54
17	Switch	8-53-327
18	Gasket	9-03-29
19	Plug	9-03-18
20	Shield	8-36-124
21	Head	9-03-4
22		
23	Manifold	9-48-6
24	Spark Plug	8-36-114
25	Pump Package, Fuel	14-73-1
26	Gasket	10-24-8
27	Pan	10-24-4
28	Plug	10-24-37
29	Gasket	10-24-38
30	Filter	14-67-1
31	Strainer w/Pipe	10-23-7
32	Block (Serviced in Short Engine 9-01-24)	
33	Tube	10-03-7
34	Clamp	8-27-26
35	Gasket	9-03-5
36	Indicator	10-03-4
37	Head	9-03-4
38	Shield	8-36-124
39	Gasket	9-03-29
40	Gasket	8-27-4
41	Lead	8-27-205
42	Distributor	8-27-1
43	Cover	9-03-28
44	Reinforcement	9-48-27
45	Heater	14-62-1
46	Gasket	9-50-6
47	Tube	14-89-2
48	Cable	8-36-49
49	Bracket	8-35-41
50	Bracket	8-36-4
51	Coil	8-35-4
52	Hose	14-29-24
53	Connector	14-29-38
54	Air Cleaner (Also see Codes 14-29-7 and 14-29-19)	14-29-2
55	Sensor	14-29-53

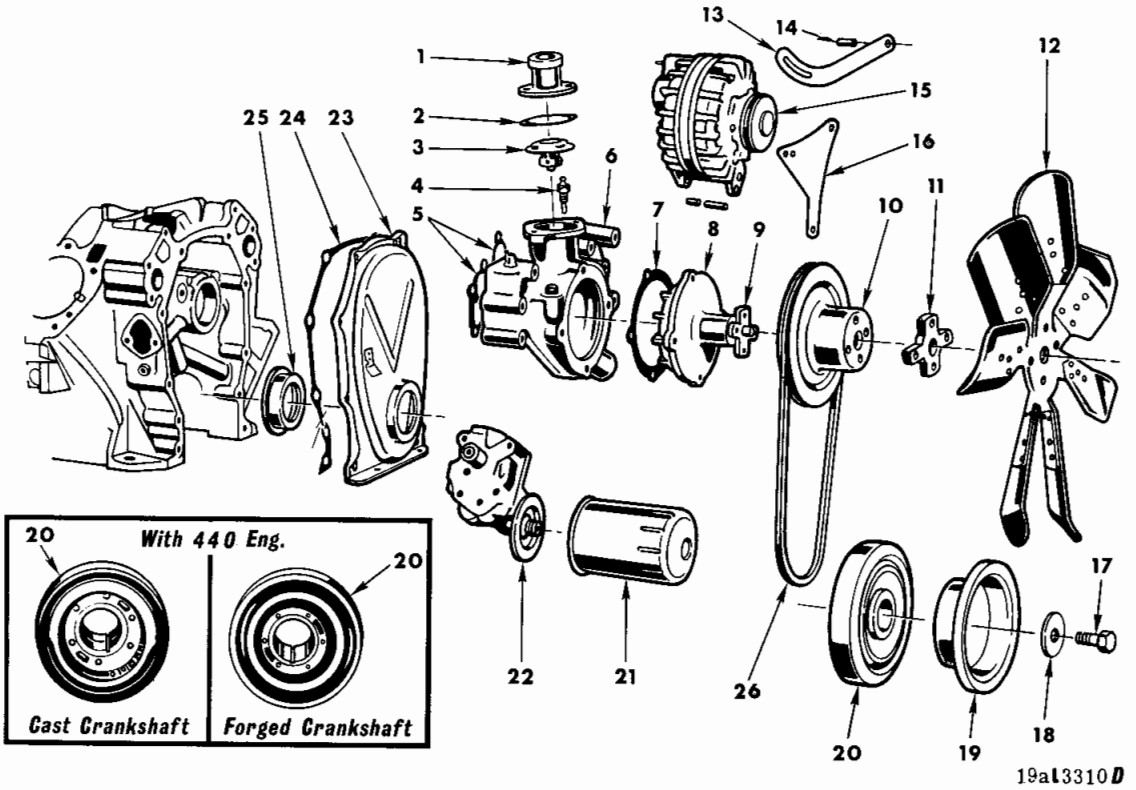

ENGINE FRONT EXTERNAL PARTS - 400 AND 440 ENGINES

Ref. No.	Name	Part Type Code	Ref. No.	Name	Part Type Code
1	Connector	9-05-5	14	Spacer	8-28-292
2	Gasket	9-05-6	15	Alternator	8-28-3
3	Thermostat	7-41-4	16	Bracket	
4	Sending Unit	8-37-155	17	Screw	9-07-8
5	Gasket	7-44-4	18	Washer	9-07-22
6	Housing	7-43-1	19	Pulley	7-06-1
7	Gasket	7-44-3	20	Damper	9-13-5
8	Pump	7-42-1	21	Filter	10-26-6
9	Hub	7-05-1	22	Pump	10-07-6
10	Pulley	7-06-14	23	Cover	9-23-5
11	Hub	7-05-1	24	Gasket	9-23-17
12	Fan	7-02-1	25	Oil Seal	9-23-18
13	Strap	8-28-15	26	Belt	7-03-1

PARTS INDICATED BY NAME ONLY - ORDER BY DESCRIPTION

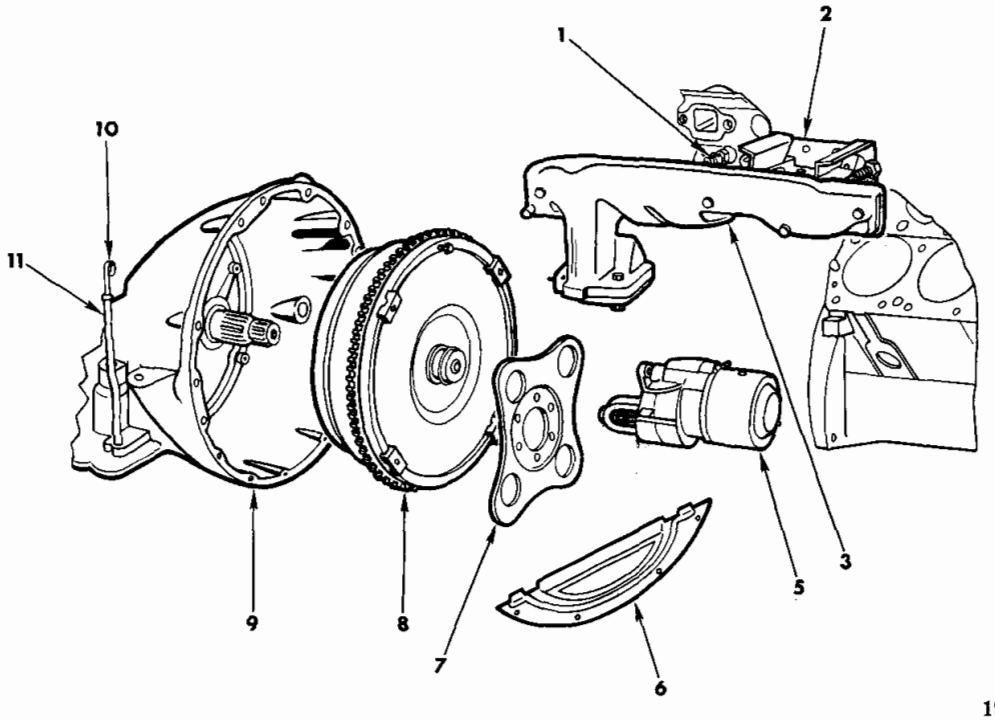

19al3311C

REAR ENGINE EXTERNAL PARTS - 400 AND 440 ENGINES

Ref. No.	Name	Part Type Code	Ref. No.	Name	Part Type Code
1	Spark Plug	8-36-114	7	Plate	9-46-8
2	Shield	8-36-124	8	Torque Converter	9-46-4
3	Manifold	9-48-6	9	Case, Transmission	21-03-1
5	Starter	8-52-4	10	Indicator	21-119-19
6	Cover	21-03-6	11	Tube	21-119-15

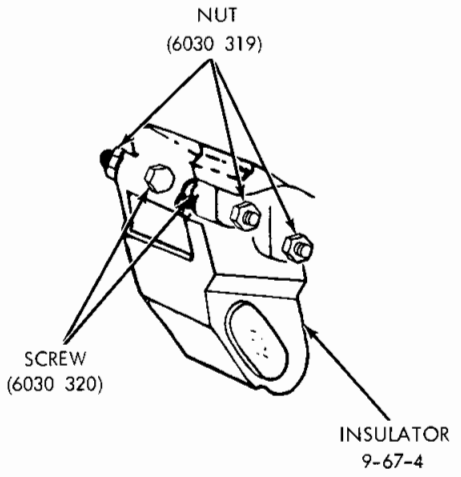

V, L, R, W, P, D **Right**

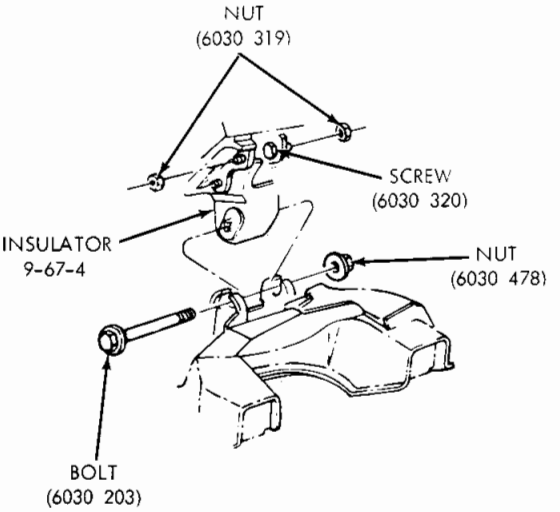

V, L, R, W, P, D **Left**

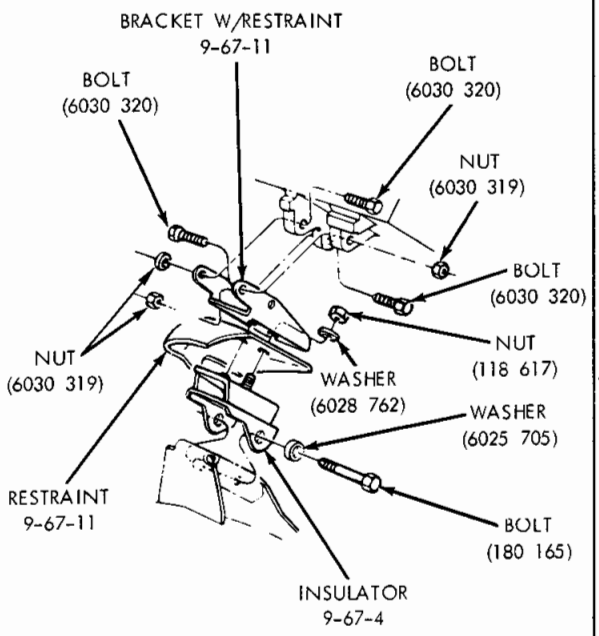

B, J **Right**

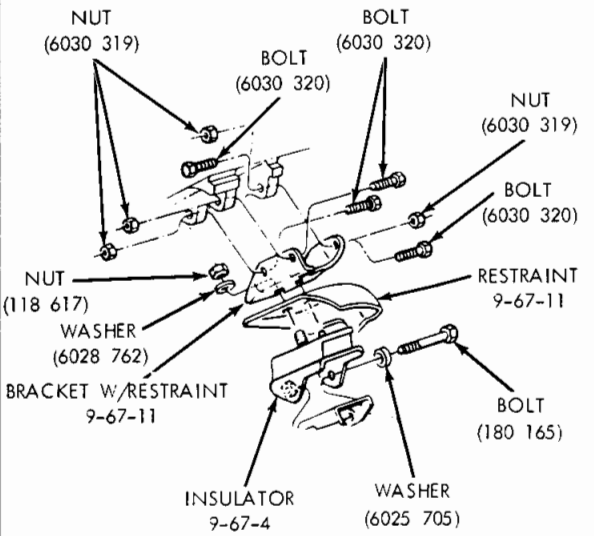

B, J **Left** 19a4833

ENGINE FRONT MOUNTING (8 CYLINDER) - 318 AND 360 ENGINES

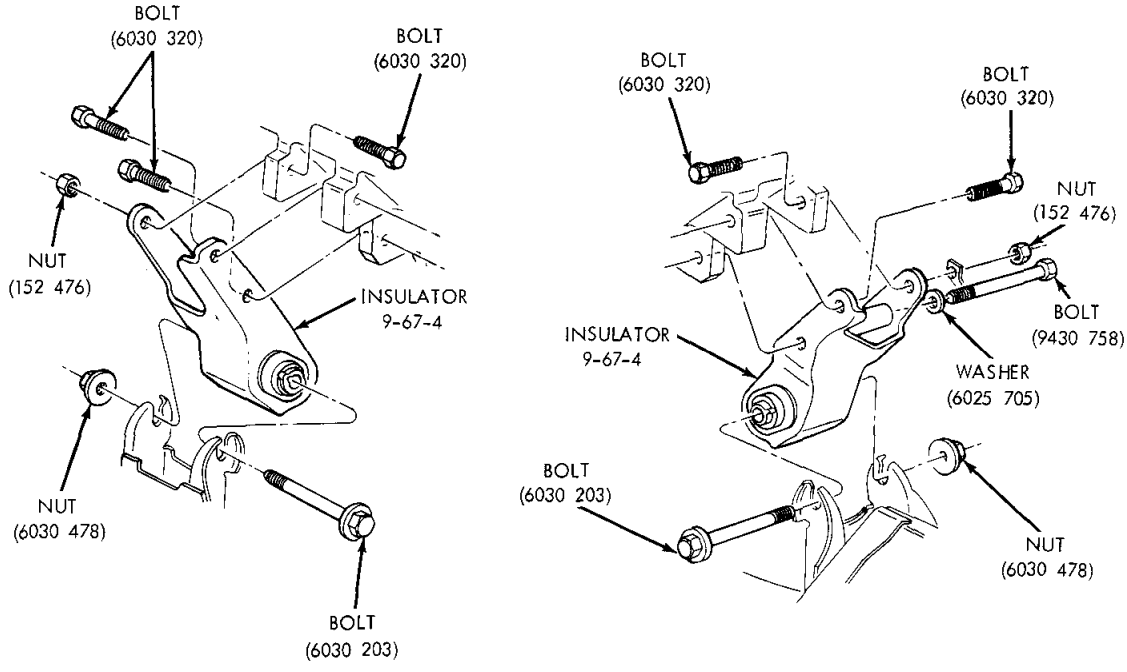

19a4834

FRONT ENGINE MOUNTING (8 CYLINDER) - 400 AND 440 ENGINES

NOTES

NOTES

Marketing Bulletin

SUBJECT: **ENGINES-LESS-ACCESSORIES**

NUMBER: MB 74-1
January 7, 1974

File Code: 9-1-24

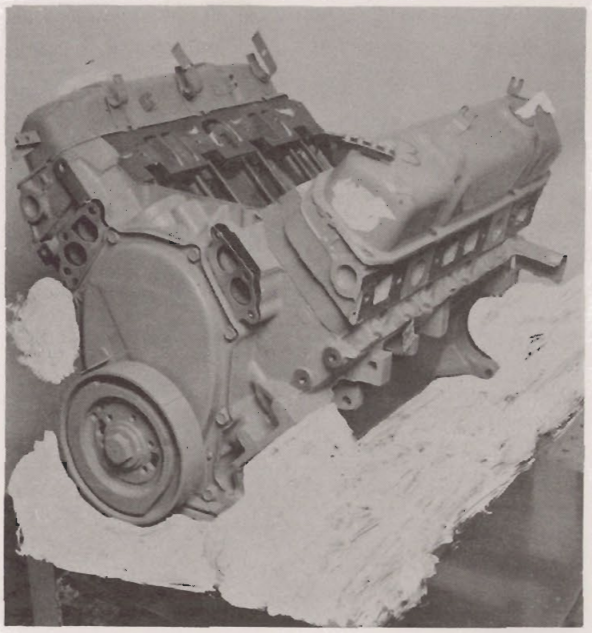

To provide better availability and service to our dealers and customers and reduce inventory requirements, a new service policy has been established to service Engine-Less-Accessories, minus the Water Pump, for all 1974 and later assemblies.

The Water Pump from the replaced Engine can be transferred to the new Short Engine or a new Pump may be specified and used if necessary.

When present stocks of Engines-Less-Accessories (with Water Pump) become exhausted, they will be replaced by new Engines-Less-Accessories (without Water Pump).

Please NOTE your records and order stock accordingly.

K. I. OKENQUIST
Marketing Manager

KIO/WRA/jl

GROUP 9 - ENGINE (8 CYLINDER)

BEARING, CAMSHAFT 9-16
BEARING PACKAGE, CONNECTING ROD 9-32
BEARING PACKAGE, CRANKSHAFT 9-09
BLOCK, CYLINDER 9-02
BRACKET, ENGINE REAR SUPPORT INSULATOR 9-69
CAMSHAFT 9-15
CAP, CRANKSHAFT BEARING 9-10
CHAIN, TIMING 9-20
CONVERTER, TORQUE 9-46
COVER, CHAIN CASE 9-23
CRANKSHAFT 9-07
DAMPER, CRANKSHAFT VIBRATION 9-13
ELBOW OR CONNECTOR, CYLINDER HEAD WATER OUTLET 9-05
ENGINE ASSEMBLY 9-01
FLYWHEEL 9-45
GASKET, MANIFOLD 9-50
HEAD, CYLINDER 9-03
INSULATOR, ENGINE FRONT SUPPORT 9-67
INSULATOR, ENGINE REAR SUPPORT 9-71
MANIFOLD 9-48
PIN, PISTON 9-36
PISTON AND PIN 9-34
RING SET, PISTON 9-35
ROCKER, VALVE 9-43
ROD, CONNECTING 9-31
ROD, VALVE PUSH 9-42
SEAL, CRANKSHAFT REAR BEARING OIL 9-11
SPROCKET, CAMSHAFT 9-16
SPROCKET, CRANKSHAFT 9-07
STOP, MANIFOLD HEAT CONTROL VALVE 9-62
SUPPORT, ENGINE FRONT 9-64
TAPPET, VALVE 9-41
THERMOSTAT, MANIFOLD HEAT CONTROL VALVE 9-58
VALVE, INTAKE AND EXHAUST 9-39
VALVE, MANIFOLD HEAT CONTROL 9-59

Printed in U.S.A.
November, 1974

EIGHT CYLINDER ENGINES

NOTE: The following symbols are used in connection with engine numbers:
ENGINE numbers without symbols indicate "Standard Cylinders and Crankshaft Bearings". The Letter "A" immediately following the engine number indicates Bore .020" (.508 MM.) Larger than Standard.
The Letter "B" immediately following the engine identification number indicates Main and Connecting Rod Bearings .010" (.245 MM.) Smaller than Standard.
The Letters "AB" immediately following the engine identification number indicates Cylinder Bore .020" (.508 MM.) Larger than Standard. Main and Connecting Rod Bearings .010" (.245 MM.) Smaller than Standard.
The Letters in the circular pads at either end of the engine number are for the use of factory inspectors only and should not be connected with the engine number. Always mention Serial Numbers when ordering major assemblies.
NOTE: Only quantities of more than one per car will be shown in parenthesis at the end of each nomenclature.

CODE	PART NAME AND DESCRIPTION	CU. IN. DISPLACEMENT & PISTON BORE SIZE				
		318		360	400	440
		3.91		4.00	4.35	4.32

EIGHT CYLINDER ENGINES

NOTE: (1) When a complete overhaul engine gasket set is required for 8 cylinder engines
Use Upper and Lower Engine Gasket Sets Part Type Code 9-01-5 and Oil Seal Package Part Type Code 9-11-1 and Intake Manifold Gasket Part Type Code 9-50-6 also Exhaust Manifold Gasket Part Type Code 9-50-5.
NOTE: (2) When a valve grinding gasket set is required for 8 cylinder engines
Use Upper Engine Gasket Set Part Type Code 9-01-5 and Intake Manifold Gasket Part Type Code 9-05-6 also Exhaust Manifold Gasket Part Type Code 9-50-5.

9-01-5	**GASKET SET, Engine**				
	Upper (See Note 1 and 2)	3780 187	3780 187	3683 818	3683 818
	Lower (See Note 1)	3780 188	3780 188	3683 822	3683 822

NOTE 3: Short Engine Assemblies Consist of the Cylinder Block with Pistons and Rings, Crankshaft and Bearings, Connecting Rods and Bearings
NOTE 4: A 440 Cubic inch engine may be built with a cast or forged crankshaft. The cast crankshaft type is identified by a stamped letter E on a pad on the upper right side of the front of the cylinder block.
NOTE: The vibration damper has an elliptical weight in front of the main member. Also a cut slot in weight with the wording "Use with 440 cast Crankshaft only". The 1 Counterweight of the 440 cast crankshaft will show the face of a clock. Identification must be confirmed before ordering a replacement SHORT ENGINE, Crankshaft, Damper or Torque Converter.

9-01-24	SHORT ENGINE				
		3769 446	3769 447	———	———
	w/4 Bbl. Carb. w/Man. Trans. R,W	———	———	3769 401	———
	w/2 Bbl. Carb. w/Auto. Trans.; w/Forged Crankshaft, From Engine No. 4T400-1-03 Through 4T400-1-08	———	———	3769 401	———
	w/2 and 4 Bbl. Carb. w/Auto. Trans.; w/Cast Crankshaft, Up to Eng. No. 4T400-1-03 and After Eng. No. 4T400-1-08	———	———	3769 402	———
	w/Forged Crankshaft, with and without H/Perf.	———	———	———	3769 405
	w/Cast Crankshaft without H/Perf. (See Note 4 Page 1)	———	———	———	3769 404
9-02-7	**DOWEL, Cylinder Block to Clutch Housing or Torque Converter (2)**	1122 532	1122 532	1122 532	1122 532
	Eccentric				
	.007" Over Center (AR)	1736 347	1736 347	1736 347	1736 347
	.014" Over Center (AR)	1736 348	1736 348	1736 348	1736 348
	.021" Over Center (AR)	1736 353	1736 353	1736 353	1736 353
	DOWEL, Cylinder Block to Cylinder Head (4)	141 215	141 215	141 195	141 195
	DOWEL, Cylinder Block to Chain Case Cover	———	———	141 195	141 195
9-02-16	PLUG, Cylinder Block Core				
	Hole, 1.635" (AR)	2406 356	2406 356	2406 356	2406 356
	1.695" (AR)	2406 575	2406 575	2406 575	2406 575
	1.2585"	2406 387	2406 387	———	———

CODE	PART NAME AND DESCRIPTION	CU. IN. DISPLACEMENT & PISTON BORE SIZE				
		318		360	400	440
		3.91		4.00	4.35	4.32
	EIGHT CYLINDER ENGINES					
9-02-17	PLUG, Cylinder Block Oil Line	3462 871		3462 871	———	———
	3/8" Pipe (2)	———		———	6028 668	6028 668
	PLUG, Cylinder Block Oil Hole	3751 818		3751 818	———	———
9-02-50	HEATER, Engine Jacket (2)	2863 477		2863 477	2863 477	2863 477
	"O" Ring (AR)	6027 513		6027 513	6027 513	6027 513
9-02-62	CORD, Engine Block Heater	3614 314		3614 314	3614 314	3614 314
9-03-4	**HEAD, Cylinder (2)**	3698 615		3698 617	———	———
	Up to 11-05-73 (2)	———		———	3769 910	3769 910
	After 11-05-73 (2)	———		———	3769 954	3769 954
9-03-5	GASKET, Cylinder Head (2)	3698 659		3698 659	3614 824	3614 824
9-03-10	BOLT, Cylinder Head					
	1/2" x 1 7/8" (10)	2463 258		2463 258	———	———
	1/2" x 3 5/8" (8)	2463 259		2463 259	———	———
	1/2" x 4 5/8" (2)	2463 260		2463 260	———	———
	7/16" x 1 27/32" (24)	———		———	1739 605	1739 605
	7/16" x 3 7/8" (10)	———		———	1739 606	1739 606
9-03-18	PLUG, Cylinder Head					
	Core Hole, 1.2605" (4)	2406 387		2406 387	———	———
	(4)	———		———	3698 639	3698 639
	1.3280" (AR)	———		———	2463 042	2463 042
	1.012" (AR)	———		———	2806 018	2806 018
	1.074" (AR)	———		———	2899 097	2899 097
9-03-28	COVER, Cylinder Head					
	Right	3780 166		3780 166	———	———
	Left	3780 167		3780 167	———	———
	Right	———		———	3780 168	3780 168
	Left, Complete P,D,C,Y	———		———	3698 821	3698 821
	Left, R,W,P,D,C,Y	———		———	3769 169	3769 169
	Bolt (10)	180 020		180 020	———	———
	Screw w/Washer (11)	———		———	6029 619	6029 619
9-03-29	GASKET, Cylinder Head Cover (2)	2951 267		2951 267	———	———
	(2)	———		———	2899 275	2899 275
9-05-5	**CONNECTOR, Cylinder Head Water**					
	Outlet	3698 565		3698 565	3698 565	3698 565
9-05-6	GASKET, Cylinder Water					
	Outlet Connector	50 082		50 082	50 082	50 082
9-07-5	**CRANKSHAFT, except Date Code 812**					
	in the Engine Number	3751 831		———	———	———
	With the Date Code 812 in					
	the Engine Number	3698 267		———	———	———
		———		3751 602	———	———
	w/4 Bbl. Carb. w/Man. 4 Speed					
	Trans. R, W	———		———	3751 881	———
	w/2 Bbl. Carb. w/Auto. Trans.;					
	Forged Crankshaft, From Eng.					
	No. 4T400-1-03 Through					
	4T400-1-08	———		———	3751 881	———
	w/2 and 4 Bbl. Carb. w/Auto.					
	Trans.; Cast Crankshaft, Up to					
	Eng. No. 4T400-1-03 and					
	After Eng. No. 4T400-1-08	———		———	3751 886	———
	w/Auto. Trans. w/o. H/Perf., Forge Type (See Note 4					
	Page 1)	———		———	———	3751 891
	w/Auto. Trans. w/o H/Perf., Cast Type (See Note 4					
	Page 1)	———		———	———	3751 889
	w/Auto. Trans., w/H/Perf.	———		———	———	3751 899
9-07-8	SCREW, Crankshaft	1821 414		1821 414	1731 525	1731 525
9-07-12	BUSHING, Crankshaft Trans.					
	Drive Pinion Pilot	53 298		53 298	53 298	53 298
9-07-22	WASHER, Crankshaft Screw	1855 561		1855 561	1855 561	1855 561

CODE	PART NAME AND DESCRIPTION	CU. IN. DISPLACEMENT & PISTON BORE SIZE				
		318		360	400	440
		3.91		4.00	4.35	4.32

EIGHT CYLINDER ENGINES

9-08-5	**SPROCKET, Crankshaft**		2463 385	———	2532 491	———
		w/o H/Perf.	———	———	———	2532 491
	Up To 2/18/74,	w/H/Perf.	———	———	———	2532 491
	After 2/18/74,	w/H/Perf.	———	———	———	4220 568
	Except 4 Bbl. H/Perf.		———	2463 385	———	———
	w/4 Bbl. H/Perf.		———	1637 657	———	———
	Key		6029 411	6029 411	6029 411	6029 411
	NOTE: When .001 thicker wall Crankshaft Main Bearings are used for Engines in Production, a Maltese Cross is stamped on the model pad of the Cylinder Block					
	NOTE: Crankshaft Bearing Packages Consists of one upper and one lower Bearing					
9-09-2	**BEARING PACKAGE, Nos. 1, 2, 4**					
	Std. (3)		2084 005	———	———	———
	.001 U/S. (3)		2084 006	———	———	———
	.002 U/S. (3)		2084 007	———	———	———
	.003 U/S. (3)		2275 387	———	———	———
	.010 U/S. (3)		2084 008	———	———	———
	.012 U/S. (3)		2275 388	———	———	———
	Std. (3)		———	3744 839	———	———
	.001 U/S. (3)		———	3744 840	———	———
	.002 U/S. (3)		———	3744 841	———	———
	.003 U/S. (3)		———	3744 842	———	———
	.010 U/S. (3)		———	3744 843	———	———
	.012 U/S. (3)		———	3744 844	———	———
	BEARING PACKAGE, No. 1 Std. (Early Type)		———	———	2084 810	———
	.001 U/S. (Early Type)		———	———	2084 811	———
	.002 U/S. (Early Type)		———	———	2084 812	———
	.003 U/S. (Early Type)		———	———	2275 391	———
	.010 U/S. (Early Type)		———	———	2084 813	———
	.012 U/S. (Early Type)		———	———	2275 392	———
	BEARING PACKAGE, Nos. 2, 4, 5 Std. (Early Type) (3)		———	———	2084 833	———
	.001 U/S. (Early Type) (3)		———	———	2084 834	———
	.002 U/S. (Early Type) (3)		———	———	2084 835	———
	.003 U/S. (Early Type) (3)		———	———	2275 393	———
	.010 U/S. (Early Type) (3)		———	———	2084 836	———
	.012 U/S. (Early Type) (3)		———	———	2275 394	———
	BEARING PACKAGE, Nos. 1, 2, 4, 5					
	Std. (Late Type) (4)		———	———	# 3837 633	———
	.001 U/S. (Late Type) (4)		———	———	# 3837 634	———
	.002 U/S. (Late Type) (4)		———	———	# 3837 635	———
	.003 U/S. (Late Type) (4)		———	———	# 3837 636	———
	.010 U/S. (Late Type) (4)		———	———	# 3837 637	———
	.012 U/S. (Late Type) (4)		———	———	# 3837 638	———
	BEARING PACKAGE, NOS. 1,2,4,5					
	Std. (3)		———	———	———	3420 009
	.001 U/S. (3)		———	———	———	3420 010
	.002 U/S. (3)		———	———	———	3420 011
	.003 U/S. (3)		———	———	———	3420 012
	.010 U/S. (3)		———	———	———	3420 013
	.012 U/S. (3)		———	———	———	3420 014
	BEARING PACKAGE NO. 3					
	Except Date Code 812 in the Engine Number					
	Std.		3780 075	———	3780 081	3780 087
	.001 U/S.		3780 076	———	3780 082	3780 088
	.002 U/S		3780 077	———	3780 083	3780 089
	.003 U/S.		3780 078	———	3780 084	3780 090
	.010 U/S.		3780 079	———	3780 085	3780 091
	.012 U/S.		3780 080	———	3780 086	3780 092
	With the Date Code 812 in the Engine Number					
	Std.		1879 627	———	3621 230	3004 944
	.001 U/S		1879 628	———	3621 231	3004 945

CODE	PART NAME AND DESCRIPTION	CU. IN. DISPLACEMENT & PISTON BORE SIZE				
		318		360	400	440
		3.91		4.00	4.35	4.32

EIGHT CYLINDER ENGINES

9-09-2	BEARING PACKAGE Cont'd.				
	.002 U/S.	1879 629	———	3621 232	3004 946
	.003 U/S.	2275 389	———	3621 233	3004 947
	.010 U/S.	1879 630	———	3621 234	3004 948
	.012 U/S.	2275 390	———	3621 235	3004 949
	BEARING PACKAGE No. 3 Std.	———	3780 094	———	———
	.001 U/S.	———	3780 095	———	———
	.002 U/S.	———	3780 096	———	———
	.003 U/S.	———	3780 097	———	———
	.010 U/S.	———	3780 098	———	———
	.012 U/S.	———	3780 099	———	———
	BEARING PACKAGE No. 5 Std.	3514 151	———	———	———
	.001 U/S.	3514 152	———	———	———
	.002 U/S.	3514 153	———	———	———
	.003 U/S.	3514 154	———	———	———
	.010 U/S.	3514 155	———	———	———
	.012 U/S.	3514 156	———	———	———
	Std. Except 4 Bbl. H/Perf.	———	3549 382	———	———
	.001 U/S. except 4 Bbl. H/Perf.	———	3549 383	———	———
	.002 U/S. except 4 Bbl. H/Perf.	———	3549 384	———	———
	.003 U/S. except 4Bbl. H/Perf.	———	3549 385	———	———
	.010 U/S. except 4 Bbl. H/Perf.	———	3549 386	———	———
	.012 U/S. except 4 Bbl. H/Perf.	———	3549 387	———	———
	Std. w/4 Bbl. H/Perf.	———	3780 100	———	———
	.001 U/S. w/4 Bbl. H/Perf.	———	3780 101	———	———
	.002 U/S. w/4 Bbl. H/Perf.	———	3780 102	———	———
	.003 U/S. w/4 Bbl. H/Perf.	———	3780 103	———	———
	.010 U/S. w/4 Bbl. H/Perf.	———	3780 104	———	———
	.012 U/S. w/4 Bbl. H/Perf.	———	3780 105	———	———
9-10-2	**OIL SEAL PACKAGE, Crankshaft Bearing Cap No. 5**	1326 091	———	———	———
9-10-5	CAP, Crankshaft Bearing Nos. 1, 2 and 4 (3)	2863 854	3614 232	2206 315	1852 910
	No. 3	2463 582	3614 233	3769 343	3769 345
	No. 5	2863 902	3614 234	2206 315	2206 316
9-10-19	SCREW, Crankshaft Bearing Cap (10)	1618 695	———	1408 867	1408 867
	(0)	———	6027 264	1408 867	1408 867
9-11-1	**OIL SEAL PACKAGE, Crankshaft Rear Bearing**	3549 392	3549 395	3549 394	3549 394
9-11-7	RETAINER, Crankshaft Bearing Oil Seal	———	———	1945 473	1945 473
	Screw (2)	———	———	9418 005	9418 005
9-13-5	**DAMPER, CRANKSHAFT Vibration**	3614 369	3751 808	———	———
	w/Man. Trans. w/4 Bbl. Carb. H/Perf. R, W	———	———	3614 371	———
	w/2 Bbl. Carb. w/Auto. Trans.; w/Forged Crankshaft, From Eng. No. 4T400-1-03 Through 4T400-1-08	———	———	3614 371	———
	w/2 and 4 Bbl. Carb., w/Auto. Trans.; w/Cast Crankshaft, Up to Eng. No. 4T400-1-03 and after Eng. No. 4T400-1-08	———	———	3614 374	———
	w/Cast Type Crankshaft, w/Auto. Trans. w/o H/Perf. (See Note 4 Page 1)	———	———	———	3577 785
	w/Forged Crankshaft w/Auto. Trans., with and without H/Perf.	———	———	———	3614 371
9-15-1	**CAMSHAFT**	3512 635	———	———	———
	Except 4 Bbl. H/Perf.	———	3512 589	———	———
	w/bbl. H/Perf.	———	2899 206	———	———

CODE	PART NAME AND DESCRIPTION	CU. IN. DISPLACEMENT & PISTON BORE SIZE				
		318		360	400	440
		3.91		4.00	4.35	4.32

EIGHT CYLINDER ENGINES

9-15-1	CAMSHAFT Cont'd.				
	Except 4 Bbl. H/Perf.	———	———	3577 181	———
	w/4 Bbl. H/Perf.	———	———	3512 907	———
	w/4 Bbl. Carb., w/o H/Perf.	———	———	———	3577 181
	w/H/Perf.	———	———	———	3512 907
	Key	106 751	106 751	———	———
9-15-2	ECCENTRIC, Camshaft	2843 661	2843 661	———	———
9-15-6	PLATE, Camshaft Sprocket Thrust	1618 670	1618 670	———	———
	Screw (3)	191 674	191 674	———	———
9-15-10	WASHER, Camshaft Sprocket Retainer Screw	1618 732	1618 732	6023 053	6023 053
9-16-6	**BEARING, Camshaft No. 1 (Up To 11/28/73)** ★	1632 522	1632 522	1821 771	1821 771
	No. 1 (After 11/28/73)	# 3830 603	# 3830 603	# 3830 604	# 3830 604
	No. 2	1632 523	1632 523	1821 772	1821 772
	No. 3	1632 524	1632 524	1821 773	1821 773
	No. 4	1632 525	1632 525	1821 774	1821 774
	No. 5	1632 526	1632 526	1821 775	1821 775
9-16-17	PLUG, Camshaft Rear Bearing	1821 722	1821 722	2402 905	2402 905
	Oversize (AR)	———	———	2463 041	2463 041
9-17-5	**SPROCKET, Camshaft**	2843 610	———	2532 490	———
	Except 4 Bbl. H/Perf.	———	2843 610	———	2532 490
	w/4 Bbl. H/Perf.	———	2899 556	———	———
	(Up To 2/18/74) w/H/Perf.	———	———	———	2532 490
	(After 2/18/74) w/H/Perf.	———	———	———	2463 037
	Dowel	———	———	141 195	141 195
9-17-9	SCREW, Camshaft Sprocket Retainer	9417 471	9417 471	181 137	181 137
9-20-1	**CHAIN, Timing**	3514 182	———	3420 053	———
	Except 4 Bbl. H/Perf.	———	3514 182	———	3420 053
	w/4 Bbl. H/Perf.	———	1327 319	———	———
	(Up To 2/18/74) w/H/Perf.	———	———	———	3420 053
	(After 2/18/74) w/H/Perf.	———	———	———	2205 569
9-20-9	TAB, Timing Chain Oil	3671 649	3671 649	———	———
9-23-5	**COVER, Chain Case**	2951 671	2951 671	3698 614	3698 614
	SCREW, w/Washer (2)	6029 713	6029 713	———	———
	SCREW, w/Washer (AR)	———	———	6022 250	6022 250
9-23-17	GASKET, Chain Case Cover	2129 012	2129 012	———	———
	Also use 2 of 1737761 Water Pump Housing Gasket	———	———	2264 794	2264 794
9-23-18	OIL SEAL, Chain Case Cover	3751 235	3751 235	3751 235	3751 235
	NOTE: Connecting Rod includes Bearing Cap, Bolt, Nut, Lockwasher and Bushing But does not include Bearing.				
9-31-4	**ROD, Connecting (8)**	2899 061 3751 015	———	2406 766	———
	Except 4 Bbl. H/Perf. (8)	———	2899 061	———	———
	w/4 Bbl. H/Perf. (8)	———	3751 015	———	———
	w/o H/Perf. (8)	———	———	———	2406 770
	w/H/Perf. (8)	———	———	———	2951 906
9-31-5	BOLT, Connecting Rod Bearing Cap (16)	1944 865	1944 865	1737 694	1737 694
9-31-7	NUT, Connecting Rod Bearing Cap (16)	1737 695	1737 695	1737 695	1737 695
	NOTE: When .001 thicker wall Connecting Rod Bearings are used for Engines in Production, A Maltese Cross is stamped on the model Pad of the Cylinder Block.				
	NOTE: Connecting Rod Bearing Packages Consists of one upper and one lower Bearing.				
9-32-2	**BEARING PACKAGE, CONNECTING ROD Std. (8)**	1879 617	2421 305	———	1881 794
	.001 U/S. (8)	1879 618	2421 306	———	1881 795
	.002 U/S. (8)	1879 619	2421 307	———	1881 796
	.003 U/S. (8)	1879 620	2421 308	———	2275 413
	.010 U/S. (8)	1879 621	2421 309	———	1881 797
	.012 U/S. (8)	1879 622	2421 310	———	2275 414
	Std. Except 4 Bbl. H/Perf. (8)	———	———	1818 698	———
	.001 U/S. Except 4 Bbl. H/Perf. (8)	———	———	1818 699	———
	.002 U/S. Except 4 Bbl. H/Perf. (8)	———	———	1818 700	———

CODE	PART NAME AND DESCRIPTION	CU. IN. DISPLACEMENT & PISTON BORE SIZE				
		318		360	400	440
		3.91		4.00	4.35	4.32

EIGHT CYLINDER ENGINES

9-32-2	BEARING PACKAGE Cont'd.					
	.003 U/S. Except 4 Bbl. H/Perf. (8)	———		———	1818 701	———
	.010 U/S. Except 4 Bbl. H/Perf. (8)	———		———	1818 702	———
	.012 U/S. Except 4 Bbl. H/Perf. (8)	———		———	1818 703	———
	Std. w/4 Bbl. H/Perf. (8)	———		———	1881 794	———
	.001 U/S. w/4 Bbl. H/Perf. (8)	———		———	1881 795	———
	.002 U/S. w/4 Bbl. H/Perf. (8)	———		———	1881 796	———
	.003 U/S. w/4 Bbl. H/Perf. (8)	———		———	2275 413	———
	.010 U/S. W/4 Bbl. H/Perf. (8)	———		———	1881 797	———
	.012 U/S. w/4 Bbl. H/Perf. (8)	———		———	2275 414	———
	NOTE: The following Pistons include Pins and Pin Retaining Rings.					
9-34-5	**PISTON, w/PIN, Std. (8)**	3685 751		———	3621 356	———
	.005 O/S (8)	3685 752		———	3621 357	———
	.020 O/S (8)	3685 753		———	3621 358	———
	.040 O/S (8)	———		———	3621 359	———
	Std. except 4 Bbl. H/Perf.					
	U/S. Built (8)	———		3685 737	———	———
	.005 O/S. except 4 Bbl. H/Perf.					
	U/S. Built (8)	———		3685 738	———	———
	.020 O/S. except 4 Bbl. H/Perf.					
	U/S. Built (8)	———		3685 739	———	———
	.040 O/S. Except 4 Bbl. H/Perf.					
	U/S. Built (8)	———		3685 740	———	———
	Std. w/4 Bbl. H/Perf.					
	U/S. Built (8)	———		3780 071	———	———
	.005 O/S. w/4 Bbl. H/Perf.					
	U/S.Built (8)	———		3780 072	———	———
	.020 O/S. w/4 Bbl. H/Perf.					
	U/S. Built (8)	———		3780 073	———	———
	.040 O/S. w/4 Bbl. H/Perf.					
	U/S. Built (8)	———		3780 074	———	———
	Std. Canada Built (8)	———		3780 071	———	———
	.020 O/S. Canada Built (8)	———		3780 073	———	———
	Std. (8)	———		———	———	3579 047
	.005 O/S (8)	———		———	———	3579 048
	.020 O/S (8)	———		———	———	3579 049
	.040 O/S (8)	———		———	———	3579 050
9-35-1	**RING SET, PISTON (COMPLETE SET FOR ALL PISTONS)**					
	Std. to .009 O/S.	2808 550		———	———	———
	.020 to .029 O/S.	2808 551		———	———	———
	.040 to .049 O/S.	2808 552		———	———	———
	Std. to .009 O/S. except 4 Bbl. H/Perf.	———		3549 588	———	———
	.020 to .029 O/S. except 4 Bbl. H/Perf.	———		3549 589	———	———
	.040 to .049 O/S. except 4 Bbl. H/Perf.	———		3549 590	———	———
	Std. to .009 O/S. w/4 Bbl. H/Perf.	———		3579 044	———	———
	.020 to .029 O/S. w/4 Bbl. H/Perf.	———		3579 045	———	———
	.040 to .049 O/S. w/4 Bbl. H/Perf.	———		3579 046	———	———
	Std. to .009 O/S. w/2 Bbl. Carb.	———		———	3683 819	———
	.020 to .029 O/S. w/2 Bbl. Carb.	———		———	3683 820	———
	.040 to .049 O/S. w/2 Bbl. Carb.	———		———	3683 821	———
	Std. to .009 O/S. w/4 Bbl. Carb.	———		———	3685 683	———
	.020 to .029 O/S. w/4 Bbl. Carb.	———		———	3685 684	———
	.040 to .049 O/S. w/4 Bbl. Carb.	———		———	3685 685	———
	Std. to .009 O/S. w/Top Molybdenum Ring	———		———	———	3780 123
	.020 to .029 O/S. w/Top Molybdenum Ring	———		———	———	3780 124
	.040 to .049 O/S.					

CODE	PART NAME AND DESCRIPTION		CU. IN. DISPLACEMENT & PISTON BORE SIZE				
			318		360	400	440
			3.91		4.00	4.35	4.32
	EIGHT CYLINDER ENGINES						
9-35-1	RING SET Cont'd.						
	w/Top Molybdenum Ring		———		———	———	3780 125
	RING SET, PISTON (SET FOR ONE PISTON)		———		———	———	———
	Std. to .009 O/S. (8)		3780 004		———	———	———
	.020 to .029 O/S. (8)		3780 005		———	———	———
	.040 to .049 O/S. (8)		3780 006		———	———	———
	Std. to .009 O/S. (8)		———		3780 016	———	———
	.020 to .029 O/S. (8)		———		3780 017	———	———
	.040 to .049 O/S. (8)		———		3780 018	———	———
	Std. to .009 O/S. (8)		———		———	3780 028	———
	.020 to .029 O/S. (8)		———		———	3780 029	———
	.040 to .049 O/S. (8)		———		———	3780 030	———
	Std. to .009 O/S. w/Top Molybdenum Ring (8)		———		———	———	3780 117
	.020 to .029 O/S. w/Top Molybdenum Ring (8)		———		———	———	3780 118
	.040 to .049 O/S. w/Top Molybdenum Ring (8)		———		———	———	3780 119
9-36-5	**PIN, Piston Std. (8)**		2658 878		2658 878	———	———
	.003 O/S. (8)		2658 879		2658 879	———	———
	.008 O/S. (8)		2658 880		2658 880	———	———
9-36-7	RING, Piston Pin Retaining (16)		1324 470		———	———	———
9-39-5	**VALVE, Intake, Std. (8)**		2465 335		3683 801	———	———
	.005 O/S. (8)		2465 336		3577 949	———	———
	.015 O/S. (8)		2465 337		3577 950	———	———
	.030 O/S. (8)		2465 338		3577 951	———	———
	VALVE, Intake, Except 4 Bbl. H/Perf. Std. (8)		———		———	2206 103	———
	.005 O/S. Except 4 Bbl. H/Perf. (8)		———		———	2206 104	———
	.015 O/S. Except 4 Bbl. H/Perf. (8)		———		———	2206 105	———
	.030 O/S. Except 4 Bbl. H/Perf. (8)		———		———	2206 106	———
	VALVE PACKAGE, Intake, w/Lock, w/4 Bbl. H/Perf.	Std. (8)	———		———	3549 975	———
	.005 O/S. w/4 Bbl. H/Perf. (8)		———		———	3549 976	———
	.015 O/S. w/4 Bbl. H/Perf. (8)		———		———	3549 977	———
	.030 O/S. w/4 Bbl. H/Perf. (8)		———		———	3549 978	———
	VALVE, Intake, w/4 Bbl. Carb. w/O. H/Perf.	Std. (8)	———		———	———	2206 103
	.005 O/S. (8)		———		———	———	2206 104
	.015 O/S. (8)		———		———	———	2206 105
	.030 O/S. (8)		———		———	———	2206 106
	VALVE PACKAGE, Intake, w/Lock, w/4 Bbl. Carb., w/H/Perf. Std. (8)		———		———	———	3549 975
	.005 O/S. (8)		———		———	———	3549 976
	.015 O/S. (8)		———		———	———	3549 977
	.030 O/S. (8)		———		———	———	3549 978
9-39-6	VALVE, Exhaust Std. (8)		2465 339		———	———	———
	.005 O/S. (8)		2465 340		———	———	———
	.015 O/S. (8)		2465 341		———	———	———
	.030 O/S. (8)		2465 342		———	———	———
	Std. except 4 Bbl. H/Perf. (8)		———		2863 521	———	———
	.005 O/S. except 4 Bbl. H/Perf. (8)		———		2863 533	———	———
	.015 O/S. except 4 Bbl. H/Perf. (8)		———		2863 534	———	———
	.030 O/S. except 4 Bbl. H/Perf. (8)		———		2863 535	———	———
	Std. w/4 Bbl. H/Perf. (8)		———		3751 673	———	———
	.005 O/S. w/4 Bbl. H/Perf. (8)		———		3751 674	———	———
	.015 O/S. w/4 Bbl. H/Perf. (8)		———		3751 675	———	———
	.030 O/S. w/4 Bbl. H/Perf. (8)		———		3751 676	———	———

CODE	PART NAME AND DESCRIPTION	CU. IN. DISPLACEMENT & PISTON BORE SIZE				
		318		360	400	440
		3.91		4.00	4.35	4.32

EIGHT CYLINDER ENGINES

9-39-6	VALVE Cont'd.				
	Std. (8)	———	———	3512 095	———
	.005 O/S. (8)	———	———	3512 096	———
	.015 O/S. (8)	———	———	3512 097	———
	.030 O/S. (8)	———	———	3512 098	———
	w/4 Bbl. Carb. w/O. H/Perf. Std. (8)	———	———	———	3512 095
	.005 O/S. (8)	———	———	———	3512 096
	.015 O/S. (8)	———	———	———	3512 097
	.030 O/S. (8)	———	———	———	3512 098
	w/4 Bbl. Carb., w/H/Perf., Std. (8)	———	———	———	3512 095
	.005 O/S. (8)	———	———	———	3512 096
	.015 O/S. (8)	———	———	———	3512 097
	.030 O/S. (8)	———	———	———	3512 098
9-39-14	SHIELD, Valve Stem Oil Exhaust (8)	2205 958	———	2121 686	2121 686
	Except 4 Bbl. H/Perf. (8)	———	2205 958	———	———
	w/4 Bbl. H/Perf. (8)	———	2205 959	———	———
	SEAL, Valve Guide Intake (8)	3671 616	3671 616	3671 616	3671 616
9-39-15	SPRING, Valve, except R-M (16)	1739 534	———	———	———
	R-M (16)	3751 741	———	———	———
	Except 4 Bbl. H/Perf.	———	1739 534	———	———
	w/4 Bbl. H/Perf.	———	2863 439	———	———
	Except 4 Bbl. H/Perf. (16)	———	———	2658 471	———
	w/4 Bbl. H/Perf. (16)	———	———	2658 204	———
	w/4 Bbl. Carb., w/o H/Perf., (16)	———	———	———	2658 471
	w/4 Bbl. Carb., w/H/Perf. (16)	———	———	———	2658 204
9-39-16	RETAINER, Valve Spring (16)	2402 045	2402 045	2402 045	2402 045
9-39-17	LOCK, Intake Valve Spring Retainer (16)	381 875	381 875	381 875	381 875
	Exhaust Valve Spring Retainer (16)	1614 666	1614 666	1614 666	1614 666
9-39-21	SPACER, Valve Spring (AR)	1859 144	1859 144	1859 144	1859 144
9-41-1	**SILENCER PACKAGE, Tappet Chamber**				
	Except 4 Bbl. H/Perf.	———	———	1879 747	———
	w/4 Bbl. Carb. w/O. H/Perf.	———	———	———	1879 747
9-41-4	TAPPET, Valve				
	Std. (16)	3549 989	3549 989	3004 647	3004 647
	.001 O/S. (16)	3549 990	3004 644	3004 648	3004 648
	.008 O/S. (16)	3549 991	3549 991	3004 649	3004 649
	.030 O/S. (16)	3549 992	3004 646	3004 650	3004 650
9-42-1	**ROD, Valve Push (16)** 3280146	2899 561	2899 567	2899 594	2899 595
9-43-1	**ROCKER, Valve Right (8)**	3418 425	3418 425	3004 718	3004 718
	Left (8)	3418 424	3418 424	3004 719	3004 719
9-43-5	SPACER, Valve Rocker (8)	———	———	1737 756	1737 756
9-43-9	SHAFT, Valve Rocker (2)	2532 149	2532 149	2465 850	2465 850
9-43-11	RETAINER, Valve Rocker Shaft, End and Center (6)	2463 322	2463 322	2463 282	2463 282
	Intermediate (4)	2463 323	2463 323	2463 283	2463 283
9-43-19	PLUG, Valve Rocker Shaft (AR)	1324 268	1324 268	1324 268	1324 268
9-45-1	**FLYWHEEL, w/Ring Gear**	2264 597	3410 916	———	———
	w/4 Bbl. Carb.	———	———	2264 597	———
	Bolt (6)	192 356	192 356	192 356	———
9-45-2	GEAR, Flywheel Ring	1941 648	1941 648	1941 648	———
	GEAR, Torque Converter Starter Ring				
	(I.D. 11.250")	2121 196	2121 196	———	———
	(I.D. 12.222")	1941 648	1941 648	———	———
	(I.D. 11.193")	3515 203	———	———	———
	(I.D. 11.193")	———	3515 203	———	———
	Except 4 Bbl. Carb. H/Perf.	———	———	1941 648	———
	w/4 Bbl. Carb. H/Perf.	———	———	3515 203	———
	w/H/Perf. w/Auto. Trans. R, W	———	———	———	3515 203
	w/Auto. Trans., P, D, C, Y	———	———	———	1941 648

EIGHT CYLINDER ENGINES

CODE	PART NAME AND DESCRIPTION	CU. IN. DISPLACEMENT & PISTON BORE SIZE				
		318		360	400	440
		3.91		4.00	4.35	4.32
9-46-4	**TORQUE CONVERTER**					
	w/A904 Auto. Trans. w/10" dia. Drive Plate Bolt Circle	2801 762		———	———	———
	w/A727 Auto. Trans. w/11 1/8" dia. Drive Plate Bolt Circle	2843 586		———	———	———
	w/A727 Auto. Trans. w/10" Dia. Drive Plate Bolt Circle	2801 764		———	———	———
	w/11 1/8" dia. Drive Plate Bolt Circle, R, W, P, D, C	———		3515 499	———	———
	w/10" Dia. Drive Bolt Circle V, L, B, J, R, W, P, D, C	———		3410 918	———	———
	w/2 Bbl. Carb.; w/Forged Crankshaft, From Eng. No. 4T400-1-03 Through 4T400-1-08	———		———	2843 586	———
	Except 4 Bbl. Carb. H/Perf.; w/Cast Crankshaft, Up to Eng. No. 4T400-1-03 and After Eng. No. 4T400-1-08	———		———	3515 282	———
	w/4 Bbl. H/Perf.	———		———	3681 145	———
	w/H/Perf. R, W	———		———	———	2801 764
	w/and w/o H/Perf. except Cast Crankshaft P, D, C, Y	———		———	———	2843 586
	w/o H/Perf. w/Cast Crankshaft (See Note 4 Page 1) P, D, C, Y	———		———	———	3515 282
	Plug, Drain	6030 035		6030 035	6030 035	6030 035
9-46-8	PLATE, Torque Converter Drive					
	w/10" dia. Drive Bolt Circle	2400 885		2400 885	———	———
	w/11 1/8" dia. Drive Bolt Circle	2204 768		2204 768	———	———
	Except 4 Bbl. H/Perf.	———		———	2204 768	———
	w/4 Bbl. H/Perf.	———		———	2400 885	———
	w/R, W	———		———	———	2400 885
	except R, W	———		———	———	2204 768
9-46-21	SCREW, Torque Converter Drive Plate to Crankshaft (6)	1949 424		1949 424	1949 424	1949 424
	SCREW, Drive Plate to Torque Converter (4)	1949 765		1949 765	1949 765	1949 765
9-46-31	COOLER, Radiator Core Oil Lgh. Wide					
	7.37" x 1.00" (AR)	2998 999		2998 999	2998 999	2998 999
	7.37" x 1.25" (AR)	2998 998		2998 998	2998 998	2998 998
	11.37 x 1.00" (AR)	2998 997		2998 997	2998 997	2998 997
	13.37 x 1.25" (AR)	2998 996		2998 996	2998 996	2998 996
	16.37 x 1.25" (AR)	2998 995		2998 995	2998 995	2998 995
	13.37 x 1.50" (AR)	2998 994		2998 994	2998 994	2998 994
	11.37 x 1.50" (AR)	2998 993		2998 993	2998 993	2998 993
	COOLER, Trans. Oil Auxiliary P, D, C, Y	———		3743 185	3743 185	3743 185
	R, W	3681 902		3681 902	3681 902	3681 902
9-46-33	BRACKET, Trans. Oil Cooler Tube					
	w/o Heavy Duty A727 Trans.	3577 172		3577 172	———	———
	w/Heavy Duty A727 Trans.	3698 668		3698 668	———	———
		———		———	3698 463	3698 463
	BRACKET, Trans. Oil Cooler Mounting					
	w/Auxiliary Oil Cooler R,W,	3681 903		3681 903	3681 903	3681 903
	J-Nut, Bracket (AR)	———		6023 168	6023 168	6023 168
	U-Nut, To Yoke R, W	152 449		152 449	152 449	152 449
	Screw, Tube Clip, P,D,C,Y (2)	———		9420 813	9420 813	9420 813
9-46-43	NUT, Trans. Oil Cooler Tube, Trans. End (2)	1941 667		1941 667	1941 667	1941 667
	Radiator End (2)	1941 667		1941 667	1941 667	1941 667
9-46-44	CONNECTOR, Trans., Oil Cooler, Tube (AR)	118 749		118 749	118 749	118 749
	CONNECTOR, Trans., Oil Cooler w/Auxiliary Oil Cooler	2801 853		2801 853	2801 853	2801 853
9-46-130	SEAL, Trans. Torque Converter Impeller Hub, w/Std. Duty Auto. Trans.	3515 138		3515 138	———	———
	w/Heavy Duty A727 Auto. Trans.	3515 137		3515 137	3515 137	3515 137

CODE	PART NAME AND DESCRIPTION	CU. IN. DISPLACEMENT & PISTON BORE SIZE				
		318		360	400	440
		3.91		4.00	4.35	4.32

EIGHT CYLINDER ENGINES

9-46-229	SPRING, Torque Converter Overrunning Clutch Roller (8)	1942 187		1942 187	1942 187	1942 187
9-48-6	**MANIFOLD, Exhaust, Right, except R-M**	3751 607		———	———	———
	Right, RM, D Export	3769 406		———	———	———
	Left, V,L up to 4-1-74	3614 396		———	———	———
	Left, R-M, D Export After 4-1-74 4006740	3671 399		———	———	———
	Left except V,L, R-M	3512 076		———	———	———
	Right	———		3751 393	———	———
	Left, V,L	———		3614 367	———	———
	Left, except V,L	———		3751 083	———	———
	Right, Except 4 Bbl. Carb. H/Perf. R, W	———		———	3751 791	———
	Right, w/4 Bbl. Carb., H/Perf. R, W	———		———	3751 795	———
	Right, P, D, C, Y,	———		———	3751 791	———
	Left, R, W	———		———	3751 067	3751 067
	Left, Except 4 Bbl. Carb. H/Perf. P, D, C	———		———	3837 601	———
	Left, w/4 Bbl. Carb. H/Perf. P, D	———		———	3837 621	———
	Right, w/o H/Perf. w/o Calif. Emission Pkg. P, D, C, Y	———		———	———	3751 791
	Left, w/o H/Perf. w/o Calif. Emission Pkg. P, D, C, Y	———		———	———	3837 601
	Right, Assembly, w/o H/Perf. w/Calif. Emission Pkg. P, D, C, Y	———		———	———	3751 794
	Left, w/o H/Perf. w/Calif. Emission Pkg. P, D, C, Y	———		———	———	3837 620
	RIGHT, w/H/Perf. w/o Calif. Emission Pkg. P, D, C, R, W	———		———	———	3751 795
	LEFT, w/H/Perf. w/o, Calif. Emission Pkg. P, D, C	———		———	———	3837 621
	SCREW, Long 5/8" x 2 1/8" (AR)	9421 360		9421 360	———	———
	Stud, Exhaust Manifold (12)	———		———	6030 409	6030 409
	Screw, Exhaust Manifold Left, V, L	6028 356		6028 356	———	———
	Stud, Exhaust Manifold, Left, B, J, R, W, P, D	6028 355		6028 355	———	———
	NUT, Stud (AR)	———		———	6030 310	6030 310
	WASHER, Stud Nut (AR)	———		———	6030 064	6030 064
9-48-7	MANIFOLD, Intake	3769 991		———	———	———
	w/2 Bbl. Carb.	———		3769 993	———	———
	w/4 Bbl. Carb.	———		3698 435	———	———
	w/2 Bbl. Carb.	———		———	3830 019	———
	w/4 Bbl. Carb.	———		———	3698 584	———
		———		———	———	3751 729
	Bolt, 3/8" x 1 5/8" (AR)	9417 050		9417 050	6029 437	6029 437
	Bolt, 3/8" x 1 1/2" (AR)	———		———	6029 757	6029 757
	Washer, Ground Cable	———		———	6026 273	6026 273
	Dowel, Gasket (2)	9414 469		9414 469	———	———
9-48-8	CONNECTOR, Intake Manifold Vacuum Control					
	O.D. .028 Center Tube (AR)	2658 625		———	———	———
	O.D. .125 Center Tube (AR)	1858 955		1858 955	1858 955	1858 955
	O.D. .1875 Side Tube (AR)	3614 059		———	3614 059	3614 059
	O.D. .125 Side Tube and .025 Center Tube (AR)	2863 486		———	———	———
	O.D. .125 and .1875 Side Tube (AR)	3618 063		———	3614 063	3614 063
	O.D. .1875 Side Tube and .025 Center Tube (AR)	3614 064		———	———	———
9-48-9	PLUG, Intake Manifold Vacuum Control Hole	1859 127		1859 127	1859 127	1859 127
	PLUG, Intake Manifold Floor	3698 644		3698 644	3698 644	3698 644
9-48-14	WASHER, Exhaust Manifold End Stud Nut (4)	2121 223		2121 223	———	———
9-48-27	REINFORCEMENT, Intake Manifold Gasket End (2)	———		———	1859 332	1851 665
9-48-44	NUT, Exhaust Manifold Stud (AR)	———		———	3614 292	3614 292
	(AR)	———		———	2806 982	2806 982

EIGHT CYLINDER ENGINES

CODE	PART NAME AND DESCRIPTION	CU. IN. DISPLACEMENT & PISTON BORE SIZE				
		318		360	400	440
		3.91		4.00	4.35	4.32
9-48-44	NUT Cont'd. 9-71-5					
	(AR)	———		———	6030 310	6030 310
	P, D, C, Y	———		———	3830 651	3830 651
	WASHER, Stud Nut (AR)	———		———	6030 064	6030 064
9-48-56	SHIELD, Intake Manifold Heat	3698 458		3698 458	———	———
9-50-1	**GASKET SET, Intake Manifold Except D Export**	3420 027	⟷	3514 187	———	———
	w/D, Export	3514 187		———	———	———
9-50-5	GASKET, Exhaust Manifold Left, w/Heat, V,L	2951 285		———	———	———
	GASKET, Exhaust Manifold (2)	———		———	3751 723	3751 723
9-50-6	GASKET, Intake Manifold	———		———	3671 874	3671 933
	Assembly, w/4 Bbl. Carb. H/Perf.	———		———	3769 932	3769 933
	PIN	9409 667		———	———	———
9-67-4	**INSULATOR, Engine Front Support,**					
	Right, Except Sta. Wgn.					
	V, L, R, W and D Export	3642 810		3642 810	———	———
	Right, w/Sta. Wgn.					
	R, W and D Export	3642 818		———	———	———
	Right, except Sta. Wgn., P, D	———		3642 818	———	———
	Right, w/Sta. Wgn., P, D	———		3817 122	———	———
	Left, except Sta. Wgn.					
	V, L, R, W and D Export	3642 811		———	———	———
	Left, w/Sta. Wgn.					
	R, W and D Export	3642 819		———	———	———
	Left, V, L, R, W	———		3642 813	———	———
	Left, except Sta. Wgn., P, D	———		3642 829	———	———
	Left, w/Sta. Wgn., P, D	———		3817 123	———	———
	INSULATOR, Engine Front Support					
	B, J (2)	3642 850		3642 850	———	———
	Right, R,W	———		———	3642 814	3642 814
	Left, R,W	———		———	3642 815	3642 815
	Right, except Sta. Wgn.					
	P, D, C, Y	———		———	3642 814	3642 814
	Right, w/Sta. Wgn.					
	P, D, C	———		———	3817 124	3817 124
	Left, except Sta. Wgn.					
	w/o Calif. Emission Pkg.					
	P, D, C, Y	———		———	3642 815	3642 815
	Left, w/Sta. Wgn.					
	w/o Calif. Emission Pkg.					
	P, D, C	———		———	3817 125	3817 125
	Left, w/Calif. Emission Pkg.					
	w/o H/Perf., P, D, C, Y	———		———	———	3817 117
	Bolt, Insulator to Frame V, L, R, W, P, D, C	6030 203		6030 203	6030 203	6030 203
	Nut, Insulator To Frame Bolt, V, L, R, W, P, D	6030 478		6030 478	———	———
	Bolt, V,L (2)	6023 353		———	———	———
	Screw, Bracket to Block (AR)	6030 475		6030 475	6030 475	6030 475
	Bolt, Bracket to Block, Left	———		———	9436 290	9436 290
	Nut, Bracket To Block Bolt	6030 319		6030 319	———	———
	Washer, Bracket to Block Bolt Left	———		———	6023 050	6023 050
9-67-11	RESTRAINT, Engine Front Support Insulator, Right, B, J	3642 840		3642 840	———	———
	Left, B, J	3642 841		3642 841	———	———
	RESTRAINT, Engine Front Support Insulator					
	w/Bracket, Right, B, J	3642 876		3642 876	———	———
	w/Bracket, Left B, J	3642 877		3642 879	———	———
9-69-12	**SPACER, Engine Rear Support Insulator Bracket**					
	B,J,R,W,P,D,C,Y (2)	3410 700		3410 700	3410 700	3410 700
9-71-5	**INSULATOR, Engine Rear Support**	3642 831	3817239	3642 831	3642 831	3642 831
	Nut, Plate Bolt, V,L	6025 804		———	———	———
	Nut, Insulator To Crossmember Mounting Bolt, B,J,					

CODE	PART NAME AND DESCRIPTION	CU. IN. DISPLACEMENT & PISTON BORE SIZE				
		318		360	400	440
		3.91		4.00	4.35	4.32
	EIGHT CYLINDER ENGINES					
9-71-5	INSULATOR Cont'd.					
	P,D,C,Y	6023 353		6023 353	6023 353	6023 353
	Bolt, Insulator To Crossmember	6028 237		6028 237	6028 237	6028 237
	Washer	9417 098		9417 098	9417 098	9417 098
	Stud, Insulator to Extension, P,D,C,Y (2)	6028 262		6028 262	6028 262	6028 262
	Nut, Insulator to Extension Stud P,D,C,Y (2)	6026 789		6026 789	6026 789	6026 789

NOTES

NOTES

GROUP 10 - ENGINE OILING

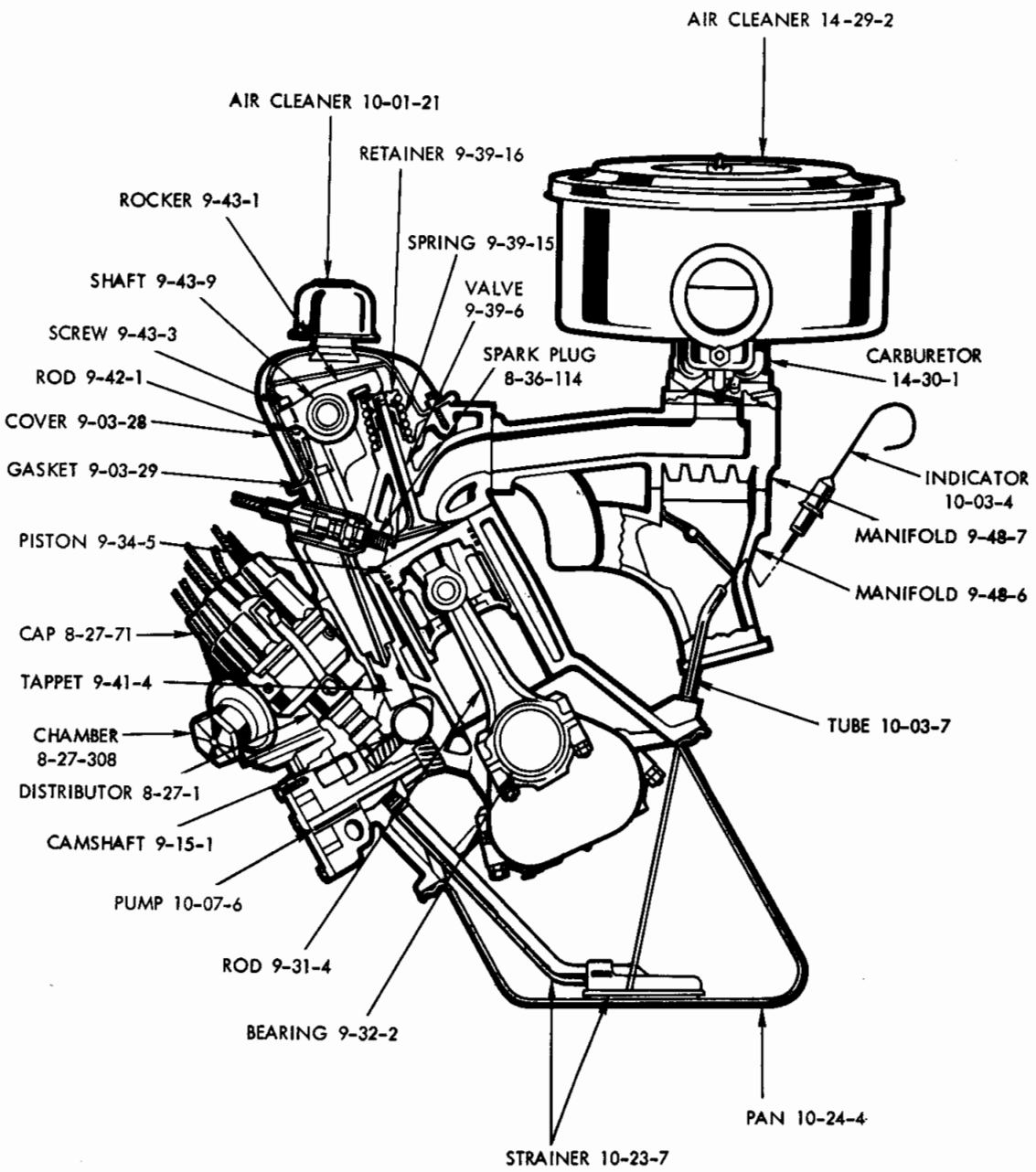

19a4504

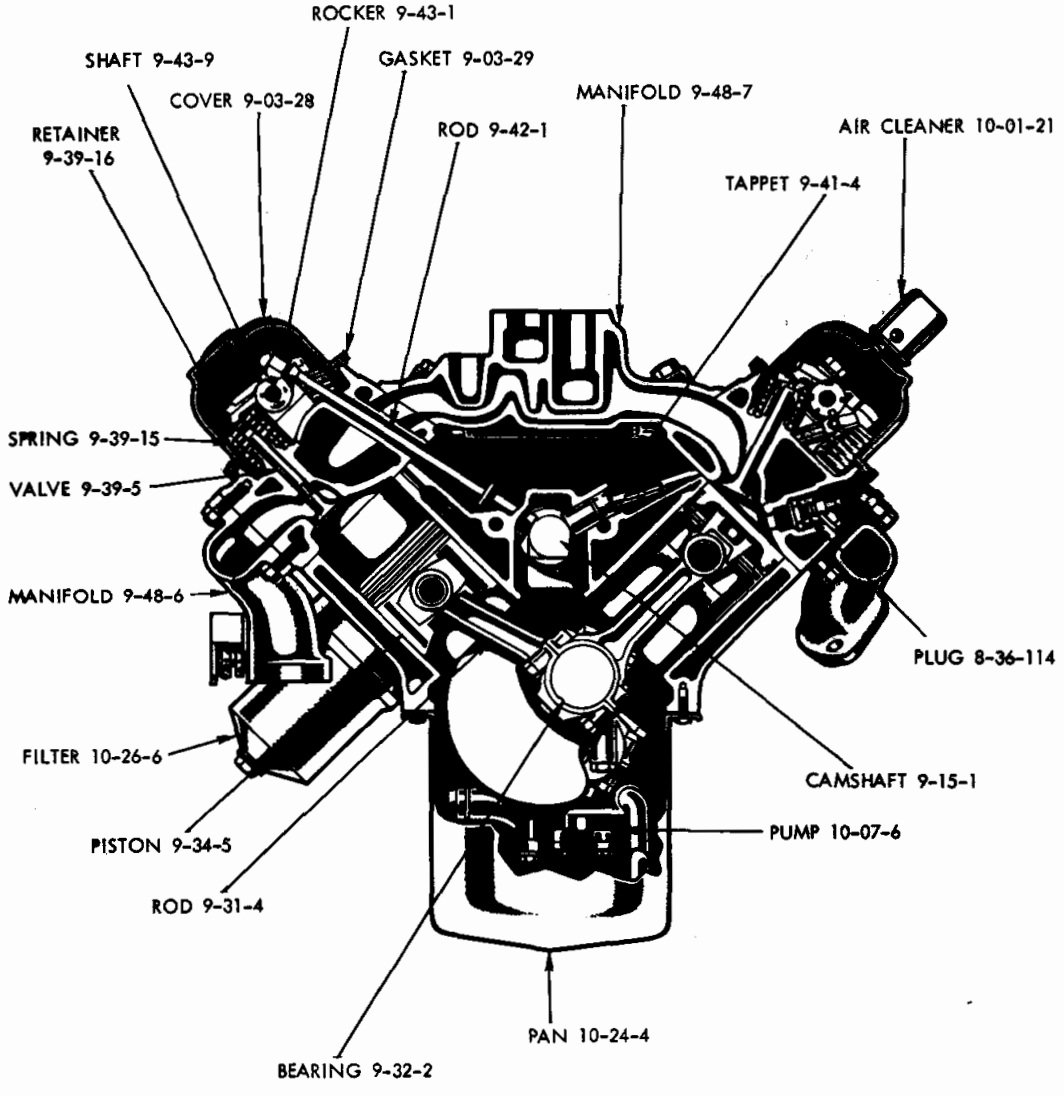
ROCKER 9-43-1
SHAFT 9-43-9
GASKET 9-03-29
COVER 9-03-28
MANIFOLD 9-48-7
RETAINER 9-39-16
ROD 9-42-1
AIR CLEANER 10-01-21
TAPPET 9-41-4
SPRING 9-39-15
VALVE 9-39-5
MANIFOLD 9-48-6
PLUG 8-36-114
FILTER 10-26-6
CAMSHAFT 9-15-1
PISTON 9-34-5
PUMP 10-07-6
ROD 9-31-4
PAN 10-24-4
BEARING 9-32-2

19a4523

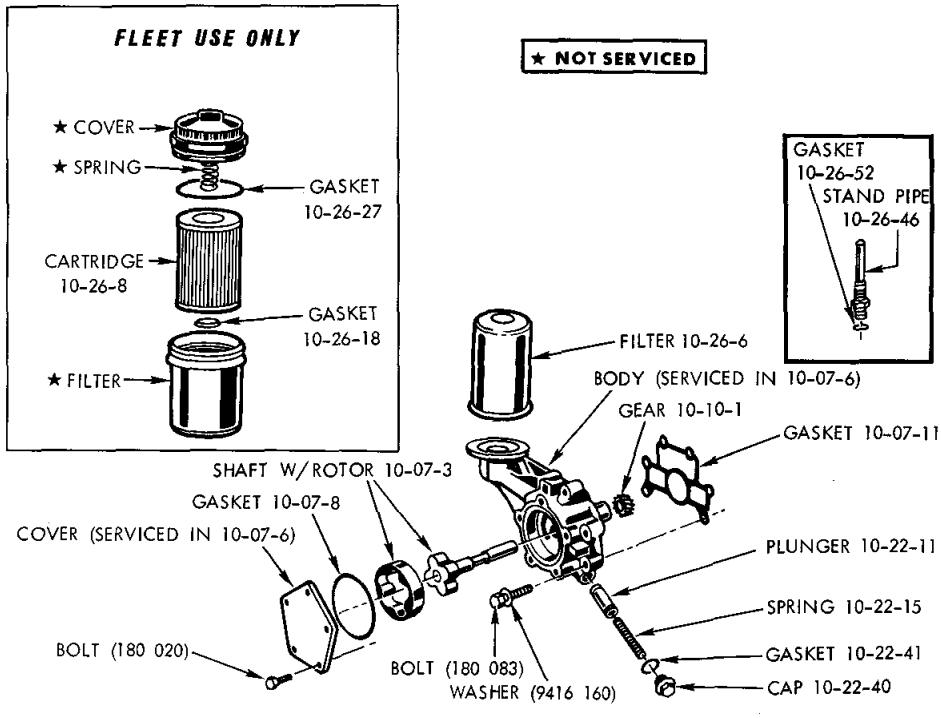

19a0365 D

OIL PUMP AND FILTER - 6 CYLINDER

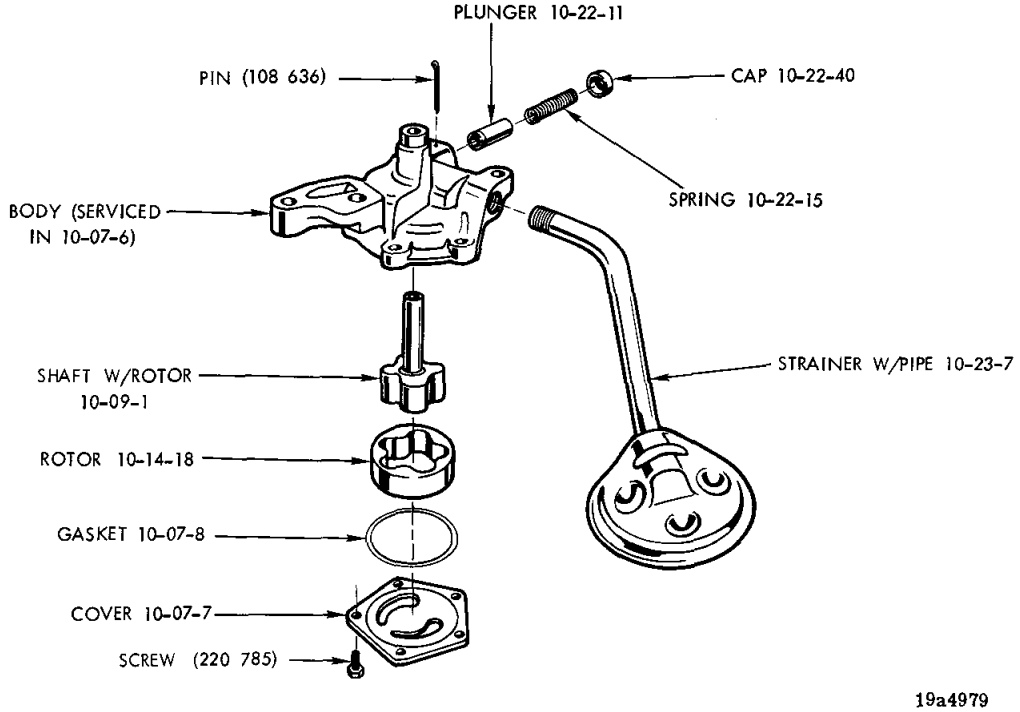

19a4979

OIL PUMP - 318, 360 ENGINES

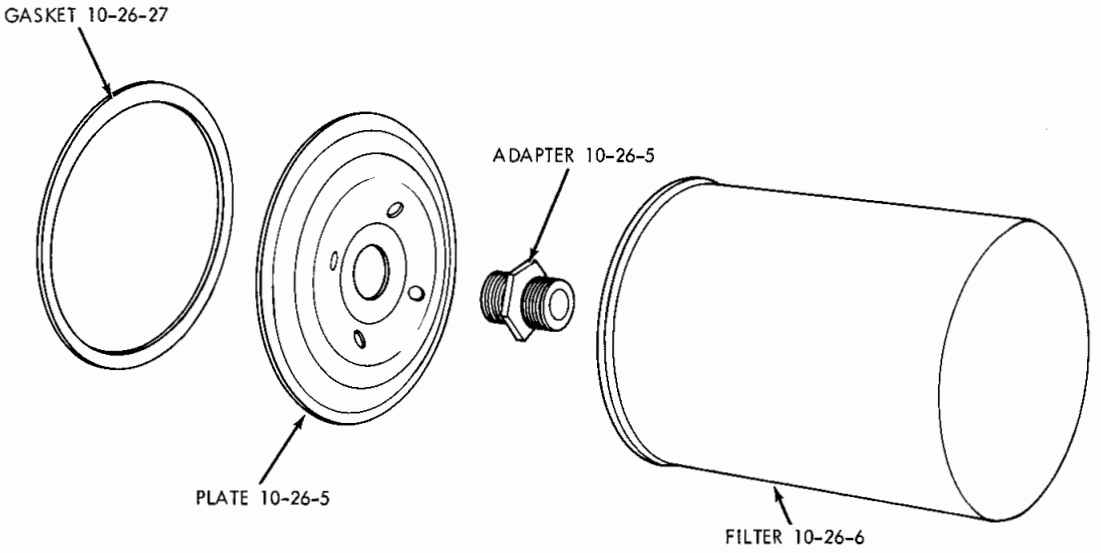

19a4845

OIL FILTER (SEALED CAN TYPE) - 318, 360 ENGINES

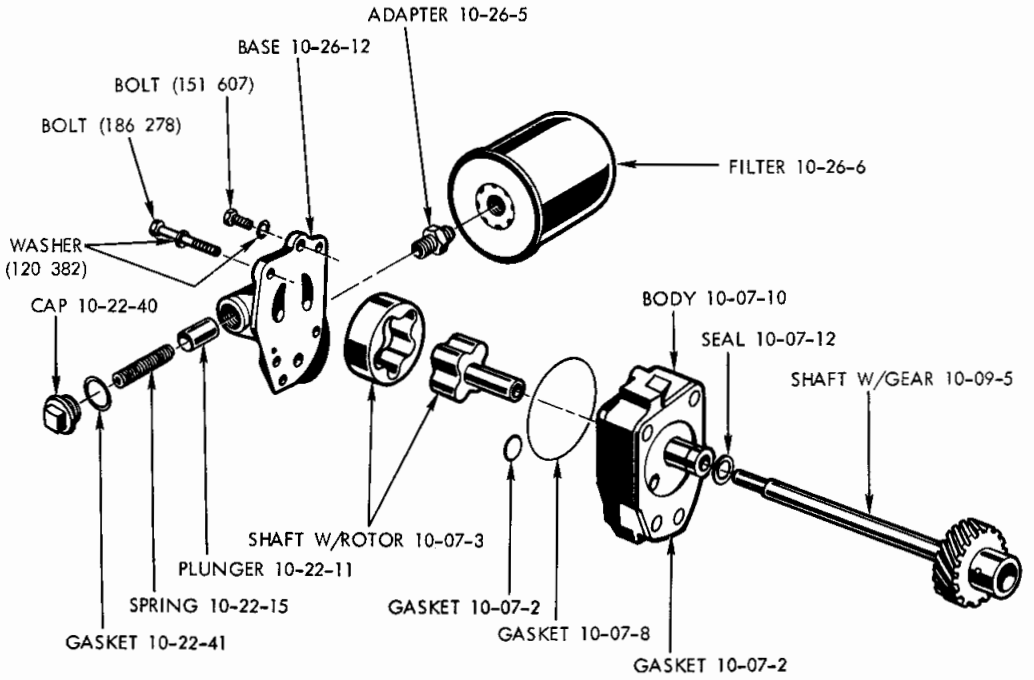

19a4517 **A**

OIL PUMP AND FILTER - 400, 440 ENGINES

GROUP 10 - ENGINE OILING

AIR CLEANER, CRANKCASE VENT INLET 10-01
FILTER, OIL 10-26
GEAR, OIL PUMP DRIVE 10-10
INDICATOR, OIL LEVEL 10-03
PAN, OIL 10-24
PUMP, OIL 10-07
ROTOR, OIL PUMP 10-14
SHAFT, OIL PUMP DRIVE 10-09
STRAINER, OIL 10-23
VALVE, CLOSED CRANKCASE VENT 10-02
VALVE, OIL PRESSURE RELIEF 10-22

Printed in U.S.A.
November, 1974

CODE	PART NAME	ENG. TYPE OR CU. IN	V	B J	L	R	W	P	D	C (L M)	C (P)	C (H S)	Y	PART NUMBER
10-01-21	**AIR CLEANER, Crankcase Vent Inlet**		1	1	1	1	1	1	1	1	1	1	1	3462 094
10-01-23	GROMMET, Cleaner		1	1	1	1	1	1	1	1	1	1	1	2946 079
10-01-54	CAP, Oil Filler		1	1	1	1	1	1	1	1	1	1	1	2946 051
10-01-62	HOSE, Inlet Air Cleaner To Air Cleaner													
	w/400, 440 Eng. Canada		—	—	—	1	1	1	1	1	1	1	1	3512 778
	55" LGH., 360 Eng.		1	1	1	1	1	—	—	—	—	—	—	2825 417
	Molded Type 2 x 5 1/2", 360 Eng.	8	—	—	—	—	—	1	1	1	1	1	—	# 3830 145
10-02-53	**HOSE, Crankcase Vent Valve to Carb. (Sold By The Inch), Up To 10-15-73**		AR	AR	AR	AR	AR	AR	AR	AR	AR	AR	AR	883 031
	After 10-15-73		AR	AR	AR	AR	AR	AR	AR	AR	AR	AR	AR	3830 372
10-02-61	GROMMET, Crankcase Vent Valve		1	1	1	1	1	1	1	1	1	1	1	3751 510
10-02-62	VALVE, Crankcase Vent, All		1	1	1	1	1	1	1	1	1	1	1	3671 076
10-03-4	**INDICATOR, Oil Level**	6	1	—	1	1	1	—	—	—	—	—	—	3751 957
	318, 360 Eng., w/o Air Cond.	8	1	1	1	—	—	—	—	—	—	—	—	3462 049
	318, 360 Eng., w/Air Cond.	8	1	1	1	—	—	—	—	—	—	—	—	3751 956
	318 Eng., and 360 Eng. 4 Bbl. Carb. w/H/Perf., w/o L/N Alt. or A/C	8	—	—	—	1	1	—	—	—	—	—	—	3462 049
	w/L/N Alt. or A/C	8	—	—	—	1	1	—	—	—	—	—	—	3751 956
	360 Eng. 2 Bbl. Carb., and 360 Eng. 4 Bbl. Carb., w/o H/Perf., w/o L/N Alt. or A/C	8	—	—	—	1	1	1	1	1	1	1	—	3751 992
	w/L/N Alt. or A/C	8	—	—	—	1	1	1	1	1	1	1	—	3751 995
	318 Eng., Export Only	8	—	—	—	—	—	—	1	—	—	—	—	3751 992
	400, 440 Eng.	8	—	—	—	1	1	—	—	—	—	—	—	# 3671 540
	400, 440 Eng., w/o H/Perf.	8	—	—	—	—	—	1	1	1	1	1	1	3830 026
	400, 440 Eng., w/H/Perf.	8	—	—	—	—	—	1	1	1	1	1	1	3830 027
10-03-7	TUBE, Oil Level Indicator	6	1	—	1	1	1	—	—	—	—	—	—	3751 951
	318, 360 Eng.	8	1	1	1	1	1	1	1	1	1	1	—	3418 933
	w/Clip, 400 Eng.	8	—	—	—	1	1	—	—	—	—	—	—	3671 659
	440 Eng.	8	—	—	—	1	1	—	—	—	—	—	—	3671 660
	400, 440 Eng.	8	—	—	—	—	—	1	1	1	1	1	1	3577 791
10-03-13	SEALER, Tube	6	AR	—	AR	AR	AR	AR	AR	—	—	—	—	1057 794
10-07-2	**GASKET and Seal Package, Oil Pump**													
	400, 440 Eng.	8	—	—	—	1	1	1	1	1	1	1	1	2084 355
10-07-3	SHAFT and ROTOR PACKAGE, Oil Pump	6	1	—	1	1	1	—	—	—	—	—	—	2084 415
	318, 360 Eng.	8	1	1	1	1	1	1	1	1	1	1	—	# 3837 648
	400, 440 Eng.	8	—	—	—	1	1	1	1	1	1	1	1	2084 354
10-07-6	OIL PUMP, 318, 360 Eng.	8	1	1	1	1	1	1	1	1	1	1	—	2806 270
	OIL PUMP PACKAGE	6	1	—	1	1	1	—	—	—	—	—	—	2808 507
	400, 440 Eng.	8	—	—	—	1	1	1	1	1	1	1	1	3685 652
10-07-7	COVER, Oil Pump, 318, 360 Eng.	8	1	1	1	1	1	1	1	1	1	1	—	2206 095
10-07-8	GASKET, Oil Pump Cover		1	1	1	1	1	1	1	1	1	1	1	2268 921
10-07-10	BODY, Oil Pump, 318, 360 Eng.		1	1	1	1	1	1	1	1	1	1	—	2806 270
	Body Package, Oil Pump, 400, 440 Eng.		—	—	—	1	1	1	1	1	1	1	1	3685 653
10-07-11	GASKET, Oil Pump Body	6	1	—	1	1	1	—	—	—	—	—	—	2121 404
10-07-12	SEAL, Oil Pump Body, 400, 440 Eng.	8	—	—	—	1	1	1	1	1	1	1	1	1855 328
10-07-14	SHIELD, Oil Pump Body Splash	6	1	—	1	1	1	—	—	—	—	—	—	2468 645
10-09-1	**SHAFT, w/Rotor, Oil Pump Drive 318, 360 Eng.**	8	1	1	1	1	1	1	1	1	1	1	—	# 3837 648
10-09-5	SHAFT and DISTRIBUTOR DRIVE, w/GEAR, 318, 360 Eng.	8	1	1	1	1	1	1	1	1	1	1	—	2121 535
	318, 360 Eng., Can. Built	8	1	1	1	1	1	1	1	—	—	—	—	2402 136
	400, 440 Eng.	8	—	—	—	1	1	1	1	1	1	1	1	1739 604
10-09-7	BUSHING, Shaft	8	1	1	1	1	1	1	1	1	1	1	1	2863 584
10-10-1	**GEAR, Oil Pump Drive**	6	1	—	1	1	1	—	—	—	—	—	—	1947 225
10-14-18	**ROTOR, Oil Pump Outer, 318, 360 Eng.**	8	1	1	1	1	1	1	1	1	1	1	—	2121 531
10-22-11	**PLUNGER, Oil Pressure Relief Valve**	6	1	—	1	1	1	—	—	—	—	—	—	2406 580
	318, 360 Eng.	8	1	1	1	1	1	1	1	1	1	1	—	2843 208
	400, 440 Eng.	8	—	—	—	1	1	1	1	1	1	1	1	2463 541

CARLINES
J - Challenger
B - Barracuda
V - Valiant
L - Dart
R - Satellite
W - Coronet - Charger
P - Plymouth
D - Dodge
C - Chrysler
Y - Imperial

AR Indicates use as required.
Numerals in parentheses ( ) refer to notes.
# Indicates parts not listed in any previous parts book.
★ Indicates change or addition.

Printed in U.S.A.
November, 1974

CODE	PART NAME	ENG. TYPE OR CU. IN	V	B J	L	R	W	P	D	C (L M)	C (P)	C (H S)	Y	PART NUMBER
10-22-15	SPRING, Oil Pressure Relief Valve	6	1	—	1	1	1	—	—	—	—	—	—	1737 742
	318, 360 Eng.	8	1	1	1	1	1	1	1	1	1	1	—	2402 473
	400, 440 Eng., All	8	—	—	—	1	1	1	1	1	1	1	1	2406 677
10-22-40	CAP, Oil Pressure Relief Valve	6	1	—	1	1	1	—	—	—	—	—	—	618 621
	318, 360 Eng.	8	1	1	1	1	1	1	1	1	1	1	—	2806 273
	400, 440 Eng.	8	—	—	—	1	1	1	1	1	1	1	1	618 621
10-22-41	GASKET, Oil Pressure Relief Valve Cap		1	1	1	1	1	1	1	1	1	1	1	618 622
10-23-7	**STRAINER, Oil, w/PIPE, All**	6	1	—	1	1	1	—	—	—	—	—	—	2780 999
	318, 360 Eng.	8	1	1	1	1	1	—	—	—	—	—	—	2468 849
	360 Eng.	8	—	—	—	—	—	1	1	1	1	1	—	3698 832
	400, 440 Eng.	8	—	—	—	1	1	—	—	—	—	—	—	3614 224
	400, 440 Eng.	8	—	—	—	—	—	1	1	1	1	1	1	3577 789
10-24-1	**GASKET SET, Oil Pan**	6	1	—	1	1	1	—	—	—	—	—	—	2240 647
	318 Eng.	8	1	1	1	1	1	—	—	—	—	—	—	3780 200
	360 Eng.	8	1	1	1	1	1	1	1	1	1	1	—	3549 388
10-24-4	PAN, Oil, w/o Drain Plug, All	6	1	—	1	1	1	—	—	—	—	—	—	3614 264
	318 Eng.	8	1	1	1	1	1	—	—	—	—	—	—	3614 227
	318 Eng., Export Only	8	—	—	—	—	—	—	1	—	—	—	—	3769 166
	360 Eng.	8	1	1	1	1	1	—	—	—	—	—	—	3751 954
	360 Eng.	8	—	—	—	—	—	1	1	1	1	1	—	3751 875
	400, 440 Eng.	8	—	—	—	1	1	—	—	—	—	—	—	3614 970
	400, 440 Eng.	8	—	—	—	—	—	1	1	1	1	1	1	3751 934
10-24-8	GASKET, Oil Pan, 400, 440 Eng.	8	—	—	—	AR	AR	AR	AR	AR	AR	AR	AR	2658 685
10-24-10	GUARD, Oil Pan Flange, 400, 440 Eng.		—	—	—	1	1	1	1	1	1	1	1	3698 564
10-24-23	SCREW, w/WASHER, Oil Pan Attaching, 5/16"-18 x 9/16"		AR	AR	AR	AR	AR	AR	AR	AR	AR	AR	AR	2121 573
	5/16"-18 x 11/16"		AR	AR	AR	AR	AR	AR	AR	AR	AR	AR	AR	6028 581
	5/16" - 18 x 13/16"		AR	AR	AR	AR	AR	AR	AR	AR	AR	AR	AR	1947 953
	5/16" - 18 x 1", 318, 360 Eng.	8	2	2	2	2	2	2	2	2	2	2	—	6025 926
10-24-30	BAFFLE, C/SHAFT OIL SCRAPPER, 360 Eng., 4 Bbl. Carb., H/Perf.	8	1	1	1	1	1	—	—	—	—	—	—	3577 794
	400, 440 Eng., w/H/Perf.	8	—	—	—	1	1	1	1	1	1	1	—	3751 236
	SCREW, w/WASHER, Baffle Attaching	8	4	4	4	4	4	—	—	—	—	—	—	6023 092
10-24-37	PLUG, Oil Pan, Drain		1	1	1	1	1	1	1	1	1	1	1	2125 890
10-24-38	GASKET, Oil Pan Drain Plug		1	1	1	1	1	1	1	1	1	1	1	3769 935
10-26-5	**ADAPTER, Oil Pump Cover to Filter, 400, 440 Eng.**	8	—	—	—	1	1	1	1	1	1	1	1	1739 619
	Filter to Cyl. Block, 318 Eng.	8	1	1	1	1	1	—	—	—	—	—	—	3671 602
	318 Eng., Export Only	8	—	—	—	—	—	—	1	—	—	—	—	3671 602
	360 Eng.	8	—	—	—	—	—	1	1	—	—	—	—	3671 602
	PLATE, Oil Filter Adapter, 318, 360 Eng.	8	1	1	1	1	1	1	1	1	1	1	—	2402 103
10-26-6	FILTER, Oil Sealed Can Type w/Built In Gasket, Long Type		1	1	1	1	1	1	1	1	1	1	1	1851 658
	Short Type		1	1	1	1	1	1	1	1	1	1	1	3549 957
	Competition Type, for all High-Speed Competitive Events		1	1	1	1	1	1	1	1	1	1	—	2536 186
10-26-8	CARTRIDGE, Oil Filter (For Fleet Use Only)	6	1	—	1	1	1	—	—	—	—	—	—	2532 752
10-26-12	COVER, Oil Pump and Filter Base, 400, 440 Eng.	8	—	—	—	1	1	1	1	1	1	1	1	2465 091
10-26-18	GASKET, Oil Filter Body (For Fleet Use Only)	6	1	—	1	1	1	—	—	—	—	—	—	2532 753
10-26-26	COVER and DECAL, Oil Filter (For Fleet Use Only)	6	1	—	1	1	1	—	—	—	—	—	—	2806 671
10-26-27	GASKET, Oil Filter Cover (For Fleet Use Only)	6	1	—	1	1	1	—	—	—	—	—	—	2532 754
	Oil Filter, Adapter Plate, 318, 360 Eng.	8	1	1	1	1	1	1	1	1	1	1	—	3671 314
10-26-46	OIL FILTER STANDPIPE, w/VALVE, All	6	1	—	1	1	1	—	—	—	—	—	—	3577 848
10-26-52	GASKET, Oil Filter Standpipe Adapter	6	1	—	1	1	1	—	—	—	—	—	—	2120 017

CARLINES: J - Challenger, B - Barracuda, V - Valiant, L - Dart, R - Satellite, W - Coronet - Charger, P - Plymouth, D - Dodge, C - Chrysler, Y - Imperial

AR Indicates use as required.

Numerals in parentheses ( ) refer to notes.

# Indicates parts not listed in any previous parts book.

★ Indicates change or addition.

Printed in U.S.A. November, 1974

NOTES

GROUP 11 - EXHAUST

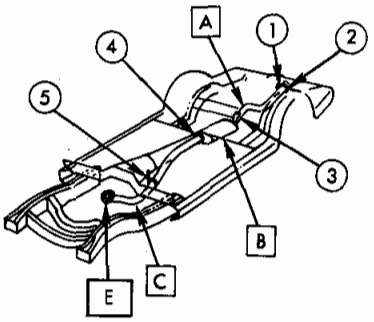

V,L,B,J - 6 CYL.SINGLE

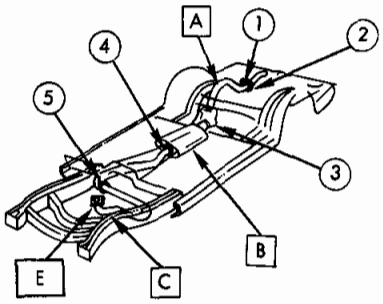

R,W - 6 CYL.SINGLE

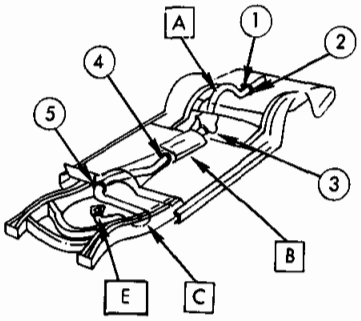

P,D - 6 CYL.SINGLE

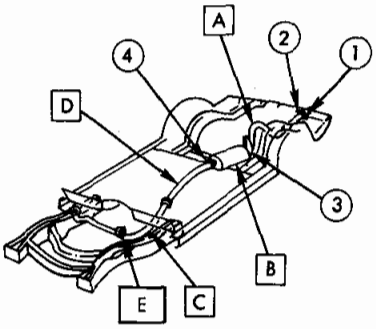

V,L,B,J - 8 CYL.SINGLE

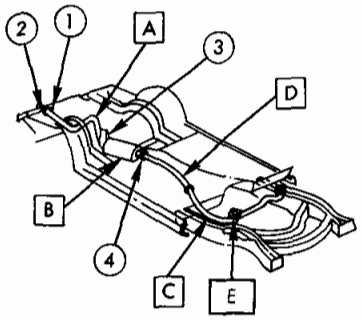

R,W - 8 CYL.SINGLE

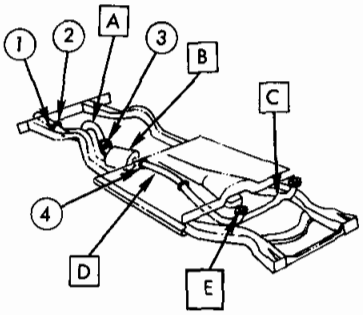

P,D,C,Y - 8 CYL.SINGLE

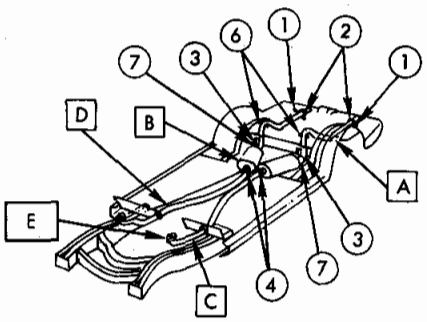

B,J,R,W - 8 CYL.DUAL

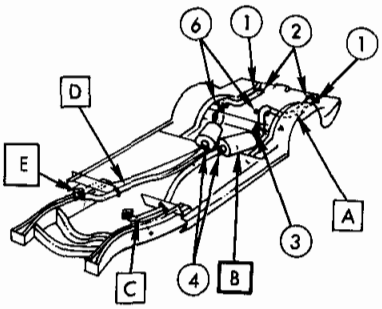

P,D,C - 8 CYL.DUAL

(1) SUPPORT and INSULATOR, Rr.Tail Pipe 11-10-3

(2) CLAMP, Tail Pipe Rr. Support 11-02-1
CLAMP, Tail Pipe Extension 11-09-4

(3) SUPPORT, Tail Pipe Frt. 11-10-3
(Also Bracket 11-10-42)

(4) U-BOLT and SADDLE
(Serviced in Clamp Pkg. 11-02-1)

(5) BRACE 11-08-5

(6) SUPPORT 11-10-3

(7) SUPPORT, Muffler Rr. Bracket 11-02-4

[A] TAIL PIPE 11-09-3
(For Resinator with Tail Pipe 11-01-1)

[B] MUFFLER 11-01-1

[C] EXHAUST PIPE 11-05-1

[D] EXHAUST PIPE EXTENSION 11-09-37

[E] FLANGE 11-05-12
GASKET 11-06-8

19a3890 A

EXHAUST SYSTEM CHART

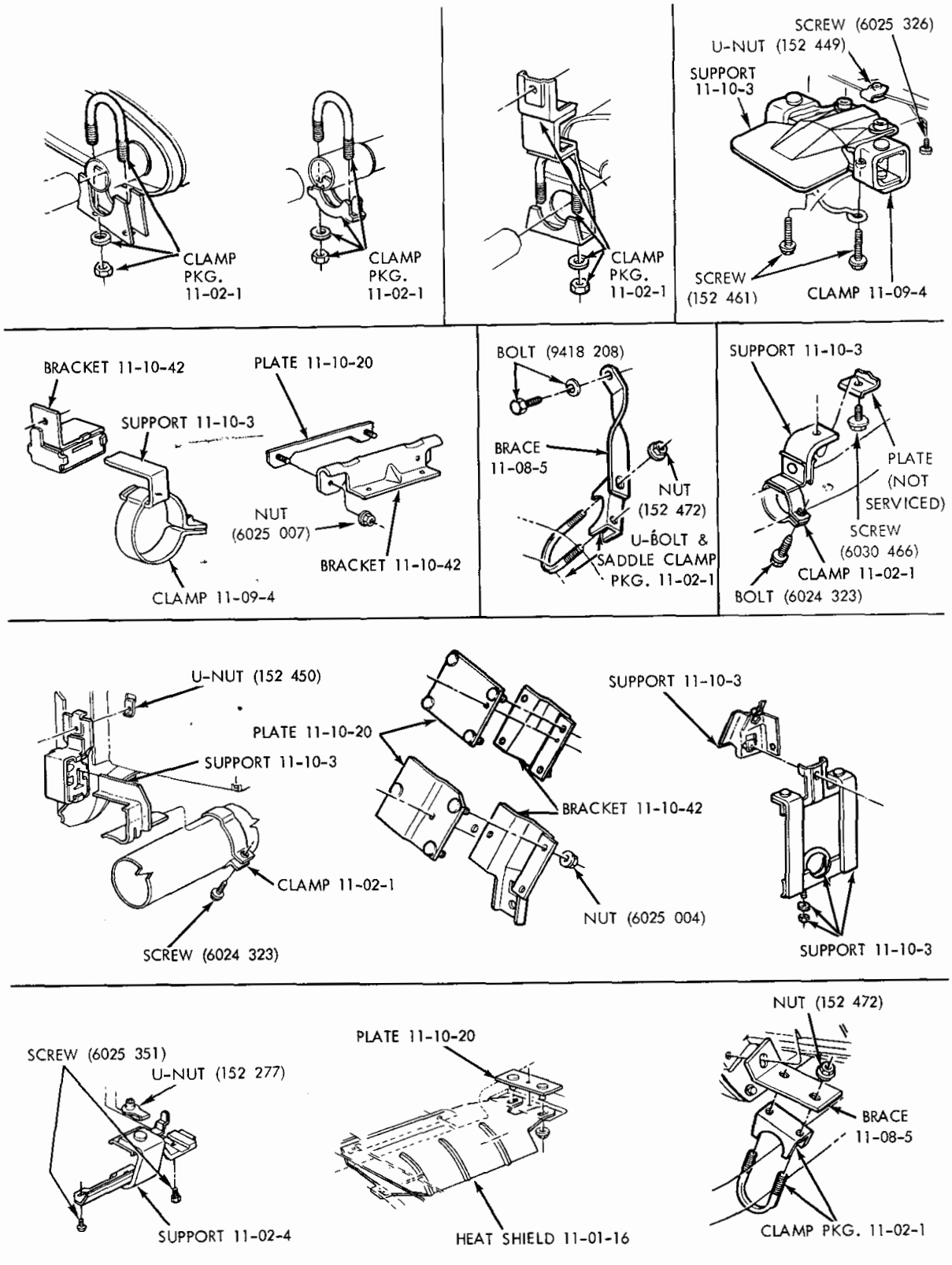

19a4645 B

EXHAUST CLAMP, BRACE AND SUPPORT CHART

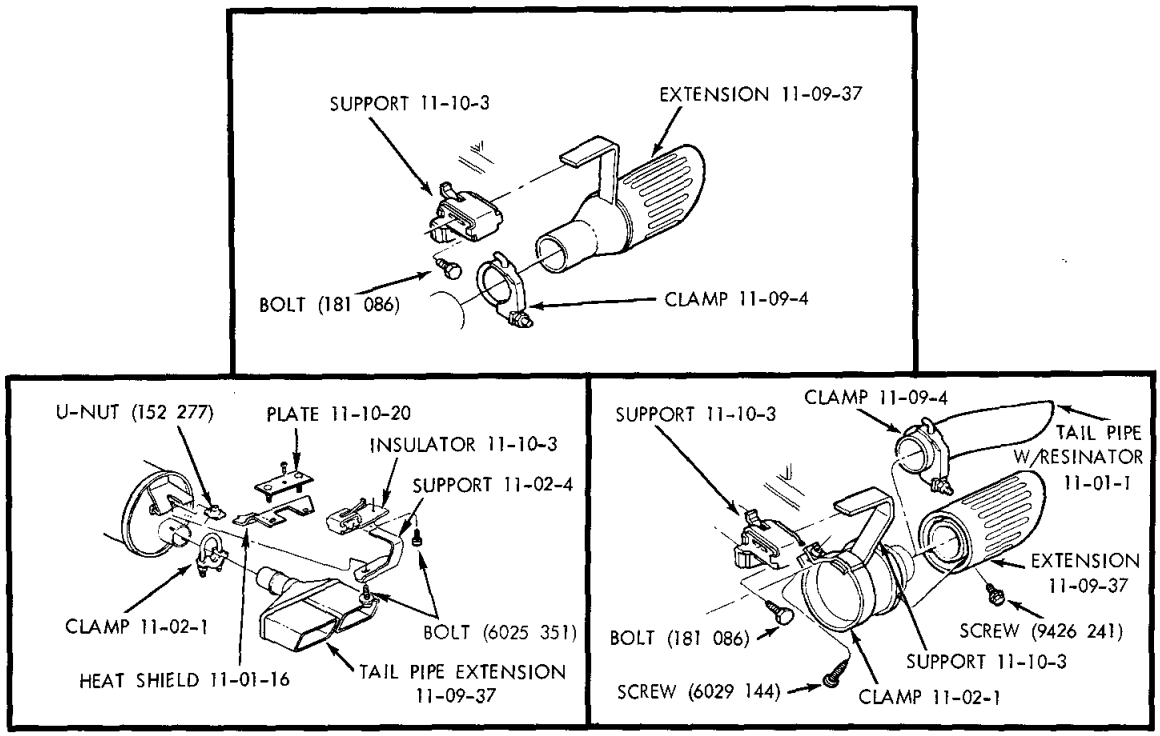

19a4646 **A**

TAIL PIPE EXTENSIONS

NOTES

NOTES

GROUP 11 - EXHAUST

GASKET AND STUD, EXHAUST PIPE FLANGE 11-06
MUFFLER AND RESONATOR 11-01
PIPE, EXHAUST 11-05
PIPE, TAIL 11-09
SUPPORT AND CLAMP, EXHAUST PIPE 11-08
SUPPORT, MUFFLER 11-02
SUPPORT, TAIL PIPE 11-10

Printed in U.S.A.
November, 1974

NOTE 1: Original Equipment Material Aluminized
NOTE 2: Mopar Replacement Material Zinc Coated

11-01-1 MUFFLER

SINGLE EXHAUST

CODE	PART NAME		ENG. TYPE OR CU. IN	V	B J	L	R	W	P	D	C (L M)	C (P)	C (H S)	Y	PART NUMBER
		Note 1	6	1	—	1	—	—	—	—	—	—	—	—	3583 753
		Note 2	6	1	—	1	—	—	—	—	—	—	—	—	3583 754
	w/318 Eng.		8	1	—	1	—	—	—	—	—	—	—	—	3579 548
	w/318 Eng.	Note 2	8	1	—	1	—	—	—	—	—	—	—	—	2460 824
	w/TAIL PIPE, w/318 Eng.		8	—	1	—	—	—	—	—	—	—	—	—	3404 266
		Note 1	6	—	—	—	1	1	—	—	—	—	—	—	3583 745
		Note 2	6	—	—	—	1	1	—	—	—	—	—	—	3583 746
	w/318 Eng., except R-M		8	—	—	—	1	1	—	—	—	—	—	—	3726 737
	w/318 Eng., except R-M	Note 2	8	—	—	—	1	1	—	—	—	—	—	—	3726 739
	w/360 and 400 Eng., w/o H/Perf., Up To 1-7-74		8	—	—	—	1	1	—	—	—	—	—	—	3726 924
	w/360 and 400 Eng., w/o H/Perf., After 1-7-74		8	—	—	—	1	1	—	—	—	—	—	—	3818 228
	w/400 Eng., w/o H/Perf.	Note 2	8	—	—	—	1	1	—	—	—	—	—	—	# 3726 899
	w/360 Eng.	Note 1	8	—	—	—	—	—	1	1	1	—	—	—	3466 965
		Note 2	8	—	—	—	—	—	1	1	1	—	—	—	3466 966
	w/318 Eng., Sta. Wgn., Export	Note 2	8	—	—	—	—	—	—	1	—	—	—	—	3466 966
	w/318 Eng., except Sta. Wgn., Exp.		8	—	—	—	—	—	—	1	—	—	—	—	2534 441
	w/400 Eng., w/o H/Perf.	Note 1	8	—	—	—	—	—	1	1	1	—	—	—	3466 957
		Note 2	8	—	—	—	—	—	1	1	1	—	—	—	3466 958
	w/400 Eng., w/H/Perf., Sta. Wgn.	Note 1	8	—	—	—	—	—	1	1	—	—	—	—	3583 991
	w/440 Eng., Std.	Note 1	8	—	—	—	—	—	1	1	1	1	1	1	3583 991
		Note 2	8	—	—	—	—	—	1	1	1	1	1	1	3583 992
	RESONATOR, w/TAIL PIPE, w/Noise Red. Pkg.		6	1	—	1	—	—	—	—	—	—	—	—	3642 489
	w/TAIL PIPE, w/318 Eng., w/Noise Red. Pkg.		8	1	—	1	—	—	—	—	—	—	—	—	3642 489
	w/TAIL PIPE, w/318 Eng., R-P 2 D.H.T., W Fastback		8	—	—	—	1	1	—	—	—	—	—	—	3642 390
	w/TAIL PIPE, w/360 and 400 Eng., w/o H/Perf., 4 D., Up To 1-7-74		8	—	—	—	1	1	—	—	—	—	—	—	3726 908
	w/Tail Pipe, w/360 and 400 Eng., w/o H/Perf., 4 D. After 1-7-74		8	—	—	—	1	1	—	—	—	—	—	—	3818 224
	w/TAIL PIPE, w/360 and 400 Eng., w/o H/Perf., except 4D. and Sta. Wgn., Up To 1-7-74		8	—	—	—	1	1	—	—	—	—	—	—	3642 376
	w/Tail Pipe, w/360 and 400 Eng., w/o H/Perf., except 4 D. and Sta. Wgn., After 1-7-74		8	—	—	—	1	1	—	—	—	—	—	—	3818 186
	w/Tail Pipe, w/360 and 400 Eng., w/o H/Perf., Sta. Wgn., Up To 1-7-74		8	—	—	—	1	1	—	—	—	—	—	—	3726 912
	w/Tail Pipe, w/360 and 400 Eng., w/o H/Perf., Sta. Wgn., After 1-7-74		8	—	—	—	1	1	—	—	—	—	—	—	3818 206
	w/TAIL PIPE, w/360 Eng., except Sta. Wgn.		8	—	—	—	—	—	1	1	1	—	—	—	3726 838
	w/TAIL PIPE, w/400 Eng., w/o H/Perf., Sta. Wgn., up to 11-21-73		8	—	—	—	—	—	1	1	—	—	—	—	3726 668
	w/TAIL PIPE, w/400 Eng., w/o H/Perf., Sta. Wgn., after 11-21-73		8	—	—	—	—	—	1	1	—	—	—	—	3726 984
	w/TAIL PIPE, w/400 Eng., w/o H/Perf., except Sta. Wgn.		8	—	—	—	—	—	1	1	1	—	—	—	3726 670
	w/TAIL PIPE, w/400 Eng., w/H/Perf., Sta. Wgn.		8	—	—	—	—	—	1	1	—	—	—	—	3726 664
	w/TAIL PIPE, w/360 Eng., Sta. Wgn., up to 1-3-74		8	—	—	—	—	—	1	1	—	—	—	—	3726 840

CARLINES: J - Challenger, B - Barracuda, V - Valiant, L - Dart, R - Satellite, W - Coronet - Charger, P - Plymouth, D - Dodge, C - Chrysler, Y - Imperial

AR Indicates use as required.
# Indicates parts not listed in any previous parts book.
Numerals in parentheses ( ) refer to notes.
★ Indicates change or addition.

Printed in U.S.A.
November, 1974

CODE	PART NAME		ENG. TYPE OR CU. IN	V	B J	L	R	W	P	D	C (L M)	C (P)	C (H S)	Y	PART NUMBER
11-01-1	MUFFLER Cont'd.														
	w/TAIL PIPE, w/360 Eng., Sta. Wgn., after 1-3-74		8	—	—	—	—	—	1	1	—	—	—	—	3726 978
	w/TAIL PIPE, w/318 Eng., Exp., Sta. Wgn., up to 1-3-74		8	—	—	—	—	—	—	1	—	—	—	—	3726 840
	w/TAIL PIPE, w/318 Eng., Exp., Sta. Wgn., after 1-3-74		8	—	—	—	—	—	—	1	—	—	—	—	3726 978
	w/TAIL PIPE, w/440 Eng., Std., Sta. Wgn., up to 11-21-73		8	—	—	—	—	—	1	1	—	1	—	—	3726 664
	w/TAIL PIPE, w/440 Eng., Std., Sta. Wgn., after 11-21-73		8	—	—	—	—	—	1	1	—	1	—	—	3818 104
	w/TAIL PIPE, w/440 Eng., Std., except Sta. Wgn.		8	—	—	—	—	—	1	1	1	—	1	1	3642 446
	DUAL EXHAUST														
	MUFFLER, w/360 Eng.	Rt. Note 1	8	1	—	1	—	—	—	—	—	—	—	—	3642 562
		Lt. Note 1	8	1	—	1	—	—	—	—	—	—	—	—	3642 561
		Note 2	8	2	—	2	—	—	—	—	—	—	—	—	3642 560
	w/TAIL PIPE, w/360 Eng.	Rt.	8	—	1	—	—	—	—	—	—	—	—	—	3726 732
		Lt.	8	—	1	—	—	—	—	—	—	—	—	—	3404 558
	w/318 Eng., R-M	Note 1	8	—	—	—	1	—	—	—	—	—	—	—	3726 972-3
		Note 2	8	—	—	—	2	—	—	—	—	—	—	—	3583 829
	w/360 and 400 Eng., w/H/Perf.	Note 1	8	—	—	—	1	1	—	—	—	—	—	—	3726 972-3
		Note 2	8	—	—	—	2	2	—	—	—	—	—	—	3583 829
	w/440 Eng.	Rt. Note 1	8	—	—	—	1	1	—	—	—	—	—	—	3726 898
		Lt. Note 1	8	—	—	—	1	1	—	—	—	—	—	—	3726 891
		Note 2	8	—	—	—	2	2	—	—	—	—	—	—	2883 912
	w/400 Eng., w/H/Perf.			—	—	—	—	—	2	2	—	—	—	—	2925 797
	w/440 Eng., w/H/Perf.	Note 1	8	—	—	—	—	—	1	1	1	—	1	—	3726 836-7
	RESONATOR, w/360 Eng.		8	—	2	—	—	—	—	—	—	—	—	—	3726 731
	w/TAIL PIPE, w/400 and 440 Eng., w/H/Perf., except 4 D. and Sta. Wgn.		8	—	—	—	1	1	—	—	—	—	—	—	3726 948-9
	w/TAIL PIPE, w/400 and 440 Eng., w/H/Perf., 4 D		8	—	—	—	1	1	—	—	—	—	—	—	3726 952-3
	w/TAIL PIPE, w/400 Eng., w/H/Perf., Sta. Wgn.		8	—	—	—	1	1	—	—	—	—	—	—	3726 956-7
11-01-16	HEAT SHIELD, Muffler, w/318 Eng.		8	—	1	—	—	—	—	—	—	—	—	—	3404 595
	w/360 Eng.		8	—	1	—	—	—	—	—	—	—	—	—	3404 595-6
	SINGLE EXHAUST														
11-02-1	**CLAMP PACKAGE,** Muffler Exhaust Pipe		6	1	—	1	—	—	—	—	—	—	—	—	1843 009
			6	—	—	—	1	1	—	—	—	—	—	—	1843 010
	w/318 Eng., except R-M		8	1	—	1	1	1	—	—	—	—	—	—	1843 008
	w/400 Eng., w/o H/Perf.		8	—	—	—	1	1	1	1	1	—	—	—	1603 364
	w/360 Eng.		8	—	—	—	—	—	1	1	—	—	—	—	1603 364
	Muffler Exh. Ext. Pipe w/400 Eng., w/H/Perf., Sta. Wgn.		8	—	—	—	—	—	1	1	—	—	—	—	1603 365
	w/440 Eng., Std.		8	—	—	—	—	—	1	1	1	1	1	1	1603 365
	DUAL EXHAUST														
	Muffler Exhaust Pipe, w/360 Eng.		8	2	—	2	2	2	—	—	—	—	—	—	1603 364
	w/318 Eng., R-M		8	—	—	—	2	—	—	—	—	—	—	—	1603 364
	w/400 w/H/Perf., and 440 Eng.		8	—	—	—	2	2	—	—	—	—	—	—	1603 364
	w/400 Eng., w/H/Perf., except Sta. Wgn.		8	—	—	—	—	—	2	2	—	—	—	—	1603 364
	w/440 Eng., w/H/Perf.		8	—	—	—	—	—	2	2	2	—	2	—	1603 364
	Muffler Tail Pipe, w/318 Eng., R-M	Rt.	8	—	—	—	1	—	—	—	—	—	—	—	1603 364

CARLINES J - Challenger, B - Barracuda, V - Valiant, L - Dart, R - Satellite, W - Coronet - Charger, P - Plymouth, D - Dodge, C - Chrysler, Y - Imperial

AR Indicates use as required.

\# Indicates parts not listed in any previous parts book.

Numerals in parentheses ( ) refer to notes.

★ Indicates change or addition.

Printed in U.S.A. November, 1974

CODE	PART NAME		ENG. TYPE OR CU. IN	V	B J	L	R	W	P	D	C (L M)	C (P)	C (H S)	Y	PART NUMBER
11-02-1	CLAMP PACKAGE Cont'd.														
	w/360, 400 w/H/Perf., and 440 Eng.	Rt.	8	—	—	—	1	1	—	—	—	—	—	—	1603 364
	Tail Pipe Rr. Support, w/440 Eng., w/H/Perf.		8	—	—	—	—	—	2	2	2	—	2	—	2585 698
11-02-4	SUPPORT and INSULATOR, Muffler														
	w/318 Eng.	Rr.	8	—	1	—	—	—	—	—	—	—	—	—	3583 698
	w/360 Eng.	Rr. Rt.	8	—	1	—	—	—	—	—	—	—	—	—	3583 702
		Rr. Lt.	8	—	1	—	—	—	—	—	—	—	—	—	3583 704
	SUPPORT, Resonator, w/440 Eng.	Rr.	8	—	—	—	2	2	—	—	—	—	—	—	3466 234
	w/318 Eng., R-P 2 D.H.T., W Fastback	Rr.	8	—	—	—	1	1	—	—	—	—	—	—	3466 234
	w/360 and 400 Eng., w/o H/Perf., except Sta. Wgn.	Rr.	8	—	—	—	1	1	—	—	—	—	—	—	3466 234
11-02-13	BRACKET, Resonator Rr. Support, w/Noise Red. Pkg.		6	1	—	1	—	—	—	—	—	—	—	—	3642 500
	Resonator Rr. Support, w/Noise Red. Pkg., w/318 Eng.		8	1	—	1	—	—	—	—	—	—	—	—	3642 500
	BRACKET and INSULATOR, Muffler w/360 Eng.	Rr.	8	—	1	—	—	—	—	—	—	—	—	—	3583 778-9
	BRACKET, Tail Pipe and Resonator Rr. Support, w/225 and 318 Eng., 4 D.			—	—	—	1	1	—	—	—	—	—	—	3466 199
	Tail Pipe and Resonator, Rr. Support, w/318 Eng., R-P 2 D.H.T., W Fastback		8	—	—	—	1	1	—	—	—	—	—	—	3466 199
	Tail Pipe and Resonator, Rr. Support, w/360 and 400 Eng., w/o H/Perf., except Sta. Wgn.		8	—	—	—	1	1	—	—	—	—	—	—	3466 199
	Tail Pipe and Resonator Rr. Support, w/318 Eng., R-M		8	—	—	—	2	—	—	—	—	—	—	—	3466 199
	Tail Pipe and Resonator Rr. Support, w/360 and 440 Eng.		8	—	—	—	2	2	—	—	—	—	—	—	3466 199
	Tail Pipe and Resonator Rr. Support, w/400 Eng., w/H/Perf., except Sta. Wgn.		8	—	—	—	2	2	—	—	—	—	—	—	3466 199
11-02-14	CLAMP, Resonator Support, w/440 Eng.		8	—	—	—	2	2	—	—	—	—	—	—	3466 235
	w/318 Eng., R-P 2 D.H.T., W Fastback	Rr.	8	—	—	—	1	1	—	—	—	—	—	—	3466 235
	w/360 and 400 Eng., w/o H/Perf., except Sta. Wgn.	Rr.	8	—	—	—	1	1	—	—	—	—	—	—	3466 235
	SINGLE EXHAUST														
11-05-1	**EXHAUST PIPE,**														
	Fastback		6	1	—	1	—	—	—	—	—	—	—	—	3583 762
	except Fastback		6	1	—	1	—	—	—	—	—	—	—	—	3583 758
	w/318 Eng., except Fastback, w/o Noise Red. Pkg.		8	1	—	1	—	—	—	—	—	—	—	—	3583 835
	w/318 Eng., Fastback, w/o Noise Red. Pkg.		8	1	—	1	—	—	—	—	—	—	—	—	3583 833
	w/318 Eng., except Fastback, w/Noise Red. Pkg.		8	1	—	1	—	—	—	—	—	—	—	—	3642 404
	w/318 Eng., Fastback w/Noise Red. Pkg.		8	1	—	1	—	—	—	—	—	—	—	—	3642 402
	w/318 Eng., B		8	—	1	—	—	—	—	—	—	—	—	—	3404 262
	w/318 Eng., J		8	—	1	—	—	—	—	—	—	—	—	—	3404 269
	4 D.		6	—	—	—	1	1	—	—	—	—	—	—	3583 909
	except 4 D.		6	—	—	—	1	1	—	—	—	—	—	—	3583 925
	w/318 Eng., 4 D. and Sta. Wgn.		8	—	—	—	1	1	—	—	—	—	—	—	3726 906

CODE	PART NAME		ENG. TYPE OR CU. IN	V	B J	L	R	W	P	D	C (L M)	C (P)	C (H S)	Y	PART NUMBER
11-05-1	EXHAUST PIPE Cont'd.														
	w/318 Eng., except 4 D. and Sta. Wgn.		8	—	—	—	1	1	—	—	—	—	—	—	3726 846
	w/360 Eng., w/o H/Perf., except 4 D. and Sta. Wgn.		8	—	—	—	1	1	—	—	—	—	—	—	3818 112
	w/360 Eng., w/o H/Perf., 4 D. and Sta. Wgn.		8	—	—	—	1	1	—	—	—	—	—	—	3818 114
	w/400 Eng., w/o H/Perf. 4 D. and Sta. Wgn.		8	—	—	—	1	1	—	—	—	—	—	—	3726 904
	w/400 Eng., w/o H/Perf., except 4D. and Sta. Wgn.		8	—	—	—	1	1	—	—	—	—	—	—	3642 384
	w/360 Eng., up to 11-1-73		8	—	—	—	—	—	1	1	—	—	—	—	3642 432
	w/360 Eng., after 11-1-73		8	—	—	—	—	—	1	1	—	—	—	—	3818 116
	w/318 Eng., Sta. Wgn., Exp., up to 11-1-73		8	—	—	—	—	—	—	1	—	—	—	—	3642 432
	w/318 Eng., Sta. Wgn., Exp., after 11-1-73		8	—	—	—	—	—	—	1	—	—	—	—	3818 116
	w/400 Eng., w/o H/Perf.		8	—	—	—	—	—	1	1	1	—	—	—	3642 452
	w/440 Eng. Std.		8	—	—	—	—	—	1	1	1	1	1	1	3642 466
	DUAL EXHAUST														
	w/360 Eng.	Rt.	8	1	—	1	—	—	—	—	—	—	—	—	3642 369
		Lt.	8	1	—	1	—	—	—	—	—	—	—	—	3583 801
	w/360 Eng., B	Rt.	8	—	1	—	—	—	—	—	—	—	—	—	3466 273
		Lt.	8	—	1	—	—	—	—	—	—	—	—	—	3466 267
	w/360 Eng., J	Rt.	8	—	1	—	—	—	—	—	—	—	—	—	3466 276
		Lt.	8	—	1	—	—	—	—	—	—	—	—	—	3466 270
	w/318 Eng., R-M	Rt.	8	—	—	—	1	—	—	—	—	—	—	—	3583 873
		Lt.	8	—	—	—	1	—	—	—	—	—	—	—	3583 927
	w/360 Eng.	Rt.	8	—	—	—	1	1	—	—	—	—	—	—	3583 873
		Lt.	8	—	—	—	1	1	—	—	—	—	—	—	3583 927
	w/400 Eng., w/H/Perf., except 4 D. and Sta. Wgn.	Rt.	8	—	—	—	1	1	—	—	—	—	—	—	3726 705
	w/400 Eng., w/H/Perf., 4D. and Sta. Wgn.	Rt.	8	—	—	—	1	1	—	—	—	—	—	—	3726 707
	w/400 Eng., w/H/Perf.	Lt.	8	—	—	—	1	1	—	—	—	—	—	—	3906 453
	w/440 Eng., except 4 D. and Sta. Wgn.	Rt.	8	—	—	—	1	1	—	—	—	—	—	—	3726 715
	w/440 Eng., 4D.	Rt.	8	—	—	—	1	1	—	—	—	—	—	—	3726 717
	w/440 Eng.	Lt.	8	—	—	—	1	1	—	—	—	—	—	—	3906 407
	w/400 Eng., w/H/Perf., Except Sta. Wgn.	Rt.	8	—	—	—	—	—	1	1	—	—	—	—	3642 477
		Lt.	8	—	—	—	—	—	1	1	—	—	—	—	3642 480
	w/440 Eng., w/H/Perf.	Rt.	8	—	—	—	—	—	1	1	—	—	—	—	3642 479
		Lt.	8	—	—	—	—	—	1	1	—	—	—	—	3642 474
	w/440 Eng., w/H/Perf.	Rt.	8	—	—	—	—	—	—	—	1	—	1	—	3726 609
	w/440 Eng., w/H/Perf.	Lt.	8	—	—	—	—	—	—	—	1	—	1	—	3726 710
	SINGLE EXHAUST														
11-05-4	EXTENSION PIPE, Exhaust,														
	w/360 Eng., except Sta. Wgn., up to 11-1-73		8	—	—	—	—	—	1	1	—	—	—	—	3642 435
	w/360 Eng., Except Sta. Wgn., after 11-1-73		8	—	—	—	—	—	1	1	—	—	—	—	3818 119
	w/360 Eng., Sta. Wgn., up to 11-1-73		8	—	—	—	—	—	1	1	—	—	—	—	3642 443
	w/360 Eng., Sta. Wgn., after 11-1-73		8	—	—	—	—	—	1	1	—	—	—	—	3818 121
	w/318 Eng., Sta. Wgn., Exp., up to 11-1-73		8	—	—	—	—	—	—	1	—	—	—	—	3642 443
	w/318 Eng. Sta. Wgn., Exp. after 11-1-73		8	—	—	—	—	—	—	1	—	—	—	—	3818 121
	w/400 Eng., w/o H/Perf., except Sta. Wgn.		8	—	—	—	—	—	1	1	—	—	—	—	3642 456

CARLINES J - Challenger, B - Barracuda, V - Valiant, L - Dart, R - Satellite, W - Coronet - Charger, P - Plymouth, D - Dodge, C - Chrysler, Y - Imperial

AR Indicates use as required.

# Indicates parts not listed in any previous parts book.

Numerals in parentheses ( ) refer to notes.

★ Indicates change or addition.

Printed in U.S.A. November, 1974

CODE	PART NAME		ENG. TYPE OR CU. IN	V	B J	L	R	W	P	D	C (L M)	C (P)	C (H S)	Y	PART NUMBER
11-05-4	EXTENSION PIPE Cont'd.														
	w/400 Eng., w/o H/Perf., Sta. Wgn.		8	—	—	—	—	—	1	1	—	—	—	—	3642 457
	w/440 Eng., Std., except Sta. Wgn.		8	—	—	—	—	—	1	1	—	—	—	—	3642 469
	w/440 Eng., Std., Sta. Wgn.		8	—	—	—	—	—	1	1	—	—	—	—	3642 471
	w/360 Eng.			—	—	—	—	—	—	—	1	—	—	—	3818 121
	w/400 Eng., w/o H/Perf.		8	—	—	—	—	—	—	—	1	—	—	—	3642 457
	w/440 Eng., Std.		8	—	—	—	—	—	—	—	1	1	1	1	3642 471
	DUAL EXHAUST														
	w/318 Eng., R-M	Lt.	8	—	—	—	1	—	—	—	—	—	—	—	3583 943
	w/360 Eng.	Lt.	8	—	—	—	1	1	—	—	—	—	—	—	3583 943
	w/400 Eng., w/H/Perf., except 4 D. and Sta. Wgn.	Lt.	8	—	—	—	1	1	—	—	—	—	—	—	3583 943
	w/400 Eng., w/H/Perf., 4 D. and Sta. Wgn.	Lt.	8	—	—	—	1	1	—	—	—	—	—	—	3583 949
	w/440 Eng., except 4 D.	Lt.	8	—	—	—	1	1	—	—	—	—	—	—	3583 964
	w/440 Eng., 4 D.	Lt.	8	—	—	—	1	1	—	—	—	—	—	—	3583 962
	PIPE, Resonator Extension, w/400 Eng., 4 D.		8	—	—	—	2	2	—	—	—	—	—	—	3642 497
11-05-12	FLANGE, Exhaust Pipe Ball Joint, w/360 Eng.		8	1	2	1	2	2	—	—	—	—	—	—	3466 230
	w/318 Eng., R-M		8	—	—	—	2	—	—	—	—	—	—	—	3466 230
	w/360 Eng., w/o /HPerf.		8	—	—	—	2	2	—	—	—	—	—	—	3466 230
	w/360 Eng.		8	—	—	—	—	—	2	2	2	—	—	—	3466 230
	w/318 Eng., Sta. Wgn. Export		8	—	—	—	—	—	—	2	—	—	—	—	3466 230
	w/400 and 440 Eng., w/o/H/Perf.		8	—	—	—	—	—	1	1	1	1	1	1	1946 639
11-06-3	**NUT, Exhaust Ext. Pipe Ball Joint** Flange, w/400 and 440 Eng., w/o H/Perf.		8	—	—	—	—	—	2	2	2	2	2	2	1946 648
11-06-8	GASKET, Exhaust Pipe Flange		6	1	—	1	1	1	—	—	—	—	—	—	2465 391
	w/360 Eng., up to 2-5-74	Lt.	8	1	—	1	—	—	—	—	—	—	—	—	2856 029
	w/360 Eng., after 2-5-74	Lt.	8	1	—	1	—	—	—	—	—	—	—	—	3818 115
	w/400 Eng., w/H/Perf., up to 2-5-74		8	—	—	—	2	2	—	—	—	—	—	—	2856 029
	w/400 Eng., w/H/Perf., after 2-5-74		8	—	—	—	2	2	—	—	—	—	—	—	3818 115
	w/440 Eng., up to 12-1-73		8	—	—	—	2	2	—	—	—	—	—	—	2856 029
	w/440 Eng., after 12-1-73		8	—	—	—	2	2	—	—	—	—	—	—	3818 115
	w/400 Eng., w/o H/Perf.	Rt.	8	—	—	—	1	1	—	—	—	—	—	—	2465 391
	up to 2-5-74	Lt.	8	—	—	—	1	1	—	—	—	—	—	—	2856 029
	w/400 Eng., w/o H/Perf., after 2-5-74	Lt.	8	—	—	—	1	1	—	—	—	—	—	—	# 3818 115
	w/400 and 440 Std., Eng.		8	—	—	—	—	—	2	2	2	2	2	2	2465 391
	w/440 Eng., w/H/Perf., up to 2-5-74		8	—	—	—	—	—	1	1	1	—	1	—	2856 029
	w/440 Eng., w/H/Perf., after 2-5-74	Rt.	8	—	—	—	—	—	1	1	1	—	1	—	3818 115
		Lt.	8	—	—	—	—	—	1	1	1	—	1	—	2465 391
11-06-14	RETAINER, Exhaust Pipe Flange Manifold Bolt, w/318 Eng.		8	4	—	4	—	—	—	—	—	—	—	—	3404 043
	w/360 Eng.		8	2	—	2	—	—	—	—	—	—	—	—	3404 043
			8	—	4	—	—	—	—	—	—	—	—	—	3404 043
	except 400 and 440 Eng.		8	—	—	—	4	4	4	4	4	—	—	—	3404 043
11-08-5	**BRACE, Exhaust Pipe**		6	1	—	1	—	—	—	—	—	—	—	—	2883 908
			6	—	—	—	1	1	—	—	—	—	—	—	3404 598
	w/318 Eng., to Trans. Case, R-P 2 D.H.T., W Fastback		8	—	—	—	1	1	—	—	—	—	—	—	3583 998
	w/318 Eng., to Trans. Case Strut, R-P 2 D.H.T., W Fastback	Lt.	8	—	—	—	1	1	—	—	—	—	—	—	3583 996
	w/400 Eng., w/o H/Perf., to Trans. Case		8	—	—	—	1	1	—	—	—	—	—	—	3818 102
	w/400 and 440 Eng., w/o H/Perf., w/Single Police Exhaust		8	—	—	—	—	—	1	1	1	1	1	—	3642 547
	BRACKET, Exhaust Pipe Brace to Eng., w/400 and 440 Eng., w/o H/Perf., w/Single Police Exhaust		8	—	—	—	—	—	1	1	1	1	1	—	3642 546

CARLINES: J - Challenger, B - Barracuda, V - Valiant, L - Dart, R - Satellite, W - Coronet - Charger, P - Plymouth, D - Dodge, C - Chrysler, Y - Imperial

AR Indicates use as required.

# Indicates parts not listed in any previous parts book.

Numerals in parentheses ( ) refer to notes.

★ Indicates change or addition.

Printed in U.S.A.
November, 1974

CODE	PART NAME		ENG. TYPE OR CU. IN	V	B J	L	R	W	P	D	C (L M)	C (P)	C (H S)	Y	PART NUMBER
11-08-19	U-BOLT, Exh. Pipe Brace Clamp		6	1	—	1	—	—	—	—	—	—	—	—	3583 767
	Muffler Exh. Pipe Clamp		6	—	—	—	1	1	—	—	—	—	—	—	2871 372
11-08-24	CLAMP, Exh. Ext. Pipe Saddle														
	w/440 Eng.	Lt.	8	—	—	—	1	1	—	—	—	—	—	—	3642 450
	w/318 Eng., R-M	Lt.	8	—	—	—	1	—	—	—	—	—	—	—	2883 919
	w/360 and 400 Eng., w/H/Perf.	Lt.	8	—	—	—	1	1	—	—	—	—	—	—	2883 919
	w/360 Eng.		8	—	—	—	—	—	1	1	—	—	—	—	2883 919
	w/318 Eng., Sta. Wgn., Export		8	—	—	—	—	—	—	1	—	—	—	—	2883 919
	Resonator Extension Pipe, w/440 Eng., 4D.		8	—	—	—	1	1	—	—	—	—	—	—	3466 613
	Resonator Exhaust Pipe Saddle, w/360 Eng.		8	—	2	—	—	—	—	—	—	—	—	—	2823 913
	Exhaust Pipe Brace to Pipe, w/400 and 440 Eng., w/o H/Perf., w/Single Police Exhaust		8	—	—	—	—	—	1	1	1	1	1	—	2925 639
	SINGLE EXHAUST														
11-09-3	**TAIL PIPE, w/o Noise Red. Pkg.**		6	1	—	1	—	—	—	—	—	—	—	—	3642 491
	w/318 Eng., w/o Noise Red. Pkg.		8	1	—	1	—	—	—	—	—	—	—	—	3642 491
	4D.		6	—	—	—	1	1	—	—	—	—	—	—	3642 488
	except 4D.		6	—	—	—	1	1	—	—	—	—	—	—	3404 920
	4 D., w/318 Eng.		8	—	—	—	1	1	—	—	—	—	—	—	3642 496
	w/318 Eng., Sta. Wgn.		8	—	—	—	1	1	—	—	—	—	—	—	3642 422
	w/318 Eng., except 4 D. and Sta. Wgn., except R-M		8	—	—	—	1	—	—	—	—	—	—	—	3583 798
	w/318 Eng., except Fastback 4 D. and Sta. Wgn.		8	—	—	—	—	1	—	—	—	—	—	—	3583 798
	Sta. Wgn., w/360 and 400 Eng., w/o H/Perf.		8	—	—	—	1	1	—	—	—	—	—	—	3726 913
	DUAL EXHAUST														
	w/360 Eng.		8	1	—	1	—	—	—	—	—	—	—	—	3642 494-5
	w/318 Eng., R-M		8	—	—	—	1	1	—	—	—	—	—	—	3466 102-3
	w/360 Eng.		8	—	—	—	1	1	—	—	—	—	—	—	3466 102-3
	w/400 Eng., w/H/Perf., 4 D.		8	—	—	—	1	1	—	—	—	—	—	—	3642 506-7
	w/400 Eng., w/H/Perf., except 4D. and Sta. Wgn.		8	—	—	—	1	1	—	—	—	—	—	—	3466 102-3
	w/400 Eng., w/H/Perf., Sta. Wgn.	Rt.	8	—	—	—	1	1	—	—	—	—	—	—	3583 414
		Lt.	8	—	—	—	1	1	—	—	—	—	—	—	3583 405
	w/318 Eng., except Sta. Wgn., Export	Rt.	8	—	—	—	—	—	—	1	—	—	—	—	3642 516
		Lt.	8	—	—	—	—	—	—	1	—	—	—	—	3642 515
	w/400 Eng., w/H/Perf. except Sta. Wgn.	Rt.	8	—	—	—	—	—	1	1	—	—	—	—	3642 516
		Lt.	8	—	—	—	—	—	1	1	—	—	—	—	3642 515
	w/440 Eng., w/H/Perf.	Rt.	8	—	—	—	—	—	1	1	1	—	1	—	3642 518
		Lt.	8	—	—	—	—	—	1	1	1	—	1	—	3642 509
11-09-4	CLAMP, Tail Pipe Rr. Support														
	Sta. Wgn., w/360 and 400 Eng., w/o H/Perf.		8	—	—	—	1	1	—	—	—	—	—	—	3466 652
	w/400 Eng., w/H/Perf., Sta. Wgn., up to 11-21-73		8	—	—	—	—	—	1	1	—	—	—	—	3466 652
	w/400 Eng., w/H/Perf., Sta. Wgn., after 11-21-73		8	—	—	—	—	—	1	1	—	—	—	—	3726 983
	w/360, 400 and 440 Eng., w/o H/Perf., except Sta. Wgn.		8	—	—	—	—	—	1	1	1	—	1	1	3466 652
	w/318 Eng., Sta. Wgn., Exp.		8	—	—	—	—	—	—	1	—	—	—	—	3726 983
	up to 11-21-73		8	—	—	—	—	—	—	—	—	1	—	—	3466 652
	after 11-21-73		8	—	—	—	—	—	—	—	—	1	—	—	3726 983
	Tail Pipe Frt. Support		6	—	—	—	1	1	—	—	—	—	—	—	3466 987
	w/360 Eng.		8	—	2	—	—	—	—	—	—	—	—	—	3726 829

CARLINES J - Challenger, B - Barracuda, V - Valiant, L - Dart, R - Satellite, W - Coronet - Charger, P - Plymouth, D - Dodge, C - Chrysler, Y - Imperial

AR Indicates use as required.

# Indicates parts not listed in any previous parts book.

Numerals in parentheses ( ) refer to notes.

★ Indicates change or addition.

Printed in U.S.A.
November, 1974

CODE	PART NAME	ENG. TYPE OR CU. IN	V	B J	L	R	W	P	D	C (L M)	C (P)	C (H S)	Y	PART NUMBER
11-09-4	CLAMP Cont'd.													
	w/318 Eng., except R-M	8	—	1	—	1	1	—	—	—	—	—	—	3466 987
	w/400 Eng., w/o H/Perf.	8	—	—	—	1	1	—	—	—	—	—	—	3466 987
	w/318 Eng., R-M Rt.	8	—	—	—	1	—	—	—	—	—	—	—	3466 987
	w/360 Eng., w/o H/Perf.	8	—	—	—	1	1	—	—	—	—	—	—	3466 987
	w/360, 400 and 440 Eng., w/H/Perf.	8	—	—	—	1	1	—	—	—	—	—	—	3466 987
	w/318 Eng., Sta. Wgn., Export	8	—	—	—	—	—	—	1	—	—	—	—	3466 649
	w/318 Eng., Except Sta. Wgn., Export	8	—	—	—	—	—	—	2	—	—	—	—	3466 649
	w/400 and 440 Eng., w/H/Perf., except Sta. Wgn.	8	—	—	—	—	—	2	2	2	—	2	—	3466 649
	w/360, 400 and 440 Eng., w/o H/Perf.	8	—	—	—	—	—	1	1	1	1	1	1	3466 649
	Resonator Tail Pipe, w/360 Eng.	8	—	2	—	—	—	—	—	—	—	—	—	2823 913
	Tail Pipe Extension, w/360 Eng.	8	—	2	—	—	—	—	—	—	—	—	—	3404 298
	w/318 Eng., R-M	8	—	—	—	2	—	—	—	—	—	—	—	3466 613
	w/360 Eng.	8	—	—	—	2	2	—	—	—	—	—	—	3466 613
	w/400 Eng., w/H/Perf., except 4 D. and Sta. Wgn.	8	—	—	—	2	2	—	—	—	—	—	—	3466 613
11-09-5	U-BOLT, Tail Pipe Clamp	6	—	—	—	1	1	—	—	—	—	—	—	2781 372
	w/318 Eng., except R-M	8	—	—	—	1	1	—	—	—	—	—	—	2781 372
11-09-37	EXTENSION, Tail Pipe, w/360 Eng., B	8	—	1	—	—	—	—	—	—	—	—	—	3404 593-4
	w/360 Eng., J	8	—	1	—	—	—	—	—	—	—	—	—	3404 591-2
	w/318 Eng., R-M	8	—	—	—	2	—	—	—	—	—	—	—	3466 123
	w/360 Eng.	8	—	—	—	2	2	—	—	—	—	—	—	3466 123
	w/400 Eng., W/H/Perf., except 4D. and Sta. Wgn.	8	—	—	—	2	2	—	—	—	—	—	—	3466 123
	w/440 Eng., except 4D. and Sta. Wgn.	8	—	—	—	2	2	—	—	—	—	—	—	3466 113
11-10-3	**SUPPORT and INSULATOR, Tail Pipe**													
	SINGLE EXHAUST-FRONT	6	1	—	1	—	—	—	—	—	—	—	—	2823 456
	w/318 Eng., w/Noise Red. Pkg.	8	1	—	1	—	—	—	—	—	—	—	—	3642 356
	w/318 Eng., w/o Noise Red. Pkg.	8	1	—	1	—	—	—	—	—	—	—	—	2823 456
	w/318 Eng.	8	—	1	—	—	—	—	—	—	—	—	—	3466 984
		6	—	—	—	1	1	—	—	—	—	—	—	3466 984
	w/318 Eng., except R-M	8	—	—	—	1	1	—	—	—	—	—	—	3466 984
	w/360 Eng., w/o H/Perf.	8	—	—	—	1	1	—	—	—	—	—	—	3466 984
	w/400 Eng., w/o H/Perf.	8	—	—	—	1	1	—	—	—	—	—	—	3466 984
	w/360 Eng.	8	—	—	—	—	—	1	1	1	—	—	—	3642 510
	w/400 Eng., w/o H/Perf.	8	—	—	—	—	—	1	1	1	—	—	—	3642 510
	w/318 Eng., Sta. Wgn., Exp.	8	—	—	—	—	—	—	1	—	—	—	—	3642 510
	w/440 Eng., Std.	8	—	—	—	—	—	1	1	1	1	1	1	3642 501
	SINGLE EXHAUST-REAR													
	w/o Noise Red Pkg.	6	1	—	1	—	—	—	—	—	—	—	—	2073 794
	w/318 Eng., w/o Noise Red. Pkg.	8	1	—	1	—	—	—	—	—	—	—	—	2073 794
	4 D.	6	—	—	—	1	1	—	—	—	—	—	—	3642 554
	4D., w/318 Eng.	8	—	—	—	1	1	—	—	—	—	—	—	3642 554
	Sta. Wgn., w/318, 360 and 400 Eng., w/o H/Perf.	8	—	—	—	1	1	—	—	—	—	—	—	3642 540
	Sta. Wgn., up to 11-21-73	8	—	—	—	—	—	1	1	—	1	—	—	3642 545
	Sta. Wgn., After 11-21-73	8	—	—	—	—	—	1	1	—	1	—	—	3726 975
	w/360, 400 and 440 Eng., w/o H/Perf., except Sta. Wgn.	8	—	4004932				1	1	1	—	1	1	3818 184
	DUAL EXHAUST-FRONT													
	w/360 Eng.	8	2	—	2	—	—	—	—	—	—	—	—	3642 573
	w/360 Eng.	8	—	2	—	—	—	—	—	—	—	—	—	3726 827
	w/318 Eng., R-M Rt.	8	—	—	—	1	—	—	—	—	—	—	—	3466 984
	w/360, 400 and 440 Eng., w/H/Perf. Rt.	8	—	—	—	1	1	—	—	—	—	—	—	3466 984
	Lt.	8	—	—	—	1	1	—	—	—	—	—	—	3466 191

CODE	PART NAME		ENG. TYPE OR CU. IN	V	B J	L	R	W	P	D	C (L M)	C (P)	C (H S)	Y	PART NUMBER
11-10-3	SUPPORT and INSULATOR Cont'd.														
	w/400 Eng., w/H/Perf., except Sta. Wgn.	Rt.	8	—	—	—	—	—	1	1	—	—	—	—	3642 521
		Lt.	8	—	—	—	—	—	1	1	—	—	—	—	3642 523
	w/318 Eng., except Sta. Wgn., Export	Rt.	8	—	—	—	—	—	—	1	—	—	—	—	3642 521
		Lt.	8	—	—	—	—	—	—	1	—	—	—	—	3642 523
	w/440 Eng., w/H/Perf.	Rt.	8	—	—	—	—	—	1	1	1	—	1	—	3642 510
		Lt.	8	—	—	—	—	—	1	1	1	—	1	—	3642 519
	DUAL EXHAUST-REAR														
	w/400 Eng., w/H/Perf., 4 D.		8	—	—	—	1	1	—	—	—	—	—	—	3642 554-5
	w/400 Eng., w/H/Perf., Sta. Wgn.		8	—	—	—	1	1	—	—	—	—	—	—	3642 540-1
	w/318 Eng., except Sta. Wgn., Export		8	—	—	—	—	—	—	2	—	—	—	—	3642 538
	w/400 and 440 Eng., w/H/Perf., except Sta. Wgn.		8	—	—	—	—	—	2	2	2	—	2	—	3818 184
11-10-17	U-BOLT, Tail Pipe Frt. Support Clamp, except 360 Eng.			1	—	1	—	—	—	—	—	—	—	—	2781 372
11-10-20	PLATE, Muffler Heat Shield Support Floor Pan, w/318 Eng.		8	—	1	—	—	—	—	—	—	—	—	—	2962 163
	w/360 Eng.		8	—	2	—	—	—	—	—	—	—	—	—	2962 163
	PLATE, Tail Pipe Frt. Support Pan, w/360 Eng.	Rt.	8	1	—	1	—	—	—	—	—	—	—	—	2856 391
	Rr. Side Rail Tail Pipe, except Sta. Wgn.			—	—	—	—	—	1	1	1	—	1	1	3756 484-5
	Tail Pipe Frt. Support Weld Stud, w/360 Eng.	Lt.	8	—	1	—	—	—	—	—	—	—	—	—	3726 831
	Tail Pipe Frt. Support Weld Stud, except Sta. Wgn., w/318 Eng., Export	Lt.	8	—	—	—	—	—	—	1	—	—	—	—	3642 531
	Tail Pipe Frt. Support Weld Stud, except Sta. Wgn., w/400 and 440 Eng., w/H/Perf.	Lt.	8	—	—	—	—	—	1	1	1	—	1	—	3642 531
11-10-42	BRACKET, Tail Pipe Rr. Support, except 360 eng., w/o Noise Red. Pkg.			1	—	1	—	—	—	—	—	—	—	—	3642 500
	w/360 Eng.		8	2	—	2	—	—	—	—	—	—	—	—	3642 500
	Tail Pipe Frt. Sup't. Floor Pan, w/360 Eng.	Rt.	8	1	—	1	—	—	—	—	—	—	—	—	2856 393
	w/318 Eng., R-M	Lt.	8	—	—	—	1	—	—	—	—	—	—	—	3466 061
	w/360, 400 and 440 Eng., w/H/Perf.	Lt.	8	—	—	—	1	1	—	—	—	—	—	—	3466 061
	Tail Pipe Frt. Support to Body, w/360 Eng.	Lt.	8	—	1	—	—	—	—	—	—	—	—	—	3726 832
	Tail Pipe Rr. Support, except 4 D. and Sta. Wgn.		6	—	—	—	1	1	—	—	—	—	—	—	3404 943
	Tail Pipe Rr. Support, except 4 D. and Sta. Wgn., w/318 Eng., except R-M		8	—	—	—	1	1	—	—	—	—	—	—	3404 943
	Tail Pipe Rr. Support, w/318, 360 and 400 Eng., w/o H/Perf., Sta. Wgn.		8	—	—	—	1	1	—	—	—	—	—	—	3642 539
	Tail Pipe Rr. Support, w/400 Eng., w/H/Perf., Sta. Wgn.		8	—	—	—	2	2	—	—	—	—	—	—	3642 539
	Tail Pipe Rr. Support, Sta. Wgn.		8	—	—	—	—	—	1	1	—	1	—	—	3642 543
	Tail Pipe Rr. Support, except Sta. Wgn., w/400 and 440 Eng., w/H/Perf.		8	—	—	—	—	—	1	1	1	—	1	—	3642 534-5
	Tail Pipe Rr. Support, except Sta. Wgn., w/318 Eng., Export		8	—	—	—	—	—	—	1	—	—	—	—	3642 534-5

CODE	PART NAME		ENG. TYPE OR CU. IN	V	B J	L	R	W	P	D	C (L M)	C (P)	C (H S)	Y	PART NUMBER
11-10-42	BRACKET Cont'd.														
	Tail Pipe Frt. Support to Body, except Sta. Wgn., w/400 and 440 Eng., w/H/Perf.	Lt.	8	—	—	—	—	—	1	1	1	—	1	—	3642 533
	Tail Pipe Frt. Support to Body, except Sta. Wgn., w/318 Eng., Export	Lt.	8	—	—	—	—	—	—	1	—	—	—	—	3642 533
	Tail Pipe Rr. Support, except Sta. Wgn., w/360, 400, w/o H/Perf. and 440 Std. Eng.		8	—	—	—	—	—	1	1	—	—	—	—	3642 534
	Tail Pipe Rr. Support, w/400 and 440 Std., Eng.		8	—	—	—	—	—	—	—	1	—	1	1	3642 534
	Rr. C/Mem. Tail Pipe Hanger		8	—	1	—	—	—	—	—	—	—	—	—	3615 299

NOTES

CARLINES J - Challenger, B - Barracuda, V - Valiant, L - Dart, R - Satellite, W - Coronet - Charger, P - Plymouth, D - Dodge, C - Chrysler, Y - Imperial

AR Indicates use as required.

# Indicates parts not listed in any previous parts book.

Numerals in parentheses ( ) refer to notes.

★ Indicates change or addition.

Printed in U.S.A.
November, 1974

GROUP 12 - FENDERS AND SHEET METAL

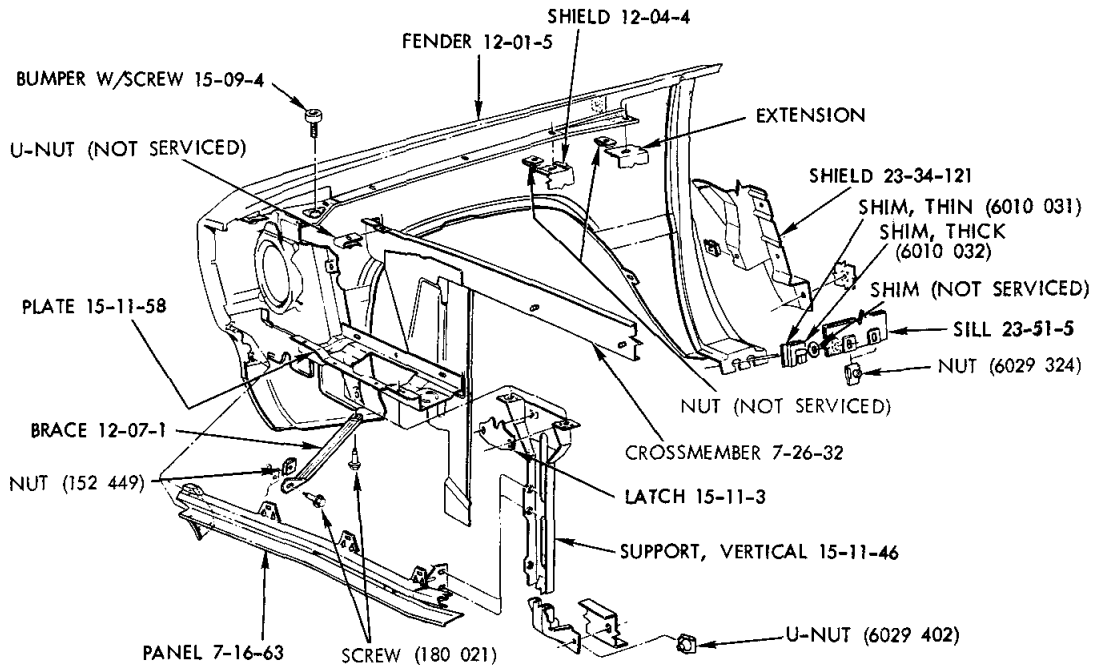

FENDER - VALIANT

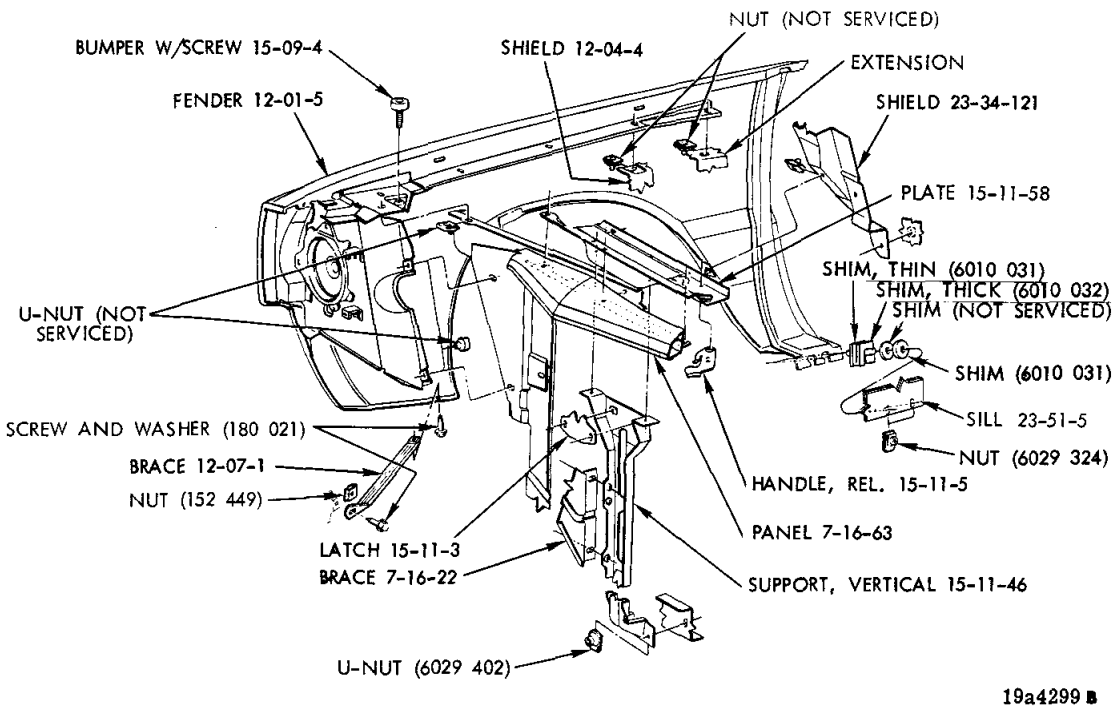

FENDER - DART

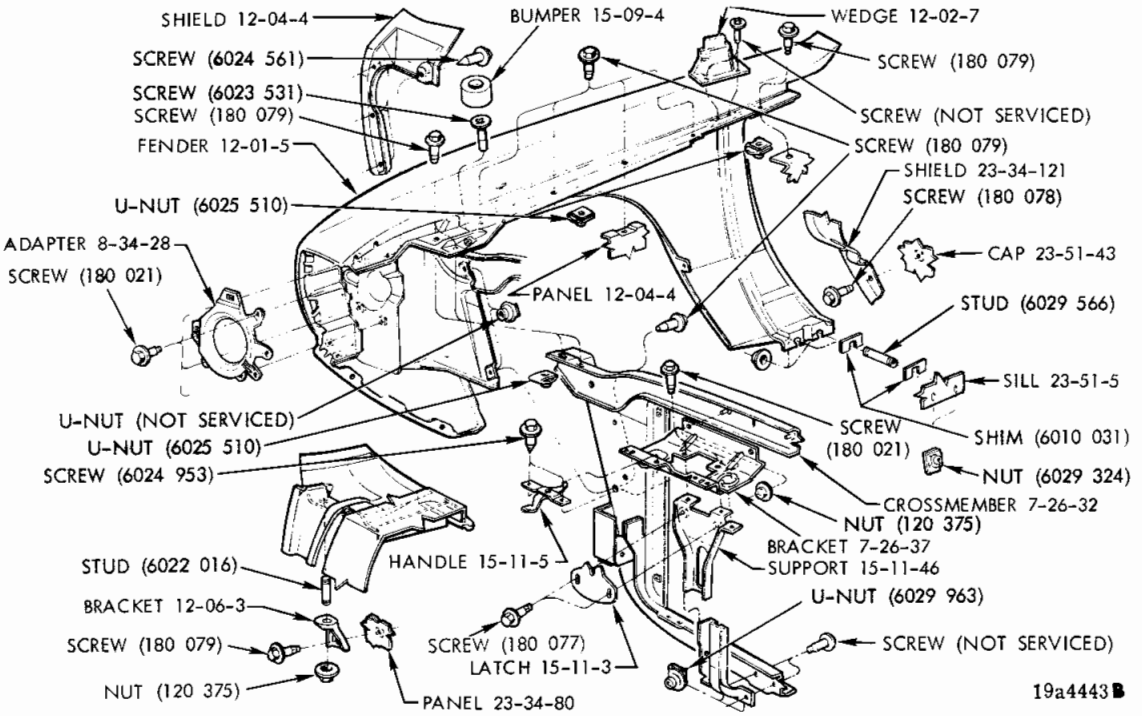

FENDER - BARRACUDA

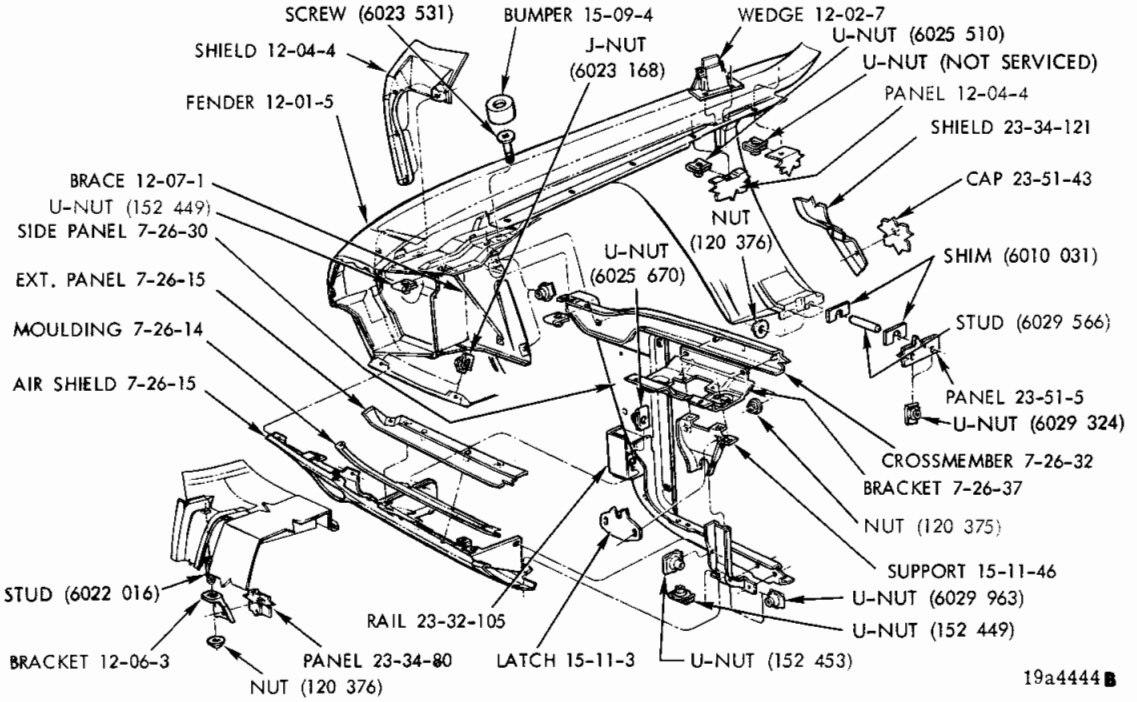

FENDER - CHALLENGER

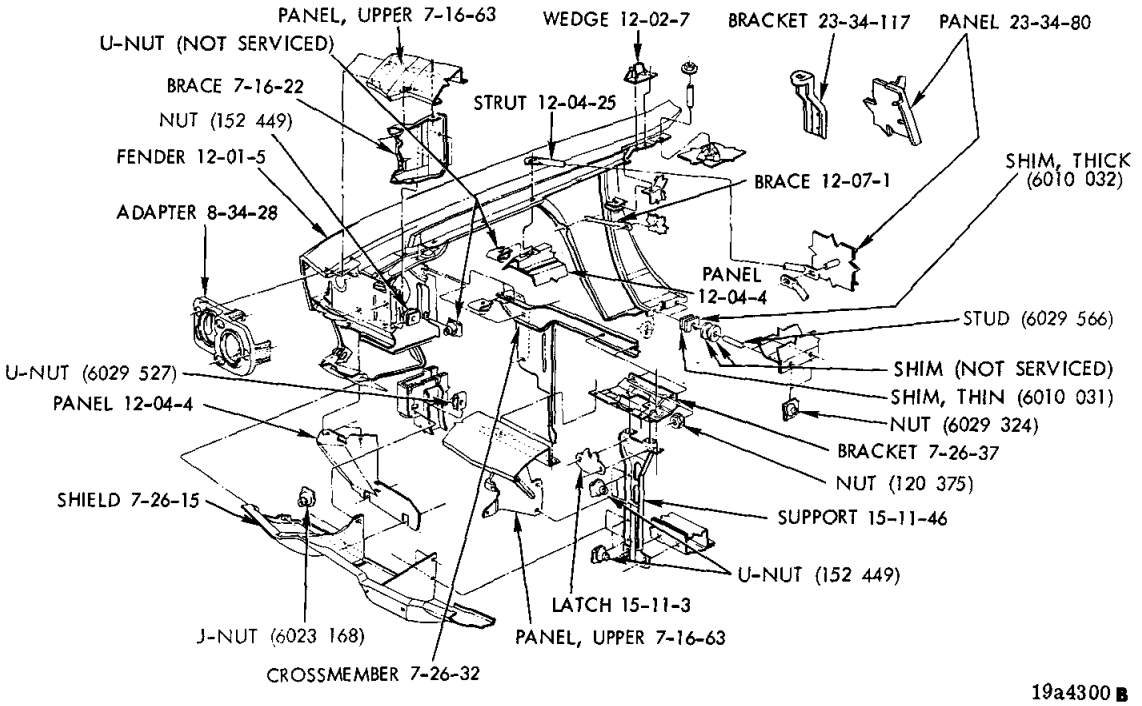

FENDER - SATELLITE 2 DOOR MODELS

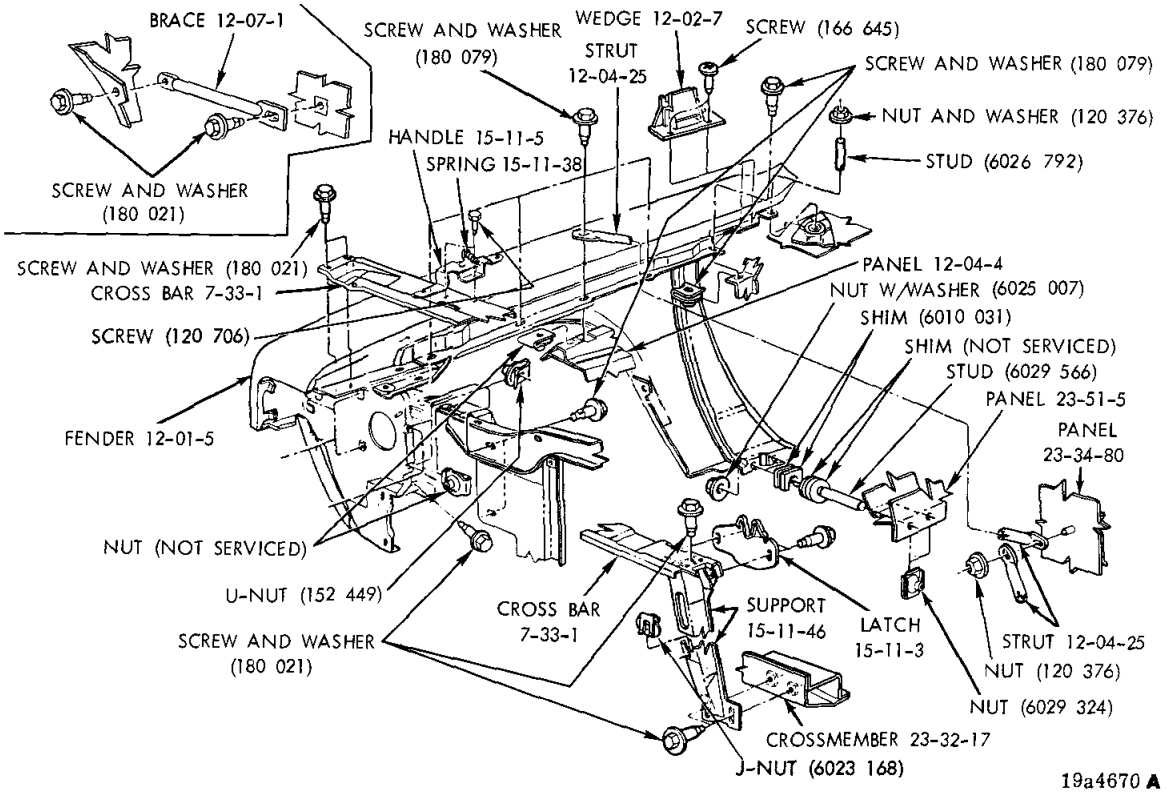

FENDER - SATELLITE 4 DOOR SEDAN AND STATION WAGON

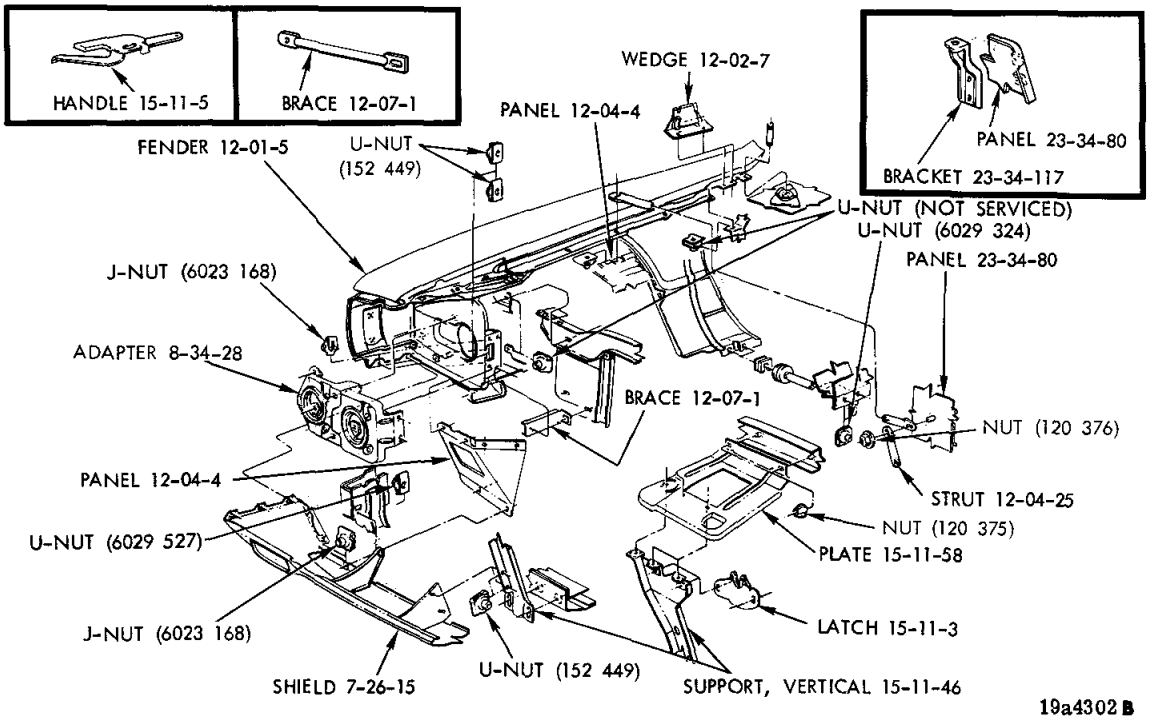

FENDER - CORONET 2 DOOR AND FASTBACK

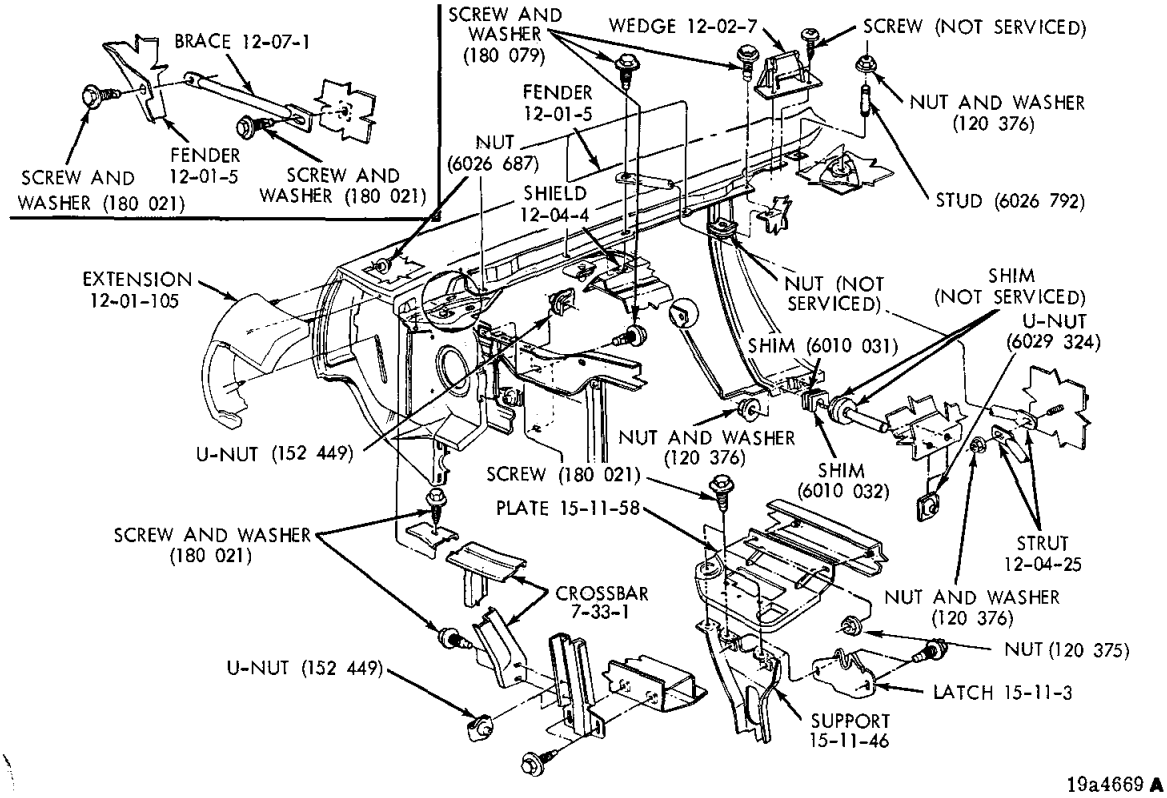

FENDER - CORONET 4 DOOR SEDAN AND STATION WAGON

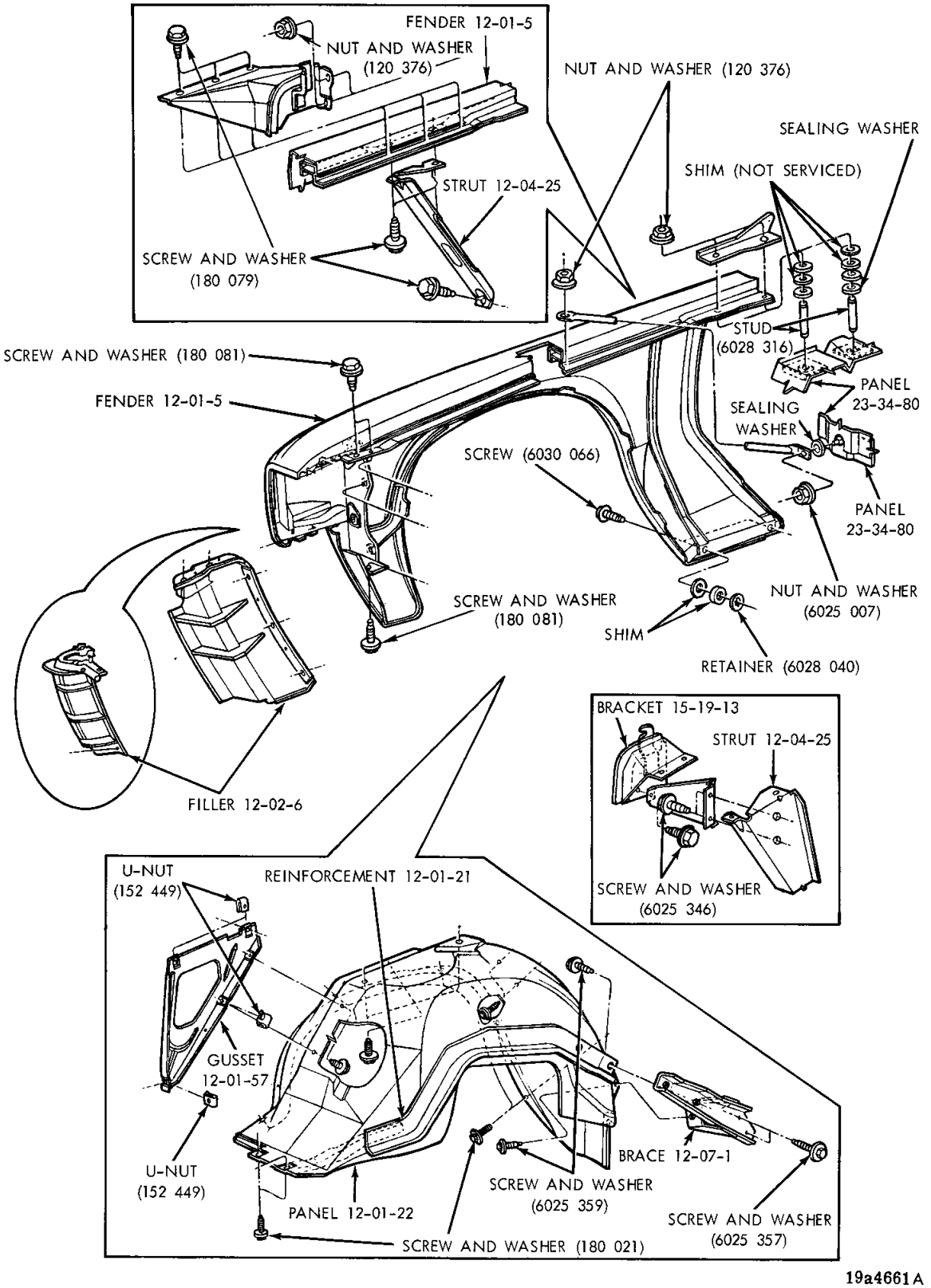

19a4661A

FENDER - PLYMOUTH, DODGE, CHRYSLER AND IMPERIAL

NOTES

GROUP 12 - FRONT FENDERS

BRACE 12-07
BRACKET 12-06
FENDER 12-01
FILLER OR SEAL, FENDER LINER 12-02
MOULDING, NAME PLATE AND ORNAMENT 12-15
SHIELD 12-04

Printed in U.S.A.
November, 1974

CODE	PART NAME	ENG. TYPE OR CU. IN	V	B J	L	R	W	P	D	C (L M)	C (P)	C (H S)	Y	PART NUMBER
12-01-5	**Fender**		1	—	—	3780371 L				4026358 R				3780 370-1
			—	—	1	—	—	—	—	—	—	—	—	3780 372-3
	B		—	1	—	—	—	—	—	—	—	—	—	3621 764-5
	J		—	1	—	—	—	—	—	—	—	—	—	3621 768-9
	2D., 2 D.H.T.		—	—	—	1	—	—	—	—	—	—	—	3685 964-5
	4 D., Sta. Wgn.		—	—	—	1	—	—	—	—	—	—	—	3780 374-5
	2 D., 2 D.H.T., Fast Back		—	—	—	—	1	—	—	—	—	—	—	3685 968-9
	4 D., Sta. Wgn.		—	—	—	—	1	—	—	—	—	—	—	3780 376-7
			—	—	—	—	—	1	—	—	—	—	—	3780 378-9
	w/o Cornering Lamp		—	—	—	—	—	—	1	—	—	—	—	3780 380-1
	w/Cornering Lamp		—	—	—	—	—	—	1	—	—	—	—	3780 382-3
	w/o Cornering Lamp		—	—	—	—	—	—	—	1	1	1	—	3780 384-5
	w/Cornering Lamp		—	—	—	—	—	—	—	1	1	1	1	3780 386-7
12-01-21	REINFORCEMENT, Fender Wheel House Pnl., Sta. Wgn., Rt.		—	—	—	—	—	1	1	—	—	—	—	3726 594
	REINFORCEMENT, Fender Wheel House Pnl., Rt.		—	—	—	—	—	—	—	1	1	1	1	3726 594
12-01-22	PANEL, Fender Wheel House	Rt.	—	—	—	—	—	1	—	—	—	—	—	3726 578
		Lt.	—	—	—	—	—	1	—	—	—	—	—	3642 983
		Rt.	—	—	—	—	—	—	1	1	1	1	1	3726 580
		Lt.	—	—	—	—	—	—	1	1	1	1	1	3642 985
	PANEL, Fender Wheel House Welding													
	Sta. Wgn.	Rt.	—	—	—	—	—	1	—	—	—	—	—	3726 590
	Sta. Wgn.	Lt.	—	—	—	—	—	1	—	—	—	—	—	3726 591
	Sta. Wgn.	Rt.	—	—	—	—	—	—	1	—	—	—	—	3726 592
	Sta. Wgn.	Lt.	—	—	—	—	—	—	1	—	—	—	—	3726 593
	All	Rt.	—	—	—	—	—	—	—	1	1	1	1	3726 592
	All	Lt.	—	—	—	—	—	—	—	1	1	1	1	3726 593
12-01-26	SEAL, Fndr. w/House Pnl to Upr. Control Arm, Rubber	Lt.	—	—	—	—	—	1	1	1	1	1	1	3642 993
	Rubber	Rt.	—	—	—	—	—	1	1	1	1	1	1	3726 600
	SEAL, Fender Shield Pnl. Upr. Control Arm, Rt.		—	—	—	1	1	—	—	—	—	—	—	3642 301
	NOTE: See 12-4-22 COVER, Lt. Fndr. w/House Pnl. to Frame													
		Frt.	—	—	—	—	—	2	2	2	2	2	2	3642 994
		Rear	—	—	—	—	—	2	2	2	2	2	2	3642 995
12-01-28	PLUG, Fndr. W/House Panel		—	—	—	—	—	4	4	—	—	—	—	1774 076
12-01-30	COVER, Fndr. Attach. Bolt		—	—	—	—	—	1	—	—	—	—	—	# 3810 358-9
			—	—	—	—	—	—	1	1	1	1	1	# 3810 360-1
12-01-57	GUSSET, Fndr. Flange Yoke													
	Sta. Wgn.		—	—	—	—	—	1	1	—	—	—	—	3691 674-5
	Use After March 25, 1974		—	—	—	—	—	1	1	—	—	—	—	# 3691 750-1
	All		—	—	—	—	—	—	—	1	1	1	1	3691 674-5
	Use After March 25, 1974		—	—	—	—	—	—	—	1	1	1	1	# 3691 750-1
12-01-58	BAFFLE, Fndr. Flg. Yoke Gusset													
	Use After March 25, 1974		—	—	—	—	—	—	—	1	1	1	1	# 3691 748-9
12-01-105	EXTENSION, Fender, Frt.													
	4 D., Sta. Wgn.		—	—	—	—	1	—	—	—	—	—	—	3691 300-1
12-02-5	**SEAL, Fender H/Lamp Panel,**													
	2 D., 2 D.H.T.		—	—	—	2	—	—	—	—	—	—	—	3672 271
	4 D., Sta. Wgn.		—	—	—	2	—	—	—	—	—	—	—	3442 206
	2 D., 2 D.H.T., FASTBACK		—	—	—	—	2	—	—	—	—	—	—	3442 364
	4 D., Sta. Wgn.		—	—	—	—	2	—	—	—	—	—	—	3691 356
12-02-6	FILLER, Fender Bumper													
	2 D., 2 D.H.T.		—	—	—	1	—	—	—	—	—	—	—	3672 664-5
	4 D., Sta. Wgn.													
	Dark Silver Met.		—	—	—	1	—	—	—	—	—	—	—	E724-5 KA5
	Powder Blue		—	—	—	1	—	—	—	—	—	—	—	E724-5 KB1
	Lucerne Blue Met.		—	—	—	1	—	—	—	—	—	—	—	E724-5 KB5
	Rallye Red		—	—	—	1	—	—	—	—	—	—	—	E724-5 KE5

CARLINES: J - Challenger, B - Barracuda, V - Valiant, L - Dart, R - Satellite, W - Coronet - Charger, P - Plymouth, D - Dodge, C - Chrysler, Y - Imperial

AR Indicates use as required. Numerals in parentheses ( ) refer to notes. Printed in U.S.A.

# Indicates parts not listed in any previous parts book. ★ Indicates change or addition. November, 1974

CODE	PART NAME		ENG. TYPE OR CU. IN	V	B J	L	R	W	P	D	C (L M)	C (P)	C (H S)	Y	PART NUMBER
12-02-6	FILLER Cont'd.														
	Frost Green Met.			—	—	—	1	—	—	—	—	—	—	—	E724-5 KG2
	Deep Sherwood Met.			—	—	—	1	—	—	—	—	—	—	—	E724-5 KG8
	Avacado Gold Met.			—	—	—	1	—	—	—	—	—	—	—	E724-5 KJ6
	Sahara Beige			—	—	—	1	—	—	—	—	—	—	—	E724-5 KL4
	Dark Moonstone Met.			—	—	—	1	—	—	—	—	—	—	—	E724-5 KL8
	Sienna Met.			—	—	—	1	—	—	—	—	—	—	—	E724-5 KT5
	White			—	—	—	1	—	—	—	—	—	—	—	E724-5 KW1
	Black			—	—	—	1	—	—	—	—	—	—	—	E724-5 KX9
	Golden Fawn			—	—	—	1	—	—	—	—	—	—	—	E724-5 KY4
	Yellow Blaze			—	—	—	1	—	—	—	—	—	—	—	E724-5 KY5
	Golden Haze Met.			—	—	—	1	—	—	—	—	—	—	—	E724-5 KY6
	Tahitian Gold Met.			—	—	—	1	—	—	—	—	—	—	—	E724-5 KY9
	4 D., Sta. Wgn.														
	Dark Silver Met.			—	—	—	—	1	—	—	—	—	—	—	E726-7 KA5
	Powder Blue			—	—	—	—	1	—	—	—	—	—	—	E726-7 KB1
	Lucerne Blue Met.			—	—	—	—	1	—	—	—	—	—	—	E726-7 KB5
	Bright Red			—	—	—	—	1	—	—	—	—	—	—	E726-7 KE5
	Frosty Green Met.			—	—	—	—	1	—	—	—	—	—	—	E726-7 KG2
	Deep Sherwood Met.			—	—	—	—	1	—	—	—	—	—	—	E726-7 KG8
	Avacado Gold Met.			—	—	—	—	1	—	—	—	—	—	—	E726-7 KJ6
	Parchment			—	—	—	—	1	—	—	—	—	—	—	E726-7 KL4
	Dark Moonstone Met.			—	—	—	—	1	—	—	—	—	—	—	E726-7 KL8
	Sienna Met.			—	—	—	—	1	—	—	—	—	—	—	E726-7 KT5
	White			—	—	—	—	1	—	—	—	—	—	—	E726-7 KW1
	Black			—	—	—	—	1	—	—	—	—	—	—	E726-7 KX9
	Golden Fawn			—	—	—	—	1	—	—	—	—	—	—	E726-7 KY4
	Yellow Blaze			—	—	—	—	1	—	—	—	—	—	—	E726-7 KY5
	Gold Met.			—	—	—	—	1	—	—	—	—	—	—	E726-7 KY6
	Dark Gold Met.			—	—	—	—	1	—	—	—	—	—	—	E726-7 KY9
	FILLER PACKAGE, Fndr. Bumper, Argent			—	—	—	1	—	—	—	—	—	—	—	3837 980
				—	—	—	—	1	—	—	—	—	—	—	3837 981
	FILLER, Fender Bumper Side			—	—	—	—	—	1	—	—	—	—	—	3691 596-7
				—	—	—	—	—	—	1	—	—	—	—	3691 604-5
	FILLER, Fender to Bumper			—	—	—	—	—	—	—	1	1	1	—	3691 592-3
				—	—	—	—	—	—	—	—	—	—	1	3691 594-5
12-02-7	WEDGE, Fender Hood			—	2	—	2	2	—	—	—	—	—	—	2949 228
12-04-4	**SHIELD, Fender**	Rt.		1	—	1	—	—	—	—	—	—	—	—	3642 972
		Lt.		1	—	1	—	—	—	—	—	—	—	—	3404 419
		Comp., Rt.		1	—	1	—	—	—	—	—	—	—	—	3726 560
	Fndr. H/Lamp Pnl. Splash			—	1	—	—	—	—	—	—	—	—	—	2998 046-7
	SHIELD, Frt. Side Rail Lwr. Splash														
	Use w/Auto. Trans. Up to Type	Lt.		1	—	1	—	—	—	—	—	—	—	—	2925 321
	After Type	Lt.		1	—	1	—	—	—	—	—	—	—	—	3642 963
	Use w/Auto Trans., Plastic, Lt.			1	—	1	—	—	—	—	—	—	—	—	3817 001
	Use w/Auto. Trans., Plastic	Lt.		—	1	—	—	—	—	—	—	—	—	—	3404 435
	SHIELD, Frt. Suspension C/Member Supt. Lwr. Side Splash	Lt.		—	—	—	1	1	—	—	—	—	—	—	3642 965
	SHIELD, Frt. Sub. Side Member Lwr. Splash	Lt.		—	—	—	—	—	1	1	1	1	1	1	3726 558
	SHIELD, Fndr. W/Opng., Frt. Use After Nov. 1, 1973			—	—	—	—	—	—	1	1	1	1	1	3691 718-9
	PANEL, Fender Shield	Rt.		—	1	—	—	—	—	—	—	—	—	—	3642 966
		Lt.		—	1	—	—	—	—	—	—	—	—	—	3642 333
	225, 318, 360 Eng.	Rt.		—	—	—	1	1	—	—	—	—	—	—	3642 304
	400, 440 Eng.	Rt.		—	—	—	1	1	—	—	—	—	—	—	3642 342
	All Eng.	Lt.		—	—	—	1	1	—	—	—	—	—	—	3817 049
	PANEL, Fndr. H/Lamp Splash														
	2 D., 2 D.H.T.			—	—	—	1	—	—	—	—	—	—	—	3672 288-9
	2 D., 2 D.H.T., FASTBACK			—	—	—	—	1	—	—	—	—	—	—	3672 392-3

CARLINES J - Challenger, B - Barracuda, V - Valiant, L - Dart, R - Satellite, W - Coronet - Charger, P - Plymouth, D - Dodge, C - Chrysler, Y - Imperial

AR Indicates use as required.

\# Indicates parts not listed in any previous parts book.

Numerals in parentheses ( ) refer to notes.

★ Indicates change or addition.

Printed in U.S.A.
November, 1974

CODE	PART NAME		ENG. TYPE OR CU. IN	V	B J	L	R	W	P	D	C (L M)	C (P)	C (H S)	Y	PART NUMBER
12-04-22	COVER, Fender Shield Pnl. Upr. Control Arm														
	225, 318, 360 Eng.			—	—	—	2	2	—	—	—	—	—	—	3642 340
	400, 440 Eng.	Lt.		—	—	—	1	1	—	—	—	—	—	—	3642 340
	COVER, Fender Shield to Dash Panel	Rt.		—	—	—	1	1	—	—	—	—	—	—	3726 598
		Lt.		—	—	—	1	1	—	—	—	—	—	—	3726 599
12-04-24	CLIP, Fender H/Lamp Pnl. Seal			AR	—	AR	AR	AR	—	—	—	—	—	—	2405 049
	CLIP, Fender Shield Pnl. Rear Cover			—	AR	—	—	—	—	—	—	—	—	—	2405 049
	CLIP, Fender Shield Pnl. Upper Control Arm Seal			—	—	—	AR	AR	—	—	—	—	—	—	2405 049
	CLIP, Fender Wheel House Pnl. to Upr. Control Arm Seal			—	—	—	—	—	AR	AR	AR	AR	AR	AR	2405 049
	CLIP, Fender Wheel House Pnl. to Frame Seal			—	—	—	—	—	AR	AR	AR	AR	AR	AR	2405 049
12-04-25	STRUT, Fender Flange Reinf. Dash	Rt.		—	—	—	—	—	1	1	1	1	1	1	3691 252
		Lt.		—	—	—	—	—	1	1	1	1	1	1	3691 253
	Fndr. Cowl Top			—	—	—	1	1	—	—	—	—	—	—	3672 720-1
				1	—	1	—	—	—	—	—	—	—	—	3691 716-7
	STRUT, Fndr. Shield Pnl. to Frame Frt. Rt., Sta. Wgn.			—	—	—	1	1	—	—	—	—	—	—	3726 572
	STRUT, Fndr. Shield Pnl. to Frame Rear, Rt., Sta. Wgn., w/o Weld Screw			—	—	—	1	1	—	—	—	—	—	—	3726 574
	w/Weld Screw			—	—	—	1	1	—	—	—	—	—	—	3726 576
	STRUT, Fndr. Flange Reinf. Cowl Side Lower			—	—	—	—	—	1	1	1	1	1	1	3691 488-9
12-06-3	**BRACKET, Cowl Side Fndr. Mtg.**			—	1	—	—	—	—	—	—	—	—	—	3500 602-3
12-07-1	**BRACE, Fndr. Lwr. Flange**			2	—	2	—	—	—	—	—	—	—	—	3691 368
	BRACE, Fndr. Bumper Supt., 2 D.H.T., FASTBACK			2	—	—	—	—	—	—	—	—	—	—	2579 904
	2 D.H.T., FASTBACK			—	—	2	—	—	—	—	—	—	—	—	3672 717
	BRACE, Fndr. Shield Pnl. to Cowl			—	1	—	—	—	—	—	—	—	—	—	2925 340-1
	BRACE, Fndr. H/Lamp Flg. Ext., J			—	2	—	—	—	—	—	—	—	—	—	3574 138
	BRACE, Fender Dash			—	—	—	1	1	—	—	—	—	—	—	3573 646-7
	BRACE, Fender Dash Pnl. Sta. Wgn.			—	—	—	1	1	—	—	—	—	—	—	3672 970-1
	BRACE, Fndr. H/Lamp Pnl. Yoke 2 D., 2 D.H.T., Fast Back			—	—	—	—	2	—	—	—	—	—	—	3672 388
	BRACE, Fndr. Flange Yoke			—	—	—	—	—	—	2	2	2	2	2	3691 700
	BRACE, Fndr. Wheel House Pnl. to Yoke Sta. Wgn.	Rt.		—	—	—	—	—	1	1	—	—	—	—	3726 588
	All	Rt.		—	—	—	—	—	—	—	1	1	1	1	3726 588
	Sta. Wgn.	Lt.		—	—	—	—	—	1	1	—	—	—	—	3726 589
	All	Lt.		—	—	—	—	—	—	—	1	1	1	1	3726 589
	BRACE, Fndr. Wheel House Pnl. to # 1 Hold Down Sta. Wgn.			—	—	—	—	—	1	1	—	—	—	—	3726 586-7
	All			—	—	—	—	—	—	—	1	1	1	1	3726 586-7
12-15-2	**MOULDING, Fender Side (See Exterior Ornamentation Illustrations)**														
12-15-8	RETAINER, Fndr. Frt. Mldg. 4 D., Sta. Wgn.			—	—	—	—	10	—	—	—	—	—	—	3691 466
	RETAINER, Fndr. Side Frt. Mldg.			—	—	—	—	—	—	—	—	—	4	—	3810 191
	RETAINER, Fndr. Side Rear Mldg.			—	—	—	—	—	—	—	—	—	4	—	3810 188
12-15-21	NAMEPLATE, Fender Side (See Exterior Ornamentation Illustrations)														
	ORNAMENT, MEDALLION, Fender Side (See Exterior Ornamentation Illustrations)														

CARLINES: J - Challenger, B - Barracuda, V - Valiant, L - Dart, R - Satellite, W - Coronet - Charger, P - Plymouth, D - Dodge, C - Chrysler, Y - Imperial

AR Indicates use as required.

Numerals in parentheses ( ) refer to notes.

# Indicates parts not listed in any previous parts book.

★ Indicates change or addition.

Printed in U.S.A.
November, 1974

CODE	PART NAME	ENG. TYPE OR CU. IN	V	B J	L	R	W	P	D	C (L M)	C (P)	C (H S)	Y	PART NUMBER
12-15-21	NAMEPLATE Cont'd.													
	DECAL, Fender Side (See Exterior Ornamentation Illustrations)													
	NAMEPLATE, Fender, "DODGE TAXI"													
	W-G, 4 D.		—	—	—	—	2	—	—	—	—	—	—	2836 772
12-15-32	OVERLAY, Fender Side													
	R-P, Sta. Wgn.		—	—	—	2	—	—	—	—	—	—	—	3680 714
	W-P, Sta. Wgn.		—	—	—	—	2	—	—	—	—	—	—	3680 734
	P-P, Sta. Wgn.		—	—	—	—	—	2	—	—	—	—	—	3810 201
	D-P, Sta. Wgn.		—	—	—	—	—	—	2	—	—	—	—	3680 107
	C-P, Sta. Wgn.		—	—	—	—	—	—	—	—	2	—	—	3680 107
	OVERLAY, Fender Frt. Ext.													
	W-P, Sta. Wgn.		—	—	—	—	1	—	—	—	—	—	—	3810 154-5
12-15-33	TAPE, Fender Side (See Exterior Ornamentation Illustrations)													

NOTES

CARLINES J - Challenger, B - Barracuda, V - Valiant, L - Dart, R - Satellite, W - Coronet - Charger, P - Plymouth, D - Dodge, C - Chrysler, Y - Imperial

AR Indicates use as required.

# Indicates parts not listed in any previous parts book.

Numerals in parentheses ( ) refer to notes.

★ Indicates change or addition.

Printed in U.S.A.
November, 1974

NOTES

GROUP 13 - FRAME

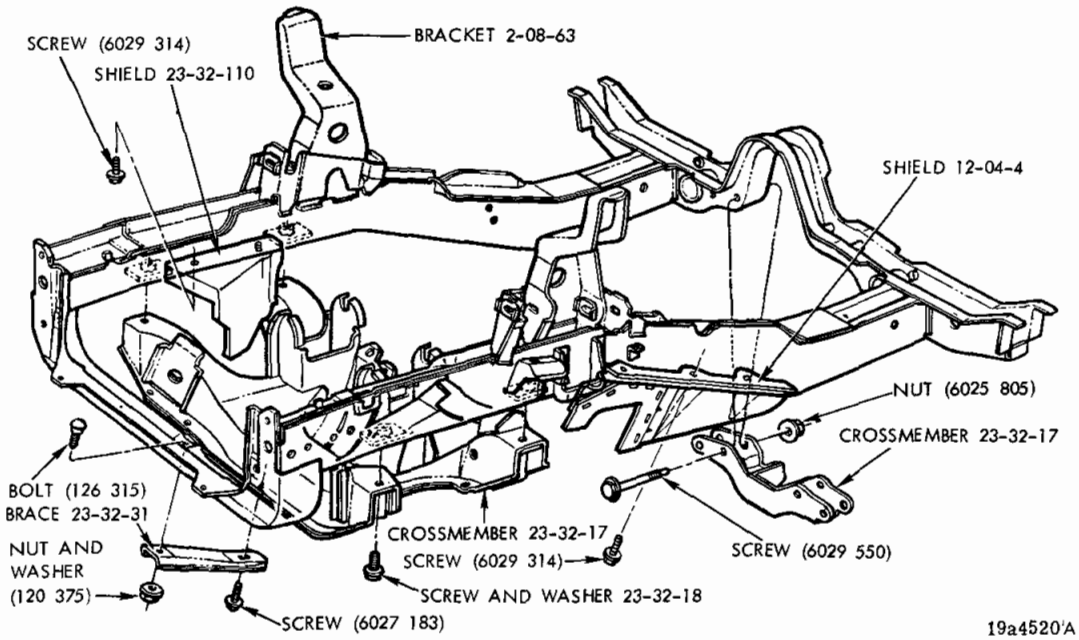

FRAME - V, L

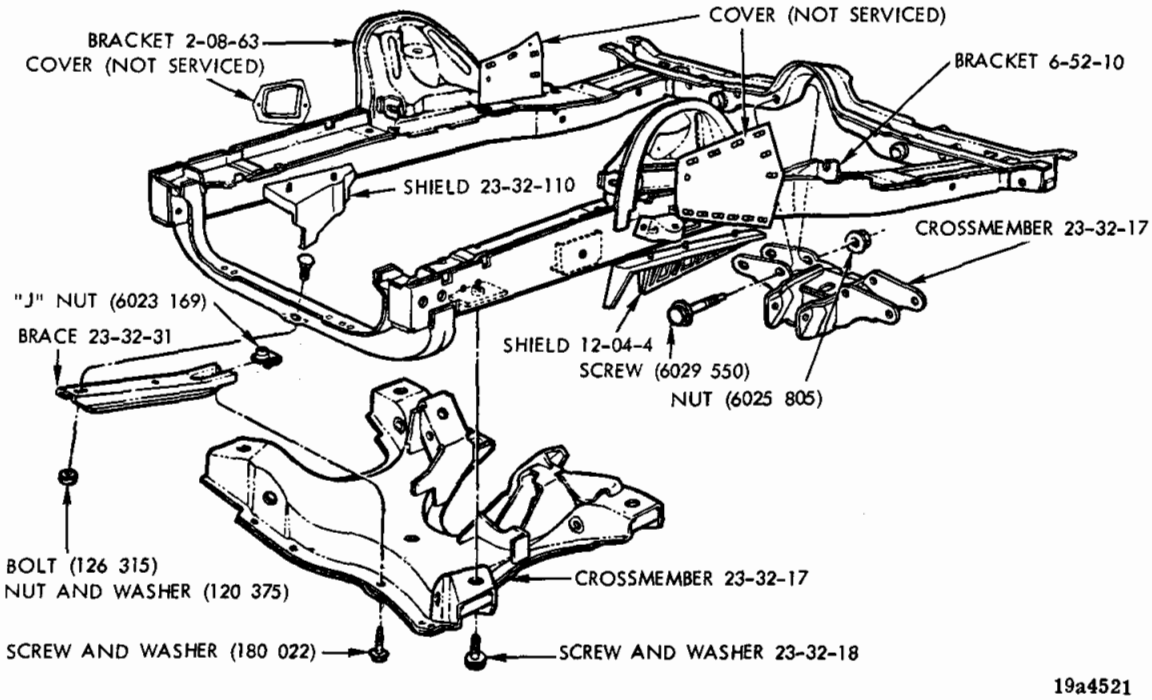

FRAME - B, J

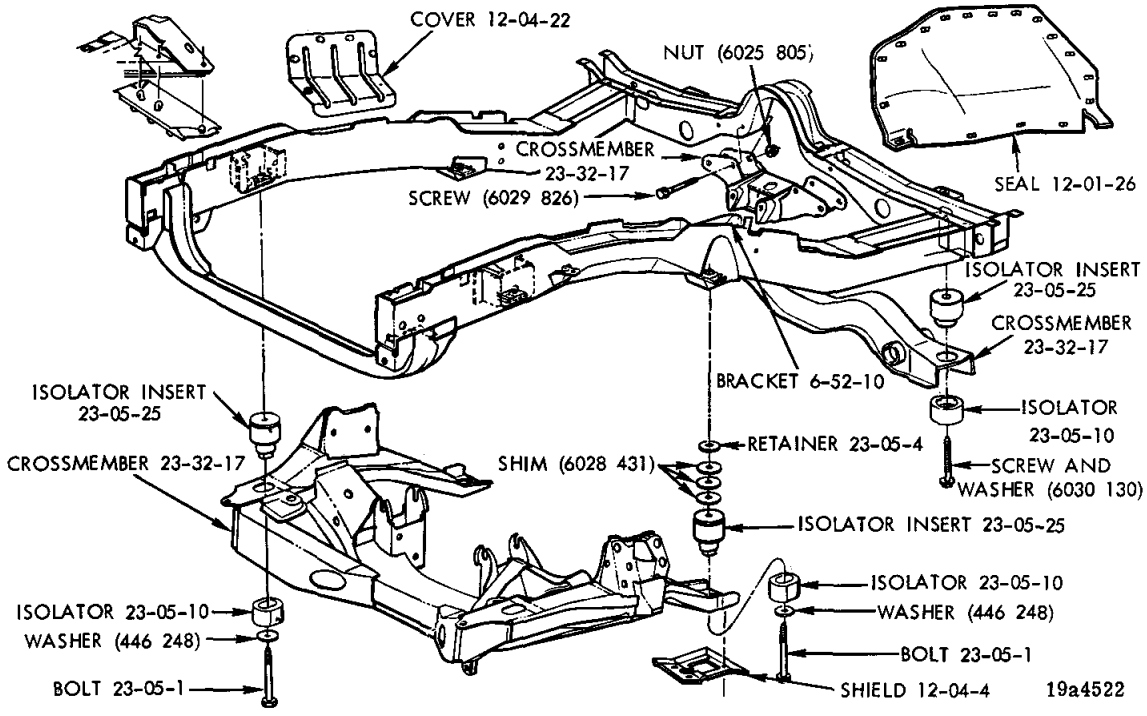

FRAME - R, W

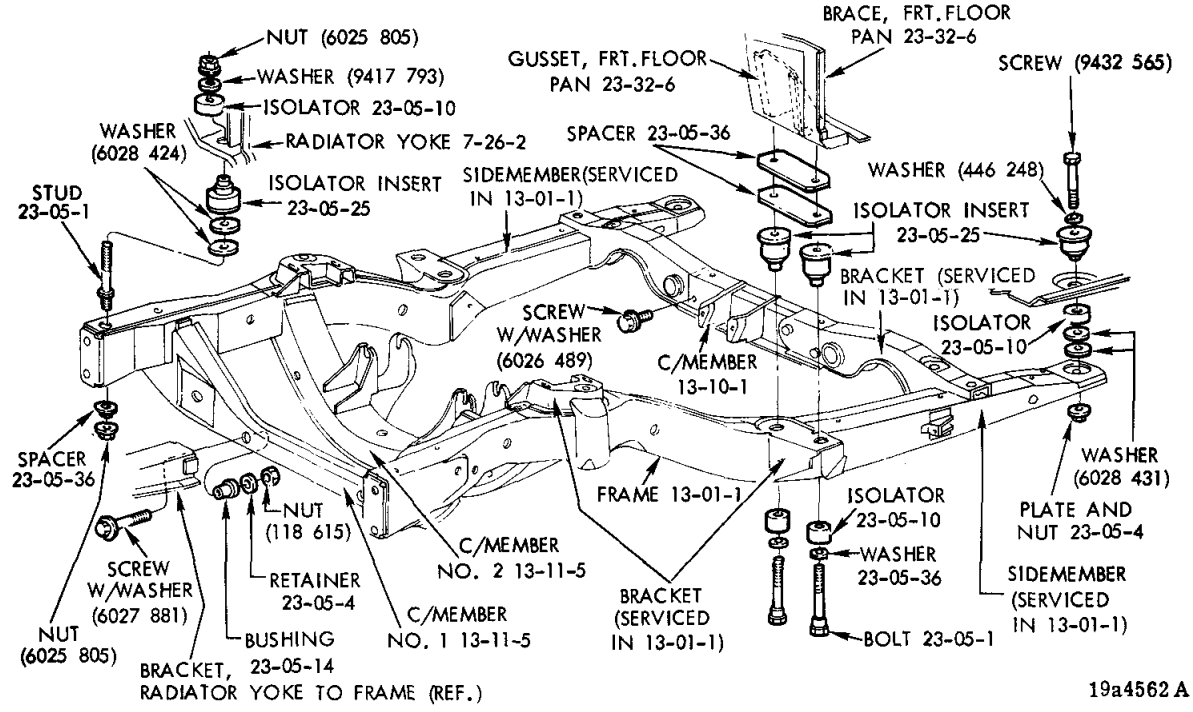

FRAME - P, D, C, Y

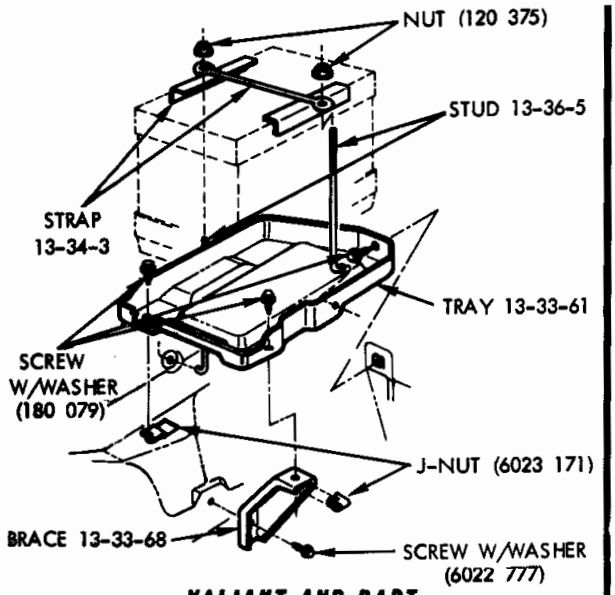

VALIANT AND DART

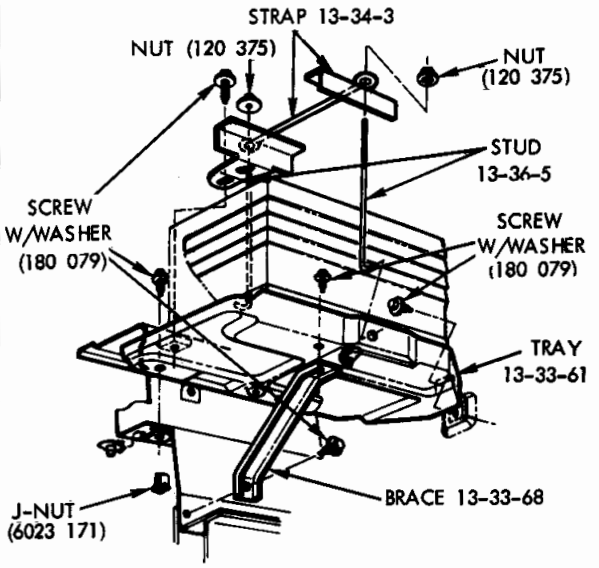

BARRACUDA AND CHALLENGER

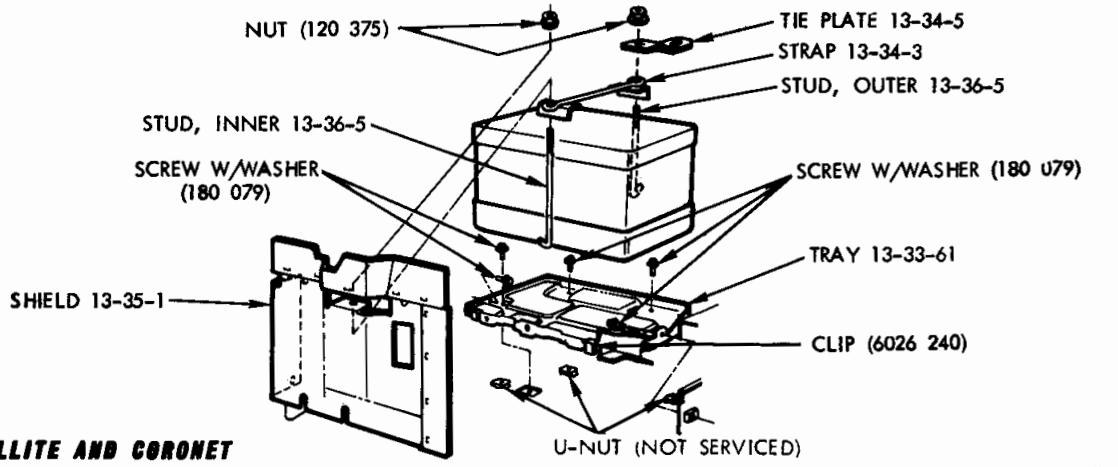

SATELLITE AND CORONET

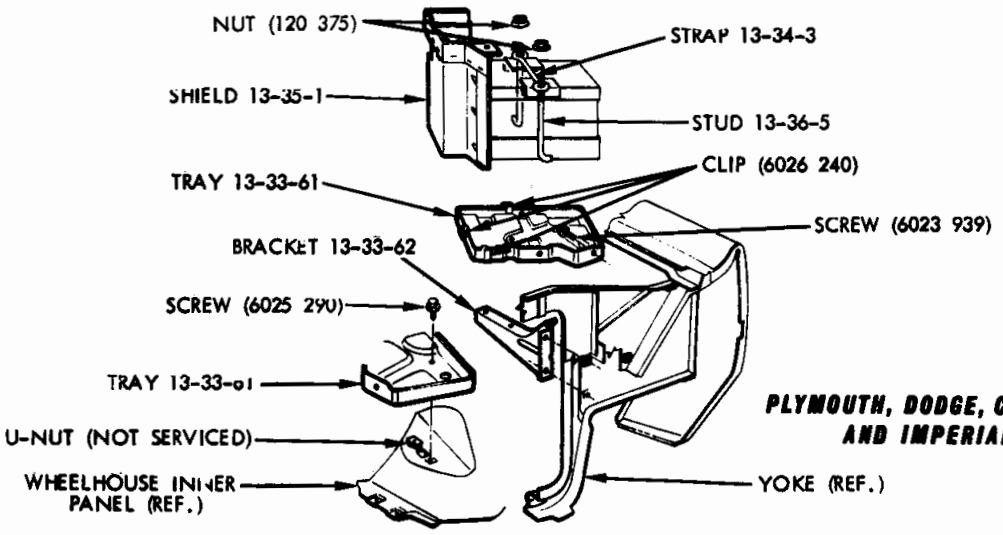

PLYMOUTH, DODGE, CHRYSLER AND IMPERIAL

19a4321 A

BATTERY TRAY AND SUPPORTS

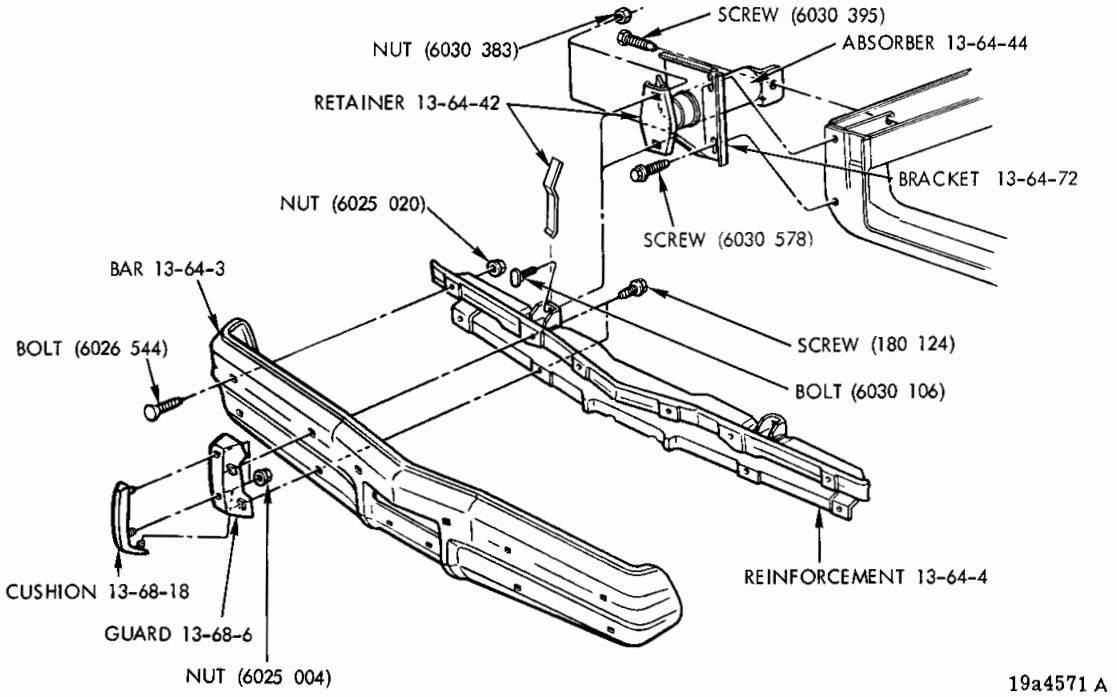

FRONT BUMPER - VALIANT 4 DOORS (WITH ABSORBER)

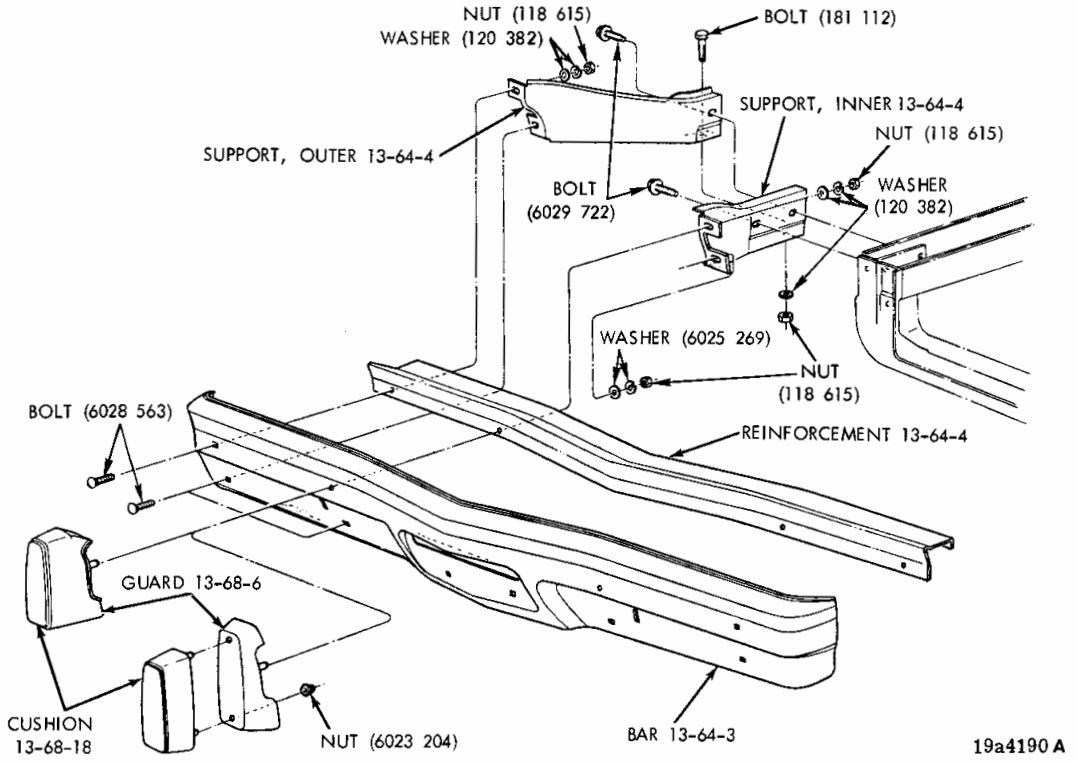

FRONT BUMPER - VALIANT 2 DOOR HARDTOP AND FASTBACK (WITHOUT ABSORBER)

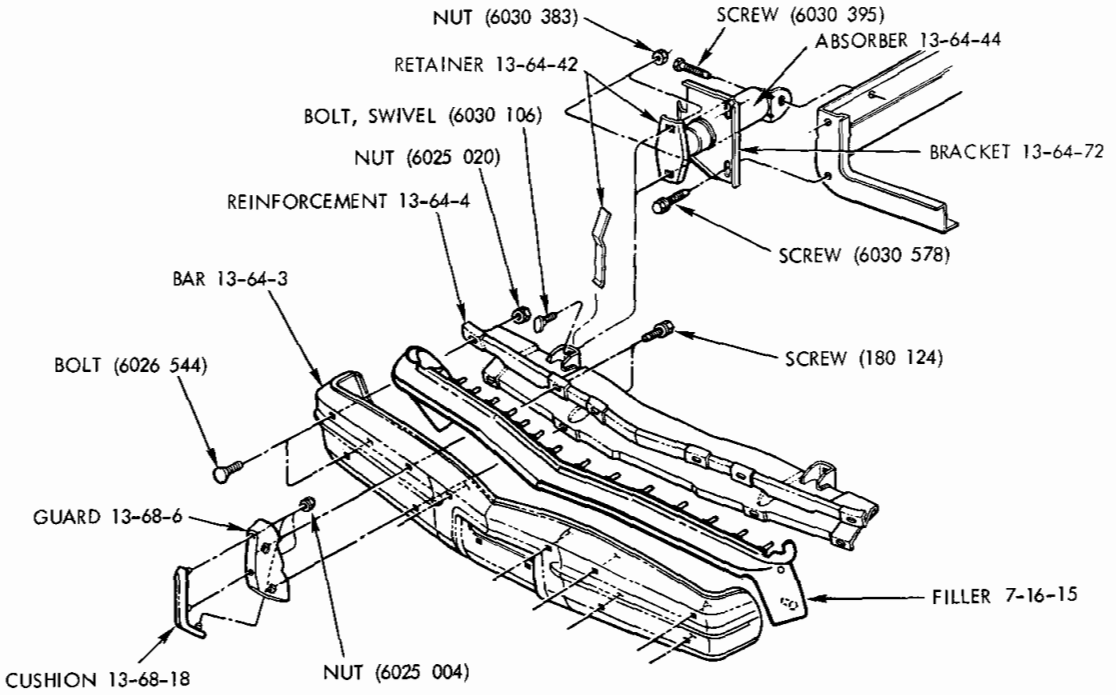

FRONT BUMPER - DART 4 DOORS (WITH ABSORBER)

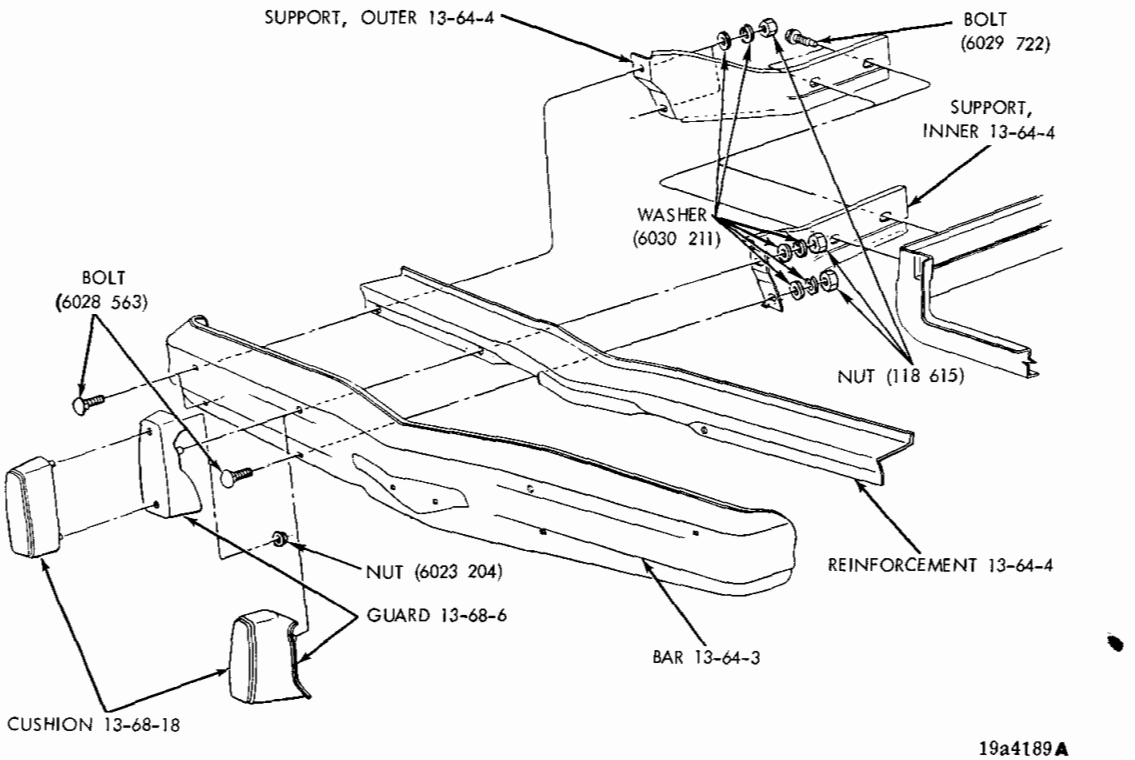

FRONT BUMPER - DART 2 DOOR HARDTOP AND FASTBACK (WITHOUT ABSORBER)

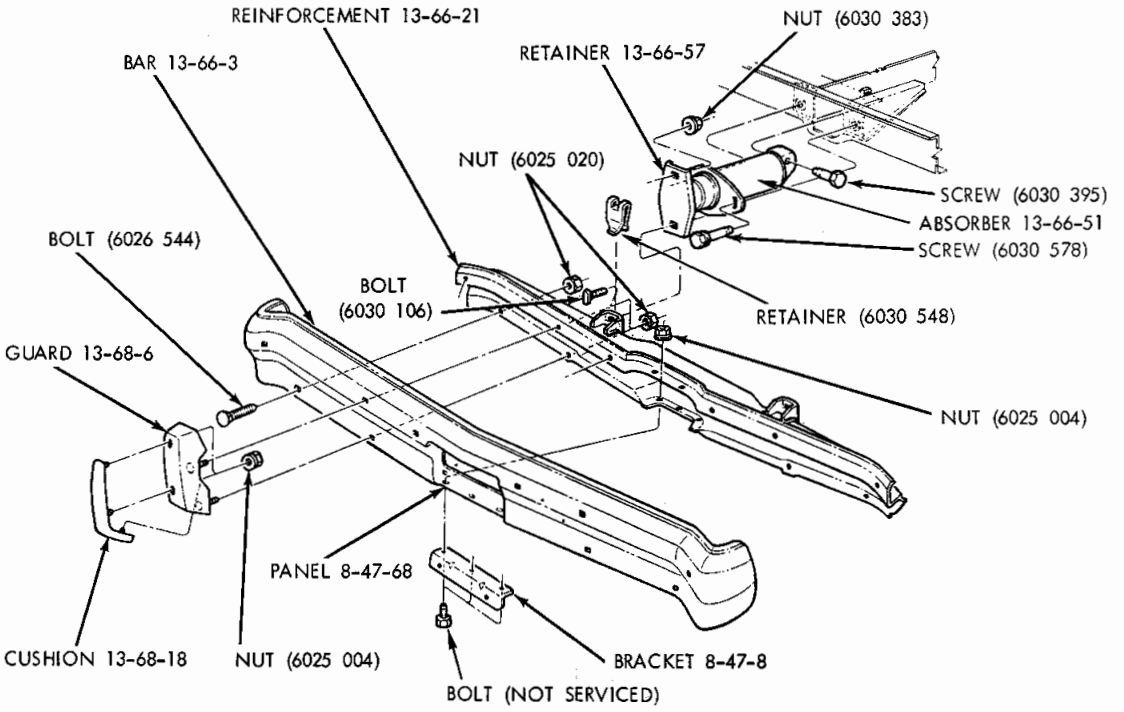

19a4581 A

REAR BUMPER - VALIANT AND DART 2 DOOR HARDTOP AND 4 DOORS

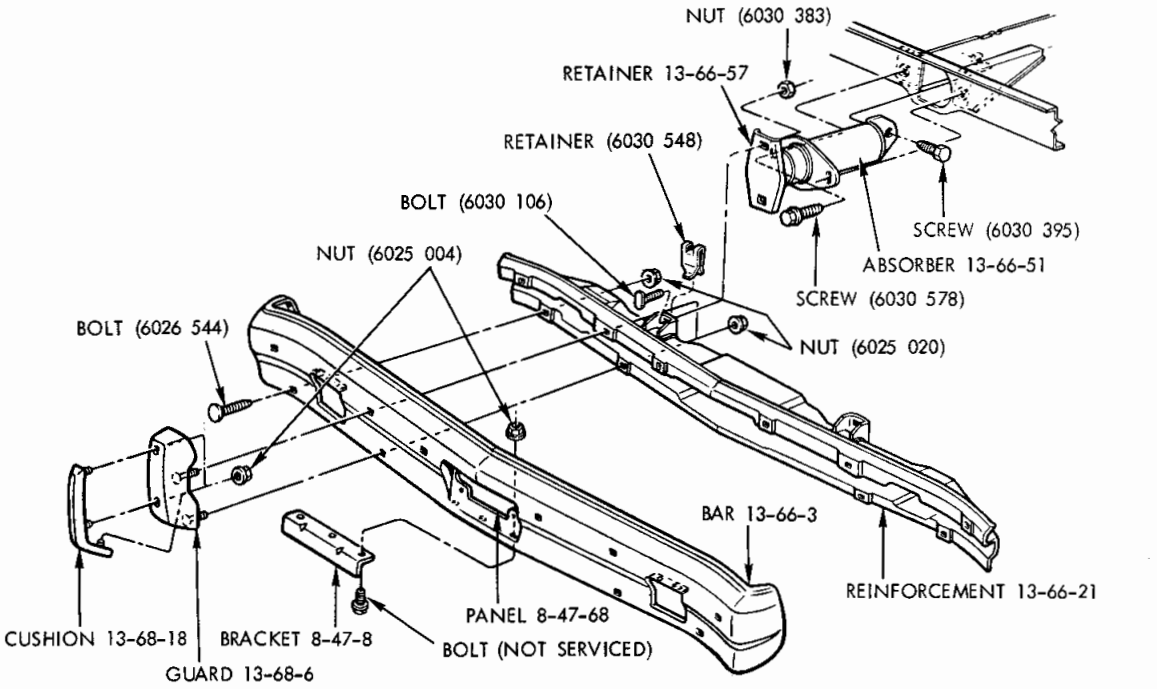

19a4573 A

REAR BUMPER - VALIANT AND DART FASTBACK

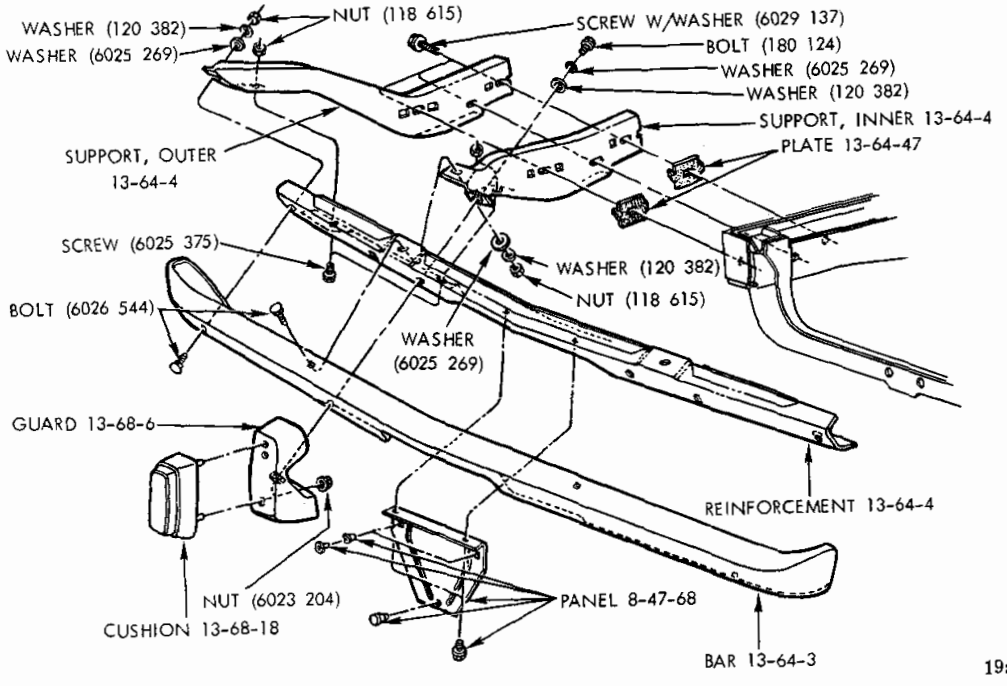

FRONT BUMPER - BARRACUDA

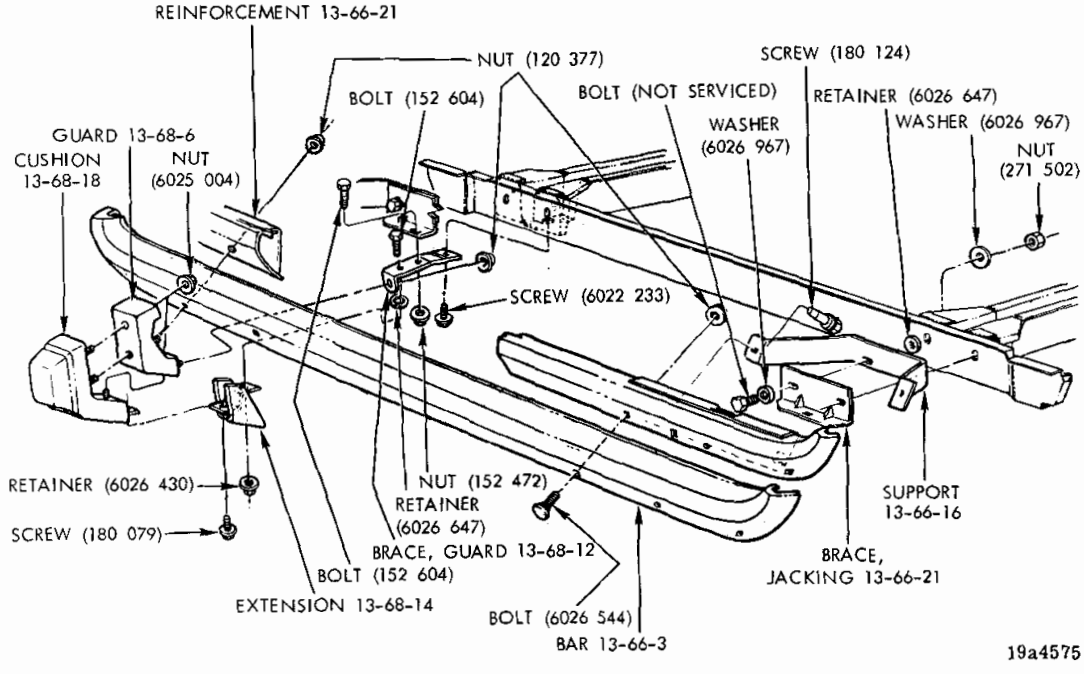

REAR BUMPER - BARRACUDA

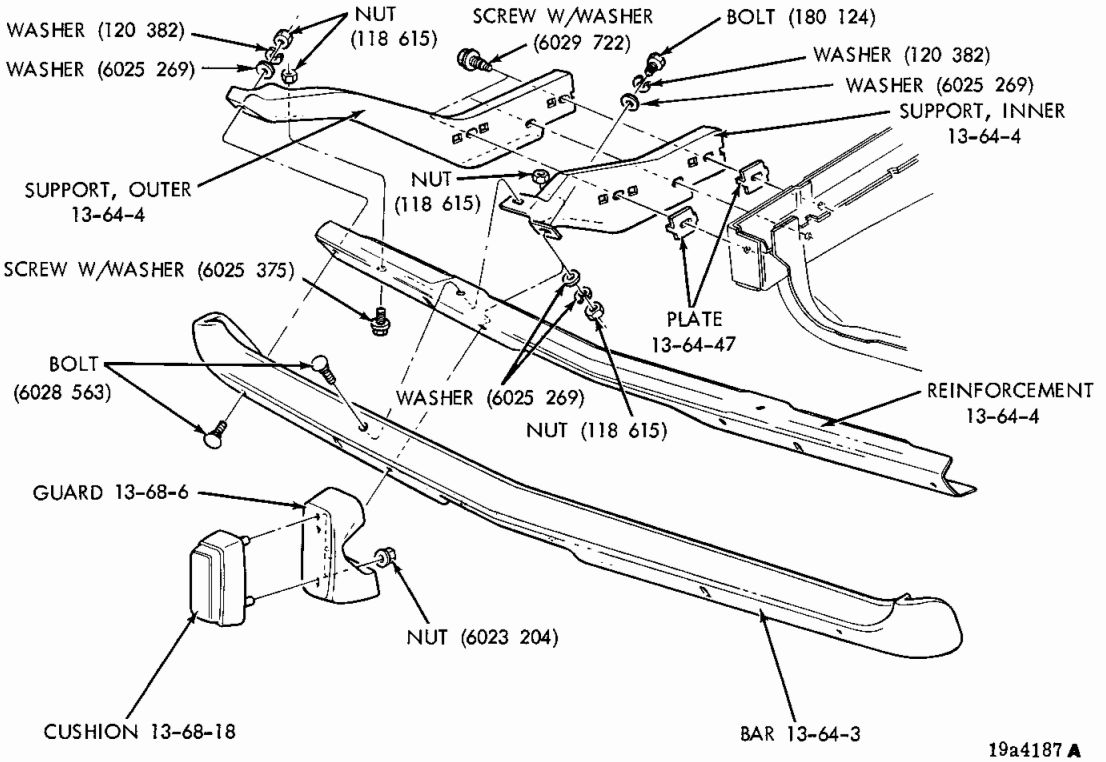

FRONT BUMPER - CHALLENGER

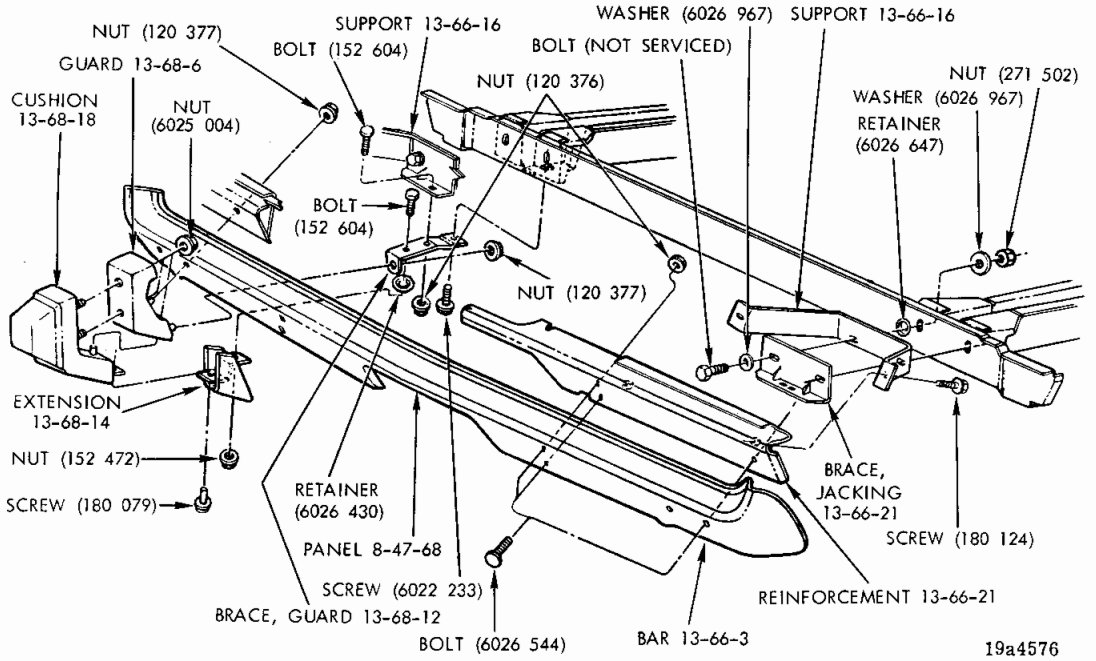

REAR BUMPER - CHALLENGER

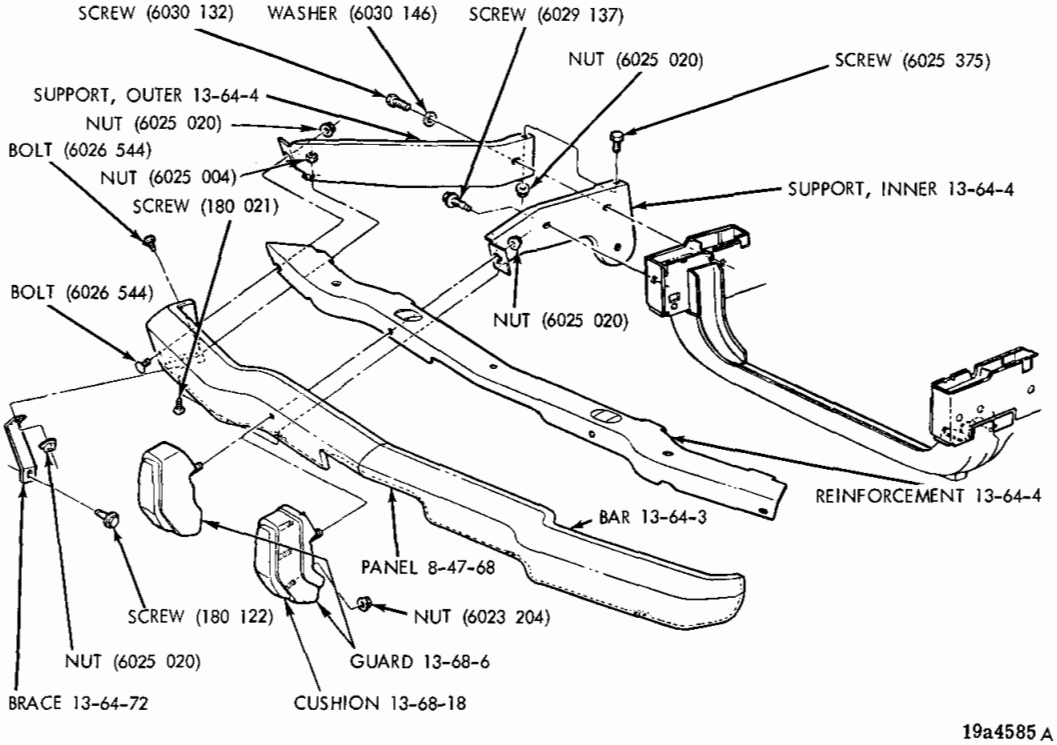

19a4585 A

FRONT BUMPER - SATELLITE 2 DOOR AND 2 DOOR HARDTOP

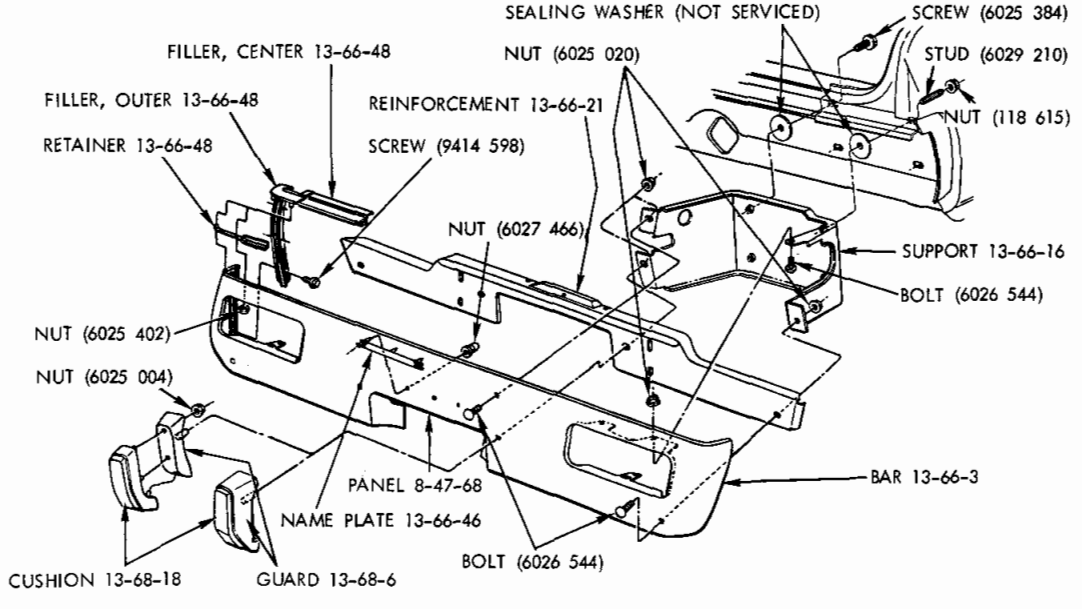

19a4572 A

REAR BUMPER - SATELLITE 2 DOOR AND 2 DOOR HARDTOP

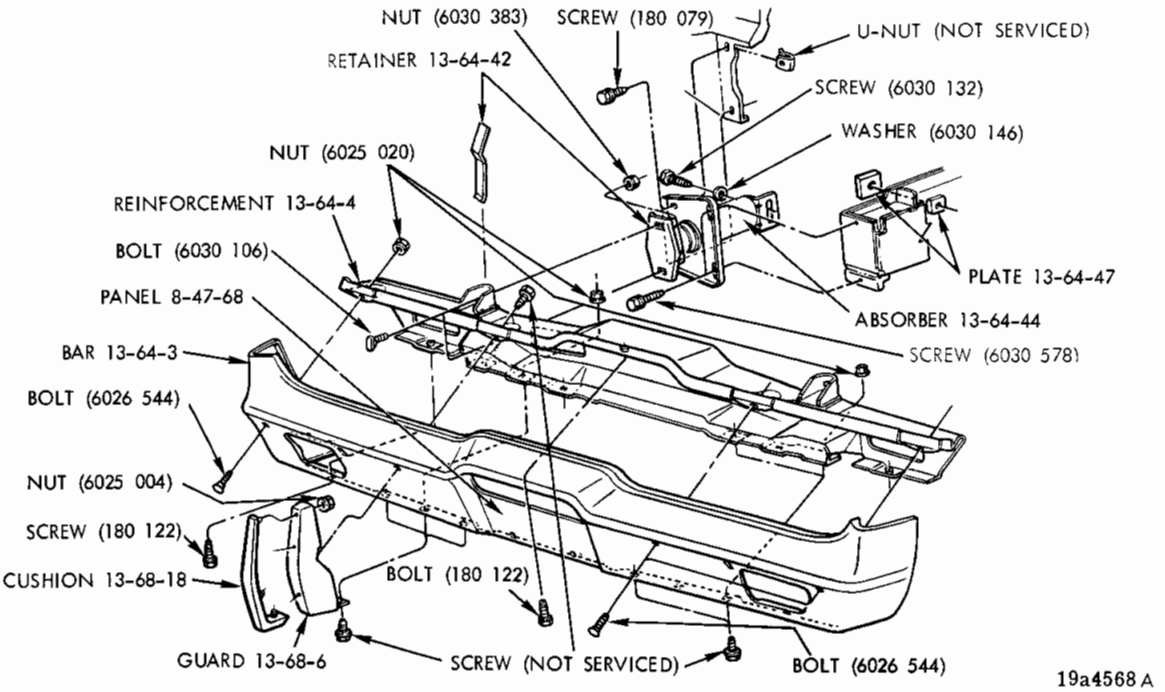

FRONT BUMPER - SATELLITE 4 DOOR AND STATION WAGON

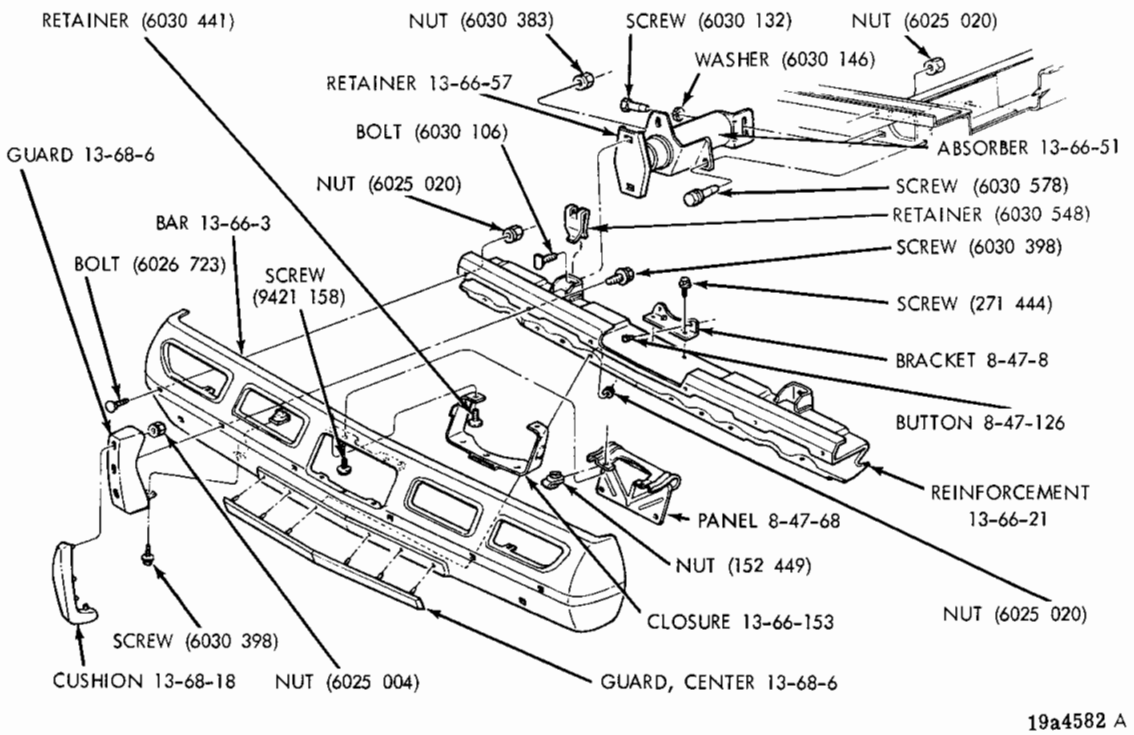

REAR BUMPER - SATELLITE 4 DOOR

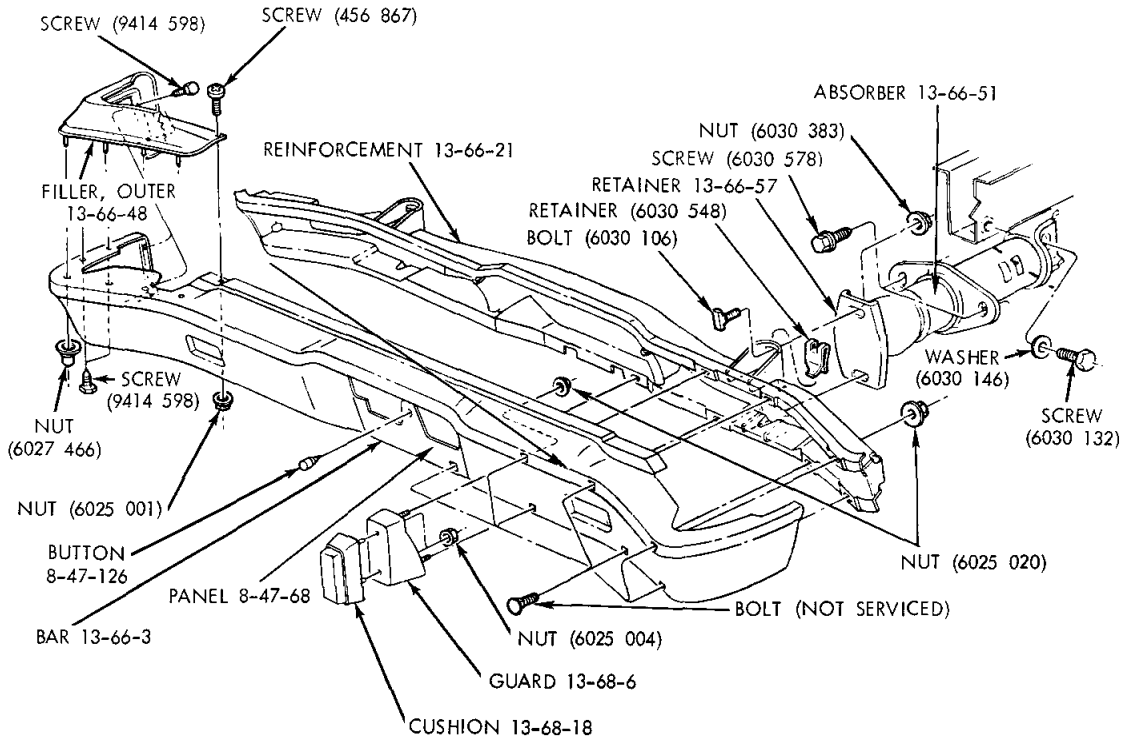

19a4637 A

REAR BUMPER - SATELLITE AND CORONET (STATION WAGON)

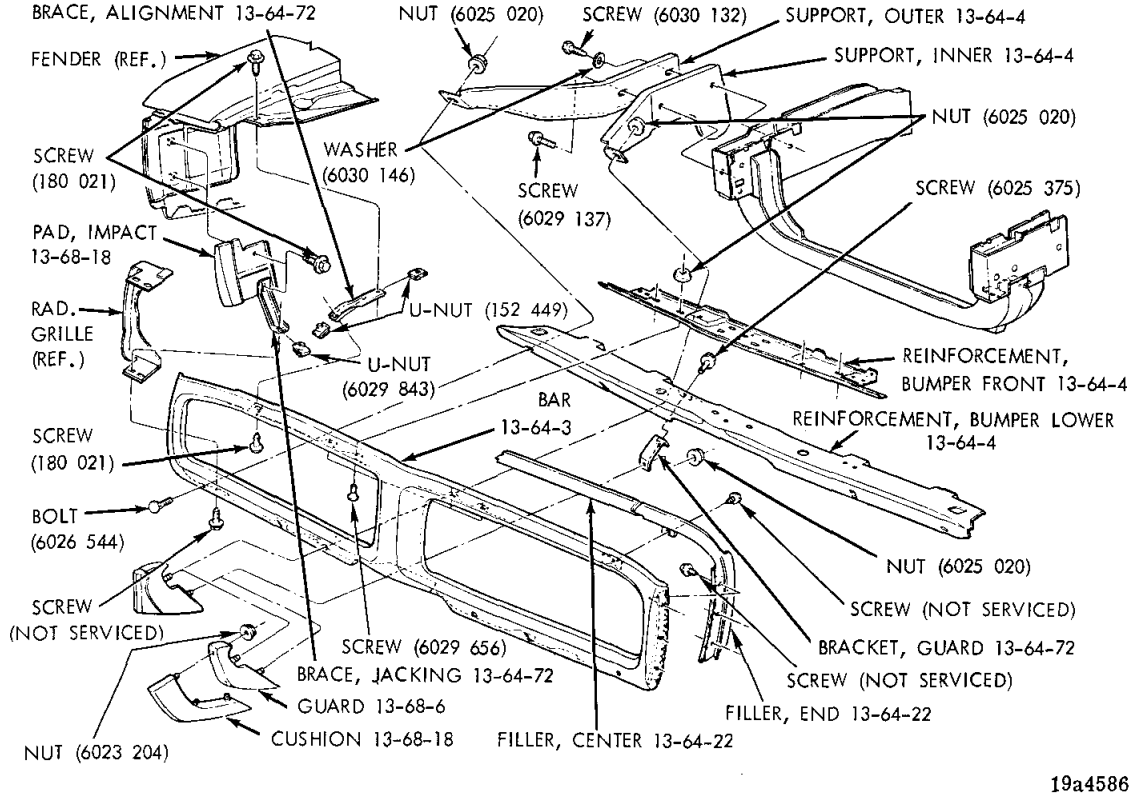

19a4586

FRONT BUMPER - CORONET 2 DOOR, 2 DOOR HARDTOP AND FASTBACK

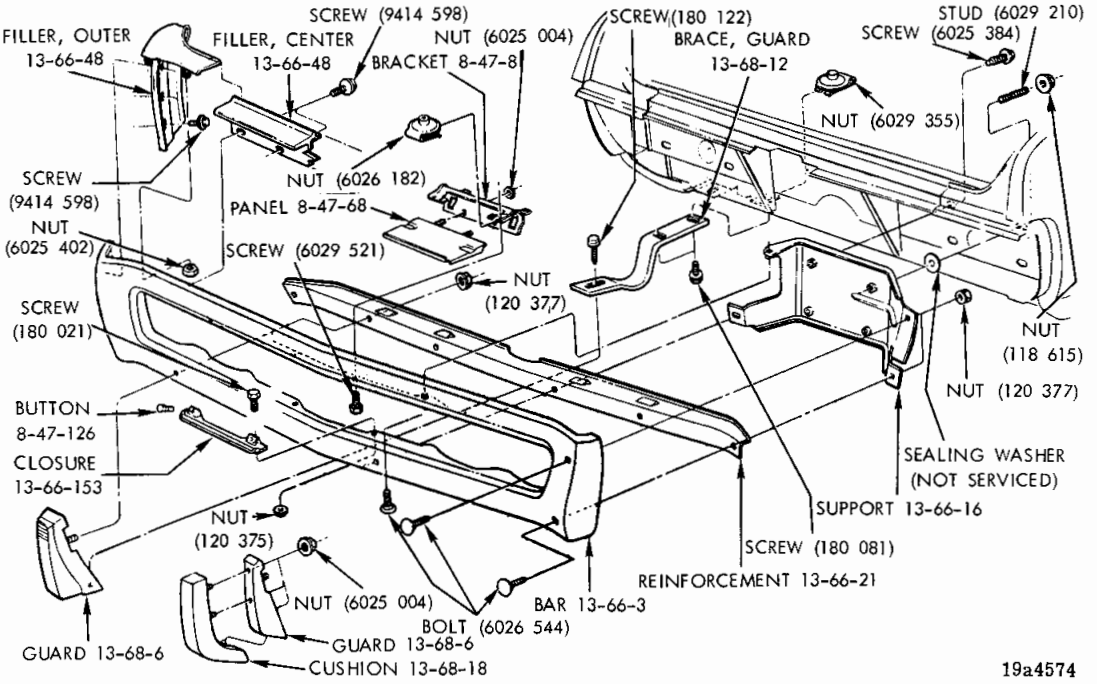

REAR BUMPER - CORONET 2 DOOR, 2 DOOR HARDTOP AND FASTBACK

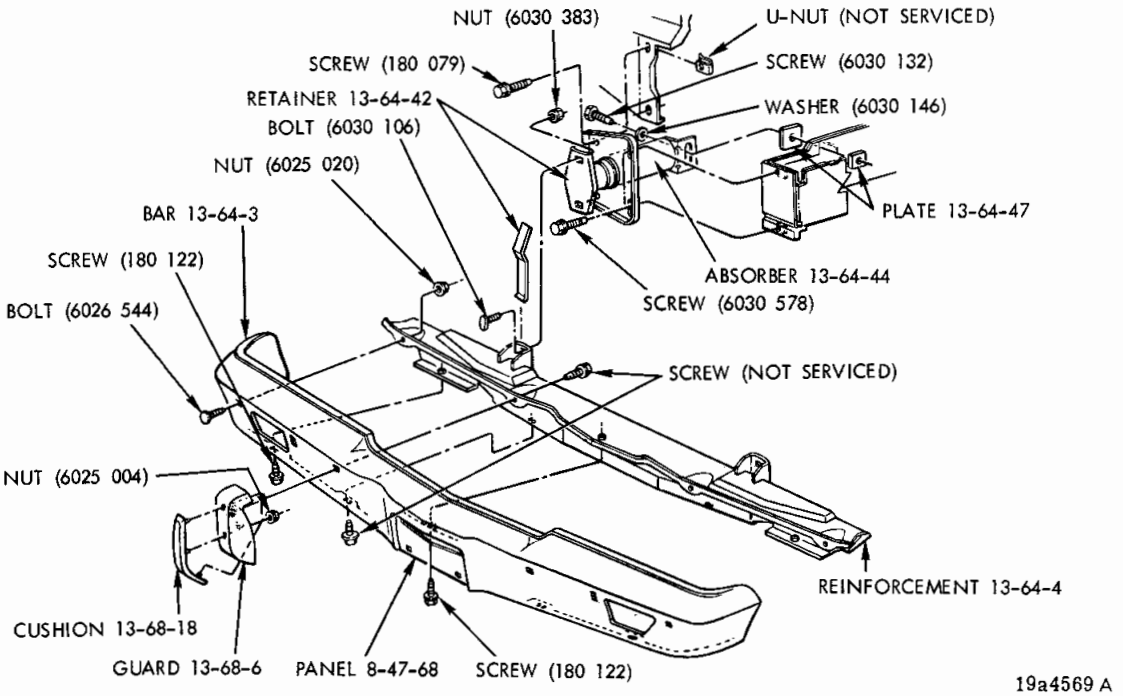

FRONT BUMPER - CORONET 4 DOOR AND STATION WAGON

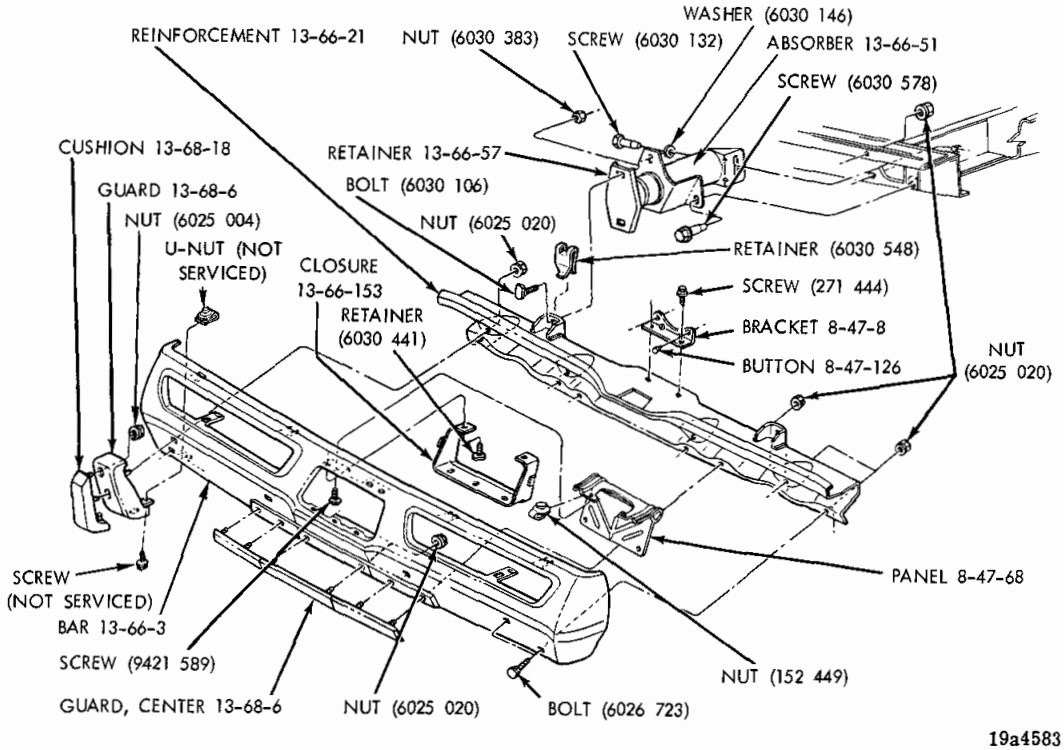

REAR BUMPER - CORONET 4 DOOR

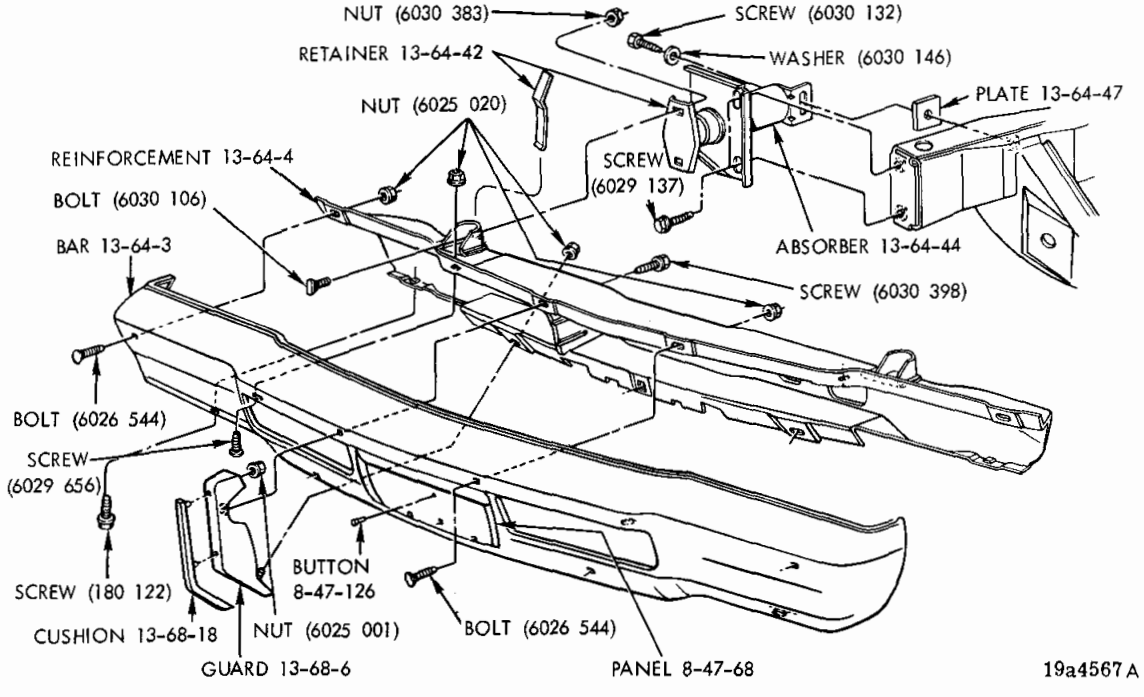

FRONT BUMPER - PLYMOUTH

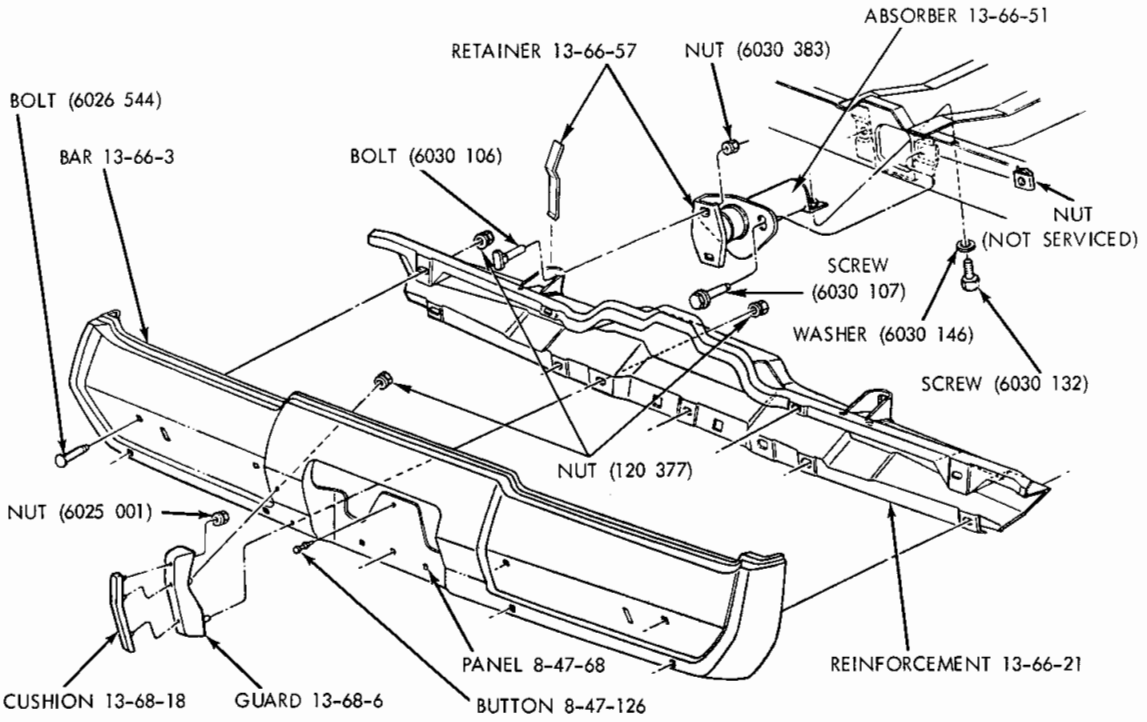

19a4584 A

REAR BUMPER - PLYMOUTH (EXCEPT STATION WAGON)

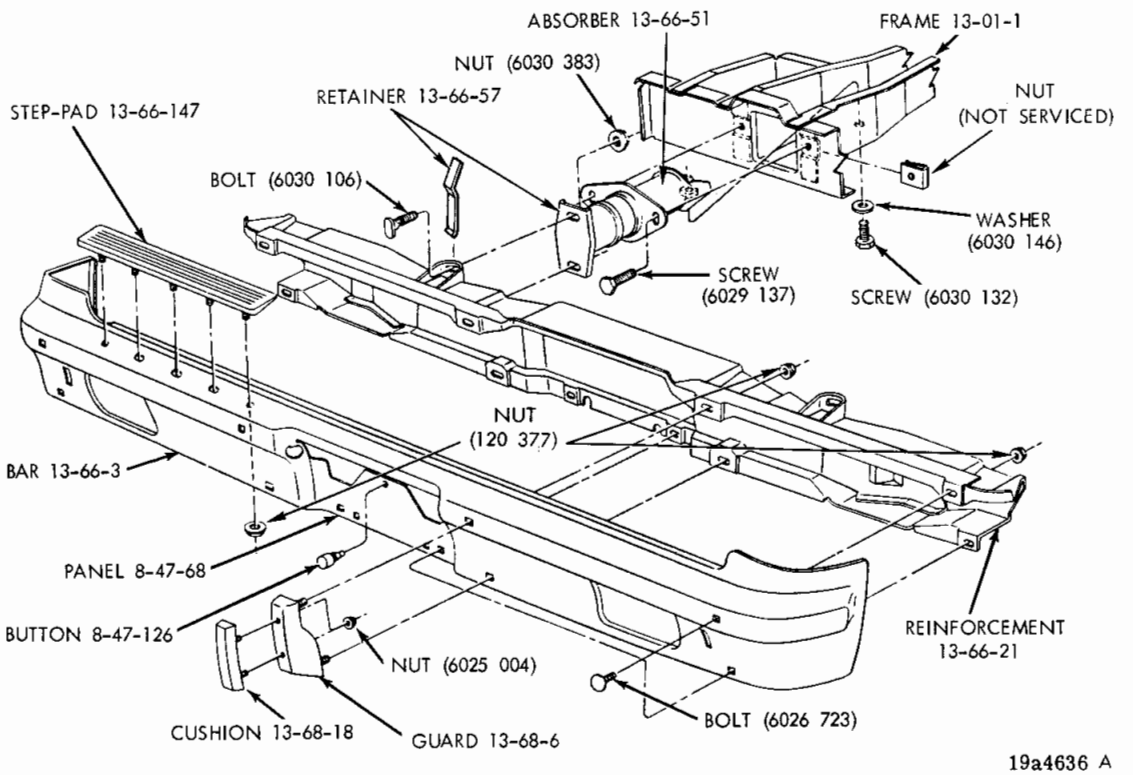

19a4636 A

REAR BUMPER - PLYMOUTH, DODGE AND CHRYSLER (STATION WAGON)

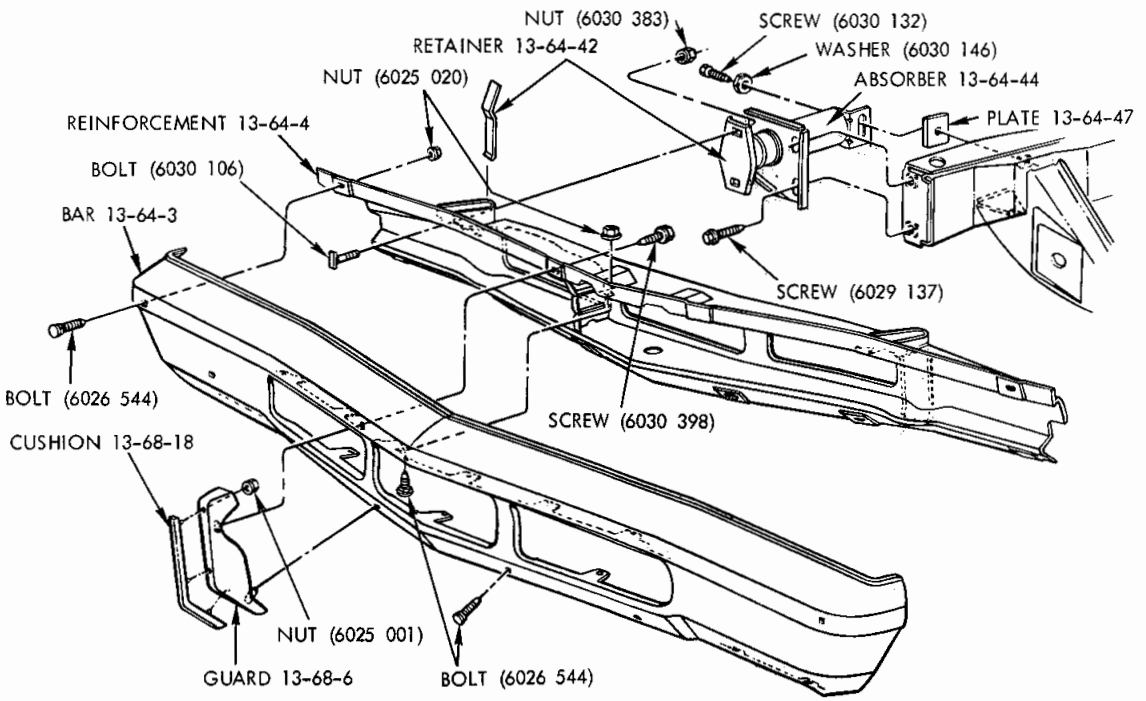

19a4566 A

FRONT BUMPER - DODGE

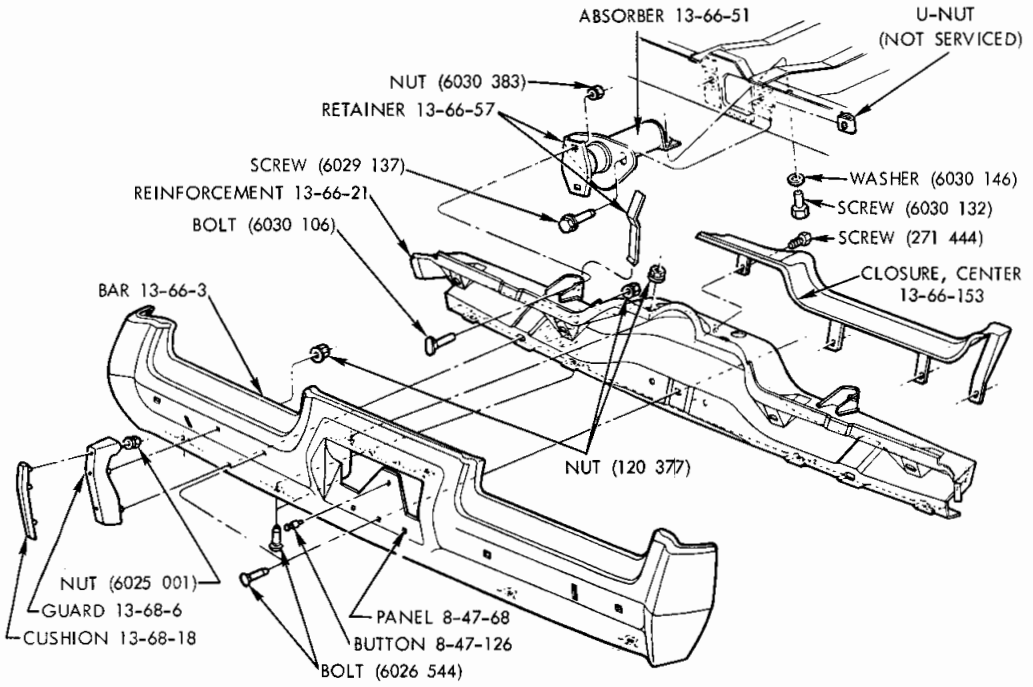

19a4578 A

REAR BUMPER - DODGE (EXCEPT STATION WAGON)

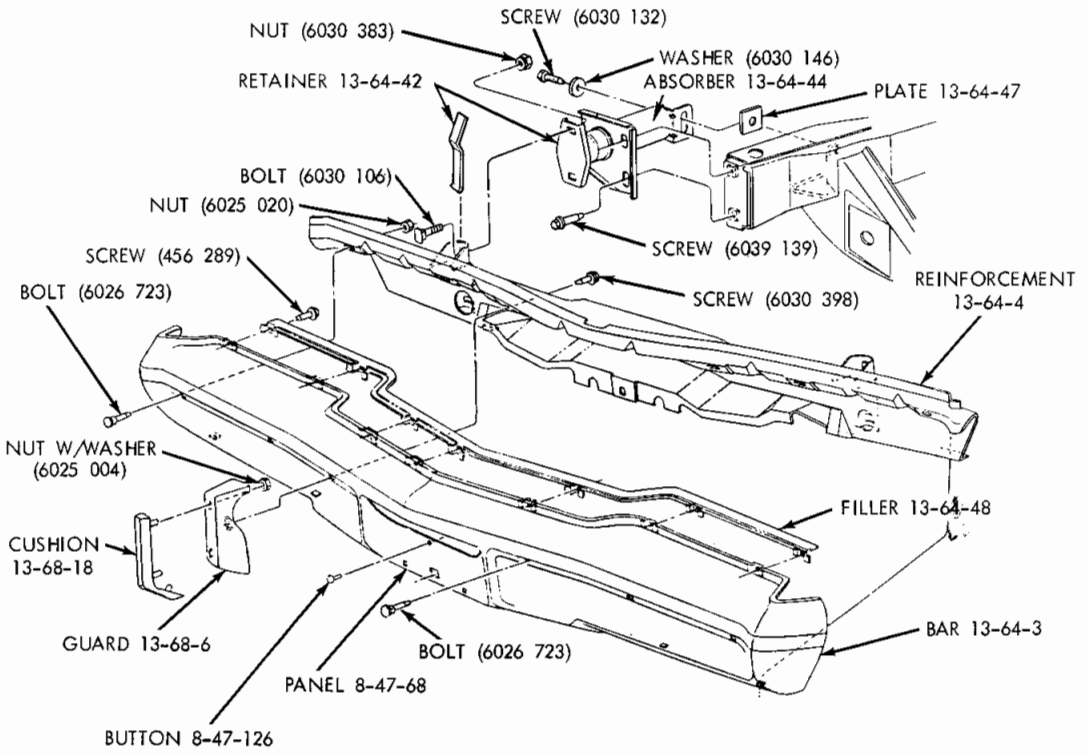

19a4588 A

FRONT BUMPER - CHRYSLER

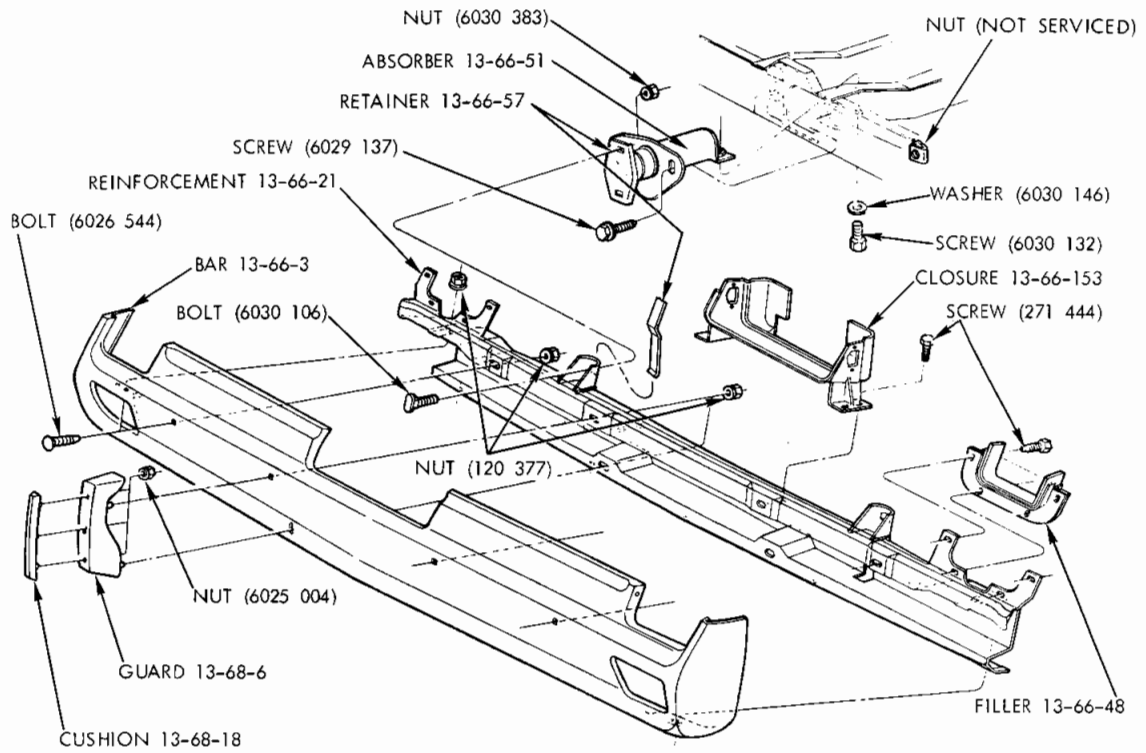

19a4593 A

REAR BUMPER - CHRYSLER C-L, C-M

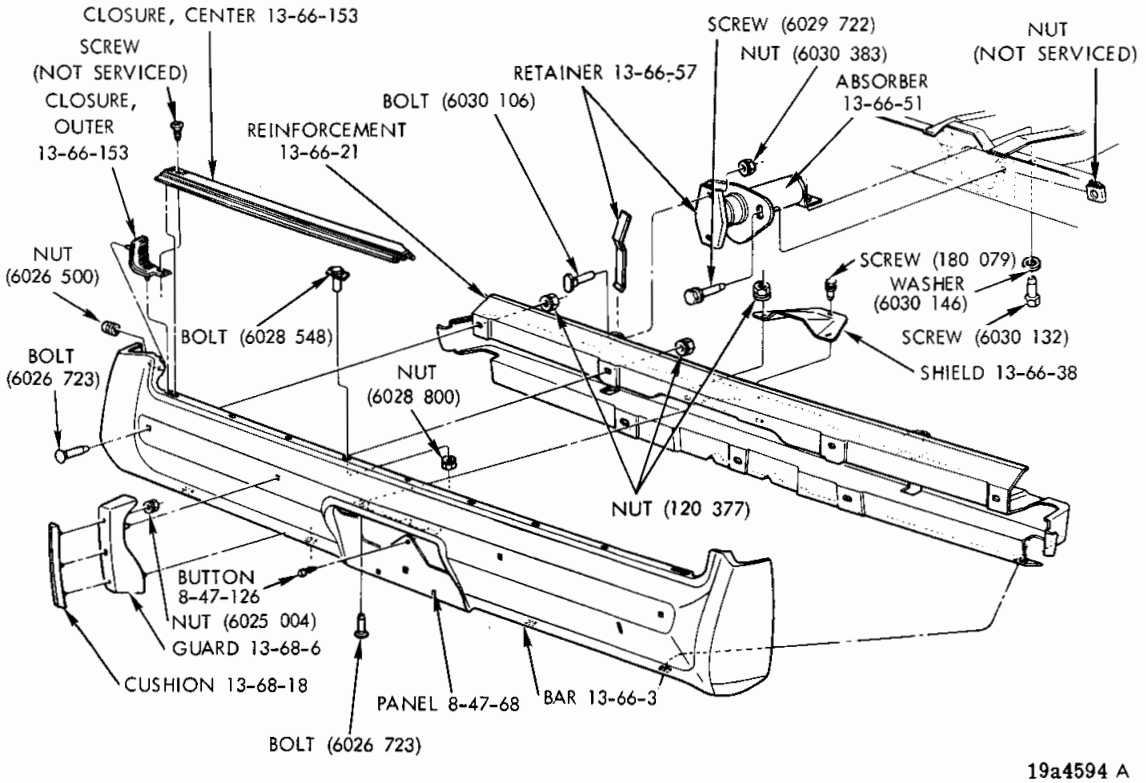

REAR BUMPER - CHRYSLER C-H, C-S

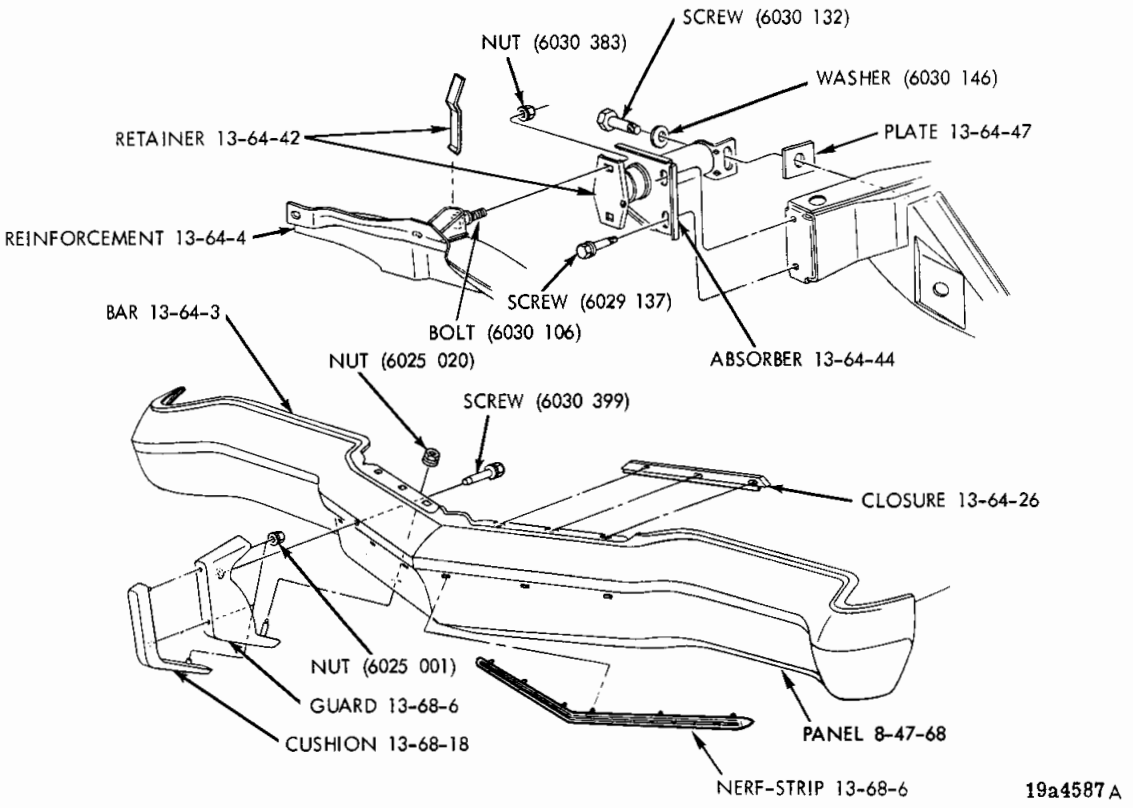

FRONT BUMPER - IMPERIAL

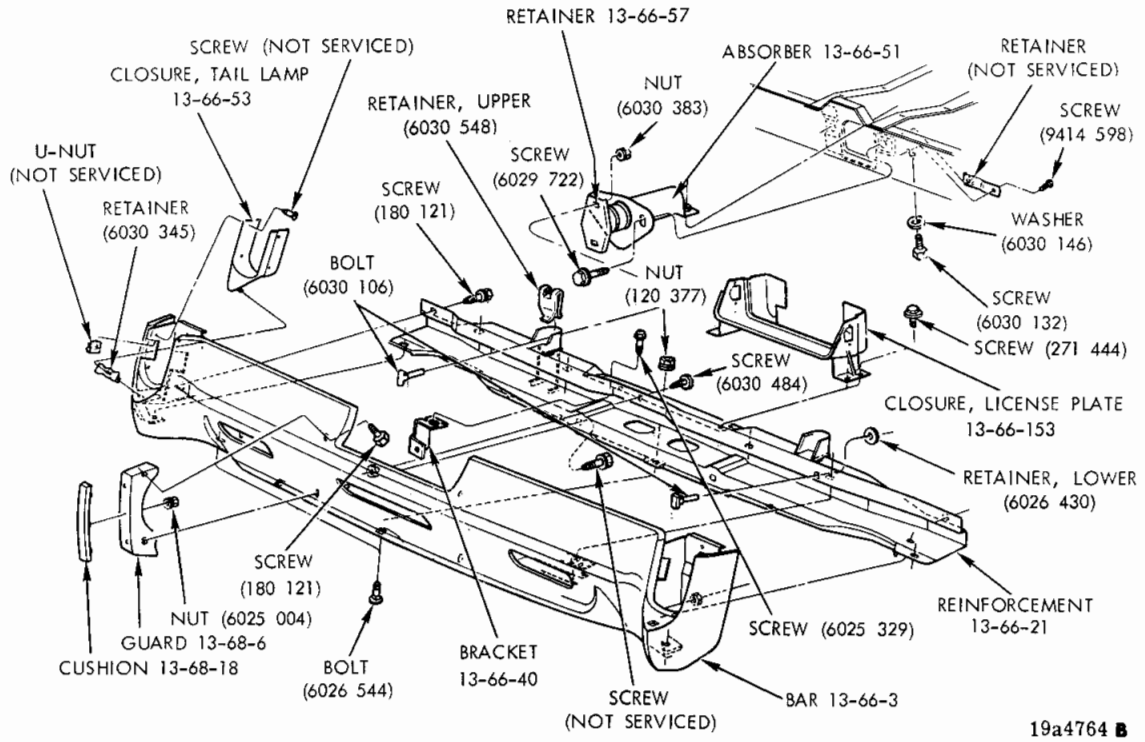

REAR BUMPER - IMPERIAL

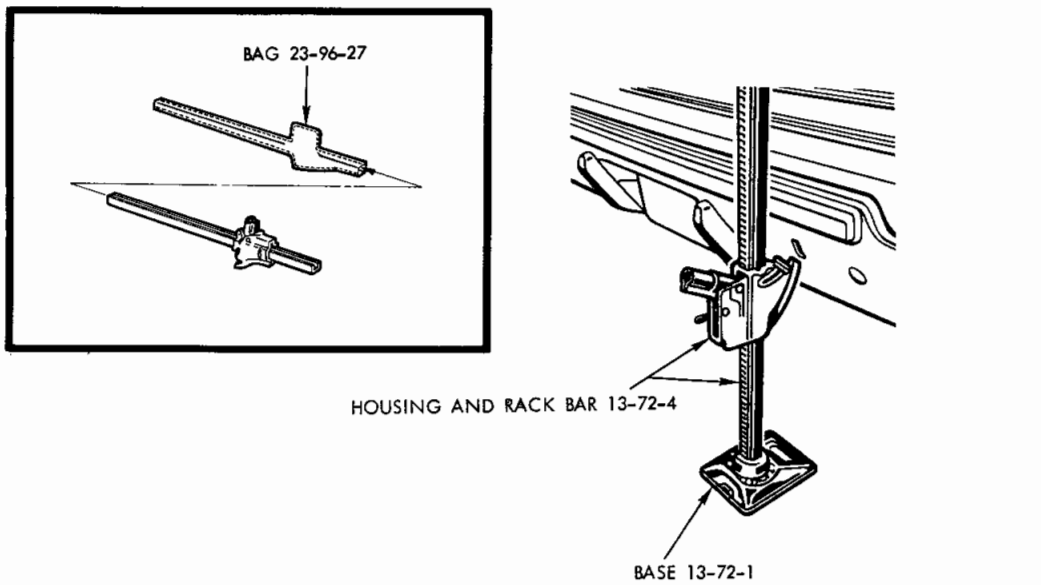

BUMPER JACK - FINGER TYPE

GROUP 13 - FRAME AND BUMPERS

BUMPER, FRONT 13-64
BUMPER, REAR 13-66
CROSSMEMBER, TORSION BAR ANCHOR 13-11
CROSSMEMBER, TRANSMISSION 13-10
FRAME OR FORESTRUCTURE 13-01
GUARDS, BUMPER 13-68
HANGER, REAR SPRING 13-54
HEAT SHIELD, BATTERY 13-35
JACK, BUMPER 13-72
STRAP, BATTERY HOLD DOWN 13-34
STUD, BATTERY HOLD DOWN 13-36
TRAY, BATTERY SUPPORT 13-33

Printed in U.S.A.
November, 1974

CODE	PART NAME	ENG. TYPE OR CU. IN	V	B J	L	R	W	P	D	C (L M)	C (P)	C (H S)	Y	PART NUMBER
13-01-1	**FRAME, 318 Eng., (Export Only)**	8	—	—	—	—	—	—	1	—	—	—	—	3726 815
	360 Eng.	8	—	—	—	—	—	1	1	—	—	—	—	3726 815
	400, 440 Eng.	8	—	—	—	—	—	1	1	1	1	1	1	3726 814
13-03-10	**PLUG, Frame Sidemember Rear**	8	—	—	—	—	—	2	2	2	2	2	2	3726 319
13-10-1	**C/MEMBER, Trans. Mounting**		—	—	—	—	—	1	1	1	1	1	1	3726 387
13-11-5	**C/MEMBER, Frame Front, No. 1**		—	—	—	—	—	1	1	1	1	1	1	3726 400
	Frame Front, No. 2	8	—	—	—	—	—	1	1	1	1	1	1	3752 188
13-33-61	**TRAY, Battery Support**		1	—	1	—	—	—	—	—	—	—	—	3642 334
	All		—	1	—	—	—	—	—	—	—	—	—	3726 551
	All		—	—	—	1	1	—	—	—	—	—	—	3642 970
	All		—	—	—	—	—	1	1	1	1	1	1	3642 978
13-33-62	BRACKET, Tray Support	8	—	—	—	—	—	1	1	1	1	1	1	3642 981
13-33-68	BRACE, Tray Support		1	—	1	—	—	—	—	—	—	—	—	3642 973
	All		—	1	—	—	—	—	—	—	—	—	—	2530 992
13-34-3	**STRAP, Battery Hold-Down**		1	—	1	1	1	—	—	—	—	—	—	3404 404
	All		—	1	—	—	—	—	—	—	—	—	—	3583 020
	All		—	—	—	—	—	1	1	1	1	1	1	3642 986
13-34-5	TIE-PLATE, Battery Hold-Down													
	Strap to Fender Shield		—	—	—	1	1	—	—	—	—	—	—	3726 570
13-35-1	**SHIELD, Battery Heat w/380 Amp. Battery**		—	—	—	1	1	—	—	—	—	—	—	3642 958
	w/420 Amp. Battery		—	—	—	—	—	1	1	—	—	—	—	3642 996
	w/380 Amp. Battery		—	—	—	—	—	—	—	1	1	1	1	3642 996
	CLIP		—	—	—	2	2	2	2	2	2	2	2	6026 240
13-35-4	SEAL, Heat Shield to Hood													
	Inner Panel, w/420 Amp. Battery	8	—	—	—	—	—	1	1	—	—	—	—	3642 998
	w/380 Amp. Battery	8	—	—	—	—	—	—	—	1	1	1	1	3642 998
13-36-5	**STUD, Battery Hold-Down Inner**		1	1	1	1	1	1	1	1	1	1	1	2074 089
	Outer		1	1	1	1	1	—	—	—	—	—	—	2534 814
	NUT, w/WASHER		AR	AR	AR	AR	AR	AR	AR	AR	AR	AR	AR	120 375
13-54-4	**HANGER, Frame Rear Spring Front**		2	—	2	—	—	—	—	—	—	—	—	3815 222
	All		—	2	—	—	—	—	—	—	—	—	—	3815 224
	Except Sta. Wgn., w/8 1/4" or 8 3/8" Axle, w/o Isolators		—	—	—	2	2	—	—	—	—	—	—	3815 216
	w/Isolators		—	—	—	2	2	—	—	—	—	—	—	3815 078
	Except Sta. Wgn., w/8 3/4" Axle		—	—	—	2	2	—	—	—	—	—	—	3815 218
	Sta. Wgn.		—	—	—	2	2	—	—	—	—	—	—	3815 218
	Except Sta. Wgn.		—	—	—	—	—	2	2	2	2	2	2	3815 211
	Sta. Wgn.		—	—	—	—	—	2	2	—	2	—	—	3815 213
	H.D., w/o Isolator		—	—	—	—	—	2	2	—	—	—	—	3815 213
13-54-11	BOLT, Hanger		8	8	8	8	8	8	8	8	8	8	8	2403 247
13-54-15	HANGER, Rear		2	—	2	—	—	—	—	—	—	—	—	2071 764
	Sta. Wgn.		—	—	—	2	2	—	—	—	—	—	—	3400 968
	Except Sta. Wgn., w/Rear Isolators		—	—	—	—	—	1	1	1	1	1	1	3643 898
	w/o Rear Isolators		—	—	—	—	—	1	1	—	—	—	—	3722 074-5
	Sta. Wgn.		—	—	—	—	—	1	1	—	1	—	—	3722 074-5
	BRACKET, Rear Spring Hanger Shipping Tie Down, Except													
	Sta. Wgn., w/Rear Isolators	8	—	—	—	—	—	1	1	1	1	1	1	3722 974-5
	Sta. Wgn.	8	—	—	—	—	—	1	1	—	1	—	—	3722 976-7
	w/o Rear Isolators	8	—	—	—	—	—	1	1	—	—	—	—	3722 976-7
13-64-3	**BAR, FRONT BUMPER FACE, V, All**													
	w/Absorber, Up to 11-14-73		1	—	—	—	—	—	—	—	—	—	—	3753 100
	V, 4 D., w/Absorber, After 11-14-73		1	—	—	—	—	—	—	—	—	—	—	3753 100
	V, 2 D.H.T., Fast-Back, w/o Absorber After 11-14-73		1	—	—	—	—	—	—	—	—	—	—	3686 002
	L, All w/Absorber, Up to 11-14-73		—	—	1	—	—	—	—	—	—	—	—	3753 150
	L, 4 D., w/Absorber, After 11-14-73		—	—	1	—	—	—	—	—	—	—	—	3753 150
	L, 2 D.H.T., Fast-Back, w/o Absorber After 11-14-73		—	—	1	—	—	—	—	—	—	—	—	3686 026
	B, All		—	1	—	—	—	—	—	—	—	—	—	3686 050

CARLINES J - Challenger, B - Barracuda, V - Valiant, L - Dart, R - Satellite, W - Coronet - Charger, P - Plymouth, D - Dodge, C - Chrysler, Y - Imperial

AR Indicates use as required.

Numerals in parentheses ( ) refer to notes.

Printed in U.S.A.

# Indicates parts not listed in any previous parts book.

★ Indicates change or addition.

November, 1974

CODE	PART NAME	ENG. TYPE OR CU. IN	V	B J	L	R	W	P	D	C (L M)	C (P)	C (H S)	Y	PART NUMBER
13-64-3	BAR Cont'd.													
	J, All		—	1	—	—	—	—	—	—	—	—	—	3686 075
	R, 2 D., 2 D.H.T.		—	—	—	1	—	—	—	—	—	—	—	3686 100
	R, 4 D. and Sta. Wgn.		—	—	—	1	—	—	—	—	—	—	—	3753 275
	W, 2 D., 2 D.H.T., Fast-Back		—	—	—	—	1	—	—	—	—	—	—	3686 150
	W, 4 D. and Sta. Wgn.		—	—	—	—	1	—	—	—	—	—	—	3753 350
	P, All		—	—	—	—	—	1	—	—	—	—	—	3753 400
	D, All		—	—	—	—	—	—	1	—	—	—	—	3753 470
	C, All	8	—	—	—	—	—	—	—	1	1	1	—	3753 500
	Y, All	8	—	—	—	—	—	—	—	—	—	—	1	3753 580
13-64-4	SUPPORT, Inner, V, 2 D.H.T., Fast-Back		1	—	—	—	—	—	—	—	—	—	—	3686 008-9
	Outer, V, 2 D.H.T., Fast-Back		1	—	—	—	—	—	—	—	—	—	—	3686 012-3
	Inner, L, 2 D.H.T., Fast-Back		—	—	1	—	—	—	—	—	—	—	—	3686 032-3
	Outer, L, 2 D.H.T., Fast-Back		—	—	1	—	—	—	—	—	—	—	—	3686 036-7
	Inner, B		—	1	—	—	—	—	—	—	—	—	—	3686 058-9
	Outer, B		—	1	—	—	—	—	—	—	—	—	—	3686 062-3
	Inner, J		—	1	—	—	—	—	—	—	—	—	—	3686 082-3
	Outer, J		—	1	—	—	—	—	—	—	—	—	—	3686 086-7
	Inner, R, 2 D.H.T., 2 D.		—	—	—	1	—	—	—	—	—	—	—	3753 256-7
	Outer, R, 2 D.H.T., 2 D.		—	—	—	1	—	—	—	—	—	—	—	3753 260-1
	Inner, W, 2 D., 2 D.H.T., Fast-Back		—	—	—	—	1	—	—	—	—	—	—	3753 332-3
	Outer, W, 2 D., 2 D.H.T., Fast-Back		—	—	—	—	1	—	—	—	—	—	—	3753 336-7
	Frame Front Bumper		—	1	—	—	—	—	—	—	—	—	—	2962 032-3
	REINFORCEMENT, Bumper Front, V, 4 D., w/Absorber		1	—	—	—	—	—	—	—	—	—	—	3753 105
	V, 2 D.H.T., Fast-Back, w/o Absorber		1	—	—	—	—	—	—	—	—	—	—	3686 005
	L, 4 D. w/Absorber		—	—	1	—	—	—	—	—	—	—	—	3753 155
	L, 2 D.H.T., Fast-Back, w/o Absorber		—	—	1	—	—	—	—	—	—	—	—	3686 029
	B		—	1	—	—	—	—	—	—	—	—	—	3686 055
	J		—	1	—	—	—	—	—	—	—	—	—	3686 079
	R, 2 D., 2 D.H.T.		—	—	—	1	—	—	—	—	—	—	—	3686 105
	R, 4 D. and Sta. Wgn.		—	—	—	1	—	—	—	—	—	—	—	3753 279
	W, 2 D., 2 D.H.T.		—	—	—	—	1	—	—	—	—	—	—	3686 195
	Bumper Front, Lower, W, 2 D., 2 D.H.T.		—	—	—	—	1	—	—	—	—	—	—	3686 155
	Bumper Front, W, 4 D. and Sta. Wgn.		—	—	—	—	1	—	—	—	—	—	—	3753 355
	P, All	8	—	—	—	—	—	1	—	—	—	—	—	3753 405
	D, All, Up to 8-27-73	8	—	—	—	—	—	—	1	—	—	—	—	3753 455
	After 8-27-73	8	—	—	—	—	—	—	1	—	—	—	—	3753 457
	C, All	8	—	—	—	—	—	—	—	1	1	1	—	3753 505
	Y, All	8	—	—	—	—	—	—	—	—	—	—	1	3753 555
13-64-9	SHIM, Reinforcement to Energy Absorber Unit		AR	AR	AR	AR	AR	AR	AR	AR	AR	AR	AR	3753 124
13-64-22	FILLER, Bumper Center, W, 2 D., 2 D.H.T.		—	—	—	—	1	—	—	—	—	—	—	3686 185
	C, All	8	—	—	—	—	—	—	—	1	1	1	—	3753 521
	Bumper End, W, 2 D., 2 D.H.T.		—	—	—	—	1	—	—	—	—	—	—	3686 196-7
13-64-26	CLOSURE, Front Bumper, Y		—	—	—	—	—	—	—	—	—	—	1	3753 568-9
13-64-42	RETAINER, Bracket End, Absorber Energy Impact Boot, Front, All		—	—	—	—	—	2	2	2	2	2	2	3722 728
	4 D.		2	—	2	—	—	—	—	—	—	—	—	3722 728
	4 D. and Sta. Wgn.		—	—	—	2	2	—	—	—	—	—	—	3722 728
	Reinforcement to Absorber Energy Impact Unit, Front, 4 D.		2	—	2	—	—	—	—	—	—	—	—	3753 123
	4 D. and Sta. Wgn.		—	—	—	2	2	—	—	—	—	—	—	3753 123
	All		—	—	—	—	—	2	2	2	2	2	2	3753 123
13-64-44	ABSORBER, Energy Impact, Front, All		1	—	—	—	—	—	—	—	—	—	—	3815 176-7
	All		—	—	1	—	—	—	—	—	—	—	—	3815 178-9
	R, 4 D. and Sta. Wgn.		—	—	—	2	—	—	—	—	—	—	—	3722 276
	W, 4 D. and Sta. Wgn.		—	—	—	—	2	—	—	—	—	—	—	3722 277

CARLINES: J - Challenger, B - Barracuda, V - Valiant, L - Dart, R - Satellite, W - Coronet - Charger, P - Plymouth, D - Dodge, C - Chrysler, Y - Imperial

AR Indicates use as required.

Numerals in parentheses ( ) refer to notes.

# Indicates parts not listed in any previous parts book.

★ Indicates change or addition.

Printe

Nove

CODE	PART NAME	ENG. TYPE OR CU. IN	V	B J	L	R	W	P	D	C (L M)	C (P)	C (H S)	Y	PART NUMBER
13-64-44	ABSORBER Cont'd.													
	P and D	8	—	—	—	—	—	1	1	—	—	—	—	3722 340-1
	C	8	—	—	—	—	—	—	—	1	1	1	—	3722 342-3
	Y	8	—	—	—	—	—	—	—	—	—	—	1	3722 340-1
13-64-47	PLATE, Anti-Slip, Support to													
	Frame, All		—	4	—	—	—	—	—	—	—	—	—	3686 072
	4 D. and Sta. Wgn.		—	—	—	2	2	—	—	—	—	—	—	3753 122
	All		—	—	—	—	—	2	2	2	2	2	2	3753 122
13-64-72	BRACKET, Bumper Guard, W, 2 D., 2													
	D.H.T., Fast-Back		—	—	—	—	2	—	—	—	—	—	—	3686 177
	Absorber Energy Impact Center, 4 D.		1	—	1	—	—	—	—	—	—	—	—	3753 128-9
	BRACE, Bumper Alignment,													
	W, 2 D., 2 D.H.T., Fast Back		—	—	—	—	2	—	—	—	—	—	—	3686 167
	Bumper Jacking, R, 2 D., 2 D.H.T.		—	—	—	2	—	—	—	—	—	—	—	3686 117
	W, 2 D., 2 D.H.T., Fast-Back		—	—	—	—	1	—	—	—	—	—	—	3686 174-5
	Bumper Guard, Rear, B		—	1	—	—	—	—	—	—	—	—	—	3754 174-5
13-66-3	**BAR, Rear Bumper Face, V, 2 D.H.T.**		1	—	—	—	—	—	—	—	—	—	—	3754 104
	V, Fast-Back		1	—	—	—	—	—	—	—	—	—	—	3754 052
	V, 4 D.		1	—	—	—	—	—	—	—	—	—	—	3754 104
	L, 2 D.H.T.		—	—	1	—	—	—	—	—	—	—	—	3754 104
	L, Fast-Back		—	—	1	—	—	—	—	—	—	—	—	3754 052
	L, 4 D.		—	—	1	—	—	—	—	—	—	—	—	3754 104
	L, 2 D.H.T., 4 D. (Export Only)		—	—	1	—	—	—	—	—	—	—	—	3754 144
	L, Fast-Back (Export Only)		—	—	1	—	—	—	—	—	—	—	—	3754 088
	B, All		—	1	—	—	—	—	—	—	—	—	—	3754 152
	J, All		—	1	—	—	—	—	—	—	—	—	—	3754 202
	R, 2 D., 2 D.H.T.		—	—	—	1	—	—	—	—	—	—	—	3754 252
	R, 4 D.		—	—	—	1	—	—	—	—	—	—	—	3754 302
	R, Sta. Wgn.		—	—	—	1	—	—	—	—	—	—	—	3754 702
	W, 2 D., 2 D.H.T., Fast-Back		—	—	—	—	1	—	—	—	—	—	—	3686 650
	W, 4 D.		—	—	—	—	1	—	—	—	—	—	—	3754 402
	W, Sta. Wgn.		—	—	—	—	1	—	—	—	—	—	—	3754 702
	P, Except Sta. Wgn.	8	—	—	—	—	—	1	—	—	—	—	—	3754 452
	D, except Sta. Wgn., w/o Guards	8	—	—	—	—	—	—	1	—	—	—	—	3754 502
	w/Guards	8	—	—	—	—	—	—	1	—	—	—	—	3754 503
	C-L, C-M,	8	—	—	—	—	—	—	—	1	—	—	—	3754 552
	C-H, C-S, w/o Guards	8	—	—	—	—	—	—	—	—	—	1	—	3754 602
	w/Guards	8	—	—	—	—	—	—	—	—	—	1	—	3754 603
	P, D, C, Sta. Wgn.,													
	w/or w/o Guards	8	—	—	—	—	—	1	1	—	1	—	—	3754 752
	w/Step Pads	8	—	—	—	—	—	1	1	—	1	—	—	3754 762
	Y, All	8	—	—	—	—	—	—	—	—	—	—	1	3754 652
13-66-16	SUPPORT, L, 2 D.H.T., 4 D. (Export Only)		—	—	1	—	—	—	—	—	—	—	—	3754 142-3
	L, Fast-Back (Export Only)		—	—	1	—	—	—	—	—	—	—	—	3754 092-3
	B		—	1	—	—	—	—	—	—	—	—	—	3754 156-7
	J		—	1	—	—	—	—	—	—	—	—	—	3754 206-7
	R, 2 D.H.T., 2 D.		—	—	—	1	—	—	—	—	—	—	—	3754 260-1
	W, 2 D., 2 D.H.T., Fast-Back		—	—	—	—	1	—	—	—	—	—	—	3686 658-9
13-66-21	REINFORCEMENT, Rear Bumper													
	V, 2 D.H.T., 4 D.		1	—	—	—	—	—	—	—	—	—	—	3754 107
	V, Fast Back		1	—	—	—	—	—	—	—	—	—	—	3754 057
	L, 2 D.H.T., 4 D.		—	—	1	—	—	—	—	—	—	—	—	3754 107
	L, Fast-Back		—	—	1	—	—	—	—	—	—	—	—	3754 057
	B, All		—	1	—	—	—	—	—	—	—	—	—	3754 169
	J, All		—	1	—	—	—	—	—	—	—	—	—	3754 205
	R, 2 D., 2 D.H.T.		—	—	—	1	—	—	—	—	—	—	—	3754 273
	R, 4 D.		—	—	—	1	—	—	—	—	—	—	—	3754 305
	W, 2 D., 2 D.H.T., Fast-Back		—	—	—	—	1	—	—	—	—	—	—	3686 655
	W, 4 D.		—	—	—	—	1	—	—	—	—	—	—	3754 421
	R, W, Sta. Wgn.		—	—	—	1	1	—	—	—	—	—	—	3754 705
	P, except Sta. Wgn.	8	—	—	—	—	—	1	—	—	—	—	—	3754 455

CARLINES
J - Challenger
B - Barracuda
V - Valiant
L - Dart
R - Satellite
W - Coronet - Charger
P - Plymouth
D - Dodge
C - Chrysler
Y - Imperial

AR Indicates use as required.
Numerals in parentheses ( ) refer to notes.
Printed in U.S.A.

# Indicates parts not listed in any previous parts book.
★ Indicates change or addition.
November, 1974

CODE	PART NAME	ENG. TYPE OR CU. IN	V	B J	L	R	W	P	D	C (L M)	C (P)	C (H S)	Y	PART NUMBER
13-66-21	REINFORCEMENT Cont'd.													
	D, except Sta. Wgn.	8	—	—	—	—	—	—	1	—	—	—	—	3754 507
	C-L, C-M	8	—	—	—	—	—	—	—	1	—	—	—	3754 557
	C-H, C-S	8	—	—	—	—	—	—	—	—	—	1	—	3754 615
	P, D, C, Sta. Wgn.	8	—	—	—	—	—	1	1	—	1	—	—	3754 177
	Y	8	—	—	—	—	—	—	—	—	—	—	1	3754 657
13-66-38	SHIELD, Bumper Splash, C-H, C-S	8	—	—	—	—	—	—	—	—	—	1	—	3754 621
13-66-40	BRACKET, Bumper Back-Up Lamp, Mounting	8	—	—	—	—	—	—	—	—	—	—	1	3754 684-5
13-66-45	SHIM, Reinforcement to Energy Absorber Unit		AR	AR	AR	AR	AR	AR	AR	AR	AR	AR	AR	3753 124
13-66-46	NAME-PLATE, R, 2 D., 2 D.H.T.		—	—	—	1	—	—	—	—	—	—	—	3613 880
13-66-48	FILLER, Bumper Center, R, 2 D., 2 D.H.T.		—	—	—	1	—	—	—	—	—	—	—	3686 617
	W, 2 D., 2 D.H.T., Fast-Back		—	—	—	—	1	—	—	—	—	—	—	3754 001
	Outer, R, 2 D., 2 D.H.T.		—	—	—	1	—	—	—	—	—	—	—	3686 618-9
	W, 2 D., 2 D.H.T., Fast-Back		—	—	—	—	1	—	—	—	—	—	—	3754 002-3
	R, W, Sta. Wgn.		—	—	—	1	1	—	—	—	—	—	—	3754 730-1 •
	Bumper Rear, D, 2 D., 4 D.	8	—	—	—	—	—	—	1	—	—	—	—	• 3754 532
	Bumper T/Lamp, C-L, C-M	8	—	—	—	—	—	—	—	1	—	—	—	3754 576-7
	RETAINER, Center, R, 2 D., 2 D.H.T.		—	—	—	1	—	—	—	—	—	—	—	3754 270-1
13-66-50	REFLEX, Bumper Rear	8	—	—	—	—	—	—	—	—	—	—	1	3728 572-3
	REFLECTOR, Bumper Rear, Sta. Wgn.		—	—	—	2	2	—	—	—	—	—	—	3728 350
13-66-51	ABSORBER, Energy Impact, Rear, V and L		2	—	2	—	—	—	—	—	—	—	—	3722 348
	R and W, 4 D.		—	—	—	2	2	—	—	—	—	—	—	3722 349
	R and W, Sta. Wgn.		—	—	—	2	2	—	—	—	—	—	—	3722 344
	P, D and C, Except Sta. Wgn.	8	—	—	—	—	—	2	2	2	2	2	—	3722 350
	P, D and C, Sta. Wgn.	8	—	—	—	—	—	2	2	—	2	—	—	3722 345
	Y	8	—	—	—	—	—	—	—	—	—	—	2	3722 350
13-66-57	RETAINER, Bracket End, Absorber Energy Impact Boot, Rear		2	—	2	—	—	2	2	2	2	2	2	3722 728
	4 D. and Sta. Wgn.		—	—	—	2	2	—	—	—	—	—	—	3722 728
	Reinforcement to Energy Absorber Unit, Rear	8	—	—	—	—	—	2	2	2	2	2	2	3753 123
13-66-105	BRACKET, w/NUT, Rear Floor Pan To Stone Deflector, 2 D.H.T., 4 D.		1	—	1	—	—	—	—	—	—	—	—	3445 483
	V, 2 D.H.T.		1	—	—	—	—	—	—	—	—	—	—	3445 483
	SUPPORT, w/Nut, Stone Deflector To Rear C/Member, B		—	2	—	—	—	—	—	—	—	—	—	3570 890
13-66-106	DEFLECTOR, Rear Stone, B, 318 Eng.	8	—	1	—	—	—	—	—	—	—	—	—	3616 901
	B, 360 Eng.		—	1	—	—	—	—	—	—	—	—	—	3616 905
	J, 318 Eng.	8	—	1	—	—	—	—	—	—	—	—	—	3616 800
	J, 360 Eng.		—	1	—	—	—	—	—	—	—	—	—	3616 803
	R, 2 D., 2 D.H.T.		—	—	—	1	—	—	—	—	—	—	—	3616 431
	W 2 D., 2 D.H.T., Fast-Back, w/225, 318, 360 Eng., w/o H/Perf. and 400 Eng. w/4 Bbl. Carb.		—	—	—	—	1	—	—	—	—	—	—	3616 546
	W 2 D., 2 D.H.T., Fast-Back, w/360 Eng., 400 Eng. 4 Bbl. Carb., H/Perf. 440 Eng., All		—	—	—	—	1	—	—	—	—	—	—	3616 553
13-66-147	STEP-PAD, Sta. Wgn.		—	—	—	—	—	2	2	—	2	—	—	3754 772
13-66-153	CLOSURE, Bumper License Plate, R, 4 D.		—	—	—	1	—	—	—	—	—	—	—	3754 322
	W, 2 D., 2 D.H.T., Fast-Back		—	—	—	—	1	—	—	—	—	—	—	3595 194
	W, 4 D.		—	—	—	—	1	—	—	—	—	—	—	3754 408
	C-L, C-M	8	—	—	—	—	—	—	—	1	—	—	—	3754 570
	Y, All	8	—	—	—	—	—	—	—	—	—	—	1	3754 672

CODE	PART NAME	ENG. TYPE OR CU. IN	V	B J	L	R	W	P	D	C (L M)	C (P)	C (H S)	Y	PART NUMBER
13-66-153	CLOSURE Cont'd.													
	Bumper Center, D, 2 D., 4 D., Up to 11-17-73	8	—	—	—	—	—	—	1	—	—	—	—	3754 536
	After 11-17-73	8	—	—	—	—	—	—	1	—	—	—	—	3754 532
	C-H, C-S	8	—	—	—	—	—	—	—	—	—	1	—	3754 610
	Bumper Quarter, C-H, C-S	8	—	—	—	—	—	—	—	—	—	1	—	3754 612-3
	Bumper Tail Lamp	8	—	—	—	—	—	—	—	—	—	—	1	3754 674-5
	BUTTON, Closure to Bumper		—	—	—	—	1	—	—	—	—	—	—	1943 547
13-68-6	**GUARD, BUMPER FRONT, V, All, Up to 11-14-73**		2	—	—	—	—	—	—	—	—	—	—	3753 115
	V, 4 D., After 11-14-73		2	—	—	—	—	—	—	—	—	—	—	3753 115
	V, 2 D.H.T., Fast-Back, After 11-14-73		2	—	—	—	—	—	—	—	—	—	—	3686 017
	L, All, Up to 11-14-73		—	—	1	—	—	—	—	—	—	—	—	3753 162-3
	L, 4 D., After 11-14-73		—	—	1	—	—	—	—	—	—	—	—	3753 162-3
	L, 2 D.H.T., Fast-Back, After 11-14-73		—	—	1	—	—	—	—	—	—	—	—	3686 042-3
	B, All		—	1	—	—	—	—	—	—	—	—	—	3686 068-9
	J, All		—	1	—	—	—	—	—	—	—	—	—	3686 094-5
	R, 2 D., 2 D.H.T., w/o Deluxe Guards		—	—	—	1	—	—	—	—	—	—	—	3686 114-5
	w/Deluxe Guards		—	—	—	1	—	—	—	—	—	—	—	3686 120-1
	R, 4 D. and Sta. Wgn., w/Deluxe Guards		—	—	—	2	—	—	—	—	—	—	—	3753 285
	W, 2 D., 2 D.H.T., Fast-Back, w/o Deluxe Guards		—	—	—	—	2	—	—	—	—	—	—	3686 170
	w/Deluxe Guards		—	—	—	—	2	—	—	—	—	—	—	3686 183
	W, 4 D. and Sta. Wgn., w/Deluxe Guards		—	—	—	—	1	—	—	—	—	—	—	3753 360-1
	P, All w/Deluxe Guard		—	—	—	—	—	1	—	—	—	—	—	3753 416-7
	D, All, w/Deluxe Guards		—	—	—	—	—	—	1	—	—	—	—	3753 460-1
	w/o Deluxe Guards		—	—	—	—	—	—	1	—	—	—	—	3753 464-5
	C, All, w/Deluxe Guards	8	—	—	—	—	—	—	—	1	1	1	—	3753 516-7
	Y, All	8	—	—	—	—	—	—	—	—	—	—	1	3753 574-5
	GUARD, REAR BUMPER, V, 2 D.H.T., 4 D., w/Deluxe Guards		1	—	—	—	—	—	—	—	—	—	—	3754 118-9
	V, Fast-Back, w/Deluxe Guards		2	—	—	—	—	—	—	—	—	—	—	3754 066
	L, 2 D.H.T., 4 D., w/Deluxe Guards		—	—	1	—	—	—	—	—	—	—	—	3754 118-9
	L, Fast-Back, w/Deluxe Guards		—	—	2	—	—	—	—	—	—	—	—	3754 066
	B, All		—	1	—	—	—	—	—	—	—	—	—	3686 566-7
	J, All		—	1	—	—	—	—	—	—	—	—	—	3686 590-1
	R, 2 D., 2 D.H.T., w/o Deluxe Guards		—	—	—	2	—	—	—	—	—	—	—	3754 262
	w/Deluxe Guards		—	—	—	2	—	—	—	—	—	—	—	3754 266
	R, 4 D., Center		—	—	—	1	—	—	—	—	—	—	—	3754 320
	w/Deluxe Guards		—	—	—	2	—	—	—	—	—	—	—	3754 436
	W, 2 D., 2 D.H.T., Fast-Back, w/o Deluxe Guards		—	—	—	—	2	—	—	—	—	—	—	3754 362
	w/Deluxe Guards		—	—	—	—	2	—	—	—	—	—	—	3754 366
	W, 4 D., Center Up to 10-1-73		—	—	—	—	1	—	—	—	—	—	—	3754 320
	After 10-1-73		—	—	—	—	1	—	—	—	—	—	—	3754 336
	W, 4 D., w/Deluxe Guards		—	—	—	—	1	—	—	—	—	—	—	3754 416-7
	R, W, Sta. Wgn., All		—	—	—	2	2	—	—	—	—	—	—	3754 744
	P, except Sta. Wgn., 7 3/4" High 1 3/4" Wide		—	—	—	—	—	1	—	—	—	—	—	3754 478-9
	After 10-25-73		—	—	—	—	—	1	—	—	—	—	—	3754 512-3
	8 1/2" High, 2 1/4" Wide		—	—	—	—	—	2	—	—	—	—	—	3754 584
	D, except Sta. Wgn.		—	—	—	—	—	—	2	—	—	—	—	3754 518
	C-L, C-M	8	—	—	—	—	—	—	—	2	—	—	—	3754 566
	C-H, C-S	8	—	—	—	—	—	—	—	—	—	2	—	3754 618
	P, D, C, Sta. Wgn.	8	—	—	—	—	—	2	2	—	2	—	—	3754 768
	Y, All	8	—	—	—	—	—	—	—	—	—	—	2	3754 668
	NERF-STRIP, Bumper Front	8	—	—	—	—	—	—	—	—	—	—	1	3753 582

CARLINES: J - Challenger, B - Barracuda, V - Valiant, L - Dart, R - Satellite, W - Coronet - Charger, P - Plymouth, D - Dodge, C - Chrysler, Y - Imperial

AR Indicates use as required.

Numerals in parentheses ( ) refer to notes.

Printed in U.S.A.

# Indicates parts not listed in any previous parts book.

★ Indicates change or addition.

November, 1974

CODE	PART NAME	ENG. TYPE OR CU. IN	V	B J	L	R	W	P	D	C (L M)	C (P)	C (H S)	Y	PART NUMBER
13-68-12	BRACE, Rear Bumper Guard													
	B, All		—	1	—	—	—	—	—	—	—	—	—	3754 174-5
	J, All		—	1	—	—	—	—	—	—	—	—	—	3754 218-9
	W, 2 D., 2 D.H.T., Fast-Back,													
	Up to 11-7-73		—	—	—	—	1	—	—	—	—	—	—	3754 372-3
	After 11-7-73		—	—	—	—	1	—	—	—	—	—	—	3754 380-1
13-68-14	EXTENSION, Rear Bumper Guard													
	Cushion, B		—	1	—	—	—	—	—	—	—	—	—	3686 570-1
	J		—	1	—	—	—	—	—	—	—	—	—	3686 520-1
13-68-18	CUSHION, GUARD FRONT, V, L, All,													
	Up to 11-14-73		2	—	2	—	—	—	—	—	—	—	—	3753 116
	V, L, 4 D., After 11-14-73		2	—	2	—	—	—	—	—	—	—	—	3753 116
	V, L, 2 D.H.T., Fast-Back, After 11-14-73		2	—	2	—	—	—	—	—	—	—	—	3686 018
	B, J, All		—	2	—	—	—	—	—	—	—	—	—	3753 206
	w/Deluxe Guards, R, 2 D., 2 D.H.T.		—	—	—	2	—	—	—	—	—	—	—	3753 264
	R, 4 D. and Sta. Wgn.		—	—	—	2	—	—	—	—	—	—	—	3754 318
	W, 2 D., 2 D.H.T., Fast-Back,													
	w/Deluxe Guards		—	—	—	—	2	—	—	—	—	—	—	3753 339
	W, 4 D. and Sta. Wgn.,													
	w/Deluxe Guards		—	—	—	—	2	—	—	—	—	—	—	3753 362
	P and D, w/Deluxe Guards		—	—	—	—	—	2	2	—	—	—	—	3753 462
	C, All	8	—	—	—	—	—	—	—	2	2	2	—	3753 518
	Y, All	8	—	—	—	—	—	—	—	—	—	—	2	3753 576
	CUSHION, GUARD, REAR, w/Deluxe													
	Guards, V, L		2	—	2	—	—	—	—	—	—	—	—	3753 116
	B, All		—	1	—	—	—	—	—	—	—	—	—	3754 162-3
	J, All		—	1	—	—	—	—	—	—	—	—	—	3754 212-3
	R, w/Deluxe Guards, 2 D., 2 D.H.T.		—	—	—	2	—	—	—	—	—	—	—	3754 268
	R, 4 D.		—	—	—	2	—	—	—	—	—	—	—	3754 318
	W, 2 D., 2 D.H.T., Fast-Back		—	—	—	—	2	—	—	—	—	—	—	3754 368
	W, 4 D		—	—	—	—	2	—	—	—	—	—	—	3753 362
	R, W, Sta. Wgn.		—	—	—	2	2	—	—	—	—	—	—	3753 206
	P, Except Sta. Wgn., Up to 11-29-73	8	—	—	—	—	—	2	—	—	—	—	—	3754 520
	After 11-29-73	8	—	—	—	—	—	2	—	—	—	—	—	3754 670
	D, except Sta. Wgn.		—	—	—	—	—	—	2	—	—	—	—	3754 520
	C, Except Sta. Wgn.	8	—	—	—	—	—	—	—	2	—	2	—	3754 670
	Sta. Wgn., P, D, C		—	—	—	—	—	2	2	—	2	—	—	3754 770
	Y, All	8	—	—	—	—	—	—	—	—	—	—	2	3754 670
	PAD, Bumper Impact FRONT,													
	W, 2 D., 2 D.H.T., Fast-Back		—	—	—	—	1	—	—	—	—	—	—	3686 164-5
13-72-1	**BASE, Bumper Jack Rack Bar**		1	1	1	1	1	—	—	—	—	—	—	3595 721
13-72-2	WRENCH or HANDLE		1	1	1	—	—	—	—	—	—	—	—	3464 976
	All		—	—	—	1	1	1	1	1	1	1	1	3464 978
13-72-4	HOUSING and RACK BAR, Bumper Jack		1	1	1	1	1	—	—	—	—	—	—	3595 720
	HOUSING and RACK BAR, w/BASE,													
	Bumper Jack Complete													
	Except Sta. Wgn., P, D		—	—	—	—	—	1	1	—	—	—	—	3621 395
	Except Sta. Wgn., C	8	—	—	—	—	—	—	—	1	—	1	—	3685 686
	Y, All	8	—	—	—	—	—	—	—	—	—	—	1	3685 686
	Sta. Wgn.		—	—	—	—	—	1	1	—	1	—	—	3621 396
13-72-6	BOLT, Jack Bar Retainer, Except													
	Sta. Wgn.		—	—	—	—	—	—	1	1	—	1	—	3615 773
13-72-7	SPRING, Jack Stowage		1	1	1	—	—	—	—	—	—	—	—	3615 817
13-72-10	BRACKET and w/SCREW, Quarter Panel													
	Wheel House Jack Stowage	45, 46	—	—	—	—	—	—	—	—	1	1	1	3767 648

NOTES

CARLINES: J - Challenger, B - Barracuda, V - Valiant, L - Dart, R - Satellite, W - Coronet - Charger, P - Plymouth, D - Dodge, C - Chrysler, Y - Imperial

AR Indicates use as required.

Numerals in parentheses ( ) refer to notes.

Printed in U.S.A.

# Indicates parts not listed in any previous parts book.

★ Indicates change or addition.

November, 1974

NOTES

GROUP 14 - FUEL

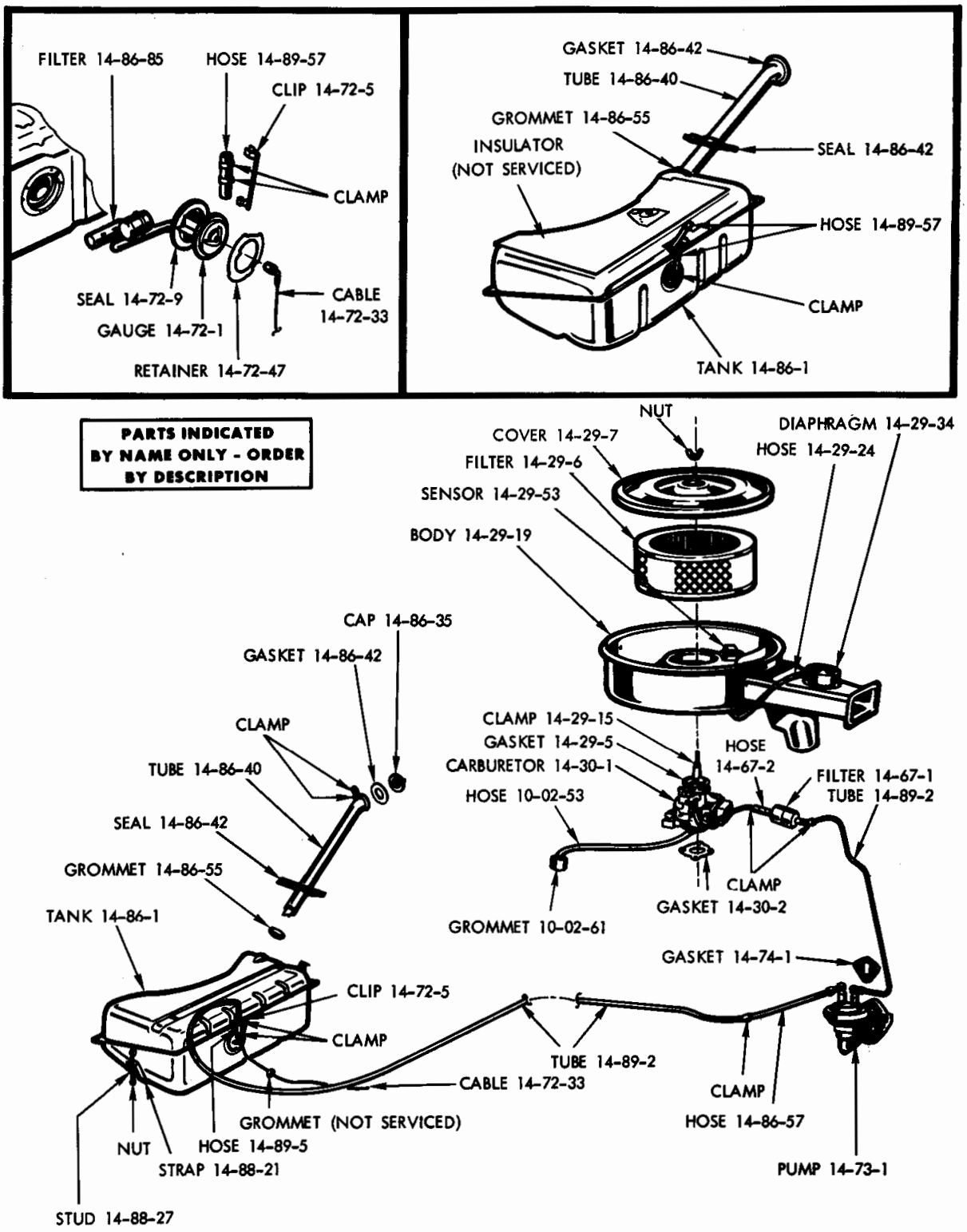

TYPICAL FUEL SYSTEM - VALIANT AND DART ILLUSTRATED

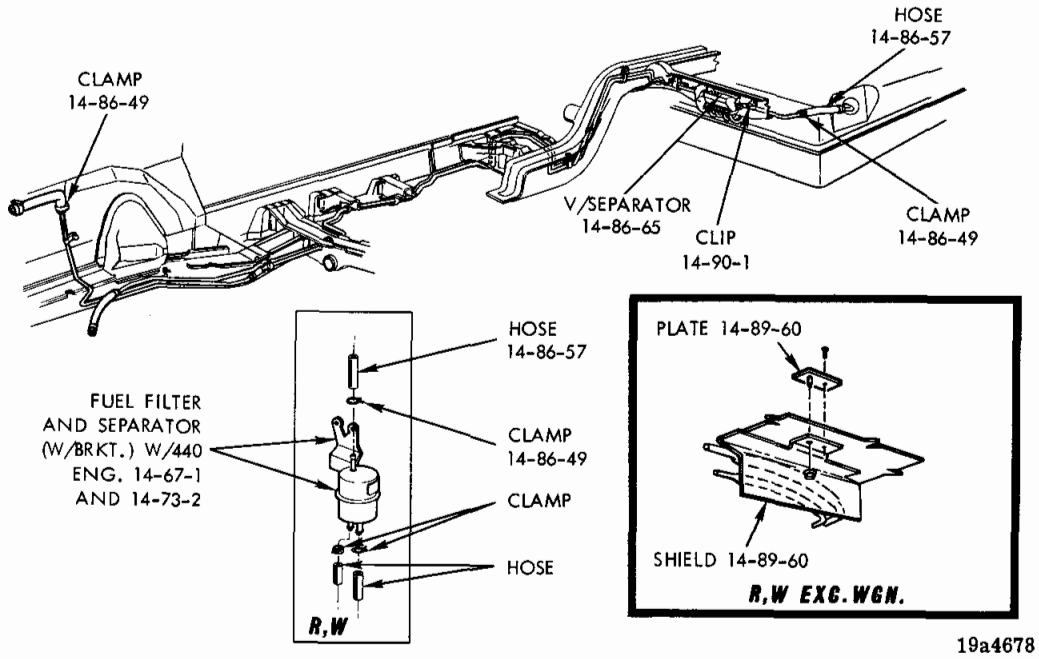

FUEL AND ECS TUBE ROUTING - B, J (WITH R, W INSERT)

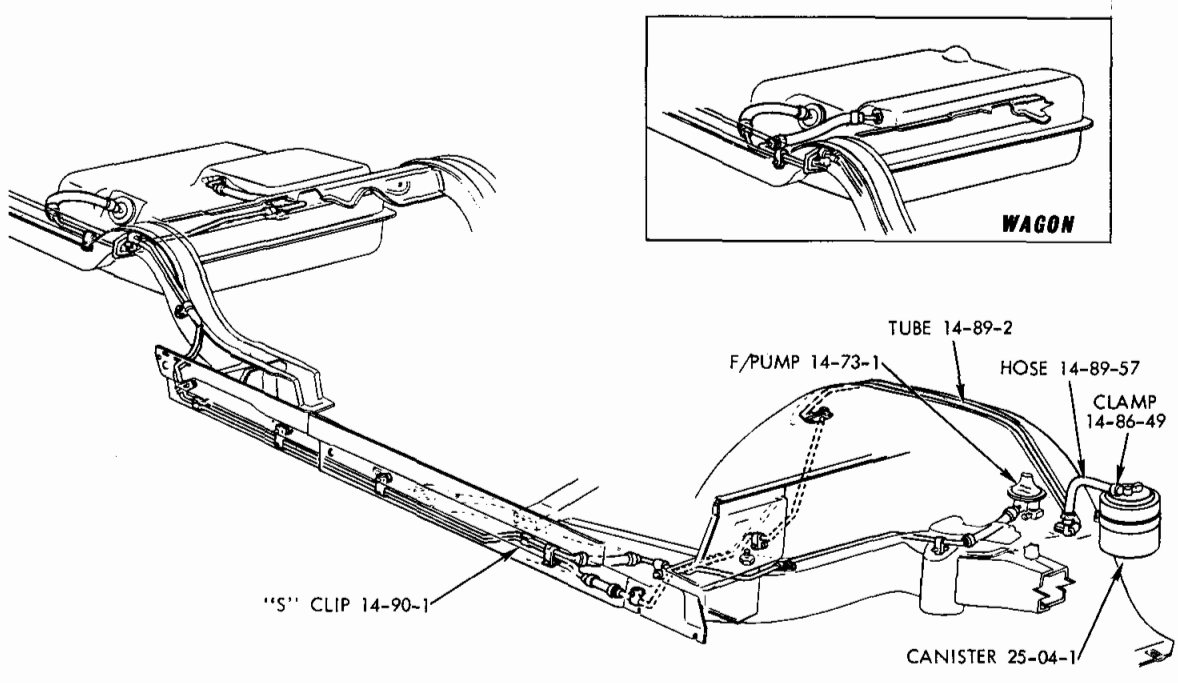

FUEL AND ECS TUBE ROUTING - TYPICAL OF P, D, C, Y

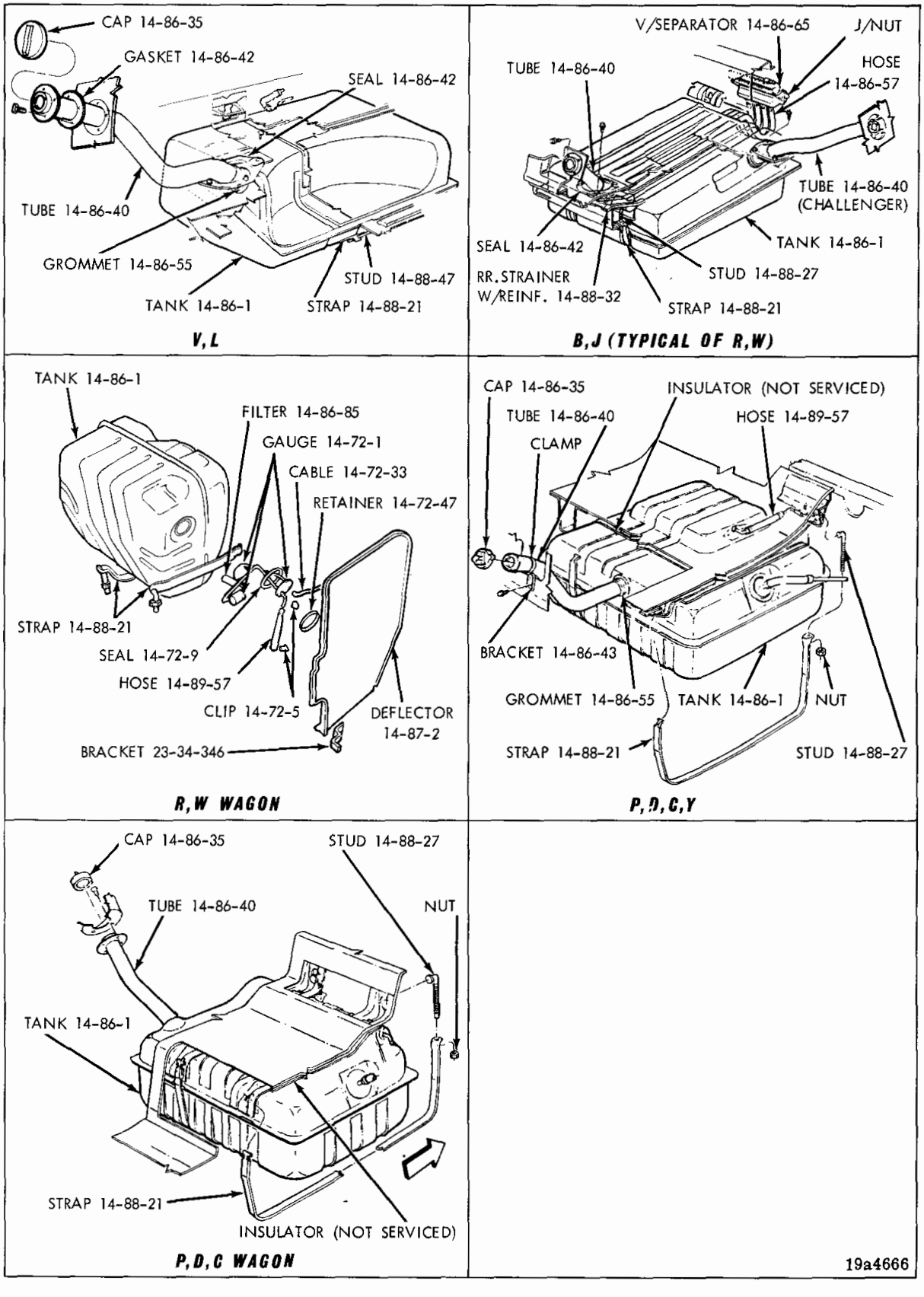

FUEL TANK CHART

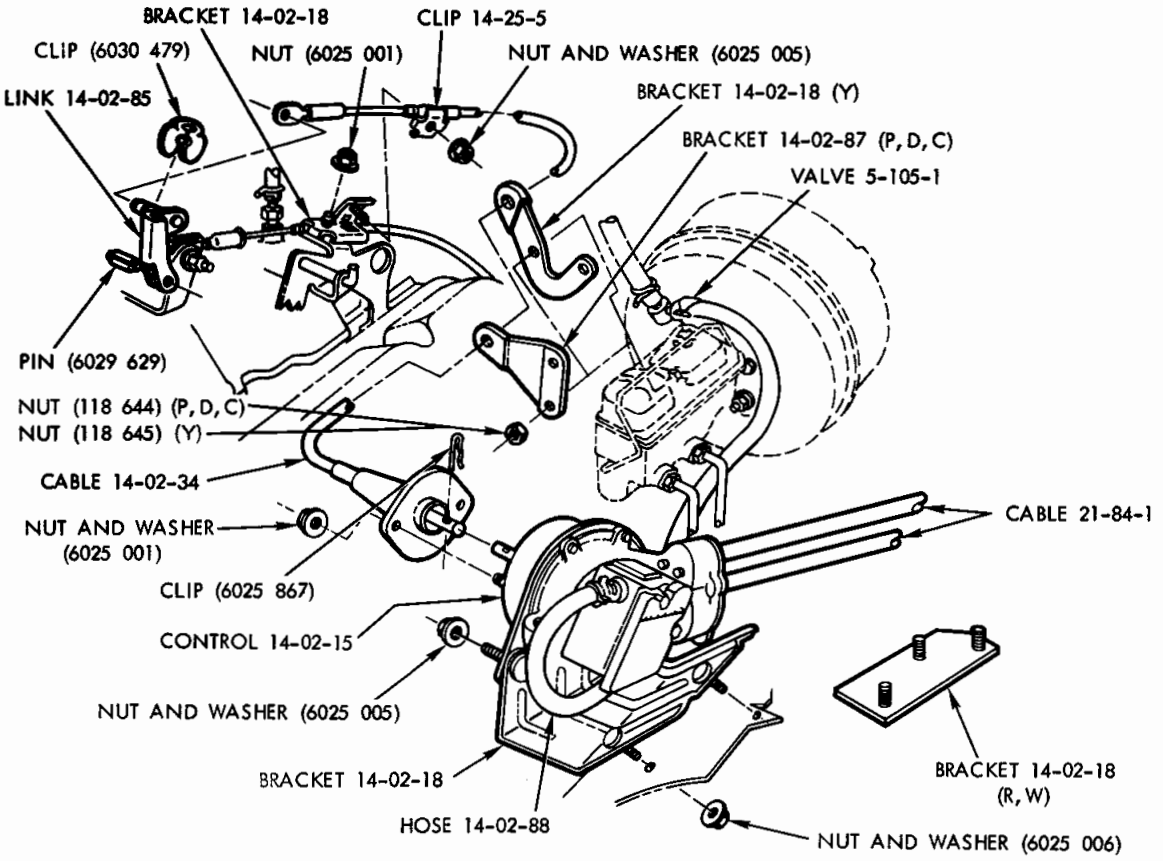

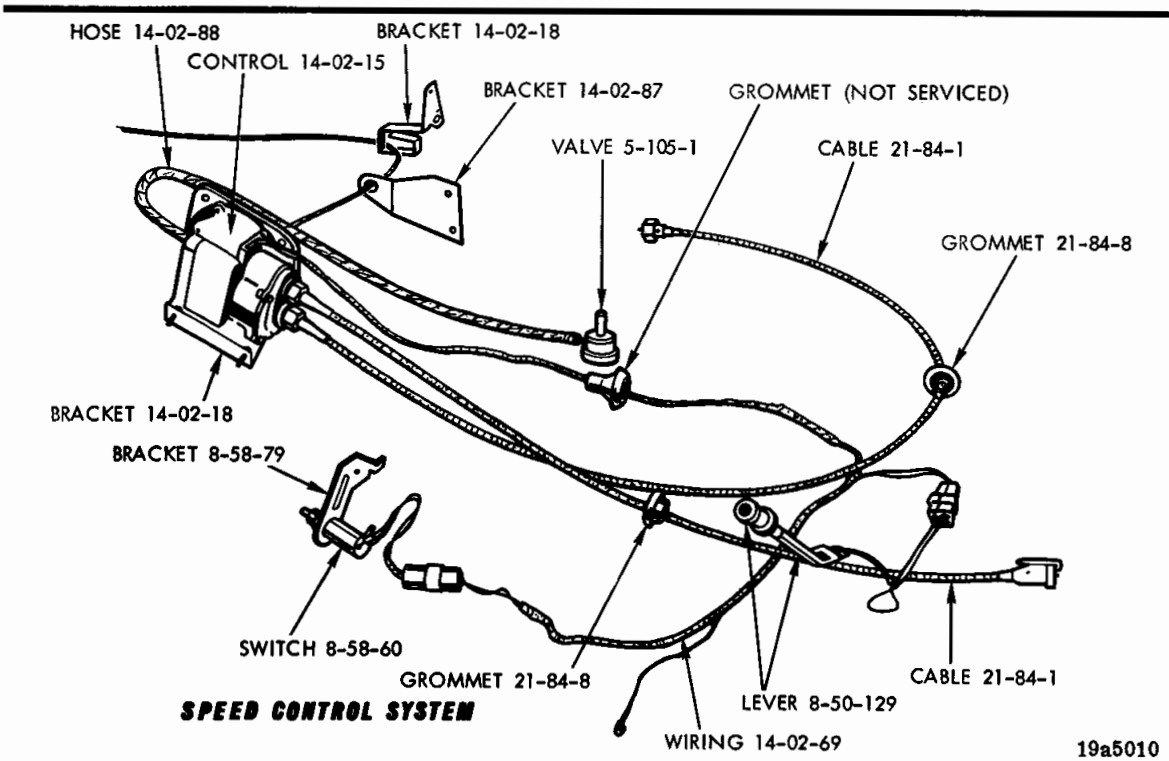

SPEED CONTROL - R, W, P, D, C, Y

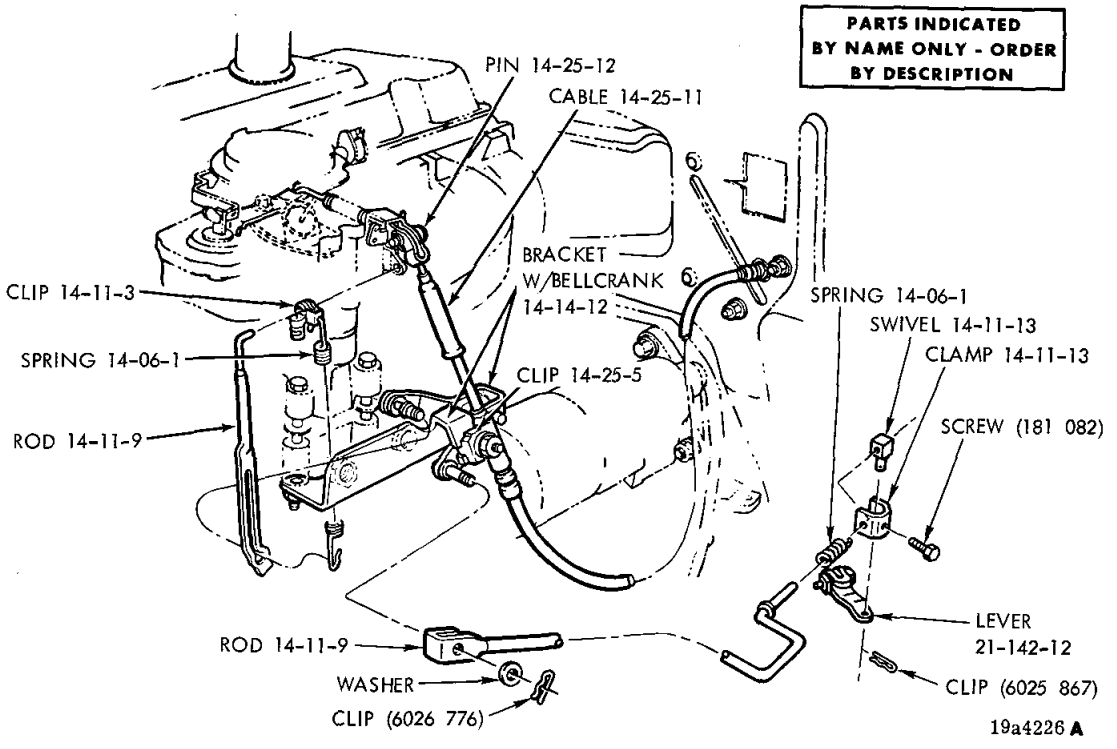

THROTTLE LINKAGE (6 CYLINDER) - ALL EXCEPT CHRYSLER AND IMPERIAL

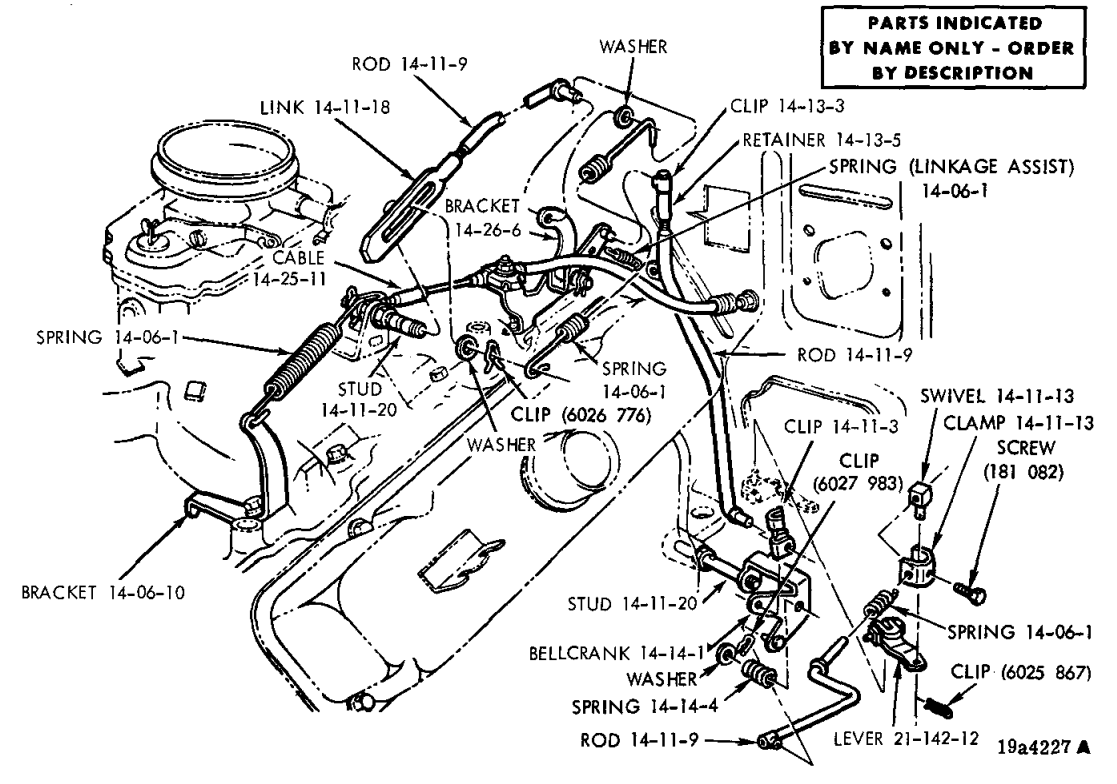

THROTTLE LINKAGE - VALIANT AND DART WITH 318 ENGINE

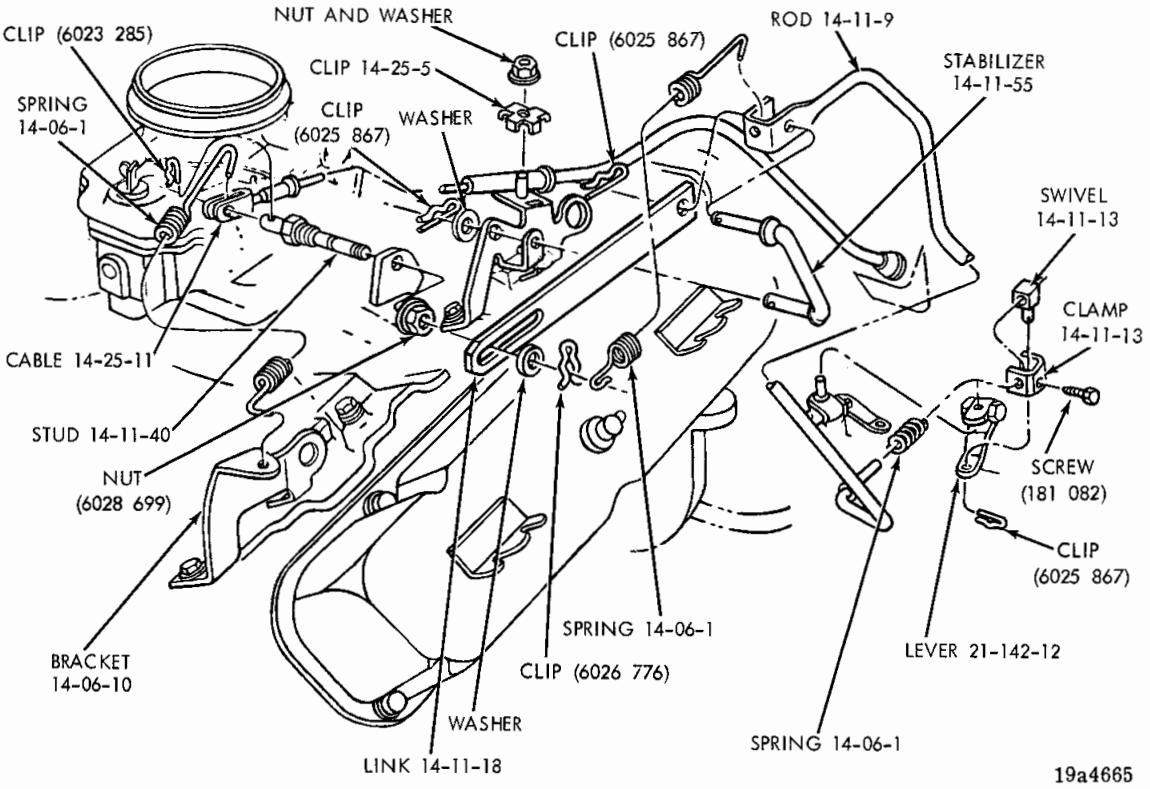

THROTTLE LINKAGE - MANUAL AND AUTOMATIC TRANSMISSION - 318 AND 360 ENGINES

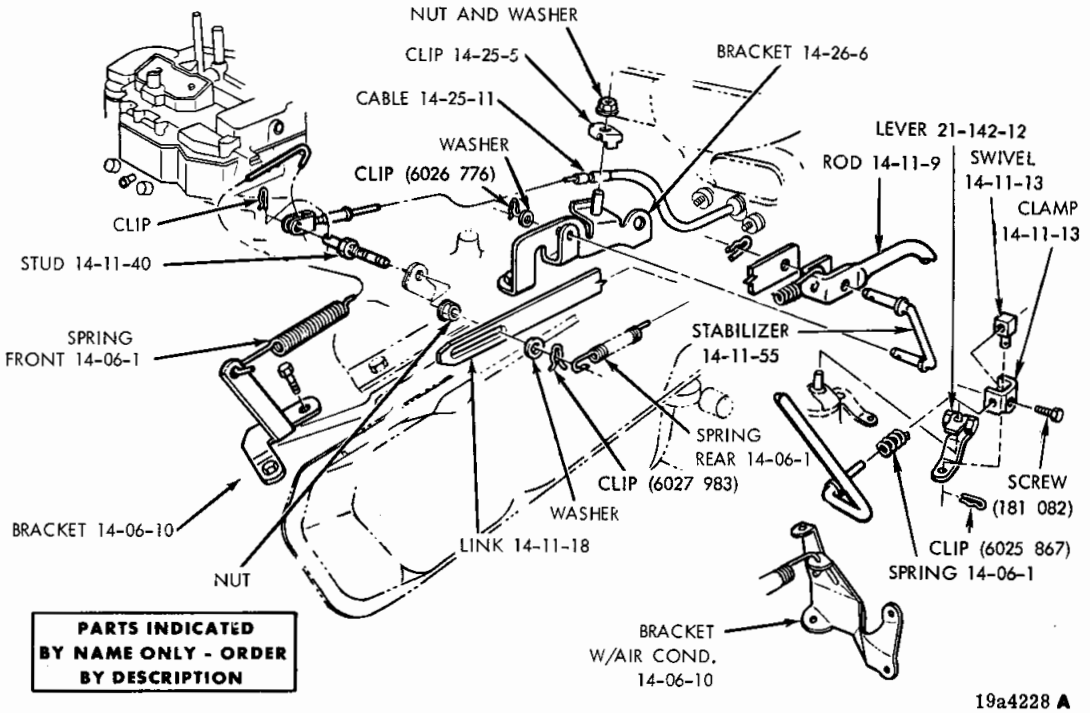

THROTTLE CONTROLS - ALL WITH 400 AND 440 ENGINES

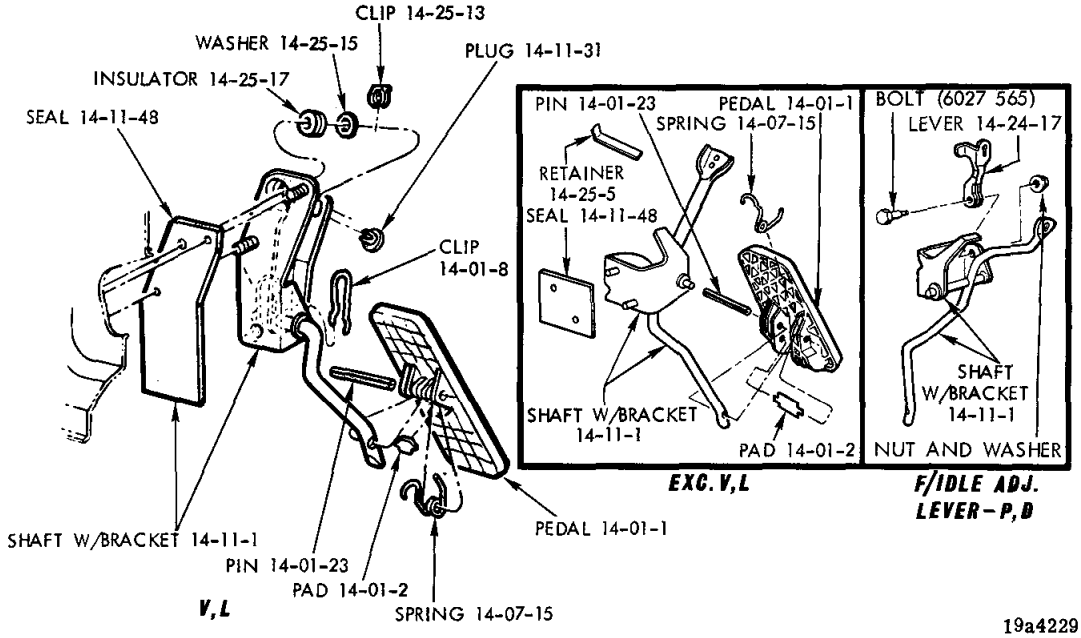

19a4229 A

ACCELERATOR PEDAL AND SHAFT

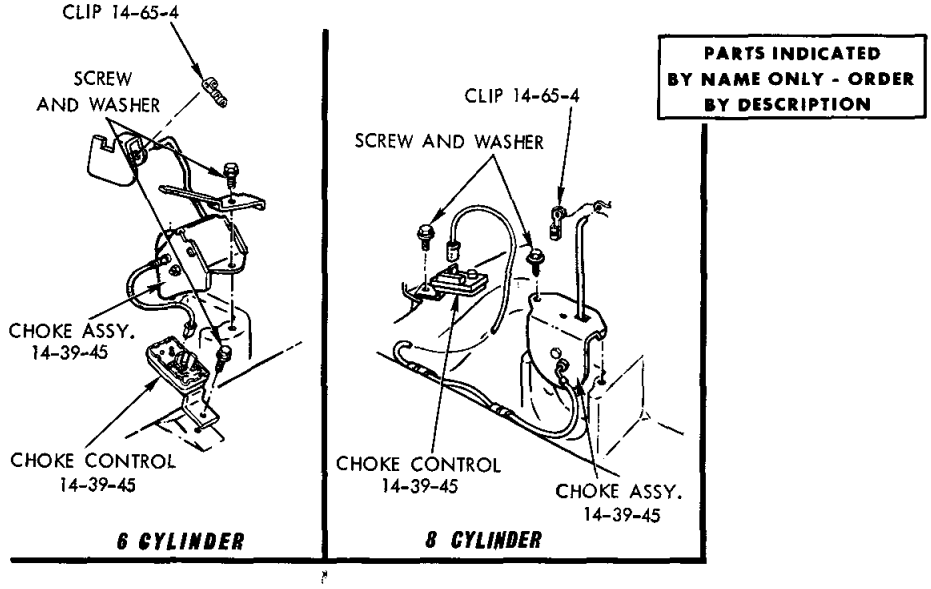

19a4222 A

AUTOMATIC CHOKE (ELECTRIC)

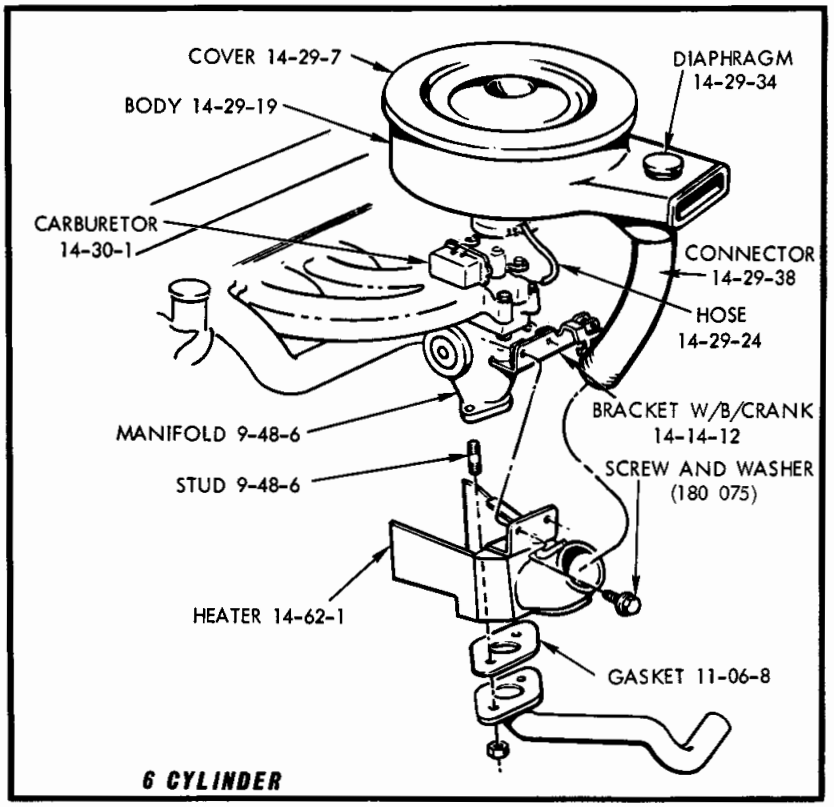

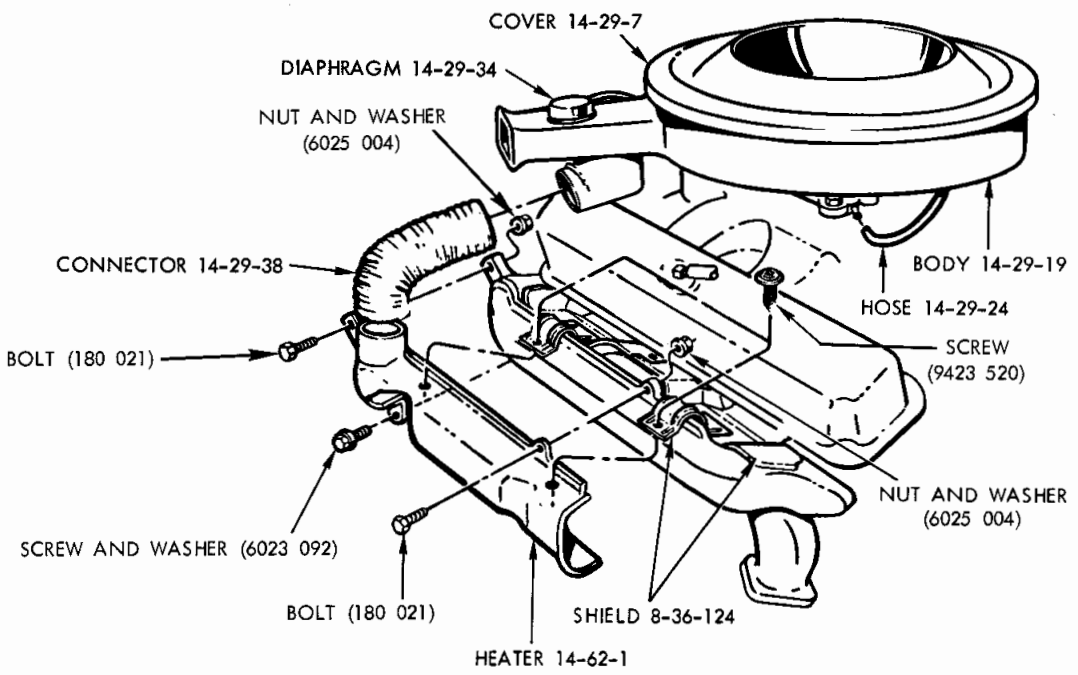

19a4221 A

CARBURETOR AIR CLEANER - 6 AND 8 CYLINDER

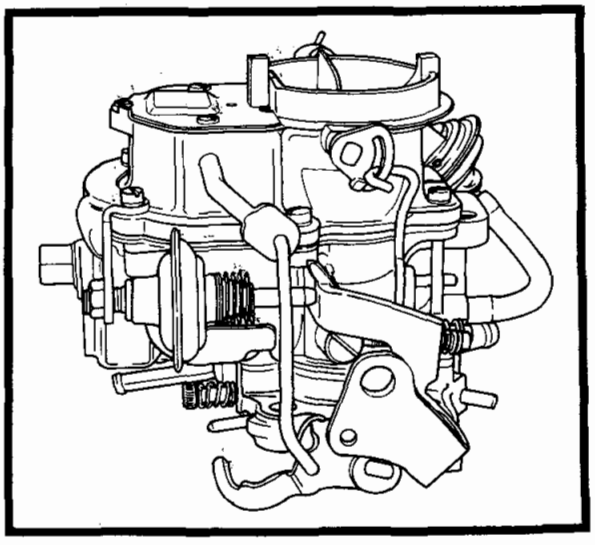

Typical Carter - Series BBD

SEPARATELY SERVICED ITEMS: General

Description	Code
CAP - Idle Mix Screw Limiter	14-45-12
CHOKE	14-39-45
DASHPOT	14-50-25
DIAPHRAGM-Choke	14-39-7
GASKET KIT	14-30-7
GASKET - Flange	14-30-2
JET - Main Metering	14-35-1
JET - w/ Housing, Pump	14-35-40
NEEDLE & SEAT	14-30-8
PLUNGER - Pump	14-41-3
REPAIR KITS - (Major & Minor)	14-30-4
ROD - Metering	14-43-5
ROD - Step Up	14-43-5
SOLENOID - Idle	14-38-24

MAJOR KIT CONTENT:

BALL, Pump Intake Check
BALL, Pump Discharge Check
GASKET, Body
GASKET, Body Flange
GASKET, Flange
GASKET, Step Up Piston
GASKET, Venturi Cover
GASKET, Venturi Housing
GAUGE, Float Housing
JET, Main Metering
NEEDLE, with Seat
PLUNGER, Pump
RETAINER, Connector Rod
RETAINER, Pump Plunger
SPRING, Pin
SPRING, Step Up Piston
VALVE, Bowl Vent

GASKET KIT CONTENT:

GASKETS
- Body Flange
- Body
- Bowl Vent Cover
- Flange
- Step Up Piston
- Thermostatic Valve
- Venturi Cover
- Venturi Housing

MINOR KIT CONTENT:

BALL, Pump Discharge Check
BALL, Pump Intake Check
GASKET, Body
GASKET, Body Flange
GASKET, Flange
GASKET, Step Up Piston
GASKET, Venturi Cover
GASKET, Venturi Housing
GAUGE, Float
NEEDLE, with Seat
PLUNGER, Pump
RETAINER, Choke Connector Rod
RETAINER, Pump Plunger
SPRING, Pin

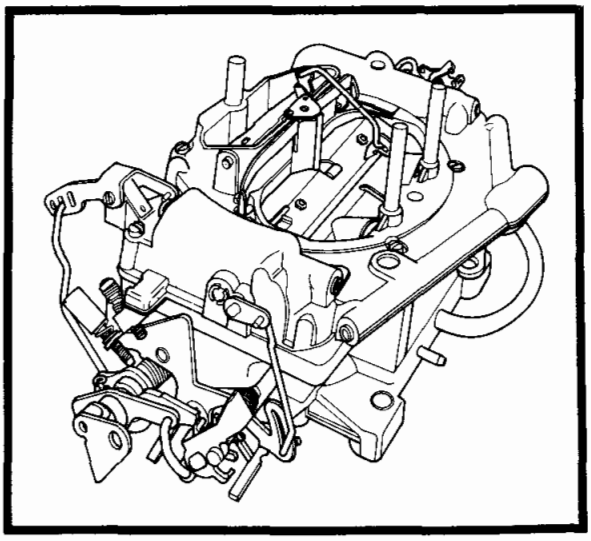

Typical - Carter Thermo Quad.

SEPARATELY SERVICED ITEMS: General

Description	Code
CAP - Idle Mix Screw Limiter	14-45-12
CHOKE	14-39-45
DASHPOT	14-50-25
DIAPHRAGM - Choke	14-39-7
GASKET KIT	14-30-7
GASKET FLANGE	14-30-2
JET - Main Metering	14-35-1
JET & HOUSING - Pump	14-35-40
NEEDLE & SEAT	14-30-8
PLUNGER - Pump	14-41-3
REPAIR KITS - Major & Minor	14-30-4
ROD - Metering	14-43-5
ROD - Step Up	14-43-5
SOLENOID - Idle	14-38-24

MAJOR KIT CONTENT:

CAP, Idle Limiter
GASKET, Air Horn
GASKET, Body Flange
GASKET, Flange
GASKET, Fuel Inlet Fitting
GASKET, Pump Housing
HOSE, Choke Diaphragm
JET, Primary Metering
JET, Secondary Metering
NEEDLE, with Seat
NEEDLE, Pump Discharge
"O" RINGS
PLUNGER, Pump
RETAINER, Connector Rod
RETAINER, Intake Check
ROD, Metering
SEAL, Grommet
SPRING, Pin
SPRING, Pump
TUBE, Pump Passage

GASKET KIT CONTENT:

GASKETS
- Air Horn
- Body Flange
- Bowl Filter
- Flange
- Pump Housing

"O" RINGS

SEALS
- Grommet

MINOR KIT CONTENT:

CAP, Idle Limiter
CHECK PUMP
GASKET, Air Horn
GASKET, Body Flange
GASKET, Bowl Filter
GASKET, Flange
GASKET, Pump Housing
NEEDLE, with Seat
"O" RINGS
PLUNGER, Pump
RETAINER, Connector Rod
SEAL, Grommet
SPRING, Pin
TUBE, Pump Passage

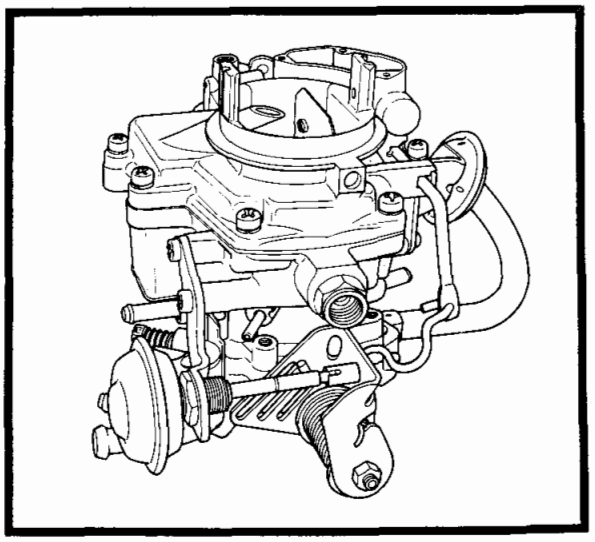

Typical 1900 Series - Holley

SEPARATELY SERVICED ITEMS: General

Description	Code
BODY & PLUGS - (Main Well)	14-35-39
CHOKE	14-39-45
COMPENSATOR-(Hot Idle)	14-45-17
DASHPOT	14-50-25
DIAPHRAGM - Choke	14-39-7
DIAPHRAGM - Secondary	14-35-9
DIAPHRAGM - Pump	14-41-3
GASKET KIT	14-30-7
JET - Main	14-35-1
NEEDLE & SEAT	14-30-8
LIMITER	14-45-12
PUMP - Carb. or Accel.	14-41-3
REPAIR KITS - (Major & Minor)	14-30-4
SOLENOID - Idle	14-38-24
STEM - Economiser	14-35-33
VALVE - Power	14-35-6

MAJOR KIT CONTENT:

GASKET KIT
LEVER, Pump Operating
LINK, Choke Diaphragm
MINOR, Repair Kit
NEEDLE, Idle Adjuster
PUMP
RETAINER, Float
RETAINER, Pump Operating Lever
RETAINER, Pump Operating Link
SCREW, Choke Plate
SCREW, Throttle Plate, Secondary
STEM, Economiser
VALVE, with Seat, Fuel

GASKET KIT CONTENT:

GASKETS
- Carburetor Flange
- Economiser Body
- Fuel Bowl
- Inlet Seat

SEAL
- Hot Idle Compensator
- Vent Valve

MINOR KIT CONTENT:

GASKET KIT
NEEDLE with Seat
PUMP
STEM, Economiser

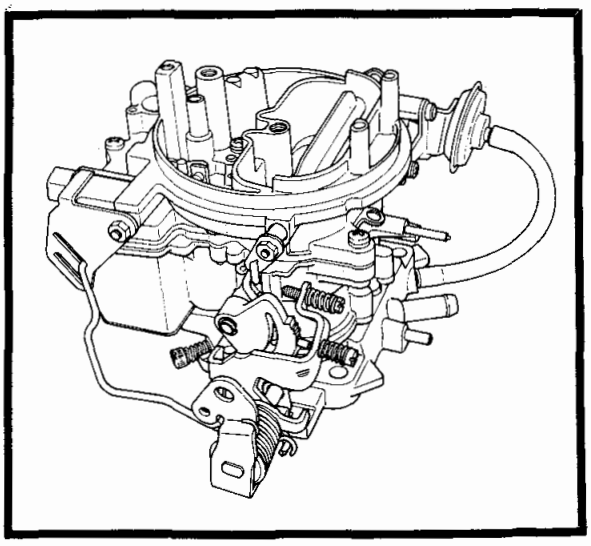

Typical 2200 Series - Holley

SEPARATELY SERVICED ITEMS: General

Description	Code
BODY & PLUGS - (Main Well)	14-35-39
CHOKE	14-39-45
COMPENSATOR - (Hot Idle)	14-45-17
DASHPOT	14-50-25
DIAPHRAGM - Choke	14-39-7
DIAPHRAGM - Secondary	14-35-9
DIAPHRAGM - Pump	14-41-3
GASKET KIT	14-30-7
JET - Main	14-35-1
NEEDLE & SEAT	14-30-8
LIMITER - Idle Needle	14-45-12
PUMP - Carb. or Accel.	14-41-3
REPAIR KITS - (Major and Minor)	14-30-4
SOLENOID - Idle	14-38-24
STEM - Economiser	14-35-33
VALVE - Power	14-35-6

MAJOR KIT CONTENT:

LINK, Choke Diaphragm
MINOR REPAIR KIT
NEEDLE, Idle Adjuster
RETAINER, Lever
SCREW, Choke Plate
SCREW, Throttle Plate Secondary
VALVE, Pump Discharge

GASKET KIT CONTENT:

GASKETS
- Flange
- Inlet Fitting
- Main Body
- Needle and Seat
- Throttle Body

SEAL
- Heat Idle Compensator
- Vent Valve

VALVE, Vent

MINOR KIT CONTENT:

GASKET KIT
NEEDLE with Seat
PUMP, Accelerator
VALVE, Power

GROUP 14 - FUEL

AIR CLEANER, CARBURETOR 14-29
BELL CRANK, THROTTLE CONTROL 14-14
BRACKET THROTTLE CONTROL CABLE MOUNTING 14-26
CABLE, FAST IDLE 14-24
CABLE, THROTTLE CONTROL 14-25
CARBURETOR 14-30
CLIP, AUTOMATIC CHOKE TO CARBURETOR ROD 14-65
CLIP, FUEL LINE TUBE 14-90
CONTROL, AUTOMATIC SPEED 14-02
DEFLECTOR, FUEL TANK STONE 14-87
FILTER, FUEL 14-67
HEATER CARBURETOR AIR 14-62
PEDAL, ACCELERATOR 14-01
PUMP, FUEL 14-73
SHAFT, ACCELERATOR 14-11
STUD, THROTTLE LINKAGE BALL 14-13
SPRING, ACCELERATOR PEDAL RETURN 14-06
SPRING, ACCELERATOR PEDAL TO ROD 14-07
SUPPORT, FUEL TANK 14-88
TANK, FUEL 14-86
TUBE, FUEL LINE 14-89

Printed in U.S.A.
November, 1974

CODE	PART NAME	ENG. TYPE OR CU. IN	V	B J	L	R	W	P	D	C (L M)	C (P)	C (H S)	Y	PART NUMBER
14-01-1	**ACCEL. PEDAL,**		1	1	1	1	1	1	1	1	1	1	1	3671 718
	(V, L, & D, P-Models) w/Bezel		1	—	1	—	—	—	1	1	1	1	1	3769 053
14-01-2	PAD		1	1	1	1	1	1	1	1	1	1	1	2899 342
14-01-6	BEZEL, Pedal		1	—	1	—	—	—	1	1	1	1	1	3769 054
14-01-8	CLIP, Pedal		1	—	1	—	—	—	—	—	—	—	—	2863 055
14-01-23	PIN		1	1	1	1	1	1	1	1	1	1	1	9420 947
14-02-1	**AUTOMATIC SPEED CONTROL ADAPTER Pkg. 360 Eng.**		—	—	—	—	—	1	1	—	—	—	—	3620 703
	400 & 440 Eng.		—	—	—	—	—	1	1	1	1	1	1	3420 939
	COMPLETE PKG. Exc. Ctrl. Lever Assy.		—	—	—	—	—	1	1	1	1	1	1	3837 324
	COMPLETE PKG. Incl. Ctrl. Lever Assy. & Also													
	Molded W/Sh./Washer Reservoir		—	—	—	1	1	—	—	—	—	—	—	3837 975
14-02-15	SERVO, Control		—	—	—	1	1	1	1	1	1	1	1	3769 294
14-02-18	BRKT. Speed Control Cable Mtg. w/318 & 360 Eng.		—	—	—	1	1	1	1	—	—	—	—	2899 376
	w/400 & 440 Eng.		—	—	—	1	1	1	1	1	1	1	1	2899 374
	PLATE, to Servo Mtg.		—	—	—	1	1	—	—	—	—	—	—	3577 597
	Servo Mtg.		—	—	—	—	—	1	1	1	1	1	1	3751 509
			—	—	—	1	1	—	—	—	—	—	—	3751 174
	Cable Routing		—	—	—	—	—	—	—	—	—	—	1	3769 295
14-02-34	CABLE, Speed Control		—	—	—	—	—	1	1	1	1	1	1	3462 367
			—	—	—	1	1	—	—	—	—	—	—	3462 371
	CLIP, Cable to Servo Attaching		—	—	—	—	—	1	1	1	1	1	1	6025 867
14-02-69	WIRING, Inst. Panel Speed Control		—	—	—	1	1	—	—	—	—	—	—	3764 754
	All	8	—	—	—	—	—	1	1	1	1	1	1	3764 666
14-02-85	LINK ASSY., Speed Control Lost Motion		—	—	—	1	1	1	1	1	1	1	1	3769 261
	CLIP, Lost Motion Retainer		—	—	—	1	1	1	1	1	1	1	1	6030 479
	PIN, Lost Motion Link to Lvr. Attg.		—	—	—	1	1	1	1	1	1	1	1	6029 629
14-02-87	BRACKET, Cable Routing Brake Mtg.		—	—	—	1	1	1	1	1	1	1	—	3418 574
14-02-88	HOSE, Servo to Eng. Manif. Vac. Tee, to Pwr. Brake Vac. Fitting 1/4" I.D. x 1/2" O.D. 50' Roll		—	—	—	AR	AR	AR	AR	AR	AR	AR	AR	3744 933
	CLAMP, Servo to Vac. Source Hose		—	—	—	—	—	2	2	2	2	2	2	272 776
14-06-1	**SPRING, Accel. Pedal or Trans. Rod Ret. Export**	6	—	—	1	—	—	—	—	—	—	—	—	2806 499
		6	1	—	1	1	1	—	—	—	—	—	—	3751 545
	w/318 Eng.		1	1	1	1	1	—	—	—	—	—	—	3751 600
	w/360 - 2 Bbl. Eng. (Up to Sept. '73)		—	—	—	—	—	1	1	—	—	—	—	3751 547
	After Sept. '73		—	—	—	1	1	1	1	—	—	—	—	3830 664
	w/360-4 Bbl. Eng. w/Auto. Trans.		1	1	1	1	1	—	—	—	—	—	—	3751 549
	w/360-4 Bbl. Eng. w/Auto. Trans. (Up to Sept. '73)		—	—	—	1	1	1	1	1	—	—	—	3769 806
	After Sept. '73		—	—	—	1	1	1	1	1	—	—	—	3830 666
	w/360-4 Bbl. Eng. w/3 or 4 Sp. Man. Trans.		1	1	1	1	1	—	—	—	—	—	—	3769 806
	w/318-4 Bbl. Eng. (Convers.) Export	8	—	—	—	—	—	—	1	—	—	—	—	3830 666
	w/400-2 Bbl. Eng.		—	—	—	—	—	1	1	1	—	—	—	3830 618
	w/400-4 Bbl. & 440 Eng. (Up to Sept. '73)		—	—	—	1	1	1	1	1	1	1	1	3751 573
	After Sept. '73		—	—	—	1	1	1	1	1	1	1	1	3830 665
	w/400-4 Bbl. w/4 Sp. Man. Trans. Eng.		—	—	—	1	1	—	—	—	—	—	—	3769 807
	440 Eng. w/o H/Perf. w/Auto. Trans. Inner		—	—	—	—	—	1	1	1	1	1	—	# 3870 561
	Outer		—	—	—	—	—	1	1	1	1	1	—	# 3870 562
	TRANS. ROD RETURN w/318 Eng.		1	—	1	—	—	—	—	—	—	—	—	2806 463
		8	1	1	1	1	1	1	1	1	1	1	1	2946 637
	TRANS. ROD, (On Rod) 9 Coils	6&8	1	1	1	1	1	1	1	1	1	1	1	3769 198

CARLINES: J - Challenger, B - Barracuda, V - Valiant, L - Dart, R - Satellite, W - Coronet - Charger, P - Plymouth, D - Dodge, C - Chrysler, Y - Imperial

AR Indicates use as required.

Numerals in parentheses ( ) refer to notes.

Printed in U.S.A.

# Indicates parts not listed in any previous parts book.

★ Indicates change or addition.

November, 1974

CODE	PART NAME	ENG. TYPE OR CU. IN	V	B J	L	R	W	P	D	C (L M)	C (P)	C (H S)	Y	PART NUMBER
14-06-10	BRACKET, Pedal Spring Return	6	1	—	1	1	1	—	—	—	—	—	—	3769 941
	w/318 & 360-2 Bbl. Eng.		1	1	1	1	1	1	1	—	—	—	—	3751 538
	w/360-4 Bbl. Eng.		1	1	1	1	1	1	1	1	—	—	—	3751 571
	400-2 bbl. Eng.		—	—	—	—	—	1	1	1	1	1	—	3769 810
	w/400-4 Bbl. & 440 Eng. (w/A/Cond. See Group 24)		—	—	—	1	1	1	1	1	1	1	1	3751 540
	BOLT		—	—	—	1	1	1	1	1	1	1	1	180 120
14-07-15	**SPRING, Accel. Pedal**		1	1	1	1	1	1	1	1	1	1	1	2899 354
14-11-1	**ACCEL. SHAFT w/BRKT.**		1	—	1	—	—	—	—	—	—	—	—	3769 064
			—	1	—	1	1	—	—	—	—	—	—	3671 723
			—	—	—	—	—	1	1	1	1	1	1	3769 057
14-11-3	CLIP, B/Crank to Carb. Rod	6	1	—	1	1	1	—	—	—	—	—	—	2946 640
	Carb. Lever to Trans. Rod End, Export	6	—	—	1	—	—	—	—	—	—	—	—	2899 360
	Hair Pin (Hole) Type	6	—	—	—	1	1	1	1	—	—	—	—	6025 867
	w/318 & 360 Eng.	8	1	—	1	—	—	—	—	—	—	—	—	2899 361
		8	—	1	—	1	1	1	1	1	1	1	1	6029 009
14-11-9	ROD, Eng. B/Crank to Carb.	6	1	—	1	1	1	—	—	—	—	—	—	3418 828
	ENG. B/CRANK TO TRANS. ROD													
	w/Auto. Trans.	6	1	—	1	1	1	—	—	—	—	—	—	3751 568
	w/Auto. Trans. (A727)	6	—	—	—	1	1	—	—	—	—	—	—	3751 569
	w/Auto. Trans. w/360-4 Bbl. Eng.	8	1	—	1	—	—	—	—	—	—	—	—	3751 537
	w/318 Eng., w/Auto. Trans.	8	1	—	1	—	—	—	—	—	—	—	—	# 3751 532
	360-4 Bbl. Eng. w/Auto. Trans.	8	—	1	—	1	1	—	—	—	—	—	—	3751 570
	CARB. TO Auto. TRANS. ROD													
	w/318, Eng.	8	—	1	—	1	1	—	—	—	—	—	—	3751 554
	400-2 Bbl. Eng.		—	—	—	1	1	—	—	—	—	—	—	3751 554
	w/400-4 Bbl. Eng.		—	—	—	1	1	1	1	1	—	—	—	3751 556
	w/360-2 Bbl. Eng.	8	—	—	—	1	1	1	1	—	—	—	—	3751 557
	w/360-4 Bbl. Eng.	8	—	—	—	1	1	1	1	1	—	—	—	3769 816
	w/318-4 Bbl. Eng. Export Convers.	8	—	—	—	—	—	—	1	—	—	—	—	3769 816
	w/440 Eng.	8	—	—	—	1	1	1	1	1	1	1	1	3751 555
	CARB. TO CABLE Mtg. Brkt. LEVER ROD													
	w/318 Eng., w/Auto. Trans.	8	1	—	1	—	—	—	—	—	—	—	—	3751 527
	w/360-4 Bbl. Eng., w/Auto. Trans.	8	1	—	1	—	—	—	—	—	—	—	—	3751 533
	CABLE MTG. BRKT. TO TRANS. B/CRANK													
	w/318 Eng. w/Auto. Trans.	8	1	—	1	—	—	—	—	—	—	—	—	3751 528
	w/360-4 Bbl. Eng., w/Auto. Trans.	8	1	—	1	—	—	—	—	—	—	—	—	# 3751 534
	Carb. Lever To Auto Trans. (Export Conv.	6	—	—	1	—	—	—	—	—	—	—	—	2806 469
14-11-13	SWIVEL, Trans. Rod	8	1	1	1	1	1	1	1	1	1	1	1	3751 552
	CLAMP, Trans. Rod	8	1	1	1	1	1	1	1	1	1	1	1	2204 274
14-11-18	LINK, Eng. B/Crank to Carb. Rod	8	—	1	—	1	1	1	1	1	1	1	1	3751 553
	w/318-4 Bbl. Eng. (Convers.) Export	8	—	—	—	—	—	—	1	—	—	—	—	3751 553
14-11-29	BUSHING, Shaft Brkt.		2	2	2	2	2	2	2	2	2	2	2	2899 351
14-11-31	PLUG, Shaft		1	1	1	1	1	1	1	1	1	1	1	2465 483
	F/Idle Lvr.		—	—	—	—	—	1	1	—	—	—	—	2465 483
14-11-40	STUD, Carb. Lvr. w/Man. Trans.	8	1	1	1	1	1	—	—	—	—	—	—	3418 899
	w/Auto. Trans.	8	1	1	1	1	1	1	1	1	1	1	1	3418 900
	w/318-4 Bbl. Eng. Export Convers.	8	—	—	—	—	—	—	1	—	—	—	—	3418 900
	Washer		1	1	1	1	1	1	1	1	1	1	1	6025 050
	Nut		1	1	1	1	1	1	1	1	1	1	1	6030 607
	Clip		1	1	1	1	1	1	1	1	1	1	1	6023 285
14-11-48	SEAL, Shaft Brkt.		1	—	1	—	—	—	—	—	—	—	—	2806 408
			—	AR	—	AR	AR	AR	AR	AR	AR	AR	AR	1242 974
14-11-55	STABILIZER, Carb. to Trans. Rod		—	1	—	1	1	1	1	1	1	1	1	3418 807
	w/318-4 Bbl. Eng. Export Convers.		—	—	—	—	—	—	1	—	—	—	—	3418 807

CARLINES					
	J - Challenger B - Barracuda	V - Valiant L - Dart	R - Satellite W - Coronet - Charger	P - Plymouth D - Dodge	C - Chrysler Y - Imperial

AR Indicates use as required.

Numerals in parentheses ( ) refer to notes.

# Indicates parts not listed in any previous parts book.

★ Indicates change or addition.

Printed in U.S.A.
November, 1974

CODE	PART NAME	ENG. TYPE OR CU. IN	V	B J	L	R	W	P	D	C (L M)	C (P)	C (H S)	Y	PART NUMBER
14-13-1	**THROT. LINKAGE BALL STUD, Export**	6	—	—	1	—	—	—	—	—	—	—	—	2268 420
	CLIP, Hair Pin Type	8	1	1	1	1	1	1	1	1	1	1	1	6026 776
14-13-3	CLIP, Throt. Rod to Carb. B/Crank- 318, 360-4 Bbl. Eng. w/Auto Trans.	8	1	—	1	—	—	—	—	—	—	—	—	2121 571
	Export	6	—	—	1	—	—	—	—	—	—	—	—	2121 571
14-13-5	RETAINER, Throt. (Threaded) Rod Export	6	—	—	1	—	—	—	—	—	—	—	—	1945 197
14-14-1	**THROT. CTRL. B/CRANK, w/318 Eng. w/Auto. Trans.**	8	1	—	1	—	—	—	—	—	—	—	—	3751 529
	w/360-4 Bbl. Eng. w/Auto. Trans.	8	1	—	1	—	—	—	—	—	—	—	—	3751 535
	w/Auto. Trans.	6	1	—	1	1	1	—	—	—	—	—	—	3751 564
	Pin, Eng. B/Crank, w/Auto. Trans.	6	1	—	1	1	1	—	—	—	—	—	—	9413 483
14-14-4	SPRING, Trans. B/Crank Stud w/318 & 360-4 Bbl. Eng. w/Auto. Trans.		1	—	1	—	—	—	—	—	—	—	—	3751 572
14-14-12	BRACKET, w/B/Crank, Partial	6	1	—	1	1	1	—	—	—	—	—	—	3830 366
	Complete	6	1	—	1	1	1	—	—	—	—	—	—	3751 344
14-14-20	STUD, Trans. B/Crank, w/318 & 360-4 Bbl. Eng. w/Auto. Trans.	8	1	—	1	—	—	—	—	—	—	—	—	3751 531
14-23-1	**SPRING, Linkage Rtn. Extra Assist w/318,** 360-4 Bbl. Eng. w/Auto. Trans.		1	—	1	—	—	—	—	—	—	—	—	3830 004
14-24-1	**FAST IDLE CABLE & HANDLE ASSY.,**		—	—	—	1	1	—	—	—	—	—	—	3577 516
			—	—	—	—	—	1	1	—	—	—	—	3769 802
	NUT		—	—	—	1	1	1	1	—	—	—	—	124 930
	WASHER		—	—	—	1	1	1	1	—	—	—	—	138 498
	Kit, Fast Idle Ctrl.	8	—	—	—	—	—	1	1	1	1	1	—	3412 816
14-24-4	COLLAR, Cable		—	—	—	1	1	1	1	—	—	—	—	2536 847
14-24-6	BRACKET, Fast Idle Cable		—	—	—	1	1	—	—	—	—	—	—	3577 518
			—	—	—	—	—	1	1	—	—	—	—	3769 803
	SCREW		—	—	—	2	2	2	2	—	—	—	—	9414 598
14-24-17	LEVER, Fast Idle Adjusting		—	—	—	—	—	1	1	—	—	—	—	3769 804
			—	—	—	1	1	—	—	—	—	—	—	3577 517
	BOLT, F/Idle Adj. Lvr.		—	—	—	1	1	1	1	—	—	—	—	6027 565
14-25-5	**CLIP, Throt, Ctrl. Cable Mtg.,**		1	1	1	1	1	1	1	1	1	1	1	2402 210
	w/318-4 Bbl. Eng. Export Convers.		—	—	—	—	—	—	1	—	—	—	—	2402 210
	at Fire Wall		—	1	—	1	1	1	1	1	1	1	1	3462 725
	w/318-4 Bbl. Eng. Export Convers.		—	—	—	—	—	—	1	—	—	—	—	3462 725
	CLIP, T/Ctrl. Cbl. Ret.		1	—	1	—	—	—	—	—	—	—	—	6027 155
	NUT		1	1	1	1	1	1	1	1	1	1	1	120 375
14-25-11	CABLE, Throt. Ctrl. All Trans.	6	1	—	1	—	—	—	—	—	—	—	—	2899 335
	All Trans.	6	—	—	—	1	1	—	—	—	—	—	—	3418 836
	w/318 Eng. All Trans.	8	1	—	1	—	—	—	—	—	—	—	—	2899 336
	Export All Trans.	6	—	—	1	—	—	—	—	—	—	—	—	2899 336
	w/318, 360-2 Bbl. Eng. All Trans.	8	—	1	—	1	1	—	—	—	—	—	—	3698 839
	w/360-4 Bbl. Eng. All Trans.	8	1	—	1	—	—	—	—	—	—	—	—	3577 523
	w/360-4 Bbl. Eng. All Trans.	8	—	1	—	1	1	—	—	—	—	—	—	3577 525
	w/400-4 Bbl., 440 Eng. All Trans.	8	—	—	—	1	1	—	—	—	—	—	—	3769 123
	w/360-2 Bbl. Eng. w/Auto. Trans.	8	—	—	—	—	—	1	1	—	—	—	—	3751 543
	w/360-4 Bbl. Eng. w/Auto. Trans.	8	—	—	—	—	—	1	1	1	—	—	—	3751 544
	w/400, 440 Eng.	8	—	—	—	—	—	1	1	1	1	1	1	3751 544
	w/318-4 Bbl. Eng. (Convers.) Export	8	—	—	—	—	—	—	1	—	—	—	—	3751 544
14-25-12	PIN, Cable	6	1	—	1	1	1	—	—	—	—	—	—	2264 706
14-25-13	CLIP, Throt. Ctrl. Cable Retainer	6 & 8	1	1	1	1	1	1	1	1	1	1	1	6027 155
	CLIP, Throt. Ctrl. Cable Pin	6	1	1	1	1	1	1	1	—	—	—	—	6023 285
14-25-15	WASHER, Throttle Ctrl. Cable		1	—	1	—	—	—	—	—	—	—	—	1551 030
14-25-17	INSULATOR, Cable Sound	6 & 8	1	—	1	—	—	—	—	—	—	—	—	2465 486
14-26-6	**THROT. CRTL. CABLE MTG. BRKT., w/318 Eng. Partial, w/Auto. Trans.**	8	1	—	1	—	—	—	—	—	—	—	—	3462 770
	Export	6	—	—	1	—	—	—	—	—	—	—	—	2806 449
	w/318 Eng., All Trans.	8	—	1	—	1	1	—	—	—	—	—	—	3418 829

CARLINES: J - Challenger, B - Barracuda, V - Valiant, L - Dart, R - Satellite, W - Coronet - Charger, P - Plymouth, D - Dodge, C - Chrysler, Y - Imperial

AR Indicates use as required.

Numerals in parentheses ( ) refer to notes.

# Indicates parts not listed in any previous parts book.

★ Indicates change or addition.

Printed in U.S.A.
November, 1974

CODE	PART NAME	ENG. TYPE OR CU. IN	V	B J	L	R	W	P	D	C (L M)	C (P)	C (H S)	Y	PART NUMBER
14-26-6	THROT. CRTL. CABLE MTG. BRKT., Cont'd.													
	w/318 Eng., All Trans.	8	1	—	1	—	—	—	—	—	—	—	—	2780 832
	w/360-4 Bbl. Eng. w/Auto. Trans.	8	1	—	1	—	—	—	—	—	—	—	—	3462 741
	w/360-2 Bbl. Eng., w/Auto. Trans.	8	—	—	—	1	1	1	1	—	—	—	—	3462 766
	w/360-4 Bbl. Eng.	8	—	1	—	1	1	1	1	1	—	—	—	3577 561
	w/318-4 BBL. Eng. Export Convers.	8	—	—	—	—	—	—	1	—	—	—	—	3577 561
	w/400-2 Bbl. & w/318 Eng. w/Auto. Trans. (Complete)	8	—	1	—	1	1	—	—	—	—	—	—	3418 810
	w/400-4 Bbl. Eng.	8	—	—	—	1	1	1	1	1	1	1	—	3577 550
	w/440 Eng.,	8	—	—	—	1	1	1	1	1	1	1	1	3577 553
14-26-11	LEVER, Cable Mtg. Brkt., w/318 & 360-4 Bbl. Eng.	8	1	—	1	—	—	—	—	—	—	—	—	2780 835
14-29-4	**GASKET, A/Cleaner Cover**	6	1	—	1	1	1	—	—	—	—	—	—	2951 790
		8	1	1	1	1	1	1	1	1	1	1	1	2536 016
	w/318-4 Bbl. Eng. (Convers.) Export	8	—	—	—	—	—	—	1	—	—	—	—	2536 016
14-29-5	GASKET, A/Cleaner to Carb.	6	1	—	1	1	1	—	—	—	—	—	—	1947 797
	w/318 Eng.	8	1	1	1	1	1	—	—	—	—	—	—	2536 626
	Export	6	—	—	1	—	—	—	—	—	—	—	—	2536 626
	w/360-2 Bbl., 400-2 Bbl. Eng.	8	—	—	—	—	—	1	1	1	—	—	—	1821 170
	w/318-4 Bbl. Eng. (Convers.) Export	8	—	—	—	—	—	—	1	—	—	—	—	2843 071
	w/360-4 Bbl. 400-4 Bbl. 440 Eng.	8	1	1	1	1	1	1	1	1	1	1	1	2843 071
14-29-6	FILTER, Air Cleaner	6	1	—	1	1	1	—	—	—	—	—	—	2206 376
	Export	6	—	—	1	—	—	—	—	—	—	—	—	1851 493
	w/318 Eng.	8	1	1	1	1	1	—	—	—	—	—	—	1739 547
	Exc. w/318 Eng.	8	1	1	1	1	1	1	1	1	1	1	—	2863 349
	w/318-4 Bbl. Eng. (Convers.) Export	8	—	—	—	—	—	—	1	—	—	—	—	2863 349
	w/440 Eng. w/Single Snorkel	8	—	—	—	—	—	—	—	1	1	1	1	2402 677
14-29-7	COVER, AIR CLEANER	6	1	—	1	1	1	—	—	—	—	—	—	2951 789
	Conv. Export	6	—	—	1	—	—	—	—	—	—	—	—	2843 088
	w/318 Eng.	8	1	1	1	1	1	—	—	—	—	—	—	3577 759
	All Others	8	1	1	1	1	1	1	1	1	1	1	1	2951 757
	318-4 Bbl. Eng. (Convers.) Export	8	—	—	—	—	—	—	1	—	—	—	—	2951 757
14-29-15	CLAMP	6	1	—	1	1	1	—	—	—	—	—	—	2951 394
	NUT, Clamp	6	1	1	1	1	1	—	—	—	—	—	—	142 745
	w/318 Eng.	8	1	1	1	1	1	—	—	—	—	—	—	2951 393
	Export	6	—	—	1	—	—	—	—	—	—	—	—	2951 393
14-29-19	BODY, A/CLEANER	6	1	—	1	1	1	—	—	—	—	—	—	3769 012
	Export	6	—	—	1	—	1	—	—	—	—	—	—	3769 016
	w/318 Eng.	8	1	1	1	1	1	—	—	—	—	—	—	3769 024
	360 Eng., 4 Bbl. H/Perf.	8	1	1	1	—	—	—	—	—	—	—	—	# 4006 500
	w/360 & 400-2 Bbl. Eng.		—	—	—	1	1	1	1	1	—	—	—	3769 008
	318-4 Bbl. Eng. (Convers.) Export		—	—	—	—	—	—	1	—	—	—	—	3769 004
	360-4 Bbl. Eng.		—	—	—	1	1	1	1	1	—	—	—	3769 004
	400-4 Bbl. Eng. Hi Perf.		—	—	—	1	1	1	1	—	—	—	—	3769 020
	440 Eng.		—	—	—	—	—	—	—	1	1	1	1	3769 035
	440 Eng. Hi. Perf.		—	—	—	—	—	1	1	1	1	1	—	3769 020
	440 Eng. (Police)		—	—	—	1	1	1	1	—	—	—	—	3830 036
	NIPPLE, A/Cleaner (Export Conv.)	6	—	—	1	—	—	—	—	—	—	—	—	2658 256
14-29-24	HOSE, Temp. Sensor To Vac. Diaph. 50'Roll	8	AR	AR	AR	AR	AR	AR	AR	AR	AR	AR	AR	2951 794
14-29-26	CLIP, Vacuum Hose Routing	6	1	—	1	—	—	—	—	—	—	—	—	3614 935
		8	—	—	—	3	3	3	3	3	3	3	3	2951 371
	RIVET, Clip Vac. Hose Routing	8	—	—	—	3	3	3	3	3	3	3	3	137 948
14-29-28	PLATE, Filter Support, Export	6	—	—	1	—	1	—	—	—	—	—	—	2264 115
14-29-33	STUD, A/Cleaner to Carb. w/4 Bbl. Engs.	8	1	1	1	1	1	1	1	1	1	1	1	1826 286
	w/360-2 Bbl. Eng. (Optional w/6028 989)	8	—	—	—	—	—	1	1	—	—	—	—	6028 987
	NUT, Up To 3-1-74	8	1	1	1	1	1	1	1	1	1	1	1	6023 523
	After 3-1-74	8	1	1	1	1	1	1	1	1	1	1	1	6030 730
14-29-34	DIAPHRAGM, A/Clnr. Dr. Vac. 360-4 Bbl., 440 Eng., w/H/Perf.	8	1	1	1	1	1	—	—	—	—	—	—	3614 916

CARLINES J - Challenger, B - Barracuda, V - Valiant, L - Dart, R - Satellite, W - Coronet - Charger, P - Plymouth, D - Dodge, C - Chrysler, Y - Imperial

AR Indicates use as required.

Numerals in parentheses ( ) refer to notes.

# Indicates parts not listed in any previous parts book.

★ Indicates change or addition.

Printed in U.S.A.
November, 1974

CODE	PART NAME	ENG. TYPE OR CU. IN	V	B J	L	R	W	P	D	C (L M)	C (P)	C (H S)	Y	PART NUMBER
14-29-38	CONNECTOR, Carb. Air Htr. to A/Clnr. Snorkel	6 & 8	1	1	1	1	1	1	1	1	1	1	1	3577 808
14-29-43	TEE, Vacuum	8	1	1	1	1	1	1	1	1	1	1	—	2857 908
14-29-46	NUT, A/Cleaner Temp. Sensor	6 & 8	2	2	2	2	2	2	2	2	2	2	2	2197 678
14-29-53	SENSOR, A/Cleaner Temp.	6 & 8	1	1	1	1	1	1	1	1	1	1	1	3514 168
14-29-78	DOOR ASSY. Hge. Brkt. & Dumper w/360-4 Bbl. & 440 Eng.	8	1	1	1	1	1	—	—	—	—	—	—	3614 911
14-29-79	BRKT. Body Hge. w/360-4 Bbl. & 440 Eng.	8	1	1	1	1	1	—	—	—	—	—	—	3614 914
14-29-80	PIN, Hge. w/360-4 Bbl. & 440 Eng.	8	1	1	1	1	1	—	—	—	—	—	—	3614 915

NOTES

CARLINES
J - Challenger, B - Barracuda, V - Valiant, L - Dart, R - Satellite, W - Coronet - Charger, P - Plymouth, D - Dodge, C - Chrysler, Y - Imperial

AR Indicates use as required.
# Indicates parts not listed in any previous parts book.
Numerals in parentheses ( ) refer to notes.
★ Indicates change or addition.

Printed in U.S.A.
November, 1974

NOTE: Serviced carburetors are compiled in code 14-30-1 below, which reflects models, engine displacement, transmission type, mfrgs. reference, and a chart reference number from which serviced components may be located for a specific carburetor. Gasket kit and repair kit content information can be located on the typical illustration for the type of carburetor.

NOTE: Later Prod. Carbs. Start w/Ref. # 37

14-30-1 CARBURETOR ASSEMBLIES

Models	Eng. (Cu. In.)	Trans.	Carburetor Type Bbl.	Carburetor Type Mfr.	Carburetor Type Mfr. No.	Comp. Chart Ref. No.	Service Carburetor No.
V,L	198	Auto.	1	Holley	R6122-1A	36	3830 410
V,L	198	Man.	1	Holley	R6721A	2	3751 421
V,L	198	Auto.	1	Holley	R6954-A	46	# 3830 406
V,L,R,W	225	Auto.	1	Holley	R6724A	3	3751 424
V,L, w/o Cal. Emiss. Pkg.	225	Auto.	1	Holley	R6938-A	47	3830 402
V,L,R,W	225	Man.	1	Holley	R6723A	4	3751 423
V,L, w/Cal. Emiss. Pkg.	225	Auto.	1	Holley	R7096-A	48	# 3830 856
L, W Export	225	Man.	1	Holley	R6747A	5	3751 447
L,W Export	225	Auto.	1	Holley	R6748A	6	3751 448
V,L,R,W w/Cal. Emiss. Pkg.	225	Auto.	1	Holley	R6726A	7	3751 426
V,L,R,W w/Cal. Emiss. Pkg.	225	Man.	1	Holley	R6725A	8	3751 425
L Export (Eng. Conversion)	225	Man.	2	Carter	6301S	9	3614 178
L Export (Eng. Conversion)	225	Auto.	2	Carter	4993S	10	3462 779
V,L,B,J,R,W	318	Auto.	2	Carter	6465S	11	3751 428
L,W Export (3 & 4 Sp.)	318	Man.	2	Carter	6491S	12	3751 449
L,W, Export	318	Auto.	2	Carter	6492S	13	3751 450
V,L,B,J,R,W (3 & 4 Sp.) Exc. R/Runner	318	Man.	2	Carter	6464S	15	3751 427
V,L,B,J,R,W, w/o Cal. Emiss. Pkg.	318	Auto.	2	Carter	8028-S	49	# 3830 854
V,L,B,J,R,W w/Cal. Emiss. Pkg.	318	Auto.	2	Carter	6467S	16	3751 430
R.W.P.D.	360	Auto.	2	Holley	R6731A	17	3751 431
R,W,P,D,C	360	Auto.	4	Carter	TQ6488S	18	3751 451
V,L,B,J,R,W (3 & 4 Sp.) Hi Perf.	360	Man.	4	Carter	TQ6452S	19	3751 433
V,L,B,J,R,W Hi Perf.	360	Auto.	4	Carter	TQ6453S	20	3751 434
V,L,B,J,R,W (3 & 4 Sp.) w/Cal. Emiss Pkg. Hi. Perf.	360	Man.	4	Carter	TQ6454S	21	3751 435
V,L,B,J,R,W w/Cal. Emiss. Pkg. Hi. Perf.	360	Auto.	4	Carter	TQ6455S	22	3751 436
R/Runner Only w/Man. 3 or 4 Sp. Trans.	318	Man.	2	Carter	8010S	25	3830 414
R,W,P,D, Hi Perf.	400	Auto.	4	Carter	TQ6457S	26	3751 440
W Export Hi. Perf.	400	Auto.	4	Carter	TQ6503S	28	3751 454
R,W 4 Sp. Hi. Perf.	400	Man.	4	Carter	TQ6456S	29	3751 439
P,D,C,Y (Early Prod.)	440	Auto.	4	Carter	TQ6460S	30	3751 443
P,D,C,Y w/Cal. Emiss. Pkg. (Early Prod.)	440	Auto.	4	Carter	TQ6461S	31	3751 444
R,W,P,D,C w/Cal. Emiss. Pkg. Hi. Perf.	440	Auto.	4	Carter	TQ6463S	33	3751 446
V, Export (Eng. Convers.)	360	All	2	Holley	R6889A	34	3751 489
D, Export	318	All	4	Carter	TQ9000S	35	3751 474
V,L Later Prod. w/3 & 4 Sp. Trans. w/Cal. Emiss. Pkg.	318	Man.	2	Carter	8009S	37	3830409
P,D,C, Later Prod.	400	Auto.	2	Holley	R6990A	38	3751 490
P,D,C	400	Auto.	2	Holley	R7139-A	50	# 3830 857
R,W,P,D,C Later Prod.	400	Auto.	4	Carter	TQ9014S	39	3751419
P,D,C,Y Later Prod.	440	Auto.	4	Carter	TQ9023S	40	3830403
R,W,P,D,C, w/Cal. Emiss. Pkg., w/H/Perf.	440	Auto.	4	Carter	TQ-9049	23	# 3830 864
P,D,C,Y Later Prod. w/Cal. Emiss. Pkg.	440	Auto.	4	Carter	TQ9024S	41	3830404
R,W,P,D,C, Later Prod. Hi.Perf.	440	Auto.	4	Carter	TQ9015S	42	3830 415
R,W,P,D,C Later Prod. Hi Perf. w/Cal. Emiss. Pkg.	440	Auto.	4	Carter	TQ9016S	43	3830416
R,W,P,D	360	Auto.	4	Carter	TQ9013S	44	3751 420
V,L,B,J,R,W, w/Cal. Emiss.	318	Auto.	2	Carter	8018S	45	3830 853

CODE	COMPONENT CHART REFERENCE NO. / MANUFACTURER'S NO.		1	2 R6721A	3 R6724A	4 R6723A	5 R6747A
14-30-2	GSKT., Flange			3698 360	3698 360	3698 360	3698 360
14-30-4	REPAIR KIT	Major	———	3837 509	3837 509	3837 509	3837 509
		Minor	———	3837 510	3837 510	3837 510	3837 510
14-30-7	GSKT. KIT		———	3837 511	3837 511	3837 511	3837 511
14-30-8	NEEDLE, w/Seat		———	2299 042	2299 042	2299 042	2299 042
14-35-1	**JET, Main-Std.**		———	3837 514	3685 839	3685 841	3685 841
14-35-6	VALVE, Power		———	3780 674	3780 674	3780 674	3780 674

CARLINES J - Challenger V - Valiant R - Satellite P - Plymouth C - Chrysler
B - Barracuda L - Dart W - Coronet - Charger D - Dodge Y - Imperial

AR Indicates use as required.
Numerals in parentheses ( ) refer to notes.
# Indicates parts not listed in any previous parts book.
★ Indicates change or addition.

Printed in U.S.A.
November, 1974

CODE	COMPONENT CHART REFERENCE NO. / MANUFACTURER'S NO.		1	2 R6721A	3 R6724A	4 R6723A	5 R6747A
14-39-7	**DIAPHRAGM, Choke**			3780 673	3780 672	3780 673	3744 673
14-39-45	CHOKE			3751 476	3751 476	3751 476	3751 477
	CHOKE, Control (Elec.)			3755 770	3755 770	3755 770	3755 770
14-41-3	**PLUNGER, Pump**			3879 140	3879 140	3879 140	3879 140
14-45-12	**LIMITER, Idle Mixture Screw**			3685 678	3685 678	3685 678	———
14-50-25	**DASHPOT**			———	———	3780 677	———

CODE	COMPONENT CHART REFERENCE NO. / MANUFACTURER'S NO.		6 R6748A	7 R6726A	8 R6725A	9 6301S	10 4993S
14-30-2	**GSKT., Flange**		3698 360	3698 360	3698 360	2468 818	2468 818
14-30-4	REPAIR KIT	Major	3837 509	3837 509	3837 509	3685 726	———
		Minor	3837 510	3837 510	3837 510	———	3879 130
14-30-7	GSKT. KIT		3837 511	3837 511	3837 511	3685 725	3621 245
14-30-8	NEEDLE, w/Seat		2299 042	2299 042	2299 042	2933 042	2933 042
14-35-1	**JET, Main-Std.**		3685 839	3685 839	3685 841	2585 787	2585 787
14-35-6	VALVE, Power		3780 674	3780 674	3780 674	———	———
14-39-7	**DIAPHRAGM, Choke**		3780 672	3780 672	3780 673	———	———
14-39-45	CHOKE, (Coil & Hsg. For Ref. 9 & 10)		3751 477	3751 476	3751 476	2809 286	2809 286
	CHOKE, Control (Elec.)		3755 770	3755 770	3755 770	———	———
14-41-3	**PLUNGER, Pump**		3879 140	3879 140	3879 140	3481 635	3481 635
14-43-5	**ROD, Metering**		———	———	———	2585 702	2585 702
14-45-12	**LIMITER, Idle Mixture Screw**		———	3685 678	3685 678	3481 644	———
14-50-25	**DASHPOT**		———	———	3780 677	———	———

CODE	COMPONENT CHART REFERENCE NO. / MANUFACTURER'S NO.		11 6465S	12 6491S	13 6492S	14 6466S	15 6464S
14-30-2	**GSKT., Flange**		3698 836	3698 836	3698 836		3698 836
14-30-4	REPAIR KIT	Major	3837 467	3837 467	3837 467		3837 467
		Minor	3837 489	3837 489	3837 489		3837 489
14-30-7	GSKT. KIT		3837 491	3837 491	3837 491		3837 491
14-30-8	NEEDLE, w/Seat		2933 042	2933 042	2933 042		2933 042
14-35-1	**JET, Main-Std.**		2809 305	2809 305	2809 305		2809 305
14-39-7	**DIAPHRAGM, Choke**		3780 153	3780 154	3780 154		3780 153
14-39-45	CHOKE		3751 478	3751 479	3751 479		3751 478
	CHOKE, Control (Elec.)		3755 770	3755 770	3755 770		3755 770
14-41-3	**PLUNGER, Pump**		3837 500	3837 500	3837 500		3837 500
	KIT, Accel. Pump, Arm & Link		3879 781	3879 781	3879 781		3879 781
14-43-5	**ROD, Metering**		3879 172	3879 172	3879 172		3837 502
14-45-12	**LIMITER, Idle Mixture Screw**		3685 661	———	———		3685 661
14-45-25	SCREW, F/Idle		3481 210	3481 210	3481 210		3481 210
14-50-25	**DASHPOT**		———	———	———		3685 776

CODE	COMPONENT CHART REFERENCE NO. / MANUFACTURER'S NO.		16 6467S	17 R6731A	18 TQ6488S	19 TQ6452S	20 TQ6453S
14-30-2	**GSKT., Flange**		3698 836	3769 252	3751 286	3751 286	3751 286
14-30-4	REPAIR KIT	Major	3837 467	3837 506	3837 464	3837 481	3837 479
		Minor	3837 489	3879 768	3837 521	3837 521	3837 521
	BRIDGE PACKAGE, Carb. Air Horn Reinf.		———	3879 169	———	———	———
14-30-7	GSKT. KIT		3837 491	3879 766	3744 757	3744 757	3744 757
14-30-8	NEEDLE, w/Seat		2933 042	3514 730	3621 161	3621 161	3621 161
14-35-1	**JET, Main-Std.**		2809 305	3780 676	———	———	———
	JET, Primary		———	———	3744 756	3744 756	3744 756
	JET, Secondary		———	———	3837 499	3837 499	3837 499
14-35-3	JET, Pump w/Hsg.		———	———	3621 163	3744 809	3683 904
14-35-6	VALVE, Power		———	3780 675	———	———	———
14-38-24	**SOLENOID, Idle**		———	———	———	3656 858	3656 858
14-39-7	**DIAPHRAGM, Choke**		3780 153	3744 549	3621 210	3621 209	3621 209
14-39-45	CHOKE		3751 478	3751 480	3751 484	3751 484	3751 484
	CHOKE, Control (Elec.)		3755 770	3755 750	3755 750	3755 750	3755 750
14-40-1	**FLOAT**		———	———	3780 155	3780 155	3780 155
14-41-3	**PLUNGER, Pump (w/Val. & Seat for T.Q. Carbs.)**		3837 500	# 3621 365	3780 111	3780 111	3780 111
	KIT, Accel. Pump, Arm & Link		3879 781	———	———	———	———
14-43-5	**ROD, Metering**		3879 121	———	3837 497	3744 755	3837 498
14-45-12	**LIMITER, Idle Mixture Screw**		3685 661	3685 678	3685 661	3685 661	3685 661
14-45-25	SCREW, F/Idle		3481 210	———	———	———	———

CARLINES
J - Challenger, B - Barracuda, V - Valiant, L - Dart, R - Satellite, W - Coronet - Charger, P - Plymouth, D - Dodge, C - Chrysler, Y - Imperial

AR Indicates use as required.
# Indicates parts not listed in any previous parts book.
Numerals in parentheses ( ) refer to notes.
★ Indicates change or addition.

Printed in U.S.A.
November, 1974

CODE	COMPONENT CHART REFERENCE NO. / MANUFACTURER'S NO.		21 TQ6454S	22 TQ6455S	23 TQ9049	24 TQ6489S	25 8010S
14-30-2	**GSKT., Flange**		3751 286	3751 286	3751 286	———	3698 836
14-30-4	REPAIR KIT	Major	3837 481	3837 479	———	———	3837 467
		Minor	3837 521	3837 521	3837 521	———	3837 489
14-30-7	GSKT., Kit		3744 757	3744 757	3744 757	———	3837 491
14-30-8	NEEDLE, w/Seat		3621 161	3621 161	3621 161	———	2933 042
14-35-1	**JET, Main-Std.**		———	———	———	———	2809 305
	JET, Primary		3744 756	3744 756	3744 756	———	———
	JET, Secondary		3837 499	3837 499	3683 906	———	———
14-35-3	JET, Pump w/Hsg.		3744 809	3683 904	3621 163	———	———
14-35-6	VALVE, Power		———	———	———	———	———
14-38-24	**SOLENOID, Idle**		3656 858	3656 858	3656 858	———	———
14-38-25	CABLE, Sol. Jumper		———	———	———	———	———
14-39-7	**DIAPHRAGM, Choke**		3621 209	3621 209	3621 210	———	3879 173
14-39-45	CHOKE		3751 484	3751 484	3751 483	———	3751 478
	CHOKE, Control (Elec.)		3755 750	3755 750	3751 415	———	3755 750
14-40-1	**FLOAT**		3780 155	3780 155	———	———	———
14-41-3	**PLUNGER, Pump (w/Val. & Seat for T.Q. Carbs.)**		3780 111	3780 111	3780 111	3780 111	3837 500
	KIT, Accel. Pump, Arm & Link		———	———	———	———	3879 781
14-43-5	**ROD, Metering**		3837 498	3837 498	3837 498	3837 498	3879 172
14-45-12	**LIMITER, Idle Mixture Screw**		3685 661	3685 661	3685 661	3685 661	3685 661
14-50-25	**DASHPOT**		———	———	———	———	3685 776

CODE	COMPONENT CHART REFERENCE NO. / MANUFACTURER'S NO.		26 TQ6457S		28 TQ6503S	29 TQ6456S	30 TQ6460S
14-30-2	**GSKT., Flange**		3751 286		3751 286	3751 286	3751 286
14-30-4	REPAIR KIT	Major	3837 464		3837 480	3837 464	3837 471
		Minor	3837 521		3837 521	3837 521	3837 521
14-30-7	GSKT., Kit		3744 757		3744 757	3744 757	3744 757
14-30-8	NEEDLE, w/Seat		3621 161		3621 161	3621 161	3621 161
14-35-1	**JET, Primary**		3744 756		3744 756	3744 756	3744 756
	JET, Secondary		3837 499		3837 499	3837 499	3683 906
14-35-3	JET, Pump w/Shsg.		3683 904		3683 904	3744 809	3621 163
14-38-24	**SOLENOID, Idle**		3656 858		———	3656 858	———
14-38-25	CABLE, Sol. Jumper		3764 161		———	———	———
14-39-7	**DIAPHRAGM, Choke**		3621 210		3621 210	3621 209	3621 210
14-39-45	CHOKE		3751 484		3751 485	3751 484	3751 484
	CHOKE, Control (Elec.)		3755 750		3755 750	3755 750	3755 750
14-40-1	**FLOAT**		3780 155		3780 155	3780 155	3780 155
14-41-3	**PLUNGER, Pump (w/Val. & Seat)**		3780 111		3780 111	3780 111	3780 111
14-43-5	**ROD, Metering**		3744 771		3744 771	3744 766	3744 771
14-45-12	**LIMITER, Idle Mixture Screw**		3685 661		3685 661	3685 661	3685 661

CODE	COMPONENT CHART REFERENCE NO. / MANUFACTURER'S NO.		31 TQ6461S	32 TQ6462S	33 TQ6463S	34 R-6889A	35 TQ9000S
14-30-2	**GSKT. FLANGE**		3751 286		3751 286	3769 252	3751 286
14-30-4	REPAIR KIT	Major	3837 472		3837 474	3780 681	3837 465
		Minor	3837 521		3837 521	3879 791	3837 521
	BRIDGE PACKAGE, Carb. Air Horn Reinf.		———		———	3879 169	———
14-30-7	GSKT., Kit		3744 757		3744 757	3879 801	3744 757
14-30-8	NEEDLE, w/Seat		3621 161		3621 161	3514 730	3621 161
14-35-1	**JET, Main Std.**		———		———	3420 332	———
	JET, Primary		3744 756		3744 756	———	3744 756
	JET, Secondary		3683 906		3683 906	———	3683 906
14-35-3	JET, Pump w/Hsg.		3621 163		3621 163	———	3621 163
14-35-6	Valve, Power		———		———	3514 796	———
14-38-24	**SOLENOID, Idle**		———		3656 858	———	———
14-39-7	**DIAPHRAGM, Choke**		3621 210		3621 210	3685 777	3621 209
14-39-45	CHOKE		3751 415		3751 415	3751 481	3751 485
	CHOKE, Control (Elec.)		3755 750		3755 750	3755 750	———
14-40-1	**FLOAT**		3780 155		3780 155	———	3780 155
14-41-3	**PLUNGER, Pump (w/Val. & Seat)**		3780 111		3780 111	———	3780 111
14-43-5	**ROD, Metering**		3837 498		3837 498	———	3744 771
14-45-12	**LIMITER, Idle Mixture Screw**		3685 661		3685 661	3685 678	———

CARLINES	J - Challenger B - Barracuda	V - Valiant L - Dart	R - Satellite W - Coronet - Charger	P - Plymouth D - Dodge	C - Chrysler Y - Imperial

AR Indicates use as required.

Numerals in parentheses ( ) refer to notes.

# Indicates parts not listed in any previous parts book.

★ Indicates change or addition.

Printed in U.S.A.
November, 1974

CODE	COMPONENT CHART REFERENCE NO. / MANUFACTURER'S NO.		36 R6722-1A	37 8009S	38 R6990A	39 TQ9014S	40 TQ9023S
14-30-2	**GSKT. Flange**		3698 360	3698 836	3769 252	3751 286	3751 286
14-30-4	REPAIR KIT	Major	3837 509	3837 467	4026228	3837 464	3837 465
		Minor	3837 510	3837 468	3879 768	3837 521	3837 521
	BRIDGE PACKAGE, Carb. Air Horn Reinf.		———	———	3879 169	———	———
14-30-7	GSKT, KIT		3837 511	3837 491	3879 766	3744 757	3621 246
14-30-8	NEEDLE, w/Seat		2299 042	2933 042	3514 730	3621 161	3621 161
14-35-1	**JET, Main-Std.**		3685 847	2809 305	3685 809	———	———
	JET, Primary		———	———	———	3744 756	3744 756
	JET, Secondary		———	———	———	3837 499	3683 906
14-35-6	VALVE, Power		3780 674	———	3780 675	———	———
14-35-40	JET, w/Hsg. Pump		———	———	———	3683 904	3621 163
14-38-24	**SOLENOID, Idle**		———	———	———	3656 858	3656 858
14-38-25	CABLE, Sol. Jumper		———	———	———	3764 161	3764 161
14-39-7	**DIAPHRAGM, Choke**		3780 672	3879 173	3744 550	3621 210	3621 210
14-39-35	CHOKE		3751 476	3751 478	3751 482	3751 484	3751 484
	CHOKE, CONTROL (Elec.)		3755 770	3755 770	3755 750	3755 750	3755 750
14-40-1	**FLOAT**		———	———	3879771	3780 155	3780 155
14-41-3	**PLUNGER or CUP, Pump**		3879 140	3837 500	3621 365	3780 111	3780 111
	KIT, Accel. Pump, Arm & Link		———	3879 781	———	———	———
14-43-5	**ROD, Metering**		———	3879 121	———	3837 498	3744 771
14-45-12	**LIMITER, Idle Mixture Screw**		3685 678	3685 661	3685 678	3685 661	3685 661
14-50-25	**DASHPOT**		———	3685 776	———	———	———

CODE	COMPONENT CHART REFERENCE NO. / MANUFACTURER'S NO.		41 TQ9024S	42 TQ9015S	43 TQ9016S	44 TQ9013S	45 8018S
14-30-2	**GSKT, Flange**		3751 286	3751 286	3751 286	3751 286	3698 836
14-30-4	REPAIR KIT	Major	3837 472	3837 465	3837 465	3837 465	3837 467
		Minor	3837 521	3837 521	3837 521	3837 521	3837 489
14-30-7	GSKT, Kit		3621 246	3744 757	3744 757	3744 757	3879 139
14-30-8	NEEDLE, w/Seat		3621 161	3621 161	3621 161	3621 161	2933 042
14-35-1	**JET, Primary**		3744 756	3744 756	3744 756	3744 756	2809 305
	JET, Secondary		3683 906	3837 499	3683 906	3837 499	———
14-35-40	JET, w/Hsg. Pump		3621 163	3621 163	3621 163	3621 163	———
14-38-24	**SOLENOID, Idle**		———	3656 858	3656 858	———	———
14-39-7	**DIAPHRAGM, Choke**		3621 210	3621 210	3621 210	3621 210	3780 153
14-39-35	CHOKE		3751 415	3751 484	3751 415	3751 484	3751 478
	CHOKE, Control (Elec.)		3755 750	3755 750	3755 750	3755 750	3755 770
14-40-1	**FLOAT**		3780 155	3780 155	3780 155	3780 155	———
14-41-3	**PLUNGER, Pump, w/Valve & Seat**		3780 111	3780 111	3780 111	3780 111	3837 500
	KIT, Accel. Pump, Arm & Link		———	———	———	———	3879 781
14-43-5	**ROD, Metering**		3837 498	3837 498	3744 771	3744 771	3879 121
14-45-12	**LIMITER, Idle Mixture Screw**		3685 661	3685 661	3685 661	3685 661	3685 661

CODE	COMPONENT CHART REFERENCE NO. / MANUFACTURER'S NO.		46 R-6954A	47 R-6938A	48 R-7096A	50 R-7139A
14-30-2	**GASKET, Flange**		3879 786	3879 786	3879 786	3769 252
14-30-4	REPAIR KIT	Major	———	———	———	———
		Minor	3879 164	3879 164	3879 164	3879 768
	BRIDGE PACKAGE, Carb. Air Horn Reinf.		———	———	———	3879 169
14-30-7	GASKET SET		3879 165	3879 165	3879 165	3879 766
14-30-8	NEEDLE w/SEAT	4026259	2299 042	2299 042	2299 042	3514 730
14-35-1	**JET, Main**		3685 847	3685 839	3685 839	3685 809
14-35-6	VALVE, Power		3780 674	3780 674	3780 674	3780 675
14-38-24	**SOLENOID,Idle**		———	———	———	———
14-39-7	**DIAPHRAGM, Choke**		3879 141	3879 141	3879 141	3744 550
14-39-45	CHOKE		3751 476	3751 476	3751 476	3751 482
	CHOKE CONTROL (Elect.)		3755 770	3755 770	3755 770	3755 750
14-41-3	**PLUNGER, Pump**		3879 140	3879 140	3879 140	3621 365
14-43-5	**ROD,Metering**		———	———	———	3879771
14-45-12	**LIMITER, Idle Mix, Screw**		3685 678	3685 678	3685 678	3685 678

NOTES

CARLINES					
	J - Challenger B - Barracuda	V - Valiant L - Dart	R - Satellite W - Coronet - Charger	P - Plymouth D - Dodge	C - Chrysler Y - Imperial

AR Indicates use as required.
# Indicates parts not listed in any previous parts book.
Numerals in parentheses ( ) refer to notes.
★ Indicates change or addition.

Printed in U.S.A.
November, 1974

CODE			COMPONENT CHART REFERENCE NO. / MANUFACTURER'S NO.
			49 / 8028-S
14-30-2	**GASKET, Flange**		3879 783
14-30-4	REPAIR KIT	Major	3837 467
		Minor	3837 489
14-30-7	GASKET SET		3837 491
14-30-8	NEEDLE w/SEAT		2933 042
14-35-1	**JET, Main**		2809 305
14-39-7	**DIAPHRAGM, Choke**		3780 153
14-39-45	CHOKE		3751 343
	CHOKE CONTROL (Elect.)		3755 770
14-41-3	**PLUNGER, Pump**		3837 500
	KIT, Accel. Pump Arm & Link		3879 781
14-43-5	**ROD, Metering**		3879 172
14-45-12	**LIMITER, Idle Mix, Screw**		3685 661

NOTES

CODE	PART NAME	ENG. TYPE OR CU. IN	V	B J	L	R	W	P	D	C (L M)	C (P)	C (H S)	Y	PART NUMBER
14-62-1	**HEATER, CARB. Air**	6	1	—	1	1	1	—	—	—	—	—	—	3698 475
	w/318 & 360-4 Bbl. Eng.		1	—	1	—	—	—	—	—	—	—	—	3614 349
	w/318, & 360 Eng.		—	1	—	1	1	1	1	1	1	1	—	3671 893
	w/318-4 Bbl. Export Covers.		—	—	—	—	—	—	1	—	—	—	—	3671 893
	w/400 & 440 Eng.,		—	—	—	1	1	—	—	—	—	—	—	3751 950
	w/400-4 Bbl. & 440 Eng.		—	—	—	—	—	1	1	1	1	1	1	3769 126
	CLIP, A/Clnr. to Exh. Manif. Heat Tube													
	6 Cyl. 2 Bbl. Eng. (Export Convers. Kit)	6	1	—	—	—	—	—	—	—	—	—	—	2658 238
14-65-4	**AUTO. CHOKE TO CARB. ROD**													
	CLIP Rt.		1	1	1	1	1	1	1	1	1	1	1	2465 560
	Lt.		1	1	1	1	1	1	1	1	1	1	—	2465 561
14-67-1	**FUEL FILTER, (w/Clamps)**		1	1	1	1	1	1	1	1	1	1	1	2084 467
	FUEL FILTER & SEPARATOR w/440 Eng. (Also in 14-73-2)		—	—	—	1	1	—	—	—	—	—	—	3751 502
14-72-1	**GAUGE, Fuel Tank, All**		1	—	1	—	—	—	—	—	—	—	—	3621 615
	All	8	—	1	—	—	—	405147	405147	—	—	—	—	3420 844
	Except 440 Eng. and Sta. Wgn.		—	—	—	1	1	—	—	—	—	—	—	3780 566
	440 Eng.	8	—	—	—	1	1	—	—	—	—	—	—	3780 567
	Sta. Wgn.		—	—	—	1	1	—	—	—	—	—	—	3514 447
	Except 440 Eng. and Sta. Wgn.	8	—	—	—	—	—	1	1	1	—	1	—	3780 425
	440 Eng.	8	—	—	—	—	—	1	1	1	—	1	1	3837 355
	Sta. Wgn.	8	—	—	—	—	—	1	1	—	1	—	—	3780 424
14-72-5	CLIP, Gauge Grounding		1	1	1	1	1	1	1	1	1	1	1	2258 862
14-72-9	SEAL, Gauge		1	1	1	1	1	1	1	1	1	1	1	1948 757
14-72-33	CABLE, w/Term. & Insul. Gauge		1	1	1	1	1	1	1	1	1	1	1	2257 444
14-72-35	COVER, F/Gauge S/Unit Wrg. Sta. Wgn.		—	—	—	—	—	1	1	—	1	—	—	3764 771
14-72-47	RETAINER, Gauge		1	1	1	1	1	1	1	1	1	1	1	1730 095
14-73-1	**FUEL PUMP PACKAGE,**	6	1	—	1	1	1	—	—	—	—	—	—	2932 798
	w/360-4 Bbl. Eng.	8	1	1	1	1	1	1	1	—	—	—	—	3744 805
	w/318 & 360-2 Bbl. Eng.	8	1	1	1	1	1	1	1	1	1	1	—	3744 806
	w/440 Eng.	8	—	—	—	1	1	—	—	—	—	—	—	3685 800
	w/400 Eng.	8	—	—	—	1	1	1	1	1	—	—	—	3685 799
	w/440 Eng.	8	—	—	—	—	—	1	1	1	1	1	1	3685 799
	SCREW, Fuel Pump Att. (3/8 x 1 3/8)	8	2	2	2	2	2	2	2	2	2	2	2	6023 548
14-73-2	SEPARATOR, Fuel Vapor, 440 Eng. (Also in 14-67-1)		—	—	—	1	1	1	1	1	1	1	—	3751 502
14-73-11	HOSE, Carburetor Vapor Hose													
	3/8" I.D. & 5/8" O.D. 24 1/2" lg.		AR	AR	AR	AR	AR	AR	AR	AR	AR	AR	AR	3404 646
	26 1/2" lg.		AR	AR	AR	AR	AR	AR	AR	AR	AR	AR	AR	3466 403
	5/16" I.D. & 9/16" O.D. 28" lg.		AR	AR	AR	AR	AR	AR	AR	AR	AR	AR	AR	3466 418
	24" lg.		AR	AR	AR	AR	AR	AR	AR	AR	AR	AR	AR	1739 243
14-73-21	PUSH ROD. Fuel Pump, w/400, 440 Eng.		—	—	—	1	1	1	1	1	1	1	1	3751 613
14-74-1	**GSKT., F/Pump**		1	1	1	1	1	1	1	1	1	1	1	3577 870
14-86-1	**FUEL TANK**													
			1	—	1	—	—	—	—	—	—	—	—	3642 179
	B		—	1	—	—	—	—	—	—	—	—	—	3642 138
	J		—	1	—	—	—	—	—	—	—	—	—	3642 139
	Exc. Sta. Wgn.		—	—	—	1	1	—	—	—	—	—	—	3726 425
	Sta. Wgn.		—	—	—	1	1	—	—	—	—	—	—	3642 170
	Sta. Wgn.		—	—	—	—	—	1	1	—	1	—	—	3726 085
	Exc. Sta. Wgn.		—	—	—	—	—	1	1	1	1	1	1	3726 077
14-86-32	BEZEL, F/Filler Opng. Vinyl, Sta. Wgn.		—	—	—	1	—	—	—	—	—	—	—	3674 155
14-86-35	CAP, Gas Filler Tube													
	LOCKING TYPE - CHROME		1	—	1	—	—	—	—	—	—	—	—	3583 547
	Export		—	—	1	—	—	—	—	—	—	—	—	2823 888
	Fully Chromed (Shallow Lid) B, All		—	1	—	1	1	1	1	1	1	1	1	3683 951
	Partially, Chromed (Deep Lid) B, All		—	1	—	1	1	1	1	1	1	1	1	3583 561
	KEYED ALIKE		—	—	—	—	—	AR	AR	AR	AR	AR	—	3740 107

CARLINES: J - Challenger, B - Barracuda, V - Valiant, L - Dart, R - Satellite, W - Coronet - Charger, P - Plymouth, D - Dodge, C - Chrysler, Y - Imperial

AR Indicates use as required.

Numerals in parentheses ( ) refer to notes.

# Indicates parts not listed in any previous parts book.

★ Indicates change or addition.

Printed in U.S.A.
November, 1974

CODE	PART NAME	ENG. TYPE OR CU. IN	V	B J	L	R	W	P	D	C (L M)	C (P)	C (H S)	Y	PART NUMBER
14-86-35	CAP Cont'd.													
	NON-LOCKING	Chrome	1	—	1	—	—	—	—	—	—	—	—	3726 478
		Export, Chrome	—	—	1	—	—	—	—	—	—	—	—	2823 328
		B	—	1	—	—	—	—	—	—	—	—	—	3780 670
		Chrome-J	—	1	—	—	—	—	—	—	—	—	—	3726 480
			—	—	—	—	—	1	1	1	1	1	1	3726 476
			—	—	—	1	1	—	—	—	—	—	—	3726 407
		Sta. Wag. Export	—	—	—	—	1	—	—	—	—	—	—	2208 538
14-86-40	TUBE, F/Tank Filler All, Exc. Fast Back		1	—	1	—	—	—	—	—	—	—	—	3642 004
	Fast Back		1	—	1	—	—	—	—	—	—	—	—	3642 007
	Export Exc. Fast Back		—	—	1	—	—	—	—	—	—	—	—	3404 478
	Export Fast back		—	—	1	—	—	—	—	—	—	—	—	3404 534
	Fast Back W/Fold Down Seat		1	—	1	—	—	—	—	—	—	—	—	3642 194
		B	—	1	—	—	—	—	—	—	—	—	—	3583 573
		J	—	1	—	—	—	—	—	—	—	—	—	3583 575
		2 Dr.	—	—	—	—	1	—	—	—	—	—	—	3726 073
		4 Dr.	—	—	—	—	1	—	—	—	—	—	—	3726 137
		2 Dr.	—	—	—	1	—	—	—	—	—	—	—	3642 095
		4 Dr.	—	—	—	1	—	—	—	—	—	—	—	3726 140
		Exc. Sta. Wgn.	—	—	—	—	—	1	1	—	—	—	—	3726 098
		Sta. Wgn.	—	—	—	—	—	1	1	—	1	—	—	3726 122
			—	—	—	—	—	—	—	1	1	1	1	3726 094
	Vent, Outer-Export, Exc. Sta. Wgn.		—	—	—	—	1	—	—	—	—	—	—	3726 092
14-86-42	GASKET, Filler Tube Cam	B (L, Export)	—	1	1	—	—	—	—	—	—	—	—	2643 956
			1	—	1	—	—	—	—	—	—	—	—	3642 075
		J	—	1	—	—	—	—	—	—	—	—	—	3404 524
	SEAL Assy. Tube To Floor Pan		1	—	1	—	—	—	—	—	—	—	—	3466 307
			—	1	—	—	—	—	—	—	—	—	—	3466 151
	Export		—	—	1	—	—	—	—	—	—	—	—	3466 158
	Gskt. Fuel Hsg. To w/House, Sta. Wgn.		—	—	—	—	—	—	—	—	1	—	—	3570 244
14-86-43	BRACKET, Filler Tube	4 Dr.	—	—	—	—	1	—	—	—	—	—	—	3726 143
		4 Dr.	—	—	—	1	—	—	—	—	—	—	—	3726 144
		2 Dr.	—	—	—	1	—	—	—	—	—	—	—	3642 098
	Retainer, Rt.		—	—	—	1	1	—	—	—	—	—	—	3466 385
	Retainer, Brkt.		—	1	—	—	—	—	—	—	—	—	—	3404 074-5
			—	—	—	—	—	1	1	—	—	—	—	3726 115
			—	—	—	—	—	—	—	1	—	1	1	3726 097
14-86-49	CLAMP, Fuel Line Hose		AR	AR	AR	AR	AR	AR	AR	AR	AR	AR	AR	2448 761
	Fuel Tank Vapor Sep. & Filler Tube		AR	AR	AR	AR	AR	AR	AR	AR	AR	AR	AR	2448 764
	Hose to Vapor Tube (Crimp Type) 9/16" I.D.		1	1	1	1	1	1	1	1	1	1	1	3642 186
	Gear Type, 7/32" to 5/8" Opng.		AR	AR	AR	AR	AR	AR	AR	AR	AR	AR	AR	3683 823
14-86-50	TUBE ASSY. Vapor, w/Limiting Valve (w/Tag 81-685-1714)		1	—	1	1	1	1	1	1	1	1	1	3642 263
		Sta. Wgn.	—	—	—	1	1	—	—	—	—	—	—	3642 269
14-86-55	GROMMET, FUEL Tank to Filler Tube		—	1	—	—	—	—	—	—	—	—	—	3404 182
		Sta. Wgn.	—	—	—	—	—	1	1	—	1	—	—	3404 182
	(Exc. PD & C Sta. Wgn.)		1	—	1	1	1	1	1	1	1	1	1	2880 481
14-86-57	HOSE, F/Vapor Tube Rear		—	1	—	1	1	1	1	1	1	1	1	2600 702
	PLUG, F/Tank Vent Tube Hole Sta. Wgn.													
	Export		—	—	—	—	1	—	—	—	—	—	—	432 416
	Fuel Tube		1	1	1	1	1	1	1	1	1	1	1	3466 418
14-86-65	SEPARATOR ASSY. Fuel Tank		—	1	—	—	—	—	—	—	—	—	—	3642 105
14-86-67	PLATE, F/Tank V/Sep. Opng. Export		—	—	1	—	—	—	—	—	—	—	—	3404 700
	GSKT. Plate F/Tank V/Sep. Opng. Export		—	—	1	—	—	—	—	—	—	—	—	3404 191
14-86-71	BRACKET, Vapor Sep. Tank Mtg.		—	1	—	—	—	—	—	—	—	—	—	3616 621
	Screw		—	2	—	—	—	—	—	—	—	—	—	6025 346
14-86-85	FILTER, Inside of Tank,		—	—	—	—	—	—	—	—	—	—	—	
	440 Eng.		—	—	—	1	1	1	1	1	1	1	—	2534 111
		All others	1	1	1	1	1	1	1	1	1	1	1	1670 694
	CLAMP, F/Filter Hose		AR	AR	AR	AR	AR	AR	AR	AR	AR	AR	AR	274 461

CARLINES J - Challenger, B - Barracuda, V - Valiant, L - Dart, R - Satellite, W - Coronet - Charger, P - Plymouth, D - Dodge, C - Chrysler, Y - Imperial

AR Indicates use as required.

Numerals in parentheses ( ) refer to notes.

Printed in U.S.A.

# Indicates parts not listed in any previous parts book.

★ Indicates change or addition.

November, 1974

CODE	PART NAME	ENG. TYPE OR CU. IN	V	B J	L	R	W	P	D	C (L M)	C (P)	C (H S)	Y	PART NUMBER
14-87-2	**DEFLECTOR, Sta. Wgn.**		—	—	—	—	—	1	1	—	1	—	—	2894 903
	SHIELD, Sta. Wgn.		—	—	—	1	1	—	—	—	—	—	—	3499 626
14-88-21	**Fuel Tank Strap**		2	—	2	—	—	—	—	—	—	—	—	3404 679
			—	2	—	—	—	—	—	—	—	—	—	3466 431
			—	—	—	2	2	—	—	—	—	—	—	3726 430
			—	—	—	—	—	2	2	2	2	2	2	3726 131
	Sta. Wgn., Front		—	—	—	1	1	—	—	—	—	—	—	3404 973
	Sta. Wgn.,		—	—	—	1	1	—	—	—	—	—	—	3404 972
	Sta. Wgn., Front		—	—	—	—	—	1	1	—	1	—	—	3404 681
	Sta. Wgn.,		—	—	—	—	—	1	1	—	1	—	—	3726 127
14-88-27	STUD, Support Strap		2	2	2	2	2	2	2	2	2	2	2	2643 824
	NUT, Support Strap		2	2	2	2	2	2	2	2	2	2	2	6023 397
	Front, Sta. Wgn.		—	—	—	1	1	—	—	—	—	—	—	1671 610
14-88-28	BRACKET, w/Nut, Rr.		—	—	—	—	—	—	—	—	—	—	—	
	Floor Pan Ret. Sta. Wgn.		—	—	—	—	—	1	1	—	1	—	—	3752 159
14-88-32	STRAINER, Rear Flr. Pan Fuel Tank,		—	—	—	—	—	—	—	—	—	—	—	
	except Sta. Wgn.		—	—	—	1	1	—	—	—	—	—	—	3482 256
	STRAINER, w/Reinf. Rr.		—	—	—	—	—	—	—	—	—	—	—	
	Flr. Pan		—	1	—	—	—	—	—	—	—	—	—	2934 840
14-88-35	EXTENSION, Rr. Flr. F/Tank Strainer		—	—	—	—	—	1	1	1	1	1	1	3756 216
14-88-36	REINF., Rr. Flr. Pan Fuel		—	—	—	—	—	—	—	—	—	—	—	
	Tank Frt.		—	—	—	—	—	1	1	1	1	1	1	2481 381
	REINF., F/Tank Strap		—	—	—	—	—	—	—	—	—	—	—	
	Rr.,		—	2	—	—	—	—	—	—	—	—	—	3506 065
14-89-2	**FUEL LINE TUBING, 25 Ft. Roll, 5/16" O. D.**		AR	AR	AR	AR	AR	AR	AR	AR	AR	AR	AR	1843 253
14-89-57	HOSE, 3/8" I.D. & 5/8" O.D. 9" Lg.		AR	AR	AR	AR	AR	AR	AR	AR	AR	AR	—	2534 117
	24 1/2" lg		AR	AR	AR	AR	AR	AR	AR	AR	AR	AR	AR	3404 646
	26 1/2" lg.		AR	AR	AR	AR	AR	AR	AR	AR	AR	AR	AR	3466 403
	5/16" I.D. & 9/16" O.D. 28" Lg.		AR	AR	AR	AR	AR	AR	AR	AR	AR	AR	AR	3466 418
	1/4" I.D. & 7/16" O.D. 37" lg.		AR	AR	AR	AR	AR	AR	AR	AR	AR	AR	AR	2600 702
	5/16" I.D. x 9/16" O.D. 25' Roll		AR	AR	AR	AR	AR	AR	AR	AR	AR	AR	AR	3744 482
	5/32" I.D. x 5/16" O.D. .50' Roll		AR	AR	AR	AR	AR	AR	AR	AR	AR	AR	AR	2951 794
	1/4" I.D. x 1/2" O.D. Sold By In.		AR	AR	AR	AR	AR	AR	AR	AR	AR	AR	AR	3780 797
14-89-60	SHIELD, Heat Fuel Hose (Exc. Sta. Wgn.)		—	—	—	1	1	—	—	—	—	—	—	3726 118
	Plate & Stud Attg.		—	—	—	1	1	—	—	—	—	—	—	3726 119
14-90-1	**FUEL LINE TUBE CLIP,**		AR	AR	AR	AR	AR	—	—	—	—	—	—	2123 341
	At Sill		AR	—	AR	—	—	—	—	—	—	—	—	2207 933
	at Sill & Rt. Rear Rail		—	—	—	—	—	AR	AR	AR	AR	AR	—	3583 483
	w/440 Eng.		—	—	—	AR	AR	—	—	—	—	—	—	3583 483
	Tube, F/Vapor S/Abs. C/Mbr. Sta. Wgn.		—	—	—	2	2	—	—	—	—	—	—	2123 341
	Tube Front		AR	—	AR	—	—	—	—	—	—	—	—	2883 929
	Tube To Front Rail		—	—	—	—	—	AR	AR	AR	AR	AR	—	3583 483
	"S" Type		—	AR	—	AR	AR	AR	AR	AR	AR	AR	AR	2530 700
	CLAMP & Fuel Line Protector	6	1	—	1	1	1	1	1	—	—	—	—	3769 805

NOTES

CARLINES
J - Challenger
B - Barracuda
V - Valiant
L - Dart
R - Satellite
W - Coronet - Charger
P - Plymouth
D - Dodge
C - Chrysler
Y - Imperial

AR Indicates use as required.
Numerals in parentheses ( ) refer to notes.
Printed in U.S.A.
# Indicates parts not listed in any previous parts book.
★ Indicates change or addition.
November, 1974

GROUP 15 - HOOD

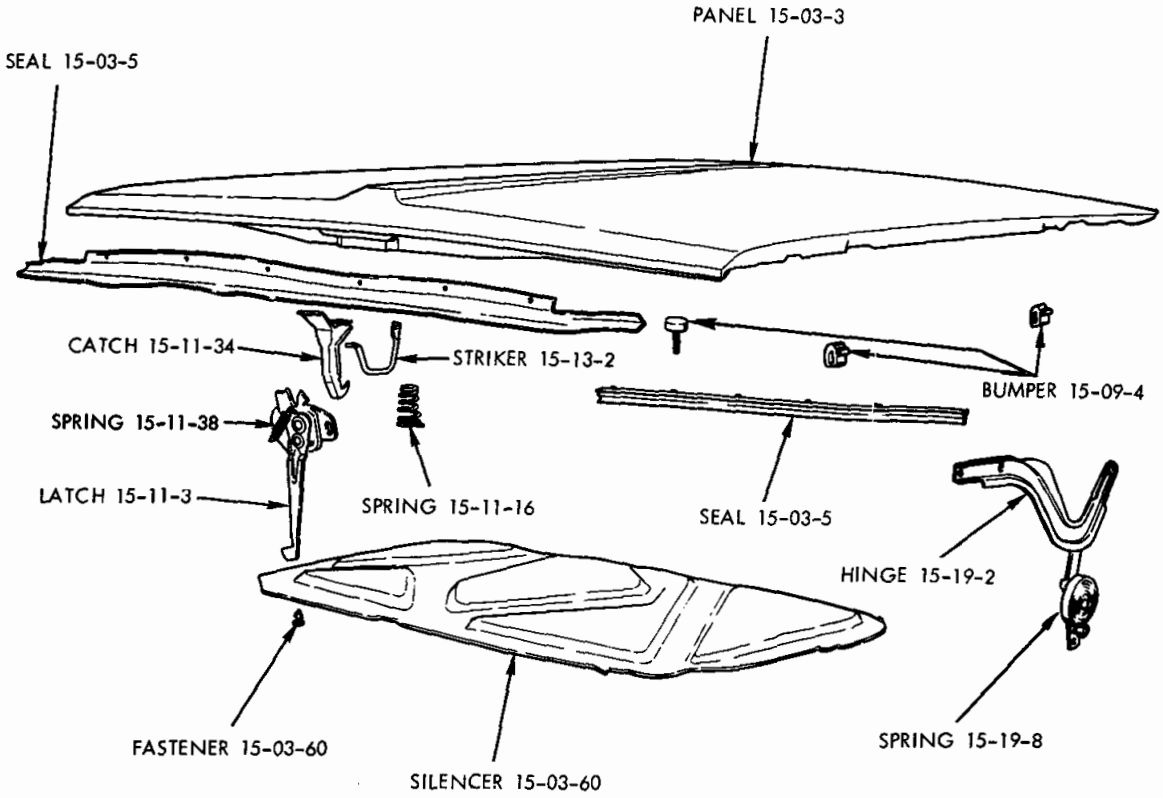

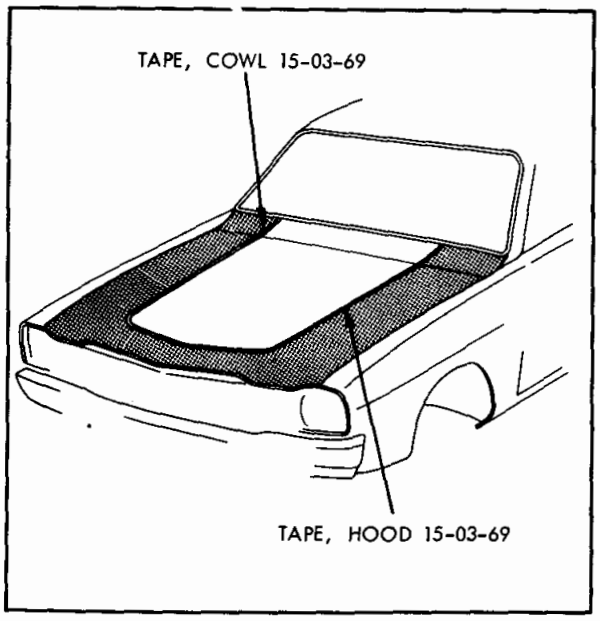

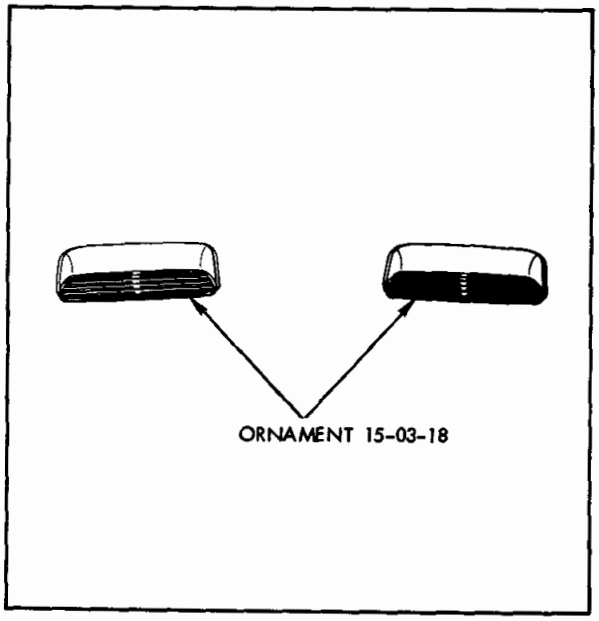

19a4310 A

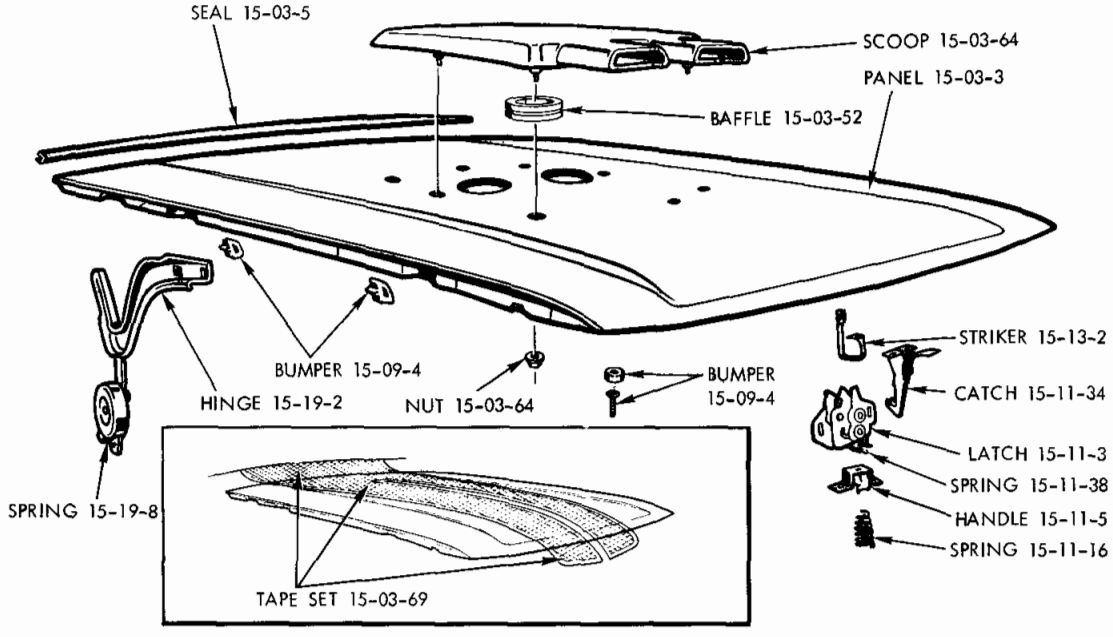

NOTE: FOR TAPES NOT SHOWN SEE PART TYPE CODE 15-03-69

19a2488 E

HOOD - DART

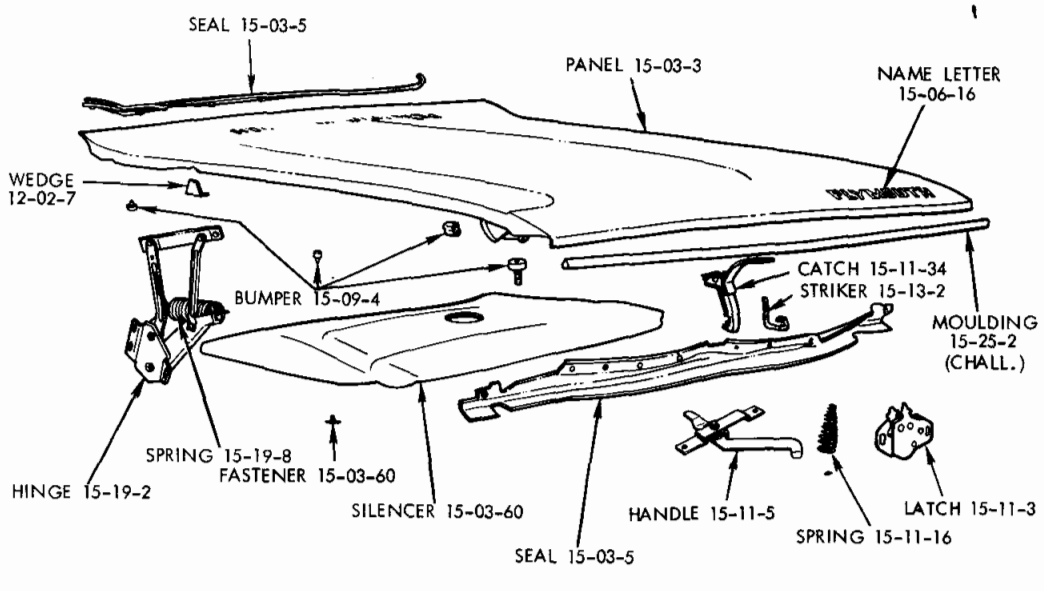

19a4318 A

HOOD - BARRACUDA AND CHALLENGER

NOTE: FOR DECALS AND TAPES SEE PART TYPE CODE 15-03-69, FOR ORNAMENTS SEE PART TYPE CODE 15-03-18

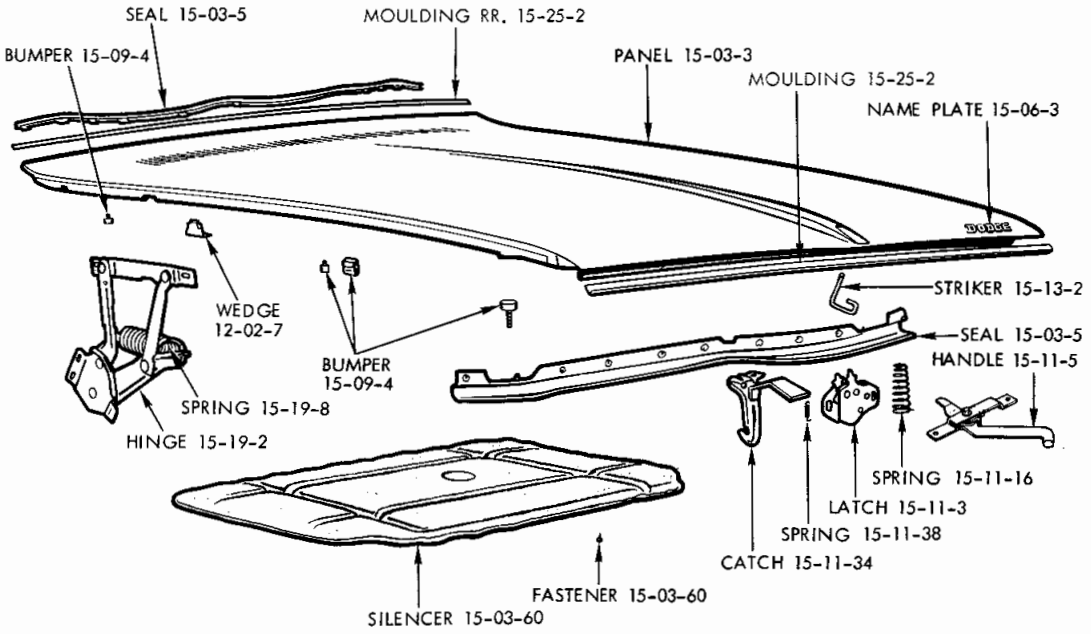

19a3700 D

HOOD - CORONET AND CHARGER

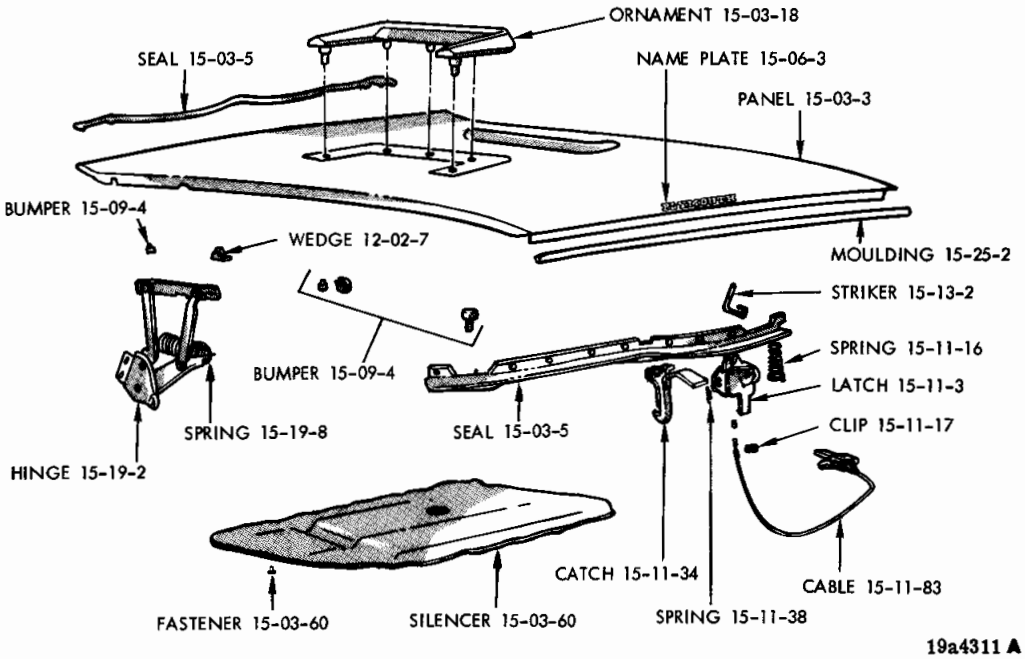

19a4311 A

HOOD - SATELLITE AND ROAD RUNNER

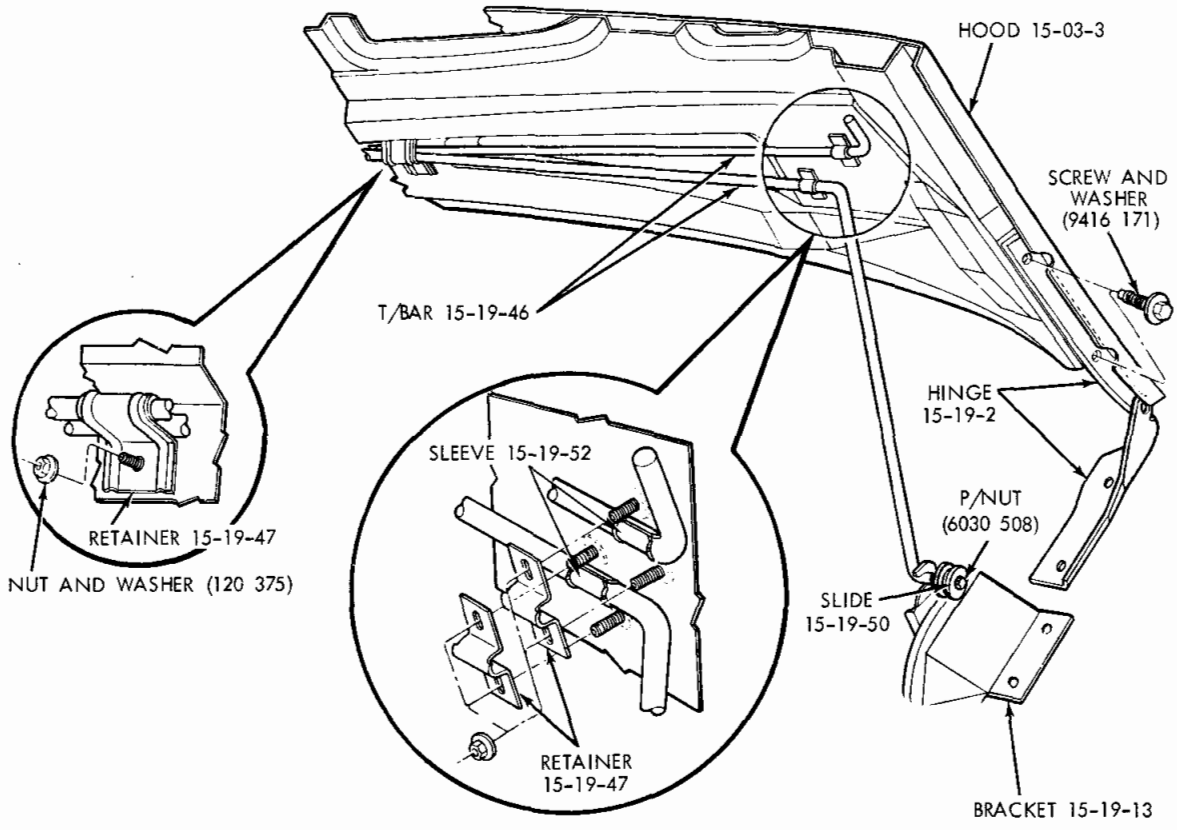
HOOD 15-03-3
SCREW AND WASHER (9416 171)
T/BAR 15-19-46
HINGE 15-19-2
SLEEVE 15-19-52
P/NUT (6030 508)
RETAINER 15-19-47
NUT AND WASHER (120 375)
SLIDE 15-19-50
RETAINER 15-19-47
BRACKET 15-19-13

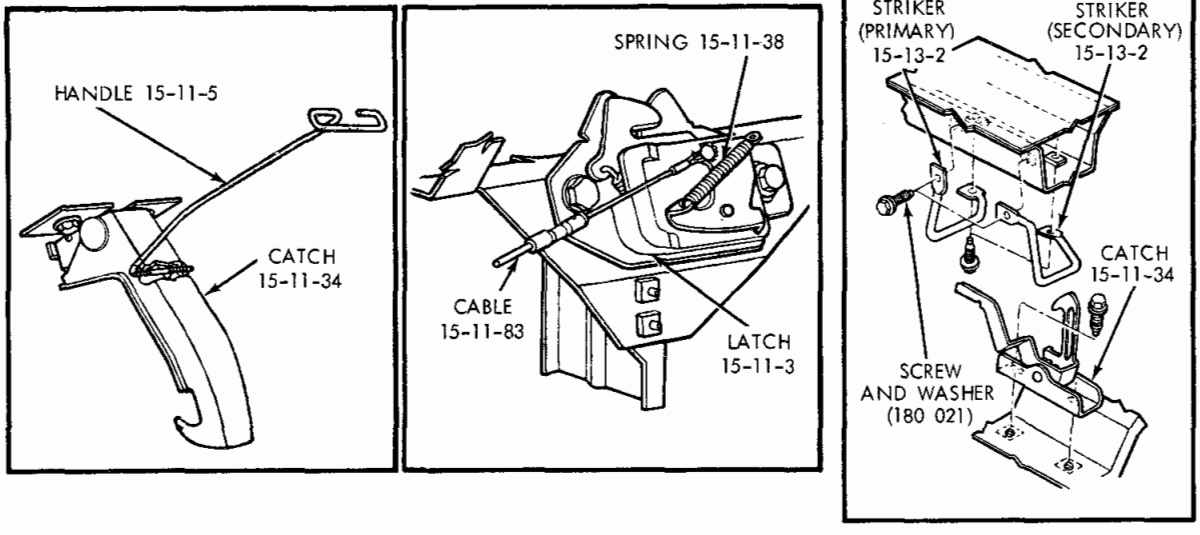
HANDLE 15-11-5
CATCH 15-11-34
SPRING 15-11-38
CABLE 15-11-83
LATCH 15-11-3
STRIKER (PRIMARY) 15-13-2
STRIKER (SECONDARY) 15-13-2
CATCH 15-11-34
SCREW AND WASHER (180 021)

19a4686

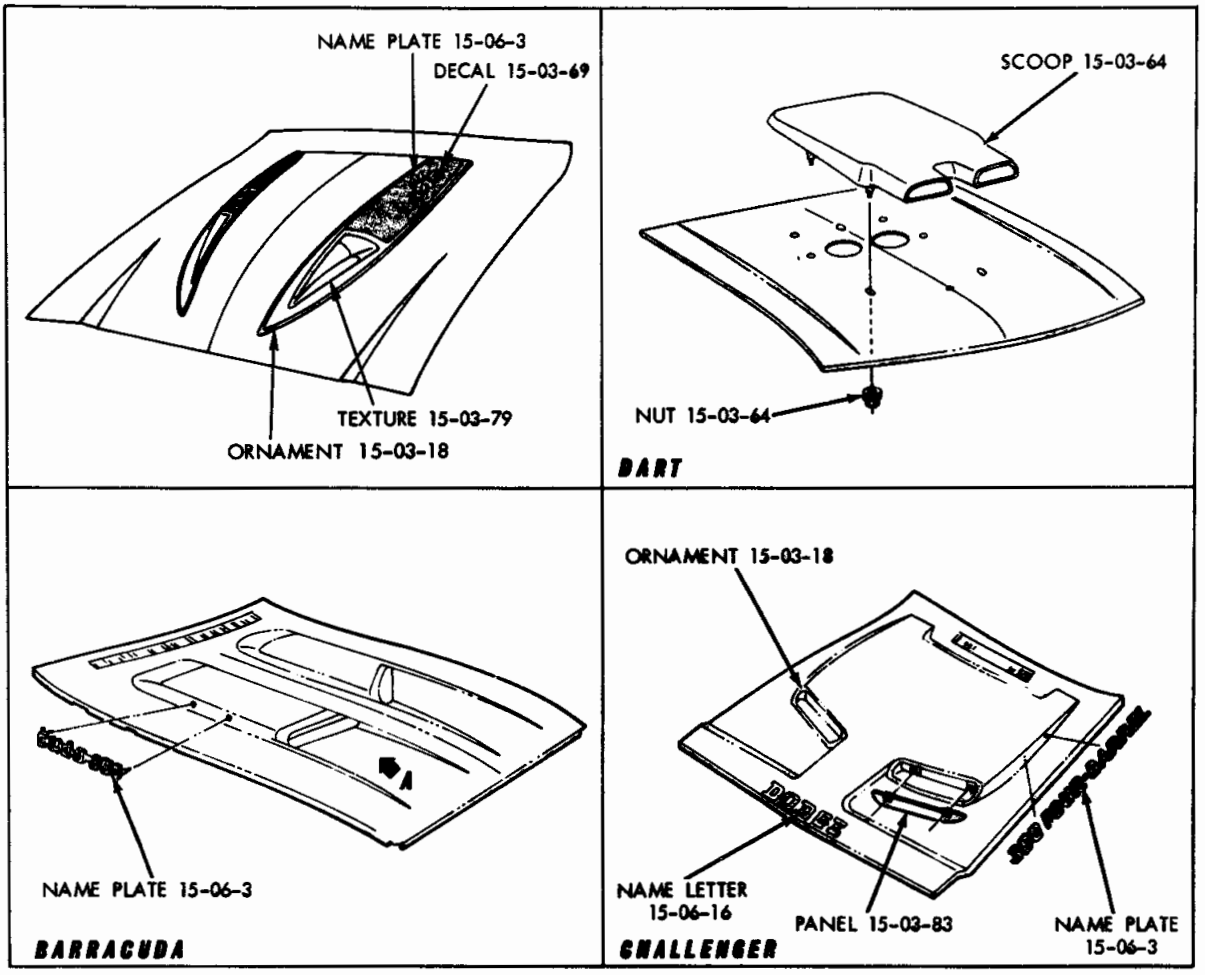

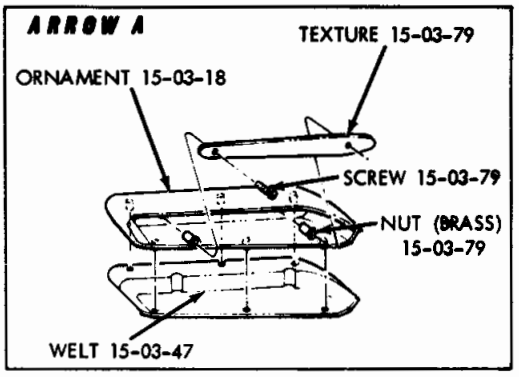

NOTE: FOR TAPES AND DECALS SEE PART TYPE CODE 15-03-69

19a4231A

SPORTS HOOD DECOR

NOTES

GROUP 15 - HOOD

BUMPER 15-09
HINGE 15-19
LATCH 15-11
MOULDING 15-25
NAME PLATE, MEDALLION AND LETTERS 15-06
PANEL 15-03
STRIKER, LATCH 15-13

Printed in U.S.A.
November, 1974

CODE	PART NAME	ENG. TYPE OR CU. IN	V	B J	L	R	W	P	D	C (L M)	C (P)	C (H S)	Y	PART NUMBER
15-03-3	**HOOD PANEL**		1	—	—	—	—	—	—	3833052			—	3684 274
	Std. (Drill Holes For Orn.)		—	—	1	—	—	—	—	—	—	—	—	3684 266
	B-H		—	1	—	—	—	—	—	—	—	—	—	3417 996
	B-S, Hi Perf.		—	1	—	—	—	—	—	—	—	—	—	3417 997
	J		—	1	—	—	—	—	—	—	—	—	—	3611 378
	Hi Perf. J		—	1	—	—	—	—	—	—	—	—	—	3611 638
	4 D, Sta. Wgn.		—	—	—	1	—	—	—	—	—	—	—	3752 646
	2D., 2D.H.T., R-L, R-H, R-P		—	—	—	1	—	—	—	—	—	—	—	3752 172
	2D., R-M, w/Sport Hood		—	—	—	1	—	—	—	—	—	—	—	3752 394
	4 D., Sta. Wgn.		—	—	—	—	1	—	—	—	—	—	—	3752 170
	2 D., 2 D.H.T., w/Sport Hood		—	—	—	—	1	—	—	—	—	—	—	3752 743
	2 D., 2 D.H.T., w/o Sport Hood		—	—	—	—	1	—	—	—	—	—	—	3752 174
			—	—	—	—	—	1	1	—	—	—	—	3752 018
			—	—	—	—	—	—	—	1	1	1	—	3752 001
			—	—	—	—	—	—	—	—	—	—	1	3752 012
15-03-5	SEAL, Hood Inner Pnl. to Cowl		1	—	1	—	—	—	—	—	—	—	—	2785 695
	SEAL, Hood Inner Pnl. to Yoke		1	—	1	—	—	—	—	—	—	—	—	2582 134
			—	1	—	—	—	—	—	—	—	—	—	2949 608
			—	—	—	—	—	1	1	1	1	1	1	3691 371
			—	—	—	1	1	—	—	—	—	—	—	3442 118
	SEAL & CLIPS, Cowl Top to Hood Pnl.		—	1	—	1	1	—	—	—	—	—	—	3440 865
	CLIP, Cowl Top to Hood Pnl. Seal, Outboard		—	6	—	6	6	—	—	—	—	—	—	2217 508
	CLIP, Hood Inr. Pnl. Cowl Seal		6	—	6	—	—	—	—	—	—	—	—	2480 904
15-03-8	RETAINER, Hood Inr. Pnl. Yoke Seal		AR	AR	AR	AR	AR	AR	AR	AR	AR	AR	AR	2898 909
15-03-18	ORNAMENT, Hood Top, w/Sport Hood		1	—	—	—	—	—	—	—	—	—	—	2949 336-7
	ORNAMENT, Hood, Valiant Brougham		1	—	—	—	—	—	—	—	—	—	—	3691 645
	ORNAMENT, Hood Top, Use w/Sport Hood, B		—	1	—	—	—	—	—	—	—	—	—	2998 034-5
	ORNAMENT, Hood Top Water Baffle Use w/Sport Hood, J		—	1	—	—	—	—	—	—	—	—	—	2998 182-3
	ORNAMENT, Hood Top Hi-Perf., Use w/Sport Hood		—	—	—	1	—	—	—	—	—	—	—	3672 258-9
	ORNAMENT, Hood Top Charger SE		—	—	—	—	1	—	—	—	—	—	—	3672 806
	BASE, Hood Top Orna., Charger SE		—	—	—	—	1	—	—	—	—	—	—	3672 669
	SPRING, Hood Top Ornament Valiant Brougham		1	—	—	—	—	—	—	—	—	—	—	3672 672
	Fast Back		—	—	—	—	1	—	—	—	—	—	—	3672 672
	RETAINER, Hood Top Ornament Valiant Brougham		1	—	—	—	—	—	—	—	—	—	—	3672 780
	Fast Back		—	—	—	—	1	—	—	—	—	—	—	3672 780
15-03-47	WELT, Hood Top Ornament, B		—	1	—	—	—	—	—	—	—	—	—	2998 036-7
	SEAL, Hood Top Orna., Hi Perf., R-M		—	—	—	2	—	—	—	—	—	—	—	3672 262
15-03-52	BAFFLE, Hood Air Scoop, Water Use w/Sport Hood		—	—	2	—	—	—	—	—	—	—	—	2998 881
15-03-60	SILENCER, Hood Inner Panel		1	—	1	—	—	—	—	—	—	—	—	2582 136
			—	1	—	—	—	—	—	—	—	—	—	3443 230
	2 D., 2 D.H.T.		—	—	—	1	—	—	—	—	—	—	—	3442 995
	4 D., Sta. Wgn.		—	—	—	1	—	—	—	—	—	—	—	3443 230
	All		—	—	—	—	1	—	—	—	—	—	—	3443 230
		Front	—	—	—	—	—	1	1	1	1	1	1	3691 372
		Rear	—	—	—	—	—	1	1	1	1	1	1	3691 402
	FASTENER		AR	AR	AR	AR	AR	AR	AR	AR	AR	AR	AR	6003 351
15-03-64	SCOOP, Hood Air, Use w/Sport Hood		—	—	1	—	—	—	—	—	—	—	—	3672 605
	NUT, Hood Air Scoop to Hood Pnl.		—	—	8	—	—	—	—	—	—	—	—	6028 172
15-03-69	TAPE SET, Hood and Cowl Stripe,	Black	1	—	—	—	—	—	—	—	—	—	—	3672 677
	TAPE SET, Hood, Cowl, Grille Pnl.,	Black	—	—	1	—	—	—	—	—	—	—	—	3672 682
	TAPE SET, Hood Top, Hi-Performance	Red	—	—	—	1	—	—	—	—	—	—	—	E162 JR2
		White	—	—	—	1	—	—	—	—	—	—	—	E162 JW1
		Black	—	—	—	1	—	—	—	—	—	—	—	E162 JX9

CARLINES: J - Challenger, B - Barracuda, V - Valiant, L - Dart, R - Satellite, W - Coronet - Charger, P - Plymouth, D - Dodge, C - Chrysler, Y - Imperial

AR Indicates use as required.

Numerals in parentheses ( ) refer to notes.

# Indicates parts not listed in any previous parts book.

★ Indicates change or addition.

Printed in U.S.A.
November, 1974

CODE	PART NAME	ENG. TYPE OR CU. IN	V	B J	L	R	W	P	D	C (L M)	C (P)	C (H S)	Y	PART NUMBER
15-03-69	TAPE SET Cont'd.													
	TAPE, Hood Stripe, "Hang Ten"													
	Fast Back		—	—	1	—	—	—	—	—	—	—	—	3691 734
	DECAL, Hood, "360",	Black	—	—	—	2	—	—	—	—	—	—	—	E163 KX2
	"360",	White	—	—	—	2	—	—	—	—	—	—	—	E163 KW1
	"400",	Black	—	—	—	2	—	—	—	—	—	—	—	E160 JX2
	"400",	White	—	—	—	2	—	—	—	—	—	—	—	E160 JW1
	"440",	Black	—	—	—	2	—	—	—	—	—	—	—	E161 JX2
	"440",	White	—	—	—	2	—	—	—	—	—	—	—	E161 JW1
15-03-79	TEXTURE, Hood Top Ornament													
	Sports Hood, B		—	1	—	—	—	—	—	—	—	—	—	2998 212-3
	Nut (Brass) w/Bshg, B		—	2	—	—	—	—	—	—	—	—	—	6026 935
	Screw, B		—	2	—	—	—	—	—	—	—	—	—	6028 684
	TEXTURE, Hood Top Ornament, Hi Performance, R-M		—	—	—	1	—	—	—	—	—	—	—	3672 824-5
15-03-83	PANEL, Hood Top Side Closure, J		—	1	—	—	—	—	—	—	—	—	—	2998 180-1
	SCREWS, J		—	4	—	—	—	—	—	—	—	—	—	6028 684
15-03-96	PIN, Hood Corner Spring		—	—	—	2	2	—	—	—	—	—	—	3508 508
15-06-3	**N/PLATE, Hood Frt. "Plymouth," B**		—	1	—	—	—	—	—	—	—	—	—	2998 042
	NUT, B		—	3	—	—	—	—	—	—	—	—	—	9411 943
	"PLYMOUTH", 4 Dr., Sta. Wgn.		—	—	—	1	—	—	—	—	—	—	—	3613 880
	"GTX" R-M		—	—	—	2	—	—	—	—	—	—	—	3680 160
	"Dodge" 2 Dr., 2 D.H.T., FASTBACK		—	—	—	—	1	—	—	—	—	—	—	2965 502
	Hood Top, "Cuda 360"		—	2	—	—	—	—	—	—	—	—	—	3691 470
	"360-4 BBL."		—	2	—	—	—	—	—	—	—	—	—	3691 468
	"Magnum," 2 D., 2 D.H.T. (Rallye)		—	—	—	—	2	—	—	—	—	—	—	3691 667
	"440 Magnum," 2 D., 2 D.H.T. (Rallye)		—	—	—	—	2	—	—	—	—	—	—	3443 516
	"400 Magnum," 2 D., 2 D.H.T. (Rallye)		—	—	—	—	2	—	—	—	—	—	—	3574 059
15-06-16	N/LETTER, Hood Frt. "D"	J	—	2	—	—	—	—	—	—	—	—	—	3749 006
	"O"	J	—	1	—	—	—	—	—	—	—	—	—	3749 007
	"G"	J	—	1	—	—	—	—	—	—	—	—	—	3749 008
	"E"	J	—	1	—	—	—	—	—	—	—	—	—	3749 009
	"D"	4 Dr., Sta. Wgn.	—	—	—	—	1	—	—	—	—	—	—	3443 365
	"O"		—	—	—	—	1	—	—	—	—	—	—	3443 367
	"D" (Center)		—	—	—	—	1	—	—	—	—	—	—	3443 369
	"G"		—	—	—	—	1	—	—	—	—	—	—	3443 371
	"E"		—	—	—	—	1	—	—	—	—	—	—	3443 373
15-09-4	**BUMPER, Fndr. Hood Side**		4	—	4	—	—	—	—	—	—	—	—	3443 894
			—	—	—	2	—	—	—	—	—	—	—	2898 588
	4 D., Sta. Wgn.		—	—	—	—	2	—	—	—	—	—	—	2898 588
	BUMPER, Fndr. Hood Side, Frt., B		—	2	—	—	—	—	—	—	—	—	—	2949 617
	2 D., 2 D.H.T., FASTBACK		—	—	—	—	2	—	—	—	—	—	—	2949 658
	BUMPER, *Hood Leveling, Rear*, B		—	3	—	—	—	—	—	—	—	—	—	2900 266
	BUMPER, Hood Leveling, Rear Center, J		—	1	—	1	1	—	—	—	—	—	—	2900 266
	BUMPER, Hood Leveling, Rear Outer, J		—	2	—	—	—	—	—	—	—	—	—	2784 714
	BUMPER, Hood Leveling, Corner		—	—	—	2	—	—	—	—	—	—	—	3443 645
			—	—	—	—	2	—	—	—	—	—	—	2784 714
	BUMPER, Fndr. Hood Leveling, J		—	2	—	—	—	—	—	—	—	—	—	2949 658
	BUMPER, Fndr. Flange Reinf., Frt. Ext. Hood		2	2	2	—	2	—	—	—	—	—	—	2276 804
	BUMPER, Fndr. Flange Hood Opng. Ext. Hood Adj.		—	—	—	2	—	—	—	—	—	—	—	2276 804
	BUMPER, Rad. Yoke Mtg. Brkt. Hood		—	—	—	—	—	2	2	2	2	2	2	2276 804
15-09-19	REINF., Hood Inner Pnl. Bmpr. J		2	2	2	2	2	2	2	2	2	2	2	3579 671
15-11-3	**LATCH, Hood, Use w/o Inst. Pnl. Mtg.**		1	—	—	—	—	—	—	—	—	—	—	3670 962
			—	1	—	—	—	—	—	—	—	—	—	3695 862
			—	—	1	—	—	—	—	—	—	—	—	3695 888
	2 D., 2 D.H.T.		—	—	—	1	—	—	—	—	—	—	—	3760 335

CARLINES J - Challenger, B - Barracuda, V - Valiant, L - Dart, R - Satellite, W - Coronet - Charger, P - Plymouth, D - Dodge, C - Chrysler, Y - Imperial

AR Indicates use as required.

# Indicates parts not listed in any previous parts book.

Numerals in parentheses ( ) refer to notes.

★ Indicates change or addition.

Printed in U.S.A.
November, 1974

CODE	PART NAME	ENG. TYPE OR CU. IN	V	B J	L	R	W	P	D	C (L M)	C (P)	C (H S)	Y	PART NUMBER
15-11-3	LATCH Cont'd.													
	4 D., Sta. Wgn.		—	—	—	1	—	—	—	—	—	—	—	3695 888
			—	—	—	—	1	—	—	—	—	—	—	3695 888
	LATCH, Hood, Use w/Inst. Pnl. Mtg.		1	1	1	—	—	—	—	—	—	—	—	3760 630
			—	—	—	1	1	—	—	—	—	—	—	3695 886
	Use w/o Alarm System		—	—	—	—	—	1	1	1	1	1	1	3695 748
	Use w/Alarm System		—	—	—	—	—	1	1	1	1	1	1	3796 598
	CLIP, Elec. Hood Latch Solenoid Use w/Alarm System		—	—	—	—	—	1	1	1	1	1	1	6015 288
15-11-5	HANDLE, Hood Latch Release, Use w/o Inst. Pnl. Mtg.													
	B		—	1	—	—	—	—	—	—	—	—	—	3586 731
	J		—	1	—	—	—	—	—	—	—	—	—	3670 860
			—	—	1	—	—	—	—	—	—	—	—	3670 964
	2 D., 2 D.H.T.		—	—	—	1	—	—	—	—	—	—	—	3760 334
	4 D., Sta. Wgn.		—	—	—	1	—	—	—	—	—	—	—	3695 841
	2 D., 2 D.H.T., FASTBACK		—	—	—	—	1	—	—	—	—	—	—	3670 320
	4 D., Sta. Wgn.		—	—	—	—	1	—	—	—	—	—	—	3760 433
	HANDLE, Hood Safety Catch Release													
	J		—	1	—	—	—	—	—	—	—	—	—	3670 461
	4 D., Sta. Wgn.		—	—	—	—	1	—	—	—	—	—	—	3760 575
	LEVER, Hood Latch Release, Use w/Inst. Pnl. Mtg.		—	—	—	1	1	—	—	—	—	—	—	3548 805
	PUSHNUT, Hood Safety Catch to Handle Attach.													
	J		—	1	—	—	—	—	—	—	—	—	—	6025 160
	4 D., Sta. Wgn.		—	—	—	—	1	—	—	—	—	—	—	6025 160
	SCREW, Hood Safety Catch Release Handle Attach.													
	J		—	2	—	—	—	—	—	—	—	—	—	9420 813
	4 D., Sta. Wgn.		—	—	—	—	1	—	—	—	—	—	—	9420 813
15-11-12	PLATE, Radiator Yoke C/Member Hood Lock		1	—	—	—	—	—	—	—	—	—	—	3672 489
			—	—	1	—	—	—	—	—	—	—	—	3672 800
15-11-16	SPRING, Hood Release Pop-Up		1	—	—	—	—	—	—	—	—	—	—	2802 974
			—	—	—	—	—	—	—	1	1	1	1	3796 471
			—	1	1	1	1	—	—	—	—	—	—	2935 375
15-11-17	CLIP, Hood Latch Rel. Cable Ret.													
	Use w/Inst. Pnl. Mtg.		1	1	1	1	1	—	—	—	—	—	—	3695 562
			—	—	—	—	—	1	1	1	1	1	1	3760 645
	CLIP, Hood Release Handle Attach.													
	Use w/o Inst. Pnl. Mtg.		—	—	2	—	2	—	—	—	—	—	—	3586 884
	4 D., Sta. Wgn.		—	—	—	2	—	—	—	—	—	—	—	3586 884
15-11-20	LINK, Hood Latch Rel. Hdle. to Latch		—	—	1	—	—	—	—	—	—	—	—	3695 089
	2 D., 2 D.H.T., Fastback		—	—	—	—	1	—	—	—	—	—	—	3695 270
	LINK, Hood Latch Rel. Handle													
	4 Dr., Sta. Wgn.		—	—	—	1	—	—	—	—	—	—	—	3695 402
	LINK, Hood Latch Release													
	4 D., Sta. Wgn.		—	—	—	—	1	—	—	—	—	—	—	3760 435
15-11-30	BUSHING, Hood Safety Catch Release Handle Mtg. Brkt.													
	J		—	1	—	—	—	—	—	—	—	—	—	2583 429
	D., Sta. Wgn.		—	—	—	—	1	—	—	—	—	—	—	2583 429
	BUSHING, Hood Latch Release Handle Mtg.													
	2 D., 2 D.H.T.		—	—	—	1	—	—	—	—	—	—	—	2467 571
15-11-34	CATCH, w/Handle, Hood Safety, Complete		1	—	—	—	—	—	—	—	—	—	—	3861 013
	B		—	1	—	—	—	—	—	—	—	—	—	2945 845
	J		—	1	—	—	—	—	—	—	—	—	—	3508 320
			—	—	1	—	—	—	—	—	—	—	—	3670 348
	2 D., 2 D.H.T.		—	—	—	1	—	—	—	—	—	—	—	3508 322
	4 D., Sta. Wgn.		—	—	—	1	—	—	—	—	—	—	—	3508 326

CARLINES J - Challenger, B - Barracuda, V - Valiant, L - Dart, R - Satellite, W - Coronet - Charger, P - Plymouth, D - Dodge, C - Chrysler, Y - Imperial

AR Indicates use as required.
Numerals in parentheses ( ) refer to notes.
Printed in U.S.A.
# Indicates parts not listed in any previous parts book.
★ Indicates change or addition.
November, 1974

CODE	PART NAME	ENG. TYPE OR CU. IN	V	B J	L	R	W	P	D	C (L M)	C (P)	C (H S)	Y	PART NUMBER
15-11-34	CATCH Cont'd.													
	2 D., 2 D.H.T., FASTBACK		—	—	—	—	1	—	—	—	—	—	—	2999 149
	4D., Sta. Wgn.		—	—	—	—	1	—	—	—	—	—	—	3508 320
			—	—	—	—	—	1	1	—	—	—	—	3796 501
			—	—	—	—	—	—	—	1	1	1	1	3796 502
15-11-38	SPRING, Hood Latch to Pawl													
	Use w/or w/o Inst. Pnl. Mtg.		1	1	1	1	1	—	—	—	—	—	—	2428 125
	Use w/o Security Alarm System		—	—	—	—	—	1	1	1	1	1	1	2428 125
	SPRING, Hood Latch Release Lever Return													
	Use w/o Inst. Pnl. Mtg.		—	1	—	—	—	—	—	—	—	—	—	2428 125
	Use w/o Inst. Pnl. Mtg.		—	—	1	—	—	—	—	—	—	—	—	2802 836
	Use w/o Inst. Pnl. Mtg., 4 D., Sta.Wgn.		—	—	—	1	—	—	—	—	—	—	—	2802 836
	Use w/o Inst. Pnl. Mtg.		—	—	—	—	1	—	—	—	—	—	—	2802 836
	Use w/Inst. Pnl. Mtg.		1	1	1	—	—	—	—	—	—	—	—	3760 623
	Use w/or w/o Alarm System		—	—	—	—	—	1	1	1	1	1	1	3695 427
	SPRING, Elec. Hood Latch Blocking Lever, w/Security Alarm		—	—	—	—	—	1	1	1	1	1	1	3695 732
	SPRING, Pin Elec. Hood Latch Solenoid Use w/Security Alarm		—	—	—	—	—	1	1	1	1	1	1	273 669
	SPRING, Hood Latch Release Handle Return													
	Use w/o Inst. Pnl. Mtg., 4 D., Sta. Wgn.		—	—	—	1	—	—	—	—	—	—	—	2862 989
	Use w/o Inst. Pnl. Mtg. All		—	—	—	—	1	—	—	—	—	—	—	2862 989
15-11-46	SUPPORT, Hood Lock Vertical		1	—	1	—	—	—	—	—	—	—	—	3691 666
			—	1	—	—	—	—	—	—	—	—	—	2949 584
	4 D., Sta. Wgn.		—	—	—	1	—	—	—	—	—	—	—	3672 244
	2 D., 2 D.H.T.		—	—	—	1	—	—	—	—	—	—	—	3672 229
	2 D., 2 D.H.T., FASTBACK		—	—	—	—	1	—	—	—	—	—	—	3672 348
	4 D., Sta. Wgn. (Complete)		—	—	—	—	1	—	—	—	—	—	—	3752 807
	4 D. and Sta. Wgn.		—	—	—	—	1	—	—	—	—	—	—	3691 608
			—	—	—	—	—	1	1	1	1	1	1	3691 580
	Use After April 5, 1974		—	—	—	—	—	1	1	1	1	1	1	3781 521
	NUT, Hd. Lk. V/Supt. to Frt. C/Mbr		2	2	2	—	—	—	—	—	—	—	—	6029 963
15-11-58	PLATE, Radiator Yoke C/Member Hood Lock		1	—	—	—	—	—	—	—	—	—	—	3672 489
			—	—	1	—	—	—	—	—	—	—	—	3672 800
	PLATE, Hood Lock Vertical Support Yoke C/Member													
	2 D., 2 D.H.T., FASTBACK		—	—	—	—	1	—	—	—	—	—	—	3442 320
	PLATE, Hood Lock Vertical Support Yoke													
	4 D., Sta. Wgn.		—	—	—	—	1	—	—	—	—	—	—	3611 581
			—	—	—	—	—	1	1	1	1	1	1	3691 249
	PLATE, Hood Lock Vertical Support Horn Mtg., J		—	1	—	—	—	—	—	—	—	—	—	3574 105
15-11-74	GROMMET, Hood Latch Rel. Hdle., Cable Use w/ Inst. Pnl. Mtg.		1	1	1	1	1	1	1	1	1	1	1	3695 100
	SPACER, Hood Latch Rel. Cable Mtg. (On Inst. Pnl.)		1	—	1	—	—	—	—	—	—	—	—	3670 478
15-11-75	BRKT. Hood Latch Rel. Cable Mtg., Use w/Inst. Pnl. Mtg.		1	—	1	—	—	—	—	—	—	—	—	3670 476
			—	1	—	—	—	—	—	—	—	—	—	3670 110
15-11-79	SHIELD, Hood Latch Rel. Cable Use w/ Inst. Pnl. Mtg. 2 D., 2 D.H.T.		—	—	—	1	—	—	—	—	—	—	—	3586 314
15-11-83	RELEASE, Inst. Pnl. Hood Latch		1	—	1	—	—	—	—	—	—	—	—	3695 563
			—	—	—	1	1	—	—	—	—	—	—	3695 565
			—	1	—	—	—	—	—	—	—	—	—	3695 564
			—	—	—	—	—	1	1	1	1	1	1	3796 459
	Use After Feb. 1, 1974		—	—	—	—	—	1	1	1	1	1	1	3796 935

CARLINES: J - Challenger; B - Barracuda; V - Valiant; L - Dart; R - Satellite; W - Coronet - Charger; P - Plymouth; D - Dodge; C - Chrysler; Y - Imperial

AR Indicates use as required.

# Indicates parts not listed in any previous parts book.

Numerals in parentheses ( ) refer to notes.

★ Indicates change or addition.

Printed in U.S.A.
November, 1974

CODE	PART NAME	ENG. TYPE OR CU. IN	V	B J	L	R	W	P	D	C (L M)	C (P)	C (H S)	Y	PART NUMBER
15-11-87	CABLE & SPRG. Pin Pkg. Hood Corner Stud													
	26", 2 D., 2 D.H.T., FASTBACK		—	—	—	1	1	—	—	—	—	—	—	3579 673
	SCREW, Hd. Cor. Stud Sprg. Pin Ret.		—	—	—	2	2	—	—	—	—	—	—	6024 654
15-11-89	STUD, SPRING and PIN PACKAGE, Hood Corner													
	2 D., 2 D.H.T.		—	—	—	1	—	—	—	—	—	—	—	3685 951
	2 D., 2 D.H.T., FASTBACK		—	—	—	—	1	—	—	—	—	—	—	3579 622
	BEZEL PACKAGE, Hood Corner Stud													
	2D., 2D.H.T., FAST BACK		—	—	—	2	2	—	—	—	—	—	—	3579 670
	PIN, Hood Corner Spring													
	2 D., 2 D.H.T., FASTBACK		—	—	—	2	2	—	—	—	—	—	—	3508 508
	WASHER, Hood Corner Stud													
	2 D., 2 D.H.T., FASTBACK		—	—	—	2	2	—	—	—	—	—	—	6023 054
	NUT, Hood Corner Stud													
	2 D., 2 D.H.T., FASTBACK		—	—	—	4	4	—	—	—	—	—	—	453 285
	SCREW, Bezel Attach													
	2 D., 2 D.H.T., FASTBACK		—	—	—	8	8	—	—	—	—	—	—	6024 403
15-13-2	**STRIKER, Hood Latch**		1	—	—	—	—	—	—	—	—	—	—	2765 743
			—	1	—	1	1	—	—	—	—	—	—	2486 697
			—	—	1	—	—	—	—	—	—	—	—	2802 218
			—	—	—	—	—	1	1	1	1	1	1	3586 614
	Hood, Safety Catch		—	—	—	—	—	1	1	1	1	1	1	3695 749
	STRIKER, Hood Open Sw., Alarm System		—	—	—	—	—	1	1	1	1	1	1	3746 682
15-19-2	**HINGE, Hood**		1	—	1	—	—	—	—	—	—	—	—	3582 972-3
	NUT, Hood Hinge to Body Att.		4	—	4	—	—	—	—	—	—	—	—	6027 394
	SC. & WA. Hood Hge to Body Att.		4	6	4	6	6	—	—	—	—	—	—	180 079
	Hood Hge. to Hood Attg.		—	4	—	4	4	6	6	6	6	6	2	180 122
	Hinge, Hood, w/o Spring		—	1	—	—	—	—	—	—	—	—	—	3582 926-7
	w/o Spring		—	—	—	1	1	—	—	—	—	—	—	3582 936-7
			—	—	—	—	—	1	1	1	1	1	1	3696 770-1
	Rivet, Hood Hge. Plt. to Arms		—	AR	—	AR	AR	—	—	—	—	—	—	6029 988
	RIVET, Hood Hge. Link to Arms		—	AR	—	AR	AR	—	—	—	—	—	—	6029 989
15-19-3	SPACER, Hood Hge. to Plr. Body Frt. Lwr.		4	—	4	—	—	—	—	—	—	—	—	3788 098
15-19-8	SPRING, Hood Hinge, (Sport)		—	—	2	—	—	—	—	—	—	—	—	2802 991
	R-H, R-P		—	—	—	1	—	—	—	—	—	—	—	3586 088
	R-M		—	—	—	1	—	—	—	—	—	—	—	3586 093
			—	2	—	—	—	—	—	—	—	—	—	3586 092
	2 D., 2 D.H.T., FASTBACK		—	—	—	—	1	—	—	—	—	—	—	3586 092
	4 D., Sta. Wgn.		—	—	—	1	1	—	—	—	—	—	—	3586 093
15-19-13	BRACKET, Hood Hge.		—	—	—	—	—	1	1	1	1	1	1	3759 588-9
	Use After Oct. 25, 1973, Painted Black		—	—	—	—	—	1	1	1	1	1	1	3788 404-5
15-19-14	BRACE w/NUT, Hood Hge. Cam Brkt. Lt.		—	—	—	—	—	1	1	1	1	1	1	3759 855
	SCREW and WA., Hood Cam Brkt. Brace		—	—	—	—	—	3	3	3	3	3	3	6025 346
	SCREW and WA., Hood Cam Brkt.		—	—	—	—	—	5	5	5	5	5	5	6025 346
15-19-46	BAR, Hood Hge. Torsion		—	—	—	—	—	1	1	1	1	1	1	3788 236-7
15-19-47	RETAINER, Hood Hge. T/Bar Ctr.		—	—	—	—	—	1	1	1	1	1	1	3759 635
	RETAINER, Hood Hge. T/Bar, End		—	—	—	—	—	4	4	4	4	4	4	3759 636
	Ret. Repair Pkg. (End)		—	—	—	—	—	AR	AR	AR	AR	AR	AR	3691 701
15-19-50	ROLLER, Hood Hge., Torsion Bar		—	—	—	—	—	2	2	2	2	2	2	3788 198
	SLIDE, Hood Hge. T/Bar		—	—	—	—	—	2	2	2	2	2	2	3759 634
15-19-52	SLEEVE, Hood Hge. T/Bar A/Squeak		—	—	—	—	—	4	4	4	4	4	4	3788 099
	PUSH NUT, Hood Hge. T/Bar Ret.		—	—	—	—	—	2	2	2	2	2	2	6030 508
15-25-2	**MOULDING, Hood, Frt.**													
	V-P Brougham		1	—	—	—	—	—	—	—	—	—	—	3691 640
	RETAINER		10	—	—	—	—	—	—	—	—	—	—	6002 716
	RETAINER		10	—	—	—	—	—	—	—	—	—	—	3744 670
	J		—	1	—	—	—	—	—	—	—	—	—	3683 011
	Use w/Bumper Periphery Mldg.													
	4D., Sta. Wgn.		—	—	—	1	—	—	—	—	—	—	—	3573 437

CARLINES: J - Challenger, B - Barracuda, V - Valiant, L - Dart, R - Satellite, W - Coronet - Charger, P - Plymouth, D - Dodge, C - Chrysler, Y - Imperial

AR Indicates use as required.

Numerals in parentheses ( ) refer to notes.

# Indicates parts not listed in any previous parts book.

★ Indicates change or addition.

Printed in U.S.A.
November, 1974

CODE	PART NAME	ENG. TYPE OR CU. IN	V	B J	L	R	W	P	D	C (L M)	C (P)	C (H S)	Y	PART NUMBER
15-25-2	MOULDING Cont'd.													
	Use w/Bumper Periphery Mldg.													
	2 D., 2 D.H.T., FASTBACK		—	—	—	—	1	—	—	—	—	—	—	3443 205
	4 D., Sta. Wgn.		—	—	—	—	1	—	—	—	—	—	—	3691 294
	MOULDING PACKAGE, Hood Center													
	V-P Brougham		1	—	—	—	—	—	—	—	—	—	—	3837 441
	RETAINER		4	—	—	—	—	—	—	—	—	—	—	6003 514
	NUT		4	—	—	—	—	—	—	—	—	—	—	9426 925
	L-P S.E.		—	—	1	—	—	—	—	—	—	—	—	3837 442
	RETAINER		—	—	5	—	—	—	—	—	—	—	—	6003 514
	NUT		—	—	5	—	—	—	—	—	—	—	—	9426 925
	MOULDING, Hood, Center													
	P-P		—	—	—	—	—	1	—	—	—	—	—	3691 412
	NUT and SEAL		—	—	—	—	—	2	—	—	—	—	—	9420 294
	D-P		—	—	—	—	—	—	1	—	—	—	—	3691 416
	NUT and SEAL		—	—	—	—	—	—	6	—	—	—	—	9420 294
	MOULDING, Hood, Rear Edge													
	2 D.H.T.		—	—	—	1	—	—	—	—	—	—	—	3680 550
	2 D., 2 D.H.T., FASTBACK		—	—	—	—	1	—	—	—	—	—	—	3680 937
	P-H, P-P, D-H, D-P		—	—	—	—	—	1	1	—	—	—	—	3749 492
			—	—	—	—	—	—	—	1	1	1	1	3749 512

NOTES

CARLINES J - Challenger, B - Barracuda, V - Valiant, L - Dart, R - Satellite, W - Coronet - Charger, P - Plymouth, D - Dodge, C - Chrysler, Y - Imperial

AR Indicates use as required.

Numerals in parentheses ( ) refer to notes.

# Indicates parts not listed in any previous parts book.

★ Indicates change or addition.

Printed in U.S.A.
November, 1974

NOTES

GROUP 16 - PROPELLER SHAFT AND UNIVERSAL JOINT

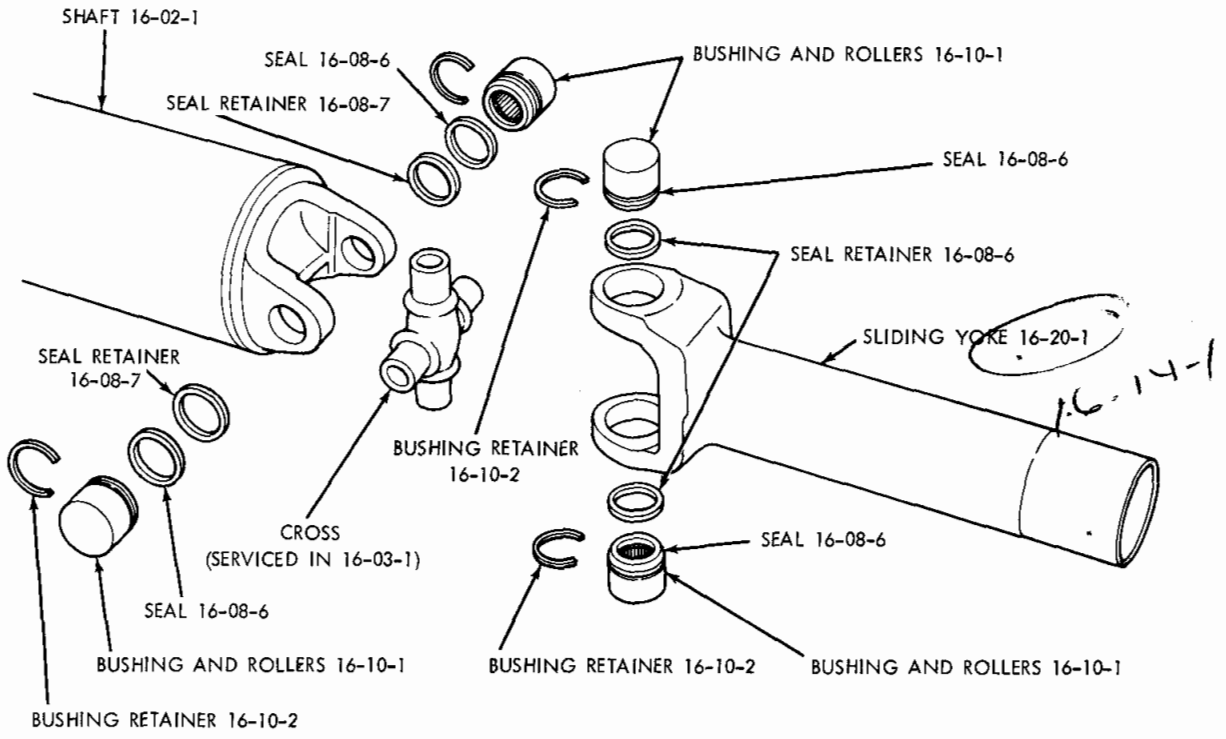

19a4675

PROPELLER SHAFT - FRONT

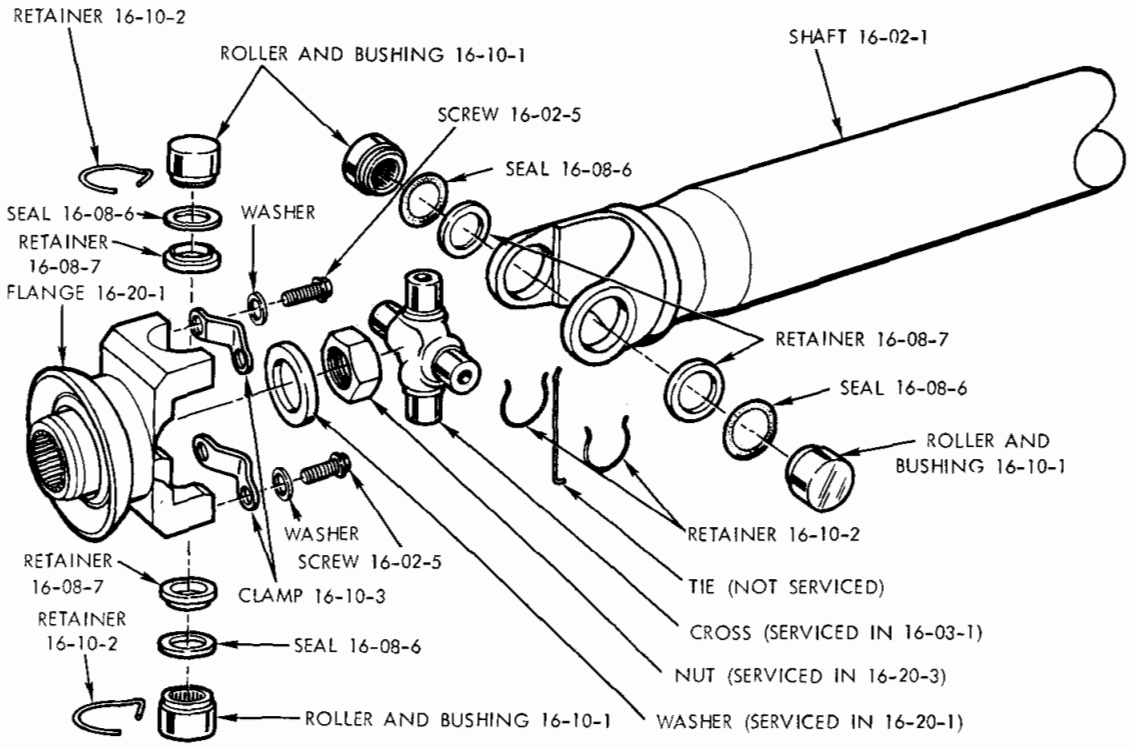

19a5017

PROPELLER SHAFT - AXLE END

PROPELLER SHAFT TYPE IDENTIFICATION CAN BE DETERMINED BY INSIDE MEASUREMENT OF YOKE AREA AS FOLLOWS:

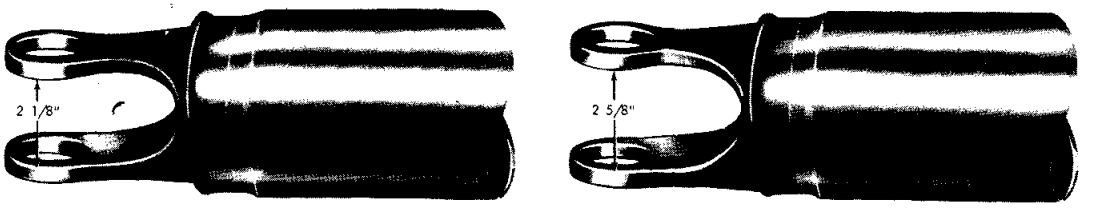

TYPE 7260
2 1/8" INSIDE YOKE

TYPE 7290
2 5/8" INSIDE YOKE

19a2306

PROPELLER SHAFT IDENTIFICATION

NOTES

GROUP 16 - PROPELLER SHAFT

CROSS, UNIVERSAL JOINT 16-08
ROLLER AND BUSHING, UNIVERSAL JOINT 16-10
SHAFT 16-02
UNIVERSAL JOINT 16-03
YOKE OR FLANGE, PROPELLER SHAFT 16-20
YOKE, UNIVERSAL JOINT SLIP SPLINE 16-14

Printed in U.S.A.
November, 1974

NOTE: Length Measurement of Shafts is from Center of Bearing Hole Trans. End to Center of Bearing Hole Axle End. For Axle Information See Note in Axle Code 3-01-0. Propeller Shaft includes Universal Slip Spline Yoke and Universal Joints. When it becomes necessary to replace the Slip Spline Yoke on vehicles with 426 Hemi. Eng. and ALL V/8 Police Cars it is recommended that the complete Propeller Shaft be replaced.

CODE	MODEL	TYPE	CU. IN. ENG.	TRANSMISSION	LENGTH	DIA.	PART NO.
16-02-1	**SHAFT-PROPELLER, with 7 1/4" Axle**						
	V	7260	198,225,318	94-1,904	51.44"	3"	2996 175
	V	7260	198,225	250,904	51.00"	3"	3578 175
	V	7260	198,225,318	94-1,230,904	54.00"	3"	3578 136
	L	7260	198,225,318	94-1,230,904	54.00"	3"	3578 136
	L	7260	198,225,318	94-1,904	51.44"	3"	2996 175
	L	7260	198,225	250,904	51.00"	3"	3578 175
	WITH 8 1/4", 8 3/4" and 9 1/4" Axle						
	V, w/4 Bbl. Carb.	7260	360	727	45.60"	3"	3578 690
	V,L,	7260	318	833	48.96"	2 3/4"	3578 760
	V, L, 4 Bbl. Carb.	7260	360	833	48.96"	2 3/4"	3578 760
	V, L, Up To May, 1974	7260	198,225,318	250,904,230,94-1	48.89"	3 1/4"	2996 157
	V, L, After May, 1974	7260	198,225,318	250,904,230,94-1	49.90"	3 1/4"	3467 151
	V, L, w/4 Bbl. Carb.						
	Up To May, 1974	7260	360	230	48.89"	3 1/4"	2996 157
	After May, 1974	7260	360	230	49.90"	3 1/4"	3467 151
	V, L, Up To May, 1974	7260	198,225,318	250,230,904,94-1	51.89"	3 1/4"	2996 137
	V, L, After May, 1974	7260	198,225,318	250,230,904,94-1	52.70"	3 1/4"	3467 155
	V Export	7260	318	833	51.96"	3"	2883 758
	L, w/4 Bbl. Carb.	7260	360	727	45.60"	3"	3578 690
	L Export	7260	318	833	51.96"	3"	2883 758
	B	7260	318	94-1	47.40"	3"	3578 138
	B,	7260	318	230	43.29"	3 1/4"	2996 134
	B, w/4 Bbl. Carb.	7260	360	230,833,727	43.29"	3 1/4"	2996 134
	J	7260	318	94-1	49.40"	3"	3578 146
	J	7260	318	230	45.79"	3 1/4"	2996 142
	J, w/4 Bbl. Carb.	7260	360	230,-833,727	45.79"	3 1/4"	2996 142
	R	7260	225,318	904,94-1	54.86"	3 1/4"	2996 201
	R, w/Small Spline (7290 Rear)						
	Up to Sept. 1973	7260	225,318	904,94-1	54.92"	3 1/4"	2996 207
	After Sept. 1973	7260	225,318	904,94-1	54.92"	3 1/4"	3578 301
	R, Up to Sept. 1973	7260	318	833,727,230	50.80"	3 1/4"	2996 109
	R, After Sept. 1973	7260	318	833,727,230	50.80"	3 1/4"	3578 305
	R,						
	Up to Sept. 1973	7260	360	727	50.80"	3 1/4"	2996 109
	After Sept. 1973	7260	360	727	50.80"	3 1/4"	3578 305
	R, Up to Sept. 1973	7260	225	727,230	50.80"	3 1/4"	2996 109
	R, After Sept. 1973	7260	225	727,230	50.80"	3 1/4"	3578 305
	R, w/4 Bbl. Carb., Up to Sept. 1973	7260	400	727	50.80"	3 1/4"	2996 109
	R, w/4 Bbl. Carb., After Sept. 1973	7260	400	727	50.80"	3 1/4"	3578 305
	R, W, w/Small Spline Sta. Wag.						
	(7290 Rear) Up to Oct. 1973	7260	318	94-1	57.42"	3 1/4"	2996 211
	(7290 Rear) After Oct. 1973	7260	318	94-1	58.00"	3 1/4"	3578 313
	R, W, w/Small Spline (7290 Rear)						
	Up to Oct. 1973	7260	225	904	57.42"	3 1/4"	2996 211
	After Oct. 1973	7260	225	904	58.00"	3 1/4"	3578 313
	R,W, w/Small Spline (7290 Rear)						
	Up to Oct. 1973	7260	318	94-1	57.42"	3 1/4"	2996 211
	After Oct. 1973	7260	318	94-1	58.00"	3 1/4"	3578 313
	R, Up to Sept., 1973	7260	225	230,727	53.24"	3 1/4"	2996 117
	R, After Sept., 1973	7260	225	230,727	53.74"	3 1/4"	3578 317
	R, Up to Sept., 1973	7260	318	230,727	53.24"	3 1/4"	2996 117
	R, After Sept., 1973	7260	318	230,727	53.74"	3 1/4"	3578 317
	R,						
	Up to Sept. 1973	7260	360	727	53.24"	3 1/4"	2996 117
	After Sept. 1973	7260	360	727	53.74"	3 1/4"	3578 317
	R, w/4 Bbl. Carb.						
	Up to Sept. 1973	7260	400	727	53.24"	3 1/4"	2996 117
	After Sept. 1973	7260	400	727	53.74"	3 1/4"	3578 317
	R, Sta. Wag. Up to Sept., 1973	7260	318	727	53.24"	3 1/4"	2996 117
	R, Sta. Wag. After Sept., 1973	7260	318	727	53.74"	3 1/4"	3578 317

CODE	MODEL	TYPE	CU. IN. ENG.	TRANSMISSION	LENGTH	DIA.	PART NO.
16-02-1	SHAFT PROPELLER Cont'd.						
	R, (7290 Rear) Up to Sept., 1973	7260	225	230,727	53.30"	3 1/4"	2996 113
	R, (7290 Rear) After Sept., 1973	7260	225	230,727	53.80"	3 1/4"	3578 322
	R, (7290 Rear) Up to Sept., 1973		318	230,727	53.30"	3 1/4"	2996 113
	R, (7290 Rear) After Sept., 1973	7260	318	230,727	53.80"	3 1/4"	3578 322
	R, (7290 Rear) w/4 Bbl. Carb.						
	Up to Sept. 1973	7260	400	727	53.30"	3 1/4"	2996 113
	After Sept. 1973	7260	400	727	53.80"	3 1/4"	3578 322
	R, Sta. Wag. (7290 Rear)						
	Up to Sept., 1973	7260	318	727,239	53.30"	3 1/4"	2996 113
	After Sept., 1973	7260	318	727,230	53.80"	3 1/4"	3578 322
	R, Sta. Wag. 4 Bbl. Carb.						
	(7290 Rear) Up to Sept., 1973	7260	400	727	53.30"	3 1/4"	2996 113
	After Sept., 1973	7260	400	727	53.80"	3 1/4"	3578 322
	R, Police (7290 Rear)						
	Up to Sept., 1973	7260	225,318	727	53.30"	3 1/4"	2996 113
	After Sept., 1973	7260	225,318	727	53.80"	3 1/4"	3578 322
	R, (7290 Rear)						
	Up to Sept. 1973	7260	360	727	53.30"	3 1/4"	2996 113
	After Sept. 1973	7260	360	727	53.80"	3 1/4"	3578 322
	R, Police 4 Bbl. Carb. (7290 Rear)						
	Up to Sept., 1973	7260	400	727	53.30"	3 1/4"	2996 113
	After Sept., 1973	7260	400	727	53.80"	3 1/4"	3578 322
	R, w/4 Bbl. Carb	7290	360,400	727,833	50.68"	3 1/4"	2996 101
	R,	7290	360	727	51.34"	3 1/4"	2996 268
	R, w/4 Bbl. Carb.	7290	360,400	727,833	51.34"	3 1/4"	2996 268
	R	7290	440	727	50.68"	3 1/4"	2996 101
	R	7290	440	727	51.34"	3 1/4"	2996 268
	R	7290	225,318	833,230,727	50.68"	3 1/4"	2996 101
	R	7290	225,318	833,230,727	51.34"	3 1/4"	2996 268
	R, w/4 Bbl. Carb.						
	Up to Sept., 1973	7290	400,440	727,833	53.18"	3 1/4"	2883 696
	After Sept., 1973	7290	400,440	727	53.84"	3 1/4"	3578 331
	R, Police w/4 Bbl. Carb.						
	Up to Sept., 1973	7290	400,440	727	53.18"	3 1/4"	2883 696
	After Sept. 1973	7290	400,440	727	53.84"	3 1/4"	3578 331
	R, W, Sta. Wagon w/4 Bbl. Carb.						
	Up to Sept., 1973	7290	400	727	53.84"	3 1/4"	2996 347
	R, W, Sta. Wagon w/4 Bbl. Carb.						
	After Sept. 1973	7290	400	727	53.84"	3 1/4"	3578 331
	R, W	7260	225,318	904,94-1	57.82"	3"	2996 121
	R, W	7260	318	727	53.74"	3"	3467 574
	R, W	7260	318	727	51.00"	3"	
	R, W, Sta. Wagon	7260	318	94-1	57.82"	3"	2996 121
	W	7260	225,318	904,94-1	54.86"	3 1/4"	2996 201
	Y, w/Small Spline (7290 Rear)						
	Up to Sept., 1973	7260	225,318	904,94-1	54.92"	3 1/4"	2996 207
	After Sept., 1973	7260	225,318	904,94-1	54.92"	3 1/4"	3578 301
	P Up to Sept., 1973	7260	318	833,727,230	50.80"	3 1/4"	2996 109
	W, After Sept., 1973	7260	318	833,727,230	50.80"	3 1/4"	3578 305
	W,						
	Up to Sept. 1973	7260	360	727	50.80"	3 1/4"	2996 109
	After Sept. 1973	7260	360	727	50.80"	3 1/4"	3578 305
	W Up to Sept., 1973	7260	225	727,230	50.80"	3 1/4"	2996 109
	W, After Sept., 1973	7260	225	727,230	50.80"	3 1/4"	3578 305
	Y, w/4 Bbl. Carb.						
	Up to Sept., 1973	7260	400	727	50.80"	3 1/4"	2996 199
	After Sept., 1973	7260	400	727	50.80"	3 1/4"	3578 305
	W, Up to Sept., 1973	7260	225	230,727	53.24"	3 1/4"	2996 117
	W, After Sept., 1973	7260	225	230,727	53.74"	3 1/4"	3578 317
	W, Up to Sept., 1973	7260	318	230,727	53.24"	3 1/4"	1996 117
	Y, After Sept., 1973	7260	318	230,727	53.74"	3 1/4"	3578 317
	W,						
	Up to Sept. 1973	7260	360	727	53.24"	3 1/4"	2996 117

CODE	MODEL	TYPE	CU. IN. ENG.	TRANSMISSION	LENGTH	DIA.	PART NO.
16-02-1	SHAFT PROPELLER Cont'd.						
	After Sept. 1973	7260	360	727	53.74"	3 1/4"	3578 317
	W, w/4 Bbl. Carb.						
	Up to Sept. 1973	7260	400	727	53.24"	3 1/4"	2996 117
	After Sept. 1973	7260	400	727	53.74"	3 1/4"	3578 317
	W, Sta. Wag. Up to Sept., 1973	7260	318	727	53.24"	3 1/4"	2996 117
	W, Sta. Wag. After Sept., 1973	7260	318	727	53.74"	3 1/4"	3578 317
	W, (7290 Rear)						
	Up to Sept., 1973	7260	225	230,727	53.30"	3 1/4"	2996 113
	After Sept., 1973	7260	225	230,727	53.30"	3 1/4"	3578 322
	W, (7290 Rear) Up to Sept., 1973	7260	318	230,727	53.30"	3 1/4"	2996 113
	After Sept., 1973	7260	318	230,727	53.30"	3 1/4"	3578 322
	W, (7290 Rear)						
	Up to Sept. 1973	7260	360	727	53.30"	3 1/4"	1996 113
	After Sept. 1973	7260	360	727	53.80"	3 1/4"	3578 322
	W, (7290 Rear) w/4 Bbl. Carb.						
	Up to Sept., 1973	7260	400	727	53.30"	3 1/4"	2996 113
	After Sept., 1973	7260	400	727	53.30"	3 1/4"	3578 322
	W, Sta. Wag. (7290 Rear)						
	Up to Sept., 1973	7260	318	727,230	53.36"	3 1/4"	2996 113
	After Sept., 1973	7260	318	727,230	53.36"	3 1/4"	3578 322
	W, Sta. Wag. 4 Bbl. Carb. (7290						
	Rear) Up to Sept. 1973	7260	400	727	53.30"	3 1/4"	2996 113
	After Sept., 1973	7260	400	727	53.30"	3 1/4"	3478 322
	W, Police (7290 Rear)						
	Up to Sept., 1973	7260	225,318	727	53.30"	3 1/4"	2996 113
	After Sept., 1973	7260	225,318	727	53.30"	3 1/4"	3578 322
	W, Police 4 Bbl. Carb. (7290 Rear)						
	Up to Sept., 1973	7260	400	727	53.30"	3 1/4"	2996 113
	After Sept., 1973	7260	400	727	53.30"	3 1/4"	3578 322
	W, w/4 Bbl. Carb.	7290	360,400	727,833	50.68"	3 1/4"	2996 101
	F	7290	360	727	51.34"	3 1/4"	2996 268
	W, w/4 Bbl. Carb.	7290	360,400	727,833	51.34"	3 1/4"	2996 268
	W	7290	440	727	50.68"	3 1/4"	2996 101
	W,	7290	440	727	51.34"	3 1/4"	2996 268
	W	7290	225,318	833,230,727	50.68"	3 1/4"	2996 101
	W	7290	225,318	833,230,727	51.34"	3 1/4"	2996 268
	W, 4 Bbl. Carb.	7290	400,440	727, 833	53.18"	3 1/4"	2883 696
	P, Police 4 Bbl. Carb.	7290	400,440	727	53.18"	3 1/4"	2883 696
	P,	7260	318,360,400	727	55.46"	3 1/4"	2996 251
	P, D,	7260	318	94-1	59.60"	3 1/4"	2996 232
	P, Taxi	7260	318	727	55.46"	3 1/4"	2996 251
	D, Taxi	7260	318	727	55.46"	3 1/4"	2996 251
	D,	7260	318,360,400	727	55.46"	3 1/4"	2996 251
	P, Police 2 Bbl. Carb.	7290	360,400	727	55.68"	3 1/4"	2996 255
	P, Police 4 Bbl. Carb.	7290	360,400,440	727	55.68"	3 1/4"	2996 255
	P,	7290	318,360	727	55.68"	3 1/4"	2996 255
	P, (7290 Rear)	7260	318	94-1	59.66"	3 1/4"	2996 236
	P, 2 Bbl. Carb.	7290	400	727	55.68"	3 1/4"	2696 255
	P, 4 Bbl. Carb.	7290	400,440	727	55.68"	3 1/4"	2996 255
	D, Police 2 Bbl. Carb.	7290	360,400	727	55.68"	3 1/4"	2996 255
	D, Police 4 Bbl. Carb.	7290	360,400,440	727	55.68"	3 1/4"	2996 255
	P, Police Sta. Wag. 2 Bbl. Carb.	7290	400	727	57.87"	3 1/4"	2996 261
	P, Police Sta. Wag. 4 Bbl. Carb.	7290	400,440	727	57.87"	3 1/4"	2996 261
	D, Police Sta. Wag. 2 Bbl. Carb.	7290	400	727	57.87"	3 1/4"	2996 261
	D, Police Sta. Wag. 4 Bbl. Carb.	7290	400,440	727	57.87"	3 1/4"	2996 261
	P, D, C, Sta. Wag.	7290	360,400,440	727	57.87"	3 1/4"	2996 261
	D,	7290	318,360	727	55.68"	3 1/4"	2996 255
	D, (7290 Rear)	7260	360	727	59.66"	3 1/4"	2996 236
	D, 2 Bbl. Carb.	7290	400	727	55.68"	3 1/4"	2996 255
	D, 4 Bbl. Carb.	7290	400,440	727	55.68"	3 1/4"	2996 255
	C, 2 Bbl. Carb.	7290	400	727	57.87"	3 1/4"	2996 261
	C, 4 Bbl. Carb.	7290	440	727	57.87"	3 1/4"	2996 261
	C, 2 Bbl., 4 Bbl. Carb.	7260	400	727	57.95"	3 1/4"	2996 257
	C, 4 Bbl Carb.	7260	360	727	57.95"	3 1/4"	2996 257
	Y		440	727	57.87"	3 1/4"	2996 261

CARLINES J - Challenger V - Valiant R - Satellite P - Plymouth C - Chrysler
B - Barracuda L - Dart W - Coronet - Charger D - Dodge Y - Imperial

AR Indicates use as required. Numerals in parentheses ( ) refer to notes. Printed in U.S.A.

# Indicates parts not listed in any previous parts book. ★ Indicates change or addition. November, 1974

CODE	PART NAME	ENG. TYPE OR CU. IN	V	B J	L	R	W	P	D	C (L M)	C (P)	C (H S)	Y	PART NUMBER
16-02-5	SCREW and Washer, Propeller Shaft Axle End, 1/4"-28 x 5/8"	All	4	4	4	4	4	4	4	4	4	4	4	6029 562
16-02-9	CAP, Prop. Shaft Inertia Tube Elastic Member		—	—	—	1	1	—	—	—	—	—	—	2883 737
16-03-1	**CROSS and ROLLER PACKAGE, For 7260 U-Joint**		2	2	2	2	2	2	2	2	2	2	—	3780 250
	CROSS and BUSHING KIT, For 7290 U-Joint		—	—	—	AR	AR	AR	AR	AR	AR	AR	AR	2852 175
16-8-6	**SEAL, CROSS ROLLER DUST,**													
	For 7260 U-JOINT		AR	AR	AR	AR	AR	AR	AR	AR	AR	AR	—	857 999
	For 7290 U-JOINT		—	—	—	AR	AR	AR	AR	AR	AR	AR	AR	2781 947
16-8-7	RETAINER, Roller Dust Seal		AR	AR	AR	AR	AR	AR	AR	AR	AR	AR	—	1739 912
16-10-1	**CROSS ROLLER and BUSHING, for 7260 U-Joint**		AR	AR	AR	AR	AR	AR	AR	AR	AR	AR	—	1739 913
	For 7290 U-Joint		—	—	—	AR	AR	AR	AR	AR	AR	AR	AR	2781 944
16-10-2	RETAINER, Roller Bushing,													
	For 7260 U-JOINT		AR	AR	AR	AR	AR	AR	AR	AR	AR	AR	—	858 006
	For 7290 U-Joint		—	—	—	AR	AR	AR	AR	AR	AR	AR	AR	2781 923
	For 1739913 Roller and Bushing		AR	AR	AR	AR	AR	AR	AR	AR	AR	AR	AR	1739 909
16-10-3	CLAMP, Use w/1739913 Roller and Bushing		2	2	2	2	2	2	2	2	2	2	—	1828 824
	Use w/2781944 Roller and Bushing		2	2	2	2	2	2	2	2	2	2	2	2781 904
	Sliding													
16-14-1	**YOKE, U-Joint Slip Spline 8.03" Long, 29 Tooth Spline W/7260**		1	1	1	1	1	1	1	1	1	1	—	2883 575
	6.80" Long, 25 Tooth Spline W/7260		1	1	1	1	1	1	1	—	—	—	—	2852 323
	W/7290 U-Joint		—	—	—	1	1	1	1	1	1	1	1	2781 932
16-20-1	**YOKE PACKAGE or FLANGE, Axle Drive Pinion**													
	w/8 1/4" Axle Up to 11-1-73		1	—	1	1	1	1	1	1	1	1	—	3432 495
	After 11-1-73		1	—	1	1	1	1	1	1	1	1	—	3723 251
	YOKE PACKAGE, Axle Drive Pinion													
	YOKE, Axle Dr. Pinion, w/7 1/4 Axle Up to 11-1-73		1	—	1	—	—	—	—	—	—	—	—	3004 878
	★ After 11-1-73		1	—	1	—	—	—	—	—	—	—	—	3723 251
	YOKE, Axle Dr. Pinion w/8 3/4", w/9 1/4" Axle 29 Tooth Spline - 7260 Series		1	1	1	1	1	1	1	1	1	1	1	3432 485
	YOKE, Axle Dr. Pinion, w/8 3/4", w/9 1/4" Axle 29 Tooth Spline - 7290 Series		—	1	—	1	1	1	1	1	1	1	1	3432 487
	Washer Axle Drv. Pinion Flange 15/16" I.D. Concave		1	1	1	1	1	1	1	1	1	1	1	2070 117
16-20-3	NUT, Axle Drive Pinion Yoke 7/8"-14 Hex		1	1	1	1	1	1	1	1	1	1	1	6028 041
16-20-7	SHIM, Rr. Axle Drv. Pinion Yoke w/29 Tooth Spline		1	1	1	1	1	1	1	1	1	1	1	3507 273

NOTES

9 7/4
10 8 1/4
12 9 3/4

CARLINES
J - Challenger
B - Barracuda
V - Valiant
L - Dart
R - Satellite
W - Coronet - Charger
P - Plymouth
D - Dodge
C - Chrysler
Y - Imperial

AR Indicates use as required.
# Indicates parts not listed in any previous parts book.
Numerals in parentheses ( ) refer to notes.
★ Indicates change or addition.

Printed in U.S.A.
November, 1974

NOTES

GROUP 17 - SPRINGS

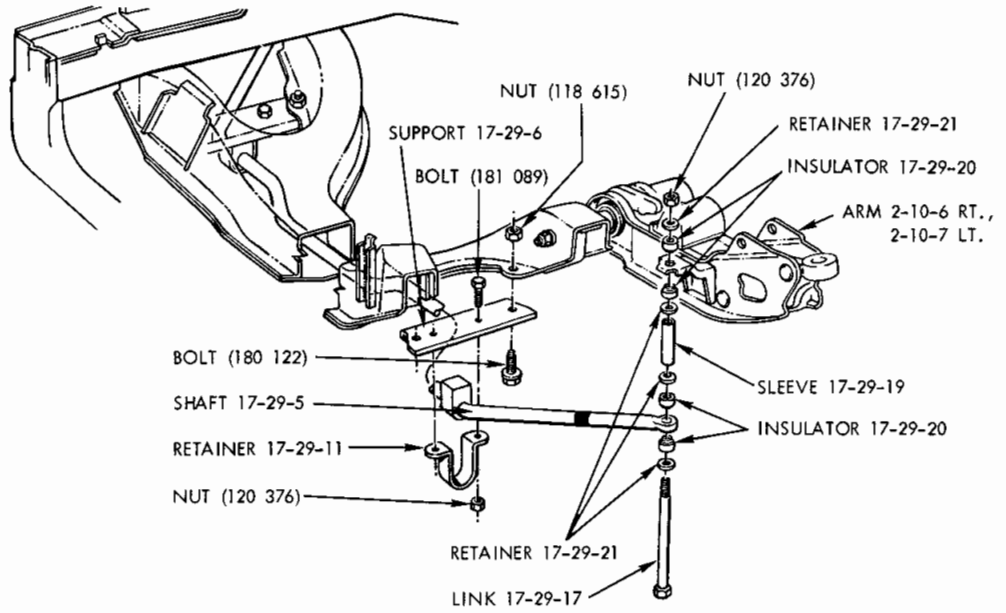

FRONT SWAY BAR - V, L, B, J

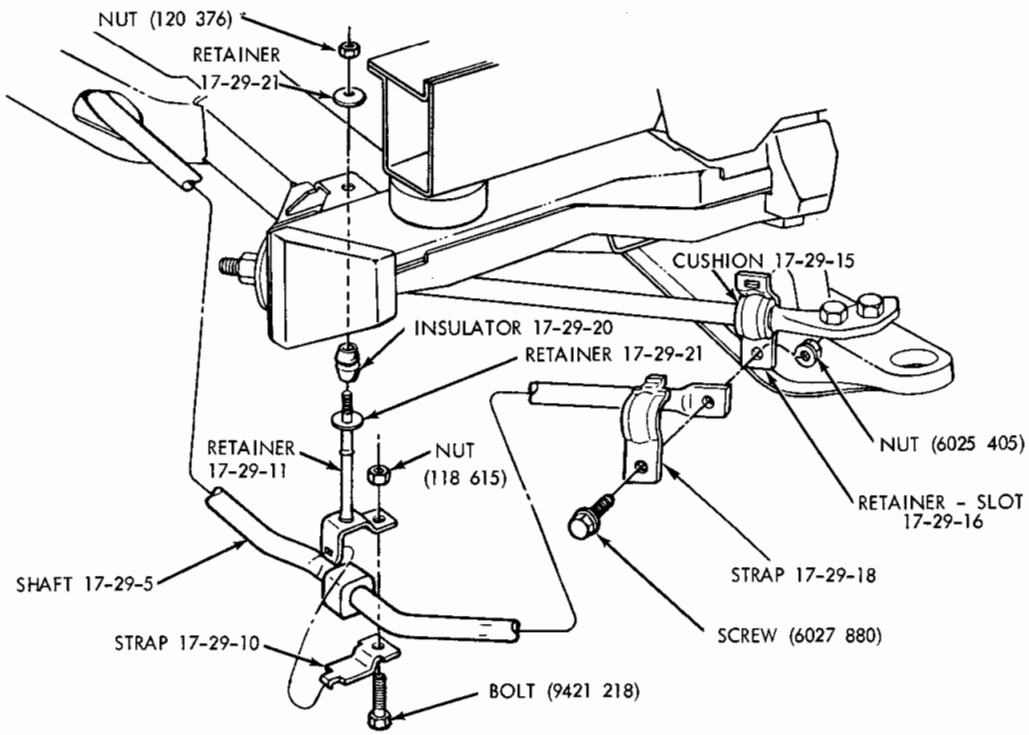

FRONT SWAY BAR - R, W

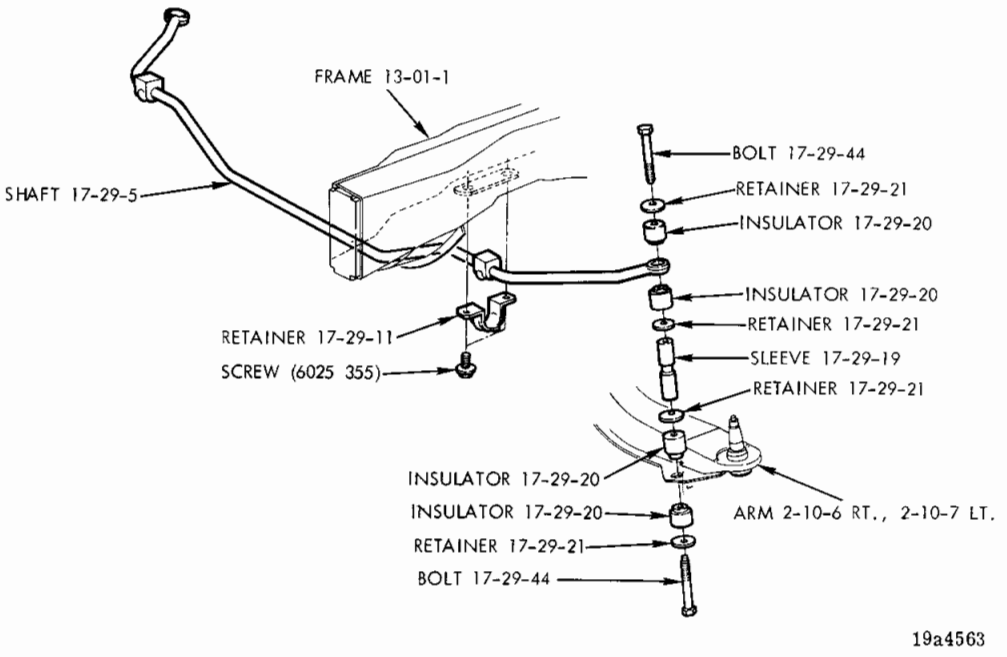

FRONT SWAY BAR - P, D, C, Y

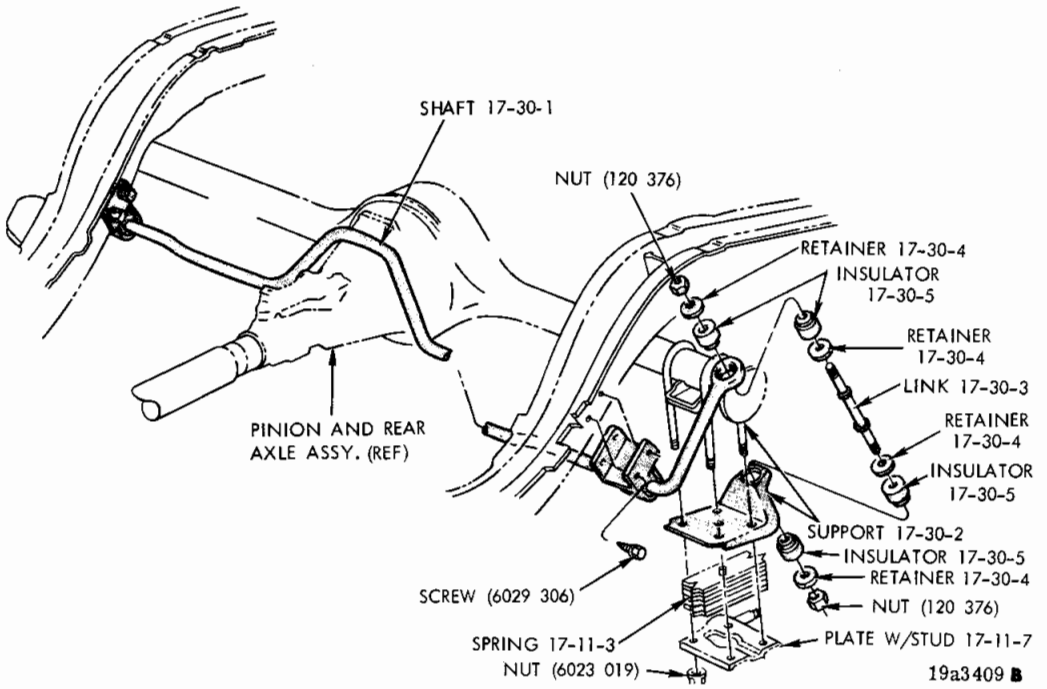

SWAY BAR - REAR SUSPENSION - B, J

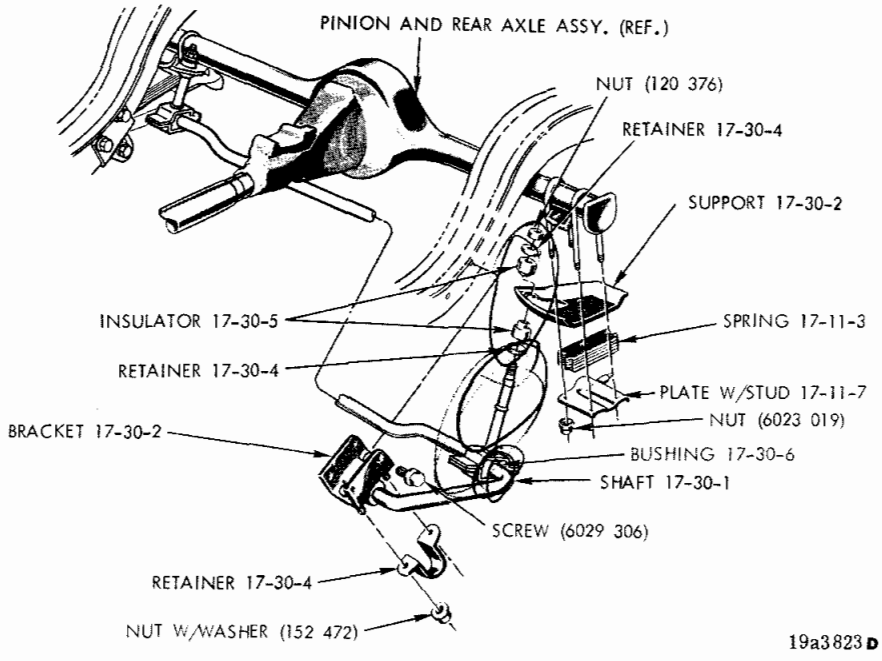

SWAY BAR - REAR SUSPENSION - R, W

NOTES

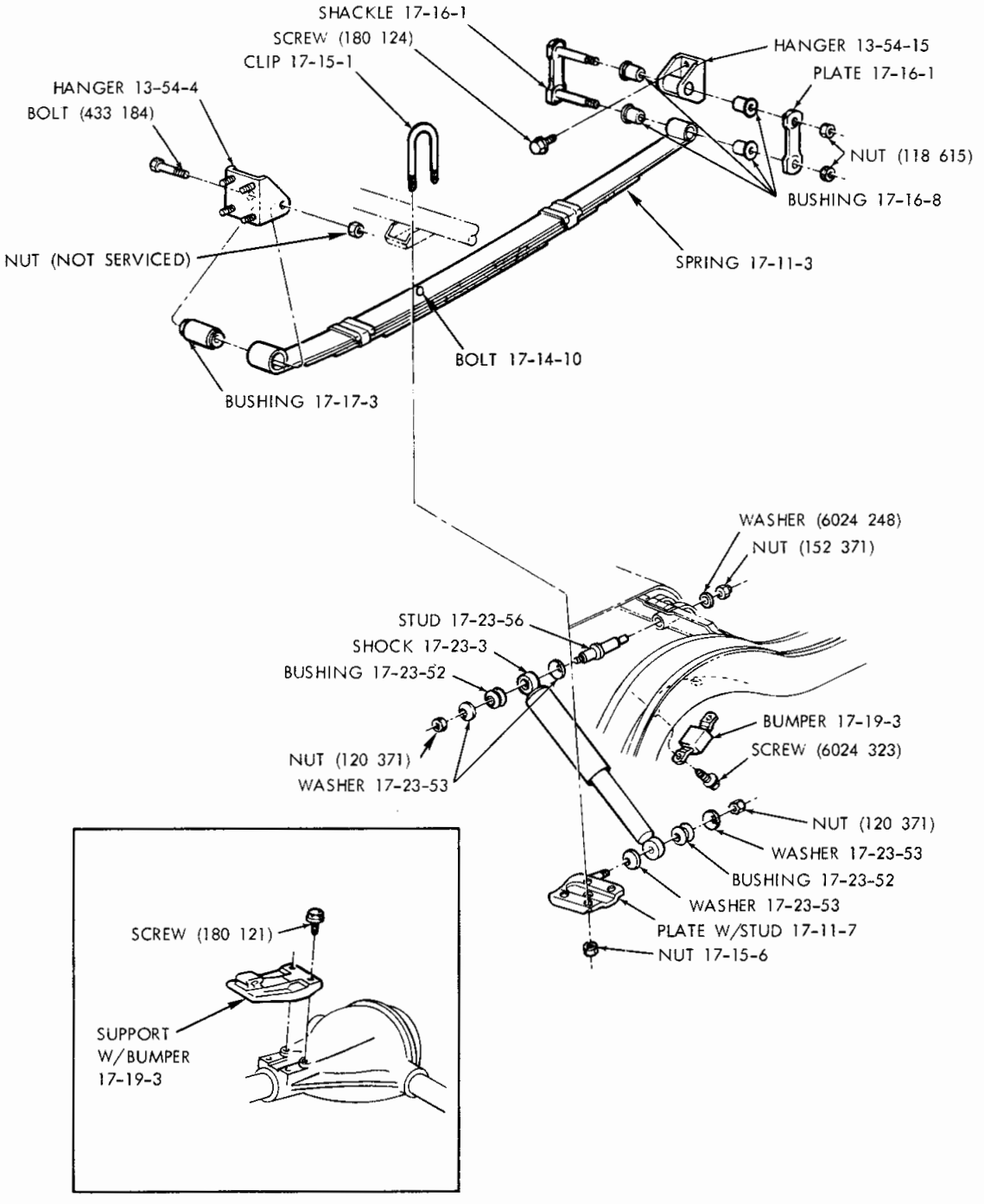

19a4772

REAR SPRING, HANGERS AND SHACKLES - V, L

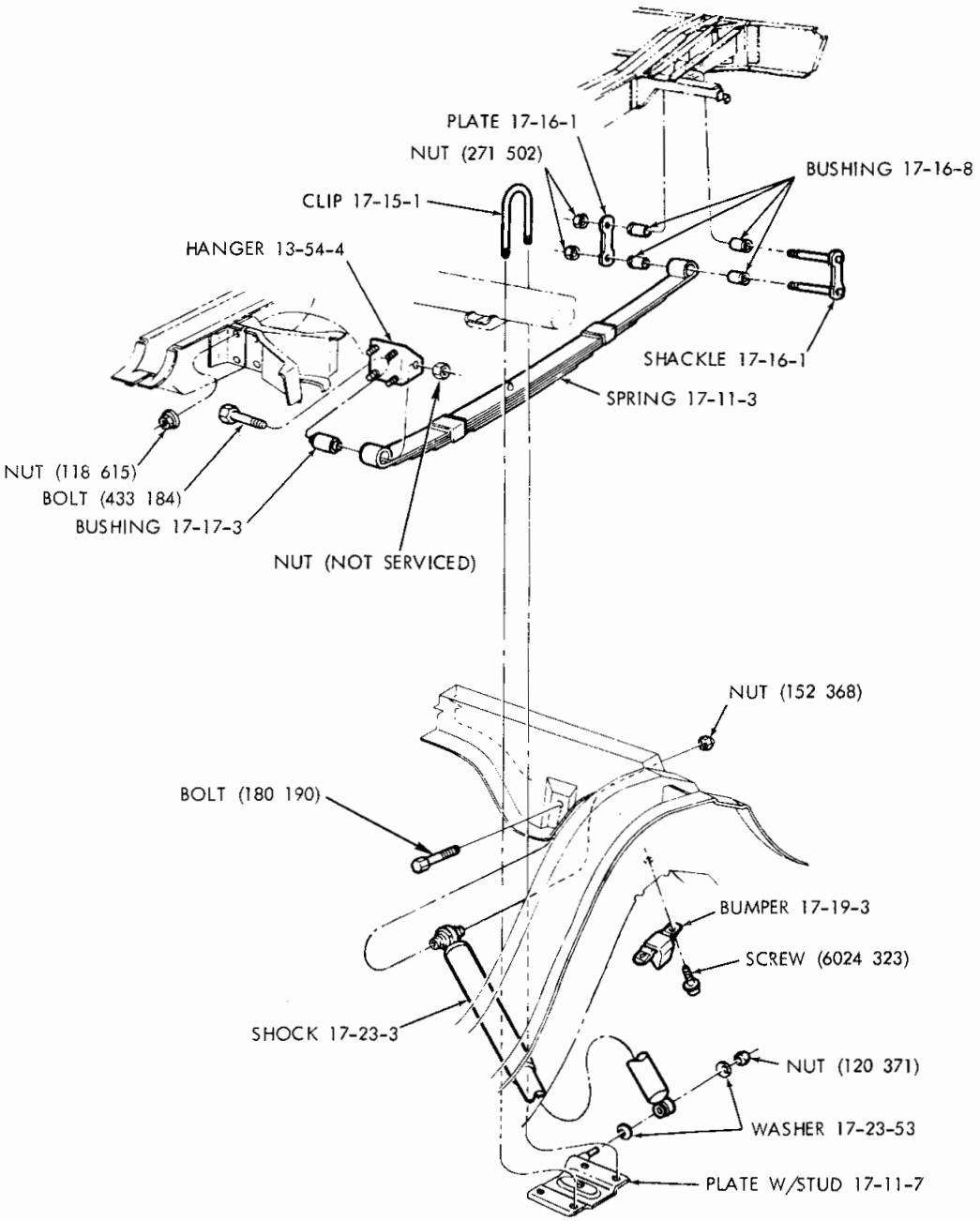

19a4773

REAR SPRING, HANGERS AND SHACKLES - B, J

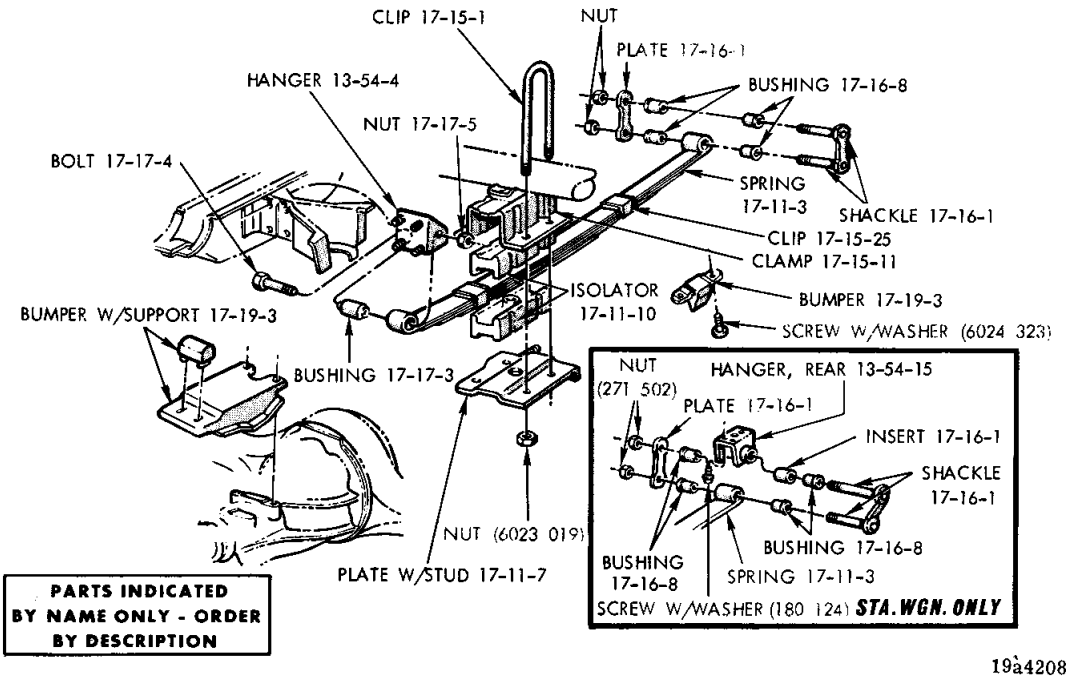

19à4208 **A**

REAR SPRING, HANGERS AND SHACKLES - R, W

NOTES

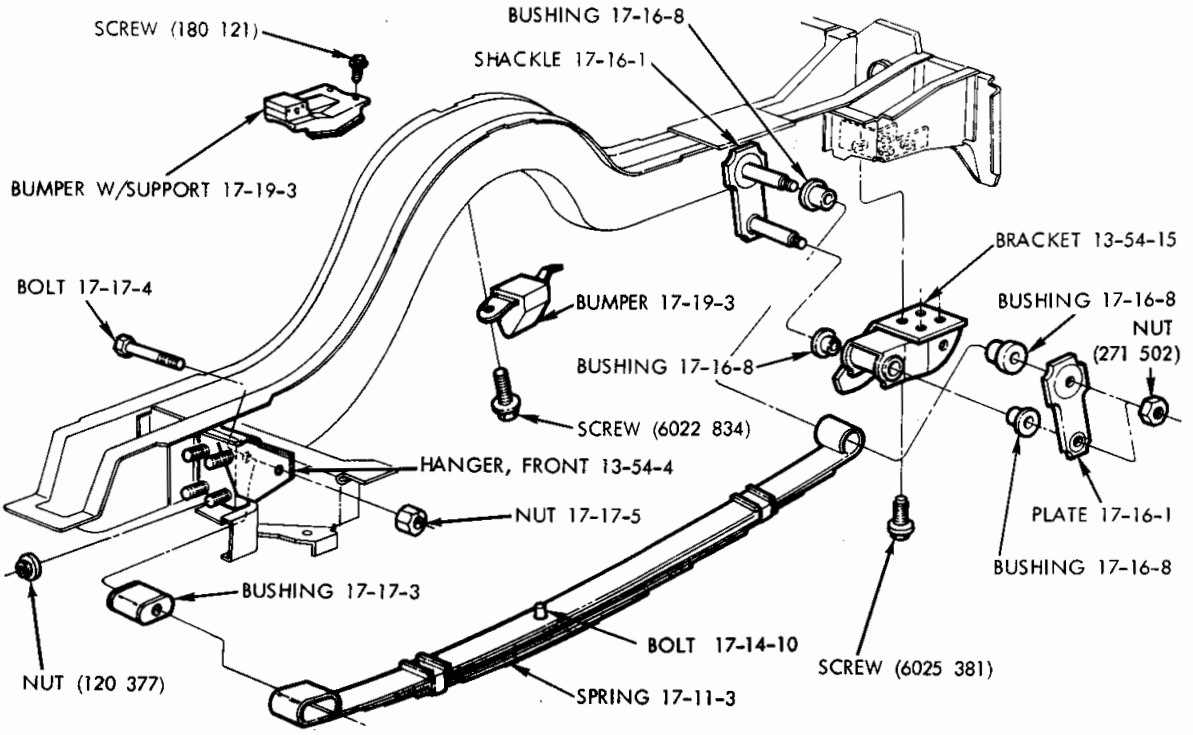

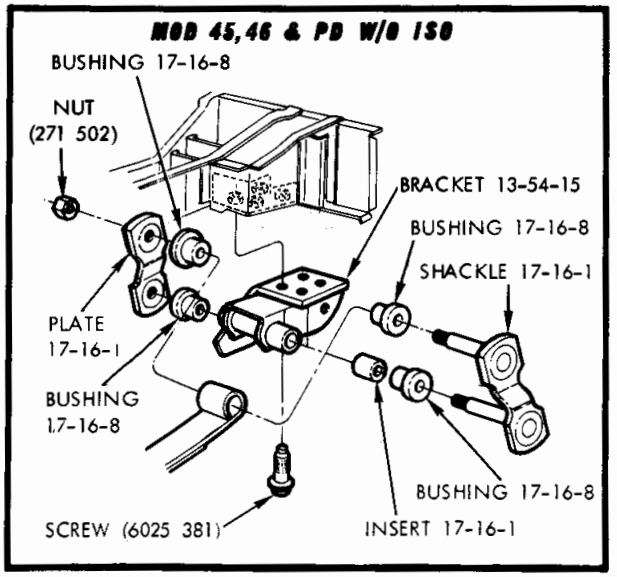

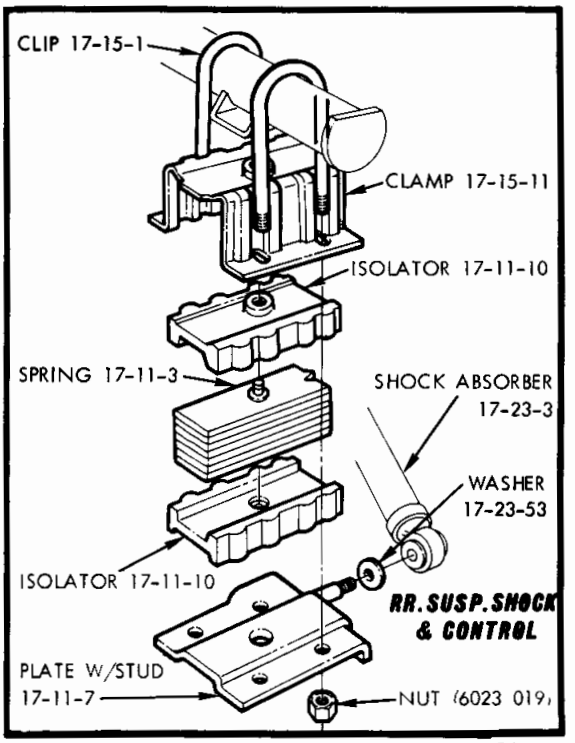

19a4564

REAR SPRING, HANGERS AND SHACKLES - P, D, C, Y

NOTES

GROUP 17 - SPRINGS, SHOCKS AND SWAY BARS

BLOCK, REAR SPRING SILENT 17-17
BOLT, REAR SPRING CENTER 17-14
BUMPER, REAR SPRING 17-19
CLIP, REAR SPRING 17-15
LEAF, REAR SPRING 17-12
SHACKLE, REAR SPRING 17-16
SHOCK ABSORBER 17-23
SHIELD, SHOCK ABSORBER 17-26
SPRING, REAR 17-11
SUPPORT, SHOCK ABSORBER 17-24
SWAY BAR, FRONT 17-29
SWAY BAR, REAR 17-30

Printed in U.S.A.
November, 1974

NOTE: The production spring assy. part number (Spring Less Bushings) is located on the bottom spring leaf. DO NOT ORDER this number. This information is provided to assist in accurate specifying. ALWAYS ORDER the SERVICE SPRING ASSY.

		BODY TYPE	TYPE OF	NO. OF LEAVES	PROD. SPRING	SERVICE SPRING
17-11-3	**SPRING, w/BUSHING-VALIANT & DART**					
	L, H, 198, 225 Eng.	23	Std.	4	3722 226	3744 419
	P, 225 Eng.	23	Std.	4	3722 227	3780 520
	L, H, 318 Eng.	23	Std.	5	3722 244	3744 416
	P, 318 Eng.	23	Std.	5	3722 245	3780 519
	L, H, P, 198, 225, 318 Eng.	23	H.D.	6	3722 293	3744 418
	L, 198, 225 Eng.	29	Std.	4	3722 225	3744 420
	L, 318 Eng.	29	Std.	5	3722 243	3744 415
	M, S, 360 Eng.	29	H.D. Std.	6	3722 293	3744 418
	L, 198, 225, 318 Eng.	29	H.D.	6	3722 293	3744 418
	L, H, 198, 225 Eng.	41	Std.	4	3722 227	3780 520
	P, 225 Eng.	41	Std.	4	3722 228	3837 045
	L, H, P, 318 Eng.	41	Std.	5	3722 245	3780 519
	L, H, P, 198, 225, 318 Eng.	41	H.D.	6	3722 294	3837 048
	BARRACUDA & CHALLENGER					
	H, 318 Eng., w/5/8" I.D. Bushing	23	Std.	4 1/2	3402 345	3780 523
	H, 318 Eng., w/9/16" I.D. Bushing	23	Std.	4 1/2	3402 345	3837 089
	S, 318, 360 Eng., w/5/8" I.D. Bushing	23	H.D. Std.	4 1/2	3643 595	3780 522
	S, 318, 360 Eng. w/9/16" I.D. Bushing	23	H.D. Std.	4 1/2	3643 595	3837 090
	H, 360 Eng., w/5/8" I.D. Bushing	23	H.D. Std.	4 1/2	3643 595	3780 522
	H, 360 Eng., w/9/16 I.D. Bushing	23	H.D. Std.	4 1/2	3643 595	3837 090
	H, 318 Eng., w/5/8" I.D. Bushing	23	H.D.	4 1/2	3643 595	3780 522
	H, 318 Eng., w/9/16" I.D. Bushing	23	H.D.	4 1/2	3643 595	3837 090
	SATELLITE					
	L, 225, 318, 400 Eng. 4 Bbl. Carb.	21	Std.	5	3815 325	3780 800
	M, 318, 360, 400 Eng. 4 Bbl. Carb., and 440 Eng., w/H/Perf.	21	H.D. Std.	6	3815 192	3837 002
	L, 225, 318, 400 Eng., 4 Bbl. Carb.	21	H.D.	6	3851 193	3837 003
	H, P, 225, 318, 400 Eng., 4 Bbl. Carb.	23	Std.	5	3815 325	3780 800
	H, 440 Eng. 4 Bbl. Carb., H/Perf.	23	H.D. Std.	6	3815 193	3837 003
	H, P, 225, 318, 400 Eng., 4 Bbl. Carb.	23	H.D.	6	3815 193	3837 003
	L, H, 225, 318, 400 Eng., 4 Bbl. Carb.	41	Std.	5	3815 326	3837 001
	L, H, 440 Eng., 4 Bbl. Carb., H/Perf.	41	H.D. Std.	6	3815 195	3837 062
	Police and Taxi, 225, 318, 400 Eng., 4 Bbl. Carb., w/o Isolators	41	H.D. Std.	5	3815 335	3837 068
	Police, 400 Eng. 4 Bbl. Carb., H/Perf., and 440 Eng., 4 Bbl. Carb. H/Perf., w/o Iso.	41	H.D. Std.	5	3815 336	3837 069
	L, H, 225, 318, 400 Eng.	41	H.D.	6	3815 195	3837 062
	L, H, P, 318, 400 Eng.	45	Std.	6	3815 145	3837 057
	L, H, P, 318, 400 Eng.	45	H.D.	6	3815 167	3780 782
	H, P, 318, 400 Eng.	46	Std.	6	3815 146	3780 783
	H, P, 318, 400 Eng.	46	H.D.	6	3815 168	3837 060
	CORONET - CHARGER					
	L, 225, 318, 360, and 400 Eng., 4 Bbl. Carb.	21	Std.	5	3815 324	3837 064
	L, 400 Eng., 4 Bbl. Carb., H/Perf.	21	Std.	5	3815 325	3780 800
	L, 440 Eng., H/Perf.	21	H.D. Std.	6	3815 193	3837 003
	L, 225, 318, 360, 400 Eng.	21	H.D.	6	3815 193	3837 003
	H, 225, 318, 360, 400 Eng.	23	Std.	5	3815 325	3780 800
	H, 400 Eng., 4 Bbl. Carb., H/Perf.	23	Std.	5	3815 326	3837 001
	H, 440 Eng., 4 Bbl. Carb., H/Perf.	23	H.D. Std.	6	3815 193	3837 003
	H, 225, 318, 360, 400 Eng.	23	H.D.	6	3815 194	3837 004
	P, 318, 400 Eng.	29	Std.	5	3815 325	3780 800
	P, 400 Eng., 4 Bbl. Carb.	29	Std.	5	3815 326	3837 001
	P, 440 Eng., HI./Perf.	29	H.D. Std.	6	3815 193	3837 003
	P, 318, 400 Eng.	29	H.D.	6	3815 194	3837 004
	L, H, 225, 318, 400 Eng.	41	Std.	5	3815 326	3837 001
	L, H, 440 Eng., Hi./Perf.	41	H.D. Std.	6	3815 195	3837 062
	Police and Taxi, 225, 318, 400, 440 Eng., (w/o Iso.)	41	H.D. Std.	5	3815 335	3837 068
	Taxi, 225, 318 Eng. (w/o Iso.)	41	H.D. Std.	5	3815 334	3837 067
	L, H, 225, 318, 400 Eng.	41	H.D.	6	3815 195	3837 062

CARLINES J - Challenger, B - Barracuda, V - Valiant, L - Dart, R - Satellite, W - Coronet - Charger, P - Plymouth, D - Dodge, C - Chrysler, Y - Imperial

AR Indicates use as required. Numerals in parentheses ( ) refer to notes. Printed in U.S.A.

# Indicates parts not listed in any previous parts book. ★ Indicates change or addition. November, 1974

NOTE: The production spring assy. part number (Spring Less Bushings) is located on the bottom spring leaf. DO NOT ORDER this number. This information is provided to assist in accurate specifying. ALWAYS ORDER the SERVICE SPRING ASSY.

		BODY TYPE	TYPE OF	NO. OF LEAVES	PROD. SPRING	SERVICE SPRING
17-11-3	SPRING Cont'd.					
	L, H, P, 318, 400 Eng.	45	Std.	6	3815 145	3837 057
	L, H, P, 318, 400 Eng.	45	H.D.	6	3815 166	3780 780
	H, P, 318, 400 Eng.	46	Std.	6	3815 146	3780 783
	H, P, 318, 400 Eng.	46	H.D.	6	3815 167	3780 782
	PLYMOUTH					
	M, H, P, 360, 400 Eng.	23	Std.	5	3722 374	3837 049
	H, P, 440 w/o H/Perf.	23	Std.	6	3815 353	3837 018
	M, 440 Eng. w/o H/Perf.	23	Std.	6	3815 354	3837 020
	M, H, P, 440 Eng. w/H/Perf.	23	H.D. Std.	6	3815 383	3837 018
	M, H, P, 360, 400, 440 Eng.	23	H.D.	6	3815 383	3837 018
	L, M, H, 360, 400 Eng.	41	Std.	5	3722 374	3837 049
	L, M, H, 440 Eng., w/o H/Perf.	41	Std.	6	3815 354	3837 020
	L, M, H, 440 Eng. w/H/Perf.	41	H.D. Std.	6	3815 383	3837 018
	Police and Taxi, 360, 400, 440 Eng., (w/o Iso.)	41	H.D. Std.	7	3722 896	3780 774
	L, M, H, 360, 400, 440 Eng.	41	H.D.	6	3815 383	3837 018
	H, P, 360, 400 Eng.	43	Std.	5	3722 374	3837 049
	H, P, 440 Eng. w/o H/Perf.	43	Std.	6	3815 354	3837 020
	H, P, 440 Eng., w/H/Perf.	43	H.D. Std.	6	3815 383	3837 018
	H, P, 360, 400, 440 Eng.	43	H.D.	6	3815 383	3837 018
	M, H, P, K, 360, 400, 440 Eng.	45	Std.	6	3722 815	3780 769
	M, H, P, K, 360, 400, 440 Eng.	45	H.D.	7	3722 823	3780 775
	H, P, 360, 400, 440 Eng.	46	Std.	6	3722 816	3780 770
	H, P, 360, 400, 440 Eng.	46	H.D.	7	3722 824	3780 776
	DODGE					
	L, M, H, 360, 400 Eng.	23	Std.	5	3722 373	3837 086
	P, 360, 400 Eng.	23	Std.	5	3722 374	3837 049
	L, M, H, 440 Eng., w/o H/Perf.	23	Std.	6	3815 353	3837 018
	P, 440 Eng., w/o H/Perf.	23	Std.	6	3815 354	3837 020
	L, M, H, 440 Eng. w/H/Perf.	23	H.D. Std.	6	3815 383	3837 072
	P, 440 Eng., w/H/Perf.	23	H.D. Std.	6	3815 384	3837 024
	L, M, H, 360, 400, 440 Eng., w/o H/Perf.	23	H.D.	6	3815 383	3837 072
	P, 360, 400, 440 Eng., w/o H/Perf.	23	H.D.	6	3815 383	3837 072
	L, M, H, 360, 400 Eng.	41	Std.	5	3722 373	3837 086
	P, 360, 400 Eng.	41	Std.	5	3722 374	3837 049
	L, M, H, 440 Eng., w/o H/Perf.	41	Std.	6	3815 383	3837 018
	P, 440 Eng., w/o H/Perf.	41	Std.	6	3815 354	3837 020
	L, M, H, P, 440 Eng., w/H/Perf.	41	H.D. Std.	6	3815 384	3837 024
	Police and Taxi, 360, 400, 440 Eng. (w/o Iso.)	41	H.D. Std.	7	3722 896	3780 774
	L, M, H, P, 360, 400, 440 Eng. w/o H/Perf.	41	H.D.	6	3815 383	3837 072
	H, P, 360, 400 Eng.	43	Std.	5	3722 374	3837 049
	H, 440 Eng., w/o H/Perf.	43	Std.	6	3815 353	3837 018
	H, P, 440 Eng. w/H/Perf.	43	H.D. Std.	6	3815 384	3837 024
	H, P, 360, 400, 440 Eng. w/o H/Perf.	43	H.D.	6	3815 383	3837 072
	M, H, 360, 400, 440 Eng.	45	Std.	6	3722 816	3780 770
	P, 360, 400, 440 Eng.	45	Std.	6	3722 818	3780 772
	M, H, 360, 400, 440 Eng.	45	H.D.	7	3722 824	3780 776
	P, 360, 400, 440 Eng.	45	H.D.	7	3722 825	3780 777
	H, 360, 400, 440 Eng.	46	Std.	6	3722 816	3780 770
	P, 360, 400, 440 Eng.	46	Std.	6	3722 817	3780 771
	H, 360, 400, 440 Eng.	46	H.D.	7	3722 824	3780 776
	P, 360, 400, 440 Eng.	46	H.D.	7	3722 825	3780 777
	CHRYSLER					
	L, M, 400 Eng.	23	Std.	5	3722 374	3837 049
	L, M, 440 Eng. w/o H/Perf.	23	Std.	6	3815 352	3837 070
	S, 440 Eng., w/o H/Perf.	23	Std.	6	3815 354	3837 020
	L, M, 440 Eng., w/H/Perf.	23	H.D. Std.	6	3815 384	3837 024
	L, M, 400, 440 Eng., w/o H/Perf.	23	H.D.	6	3815 383	3837 072
	S, 440 Eng., w/o H/Perf.	23	H.D.	6	3815 384	3837 024
	L, M, 400 Eng.	41	Std.	5	3722 374	3837 049
	L, M, 440 Eng., w/o H/Perf.	41	Std.	6	3815 353	3837 018

NOTE: The production spring assy. part number (Spring Less Bushings) is located on the bottom spring leaf. DO NOT ORDER this number. This information is provided to assist in accurate specifying. ALWAYS ORDER the SERVICE SPRING ASSY.

	BODY TYPE	TYPE OF	NO. OF LEAVES	PROD. SPRING	SERVICE SPRING
17-11-3 SPRING Cont'd.					
H, S, 440 Eng., w/o H/Perf.	41	Std.	6	3815 354	3837 020
L, M, 440 Eng., w/H/Perf.	41	H.D. Std.	6	3815 384	3837 024
H, 440 Eng., w/H/Perf.	41	H.D. Std.	6	3815 385	3837 025
L, M, 400, 440 Eng., w/O H/Perf.	41	H.D.	6	3815 383	3837 072
H, S, 400 Eng. w/o H/Perf.	41	H.D.	6	3815 384	3837 024
L, M, 400 Eng.	43	Std.	5	3722 374	3837 049
L, M, 440 Eng., w/o H/Perf.	43	Std.	6	3815 353	3837 018
H, S, 440 Eng., w/o H/Perf.	43	Std.	6	3815 354	3837 020
L, M, H, 440 Eng., w/H/Perf.	43	H.D. Std.	6	3815 384	3837 024
L, M, 400, 440 Eng., w/o H/Perf.	43	H.D.	6	3815 383	3837 072
H, S, 440 Eng., w/o H/Perf.	43	H.D.	6	3815 384	3837 024
P, 440 Eng.	45	Std.	6	3722 816	3780 770
P, 440 Eng.	45	H.D.	7	3722 824	3780 776
P, 440 Eng.	46	Std.	6	3722 816	3780 770
P, 440 Eng.	46	H.D.	7	3722 824	3780 776
IMPERIAL					
M, 440 Eng.	23, 43	Std.	6	3815 356	3837 022
M, 440 Eng.	23, 43	H.D.	6	3815 385	3837 025

NOTES

CODE	PART NAME	ENG. TYPE OR CU. IN	V	B J	L	R	W	P	D	C (L M)	C (P)	C (H S)	Y	PART NUMBER
17-11-5	PLATE, Spring Seat Angle,													
	1 degree		—	—	—	AR	AR	AR	AR	AR	AR	AR	AR	3722 711
	2 degrees		—	—	—	AR	AR	AR	AR	AR	AR	AR	AR	3722 712
	3 degrees		—	—	—	AR	AR	AR	AR	AR	AR	AR	AR	3722 713
	4 Degrees		—	—	—	AR	AR	AR	AR	AR	AR	AR	AR	3722 714
17-11-7	PLATE, w/STUD, 7 1/4" Axle		1	—	1	—	—	—	—	—	—	—	—	2071 766-7
	8 1/4", 8 3/8"		1	—	1	—	—	—	—	—	—	—	—	1856 346-7
	All		—	1	—	—	—	—	—	—	—	—	—	1856 346-7
	All, w/Isolator Clamp		—	—	—	1	1	—	—	—	—	—	—	3643 526-7
	All w/o Isolator Clamp		—	—	—	1	1	—	—	—	—	—	—	3400 836-7
	H.D., w/o Isolator Clamp		—	—	—	—	—	1	1	—	—	—	—	3400 836-7
	Police and Taxi		—	—	—	—	—	1	1	—	—	—	—	3400 836-7
	Rear Spring Isolator		—	—	—	—	—	1	1	1	1	1	1	3722 764-5
17-11-10	ISOLATOR, All		—	—	—	4	4	4	4	4	4	4	4	3402 379
17-11-14	PILOT, Rear Spring Center Bolt		—	—	—	2	2	2	2	—	—	—	—	3621 925
17-11-31	SPACER, Rear Spring Center Bolt		—	—	—	4	4	4	4	4	4	4	4	2403 462
17-11-40	PLATE, Rear Suspension Front Bracket, Support Front		—	—	—	1	1	—	—	—	—	—	—	3756 648-9
	Rear Bracket Support Rear, Sta. Wgn., 400, 440 Eng.	8	—	—	—	1	1	—	—	—	—	—	—	2782 805
	4 D.H.T., 400, 440 Eng.	8	—	—	—	2	2	—	—	—	—	—	—	2782 805
	Standard													
17-12-4	**LEAF, w/BUSHING, Rear Spring Main**	6	2	—	2	—	—	—	—	—	—	—	—	3815 072
	318 Eng.		2	—	2	—	—	—	—	—	—	—	—	3815 074
	All	8	—	2	—	—	—	—	—	—	—	—	—	3400 886
	Except Sta. Wgn.		—	—	—	2	2	—	—	—	—	—	—	3815 116
	Sta. Wgn.		—	—	—	2	2	—	—	—	—	—	—	3815 118
	Police and Taxi		—	—	—	—	—	2	—	—	—	—	—	3722 989
	Except Sta. Wgn., except 440 Eng.		—	—	—	—	—	2	—	—	—	—	—	3722 983
	Except Sta. Wgn., 440 Eng.	8	—	—	—	—	—	2	—	—	—	—	—	3722 979
	Sta. Wgn., All	8	—	—	—	—	—	2	—	—	—	—	—	3722 985
	Except Sta. Wgn., Except 440 Eng.	8	—	—	—	—	—	—	2	—	—	—	—	3722 983
	Except Sta. Wgn., 440 Eng.	8	—	—	—	—	—	—	2	—	—	—	—	3722 979
	Police and Taxi	8	—	—	—	—	—	—	2	—	—	—	—	3722 989
	Sta. Wgn., All	8	—	—	—	—	—	—	2	—	—	—	—	3722 985
	400 Eng.	8	—	—	—	—	—	—	—	2	—	—	—	3722 983
	440 Eng.	8	—	—	—	—	—	—	—	2	—	2	—	3722 979
	Sta. Wgn.	8	—	—	—	—	—	—	—	—	2	—	—	3722 985
	All	8	—	—	—	—	—	—	—	—	—	—	2	3722 979
	Heavy Duty													
	All		2	—	2	—	—	—	—	—	—	—	—	3815 108
	All		—	2	—	—	—	—	—	—	—	—	—	3643 576
	Except Sta. Wgn., H.D., w/o Rear Isolators		—	—	—	2	2	—	—	—	—	—	—	3722 059
	Except Sta. Wgn., w/Sway Bar and Rear Isolators		—	—	—	2	2	—	—	—	—	—	—	3815 116
	Sta. Wgn., w/Sway Bar and Rear Isolators		—	—	—	2	2	—	—	—	—	—	—	3815 118
	Police and Taxi	8	—	—	—	—	—	2	—	—	—	—	—	3722 989
	Except Sta. Wgn., w/Sway Bar	8	—	—	—	—	—	2	—	—	—	—	—	3722 983
	Sta. Wgn., w/Sway Bar	8	—	—	—	—	—	2	—	—	—	—	—	3722 985
	Except Sta. Wgn., w/Sway Bar	8	—	—	—	—	—	—	2	—	—	—	—	3722 983
	Sta. Wgn., w/Sway Bar	8	—	—	—	—	—	—	2	—	—	—	—	3722 985
	All, w/Sway Bar	8	—	—	—	—	—	—	—	2	—	2	—	3722 983
	Sta. Wgn., w/Sway Bar	8	—	—	—	—	—	—	—	—	2	—	—	3722 985
	All	8	—	—	—	—	—	—	—	—	—	—	2	3722 983
17-12-6	INTERLEAF		AR	AR	AR	AR	AR	AR	AR	AR	AR	AR	AR	2539 512
17-12-12	INTERLINER		AR	AR	AR	AR	AR	AR	AR	AR	AR	AR	AR	1948 396

CARLINES: J - Challenger, B - Barracuda, V - Valiant, L - Dart, R - Satellite, W - Coronet - Charger, P - Plymouth, D - Dodge, C - Chrysler, Y - Imperial

AR Indicates use as required.

Numerals in parentheses ( ) refer to notes.

# Indicates parts not listed in any previous parts book.

★ Indicates change or addition.

Printed in U.S.A.
November, 1974

CODE	PART NAME	ENG. TYPE OR CU. IN	V	B J	L	R	W	P	D	C (L M)	C (P)	C (H S)	Y	PART NUMBER
17-14-10	**BOLT, Rear Spring Center All**		AR	AR	AR	—	—	—	—	—	—	—	—	1944 361
	Std.		—	—	—	AR	AR	AR	AR	AR	AR	AR	AR	3643 558
	Police & Taxi		—	—	—	AR	AR	AR	AR	—	—	—	—	3643 579
	H.D.		—	—	—	AR	AR	AR	AR	—	—	—	—	3643 579
17-15-1	**CLIP, Rear Spring, 5 3/4" Lgh., 7/16-20 Thd.**		4	—	4	—	—	—	—	—	—	—	—	2834 928
	6 5/8" Lgh., 1/2-20 Thd.		4	4	4	4	4	—	—	—	—	—	—	3491 296
	7" Lgh., 1/2-20 Thd.		—	—	—	—	—	4	4	—	—	—	—	1635 666
	7 3/4" Lgh., 1/2-20 Thd.		—	—	—	4	4	4	4	4	4	4	4	1948 334
	8" Lgh., 1/2-20 Thd.		—	—	—	—	—	4	4	4	4	4	4	1948 335
17-15-6	NUT, Clip, 1/2-20 Thd.		8	8	8	8	8	8	8	8	8	8	8	6023 019
	7/16-20 Thd.		8	—	8	—	—	—	—	—	—	—	—	6023 018
17-15-11	CLAMP, Rear Spring ISOLATOR													
	Except Sta. Wgn., Std.		—	—	—	2	2	—	—	—	—	—	—	3815 226
	Sta. Wgn., Std.		—	—	—	2	2	—	—	—	—	—	—	3815 227
	Except Sta. Wgn., H.D.		—	—	—	2	2	—	—	—	—	—	—	3815 227
	Sta. Wgn., H.D.		—	—	—	2	2	—	—	—	—	—	—	3722 909
	Except Sta. Wgn., Except 440 Eng. Std.		—	—	—	—	—	2	2	—	—	—	—	3722 901
	Except Sta. Wgn., 440 Eng., Std.	8	—	—	—	—	—	2	2	—	—	—	—	3722 902
	Except Sta. Wgn., H.D. All		—	—	—	—	—	2	2	—	—	—	—	3722 903
	Except Sta. Wgn., 400 Eng., Std.	8	—	—	—	—	—	—	—	2	—	2	—	3722 901
	Except Sta. Wgn., 440 Eng., Std.	8	—	—	—	—	—	—	—	2	—	2	—	3722 902
	Except Sta. Wgn., H.D., All	8	—	—	—	—	—	—	—	2	—	2	—	3722 903
	Sta. Wgn., Std.		—	—	—	—	—	2	2	—	2	—	—	3722 906
	Sta. Wgn., H.D.		—	—	—	—	—	2	2	—	2	—	—	3722 907
	Std.	8	—	—	—	—	—	—	—	—	—	—	2	3722 902
	H.D.	8	—	—	—	—	—	—	—	—	—	—	2	3722 903
17-15-24	INSULATOR, alignment Clip		AR	AR	AR	AR	AR	AR	AR	AR	AR	AR	AR	1829 929
17-15-25	CLIP and CLAMP PACKAGE		AR	AR	AR	AR	AR	AR	AR	AR	AR	AR	AR	2808 399
17-15-28	SCREW, Alignment Clip		—	—	—	—	—	4	4	4	4	4	4	1485 510
17-15-30	WASHER, Alignment Clip Screw		—	—	—	—	—	4	4	4	4	4	4	1530 398
17-16-1	**SHACKLE and BUSHING PACKAGE**		2	—	2	—	—	—	—	—	—	—	—	3004 822
	All		—	2	—	—	—	—	—	—	—	—	—	3420 118
	Except Sta. Wgn.		—	—	—	2	2	—	—	—	—	—	—	3780 515
	Sta. Wgn.		—	—	—	2	2	—	—	—	—	—	—	3780 514
	w/Rear Isolators		—	—	—	—	—	2	2	2	—	2	2	3780 516
	w/o Rear Isolators		—	—	—	—	—	2	2	—	—	—	—	3780 513
	Sta. Wgn., All		—	—	—	—	—	2	2	—	2	—	—	3780 513
17-16-8	BUSHING, Shackle Pivot		8	—	8	—	—	—	—	—	—	—	—	1940 725
	All	8	—	8	—	—	—	—	—	—	—	—	—	1400 269
	All		—	—	—	8	8	8	8	8	8	8	8	3643 989
17-17-3	**BUSHING, Rear Spring, Front, Pivot**		2	2	2	—	—	—	—	—	—	—	—	3643 990
	All		—	—	—	—	—	2	2	2	2	2	2	3815 210
	Except Sta. Wgn., Std.		—	—	—	2	2	—	—	—	—	—	—	3815 210
	Except Sta. Wgn., H.D.		—	—	—	2	2	—	—	—	—	—	—	3815 215
	Sta. Wgn.		—	—	—	2	2	—	—	—	—	—	—	3815 215
	H.D.		—	2	—	—	—	2	2	—	—	—	—	2403 245
17-17-4	BOLT, Pivot Bushing		2	2	2	2	2	2	2	2	2	2	2	433 179
17-17-5	NUT, Pivot Bushing Bolt		2	2	2	2	2	2	2	2	2	2	2	152 370
17-19-3	**BUMPER, w/o Support, Rear Axle Pinion Carrier**		1	1	1	1	1	1	1	1	1	1	1	3643 969
	SUPPORT w/BUMPER, Rear Axle Pinion Carrier, w/7 1/4" Axle		1	—	1	—	—	—	—	—	—	—	—	3643 880
	w/8 1/4" or 8 3/8" Axle		1	—	1	1	1	1	1	1	1	1	—	3643 886
	w/8 3/4" Axle		—	1	—	1	1	1	1	1	1	1	1	3643 884
	BUMPER, Rear Axle Side Rail		2	—	2	—	—	—	—	—	—	—	—	3722 994
	w/o Plate		—	2	—	2	2	2	2	2	2	2	2	3722 996
	w/Plate	8	—	—	—	—	—	2	2	2	2	2	2	3722 915

CARLINES: J - Challenger, B - Barracuda, V - Valiant, L - Dart, R - Satellite, W - Coronet - Charger, P - Plymouth, D - Dodge, C - Chrysler, Y - Imperial

AR Indicates use as required.

Numerals in parentheses ( ) refer to notes.

Printed in U.S.A.

# Indicates parts not listed in any previous parts book.

★ Indicates change or addition.

November, 1974

CODE	PART NAME	ENG. TYPE OR CU. IN	V	B J	L	R	W	P	D	C (L M)	C (P)	C (H S)	Y	PART NUMBER
17-19-4	BRACKET, Center Floor Pan Carrier Bumper		1	—	1	—	—	—	—	—	—	—	—	2784 470
17-19-20	REINFORCEMENT, Center Floor Pan Pinion Carrier Bumper		—	1	—	—	—	—	—	—	—	—	—	3444 611
	All		—	—	—	1	1	—	—	—	—	—	—	3756 640
	All		—	—	—	—	—	1	1	1	1	1	1	3615 872
	Standard-Front													
17-23-3	**SHOCK ABSORBER PACKAGE, FRONT, All**		2	—	2	—	—	—	—	—	—	—	—	3744 465
	All		—	2	—	—	—	—	—	—	—	—	—	3402 417
	Except Sta. Wgn.		—	—	—	2	2	—	—	—	—	—	—	3780 547
	Sta. Wgn.		—	—	—	2	2	—	—	—	—	—	—	3744 464
	All	8	—	—	—	—	—	2	2	2	2	2	2	3780 505
	Standard-Rear													
	SHOCK ABSORBER PACKAGE, REAR, All		2	—	2	—	—	—	—	—	—	—	—	3722 214
	All		—	2	—	—	—	—	—	—	—	—	—	3402 411
	Except Sta. Wgn.		—	—	—	2	2	—	—	—	—	—	—	3815 104
	Sta. Wgn.		—	—	—	2	2	—	—	—	—	—	—	3722 731
	All	8	—	—	—	—	—	2	2	2	2	2	2	3815 376
	Heavy Duty-Front													
	SHOCK ABSORBER PACKAGE, FRONT, All		2	—	2	—	—	—	—	—	—	—	—	3004 959
	All		—	2	—	—	—	—	—	—	—	—	—	3402 417
	All, 1" Dia.		—	—	—	2	2	—	—	—	—	—	—	3744 464
	All 1 3/16" Dia.		—	—	—	2	2	—	—	—	—	—	—	3744 422
	1" Dia.	8	—	—	—	—	—	2	2	2	2	2	2	3780 504
	1 3/16" Dia.	8	—	—	—	—	—	2	2	2	2	2	2	3780 536
	Heavy Duty-Rear													
	SHOCK ABSORBER PACKAGE, REAR, All		2	—	2	—	—	—	—	—	—	—	—	3400 594
	All		—	2	—	—	—	—	—	—	—	—	—	3402 415
	Except Sta. Wgn., 1" Dia.		—	—	—	2	2	—	—	—	—	—	—	3722 731
	All 1 3/8" Dia.		—	—	—	2	2	—	—	—	—	—	—	3400 959
	1" Dia.	8	—	—	—	—	—	2	2	2	2	2	2	3815 376
	1 3/8" Dia.	8	—	—	—	—	—	2	2	2	2	2	2	3722 971
	2 3/8" Dia.	8	—	—	—	—	—	2	2	2	2	2	2	3722 972
17-23-52	BUSHING, Front Shock, Upper Mounting		2	2	2	—	—	2	2	2	2	2	2	2206 923
	Upper Mounting		—	—	—	2	2	—	—	—	—	—	—	3722 006
	Lower Mounting		2	2	2	—	—	—	—	—	—	—	—	1635 588
	Lower Mounting		—	—	—	—	—	4	4	4	4	4	4	3643 891
	Rear Shock, Upper Mounting		2	2	2	2	2	2	2	2	2	2	2	1319 902
	Upper Mounting, w/1 3/8" Shocks		—	—	—	—	—	2	2	2	2	2	2	2201 554
	Lower Mounting		2	2	2	2	2	2	2	2	2	2	2	1319 902
17-23-53	WASHER, Rear Shock Pivot Bushing, Inner		4	—	4	—	—	—	—	—	—	—	—	1319 555
	Inner		—	2	—	2	2	2	2	2	2	2	2	1319 555
	Outer		4	—	4	—	—	—	—	—	—	—	—	1319 554
	Outer		—	2	—	2	2	2	2	2	2	2	2	1319 554
	RETAINER, Front Shock Upper Mounting Bushing		2	2	2	—	—	—	—	—	—	—	—	2206 925
			—	—	—	4	4	—	—	—	—	—	—	3722 001
			—	—	—	—	—	4	4	4	4	4	4	2206 925
17-23-56	STUD, Rear Shock Upper Mounting		2	—	2	—	—	—	—	—	—	—	—	2071 714
	BOLT, Rear Shock Upper Mounting		—	2	—	2	2	2	2	2	2	2	2	180 190
17-23-57	NUT, Front Shock Lower Mounting Bolt		2	2	2	2	2	2	2	2	2	2	2	6028 465
	Rear Shock Upper Mounting Stud		2	—	2	—	—	—	—	—	—	—	—	152 371
	Rear Shock Upper Mounting Bolt		—	2	—	2	2	2	2	2	2	2	2	6028 466
17-24-28	**SUPPORT, Shock Absorber Frame Front Shock Mounting**		—	—	—	—	—	2	2	2	2	2	—	2925 279
	REINFORCEMENT, Rear Shock C/Member, Tail Pipe, Mounting		—	—	—	1	1	—	—	—	—	—	—	3615 108
17-26-4	**SHIELD, Front Shock Upper Dust**	8	—	—	—	—	—	—	—	—	—	—	2	2539 404

CARLINES J - Challenger, B - Barracuda, V - Valiant, L - Dart, R - Satellite, W - Coronet - Charger, P - Plymouth, D - Dodge, C - Chrysler, Y - Imperial

AR Indicates use as required.

Numerals in parentheses ( ) refer to notes.

Printed in U.S.A.

# Indicates parts not listed in any previous parts book.

★ Indicates change or addition.

November, 1974

CODE	PART NAME	ENG. TYPE OR CU. IN	V	B J	L	R	W	P	D	C (L M)	C (P)	C (H S)	Y	PART NUMBER
17-29-5	**SHAFT, Sway Bar Front All**		1	—	1	—	—	—	—	—	—	—	—	2948 568
	All		—	1	—	—	—	—	—	—	—	—	—	2835 862
	Except 400, 440 Eng.		—	—	—	1	1	—	—	—	—	—	—	3402 891
	400, 440 Eng.	8	—	—	—	1	1	—	—	—	—	—	—	3722 411
	Sta. Wgn., All		—	—	—	1	1	—	—	—	—	—	—	3722 411
	Police, 400, 440 Eng.	8	—	—	—	1	1	—	—	—	—	—	—	3815 551
	Except Sta. Wgn., Std.	8	—	—	—	—	—	1	1	1	1	1	1	3722 481
	Except Sta. Wgn., H.D.	8	—	—	—	—	—	1	1	1	1	1	1	3722 498
	Sta. Wgn., All	8	—	—	—	—	—	1	1	—	1	—	—	3722 498
17-29-6	SUPPORT, Shaft		2	2	2	—	—	—	—	—	—	—	—	2835 707
	BRACKET, Shaft		1	1	1	—	—	—	—	—	—	—	—	# 3879 243
17-29-10	STRAP, Shaft Bushing Retainer		—	—	—	2	2	—	—	—	—	—	—	3402 897
	Police, 400, 440 Eng.	8	—	—	—	2	2	—	—	—	—	—	—	3815 556
17-29-11	RETAINER, Shaft Bushing		2	2	2	—	—	—	—	—	—	—	—	2535 990
			—	—	—	2	2	—	—	—	—	—	—	3402 894
	Police, 400, 440 Eng.	8	—	—	—	2	2	—	—	—	—	—	—	3815 554
		8	—	—	—	—	—	2	2	2	2	2	2	3402 714
17-29-15	CUSHION, Shaft		—	—	—	2	2	—	—	—	—	—	—	3402 890
17-29-16	RETAINER, Shaft to Strut Cushion Slot		—	—	—	2	2	—	—	—	—	—	—	3402 905
17-29-17	LINK, Shaft Insulator		2	2	2	—	—	—	—	—	—	—	—	2535 992
17-29-18	STRAP, Cushion Retain-Hook		—	—	—	2	2	—	—	—	—	—	—	3402 904
17-29-19	SLEEVE, Shaft Insulator Link		2	2	2	—	—	—	—	—	—	—	—	2535 991
	All		—	—	—	—	—	2	2	2	2	2	2	3722 463
17-29-20	INSULATOR, Shaft Link		8	8	8	—	—	—	—	—	—	—	—	2071 604
	All	8	—	—	—	—	—	8	8	8	8	8	8	3402 568
	Shaft Front Bracket		—	—	—	2	2	—	—	—	—	—	—	3402 898
17-29-21	RETAINER, Shaft Insulator		8	8	8	—	—	8	8	8	8	8	8	2071 611
	All		—	—	—	4	4	—	—	—	—	—	—	1558 352
17-29-44	BOLT, Shaft Link		—	—	—	—	—	4	4	4	4	4	4	3722 464
17-30-1	**SHAFT, Sway Bar Rear, w/BUSHING**		—	1	—	—	—	—	—	—	—	—	—	3402 049
	Except Police Car		—	—	—	1	1	—	—	—	—	—	—	3845 007
	Police, 400, 440 Eng.		—	—	—	1	1	—	—	—	—	—	—	3845 019
17-30-2	SUPPORT, Shaft		—	2	—	—	—	—	—	—	—	—	—	3402 045
	All, Except Police Car		—	—	—	1	1	—	—	—	—	—	—	3643 818-9
	Police Car		—	—	—	1	1	—	—	—	—	—	—	3722 944-5
	BRACKET, Shaft		—	—	—	2	2	—	—	—	—	—	—	3643 502
	Screw, Bracket		—	—	—	8	8	—	—	—	—	—	—	6029 306
	Nut		—	—	—	4	4	—	—	—	—	—	—	6025 804
17-30-3	LINK, Shaft		—	2	—	—	—	—	—	—	—	—	—	2535 188
	Nut		—	4	—	—	—	—	—	—	—	—	—	120 376
17-30-4	RETAINER, Shaft Insulator		—	8	—	—	—	—	—	—	—	—	—	2071 611
	Shaft Link		—	—	—	4	4	—	—	—	—	—	—	2071 611
	Shaft Bushing		—	—	—	2	2	—	—	—	—	—	—	3643 506
17-30-5	INSULATOR, Shaft Link		—	8	—	—	—	—	—	—	—	—	—	2071 604
	Except Sta. Wgn.		—	—	—	4	4	—	—	—	—	—	—	2071 604
	Nut		—	—	—	4	4	—	—	—	—	—	—	120 376
17-30-6	BUSHING, Shaft Link,													
	Except Sta. Wgn.		—	—	—	2	2	—	—	—	—	—	—	2269 709
17-30-8	ATTACHING PACKAGE, Rear Sway Bar		—	2	—	2	2	—	—	—	—	—	—	# 3879 239

NOTES

CARLINES J - Challenger, B - Barracuda, V - Valiant, L - Dart, R - Satellite, W - Coronet - Charger, P - Plymouth, D - Dodge, C - Chrysler, Y - Imperial

AR Indicates use as required.

Numerals in parentheses ( ) refer to notes.

Printed in U.S.A.

# Indicates parts not listed in any previous parts book.

★ Indicates change or addition.

November, 1974

GROUP 18
STANDARD PARTS

This group contains illustration and text of National Standard Parts that are used on Chrysler Corporation vehicles.

Only those items that are serviced and available in inventory are listed.

The alphabetical index included in this group indicates the page number on which a particular type of item may be located.

Abbreviations appearing in the text are interpreted as follows:

AL = ALUMINUM
BE = BLACK ENAMEL
BR = BRASS
CA = CADMIUM
CH = CHROME
CO = COPPER
NI = NICKEL
PA = PARKERIZED
PH = PHOSPHATE
PL = PLAIN
ST = STEEL
STN = STAINLESS
TI = TIN
ZI = ZINC

ALPHABETICAL INDEX

NAME	PAGE
A ADAPTERS	
Pipe	18-3
Pipe Reducer	18-3
B BALLS	
Steel	18-3
BALL JOINTS	18-3
BOLTS	
Hexagon	18-3, 4
Hexagon Lock	18-5
Round Head, Square Neck	18-5
BUSHINGS	
Pipe Reducing	18-5
C CLAMPS	
Hose	18-5
CLEVIS	
Rod End	18-5
COCKS	
Drain	18-6
CONNECTORS, Tube	
Automotive Flared	18-6
Ball Sleeve	18-6
Inverted Flared	18-6
Refrigeration	18-7
COUPLINGS	
Pipe	18-7
E ELBOWS	
Ball Sleeve	18-7
Inverted Flared	18-7, 8
Street	18-8

Printed in U.S.A.
November, 1974

NAME	PAGE
F FASTENERS	
Curtain	18-8
FITTINGS	
Lubrication	18-9
Pressure Relief	18-9
G GASKETS	
Annular	18-10
Spark Plug	18-10
GROMMETS	18-10
K KEYS	
Woodruff	18-10
N NIPPLES	
Pipe	18-11
NUTS	
Ball Sleeve	18-11
Clinch	18-11
Flared Tube	18-10, 11
Hexagon Jam	18-12
Hexagon Lock	18-12, 13
Hexagon Machine Screw	18-14
Hexagon Slotted	18-13
Hexagon with Lock Washer	18-13
Spring	18-14
Stamped	18-14, 15
'U'	18-16
Wing	18-16
P PINS	
Grooved	18-16, 17
Chamfered	18-17
Clevis	18-17
Cotter	18-17
Dowel	18-17
Spring	18-18
Square End	18-18
Taper	18-18
PLUGS	
Button	18-18
Expansion	18-19
Hexagon Head	18-19
Hexagon Socket	18-19
Slotted Headless	18-19
Square Head	18-19
R RIVETS	
Button Head	18-19
Counter Sunk Head	18-20
Flat Head	18-20
Oval Head	18-20
S SCREWS	
Cross Recessed Head Machine	18-20, 21, 22
Cross Recessed Head Tapping	18-22, 23, 24, 25, 26, 27
Cross Recessed Head Drilling & Tapping	18-27
Hexagon Head Machine	18-27
Hexagon Flange Head Machine	18-28
Hexagon Head Tapping	18-28, 29
Hexagon Flange Head Tapping	18-28, 29
Hexagon Socket Head Cap	18-30
Metallic Drive	18-30
Set	18-30, 31
Slotted Head Machine	18-31
SLEEVE	
Ball	18-31
SPRING	
Retainer	18-31
STUDS	18-31
T TEES	
Extruded Pipe	18-32
Flared Tube	18-32
Inverted Flared Tube	18-32
TERMINALS	
Eyelet Double Wire	18-33
Eyelet Offset	18-33
Eyelet Straight	18-33
Spade Straight	18-33
U UNION	
Inverted Flared	18-33
V VALVE	
Pressure Relief	18-33
W WASHERS	
Flat	18-33
Lock	18-34
Spring Lock	18-34

Printed in U.S.A.
November, 1974

GROUP 18— STANDARD PARTS

ADAPTER, Automotive Pipe

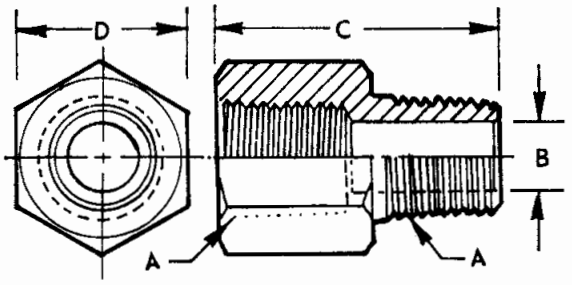

A	Thrds./Inch	B	C	D	Part No.
1/8	27	7/32	7/8	9/16	443 998
1/4	18	5/16	1 1/4	3/4	444 000
3/8	7/16	7/16	1 1/4	7/8	444 002
1/2	9/16	9/16	1 21/32	1 1/16	444 004

ADAPTER, Pipe Reducer

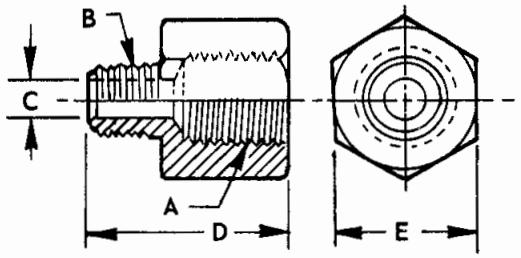

A	B	C	D	E	Part No.
3/8-18	1/4-18	5/16	1 15/32	7/8	444 014

BALL, Steel

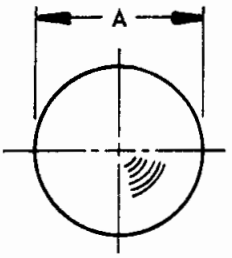

A	Material	Grade	Part No.
3/32	CH	50	114 072
3/32	CA	500	147 480
5/32	CA	100	152 096
3/16	CH	200	145 637
3/16	CA	500	147 483
1/4	CH	50	104 918
9/32	CH	50	114 861
5/16	CH	50	104 919
5/16	CA	500	147 487
11/32	CH	50	119 282
11/32	CA	1000	169 111
3/8	CH	50	104 920
3/8	CA	500	147 500
13/32	CA	500	147 490
7/16	CH	200	145 655
1/2	CH	50	104 922
5/8	CH	50	104 924
7/8	CH	50	104 927

BALL JOINTS

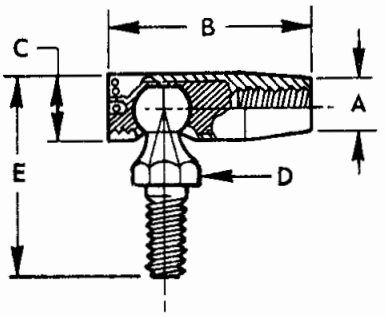

Size	A	B	C	D	E	Part No.
10-32	1/4	1 7/32	3/8	5/16	1 5/16	441 279
5/16-24	3/8	1 17/32	1/2	7/16	1 1/2	9418 526
3/8-24	1/2	1 29/32	5/8	1/2	1 29/32	191 595

BOLTS, Hexagon (Fine Thread)

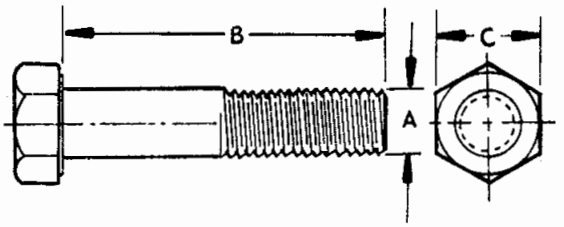

A	Thrds./Inch	B	C	Finish	Part No.
1/4	28	1/2	7/16	ZI	181 561
1/4	28	7/8	7/16	ZI	181 567
1/4	28	1	7/16	ZI	181 568
1/4	28	1 3/4	7/16		181 577
1/4	28	2	7/16		181 579
5/16	24	5/8	1/2	ZI	181 593
5/16	24	3/4	1/2	ZI	181 595
5/16	24	7/8	1/2	ZI	181 596
5/16	24	1	1/2	ZI	181 608
5/16	24	1 1/4	1/2	ZI	181 610
5/16	24	1 1/2	1/2	ZI	181 614
5/16	24	2	1/2	ZI	181 620
5/16	24	2 3/4	1/2		181 623
5/16	24	3	1/2		182 703
3/8	24	1/2	9/16		181 627
3/8	24	1	9/16	ZI	181 637
3/8	24	1 1/4	9/16	ZI	181 639
3/8	24	1 1/2	9/16	PH	182726
3/8	24	1 3/4	9/16		181 646
3/8	24	2 1/4	9/16	ZI	181 649
3/8	24	2 1/2	9/16		181 650
3/8	24	2 7/8	9/16	PL	187 234
3/8	24	3	9/16	ZI	181 652
3/8	24	3	9/16	PH	186 310
3/8	24	3 1/4	9/16	PH	189 121
3/8	24	4 1/2	9/16	ZI	189 334
3/8	24	6 3/4	9/16	PH	9431 547
3/8	24	8	9/16	PH	9429 497
7/16	20	1 1/8	5/8	ZI	181 667
7/16	20	1 1/4	5/8	ZI	181 668
7/16	20	1 1/2	5/8	PH	9417 818
7/16	20	1 3/4	5/8	ZI	181 672
7/16	20	2	5/8	ZI	181 674
7/16	20	3	5/8		181 680
7/16	20	4	5/8		181 682
7/16	20	4 1/4	5/8	PH	433 146
7/16	20	4 1/4	5/8	ZI	187 612
7/16	20	4 3/8	5/8	PH	9427 473

Printed in U.S.A.
November, 1974

	A	Thrds./Inch	B	C	Finish	Part No.
	7/16	20	5 1/2	5/8	PH	215 649
	1/2	20	1/2	3/4		181 683
	1/2	20	1	3/4		181 696
	1/2	20	1 1/4	3/4	ZI	181 698
	1/2	20	1 1/2	3/4	ZI	181 700
	1/2	20	2	3/4	ZI	181 705
	1/2	20	2 1/4	3/4	PH	9419 523
	1/2	20	2 1/2	3/4	PH	9421 898
	1/2	20	2 1/2	3/4	ZI	181 709
	1/2	20	2 3/4	3/4	PH	9422 752
	1/2	20	3	3/4		181 711
	1/2	20	3 1/4	3/4	PH	9420 616
# 8 Steel	1/2	20	3 1/2	3/4	PH	9425 137
# 5 Steel	1/2	20	3 1/2	3/4	PH	182 788
# 5 Steel	1/2	20	4 1/4	3/4	PH	192 202
# 8 Steel	1/2	20	4 1/4	3/4	PH	9420 879
	1/2	20	6	3/4	PH	9420 846
	1/2	20	6 1/2	3/4	PH	9428 918
	1/2	20	10 1/4	3/4	PH	9428 923
	9/16	18	7/8	13/16	PH	182 794
	9/16	18	1 1/2	13/16	PH	9427 609
	9/16	18	2	13/16	PH	9427 610
	9/16	18	2	13/16	ZI	181 731
	9/16	18	2 1/2	13/16	ZI	181 733
	9/16	18	3 1/4	13/16	PH	182 808
	9/16	18	4	13/16		181 747
	5/8	18	1 1/4	15/16	PH	271 889
	5/8	18	1 1/2	15/16	PH	9421 226
	5/8	18	1 3/4	15/16	PH	271 903
	5/8	18	1 7/8	15/16	ZI	271 747
	5/8	18	2	15/16	PH	271 905
	5/8	18	2 1/4	15/16	ZI	271 749
	5/8	18	2 1/2	15/16	PH	9424 199
# 8 Steel	5/8	18	4 1/2	15/16	PH	9430 900
# 5 Steel	5/8	18	4 1/2	15/16	PH	271 915
	5/8	18	5	15/16	PH	271 917
	5/8	18	6 1/8	15/16	PH	9430 908
	5/8	18	11 1/2	15/16	PH	9433 375
	3/4	16	1 3/4	1 1/8	PL	271 632
	3/4	16	7 1/4	1 1/8	PH	9423 947
	3/4	16	7 3/4	1 1/8	PH	9423 948
	7/8	14	3 1/4	1 5/16	PH	272 000
	7/8	14	4 1/2	1 5/16	PH	272 005
	7/8	14	5 1/2	1 5/16	PH	9422 085

BOLTS, Hexagon (Coarse Thread)

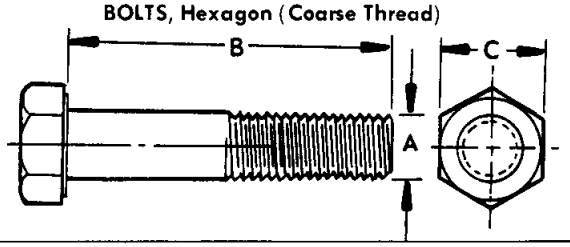

	A	Thrds./Inch	B	C	Finish	Part No.
	1/4	20	3/8	7/16	PH	181 055
	1/4	20	5/8	7/16	ZI	180 018
	1/4	20	3/4	7/16	ZI	180 020
	1/4	20	7/8	7/16	ZI	180 021
	1/4	20	1	7/16	ZI	180 022
	1/4	20	1 1/4	7/16	ZI	180 024
	1/4	20	1 1/2	7/16	ZI	180 034
	1/4	20	1 3/8	7/16	PH	181 068
	1/4	20	2 1/2	7/16	PH	180 048
	5/16	18	3/8	1/2	PH	181 080
	5/16	18	1/2	1/2	PH	181 082
	5/16	18	5/8	1/2	ZI	180 075
	5/16	18	3/4	1/2	ZI	180 077
	5/16	18	7/8	1/2	ZI	180 078
	5/16	18	1	1/2	ZI	180 079
	5/16	18	1 1/8	1/2	PH	181 089
	5/16	18	1 1/4	1/2	ZI	180 081
	5/16	18	1 1/2	1/2	PH	9422 041
	5/16	18	1 5/8	1/2	PH	9422 727
	5/16	18	1 3/4	1/2	PH	181 094
	5/16	18	1 7/8	1/2	PH	181 092
	5/16	18	2 1/8	1/2	ZI	9421 360
	5/16	18	2 1/4	1/2	PH	181 097
	5/16	18	2 1/2	1/2	ZI	180 091
	5/16	18	2 5/8	1/2	PH	9419 042
	5/16	18	2 3/4	1/2	PH	181 076

	A	Thrds./Inch	B	C	Finish	Part No.
	5/16	18	3	1/2	PH	181 101
	5/16	18	3	1/2	ZI	180 113
	15/16	18	4	1/2		189 298
	3/8	16	1/2	9/16	ZI	180 116
	3/8	16	11/16	9/16	ZI	180 119
	3/8	16	7/8	9/16	ZI	180 121
	3/8	16	1	9/16	ZI	180 122
	3/8	16	1	9/16	PL	186 609
	3/8	16	1 1/8	9/16	PH	181 113
	3/8	16	1 1/4	9/16	ZI	180 124
	3/8	16	1 1/4	9/16	PH	9416 171
	3/8	16	1 1/2	9/16	ZI	180 126
	3/8	16	1 1/2	9/16	PH	9421 218
	3/8	16	1 5/8	9/16	PH	9417 050
	3/8	16	1 3/4	9/16	PL	186 632
	3/8	16	2	9/16	PH	181 126
	7/16	14	1 1/8	5/8	PL	181 138
	1/2	13	3	3/4	PH	181 173
	9/16	12	1 3/4	13/16	PH	181 188
	9/16	12	2	13/16	PL	179 910
	9/16	12	3 1/4	13/16	PH	181 195
	5/8	11	1 1/2	15/16	PH	271 876
	5/8	11	1 5/8	15/16	PH	271 877
	5/8	11	2	15/16	PH	271 880
	5/8	11	2 1/4	15/16	PH	271 881
	5/8	11	3 1/4	15/16	PH	271 885
	5/8	11	3 3/8	15/16	PH	9432 565
	5/8	11	3 3/4	15/16	PH	271 887
# 5 Steel	3/4	10	1 7/8	1 1/8	PH	271 927
# 8 Steel	3/4	10	1 7/8	1 1/8	PH	9424 010

BOLTS, Hexagon Lock

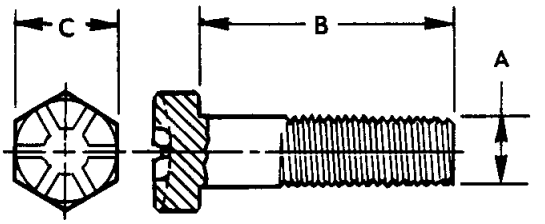

	A	Thrds./Inch	B	C	Finish	Part No.
	1/4	20	5/8	7/16	ZI	9408 948
	5/16	18	3/4	1/2	ZI	9408 961
	5/16	18	7/8	1/2	PH	220 901
	3/8	16	3/4	9/16	PL	192 278
	3/8	16	7/8	9/16	PL	192 279
	3/8	16	1 3/8	9/16	ZI	9412 112
	3/8	16	1 5/8	9/16	PL	192 349
	7/16	14	1	5/8	PL	192 195
	7/16	14	1 1/8	5/8	PL	190 385
	7/16	14	1 1/2	5/8	PL	190 386
	7/16	14	2	5/8	PL	9409 534
	7/16	20	7/8	5/8	PL	192 356
	7/16	20	1 1/8	5/8	PH	429 023
	7/16	20	1 1/4	5/8	PL	221 802
	7/16	20	1 1/2	5/8	PL	192 233
	7/16	20	2	5/8	PH	222 052
	7/16	20	2 1/4	5/8	PL	218 376
	7/16	20	2 1/2	5/8	PL	218 354
	1/2	13	1	3/4	PL	192 358
	1/2	20	7/8	3/4	PL	9411 259
	1/2	20	1	3/4	ZI	191 811
	1/2	20	1 1/8	3/4	PL	191 686
	1/2	20	1 5/8	3/4	PL	190 823
	1/2	20	2 1/4	3/4	PL	191 694
	5/8	18	2 1/8	7/8	PH	9422 604
	3/4	16	3	1	PL	222 574
	3/4	16	4 1/2	1	PL	221 854

Printed in U.S.A.
November, 1974

BOLTS, Round Head Square Neck

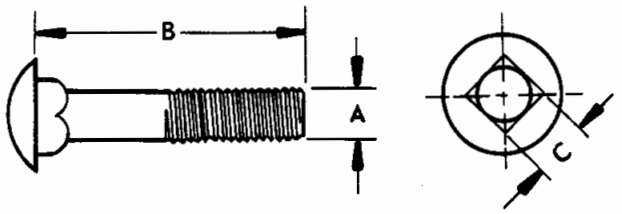

A	Thrds./Inch	B	C	Finish	Part No.
5/16	18	3/4	5/16	ZI	273 730
1/4	20	3/4	1/4	ST	152 602
1/4	20	1	1/4	ST	152 603
3/8	16	1 1/2	3/8	ZI	126 411
3/8	16	4	3/8	ZI	128 732
3/8	16	7 1/2	3/8	ZI	127 017
3/8	16	8 1/2	3/8	ZI	128 980
7/16	14	1 1/4	7/16	ZI	126 442
7/16	14	1 1/4	7/16	PH	152 613
7/16	14	2	7/16	ZI	126 460
7/16	14	4	7/16	ZI	126 769
1/2	13	1 1/4		PH	152 498
1/2	13	1 1/2	1/2	ZI	456 926
1/2	13	5 1/2	1/2	ZI	127 087

BUSHING, Pipe Reducing

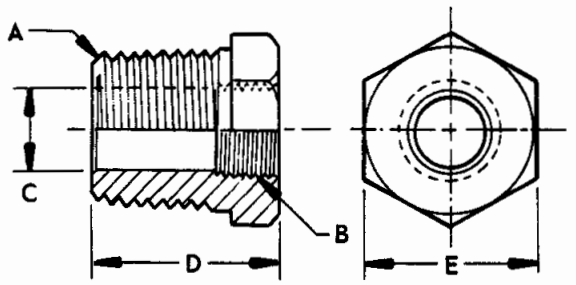

A	B	C	D	E	Part No.
1/4-18	1/8-27	11/32	3/4	9/16	444 024
3/8-18	1/8-27	11/32	3/4	11/16	444 027
3/8-18	1/4-18	3/4	3/4	3/4	444 028
1/2-14	1/8-27	11/32	1	7/8	444 030
1/4	1/8				119 930
3/8	1/8				119 923
1/2	1/4				144 051
1/2	3/8				120 322

CLAMP, Hose

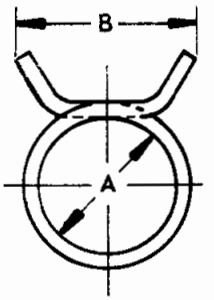

SA Size No.	A	B	Part No.
		Free Width	
6	.375	.88	272 774
7	.438	.94	272 775
8	.500	1.00	272 776
FP9	.562	1.06	274 461
11	.688	1.12	448 797
12	.750	1.19	271 197
13	.812	1.25	272 848

CLAMP, Hose

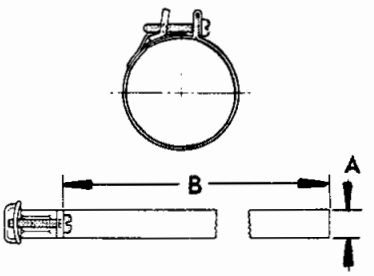

A	B	Part No.
1/2	9 1/2	870 469

CLEVIS, Adjustable Rod End

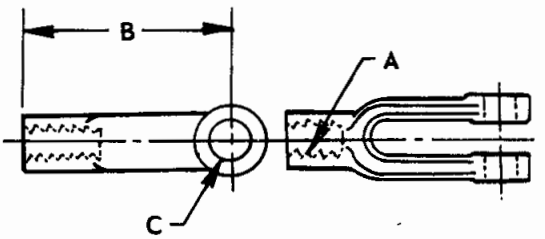

A	B	C	Part No.
7/16-20	2 7/8	7/16	117 825
1/2-20	3	1/2	104 039
10-32	1 3/8	3/16	116 533
3/8-24	2 1/2	3/8	116 536
1/2-20	3	1/2	116 538

Printed in U.S.A.
November, 1974

COCK, Drain

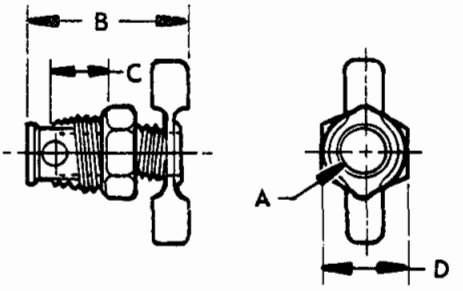

Pipe Thrd.	A	B	C	D	Part No.
1/4	1/4	1 1/16	7/16	9/16	103 647

COCK, Drain

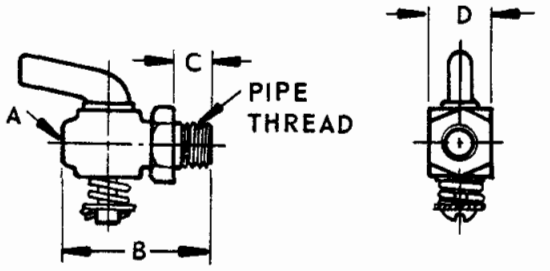

Pipe Thrd.	A	B	C	D	Part No.
1/4	1/4	1 9/16	7/16	5/8	106 794

CONNECTOR, Flared Tube

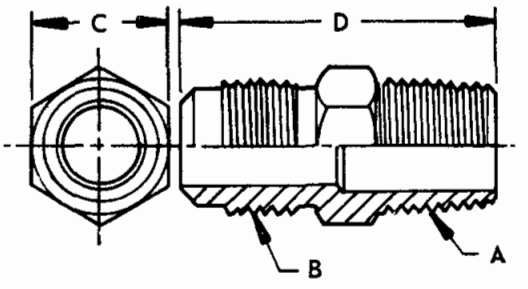

Tubing O.D.	A	B	C	D	Part No.
1/4	1/8-27	7/16-20	7/16	1	118 748
5/16	1/8-27	1/2-20	1/2	1 1/8	118 749
3/8	1/4-18	5/8-18	5/8	1 1/2	118 750
7/16	1/4-18	11/16-16	11/16	1 1/2	118 751
1/2	3/8-18	3/4-16	3/4	1 5/8	118 752
5/8	1/2-14	7/8-14	7/8	2	116 487

CONNECTOR, Flared Tube Internal Pipe Thread

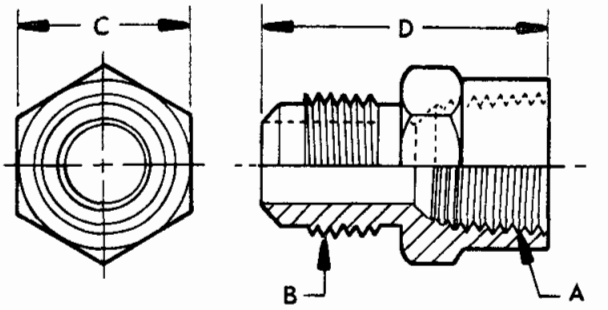

Tubing O.D.	A	B	C	D	Part No.
1/4	1/8-27	7/16-20	9/16	1	125 620
5/16	1/8-27	1/2-20	9/16	1 11/64	119 298

CONNECTORS, Ball Sleeve Tube

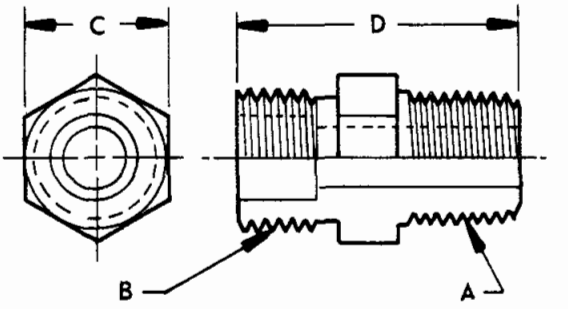

Tubing O.D.	A	B	C	D	Part No.
1/4	1/8	7/16-24	7/16	7/8	114 638
3/16	1/8	3/8-24	7/16	27/32	121 711
3/8	1/4	9/16-24	9/16	1 5/32	140 286
3/4	1/2	1-18	1	1 5/8	125 733

CONNECTORS, Inverted Flared Tube

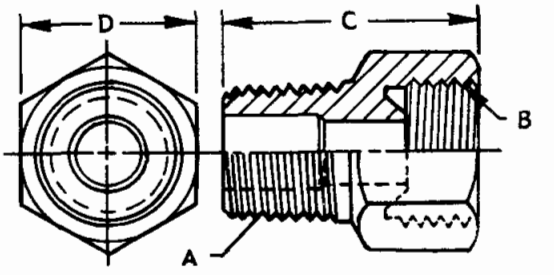

Tubing O.D.	A	B	C	D	Part No.
1/8	1/8-27	5/16-28	5/8	13/32	137 403
1/4	1/8-27	7/16-24	47/64	1/2	137 405
5/16	1/8-27	1/2-20	25/32	9/16	137 406
3/8	1/4-18	5/8-18	1 1/64	23/32	137 407

Printed in U.S.A.
November, 1974

CONNECTOR, Refrigeration Tube Fittings (Half Union)

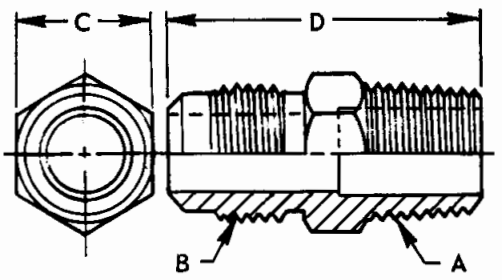

Tubing O.D.	A	B	C	D	Part No.
3/8	1/4	5/8-13	5/8	1 7/16	144 315

COUPLING, Automotive Pipe

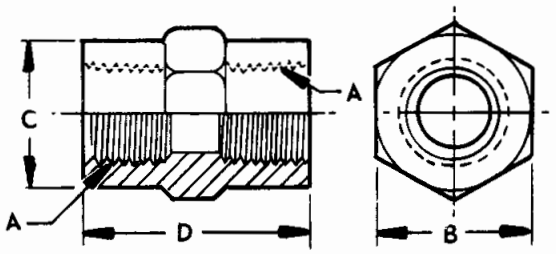

A	B	C	D	Part No.
1/4-18	3/4	3/4	1 1/8	444 096

ELBOW, Ball Sleeve Internal Pipe Thread 90°

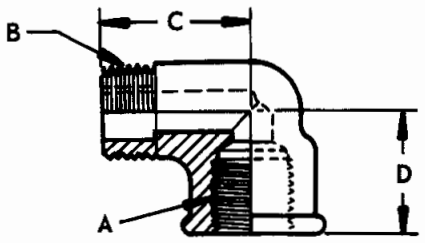

Tubing O.D.	A	B	C	D	Part No.
5/8	1/2	13/16-18	1 1/16	7/8	144 382

ELBOW, Ball Sleeve Tube 90°

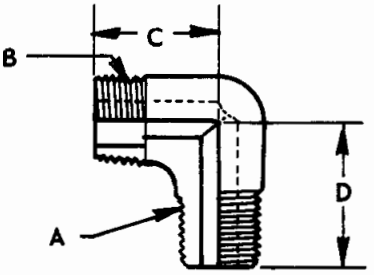

Tubing O.D.	A	B	C	D	Part No.
3/16	1/8	3/8-24	5/8	11/16	121 370
1/4	1/8	7/16-24	5/8	3/4	114 632
3/8	1/4	9/16-24	3/4	15/16	140 305

ELBOW, Flared Tube 90°

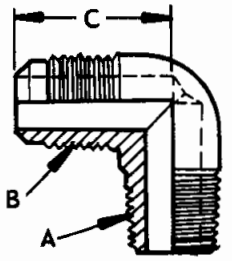

Tubing O.D.	A	B	C	Part No.
3/16	1/8-27	3/8-24	3/4	121 339
5/16	1/8-27	1/2-20	15/16	118 754

ELBOW, Inverted Flared Tube 45°

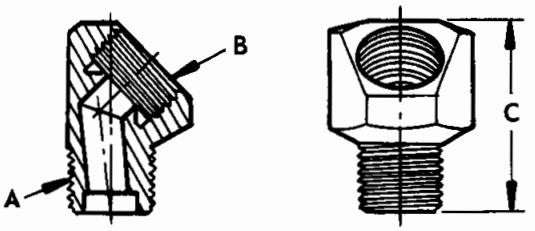

Tubing O.D.	A	B	C	Part No.
3/16	1/8-27	3/8-24	7/8	127 829
1/4	1/8-27	7/16-24	15/16	125 859
5/16	1/8-27	1/2-20	1	116 341
3/8	1/4-18	5/8-18	1 11/32	143 338
1/2	3/8-18	3/4-18	1 7/16	143 340
5/8	1/2-14	7/8-18	1 3/4	143 341

Printed in U.S.A.
November, 1974

ELBOW, Inverted Flared Tube 90°

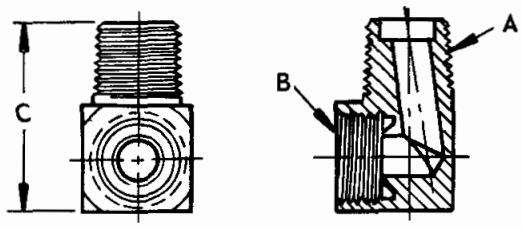

Tubing O.D.	A	B	C	Part No.
3/16	1/8-27	3/8-24	13/16	137 420
1/4	1/8-27	7/16-24	7/8	137 421
5/16	1/8-27	1/2-20	15/16	137 422
5/16	1/4-18	1/2-20	1 1/8	143 343
3/8	1/4-18	5/8-18	1 1/4	137 423
7/16	1/4-18	1/4-18	1 5/16	137 424
1/2	3/8-18	3/8-18	1 13/32	137 425

ELBOW, Automotive Pipe Street 90°

(Extruded Type)

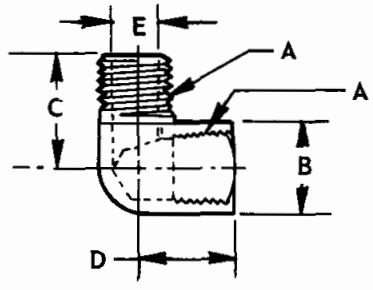

A	B	C	D	E	Part No.
1/4-18	11/16	29/32	23/32	5/16	444 040
3/8-18	13/16	31/32	25/32	7/16	444 042

ELBOW, Automotive Pipe Street 45° (Extruded Type)

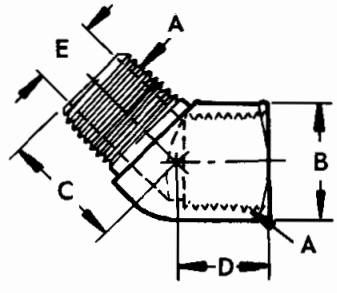

A	B	C	D	E	Part No.
1/2-14	1	1	3/4	9/16	444 058

FASTENER, Curtain Eyelet

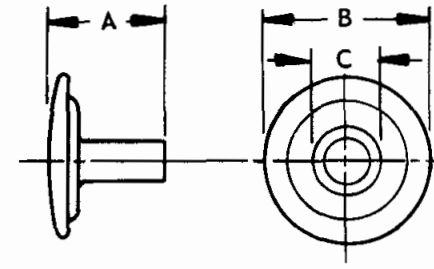

A	B	C	Part No.
13/32	9/16	5/32	141 991

FASTENER, Curtain Socket

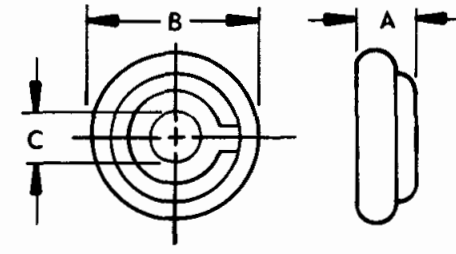

A	B	C	Part No.
5/32	9/16	11/64	141 991

FASTENER, Curtain Screw

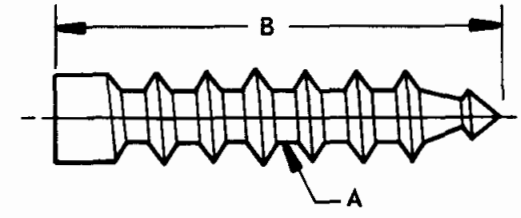

A	B	Part No.
#6	5/8	119 490

FITTING, Lubrication, Elbow 1/8 Pipe Special Thread Forming

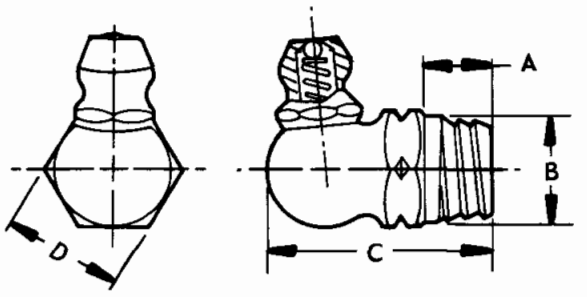

Angle	A	B	C	D	Part No.
65°	13/64	13/32	25/32	7/16	9411 024
90°	13/64	13/32	49/64	7/16	9411 025

FITTING, Lubrication, Straight Drive Base

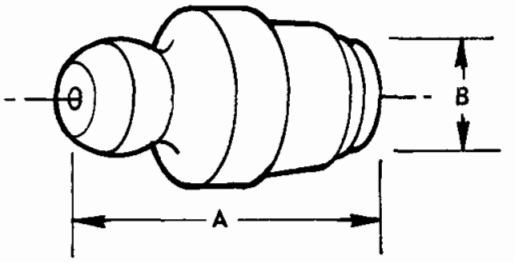

A	B	Part No.
5/8	5/16	119 516

FITTING, Straight 1/8 Pipe Special Thread Forming

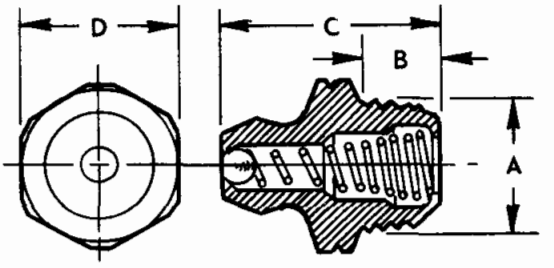

A	B	C	D	Part No.
13/32	1/4	7/8	7/16	9411 022

FITTINGS, Lubrication, Straight

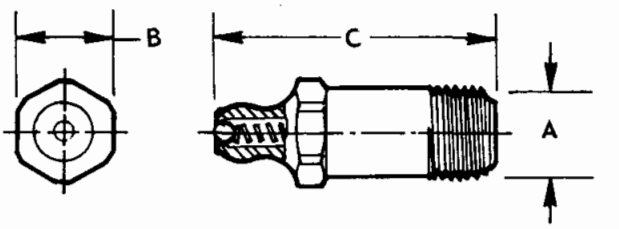

A	Thrds./Inch	B	C	Part No.
1/8	27	7/16	21/32	9411 010
1/4	28	5/16	1/2	9411 027
1/4	28	5/16	11/16	9411 028
1/4	20		11/16	111 595
1/4	20		1 1/8	128 274

FITTING, Lubrication, Elbow

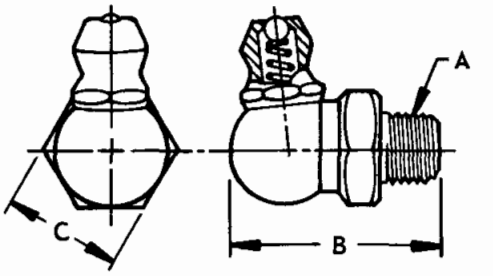

Angle	A	Thrds./Inch	B	C	Part No.
45°	1/4	28	13/16	3/8	9411 030
45°	1/4	28	7/8	3/8	110 309
67 1/2°	1/8		1 3/16		109 365
90°	1/8	27	27/32	7/16	9411 019
90°	1/8	27	1 27/32	7/16	9411 020
90°	1/8		1 13/16		109 357

FITTING, Lubrication, Pressure Relief

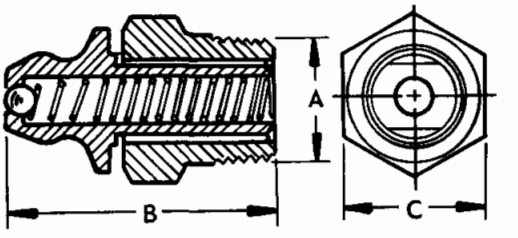

Relief Pressure	A	Thrds./Inch	B	C	Part No.
15 PSI	1/8	27	13/16	7/16	273 178

GASKET, Annular

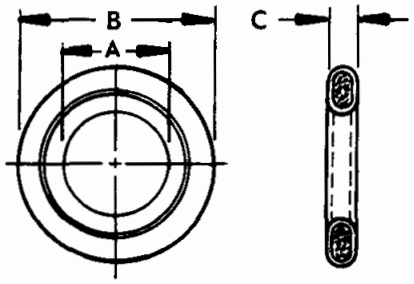

A	B	C	Part No.
3/16	3/8	5/64	105 450
5/16	7/16	5/64	114 622
9/16	25/32		965 297
7/8	1 1/8	3/32	105 456
1 1/4	1 1/2	3/32	142 756

GASKET, Spark Plug

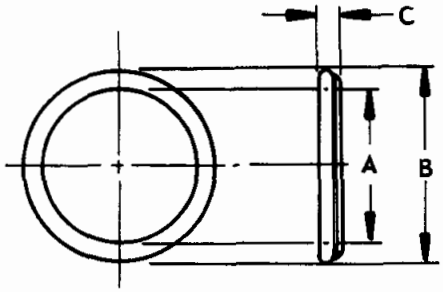

A	B	C	Part No.
45/64	59/64	3/32	150 191

GROMMETS

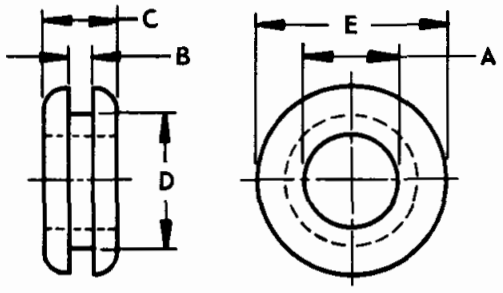

A	B	C	D	E	Part No.
17/64	1/16	5/16	15/32	5/8	117 957
17/64	3/16	7/16	15/32	5/8	140 711
25/64	1/16	7/16	21/32	27/32	120 302
41/64	1/16	5/16	31/32	1 3/16	120 013
5/16	1/16	1/2	1	1 3/8	113 780
3/8	1/16	3/8	3/4	1	9426 731
1/2	1/16	1/4	15/16	1 5/8	144 228
1	1/16	7/16	1 3/8	1 3/4	9421 560

KEY, Woodruff

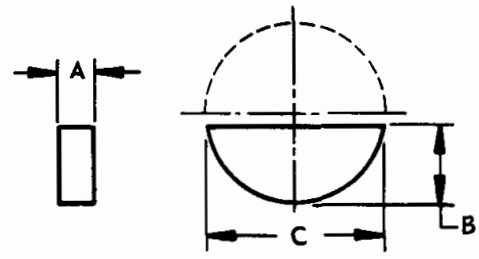

A	B	C	Mfgrs. No.	Heat Treat	Part No.
3/32	9/64	21/64	207	H.T.	218 218

KEY, Woodruff

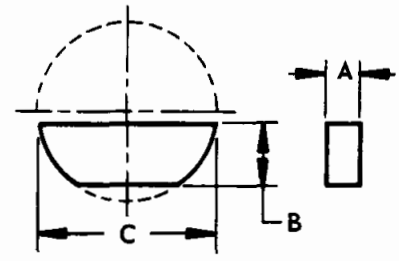

A	B	C	Mfgrs. No.	Heat Treat	Part No.
1/8	3/16	35/64	3		106 749
1/8	3/16	35/64	3	H.T.	124 543
3/32	15/64	11/16	4	H.T.	124 544
1/8	15/64	11/16	5	H.T.	124 545
5/32	19/64	13/16	8		103 906
3/16	19/64	13/16	9		106 751
1/4	19/64	13/16	91		127 559
5/32	23/64	15/16	10	H.T.	120 051
3/16	23/64	15/16	11	H.T.	120 502
7/32	23/64	15/16	12	H.T.	178 879
1/4	23/64	15/16	A	H.T.	124 551
5/16	17/32	1 21/64	D		113 879
3/8	17/32	1 21/64	E	H.T.	117 992

KEY, Woodruff

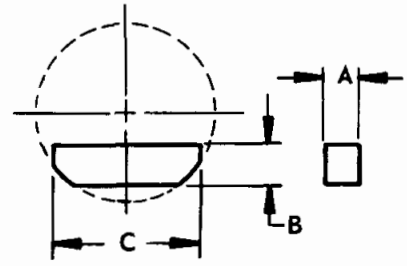

A	B	C	Mfrgs. No.	Heat Treat	Part No.
3/16	25/64	1 3/8	126	H.T.	152 191

Printed in U.S.A.
November, 1974

NIPPLE, Pipe

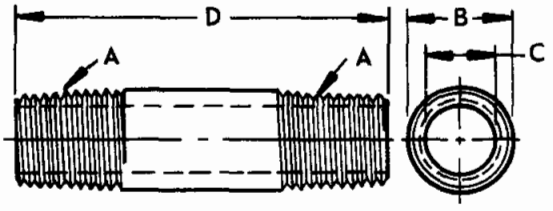

A	B	C	D	Part No.
1/4	35/64	3/8	1 5/8	144 596

NIPPLE, Pipe

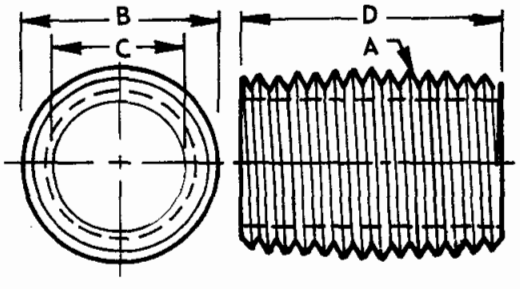

A	B	C	D	Part No.
1/2	27/32	5/8	2	140 537

NIPPLES, Automotive Pipe

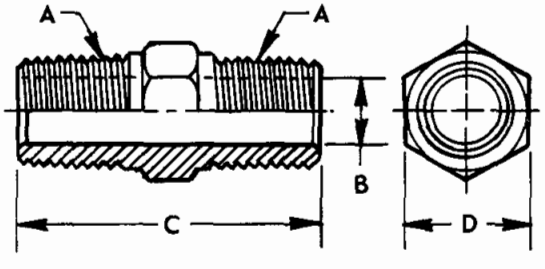

A	Thrds./Inch	B	C	D	Part No.
1/8	27	7/32	31/32	7/16	443 976
1/4	18	5/16	1 3/8	9/16	443 978
3/8	18	7/16	1 13/32	11/16	443 980
1/2	14	9/16	1 13/16	7/8	443 982

NUTS, Ball Sleeve Tube

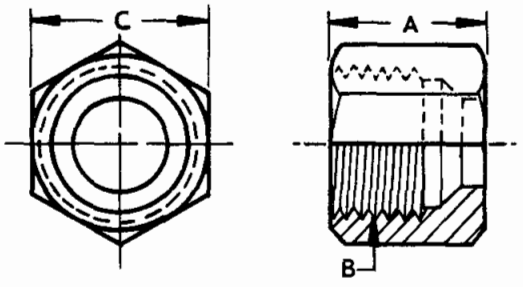

Tubing O.D.	A	B	C	Part No.
3/16	13/32	3/8-24	7/16	120 487
5/16	7/16	1/2-24	9/16	114 630
3/8	15/32	9/16-24	5/8	141 520
3/4	11/16	1-28	1 3/16	144 409

NUTS, Clinch

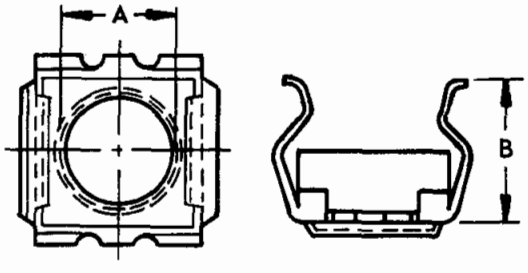

A	Thrds./Inch	B	Material	Finish	Part No.
10	24	11/32	ST	PH	271 006
10	32	11/32	ST	PH	271 011
1/4	20	13/32	ST	PL	271 026
5/16	18	27/64	ST	PL	271 036
5/16	18	1/2	ST	PH	271 041

NUTS, Inverted Flared Tube

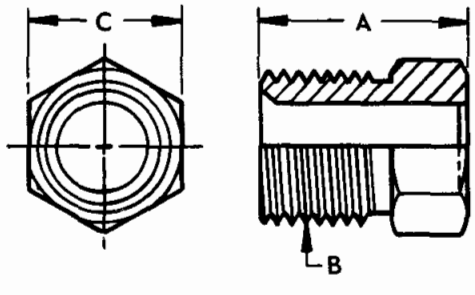

Tubing O.D.	A	B	C	Part No.
3/16	9/16	3/8-24	3/8	137 396
1/4	9/16	7/16-24	7/16	137 397
5/16	5/8	1/2-20	1/2	137 398
3/8	21/32	5/8-18	5/8	137 399
1/2	3/4	3/4-18	3/4	137 401
5/8	13/16	7/8-18	7/8	137 402
3/4	7/8	1 1/16-16	1 1/16	190 236

Printed in U.S.A.
November, 1974

NUT, Flared Tube

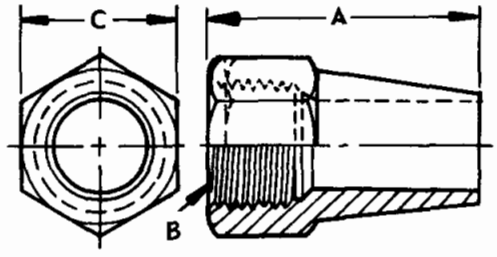

Tubing O.D.	A	B	C	Part No.
5/16	7/8	1/2-20	5/8	118 538

Nuts, Hexagon

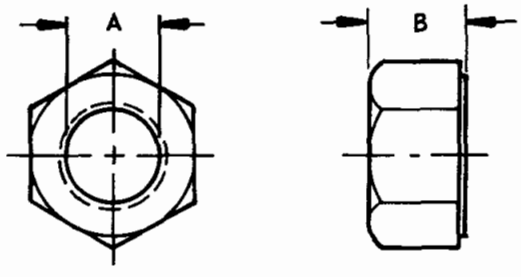

A	Thrds./Inch	B	Material	Finish	Part No.
1/4	20	7/32	ST	ZI	120 375
1/4	28	7/32	ST	ZI	120 367
5/16	18	17/64	ST	CA	120 376
5/16	24	17/64	ST	ZI	120 368
3/8	16	21/64	ST	PH	118 615
3/8	24	21/64	BR	PL	114 547
3/8	24	21/64	ST	ZI	120 369
7/16	14	3/8	ST	PH	271 502
7/16	20	3/8	BR	PL	271 514
7/16	20	3/8	ST	ZI	271 506
1/2	13	7/16	ST	CA	120 378
1/2	20	7/16	ST	ZI	120 371
9/16	12	31/64			124 583
9/16	18	31/64	ST	CA	124 634
5/8	11	35/64	ST	ZI	124 589
5/8	18	35/64	ST	ZI	121 358
3/4	10	41/64	ST	PH	427 362
3/4	16	41/64	ST	ZI	426 099
3/4	16	13/32	ST	ZI	219 758
7/8	14	3/4	ST	CA	426 767
1	8	55/64	ST	PH	427 366

NUTS, Hexagon Jam

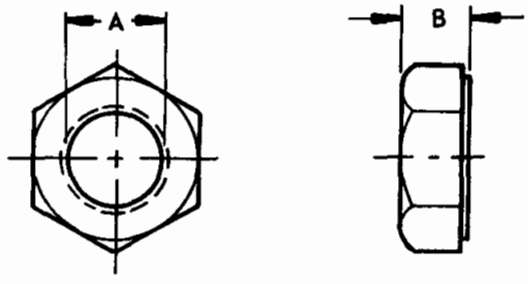

A	Thrds./Inch	B	Material	Finish	Part No.
5/16	24	3/16	ST	PH	118 624
3/8	24	7/32	ST	ZI	124 925
1/2	13	5/16	ST	PH	118 647
1/2	20	5/16	ST	ZI	124 934
9/16	18	5/16	ST	ZI	124 939
3/4	16	27/64	ST	ZI	219 758

NUT, Hexagon Lock (Thin)

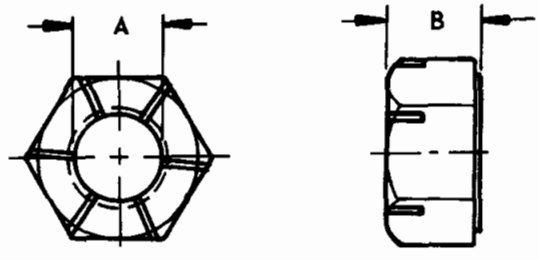

A	Thrds./Inch	B	Material	Finish	Part No.
5/8	18	35/64	ST	PL	145 013

NUT, Hexagon Lock

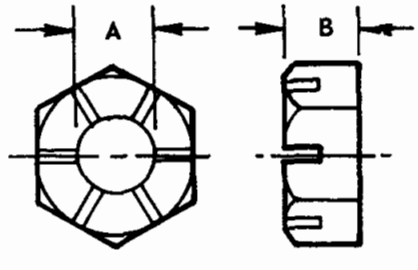

A	Thrds./Inch	B	Material	Finish	Part No.
7/16	14	29/64	ST	ZI	126 012

Printed in U.S.A.
November, 1974

NUTS, Hexagon Lock

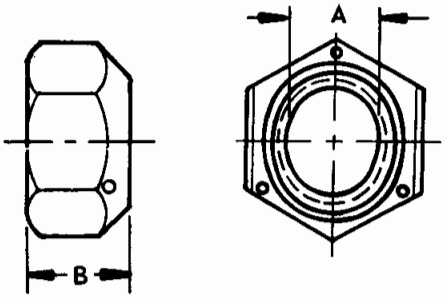

A	Thrds./Inch	B	Material	Finish	Part No.
5/16	18	19/64	ST	PH	152 362
3/8	16	3/8	ST	PH	152 364
3/8	16	21/64	ST	PH	152 344
7/16	20	3/8	ST	PH	152 347
7/16	14	3/8	ST	PH	152 346
1/2	20	7/16	ST	PH	152 349
1/2	20	33/64	ST	PH	152 369
9/16	18	15/64	ST	PH	152 351
5/8	11	5/8	ST	PH	152 372
5/8	18	35/64	ST	PH	152 353
3/4	10	5/8	ST	PH	152 354
3/4	10	3/4	ST	PH	152 374

NUTS, Hexagon Lock

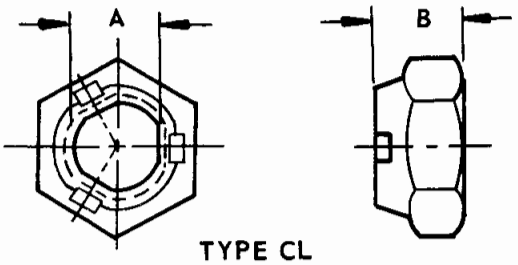

TYPE CL

A	Thrds./Inch	B	Material	Finish	Part No.
5/16	18	9/32	ST	PH	9411 368
3/8	16	21/64	ST	CA	9416 107
3/8	16	21/64	ST	PH	9417 668
7/16	20		ST	PH	9422 661
1/2	20		ST	PH	9421 980
3/4	16		ST	PH	9424 882
3/4	10	5/8	ST	CA	9416 467

NUTS, Hexagon Flange Lock

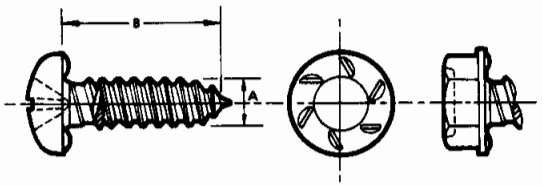

A	Thrds./Inch	B	C	D	Part No.
1/4	20	7/16	9/16	5/16	152 470
5/16	18	9/16	11/16	23/64	152 472
7/16	14	11/16	15/16	1/2	152 476
1/2	13	3/4	15/16	9/16	152 478

NUTS, Washer Insert Hexagon Lock

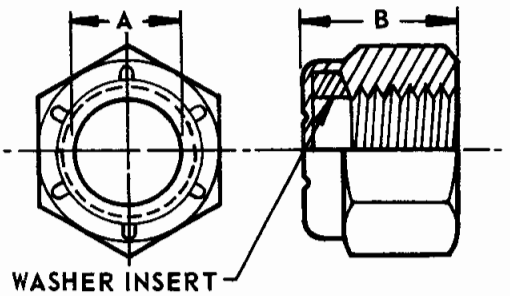

A	Thrds./Inch	B	Material	Finish	Part No.
6	32	11/64	ST	ZI	427 254
10	24	15/64	ST	ZI	190 254
1/4	20	5/16	ST	PH	189 866
7/16	20	29/64	ST	PH	190 551

NUT, Hexagon & External Tooth Lock Washer Assy.

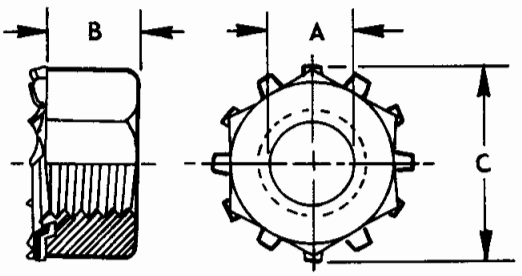

A	Thrds./Inch	B	C	Material	Finish	Part No.
12	24	5/32	1/2	ST	PH	273 173

NUT, Hexagon Thick Slotted

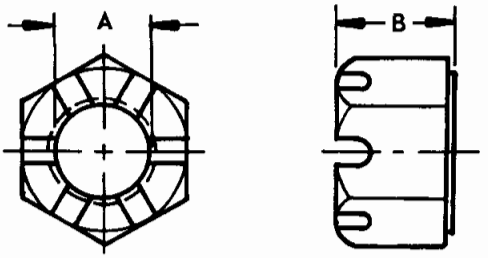

A	Thrds./Inch	B	Material	Finish	Part No.
7/16	20	29/64	ST	PH	272 314

NUTS, Hexagon Slotted

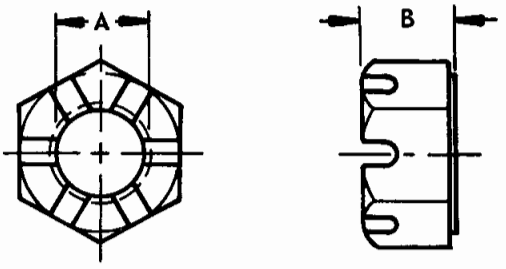

A	Thrds./Inch	B	Material	Finish	Part No.
3/8	24	21/64	ST	PH	125 237
7/16	20	3/8			128 014

Printed in U.S.A.
November, 1974

NUTS, Hexagon Tri Slotted

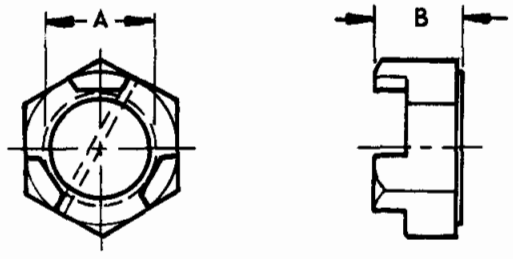

A	Thrds./Inch	B	Material	Finish	Part No.
7/16	20	29/64	ST	PH	273 705
1/2	20	9/16	ST	PH	9425 132
9/16	18	31/64	ST	PH	9424 798
9/16	18	31/64	ST	ZI	128 178
5/8	18	31/64	ST	ZI	128 027
5/8	18	23/32	ST	PH	273 912
3/4	16	13/16	ST	PH	9425 133
3/4	16	13/16			128 180

NUTS, Hexagon Machine Screw

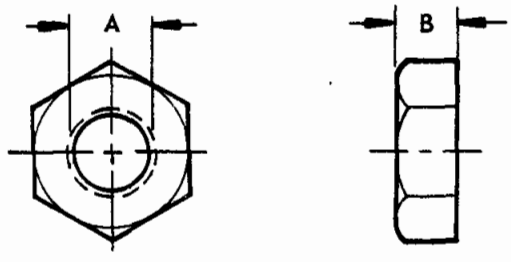

A	Thrds./Inch	B	Material	Finish	Part No.
8	32	1/8	ST	CA	120 622
10	24	1/8	ST	PH	116 000
10	32	1/8	ST	CA	120 614
12	24	1/8	ST	CA	121 743

NUTS, Push On Spring

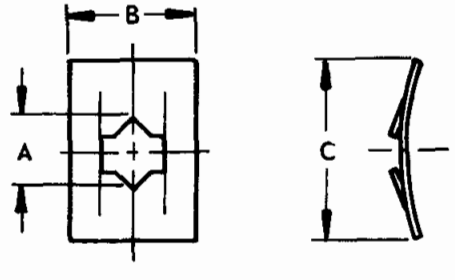

A	Stud Dia.	B	C	Material	Finish	Part No.
3/32	15/64	29/64	ST	PH	445 153
1/8	5/16	37/64	ST	PH	445 160
3/16	3/8	5/8	ST	PH	445 170

NUT, 'J' Shape Spring

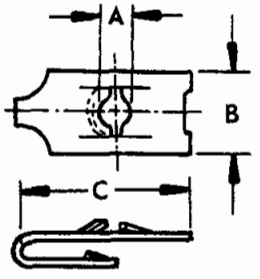

A	Screw Size	B	C	Material	Finish	Part No.
	8-18	27/64	21/32	ST	PH	445 346

NUTS, Stamped Self Threading

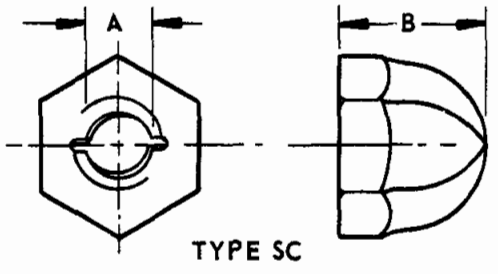

TYPE SC

A	Stud Dia.	B	Material	Finish	Part No.
	1/8	21/64	ST	ZI	9418 877
	3/16	3/8	ST	CH	9422 467

NUTS, Stamped

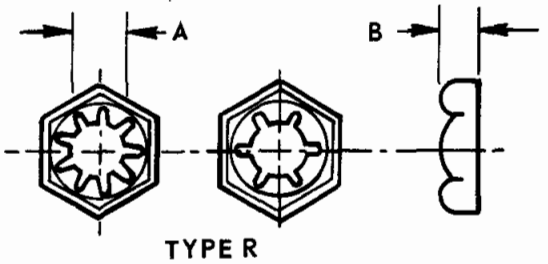

TYPE R

No. of Notches	A	Thrds./Inch	B	Material	Finish	Part No.
9	3/8	24	5/32	ST	CA	107 823
6	1/2	13	3/16	ST	ZI	107 817
9	1/2	20	11/64	ST	ZI	107 825
9	3/4	16	7/32	ST	PH	145 498
9	7/8	14		ST	CA	145 507
9	1	14		ST	CA	145 509

Printed in U.S.A.
November, 1974

NUTS, Stamped

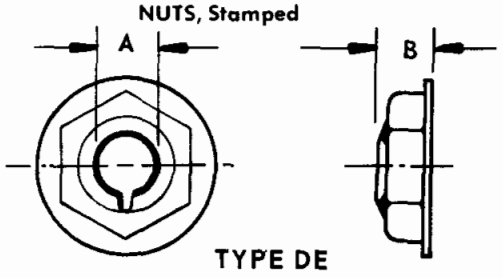

TYPE DE

A	Thrds./Inch	B	Material	Finish	Part No.
10	24	15/32	ST	CA	446 059
7/16	20	3/16	ST	PH	9416 992

NUTS, Stamped

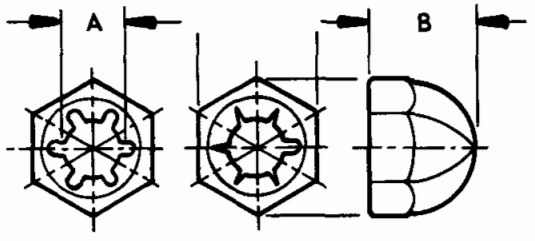

TYPE AC

No. of Notches	A	Thrds./Inch	B	Material	Finish	Part No.
1	8	32	19/64	ST	CH	446 617
1	10	24	21/64	ST	CH	446 618
6	1/4	20	3/8	ST	CH	446 620

NUTS, Stamped Self Threading

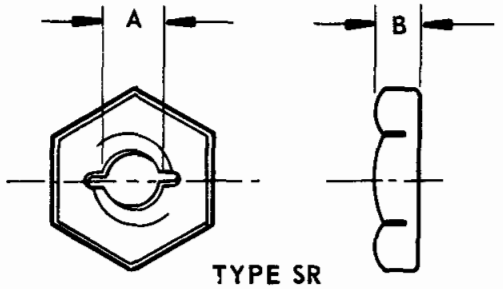

TYPE SR

A	Stud Dia.	B	Material	Finish	Part No.
	3/16	7/64	ST	ZI	9414 977
	3/16	1/8	ST	ZI	9420 865
	1/4	9/64	ST	ZI	9428 739

NUTS, Stamped Formed Thread Faceted Flange

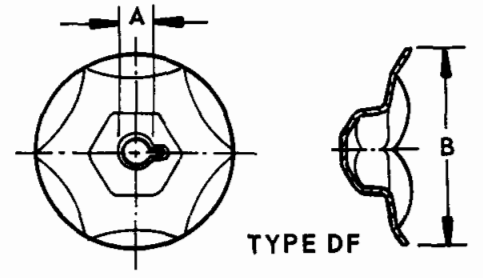

TYPE DF

A	Thrds./Inch	B	Material	Finish	Part No.
10	24	9/16	ST	ZI	9420 218
10	24	5/8	ST	ZI	9420 219

NUTS, Stamped Heavy Duty Self Threading Faceted Flange with Sealer

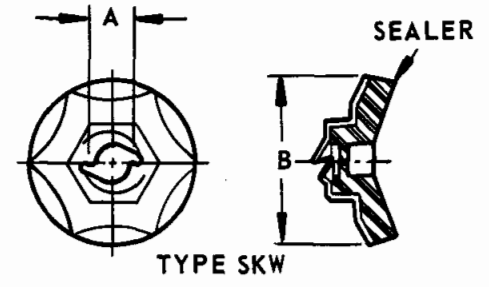

TYPE SKW

A	Stud Dia.	B	Material	Finish	Part No.
	1/8	7/16	ST	ZI	9420 263
	1/8	17/32	ST	ZI	9420 291
	3/16	5/8	ST	ZI	9420 294

NUTS, Stamped Heavy Duty Self Threading Faceted Flange

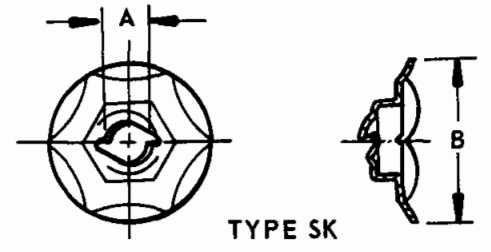

TYPE SK

A	Stud Dia.	B	Material	Finish	Part No.
	1/8	17/32	ST	ZI	9420 276
	3/16	9/16	ST	PH	9420 621
	3/16	3/4	ST	PH	9420 224

Printed in U.S.A.
November, 1974

NUTS, Stamped Regular Duty Self Threading Faceted Flange with Sealer

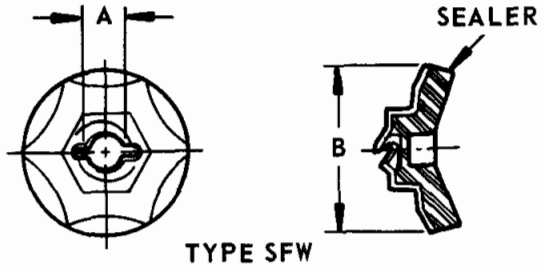

A Stud Dia.	B	Material	Finish	Part No.
1/4	11/16	ST	ZI	9420 262

NUTS, Stamped Regular Duty Self Threading Faceted Flange

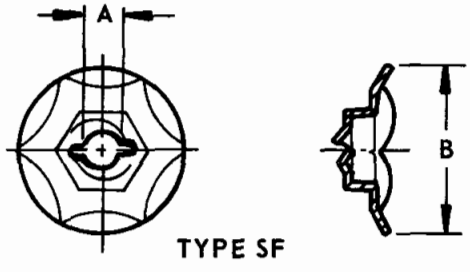

A Stud Dia.	B	Material	Finish	Part No.
1/4	19/32	ST	ZI	9420 252
1/4	11/16	ST	ZI	9420 253

NUTS, Stamped Formed Thread Faceted Flange with Sealer

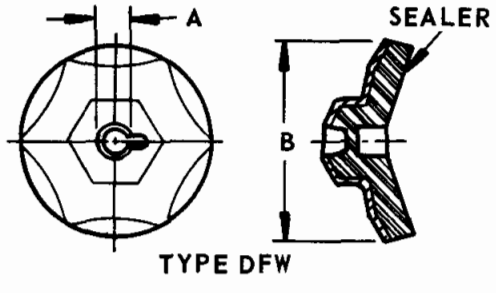

A	Thrds./Inch	B	Material	Finish	Part No.
10	24	9/16	ST	ZI	9420 866
10	24	5/8	ST	ZI	9420 867

NUT, Multi Thread 'U'

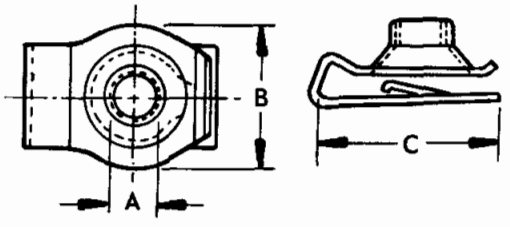

A	Thrds./Inch	B	C	Material	Part No.
10	24	11/16	7/8	ST	152 448
10	24	11/16	7/8	ST	*152 453
1/4	20	3/4	59/64	ST	152 449
1/4	20	3/4	15/16	ST	*152 454

* Locking Type

NUT, Wing

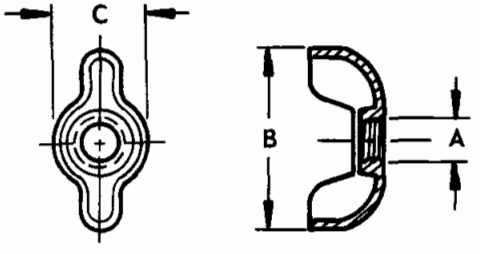

A	Thrds./Inch	B	C	Material	Finish	Part No.
1/4	20	1	1/2	ST	CH	219 281
3/8	16	1 3/8	11/16	ST	ZI	148 314

PINS, Grooved Straight

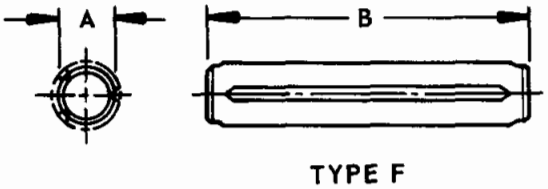

A	B	Part No.
5/64	3/8	9409 632
5/64	1/2	9409 633
3/32	1/2	9409 638
3/32	5/8	9409 639
7/64	5/8	9409 644
1/4	1	9409 682

PINS, Grooved Straight

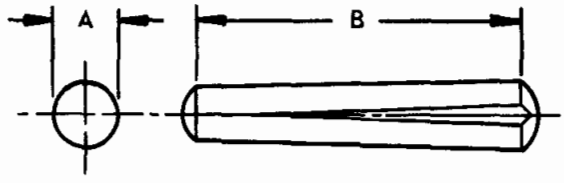

TYPE A

A	B	Part No.
5/32	5/8	142 492
3/16	1 3/8	271 195
1/4	1	142 520
1/4	1 1/8	144 563

PINS, Grooved Straight

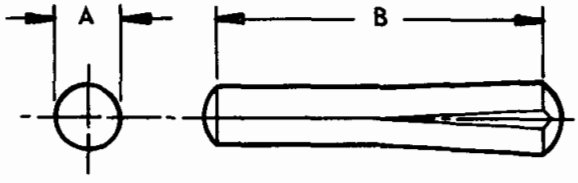

TYPE B

A	B	Part No.
3/64	5/8	274 629
3/32	1/4	9409 636
1/8	5/8	442 917

PINS, Chamfered Straight

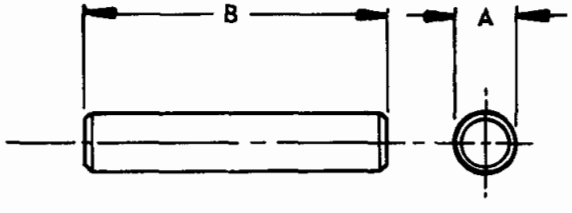

A	B	Material	Finish	Part No.
3/16	1 1/8	ST	PL	103 725
1/4	15/16	ST	PL	117 876
1/4	1 1/8	ST	PL	103 740
1/4	1 1/2	ST	PL	103 743
5/16	1 3/8	ST	PL	103 757
5/16	1 1/2	ST	PL	103 758

PINS, Clevis

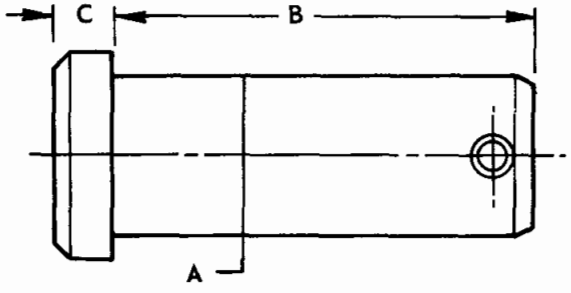

A	B	C	Part No.
3/16	1 3/16	1/16	9421 927
1/4	49/64	3/32	138 038
1/4	1 13/32	3/32	9421 391
5/16	15/16	3/32	121 741
5/16	1 3/4	3/32	9427 935
3/8	1 1/16	1/4	138 084
3/8	1 21/32	1/4	9417 430
3/8	1 29/32	1/4	9421 466
3/8	11/16	1/4	9428 579
5/8	1 5/8	13/64	138 081
1/2	7/8	5/32	9421 883

PINS, Cotter

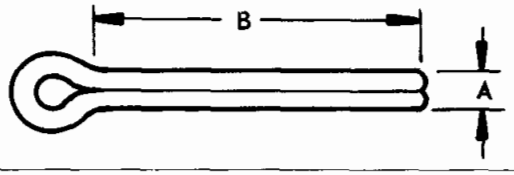

A	B	Material	Part No.
3/32	3/4	ST	103 373
3/32	1 1/8	ST	108 636
1/16	1/2	ST	112 726

PINS, Dowel

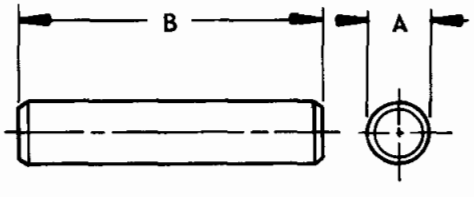

Material	Finish	A	B	Part No.
ST	PL	5/32	5/8	141 132
ST	PL	5/32	1 1/4	141 140
ST	PL	3/16	1 1/8	141 160
ST	PL	1/4	5/8	141 195
ST	PL	1/4	1 7/8	141 208
ST	PL	1/4	2 1/4	141 210
ST	PL	5/16	1/2	141 215
ST	PL	5/16	5/8	141 217
ST	PL	5/16	7/8	141 221
ST	PL	5/16	1 3/4	141 229
ST	PL	5/16	2 1/4	141 232
ST	PL	3/8	1	141 244
ST	PL	3/8	1 1/8	141 245
ST	PL	7/16	1 3/4	141 270
ST	PL	5/8	3/4	187 464
ST	PL	5/8	1	187 149

Printed in U.S.A.
November, 1974

PINS, Slotted Spring

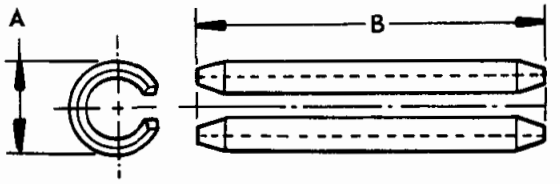

A	B	Finish	Part No.
1/16	5/16	CA or ZI	9423 246
1/16	1/2	PL	455 478
3/32	3/8	CA or ZI	9417 599
3/32	1/2	PL	151 972
3/32	9/16	PL	9414 521
3/32	3/4	CA or ZI	273 753
3/32	11/16	PL	9423 664
1/8	3/8	PL	455 919
1/8	5/8	CA or ZI	273 752
1/8	13/16	CA or ZI	9423 840
1/8	7/8	CA or ZI	9411 579
1/8	1 3/8	PL	273 703
5/32	5/8	CA or ZI	454 516
5/32	11/16	CA or ZI	456 934
5/32	1	PL	271 448
3/16	1/2	PL	455 160
3/16	5/8	CA or ZI	9414 469
3/16	7/8	PL	456 098
3/16	13/16	PL	455 106
3/16	7/8	CA or ZI	152 233
3/16	1	CA or ZI	9421 202
3/16	1 1/8	PL	273 503
3/16	1 1/4	CA or ZI	454 668
3/16	1 3/8	PL	152 229
3/16	1 5/8	CA or ZI	9420 947
3/16	1 3/4	PL	457 009
3/16	1 3/4	CA or ZI	9431 521
3/16	2 1/8	CA or ZI	9414 527
7/32	1	PL	455 598
1/4	5/8	CA or ZI	273 709
1/4	7/8	CA or ZI	9432 156
1/4	1	CA or ZI	9412 281
1/4	1 1/4	CA or ZI	9419 981
1/4	1 3/4	PL	455 313
5/16	3/4	CA or ZI	9418 666
5/16	1 1/8	CA or ZI	9422 159
5/16	1 3/8	CA or ZI	9423 350
3/8	11/16	PL	9419 570
3/8	1 3/8	PL	453 673

PINS, Coiled Spring

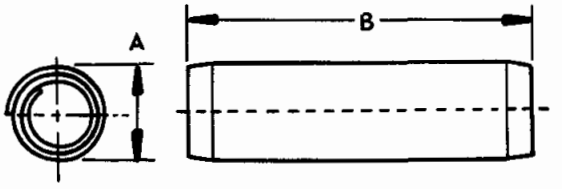

A	B	Finish	Part No.
1/16	1/2	PL	9423 287
5/64	3/8	CA or ZI	9431 636
5/64	9/16	CA or ZI	9431 637
3/32	5/8	PL	9429 632
1/8	13/16	PL	9414 181
1/8	15/16	PL	9417 507
5/32	3/4	PL	9419 251
3/16	13/16	PL	456 098
3/16	1	CA or ZI	9416 722
3/16	1 5/8	CA or ZI	9429 032

PIN, Square End Straight

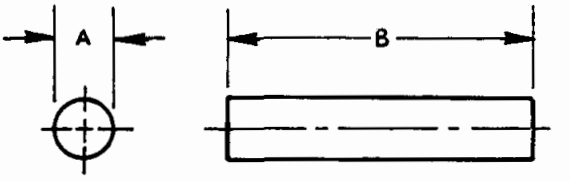

A	B	Material	Finish	Part No.
1/8	2	ST	PL	112 020

PIN, Taper

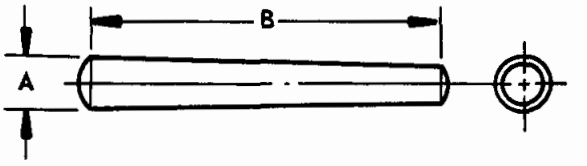

A	B	Material	Finish	Part No.
5/32	3/4	ST	PL	103 563

PLUGS, Button

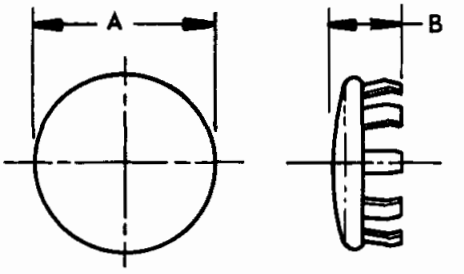

A	B	Hole Dia.	Material	Finish	Part No.
11/32	7/32	7/32	ST	BE	142 057
7/16	1/4	5/16	ST	PH	432 417
1/2	7/32	3/8	ST	CH	432 529
1/2	7/32	3/8	ST	PH	432 528
1/2	1/4	13/32	ST	CH	142 070
21/32	17/64	33/64	ST	CH	142 074
51/64	9/32	5/8	ST	BE	142 081
15/16	19/64	3/4	ST	BE	142 026
15/16	25/64	25/32	ST	CH	454 166
1 1/16	9/32	13/16	ST	PL	189 970
1 1/16	19/64	7/8	ST	BE	142 085
1	11/32	29/32	ST	CH	178 023
1 5/32	19/64	1	ST	BE	142 093
1 7/16	5/16	1 1/4	ST	PL	142 095
1 9/16	13/32	1 3/8	ST	PH	432 497
1 41/64	27/64	1 1/2	ST	ZI or CA	432 449
2 5/16	17/32	2	ST	PH	432 576

PLUGS, Expansion

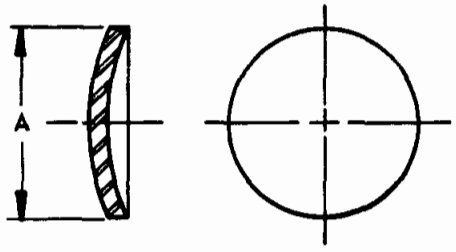

A	Material	Part No.
9/16	ST	117 918
5/8	ST	103 891
3/4	AL	142 656
3/4	ST	103 892
13/16	ST	105 602
7/8	ST	103 893
7/8	BR	121 755
1	BR	137 183
1 1/16	ST	117 920
1 1/16	BR	121 756
1 3/16	ST	117 921
1 3/16	BR	140 690
1 1/4	BR	179 380
1 3/8	BR	178 878
1 3/8	ST	117 923
1 1/2	ST	103 896
1 5/8	ST	117 924
1 5/8	BR	140 802
1 3/4	ST	103 897
1 7/8	ST	114 564
2	BR	140 089

PLUGS, Automotive Hexagon Head Pipe

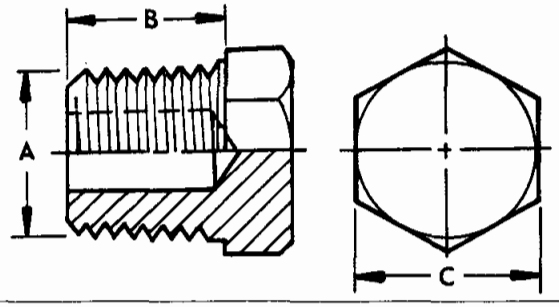

A	Thrds./Inch	B	C	Material	Part No.
1/8	27	3/8	7/16	BR	444 614
1/4	18	9/16	9/16	BR	127 951
3/8	18	9/16	11/16	ST	444 625

PLUG, Automotive Hexagon Socket Pipe

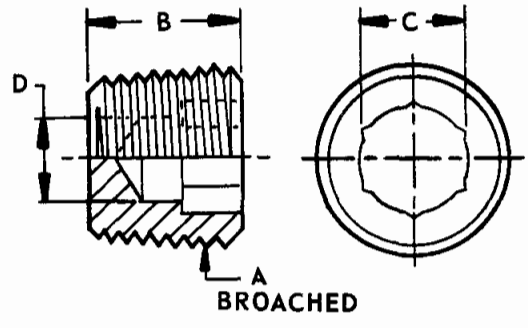

BROACHED

A	B	C	D	Part No.
1/8-27	5/16	3/16	3/16	444 688

PLUG, Slotted Headless Pipe

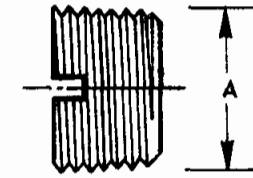

A	Thrds./Inch	Part No.
1/8	27	118 831

PLUGS, Square Head Pipe

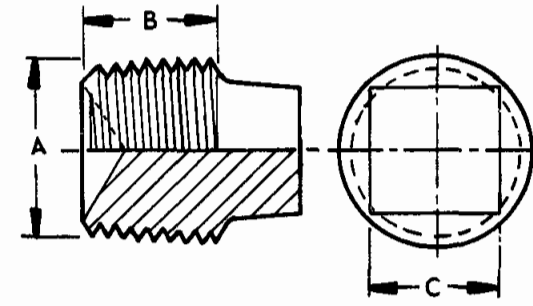

A	Thrds./Inch	B	C	Part No.
1/4	18	1/2	3/8	143 933
3/4	14	11/16	5/8	103 869

RIVET, Solid Button Head

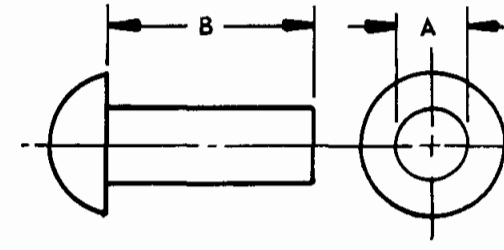

A	B	Material	Part No.
3/16	5/8	ST	108 682
3/16	5/8	ST	104 068

Printed in U.S.A.
November, 1974

RIVET, Solid Counter Sunk Head

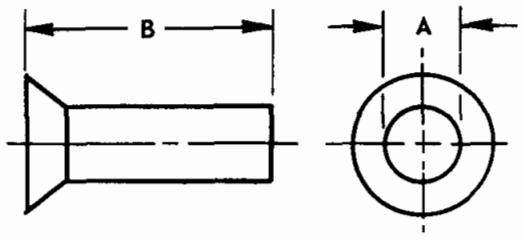

A	B	Material	Part No.
1/8	1 1/2	ST	104 145

RIVETS, Solid Flat Head

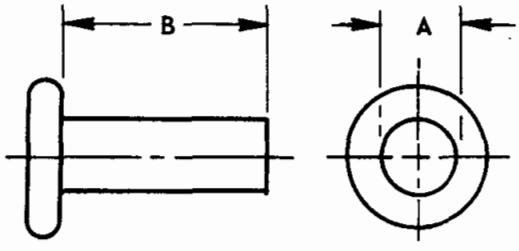

A	B	Material	Part No.
1/8	11/16	ST	271 130
3/16	1/2	ST	104 235

RIVETS, Tubular Counter Sunk Head

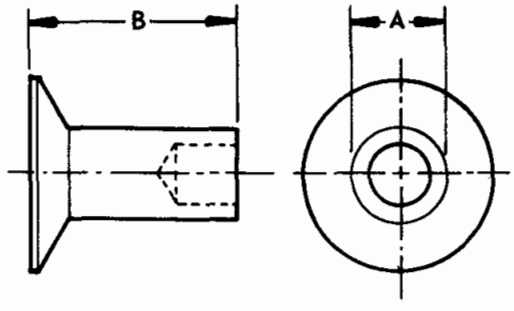

A	B	Material	Part No.
3/16	13/32	ST	114 518
3/16	7/16	ST	192 412

RIVET, Split Oval Head

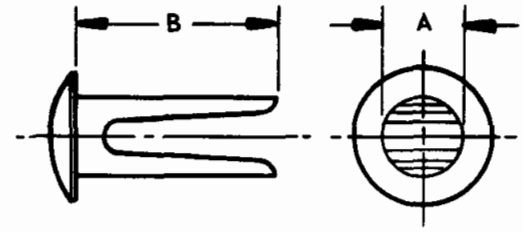

A	B	Material	Part No.
7/16	9/64	BR	113 194

RIVET, Tubular Oval Head

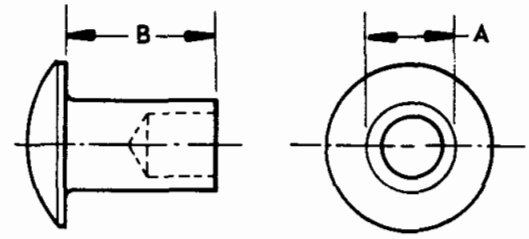

A	B	Material	Part No.
3/32	3/16	ST	131 284

SCREW, Cross Recessed Round Head Machine

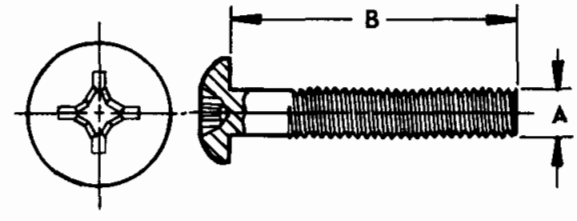

A	Thrds./Inch	B	Finish	Part No.
4	40	1/4		154 921
6	32	1/4		154 950
6	32	1/2		154 987
8	32	1/2	CH	155 044
8	32	1/2		9415 921
8	32	1		188 764
10	24	1/2		456 867
10	32	5/16		9416 993
10	32	1/2		155 194
12	24	3/4		155 278
1/4	20	3/4		155 348

Printed in U.S.A.
November, 1974

SCREW, Cross Recessed Pan Head Machine

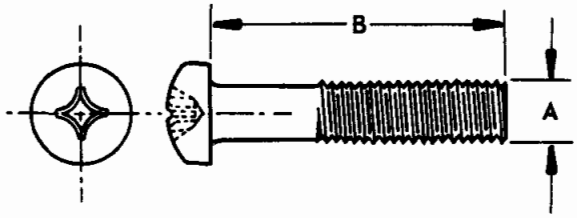

A	Thrds./Inch	B	Finish	Part No.
6	32	1/4	ZI	159 229
6	32	7/8	CA	159 353
8	32	5/16	CA	159 577
8	32	1/2	ZI	9415 921
8	32	1/2	CH	9417 776
8	32	3/4	ZI	9417 303
8	32	1	CH	188 764
10	24	3/8	ZI	9416 162
10	24	7/16		153 241
10	24	1/2	ZI	456 867
10	24	5/8	ZI	9417 304
10	24	5/8	CH	9417 772
10	32	3/8	ZI	9416 993
10	32	1/2	ZI	9417 265
10	32	1 1/2		153 479
1/4	20	1/2	ZI	456 868
1/4	20	1/2	CH	9417 768
1/4	20	3/4	CH	9421 589
1/4	20	3/4	ZI	456 781
1/4	20	7/8	ZI	9417 306
1/4	20	1	CH	9418 832
1/4	20	1 1/4	CH	9422 167
1/4	20	1 3/8	ZI	9432 654
5/16	18	3/4	ZI	174 988
5/16	18	1	ZI	9422 222
5/16	18	1 1/4	CH	9421 082

SCREW, Cross Recessed Oval Head Machine

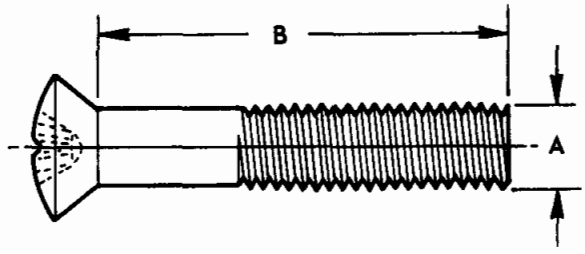

A	Thrds./Inch	B	Finish	Part No.
6	32	1	CH	156 730
8	32	1/2	CH	156 771
8	32	5/8	ZI	9418 308
8	32	5/8	CH	147 762
8	32	3/4	CH	186 575
8	32	3/4	PL	156 831
10	24	7/16	CH	148 034
10	24	1/2	CH	451 187
10	24	1/2	CA	156 963
10	24	5/8	CH	148 109
10	24	3/4	CH	451 270
10	24	3/4	CH	179 355
10	24	1	CH	187 528
12	24	5/8		157 277
12	24	3/4	CH	446 635
1/4	20	1/2		157 391
1/4	20	3/4		443 869
3/8	16	1 1/4	STN	152 653

SCREW, Cross Recessed Flat Head Machine

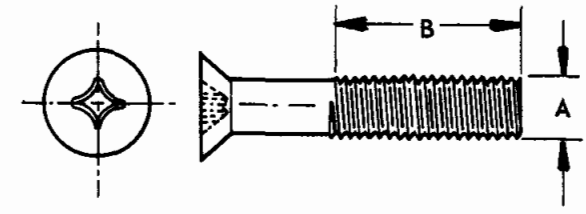

A	Thrds./Inch	B	Finish	Part No.
6	32	1/4		155 830
8	32	3/16		155 868
8	32	3/8	ZI	9418 323
8	32	1/2	ZI	9415 920
8	32	3/4	ZI	9418 324
10	24	1/2	ZI	177 935
10	24	1		155 954
10	24	1	ZI	9418 328
10	24	1 1/4	STN	9418 295
10	32	1/2		156 009
10	32	1		156 033
12	24	1/2		156 094
1/4	20	7/8	ZI	9417 535
1/4	20	1	ZI	455 559
1/4	20	2	ZI	156 351
5/16	24	1		178 837
3/8	16	1	ZI	9418 266

SCREW, Large Round Washer Head Cross Recessed Machine

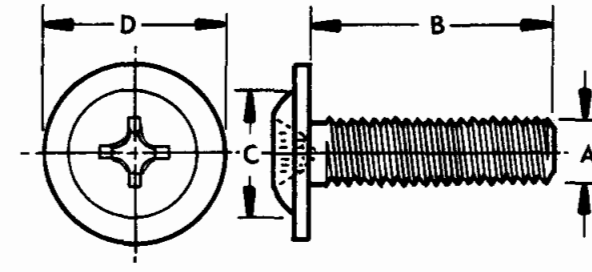

A	Thrds./Inch	B	C	D	Material	Part No.
8	32	5/8	5/16	13/32	STN	9427 799
8	32	1/4	17/64	3/8	STN	9428 567
10	24	3/8			ST	9428 256
10	24	1	11/32	15/32	ST	9428 265
1/4	20	5/8	13/32	9/16	ST	9416 266
1/4	20	3/4	15/32	5/8	STN	9433 965
1/4	20	3/4	15/32	5/8	ST	9433 293

SCREW, Cross Recessed Oval Trim Head Machine

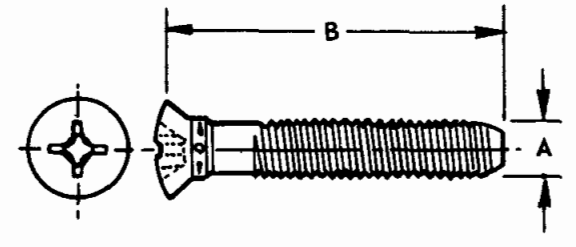

A	Thrds./Inch	B	Finish	Part No.
6	32	1	CH	168 999
8	32	3/8	ZI	168 634
8	32	5/8	CH	168 641
8	32	1	CH	271 100
10	24	3/4	CH	187 709
10	24	7/8	CH	456 744

Printed in U.S.A.
November, 1974

SCREW & EXTERNAL TOOTH LOCK WASHER ASSY., Cross Recessed Machine

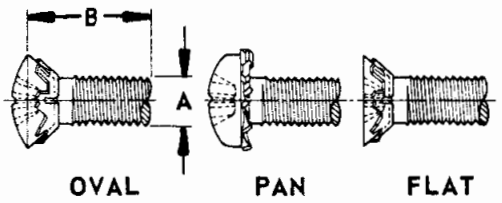

Head	A	Thrds./Inch	B	Finish	Part No.
Pan	10	32	7/16	PH	9427 309
Pan	1/4	20	5/8	ZI	189 355
Pan	1/4	20	1	ZI	9416 872
Pan	1/4	20	1 1/8	ZI	9418 263
Oval	5/16	18	3/4	ZI	9424 327
Flat	3/8	16	1	ZI	456 792

SCREW & SPRING LOCK WASHER ASSY., Cross Recessed Machine

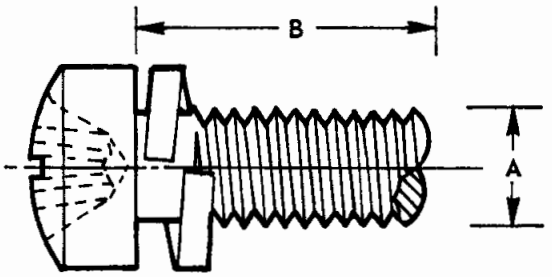

A	Thrds./Inch	B	Finish	Part No.
10	24	7/16	PL	274 092
10	24	1 1/4	PL	9418 651

SCREW, Flat Head Cross Recessed Machine

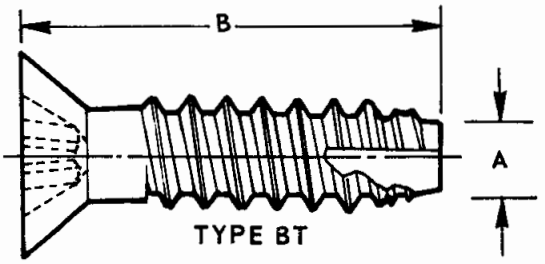

A	Thrds./Inch	B	Material	Finish	Part No.
4	24	1/2	ST	ZI	9427 408

SCREWS, Flat Head Cross Recessed Tapping

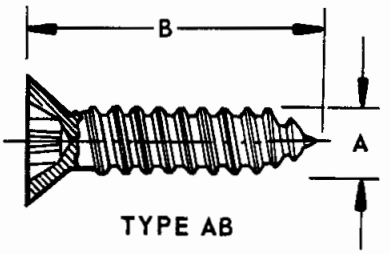

A	Thrds./Inch	B	Material	Finish	Part No.
4	24	1/2	ST	ZI	9425 719
4	24	5/8	ST	ZI	9426 488
6	20	3/4	ST	PH	9421 945
6	32	5/16	ST	ZI	166 251
8	18	1/2	ST	ZI	162 656
8	18	1/2	STN	BE	9432 451
8	18	1/2	ST	PH	9414 732
8	18	5/8	ST	PH	9414 733
8	18	3/4	ST	PH	9414 734
8	18	3/4	ST	CH	9426 528
10	16	1/2	ST	PH	9414 742
10	16	5/8	ST	PH	9414 743
10	16	1 1/4	ST	PH	9414 747

SCREWS, Flat Head Cross Recessed Tapping

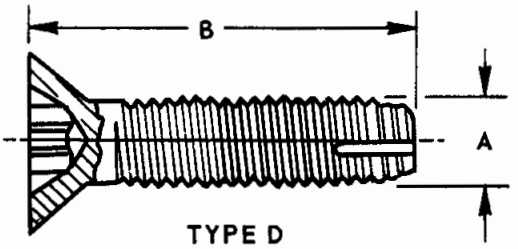

A	Thrds./Inch	B	Material	Finish	Part No.
8	32	1/2	ST	ZI	166 303
10	16	1 3/4	STN	CH	9417 995
10	24	3/8	ST	ZI	166 330
10	24	3/4	ST	ZI	166 342

SCREWS, Flat Head Cross Recessed Tapping

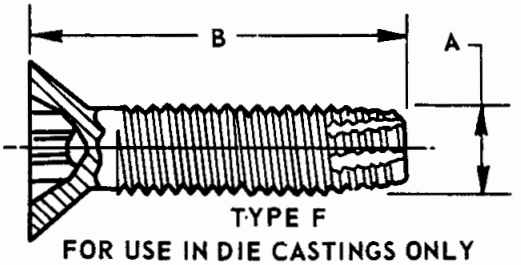

A	Thrds./Inch	B	Material	Finish	Part No.
8	32	1/2	ST	ZI	449 013
10	24	1/2	ST	CH	9423 017

Printed in U.S.A.
November, 1974

SCREWS, Pan Head Cross Recessed Tapping

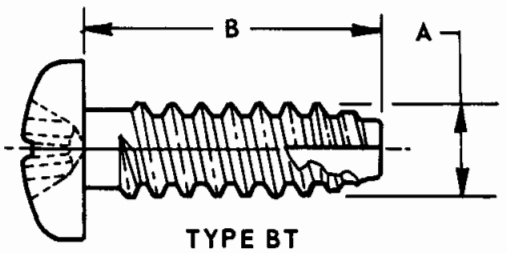

TYPE BT

A	Thrds./Inch	B	Material	Finish	Part No.
8	18	5/8	ST	ZI	9413 586
8	18	3/4	STN	CH	9431 913
8	18	1 1/4	STN	CH	9428 328
10	16	7/8	ST	ZI	9432 334

SCREWS, Pan Head Cross Recessed Tapping

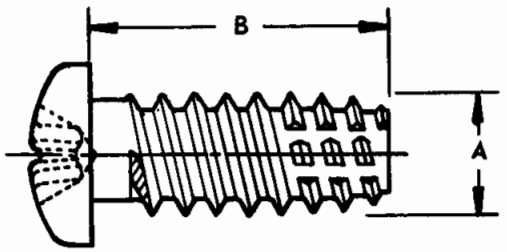

TYPE BF

A	Thrds./Inch	B	Material	Finish	Part No.
8	18	3/8	ST	ZI	9421 776
8	18	1/2	ST	ZI	9417 981
8	18	5/8	ST	ZI	9420 993

SCREWS, Pan Head Cross Recessed Tapping

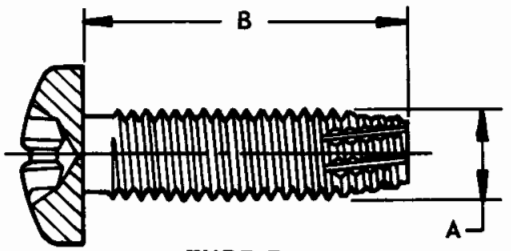

TYPE F

A	Thrds./Inch	B	Material	Finish	Part No.
6	32	3/8	ST	ZI	449 603
6	32	1/2	ST	ZI	449 605
8	32	3/8	STN	CH	9425 246
8	32	5/8	ST	ZI	449 615
8	32	3/4	ST	ZI	449 617
8	32	364	STN	CH	9425 251
8	32	768	STN	BE	152 319
8	32	1/2	STN	CH	9424 085
8	32	1	STN	CH	9425 255
8	32	1 1/4	STN	BF	152 320
8	32	1 1/2	STN	BE	152 321
8	32	1 5/8	STN	CH	9432 622
8	32	1 3/4	STN	BE	152 322
10	24	5/8	STN	CH	9425 262

SCREWS, Pan Head Cross Recessed Tapping

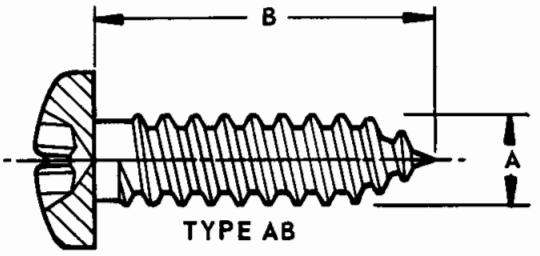

TYPE AB

A	Thrds./Inch	B	Material	Finish	Part No.
6	20	1/4	ST	ZI	161 788
6	20	3/8	ST	ZI	9416 136
6	20	1/2	ST	ZI	9417 276
6	20	3/4	ST	CH	9424 845
6	20	3/4	STN	CH	9432 682
8	18	1/4	ST	PH	9423 520
8	18	3/8	ST	ZI	9414 711
8	18	3/8	STN	CH	9417 316
8	18	1/2	STN	BE	152 313
8	18	1/2	STN	CH	9416 049
8	18	3/4	ST	ZI	9414 714
8	18	3/4	ST	CH	9423 317
8	18	3/4	STN	CH	9422 165
8	18	7/8	ST	ZI	9414 715
8	18	1	STN	CH	9422 166
8	18	1 1/4	ST	CH	9424 872
8	18	1 1/4	STN	CH	9425 045
8	18	1 1/2	STN	CH	9417 427
8	18	1 3/4	ST	PH	9424 111
8	18	2	STN	CH	9425 046
10	16	3/8	ST	PH	9419 675
10	16	3/8	STN	CH	9417 766
10	16	1/2	STN	CH	9420 813
10	16	5/8	ST	PH	9417 085
10	16	3/4	ST	ZI	9414 724
10	16	3/4	STN	BE	152 383
10	16	7/8	ST	ZI	9414 725
10	16	1	ST	ZI	9414 726
10	16	1	ST	CH	9417 767
10	16	1	STN	CH	9433 577
10	16	1 1/4	ST	ZI	9414 727
10	16	1 1/4	ST	CH	9425 931
14	10	3/4			162 077
1/4	14	5/8	ST	ZI	9416 642
1/4	14	1 1/4	ST	ZI	9416 847

SCREWS, Pan Head Cross Recessed Tapping

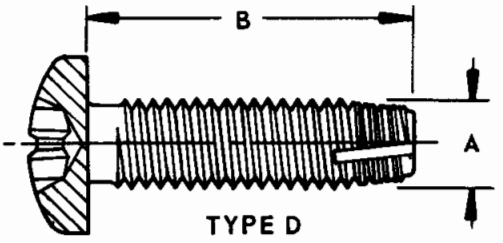

TYPE D

A	Thrds./Inch	B	Material	Finish	Part No.
6	32	1/4	STN	CH	9420 992
6	32	7/16	ST	CA	167 159
6	32	1/2	ST	CH	167 003
6	32	7/8	ST	CH	9417 816
6	32	3/4	ST	ZI	167 008
8	32	3/8	STN	BE	152 339
8	32	5/8	STN	CH	9415 893
8	32	7/16	ST	ZI	167 042
8	32	3/4	STN	CH	9419 347
8	32	7/8	STN	CH	9417 816
10	24	3/8	STN	CH	9418 486
10	24	1/2	STN	CH	9418 073
10	24	5/8	STN	CH	9422 363
10	24	3/4	ST	CH	167 107
10	24	7/8	ST	ZI	167 121
10	24	1	STN	CH	9422 366
10	24	1 1/4	ST	ZI	167 137
10	24	1 1/2	ST	ZI	167 140
1/4	20	1/2	STN	CH	9432 616
1/4		3/4	ST	ZI	167 263

Printed in U.S.A.
November, 1974

SCREW, Oval Head Cross Recessed Tapping

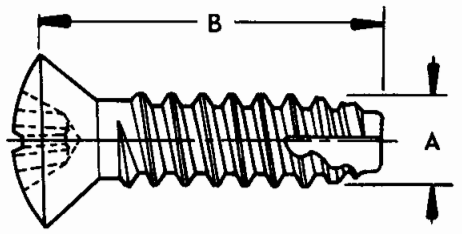

TYPE BT

A	Thrds./Inch	B	Material	Finish	Part No.
8	18	3/4	STN	CH	9433 494
10	16	5/8	ST	CH	9431 606

SCREWS, Oval Head Cross Recessed Tapping

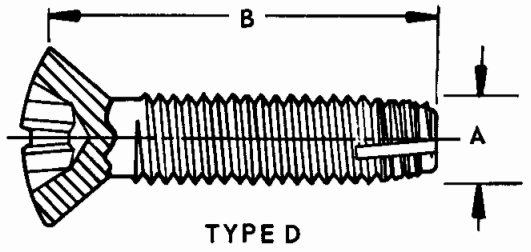

TYPE D

A	Thrds./Inch	B	Material	Finish	Part No.
4	40	3/8	ST	CH	9424 863
8	32	1/2	STN	CH	9414 510
8	32	3/8	STN	BE	152 409
8	32	5/8	ST	CH	167 545
8	32	3/4	STN	BE	152 326
8	32	3/4	ST	ZI	167 547
10	24	1/2	ST	ZI	167 562
10	24	1/2	STN	CH	9421 187
10	24	1	ST	ZI	167 579
10	32	5/8	ST	CH	167 602
1/4	20	1/2	STN	CH	9422 924
1/4	20	1 1/2	ST	CH	167 688

SCREW, Oval Head Cross Recessed Tapping

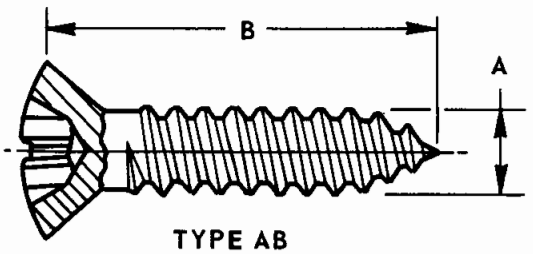

TYPE AB

A	Thrds./Inch	B	Material	Finish	Part No.
4	24	3/4	STN	CH	9423 974
6	20	1/2	ST	ZI	9423 821
6	20	1/2	ST	CH	9421 526
6	20	5/8	STN	CH	9423 316
6	20	1	ST	CH	9421 771

TYPE AB Cont'd.

A	Thrds./Inch	B	Material	Finish	Part No.
6	32	1	STN	CH	9424 770
8	18	3/4	STN	BE	152 468
8	18	7/8	ST	PH	9420 725
8	18	1	ST	PH	9424 881
8	18	1 1/4	ST	PH	9426 436
5/16	18	1	STN	CH	9429 028
8	15	1/2	ST	ZI	162 396
8	15	3/4	ST	CH	162 402
8	15	1	STN	PL	186 775
8	15	1 1/4	ST	CH	162 416
8	15	1 3/4	ST	CH	162 421
8	18	5/8	ST	CH	9431 735
8	18	3/4	ST	ZI	9423 822
8	18	3/4	ST	CH	9416 208
8	18	3/4	STN	CH	9417 986
8	18	7/8	ST	CH	9415 942
8	18	1 1/4	ST	CH	9416 819
8	18	1 1/4	STN	CH	9417 989
8	18	1 1/2	ST	CH	9420 371
8	18	1 5/8	ST	CH	9423 368
10	16	3/4	ST	CH	9415 537
10	16	1	STN	CH	9417 992
10	16	1 1/4	STN	CH	9417 993
10	16	1 1/2	STN	CH	9417 994
10	16	2	STN	CH	9417 996
12	11	1 1/4	ST	CH	162 513

SCREWS, Oval Head Cross Recessed Tapping

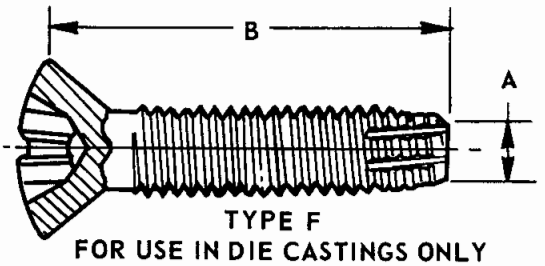

TYPE F
FOR USE IN DIE CASTINGS ONLY

A	Thrds./Inch	B	Material	Finish	Part No.
8	32	3/8	STN	CH	9425 211
8	32	1/2	STN	CH	9425 212
8	32	3/4	ST	CH	9425 215
10	24	1	STN	CH	9425 233

SCREW, Round Washer Head Cross Recessed Tapping

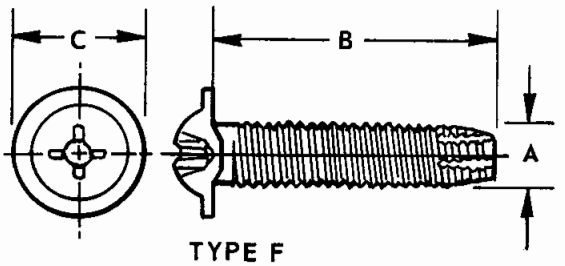

TYPE F

A	Thrds./Inch	B	C	Material	Finish	Part No.
6	32	5/8	5/16	ST	ZI	9427 346

Printed in U.S.A.
November, 1974

SCREWS, Round Washer Head Cross Recessed Tapping

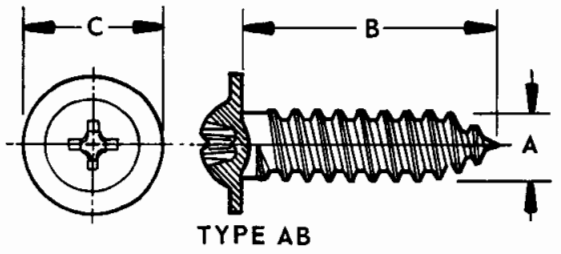

A	Thrds./Inch	B	C	Material	Finish	Part No.
8	18	3/8	3/8	STN	CH	9418 246
8	18	7/16	3/8	ST	ZI	9416 409
8	18	1/2	3/8	ST	CH	152 299
8	18	5/8	3/8	ST	CH	9415 956
8	18	5/8	3/8	ST	PH	9416 105
8	18	1	3/8	ST	CH	9418 736
10	16	1/2	7/16	ST	CH	9420 948
10	16	3/4	7/16	ST	ZI	9416 274

SCREW, Large Round Washer Head Cross Recessed Tapping

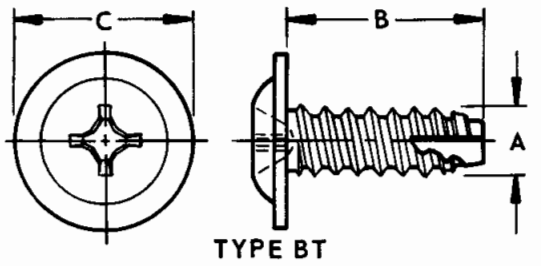

A	Thrds./Inch	B	C	Material	Finish	Part No.
	10	16	3/4	ST	ZI	9427 977
8	18	1/2	13/32	STN	CH	9431 768

SCREW, Large Round Washer Head Cross Recessed Tapping

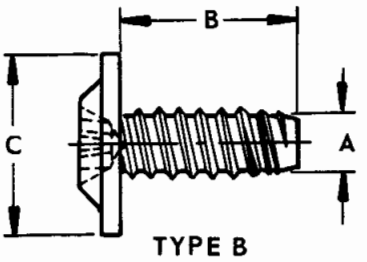

A	Thrds./Inch	B	C	Material	Finish	Part No.
1/4	14	1 1/8	5/8	ST	ZI	9428 368

SCREW, Large Round Washer Head Cross Recessed Tapping

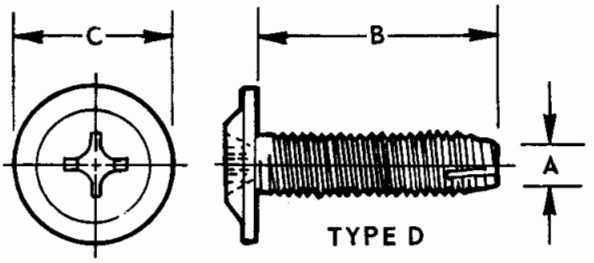

A	Thrds./Inch	B	C	Material	Finish	Part No.
10	24	3/4	15/32	ST	ZI	9428 296

SCREW, Large Round Washer Head Cross Recessed Tapping

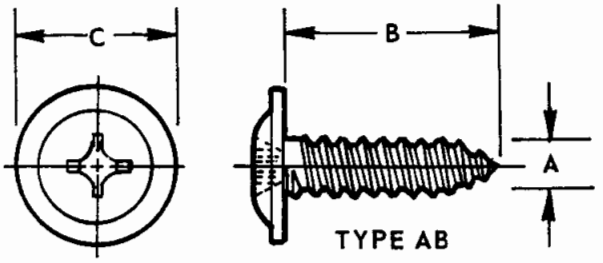

A	Thrds./Inch	B	C	Material	Finish	Part No.
8	18	1	11/32	ST	CH	9427 808

SCREWS, Fillister Head Cross Recessed Tapping

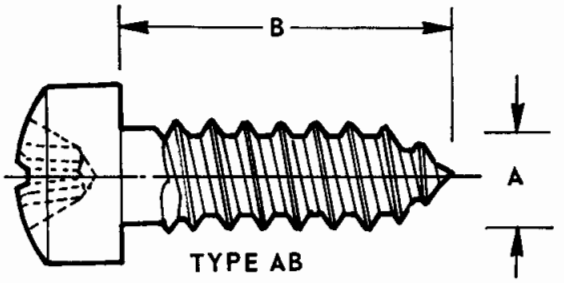

	A	Thrds./Inch	B	Material	Finish	Part No.
	6	20	3/4	ST	CH	9428 812
	8	18	3/4	ST	PH	9429 039
	8	18	1 1/4	STN	BE	152 336

Printed in U.S.A.
November, 1974

SCREWS, Fillister Head Cross Recessed Tapping

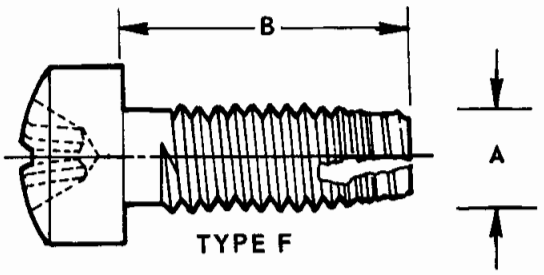

A	Thrds./Inch	B	Material	Finish	Part No.
8	32	3/8	ST	ZI	450 211
8	32	1/2	STN	CH	9424 306

SCREW, Fillister Head Cross Recessed Tapping

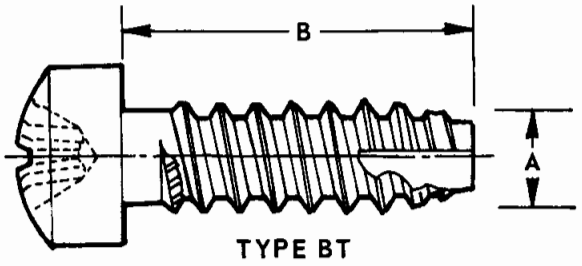

A	Thrds./Inch	B	Material	Finish	Part No.
6	20	3/4	ST	ZI	9427 365

SCREWS, Oval Trim Head Cross Recessed Tapping

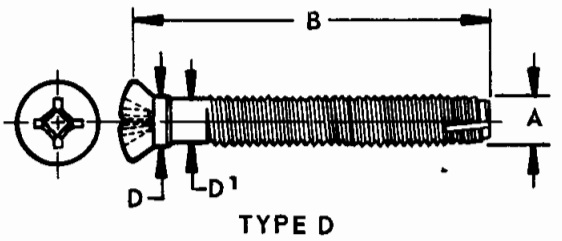

Head #	A	Thrds./Inch	B	Material	Finish	Part No.
6	8	32	3/8	ST	CH	168 971
6	8	32	5/8	ST	CH	168 977
6	8	32	7/8	STN	CH	9412 247
6	8	32	1	ST	CH	168 999
6	8	32	1 1/8	STN	CH	9415 492
8	10	24	1/2	ST	CH	9419 351

SCREWS, Oval Trim Head Cross Recessed Tapping

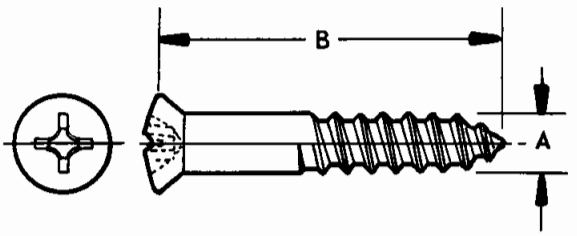

Head #	A	Thrds./Inch	B	Material	Finish	Part No.
4	6	20	3/8	STN	CH	9431 737
6	6	20	5/4	ST	CH	9421 893
6	8	18	1 1/8	STN	CH	9418 703
6	8	18	1 3/8	STN	CH	9416 628
6	8	18	1/2	STN	BE	152 304
	8	18	1/2	STN	BE	152 305
6	8	18	1/2	STN	CH	9427 804
6	8	18	1/2	ST	CH	9414 752
6	8	18	5/8	STN	CH	9432 446
6	8	18	3/4	STN	CH	9417 943
6	8	18	7/8	ST	PH	9419 662
6	8	18	1	ST	CH	9414 756
6	8	18	1 1/8	ST	CH	9418 780
6	8	18	1 1/4	ST	CH	9414 757
6	8	18	1 1/4	STN	CH	9423 405
6	8	18	1 1/2	STN	CH	9423 434
6	8	18	1 3/4	ST	CH	9414 759
6	8	18	2	ST	CH	9414 760
6	8	18	2 1/4	ST	CH	9419 244
8	10	16	5/8	ST	CH	9414 763
8	10	16	5/8	ST	PH	9424 887
8	10	16	3/4	ST	CH	9414 764
8	10	16	1	ST	CH	9414 766
8	10	16	1 1/8	STN	CH	9417 331
8	10	16	1 1/4	ST	CH	9414 767
8	10	16	1 1/2	ST	CH	9414 768
8	10	16	1 3/4	ST	CH	9414 769
10	1/4	14	3/4	ST	CH	9423 819

SCREWS, Oval Trim Head Cross Recessed Tapping

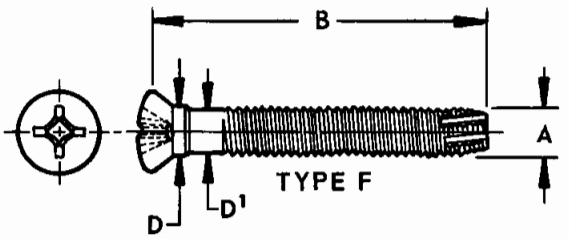

FOR USE IN DIE CASTINGS ONLY

Head #	A	Thrds./Inch	B	Material	Finish	Part No.
6	8	32	1/2	STN	BE	152 316
6	8	32	1/2	STN	CH	9423 677
6	8	32	5/8	STN	CH	152 317
6	8	32	5/8	STN	BE	152 408
6	8	32	3/4	STN	CH	152 318
6	8	32	3/4	ST	CH	9425 397
6	8	32	2	STN	BE	152 323
8	10	16	1 1/2	STN	BE	152 307
8	10	24	3/4	STN	BE	152 324
8	10	24	1	STN	BE	152 325

Printed in U.S.A.
November, 1974

SCREW, Flat Trim Head Cross Recessed Tapping

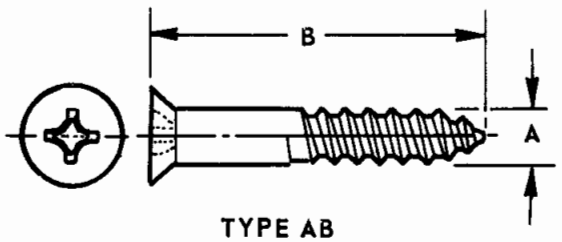

TYPE AB

Head #	A	Thrds./Inch	B	Material	Finish	Part No.
6	8	18	5/8	STN	CH	9431 736

SCREWS, Flat Trim Head Cross Recessed Tapping

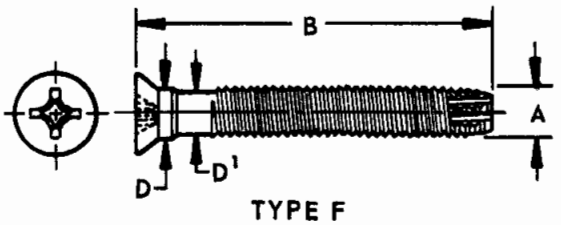

TYPE F

Head #	A	Thrds./Inch	B	Material	Finish	Part No.
6	8	32	1/2	ST	ZI	9432 139
6	8	32	1/2	STN	CH	9432 624

SCREW, Oval Head Cross Recessed Self Drilling & Tapping

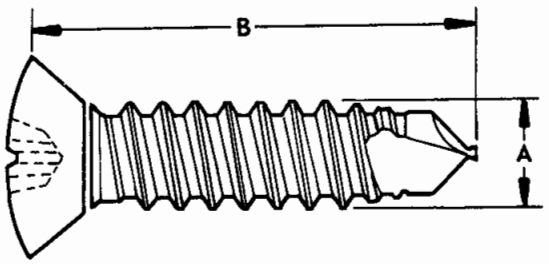

	A	Thrds./Inch	B	Material	Finish	Part No.
	8	18	1/2	STN	CH	9432 524

SCREW, Pan Head Cross Recessed Self Drilling & Tapping

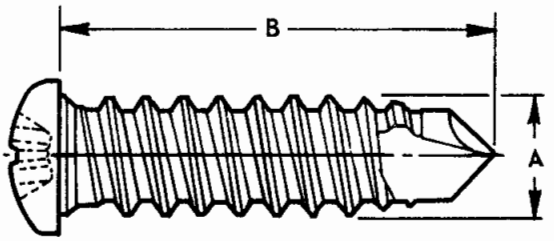

	A	Thrds./Inch	B	Material	Finish	Part No.
	8	18	3/4	ST	ZI	9432 344

SCREW, Large Round Washer Head Cross Recessed Self Drilling & Tapping

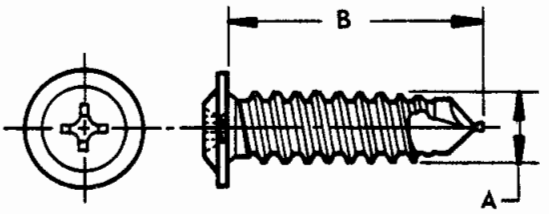

	A	Thrds./Inch	B	Material	Finish	Part No.
	8	18	1/2	ST	ZI	9432 486
	8	18	1/2	ST	STN	151 405
	10	16	3/4	ST	ZI	9433 399

SCREWS, Hexagon Head Machine

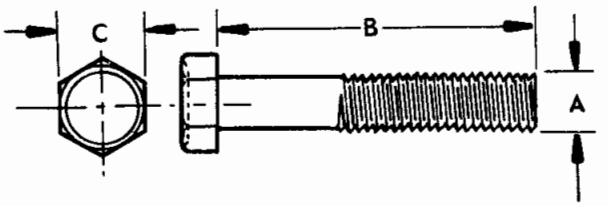

	A	Thrds./Inch	B	C	Part No.
	10	24	1/4	5/16	9414 023
	10	24	3/8	5/16	9418 500
	10	24	5/8	5/16	9411 629
	10	24	7/8	5/16	446 937
	10	24	1	5/16	9417 796

Printed in U.S.A.
November, 1974

SCREW, Hexagon Flange Head Machine

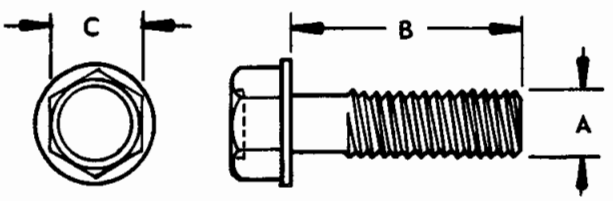

A	Thrds./Inch	B	C	Part No.
1/4	20	7/8	3/8	9418 532

SCREWS, Hexagon Head Tapping

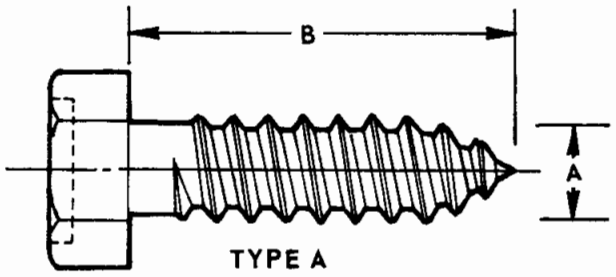

A	Thrds./Inch	B	Material	Finish	Part No.
8	18	3/8	ST	ZI	9414 586
8	18	1/2	ST	ZI	9414 587
10	16	3/8	ST	ZI	9414 596
10	16	1/2	ST	ZI	9414 597
10	16	5/8	ST	ZI	9414 598
1/4	14	1/2	ST	ZI	9416 612

SCREW, Hexagon Head Tapping

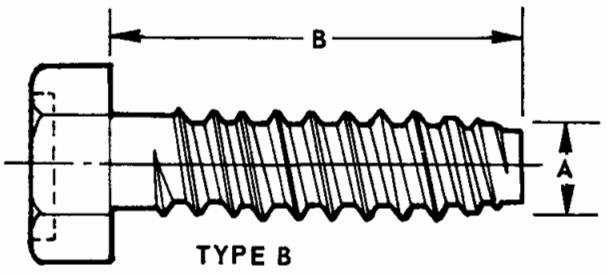

A	Thrds./Inch	B	Material	Finish	Part No.
6	20	3/8	ST	ZI	451 322

SCREWS, Hexagon Head Tapping

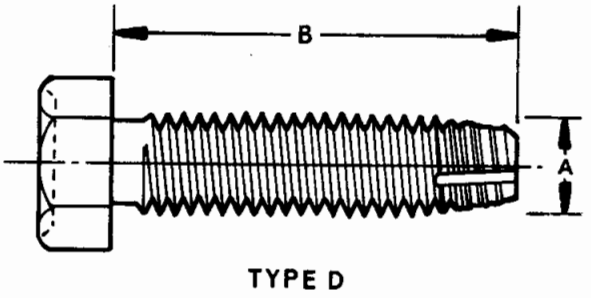

A	Thrds./Inch	B	Material	Finish	Part No.
8	32	1/2	ST	ZI	172 304
8	32	3/4	ST	ZI	172 306
10	24	1/4	ST	ZI	172 308
10	24	1/2	ST	ZI	172 313
5/16	18	5/8	ST	ZI	172 451

SCREWS, Hexagon Flange Head Tapping

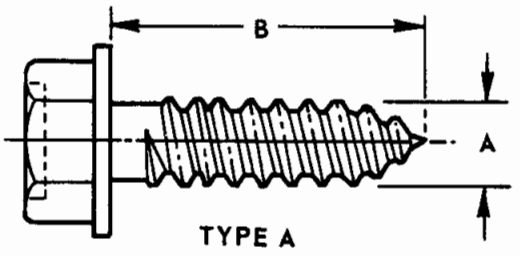

A	Thrds./Inch	B	Material	Finish	Part No.
10	12	5/8	ST	CA	456 766
10	16	5/8	ST	ZI	9417 855
10	24	3/4	ST	ZI	9425 180
1/4	14	1 1/4	ST	ZI	9423 830
1/4	14	2	ST	ZI	9423 831

SCREWS, Hexagon Flange Head Tapping

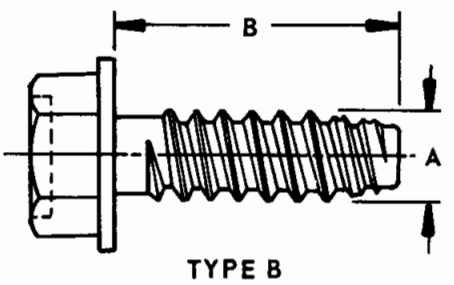

A	Thrds./Inch	B	Material	Finish	Part No.
10	16	3/8	ST	CA	451 790
1/4	14	3/8	ST	ZI	9417 749

Printed in U.S.A.
November, 1974

SCREWS, Hexagon Flange Head Tapping

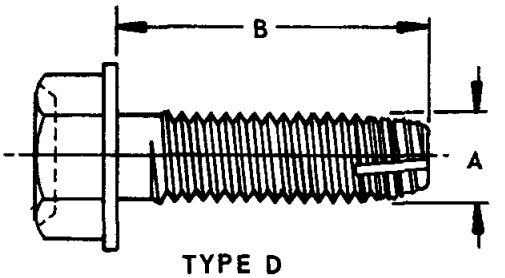

TYPE D

A	Thrds./Inch	B	Material	Finish	Part No.
8	32	3/8	ST	ZI	450 539
1/4	20	1/2	ST	ZI	456 289
5/16	18	5/8	ST	ZI	271 444

SCREWS, Hexagon Flange Head Tapping

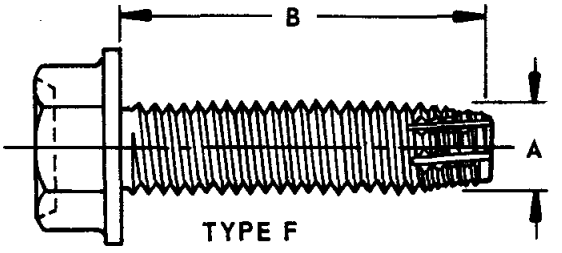

TYPE F

FOR USE IN DIE CASTINGS ONLY

A	Thrds./Inch	B	Material	Finish	Part No.
10	24	1/2	ST	ZI	9417 361
10	24	5/8	ST	ZI	9425 179
10	24	7/8	ST	ZI	9425 181

SCREW, Hexagon Head Tapping

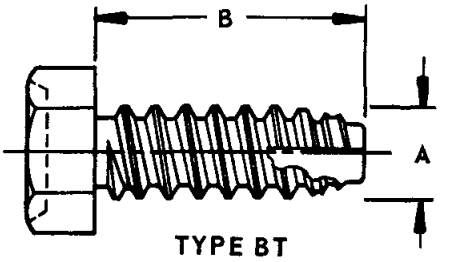

TYPE BT

A	Thrds./Inch	B	Material	Finish	Part No.
8	18	1/2	ST	ZI	9427 266

SCREW, Hexagon Flange Head Tapping

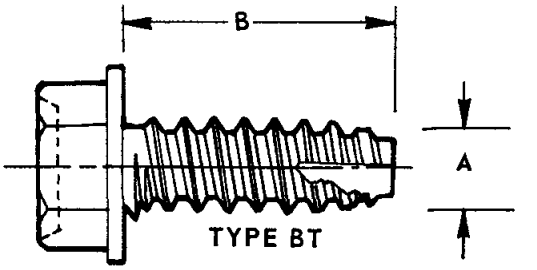

TYPE BT

A	Thrds./Inch	B	Material	Finish	Part No.
10	16	5/8	ST	PH	9429 022
10	16	3/4	ST	PH	9433 355

SCREW, Hexagon Flanged Head Self Drilling & Tapping

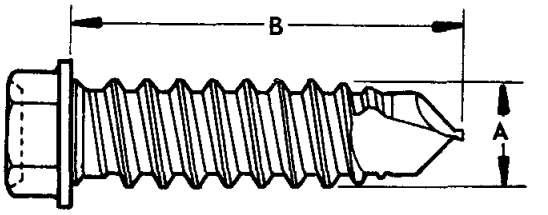

A	Thrds./Inch	B	Material	Finish	Part No.
10	16	1/2	ST	ZI	9432 533

SCREW, Torque Absorber Head Tapping

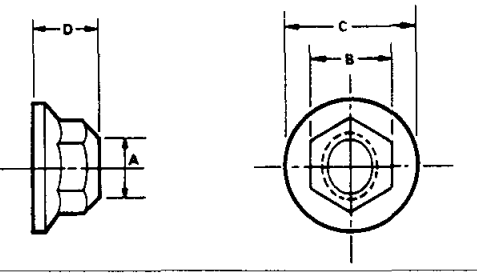

Head	A	Thirds./Inch	B	Part No.
Pan	10	16	3/4	152 467
Hex. Flange	1/4	14	1/2	152 706

SCREWS, Hexagon Socket Head Cap

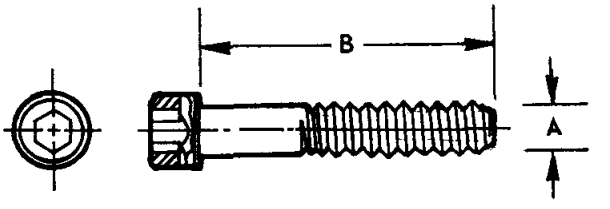

A	Thrds./Inch	B	Part No.
3/8	16	2	138 246
3/8	16	2 1/2	138 248
5/16	18	3/4	9421 919
5/16	18	1 1/4	9422 009

Printed in U.S.A.
November, 1974

SCREWS, Round Head Metallic Drive

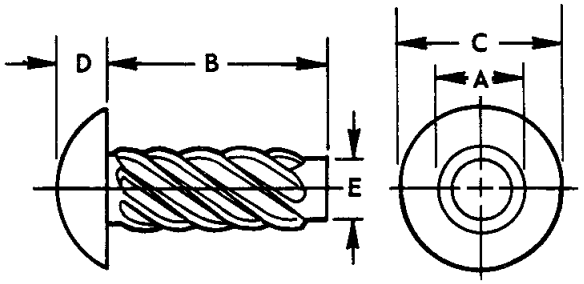

A	B	C	D	E	Finish	Part No.
7/64	1/4	5/32	1/16	5/64	CH	131 281
9/64	3/8	1/4	3/32	5/32	PL	145 067
3/16	3/8	23/64	1/8	13/64	PL	142 281
15/64	3/8	7/16	5/32	13/64	PL	273 677

SCREW, Hexagon Socket Set (Flat Point)

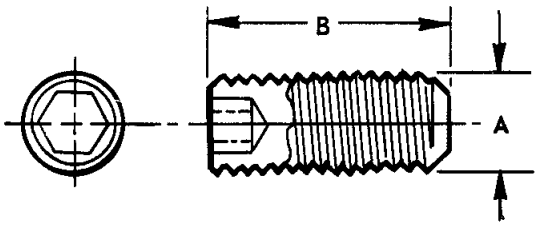

A	Thrds./Inch	B	Finish	Part No.
6	32	1/4	PL	435 146

SCREWS, Square Head Set (Cup Point)

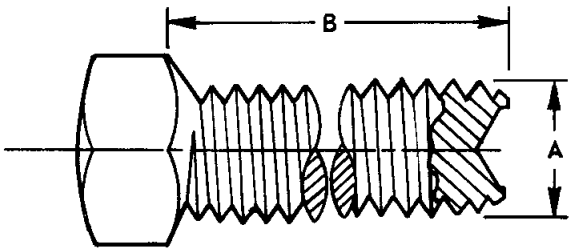

A	Thrds./Inch	B	Finish	Part No.
10	24	1/2	ZI	443 379
3/8	16	1	PL	102 896
3/8	16	1 3/8	PL	9418 626

SCREWS, Hexagon Socket Set (Cup Point)

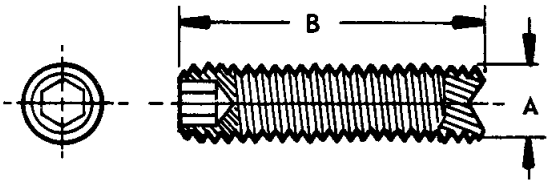

A	Thrds./Inch	B	Finish	Part No.
6	32	1/4	ZI	9423 276
8	32	3/8	ZI	217 218
10	24	1/8	ZI	9427 226
10	24	1/4	PH	426 094
10	24	1/4	PL	140 868
10	24	5/16	PH	455 700
10	24	5/8	PL	140 874
10	32	5/16	ZI	456 843
1/4	20	5/16	ZI	179 117
1/4	20	3/8	ZI	125 735
5/16	18	3/4	PL	102 584
3/8	16	1/2	ZI	426 374

SCREW, Headless Slotted Set (Cup Point)

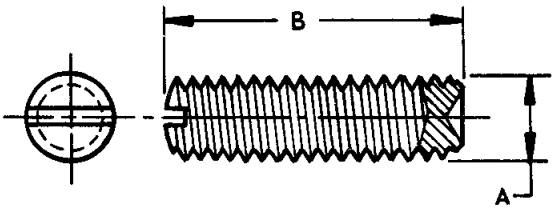

A	Thrds./Inch	B	Finish	Part No.
10	24	1	PL	102 700

SCREW, Hexagon Socket Set (Half Dog Point)

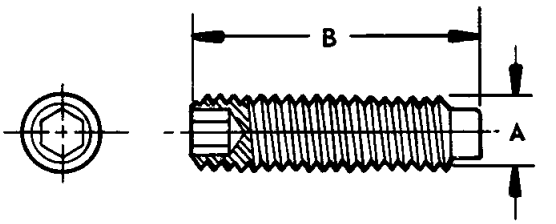

A	Thrds./Inch	B	Finish	Part No.
5/16	18	3/4	PL	223 058

Printed in U.S.A.
November, 1974

SCREW, Hexagon Socket Set (Cone Point)

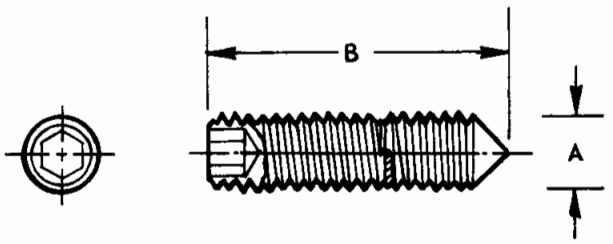

A	Thrds./Inch	B	Finish	Part No.
1/4	20	5/16	ZI	139 324

SCREW, Fillister Head Slotted Machine

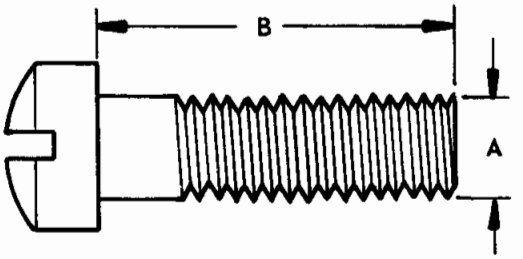

A	Thrds./Inch	B	Part No.
1/4	20	7/16	153 241

SCREWS, Round Head Slotted Machine

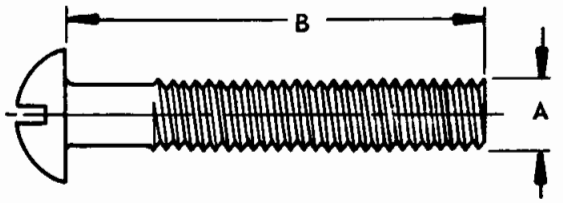

A	Thrds./Inch	B	Finish	Part No.
8	32	1/4	CA	122 159
1/4	20	3/8	CA	131 375
10	32	3/4	CA	132 915
10	32	1	CA	132 923

SLEEVE, Ball

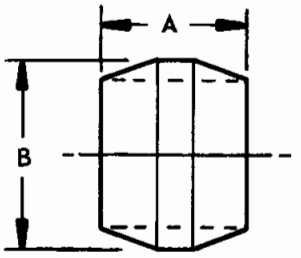

Tubing O.D.	A	B	Part No.
1/4	1/4	11/32	114 628
3/8	1/4	15/32	114 624
3/4	7/16	7/8	125 654

SPRING, Retainer

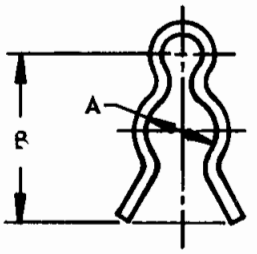

Groove Dia.	A	B	Part No.
1/4	7/32	9/16	148 148

STUDS

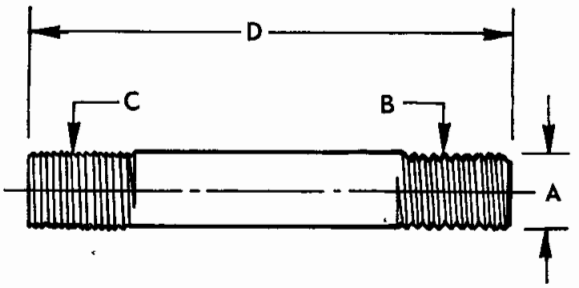

A	B	C	D	Finish	Part No.
	Thrd./Inch	Thrd./Inch			
1/4	20	28	2 7/8	PL	103 160
1/4	20	28	3 3/8	PL	103 162
5/16	18	24	1 5/16	PL	455 597
5/16	18	24	1 7/16	PL	9411 604
5/16	18	24	1 1/2	PL	103 175
5/16	18	24	1 5/8	PL	117 713
5/16	18	24	2 1/2	PL	103 179
5/16	18	24	3 1/2	PL	103 183
5/16	18	24	4 1/2	PL	103 187
3/8	16	24	1 7/16	PL	103 195
3/8	16	24	1 3/4	PL	446 550
3/8	16	24	3 5/16	PL	103 203
3/8	16	24	3 1/2	PL	451 916
3/8	16	16	3 5/8	ZI	152 568
3/8	16	24	5 9/16	PL	103 212
3/8	16	24	5 13/16	PL	111 647
7/16	14	20	1 7/16	PL	103 215
7/16	14	20	1 3/4	PL	9417 094
7/16	14	20	1 15/16	ZI	191 656
7/16	14	20	2 1/16	PL	112 210
7/16	14	20	2 11/16	PL	103 221

TEES, Automotive Pipe (Extruded Type)

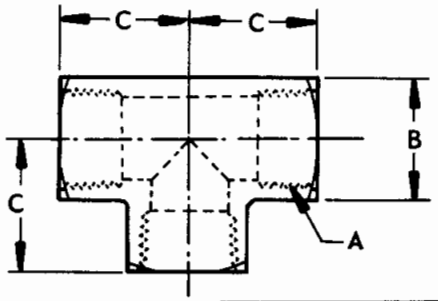

A	B	C	Part No.
1/4-18	11/16	27/32	444 120

TEES, Automotive Pipe (Extruded Type)

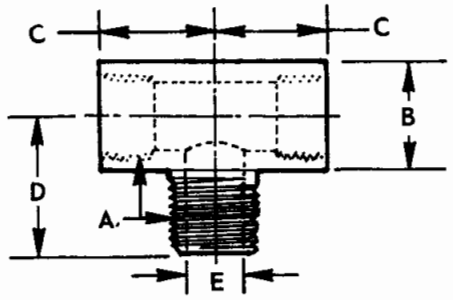

A	B	C	D	E	Part No.
1/4-18	11/16	25/32	29/32	5/16	444 134

TEES, Inverted Flared Tube Two Way Right Angle

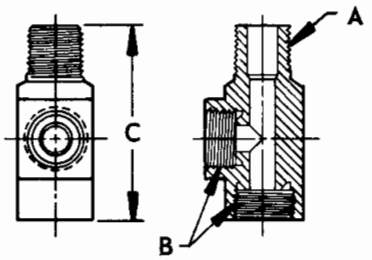

Tubing O.D.	A	B	C	Part No.
1/8	1/8-27	5/16-28	1 5/32	178 677
5/16	1/8-27	1/2-20	1 15/32	173 203

TEE, Flared Tube Two Way Right Angle

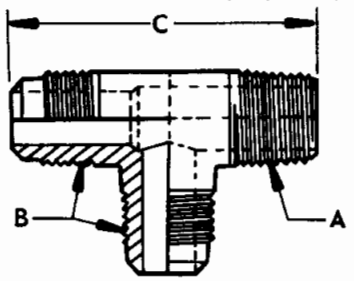

Tubing O.D.	A	B	C	Part No.
1/4	1/8-27	7/16-20	1 3/4	116 561

TEE, Flared Tube Two Way

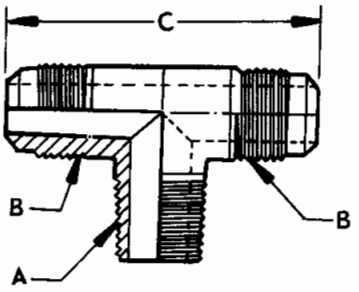

Tubing O.D.	A	B	C	Part No.
1/4	1/8-27	7/16-20	1 3/4	118 758

TEE, Flared Tube Three Way

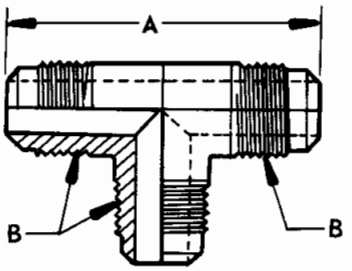

Tubing O.D.	A	B	Part No.
3/8	2	5/8-18	118 807

TEE, Inverted Flared Tube Internal Pipe Thread Two Way

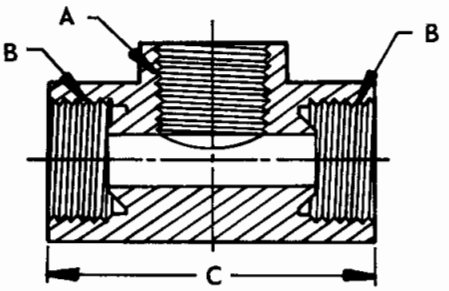

Tubing O.D.	A	B	C	Part No.
1/4	1/8-27	7/16-24	1 1/8	178 910

TEES, Inverted Flared Tube Three Way

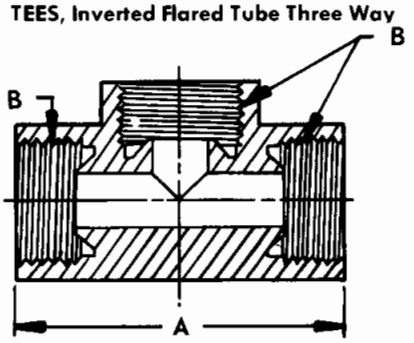

Tubing O.D.	A	B	Part No.
1/4	1 1/8	7/16-24	127 927
5/16	1 1/4	1/2-20	173 182

Printed in U.S.A.
November, 1974

TERMINAL, Eyelet Double Wire

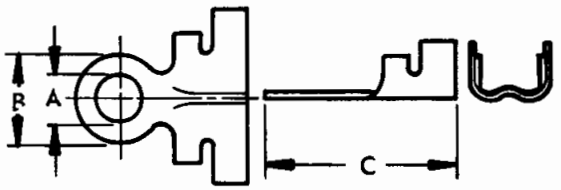

Cable	Screw or Stud	A	B	C	Part No.
10 & 14	10	13/64	3/8	13/16	200 052

TERMINALS, Eyelet Offset

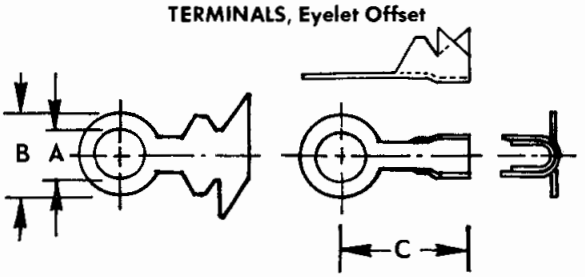

Cable	Screw or Stud	A	B	C	Part No.
6	1/4	9/32	9/16	1 1/8	200 230
6	3/8	13/32	13/16	1 7/32	200 235

TERMINALS, Eyelet Straight

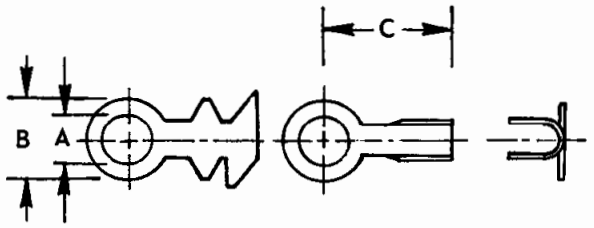

Cable	Screw or Stud	A	B	C	Part No.
14 & 16	6	1/64	11/32	13/16	200 001
10 & 12	1/4	9/32	9/16	7/8	200 013

TERMINAL, Spade Straight

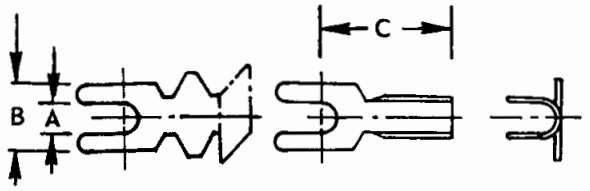

Cable	Screw or Stud	A	B	C	Part No.
10 & 12	10	13/64	3/8	13/16	200 393

UNION, Inverted Flared Tube

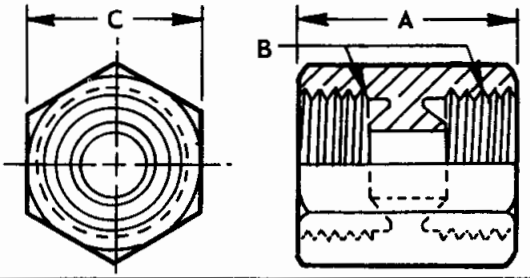

Tubing O.D.	A	B	C	Part No.
3/16	5/8	3/8-24	7/16	137 412
1/4	5/8	7/16-24	1/2	137 413
5/16	45/64	1/2-20	9/16	137 414

VALVE, Pressure Relief

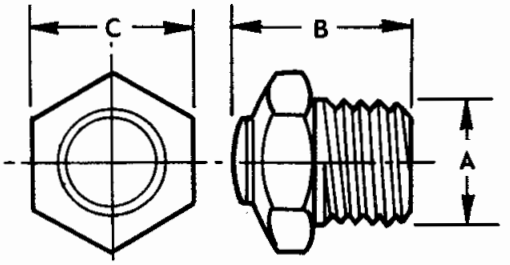

PSI-Min	PSI-Max.	A	Thrds./Inch	B	C	Part No.
45 #	80 #	1/8	27	15/32	7/16	106 671

WASHERS, Flat

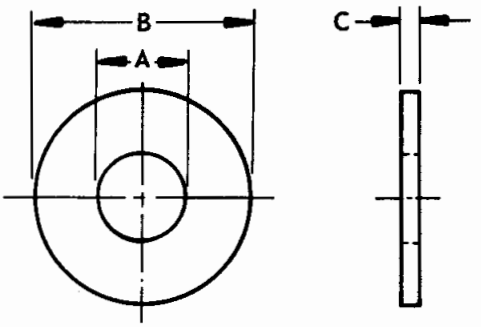

Remarks	Screw or Bolt Size	A	B	C	Part No.
	5	9/64	9/32	1/32	9418 398
	6	5/32	5/16	1/32	9420 522
	8	3/16	3/8	3/64	9414 106
	8	3/16	1/2	3/64	9423 534
	10	13/64	13/32	3/64	9416 128
	10	13/64	9/16	3/64	9417 373
	10	13/64	47/64	1/16	9417 714
	12	15/64	7/8	1/16	9417 497
CH	1/4	19/64	1/2	1/16	9421 772
	1/4	19/64	5/8	1/16	120 392
	1/4	19/64	47/64	1/16	9418 888
	1/4	19/64	1	1/16	9416 904
	5/16	11/64	5/8	1/16	9416 160
	5/16	11/64	7/8	1/16	274 865
	5/16	3/8	7/8	1/16	446 363
CA	5/16	13/32	7/8	5/64	120 387
PH	5/16	13/32	7/8	5/64	147 697
	3/8	27/64	3/4	1/16	128 051
	3/8	27/64	13/16	1/16	120 394
	3/8	27/64	47/64	1/16	274 517
CO	3/8	27/64	47/64	7/64	9415 545
	3/8	27/64	1 1/4	7/64	9417 793
	7/16	15/32	59/64	1/16	120 395

Printed in U.S.A.
November, 1974

Remarks	Screw or Bolt Size	A	B	C	Part No.
CH	7/16	15/32	1 1/8	1/16	9423 917
	1/2	17/32	1 1/16	1/16	120 396
	1/2	17/32	1	1/16	9417 098
	1/2	17/32	1 3/4	7/64	9417 794
	9/16	19/32	1 3/16	3/32	121 458
	5/8	43/64		3/32	131 016
	5/8	43/64		7/64	9420 611
	5/8	43/64		5/32	9416 173
	7/8	15/16		9/64	131 018
		1 13/64	2 1/2	3/16	446 283

WASHERS, Counter Sunk External Teeth Lock

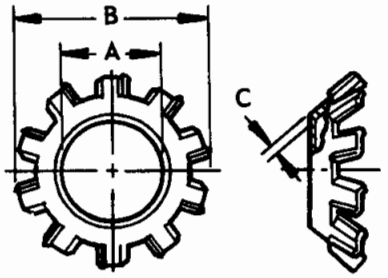

A	B	C	Part No.
10	23/64	1/64	138 597
1/4	29/64	1/64	138 604
3/8	49/64	1/32	138 617

WASHER, Internal Teeth Lock

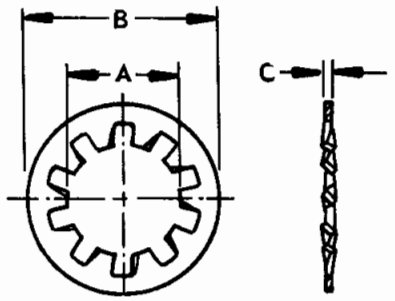

A	B	C	Part No.
5/8	1 3/64	3/64	138 557

WASHERS, Internal External Teeth Lock

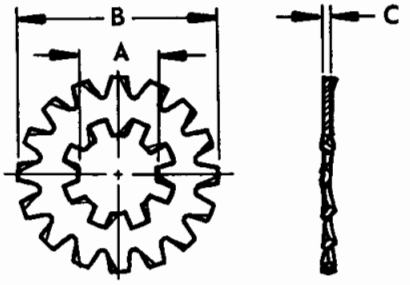

A	B	C	Part No.
1/4	3/4	1/16	174 916
5/16	29/32	3/64	178 532
3/8	31/32	3/64	178 551
7/16	1 1/16	1/16	178 571
9/16			178 612

WASHERS, External Teeth Lock

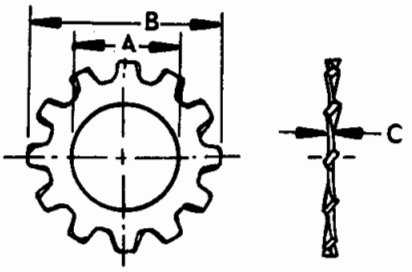

A	B	C	Part No.
1/4	1/2	1/32	121 753
5/16	19/32	1/32	138 485
7/16	3/4	1/32	136 857
1/2	57/64	1/32	135 629
9/16	31/32	1/32	138 498
5/8	1 1/16	3/64	138 502
3/4	1 1/4	3/64	138 506

WASHERS, Spring Lock

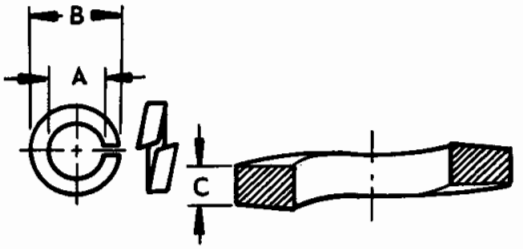

		A	B	C	Part No.
		12	25/64	1/16	131 120
		1/4	31/64	1/16	120 380
		5/16	37/64	5/64	120 214
		5/16	19/32	1/8	121 367
		3/8	11/16	3/32	120 382
		7/16	49/64	7/64	120 383
		7/16	25/32	1/8	131 100
		1/2	7/8	1/8	120 384
		9/16	31/32	9/64	120 898
		5/8	1 5/64	5/32	121 574
		3/4	1 17/64	3/16	131 046
10	24	3/4	ST	ZI	9425 180

Printed in U.S.A.
November, 1974

GROUP 19 - STEERING

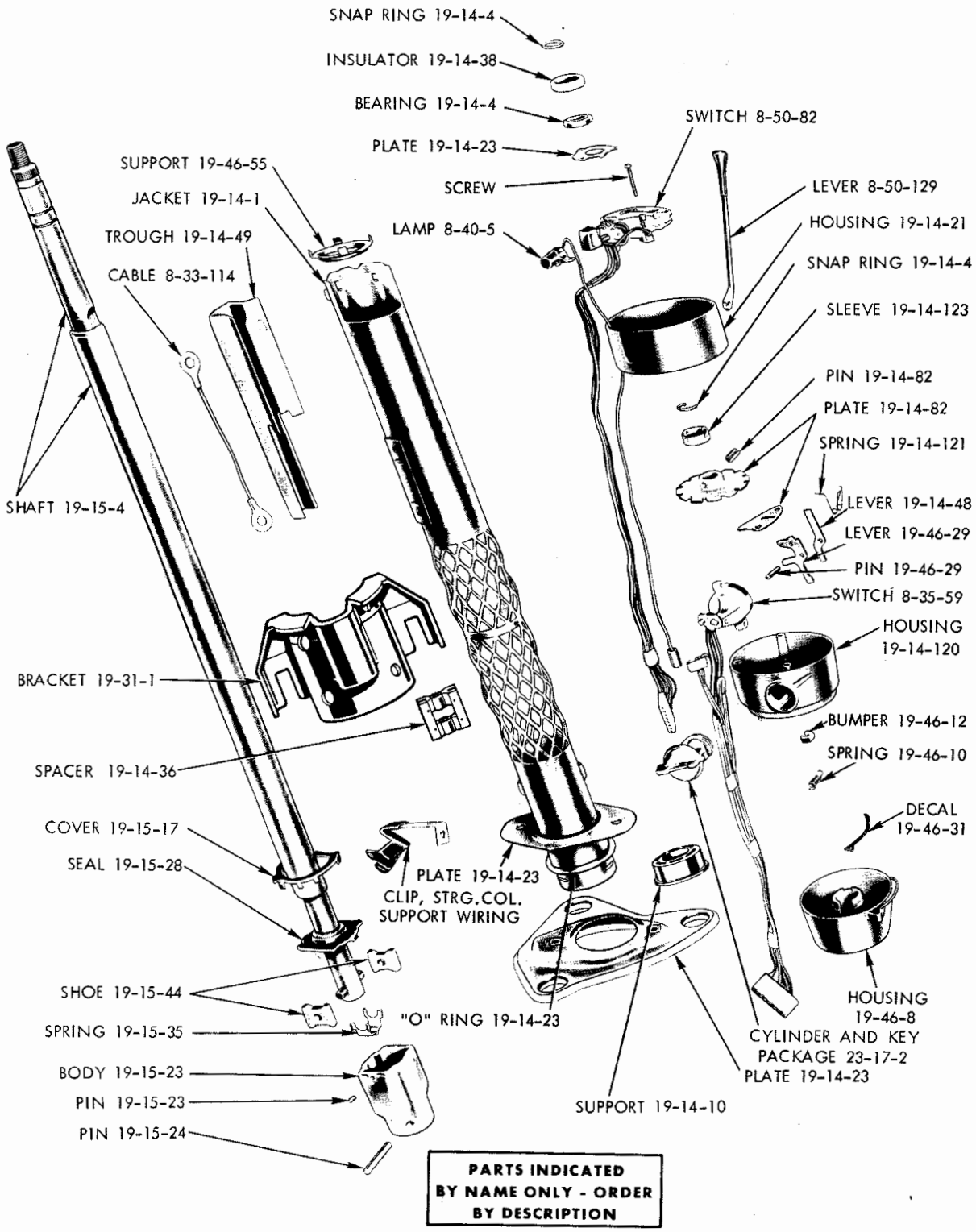

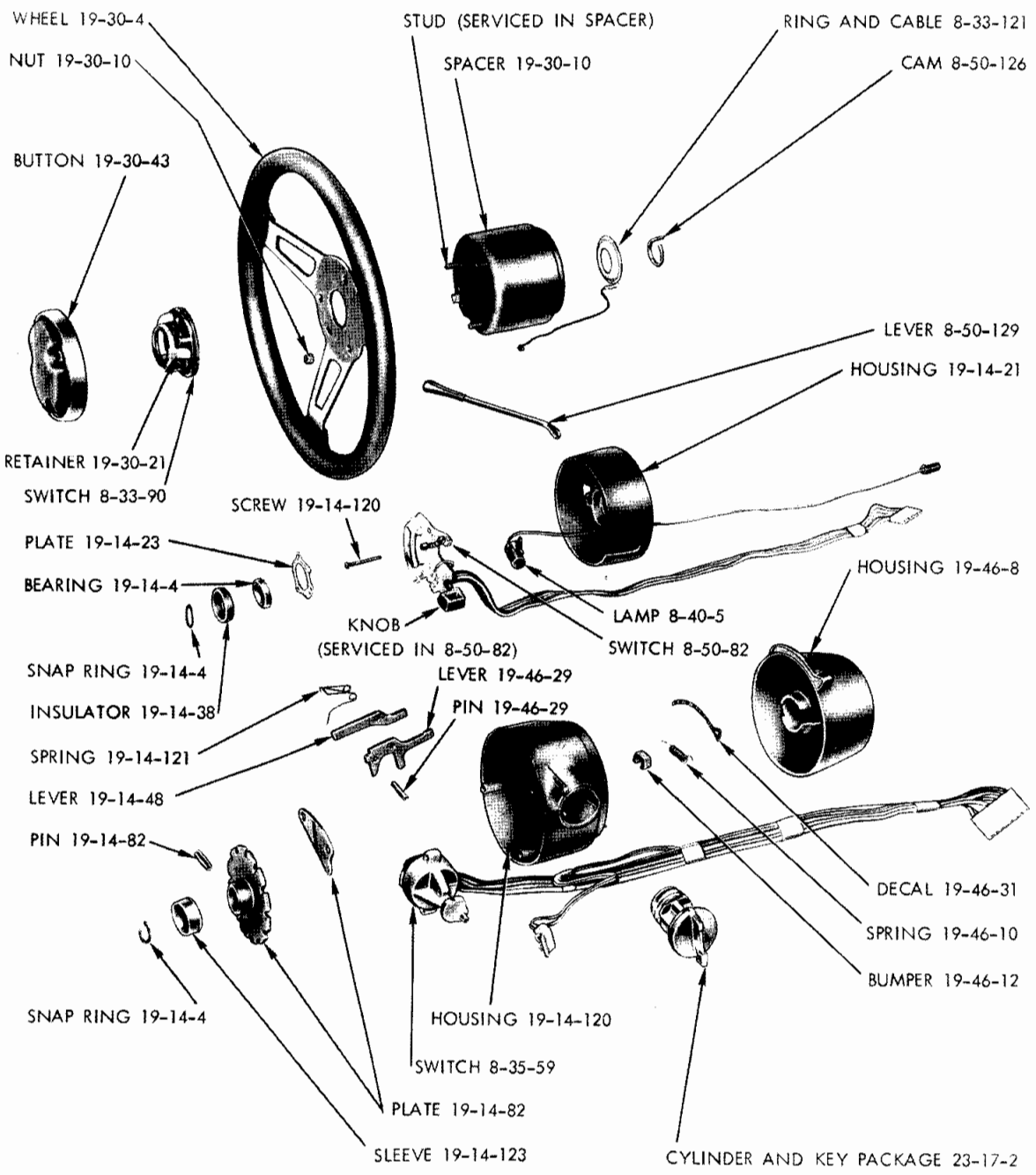

19837?B

STEERING COLUMN - FLOOR SHIFT WITH SOFT RIM STEERING WHEEL - V, L, R, W

NOTES

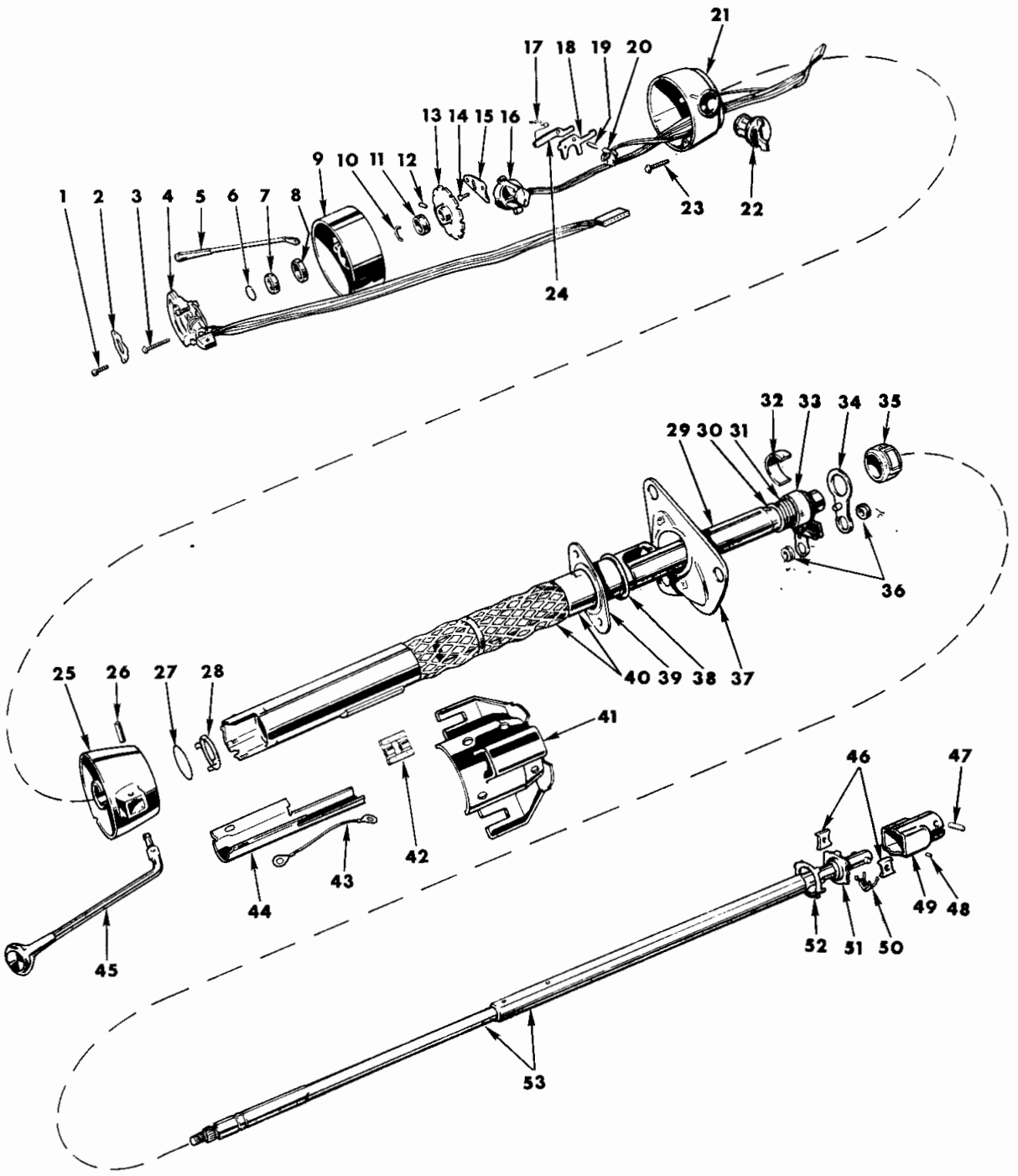

19a14547A

STEERING COLUMN (WITH MANUAL TRANSMISSION COLUMN SHIFT) - V, L, R, W

STEERING COLUMN (WITH MANUAL TRANSMISSION COLUMN SHIFT) - V, L, R, W

Ref. No.	Name	Part Type Code
1	Screw	19-14-23
2	Plate	19-14-23
3	Screw	8-50-82
4	Switch	8-50-82
5	Lever	8-50-129
6	Snap Ring	19-14-4
7	Bearing	19-14-4
8	Insulator	19-14-38
9	Housing	19-14-21
10	Snap Ring	19-14-4
11	Sleeve	19-14-123
12	Pin	19-14-82
13	Plate	19-14-82
14	Screw	19-14-82
15	Plate	19-14-82
16	Switch, Ignition	8-35-59
17	Spring	19-14-121
18	Lever	19-46-29
19	Pin	19-46-29
20	Switch, Buzzer	8-35-59
21	Housing	19-14-120
22	Cylinder and Key Package	23-17-2
23	Screw	19-14-120
24	Lever	19-14-48
25	Housing	19-46-8
26	Pin	21-30-2
27	Washer	19-46-8
28	Support	19-46-55
29	Tube	19-46-3
30	Washer (Serviced in Tube 19-46-3)	
31	Spring (Serviced in Tube 19-46-3)	
32	Spacer	19-46-12
33	Bearing (Serviced in Tube 19-46-3)	
34	Lever	19-46-16
35	Bearing w/Support	19-14-4
36	Grommet	19-48-49
37	Plate	19-14-23
38	"O" Ring	19-14-23
39	Plate	19-14-23
40	Jacket	19-14-1
41	Bracket	19-31-1
42	Spacer	19-14-36
43	Cable	8-33-114
44	Trough	19-14-49
45	Lever	21-30-2
46	Shoe	19-15-44
47	Pin	19-15-24
48	Pin	19-15-23
49	Body	19-15-23
50	Spring	19-15-35
51	Seal	19-15-28
52	Cover	19-15-17
53	Shaft	19-15-4

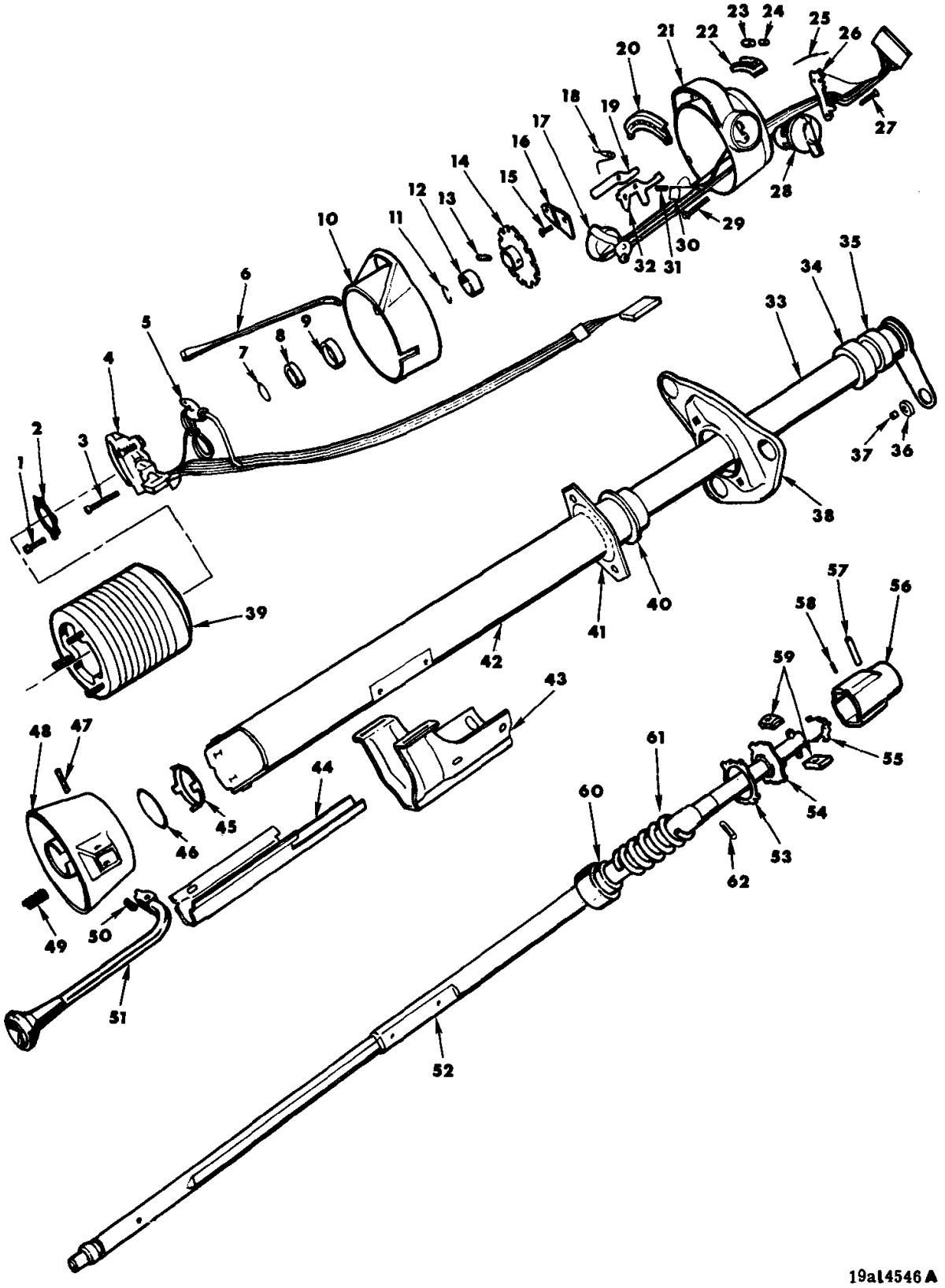

STEERING COLUMN (WITH AUTOMATIC TRANSMISSION)- BARRACUDA AND CHALLENGER

STEERING COLUMN (WITH AUTOMATIC TRANSMISSION)
BARRACUDA AND CHALLENGER

Ref. No.	Name	Part Type Code
1	Screw	19-14-23
2	Plate	19-14-23
3	Screw	8-50-82
4	Switch	8-50-82
5	Lamp	8-40-5
6	Lever	8-50-129
7	Snap Ring	19-14-4
8	Bearing	19-14-4
9	Insulator	19-14-38
10	Housing	19-14-21
11	Snap Ring	19-14-4
12	Sleeve	19-14-123
13	Pin	19-14-82
14	Plate	19-14-82
15	Screw	19-14-82
16	Plate	19-14-82
17	Switch	8-35-59
18	Spring	19-14-121
19	Lever	19-14-48
20	Lens	21-30-21
21	Housing	19-14-120
22	Lamp	21-30-28
23	Diffuser (Serviced in 21-30-28)	
24	Bulb	8-44-1
25	Pointer	21-30-23
26	Gate	21-30-11
27	Screw	21-30-11
28	Cylinder and Key	23-17-2
29	Screw	19-14-120
30	Switch	8-35-59
31	Pin	19-46-29
32	Lever	19-46-29
33	Tube	19-46-3
34	Seal	19-15-28
35	Support (Serviced in Tube 19-46-3)	
36	Grommet	19-46-13
37	Bushing	19-46-14
38	Plate	19-14-23
39	Can	19-14-59
40	"O" Ring	19-14-23
41	Plate	19-14-23
42	Jacket	19-14-1
43	Bracket	19-31-1
44	Trough	19-14-49
45	Support	19-46-55
46	Washer	19-46-8
47	Pin	21-30-2
48	Housing	19-46-8
49	Spring	21-30-100
50	Screw	19-46-8
51	Lever	21-30-2
52	Shaft	19-15-4
53	Cover	19-15-17
54	Seal	19-15-28
55	Spring	19-15-35
56	Body	19-15-23
57	Pin	19-15-24
58	Pin	19-15-23
59	Shoe	19-15-44
60	Bearing	19-14-4
61	Spring	19-14-85
62	Pin	(Part No. 9434 249)

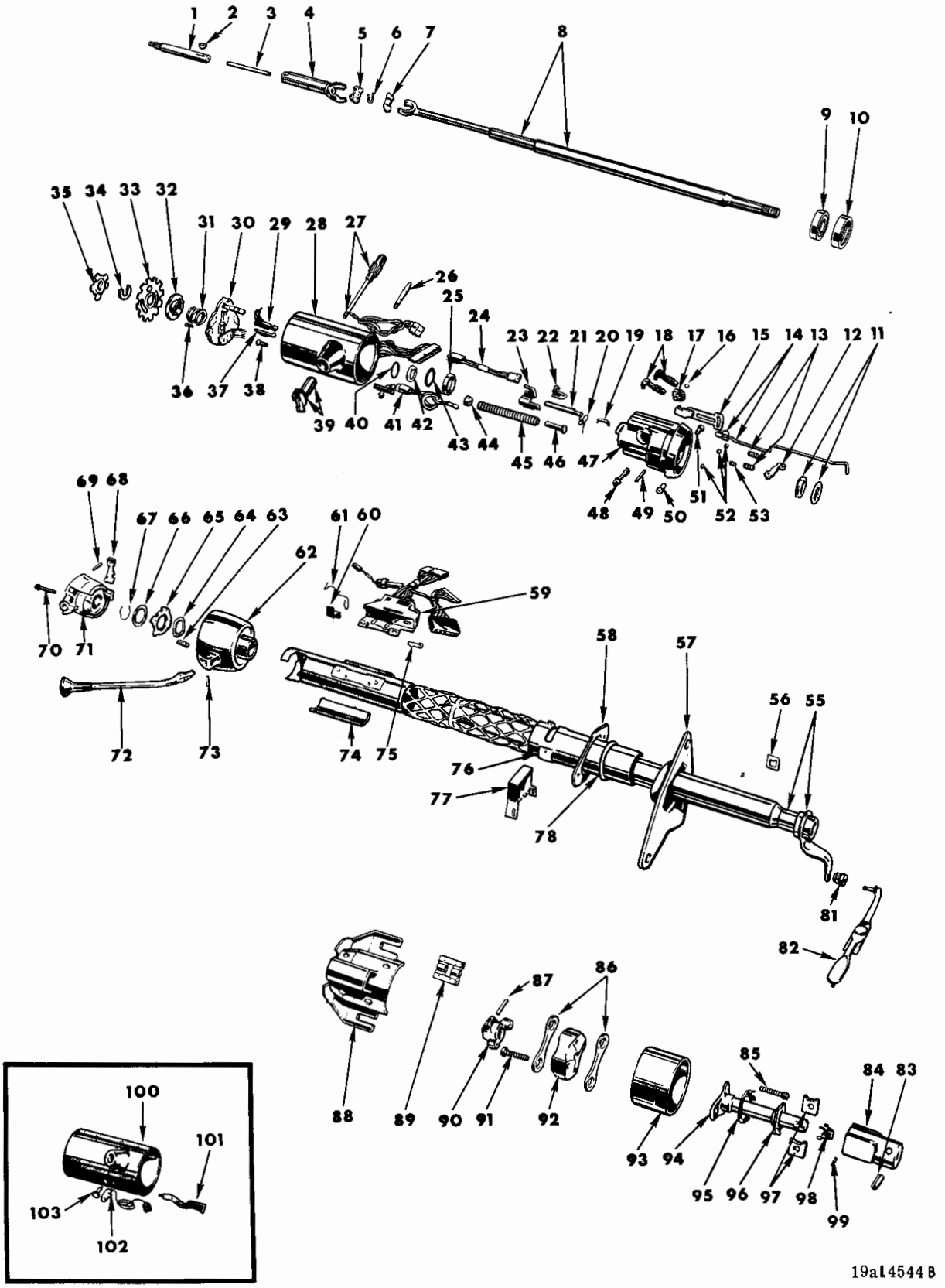

STEERING COLUMN - TILT-TELESCOPIC STEERING - P, D, C, Y

STEERING COLUMN - TILT-TELESCOPIC STEERING -
PLYMOUTH, DODGE, CHRYSLER AND IMPERIAL

Ref. No.	Name	Part Type Code
1	Upper Shaft	19-15-4
2	Wedge	19-14-80
3	Rod	19-14-81
4	Yoke	19-14-22
5	Sphere (Serviced in Sphere Kit)	19-15-1
6	Spring, Joint Preload (Serviced in Kit)	19-15-1
7	Sphere (Serviced in Sphere Kit)	19-15-1
8	Shaft, Complete	19-15-4
9	Bearing	19-14-4
10	Insulator	19-14-38
11	Bearing	19-14-4
12	Lever	19-14-48
13	Spring, Shoe	19-14-85
14	Actuator	19-46-59
15	Rack	19-46-58
16	Ring	19-46-64
17	Sector	19-46-61
18	Shoe	19-14-84
19	Spring, Rack Preload	19-14-85
20	Spring, Lock Bolt	19-14-85
21	Bolt	19-14-93
22	Shield, Turn Signal	19-14-118
23	Shield, Tilt Lever	19-14-118
24	Wiring	8-15-53
25	Bearing	19-14-4
26	Lever	19-14-48
27	Lever	8-50-129
28	Cover	19-14-24
29	Switch	8-35-59
30	Switch	8-50-82
31	Spring, Upper Bearing	19-14-85
32	Carrier	19-14-98
33	Lock	19-15-31
34	Ring	19-14-91
35	Retainer	19-14-108
36	Screw	8-50-84
37	Clip	8-35-67
38	Screw	8-50-84
39	Cylinder and Key Package	23-17-2
40	Seat	19-14-11
41	Lamp	8-40-5
42	Race	19-14-22
43	Bearing	19-14-4
44	Retainer, Spring	19-14-108
45	Spring	19-14-85
46	Guide	19-14-75
47	Housing	19-14-21
48	Shaft, Drive	19-15-4
49	Pin, Dowel	19-14-92
50	Pin, Pivot	19-14-92
51	Pin, Pivot	19-14-92
52	Bumper	19-14-102
53	Spring, Release Lever	19-14-85
54		
55	Tube (Serviced in 19-14-1 Jacket w/Tube)	
56	Actuator	19-46-59
57	Plate	19-14-23
58	Plate	19-14-23
59	Ignition Switch	8-35-59
60	Bracket	21-30-24
61	Pointer	21-30-23
62	Bowl (Serviced in Jacket)	19-14-1
63	Spring	21-30-100
64	Washer, Wave	19-14-89
65	Plate	19-14-82
66	Washer, Thrust	19-14-89
67	Ring, Shift Tube	19-46-50
68	Gate	21-30-11
69	Pin, Release Lever	19-14-92
70	Screw	19-14-93
71	Support	19-14-97
72	Lever	21-30-2
73	Pin	21-30-2
74	Guide	19-14-75
75	Support	19-46-55
76	Jacket, w/Shift Tube	19-14-1
77	Valve	4-25-20
78	"O" Ring	19-14-23
79		
80		
81	Grommet	19-48-49
82	Rod	19-48-1
83	Pin	19-15-24
84	Body	19-15-23
85	Bolt	19-15-23
86	Strap	19-15-51
87	Pin	19-15-23
88	Bracket	19-31-1
89	Spacer	19-14-36
90	Flange	19-15-43
91	Bolt	19-15-23
92	Coupling	19-15-23
93	Shield	19-15-111
94	Shaft, Lower	19-15-4
95	Cover	19-15-17
96	Seal	19-15-28
97	Shoe	19-15-44
98	Spring	19-15-35
99	Pin	19-15-23
100	Cover	19-14-24
101	Lever	8-50-129
102	Lamp	8-40-5
103	Knob	8-50-95

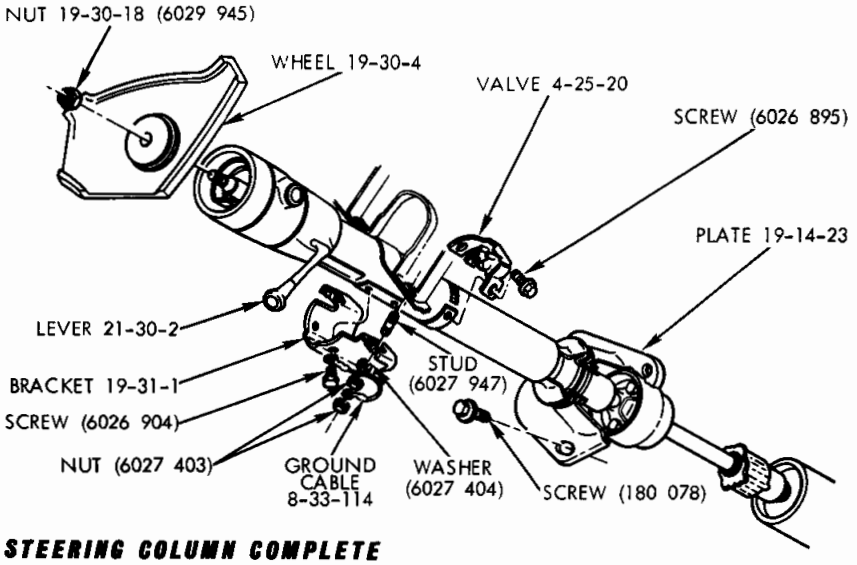

STEERING COLUMN COMPLETE

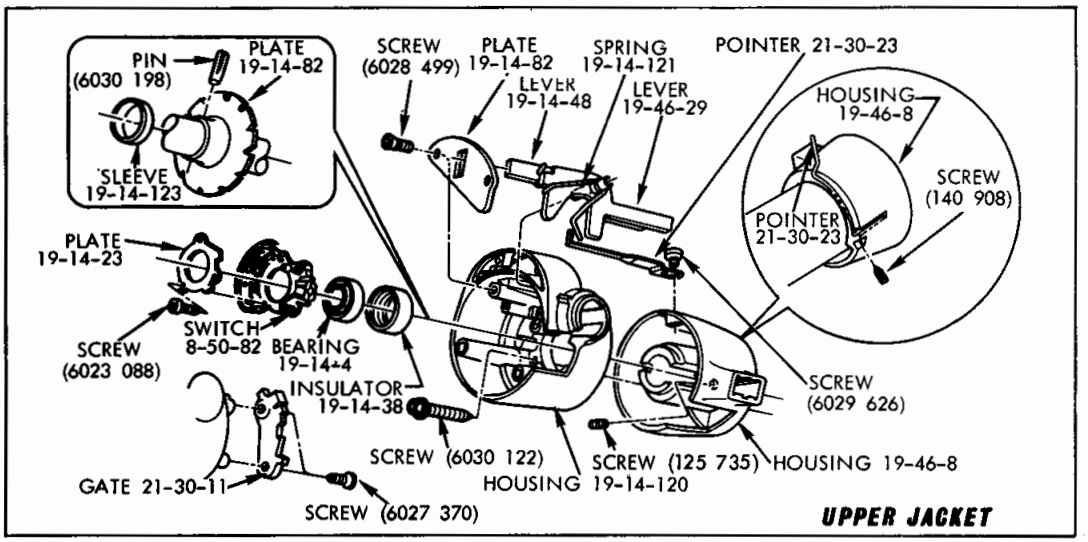

UPPER JACKET

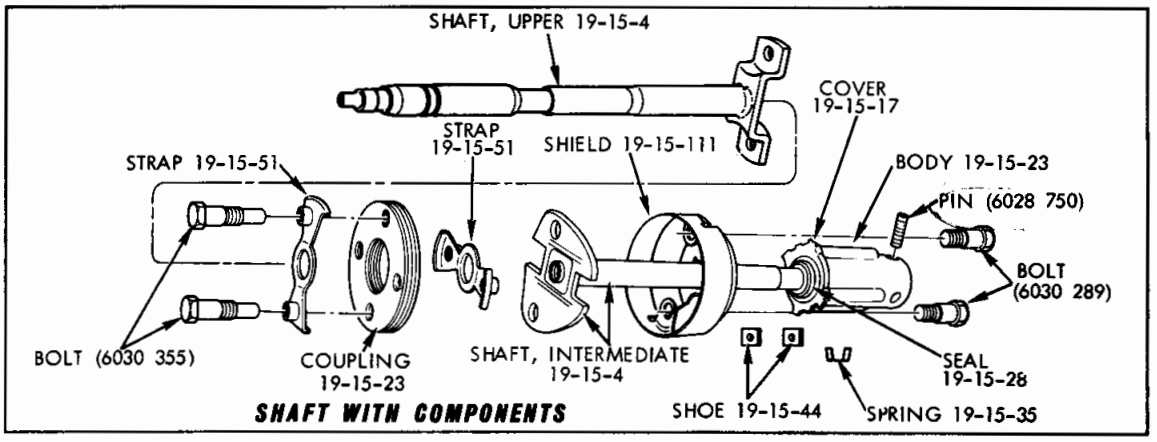

SHAFT WITH COMPONENTS

19a4647A

STEERING COLUMN (EXCEPT TILT-TELESCOPIC STEERING) - P, D, C, Y

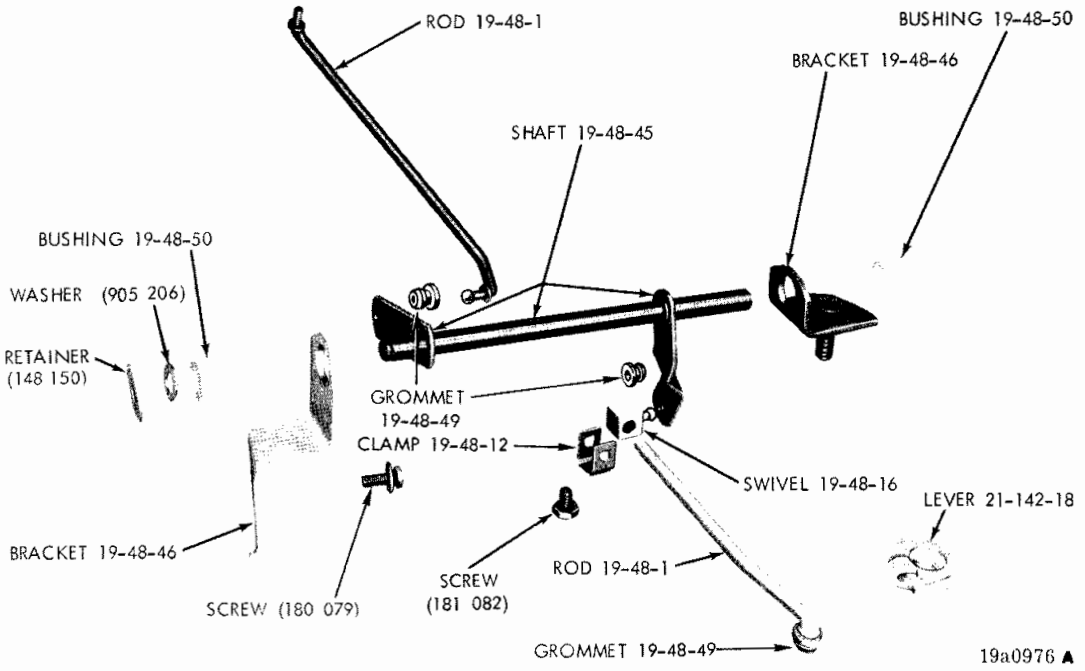

STEERING COLUMN GEARSHIFT CONTROLS - WITH AUTOMATIC TRANSMISSION

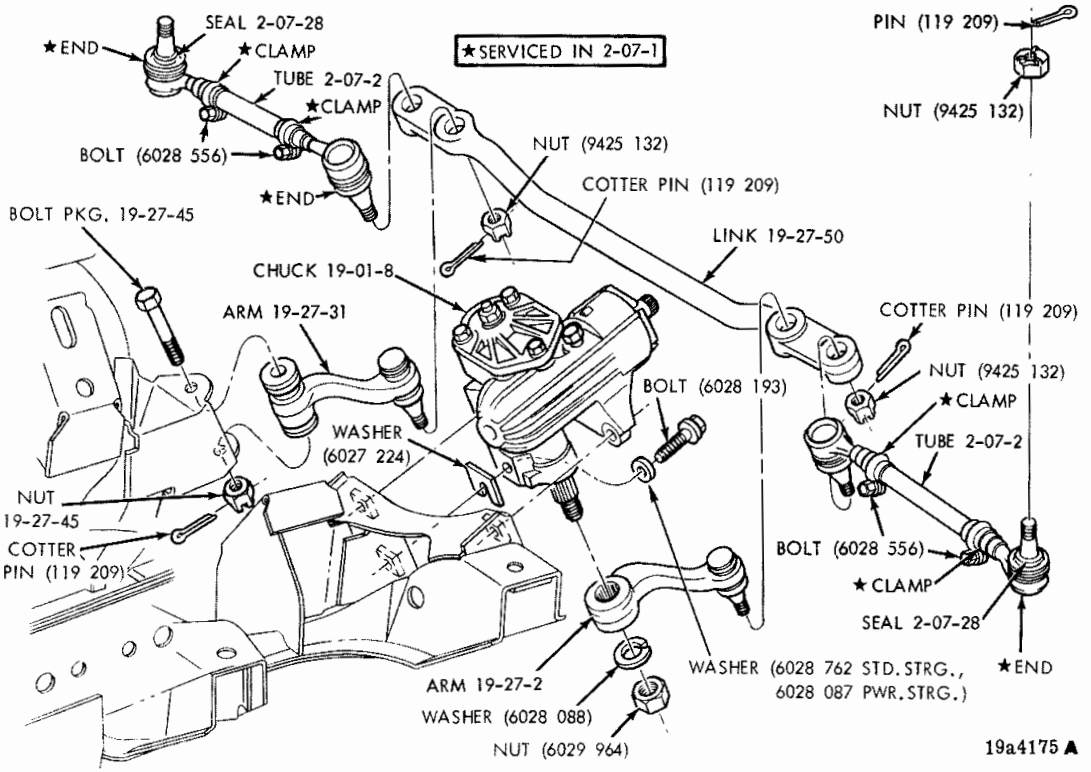

STEERING GEAR AND LINKAGE - V, L

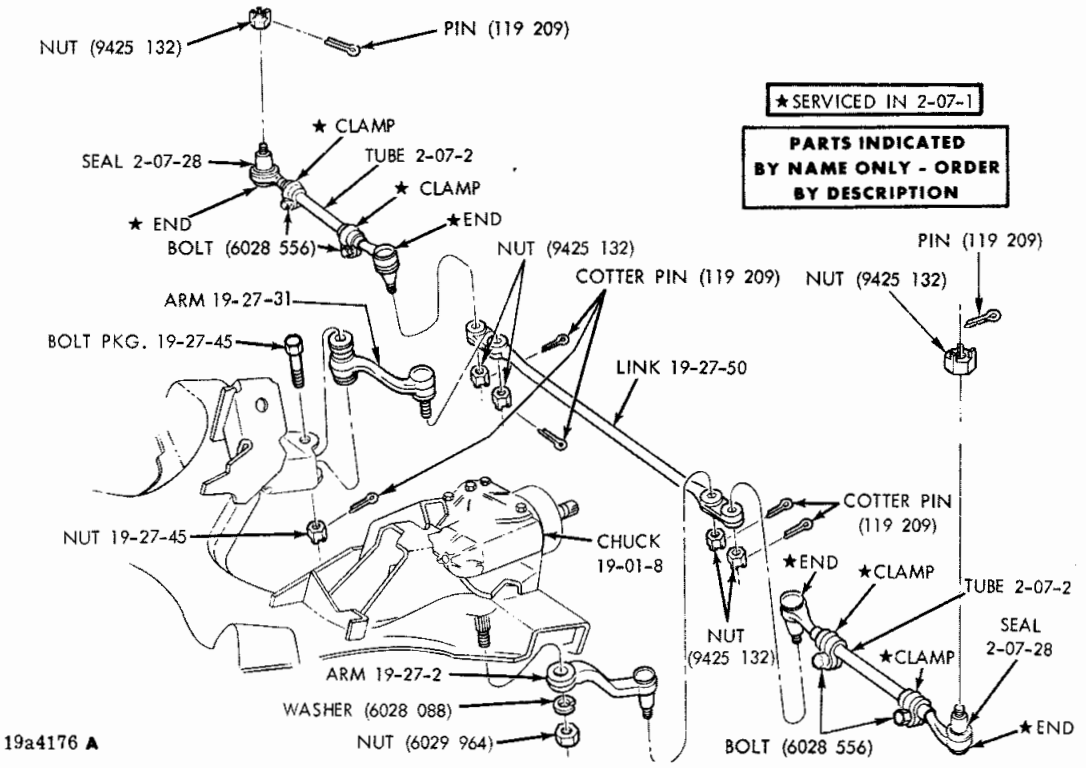

STEERING GEAR AND LINKAGE - B, J, R, W

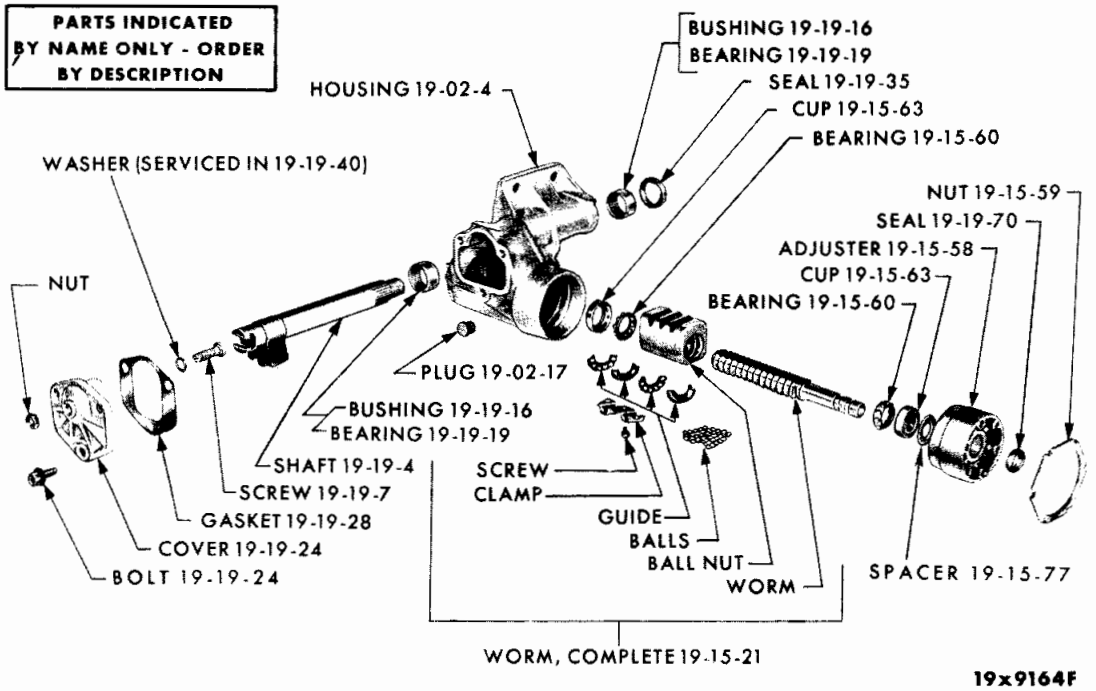

STANDARD STEERING GEAR (CHUCK) ASSEMBLY

NOTES

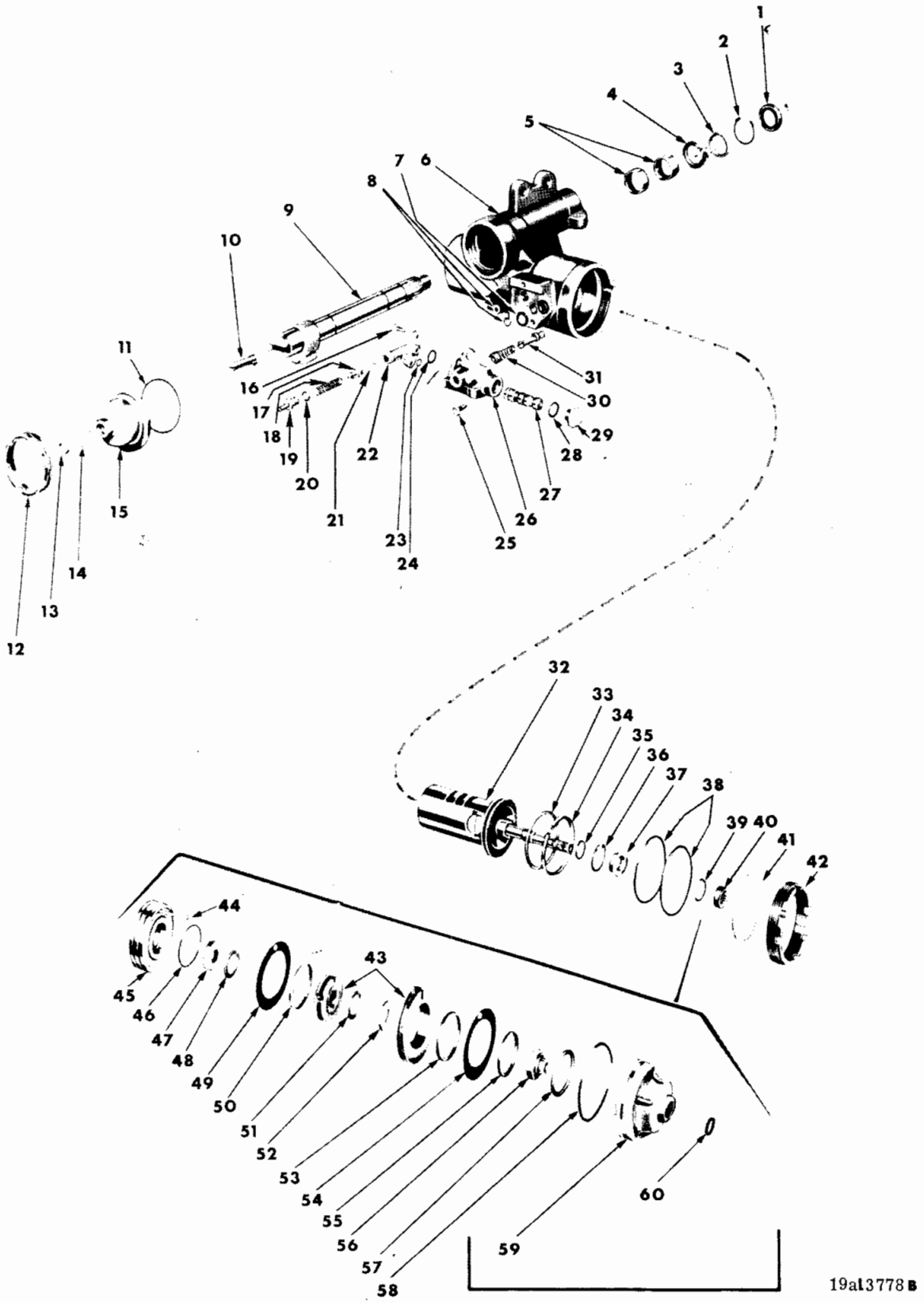

POWER STEERING GEAR (CHUCK) ASSEMBLY

POWER STEERING GEAR (CHUCK) ASSEMBLY

Ref. No.	Name	Part Type Code
1	Seal, Shaft Dust	19-19-38
2	Snap Ring, Shaft Seal	19-19-5
3	Retainer, Shaft Seal	19-19-36
4	Seal, Gear Shaft Oil	19-19-35
5	Bearing, Gear Shaft	19-19-19
6	Housing	19-02-4
7	"O" Ring, Housing to Valve	19-02-15
8	"O" Ring, Housing Port	19-02-15
9	Shaft	19-19-4
10	Screw, Shaft Adjusting	19-19-7
11	"O" Ring, Shaft Cover	19-19-26
12	Nut, Cover	19-19-32
13	Nut, Adjusting Screw	19-19-9
14	Seal, Shaft Adjusting Screw	19-19-35
15	Cover, Shaft	19-19-24
16	Screw	19-57-3
17	Plunger (Serviced in Valve Assy.	19-57-3)
18	Spring (Serviced in Valve Assy.	19-57-3)
19	Adapter, Return Hose	19-57-19
20	Gasket, Return Hose Adapter	19-57-20
21	Spring, Pressure Control	19-56-83
22	Body (Serviced in Valve Assy.	19-57-3)
23	Ring, Pressure Control	19-56-90
24	"O" Ring, Valve Housing	19-57-13
25	Screw (Serviced in Valve Assy.	19-57-3)
26	Housing (Serviced in Valve Assy.	19-57-3)
27	Piston (Serviced in Valve Assy.	19-57-3)
28	Gasket, Valve Plug	19-57-16
	(Also Serviced in Valve Assy.	19-57-3)
29	Plug (Serviced in Valve Assy.	19-57-3)
30	Spring	19-57-64
31	Lever, Valve	19-57-63
32	Worm w/Piston	19-15-38
33	Ring, Piston	19-56-6
34	Ring, Piston	19-56-6
35	Ring, Worm Seal	19-19-71
36	Ring, Cylinder Head Snap	19-01-62
37	Sleeve, Worm	19-19-72
38	"O" Ring, Cylinder Head	19-02-69
39	Seal, Worm Sleeve	19-19-70
40	Bearing, Worm	19-15-60
41	Washer, Housing Head Nut	19-14-13
42	Nut, Housing Head	19-14-19
43	Spacer, w/Center Race	19-15-69
44	"O" Ring, Ferrule	19-56-22
45	Head, Cylinder	19-01-60
46	Ring, Lower Reaction	19-01-52
47	Race, Inner	19-15-63
48	Bearing, Thrust	19-15-60
49	Spring, Reaction	19-01-50
50	Ring, Reaction	19-01-51
51	Bearing, Thrust	19-15-60
52	Race, Outer	19-15-63
53	Ring, Reaction	19-01-51
54	Spring, Reaction	19-01-50
55	Washer, Reaction	19-01-53
56	Nut, Thrust Bearing	19-15-65
57	Seal, Upper Reaction	19-01-52
58	"O" Ring, Housing Head	19-14-18
59	Head	19-02-55
60	Seal	19-19-35

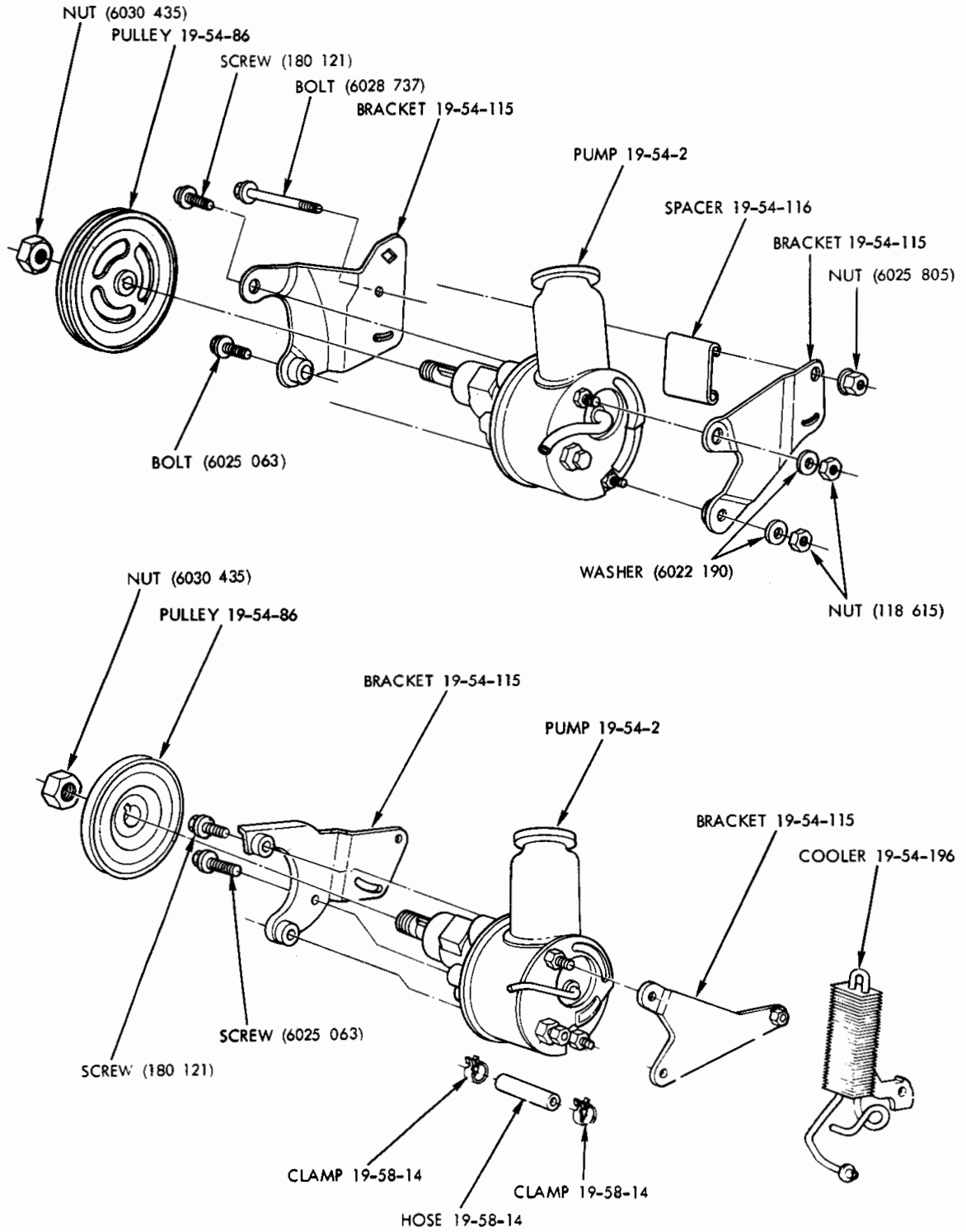

POWER STEERING PUMP WITH KEY SLOTTED SHAFT - WITH OR WITHOUT OIL COOLER

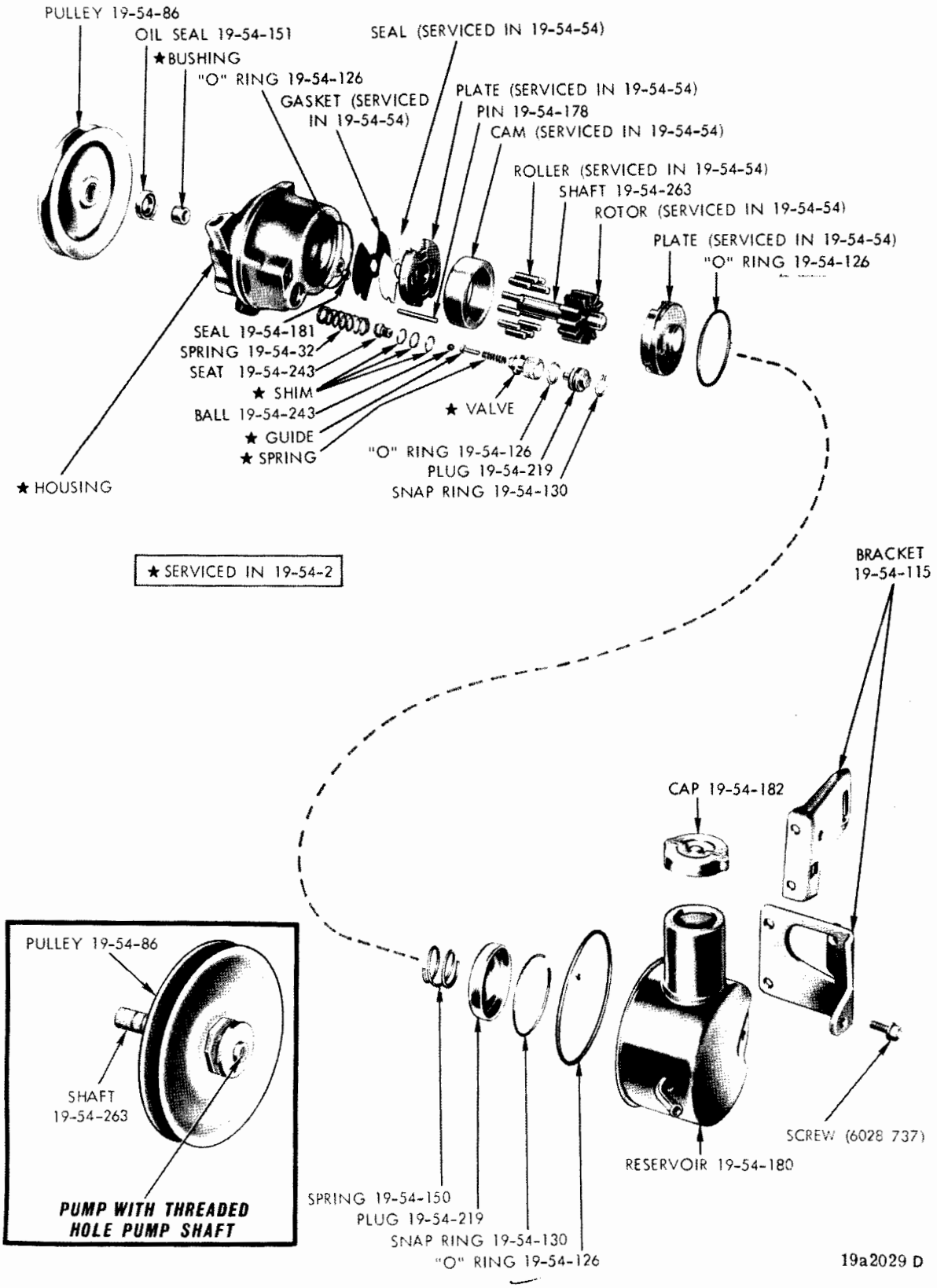

POWER STEERING PUMP WITH THREADED HOLE PUMP SHAFT

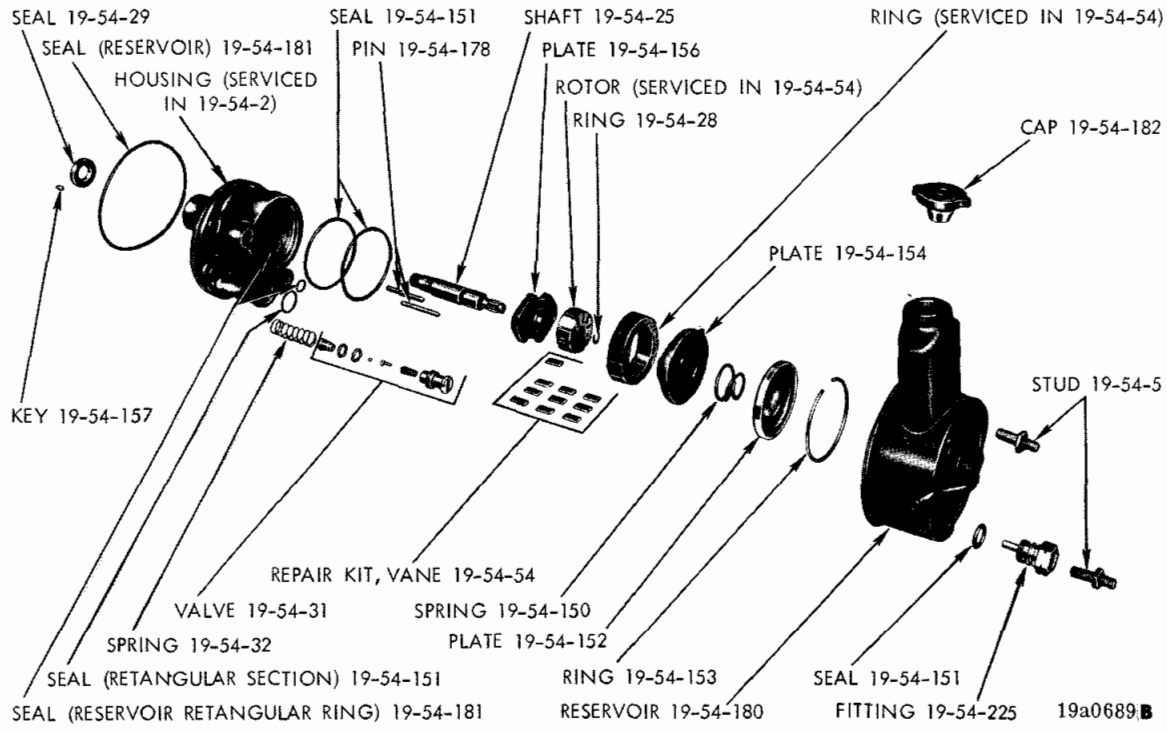

POWER STEERING PUMP (WITH KEY SLOTTED SHAFT)

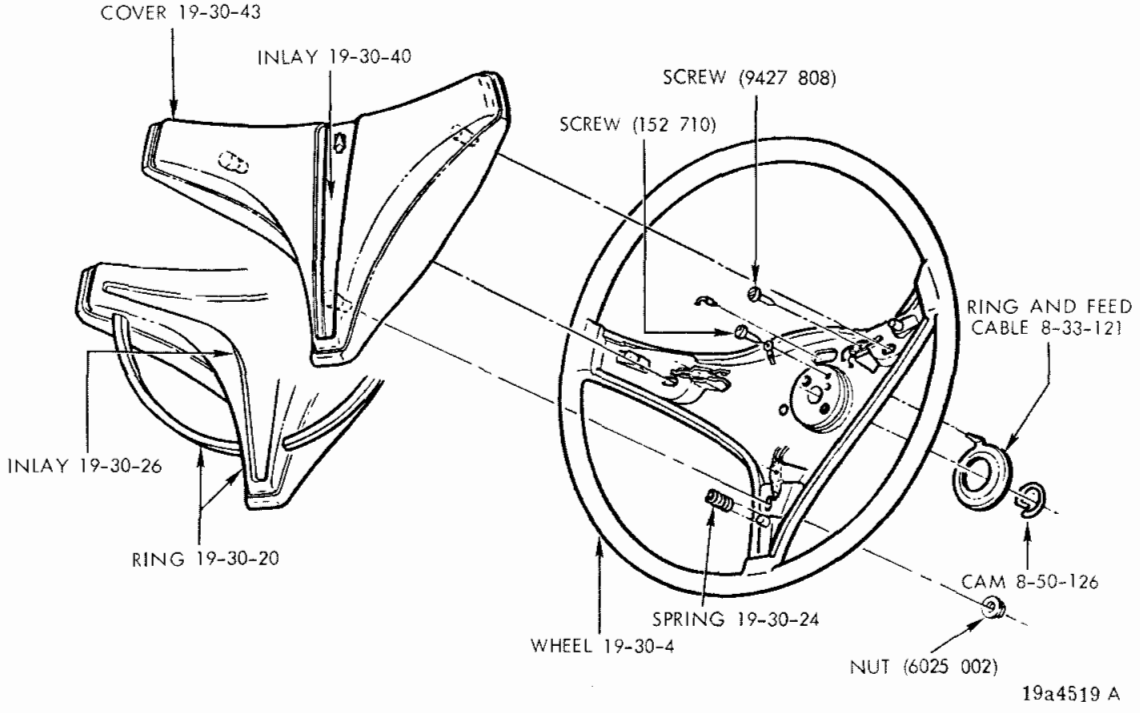

STEERING WHEEL WITH 3 SPOKES

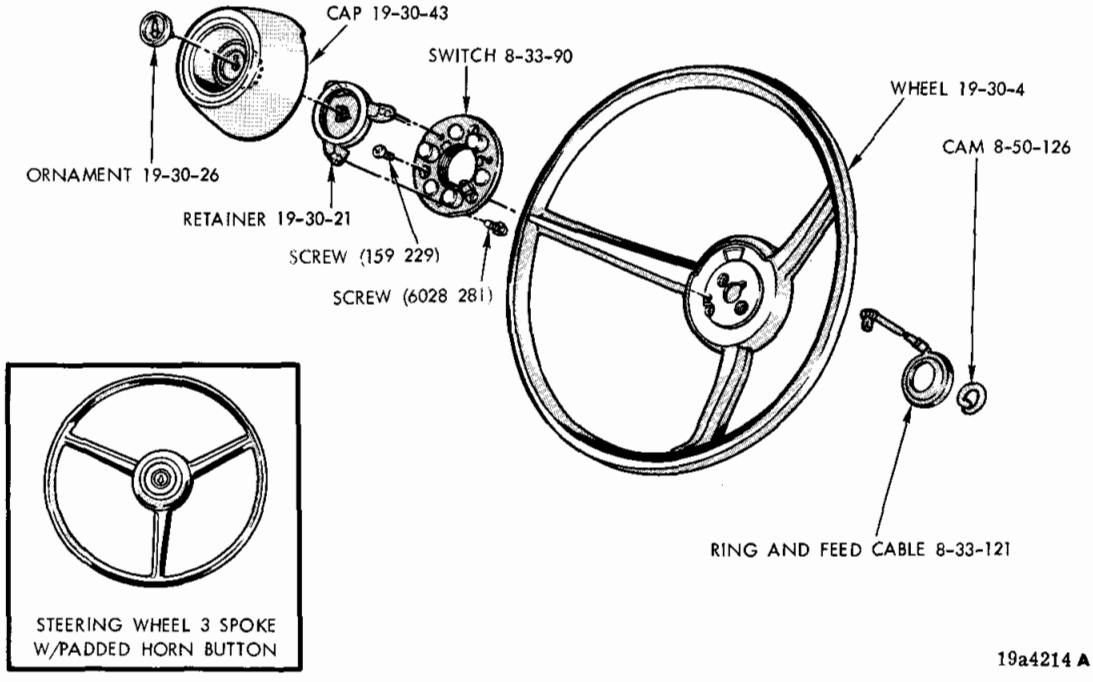

THREE SPOKE STEERING WHEEL WITH CENTER PADDED HORN BUTTON - V, L

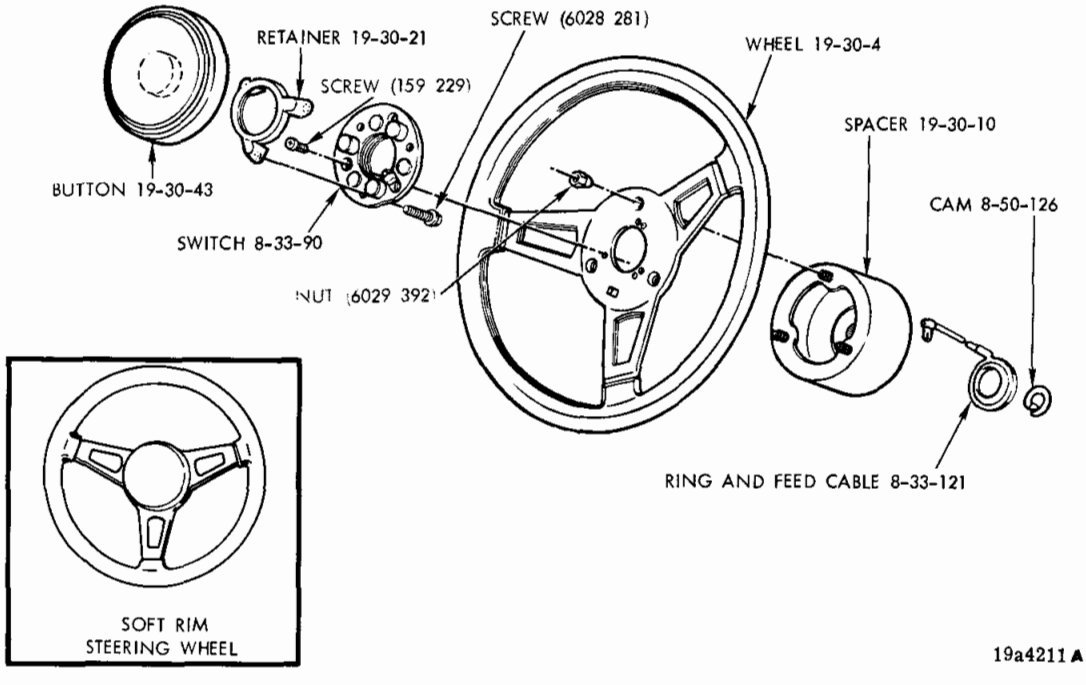

STEERING WHEEL WITH SOFT RIM - V, L, R, W

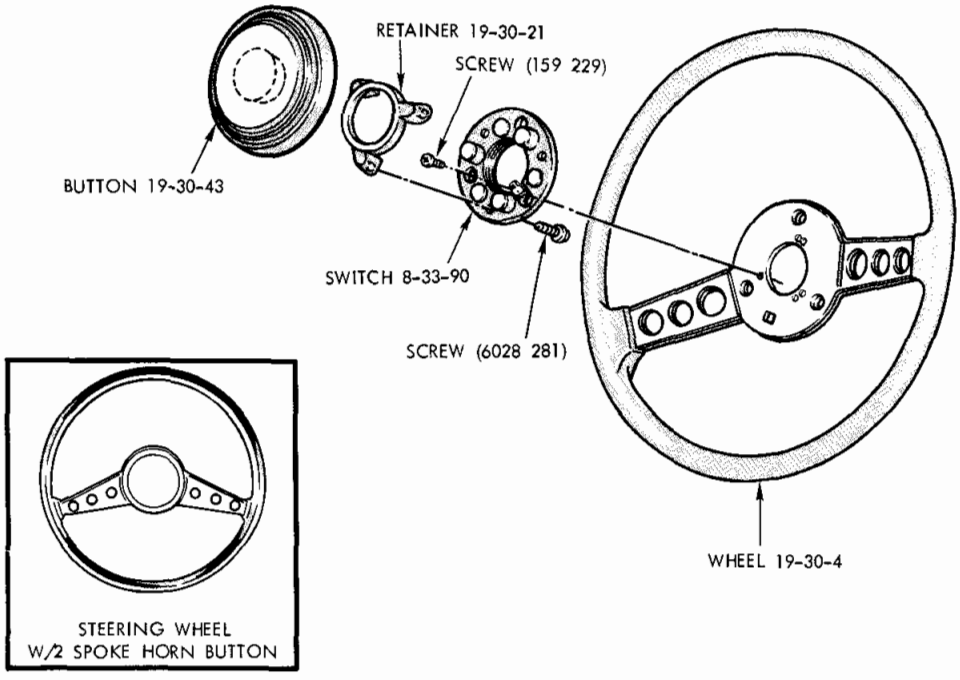

STEERING WHEEL (TWO SPOKE) - B, J

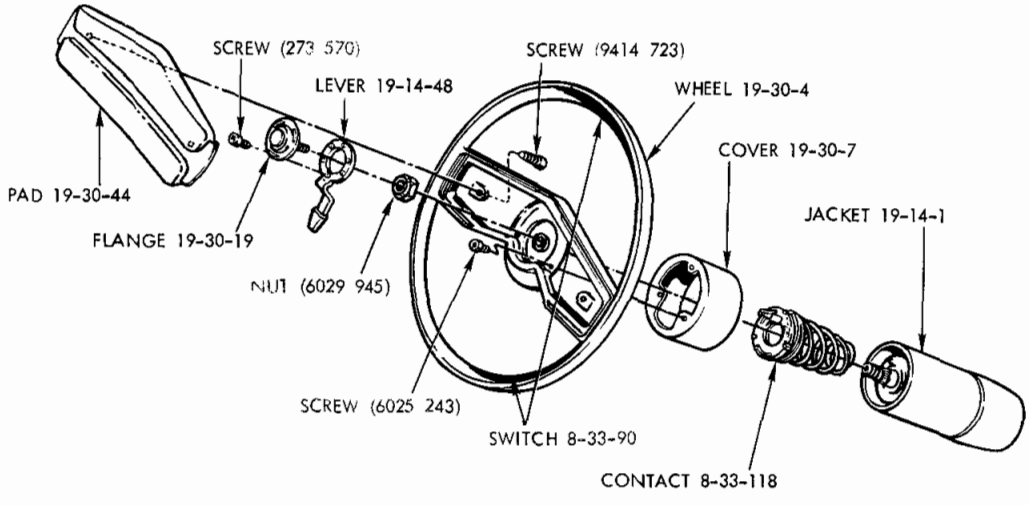

STEERING WHEEL WITH TILT-TELESCOPIC STEERING - P, D, C, Y

GROUP 21 - TRANSMISSION
MANUAL

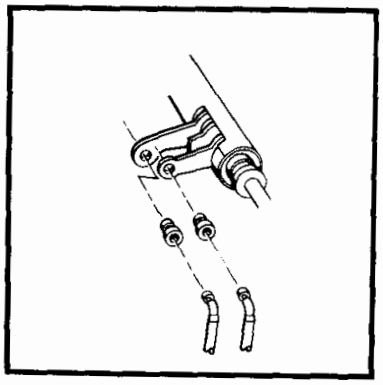

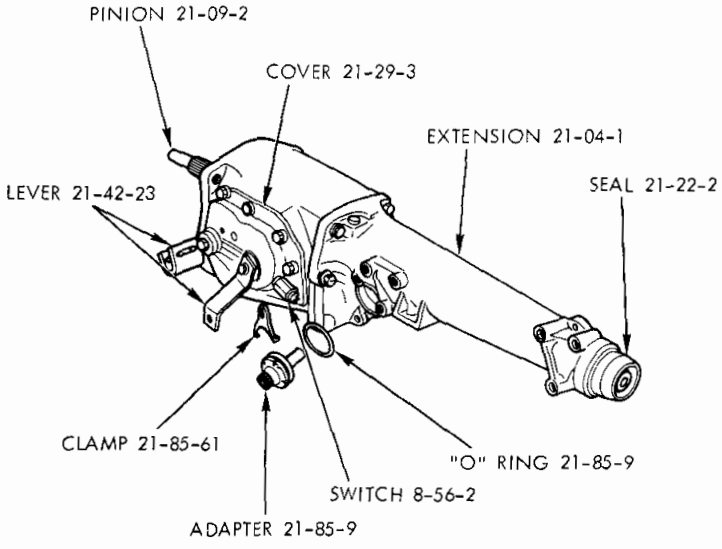

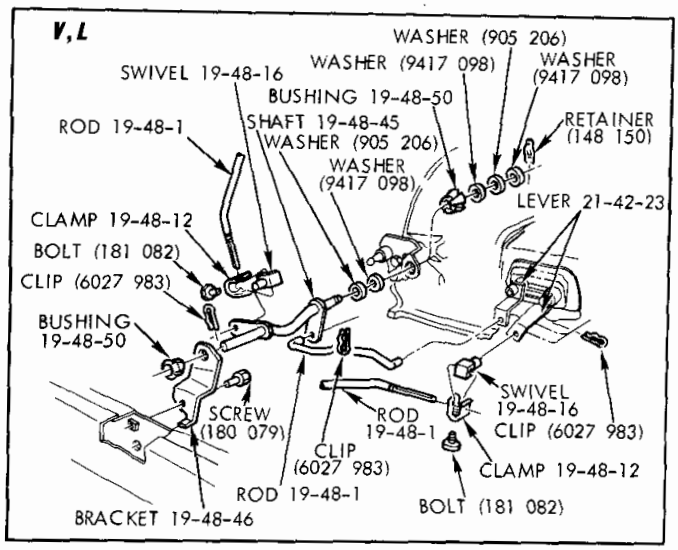

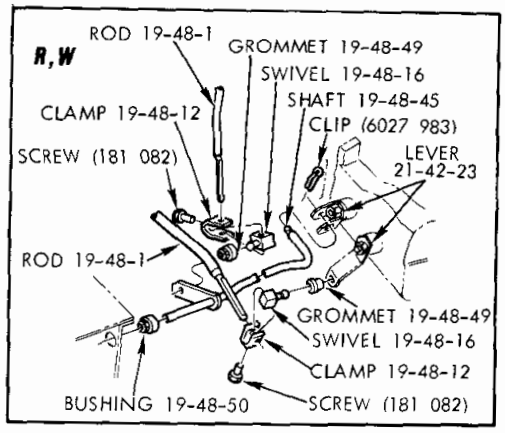

19a4829

COLUMN GEARSHIFT CONTROLS -
WITH A230 3 SPEED MANUAL TRANSMISSION

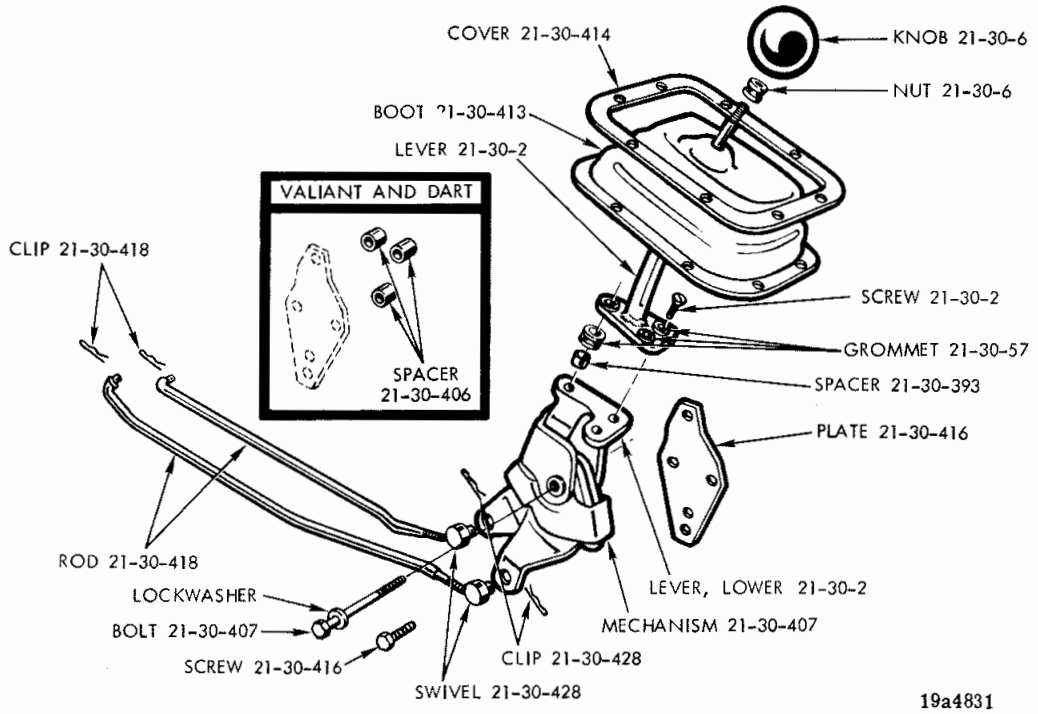

MANUAL 3 SPEED FLOOR SHIFT TRANSMISSION CONTROLS - WITHOUT CONSOLE

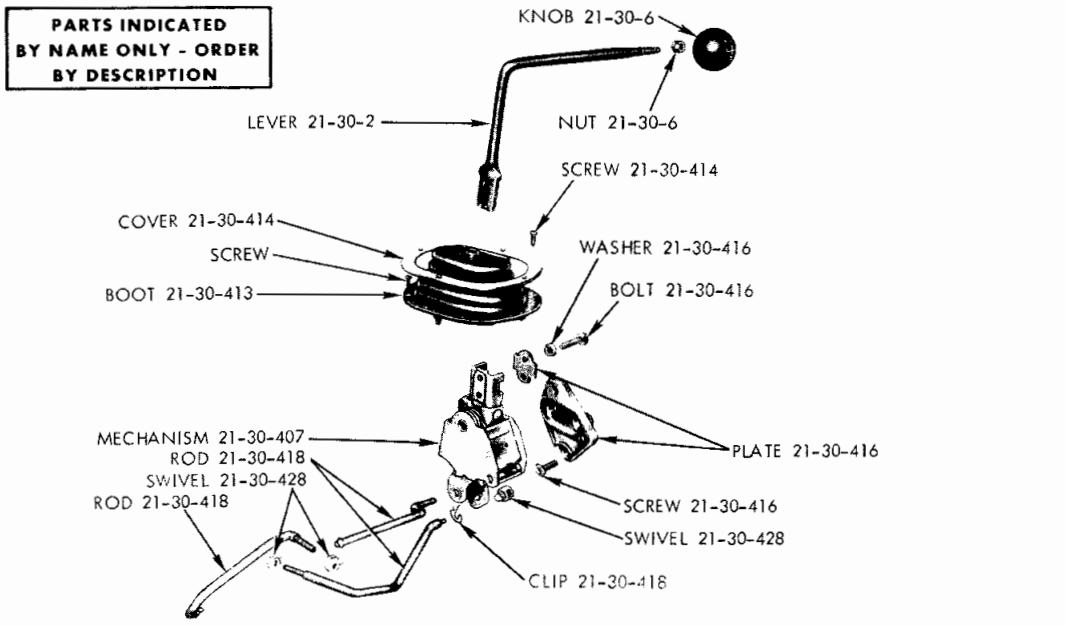

MANUAL 4 SPEED TRANSMISSION FLOOR SHIFT CONTROLS - V, L

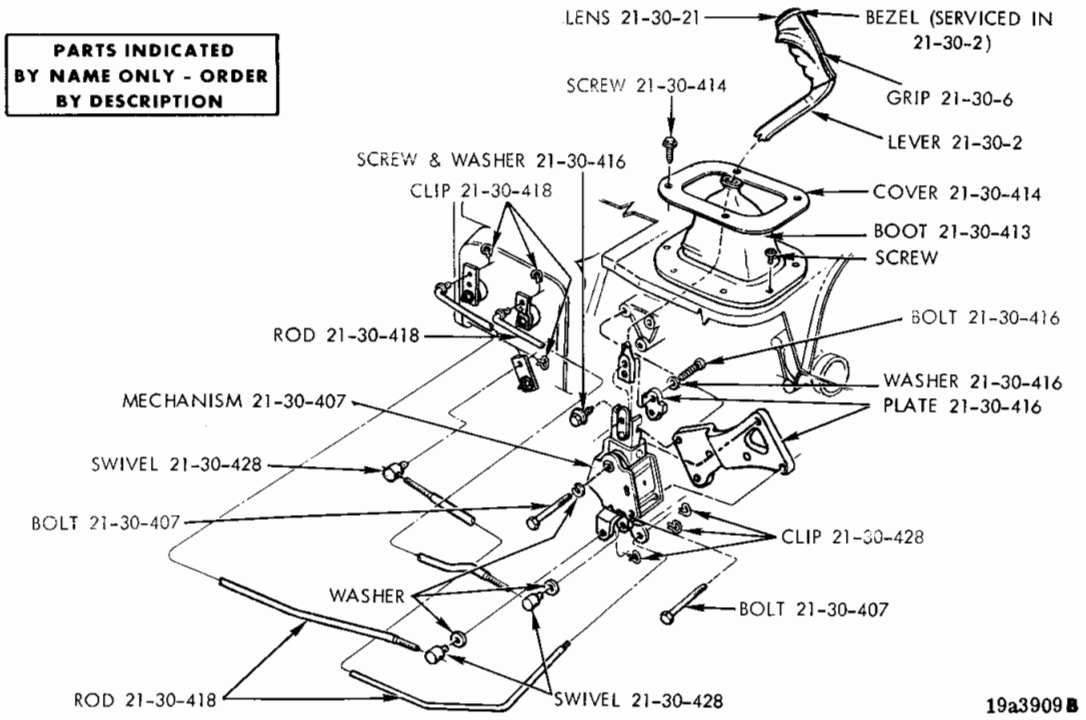

MANUAL 4 SPEED TRANSMISSION FLOOR SHIFT CONTROLS - B, J, R, W

NOTES

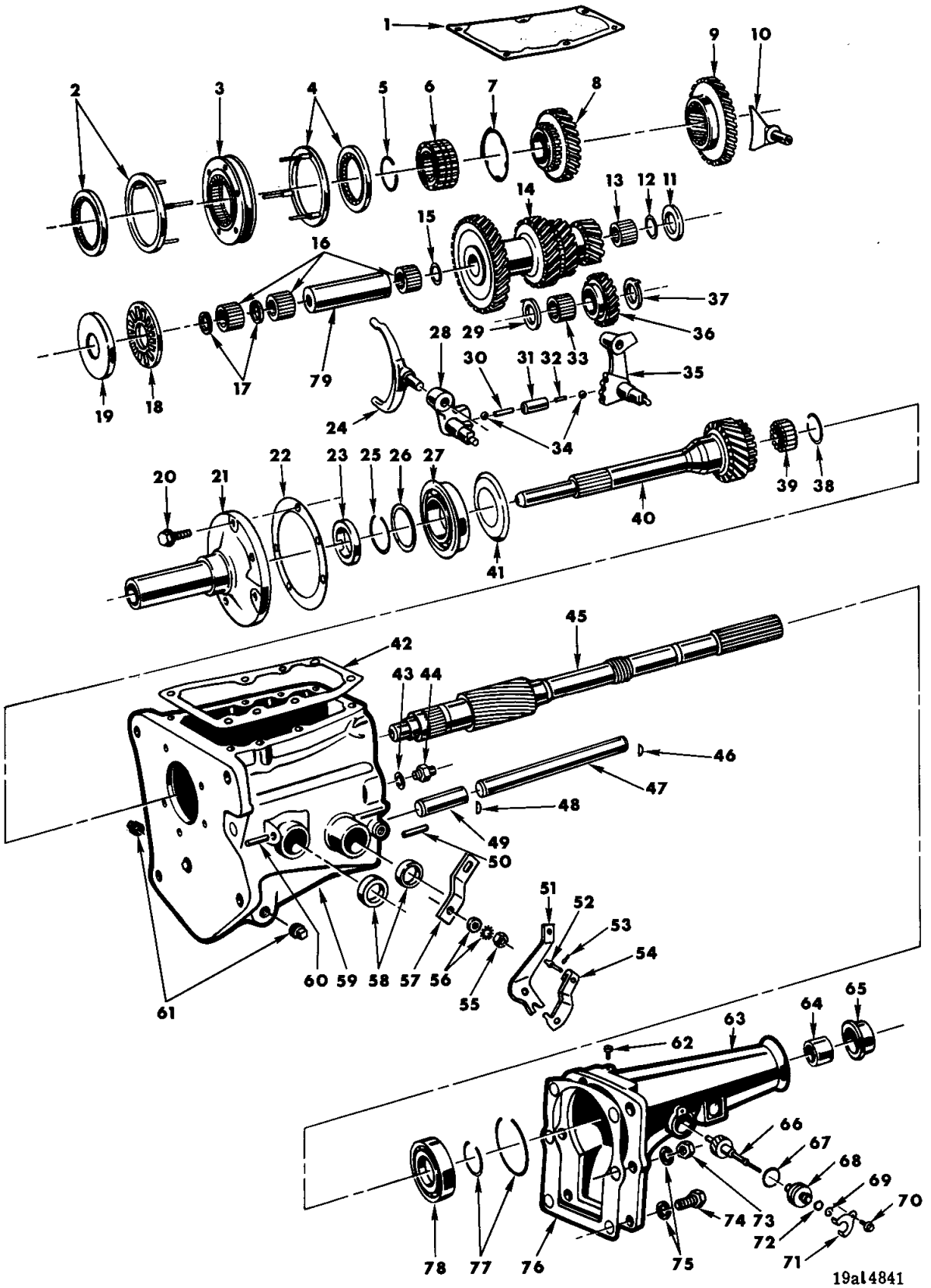

MANUAL 3 SPEED TRANSMISSION - 6 CYLINDER A250

MANUAL 3 SPEED TRANSMISSION - 6 CYLINDER A250

Ref. No.	Name	Part Type Code
1	Cover	21-29-3
2	Ring	21-14-19
3	Sleeve	21-14-6
4	Ring	21-14-19
5	Ring	21-14-20
6	Gear	21-14-5
7	Spring	21-14-15
8	Gear	21-10-16
9	Gear	21-10-4
10	Fork	21-39-3
11	Washer	21-15-33
12	Washer	21-25-6
13	Rollers	21-25-2
14	Gear	21-15-2
15	Washer	21-25-6
16	Rollers	21-25-2
17	Washer	21-25-6
18	Bearing	21-25-2
19	Retainer	21-25-2
20	Screw	
21	Retainer	21-09-29
22	Gasket	21-09-33
23	Seal	21-09-30
24	Fork	21-39-3
25	Ring	21-09-23
26	Washer	21-09-25
27	Bearing	21-09-5
28	Lever	21-42-11
29	Washer	21-11-9
30	Spring	21-34-47
31	Sleeve	21-34-45
32	Pin	21-34-42
33	Rollers	21-11-2
34	Ball	
35	Lever	21-42-11
36	Gear	21-11-1
37	Washer	21-11-9
38	Ring	21-17-7
39	Rollers	21-17-2
40	Pinion	21-09-2
41	Oil Slinger	21-09-19
42	Gasket	21-29-25
43	Gasket	8-56-46
44	Switch	8-56-2
45	Shaft	21-16-3
46	Key	21-24-22
47	Shaft	21-24-2
48	Key	21-12-2
49	Shaft	21-12-1
50	Pin	21-42-23
51	Lever	21-42-23
52	Pin	21-42-28
53	Clip	
54	Pawl	21-42-29
55	Nut	
56	Washer	
57	Lever	21-42-23
58	Seal	21-42-31
59	Case	21-03-1
60	Pin	21-42-23
61	Plug	
62	Vent	21-02-6
63	Extension	21-04-1
64	Bushing	21-04-11
65	Seal	21-22-2
66	Pinion	21-85-5
67	"O" Ring	21-85-9
68	Adapter	21-85-9
69	Ring	21-85-23
70	Bolt and Washer	
71	Clamp	21-85-61
72	Seal	21-85-22
73	Nut	
74	Screw	
75	Washer	
76	Gasket	21-04-2
77	Snap Ring	21-19-15
78	Bearing	21-19-2
79	Spacer	21-25-4

PARTS INDICATED BY NAME ONLY - ORDER BY DESCRIPTION

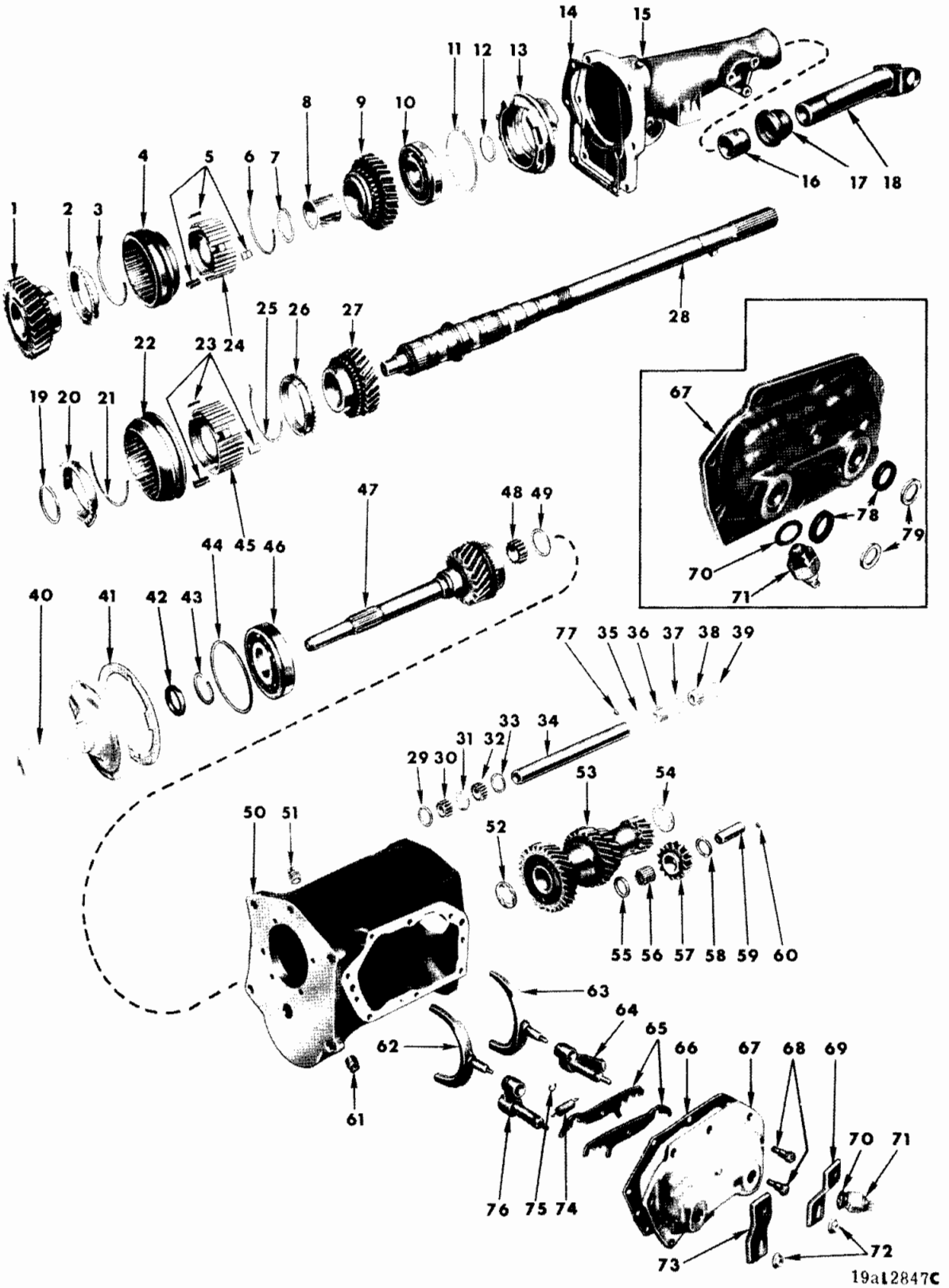
1 2 3 4 5 6 7 8 9 10 11 12 13 14 15 16 17 18
19 20 21 22 23 24 25 26 27 28
40 41 42 43 44 45 46 47 48 49
50 51 52 53 54 55 56 57 58 59 60
61 62 63 64 65 66 67 68 69 70 71 72 73 74 75 76 77 78 79
29 30 31 32 33 34 35 36 37 38 39
19a12847C

MANUAL 3 SPEED TRANSMISSION - A-230

Ref. No.	Name	Part Type Code
1	Gear, Low	21-10-3
2	Ring	21-14-19
3	Spring	21-14-15
4	Sleeve (Serviced in 21-14-1)	
5	Strut (Serviced in 21-14-1)	
6	Spring	21-14-15
7	Snap Ring	21-14-20
8	Bushing (Serviced in 21-10-72)	
9	Gear, Reverse	21-10-72
10	Bearing	21-19-2
11	Snap Ring	21-19-15
12	Snap Ring	21-19-15
13	Retainer	21-23-2
14	Gasket	21-04-2
15	Extension	21-04-1
16	Bushing	21-04-11
17	Seal	21-22-2
18	Yoke	16-20-1
19	Snap Ring	21-14-20
20	Ring	21-14-19
21	Spring	21-14-15
22	Sleeve (Serviced in 21-14-1)	
23	Strut (Serviced in 21-14-1)	
24	Gear (Serviced in 21-14-1)	
25	Spring	21-14-15
26	Ring	21-14-19
27	Gear, Second	21-10-16
28	Shaft, Output	21-16-3
29	Washer	21-25-6
30	Roller	21-25-2
31	Washer	21-25-6
32	Roller	21-25-2
33	Washer	21-25-6
34	Countershaft	21-24-2
35	Washer	21-25-6
36	Roller	21-25-2
37	Washer	21-25-6
38	Roller	21-25-2
39	Washer	21-25-6
40	Retainer	21-09-29
41	Gasket	21-09-33
42	Seal	21-09-30
43	Snap Ring	21-09-23
44	Snap Ring	21-09-23
45	Gear (Serviced in 21-14-1)	
46	Bearing	21-09-5
47	Pinion, Drive	21-09-2
48	Roller	21-17-2
49	Snap Ring	21-17-7
50	Case	21-03-1
51	Plug, Filler (1/2"-14)	
52	Washer	21-15-33
53	Gear, Countershaft	21-15-2
54	Washer	21-15-33
55	Washer	21-11-9
56	Roller	21-11-2
57	Gear	21-11-1
58	Washer	21-11-9
59	Shaft	21-12-1
60	Key	21-12-2
61	Plug, Drain	21-03-1
62	Fork	21-39-3
63	Fork	21-39-3
64	Lever	21-42-11
65	Lever, Interlock	21-42-23
66	Gasket	21-29-25
67	Housing	21-29-3
68	Bolt	21-29-3
69	Lever	21-42-23
70	Gasket	8-56-46
71	Switch	8-56-2
72	Nut, Locking	
73	Lever	21-42-23
74	Spring	21-34-47
75	Snap Ring	
76	Lever	21-42-11
77	Key	21-24-22
78	Seal	21-42-31
79	Retainer	21-42-34

PARTS INDICATED BY NAME ONLY - ORDER BY DESCRIPTION

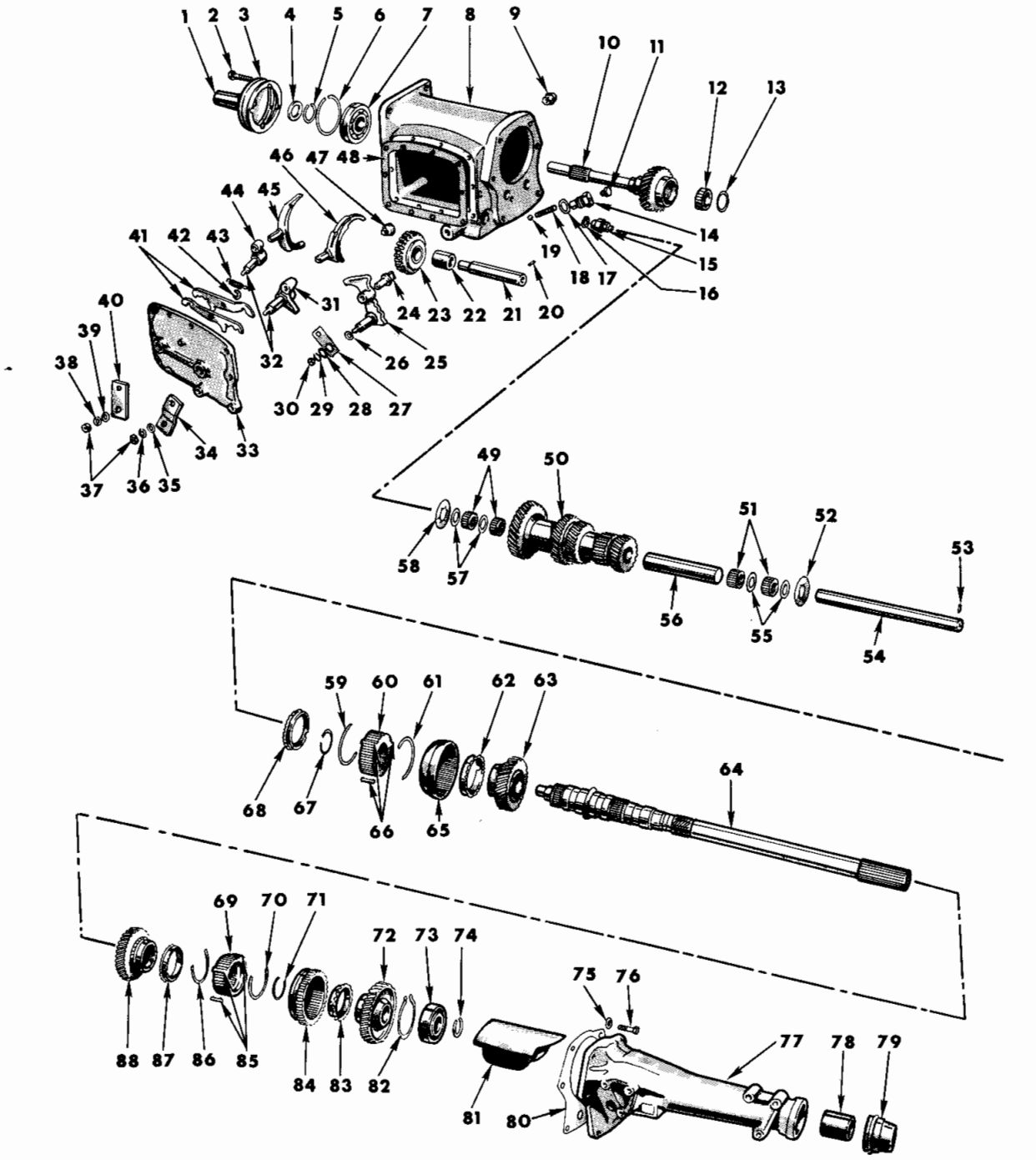

19a14493

MANUAL 4 SPEED TRANSMISSION - A833

MANUAL 4 SPEED TRANSMISSION - A833

Ref. No.	Name	Part Type Code
1	Retainer	21-09-29
2	Screw	21-09-31
3	Gasket	21-09-33
4	Seal	21-09-30
5	Snap Ring	21-09-23
6	Snap Ring	21-09-23
7	Bearing	21-09-5
8	Case	21-03-1
9	Plug, Filler (1/2"-14 Pipe)	
10	Pinion	21-09-2
11	Plug	
12	Roller	21-17-2
13	Snap Ring	21-17-7
14	Retainer	21-34-51
15	Switch	8-56-2
16	Gasket	8-56-46
17	Gasket	21-34-53
18	Spring	21-34-47
19	Ball	21-34-47
20	Key	21-12-2
21	Shaft	21-12-1
22	Bushing (Serviced in 21-11-1)	
23	Gear	21-11-1
24	Fork	21-39-3
25	Lever	21-42-11
26	Seal	21-42-31
27	Lever	21-42-23
28	Washer	
29	Washer	
30	Nut	
31	Lever	21-42-11
32	Seal	21-24-31
33	Housing	21-29-3
34	Lever	21-42-23
35	Washer	
36	Washer	
37	Nut	
38	Washer	
39	Washer	
40	Lever	21-42-23
41	Lever, Interlock	21-42-23
42	Snap Ring	21-42-23
43	Spring	21-34-47
44	Lever	21-42-11
45	Fork	21-39-3
46	Fork	21-39-3
47	Plug, Drain	21-03-1
48	Gasket	21-29-25
49	Rollers	21-25-2
50	Gear	21-15-2
51	Roller	21-25-2
52	Washer	21-15-33
53	Key	21-24-22
54	Countershaft	21-24-2
55	Washer	21-25-6
56	Spacer	21-25-4
57	Washer	21-25-6
58	Washer	21-15-33
59	Spring	21-14-15
60	Gear, Third and Direct (Serviced in 21-14-1)	
61	Spring	21-14-15
62	Ring	21-14-19
63	Gear, Third	21-10-31
64	Mainshaft	21-16-3
65	Sleeve, Third and Direct (Serviced in 21-14-1)	
66	Plate (Serviced in 21-14-1)	
67	Snap Ring	21-14-1
68	Ring	21-14-19
69	Gear, First and Second (Serviced in 21-14-1)	
70	Spring	21-14-15
71	Snap Ring	21-14-1
72	Gear, First Speed	21-10-3
73	Bearing	21-19-2
74	Snap Ring	21-19-15
75	Washer	
76	Bolt	
77	Extension	21-04-1
78	Bushing	21-04-11
79	Seal	21-22-2
80	Gasket	21-04-2
81	Baffle	21-04-17
82	Snap Ring	21-19-15
83	Ring	21-14-19
84	Gear, First, Second and Reverse (Serviced in 21-14-1)	
85	Plate (Serviced in 21-14-1)	
86	Spring	21-14-15
87	Ring	21-14-19
88	Gear, Second	21-10-16

PARTS INDICATED BY NAME ONLY - ORDER BY DESCRIPTION

NOTES

GROUP 19 - STEERING (MANUAL)

ARM AND IDLER ARM, LINKAGE 19-27
BRACKET OR SUPPORT, COLUMN 19-31
GEAR ASSEMBLY 19-01
HOUSING GEAR 19-02
JACKET, COLUMN 19-14
ROD, GEARSHIFT CONTROL 19-48
SHAFT, GEAR 19-19
SHAFT AND COUPLING COLUMN 19-15
TUBE, COLUMN GEAR SHIFT 19-46
WHEEL 19-30

Printed in U.S.A.
November 1974

CODE	PART NAME	ENG. TYPE OR CU. IN	V	B J	L	R	W	P	D	C (L M)	C (P)	C (H S)	Y	PART NUMBER
19-01-8	**CHUCK, Strg. Gear**		1	1	1	1	1	—	—	—	—	—	—	3643 016
	Bolt, Mounting		3	3	3	3	3	—	—	—	—	—	—	6028 193
	Washer		3	3	3	3	3	—	—	—	—	—	—	6028 762
19-02-4	**HOUSING, Strg. Gear**		1	1	1	1	1	—	—	—	—	—	—	2948 812
	Washer, Housing to Frame		AR	AR	AR	AR	AR	—	—	—	—	—	—	6027 224
19-02-17	PLUG, Strg. Gear Housing Oil Filler		1	1	1	1	1	—	—	—	—	—	—	1673 974
19-14-1	**JACKET, Strg. Column**													
	w/3 Speed Man. Trans. Col. Shift		1	—	1	—	—	—	—	—	—	—	—	3748 206
	w/Auto. Trans. Col. Shift		1	—	1	—	—	—	—	—	—	—	—	3748 376
	w/Floor Shift		1	—	1	—	—	—	—	—	—	—	—	3748 378
	w/Auto. Trans. Col. Shift		—	1	—	—	—	—	—	—	—	—	—	3748 458
	w/Floor Shift		—	1	—	—	—	—	—	—	—	—	—	3748 459
	w/3 Speed Man. Trans. Col. Shift		—	—	—	1	1	—	—	—	—	—	—	3748 207
	w/Auto. Trans. Col. Shift		—	—	—	1	1	—	—	—	—	—	—	3748 232
	w/Floor Shift		—	—	—	1	1	—	—	—	—	—	—	3748 233
19-14-4	BEARING, Strg. Column Shaft													
	Upper		1	1	1	1	1	—	—	—	—	—	—	2265 656
	Lower		1	1	1	1	1	—	—	—	—	—	—	3748 241
	Snap Ring, Bearing Upper		1	1	1	1	1	—	—	—	—	—	—	6024 333
19-14-10	SUPPORT, w/Bearing, Strg. Col. Shaft, Lower													
	w/Man. Trans. Col. Shift		1	—	1	1	1	—	—	—	—	—	—	3575 884
	SUPPORT, Strg. Col. Shaft Bearing,													
	w/Floor Shift		1	1	1	1	1	—	—	—	—	—	—	3748 229
	Snap Ring, Bearing Lower		1	1	1	1	1	—	—	—	—	—	—	6023 045
	Screw, Bearing Support, w/3 Speed Man. Trans.		3	—	3	3	3	—	—	—	—	—	—	9417 749
19-14-16	RING, Strg. Col. Lower Bearing													
	Except Man. Trans. Col. Shift		1	1	1	—	—	—	—	—	—	—	—	3748 489
19-14-21	HOUSING, Strg. Column Shaft Bearing,													
	w/Auto. Trans. Column Shift		1	1	1	1	1	—	—	—	—	—	—	3575 572
	Except Auto. Trans. Col. Shift		1	1	1	1	1	—	—	—	—	—	—	3575 231
	SCREW, Bearing Housing		3	3	3	3	3	—	—	—	—	—	—	6029 932
	Washer, Spring		1	1	1	1	1	—	—	—	—	—	—	6023 046
19-14-23	PLATE, Strg. Column Shaft													
	Bearing Retainer		1	1	1	1	1	—	—	—	—	—	—	2950 989
	PLATE, Strg. Column Jacket Support													
	Complete		1	—	1	—	—	—	—	—	—	—	—	3748 214
			—	1	—	—	—	—	—	—	—	—	—	2950 601
			—	—	—	1	1	—	—	—	—	—	—	3748 215
	PLATE, Strg. Column Jacket													
	Support "O" Ring		—	1	—	—	—	—	—	—	—	—	—	3575 733
	Screw, Retainer Plate		3	3	3	3	3	—	—	—	—	—	—	180 078
	"O" Ring, Strg - Column Jacket Plate													6026 275
19-14-30	GROMMET, Strg. Column		1	—	1	1	1	—	—	—	—	—	—	3748 153
19-14-36	SPACER, Strg. Column Support Bracket		2	—	2	2	2	—	—	—	—	—	—	3748 492
19-14-37	BRACKET, Strg. Column		—	1	—	—	—	—	—	—	—	—	—	2950 956
	Screw, w/Washer, to Strg. Column		—	4	—	—	—	—	—	—	—	—	—	6026 904
19-14-38	INSULATOR, Strg. Column Shaft Upper Bearing		1	1	1	1	1	—	—	—	—	—	—	2925 491
19-14-48	LEVER, Strg. Column Shaft Lock,		1	1	1	1	1	—	—	—	—	—	—	2950 840
19-14-49	TROUGH, Strg. Column Wiring													
		Blue	—	—	—	1	1	—	—	—	—	—	—	P610 KB7
		Green	—	—	—	1	1	—	—	—	—	—	—	P610 KG6
		Tan	—	—	—	1	1	—	—	—	—	—	—	P610 KT8
		Black	1	—	1	1	1	—	—	—	—	—	—	P610 KX9
		Gold	—	—	—	1	1	—	—	—	—	—	—	P610 KY7
		Parchment	—	—	—	1	1	—	—	—	—	—	—	P610 KL5
		Black	—	1	—	—	—	—	—	—	—	—	—	P611 JX9
	SCREW, Wiring Trough		2	2	2	2	2	—	—	—	—	—	—	9432 699

CARLINES: J - Challenger, B - Barracuda, V - Valiant, L - Dart, R - Satellite, W - Coronet - Charger, P - Plymouth, D - Dodge, C - Chrysler, Y - Imperial

AR Indicates use as required.

Numerals in parentheses ( ) refer to notes.

# Indicates parts not listed in any previous parts book.

★ Indicates change or addition.

Printed in U.S.A.
November 1974

CODE	PART NAME	ENG. TYPE OR CU. IN	V	B J	L	R	W	P	D	C (L M)	C (P)	C (H S)	Y	PART NUMBER
19-14-59	CAN, Strg. Column Energy Absorbing		—	1	—	—	—	—	—	—	—	—	—	2950 812
	Nut		—	3	—	—	—	—	—	—	—	—	—	6029 392
19-14-68	SEAL, Strg. Col. Jacket To Tube, w/Auto. Trans. Col. Shift,		1	1	1	1	1	—	—	—	—	—	—	3575 082
19-14-82	PLATE, Strg. Column Shaft Lock,		1	1	1	1	1	—	—	—	—	—	—	2950 980
	PLATE, Strg. Column Lock Lever Guide		1	1	1	1	1	—	—	—	—	—	—	2950 839
	Screw, Guide Plate		2	2	2	2	2	—	—	—	—	—	—	6028 499
	Pin, Lock Plate		1	1	1	1	1	—	—	—	—	—	—	6030 198
19-14-85	SPRING, Strg. Column Lower Bearing		1	1	1	1	1	—	—	—	—	—	—	3748 242
19-14-120	HOUSING, Strg. Column Lock,													
	w/Auto Trans. Column Shift		1	1	1	1	1	—	—	—	—	—	—	3575 715
	Except Auto Trans. Column Shift		1	1	1	1	1	—	—	—	—	—	—	3748 398
	Screw		4	4	4	4	4	—	—	—	—	—	—	6030 122
19-14-121	SPRING, Strg. Column Lock,		1	1	1	1	1	—	—	—	—	—	—	2996 858
19-14-123	SLEEVE, Strg. Column Shaft Lock Plate,		1	1	1	1	1	—	—	—	—	—	—	3467 178
19-15-4	**SHAFT, Strg. Col. w/Body**													
	w/Man. Trans. Col. Shift		1	—	1	—	—	—	—	—	—	—	—	3748 249
	Except Man. Trans. Col. shift		1	—	1	—	—	—	—	—	—	—	—	3748 490
	Shaft, Strg. Column, w/Body,		—	1	—	—	—	—	—	—	—	—	—	3748 248
	Shaft, Strg. Col. Upper, w/Man. Trans. Col. Shift		—	—	—	1	1	—	—	—	—	—	—	3748 199
	Except Man. Trans. Col. Shift		—	—	—	1	1	—	—	—	—	—	—	3748 269
	Shaft, Strg. Col. Intermediate													
	w/Man. Trans. Col. Shift		—	—	—	1	1	—	—	—	—	—	—	3748 212
	Except Man. Trans. Col. Shift		—	—	—	1	1	—	—	—	—	—	—	3748 252
19-15-17	COVER, Strg. Column Shaft Coupling Body		1	1	1	1	1	—	—	—	—	—	—	2530 538
19-15-21	WORM, w/Ball Nut, Strg. Gear		1	1	1	1	1	—	—	—	—	—	—	2267 454
19-15-23	BODY, Strg. Column Shaft Coupling		1	1	1	1	1	—	—	—	—	—	—	3748 267
	COUPLING, Strg. Column Shaft,		—	—	—	1	1	—	—	—	—	—	—	3748 310
	Pin, Body		1	1	1	1	1	—	—	—	—	—	—	6029 951
	Pin, Spring Coupling		AR	AR	AR	AR	AR	—	—	—	—	—	—	6028 750
	Bolt, Coupling, Up To 10-4-73		—	—	—	2	2	—	—	—	—	—	—	6030 289
	After 10-4-73		—	—	—	2	2	—	—	—	—	—	—	6030 602
	Bolt, Coupling, Up to 10-4-73		—	—	—	2	2	—	—	—	—	—	—	6030 355
	After 10-4-73		—	—	—	2	2	—	—	—	—	—	—	6030 604
19-15-24	PIN, Strg. Column Shaft Lower Coupling		1	1	1	1	1	—	—	—	—	—	—	2266 743
19-15-28	SEAL, Strg. Column Shaft Coupling Body		1	1	1	1	1	—	—	—	—	—	—	2530 848
	SEAL, Strg. Column Jacket to Tube		1	1	1	1	1	—	—	—	—	—	—	3575 082
19-15-35	SPRING, Strg. Column Shaft Coupling Body		1	1	1	1	1	—	—	—	—	—	—	2925 492
19-15-44	SHOE, Strg. Column Shaft Coupling Body		2	2	2	2	2	—	—	—	—	—	—	2800 738
19-15-51	STRAP, Strg. Column Shaft Coupling, Up to 11-5-73		—	—	—	2	2	—	—	—	—	—	—	3748 270
	After 11-5-73		—	—	—	2	2	—	—	—	—	—	—	3748 599
19-15-58	ADJUSTER, Strg. Gear Worm Thrust Bearing		1	1	1	1	1	—	—	—	—	—	—	2127 146
19-15-59	NUT, Strg. Gear Worm Adjusting Lock		1	1	1	1	1	—	—	—	—	—	—	2267 192
19-15-60	BEARING, Strg. Gear Worm Thrust		2	2	2	2	2	—	—	—	—	—	—	2072 060
19-15-63	CUP, Strg. Gear Worm Thrust Bearing		2	2	2	2	2	—	—	—	—	—	—	2127 097
19-15-111	SHIELD, Strg. Column Shaft Coupling		—	—	—	1	1	—	—	—	—	—	—	3748 349
19-19-4	**SHAFT, Strg. Gear**		1	1	1	1	1	—	—	—	—	—	—	3643 018
19-19-7	SCREW, Strg. Gear Shaft Adjusting		1	1	1	1	1	—	—	—	—	—	—	2267 178
19-19-19	BEARING, Strg. Gear Shaft		3	3	3	3	3	—	—	—	—	—	—	2948 801
19-19-24	COVER, Strg. Gear Shaft		1	1	1	1	1	—	—	—	—	—	—	2267 152
	Bolt, w/Washer		AR	AR	AR	AR	AR	—	—	—	—	—	—	6025 063
19-19-28	GASKET, Strg. Gear Shaft Cover		1	1	1	1	1	—	—	—	—	—	—	2127 108
19-19-35	OIL SEAL, Strg. Gear Shaft		1	1	1	1	1	—	—	—	—	—	—	2127 154
19-19-40	WASHER PACKAGE, Strg. Gear Shaft Adjusting Screw		1	1	1	1	1	—	—	—	—	—	—	2279 961

CARLINES: J - Challenger, B - Barracuda, V - Valiant, L - Dart, R - Satellite, W - Coronet - Charger, P - Plymouth, D - Dodge, C - Chrysler, Y - Imperial

AR Indicates use as required.

Numerals in parentheses ( ) refer to notes.

# Indicates parts not listed in any previous parts book.

★ Indicates change or addition.

Printed in U.S.A.
November 1974

CODE	PART NAME	ENG. TYPE OR CU. IN	V	B J	L	R	W	P	D	C (L M)	C (P)	C (H S)	Y	PART NUMBER
19-19-70	SEAL, Strg. Gear Worm Shaft		1	1	1	1	1	—	—	—	—	—	—	2267 156
19-27-2	**ARM, Strg. Link Gear**		1	1	1	1	1	—	—	—	—	—	—	3402 647
19-27-8	NUT, Strg. Link Gear Arm		1	1	1	1	1	—	—	—	—	—	—	6029 964
	Nut, Strg. Link Gear Arm Stud End		1	1	1	1	1	—	—	—	—	—	—	9425 132
	Washer, Gear Arm Nut		1	1	1	1	1	—	—	—	—	—	—	6028 088
19-27-31	ARM, Strg. Link Idler		1	—	1	—	—	—	—	—	—	—	—	3402 846
			—	1	—	—	—	—	—	—	—	—	—	2535 886
			—	—	—	1	1	—	—	—	—	—	—	3402 583
	Nut, Stud		1	1	1	1	1	—	—	—	—	—	—	9425 132
19-27-33	BRACKET, Front Suspension Crossmember Strg. Linkage Idler Arm		1	—	1	—	—	—	—	—	—	—	—	2883 977
19-27-40	SEAL, Strg. Link Idler Arm End		1	1	1	1	1	—	—	—	—	—	—	2835 895
	SEAL, Strg. Link Gear Arm Stud End		1	1	1	1	1	—	—	—	—	—	—	2835 896
19-27-45	BOLT, Package Strg. Link Idler Arm Bracket End		1	1	1	1	1	—	—	—	—	—	—	3004 804
19-27-50	LINK, Strg. Link Center		1	—	1	—	—	—	—	—	—	—	—	3402 797
			—	1	—	—	—	—	—	—	—	—	—	2835 877
			—	—	—	1	1	—	—	—	—	—	—	3402 735
19-27-51	PLUG, Strg. Link Gear Arm Stud		1	—	1	—	—	—	—	—	—	—	—	6030 099
	Strg. Link Gear Arm End Cover		—	1	—	1	1	—	—	—	—	—	—	6030 099
	Strg. Link Tie Rod End Cover		4	4	4	4	4	—	—	—	—	—	—	6030 099
19-30-4	**WHEEL, Strg., w/Center Padded Horn Button,**													
	Black		1	—	1	—	—	—	—	—	—	—	—	P000 JX9
	Blue		1	—	1	—	—	—	—	—	—	—	—	P000 KB7
	Gold		1	—	1	—	—	—	—	—	—	—	—	P000 JY7
	Green		1	—	1	—	—	—	—	—	—	—	—	P000 KG7
	Parchment		1	—	1	—	—	—	—	—	—	—	—	P000 JL5
	WHEEL, Steering w/Three Spokes Blue		1	—	1	1	1	—	—	—	—	—	—	P001 KB7
	Green		1	—	1	1	1	—	—	—	—	—	—	P001 KG7
	Parchment		1	—	1	1	1	—	—	—	—	—	—	P001 KL5
	Black		1	—	1	1	1	—	—	—	—	—	—	P001 KX9
	Gold		1	—	1	1	1	—	—	—	—	—	—	P001 KY7
	Chestnut		—	—	—	1	1	—	—	—	—	—	—	P001 KT8
	w/Partial Horn Ring Black		—	—	—	1	1	—	—	—	—	—	—	P001 KX9
	WHEEL, Steering w/Three Spokes, w/Partial Horn Ring Blue		—	—	—	1	1	—	—	—	—	—	—	P003 KB7
	Green		—	—	—	1	1	—	—	—	—	—	—	
	Parchment		—	—	—	1	1	—	—	—	—	—	—	P003 KL5
	Chestnut		—	—	—	1	1	—	—	—	—	—	—	P003 KT8
	Black		—	—	—	1	1	—	—	—	—	—	—	P003 KX9
	Gold		—	—	—	1	1	—	—	—	—	—	—	P003 KY3
	w/2 Spoke Horn Button, Black		—	1	—	—	—	—	—	—	—	—	—	P005 JX9
	w/Soft Rim Strg. Wheel		1	—	1	1	1	—	—	—	—	—	—	P006 JX9
	Nut, w/Washer, w/Three Spoke Wheel		3	3	3	3	3	—	—	—	—	—	—	6025 002
19-30-10	SPACER, Strg. Wheel, w/Soft Rim		1	—	1	1	1	—	—	—	—	—	—	3467 186
	Nut		3	—	3	3	3	—	—	—	—	—	—	6029 392
19-30-18	NUT, Strg. Column Shaft Strg. Wheel,		1	1	1	1	1	—	—	—	—	—	—	6029 945
19-30-20	RING, Strg. Wheel Horn w/Partial Horn Ring, and Cover													
	Black		1	—	1	1	1	—	—	—	—	—	—	P105 KX9
	Blue		1	—	1	1	1	—	—	—	—	—	—	P105 KB7
	Green		1	—	1	1	1	—	—	—	—	—	—	P105 KG7
	Parchment		1	—	1	1	1	—	—	—	—	—	—	
	Chestnut		1	—	1	1	1	—	—	—	—	—	—	P105 KT8
	Gold		1	—	1	1	1	—	—	—	—	—	—	P105 KY7

CODE	PART NAME	ENG. TYPE OR CU. IN	V	B J	L	R	W	P	D	C (L M)	C (P)	C (H S)	Y	PART NUMBER
19-30-21	RETAINER, Strg. Wheel Horn Button		1	1	1	1	1	—	—	—	—	—	—	3467 836
	RETAINER, Strg. Wheel Horn Ring w/Full and Partial Horn Ring		1	—	1	1	1	—	—	—	—	—	—	2996 884
19-30-23	PLATE, Strg. Wheel and Horn Ring Mounting w/Full and Partial Horn Ring		1	—	1	1	1	—	—	—	—	—	—	3467 500
19-30-24	SPRING, Strg. Wheel Horn		3	—	3	3	3	—	—	—	—	—	—	3748 114
19-30-26	ORNAMENT, Strg. Wheel w/Horn Button Padded		1	—	—	—	—	—	—	—	—	—	—	3467 485
	w/Horn Button Padded		—	—	1	—	—	—	—	—	—	—	—	3467 486
	INLAY, Strg. Wheel Horn Ring, w/Partial Horn Ring, Wood Grain		1	—	—	1	—	—	—	—	—	—	—	3748 344
			—	—	1	—	1	—	—	—	—	—	—	3748 283
19-30-40	INLAY, Strg. Wheel Spoke Cover, w/3 Spoke Strg. Wheel, w/o Partial Horn Ring		1	—	—	1	—	—	—	—	—	—	—	3748 478
			—	—	1	—	1	—	—	—	—	—	—	3748 479
19-30-43	COVER, Strg. Wheel Spoke, w/3 Spoke Strg. Wheel, w/o Inlay													
	Blue		—	—	—	1	1	—	—	—	—	—	—	P116 KB7
	Green		—	—	—	1	1	—	—	—	—	—	—	P116 KG7
	Parchment		—	—	—	1	1	—	—	—	—	—	—	P116 KL5
	Chestnut		—	—	—	1	1	—	—	—	—	—	—	P116 KT8
	Black		—	—	—	1	1	—	—	—	—	—	—	P116 KX9
	Gold		—	—	—	1	1	—	—	—	—	—	—	P116 KY7
	COVER, Strg. Wheel Spoke w/3 Spoke Strg. Wheel, w/Inlay Blue		1	—	1	1	1	—	—	—	—	—	—	P122 KB7
	Green		1	—	1	1	1	—	—	—	—	—	—	P122 KG7
	Parchment		1	—	1	1	1	—	—	—	—	—	—	P122 KL5
	Chestnut		—	—	—	1	1	—	—	—	—	—	—	P122 KT5
	Black		1	—	1	1	1	—	—	—	—	—	—	P122 KX9
	Gold		1	—	1	1	1	—	—	—	—	—	—	P122 KY7
	BUTTON, Strg. Wheel Horn w/Soft Rim Strg. Wheel		—	—	—	1	1	—	—	—	—	—	—	3575 564
	w/Two Spoke Strg. Wheel		—	1	—	—	—	—	—	—	—	—	—	3575 564
	CAP, Strg. Wheel Ornament, w/Three Spoke Center Padded Horn Button Strg. Wheel Blue		1	—	1	—	—	—	—	—	—	—	—	P100 KB7
	Green		1	—	1	—	—	—	—	—	—	—	—	P100 KG7
	Black		1	—	1	—	—	—	—	—	—	—	—	P100 JX9
	Parchment		1	—	1	—	—	—	—	—	—	—	—	P100 JL5
	Gold		1	—	1	—	—	—	—	—	—	—	—	P100 JY7
19-31-1	**BRACKET, Instrument Panel Strg. Column Support**		1	—	1	—	—	—	—	—	—	—	—	3748 105
			—	—	—	1	1	—	—	—	—	—	—	3748 107
	BRACKET, Instrument Panel Strg. Column Support to Dash		—	1	—	—	—	—	—	—	—	—	—	2984 757
	Screw w/Washer, Support Brkt. to Col.		4	4	4	4	4	—	—	—	—	—	—	6026 904
	Stud Brkt. or Clamp		2	2	2	2	2	—	—	—	—	—	—	6027 947
	Nut		AR	AR	AR	AR	AR	—	—	—	—	—	—	6027 403
	Washer		AR	AR	AR	AR	AR	—	—	—	—	—	—	6027 404
19-46-3	**TUBE, Strg. Column Gearshift,** w/Three Speed Man. Trans. Col. Shift		1	—	1	—	—	—	—	—	—	—	—	3748 311
	w/Auto. Trans. Column Shift		1	—	1	—	—	—	—	—	—	—	—	3748 164
			—	1	—	—	—	—	—	—	—	—	—	3748 577
	w/Three Speed Man. Trans. Col. Shift		—	—	—	1	1	—	—	—	—	—	—	3748 246
	w/Auto. Trans. Col. Shift		—	—	—	1	1	—	—	—	—	—	—	3748 247

CARLINES — J - Challenger, B - Barracuda, V - Valiant, L - Dart, R - Satellite, W - Coronet - Charger, P - Plymouth, D - Dodge, C - Chrysler, Y - Imperial

AR Indicates use as required.

Numerals in parentheses ( ) refer to notes.

# Indicates parts not listed in any previous parts book.

★ Indicates change or addition.

Printed in U.S.A.
November 1974

CODE	PART NAME	ENG. TYPE OR CU. IN	V	B J	L	R	W	P	D	C (L M)	C (P)	C (H S)	Y	PART NUMBER
19-46-3	TUBE Cont'd.													
	Screw, Gearshift Tube Bearing													
	w/3 Speed Man. Trans.		2	—	2	2	2	—	—	—	—	—	—	9417 749
19-46-8	HOUSING, Strg. Column Gearshift													
	w/3 Speed Man. Trans. Column													
	Shift, Up To 11/14/73		1	—	1	1	1	—	—	—	—	—	—	2996 798
	After 11/14/73		1	—	1	1	1	—	—	—	—	—	—	3748 584
	w/Auto. Trans. Column Shift		1	1	1	1	1	—	—	—	—	—	—	3575 996
	HOUSING, Strg. Column Lock Control													
	w/Floor Shift		1	1	1	1	1	—	—	—	—	—	—	3575 208
	Washer, Spring, Col. Gearshift		1	—	1	1	1	—	—	—	—	—	—	6023 046
	Screw, Set, Col. Gearshift Housing		1	1	1	1	1	—	—	—	—	—	—	125 735
19-46-10	SPRING, Strg. Column Lock Control													
	Housing, w/Floor Shift		1	1	1	1	1	—	—	—	—	—	—	3575 256
19-46-12	SPACER, Strg. Column Gearshift													
	Tube Lever													
	w/3 Speed Man. Trans. Col. Shift		1	—	1	1	1	—	—	—	—	—	—	2883 357
	w/3 Speed Man. Trans. Col. Shift		1	—	1	1	1	—	—	—	—	—	—	2883 541
	BUMPER, Strg. Column Lock													
	Control Housing, w/Floor Shift,		1	1	1	1	1	—	—	—	—	—	—	3575 257
19-46-16	LEVER, Strg. Column Gearshift													
	Tube, First and Reverse,													
	w/Man. Trans. Column Shift		1	—	1	1	1	—	—	—	—	—	—	3575 891
19-46-29	LEVER, Strg. Column Gearshift													
	Housing Lock		1	1	1	1	1	—	—	—	—	—	—	2950 844
	Pin		1	1	1	1	1	—	—	—	—	—	—	9421 202
19-46-31	DECAL, Strg. Column Lock Control													
	Housing, w/Floor Shift		1	1	1	1	1	—	—	—	—	—	—	3575 258
19-46-55	SUPPORT, Strg. Column Gearshift													
	Housing, Except Auto. Trans. Column													
	Shift		1	1	1	1	1	—	—	—	—	—	—	2996 799
19-48-1	**ROD, Gearshift, First and Reverse,**													
	w/Std.-3 Speed Man. Trans. Col.													
	Shift	6	1	—	1	—	—	—	—	—	—	—	—	3575 344
	w/Heavy Duty 3 Speed Man. Trans.													
	Col. Shift		1	—	1	—	—	—	—	—	—	—	—	3575 345
			—	—	—	1	1	—	—	—	—	—	—	3467 784
	Second and Third Trans.													
	w/Std.-3 Speed Man. Trans. Col.													
	Shift (Trans. End) w/Clip Hole End	6	1	—	1	—	—	—	—	—	—	—	—	3467 777
	w/Slot End	6	1	—	1	—	—	—	—	—	—	—	—	3575 380
	w/Heavy Duty 3 Speed Man. Trans.													
	Col. Shift (Trans. End) w/Clip Hole													
	End		1	—	1	—	—	—	—	—	—	—	—	3467 778
	w/Slot End		1	—	1	—	—	—	—	—	—	—	—	3575 378
	Second and Third, Front		1	—	1	—	—	—	—	—	—	—	—	3575 346
	Second and Third		—	—	—	1	1	—	—	—	—	—	—	3467 785
	ROD, Gearshift, Control W/Auto. Trans.													
	Col. Shift,													
	Front		1	—	1	—	—	—	—	—	—	—	—	3575 361
	Front		—	1	—	—	—	—	—	—	—	—	—	3575 364
	Front		—	—	—	1	1	—	—	—	—	—	—	3575 338
	Except 360 Eng. Rear		1	—	1	—	—	—	—	—	—	—	—	3575 342
	w/360 Eng. Rear		1	—	1	—	—	—	—	—	—	—	—	3575 343
	Rear		—	1	—	—	—	—	—	—	—	—	—	2950 298
	Rear		—	—	—	1	1	—	—	—	—	—	—	3575 336
19-48-9	SPRING, Gearshift Control Front Rod													
	Adjusting													
	w/Auto. Trans. Column Shift		1	1	1	1	1	—	—	—	—	—	—	3575 354
19-48-12	CLAMP, Gearshift Front Rod,													

CODE	PART NAME	ENG. TYPE OR CU. IN	V	B J	L	R	W	P	D	C (L M)	C (P)	C (H S)	Y	PART NUMBER
19-48-12	CLAMP Cont'd.													
	w/Auto. Trans. Col. Shift		1	1	1	1	1	—	—	—	—	—	—	2204 274
	CLAMP, Gearshift Rod Swivel, w/3 Speed Man. Trans. Col. Shift		2	—	2	2	2	—	—	—	—	—	—	2204 274
19-48-16	SWIVEL, Gearshift Rod, W/Auto. Trans. Col. Shift Front		—	1	—	—	—	—	—	—	—	—	—	3467 665
	Front		1	—	1	1	1	—	—	—	—	—	—	3575 334
	w/Man. Trans. Col. Shift		1	—	1	—	—	—	—	—	—	—	—	3467 667
	w/Man. Trans. Col. Shift		—	—	—	1	1	—	—	—	—	—	—	3467 790
19-48-23	CLIP, Gearshift Control Rod		AR	AR	AR	AR	AR	—	—	—	—	—	—	6027 983
19-48-45	SHAFT, Gearshift Torque													
	w/Man. Trans. Col. Shift		1	—	1	—	—	—	—	—	—	—	—	3467 774
			—	—	—	1	1	—	—	—	—	—	—	3467 786
	w/Auto. Trans. Column Shift, except 360 and Heavy Duty 225 Eng.		1	—	1	—	—	—	—	—	—	—	—	3575 339
	w/Auto. Trans. Col. Shift, w/360 and Heavy Duty 225 Eng.		1	—	1	—	—	—	—	—	—	—	—	3575 340
	w/Auto Trans. Col. Shift		—	1	—	—	—	—	—	—	—	—	—	3467 608
	w/Auto. Trans. Col. Shift Up to 5/7/74		—	—	—	1	1	—	—	—	—	—	—	3575 360
	After 5/7/74		—	—	—	1	1	—	—	—	—	—	—	3575 384
	Washer		AR	AR	AR	AR	AR	—	—	—	—	—	—	9417 098
	Washer, Spring		AR	AR	AR	AR	AR	—	—	—	—	—	—	905 206
19-48-46	BRACKET, Gearshift Torque Shaft Trans.													
	w/Auto. Trans. Col. Shift Except 360 Eng.		1	—	1	—	—	—	—	—	—	—	—	2781 429
	w/Auto. Trans. Col. Shift w/360 Eng.		1	—	1	—	—	—	—	—	—	—	—	2800 942
	w/Auto. Trans. Col. Shift													
	w/318 Eng. Up to 5/7/74	8	—	1	—	—	—	—	—	—	—	—	—	3575 326
	w/360 Eng. Up to 5/7/74	8	—	1	—	—	—	—	—	—	—	—	—	3575 327
	w/225 and 318 Eng. w/Std. Duty Auto. Trans. Up to 5/7/74		—	—	—	1	1	—	—	—	—	—	—	3575 326
	w/All Engines													
	w/All Auto. Trans. After 5/7/74		—	—	—	1	1	—	—	—	—	—	—	3575 327
	BRACKET, Gearshift Torque Shaft Frame, w/Auto. Trans. Col. Shift,		1	—	1	—	—	—	—	—	—	—	—	2467 932
	w/Man. Trans. Col. Shift		1	—	1	—	—	—	—	—	—	—	—	3467 776
	w/Auto. Trans. Col. Shift		—	1	—	—	—	—	—	—	—	—	—	2950 920
	w/Auto. Trans. Col. Shift		—	—	—	1	1	—	—	—	—	—	—	3467 735
	Nut, w/Washer		AR	AR	AR	AR	AR	—	—	—	—	—	—	6028 114
19-48-49	GROMMET, Gearshift Rod, Col. Lever		AR	—	AR	AR	AR	—	—	—	—	—	—	3467 791
	GROMMET, Gearshift Control Rod, Frt. & Rr. w/Auto. Trans. Col. Shift		AR	AR	AR	AR	AR	—	—	—	—	—	—	3575 333
19-48-50	BUSHING, Gearshift Torque Shaft Bracket,		2	2	2	—	—	—	—	—	—	—	—	3467 800
	w/Man. Trans. Col. Shift		—	—	—	2	2	—	—	—	—	—	—	3467 800
	w/Auto Trans.		—	—	—	2	2	—	—	—	—	—	—	2781 420

NOTES

CARLINES: J - Challenger, B - Barracuda, V - Valiant, L - Dart, R - Satellite, W - Coronet - Charger, P - Plymouth, D - Dodge, C - Chrysler, Y - Imperial

AR Indicates use as required.

# Indicates parts not listed in any previous parts book.

Numerals in parentheses ( ) refer to notes.

★ Indicates change or addition.

Printed in U.S.A.
November 1974

NOTES

GROUP 19 - STEERING (POWER)

ARM AND IDLER ARM, LINKAGE 19-27
BRACKET OR SUPPORT, COLUMN 19-31
GEAR ASSEMBLY 19-01
HOSE 19-58
HOUSING, GEAR 19-02
JACKET, COLUMN 19-14
PISTON, GEAR 19-56
PUMP, OIL 19-54
ROD, GEARSHIFT CONTROL 19-48
SHAFT, GEAR 19-19
SHAFT AND COUPLING, COLUMN 19-15
TUBE, COLUMN GEAR SHIFT 19-46
VALVES 19-57
WHEEL 19-30

Printed in U.S.A.
November 1974

CODE	PART NAME	ENG. TYPE OR CU. IN	V	B J	L	R	W	P	D	C (L M)	C (P)	C (H S)	Y	PART NUMBER
19-01-4	**"O" RING and SEAL PACKAGE, Strg. Gear**		1	1	1	1	1	1	1	1	1	1	1	3579 523
19-01-8	CHUCK, Strg. Gear		1	1	1	1	1	—	—	—	—	—	—	3643 014
			—	—	—	—	—	1	1	1	1	1	1	3643 030
	Bolt, Mounting		3	3	3	3	3	—	—	—	—	—	—	6028 193
	Bolt, Mounting-Inboard		—	—	—	—	—	2	2	2	2	2	2	6028 193
	Stud, Mounting		—	—	—	—	—	—	1	1	1	1	1	6030 443
	Washer		3	3	3	3	3	3	3	3	3	3	3	6028 087
19-01-50	SPRING, Strg. Gear Reaction, Up to 11-28-73		2	2	2	2	2	—	—	—	—	—	—	2537 178
	After 11-28-73		2	2	2	2	2	—	—	—	—	—	—	3643 129
			—	—	—	—	—	2	2	2	2	2	2	2537 247
	w/Police Car		—	—	—	2	2	2	2	2	2	2	—	3643 169
19-01-51	RING, Strg. Gear Reaction		2	2	2	2	2	—	—	—	—	—	—	1822 150
			—	—	—	—	—	2	2	2	2	2	2	1733 791
19-01-52	SEAL, Strg. Gear Reaction,	Upper	1	1	1	1	1	—	—	—	—	—	—	1822 151
		Upper	—	—	—	—	—	1	1	1	1	1	1	1733 593
	Ring, Strg. Gear Reaction	Lower	1	1	1	1	1	—	—	—	—	—	—	1822 149
		Lower	—	—	—	—	—	1	1	1	1	1	1	1823 091
19-01-53	WASHER, Strg. Gear Reaction		1	1	1	1	1	1	1	1	1	1	1	1733 790
19-01-60	HEAD, Strg. Gear Cylinder		1	1	1	1	1	—	—	—	—	—	—	3643 173
	Except Police Cars		—	—	—	—	—	1	1	1	1	1	1	1823 161
	w/Police Cars		—	—	—	—	—	1	1	1	1	1	—	3643 173
19-01-62	SNAP RING, Strg. Gear Cylinder Head		1	1	1	1	1	1	1	1	1	1	1	1822 321
19-02-4	**HOUSING, Strg. Gear**		1	1	1	—	—	—	—	—	—	—	—	3643 013
	Except Police Cars		—	—	—	1	1	—	—	—	—	—	—	3643 013
	w/Police Cars		—	—	—	1	1	—	—	—	—	—	—	3579 526
			—	—	—	—	—	1	1	1	1	1	1	3579 526
	Washer, Housing to Frame		AR	AR	AR	AR	AR	AR	AR	AR	AR	AR	—	6027 224
19-02-15	"O" RING, Strg. Gear Housing Port		2	2	2	2	2	2	2	2	2	2	2	1556 385
	"O" RING, Strg. Gear Housing to Valve		1	1	1	1	1	1	1	1	1	1	1	1823 150
19-02-55	HEAD, Strg. Gear Housing		1	1	1	1	1	—	—	—	—	—	—	3643 176
	Except Police Cars		—	—	—	—	—	1	1	1	1	1	1	2267 491
	w/Police Cars		—	—	—	—	—	1	1	1	1	1	—	3643 176
19-02-69	"O" RING, Strg. Gear Cylinder Head		2	2	2	2	2	2	2	2	2	2	2	1733 562
19-14-1	**JACKET, Strg. Column**													
	w/3 Speed Man. Trans. Col. Shift		1	—	1	—	—	—	—	—	—	—	—	3748 206
	w/Auto. Trans. Col. Shift		1	—	1	—	—	—	—	—	—	—	—	3748 376
	w/Floor Shift		1	—	1	—	—	—	—	—	—	—	—	3748 378
	w/Auto. Trans. Col. Shift		—	1	—	—	—	—	—	—	—	—	—	3748 458
	w/Floor Shift		—	1	—	—	—	—	—	—	—	—	—	3748 459
	w/Auto. Trans. Col. Shift		—	—	—	1	1	—	—	—	—	—	—	3748 232
	w/3 Speed Man. Trans. Col. Shift		—	—	—	1	1	—	—	—	—	—	—	3748 207
	w/Floor Shift		—	—	—	1	1	—	—	—	—	—	—	3748 233
	w/Auto. Trans. Except Tilt Telescopic Strg., except C-S		—	—	—	—	—	1	1	1	1	1	—	3748 376
	w/C-S		—	—	—	—	—	—	—	—	—	1	1	3748 208
	w/318 4/Bbl. Eng. Export		—	—	—	—	—	—	1	—	—	—	—	3748 378
	JACKET, w/Shift Tube, w/Column Shift, w/Tilt Telescopic Strg.		—	—	—	—	—	1	1	1	1	1	1	3748 493
19-14-4	BEARING, Strg. Column Shaft, Except Tilt-Telescopic Strg.	Upper	1	1	1	1	1	1	1	1	1	1	1	2265 656
	except Tilt-Telescipic Strg.	Lower	1	1	1	1	1	1	1	1	1	1	1	3748 241
	Snap Ring, Bearing Upper		1	1	1	1	1	1	1	1	1	1	1	6024 333
	BEARING, w/Tilt-Telescopic Strg.		—	—	—	—	—	2	2	2	2	2	2	2950 549
	BEARING, Lower, w/Tilt-Telescopic Strg.		—	—	—	—	—	1	1	1	1	1	1	2530 570
19-14-10	SUPPORT, w/Bearing, Strg. Col. Shaft, Lower, w/3 Speed Man. Trans. Col. Shift		1	—	1	1	1	—	—	—	—	—	—	3575 884

CARLINES: J - Challenger, 8 - Barracuda, V - Valiant, L - Dart, R - Satellite, W - Coronet - Charger, P - Plymouth, D - Dodge, C - Chrysler, Y - Imperial

AR Indicates use as required.

# Indicates parts not listed in any previous parts book.

Numerals in parentheses ( ) refer to notes.

★ Indicates change or addition.

Printed in U.S.A.
November 1974

CODE	PART NAME	ENG. TYPE OR CU. IN	V	B J	L	R	W	P	D	C (L M)	C (P)	C (H S)	Y	PART NUMBER
19-14-10	SUPPORT Cont'd.													
	BRACE, Instrument Panel, Strg. Col. Support to Cowl Top		—	—	—	—	—	1	1	1	1	1	1	3590 545
	SUPPORT, Strg. Col. Shaft Bearing, w/Floor Shift		1	1	1	1	1	—	—	—	—	—	—	3748 229
	Snap Ring, Bearing Lower, Except Tilt-Telescopic Strg.		1	1	1	1	1	1	1	1	1	1	1	6023 045
	Screw, Bearing Support, w/3 Speed Man. Trans		3	—	3	3	3	—	—	—	—	—	—	9417 749
19-14-11	SEAT, Inner Race, w/Tilt-Telescopic Strg.		—	—	—	—	—	1	1	1	1	1	1	3467 418
19-14-13	WASHER, Strg. Gear Housing Head Nut		1	1	1	1	1	1	1	1	1	1	1	1733 588
19-14-16	RING, Strg. Col. Lower Bearing Except Man. Trans. Col. Shift		1	1	1	—	—	—	—	—	—	—	—	3748 489
19-14-18	"O" RING, Strg. Gear Housing Head		1	1	1	1	1	1	1	1	1	1	1	1733 602
19-14-19	NUT, Strg. Gear Housing Head		1	1	1	1	1	1	1	1	1	1	1	1733 625
19-14-21	HOUSING, Strg. Column Shaft Bearing													
	w/Auto. Trans. Column Shift		1	1	1	1	1	—	—	—	—	—	—	3575 572
	Except Auto. Trans. Col. Shift		1	1	1	1	1	—	—	—	—	—	—	3575 231
	Except Tilt-Telescopic Strg.		—	—	—	—	—	1	1	1	1	1	1	3575 231
	HOUSING, Strg. Column w/Tilt-Telescopic Strg.		—	—	—	—	—	1	1	1	1	1	1	3467 815
	SCREW, Bearing Housing except Tilt-Telescopic Strg.		3	3	3	3	3	3	3	3	3	3	3	6029 932
	Washer, Spring		1	1	1	1	1	1	1	1	1	1	1	6023 046
19-14-22	RACE, Inner, w/Tilt-Telescopic		—	—	—	—	—	1	1	1	1	1	1	2781 675
	YOKE, Race and Strg. Shaft Assy. w/Tilt-Telescopic Strg.		—	—	—	—	—	1	1	1	1	1	1	3467 396
19-14-23	PLATE, Strg. Column Shaft Bearing Retainer													
	Except Tilt-Telescopic		1	1	1	1	1	1	1	1	1	1	1	2950 989
	PLATE, Strg. Column Jacket Support Complete		1	—	1	—	—	—	—	—	—	—	—	3748 214
			—	1	—	—	—	—	—	—	—	—	—	2950 601
			—	—	—	1	1	—	—	—	—	—	—	3748 215
	except Tilt-Telescopic Strg.		—	—	—	—	—	1	1	1	1	1	1	3748 216
	w/Tilt-Telescopic Strg.		—	—	—	—	—	1	1	1	1	1	1	3748 380
	PLATE, Strg. Column Jacket "O Ring"		1	—	—	—	—	—	—	—	—	—	—	3575 733
	Screw, Retainer Plate		3	3	3	3	3	3	3	3	3	3	3	180 078
	"O" Ring, Strg. Column Jacket Support Plate		—	1	—	—	—	—	—	—	—	—	—	6026 275
19-14-24	COVER, Lock Housing w/Tilt-Telescopic Strg.		—	—	—	—	—	1	1	1	1	1	1	3575 236
19-14-27	ADAPTER, Lower, w/Bearing, w/Tilt, Tilt-Telescopic Strg.		—	—	—	—	—	1	1	1	1	1	1	2950 570
19-14-30	GROMMET, Strg. - Column													
	Except Tilt-Telescopic Strg.		1	—	1	1	1	1	1	1	1	1	1	3748 153
	w/Tilt-Telescopic Strg.		—	—	—	—	—	1	1	1	1	1	1	3748 400
19-14-36	SPACER, Strg. Column Support Bracket		2	—	2	2	2	2	2	2	2	2	2	3748 492
19-14-37	BRACKET, Strg. Column		—	1	—	—	—	—	—	—	—	—	—	2950 956
	Screw, w/Washer, to Strg. Column		—	4	—	—	—	—	—	—	—	—	—	6026 904
19-14-38	INSULATOR, Strg. Column Shaft Upper Bearing Except Tilt-Telescopic Strg.		1	1	1	1	1	1	1	1	1	1	1	2925 491
	Lower Bearing, w/Tilt-Telescopic Strg.		—	—	—	—	—	1	1	1	1	1	1	2530 566
19-14-48	LEVER, Shoe Release, w/Tilt-Telescopic Strg.		—	—	—	—	—	1	1	1	1	1	1	3467 381

CARLINES: J - Challenger, B - Barracuda, V - Valiant, L - Dart, R - Satellite, W - Coronet - Charger, P - Plymouth, D - Dodge, C - Chrysler, Y - Imperial

AR Indicates use as required.

# Indicates parts not listed in any previous parts book.

Numerals in parentheses ( ) refer to notes.

★ Indicates change or addition.

Printed in U.S.A.
November 1974

CODE	PART NAME	ENG. TYPE OR CU. IN	V	B J	L	R	W	P	D	C (L M)	C (P)	C (H S)	Y	PART NUMBER
19-14-48	LEVER Cont'd.													
	LEVER, Strg. Column Shaft Lock, Except Tilt-Telescopic Strg.		1	1	1	1	1	1	1	1	1	1	1	2950 840
	LEVER, Strg. Column Release w/Tilt-Telescopic Strg.,		—	—	—	—	—	1	1	1	1	1	1	3575 002
	LEVER, w/KNOB, Strg. Wheel Locking, w/Strg. Wheel Horn Rim Switch, w/Tilt-Telescopic Strg.		—	—	—	—	—	1	1	1	1	1	1	2996 860
19-14-49	TROUGH, Strg. Column Wiring													
		Blue	—	—	—	1	1	—	—	—	—	—	—	P610 KB7
		Green	—	—	—	1	1	—	—	—	—	—	—	P610 KG6
		Chestnut	—	—	—	1	1	—	—	—	—	—	—	P610 KT8
		Black	1	—	1	1	1	1	1	1	1	1	1	P610 KX9
		Gold	—	—	—	1	1	—	—	—	—	—	—	P610 KY7
		Parchment	—	—	—	1	1	—	—	—	—	—	—	P610 KL5
		Black	—	1	—	—	—	—	—	—	—	—	—	P611 JX9
	Screw, Wiring Trough		2	2	2	2	2	2	2	2	2	2	2	9432 699
19-14-59	CAN, Strg. Column Energy Absorbing		—	1	—	—	—	—	—	—	—	—	—	2950 812
	Nut		—	3	—	—	—	—	—	—	—	—	—	6029 392
19-14-68	SEAL, Strg. Col. Jacket To Tube, w/Auto Trans. Col. Shift,		1	1	1	1	1	—	—	—	—	—	—	3575 082
	Except Tilt Strg.		—	—	—	—	—	1	1	1	1	1	1	3575 082
19-14-75	PROTECTION, Wire, w/Tilt-Telescopic Strg.		—	—	—	—	—	1	1	1	1	1	1	3748 499
	GUIDE, Spring, Tilt-Telescopic Strg.		—	—	—	—	—	1	1	1	1	1	1	2880 361
19-14-80	WEDGE, Telescope Locking, W/Tilt-Telescopic Strg.		—	—	—	—	—	1	1	1	1	1	1	3467 822
19-14-81	ROD, Telescopic Locking, W/Tilt-Telescopic Strg.		—	—	—	—	—	1	1	1	1	1	1	2781 685
19-14-82	PLATE, Strg. Column Shaft Lock, Except Tilt-Telescopic Strg.		1	1	1	1	1	1	1	1	1	1	1	2950 980
	PLATE, Strg. Column Lock Lever Guide, Except Tilt-Telescopic Strg.		1	1	1	1	1	1	1	1	1	1	1	2950 839
	PLATE LOCK, Tilt-Telescopic Strg.		—	—	—	—	—	1	1	1	1	1	1	3748 498
	Screw, Guide Plate		2	2	2	2	2	2	2	2	2	2	2	6028 499
	Pin, Lock Plate, Except Tilt, Tilt-Telescopic Strg.		1	1	1	1	1	1	1	1	1	1	1	6030 198
19-14-84	SHOE, Strg. Wheel Lock Tilt-Telescopic Strg.	3-Position	—	—	—	—	—	1	1	1	1	1	1	3467 388
	Tilt-Telescopic Strg.	4-Position	—	—	—	—	—	1	1	1	1	1	1	3467 389
19-14-85	SPRING, Upper Bearing w/Tilt-Telescopic Strg.		—	—	—	—	—	1	1	1	1	1	1	2781 679
	SPRING, Wheel Tilt w/Tilt-Telescopic		—	—	—	—	—	1	1	1	1	1	1	2925 524
	SPRING, Lock Bolt, Tilt-Telescopic Strg.		—	—	—	—	—	1	1	1	1	1	1	3467 390
	SPRING, Rack Preload, Tilt-Telescopic Strg.		—	—	—	—	—	1	1	1	1	1	1	3467 391
	SPRING, Shoe, Tilt-Telescopic Strg.		—	—	—	—	—	2	2	2	2	2	2	3467 392
	SPRING, Release Lever, Tilt-Telescopic Strg.		—	—	—	—	—	1	1	1	1	1	1	2880 262
	SPRING, Strg. Column Lower Bearing Except Tilt-Telescopic Strg.		1	1	1	1	1	1	1	1	1	1	1	3748 242
19-14-89	WASHER, Thrust, Tilt-Telescopic Strg.	(Early Type)	—	—	—	—	—	1	1	1	1	1	1	3467 423
		(Late Type)	—	—	—	—	—	1	1	1	1	1	1	3748 592
	WASHER, Wave, Tilt-Telescopic Strg.		—	—	—	—	—	1	1	1	1	1	1	3467 424
19-14-91	RING, Retaining, w/Tilt-Telescopic Strg.		—	—	—	—	—	1	1	1	1	1	1	2781 676

CARLINES
J - Challenger, B - Barracuda, V - Valiant, L - Dart, R - Satellite, W - Coronet - Charger, P - Plymouth, D - Dodge, C - Chrysler, Y - Imperial

AR Indicates use as required.
Numerals in parentheses ( ) refer to notes.
# Indicates parts not listed in any previous parts book.
★ Indicates change or addition.

Printed in U.S.A.
November 1974

CODE	PART NAME	ENG. TYPE OR CU. IN	V	B J	L	R	W	P	D	C (L M)	C (P)	C (H S)	Y	PART NUMBER
19-14-92	PIN, Dowel, Tilt-Telescopic		—	—	—	—	—	1	1	1	1	1	1	3467 382
	PIN, Pivot, Tilt-Telescopic		—	—	—	—	—	2	2	2	2	2	2	3467 823
	PIN, Release Lever, Tilt-Telescopic Strg.		—	—	—	—	—	1	1	1	1	1	1	2880 259
19-14-93	BOLT, Lock w/Tilt-Telescopic Strg.		—	—	—	—	—	1	1	1	1	1	1	3467 376
	SCREW, Support, Tilt-Telescopic Strg.		—	—	—	—	—	4	4	4	4	4	4	3748 500
19-14-97	SUPPORT, Bearing Housing w/Column Shaft, Tilt-Telescopic Strg.		—	—	—	—	—	1	1	1	1	1	1	3748 496
19-14-98	CARRIER, Assembly, w/Tilt-Telescopic Strg.		—	—	—	—	—	1	1	1	1	1	1	3575 561
19-14-102	BUMPER, Tilt-Telescopic Strg.		—	—	—	—	—	3	3	3	3	3	3	3467 378
	BUMPER, Strg. Shaft, w/Tilt-Telescopic Strg.		—	—	—	—	—	1	1	1	1	1	1	3575 948
19-14-108	RETAINER, Carrier Snap Ring, w/Tilt-Telescopic Strg.		—	—	—	—	—	1	1	1	1	1	1	3467 432
	RETAINER, Spring, Tilt-Telescopic Strg.		—	—	—	—	—	1	1	1	1	1	1	2880 367
19-14-118	SHIELD, Turn Signal Opening, w/Tilt-Telescopic Strg.		—	—	—	—	—	1	1	1	1	1	1	3575 982
	SHIELD, Tilt Lever Opening, Tilt-Telescopic Strg.		—	—	—	—	—	1	1	1	1	1	1	3467 419
19-14-120	HOUSING, Strg. Column Lock, w/Auto. Trans. Column Shift,		1	1	1	1	1	—	—	—	—	—	—	3575 715
	Except Auto. Trans. Column Shift		1	1	1	1	1	—	—	—	—	—	—	3748 398
	Except Tilt-Telescopic Strg.		—	—	—	—	—	1	1	1	1	1	1	3748 398
	Screw		4	4	4	4	4	4	4	4	4	4	4	6030 122
19-14-121	SPRING, Strg. Column Lock, Except Tilt-Telescopic Strg.		1	1	1	1	1	1	1	1	1	1	1	2996 858
19-14-123	SLEEVE, Strg. Column Shaft Lock Plate, Except Tilt-Telescopic Strg.		1	1	1	1	1	1	1	1	1	1	1	3467 178
19-15-1	**REPAIR KIT, Collapsible Strg. Column**													
	Shaft		1	1	1	1	1	1	1	1	1	1	1	3514 996
	KIT, Strg. Col. Shaft Centering Spheres w/Tilt-Telescopic Strg.		—	—	—	—	—	1	1	1	1	1	1	3514 995
19-15-4	SHAFT, Strg. Column, w/Body, w/Man. Trans. Col. Shift		1	—	1	—	—	—	—	—	—	—	—	3748 250
	Except Man. Trans. Col. Shift		1	—	1	—	—	—	—	—	—	—	—	3748 491
	SHAFT, Strg. Column, w/Body		—	1	—	—	—	—	—	—	—	—	—	3748 353
	SHAFT, Strg. Col. Upper, w/Man. Trans. Col. Shift		—	—	—	1	1	—	—	—	—	—	—	3748 199
	Except Man. Trans. Col. Shift		—	—	—	1	1	—	—	—	—	—	—	3748 269
	SHAFT, Strg. Col. Upper, Except Tilt-Telescopic		—	—	—	—	—	1	1	1	1	1	1	3748 362
	Upper w/Tilt-Telescopic		—	—	—	—	—	1	1	1	1	1	1	2880 266
	SHAFT, Strg. Col. Intermediate w/Man. Trans. Col. Shift		—	—	—	1	1	—	—	—	—	—	—	3748 213
	Except Man. Trans. Col. Shift		—	—	—	1	1	—	—	—	—	—	—	3748 258
	SHAFT, Strg. Col. Intermediate, Except Tilt-Telescopic		—	—	—	—	—	1	1	1	1	1	1	3748 257
	Intermediate, w/Tilt-Telescopic		—	—	—	—	—	1	1	1	1	1	1	3748 495
	SHAFT DRIVE, Tilt-Telescopic Strg.		—	—	—	—	—	1	1	1	1	1	1	3467 817
19-15-17	COVER, Strg. Column Shaft Coupling Body		1	1	1	1	1	1	1	1	1	1	1	(2530 538)
19-15-23	BODY, Strg. Column Shaft Coupling		1	1	1	1	1	1	1	1	1	1	1	3748 268
	COUPLING, Strg. Column Shaft,		—	—	—	1	1	1	1	1	1	1	1	3748 263
	Pin, Coupling Body		1	1	1	1	1	1	1	1	1	1	1	6029 951
	Pin, Spring, Coupling		AR	AR	AR	AR	AR	AR	AR	AR	AR	AR	AR	6028 750
	Bolt, Coupling, Up To 10-4-73		—	—	—	2	2	2	2	2	2	2	2	6030 289
	After 10-4-73		—	—	—	2	2	2	2	2	2	2	2	6030 602
	Bolt, Coupling, Except Tilt-Telescopic Strg., Up To 10-4-73		—	—	—	2	2	2	2	2	2	2	2	6030 355
	After 10-4-73		—	—	—	2	2	2	2	2	2	2	2	6030 604

CARLINES
J - Challenger V - Valiant
B - Barracuda L - Dart
R - Satellite
W - Coronet - Charger
*P - Plymouth
D - Dodge
C - Chrysler
Y - Imperial

AR Indicates use as required.
# Indicates parts not listed in any previous parts book.
Numerals in parentheses ( ) refer to notes.
★ Indicates change or addition.

Printed in U.S.A.
November 1974

CODE	PART NAME	ENG. TYPE OR CU. IN	V	B J	L	R	W	P	D	C (L M)	C (P)	C (H S)	Y	PART NUMBER
19-15-23	BODY Cont'd.													
	Bolt, Coupling, w/Tilt-Telescopic Strg., Up To 10-4-73		—	—	—	—	—	2	2	2	2	2	2	6030 354
	After 10-4-73		—	—	—	—	—	2	2	2	2	2	2	6030 603
19-15-24	PIN, Strg. Column Shaft Lower Coupling		1	1	1	1	1	1	1	1	1	1	1	2266 743
19-15-28	SEAL, Strg. Column Shaft Coupling Body		1	1	1	1	1	1	1	1	1	1	1	2530 848
	SEAL, Strg. Column Jacket to Tube Except Tilt-Telescopic Strg.		1	1	1	1	1	1	1	1	1	1	1	3575 082
19-15-31	LOCK, Shaft, w/Tilt-Telescopic Strg.		—	—	—	—	—	1	1	1	1	1	1	3575 562
19-15-33	GUIDE, Strg. Gear Recirculating Ball		2	2	2	2	2	2	2	2	2	2	2	2072 035
19-15-35	SPRING, Strg. Column Shaft Coupling Body		1	1	1	1	1	1	1	1	1	1	1	2925 492
19-15-38	WORM, w/Piston, Strg. Gear		1	1	1	1	1	1	1	1	1	1	1	3643 170
19-15-39	SPRING PACKAGE Strg. Gear Recirculating Ball Guide		1	1	1	1	1	1	1	1	1	1	1	2084 215
19-15-43	FLANGE, Strg. Column Shaft Coupling, Tilt-Telescopic Strg.		—	—	—	—	—	1	1	1	1	1	1	3748 271
19-15-44	SHOE, Strg. Column Shaft Coupling Body		2	2	2	2	2	2	2	2	2	2	2	2800 738
19-15-51	STRAP, Strg. Column Shaft Coupling, Up To 11-5-73		—	—	—	2	2	2	2	2	2	2	2	3748 270
	After 11-5-73		—	—	—	2	2	2	2	2	2	2	2	3748 599
19-15-60	BEARING, Strg. Gear Worm		1	1	1	1	1	1	1	1	1	1	1	2537 796
	BEARING, Strg. Gear Thrust		2	2	2	2	2	2	2	2	2	2	2	1822 158
19-15-63	RACE, Strg. Gear Thrust Bearing, Inner		1	1	1	1	1	1	1	1	1	1	1	1856 292
	Outer		1	1	1	1	1	1	1	1	1	1	1	1822 156
19-15-65	NUT, Strg. Gear Thrust Bearing		1	1	1	1	1	1	1	1	1	1	1	1822 157
19-15-69	SPACER, W/Center Race, Strg. Gear		1	1	1	1	1	1	1	1	1	1	1	1822 390
19-15-77	SPACER, Upper Strg. Shaft w/Tilt-Telescopic Strg.		—	—	—	—	—	1	1	1	1	1	1	3748 501
19-15-81	RETAINER, Strg. Column Shaft Lock Cover Screw, w/Tilt Strg.		—	—	—	—	—	3	3	—	—	—	—	3575 080
19-15-111	SHIELD, Strg. Col. Shaft Coupling		—	—	—	—	—	1	1	1	1	1	1	3748 349
19-19-1	**SEAL PACKAGE, Strg. Gear Shaft Cover**		1	1	1	1	1	1	1	1	1	1	1	3004 995
19-19-4	SHAFT, Strg. Gear		1	1	1	1	1	1	1	1	1	1	1	2537 776
19-19-5	SNAP RING, Strg. Gear Shaft Seal		1	1	1	1	1	1	1	1	1	1	1	2127 049
19-19-7	SCREW, Strg. Gear Shaft Adjusting		1	1	1	1	1	1	1	1	1	1	1	2948 857
19-19-9	NUT, Strg. Gear Shaft Adjusting Screw		1	1	1	1	1	1	1	1	1	1	1	6028 983
19-19-19	BEARING, Strg. Gear Shaft		—	—	—	—	—	1	1	1	1	1	1	2948 971
19-19-24	COVER, Strg. Gear Shaft		1	1	1	1	1	1	1	1	1	1	1	2948 989
19-19-26	"O" RING, Strg. Gear Shaft Cover		1	1	1	1	1	1	1	1	1	1	1	3643 009
19-19-32	NUT, Strg. Gear Shaft Cover		1	1	1	1	1	1	1	1	1	1	1	1733 627
19-19-35	SEAL, w/DATE TAG, Strg. Gear Shaft Adjusting Screw		1	1	1	1	1	1	1	1	1	1	1	2948 859
	SEAL, Strg. Gear Worm Shaft		1	1	1	1	1	1	1	1	1	1	1	2267 129
	OIL SEAL, Strg. Gear Shaft Early Type		1	1	1	1	1	1	1	1	1	1	1	2537 153
	Late Type		1	1	1	1	1	1	1	1	1	1	1	# 3643 184
19-19-36	RETAINER, Strg. Gear Shaft Seal		1	1	1	1	1	1	1	1	1	1	1	1670 356
19-19-38	DUST SEAL, Strg. Gear Shaft		1	1	1	1	1	1	1	1	1	1	1	2267 350
19-19-70	SEAL, Strg. Gear Worm Sleeve		1	1	1	1	1	1	1	1	1	1	1	1822 324
19-19-71	RING, Strg. Gear Worm Seal		1	1	1	1	1	1	1	1	1	1	1	1822 406
19-19-72	SLEEVE, Strg. Gear Worm		1	1	1	1	1	1	1	1	1	1	1	1822 320
19-27-2	**ARM, Strg. Link Gear**		1	1	1	1	1	—	—	—	—	—	—	3402 729
			—	—	—	—	—	1	1	1	1	1	1	3722 435
19-27-8	NUT, Strg. Link Gear Arm		1	1	1	1	1	1	1	1	1	1	1	6029 964
	Nut, Strg. Link Gear Arm Stud. End		1	1	1	1	1	1	1	1	1	1	1	9425 132
	Washer, Gear Arm Nut		1	1	1	1	1	1	1	1	1	1	1	6028 088

CODE	PART NAME	ENG. TYPE OR CU. IN	V	B J	L	R	W	P	D	C (L M)	C (P)	C (H S)	Y	PART NUMBER
19-27-31	ARM, Strg. Link Idler		1	—	1	—	—	—	—	—	—	—	—	3402 846
			—	1	—	—	—	—	—	—	—	—	—	2535 886
			—	—	—	1	1	—	—	—	—	—	—	3402 583
			—	—	—	—	—	1	1	1	1	1	1	3780 503
	Nut, Stud		1	1	1	1	1	1	1	1	1	1	1	9425 132
19-27-33	BRACKET, Front Suspension Crossmember Strg. Linkage Idler Arm		1	—	1	—	—	—	—	—	—	—	—	2883 977
19-27-40	SEAL, Strg. Link Idler Arm End		1	1	1	1	1	—	—	—	—	—	—	2835 895
	SEAL, Strg. Link Idler Arm Small Socket		—	—	—	—	—	1	1	1	1	1	1	2835 895
	SEAL, Strg. Link Gear Arm Stud		—	—	—	—	—	1	1	1	1	1	—	2535 459
	SEAL, Strg. Link Gear Arm Stud End		1	1	1	1	1	—	—	—	—	—	—	2835 896
19-27-45	BOLT PACKAGE, Strg. Link Idler Arm Bracket End		1	1	1	1	1	—	—	—	—	—	—	3004 804
			—	—	—	—	—	1	1	1	1	1	1	3004 805
19-27-50	LINK, Strg. Link Center		1	—	1	—	—	—	—	—	—	—	—	3402 797
			—	1	—	—	—	—	—	—	—	—	—	2835 877
			—	—	—	1	1	—	—	—	—	—	—	3402 735
			—	—	—	—	—	1	1	1	1	1	1	3722 473
19-27-51	PLUG, Strg. Link Gear Arm Stud		1	1	1	1	1	1	1	1	1	1	—	2950 840
	Strg. Link Gear Arm End Cover		—	1	—	1	1	—	—	—	—	—	—	6030 099
	Strg. Link Gear Arm End		—	—	—	—	—	—	—	—	—	—	1	6030 099
	Strg. Link Tie Rod End Cover		4	4	4	4	4	4	4	4	4	4	4	6030 099
19-30-4	**WHEEL, Strg., w/Center Padded Horn Button,**													
		Black	1	—	1	—	—	—	—	—	—	—	—	P000 JX9
		Blue	1	—	1	—	—	—	—	—	—	—	—	P000 KB7
		Gold	1	—	1	—	—	—	—	—	—	—	—	P000 JY7
		Green	1	—	1	—	—	—	—	—	—	—	—	P000 KG7
		Parchment	1	—	1	—	—	—	—	—	—	—	—	P000 JL5
	Wheel, Steering w/Three Spokes	Blue	1	—	1	1	1	—	—	—	—	—	—	P002 KB7
		Green	1	—	1	1	1	—	—	—	—	—	—	P002 KG7
		Parchment	1	—	1	1	1	—	—	—	—	—	—	P002 KL5
		Black	1	—	1	1	1	1	1	—	—	—	—	P002 KX9
		Gold	1	—	1	1	1	—	—	—	—	—	—	P002 KY7
		Chestnut	—	—	—	1	1	—	—	—	—	—	—	P002 KT8
	w/Partial Horn Ring	Black	—	—	—	1	1	1	1	—	—	—	—	P001 KX9
	Wheel, Steering w/Three Spokes, w/Partial Horn Ring	Blue	1	—	1	1	1	—	—	—	—	—	—	P003 KB7
		Green	1	—	1	1	1	—	—	—	—	—	—	P003 KG7
		Parchment	1	—	1	1	1	—	—	—	—	—	—	P003 KL5
		Chestnut	1	—	1	1	1	—	—	—	—	—	—	P003 KT8
		Black	1	—	1	1	1	1	1	1	1	1	1	P003 KX9
		Gold	1	—	1	1	1	—	—	—	—	—	—	P003 KY7
	w/2 Spoke Horn Button	Black	—	1	—	—	—	—	—	—	—	—	—	P005 JX9
	w/Soft Rim Strg. Wheel		1	—	1	1	1	—	—	—	—	—	—	P006 JX9
	w/Tilt-Telescopic, w/Horn Rim Switch	Black	—	—	—	—	—	1	1	1	1	1	1	P004 JX9
	Nut, w/Washer, w/Three Spoke Wheel		3	3	3	3	3	3	3	3	3	3	3	6025 002
19-30-7	COVER, Strg. Wheel Hub, w/Tilt-Telescopic Strg.		—	—	—	—	—	1	1	1	1	1	1	2996 863
	Screw		—	—	—	—	—	3	3	3	3	3	3	6025 243
19-30-10	SPACER, Strg. Wheel, w/Soft Rim		1	—	1	1	1	—	—	—	—	—	—	3467 186
	Nut		3	—	3	3	3	—	—	—	—	—	—	6029 392
19-30-18	NUT, Strg. Column Shaft, Strg. Wheel,		1	1	1	1	1	1	1	1	1	1	1	6029 945
19-30-19	FLANGE, Strg. Wheel Locking, w/Tilt-Telescopic Strg.		—	—	—	—	—	1	1	1	1	1	1	2925 558

CODE	PART NAME	ENG. TYPE OR CU. IN	V	B J	L	R	W	P	D	C (L M)	C (P)	C (H S)	Y	PART NUMBER
19-30-20	RING, Strg. Wheel Horn w/Partial Horn Ring and Cover													
	Black		1	—	1	1	1	1	1	1	1	1	1	P105 KX9
	Blue		1	—	1	1	1	1	1	1	1	1	1	P105 KB7
	Green		1	—	1	1	1	1	1	1	1	1	1	P105 KG7
	Parchment		1	—	1	1	1	1	1	1	1	1	1	P105 KL5
	Chestnut		1	—	1	1	1	1	1	1	1	1	1	P105 KT8
	Gold		1	—	1	1	1	1	1	1	1	1	1	P105 KY7
19-30-21	RETAINER, Strg. Wheel Horn Button		1	1	1	1	1	—	—	—	—	—	—	3467 836
	RETAINER, Strg. Wheel Horn Ring w/Full and Partial Horn Ring		—	—	1	1	1	1	1	—	—	—	—	2996 884
19-30-23	PLATE, Strg. Wheel and Horn Ring Mounting w/Full and Partial Horn Ring		1	—	1	1	1	1	1	—	—	—	—	3467 500
19-30-24	SPRING, Strg. Wheel Horn		3	—	3	3	3	3	3	3	3	3	3	3748 114
19-30-26	ORNAMENT, Strg. Wheel w/Horn Button Padded		1	—	—	—	—	—	—	—	—	—	—	3467 485
	w/Horn Button Padded		—	—	1	—	—	—	—	—	—	—	—	3467 486
	INLAY, Strg. Wheel Horn Ring w/Partial Horn Ring, Wood Grain		1	—	—	1	—	—	—	—	—	—	—	3748 344
			—	—	1	—	1	—	—	—	—	—	—	3748 283
			—	—	—	—	—	1	—	—	—	—	—	3748 284
			—	—	—	—	—	—	1	—	—	—	—	3748 347
			—	—	—	—	—	—	—	1	1	1	—	3748 348
			—	—	—	—	—	—	—	—	—	—	1	3748 285
	ORNAMENT, w/TILT-Telescopic Strg. Wheel		—	—	—	—	—	1	—	—	—	—	—	2996 888
	w/Tilt-Telescopic Strg. Wheel		—	—	—	—	—	—	1	—	—	—	—	2996 889
	w/Tilt-Telescopic Strg. Wheel		—	—	—	—	—	—	—	1	1	1	—	2996 890
	Clip, Ornament Bar, Tilt-Telescopic		—	—	—	—	—	5	5	5	5	5	5	445 160
19-30-40	INLAY, Strg. Wheel Spoke Cover, w/3 Spoke Strg. - Wheel w/o Partial Horn Ring		1	—	—	1	—	—	—	—	—	—	—	3748 478
			—	—	1	—	1	—	—	—	—	—	—	3748 479
			—	—	—	—	—	1	—	—	—	—	—	3748 480
			—	—	—	—	—	—	1	—	—	—	—	3748 481
			—	—	—	—	—	—	—	1	1	1	—	3748 482
19-30-43	COVER, Strg. Wheel Spoke, w/3 Spoke Strg. Wheel, w/o Inlay													
	Blue		—	—	—	1	1	—	—	—	—	—	—	P116 KB7
	Green		—	—	—	1	1	—	—	—	—	—	—	P116 KG7
	Parchment		—	—	—	1	1	—	—	—	—	—	—	P116 KL5
	Chestnut		—	—	—	1	1	—	—	—	—	—	—	P116 KT8
	Black		—	—	—	1	1	1	1	—	—	—	—	P116 KX9
	Gold		—	—	—	1	1	—	—	—	—	—	—	P116 KY7
	COVER, Strg. Wheel Spoke, w/3 Spoke Strg. Wheel, w/Inlay Blue		1	—	1	1	1	—	—	—	—	—	—	P122 KB7
	Green		1	—	1	1	1	—	—	—	—	—	—	P122 KG7
	Parchment		1	—	1	1	1	—	—	—	—	—	—	P122 KL5
	Chestnut		—	—	—	1	1	—	—	—	—	—	—	P122 KT8
	Black		1	—	1	1	1	1	1	1	1	1	—	P122 KX9
	Gold		1	—	1	1	1	—	—	—	—	—	—	P122 KY7
	BUTTON, Strg. Wheel Horn w/Soft Rim Strg. Wheel		1	—	1	1	1	—	—	—	—	—	—	3575 564
	w/Two Spoke Strg. Wheel		—	1	—	—	—	—	—	—	—	—	—	3575 564
	CAP, Strg. Wheel Ornament, w/Three Spoke Center Padded Horn Button Strg. Wheel Blue		1	—	1	—	—	—	—	—	—	—	—	P100 KB7
	Green		1	—	1	—	—	—	—	—	—	—	—	P100 KG7
	Black		1	—	1	—	—	—	—	—	—	—	—	P100 JX9

CARLINES: J - Challenger, B - Barracuda, V - Valiant, L - Dart, R - Satellite, W - Coronet - Charger, P - Plymouth, D - Dodge, C - Chrysler, Y - Imperial

AR Indicates use as required.

Numerals in parentheses ( ) refer to notes.

Printed in U.S.A.

# Indicates parts not listed in any previous parts book.

★ Indicates change or addition.

November 1974

CODE	PART NAME	ENG. TYPE OR CU. IN	V	B J	L	R	W	P	D	C (L M)	C (P)	C (H S)	Y	PART NUMBER
19-30-43	CAP, Cont'd.													
	Parchment		1	—	1	—	—	—	—	—	—	—	—	P100 JL5
	Gold		1	—	1	—	—	—	—	—	—	—	—	P100 JY7
19-30-44	PAD, Strg. Wheel													
	w/Tilt-Telescopic Strg. Wheel													
	Black		—	—	—	—	—	1	1	1	1	1	—	P101 KX9
	Black		—	—	—	—	—	—	—	—	—	—	1	P102 KX9
19-31-1	**BRACKET, Instrument Panel Strg.**													
	Column Support		1	—	1	—	—	—	—	—	—	—	—	3748 105
			—	—	—	1	1	—	—	—	—	—	—	3748 107
	Except Tilt-Telescopic Strg.		—	—	—	—	—	1	1	1	1	1	1	3748 109
	w/Tilt-Telescopic Strg.		—	—	—	—	—	1	1	1	1	1	1	3748 111
	BRACKET, Instrument Panel Strg. Column													
	Support to Dash		—	1	—	—	—	—	—	—	—	—	—	2984 757
	Screw w/Washer , Support Bracket to Col.		4	4	4	4	4	4	4	4	4	4	4	6026 904
	Screw, Bracket to Hanger		—	—	—	1	1	1	1	1	1	1	1	6027 402
	Stud, Bracket or Clamp		2	2	2	2	2	2	2	2	2	2	2	6027 947
	Nut		AR	AR	AR	AR	AR	AR	AR	AR	AR	AR	AR	6027 403
	Nut		1	—	1	1	1	—	—	—	—	—	—	6027 458
	Washer		AR	AR	AR	AR	AR	AR	AR	AR	AR	AR	AR	6027 404
19-31-3	CLIP, Strg. Column Support Bracket													
	Hanger		—	—	—	—	—	1	1	1	1	1	1	2925 495
19-46-3	**TUBE, Strg. Column Gearshift,**													
	w/Three Speed Man. Trans.		1	—	1	—	—	—	—	—	—	—	—	3748 311
	w/Auto. Trans. Column Shift		1	—	1	—	—	—	—	—	—	—	—	3748 164
			—	1	—	—	—	—	—	—	—	—	—	3748 577
	w/Three Speed Man. Trans.		—	—	—	1	1	—	—	—	—	—	—	3748 246
	Except Three Speed Man. Trans.		—	—	—	1	1	—	—	—	—	—	—	3748 247
	w/Auto. Trans., Except Tilt Strg.		—	—	—	—	—	1	1	1	1	1	1	3748 175
	Screw, Strg. Col. Gearshift Tube Bearing, w/Man. Trans. Col. Shift		2	—	2	2	2	—	—	—	—	—	—	9417 749
19-46-8	HOUSING, Strg. Column Gearshift													
	w/3 Speed Man. Trans. Column Shift, Up To 11/19/73		1	—	1	1	1	—	—	—	—	—	—	2996 798
	After 11/19/73		1	—	1	1	1	—	—	—	—	—	—	3748 584
	w/Auto. Trans. Column Shift		1	1	1	1	1	—	—	—	—	—	—	3575 996
	w/Auto Trans. Column Shift Except Tilt-Telescopic Strg.		—	—	—	—	—	1	1	1	1	1	1	3748 133
	HOUSING, Strg. Column Lock Control,													
	w/Floor Shift		1	1	1	1	1	—	1	—	—	—	—	3575 208
	Washer, Spring Col. Gearshift		1	1	1	1	1	1	1	1	1	1	1	6023 046
	Screw, Set Col. Gearshift Housing		1	1	1	1	1	1	1	1	1	1	1	125 735
19-46-10	SPRING, Strg. Column Lock Control													
	Housing, w/Floor Shift		1	1	1	1	1	—	1	—	—	—	—	3575 256
	w/Auto. Console, Export		—	—	—	—	—	—	1	—	—	—	—	3575 256
19-46-12	SPACER, Strg. Column Gearshift Tube Lever													
	w/3 Speed Man. Trans. Col. Shift		1	—	1	1	1	—	—	—	—	—	—	2883 357
	w/3 Speed Man. Trans. Col. Shift		1	—	1	1	1	—	—	—	—	—	—	2883 541
	BUMPER, Strg. Column Lock													
	Control Housing, w/Floor Shift		1	1	1	1	1	—	1	—	—	—	—	3575 257
	w/Auto. Console, Export		—	—	—	—	—	—	1	—	—	—	—	3575 257
19-46-16	LEVER, Strg. Column Gearshift Tube, First and Reverse,													
	W/Man. Trans. Column Shift		1	—	1	1	1	—	—	—	—	—	—	3575 891
19-46-29	LEVER, Strg. Column Gearshift Housing Lock, except													
	Tilt-Telescopic Strg.		1	1	1	1	1	1	1	1	1	1	1	2950 844
	Pin		1	1	1	1	1	1	1	1	1	1	1	9421 202
19-46-31	DECAL, Strg. Column Lock Control Housing, w/Floor Shift		1	1	1	1	1	—	1	—	—	—	—	3575 258

CARLINES: J - Challenger, B - Barracuda, V - Valiant, L - Dart, R - Satellite, W - Coronet - Charger, P - Plymouth, D - Dodge, C - Chrysler, Y - Imperial

AR Indicates use as required.

# Indicates parts not listed in any previous parts book.

Numerals in parentheses ( ) refer to notes.

★ Indicates change or addition.

Printed in U.S.A.
November 1974

CODE	PART NAME	ENG. TYPE OR CU. IN	V	B J	L	R	W	P	D	C (L M)	C (P)	C (H S)	Y	PART NUMBER
19-46-31	DECAL Cont'd.													
	w/Auto. Console Export		—	—	—	—	—	—	1	—	—	—	—	3575 258
19-46-50	RING, Shift Tube Retainer,													
	w/Tilt-Telescopic Strg.		—	—	—	—	—	1	1	1	1	1	1	3467 415
19-46-55	SUPPORT, Strg. Column Gearshift Housing, except Auto. Trans. Column Shift		1	1	1	1	1	—	1	—	—	—	—	2996 799
	w/Auto. Console, Export		—	—	—	—	—	—	1	—	—	—	—	2996 799
	SUPPORT, Shift Tube, w/Tilt-Telescopic Strg.		—	—	—	—	—	1	1	1	1	1	1	3467 394
19-46-58	RACK, Switch Actuator, w/Tilt-Telescopic Strg.		—	—	—	—	—	1	1	1	1	1	1	3467 383
19-46-59	ACTUATOR, Switch, w/Tilt-Telescopic Strg.		—	—	—	—	—	1	1	1	1	1	1	3748 494
	ACTUATOR, Strg. Column Switch, w/o Tilt-Tel. Strg., C-S		—	—	—	—	—	—	—	—	—	1	1	3748 361
19-46-61	SECTOR, Switch Actuator, w/Tilt-Telescopic Strg.		—	—	—	—	—	1	1	1	1	1	1	3467 386
19-46-64	RING, Ignition Switch Sector Retaining w/Tilt-Telescopic Strg.		—	—	—	—	—	1	1	1	1	1	1	3467 384
19-48-1	**ROD, Gearshift, First and Reverse,**													
	w/Std.-3 Speed Man. Trans. Col. Shift	6	1	—	1	—	—	—	—	—	—	—	—	3575 344
	w/Heavy Duty-3 Speed Man. Trans. Col. Shift		1	—	1	—	—	—	—	—	—	—	—	3575 345
			—	—	—	1	1	—	—	—	—	—	—	3467 784
	Second and Third Trans. w/Std.-3 Speed Man. Trans. Col. Shift (Trans. End) w/Clip Hold End	6	1	—	1	—	—	—	—	—	—	—	—	3467 777
	w/Slot End	6	1	—	1	—	—	—	—	—	—	—	—	3575 380
	w/Heavy Duty 3 Speed Man. Trans. Col. Shift (Trans. End) w/Clip Hole End		1	—	1	—	—	—	—	—	—	—	—	3467 778
	w/Slot End		1	—	1	—	—	—	—	—	—	—	—	3575 378
	Second and Third, Front		1	—	1	—	—	—	—	—	—	—	—	3575 346
	Second and Third		—	—	—	1	1	—	—	—	—	—	—	3467 785
	ROD, Gearshift, Control W/Auto. Trans. Col. Shift	Front	1	—	1	—	—	—	—	—	—	—	—	3575 361
		Front	—	1	—	—	—	—	—	—	—	—	—	3575 364
		Front	—	—	—	1	1	—	—	—	—	—	—	3575 338
		Front	—	—	—	—	—	1	1	1	1	1	1	3575 331
	Except 360 Eng.,	Rear	1	—	1	—	—	—	—	—	—	—	—	3575 342
	w/360 Eng.	Rear	1	—	1	—	—	—	—	—	—	—	—	3575 343
		Rear	—	1	—	—	—	—	—	—	—	—	—	2950 298
		Rear	—	—	—	1	1	1	1	1	1	1	1	3575 336
19-48-9	SPRING, Gearshift Control Front Rod Adjusting w/Auto. Trans. Column Shift		1	1	1	1	1	1	1	1	1	1	1	3575 354
19-48-12	CLAMP, Gearshift Front Rod w/Auto. Trans. Col. Shift		1	1	1	1	1	1	1	1	1	1	1	2204 274
	CLAMP, Gearshift Rod Swivel w/3 Speed Man. Trans. Col. Shift		2	—	2	2	2	—	—	—	—	—	—	2204 274
19-48-16	SWIVEL, Gearshift Rod, W/Auto. Trans. Column Shift	Front	—	1	—	—	—	—	—	—	—	—	—	3467 665
		Front	1	—	1	1	1	1	1	1	1	1	1	3575 334
	w/Man. Trans. Col. Shift		1	—	1	—	—	—	—	—	—	—	—	3467 667
	w/Man. Trans. Col. Shift		—	—	—	1	1	1	—	—	—	—	—	3467 790
19-48-23	CLIP, Gearshift Control Rod		AR	AR	AR	AR	AR	—	—	—	—	—	—	6027 983
19-48-45	SHAFT, gearshift Torque, w/Man. Trans. Column Shift		1	—	1	—	—	—	—	—	—	—	—	3467 774

CARLINES: J - Challenger; B - Barracuda; V - Valiant; L - Dart; R - Satellite; W - Coronet - Charger; P - Plymouth; D - Dodge; C - Chrysler; Y - Imperial

AR Indicates use as required.

Numerals in parentheses ( ) refer to notes.

# Indicates parts not listed in any previous parts book.

★ Indicates change or addition.

Printed in U.S.A.
November 1974

CODE	PART NAME	ENG. TYPE OR CU. IN	V	B J	L	R	W	P	D	C (L M)	C (P)	C (H S)	Y	PART NUMBER
19-48-45	SHAFT Cont'd.													
			—	—	—	1	1	—	—	—	—	—	—	3467 786
	w/Auto. Trans. Column Shift Except 360 and Heavy Duty 225 Eng.		1	—	1	—	—	—	—	—	—	—	—	3575 339
	w/Auto. Trans. Column Shift,													
	w/360 and Heavy Duty 225 Eng.		1	—	1	—	—	—	—	—	—	—	—	3575 340
	w/Auto. Trans. Column Shift		—	1	—	—	—	—	—	—	—	—	—	3467 608
	w/Auto. Trans. Col. Shift	Up to 5/7/74	—	—	—	1	1	—	—	—	—	—	—	3575 360
		After 5/7/74	—	—	—	1	1	—	—	—	—	—	—	3575 384
	w/Auto. Trans. Column Shift	Up to 5/7/74	—	—	—	—	—	1	1	1	1	1	1	3575 328
		After 5/7/74	—	—	—	—	—	1	1	1	1	1	1	# 3575 386
	Washer		AR	AR	AR	AR	AR	AR	AR	AR	AR	AR	AR	9417 098
	Washer, Spring		1	1	1	1	1	1	1	1	1	1	1	905 206
19-48-46	BRACKET, Gearshift Torque Shaft Trans., w/Auto. Trans. Col. Shift Except													
	360 Eng.		1	—	1	—	—	—	—	—	—	—	—	2781 429
	w/Auto. Trans. Col. Shift w/360 Eng.		1	—	1	—	—	—	—	—	—	—	—	2800 942
	w/Auto. Trans. Col. Shift													
	w/318 Eng.	Up to 5/7/74 8	—	1	—	—	—	—	—	—	—	—	—	3575 326
	w/360 Eng.	Up to 5/7/74 8	—	1	—	—	—	—	—	—	—	—	—	3575 327
	w/225 and 318 Eng. w/Std. Duty Auto. Trans.	Up to 5/7/74	—	—	—	1	1	—	—	—	—	—	—	3575 326
	w/360 Eng. w/Std. Duty Auto. Trans.	Up to 5/7/74	—	—	—	—	—	1	1	—	—	—	—	3575 326
	w/All Engines w/All Auto. Trans.	After 5/7/74	—	1	—	1	1	1	1	1	1	1	1	3575 327
	BRACKET, Gearshift Torque Shaft Frame, w/Auto. Trans. Col. Shift		1	—	1	—	—	—	—	—	—	—	—	2467 932
	w/Man. Trans. Col. Shift		1	—	1	—	—	—	—	—	—	—	—	3467 776
	w/Auto. Trans. Col. Shift		—	1	—	—	—	—	—	—	—	—	—	2950 920
	w/Auto. Trans. Col. Shift		—	—	—	1	1	—	—	—	—	—	—	3467 735
	w/Auto. Trans. Col. Shift		—	—	—	—	—	1	1	1	1	1	1	3575 332
	Nut, w/Washer		AR	AR	AR	AR	AR	AR	AR	AR	AR	AR	—	6028 114
19-48-49	GROMMET, Gearshift Rod, Col. Lever		AR	—	AR	AR	AR	—	—	—	—	—	—	3467 791
	GROMMET, Gearshift Control Rod, Front & Rear													
	w/Auto. Trans. Col. Shift		AR	AR	AR	AR	AR	AR	AR	AR	AR	AR	AR	3575 333
19-48-50	BUSHING, Gearshift Torque Shaft Bracket,		2	2	2	—	—	2	2	2	2	2	2	3467 800
	w/Man. Trans. Col. Shift		—	—	—	2	2	—	—	—	—	—	—	3467 800
	w/Auto. Trans. Col. Shift		—	—	—	2	2	—	—	—	—	—	—	2781 420
19-54-2	**OIL PUMP PACKAGE, Power Steering**													
	w/3/8" Threaded Hole Pump Shaft		1	1	1	—	—	—	—	—	—	—	—	3004 800
	w/Key Slotted Pump Shaft		1	1	1	—	—	—	—	—	—	—	—	(2891 471)
	w/o Air Conditioning	6	—	—	—	1	1	—	—	—	—	—	—	2891 472
	w/3/8" Threaded Hole Pump Shaft w/Air Conditioning	6	—	—	—	1	1	—	—	—	—	—	—	2891 462
	w/3/8" Threaded Hole Pump Shaft (Also use one of 3004 564 Ring Pkg.)	8	—	—	—	1	1	1	1	1	1	1	1	2891 463
	w/Key Slotted Pump Shaft		—	—	—	1	1	1	1	1	1	1	—	2891 472
	Plug, Pump Housing High Pressure By-Pass, w3/8" Threaded Hole Pump Shaft		1	1	1	1	1	1	1	1	1	1	1	444 688
	Bolt, Adjusting	Up to 6/20/74 6	1	—	1	1	1	—	—	—	—	—	—	6028 737
	Bolt Adjusting	After 6/20/74 6	1	—	1	1	1	—	—	—	—	—	—	6029 550

CARLINES: J - Challenger, B - Barracuda, V - Valiant, L - Dart, R - Satellite, W - Coronet - Charger, P - Plymouth, D - Dodge, C - Chrysler, Y - Imperial

AR Indicates use as required.

# Indicates parts not listed in any previous parts book.

Numerals in parentheses ( ) refer to notes.

★ Indicates change or addition.

Printed in U.S.A.
November 1974

CODE	PART NAME	ENG. TYPE OR CU. IN	V	B J	L	R	W	P	D	C (L M)	C (P)	C (H S)	Y	PART NUMBER
19-54-2	OIL PUMP PACKAGE Cont'd.													
	Screw, Adjusting, w/400 & 440 Engines	8	—	—	—	1	1	1	1	1	1	1	1	180 121
	Washer, w/Key Slotted Pump Shaft		2	2	2	2	2	2	2	2	2	2	—	6025 063
	Washer, w/Key Slotted Pump Shaft		2	2	2	2	2	2	2	2	2	2	—	6022 190
	Screw w/Washer, w/Key Slotted Pump Shaft	6	2	—	2	2	2	—	—	—	—	—	—	6025 063
	Spacer, Power Strg. Pump Eng. w/400, 440 Engines	8	—	—	—	1	1	1	1	1	1	1	1	6030 051
	Washer, w/Key Slotted Pump Shaft	6	2	—	2	2	2	—	—	—	—	—	—	6022 190
19-54-5	STUD, Pump Mounting, w/Key Slotted Pump Shaft		1	1	1	1	1	1	1	1	1	1	—	2537 835
19-54-25	SHAFT and RETAINING RING PACKAGE, Pump, w/Key Slotted Pump Shaft		1	1	1	1	1	1	1	1	1	1	—	2891 168
19-54-28	RING, Pump Drive Shaft Retaining, w/Key Slotted Pump Shaft		1	1	1	1	1	1	1	1	1	1	—	2891 166
19-54-29	SEAL, Pump Drive Shaft, w/Key Slotted Pump Shaft		1	1	1	1	1	1	1	1	1	1	—	2537 899
19-54-31	VALVE, Pump Flow Control Pressure Relief w/Key Slotted Pump Shaft		1	1	1	—	—	—	—	—	—	—	—	2891 459
	w/Key Slotted Pump Shaft	8	—	—	—	1	1	1	1	1	1	1	—	2891 460
19-54-32	SPRING, Pump Flow Control Valve, w/3/8" Threaded Hole Pump Shaft		1	1	1	1	1	1	1	1	1	1	1	2537 926
	SPRING, Pump Flow Control, w/Key Slotted Pump Shaft		1	1	1	1	1	1	1	1	1	1	—	2537 833
19-54-54	ROTATING GROUP PACKAGE, Pump, w/3/8" Threaded Hole Pump Shaft		1	1	1	1	1	1	1	1	1	1	1	2537 995
	REPAIR KIT, Pump Vane, w/Key Slotted Pump Shaft		1	1	1	1	1	1	1	1	1	1	—	2537 840
	REPAIR KIT, Pump Ring and Rotor Vane, w/Key Slotted Pump Shaft		1	1	1	1	1	1	1	1	1	1	—	2537 837
19-54-55	SEAL KIT, Pump w/Key Slotted Pump Shaft		1	1	1	1	1	1	1	1	1	1	—	2537 838
	w/3/8" Threaded Hole Pump Shaft		1	1	1	1	1	1	1	1	1	1	1	3685 622
19-54-86	PULLEY, Pump w/3/8" Threaded Hole Pump Shaft, w/Air Cond.	6	1	—	1	1	1	—	—	—	—	—	—	2951 157
	w/Key Slotted Pump Shaft, w/o Air Cond.	6	1	—	1	1	1	—	—	—	—	—	—	3769 986
	w/3/8" Threaded Hole Pump Shaft, w/318 and 360 Eng.	8	1	—	1	—	—	—	—	—	—	—	—	2951 901
	w/360 Eng. w/Pwr. Strg. Oil Cooler	8	—	1	—	1	1	—	—	—	—	—	—	2951 901
	w/Key Slotted Pump Shaft w/318 and 360 Eng., w/o Oil Cooler	8	1	1	1	1	1	1	1	—	—	—	—	# 3769 985
	w/Key Slotted Pump Shaft, w/400 and 440 Eng. w/o Oil Cooler	8	—	—	—	1	1	—	—	—	—	—	—	3769 987
	w/3/8" Threaded Hole Pump Shaft, w/400 Eng. w/4 Bbl. w/Calif. Emission Pkg.		—	—	—	—	—	1	1	1	1	1	—	3698 826
	w/440 Eng., w/o H/Perf. w/Calif. Emission Pkg.		—	—	—	—	—	1	1	1	1	1	1	3698 826
	w/400 Eng. and w/440 Eng. w/o Calif. Emission Pkg.		—	—	—	1	1	1	1	1	1	1	1	2951 128
	NUT, Pump Pulley, W/Key Slotted Pump Shaft		1	1	1	1	1	1	1	1	1	1	—	6030 435
19-54-115	BRACKET, Pump, w/3/8" Threaded Hole Pump Shaft	6	1	—	1	1	1	—	—	—	—	—	—	3462 860

CARLINES
J - Challenger, B - Barracuda | V - Valiant, L - Dart | R - Satellite, W - Coronet - Charger | P - Plymouth, D - Dodge | C - Chrysler, Y - Imperial

AR Indicates use as required.
Numerals in parentheses ( ) refer to notes.
# Indicates parts not listed in any previous parts book.
★ Indicates change or addition.

Printed in U.S.A.
November 1974

CODE	PART NAME		ENG. TYPE OR CU. IN	V	B J	L	R	W	P	D	C (L M)	C (P)	C (H S)	Y	PART NUMBER
19-54-115	BRACKET Cont'd.														
	w/Key Slotted Pump Shaft	Front	6	1	—	1	1	1	—	—	—	—	—	—	3751 277
	w/Key Slotted Pump Shaft	Rear	6	1	—	1	1	1	—	—	—	—	—	—	3671 102
	w/3/8" Threaded Hole Pump Shaft														
	w/318 and 360 Eng.		8	1	1	1	1	1	—	—	—	—	—	—	3418 348
	w/Key Slotted Pump Shaft														
	w/318 and 360 Eng.	Front	8	1	1	1	1	1	1	1	—	—	—	—	3751 273
	w/Key Slotted Pump Shaft														
	w/318 and 360 Eng.	Rear	8	1	1	1	1	1	1	1	—	—	—	—	3751 275
	w/Threaded Hole Pump Shaft														
	w/o Calif. Emission Pkg.														
	w/400 and 440 Eng.	Front		—	—	—	1	1	1	1	1	1	1	1	3698 902
	w/Threaded Hole Pump Shaft														
	w/o Calif. Emission Pkg.														
	w/400 and 440 Eng.	Rear		—	—	—	1	1	1	1	1	1	1	1	3698 903
	w/400 Four Bbl. and														
	w/440 Eng. w/o H/Perf.														
	w/Calif. Emission Pkg.			—	—	—	—	—	1	1	1	1	1	1	3698 846
	w/Key Slotted Pump Shaft														
	w/400 and 440 Eng.	Front		—	—	—	1	1	1	1	—	—	—	—	3671 542
	w/400 and 440 Eng.	Rear		—	—	—	1	1	1	1	—	—	—	—	3751 276
	Washer, w/400, 440 Engines			—	—	—	—	—	1	1	1	1	1	1	6022 190
	BRACKET, Pump Engine		6	1	—	1	1	1	—	—	—	—	—	—	3671 308
	w/400 and 440 Eng. w/o Calif.														
	Emission Pkg.		8	—	—	—	1	1	1	1	1	1	1	1	3698 652
	w/400 Four Bbl. and w/440 Eng.,														
	w/Calif. Emission Pkg.,														
	w/o Air Conditioning		8	—	—	—	—	—	1	1	1	1	1	1	3698 810
	w/318 and 360 Eng.	Front	8	1	1	1	1	1	1	1	1	—	—	—	2951 747
	w/318 and 360 Eng.	Rear	8	1	1	1	1	1	1	1	1	—	—	—	2951 852
19-54-116	SPACER, Pump Mounting Bracket														
	w/3/8" Threaded Hole Pump Shaft		6	1	—	1	1	1	—	—	—	—	—	—	3462 418
	w/Key Slotted Pump Shaft		6	1	—	1	1	1	—	—	—	—	—	—	3751 279
	SPACER, Pump Rear Bracket														
19-54-126	"O" RING, Pump Pressure Plate,														
	W/3/8" Threaded Hole Pump Shaft			1	1	1	1	1	1	1	1	1	1	1	2537 694
	"O" RING, Pump Rear Plug,														
	W/3/8" Threaded Hole Pump Shaft			1	1	1	1	1	1	1	1	1	1	1	2537 858
	"O" RING, Pump Oil Reservoir Flange,														
	w/3/8" Threaded Hole Pump Shaft			1	1	1	1	1	1	1	1	1	1	1	2537 869
	"O" RING, Pump Flow Control Valve Bore,														
	w/3/8" Threaded Hole Pump Shaft			1	1	1	1	1	1	1	1	1	1	1	1859 444
19-54-130	SNAP RING, Pump Rear Plug,														
	w/3/8" Threaded Hole Pump Shaft			1	1	1	1	1	1	1	1	1	1	1	2891 264
	SNAP RING, Pump Flow Control														
	VALVE BORE PLUG, W/3/8" Threaded Hole														
	Pump Shaft			1	1	1	1	1	1	1	1	1	1	1	2537 866
	SNAP RING, Pump Rotor Shaft														
	w/3/8" Threaded Hole Pump Shaft			1	1	1	1	1	1	1	1	1	1	1	1738 681
19-54-150	SPRING, Pump Pressure Plate,														
	w/3/8" Threaded Hole Pump Shaft			1	1	1	1	1	1	1	1	1	1	1	2537 958
	w/Key Slotted Pump Shaft			1	1	1	1	1	1	1	1	—	—	—	2537 834
19-54-151	OIL SEAL, Pump Rotor Shaft,														
	w/3/8" Threaded Hole Pump Shaft			1	1	1	1	1	1	1	1	1	1	1	2537 689
	RING, Pump End and Pressure Plate,														
	w/Key Slotted Pump Shaft			1	1	1	1	1	1	1	1	—	—	—	2537 827
	SEAL, Pump Union Rectangular Section,														
	w/Key Slotted Pump Shaft		8	1	1	1	1	1	1	1	1	—	—	—	2537 829
	SEAL, Pump O Ring,														
	w/Key Slotted Pump Shaft			1	1	1	1	1	1	1	1	—	—	—	2537 830

CODE	PART NAME	ENG. TYPE OR CU. IN	V	B J	L	R	W	P	D	C (L M)	C (P)	C (H S)	Y	PART NUMBER
19-54-152	PLATE, Pump End, w/Key Slotted Pump Shaft		1	1	1	1	1	1	1	1	—	—	—	2537 820
19-54-153	RING, Pump End Plate Retaining w/Key Slotted Pump Shaft		1	1	1	1	1	1	1	1	—	—	—	2537 823
19-54-154	PLATE, Pump Pressure w/Key Slotted Pump Shaft		1	1	1	1	1	1	1	1	—	—	—	2537 821
19-54-156	PLATE, Pump Thrust, w/Key Slotted Pump Shaft		1	1	1	1	1	1	1	1	—	—	—	2537 822
19-54-157	KEY, Pump Drive Shaft, w/Key, Slotted Pump Shaft		1	1	1	1	1	1	1	1	—	—	—	2537 818
19-54-178	PIN, Pump Cam and Plate Dowel, w/3/8" Threaded Hole Pump Shaft		1	1	1	1	1	1	1	1	1	1	1	2537 503
	PIN, Pump Ring Dowel, w/Key Slotted Pump Shaft		2	2	2	2	2	2	2	2	—	—	—	2537 819
19-54-180	RESERVOIR, Pump Oil, w/3/8" Threaded Hole Pump Shaft w/o Calif. Emission Pkg.		1	1	1	1	1	1	1	1	1	1	1	2891 156
	w/3/8" Threaded Hole Pump Shaft, w/Calif. Emission Pkg. w/440 w/o/H/Perf. Eng.		—	—	—	—	—	1	1	1	1	1	1	2891 425
	w/Key Slotted Pump Shaft		1	1	1	—	—	—	—	—	—	—	—	2891 513
			—	—	—	1	1	1	1	—	—	—	—	2891 491
19-54-181	SEAL, Pump Oil Reservoir Mounting w/3/8" Threaded Hole Pump Shaft		1	1	1	1	1	1	1	1	1	1	1	2127 486
	SEAL, Pump Reservoir "O" Ring w/Key Slotted Pump Shaft		1	1	1	1	1	1	1	1	—	—	—	2537 828
	SEAL, Pump Reservoir Rectangular Section, w/Key Slotted Pump Shaft		2	2	2	2	2	2	2	2	—	—	—	2537 831
19-54-182	CAP, Pump Oil Reservoir, w/3/8" Threaded Hole Pump Shaft		1	1	1	1	1	1	1	1	1	1	1	2891 434
	w/Key Slotted Pump Shaft		1	1	1	1	1	1	1	1	—	—	—	2891 284
19-54-196	COOLER, Pump Oil w/318 and 360 Eng., w/3.54, 3.55 Axle Ratio	8	1	1	1	1	1	—	—	—	—	—	—	2891 241
	w/400 and 440 Eng.													
	w/3.54, 3.55 Axle Ratio	8	—	—	—	1	1	—	—	—	—	—	—	2891 428
	w/400, 440 Eng.	8	—	—	—	—	—	1	1	1	1	1	1	2891 428
	Clamp, Hose	8	2	2	2	2	2	—	—	—	—	—	—	6026 873
19-54-219	PLUG, Pump Flow Control Valve, w/3/8" Threaded Hole Pump Shaft		1	1	1	1	1	1	1	1	1	1	1	2537 865
	PLUG, Pump Rear w/3/8" Threaded Hole Pump Shaft		1	1	1	1	1	1	1	1	1	1	1	2537 959
19-54-225	FITTING, Pump Discharge, w/Key Slotted Pump Shaft		1	1	1	1	1	1	1	—	—	—	—	2537 815
19-54-243	SEAT, Pump Flow Control Relief Valve, w/3/8" Threaded Hole Pump Shaft		1	1	1	1	1	1	1	1	1	1	1	2537 863
	Ball, Relief Valve		1	1	1	1	1	1	1	1	1	1	1	152 096
19-54-258	SEAL and GASKET, Pump w/3/8" Threaded Hole Pump Shaft		1	1	1	1	1	1	1	1	1	1	1	# 3780 845
19-54-263	SHAFT, Pump Rotor w/3/8" Threaded Hole Pump Shaft		1	1	1	1	1	1	1	1	1	1	1	2891 289
	Key, Shaft		1	1	1	1	1	1	1	1	1	1	1	141 131
19-56-6	**RING AND "O" RING PACKAGE, Strg. Gear Piston Ring**		1	1	1	1	1	1	1	1	1	1	1	3579 549
19-56-22	"O" RING, Strg. Gear Ferrule		1	1	1	1	1	1	1	1	1	1	1	1486 205
19-56-83	SPRING, Strg. Gear Pressure Control Valve		1	1	1	1	1	1	1	1	1	1	1	1822 442
19-56-90	"O" RING, Strg. Gear Pressure Control Valve		1	1	1	1	1	1	1	1	1	1	1	1536 268
19-57-1	**SEAL PACKAGE, Strg. Gear Valve**		1	1	1	1	1	1	1	1	1	1	1	2279 985
19-57-3	VALVE, Strg. Gear,		1	1	1	1	1	1	1	1	1	1	1	3643 027

CARLINES
J - Challenger, B - Barracuda, V - Valiant, L - Dart, R - Satellite, W - Coronet - Charger, P - Plymouth, D - Dodge, C - Chrysler, Y - Imperial

AR Indicates use as required.
# Indicates parts not listed in any previous parts book.
Numerals in parentheses ( ) refer to notes.
★ Indicates change or addition.

Printed in U.S.A.
November 1974

CODE	PART NAME	ENG. TYPE OR CU. IN	V	B J	L	R	W	P	D	C (L M)	C (P)	C (H S)	Y	PART NUMBER
19-57-3	VALVE Cont'd.													
	VALVE, Strg. Gear Pressure		AR	AR	AR	AR	AR	AR	AR	AR	AR	AR	AR	3643 021
	Screw		2	2	2	2	2	2	2	2	2	2	2	9408 948
19-57-13	"O" RING, Strg. Gear Valve Housing		1	1	1	1	1	1	1	1	1	1	1	1733 612
19-57-16	GASKET, Strg. Gear Valve Plug		1	1	1	1	1	1	1	1	1	1	1	1733 724
19-57-19	ADAPTER, Strg. Gear Return Hose		1	1	1	1	1	1	1	1	1	1	1	2537 228
19-57-20	GASKET, Strg. Gear Return Hose Adapter		1	1	1	1	1	1	1	1	1	1	1	2537 229
19-57-63	LEVER, Strg. Gear Valve		1	1	1	1	1	1	1	1	1	1	1	1822 380
19-57-64	SPRING, Strg. Gear Valve Lever		1	1	1	1	1	1	1	1	1	1	1	1823 151

NOTES

POWER STEERING PUMP RETURN HOSE LENGTH CHART

NOTE: Cut The Service Hose Listed in Part Type Code 19-58-14 To The Specified Length To Insure Proper Fit and Route.

CARLINE MODELS	CUBIC INCH DISPLACEMENT	POWER STEERING PUMP	WITH OR WITHOUT CALIF. EMISSION PKG.	REQUIRED HOSE LENGTH
V,L,B,J	All	All	All	12"
R,W	318, 360	All	All	12"
R,W	225, 400, 440	All	All	10"
P,D,C,Y	318, 360, 400, 440	All	All	10"

NOTES

CODE	PART NAME	ENG. TYPE OR CU. IN	V	B J	L	R	W	P	D	C (L M)	C (P)	C (H S)	Y	PART NUMBER
19-58-7	**HOSE, Power Steering Pump Pressure**													
	w/Max. Cooling, w/Air Cond.	6	1	—	1	1	1	—	—	—	—	—	—	2891 504
	w/o Max. Cooling, w/o Air Cond. Up to 12/17/73	6	1	—	1	1	1	—	—	—	—	—	—	2891 494
	After 12/17/73	6	1	—	1	1	1	—	—	—	—	—	—	2891 515
	w/3/8" Threaded Hole Pump Shaft w/3.54 and 3.55 Axle Ratio w/318 and 360 Engines	8	1	—	1	—	—	—	—	—	—	—	—	2891 374
	w/360 Eng. w/3.54 and 3.55 Axle Ratio	8	—	1	—	1	1	—	—	—	—	—	—	2891 371
	w/Key Slotted Pump Shaft													
	w/318 and 360 Engines	8	1	1	1	—	—	—	—	—	—	—	—	2891 495
	w/318, 360, 400, 440 Engines w/o 3.54 and 3.55 Axle Ratio	8	—	—	—	1	1	—	—	—	—	—	—	2891 495
	w/318 and 360 and 400 Engs.	8	—	—	—	—	—	1	1	1	1	1	—	2891 496
	w/Threaded Hole Pump Shaft, w/400 Eng. w/4 Bbl. Carb.													
	w/Calif. Emission Pkg.	8	—	—	—	—	—	1	1	1	1	1	—	2891 402
	w/440 Eng. w/o H/Perf. w/Calif. Emission Pkg.	8	—	—	—	—	—	1	1	1	1	1	1	2891 402
	w/400 and 440 Eng. w/3.54, 3.55 Axle Ratio	8	—	—	—	1	1	—	—	—	—	—	—	2891 429
	w/400 and 440 Eng. w/o Calif.													
	Emission Pkg.	8	—	—	—	—	—	1	1	1	1	1	1	2891 493
19-58-14	HOSE, Pump Return (14" Lgh. See Chart 19-58-0)		1	1	1	1	1	1	1	1	1	1	1	2891 661 2537 699
	Clamp		AR	AR	AR	AR	AR	AR	AR	AR	AR	AR	AR	6026 873
	HOSE, Reservoir to Oil Cooler., w/3.54, 3.55 Axle Ratio,													
	w/318 and 360 Eng. (2 3/4" Long)	8	1	1	1	1	1	—	—	—	—	—	—	2537 699
	w/3.54, 3.55 Axle Ratio w/400 and 440 Engines (10" Long)	8	—	—	—	1	1	—	—	—	—	—	—	2537 699
19-58-18	"O" RING, Pump Pressure Hose Pump Fitting,													
	w/3/8" Threaded Hole Pump Shaft		1	1	1	1	1	1	1	1	1	1	1	1859 445
	"O" RING, Pump Pressure Hose Gear Fitting		1	1	1	1	1	1	1	1	1	1	1	1316 864
19-58-21	NUT, Pump Pressure Hose Pump, w/Key Slotted Pump Shaft	8	—	1	—	1	1	1	1	1	1	1	—	6029 857
	w/Key Slotted Pump Shaft,	6	1	1	1	1	1	—	—	—	—	—	—	6029 857
	NUT, Pressure Hose Gear w/Threaded Hole Pump Shaft	8	—	—	—	—	—	1	1	1	1	1	1	6028 021

NOTES

CARLINES: J - Challenger, B - Barracuda, V - Valiant, L - Dart, R - Satellite, W - Coronet - Charger, P - Plymouth, D - Dodge, C - Chrysler, Y - Imperial

AR Indicates use as required.

Numerals in parentheses ( ) refer to notes.

# Indicates parts not listed in any previous parts book.

★ Indicates change or addition.

Printed in U.S.A.
November 1974

NOTES

GROUP 21 - TRANSMISSION
MANUAL

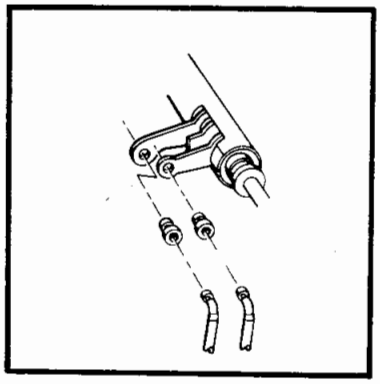

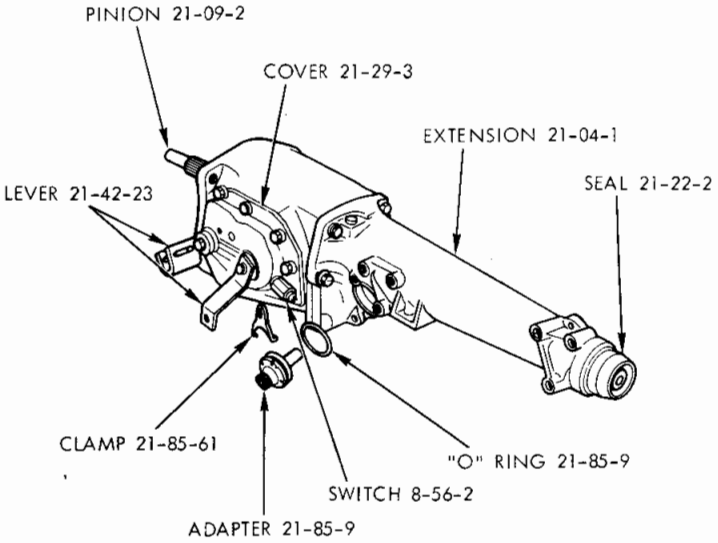

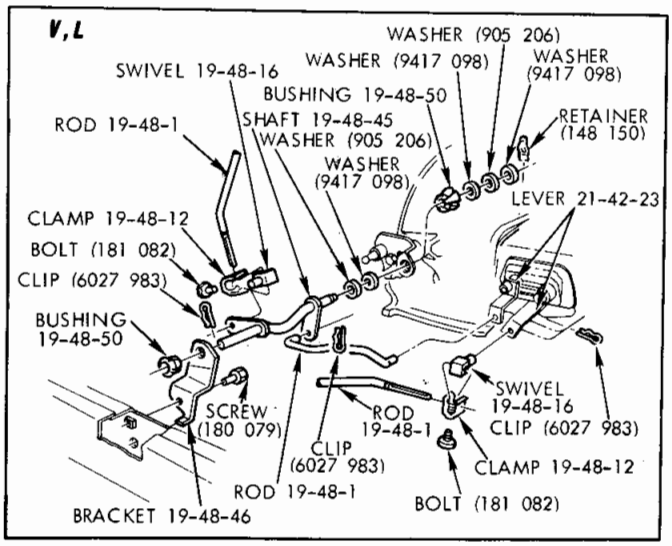

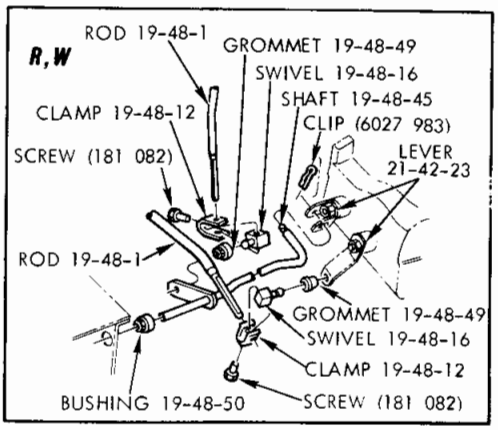

19a4829

COLUMN GEARSHIFT CONTROLS -
WITH A230 3 SPEED MANUAL TRANSMISSION

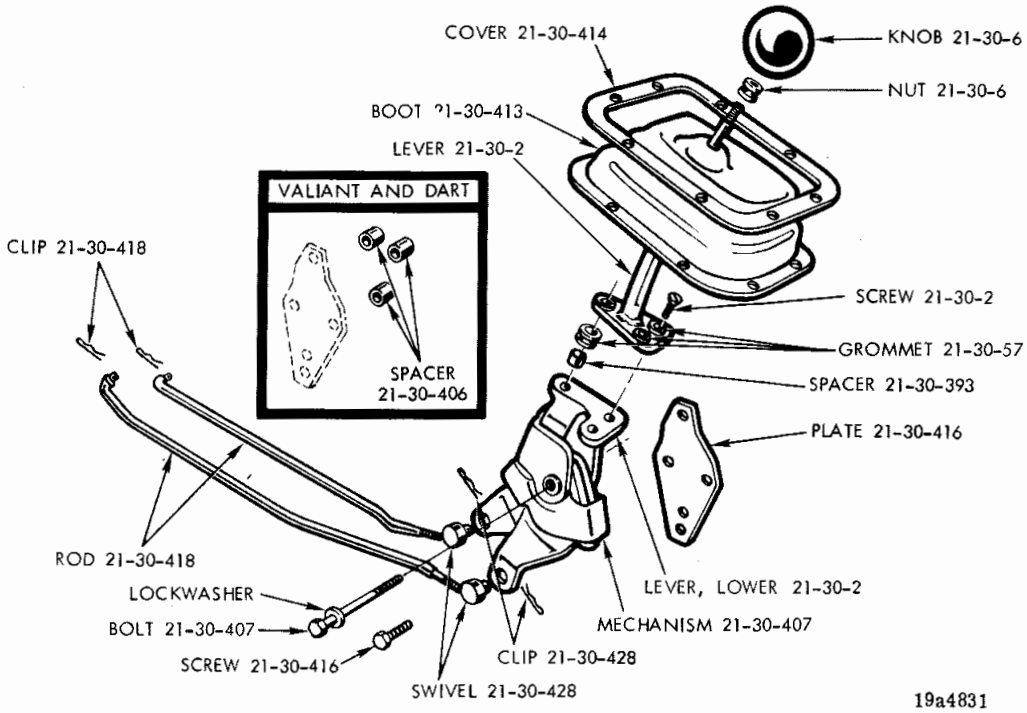

MANUAL 3 SPEED FLOOR SHIFT TRANSMISSION CONTROLS - WITHOUT CONSOLE

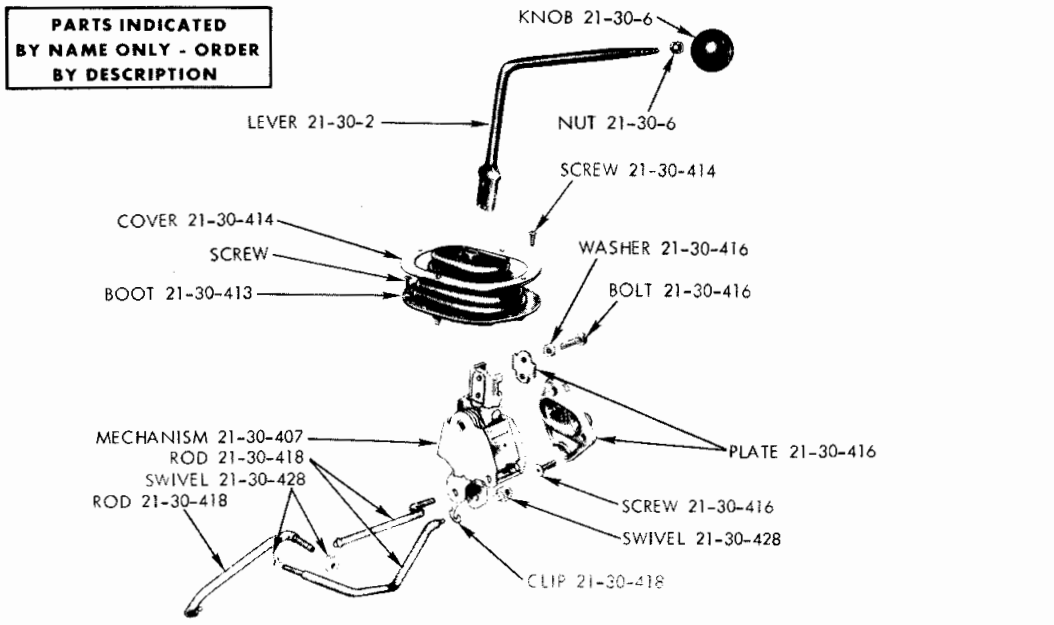

MANUAL 4 SPEED TRANSMISSION FLOOR SHIFT CONTROLS - V, L

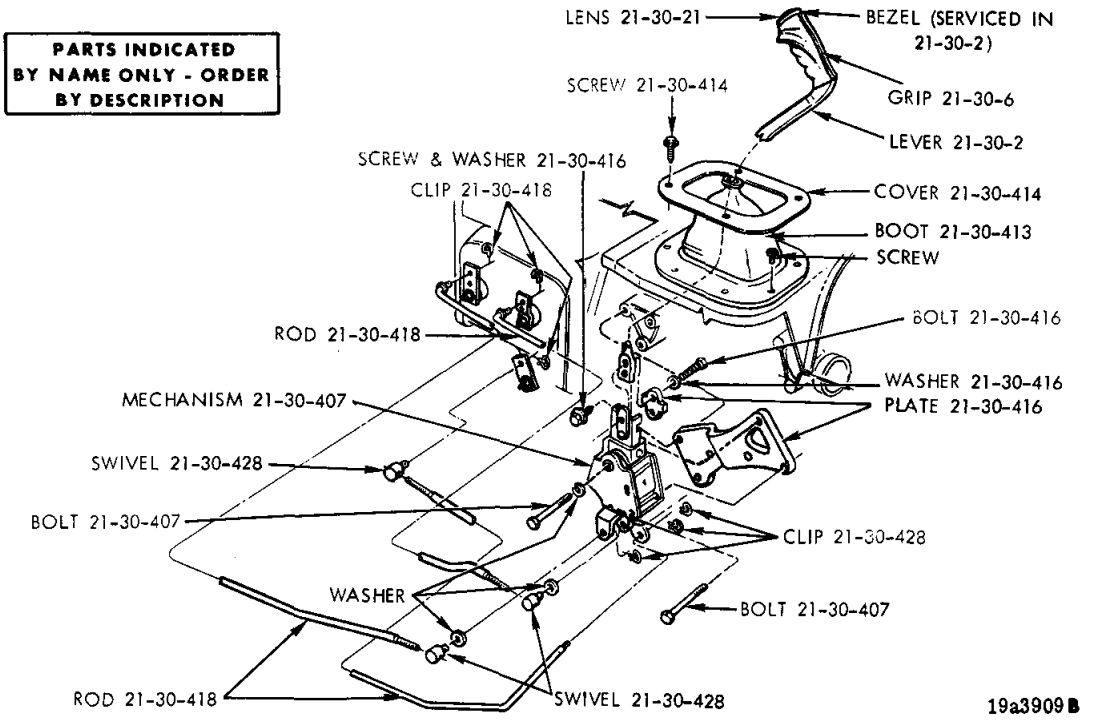

MANUAL 4 SPEED TRANSMISSION FLOOR SHIFT CONTROLS - B, J, R, W

NOTES

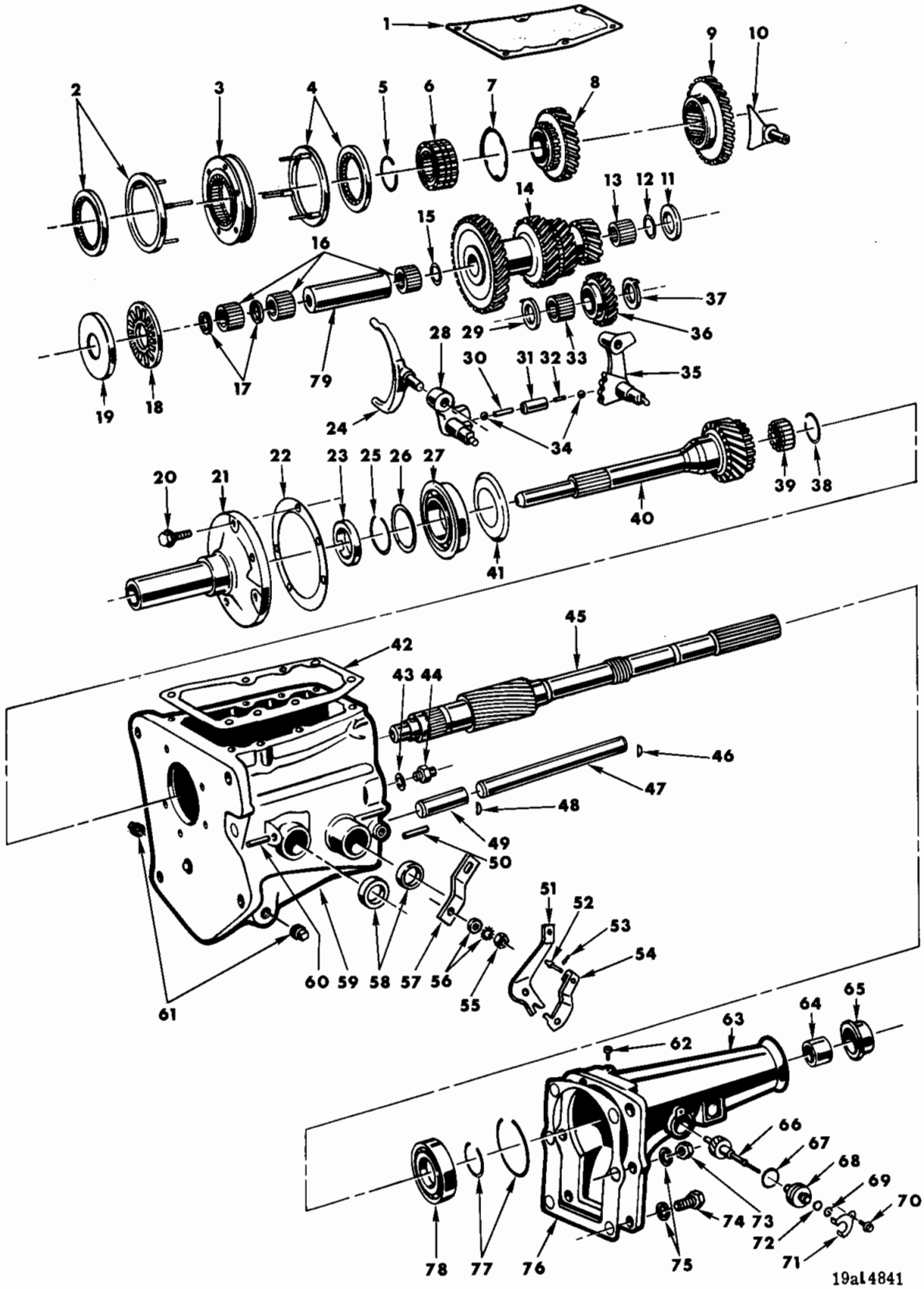

MANUAL 3 SPEED TRANSMISSION - 6 CYLINDER A250

GROUP 21 - TRANSMISSION (MANUAL)

BEARING, COUNTERSHAFT 21-25
BEARING, MAIN OR OUTPUT SHAFT 21-19
BEARING, MAIN OR OUTPUT SHAFT PILOT 21-17
CABLE, SPEEDOMETER 21-84
CASE 21-03
COUNTERSHAFT 21-24
COVER OR HOUSING, GEARSHIFT CASE 21-29
EXTENSION, CASE 21-04
FORK, GEARSHIFT 21-39
GEAR, CLUTCH 21-14
GEAR, COUNTERSHAFT 21-15
GEAR, MAIN DRIVE 21-10
GEAR, REVERSE IDLER 21-11
GEARSHIFT, REMOTE CONTROL 21-42
GEAR AND PINION, SPEEDOMETER 21-85
LEVER AND ROD, GEARSHIFT 21-30
PINION, MAIN DRIVE 21-09
RAIL, GEARSHIFT 21-34
RETAINER, MAIN OR OUTPUT SHAFT BEARING 21-23
SEAL AND GASKET PKG. 21-01
SEAL, MAIN OR OUTPUT SHAFT BEARING OIL 21-22
SHAFT, MAIN OR OUTPUT 21-16
SHAFT, REVERSE IDLER GEAR 21-12
SWITCH, NEUTRAL STARTER AND BACK-UP LIGHT 21-113
TRANSMISSION, REPLACEMENT 21-02
VENT 21-02

Printed in U.S.A.
November, 1974

CODE	PART NAME	ENG. TYPE OR CU. IN	V	B J	L	R	W	P	D	C (L M)	C (P)	C (H S)	Y	PART NUMBER
	NOTE: Transmission component parts for the transmission assemblies shown in code 21-02-1 below are catalogued in charted style after code 21-113-24. The respective service transmission part number and complete type code (A903-A230 etc.) Is designated at the top of each chart column, and both must be verified before specifying components.													
21-02-1	**TRANSMISSION, Manual, w/198, 225 and 318**													
	Eng., w/3 Speed Trans. A230		1	—	1	—	—	—	—	—	—	—	—	3681 817
	w/198 and 225 Eng., w/3 Speed Trans., A250	6	1	—	1	—	—	—	—	—	—	—	—	3637 983
	w/318 Eng., w/4 Speed Trans. A833	8	1	—	1	—	—	—	—	—	—	—	—	3681 897
	360 Eng., w/4 Speed Trans., A833	8	1	—	1	—	—	—	—	—	—	—	—	3410 759
	w/360 Eng., w/3 Speed Trans., Floor Shift, A230	8	1	—	1	—	—	—	—	—	—	—	—	3681 818
	B, J, w/318 Eng., R, W, w/225 and 318 Eng., w/3 Speed Trans. A230		—	1	—	1	1	—	—	—	—	—	—	3681 834
	B, J, w/360 Eng., R, W, w/318 and w/360 Eng., w/4 Speed Trans., A833	8	—	1	—	1	1	—	—	—	—	—	—	3780 235
	w/360 Eng., Floor Shift 3 Speed Trans., A230	8	—	1	—	—	—	—	—	—	—	—	—	3681 836
	w/400 Eng., 4 Bbl. Carb., w/4 Speed Trans., A833	8	—	—	—	1	1	—	—	—	—	—	—	3780 234
21-30-2	**LEVER, Gearshift Control Selector,** w/4 Speed Trans., w/o Console, w/o Knob		1	—	1	—	—	—	—	—	—	—	—	3467 740
	w/4 Speed Trans., w/Console, w/o Knob		—	—	1	—	—	—	—	—	—	—	—	3467 736
	Gearshift Selector, Upper, Floor Shift, w/3 Speed Trans., w/o Knob		1	—	1	—	—	—	—	—	—	—	—	3467 675
	Lwr., w/3 Speed Trans., Floor Shift, Fits Into top of mechanism		1	1	1	1	1	—	—	—	—	—	—	2950 950
	Strg. Column Gearshift w/3 Speed Trans., w/Knob		1	—	1	1	1	—	—	—	—	—	—	3575 215
	Gearshift Selector, Upper, w/3 Speed Trans. Floor Shift,		—	1	—	—	—	—	—	—	—	—	—	3467 678
	w/o Fold Down Arm Rest		—	—	—	1	—	—	—	—	—	—	—	3467 678
	w/4 Speed Trans., w/Grips, Lens and Bezel, R, w/o Fold Down Arm Rest		—	1	—	1	—	—	—	—	—	—	—	3467 732
	w/4 Speed Trans., w/Grips, Lens and Bezel, w/Fold Down Arm Rest		—	—	—	1	—	—	—	—	—	—	—	3467 733
	Gearshift Selector, w/3 Speed Trans., Upper, w/o Knob, Floor Shift, w/Lwr. Flange w/4 Holes		—	—	—	1	—	—	—	—	—	—	—	3467 687
	SCREW, w/WASHER, Shift Lever, Base to Top of Mechanism, w/3 Speed Floor Shift		3	3	3	3	3	—	—	—	—	—	—	6028 606
	BOLT, w/4 Speed Trans., 3/8-24		2	2	2	2	2	—	—	—	—	—	—	9420 373
	WASHER, Cone Type, w/4 Speed Trans.		2	2	2	2	2	—	—	—	—	—	—	6023 654
	SPRING, w/3 Speed Trans.		1	1	1	1	1	—	—	—	—	—	—	6026 255
21-30-6	KNOB, Gearshift Selector, w/4 Speed Trans.		1	—	1	—	—	—	—	—	—	—	—	2950 213
	w/3 Speed Trans., Floor Shift, w/Shift Pattern, Black, 1.81" O.D., 3/8"-16 L.H. Thread		1	1	1	1	—	—	—	—	—	—	—	3467 683
	w/3 Speed Trans., Column Shift		1	—	1	1	1	—	—	—	—	—	—	3575 242

CODE	PART NAME	ENG. TYPE OR CU. IN	V	B J	L	R	W	P	D	C (L M)	C (P)	C (H S)	Y	PART NUMBER
21-30-6	KNOB Cont'd.													
	GRIP, Gearshift Selector Lever, w/4 Speed, Rt.		—	1	—	1	1	—	—	—	—	—	—	2996 466
	Lt.		—	1	—	1	1	—	—	—	—	—	—	2996 467
	NUT, Knob, w/3 Speed Trans.		1	1	1	1	—	—	—	—	—	—	—	6029 094
	w/4 Speed Trans.		1	—	1	—	—	—	—	—	—	—	—	6026 132
21-30-21	LENS, w/o Bezel, Gearshift Selector Lever, w/4 Speed Trans., w/Shift Pattern		—	1	—	1	1	—	—	—	—	—	—	2996 464
21-30-22	PIN, Gearshift Selector Lever, w/3 Speed Trans., Floor Shift w/Hole		1	1	1	1	—	—	—	—	—	—	—	2534 515
	Column Gearshift Lever Spring		1	—	1	1	1	—	—	—	—	—	—	9412 281
21-30-43	SPRING, Gearshift Selector Lever, w/3 Speed Trans., Floor Shift		1	1	1	1	—	—	—	—	—	—	—	2996 305
21-30-57	GROMMET, Gearshift Selector Lever, Upper, w/3 Speed Trans., Floor Shift		3	3	3	3	—	—	—	—	—	—	—	2660 374
21-30-393	SPACER, Gearshift Selector Lever, Upper, w/3 Speed Trans., Floor Shift		3	3	3	3	—	—	—	—	—	—	—	2996 477
21-30-403	HOUSING, Gearshift Selector Lever, w/3 Speed Trans., w/Floor Shift		1	1	1	1	—	—	—	—	—	—	—	2950 652
21-30-406	SPACER, Gearshift Mechanism Mounting, w/3 Speed Trans., w/Floor Shift		3	—	3	—	—	—	—	—	—	—	—	2996 476
	Gearshift Operating Lever, w/3 Speed Trans., Floor Shift		1	1	1	1	—	—	—	—	—	—	—	3467 745
	Gearshift Operating Lever Spring, w/3 Speed Trans., w/Floor Shift		1	1	1	1	—	—	—	—	—	—	—	3467 746
21-30-407	MECHANISM, Gearshift Control, w/4 Speed Trans.		1	—	1	—	—	—	—	—	—	—	—	3467 793
	w/3 Speed Trans.		1	1	1	1	—	—	—	—	—	—	—	3467 743
	w/4 Speed Trans.		—	1	—	1	1	—	—	—	—	—	—	3467 794
	w/3 Speed Trans., w/Center Frt. Auxiliary Seat		—	—	—	1	—	—	—	—	—	—	—	3467 744
	SCREW, w/WASHER, Mtg., w/3 Speed Trans. 3/8" - 16 x 2		2	—	2	—	—	—	—	—	—	—	—	6027 880
	w/3 Speed Trans.		—	3	—	3	3	—	—	—	—	—	—	180 124
	BOLT, w/3 Speed Trans.		1	1	1	1	—	—	—	—	—	—	—	9431 651
	w/3 Speed Trans.		—	—	—	2	—	—	—	—	—	—	—	1801 121
	w/4 Speed, 3/8"-16 x 3"		1	1	1	1	1	—	—	—	—	—	—	181 130
	w/4 Speed Trans.		1	1	1	1	1	—	—	—	—	—	—	6029 782
	w/4 Speed, 7/16"-14 x 3"		1	1	1	1	1	—	—	—	—	—	—	181 150
	w/4 Speed Trans.		1	1	1	1	1	—	—	—	—	—	—	6029 783
21-30-413	BOOT, Gearshift Floor, w/3 and 4 Speed Trans., Oblong Shape		1	—	1	—	—	—	—	—	—	—	—	3467 764
	w/4 Speed Trans., w/Console, Square Shape		—	—	1	—	—	—	—	—	—	—	—	2660 422
	w/3 Speed Trans., R w/o Center Frt. Seat		—	1	—	1	—	—	—	—	—	—	—	3467 770
	w/4 Speed Trans., R, W, w/o Center Frt. Seat, Square Shape		—	1	—	1	1	—	—	—	—	—	—	3467 766
	w/3 Speed Trans., w/Center Frt. Seat		—	—	—	1	—	—	—	—	—	—	—	3467 758
	w/4 Speed Trans., w/Center Frt. Seat		—	—	—	1	—	—	—	—	—	—	—	3467 755
21-30-414	COVER, Gearshift Boot, w/4 Speed Trans., L w/o Console		1	—	1	—	—	—	—	—	—	—	—	2660 393
	w/3 Speed Trans.		1	—	1	—	—	—	—	—	—	—	—	2660 393
	w/4 Speed Trans., R w/o Center Frt. Seat		—	1	—	1	1	—	—	—	—	—	—	2996 415
	w/3 Speed Trans., R w/o Center Frt. Seat		—	1	—	1	—	—	—	—	—	—	—	2996 415

CARLINES: J - Challenger, B - Barracuda, V - Valiant, L - Dart, R - Satellite, W - Coronet - Charger, P - Plymouth, D - Dodge, C - Chrysler, Y - Imperial

AR Indicates use as required.

Numerals in parentheses ( ) refer to notes.

Printed in U.S.A.

# Indicates parts not listed in any previous parts book.

★ Indicates change or addition.

November, 1974

CODE	PART NAME	ENG. TYPE OR CU. IN	V	B J	L	R	W	P	D	C (L M)	C (P)	C (H S)	Y	PART NUMBER
21-30-414	COVER Cont'd.													
	w/4 Speed Trans., w/ Center Frt. Seat		—	—	—	1	—	—	—	—	—	—	—	3467 647
	w/3 Speed Trans., w/Center Frt. Seat		—	—	—	1	—	—	—	—	—	—	—	3467 647
	SCREW, Tapping, w/3 and 4 Speed Trans.		4	4	4	4	4	—	—	—	—	—	—	9415 537
21-30-416	PLATE, Gearshift Mechanism Mounting, w/4 Speed Trans.		1	—	1	—	—	—	—	—	—	—	—	2950 205
	w/3 Speed Trans., Floor Shift		1	1	1	—	—	—	—	—	—	—	—	2950 942
	w/o Fold Down Arm Rest		—	—	—	1	—	—	—	—	—	—	—	2950 942
	w/4 Speed Trans., w/5 Round Holes		—	1	—	1	1	—	—	—	—	—	—	2996 316
	w/3 Speed Trans., w/Fold Down Arm Rest		—	—	—	1	—	—	—	—	—	—	—	3467 700
	w/4 Speed Trans., w/6 Round Holes		—	—	—	1	—	—	—	—	—	—	—	3467 668
	Gearshift Control Lever Stiffener, Steel, w/2 Holes, 1 3/4" High, 1 37/64" Wide, w/4 Speed Trans.		1	1	1	1	1	—	—	—	—	—	—	3467 699
	BRACKET, Gearshift Mechanism Mounting, w/3 Speed Trans., Floor Shift		1	1	1	—	—	—	—	—	—	—	—	2996 301
	w/o Fold Down Arm Rest		—	—	—	1	—	—	—	—	—	—	—	2996 301
	w/Fold Down Arm Rest, 3 Speed Trans.		—	—	—	1	—	—	—	—	—	—	—	3467 685
	SCREW, Plate, w/3 Speed Trans., 3/8 - 16 x 2"		1	1	1	1	1	—	—	—	—	—	—	6027 880
	w/4 Speed Trans.		3	3	3	3	3	—	—	—	—	—	—	6024 554
	w/3 and 4 Speed Trans.		—	—	—	3	—	—	—	—	—	—	—	180 124
			—	3	—	3	3	—	—	—	—	—	—	6026 764
	BOLT, w/4 Speed Trans.		2	2	2	2	2	—	—	—	—	—	—	9420 373
	WASHER, Coned, w/4 Speed Trans.		2	2	2	2	2	—	—	—	—	—	—	6023 654
21-30-418	ROD, Gearshift First and Reverse, w/ 3 Speed Trans., w/Floor Shift		1	—	1	—	—	—	—	—	—	—	—	2996 482
	Second and Third, w/3 Speed Trans., w/Floor Shift		1	—	1	—	—	—	—	—	—	—	—	2996 483
	First and Second, w/4 Speed Trans.		1	—	1	—	—	—	—	—	—	—	—	2950 052
	Third and Fourth, w/4 Speed Trans.		1	—	1	—	—	—	—	—	—	—	—	2950 053
	Reverse, w/4 Speed Trans.		1	—	1	—	—	—	—	—	—	—	—	2950 051
	First and Reverse, w/3 Speed Trans., Floor Shift		—	1	—	1	—	—	—	—	—	—	—	2950 852
	Second and Third, w/3 Speed Trans., Floor Shift		—	1	—	1	—	—	—	—	—	—	—	2950 853
	First and Second, w/4 Speed Trans.		—	1	—	1	1	—	—	—	—	—	—	2950 852
	Third and Fourth, w/4 Speed Trans.		—	1	—	1	1	—	—	—	—	—	—	2950 853
	Reverse, w/4 Speed Trans., w/o Center Frt. Seat		—	1	—	1	1	—	—	—	—	—	—	3467 792
	First and Reverse, w/3 Speed Trans., Floor Shift, w/Center Frt. Seat		—	—	—	1	—	—	—	—	—	—	—	3467 609
	Second and Third, w/3 Speed Trans., w/Floor Shift		—	—	—	1	—	—	—	—	—	—	—	3467 610
	First and Second, w/4 Speed Trans.		—	—	—	1	—	—	—	—	—	—	—	3467 609
	Third and Fourth, w/4 Speed Trans.		—	—	—	1	—	—	—	—	—	—	—	3467 610
	Reverse, w/4 Speed Trans., w/Center Frt. Seat		—	—	—	1	—	—	—	—	—	—	—	3467 611
	CLIP		AR	AR	AR	AR	—	—	—	—	—	—	—	6027 983

CARLINES: J - Challenger, B - Barracuda, V - Valiant, L - Dart, R - Satellite, W - Coronet - Charger, P - Plymouth, D - Dodge, C - Chrysler, Y - Imperial

AR Indicates use as required.

Numerals in parentheses ( ) refer to notes.

# Indicates parts not listed in any previous parts book.

★ Indicates change or addition.

Printed in U.S.A.
November, 1974

CODE	PART NAME	ENG. TYPE OR CU. IN	V	B J	L	R	W	P	D	C (L M)	C (P)	C (H S)	Y	PART NUMBER
21-30-421	SHAFT, Gearshift Operating Lever, w/3 Speed Trans., w/Floor Shift, 2 5/64" Lgh., 3/4" O.D.		1	1	1	1	—	—	—	—	—	—	—	2950 946
21-30-428	SWIVEL, Gearshift Rod, w/3 Speed Trans.													
	w/FLaor Shift		AR	AR	AR	AR	—	—	—	—	—	—	—	2409 408
	w/4 Speed Trans., w/Floor Shift		AR	AR	AR	AR	AR	—	—	—	—	—	—	2409 408
	CLIP		AR	AR	AR	AR	—	—	—	—	—	—	—	6027 983
21-84-1	**CABLE, w/HOUSING, Speedometer 62"**													
	Lgh., Snap on Type At Speedo. End		1	1	1	1	1	—	—	—	—	—	—	3592 360
	Lwr., w/Two Piece Cable Type, 54" Lgh., Both Ends Threaded		—	—	1	1	1	—	—	—	—	—	—	2889 785
	w/Connector, Fleet use in Nebraska, North Carolina and Florida, 5/8"		—	—	—	—	—	1	1	1	1	1	—	3740 802
	Lwr., Fleet use in Nebraska, North Carolina and Florida		—	—	—	—	—	1	1	1	1	1	—	3740 804
	EXTENSION, Speedometer Cable, w/Two Piece Cable Type, Upper 6" Lgh.		—	—	—	1	1	—	—	—	—	—	—	2927 670
	Upper, 12" Lgh.		—	—	1	—	—	—	—	—	—	—	—	2927 920
21-84-4	SHAFT or CABLE PACKAGE, Speedometer, Universal, 80" Lgh.		1	1	1	1	1	—	—	—	—	—	—	2448 294
21-84-8	GROMMET, Speedometer Cable Dash		1	1	1	1	1	—	—	—	—	—	—	2216 552
21-84-11	SLEEVE, Speedometer Drive Shaft Silencing		1	1	1	1	1	—	—	—	—	—	—	3592 374

NOTES

CARLINES
J - Challenger, B - Barracuda, V - Valiant, L - Dart, R - Satellite, W - Coronet - Charger, P - Plymouth, D - Dodge, C - Chrysler, Y - Imperial

AR Indicates use as required.
Numerals in parentheses ( ) refer to notes.
# Indicates parts not listed in any previous parts book.
★ Indicates change or addition.

Printed in U.S.A.
November, 1974

21-85-5 PINION, w/GEAR, Speedometer

Tire Size	2.45 to 1 Ratio Pinion	Teeth	2.71 to 1 Ratio Pinion	Teeth	2.76 to 1 Ratio Pinion	Teeth	2.93 to 1 Ratio Pinion	Teeth	2.94 to 1 Ratio Pinion	Teeth
B78 x 14	2538 927	27W	2538 929	29BL	2538 930	30Y	2538 932	32BL	2538 932	32BL
C78 x 14	2538 926	26R	2538 929	29BL	2538 929	29BL	2538 931	31G	2538 931	31G
D78 x 14	2538 926	26R	2538 928	28B	2538 929	29BL	2538 931	31G	2538 931	31G
E78 x 14	3410 025	25B	2538 928	28B	2538 928	28B	2538 930	30Y	2538 930	30Y
F78 x 14	3410 025	25B	2538 927	27W	2538 928	28B	2538 929	29BL	2538 930	30Y
G78 x 14	3410 024	24W	2538 927	27W	2538 927	27W	2538 929	29BL	2538 929	29BL
H78 x 14	3410 024	24W	2538 926	26R	2538 927	27W	2538 928	28B	2538 928	28B
DR78 x 14	2538 926	26R	2538 928	28B	2538 929	29BL	2538 931	31G	2538 931	31G
ER x 14	3410 025	25B	2538 928	28B	2538 929	29BL	2538 930	30Y	2538 930	30Y
FR78 x 14			2538 927	27W	2538 928	28B	2538 930	30Y	2538 930	30Y
HR78 x 14	3410 024	24W	2538 926	26R	2538 927	27W	2538 928	28B	2538 928	28B
F78 x 15	3410 024	24W	2538 927	27W	2538 927	27W	2538 929	29BL	2538 929	29BL
G78 x 15	3410 024	24W	2538 926	26R	2538 927	27W	2538 928	28B	2538 928	28B
H78 x 15	3410 023	23R	2538 926	26R	2538 926	26R	2538 928	28B	2538 928	28B
J78 x 15	3410 023	23R	3410 025	25B	2538 926	26R	2538 927	27W	2538 927	27W
L78 x 15	3410 023	23R	3410 025	25B	3410 025	25B	2538 927	27W	2538 927	27W
E70 x 14	2538 926	26R	2538 928	28B	2538 929	29BL	2538 931	31G	2538 931	31G
F70 x 14	3410 025	25B	2538 928	28B	2538 928	28B	2538 930	30Y	2538 930	30Y
G70 x 14	3410 025	25B	2538 927	27W	2538 928	28B	2538 929	29BL	2538 930	30Y
GR78 x 15	3410 024	24W	2538 926	26R	2538 927	27W	2538 928	28B	2538 928	28B
HR78 x 15	3410 023	23R	2538 926	26R	2538 926	26R	2538 928	28B	2538 928	28B
LR78 x 15	3410 023	23R	3410 025	25B	2538 926	26R	2538 927	27W	2538 927	27W
JR78 x 15	3410 023	23R	2538 926	26R	2538 926	26R	2538 928	28B	2538 928	28B
H70 x 15	3410 024	24W	2538 926	26R	2538 927	27W	2538 928	28B	2538 928	28B
E60 x 15	3410 025	25B	2538 928	28B	2538 929	29BL	2538 930	30Y	2538 930	30Y
F60 x 15	3410 025	25B	2538 928	28B	2538 928	28B	2538 930	30Y	2538 930	30Y
G60 x 15	3410 024	24W	2538 927	27W	2538 928	28B	2538 929	29BL	2538 929	29BL
GR70 x 15	3410 024	24W	2538 926	26R	2538 927	27W	2538 928	28B	2538 929	29BL
HR70 x 15	3410 023	23R	2538 926	26R	2538 926	26R	2538 928	28B	2538 928	28B
6.45 x 14			2538 929	29BL	2938 930	30Y	2538 931	31G	2538 931	31G
6.95 x 14	2538 926	26R	2538 928	28B	2538 929	29BL	2538 931	31G	2538 931	31G
7.35 x 14	3410 025	28B	2538 928	28B	2538 928	28B	2538 930	30Y	2538 930	30Y
7.75 x 14			2538 927	27W	2538 928	28B	2538 929	29BL	2538 929	29BL
8.25 x 14			2538 927	27W	2538 927	27W	2538 929	29BL	2538 929	29BL
8.55 x 14			2538 926	26R	2538 926	26R	2538 928	28B	2538 928	28B
7.75 x 15			2538 927	27W	2538 928	28B	2538 929	29BL	2538 929	29BL
8.25 x 15			2538 926	26R	2538 927	27W	2538 928	28B	2538 929	29BL
8.55 x 15			2538 926	26R	2538 926	26R	2538 928	28B	2538 928	28B
8.90 x 15					3410 024	24W	3410 025	25B	3410 025	25B
9.00 x 15			3410 024	24W	3410 025	25B	2538 926	26R	2538 926	26R
9.15 x 15			3410 025	25B	2538 926	26R	2538 927	27W	2538 927	27W

Tire Size	3.21 to 1 Ratio Pinion	Teeth	3.23 to 1 Ratio Pinion	Teeth	3.54 to 1 Ratio Pinion	Teeth	3.55 to 1 Ratio Pinion	Teeth
B78 x 14	2538 935	35O	2538 935	35O	2538 938	38B	2538 938	38B
C78 x 14	2538 934	34G	2538 934	34G	2538 937	37W	2538 937	37W
D78 x 14	2538 934	34G	2538 934	34G	2538 937	37W	2538 937	37W
E78 x 14	2538 933	33Y	2538 933	33Y	2538 936	36R	2538 936	36R
F78 x 14	2538 932	32BL	2538 932	32BL	2538 936	36R	2538 936	36R
G78 x 14	2538 932	32BL	2538 932	32BL	2538 935	35O	2538 935	35O
H78 x 14	2538 931	31G	2538 931	31G	2538 934	34G	2538 934	34G
DR78 x 14	2538 934	34G	2538 934	34G	2538 937	37W	2538 937	37W
FR78 x 14	2538 933	33Y	2538 933	33Y	2538 936	36R	2538 936	36R
HR78 x 14	2538 931	31G	2538 931	31G	2538 934	34G	2538 934	34G
F78 x 15	2538 932	32BL	2538 932	32BL	2538 935	35O	2538 935	35O
G78 x 15	2538 931	31G	2538 931	31G	2538 934	34G	2538 934	34G
H78 x 15	2538 930	30Y	2538 930	30Y	2538 933	33Y	2538 933	33Y
J78 x 15	2538 930	30Y	2538 930	30Y	2538 933	33Y	2538 933	33Y
L78 x 15	2538 930	30Y	2538 930	30Y	2538 933	33Y	2538 933	33Y
E70 x 14	2538 934	34G	2538 934	34G	2538 937	37W	2538 937	37W
F70 x 14	2538 933	33Y	2538 933	33Y	2538 936	36R	2538 936	36R
G70 x 14	2538 932	32BL	2538 932	32BL	2538 936	36R	2538 936	36R

21-85-5 PINION w/GEAR Cont'd.

Tire Size	3.21 to 1 Ratio		3.23 to 1 Ratio		3.54 to 1 Ratio		3.55 to 1 Ratio	
	Pinion	Teeth	Pinion	Teeth	Pinion	Teeth	Pinion	Teeth
GR78 x 15	2538 931	31G	2538 931	31G	2538 934	34G	2538 934	34G
HR78 x 15	2538 931	31G	2538 930	30Y	2538 933	33Y	2538 934	34G
LR78 x 15	2538 930	30Y	2538 930	30Y	2538 933	33Y	2538 933	33Y
JR78 x 15	2538 930	30Y	2538 930	30Y	2538 933	33Y	2538 933	33Y
H70 x 15	2538 931	31G	2538 931	31G	2538 934	34G	2538 934	34G
E60 x 15	2538 933	33Y	2538 933	33Y	2538 936	36R	2538 936	36R
F60 x 15	2538 933	33Y	2538 933	33Y	2538 936	36R	2538 936	36R
G60 x 15	2538 932	32BL	2538 932	32BL	2538 935	35O	2538 935	35O
GR70 x 15	2538 931	31G	2538 931	31G	2538 934	34G	2538 934	34G
HR70 x 15	2538 931	31G	2538 931	31G	2538 934	34G	2538 934	34G
6.45 x 14	2538 934	34G	2538 935	35O	2538 938	38B	2538 938	38B
6.95 x 14	2538 934	34G	2538 934	34G	2538 937	37W	2538 937	37W
7.35 x 14	2538 933	33Y	2538 933	33Y	2538 936	36R	2538 936	36R
7.75 x 14	2538 932	32BL	2538 932	32BL	2538 935	35O	2538 935	35O
8.25 x 14	2538 932	32BL	2538 932	32BL	2538 935	35O	2538 935	35O
8.55 x 14	2538 931	31G	2538 931	31G	2538 934	34G	2538 934	34G
7.75 x 15	2538 932	32BL	2538 932	32BL	2538 935	35O	2538 935	35O
8.25 x 15	2538 931	31G	2538 931	31G	2538 934	34G	2538 934	34G
8.55 x 15	2538 931	31G	2538 931	31G	2538 934	34G	2538 934	34G
8.90 x 15	2538 928	28B	2538 928	28B	2538 930	30Y	2538 930	30Y
9.00 x 15	2538 929	29BL	2538 929	29BL	2538 932	32BL	2538 932	32BL
9.15 x 15	2538 930	30Y	2538 930	30Y	2538 933	33Y	2538 933	33Y

COLOR OF PINIONS

G-GREEN R-RED W-WHITE B-BLUE Y-YELLOW
BL-BLACK
O-ORANGE

NOTES

CARLINES J - Challenger V - Valiant R - Satellite P - Plymouth C - Chrysler
B - Barracuda L - Dart W - Coronet - Charger D - Dodge Y - Imperial

AR Indicates use as required.
Numerals in parentheses ( ) refer to notes.
# Indicates parts not listed in any previous parts book.
★ Indicates change or addition.

Printed in U.S.A.
November, 1974

CODE	PART NAME	ENG. TYPE OR CU. IN	V	B J	L	R	W	P	D	C (L M)	C (P)	C (H S)	Y	PART NUMBER
21-85-9	ADAPTER, Speedometer Drive Pinion,													
	w/26 to 45 Tooth Pinions		1	1	1	1	1	—	—	—	—	—	—	2538 608
	w/21 to 25 Tooth Pinions		—	—	—	1	1	—	—	—	—	—	—	2892 994
	"O" RING, Adapter, Rubber, 1 35/64" I.D.		1	1	1	1	1	—	—	—	—	—	—	6025 752
21-85-22	SEAL, Drive Pinion Adapter, Rubber		1	1	1	1	1	—	—	—	—	—	—	2538 588
21-85-23	RING, Speedometer Seal Retainer, Steel		1	1	1	1	1	—	—	—	—	—	—	2538 571
21-85-61	CLAMP, Speedometer Drive Pinion Adapter		1	1	1	1	1	—	—	—	—	—	—	2892 399
	SCREW, w/WASHER		1	1	1	1	1	—	—	—	—	—	—	180 077
21-113-24	**SWITCH, Transmission Neutral Starter and Back-Up Light**													

NOTE: See Code 8-56-2 for Manual Transmission Back-Up Light Switch

NOTE: See Code 8-52-42 for 4 Speed Manual Transmission Clutch Starter Switch

NOTES

NOTE: All quantities are one (1) unless otherwise indicated in parenthesis

CODE	TRANSMISSION	3637 983 3 Speed A250	3681 817 3681 818 3 Speed A230	3681 834 3681 836 3 Speed A230
21-01-3	**SEAL and GASKET PACKAGE, Transmission**	3780 208	3780 206	3780 205
21-02-6	**VENT**	2124 715	2124 715	2124 715
21-03-1	**CASE**	3681 192	3681 558	3681 558
	SCREW, Case Cover (6)	180 075	———	———
	PLUG, Drain	———	444 625	444 625
	Filler 1/2" - 14 Pipe (Not Serviced)			
21-03-11	MAGNET, Case Chip Collector	3681 601	3681 601	3681 601
21-03-21	CLIP	3743 314	3743 314	3743 314
21-04-1	**EXTENSION, Transmission Case**	3681 649	3681 655	3410 005
	BOLT, Upper (2)	———	———	180 129
	(6)	181 141	———	———
	Lwr. (4) (Not Serviced) 1 3/8" x 3/8"-16			
21-04-2	GASKET	1949 361	3410 008	3410 008
21-04-11	BUSHING	2801 726	2801 726	2801 724
21-09-2	**PINION or GEAR, Main Drive, 21T., 18T., 23T.**	3681 330	———	———
	36T., 20T., 23 Splines, w/3681 818 and 3681 836 Trans.	———	3410 066	3410 066
	36T., 20T., 23 Splines, Use w/3681 817 and 3681 834 Trans.	———	3410 009	3410 009
21-09-5	BEARING, Drive Pinion w/o Snap Ring, 3 9/64" O.D.	2892 793	———	———
		———	3410 048	3410 048
21-09-19	SLINGER, Brg. Oil	3410 413	———	———
21-09-23	SNAP RING, Brg., 1 1/4" I.D., .086" thk. (AR)	6030 191	———	———
	.088" thk. (AR)	———	6025 754	6025 754
	.089" thk. (AR)	6030 192	———	———
	.091" thk. (AR)	———	6025 755	6025 755
	.092" thk. (AR)	6030 193	———	———
	.094" thk. (AR)	———	6025 756	6025 756
	.095" thk. (AR)	6030 194	———	———
	.097" thk. (AR)	———	6025 757	6025 757
	Outer, 2.99 I.D.	2124 518	2124 518	2124 518
21-09-25	WASHER, Brg.	631 877	———	———
21-09-29	RETAINER, Brg.	3410 395	3410 395	3410 395
21-09-30	SEAL, Brg., Rubber Coated	2801 692	2801 692	2801 692
21-09-31	SCREW, Brg. Retainer (3)	1920 101	———	———
	(4)	———	1920 101	1920 101
21-09-33	GASKET, Brg. Retainer	2124 499	2124 499	2124 499
21-10-3	**GEAR, Main Drive Low Speed, w/3681 818 and 3681 836 Trans.**	———	3410 068	3410 068
	Use w/3681 817 and 3681 834 Trans.	———	3410 012	3410 012
21-10-4	GEAR, Sliding, First and Reverse, 29T., 32 Splines	2892 812	———	———
21-10-16	GEAR, Second Speed,	———	———	———
	24T., 24T	2892 807	———	———
	36T., 24T., Use w/3681 818 and 3681 836	———	3410 067	3410 067
	36T., 27T., Use w/3681 817 and 3681 834 Trans.	———	3410 011	3410 011
21-10-72	GEAR, Reverse Speed,			
	34T., 32T., Use w/3681 817 and 3681 834 Trans.	———	3410 013	3410 013
	34T., 28T., Use w/3681 818 and 3681 836 Trans.	———	3410 069	3410 069
21-11-1	**GEAR, Reverse Idler**	2892 813	———	———
	Use w/3681 818 and 3681 836 Trans.	———	3410 072	3410 072
	Use w/3681 817 and 3681 834 Trans.	———	3410 018	3410 018
21-11-2	ROLLER, Brg. (22)	666 927	666 927	666 927
21-11-9	WASHER (2)	3515 472	3515 472	3515 472
21-12-1	**SHAFT, Reverse Idler Gear 2 13/32" Lgh.**	3410 210	3410 210	3410 210
21-12-2	KEY	1635 293	1635 293	1635 293

NOTE: All quantities are one (1) unless otherwise indicated in parenthesis

CODE	TRANSMISSION	3637 983 3 Speed A250	3681 817 3681 818 3 Speed A230	3681 834 3681 836 3 Speed A230
21-14-1	**SYNCHRONIZER, Clutch Gear**	3681 318	———	———
	Low	———	3515 449	3515 449
	Second and Direct, w/3681 818 and 3681 836 Trans.	———	3515 448	3515 448
	Use w/3681 817 and 3681 834	———	3515 444	3515 444
21-14-5	GEAR	3681 317	———	———
21-14-6	SLEEVE	1676 197	———	———
21-14-15	SPRING, Stop Ring	3410 428	———	———
	Low (2)	———	3515 468	3515 468
	Second and Direct (2)	———	3515 468	3515 468
21-14-19	RING, Stop, Outer	2464 839	———	———
	Second Speed Stop, Inner	3410 808	———	———
	Direct Speed Stop, Inner	3410 808	———	———
	Low Stop	———	3515 023	3515 023
	Second and Direct, Stop, (2)	———	3515 023	3515 023
21-14-20	SNAP RING, Clutch Gear	6027 246	6024 131	6024 131
21-14-21	SHIM	2464 724	———	———
21-15-2	**GEAR, Countershaft 33T., 24T., 12T.,**	———	———	———
	15T.	2892 808	———	———
	29T., 23T., 16T., 16T			
	Use w/3681 817 and 3681 834 Trans.	———	3410 020	3410 020
	31T., 25T., 17T., 13T., Use			
	w/3681 818 and 3681 836 Trans.	———	3410 073	3410 073
21-15-33	WASHER, Gear Thrust (2)	1633 763	3410 162	3410 162
21-16-3	**SHAFT, Main or Output**	3681 334	———	———
	40T., 40T., 13T., 26T	———	3410 043	———
	40T., 40T., 13T., 30T.	———	———	3410 010
21-17-2	**ROLLER, Main or Output Shaft Pilot Bearing (14)**	1949 834	———	———
	(15)	———	1949 834	1949 834
21-17-7	SNAP RING, Roller	601 108	862 173	862 173
21-19-2	**BEARING, Main or Output Shaft, 2 53/64" O.D.**	3681 120	———	———
		———	3410 048	3410 048
21-19-15	SNAP RING, Inner, 1 1/4" I.D.,			
	.088" thk. (AR)	6025 754	6025 754	6025 754
	.091" thk. (AR)	6025 755	6025 755	6025 755
	.094" thk. (AR)	6025 756	6025 756	6025 756
	.097" thk. (AR)	6025 757	6025 757	6025 757
	Outer, .086" thk. (AR)	640 280	———	———
	.089" thk. (AR)	631 809	———	———
	.092" thk. (AR)	631 810	———	———
	.093" thk. (AR)	———	6028 258	6028 258
	.095" thk. (AR)	640 331	———	———
21-22-2	**SEAL, Main or Output Shaft Bearing Oil Yoke**			
	Rubber	3515 384	3515 384	3515 383
21-23-2	**RETAINER, Main or Output Shaft Bearing**	———	3410 007	3410 007
21-24-2	**COUNTERSHAFT**	1635 282	3410 026	3410 026
21-24-22	KEY	1635 293	1635 293	1635 293
21-25-2	**ROLLER, Countershaft Bearing (88)**	2508 004	2124 502	2124 502
	BEARING, Needle	2466 319	———	———
21-25-3	RETAINER, Needle Brg.	2466 320	———	———
21-25-4	SPACER	2892 810	———	———
21-25-6	WASHER, Brg. Thrust (4)	2466 318	———	———
	Brg. (6)	———	2124 506	2124 506
21-29-3	**COVER or HOUSING, Gearshift Case**	1949 345	———	———
	HOUSING, Gearshift, Cstg. No. 3515 758			
	Use w/3410 759 and 3780 235 Trans.	———	3515 759	———
	BOLT	———	6026 874	6026 874
	(8)	———	6024 457	6024 457

NOTE: All quantities are one (1) unless otherwise indicated in parenthesis

CODE	TRANSMISSION	3637 983 3 Speed A250	3681 817 3681 818 3 Speed A230	3681 834 3681 836 3 Speed A230
21-29-25	GASKET, Case Cover	1949 346	———	———
	Gearshift Hsg.	———	3410 030	3410 030
21-34-42	**PIN, Gearshift Rail Interlock**	1949 356	———	———
21-34-45	SLEEVE, Interlock	1949 355	———	———
21-34-47	SPRING, Interlock	1853 745	3410 204	3410 204
	WASHER	6026 239	———	———
	BALL, Gearshift Interlock (2)	104 919	———	———
21-39-3	**FORK, Gearshift, Low and Reverse**	1949 351	———	———
	Second and Direct	3410 561	———	———
	(2)	———	3410 038	3410 038
21-42-11	**LEVER, w/SHAFT, Gearshift**			
	Inside of Case, Low and Reverse	2801 938	3515 492	3515 492
	Second and Direct	3515 017	3681 684	3681 684
	PIN, Shaft (2)	6022 161	———	———
21-42-23	LEVER, Gearshift Operating, Located Outside of Case, Low and Reverse,			
	Stamped 362	3410 362	———	———
	Stamped 794	3743 794	———	———
	Second and Direct, V, L, w/198 and 225 Eng.	3515 730	———	———
	Low and Reverse, Floor Shift	———	3515 402	———
	w/o Center Seat, Stamped 403	———	———	3515 403
	w/Center Seat, w/3681 834 Trans.	———	———	3515 404
	Low and Reverse, Column Shift, use w/3681 817 Trans. UP TO			
	Nov. 1, 1973, Stamped 063	———	3410 063	———
	From Nov. 1, 1973, Stamped 439	———	3743 439	———
	AFTER Nov. 1, 1973, Stamped 795	———	3743 795	———
	w/3681 834 Trans., Stamped 174	———	———	3681 174
	First and Reverse, Floor Shift, on Mechanism, w/Square Center Slot, R, w/o Fold Down Arm Rest			
	V, L, B, J	———	2950 948	———
	B, J, R	———	———	2950 948
	First and Reverse, Floor Shift, R, w/Fold Down Arm Rest	———	3467 689	———
	w/3681 834 Trans., w/Round Slot	———	———	3467 689
	Second and Direct, Floor Shift B, J, R, W, Stamped 490	———	———	3410 490
	R, W, w/3681 834 Trans., Stamped 172	———	———	3515 172
	Second and Direct, Column Shift, Use w/3681 817 Trans.	———	3515 731	———
	w/3681 834 Trans., Stamped 246	———	———	3681 246
	Second and Third, on Mechanism	———	2950 947	2950947
	Gearshift Interlock (2)	———	3410 207	3410 207
	CLIP, Interlock Lever	6027 983	———	———
	PIN, Interlock Lever	———	6028 261	6028 261
	SNAP RING, Interlock Lever Pin	———	6025 857	6025 857
	NUT, Gearshift Operating Lever (2)	6028 034	6028 034	6028 034
21-42-25	WASHER, Interlock Lever Spring, Low and Reverse	6026 239	———	———
21-42-28	PIN, Interlock, Low and Reverse	2538 013	———	———
21-42-29	PAWL, Interlock Lever, Low and Reverse	2538 014	———	———
21-42-31	SEAL, Gearshift Lever Shaft Oil (2)	1949 350	———	———
	13/16" O.D. (2)	———	1316 849	1316 849
21-42-34	RETAINER, "O" Ring Seal 51/64" O.D., Plastic (2)	———	3515 793	3515 793

NOTE: All quantities are one (1) unless indicated in parenthesis

CODE	TRANSMISSION	3410 759 3780 234 3780 235 4 Speed A833	≠ 3681 897 4 Speed A833
21-01-3	**SEAL and GASKET PACKAGE, Transmission**	3780 204	3780 204
21-02-6	**VENT, Trans.**	2124 715	2124 715
21-03-1	**CASE, Use w/3410 759 and 3780 235 Trans.**	3410 193	———
		———	3410 193
	Use w/3780 234 Trans.	3410 194	———
	PLUG, Drain, 3/8"-14	444 625	444 625
	Filler, 1/2 - 14 Pipe (Not Serviced)		
21-03-11	MAGNET, Case Chip Collector	3681 601	3681 601
21-03-21	CLIP	3743 314	3743 314
21-04-1	**EXTENSION, Case, Use w/3410 759**	2892 961	———
		———	2892 961
	Use w/3780 234-5 Trans.	3410 394	———
21-04-2	GASKET	2464 059	2464 059
21-04-11	BUSHING	2801 724	2801 724
21-04-17	BAFFLE, Vent	2538 785	2538 785
21-09-2	**PINION or GEAR, Main Drive 23T.,**		
	25T., 36 Splines, 11" Lgh.	3681 889	———
		———	3743 690
21-09-5	BEARING, w/o SNAP RING		
	Use w/3780 235 and 3410 759 Trans.	3410 048	———
	Use w/3780 234 Trans.	2801 890	———
		———	3410 048
21-09-23	SNAP RING, Brg., Outer,		
	3" I.D., .063 Thk., Use w/		
	3410 759 and 3780 235 Trans.	2124 518	———
	3 3/8" I.D., .063 Thk., Use w/		
	3780 234 Trans.	6027 225	———
		———	2124 518
	1 1/4" I.D., .088" thk. (AR)	6025 754	6025 754
	.091" thk. (AR)	6025 755	6025 755
	.094" thk. (AR)	6025 756	6025 756
	.097" thk. (AR)	6025 757	6025 757
21-09-29	RETAINER, Brg., Use w/3410 759 and 3780 235	3410 395	———
	Use w/3780 234 Trans.	3410 247	———
		———	3410 395
21-09-30	SEAL, Pinion	2801 692	2801 692
21-09-31	SCREW, Brg. Retainer (4)	1920 101	1920 101
21-09-33	GASKET, Brg. Retainer		
	Use w/3780 235 and 3410 759 Trans.	2124 499	———
	Use w/3780 234 Trans.	2801 893	———
		———	2124 499
21-10-3	**GEAR, Main Drive or Low Speed**	2464 018	2464 018
21-10-16	GEAR, Second Speed	3410 411	2464 069
21-10-31	GEAR, Third Speed	3410 410	2464 659
21-11-1	**GEAR, w/BUSHING, Reverse Idler 22T.**	2464 073	2464 073
21-12-1	**SHAFT, Reverse Idler Gear**	2464 023	2464 023
21-12-2	KEY	1635 293	1635 293
21-14-1	**SYNCHRONIZER, Clutch Gear, Low,**		
	Second and Reverse	3515 446	3515 446
	Third and Direct	3515 444	3515 444
	SNAP RING, Low,		
	Second and Reverse	6024 131	6024 131
	Third and Direct	6024 131	6024 131
21-14-15	SPRING, Synchronizer, Low, Second		
	and Reverse (2)	3515 468	3515 468
	Third and Direct (2)	3515 468	3515 468
21-14-19	RING, Synchronizer Stop (2)	3515 023	3515 023
	Third and Direct (2)	3515 023	3515 023

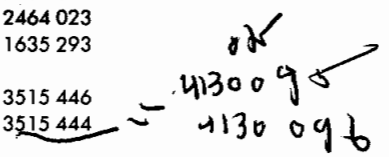

NOTE: All quantities are one (1) unless otherwise indicated in parenthesis

CODE	TRANSMISSION		3410 759 3780 234 3780 235 4 Speed A833	# 3681 897 4 Speed A833
21-15-2	**GEAR, Countershaft 30T., 26T., 23T.,**			
	17T., 17T		3410 412	———
	33T., 29T., 25T., 17T., 17T		———	2464 658
21-15-33	WASHER, Thrust (2)		2538 207	2538 207
21-16-3	**SHAFT, Main or Output, 40T., 40T., 13T.,**			
	30T., 23 1/4" lgh., Use w/3410 759 Trans.		2892 909	———
	40T., 40T., 13T., 30T., 27 23/64"		———	———
	Lgh., Use w/3780 234-5 Trans.		2892 942	———
			———	2892 909
21-17-2	**ROLLER, Main or Output Shaft Pilot Bearing (16)**		1949 834	1949 834
21-17-7	SNAP RING, Roller		6024 130	6024 130
21-19-2	**BEARING, Main or Output Shaft Frt.**			
	Use w/3780 235 and 3410 759 Trans.		3410 048	———
	Use w/3780 234 Trans.		2801 890	———
			———	3410 048
21-19-15	SNAP RING, Inner,			
	(AR) 1 1/4" I.D.	.088" thk.	6025 754	6025 754
	(AR)	091" thk.	6025 755	6025 755
	(AR)	.094" thk.	6025 756	6025 756
	(AR)	.097" thk.	6025 757	6025 757
	Outer (AR)	.087" thk.	6024 125	6024 125
	(AR) Use w/3780 234-5	093" thk.	6027 299	———
21-22-2	**SEAL, Main or Output Shaft Bearing Oil Yoke**		3515 383	3515 383
21-24-2	**COUNTERSHAFT**		2464 012	2464 658
21-24-22	KEY		1635 293	1635 293
21-25-2	**ROLLER, Countershaft Bearing (76)**		2464 744	2464 744
21-25-4	SPACER		2464 013	2464 013
21-25-6	WASHER (4)		2464 743	2464 743
21-29-3	**HOUSING, Gearshift Case**		3515 350	3515 350
	BOLT (7)		6024 457	6024 457
			6026 874	6026 874
21-29-25	GASKET		2464 037	2464 037
21-34-42	**PIN, Gearshift Rail Interlock**		6028 630	6028 630
21-34-44	PLUG, Reverse Lever Detent		1139 153	1139 153
21-34-46	GASKET, Reverse Lever Detent Plug		1302 807	1302 807
21-34-47	SPRING, Reverse Lever			
	Detent Ball		3515 344	3515 344
	Gearshift Interlock			
	Lever		3410 204	3410 204
	BALL		147 500	147 500
21-34-51	RETAINER, Lever, Detent Spring		2464 052	2464 052
21-34-53	GASKET, Gearshift Lever Detent			
	Spring Retainer		2464 053	2464 053
21-39-3	**FORK, Gearshift Low and Second**		3410 141	3410 141
	Third and Direct		3410 038	3410 038
	Reverse		2464 051	2464 051
21-42-11	**LEVER, w/SHAFT, Remote Control**			
	Gearshift, Located Inside of Case,			
	Low and Second, Stamped Type "A"		3410 542	3410 542
	Low and Second,			
	Stamped Type "B"		3410 543	3410 543
	Third and Direct		3410 168	3410 168
	Reverse		2466 295	2466 295
21-42-23	LEVER, Gearshift Operating, Located			
	Outside of Case, Low and Second,			
	V, L, Used w/3410 759 Trans.		2538 575	2538 575
	Low and Second, R, Stamped 147,			
	Used w/3780 234-5 Trans.		3515 147	———

NOTE: All quantities are one (1) unless otherwise indicated in parenthesis.

CODE	TRANSMISSION	3410 759 3780 234 3780 235 4 Speed A833	# 3681 897 4 Speed A833	
21-42-23	LEVER Cont'd.			
	Low and Second, B, J, R, W, Stamped 058, Used w/3780 234-5 Trans.	3515 058	———	
	Third and Direct, V, L, Used w/3410 759 Trans.	2538 576	2538 576	
	Third and Direct, B, J, R, W, Stamped 057, Used w/3780 234-5 Trans.	3515 057	———	
	Third and Direct, R, W, Stamped 146, Used w/3780 234-5 Trans.	3515 146	———	
	Reverse, V, L, Stamped 967, Used w/3410 759 Trans.	2892 967	2892 967	
	Reverse, R, Stamped 148, Used w/3780 234-5 Trans.	3515 148	———	
	Reverse, B, J, R, W, Stamped 368, Used w/3780 234-5 Trans.	3410 368	———	
	Interlock (2)	3410 093	———	
	NUT, Operating Lever, (AR)	6028 034	6028 034	
	PIN, Interlock	6028 630	6028 630	
	SNAP RING, Interlock Pin	6023 878	6028 878	
21-42-31	SEAL, Gearshift Lever Shaft Oil (3)	1536 267	1536 267	

NOTES

Printed in U.S.A.
November, 1974

GROUP 21 - TRANSMISSION

AUTOMATIC

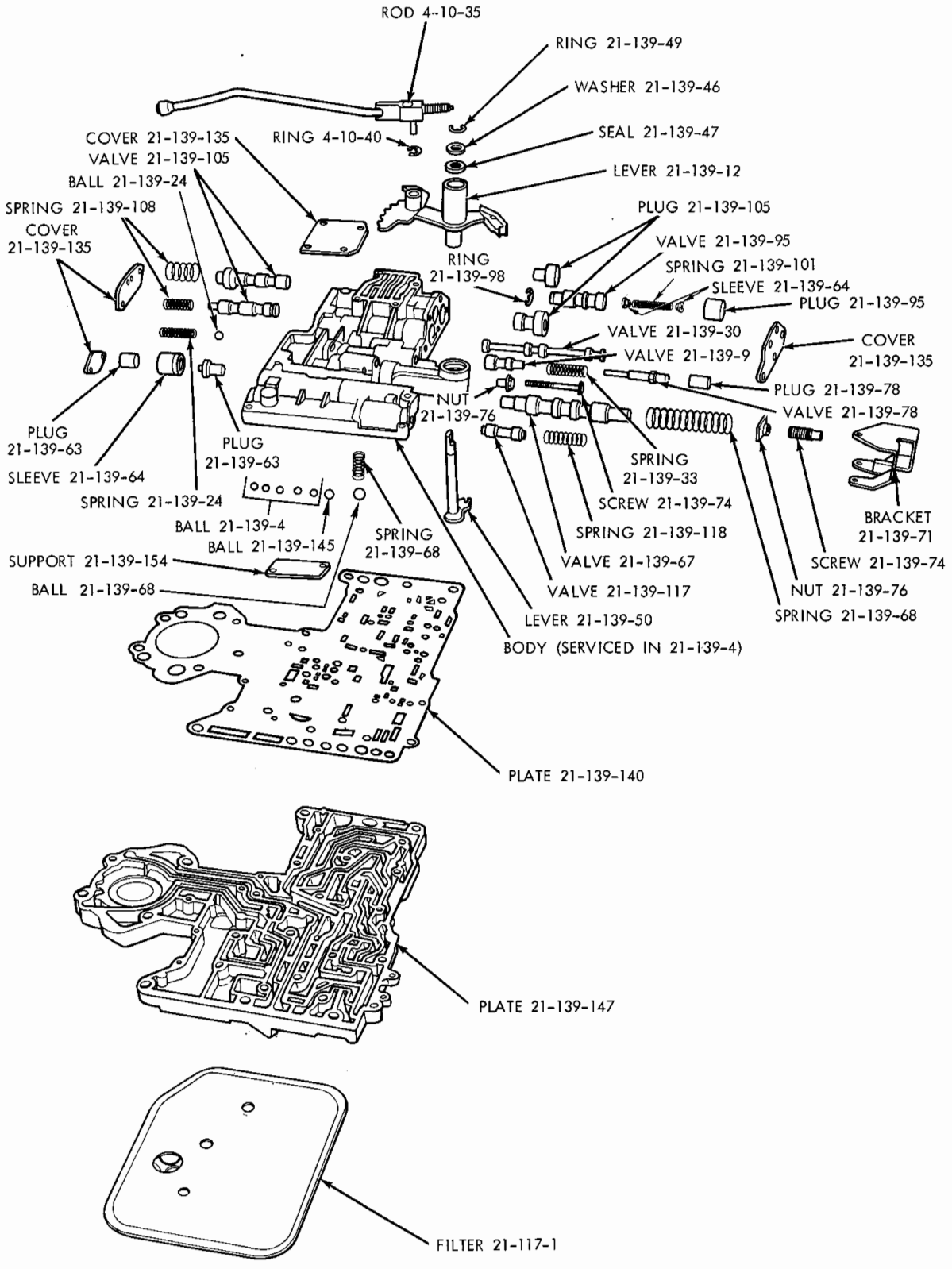

19a4900 B

A727 AND A904 3 SPEED AUTOMATIC TRANSMISSION VALVE BODY

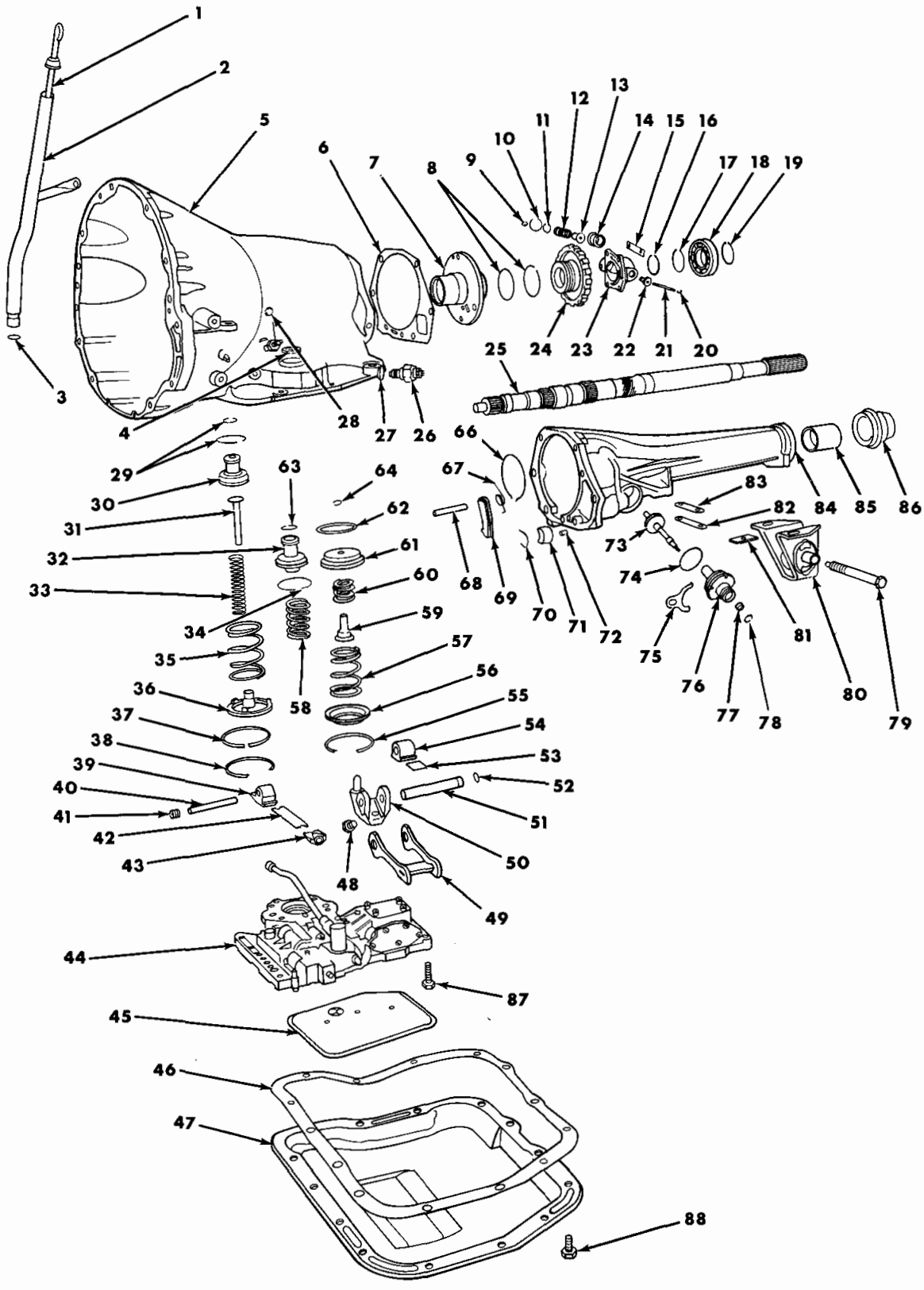

A727 AND A904 3 SPEED AUTOMATIC TRANSMISSION CASE AND EXTENSION

A727 AND A904 3 SPEED AUTOMATIC TRANSMISSION
CASE AND EXTENSION

Ref. No.	Name	Part Type Code
1	Indicator	21-119-19
2	Tube	21-119-15
3	Seal	21-119-25
4	Seal	21-139-16
5	Case	21-03-1
6	Gasket	21-04-2
7	Support	21-05-25
8	Ring	21-138-38
9	Ring	21-138-29
10	Ring	21-138-19
11	Ring	21-138-19
12	Spring	21-138-15
13	Weight	21-138-13
14	Weight	21-138-13
15	Lock	21-138-21
16	Ring	21-138-7
17	Ring	21-05-8
18	Bearing	21-05-2
19	Ring	21-05-8
20	Ring	21-138-29
21	Shaft	21-138-26
22	Valve	21-138-23
23	Housing (Serviced in 21-138-2)	
24	Support	21-138-10
25	Shaft, Output	21-05-1
26	Switch	21-113-24
27	Washer	21-113-29
28	Screw	21-136-17
29	Ring	21-137-8
30	Piston	21-137-5
31	Rod	21-137-5
32	Piston	21-137-200
33	Spring	21-137-22
34	Ring, Large	21-137-202
35	Spring	21-137-22
36	Guide	21-137-13
37	Ring	21-137-8
38	Ring	21-137-19
39	Lever	21-136-20
40	Shaft	21-136-23
41	Plug, Pipe, 1/4"-18	
42	Strut	21-136-15
43	Anchor	21-136-15
44	Body, w/Plate	21-139-4
45	Filter	21-117-1
46	Gasket	21-119-5
47	Pan	21-119-3
48	Screw	21-136-52
49	Link	21-136-44
50	Lever, w/Stem	21-136-47
51	Shaft	21-136-49
52	Seal	21-136-55
53	Strut	21-136-41
54	Lever, Short	21-136-47
55	Ring	21-137-59
56	Retainer	21-137-56
57	Spring	21-137-53
58	Spring	21-137-205
59	Plug	21-137-47
60	Spring	21-137-41
61	Piston	21-137-35
62	Seal	21-137-50
63	Ring, Small	21-137-202
64	Ring	21-137-47
65		
66	Ring (A727)	21-05-8
67	Spring	4-10-11
68	Shaft	4-10-8
69	Sprag	4-10-10
70	Ring	4-10-33
71	Plug	4-10-32
72	Pin (Serviced in 4-10-32)	
73	Pinion	21-85-5
74	Seal, Outer	21-85-9
75	Clamp	21-85-61
76	Adapter	21-85-9
77	Seal, Inner	21-85-22
78	Ring	21-85-23
79	Bolt	(Part No. 6028 237)
80	Insulator	9-71-5
81	Spacer	9-69-12
82	Cover	21-04-8
83	Gasket	21-04-2
84	Extension	21-04-1
85	Bushing	21-04-11
86	Seal	21-05-12
87	Screw	21-117-1
88	Screw	21-119-3

PARTS INDICATED BY NAME ONLY - ORDER BY DESCRIPTION

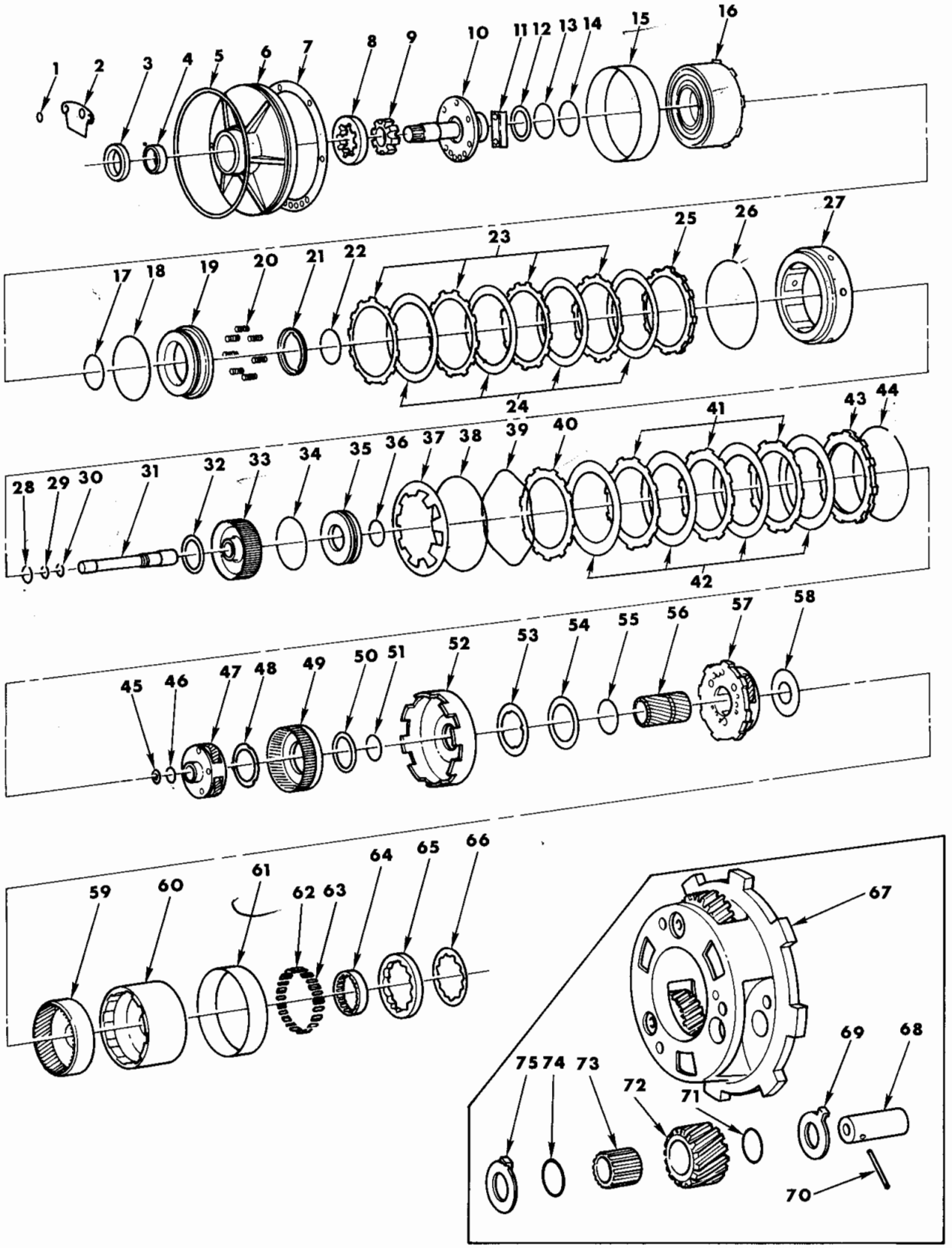

19a14912

A727 AND A904 3 SPEED AUTOMATIC TRANSMISSION GEAR TRAIN

A727 AND A904 3 SPEED AUTOMATIC TRANSMISSION
GEAR TRAIN

Ref. No.	Name	Part Type Code	Ref. No.	Name	Part Type Code
1	Plug (A727)	21-118-58	38	Spacer (A727)	21-133-62
2	Shield (A727)	21-118-57	39	Spring, Wave	21-133-31
3	Seal	9-46-130	40	Plate, Rear Clutch Front	21-133-39
4	Bushing	21-118-47	41	Plate	21-133-38
5	Seal	21-118-45	42	Disc	21-133-36
6	Housing	21-118-40	43	Plate, Rear Clutch Rear	21-133-39
7	Gasket (A727)	21-118-54	44	Ring, Rear Clutch	21-133-25
8	Rotor (Serviced in 21-118-6)	21-129-24	45	Washer	21-05-35
9	Rotor (Serviced in 21-118-6)		46	Ring	21-05-8
10	Shaft, w/Support	21-129-10	47	Carrier, Front	21-134-5
11	Baffle (A727)	21-129-11	48	Washer (A727)	21-134-30
12	Washer	21-133-65	49	Gear, Front	21-134-38
13	Ring	21-129-13	50	Washer (A727)	21-134-30
14	Ring	21-129-13	51	Ring (A727)	21-133-46
15	Band	21-136-5	52	Shell	21-133-42
16	Retainer, Front Clutch	21-133-7	53	Plate	21-133-47
17	Seal, Inner	21-133-17	54	Washer	21-133-48
18	Seal, Outer	21-133-17	55	Ring	21-133-46
19	Piston, Front Clutch	21-133-15	56	Gear, Sun	21-133-40
20	Spring, Front	21-133-20	57	Carrier, Rear	21-134-5
21	Retainer	21-133-22	58	Plate	21-134-45
22	Ring, Front Clutch, Inner	21-133-43	59	Gear, Rear	21-134-38
23	Plate	21-133-38	60	Drum	21-136-65
24	Disc	21-133-36	61	Band	21-136-30
25	Plate, Front Clutch	21-133-39	62	Spring	21-136-236
26	Ring, Front Clutch, Outer	21-133-43	63	Roller	21-136-235
27	Retainer, Rear Clutch	21-133-7	64	Race	21-136-232
28	Ring	21-133-25	65	Cam	21-136-231
29	Ring (A727)	21-129-7	66	Retainer	21-136-233
30	Ring (A904 and A727)	21-129-7	67	Carrier (Serviced in 21-134-5)	
	Ring (A904)	21-129-5	68	Shaft	21-134-9
31	Shaft, Input	21-129-5	69	Washer	21-134-10
32	Washer	21-133-65	70	Pin	21-134-9
33	Retainer, Rear Piston (A727)	21-133-7	71	Ring	21-134-12
34	Seal, Outer	21-133-17	72	Pinion	21-134-8
35	Piston, Rear Clutch	21-133-15	73	Roller	21-134-11
36	Seal, Inner	21-133-17	74	Ring	21-134-12
37	Spring, Rear	21-133-20	75	Washer	21-134-10

PARTS INDICATED BY NAME ONLY - ORDER BY DESCRIPTION

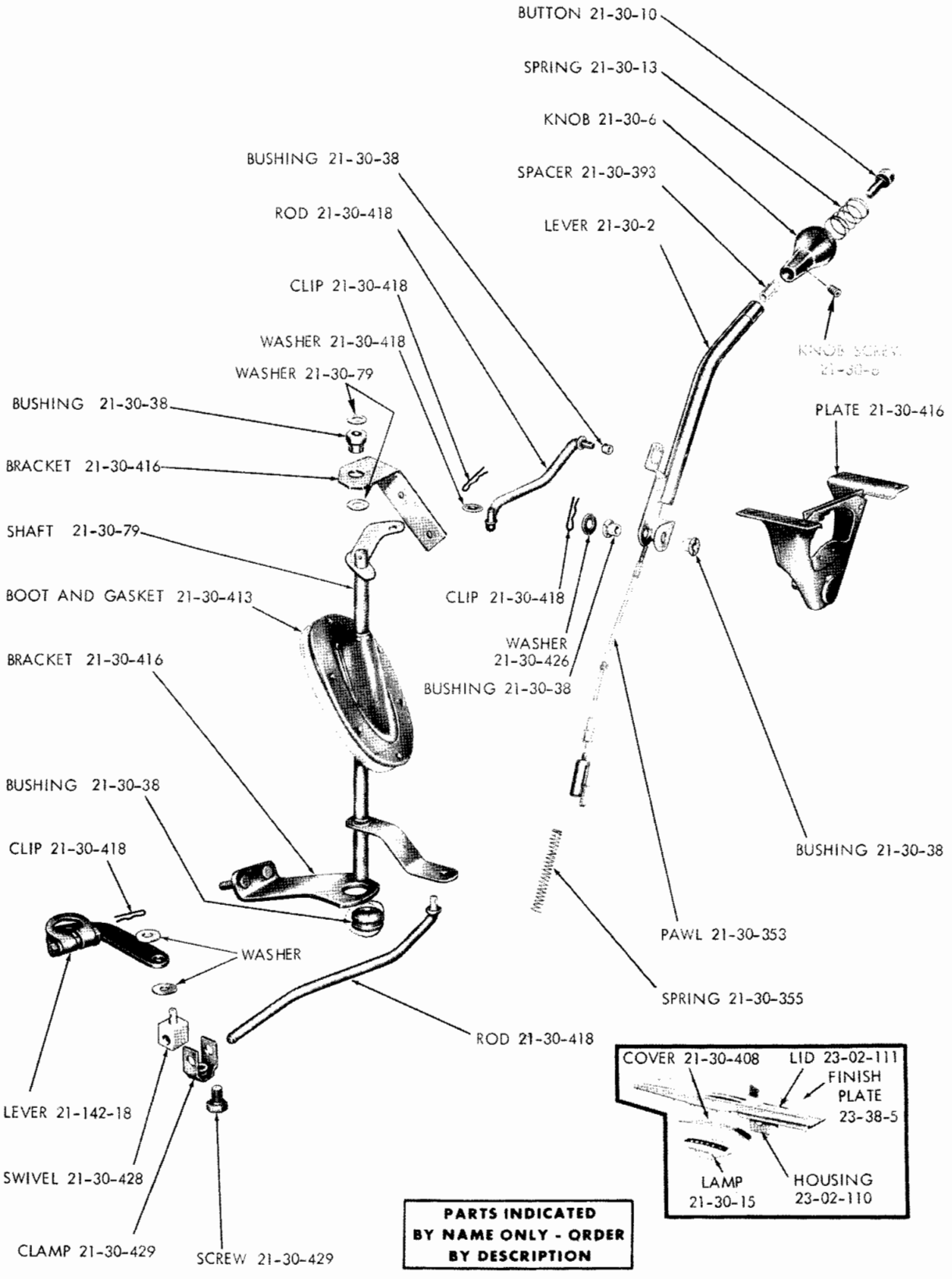

AUTOMATIC TRANSMISSION CONTROLS - WITH CONSOLE - V, L

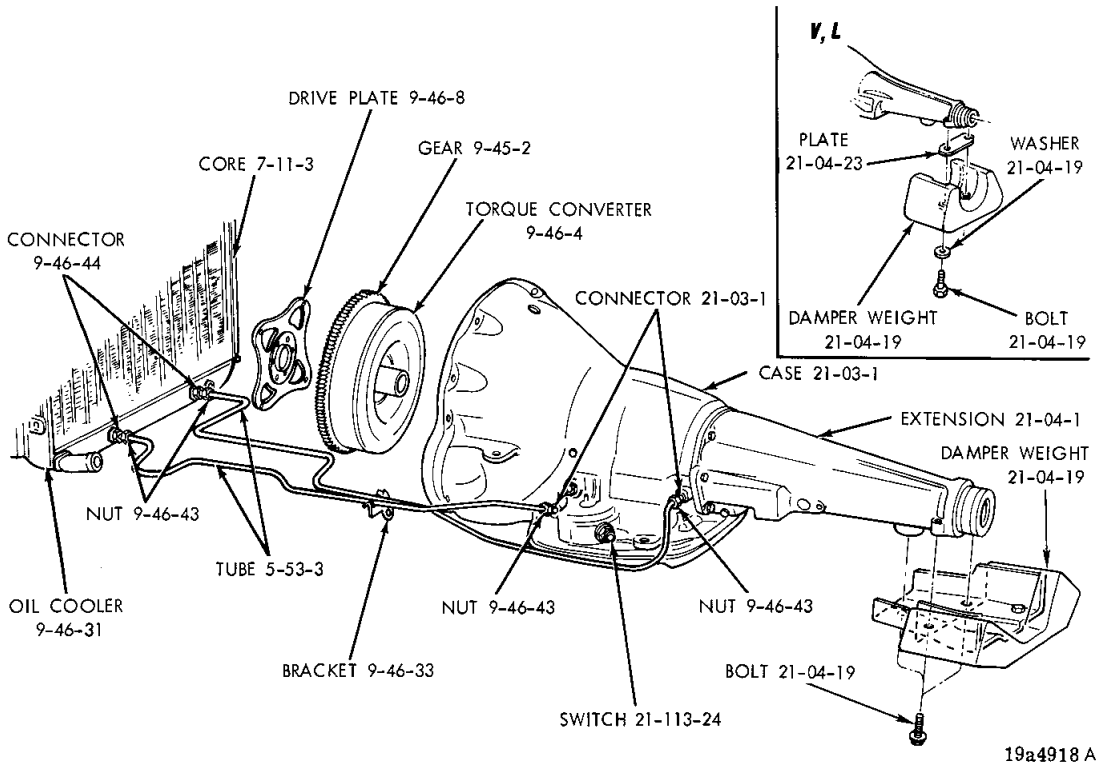

AUTOMATIC TRANSMISSION OIL COOLER SYSTEM

NOTES

NOTES

GROUP 21 - TRANSMISSION (AUTOMATIC)

BANDS 21-136
CABLE, SPEEDOMETER 21-84
CASE 21-03
CLUTCH 21-133
CONTROLS, GEARSHIFT 21-30
DAMPER, CASE EXTENSION 21-04
EXTENSION, CASE 21-04
FILTER, OIL 21-117
GEAR AND PINION, SPEEDOMETER 21-85
GOVERNOR 21-138
LEVER, CONTROL 21-142
PAN, OIL 21-119
PLANETARY PINION CARRIER 21-134
PUMP, OIL 21-118
SEAL AND GASKET PACKAGE 21-01
SERVOS 21-137
SHAFT, OUTPUT 21-05
SHAFT, INPUT AND TORQUE CONVERTER REACTION 21-129
SWITCH, NEUTRAL STARTER AND BACK-UP LIGHT 21-113
TRANSMISSION, REPLACEMENT 21-02
VALVES 21-139

Printed in U.S.A.
November 1974

CODE	PART NAME	ENG. TYPE OR CU. IN	V	B J	L	R	W	P	D	C (L M)	C (P)	C (H S)	Y	PART NUMBER
	NOTE: The Transmission number can be found on the Transmission Oil Pan Rail													
	NOTE: Transmission component parts for the transmission assemblies shown in code 21-02-1 below are catalogued in charted style after code 21-142-18. The respective service transmission part number is designated at the top of each column, and must be verified before specifying components.													
21-02-1	**TRANSMISSION, V, L, w/198 Eng. V, L, R, W, w/225 Eng., w/1 Bbl. Carb., Early Type A904**	6	1	—	1	1	1	—	—	—	—	—	—	3681 841
	V, L, 198 Eng., V, L, R, W, w/225 Eng., w/1 Bbl. Carb., Late Type, A904	6	1	—	1	1	1	—	—	—	—	—	—	3743 421
	V, L, 198 Eng., V, L, R, W, w/225 Eng., w/1 Bbl. Carb., Late Type (Cancelled —Service 3743 421 Trans.) (Use Components of 3743 421) A904	6	1	—	1	1	1	—	—	—	—	—	—	3743 476
	w/318 Eng., UP TO Approx. Dec. 3, 1973, A94-1	8	1	1	1	1	1	—	—	—	—	—	—	3681 843
	w/318 Eng., AFTER Approx. Dec. 3, 1973, A94-1	8	1	1	1	1	1	—	—	—	—	—	—	3743 423
	w/318 Eng., Late Type (Cancelled—Service 3743 423 Assy.) (For Components of 3743 478 Trans. See Chart)	8	1	1	1	1	1	—	—	—	—	—	—	3743 478
	w/360 4 Bbl. Carb. Eng., High Performance, A727	8	1	1	1	1	1	—	—	—	—	—	—	3681 863
	w/225 Eng., w/2 Bbl. Carb., Export, Early Type, A904	6	—	—	1	—	—	—	—	—	—	—	—	3681 842
	w/225 Eng., w/2 Bbl. Carb., Export, Late Type, A904	6	—	—	1	—	—	—	—	—	—	—	—	3743 422
	w/225 Eng., A727	6	—	—	1	1	1	—	—	—	—	—	—	3681 861
	w/360 2 and 4 Bbl. Carb. Eng., (Not Used in 1974) A904	8	—	—	—	1	1	1	1	1	—	—	—	3681 844
	R, W, D, w/318 Eng., R, W, P, D, w/360 2 Bbl. and 4 Bbl. Carb. Eng., C, w/360 4 Bbl. Carb. Eng., w/o Hi-Perf., A727	8	—	—	—	1	1	1	1	1	—	—	—	3681 862
	w/400 2 bbl. Carb. Eng., A727	8	—	—	—	1	1	1	1	1	1	1	—	3681 864
	w/400 4 Bbl. Carb. Eng., High-Performance, A727	8	—	—	—	1	1	1	1	—	—	—	—	3681 865
	w/440 Eng., High Performance, w/1-4 Bbl. Carb. A727		—	—	—	1	1	1	1	1	1	1	—	3681 867
	w/225 Eng., A727	6	—	—	1	1	1	—	—	—	—	—	—	3681 861
	w/440 Eng., w/o Hi-Perf. w/1-4 Bbl. Bbl. Carb., A727	8	—	—	—	—	—	1	1	1	1	1	1	3681 866
21-03-6	**COVER, or SHIELD Case, V, L, w/198 and 225 Eng., R, W, w/225 Eng.,** A904	6	1	—	1	1	1	—	—	—	—	—	—	1949 767
	w/318 Eng., A94-1	8	1	1	1	1	1	—	—	—	—	—	—	2892 913
	w/360 Eng., A904	8	—	—	—	1	1	1	1	1	—	—	—	2892 913
	D, Export, w/318 Eng., V, L, B, J, R, W, P, D, C, w/360 Eng., R, W, 318 Eng., A727	8	1	1	1	1	1	1	1	1	—	—	—	2892 912
	w/360 Eng. A727	8	—	—	—	—	—	1	1	—	—	—	—	3515 920
	w/400 and 440 Eng., A727		—	—	—	1	1	1	1	1	1	1	1	3515 920
	w/225 Eng., Heavy Duty, A727	6	—	—	—	1	1	—	—	—	—	—	—	2892 163
	SCREW, w/WASHER, 1/4"-20 x 1/2"		AR	AR	AR	AR	AR	AR	AR	AR	AR	AR	AR	6023 092
21-03-7	COVER, Torque Conv. Drain, V, L, B, J, R, W, w/318 Eng., R, W, P, D, C, w/360 Eng., A904	8	1	1	1	1	1	1	1	1	—	—	—	2464 551
	V, L, B, J, R, W, P, D, C, w/360 Eng., R, W, D, w/318 Eng., A727	8	1	1	1	1	1	1	1	1	—	—	—	2204 728

CODE	PART NAME		ENG. TYPE OR CU. IN	V	B J	L	R	W	P	D	C (L M)	C (P)	C (H S)	Y	PART NUMBER
21-03-23	SCREW, w/WASHER, Case to Cyl. Block, 3/8"-16 x 1 3/8"			AR	AR	AR	AR	AR	AR	AR	4	4	4	4	6023 187
	Strut to Cyl. Block, 7/16" - 14 x 1 1/8"			2	—	2	2	2	—	—	—	—	—	—	6023 143
	Cyl. Block to Trans. Case, 7/16"-14 x 2 1/8"			AR	—	AR	AR	AR	AR	AR	AR	AR	AR	AR	6024 863
	Case to Cyl. Block, 3/8" - 16 x 2 5/8"			—	—	—	3	3	—	—	—	—	—	—	6027 252
	Cyl. Block to Trans. Case, 7/16"-14 x 1 7/8"			AR	AR	AR	AR	AR	AR	AR	—	—	—	—	6024 862
	Strut to Case, 7/16" - 14 x 1 1/8"			AR	AR	AR	AR	AR	AR	AR	—	—	—	—	6023 143
	Cyl. Block to Trans. Case, 3/8"-16 x 1 7/8"			AR	—	AR	AR	AR	—	—	—	—	—	—	6024 864
	Strut to Case			2	—	2	2	2	—	—	—	—	—	—	180 122
	Case to Strut, Lt., 7/16" - 14 x 1 7/8"			1	1	1	1	1	1	1	1	1	1	1	6024 862
	Strut to Cyl. Block, 7/16" - 14 x 1 1/8"			2	2	2	2	2	2	2	—	—	—	—	6023 143
	Strut to Cyl. Block			2	2	2	2	2	2	2	—	—	—	—	180 122
21-03-28	STRUT, Case to Cylinder Block	Lt.	6	1	—	1	1	1	—	—	—	—	—	—	1949 701
	w/318 and 360 Eng.	Rt.	8	1	1	1	1	1	1	1	1	—	—	—	2204 702
	w/318 and 360 Eng.	Lt.	8	1	1	1	—	—	—	—	—	—	—	—	2464 552
	w/318 and 360 Eng., w/One Round Hole and One Oblong Hole	Lt.	8	—	—	—	1	1	1	1	1	—	—	—	3681 658
21-04-19	**WEIGHT, w/SPACERS and INSULATORS, Case Extension Damper, w/318 Eng., A94-1**		8	1	—	1	—	—	—	—	—	—	—	—	3681 612
	w/A727 Trans.		8	—	—	—	1	1	1	1	1	1	1	1	3681 463
	WEIGHT, w/SUPPORT, INSULATORS, SPACERS, BOLTS, NUTS and WASHERS,														
	w/318 Eng., A94-1 Trans.		8	—	—	—	1	1	—	—	—	—	—	—	3743 669
	WEIGHT, A904 Trans.		8	—	—	—	1	1	—	—	—	—	—	—	3681 564
			8	—	—	—	—	—	1	1	1	—	—	—	3743 245
	BOLT, 5/16" A94-1		8	—	—	—	1	1	—	—	—	—	—	—	181 090
	NUT, w/WASHER, A94-1		8	—	—	—	1	1	—	—	—	—	—	—	120 376
	BOLT, 5/16" - 18, A727		8	—	—	—	2	2	2	2	2	2	2	2	181 091
21-04-22	SPACER		8	2	—	2	2	2	2	2	2	2	2	2	3681 189
21-04-23	PLATE, Damper Weight, w/318 Eng., A94-1		8	1	—	1	—	—	—	—	—	—	—	—	3681 614
21-04-26	INSULATOR, Damper Weight, w/318 Eng., Yellow, A94-1 Trans.		8	2	—	2	—	—	—	—	—	—	—	—	3681 514
	A904 Trans., Red		8	—	—	—	2	2	—	—	—	—	—	—	3631 512
	w/360 Eng.		8	—	—	—	—	—	2	2	2	—	—	—	3743 351
	w/A727 Trans., Orange		8	—	—	—	2	2	2	2	2	2	2	2	3681 513
	A727, White		8	—	—	—	—	—	—	—	—	—	—	2	3681 190
21-04-27	SUPPORT, Damper Weight, w/318 and 360 Eng., A904 Trans.		8	—	—	—	1	1	1	1	1	1	1	—	3743 246
	SCREW		8	—	—	—	3	3	3	3	—	—	—	—	180 077
21-30-2	**LEVER, w/KNOB, Column Shift, Chrysler Blt.**			1	—	1	1	1	—	—	—	—	—	—	3575 036
	Column Shift, Chrysler Blt., w/Knob, w/o Tilt and Telescopic			—	—	—	—	—	1	1	1	1	1	1	3748 299
	Column Shift, w/Knob, Chrysler Blt.			—	1	—	—	—	—	—	—	—	—	—	3575 038
	w/o Knob, w/Bracket, w/Console			1	—	1	—	—	—	—	—	—	—	—	3467 641
	w/Tilt and Telescopic, Saginaw Blt.			—	—	—	—	—	1	1	1	1	1	1	3748 456
	WASHER, Pivot Stud, w/Console			1	—	1	—	—	—	—	—	—	—	—	632 258
	Pivot Stud Spring, w/Console			1	—	1	—	—	—	—	—	—	—	—	6026 239
	PIN, Spring			1	1	1	1	1	1	1	1	1	1	1	9412 281
21-30-6	KNOB, w/PAD, Gearshift Control Selector Lever, w/Console, Wood Grained			1	1	1	1	1	—	1	—	—	—	—	2950 713
	Column Shift Lever			1	1	1	1	1	1	1	1	1	1	1	2883 402

CARLINES — J - Challenger, B - Barracuda, V - Valiant, L - Dart, R - Satellite, W - Coronet - Charger, P - Plymouth, D - Dodge, C - Chrysler, Y - Imperial

AR Indicates use as required.

Numerals in parentheses ( ) refer to notes.

# Indicates parts not listed in any previous parts book.

★ Indicates change or addition.

Printed in U.S.A.
November 1974

CODE	PART NAME	ENG. TYPE OR CU. IN	V	B J	L	R	W	P	D	C (L M)	C (P)	C (H S)	Y	PART NUMBER
21-30-6	KNOB Cont'd.													
	SCREW, Set, w/Console		1	1	1	1	1	—	—	—	—	—	—	426 094
21-30-10	BUTTON, Gearshift, Control Selector Lever Knob, w/Console, Black		1	1	1	1	1	—	—	—	—	—	—	2950 715
	Inner		—	1	—	1	1	—	—	—	—	—	—	3467 055
21-30-11	GATE, Column Gearshift Lever, w/12" Half Round Radius Shot At Bottom Edge		1	1	1	1	1	1	—	1	1	1	1	3748 393
	Shift Lever, w/o Console, Tilt, Telescopic		1	1	1	1	1	1	—	1	1	1	1	3748 393
	SCREW, w/o Console		—	—	—	—	—	1	1	1	1	1	1	3748 497
21-30-13	SPRING, Gearshift Control Selector Lever Knob, w/Console, 8 Coils		2	2	2	2	2	2	2	2	2	2	2	6027 370
	Button, Lwr., w/Console		1	1	1	1	1	—	1	—	—	—	—	2950 716
	Gearshift Control Actuator Lower Gate, w/Console, 16 Coils		—	1	—	1	1	—	—	—	—	—	—	3467 019
21-30-15	LAMP, w/LENS, HOUSING, MASK and DIFFUSER, w/Console Gearshift Selector Indicator, w/o Socket, w/Shift Patterns, w/Sliding Plastic Cover, (Also		—	1	—	1	1	—	1	—	—	—	—	3467 018
	See Code 21-30-28)		1	—	1	—	—	—	—	—	—	—	—	2820 756
	(Also See Code 21-30-28)		—	1	—	1	1	—	—	—	—	—	—	3488 535
21-30-21	LENS, w/MASK and BACKDIAL, Column Gearshift Selector Indicator Lamp, w/Shift Pattern, UP TO Approx. Jan. 30, 1974		1	—	1	1	1	—	—	—	—	—	—	3488 555
	AFTER Approx. Jan. 30, 1974		1	—	1	1	1	—	—	—	—	—	—	3746 921
	UP TO Approx. Jan. 30, 1974		—	1	—	—	—	—	—	—	—	—	—	3488 556
	AFTER Approx. Jan. 30, 1974 (For P,D,C,Y Models With Shift Pattern See Code 8-37-162)		—	1	—	—	—	—	—	—	—	—	—	3746 922
			—	—	—	—	—	1	1	1	1	1	—	
21-30-23	POINTER, Column Gearshift Dial		1	1	1	1	1	—	—	—	—	—	—	3575 969
	Gearshift Indicator, w/Tilt and Telescopic, UP TO Sept. 17, 1973		—	—	—	—	—	1	1	—	—	—	—	3592 699
	AFTER Sept. 17, 1973		—	—	—	—	—	1	1	—	—	—	—	3592 767
	w/o Tilt and Telescopic		—	—	—	—	—	1	1	—	—	—	—	3592 610
	w/o Tilt and Telescopic		—	—	—	—	—	—	—	1	1	1	1	3592 474
	w/Tilt and Telescopic, UP TO Sept. 17, 1973		—	—	—	—	—	—	—	1	1	1	1	3592 700
	AFTER Sept. 17, 1973		—	—	—	—	—	—	—	1	1	1	1	3592 768
	SCREW, Pointer, Tapping Type, 6-32 x 5/16"		1	1	1	1	1	—	—	—	—	—	—	6029 134
	Shoulder Type, 3/8" - 16 x 4 1/2"		1	1	1	1	1	—	—	—	—	—	—	6029 626
	Set Type		—	—	—	—	—	1	1	1	1	1	1	140 908
21-30-24	BRACKET, w/STUD, Column Gearshift Tube Indicator, w/Tilt and Telescopic Strg.		—	—	—	—	—	1	1	1	1	1	1	3467 176
	RIVET		—	—	—	—	—	2	2	2	2	2	2	6027 976
21-30-28	LAMP, w/HOUSING, DIFFUSER, BRACKET, BULB and WIRE, Column Gearshift Selector Indicator		1	1	1	1	1	—	—	—	—	—	—	3488 663
	SOCKET, Gearshift Selector Lamp, w/Console, 4 Prongs, Plastic Hsg.		—	1	—	1	1	—	—	—	—	—	—	2096 374
21-30-33	CONTACT, Gearshift Selector Lamp Socket		—	1	—	—	—	—	—	—	—	—	—	2256 966
	w/Console		—	—	—	1	1	—	—	—	—	—	—	2256 966

CARLINES: J - Challenger, B - Barracuda, V - Valiant, L - Dart, R - Satellite, W - Coronet - Charger, P - Plymouth, D - Dodge, C - Chrysler, Y - Imperial

AR Indicates use as required.
# Indicates parts not listed in any previous parts book.
Numerals in parentheses ( ) refer to notes.
★ Indicates change or addition.

Printed in U.S.A.
November 1974

CODE	PART NAME	ENG. TYPE OR CU. IN	V	B J	L	R	W	P	D	C (L M)	C (P)	C (H S)	Y	PART NUMBER
21-30-38	BUSHING, Gearshift Control Selector Lever Pivot Stud, w/Console		2	—	2	—	—	—	—	—	—	—	—	2643 910
	Gearshift Torque Shaft Bracket, w/and w/o Console		2	2	2	2	2	2	2	2	2	2	2	3575 434
	Gearshift Control Rod, Upper, w/Console		1	1	1	1	1	—	1	—	—	—	—	3467 245
21-30-43	SPRING, Shift Lever, w/Tilt and Telescopic Strg., w/o Console, Saginaw Blt., 10 Coils		—	—	—	—	—	1	1	1	1	1	1	2880 284
21-30-61	CAP, Gearshift Control Selector Lever Button Retainer, w/Console		—	1	—	1	1	—	—	—	—	—	—	3467 059
21-30-79	SHAFT, Gearshift Control Torque, Complete, w/Console		1	—	1	—	—	—	—	—	—	—	—	3575 349
			—	1	—	1	1	—	—	—	—	—	—	3467 721
			—	—	—	—	—	—	1	—	—	—	—	3575 388
	Washer		2	2	2	2	2	—	—	—	—	—	—	9417 098
	WASHER, Spring		1	1	1	1	1	—	—	—	—	—	—	905 206
	PIN, Cotter		1	1	1	1	1	—	—	—	—	—	—	121 224
21-30-100	SPRING, Column Gearshift Lever, 8 Coils		1	1	1	1	1	1	1	1	1	1	1	2996 786
	PIN		1	1	1	1	1	1	1	1	1	1	1	9412 281
21-30-353	PAWL, w/WIRE, Gearshift Control Selector Lever Lock, w/Console		1	—	1	—	—	—	—	—	—	—	—	2950 210
21-30-355	SPRING, Gearshift Control Selector Lever Lock Pawl, 23 Coils, w/Console		1	—	1	—	—	—	—	—	—	—	—	2643 913
	Gearshift Control Linkage Return, w/Console		—	1	—	1	1	—	1	—	—	—	—	3467 648
21-30-393	SPACER, Gearshift Control Selector Lever Cable, 7/8" Lgh., w/Console		1	—	1	—	—	—	—	—	—	—	—	2768 061
21-30-407	ACTUATOR, w/LEVER, PLATE and SUPPORT, Gearshift Control w/Console,		—	1	—	1	1	—	1	—	—	—	—	3467 627
	SCREW, w/WASHER		—	3	—	3	3	—	3	—	—	—	—	6024 069
21-30-408	COVER, Floor Console Trans. Control Lever Opening (See Code 21-30-15 for B, J, R and W Models)		1	—	1	—	—	—	—	—	—	—	—	2656 089
21-30-413	BOOT, w/GASKET, Gearshift Control Torque Shaft, w/Console		1	1	1	1	1	—	1	—	—	—	—	2781 407
21-30-416	PLATE, w/STUD and GATE, Gearshift Control Actuator, w/Console		1	—	1	—	—	—	—	—	—	—	—	3467 116
	BRACKET, w/NUT, Console Gear Selector to Floor Pan Mtg., w/Console		—	1	—	1	1	—	—	—	—	—	—	3616 453
	Torque Shaft To Floor Mounting w/Console		—	1	—	1	1	—	—	—	—	—	—	3446 959
	BRACKET, Gearshift Control Torque Shaft, Upper, w/Console		1	—	1	—	—	—	—	—	—	—	—	2781 419
			—	1	—	1	1	—	—	—	—	—	—	3467 078
	Lwr., Torque Shaft, w/Console		1	1	1	1	1	—	—	—	—	—	—	3467 717
	SCREW, Upper		2	2	2	2	2	—	—	—	—	—	—	180 079
21-30-418	ROD, Gearshift Control, Upper, w/Console		1	—	1	—	—	—	—	—	—	—	—	2781 417
	Lwr.		1	—	1	—	—	—	—	—	—	—	—	2950 212
	Upper, w/Console		—	1	—	1	1	—	—	—	—	—	—	2996 432
	Lwr., w/Console		—	1	—	1	1	—	—	—	—	—	—	3467 727
	WASHER, w/Console		AR	AR	AR	AR	AR	—	—	—	—	—	—	6027 467
	CLIP		AR	AR	AR	AR	AR	AR	—	—	—	—	—	6027 983
21-30-426	WASHER, Gearshift Control Selector Lever Pivot Stud, w/Console		1	—	1	—	—	—	—	—	—	—	—	632 258
21-30-428	SWIVEL, Gearshift Control Lower Rod, w/Console		1	—	1	—	—	—	—	—	—	—	—	3467 665
			—	1	—	1	1	—	1	—	—	—	—	2467 935

CARLINES: J - Challenger; B - Barracuda; V - Valiant; L - Dart; R - Satellite; W - Coronet - Charger; P - Plymouth; D - Dodge; C - Chrysler; Y - Imperial

AR Indicates use as required.

Numerals in parentheses ( ) refer to notes.

# Indicates parts not listed in any previous parts book.

★ Indicates change or addition.

Printed in U.S.A.
November 1974

CODE	PART NAME	ENG. TYPE OR CU. IN	V	B J	L	R	W	P	D	C (L M)	C (P)	C (H S)	Y	PART NUMBER
21-30-429	CLAMP, Gearshift Control Lower Rod Swivel, w/Console		1	1	1	1	1	—	1	—	—	—	—	2404 274
	SCREW		1	1	1	1	1	—	—	—	—	—	—	181 082
21-84-1	**CABLE, w/HOUSING, Speedometer, w/o**													
	Auto. Speed Control, Snap On Type At Speedo End, 62" Lgh.		1	1	1	1	1	1	1	1	1	1	1	3592 360
	w/400 Hi-Perf. and 440 Hi-Perf. Eng., Both Ends Threaded, 62" Lgh.		—	—	—	—	—	1	1	1	1	1	—	3592 787
	Lwr., w/Two Piece Cable Type, Both Ends Threaded, 54" Lgh.		—	—	1	1	1	1	1	—	—	—	—	2889 785
	Thermo Protected Type, Snap On Type At Speedo End, 62" Lgh.		—	—	—	—	—	1	1	1	1	1	—	3592 408
	CABLE, w/Connector, Fleet use in Nebraska, North Carolina and Florida, 5/8		—	—	—	—	—	1	1	1	1	1	—	3740 802
	CABLE, Lwr., Fleet use in Nebraska North Carolina and Florida		—	—	—	—	—	—	1	1	1	1	—	3740 804
	w/Auto. Speed Control, Upper, 36" Lgh.		—	—	—	1	1	1	1	—	—	—	—	3592 367
	Lwr. 54" Lgh.		—	—	—	1	1	—	—	—	—	—	—	2889 785
	Upper, 40" Lgh.		—	—	—	—	—	1	1	1	1	1	1	3592 421
	Lwr., 56" Lgh.		—	—	—	—	—	1	1	1	1	1	1	3592 422
	EXTENSION, Speedometer Cable, Two Piece Cable													
	Type, Upper, 6" Lgh.		—	—	—	1	1	—	—	—	—	—	—	2927 670
	Upper, 12" Lgh.		—	—	1	—	—	—	—	—	—	—	—	2927 920
	12" Lgh.		—	—	—	—	—	1	1	—	—	—	—	2927 920
21-84-4	SHAFT or CABLE PACKAGE, Speedometer, Universal, 80" Lgh.		1	1	1	1	1	1	1	1	1	1	1	2448 294
21-84-8	GROMMET, Speedometer Cable Dash		1	1	1	1	1	1	1	1	1	1	1	2216 552
21-84-11	SLEEVE, Speedometer Drive Shaft Silencing		1	1	1	1	1	1	1	1	1	1	1	3592 374

NOTES

21-85-5 PINION, w/GEAR, Transmission Speedometer

Tire Size	2.45 to 1 Ratio		2.71 to 1 Ratio		2.76 to 1 Ratio		2.93 to 1 Ratio		2.94 to 1 Ratio	
	Pinion	Teeth	Pinion	Teeth	Pinion	Teeth	Pinion	Teeth	Pinion	Teeth
B78 x 14	2538 927	27W	2538 929	29BL	2538 930	30Y	2538 932	32BL	2538 932	32BL
C78 x 14	2538 926	26R	2538 929	29BL	2538 929	29BL	2538 931	31G	2538 931	31G
D78 x 14	2538 926	26R	2538 928	28B	2538 929	29BL	2538 931	31G	2538 931	31G
E78 x 14	3410 025	25B	2538 928	28B	2538 928	28B	2538 930	30Y	2538 930	30Y
F78 x 14	3410 025	25B	2538 927	27W	2538 928	28B	2538 929	29BU	2538 930	30Y
G78 x 14	3410 024	24W	2538 927	27W	2538 927	27W	2538 929	29BL	2538 929	29BL
H78 x 14	3410 024	24W	2538 926	26R	2538 927	27W	2538 928	28B	2538 928	28B
DR78 x 14	2538 926	26R	2538 928	28B	2538 929	29BL	2538 931	31G	2538 931	31G
ER78 x 14	3410 025	25B	2538 928	28B	2538 929	29BL	2538 930	30T	2538 930	30Y
FR78 x 14	3410 025	25B	2538 927	27W	2538 928	28B	2538 930	30T	2538 930	30Y
HR78 x 14	3410 024	24W	2538 926	26R	2538 927	27W	2538 928	28B	2538 928	28B
F78 x 15	3410 024	24W	2538 927	27W	2538 927	27W	2538 929	29BL	2538 929	29BL
G78 x 15	3410 024	24W	2538 926	26R	2538 927	27W	2538 928	28B	2538 928	28B
H78 x 15	3410 023	23R	2538 926	26R	2538 926	26R	2538 928	28B	2538 928	28B
J78 x 15	3410 023	23R	3410 025	25B	2538 926	26R	2538 927	27W	2538 927	27W
L78 x 15	3410 023	23R	3410 025	25B	3410 025	25B	2538 927	27W	2538 927	27W
E70 x 14	2538 926	26R	2538 928	28B	2538 929	29BL	2538 931	31G	2538 931	31G
F70 x 14	3410 025	25B	2538 928	28B	2538 928	28B	2538 930	30Y	2538 930	30Y
G70 x 14	3410 025	25B	2538 927	27W	2538 928	28B	2538 929	29BL	2538 930	30Y
GR78 x 15	3410 024	24W	2538 926	26R	2538 926	26R	2538 928	28B	2538 928	28B
HR78 x 15	3410 023	23R	2538 926	26R	2538 926	26R	2538 928	28B	2538 928	28B
LR78 x 15	3410 023	23R	3410 025	25B	2538 926	26R	2538 927	27W	2538 927	27W
JR78 x 15	3410 023	23R	2538 926	26R	2538 926	26R	2538 928	28B	2538 928	28B
H70 x 15	3410 024	24W	2538 926	26R	2538 927	27W	2538 928	28B	2538 928	28B
E60 x 15	3410 025	25B	2538 928	28B	2538 929	29BL	2538 930	30Y	2538 930	30Y
F60 x 15	3410 025	25B	2538 928	28B	2538 928	28B	2538 930	30Y	2538 930	30Y
G60 x 15	3410 024	24W	2538 927	27W	2538 928	28B	2538 929	29BL	2538 929	29BL
GR70 x 15	3410 024	24W	2538 926	26R	2538 927	27W	2538 928	28B	2538 929	29BL
HR70 x 15	3410 023	23R	2538 926	26R	2538 926	26R	2538 928	28B	2538 928	28B
6.45 x 14			2538 929	29BL	2538 930	30Y	2538 931	31G	2538 931	31G
6.95 x 14	2538 926	26R	2538 928	28B	2538 929	29BL	2538 931	31G	2538 931	31G
7.35 x 14	3410 025	25B	2538 928	28B	2538 928	28B	2538 930	30Y	2538 930	30Y
7.75 x 14			2538 927	27W	2538 928	28B	2538 929	29BL	2538 929	29BL
8.25 x 14			2538 927	27W	2538 927	27W	2538 929	29BL	2538 929	29BL
8.55 x 14			2538 926	26R	2538 926	26R	2538 928	28B	2538 928	28B
7.75 x 15			2538 927	27W	2538 928	28B	2538 929	29BL	2538 929	29BL
8.25 x 15			2538 926	26R	2538 927	27W	2538 928	28B	2538 929	29BL
8.55 x 15			2538 926	26R	2538 926	26R	2538 928	28B	2538 928	28B
8.90 x 15					3410 024	24W	3410 025	25B	3410 025	25B
9.00 x 15			3410 024	24W	3410 025	25B	2538 926	26R	2538 926	26R
9.15 x 15			3410 025	25B	2538 926	26R	2538 927	27W	2538 927	27W

Tire Size	3.21 to 1 Ratio		3.23 to 1 Ratio		3.54 to 1 Ratio		3.55 to 1 Ratio	
	Pinion	Teeth	Pinion	Teeth	Pinion	Teeth	Pinion	Teeth
B78 x 14	2538 935	35O	2538 935	35O	2538 938	38B	2538 938	38B
C78 x 14	2538 934	34G	2538 934	34G	2538 937	37W	2538 937	37W
D78 x 14	2538 934	34G	2538 934	34G	2538 937	37W	2538 937	37W
E78 x 14	2538 933	33Y	2538 933	33Y	2538 936	36R	2538 936	36R
F78 x 14	2538 932	32BL	2538 932	32BL	2538 936	36R	2538 936	36R
G78 x 14	2538 932	32BL	2538 932	32BL	2538 935	35O	2538 935	35O
H78 x 14	2538 931	31G	2538 931	31G	2538 934	34G	2538 934	34G
DR78 x 14	2538 934	34G	2538 934	34G	2538 937	37W	2538 937	37W
FR78 x 14	2538 932	32BL	2538 933	33Y	2538 936	36R	2538 936	36R
HR78 x 14	2538 931	31G	2538 931	31G	2538 934	34G	2538 934	34G
F78 x 15	2538 931	31G	2538 932	32BL	2538 935	35O	2538 935	35O
G78 x 15	2538 931	31G	2538 931	31G	2538 934	34G	2538 934	34G
H78 x 15	2538 930	30Y	2538 930	30Y	2538 933	33Y	2538 933	33Y
J78 x 15	2538 930	30Y	2538 930	30Y	2538 933	33Y	2538 933	33Y
L78 x 15	2538 930	30Y	2538 930	30Y	2538 933	33Y	2538 933	33Y
E70 x 14	2538 934	34G	2538 934	34G	2538 937	37W	2538 937	37W
F70 x 14	2538 933	33Y	2538 933	33Y	2538 936	36R	2538 936	36R

21-85-5 PINION, w/GEAR Cont'd.

Tire Size	3.21 to 1 Ratio		3.23 to 1 Ratio		3.54 to 1 Ratio		3.55 to 1 Ratio	
	Pinion	Teeth	Pinion	Teeth	Pinion	Teeth	Pinion	Teeth
G70 x 14	2538 932	32BL	2538 932	32BL	2538 936	36R	2538 936	36R
GR78 x 15	2538 931	31G	2538 931	31G	2538 934	34G	2538 934	34G
HR78 x 15	2538 931	31G	2538 930	30Y	2538 933	33Y	2538 934	34G
LR78 x 15	2538 930	30Y	2538 930	30Y	2538 933	33Y	2538 933	33Y
JR78 x 15	2538 930	30Y	2538 930	30Y	2538 933	33Y	2538 933	33Y
H70 x 15	2538 931	31G	2538 931	31G	2538 934	34G	2538 934	34G
E60 x 15	2538 933	33Y	2538 933	33Y	2538 936	36R	2538 936	36G
F60 x 15	2538 933	33Y	2538 933	33Y	2538 936	36R	2538 936	36R
G60 x 15	2538 932	32BL	2538 932	32BL	2538 935	35O	2538 935	35O
GR70 x 15	2538 931	31G	2538 931	31G	2538 934	34G	2538 934	34G
HR70 x 15	2538 931	31G	2538 931	31G	2538 934	34G	2538 934	34G
6.45 x 14	2538 934	34G	2538 935	35O	2538 938	38B	2538 938	38B
6.95 x 14	2538 934	34G	3538 934	34G	2538 937	37W	2538 937	37W
7.35 x 14	2538 933	33Y	2538 933	33Y	2538 936	36R	2538 936	36R
7.75 x 14	2538 932	32BL	2538 932	32BL	2538 935	35O	2538 935	35O
8.25 x 14	2538 932	32BL	2538 932	32BL	2538 935	35O	2538 935	35O
8.55 x 14	2538 931	31G	2538 931	31G	2538 934	34G	2538 934	34G
7.75 x 15	2538 932	32BL	2538 932	32BL	2538 935	35O	2538 935	35O
8.25 x 15	2538 931	31G	2538 931	31G	2538 934	34G	2538 934	34G
8.55 x 15	2538 931	31G	2538 931	31G	2538 934	34G	2538 934	34G
8.90 x 15	2538 928	28B	2538 928	28B	2538 930	30Y	2538 930	30Y
9.00 x 15	2538 929	29BL	2538 929	29BL	2538 932	32BL	2538 932	32BL
9.15 x 15	2538 930	30Y	2538 930	30Y	2538 933	33Y	2538 933	33Y

COLOR OF PINIONS

G-GREEN R-RED W-WHITE BL-BLACK O-ORANGE B-BLUE Y-YELLOW

NOTES

CODE	PART NAME	ENG. TYPE OR CU. IN	V	B J	L	R	W	P	D	C (L M)	C (P)	C (H S)	Y	PART NUMBER
21-85-9	**ADAPTER, Speedometer Drive Pinion,**													
	w/26 to 45 Tooth Pinions		1	1	1	1	1	1	1	1	1	1	1	2538 608
	w/21 to 25 Tooth Pinions		—	—	—	—	—	1	1	1	1	1	1	2892 994
	"O" RING, Adapter, Rubber, 1 35/64" I.D.		1	1	1	1	1	1	1	1	1	1	1	6025 752
21-85-22	SEAL, Pinion Adapter, Rubber		1	1	1	1	1	1	1	1	1	1	1	2538 588
21-85-23	RING, Speedometer Seal Retainer		1	1	1	1	1	1	1	1	1	1	1	2538 571
21-85-61	CLAMP, Speedometer Drive Pinion Adapter		1	1	1	1	1	1	1	1	1	1	1	2892 399
	SCREW, w/WASHER, Clamp		1	1	1	1	1	1	1	1	1	1	1	180 077
21-113-24	**SWITCH, w/WASHER, Neutral Starter and Back-Up Light, w/3 Prongs**		1	1	1	1	1	1	1	1	1	1	1	2932 820
21-113-29	WASHER, Mtg.		1	1	1	1	1	1	1	1	1	1	1	2408 143
21-119-15	**TUBE, Oil Pan, Oil Filler, w/198 and 225 Eng.,**													
	A904 Trans.	6	1	—	1	1	1	—	—	—	—	—	—	2801 911
	w/318 Eng., A94-1 Trans.	8	1	1	1	1	1	—	—	—	—	—	—	3878 320
	w/360 Eng., A904 Trans.	8	—	—	—	1	1	1	1	1	—	—	—	3878 320
	w/318 and 360 Eng., A727 Trans.		1	1	1	1	1	1	1	1	—	—	—	3681 254
	w/400 and 440 Eng., A727 Trans.	8	—	—	—	1	1	—	—	—	—	—	—	3410 535
	w/225 Eng., Heavy Duty, A727 Trans.	6	—	—	—	1	1	—	—	—	—	—	—	2892 408
	w/400 and 440 Eng., A727 Trans.	8	—	—	—	—	—	1	1	1	1	1	1	3681 316
21-119-19	INDICATOR, Oil Level		1	1	1	1	1	1	1	1	1	1	1	2466 302
21-119-25	SEAL, Oil Filler Tube		1	1	1	1	1	1	1	1	1	1	1	1316 815
21-142-12	**LEVER, w/BOLT and NUT, Throttle Control, A904 Trans.**		1	1	1	1	1	1	1	1	—	—	—	3751 551
	A727 Trans., w/o Bolt and Nut	8	1	1	1	1	1	1	1	1	1	1	1	2899 370
21-142-18	LEVER, Manual Control, w/o Console, w/A904 Trans., Up To Approx.													
	Mar. 1, 1974		1	—	1	1	1	1	1	1	—	—	—	3743 254
	AFTER Approx. Mar. 1, 1974		1	—	1	1	1	1	1	1	—	—	—	3878 538
	w/Console, w/A904 Trans.		1	—	1	1	—	—	—	—	—	—	—	2538 064
	w/and w/o Console, w/A904 Trans.		—	1	—	—	—	—	—	—	—	—	—	2538 064
	w/53/64" I.D. Hole in Bolt End,													
	w/Console, w/A727 Trans.		1	—	1	1	1	—	—	—	—	—	—	2801 828
	w/o Console, w/A727 Trans.		1	—	1	1	1	1	1	1	1	1	1	3743 891
	w/and w/o Console, w/A727 Trans.		—	1	—	—	—	—	—	—	—	—	—	2801 828

NOTES

CARLINES
J - Challenger, B - Barracuda, V - Valiant, L - Dart, R - Satellite, W - Coronet - Charger, P - Plymouth, D - Dodge, C - Chrysler, Y - Imperial

AR Indicates use as required.
# Indicates parts not listed in any previous parts book.
Numerals in parentheses ( ) refer to notes.
★ Indicates change or addition.

Printed in U.S.A.
November 1974

NOTE: All quantities are one (1) unless otherwise indicated in parenthesis.

CODE	TRANSMISSION	3681 861 3681 862 3681 863 A727				
21-01-3	**SEAL and GASKET PACKAGE, Transmission**	3780 202				
21-03-1	**CASE, Use w/3681 862 and 863 Trans.**	3743 117				
	Use w/3681 861 Trans.	3743 119				
	SCREW, w/WASHER, Cover 1/4"-20 x 1/2" (AR)	6023 092				
	CONNECTOR, Oil Cooler Tube, Trans. End (2)	118 749				
	NUT, Tube, Inverted Flair, 5/16" (2)	137 398				
	NOTE: See Code 5-53-3 for Tubing.					
21-04-1	**EXTENSION, w/BUSHING, Case**	3681 322				
	SCREW, w/WASHER 1 13/64" Lgh. (6)	6023 514				
	1 1/8" Lgh. (6)	6027 150				
21-04-2	GASKET Output Shaft Brg. Inspection Cover	2466 954 2801 398				
21-04-8	COVER, Output Shaft Brg. Inspection	2466 957				
	SCREW 1/4"-20 x 5/8" (2)	6026 884				
21-04-11	BUSHING	2801 724				
21-05-1	**SHAFT, Output**	2892 655				
21-05-2	BEARING	2466 224				
21-05-8	SNAP RING, Brg., Outer	2400 320				
	Brg. (2)	6025 570				
21-05-12	SEAL, Yoke	3515 383				
21-05-19	SNAP RING, Output Shaft, .048" thk. (AR)	6022 816				
	.055" thk. (AR)	6024 311				
	.062" thk. (AR)	6024 312				
21-05-25	SUPPORT	2466 882				
21-05-35	WASHER, Output Shaft Thrust, .062" thk.	2400 843				
	NOTE: See Code 5-53-3 for Oil Filter Tubes.					
21-117-1	**FILTER or STRAINER, Transmission Oil** 7 7/64" Lgh.	3515 996				
	SCREW, w/WASHER, 10-24 x 1 1/4" (3)	6026 390				
21-118-6	**ROTOR PACKAGE, Frt. Oil Pump**	3780 239				
21-118-40	HOUSING, w/BUSHING and PLUG, Frt. Pump	3743 229				
	SCREW, w/WASHER, 5/16"-18 x 1 3/8" (7)	6023 943				
21-118-45	SEAL, Frt. Pump Hsg., 10" O.D.	1942 021				
21-118-47	BUSHING, Frt. Pump Hsg.	2466 324				
21-118-54	GASKET, Frt. Pump Hsg.	2124 846				
21-118-57	SHIELD, Frt. Pump Hsg. Vent w/Plug	2204 993 2892 679				
	BAFFLE, w/NAIL, Frt. Pump Hsg. Vent	3420 087				
21-118-58	PLUG, Vent Shield	2892 553				
21-119-3	**PAN, w/PLUG, Oil**	2464 323				
	SCREW, w/WASHER, 5/16"-18 x 5/8" (14)	6023 355				
21-119-5	GASKET	2464 324				
21-129-5	**SHAFT, Input**	3743 188				
	Ball, 11/32"	147 488				
21-129-6	BUSHING, Input Shaft	3681 709				
21-129-7	RING, Input Shaft (2)	2801 054				

NOTE: All quantities are one (1) unless otherwise indicated in parenthesis.

CODE	TRANSMISSION		3681 861 3681 862 3681 863 A727
21-129-10	SHAFT, w/SUPPORT, Reaction		3878 343
	BALL, Support, Large 11/32" (4)		147 488
21-129-11	BAFFLE, Vent		3420 087
	SCREW, Drive		145 067
21-129-13	RING, Reaction Shaft		
	Support Seal (2)		3515 321
21-129-23	BUSHING, Reaction Shaft		2801 348
21-133-7	**RETAINER, w/BUSHING, Frt.**		
	Clutch		3515 314
	Rr. Clutch		3743 622
	Rr. Clutch Piston		3780 224
21-133-10	BUSHING, Frt. Clutch Retainer		3515 315
21-133-15	PISTON, Frt., Clutch		2464 651
	Rr.		3743 624
	BALL, Frt. and Rr. Clutch Check Valve 3/16" (2)		147 483
21-133-17	SEAL, Frt. Clutch Piston, Inner		3410 226
	Outer		3743 237
	Rr., Inner		1942 054
	Outer		2124 835
21-133-20	SPRING, Frt. Clutch Piston,		
	Use w/3681 861 Trans. (13)		2801 243
	w/3681 862 and 863 Trans. (9)		2801 243
	Rr.		3743 621
21-133-22	RETAINER, Frt., Clutch Piston Spring		2801 949
	BALL, Check Valve, 3/16"		147 483
21-133-25	SNAP RING, Rr. Clutch Retainer,		
	7" O.D.,	.060" thk. (AR)	1942 063
		.074" thk. (AR)	1942 064
		.088" thk. (AR)	1942 065
		.106" thk. (AR)	2466 811
	Rr. Clutch Piston Retainer, .060" thk., 1 31/64" O.D.		2124 872
21-133-31	SPRING, Rr. Clutch Wave		2466 806
21-133-36	DISC, Frt. Clutch (3)		2801 167
	Rr. (4)		2801 992
21-133-38	PLATE, Frt. and Rr. Clutch (6)		2124 826
21-133-39	PLATE, Frt. Clutch Pressure		2801 961
	Rr. Clutch Pressure, Frt.		2466 803
	Rr., Rr.		2801 961
21-133-40	GEAR, w/BUSHING, Sun		2801 311
21-133-42	SHELL, Sun Gear Driving		2400 662
21-133-43	SNAP RING, Frt. Clutch, Steel, 7 8/64" O.D. .050" thk. (AR)		3410 570
	Frt. Clutch, Inner, .060" thk., 3" I.D.		2124 824
21-133-46	RING, Sun Gear Driving Shell Lock (2)		1736 521
21-133-47	PLATE, Sun Gear Driving Shell Thrust, w/4 Inside Tangs		1942 080
21-133-48	WASHER, Sun Gear Driving Shell Thrust, w/3 Outside Tabs		1942 081
21-133-62	SPACER, Rr. Clutch Piston Spring, 6 13/16" O.D., Plastic		3515 077
21-133-65	WASHER, Frt. Clutch Thrust, Frt., Green, .061" thk., 3 21/64" O.D. (AR)		2204 622

NOTE: All quantities are one (1) unless otherwise indicated in parenthesis.

CODE	TRANSMISSION	3681 861 3681 862 3681 863 A727				
21-133-65	WASHER Cont'd.					
	Red, .084" thk. (AR)	2204 623				
	Yellow, .102" thk. (AR)	2400 284				
	Frt. Clutch Thrust, Rr.	2204 622				
21-134-5	**CARRIER, w/PINION and**					
	WASHER, Frt. Planet Pinion,					
	w/3681 861 and 862 Trans.	2466 537				
	w/3681 863 Trans.	2801 171				
	Rr.	2466 539				
21-134-8	PINION, Frt. (3)	2400 667				
	Use w/3681 862 and 863 Trans.	2400 667				
	Rr., Use w/3681 861 and 863 Trans. (3)	2400 667				
21-134-9	SHAFT, Frt. (3)	2464 178				
	w/3681 863 Trans. (4)	2464 178				
	Rr. (3)	2464 178				
	PIN (AR)	6024 666				
21-134-10	WASHER, Frt. Planet Pinion					
	Use w/3681 861 and 862 Trans. (6)	2801 315				
	Use w/3681 863 Trans. (8)	2801 315				
	Rr. (6)	2801 315				
21-134-11	ROLLER, Frt.					
	Use w/3681 861 and 862 Trans. (69)	2204 647				
	Use w/3681 863 Trans. (92)	2204 647				
	Rr. (69)	2204 647				
21-134-12	RING, Frt. Pinion Roller Thrust					
	Use w/3681 861 and 862 Trans. (6)	2204 649				
	Use w/3681 863 Trans. (8)	2204 649				
	Rr. (6)	2204 649				
21-134-30	WASHER, Frt. Carrier Thrust, Use					
	w/3681 861 and 862 Trans.	1942 081				
	Use w/3681 863 Trans.	2801 060				
	Rr.	1942 081				
21-134-38	GEAR, w/SUPPORT, Frt. Annulus	2892 656				
	Rr.	2538 185				
21-134-45	PLATE, Rr. Annulus Gear Thrust,					
	w/31 Inside Teeth,					
	3 23/64" O.D.	2400 580				
21-136-5	**BAND, Kickdown**	3621 491				
21-136-15	STRUT, Kickdown Band	2124 848				
	ANCHOR, Kickdown Band	3743 338				
21-136-17	SCREW, Kickdown Band Adjusting	2400 389				
	NUT, Lock 1/2"-20	124 934				
21-136-20	LEVER, Kickdown Band, w/3681 863 Trans.	2124 666				
	Use w/3681 862 Trans.	2204 952				
	Use w/3681 861 Trans.	3515 116				
21-136-23	SHAFT, Kickdown Band Lever	1942 132				
21-136-30	BAND, Reverse	1942 133				
21-136-41	STRUT, Reverse Band	2204 823				
21-136-44	LINK, w/ANCHOR, Reverse Band	2204 820				
21-136-47	LEVER, w/STEM, Reverse Band	1942 137				
	Reverse Band, Short	3515 347				
21-136-49	SHAFT, Reverse Band Lever	2124 857				
21-136-52	SCREW, Reverse Band Adjusting	1942 141				
	NUT	271 506				
21-136-55	SEAL, Reverse Band Lever Shaft	1672 358				
21-136-65	DRUM, Reverse (Also specify 1 of 3420 100 Race Pkg.)	3515 451				
21-136-231	CAM, "O" Running Clutch	1942 095				
21-136-232	RACE, ROLLER and SPRING,					
	PACKAGE, "O" Running					
	Clutch 26T	3420 100				

NOTE: All quantities are one (1) unless otherwise indicated in parenthesis.

CODE	TRANSMISSION	3681 861 3681 862 3681 863 A727				
21-136-233	RETAINER, "O" Running Clutch Spring	2801 426				
21-136-235	ROLLER, "O" Running Clutch (12)	670 776				
21-136-236	SPRING, "O" Running Clutch Roller (12)	1942 187				
21-137-5	**PISTON, Kickdown Servo**	3410 440				
	Inner	3410 442				
	Inner, w/ROD and SEAL	3410 445				
	SEAL, Inner	6028 864				
	SNAP RING, Inner	6024 336				
21-137-6	RETAINER, Kickdown Piston, Inner	3410 437				
21-137-8	RING, Kickdown Servo					
	Piston Seal, Small	2124 851				
	Large	1942 123				
	Kickdown Servo Guide Seal	1942 123				
21-137-13	GUIDE, Kickdown Servo	3410 441				
21-137-19	SNAP RING, Kickdown Servo Guide	1942 130				
21-137-22	SPRING, Kickdown Servo					
	Piston, Inner	3410 444				
	Outer	3410 518				
21-137-35	PISTON, Reverse Servo	2801 281				
21-137-41	SPRING, Reverse Servo Cushion	3743 580				
21-137-47	PLUG, Reverse Servo Piston	3743 353				
	RING, .435" I.D.	6027 153				
21-137-50	SEAL, Reverse Servo					
	Piston, Rubber	2464 481				
21-137-53	SPRING, Reverse Servo Piston	2801 241				
21-137-56	RETAINER, Reverse Servo Piston	1942 150				
21-137-59	SNAP RING, Reverse Servo Piston Spring Retainer	1942 130				
21-137-200	PISTON, Accumulator	3410 908				
21-137-202	RING, Accumulator Piston					
	Seal, Small	1941 831				
	Large	2124 255				
21-137-205	SPRING, Accumulator, Lwr.	3515 079				
21-138-2	**REPAIR PACKAGE, Governor, w/3681 863 Trans.**	3780 242				
	Use w/3681 862 Trans.	3780 241				
	Use w/3681 861 Trans.	3780 240				
21-138-7	SNAP RING, Governor Body	6022 817				
21-138-8	FILTER, Governor	3743 519				
21-138-10	SUPPORT, Governor	2538 634				
21-138-13	WEIGHT, Governor, Inner, w/3681 861 Trans.	3515 482				
	Use w/3681 862 and 863 Trans.	3515 478				
	Outer, Use w/3681 862 and 863 Trans.	1636 461				
	Use w/3681 861 Trans.	3515 491				
21-138-15	SPRING, Governor Weight, w/3681 862 Trans.	3515 085				
	Use w/3681 861 and 863 Trans.	3515 110				
21-138-19	SNAP RING, Governor Weight, Outer	1636 465				
	Inner	1636 464				
21-138-21	LOCK, Governor Body Bolt					
	Straight Type (2)	2125 024				
	Off-Set Type (2)	3743 520				
21-138-23	VALVE, Governor	3515 479				
21-138-26	SHAFT, Governor Valve	1556 082				
21-138-29	SNAP RING, Governor Valve Shaft (2)	1638 461				
21-138-38	RING, Governor Support Seal, Frt. and Rr. (2)	1942 109				
21-139-4	**BODY, w/Transfer PLATE, Valve, Use** w/3681 861 Trans.	3743 139				
	Use w/3681 862 Trans.	3743 140				

NOTE: All quantities are one (1) unless otherwise indicated in parenthesis.

CODE	TRANSMISSION	3681 861 3681 862 3681 863 A727	
21-139-4	BODY Cont'd.		
	Use w/3681 863 Trans.	3743 141	
	BALL, Check Valve, Small (5)	104 918	
	Large (see Code 21-139-145)		
21-139-9	VALVE, Manual	2801 259	
21-139-11	VALVE, Limit	3410 560	
21-139-12	LEVER, w/INSULATOR, Manual Valve	3410 484	
21-139-16	SEAL, Manual Valve Shaft, 1 1/4" O.D.	2466 842	
21-139-19	BODY, Limit Valve, w/3681 862 and 863 Trans.	3410 564	
	Use w/3681 861 Trans.	3681 488	
21-139-24	SPRING, Manual Valve Lever Detent	2466 615	
	BALL 11/32"	147 488	
21-139-30	VALVE, Throttle	3743 092	
21-139-33	SPRING, Throttle Valve	2892 350	
21-139-34	PIN, Manual Valve Lever Spring	2466 756	
21-139-46	WASHER, Throttle Valve Lever Shaft	2538 062	
21-139-47	SEAL, Throttle Lever Shaft, Rubber, 11/16" O.D.	2466 548	
21-139-49	E-RING, Throttle Valve Lever Shaft	6025 857	
21-139-50	LEVER, Throttle Valve	3681 227	
21-139-63	PLUG, Throttle Pressure	2892 943	
	Regulator Valve Throttle Pressure	1942 245	
	Regulator Valve Line Pressure	1942 218	
21-139-64	SLEEVE, Regulator Valve Line Pressure Plug, Steel	1942 213	
	Shuttle Valve, Plastic, 7/32" Lgh. (2)	3410 312	
21-139-67	VALVE PACKAGE, Regulator	2240 685	
21-139-68	SPRING, Regulator Valve	2124 734	
	Pressure Relief	2892 846	
	Limit Valve, Use w/3681 862 and 863 Trans.	3515 251	
	Use w/3681 861 Trans.	3515 062	
	BALL, Bright Finish, 3/8"	147 500	
21-139-71	BRACKET, Throttle Pressure Adjusting Screw, w/5/16"-24 Hole		
	w/Reformed End 3 Places	3681 319	
	w/o Reformed End 3 Places	3743 840	
	RETAINER, Limit Valve Spring	2892 947	
	SCREW, w/WASHER, Throttle Pressure Adjusting Screw Brkt., 10 - 24 x 7/16" (2)	6029 926	
21-139-73	SCREEN, Regulator Valve	3515 995	
21-139-74	SCREW, Line Pressure Adjusting	2124 736	
	Throttle Pressure Adjusting, 5/16" - 24 x 1 1/4"	6030 104	
	Transfer Plate to Valve Body, 10-24 x 1" (14)	6027 391	
21-139-76	NUT, Line Pressure Adjusting Screw, 3/8"-24	2124 737	
21-139-78	VALVE, Kickdown	2892 351	
	PLUG, Kickdown Detent	2892 352	
21-139-95	VALVE, Shuttle	2892 926	
	PLUG, Shuttle Valve	2892 927	
21-139-98	SNAP RING, Shuttle Valve	6025 857	

NOTE: All quantities are one (1) unless otherwise indicated in parenthesis

CODE	Transmission	3681 861 3681 862 3681 863 A727
21-139-101	SPRING, Shuttle Valve, Primary, Use w/3681 862 and 863 Trans.	3515 047
	Use w/3681 861 Trans.	3681 252
	Secondary	3515 048
21-139-105	VALVE, 1-2 Shift Control	3410 912
	VALVE, 1-2 Shift	3410 881
	PLUG, 1-2 Shift Valve	3515 948
	VALVE, 2-3 Shift	3515 132
	PLUG, 2-3 Shift Valve	2892 990
21-139-108	SPRING, 1-2 Shift Valve	2204 547
	1-2 Shift Control, w/3681 862 and 863 Trans.	3410 517
	Use w/3681 861 Trans.	3681 253
	2-3 Shift Valve	1942 231
21-139-117	VALVE, Torque Conv. Control	2124 256
21-139-118	SPRING, Torque Conv. Control Valve	2124 257
21-139-135	COVER, Regulator Valve	2205 034
	Shift Valve Plug	3410 378
	Shuttle Valve	3410 889
	Limit Valve	2892 944
	SCREW, w/WASHER, Limit Valve Cover (3)	6029 927
	Shuttle and Shift Valve Cover, 10-24 x 7/16" (AR)	6029 926
	Regulator Valve Cover, 10-24 x 7/16 (2)	6029 926
21-139-140	PLATE, Valve Body, w/3681 861 and 363 Trans.	3743 161
	Use w/3681 862 Trans.	3743 163
	SCREW, w/WASHER, Valve Body Plate to Transfer Plate, 10-24 x 7/16" (2)	6029 926
21-139-145	BALL, Valve Body Check Valve, Large, Dull Copper Finish, 11/32" O.D.	3515 398
21-139-147	PLATE, Transfer, w/3681 861 and 3681 863 Trans.	3743 159
	Use w/3681 862 Trans.	3743 158
	SCREW, w/WASHER, Plate to Valve Body (14)	6027 391
21-139-154	SUPPORT, Transfer Plate	3410 380
	SCREW, w/WASHER, 10-24 x 7/16" (2)	6029 926

NOTES

NOTE: All quantities are one (1) unless otherwise indicated in parenthesis

CODE	TRANSMISSION		3681 864 A727	3681 865 A727	3681 866 A727	3681 867 A727
21-01-3	**SEAL and GASKET PACKAGE, Transmission**		3780 202	3780 202	3780 202	3780 202
21-03-1	**CASE**		3743 118	3743 118	3743 118	3743 118
	SCREW, w/WASHER, Cover 1/4"-20 x 1/2" (AR)		6023 092	6023 092	6023 092	6023 092
	CONNECTOR, Oil Cooler Tube, Trans. End (2)		118 749	118 749	118 749	118 479
	NOTE: See Code 5-53-3 For Tubing					
21-04-1	**EXTENSION, Case**		3681 322	3681 322	3681 322	3681 322
	SCREW, w/WASHER 1 13/64" Lgh. (6)		6023 514	6023 514	6023 514	6023 514
	1 1/8" Lgh. (6)		6027 150	6027 150	6027 150	6027 150
21-04-2	GASKET Output Shaft Brg. Inspection Cover		2466 954 2801 398	2466 954 2801 398	2466 954 2801 398	2466 954 2801 398
21-04-8	COVER, Output Shaft Brg. Inspection		2466 957	2466 957	2466 957	2466 957
	SCREW 1/4"-20 x 5/8" (2)		6026 884	6026 884	6026 884	6026 884
21-04-11	BUSHING		2801 724	2801 724	2801 724	2801 724
21-05-1	**SHAFT, Output**		2892 655	2892 655	2892 655	2892 655
21-05-2	BEARING		2466 224	2466 224	2466 224	2466 224
21-05-8	SNAP RING, Brg., Outer		2400 320	2400 320	2400 320	2400 320
	Brg. (2)		6025 570	6025 570	6025 570	6025 570
21-05-12	SEAL, Yoke		3515 383	3515 383	3515 383	3515 383
21-05-19	SNAP RING, Output Shaft	.048" thk. (AR)	6022 816	6022 816	6022 816	6022 816
		.055" thk. (AR)	6024 311	6024 311	6024 311	6024 311
		.062" thk. (AR)	6024 312	6024 312	6024 312	6024 312
21-05-25	SUPPORT		2466 882	2466 882	2466 882	2466 882
21-05-35	WASHER, Output Shaft Thrust, .062" thk.		2400 843	2400 843	2400 843	3681 688
	NOTE: See Code 5-53-3 for Oil Filter Tubes					
21-117-1	**FILTER or STRAINER, Trans. Oil, 7 7/64" Lgh.**		3515 996	3515 996	3515 996	3515 996
	SCREW, w/WASHER, 10-24 x 1 1/4" (3)		6026 390	6026 390	6026 390	6026 390
21-118-6	**ROTOR PACKAGE, Frt. Oil Pump**		3780 239	3780 239	3780 239	3780 239
21-118-40	HOUSING, w/BUSHING and PLUG, Frt. Oil Pump		3743 229	3743 229	3743 229	3743 229
	SCREW, w/WASHER, 5/16"-18 x 1 3/8" (7)		6023 943	6023 943	6023 943	6023 943
21-118-45	SEAL, Frt. Pump Hsg., 10" O.D.		1942 021	1942 021	1942 021	1942 021
21-118-47	BUSHING, Frt. Pump Hsg.		2466 324	2466 324	2466 324	2466 324
21-118-54	GASKET, Frt. Pump Hsg.		2124 846	2124 846	2124 846	2124 846
21-118-57	SHIELD, Frt. Pump Hsg. Vent w/Plug		2204 993 2892 679	2204 993 2892 679	2204 993 2892 679	2204 993 2892 679
	BAFFLE, w/NAIL, Frt. Pump Hsg.		3420 087	3420 087	3420 087	3420 087
21-118-58	PLUG, Vent Shield		2892 553	2892 553	2892 553	2892 553
21-119-3	**PAN, w/PLUG, Oil**		2464 323	2464 323	2464 323	2464 323
	SCREW, w/WASHER, 5/16"-18 x 5/8" (14)		6023 355	6023 355	6023 355	6023 355
21-119-5	GASKET		2464 324	2464 324	2464 324	2464 324
21-129-5	**SHAFT, Input**		3743 188	3743 188	3743 188	3743 189
	BALL, 11/32"		147 488	147 488	147 488	147 488
21-129-6	BUSHING, Input Shaft		3681 709	3681 709	3681 709	3681 709
21-129-7	RING, Input Shaft Seal (2)		2801 054	2801 054	2801 054	2801 054
21-129-10	SHAFT, w/SUPPORT, Reaction		3743 186	3743 186	3743 186	3743 186
	BALL, Support, Large 11/32" (4)		147 488	147 488	147 488	147 488
21-129-11	BAFFLE, Vent		3420 087	3420 087	3420 087	3420 087
	SCREW, Drive		145 067	145 067	145 067	145 067
21-129-13	RING, Reaction Shaft Support Seal (2)		3515 321	3515 321	3515 321	3515 321
21-129-23	BUSHING, Reaction Shaft		2801 348	2801 348	2801 348	2801 348
21-133-7	**RETAINER, w/BUSHING, Frt. Clutch**		3515 314	3410 810	3410 810	3410 810
	Rr. Clutch		3743 622	3743 622	3743 622	3743 622
	Rr. Clutch Piston		3780 224	3780 224	3780 224	3681 689
21-133-10	BUSHING, Frt. Clutch Retainer		3515 315	3515 315	3515 315	3515 315
21-133-15	PISTON, Frt. Clutch		2464 651	2464 651	2464 651	2464 651

NOTE: All quantities are one (1) unless otherwise indicated in parenthesis.

CODE	TRANSMISSION		3681 864 A727	3681 865 A727		3681 866 A727	3681 867 A727
21-133-15	PISTON Cont'd.						
	Rr.		3743 624	3743 624		3743 624	3743 624
	BALL, Frt. and Rr. Clutch Check Valve, 3/16" (2)		147 483	147 483		147 483	147 483
21-133-17	SEAL, Frt. Clutch Piston, Inner		3410 226	3410 226		3410 226	3410 226
	Outer		3743 237	3743 237		3743 237	3743 237
	Rr., Inner		1942 054	1942 054		1942 054	1942 054
	Outer		2124 835	2124 835		2124 835	2124 835
21-133-20	SPRING, Frt. Clutch Piston (9)		2801 243	2801 243		2801 243	2801 243
	Rr.		3743 621	3743 621		3743 621	3743 621
21-133-22	RETAINER, Frt. Clutch Piston Spring		2801 949	2801 949		2801 949	2801 949
	BALL, Check Valve, 3/16"		147 483	147 483		147 483	147 483
21-133-25	SNAP RING, Rr. Clutch Retainer						
	7" O.D.	.060" thk. (AR)	1942 063	1942 063		1942 063	1942 063
		.074" thk. (AR)	1942 064	1942 064		1942 064	1942 064
		.088" thk. (AR)	1942 065	1942 065		1942 065	1942 065
		.106" thk. (AR)	2466 811	2466 811		2466 811	2466 811
	Rr. Clutch Piston Retainer, .060" thk., 1 31/64" O.D.		2124 872	2124 872		2124 872	2124 872
21-133-31	SPRING, Rr. Clutch Wave		2466 806	2466 806		2466 806	2466 806
21-133-36	DISC, Frt. Clutch (3)		2801 167	———		———	———
	(4)		———	2801 167		2801 167	2801 167
	Rr. (4)		2801 992	2801 992		2801 992	2801 992
21-133-38	PLATE, Frt. Clutch (3)		2124 826	———		———	———
	(4)		———	2124 826		2124 826	2124 826
	Rr. (3)		2124 826	2124 826		2124 826	2124 826
21-133-39	PLATE, Frt. Clutch Pressure		2801 961	2801 961		2801 961	2801 961
	Rr. Clutch Pressure, Frt.		2466 803	2466 803		2466 803	2466 803
	Rr. Rr.		2801 961	2801 961		2801 961	2801 961
21-133-40	GEAR, w/BUSHING, Sun		2801 311	2801 311		2801 311	2801 311
21-133-42	SHELL, Sun Gear Driving		2400 662	2400 662		2400 662	2400 662
21-133-43	SNAP RING, Frt. Clutch, Steel						
	7 7/64" O.D., 050" thk. (AR)		3410 570	3410 570		3410 570	3410 570
	Frt. Clutch, Inner, 3" I.D., .060" thk.		2124 824	2124 824		2124 824	2124 824
21-133-46	RING, Sun Gear Driving Shell Lock (2)		1736 521	1736 521		1736 521	1736 521
21-133-47	PLATE, Sun Gear Driving Shell Thrust, w/4 Inside Tangs		1942 080	1942 080		1942 080	1942 080
21-133-48	WASHER, Sun Gear Driving Shell Thrust, w/3 Outside Tabs		1942 081	1942 081		1942 081	1942 081
21-133-62	SPACER, Rr. Clutch Piston Spring, 6 13/16" O.D., Plastic		3515 077	3515 077		3515 077	3515 077
21-133-65	WASHER, Frt. Clutch Thrust, Frt., Green, .061" thk., 3 21/64" O.D. (AR)		2204 622	2204 622		2204 622	2204 622
	Red, .084" thk. (AR)		2204 623	2204 623		2204 623	2204 623
	Yellow, .102" thk. (AR)		2400 284	2400 284		2400 284	2400 284
	Frt. Clutch Thrust, Rr.		2204 622	2204 622		2204 622	2204 622
21-134-5	**CARRIER, w/PINION and** WASHER, Frt. Planet Pinion		2466 537	2801 171		2801 171	2801 171
	Rr.		2466 539	2466 539		2466 539	2801 061
21-134-8	PINION, Frt. (3)		2400 667	———		———	———
	(4)		———	2400 667		2400 667	2400 667
	Rr. (3)		2400 667	2400 667		2400 667	———
	(4)		———	———		———	2400 667
21-134-9	SHAFT, Frt. (3)		2464 178	———		———	———
	(4)		———	2464 178		2464 178	2464 178
	Rr. (3)		2464 178	2464 178		2464 178	———

CARLINES J - Challenger, B - Barracuda, V - Valiant, L - Dart, R - Satellite, W - Coronet - Charger, P - Plymouth, D - Dodge, C - Chrysler, Y - Imperial

AR Indicates use as required.

Numerals in parentheses ( ) refer to notes.

Printed in U.S.A.
November 1974

# Indicates parts not listed in any previous parts book.

★ Indicates change or addition.

NOTE: All quantities are one (1) unless otherwise indicated in parenthesis.

CODE	TRANSMISSION	3681 864 A727	3681 865 A727		3681 866 A727	3681 867 A727
21-134-9	SHAFT Cont'd.					
	(4)	———	———		———	2464 178
	PIN (AR)	6024 666	6024 666		6024 666	6024 666
21-134-10	WASHER, w/Tab, Frt. Planet Pinion (6)	2801 315	———		———	———
	(8)	———	2801 315		2801 315	2801 315
	Rr. (6)	2801 315	2801 315		2801 315	———
	(8)	———	———		———	2801 315
21-134-11	ROLLER, Frt. (69)	2204 647	———		———	———
	(92)	———	2204 647		2204 647	2204 647
	Rr. (69)	2204 647	2204 647		2204 647	———
	(92)	———	———		———	2204 647
21-134-12	RING, Frt. Planet Pinion Roller Thrust (6)	2204 649	———		———	———
	(8)	———	2204 649		2204 649	2204 649
	Rr. (6)	2204 649	2204 649		2204 649	———
	(8)	———	———		———	2204 649
21-134-30	WASHER, Frt. Carrier Thrust	1942 081	2801 060		2801 060	2801 060
	Rr.	1942 081	1942 081		1942 081	2801 060
21-134-38	GEAR, w/SUPPORT, Frt. Annulus	2892 656	2892 656		2892 656	2892 656
	Rr.	2538 185	2538 185		2538 185	2538 185
21-134-45	PLATE, Rr. Annulus Gear Thrust, w/31 Inside Teeth, 3 23/64" O.D.	2400 580	2400 580		2400 580	2400 580
21-136-5	**BAND, Kickdown**	3621 491	3621 491		3621 491	3621 491
21-136-15	STRUT, Kickdown Band	2124 848	2124 848		2124 848	2124 848
	ANCHOR, Kickdown Band w/Ground Off Outer Edges of Fork	3743 338	3743 338		3743 338	3743 338
21-136-17	SCREW, Kickdown Band Adjusting	2400 389	2400 389		2400 389	2400 389
	NUT, Lock 1/2" - 20	124 934	124 934		124 934	124 934
21-136-20	LEVER, Kickdown Band	2204 952	2124 666		2124 666	2125 067
21-136-23	SHAFT, Kickdown Band Lever	1942 132	1942 132		1942 132	1942 132
21-136-30	BAND, Reverse	1942 133	1942 133		1942 133	1942 133
21-136-41	STRUT, Reverse Band	2204 823	2204 823		2204 823	2204 823
21-136-44	LINK, w/ANCHOR, Reverse Band	2204 820	2204 820		2204 820	2204 820
21-136-47	LEVER, w/STEM, Reverse Band	1942 137	1942 137		1942 137	1942 137
	Reverse Band, Short	3515 347	3515 347		3515 347	3515 347
21-136-49	SHAFT, Reverse Band Lever	2124 857	2124 857		2124 857	2124 857
21-136-52	SCREW, Reverse Band Adjusting	1942 141	1942 141		1942 141	1942 141
	NUT, Lock	271 506	271 506		271 506	271 506
21-136-55	SEAL, Reverse Band Lever Shaft	1672 358	1672 358		1672 358	1672 358
21-136-65	DRUM, Reverse (Also specify 1 of 3420 100 Race Pkg.)	3515 451	3515 451		3515 451	3515 451
21-136-231	CAM, "O" Running Clutch	1942 095	1942 095		1942 095	1942 095
21-136-232	RACE, ROLLER and SPRING PACKAGE, "O" Running Clutch, 26T	3420 100	3420 100		3420 100	3420 100
21-136-233	RETAINER, "O" Running Clutch Spring	2801 426	2801 426		2801 426	2801 426
21-136-235	ROLLER, "O" Running Clutch (12)	670 776	670 776		670 776	670 776
21-136-236	SPRING, "O" Running Clutch Roller (12)	1942 187	1942 187		1942 187	1942 187
21-137-5	**PISTON, Kickdown Servo**	3410 440	3410 440		3410 440	2124 850
	Inner, w/ROD and SEAL	3410 445	3410 445		3410 445	———
	SEAL, Inner	6028 864	6028 864		6028 864	———
	SNAP RING, Inner	6024 336	6024 336		6024 336	———
21-137-6	RETAINER, Kickdown Piston, Inner	3410 437	3410 437		3410 437	———
21-137-8	RING, Kickdown Servo Piston Seal, Small	2124 851	2124 851		2124 851	2124 851
	Large	1942 123	1942 123		1942 123	1942 123
	Kickdown Servo Guide	1942 123	1942 123		1942 123	1942 123
21-137-11	ROD, Kickdown Servo Piston	———	———		———	2124 853
21-137-13	GUIDE, Kickdown Servo	3410 441	3410 441		3410 441	2124 856
21-137-19	SNAP RING, Kickdown Servo Guide	1942 130	1942 130		1942 130	1942 130

CARLINES J - Challenger, B - Barracuda, V - Valiant, L - Dart, R - Satellite, W - Coronet - Charger, P - Plymouth, D - Dodge, C - Chrysler, Y - Imperial

AR Indicates use as required.

Numerals in parentheses ( ) refer to notes.

Printed in U.S.A.

# Indicates parts not listed in any previous parts book.

★ Indicates change or addition.

November 1974

NOTE: All quantities are one (1) unless otherwise indicated in parenthesis

CODE	TRANSMISSION	3681 864 A727	3681 865 A727	3681 866 A727	3681 867 A727
21-137-22	SPRING, Kickdown Servo				
	Piston, Inner	3410 444	3410 444	3410 444	3515 112
	Outer	3410 518	3410 518	3410 518	2125 069
21-137-35	PISTON, Reverse Servo	2801 281	2801 281	2801 281	2801 281
21-137-41	SPRING, Reverse Servo Cushion	3743 580	3743 580	3743 580	3743 580
21-137-47	PLUG, Reverse Servo Piston	3743 353	3743 353	3743 353	3743 353
	RING, .435" I.D.	6027 153	6027 153	6027 153	6027 153
21-137-50	SEAL, Reverse Servo Piston,				
	Rubber	2464 481	2464 481	2464 481	2464 481
21-137-53	SPRING, Reverse Servo Piston	2801 241	2801 241	2801 241	2801 241
21-137-56	RETAINER, Reverse Servo Piston	1942 150	1942 150	1942 150	1942 150
21-137-59	SNAP RING, Reverse Servo				
	Piston Spring Retainer	1942 130	1942 130	1942 130	1942 130
21-137-200	PISTON, Accumulator	3410 908	3410 908	3410 908	3410 908
21-137-202	RING, Accumulator Piston				
	Seal, Small	1941 831	1941 831	1941 831	1941 831
	Large	2124 255	2124 255	2124 255	2124 255
21-137-205	SPRING, Accumulator, Lwr.	3515 079	3515 079	3515 079	———
	Upper	———	———	———	3515 114
21-138-2	**REPAIR PACKAGE, Governor**	3780 241	3780 242	3780 241	3780 242
21-138-7	SNAP RING, Governor Body	6022 817	6022 817	6022 817	6022 817
21-138-8	FILTER, Governor	3743 519	3743 519	3743 519	3743 519
21-138-10	SUPPORT, Governor	3743 517	3743 517	3743 517	3743 517
21-138-13	WEIGHT, Governor, Outer	1636 461	1636 461	1636 461	1636 461
	Inner	3515 478	3515 478	3515 478	3515 478
21-138-15	SPRING, Governor Weight	3515 085	3515 110	3515 085	3515 110
21-138-19	SNAP RING, Governor Weight, Outer	1636 465	1636 465	1636 465	1636 465
	Inner	1636 464	1636 464	1636 464	1636 464
21-138-21	LOCK, Governor Body Bolt				
	Straight Type (2)	2125 024	2125 024	2125 024	2125 024
	Off-Set Type (2)	3743 520	3743 520	3743 520	3743 520
21-138-23	VALVE, Governor	3515 479	3515 479	3515 479	3515 479
21-138-26	SHAFT, Governor Valve	1556 082	1556 082	1556 082	1556 082
21-138-29	SNAP RING, Governor Valve Shaft (2)	1638 461	1638 461	1638 461	1638 461
21-138-38	RING, Governor Support				
	Seal, Frt. and Rr. (2)	1942 109	1942 109	1942 109	1942 109
21-139-4	**BODY, w/TRANSFER PLATE, Valve**	3743 140	3743 141	3743 141	3743 142
	BALL, Check Valve Body				
	Small (6)	104 918	104 918	104 918	104 918
	Large (See Code 21-139-145)				
21-139-9	VALVE, Manual	2801 259	2801 259	2801 259	2801 259
21-139-11	VALVE, Limit	3410 560	3410 560	3410 560	3410 560
21-139-12	LEVER, w/INSULATOR, Manual Valve	3410 484	3410 484	3410 484	3410 484
21-139-16	SEAL, Manual Valve Shaft, 1 1/4" O*D.	2466 842	2466 842	2466 842	2466 842
21-139-19	BODY, Limit Valve	3410 564	3410 564	3410 564	3410 564
21-139-24	SPRING, Manual Valve Lever Detent	2466 615	2466 615	2466 615	2466 615
	BALL, Bright Finish 11/32"	147 488	147 488	147 488	147 488
21-139-30	VALVE, Throttle	3743 092	2892 349	2892 349	2892 349
21-139-33	SPRING, Throttle Valve	2892 350	2892 350	2892 350	2892 350
21-139-34	PIN, Manual Valve Lever Spring	2466 756	2466 756	2466 756	2466 756
21-139-46	WASHER, Throttle Valve Lever Shaft	2538 062	2538 062	2538 062	2538 062
21-139-47	SEAL, Throttle Lever				
	Shaft, Rubber, 11/16" O.D.	2466 548	2466 548	2466 548	2466 548
21-139-49	"E" RING, Throttle Valve Lever Shaft	6025 857	6025 857	6025 857	6025 857
21-139-50	LEVER, Throttle Valve	3681 227	3681 227	3681 227	3681 227
21-139-63	PLUG, Throttle Pressure	2892 943	2892 943	2892 943	2892 943
	Regulator Valve Throttle				
	Pressure	1942 245	1942 245	1942 245	1942 245
	Regulator Valve Line				
	Pressure	1942 218	1942 218	1942 218	1942 218
21-139-64	SLEEVE, Regulator Valve				
	Line Pressure Plug, Steel	1942 213	1942 213	1942 213	1942 213

CARLINES — J - Challenger, B - Barracuda, V - Valiant, L - Dart, R - Satellite, W - Coronet - Charger, P - Plymouth, D - Dodge, C - Chrysler, Y - Imperial

AR Indicates use as required.

Numerals in parentheses ( ) refer to notes.

# Indicates parts not listed in any previous parts book.

★ Indicates change or addition.

NOTE: All quantities are one (1) unless otherwise indicated in parenthesis.

CODE	TRANSMISSION	3681 864 A727	3681 865 A727		3681 866 A727	3681 867 A727
21-139-64	SLEEVE Cont'd.					
	Shuttle Valve, Plastic (2)	3410 312	3410 312		3410 312	3410 312
21-139-67	VALVE PACKAGE, Regulator	2240 685	2240 685		2240 685	2240 685
21-139-68	SPRING, Regulator Valve	2124 734	2124 734		2124 734	2124 734
	Pressure Relief	2892 846	2892 846		2892 846	2892 846
	Limit Valve	3515 251	3515 251		3515 251	3515 251
	BALL, Pressure Relief Bright Finish, 3/8"	147 500	147 500		147 500	147 500
21-139-71	BRACKET, Throttle Pressure					
	Adj. Screw, w/5/16"-24 Hole					
	w/Reformed End 3 Places	3681 319	3681 319		3681 319	3681 319
	w/o Reformed End 3 Places	3743 840	3743 840		3743 840	3743 840
	RETAINER, Limit Valve Spring	2892 947	2892 947		2892 947	2892 947
	SCREW, w/WASHER,					
	Throttle Pressure					
	Adj. Screw Brkt., 10-24 x 7/16" (2)	6029 926	6029 926		6029 926	6029 926
21-139-73	SCREEN, Regulator Valve	3515 995	3515 995		3515 995	3515 995
21-139-74	SCREW, Line Pressure Adjusting	2124 736	2124 736		2124 736	2124 736
	Throttle Pressure Adjusting,					
	5/16"-24 x 1 1/4"	6030 104	6030 104		6030 104	6030 104
	Transfer Plate to Valve					
	Body, 10-24 x 1" (14)	6027 391	6027 391		6027 391	6027 391
21-139-76	NUT, Line Pressure					
	Adjusting Screw, 3/8"-24	2124 737	2124 737		2124 737	2124 737
21-139-78	VALVE, Kickdown	2892 351	2892 351		2892 351	2892 351
	PLUG, Kickdown Detent	2892 352	2892 352		2892 352	2892 352
21-139-95	VALVE, Shuttle	2892 926	2892 926		2892 926	2892 926
	PLUG, Shuttle Valve	2892 927	2892 927		2892 927	2892 927
21-139-98	SNAP RING, Shuttle Valve	6025 857	6025 857		6025 857	6025 857
21-139-101	SPRING, Shuttle Valve, Pri.	3515 047	3515 047		3515 047	3515 047
	Secondary	3515 048	3515 048		3515 048	3515 048
21-139-105	VALVE, 1-2 Shift Control	3410 912	3410 912		3410 912	3410 912
	VALVE, 1-2 Shift	3410 881	3410 881		3410 881	3410 881
	PLUG, 1-2 Shift Valve	3515 948	3515 948		3515 948	3515 948
	VALVE, 2-3 Shift	3515 132	3515 132		3515 132	3515 132
	PLUG, 2-3 Shift Valve	2892 990	2892 990		2892 990	2892 990
21-139-108	SPRING, 1-2 Shift Valve	2204 547	2204 547		2204 547	2204 547
	1-2 Shift Control	3410 517	3410 517		3410 517	3410 517
	2-3 Shift Valve	1942 231	1942 231		1942 231	1942 231
21-139-117	VALVE, Torque Conv. Control	2124 256	2124 256		2124 256	2124 256
21-139-118	SPRING, Torque Conv. Control Valve	2124 257	2124 257		2124 257	2124 257
21-139-135	COVER, Regulator Valve	2205 034	2205 034		2205 034	2205 034
	Shift Valve Plug	3410 378	3410 378		3410 378	3410 378
	Shuttle Valve	3410 889	3410 889		3410 889	3410 889
	Limit Valve	2892 944	2892 944		2892 944	2892 944
	SCREW, w/WASHER, Limit Valve					
	Cover, 10-24 x 1.04" (3)	6029 927	6029 927		6029 927	6029 927
	Shift and Shuttle Valve Cover, 10-24 x 7/16" (AR)	6029 926	6029 926		6029 926	6029 926
	Regulator Valve					
	Cover, 10-24 x 7/16" (2)	6029 926	6029 926		6029 926	6029 926
21-139-140	PLATE, Valve Body	3743 163	3743 161		3743 161	3743 161
	SCREW, w/WASHER,					
	Valve Body Plate to					
	Transfer Plate, 10-24 x 7/16" (2)	6029 926	6029 926		6029 926	6029 926
21-139-145	BALL, Valve Body Check Valve,					
	Large, Dull Copper, Finish,					
	11/32" O.D.	3515 398	3515 398		3515 398	3515 398
	Small	104 918	104 918		104 918	104 918
21-139-147	PLATE, Transfer	3743 158	3743 159		3743 159	3743 159
	SCREW, w/WASHER,					
	Transfer Plate to Valve Body, 10-24 x 1" (14)	6027 391	6027 391		6027 391	6027 391
21-139-154	SUPPORT, Transfer Plate	3410 380	3410 380		3410 380	3410 380
	SCREW, w/Washer, 10-24 x 7/16" (2)	6029 926	6029 926		6029 926	6029 926

CARLINES					
	J - Challenger B - Barracuda	V - Valiant L - Dart	R - Satellite W - Coronet - Charger	P - Plymouth D - Dodge	C - Chrysler Y - Imperial

AR Indicates use as required.

Numerals in parentheses ( ) refer to notes.

Printed in U.S.A.

# Indicates parts not listed in any previous parts book.

★ Indicates change or addition.

November 1974

NOTE: All quantities are one (1) unless otherwise indicated in parenthesis.

CODE	TRANSMISSION	3681 841 A904	3681 842 A904	3681 843 A94-1	3681 844 A904	3743 421 3743 422 3743 423 3743 476 3743 478 A904
21-01-3	**SEAL and GASKET, PACKAGE, TRANSMISSION**	3780 201	3780 201	3780 201	———	3780 201
21-03-1	**CASE**	3743 125	3743 125	3743 128	3743 128	———
	w/3743 421 422 and 476 Trans.	———	———	———	———	3743 125
	w/3743 423 and 478 Trans.	———	———	———	———	3743 128
	CONNECTOR, Oil Cooler Tube, Trans. End (2)	118 749	118 749	118 749	118 749	118 749
	NOTE: See Code 5-53-3 For Tubing					
21-04-1	**EXTENSION, Case**	3780 230	3780 230	3780 230	3780 230	3780 230
	SCREW, w/WASHER 1 13/64" Lgh. (6)	6023 514	6023 514	6023 514	———	———
	1 1/8" Lgh. (6)	6027 150	6027 150	6027 150	6027 150	6027 150
21-04-2	GASKET	2466 954	2466 954	2466 954	2466 954	2466 954
	Output Shaft Brg. Inspection Cover	2801 398	2801 398	2801 398	2801 398	2801 398
21-04-8	COVER, Output Shaft Brg. Inspection	2466 957	2466 957	2466 957	2466 957	2466 957
	SCREW, 1/4" - 20 x 5/8" (2)	6026 884	6026 884	6026 884	166 412	166 412
21-04-11	BUSHING, Extension	2801 726	2801 726	2801 726	2801 726	2801 726
21-05-1	**SHAFT, Output**	3780 256	3780 256	3780 256	3743 049	———
	w/3743 421, 422 and 476 Trans.	———	———	———	———	3743 049
	w/3743 478 Trans.	———	———	———	———	3515 757
21-05-2	BEARING	3410 465	3410 465	3410 465	3410 465	3410 465
21-05-8	SNAP RING, Brg., Outer Brg.	2400 185 6029 675	2400 185 6029 675	2400 185 6029 675	2400 185 6029 675	2400 185 6029 675
21-05-12	SEAL, Yoke, 1 9/16" lgh., w/One Lip, Rubber and Metal	3515 384	3515 384	3515 384	3515 384	3515 384
21-05-19	SNAP RING, Output Shaft, .040" thk., Red (AR)	6026 289	6026 289	6026 289	6026 289	6026 289
	.048" thk., Orange (AR)	6026 290	6026 290	6026 290	———	———
	w/3743 478 Trans.	———	———	———	———	6026 290
	.059" thk., Yellow (AR)	6026 291	6026 291	6026 291	———	———
	w/3743 478 Trans.	———	———	———	———	6026 291
	.062" thk., Green (AR)	———	———	———	6030 333	6030 333
	Except 3743 478 Trans.	———	———	———	———	6030 333
	.082" thk., White (AR)	———	———	———	6030 404	6030 404
	Except 3743 478 Trans.	———	———	———	———	6030 404
21-05-25	SUPPORT	2466 881	2466 881	2466 881	2466 881	2466 881
21-05-35	WASHER, Output Shaft Thrust Natural, .052" thk. (AR)	2538 669	2538 669	2538 669	2538 669	2538 669
	.068" thk. Red (AR)	2538 670	2538 670	2538 670	2538 670	2538 670
	.083" thk. Black (AR)	2538 671	2538 671	2538 671	2538 671	2538 671
	NOTE: See Code 5-53-3 for Oil Filter Tubes					
21-117-1	**FILTER or STRAINER, Trans. Oil 7 7/64" Lgh.**	3515 996	3515 996	3515 996	3515 996	3515 996
	SCREW, w/WASHER, 10-24 x 1 1/4" (3)	6026 390	6026 390	6026 390	6026 390	6026 390
21-118-6	**ROTOR PACKAGE, Frt. Oil Pump**	3780 238	3780 238	3780 238	3780 238	3780 238
21-118-40	HOUSING, w/BUSHING, Frt. Pump	3743 910	3743 910	3743 910	3743 910	3743 910
	SCREW, w/WASHER, 5/16"-18 x 1 3/8" (6)	6023 943	6023 943	6023 943	6023 943	6023 943
21-118-45	SEAL, Frt. Pump Hsg., 8 17/64" O.D.	2204 709	2204 709	2204 709	2204 709	2204 709
21-118-47	BUSHING, Frt. Pump Hsg.	2466 796	2466 796	2466 796	2466 796	2466 796
21-119-3	**PAN, Oil**	2464 413	2464 413	2464 413	2464 413	2464 413
	SCREW, w/WASHER, 5/16"-18 x 5/8" (14)	6023 355	6023 355	6023 355	6023 355	6023 355
21-119-5	GASKET	2205 299	2205 299	2205 299	2205 299	2205 299
21-129-5	**SHAFT, Input**	2538 407	2538 407	2538 407	2538 407	2538 407
	SNAP RING, Green, 57/64" I.D., .059" Thk.	6022 859	6022 859	6022 859	6022 859	6022 859
21-129-7	RING or SEAL, Input Shaft, 1 1/16" O.D.	1941 831	1941 831	1941 831	1941 831	1941 831
21-129-10	SHAFT, w/SUPPORT, Torque Converter Reaction	3743 047	3743 047	3743 047	3743 047	3743 047
21-129-13	RING, Reaction Shaft Support (2)	1942 389	1942 389	1942 389	1942 389	1942 389

NOTE: All quantities are one (1) unless otherwise indicated in parenthesis.

CODE	TRANSMISSION		3681 841 A904	3681 842 A904	3681 843 A94-1	3681 844 A904	3743 421 3743 422 3743 423 3743 476 3743 478 A904
21-129-23	BUSHING, Reaction Shaft		2801 728	2801 728	2801 728	2801 728	2801 728
21-129-24	GASKET, Reaction Shaft Support, 8 15/64" O.D.		1942 390	1942 390	1942 390	1942 390	1942 390
21-133-7	**RETAINER, w/SEALS, Frt. Clutch**		3621 475	3621 476	3621 476	3743 382	———
	w/3743 421 and 476 Trans.		———	———	———	———	3621 475
	w/3743 422 and 423 Trans.		———	———	———	———	3621 476
	w/3743 478 Trans.		———	———	———	———	3780 280
	Rr. Clutch		3681 977	3681 977	3681 976	3681 994	———
	w/3743 421, 422 and 476 Trans.		———	———	———	———	3743 341
	w/3743 423 Trans.		———	———	———	———	3681 976
	w/3743 478 Trans., 1 3/32" Spline Lgh.		———	———	———	———	3681 994
	BALL, Check Valve, Frt. and Rr., 3/16" (2)		147 483	147 483	147 483	147 483	147 483
21-133-10	BUSHING, Frt. Clutch Retainer		2801 727	2801 727	2801 727	2801 727	2801 727
21-133-15	PISTON, Frt. Clutch		3743 090	3743 090	3743 090	3743 384	3743 090
	w/3743 478 Trans.		———	———	———	———	3743 384
	Rr.		3515 716	3515 716	3515 716	3515 716	3515 716
	BALL, Check Valve, 3/16" (2)		147 483	147 483	147 483	147 483	147 483
21-133-17	SEAL, Frt. Clutch Piston Inner, Rubber		3515 176	3515 176	355 176	3515 176	3515 176
	Outer		3743 238	3743 238	3743 238	3743 238	3743 238
	Rr., Inner, Rubber		2538 510	2538 510	2538 510	2538 510	2538 510
	Outer		2538 695	2538 695	2538 695	2538 695	2538 695
	Rr. Clutch Retainer Ring, 1 1/2" O.D., .09" Thk.						
21-133-20	SPRING, Frt. Clutch Piston		3410 898	2801 844	2801 844	2124 573	———
	w/3743 421 and 476 Trans.		———	———	———	———	3410 898
	w/3743 422, 423 and 478 Trans.		———	———	———	———	2801 844
	Rr.		1942 414	1942 414	1942 414	1942 414	1942 414
21-133-22	RETAINER, Frt. Clutch Piston Spring		1942 399	1942 399	1942 399	1942 399	1942 399
	BALL, Check Valve, 3/16"		147 483	147 483	147 483	147 483	147 483
21-133-25	SNAP RING, Rr. Clutch Retainer 5 11/32" O.D.	.060" thk. (AR)	1942 421	1942 421	1942 421	1942 421	1942 421
		.076" thk. (AR)	1942 423	1942 423	1942 423	1942 423	1942 423
		.098" thk. (AR)	2538 617	2538 617	2538 617	2538 617	2538 617
21-133-31	SPRING, Rr. Clutch Wave		2466 283	2466 283	2801 626	2801 626	———
	w/3743 421, 422 and 476 Trans.		———	———	———	———	2466 283
	w/3743 423 and 478 Trans.		———	———	———	———	2801 626
21-133-36	DISC, Frt. Clutch (3)		2205 203	———	———	———	———
	w/3743 421 and 476 Trans. (3)		———	———	———	———	2205 203
	(4)		———	2205 203	2205 203	———	———
	w/3743 422, 423 and 478 Trans. (4)		———	———	———	———	2205 203
	(5)		———	———	———	2205 203	———
	Rr. (3)		2892 551	2892 551	———	———	———
	(4)		———	———	2892 551	2892 551	———
	w/3743 421, 422 and 476 Trans. (3)		———	———	———	———	2892 551
	w/3743 423 and 478 Trans. (4)		———	———	———	———	2892 551
21-133-38	PLATE, Frt. (3)		1942 403	———	———	———	———
	w/3743 421 and 476 Trans. (3)		———	———	———	———	1942 403
	w/3743 422, 423 and 478 Trans. (4)		———	———	———	———	1942 403
	(4)		———	1942 403	1942 403	———	———
	(5)		———	———	———	1942 403	———
	Rr. (2)		1942 403	1942 403	———	———	———
	w/3743 421, 422 and 476 Trans. (2)		———	———	———	———	1942 403
	(3)		———	———	1942 403	1942 403	———
	w/3743 423 and 478 Trans. (3)		———	———	———	———	1942 403
21-133-39	PLATE, Frt. Clutch Pressure		2801 969	2801 969	2801 969	2801 969	2801 969
	Rr. Clutch Pressure, Frt.		2466 281	2466 281	2466 281	2466 281	2466 281
	Rr. Rr.		2801 969	2801 969	2801 969	2801 969	2801 969

CARLINES
J - Challenger
B - Barracuda
V - Valiant
L - Dart
R - Satellite
W - Coronet - Charger
P - Plymouth
D - Dodge
C - Chrysler
Y - Imperial

AR Indicates use as required.

# Indicates parts not listed in any previous parts book.

Numerals in parentheses ( ) refer to notes.

★ Indicates change or addition.

Printed in U.S.A.
November 1974

NOTE: All quantities are one (1) unless otherwise indicated in parenthesis.

CODE	TRANSMISSION	3681 841 A904	3681 842 A904	3681 843 A94-1	3681 844 A904	3743 421 3743 422 3743 423 3743 476 3743 478 A904
21-133-40	GEAR, w/BUSHING, Sun	1942 434	1942 434	1942 434	3681 964	———
	w/3743 421, 422, 423 and 476 Trans.	———	———	———	———	3681 964
	w/3743 478 Trans.	———	———	———	———	1942 434
21-133-42	SHELL, Sun Gear Driving	1942 438	1942 438	1942 438	———	1942 438
		———	———	———	1942 438	———
21-133-43	SNAP RING, Frt. Clutch, Inner					
	2 7/16" O.D., .060" thk.	1942 400	1942 400	1942 400	1942 400	1942 400
	Outer	3410 571	3410 571	3410 571	3410 571	3410 571
21-133-46	RING, Sun Gear Driving Shell	———				
	Lock, Steel, 1 41/64" I.D. (2)	1942 439	1942 439	1942 439	1942 439	1942 439
21-133-47	PLATE, Sun Gear Driving Shell					
	Thrust, w/28 Tangs (2)	3410 540	3410 540	3410 540	3681 959	3410 540
21-133-48	WASHER, Sun Gear Driving Shell					
	Thrust, w/3 Oil Grooves (2)	2801 356	2801 356	———	———	———
	w/3743 421, 422 and 476 Trans. (2)	———	———	———	———	3743 027
	w/3743 423 and 478 Trans. (2)	———	———	———	———	3681 935
	w/4 Outside Tabs and 4					
	Oil Grooves (2)	———	———	2538 515	———	———
	w/4 Tabs and 4 Oil Grooves (2)	———	———	———	3681 935	———
21-133-65	WASHER, Frt. Clutch Thrust,					
	5 7/8" O.D. (2)	3410 572	3410 572	3410 572	3410 572	3410 572
21-134-5	**CARRIER, w/PINIONS, SHAFTS, ROLLERS, RINGS,**					
	PINS and WASHERS, Frt. Planet Pinion	2801 018	2801 018	2538 523	———	———
		———	———	———	3681 989	———
	w/3743 421, 422 and 476 Trans.	———	———	———	———	3743 020
	w/3743 423 Trans.	———	———	———	———	3681 989
	w/3743 478 Trans.	———	———	———	———	2538 523
	Rr.	2801 180	2801 180	2538 522	———	———
		———	———	———	3681 988	———
	w/3743 421, 422 and 476 Trans.	———	———	———	———	3743 022
	w/3743 423 Trans.	———	———	———	———	3681 988
	w/3743 478 Trans.	———	———	———	———	2538 522
21-134-8	PINION, Frt. Planet (3)	2466 759	2466 759	———	———	———
	(4)	———	———	2466 759	3681 934	3681 934
	w/3743 478 Trans. (4)	———	———	———	———	2466 759
	Rr. (3)	2466 759	2466 759	———	———	———
	(4)	———	———	2466 759	3681 934	3681 934
	w/3743 478 Trans. (4)	———	———	———	———	2466 759
21-134-9	SHAFT, Frt. (3)	2801 363	2801 363	———	———	———
	(4)	———	———	2801 363	———	———
	w/3743 478 Trans. (4)	———	———	———	———	2801 363
	Rr. (3)	2801 363	2801 363	———	———	———
	(4)	———	———	2801 363	———	———
	w/3743 478 Trans. (4)	———	———	———	———	2801 363
	Pin, Frt. and Rr. (6)	6024 666	6024 666	6024 666	———	———
	(8)	———	———	6024 666	———	6024 666
21-134-10	WASHER, Frt. and Rr. (12)	2466 758	2466 758	———	———	———
	Frt. and Rr. (16)	———	———	2466 758	———	———
	w/3743 478 Trans.	———	———	———	———	2466 758
21-134-11	ROLLER, Frt. and Rr. (114)	2466 756	2466 756	———	———	———
	Frt. and Rr. (152)	———	———	2466 756	2204 647	———
	w/3743 478 Trans. (152)	———	———	———	———	2466 756
21-134-12	RING, Frt. and Rr. Planet Pinion					
	Roller Thrust (12)	2466 757	2466 757	———	———	———
	Frt. and Rr. (16)	———	———	2466 757	———	———
	w/3743 478 Trans. (16)	———	———	———	———	2466 757

NOTE: All quantities are one (1) unless otherwise indicated in parenthesis.

CODE	TRANSMISSION	3681 841 A904	3681 842 A904	3681 843 A94-1	3681 844 A904	3743 421 3743 422 3743 423 3743 476 3743 478 A904
21-134-36	SUPPORT, w/BUSHING Frt. Annulus Gear	2538 574	2538 574	2538 574	3681 966	3743 555
	w/o BUSHING, w/3743 478 Trans.	———	———	———	———	2538 574
	Rr.	3515 501	3515 501	3515 501	3515 501	3515 501
	SNAP RING, Frt.	6026 278	6026 278	6026 278	———	———
	1 3/8" I.D., Brown	———	———	———	———	6030 424
21-134-38	GEAR, Frt. and Rr. (2)	3743 184	3743 184	3743 184	3743 184	3743 184
21-134-40	SNAP RING, Frt. and Rr.					
	Annulus Gear (2)	1942 444	1942 444	1942 444	1942 444	———
	Frt., w/3743 421, 422, 423 and 476	———	———	———	———	6030 424
	Frt., w/3743 478 Trans.	———	———	———	———	6026 278
	Frt. Annulus Gear Support	———	———	———	3681 968	———
	Rr., w/3743 421, 422, 423 and 476	———	———	———	———	1942 444
	Rr., w/3743 478 Trans.	———	———	———	———	1942 444
21-134-45	WASHER, Frt. Annulus Gear Support Thrust, w/6 Oil Grooves and 1 Outside Tab	2538 696	2538 696	2538 696	———	———
	Frt., w/1 Tab and 6 Oil Grooves, w/3743 421, 422, 423, 476 Trans.	———	———	———	3681 969	3681 969
	Frt. and Rr., w/4 Tabs (2)	———	———	———	3681 935	———
	Frt., w/3 Tabs and 3 Oil Grooves Frt. and Rr. w/3743 421, 422 and 476 Trans. (2)	———	———	———	———	3743 027
	Frt. and Rr. w/3743 423 and 478 Trans.	———	———	———	———	3681 935
	Frt., w/3743 478 Trans.	———	———	———	———	2538 696
21-136-5	**BAND, Kickdown**	2204 792	2204 792	2204 792	3681 921	2204 792
21-136-15	STRUT, Kickdown Band	3515 084	3515 084	3515 084	3515 084	3515 084
21-136-17	SCREW, Kickdown Band Adjusting	1942 477	1942 477	1942 477	1942 477	1942 477
	NUT, Lock 1/2" - 20	124 934	124 934	124 934	124 934	124 934
21-136-20	LEVER, Kickdown Band	2125 067	2124 579	2124 666	2125 067	———
	w/3743 421 and 476 Trans.	———	———	———	———	2125 067
	w/3743 422 Trans.	———	———	———	———	2124 579
	w/3743 423 and 478 Trans.	———	———	———	———	2124 666
21-136-23	SHAFT, Kickdown Band Lever	1942 132	1942 132	1942 132	1942 132	1942 132
21-136-30	BAND, Reverse	1942 487	1942 487	2801 818	2801 818	———
	w/3743 421, 422 and 476 Trans.	———	———	———	———	1942 487
	w/3743 423 and 478 Trans.	———	———	———	———	2801 818
21-136-41	STRUT, Reverse Band w/3743 421, 422 and 476 Trans.	3515 589	3515 589	———	———	———
21-136-44	LINK, w/ANCHOR, Reverse Band	2464 439	2464 439	———	———	———
	w/3743 421, 422 and 476 Trans.	———	———	———	———	2464 439
21-136-47	LEVER, w/STEM, Reverse Band	———	———	2801 815	2801 815	———
	w/3743 421, 422 and 476 Trans.	———	———	———	———	3681 139
	w/3743 423 Trans.	———	———	———	———	2801 815
21-136-49	SHAFT, Reverse Band Lever	3410 102	3410 102	3410 102	3410 102	3410 102
	Reverse Band Reaction	———	———	3410 102	3410 102	———
	w/3743 423 and 478 Trans.	———	———	———	———	3410 102
21-136-50	SEAL, Reverse Band Reaction Shaft	———	———	1556 385	1556 385	1556 385
21-136-52	SCREW, Reverse Band Adjusting, 1 1/2" Lgh.	1942 543	1942 543	———	———	———
	3/8"-24 x 1 7/8" Lgh.	———	———	2538 472	2538 472	———
	w/3743 423 and 478 Trans., 3/8"-24 x 1 7/8"	———	———	———	———	2538 472
	w/3743 421, 422 and 476 Trans., 7/16"-20 x 2 7/32 Lgh.	———	———	———	———	6030 415
	NUT, Lock	120 369	120 369	120 369	120 369	———
	w/3743 421, 422 and 476 Trans.	———	———	———	———	271 506
	w/3743 423 and 478 Trans.	———	———	———	———	120 369
21-136-55	SEAL, Reverse Band Lever Shaft	1556 385	1556 385	1556 385	1556 385	1556 385

CARLINES: J - Challenger, B - Barracuda, V - Valiant, L - Dart, R - Satellite, W - Coronet - Charger, P - Plymouth, D - Dodge, C - Chrysler, Y - Imperial

AR Indicates use as required.

# Indicates parts not listed in any previous parts book.

Numerals in parentheses ( ) refer to notes.

★ Indicates change or addition.

Printed in U.S.A.
November 1974

NOTE: All quantities are one (1) unless otherwise indicated in parenthesis.

CODE	TRANSMISSION	3681 841 A904	3681 842 A904	3681 843 A94-1	3681 844 A904	3743 421 3743 422 3743 423 3743 476 3743 478 A904
21-136-65	DRUM, Reverse	3743 051	3743 051	3743 051	3743 051	3743 051
21-136-228	CAM, RETAINER, SCREW and WASHER PACKAGE, "O" Running Clutch	3780 221	3780 221	3780 221	3780 221	3780 221
21-136-229	WASHER, "O" Running Clutch Cam Screw (7)	1559 489	1559 489	1559 489	1559 489	1559 489
21-136-232	RACE, ROLLER and SPRING PACKAGE, "O" Running Clutch 24T.	3420 023	3420 023	3420 023	3420 023	3420 023
21-136-235	ROLLER, "O" Running Clutch (10)	2464 888	2464 888	2464 888	2464 888	2464 888
21-136-236	SPRING, "O" Running Clutch Roller (10)	2464 446	2464 446	2464 446	2464 446	2464 446
21-137-5	**PISTON, Kickdown Servo**	1942 478	1942 478	3410 333	3410 333	———
	w/3743 421, 422 and 476 Trans.	———	———	———	———	1942 478
	w/3743 423 Trans.	———	———	———	———	3410 333
21-137-8	RING, Kickdown Servo Piston Seal, Small	1672 287	1672 287	3410 374	3410 374	———
	w/3743 421, 422 and 476 Trans.	———	———	———	———	1672 287
	w/3743 423, 478 Trans.	———	———	———	———	3410 374
	Large	1636 470	1636 470	3410 372	3410 372	———
	w/3743 421, 422 and 476 Trans.	———	———	———	———	1636 470
	w/3743 423 and 478 Trans.	———	———	———	———	3410 372
	Kickdown Servo Guide	1636 470	1636 470	3410 372	3410 372	———
	w/3743 421, 422 and 476 Trans.	———	———	———	———	1636 470
	w/3743 423 and 478 Trans.	———	———	———	———	3410 372
21-137-11	ROD, Kickdown Servo Piston	1942 482	1942 482	1942 482	1942 482	1942 482
21-137-13	GUIDE, Kickdown Servo	1942 485	1942 485	3410 332	3410 332	———
	w/3743 421, 422 and 476 Trans.	———	———	———	———	1942 485
	w/3743 423 and 478 Trans.	———	———	———	———	3410 332
21-137-19	SNAP RING, Kickdown Servo	1942 486	1942 486	6028 863	6028 863	———
	w/3743 421, 422 and 476 Trans.	———	———	———	———	1942 486
	w/3743 423 and 478 Trans.	———	———	———	———	6028 863
21-137-22	SPRING, Kickdown Servo Piston	3515 111	3515 111	———	———	———
	w/3743 421, 422 and 476 Trans.	———	———	———	———	3515 111
	Inner	———	———	3515 111	———	———
	w/3743 423 and 478 Trans.	———	———	———	———	3515 111
	Outer	———	———	3515 412	3743 052	———
	w/3743 423 and 478 Trans.	———	———	———	———	3515 412
21-137-35	PISTON, Reverse Servo	2801 271	2801 271	2801 271	2801 271	2801 271
21-137-41	SPRING, Reverse Servo Cushion	2801 273	2801 273	2801 872	2801 872	———
	w/3743 421, 422 and 476 Trans., 59/64" Lgh., 4.1 Coils	———	———	———	———	2801 273
	w/3743 421, 422 and 476 Trans., 1 5/32" Lgh., 4.9 Coils	———	———	———	———	3743 580
	w/3743 423 and 478 Trans., 59/64" Lgh., 4.4 Coils, Orange	———	———	———	———	2801 872
	w/3743 423 and 478 Trans., 1 5/32" Lgh., 4.6 Coils	———	———	———	———	3743 798
21-137-47	PLUG, Reverse Servo Piston	2801 272	2801 272	2801 272	2801 272	———
	w/3743 421, 422 and 476 Trans., 1 39/64" Lgh., Aluminum	———	———	———	———	2801 272
	w/3743 421, 422 and 476 Trans., 1 53/64" Lgh., Steel	———	———	———	———	3743 687
	w/3743 423 and 478 Trans., 1 39/64" Lgh. Aluminum	———	———	———	———	2801 272
	w/3743 423 and 478 Trans., 1 53/64" Lgh. Aluminum	———	———	———	———	3743 353
	RING, .435" I.D.	6027 153	6027 153	6027 153	6027 153	6027 153
21-137-50	SEAL, Reverse Servo Piston, Rubber	2464 462	2464 462	2464 462	2464 462	2464 462
21-137-53	SPRING, Reverse Servo Piston	2801 274	2801 274	2801 274	2801 274	2801 274
21-137-56	RETAINER, Reverse Servo Piston Spring	2464 463	2464 463	2464 463	2464 463	2464 463

NOTE: All quantities are one (1) unless otherwise indicated in parenthesis

CODE	TRANSMISSION	3681 841 A904	3681 842 A904	3681 843 A94-1	3681 844 A904	3743 421 3743 422 3743 423 3743 476 3743 478 A904
21-137-59	SNAP RING, Reverse Servo Piston Spring Retainer	2464 464	2464 464	2464 464	2464 464	2464 464
21-137-200	PISTON, Accumulator	3410 908	3410 908	3410 908	3410 908	3410 908
21-137-202	RING, Accumulator Piston					
	Seal, Small	1941 831	1941 831	1941 831	1941 831	1941 831
	Large	2124 255	2124 255	2124 255	2124 255	2124 255
21-137-205	SPRING, Accumulator	2125 109	2125 109	3515 411	———	———
	5 1/2 Coils	———	———	———	3743 536	———
	7 Coils	———	———	———	3515 079	———
	w/3743 421, 422 and 476 Trans.	———	———	———	———	2125 109
	w/3743 423 and 478 Trans.	———	———	———	———	3515 411
21-138-2	**REPAIR PACKAGE, Governor**	3780 244	3780 245	3780 245	3780 245	———
	w/3743 421 and 476 Trans.	———	———	———	———	3780 244
	w/3743 422, 423 and 478 Trans.	———	———	———	———	3780 245
21-138-7	SNAP RING, Governor Body	6027 271	6027 271	6027 271	6027 271	6027 271
21-138-8	FILTER, Governor	3743 519	3743 519	3743 519	3743 519	3743 519
21-138-10	SUPPORT, Governor	3743 518	3743 518	3743 518	3743 518	3743 518
21-138-13	WEIGHT, Governor, Outer	3515 491	1636 461	1636 461	1636 461	———
	w/3743 421 and 476 Trans.	———	———	———	———	3515 491
	w/3743 422, 423 and 478 Trans.	———	———	———	———	1636 461
	Inner	3515 482	3515 478	3515 478	3515 478	———
	w/3743 421 and 476 Trans.	———	———	———	———	3515 482
	w/3743 422, 423 and 478 Trans.	———	———	———	———	3515 478
21-138-15	SPRING, Governor Weight	3515 110	3515 085	3515 085	3515 085	———
	w/3743 421 and 476 Trans.	———	———	———	———	3515 110
	w/3743 422, 423 and 478 Trans.	———	———	———	———	3515 085
21-138-19	SNAP RING, Governor Weight, Outer	1636 465	1636 465	1636 465	1636 465	1636 465
	Inner	1636 464	1636 464	1636 464	1636 464	1636 464
21-138-21	LOCK, Governor Body Bolt (2)					
	Straight Type	2125 024	2125 024	2125 024	2125 024	2125 024
	Off-Set Type	3743 520	3743 520	3743 520	3743 520	3743 520
21-138-23	VALVE, Governor .859" lgh.	3515 479	3515 479	3515 479	3515 479	3515 479
21-138-26	SHAFT, Governor Valve	1556 082	1556 082	1556 082	1556 082	1556 082
21-138-29	SNAP RING, Governor Valve Shaft (2)	1638 461	1638 461	1638 461	1638 461	1638 461
21-138-38	RING, Governor Support Seal, Frt. and Rr. (2)	1942 109	1942 109	1942 109	1942 109	1942 109
21-139-4	**BODY, w/Transfer PLATE, Valve**	3743 146	3743 146	3743 144	3743 144	———
	w/3743 421, 422 and 476 Trans.	———	———	———	———	3743 146
	w/3743 423 and 478 Trans.	———	———	———	———	3743 144
	BALL, Check Valve, Small (6)	104 918	104 918	———	———	———
	(5)	———	———	104 918	104 918	———
	w/3743 421, 422 and 476 Trans. (6)	———	———	———	———	104 918
	w/3743 423 and 478 Trans. (5)	———	———	———	———	104 918
21-139-9	VALVE, Manual	2801 259	2801 259	2801 259	2801 259	2801 259
21-139-11	VALVE, Limit	———	———	3410 560	3410 560	———
	w/3743 423 and 478 Trans.	———	———	———	———	3410 560
21-139-12	LEVER, w/INSULATOR, Manual Valve	3410 484	3410 484	3410 484	3410 484	3410 484
21-139-16	SEAL, Manual Valve Shaft, 1 1/4" O.D.	2466 842	2466 842	2466 842	2466 842	2466 842
21-139-19	BODY, Limit Valve	———	———	3410 564	3410 564	———
	w/3743 423 and 478 Trans.	———	———	———	———	3410 564
21-139-24	SPRING, Manual Valve Lever Detent	2466 615	2466 615	2466 615	2466 615	2466 615
21-139-30	VALVE, Throttle	3743 092	3743 092	3743 092	3743 092	3743 092
21-139-33	SPRING, Throttle Valve	2892 350	2892 350	2892 350	2892 350	2892 350
21-139-34	PIN, Manual Valve Lever Spring	2466 756	2466 756	2466 756	2466 756	2466 756
21-139-46	WASHER, Throttle Valve Lever Shaft	2538 062	2538 062	2538 062	2538 062	2538 062
21-139-47	SEAL, Throttle Lever Shaft, 11/16" O.D.	2466 548	2466 548	2466 548	2466 548	2466 548

NOTE: All quantities are one (1) unless otherwise indicated in parenthesis

CODE	TRANSMISSION	3681 841 A904	3681 842 A904	3681 843 A94-1	3681 844 A904	3743 421 3743 422 3743 423 3743 476 3743 478 A904
21-139-49	"E" RING, Throttle Valve Lever Shaft	6025 857	6025 857	6025 857	6025 857	6025 857
21-139-50	**LEVER, Throttle Valve**	**3681 227**	**3681 227**	**3681 227**	**3681 227**	**3681 227**
21-139-60	COVER, Throttle Pressure	2801 198	2801 198	———	———	———
	SCREW, w/WASHER,					
	Long	6029 883	6029 883	———	———	———
	Short (2)	6029 271	6029 271	———	———	———
21-139-63	PLUG, Throttle Pressure	———	———	2892 943	2892 943	———
	w/3743 423 and 478 Trans.	———	———	———	———	**2892 943**
	Regulator Valve Line Pressure	1942 218	1942 218	1942 218	1942 218	1942 218
	Regulator Valve Throttle Pressure	1942 245	1942 245	1942 245	1942 245	1942 245
21-139-64	SLEEVE, Regulator Valve Line					
	Pressure Plug	1942 213	1942 213	1942 213	1942 213	1942 213
	Shuttle Valve	———	———	3410 312	3410 312	———
	w/3743 423 and 478 Trans.	———	———	———	———	**3410 312**
21-139-67	VALVE PACKAGE, Regulator	2240 685	2240 685	2240 685	2240 685	2240 685
21-139-68	SPRING, Regulator Valve	2124 734	2124 734	2124 734	2124 734	2124 734
	Trans. Pressure Relief	2892 846	2892 846	2892 846	2892 846	2892 846
	Trans. Limit Valve	———	———	3515 251	3515 251	———
	w/3743 423 and 478 Trans.	———	———	———	———	3515 251
	BALL, Pressure Relief,					
	Bright Finish, 3/8"	147 500	147 500	147 500	147 500	147 500
	SCREW, w/WASHER, Regulator Valve					
	Spring Retainer 10-24 x 7/16" (2)	6029 926	6029 926	6029 926	6029 926	6029 926
	Regulator Valve Spring (3)	6029 271	6029 271	6029 271	6029 271	———
21-139-71	BRACKET, Throttle Pressure Adj.					
	Screw, w/5/16"-24 Hole,					
	w/Reformed End 3 Places	3681 319	3681 319	3681 319	3681 319	3681 319
	w/o Reformed End 3 Places	3743 840	3743 840	3743 840	3743 840	3743 840
	RETAINER, Limit Valve Spring	———	———	2892 947	2892 947	———
	w/3743 423 and 478 Trans.	———	———	———	———	2892 947
21-139-73	SCREEN, Regulator Valve	3515 995	3515 995	3515 995	3515 995	3515 995
21-139-74	**SCREW, Line Pressure Adjusting**	**2124 736**	**2124 736**	**2124 736**	**2124 736**	**2124 736**
	Throttle Pressure Adjusting,					
	5/16"-24 x 1 1/4"	6030 104	6030 104	6030 104	6030 104	6030 104
21-139-76	NUT, Line Pressure Adj. Screw					
	Lock, 3/8"-24	2124 737	2124 737	2124 737	2124 737	2124 737
21-139-78	VALVE, Kickdown	2892 351	2892 351	2892 351	2892 351	2892 351
	PLUG, Kickdown Detent	**2892 352**	**2892 352**	**2892 352**	**2892 352**	**2892 352**
21-139-95	VALVE, Shuttle	1854 275	1854 275	2892 926	2892 926	———
	w/3743 421, 422 and 476 Trans.	———	———	———	———	1854 275
	w/3743 423 and 478 Trans.	———	———	———	———	2892 926
	PLUG, Shuttle Valve	2892 927	2892 927	2892 927	2892 927	2892 927
21-139-98	SNAP RING, Shuttle Valve	6025 857	6025 857	6025 857	6025 857	6025 857
21-139-101	**SPRING, Shuttle Valve**	**3515 202**	**3515 202**	———	———	———
	w/3743 421, 422 and 476 Trans.	———	———	———	———	3515 202
	Primary	———	———	3515 047	3515 047	———
	w/3743 423 and 478 Trans.	———	———	———	———	3515 047
	Secondary	———	———	3515 048	3515 048	———
	w/3743 423 and 478 Trans.	———	———	———	———	3515 048
21-139-105	**VALVE, 1-2 Shift**	**3410 881**	**3410 881**	**3410 912**	**3410 912**	———
	w/3743 423 and 478 Trans.	———	———	———	———	3410 912
	PLUG, 1-2 Shift Valve	3515 948	3515 948	3515 948	3515 948	3515 948
	VALVE, 2-3 Shift	3515 132	3515 132	3515 132	3515 132	3515 132
	PLUG, 2-3 Shift Valve	2892 990	2892 990	2892 990	2892 990	2892 990
21-139-108	SPRING, 1-2 Shift Valve	2204 547	2204 547	2204 547	2204 547	2204 547
	1-2 Shift Control					
	Valve	———	———	3410 517	3410 517	———

NOTE: All quantities are one (1) unless otherwise indicated in parenthesis.

CODE	TRANSMISSION	3681 841 A904	3681 842 A904	3681 843 A94-1	3681 844 A904	3743 421 3743 422 3743 423 3743 476 3743 478 A904
21-139-108	SPRING Cont'd.					
	w/3743 423 and 478 Trans.	———	———	———	———	3410 517
	2-3 Shift Valve	1942 231	1942 231	1942 231	1942 231	1942 231
21-139-117	VALVE, Torque Conv. Control	2124 256	2124 256	2124 256	2124 256	2124 256
21-139-118	SPRING, Torque Conv. Control Valve	2124 257	2124 257	2124 257	2124 257	2124 257
21-139-135	COVER, Regulator Valve	2205 034	2205 034	2205 034	2205 034	2205 034
	Shift Valve Plug	3410 378	3410 378	3410 378	3410 378	3410 378
	Shuttle Valve	3410 889	3410 889	3410 889	3410 889	3410 889
	Limit Valve	———	———	2892 944	2892 944	———
	w/3743 423 and 478 Trans.	———	———	———	———	2892 944
	SCREW, w/WASHER,					
	Limit Valve Cover (3)	———	———	6029 883	6029 883	———
	w/3743 423 amnd 478 Trans. (3)	———	———	———	———	6029 927
	Shift Valve Cover, 10-24 x 7/16" (5)	6029 926	6029 926	6029 926	6029 926	———
	(4)	6029 926	6029 926	———	———	———
	(6)	———	———	6029 926	6029 926	———
	w/3743 421, 422 and 476 Trans. (4)	———	———	———	———	6029 926
	Regulator Valve Cover, 10-24 x 7/16" (2)	6029 271	6029 271	6029 271	6029 271	6029 926
21-139-140	PLATE, Valve Body	3743 165	3743 165	3743 162	3743 162	———
	w/3743 421, 422 and 476 Trans.	———	———	———	———	3743 165
	w/3743 423 and 478 Trans.	———	———	———	———	3743 162
	SCREW, w/WASHER, Valve Body Plate to Transfer Plate, 10-24 x 7/16" (2)	6029 926	6029 926	6029 926	6029 926	6029 926
21-139-145	BALL, Valve Body Check Valve, Large, Dull Copper Finish, 11/32" O.D.	3515 398	3515 398	3515 398	3515 398	3515 398
21-139-147	PLATE, Transfer	3743 160	3743 160	3743 158	3743 158	———
	w/3743 421, 422 and 476 Trans.	———	———	———	———	3743 160
	w/3743 423 Trans.	———	———	———	———	3743 158
	SCREW, w/WASHER, Transfer Plate to Valve Body (14)	6027 391	6027 391	6027 391	6027 391	6027 391
21-139-154	SUPPORT, Transfer Plate	3410 380	3410 380	3410 380	3410 380	3410 380
	SCREW, w/WASHER (2)	6029 926	6029 926	6029 926	6029 926	6029 926

NOTES

GROUP 22 - WHEELS

STYLED WHEEL CLASS I 14 x 5.50



DISC BRAKE ONLY
WHEEL 3580 058
NUT 3580 286

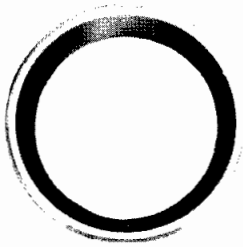

TRIM RING 2944 424



DOME 3461 458
SCREW 6029 190

STYLED WHEEL CLASS I 14 x 6.00

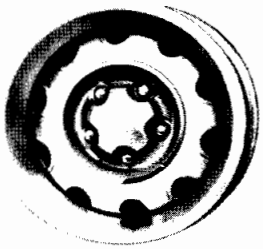

WHEEL 3580 068
NUT 3580 286

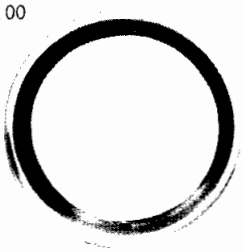

TRIM RING 2944 424



DOME 3461 458
SCREW 6029 190

STYLED WHEEL CLASS II 14 x 6.00



MAG 500 WHEEL 3580 065
NUT 3580 286

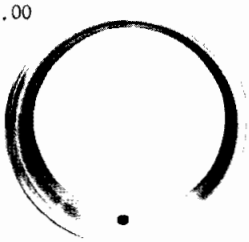

TRIM RING 2944 424



DOME ASSY. 2823 842
DOME RETAINER 2823 845
SCREW 180 016

STYLED WHEEL CLASS II 16 SLOTS
15 x 6.00

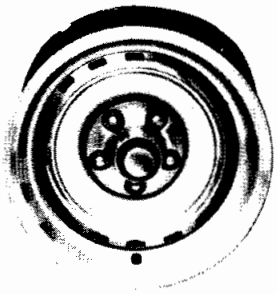

MULTI STYLE WHEEL 3580 067
NUT 3580 134

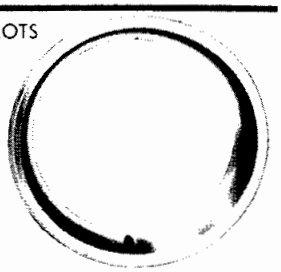

TRIM RING 3461 012



DOME ASSY. 3461 041
CAP DOME 3461 042
SCREW 6029 190

19a4374 A

WHEEL CHART

CAP, WHL. HUB  V, B, R, P 3461 450	CAP, WHL. HUB  L, J, W, D 2944 454	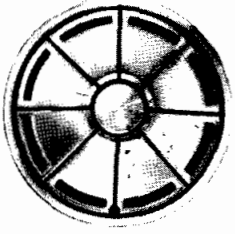 V 3580 014	
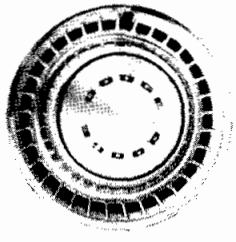 L, J, W 3580 153	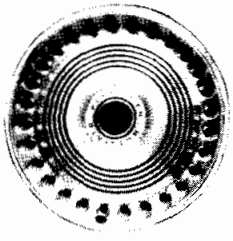 B, R 3699 017	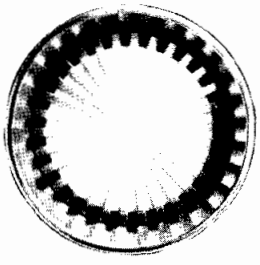 R 3699 003	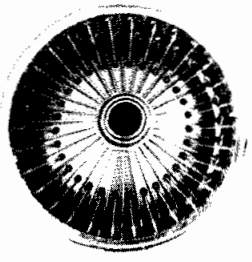 V, L, W 3461 467
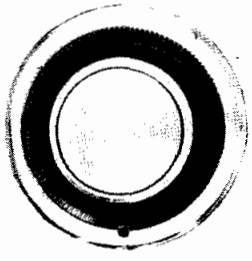 P 3580 176	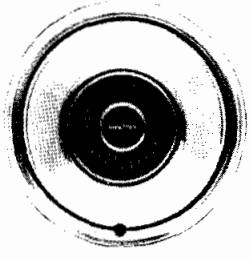 D 3580 257	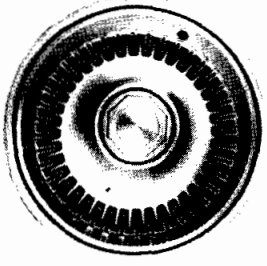 P, D 3580 180	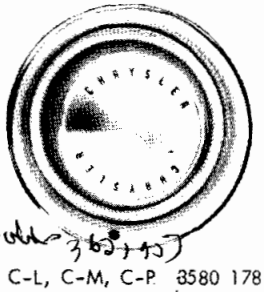 C-L, C-M, C-P 3580 178
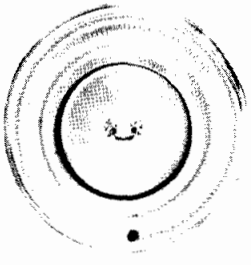 C-H, C-S 3580 305	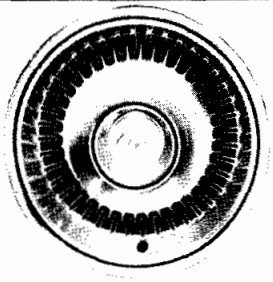 C 3580 182	 Y 3580 234	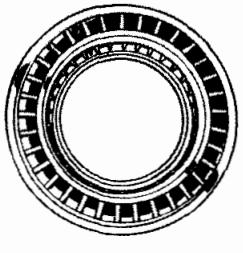 V, L (SEE BELOW)

E601 KL4 PARCHMENT, LIGHT
E601 KF7 RED
E601 KX9 BLACK
E601 KY9 GOLD
E601 KL8 PARCHMENT, DARK
E601 KW1 WHITE
E601 KG2 GREEN, LIGHT
E601 KG8 GREEN, DARK

19a4774c

WHEEL COVER CHART

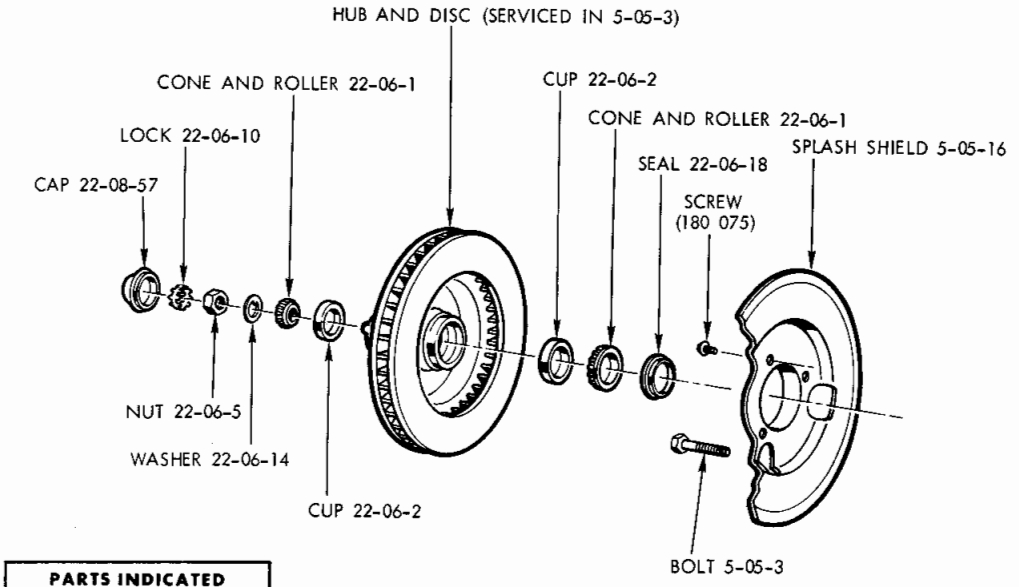

19a4402 **A**

CONE AND ROLLERS - WITH DISC BRAKES

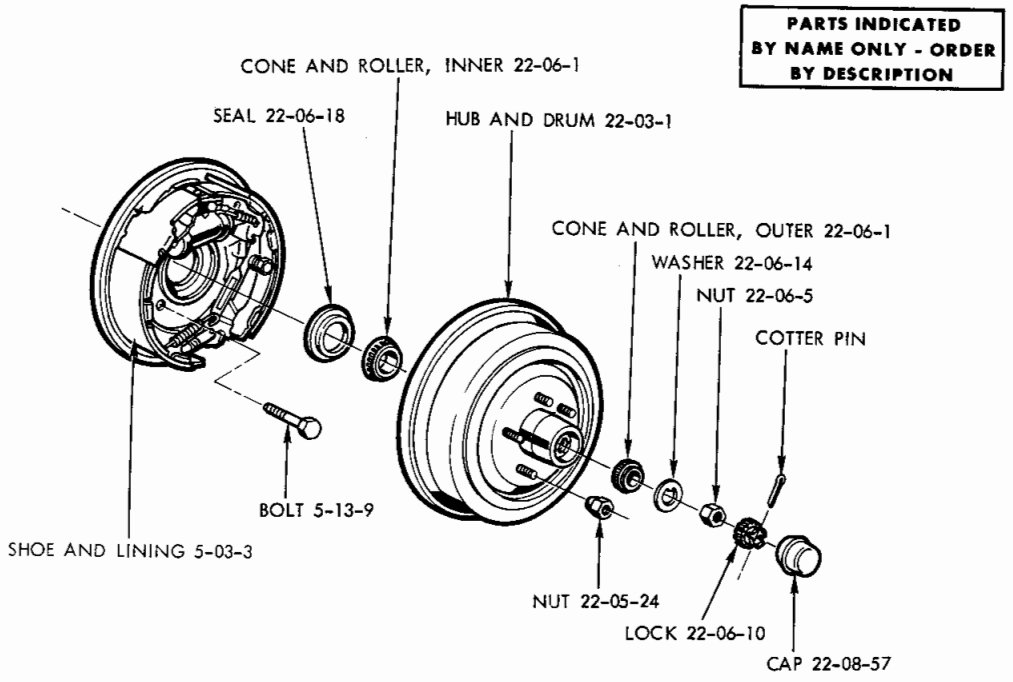

19a4403 **A**

CONE AND ROLLERS - WITH DRUM BRAKES

NOTES

GROUP 23 ILLUSTRATION INDEX

	PAGE
SECTION 1	
Underbody	23-2 thru 23-9
SECTION 2	
Windshield, Cowl and Dash	23-10 thru 23-14
SECTION 3	
Side Sill and Center Pillar	23-1
SECTION 4	
Wheelhouse and Quarter Panel	23-15 thru 23-23
SECTION 5	
Upper and Lower Deck Opening	23-24 and 23-25
SECTION 6	
Deck Lid	23-26 thru 23-38
SECTION 7	
Roof Panel	23-40 thru 23-45
SECTION 8	
Instrument Panel	23-46 thru 23-57
SECTION 9	
Front and Rear Doors	23-58 thru 23-85
EXTERIOR VIEWS	
CODED REFERENCE	23-90
VALIANT	
V-L 4 Door Sedan	23-92
V-L Duster Fastback	23-96
V-H Scamp 2 Door Hardtop	23-94
V-P Brougham 4 Door Sedan	23-92
V-P 2 Door Hardtop	23-94
V-S Duster 360 Fastback	23-96
DART	
L-L 4 Door Sedan	23-98
L-L Swinger (Special) 2 Door Hardtop	23-100
L-L Sport Fastback	23-102
L-M Sport 360 Fastback	23-102
L-H Custom 4 Door Sedan	23-98
L-H Swinger 2 Door Hardtop	23-100
L-P Special Edition 4 Door Sedan	23-98
L-P Special Edition 2 Door Hardtop	23-100
BARRACUDA	
B-H 2 Door Hardtop	23-104
B-S 2 Door Hardtop	23-104

	PAGE
EXTERIOR VIEWS - CONTINUED	
CHALLENGER	
J-H 2 Door Hardtop	23-106
SATELLITE	
R-L 2 Door Sedan	23-108
R-L 4 Door Sedan	23-110
R-L Station Wagon	23-116
R-M 2 Door Sedan	23-108
R-H Custom 4 Door Sedan	23-110
R-H Sebring 2 Door Hardtop	23-112
R-H Station Wagon	23-116
R-P Sebring Plus 2 Door Hardtop	23-112
R-P Regent Station Wagon	23-116
CORONET	
W-L 4 Door Sedan	23-120
W-L Station Wagon	23-122
W-H 4 Door Sedan	23-120
W-H Custom Station Wagon	23-122
W-P Crestwood Station Wagon	23-122
CHARGER	
W-L Coupe 2 Door Sedan	23-126
W-H 2 Door Hardtop	23-128
W-P SE Fastback	23-130
PLYMOUTH	
P-L Fury I 4 Door Sedan	23-132
P-M Fury II 4 Door Sedan	23-132
P-M Suburban	23-138
P-H Fury III 4 Door Sedan	23-132
P-H Fury III 2 Door Hardtop	23-134
P-H Fury III 4 Door Hardtop	23-136
P-H Custom Suburban	23-138
P-P Gran Coupe 2 Door Hardtop	23-134
P-P Gran Sedan 4 Door Hardtop	23-136
P-P Sport Suburban	23-142
DODGE	
D-M Monaco 4 Door Sedan	23-144
D-M Monaco 2 Door Hardtop	23-146
D-M Monaco Station Wagon	23-150
D-H Monaco Custom 4 Door Sedan	23-144
D-H Monaco Custom 2 Door Hardtop	23-146
D-H Monaco Custom 4 Door Hardtop	23-148
D-H Monaco Custom Station Wagon	23-150
D-P Monaco Brougham 4 Door Sedan	23-144
D-P Monaco Brougham 2 Door Hardtop	23-146
D-P Monaco Brougham 4 Door Hardtop	23-148
D-P Monaco Brougham Station Wagon	23-150

GROUP 23 ILLUSTRATION INDEX - CONTINUED

PAGE

EXTERIOR VIEWS - CONTINUED

CHRYSLER

C-L Newport 4 Door Sedan 23-154
C-L Newport 2 Door Hardtop 23-156
C-L Newport 4 Door Hardtop 23-160
C-M Newport Custom 4 Door Sedan. 23-154
C-M Newport Custom 2 Door Hardtop . . . 23-156
C-M Newport Custom 4 Door Hardtop . . . 23-160
C-H New Yorker 4 Door Sedan 23-162
C-H New Yorker 4 Door Hardtop 23-164
C-S New Yorker (Brougham) 2 Door Hardtop 23-156
C-S New Yorker (St. Regis) 2 Door Hardtop 23-156
C-S New Yorker (Brougham) 4 Door Sedan 23-162
C-S New Yorker (Brougham) 4 Door Hardtop 23-164
C-P Town & Country. 23-166

IMPERIAL

Y-M Le Baron 2 Door Hardtop 23-168
Y-M Le Baron 4 Door Hardtop 23-170

INTERIOR VIEWS - FRONT AND REAR

VALIANT . . . . . 23-174 thru 23-177

PAGE

INTERIOR VIEWS - FRONT AND REAR - CONTINUED

DART . . . . . 23-178 thru 23-183
BARRACUDA . . . . . 23-184 and 23-185
CHALLENGER. . . . . 23-186 and 23-187
SATELLITE . . . . . 23-188 thru 23-193
CORONET . . . . . 23-194 and 23-195
CHARGER . . . . . 23-196 thru 23-199
PLYMOUTH . . . . . 23-200 thru 23-210
DODGE. . . . . 23-211 thru 23-217
CHRYSLER . . . . . 23-218 thru 23-227
IMPERIAL . . . . . 23-228 and 23-229

GROUP 22 - WHEELS

BEARING, FRONT 22-06
CAPS, HUB 22-08
CARRIER, SPARE 22-20
DRUM, REAR BRAKE 22-04
HUB AND DRUM, FRONT 22-03
STUD AND NUT, WHEEL DRIVING 22-05
WEIGHT, BALANCE 22-09
WHEELS 22-01

Printed in U.S.A.
November, 1974

TIRE CHART

WHEEL	TIRE SIZE	CARLINE
14 x 4.5"	6.95 x 14 - D78 x 14	V,L
14 x 5"	7.35 x 14 - E78 x 14 - F78 x 14, FR78 x 14	B,J,R,W
14 x 5.5"	6.95 x 14 - 7.35 x 14 - D78 x 14 - E70 x 14 - E78 x 14 - F70 x 14 - F78 x 14 - G78 x 14 - H78 x 14 DR78 x 14, HR78 x 14, FR78 x 14	V,L,B,J,R,W
14 x 6"	E78 x 14 - F78 x 14 - G70 x 14 - G78 x 14 - H78 x 14 FR78 x 14, HR78 x 14	B,J,R,W
15 x 5.5"	G78 x 15 - H78 x 15 HR78 x 15, J78 x 15, JR78 x 15	P,D,C
15 x 6"	8.25 x 15 - 8.55 x 15 - GR70 x 15 G78 x 15 - H78 x 15 - J78 x 15 - L84 x 15 - LR78 x 15 HR78 x 15	R,W,P,D,C
15 x 6.5"	J78 x 15 - L78 x 15 - LR78 x 15, F78 x 15, G78 x 15, H78 x 15, HR78 x 15, J78 x 15, JR78 x 15	R,W,P,D,C,Y

NOTES

CARLINES J - Challenger B - Barracuda V - Valiant L - Dart R - Satellite W - Coronet - Charger P - Plymouth D - Dodge C - Chrysler Y - Imperial

AR Indicates use as required.

# Indicates parts not listed in any previous parts book.

Numerals in parentheses ( ) refer to notes.

★ Indicates change or addition.

Printed in U.S.A.
November, 1974

CODE	PART NAME	ENG. TYPE OR CU. IN	V	B J	L	R	W	P	D	C (L M)	C (P)	C (H S)	Y	PART NUMBER
22-01-5	**WHEELS**													
	14 x 4.50 Painted		5	—	5	—	—	—	—	—	—	—	—	3621 951
	14 x 4.50 Painted w/Disc Brakes		5	—	5	—	—	—	—	—	—	—	—	3683 970
	14 x 5.00 Painted		5	5	5	5	5	—	—	—	—	—	—	3621 952
	14 x 5.50 Painted		5	5	5	5	5	—	—	—	—	—	—	3621 953
	14 x 5.50 Styled Wheel, Class 1													
	w/Disc Brakes		5	5	5	—	—	—	—	—	—	—	—	3580 058
	14 x 6.00 Painted		—	4	—	4	4	—	—	—	—	—	—	3621 954
	14 x 6.00 Styled Wheel Class 1		—	—	—	5	5	—	—	—	—	—	—	3580 068
	14 x 6.00 Styled Wheel Class 2		—	5	—	5	5	—	—	—	—	—	—	3580 065
	15 x 5.50 Painted		—	—	—	—	—	5	5	5	5	5	—	3621 957
	15 x 6.00 Styled Wheel Class 2													
	16 Slots		—	—	—	5	5	5	5	5	5	5	—	3580 067
	15 x 6.00 Painted Heavy Duty		—	—	—	—	—	—	—	5	—	5	—	# 3699 101
	15 x 6.50 Painted		—	—	—	5	5	5	5	5	5	5	5	3621 956
22-01-41	RING, Wheel Trim													
	Styled Road Wheel-Class 1-11		4	4	4	4	4	—	—	—	—	—	—	2944 424
			—	—	—	—	—	4	4	4	4	4	—	3461 012
	NOTE: For Illustration See Wheel Covers Illustrated at Start of GR. 22.													
22-01-42	COVER, Wheel — For replacement parts, refer to Wheel Cover Illustration Pages.													
22-01-43	APPLIQUE													
			4	4	4	4	4	—	—	—	—	—	—	3461 458
	Screw, Applique to Wheel		AR	AR	AR	AR	AR	AR	AR	AR	AR	AR	—	6029 190
22-1-46	EXTENSION PACKAGE, Valve Stem													
	1/2" LGH.		1	1	1	1	1	1	1	1	1	1	—	2660 315
	1" LGH.		—	—	—	—	—	1	1	—	—	—	—	3461 079
	1 1/4" LGH.		—	—	—	—	—	—	—	—	—	—	1	2401 841
22-01-48	CAP, Wheel Dome		—	—	—	—	—	4	4	4	4	4	—	3461 042
22-01-49	RETAINER, Wheel Dome		—	4	—	4	4	—	—	—	—	—	—	2823 845
22-01-51	DOME, Wheel		—	4	—	4	4	—	—	—	—	—	—	2823 842
			—	—	—	—	—	4	4	4	4	4	—	3461 041
	Screw, Class II Wheel Dome Mtg.		—	AR	—	AR	AR	—	—	—	—	—	—	180 016
22-03-1	**FRONT HUB and DRUM**													
	10" x 2 1/2" Brakes		2	—	2	—	—	—	—	—	—	—	—	3699 614
	NOTE: For Hub w/Disc See Part Type Code 5-05-3.													
22-04-2	**DRUM,**													
	9" Brakes		2	—	2	—	—	—	—	—	—	—	—	3580 549
	10 x 2 1/2 Brakes		2	2	2	2	2	—	—	—	—	—	—	3580 553
	11 x 2 Brakes		2	—	2	2	2	2	2	—	—	—	—	3780 526
	11 x 2 1/2 Brakes		2	2	2	2	2	2	2	2	2	2	—	3780 537
22-04-14	RETAINER, Rr. Whl. Brake Drum to Axle Shaft													
	Use on Threads 7/16" - 14		AR	—	AR	—	—	—	—	—	—	—	—	6026 647
	1/2" - 13		AR	AR	AR	AR	AR	AR	AR	AR	AR	AR	AR	6024 128
22-05-14	**STUD, Front Wheel**													
	w/10" Brakes													
	w/Kelsey Hayes, 7/16"-20, Drum		10	—	10	—	—	—	—	—	—	—	—	3699 558
	w/Motor Wheel, 1/2"-20		10	—	10	—	—	—	—	—	—	—	—	3580 728
	w/Motor Wheel 1/2"-20		—	10	—	10	10	—	—	—	—	—	—	3580 728
	w/Kelsey-Hayes 1/2"-20 w/Disc		10	10	10	10	10	—	—	—	—	—	—	3699 902
	w/Budd, 1/2"-20		—	—	—	—	—	10	10	10	10	10	10	3699 680
	w/Kelsey-Hayes, 1/2"-20		—	—	—	—	—	10	10	10	10	10	10	3699 932
	Rear Wheel w/9" Brakes, 7/16"-20		10	—	10	—	—	—	—	—	—	—	—	2070 158
	1/2"-20		10	10	10	10	10	10	10	10	10	10	—	3432 698
	1/2"-20		—	—	—	—	—	—	—	—	—	—	10	2959 852
22-5-24	NUT, Wheel Mtg. Standard 7/16" Thd.		20	—	20	—	—	—	—	—	—	—	—	2409 824
	Standard 1/2" Thd.		20	20	20	20	20	20	20	20	20	20	20	2409 826

CARLINES J - Challenger, B - Barracuda, V - Valiant, L - Dart, R - Satellite, W - Coronet - Charger, P - Plymouth, D - Dodge, C - Chrysler, Y - Imperial

AR Indicates use as required.

Numerals in parentheses ( ) refer to notes.

Printed in U.S.A.

# Indicates parts not listed in any previous parts book.

★ Indicates change or addition.

November, 1974

CODE	PART NAME	ENG. TYPE OR CU. IN	V	B J	L	R	W	P	D	C (L M)	C (P)	C (H S)	Y	PART NUMBER
22-5-24	NUT Cont'd.													
	w/Styled Wheels Class 1, 2, 1/2" Thd.		20	20	20	20	20	—	—	—	—	—	—	3580 286
	Cap Style 1/2" Thd. w/16 Slot Wheel		—	—	—	—	—	20	20	20	20	20	—	3580 134
22-06-1	**CONE and ROLLER, Frt. Wheel Bearing**													
	Outer w/Disc		2	2	2	2	2	—	—	—	—	—	—	1619 703
	w/o Disc		2	—	2	—	—	—	—	—	—	—	—	1619 703
	Inner w/Disc		2	2	2	2	2	—	—	—	—	—	—	3580 892
	w/o Disc		2	—	2	—	—	—	—	—	—	—	—	3580 892
	Inner w/Disc		—	—	—	—	—	2	2	2	2	2	2	3699 676
	Outer w/Disc		—	—	—	—	—	2	2	2	2	2	2	3580 888
	Bearing Pkg. Outer w/Disc Brakes		2	2	2	2	2	—	—	—	—	—	—	3838 020
	w/o Disc		2	—	2	—	—	—	—	—	—	—	—	3838 020
	Bearing Pkg., Inner w/Disc		2	2	2	2	2	—	—	—	—	—	—	3683 975
	w/o Disc		2	—	2	—	—	—	—	—	—	—	—	3838 045
	w/Disc		—	—	—	—	—	2	2	2	2	2	2	3780 531
	Bearing Pkg., Outer Disc		—	—	—	—	—	2	2	2	2	2	2	3683 974
22-06-2	CUP, Frt. Wheel Bearing													
	Inner Serviced in		2	2	2	2	2	—	2	2	2	2	2	3683 975
			—	—	—	—	—	2	2	2	2	2	2	3780 531
	Outer		2	2	2	2	2	—	—	—	—	—	—	1619 702
	Outer Serviced in		—	—	—	—	—	2	2	2	2	2	2	3683 974
22-06-5	NUT, Frt. Wheel Bearing		2	2	2	2	2	2	2	2	2	2	2	6029 692
22-06-10	LOCK, Frt. Wheel Bearing Nut		2	2	2	2	2	2	2	2	2	2	2	1673 324
22-06-14	WASHER, Thrust, Front		2	2	2	2	2	2	2	2	2	2	2	600 194
	WASHER, Thrust, w/9 x 2 1/2"													
22-06-18	SEAL, Frt. Wheel Hub Dust													
	w/o Disc Brakes		2	—	2	—	—	—	—	—	—	—	—	3580 975
	w/Disc Brake		2	2	2	2	2	—	—	—	—	—	—	3580 723
			—	—	—	—	—	2	2	2	2	2	2	3699 678
22-08-5	**CAP, Wheel Hub, for replacement refer**													
	To Illustrated Covers in front of Wheel Group 22.													
22-08-57	CAP, Frt. Wheel Grease		2	2	2	2	2	2	2	2	2	2	2	3580 894
22-09-1	**WEIGHT** 1/2 OZ.		AR	AR	AR	AR	AR	AR	AR	AR	AR	AR	AR	1615 349
	1 OZ.		AR	AR	AR	AR	AR	AR	AR	AR	AR	AR	AR	1615 350
	1 1/2 OZ.		AR	AR	AR	AR	AR	AR	AR	AR	AR	AR	AR	1615 351
	2 OZ.		AR	AR	AR	AR	AR	AR	AR	AR	AR	AR	AR	1615 352
	2 1/2 OZ.		AR	AR	AR	AR	AR	AR	AR	AR	AR	AR	AR	1615 353
	3 OZ.		AR	AR	AR	AR	AR	AR	AR	AR	AR	AR	AR	1615 354
22-20-29	**BRACKET, Spare Whl. Anchor Bolt**		1	—	1	—	—	—	—	—	—	—	—	2841 154
22-20-82	RETAINER, Qtr. Pnl. w/Hse. Spare Tire Anchor Rod		—	—	—	—	—	1	1	1	1	1	—	3674 758
22-20-87	ROD, Spare Wheel Anchor													
	Except Sta. Wgn.		—	1	—	—	—	—	—	—	—	—	—	2965 020
	Sta. Wgn.		—	—	—	1	1	1	1	—	—	1	—	3440 134
	Except Sta. Wgn.		—	—	—	1	1	1	1	1	1	—	1	3756 833
	BOLT, Spare Wheel Anchor w/o E70 x 14 Tires		1	—	1	—	—	—	—	—	—	—	—	6029 715
	w/E70 x 14 Tires		1	—	1	—	—	—	—	—	—	—	—	6027 740
22-20-96	WING NUT, Spare Wheel Anchor Rod		AR	AR	AR	AR	AR	AR	AR	AR	AR	AR	AR	2842 961
	Sta. Wgn. Only		—	—	—	1	1	1	1	—	—	1	—	3499 878

CARLINES	J - Challenger	V - Valiant	R - Satellite	P - Plymouth	C - Chrysler
	B - Barracuda	L - Dart	W - Coronet - Charger	D - Dodge	Y - Imperial

AR Indicates use as required.
# Indicates parts not listed in any previous parts book.
Numerals in parentheses ( ) refer to notes.
★ Indicates change or addition.

Printed in U.S.A.
November, 1974

EXTERIOR VIEW ILLUSTRATION INDEX

		PAGE
CODED REFERENCE		23-88
VALIANT		
V-L	4 Door Sedan	23-90
V-L	Duster Fastback	23-94
V-H	Scamp 2 Door Hardtop	23-92
V-P	Brougham 4 Door Sedan	23-90
V-P	2 Door Hardtop	23-92
V-S	Duster 360 Fastback	23-94
DART		
L-L	4 Door Sedan	23-96
L-L	Swinger (Special) 2 Door Hardtop	23-98
L-L	Sport Fastback	23-100
L-M	Sport 360 Fastback	23-100
L-H	Custom 4 Door Sedan	23-96
L-H	Swinger 2 Door Hardtop	23-98
L-P	Special Edition 4 Door Sedan	23-96
L-P	Special Edition 2 Door Hardtop	23-98
BARRACUDA		
B-H	2 Door Hardtop	23-102
B-S	2 Door Hardtop	23-102
CHALLENGER		
J-H	2 Door Hardtop	23-104
SATELLITE		
R-L	2 Door Sedan	23-106
R-L	4 Door Sedan	23-108
R-L	Station Wagon	23-114
R-M	2 Door Sedan	23-106
R-H	Custom 4 Door Sedan	23-108
R-H	Sebring 2 Door Hardtop	23-110
R-H	Station Wagon	23-114
R-P	Sebring Plus 2 Door Hardtop	23-110
R-P	Regent Station Wagon	23-114
CORONET		
W-L	4 Door Sedan	23-118
W-L	Station Wagon	23-120
W-H	4 Door Sedan	23-118
W-H	Custom Station Wagon	23-120
W-P	Crestwood Station Wagon	23-120
CHARGER		
W-L	Coupe 2 Door Sedan	23-124
W-H	2 Door Hardtop	23-126
W-P	SE Fastback	23-128
PLYMOUTH		
P-L	Fury I 4 Door Sedan	23-130
P-M	Fury II 4 Door Sedan	23-130
P-M	Suburban	23-136
P-H	Fury III 4 Door Sedan	23-130
P-H	Fury III 2 Door Hardtop	23-132
P-H	Fury III 4 Door Hardtop	23-134
P-H	Custom Suburban	23-136
P-P	Gran Coupe 2 Door Hardtop	23-132
P-P	Gran Sedan 4 Door Hardtop	23-134
P-P	Sport Suburban	23-140
DODGE		
D-M	Monaco 4 Door Sedan	23-142
D-M	Monaco 2 Door Hardtop	23-144
D-M	Monaco Station Wagon	23-148
D-H	Monaco Custom 4 Door Sedan	23-142
D-H	Monaco Custom 2 Door Hardtop	23-144
D-H	Monaco Custom 4 Door Hardtop	23-146
D-H	Monaco Custom Station Wagon	23-148
D-P	Monaco Brougham 4 Door Sedan	23-142
D-P	Monaco Brougham 2 Door Hardtop	23-144
D-P	Monaco Brougham 4 Door Hardtop	23-146
D-P	Monaco Brougham Station Wagon	23-148
CHRYSLER		
C-L	Newport 4 Door Sedan	23-152
C-L	Newport 2 Door Hardtop	23-154
C-L	Newport 4 Door Hardtop	23-158
C-M	Newport Custom 4 Door Sedan	23-152
C-M	Newport Custom 2 Door Hardtop	23-154
C-M	Newport Custom 4 Door Hardtop	23-158
C-H	New Yorker 4 Door Sedan	23-160
C-H	New Yorker 4 Door Hardtop	23-162
C-S	New Yorker (Brougham) 2 Door Hardtop	23-154
C-S	New Yorker (St. Regis) 2 Door Hardtop	23-154
C-S	New Yorker (Brougham) 4 Door Sedan	23-160
C-S	New Yorker (Brougham) 4 Door Hardtop	23-162
C-P	Town & Country	23-164
IMPERIAL		
Y-M	Le Baron 2 Door Hardtop	23-166
Y-M	Le Baron 4 Door Hardtop	23-168
INTERIOR VIEWS - FRONT AND REAR		
VALIANT		23-170 thru 23-173
DART		23-174 thru 23-179

EXTERIOR VIEW ILLUSTRATION INDEX - CONTINUED

	PAGE
INTERIOR VIEWS - FRONT AND REAR - Continued	
BARRACUDA	23-180 and 23-181
CHALLENGER	23-182 and 23-183
SATELLITE	23-184 thru 23-189
CORONET	23-190 and 23-191
CHARGER	23-192 thru 23-195
PLYMOUTH	23-196 thru 23-205
DODGE	23-206 thru 23-211
CHRYSLER	23-212 thru 23-219
IMPERIAL	23-220 and 23-221

NOTES

GROUP 23 - BODY

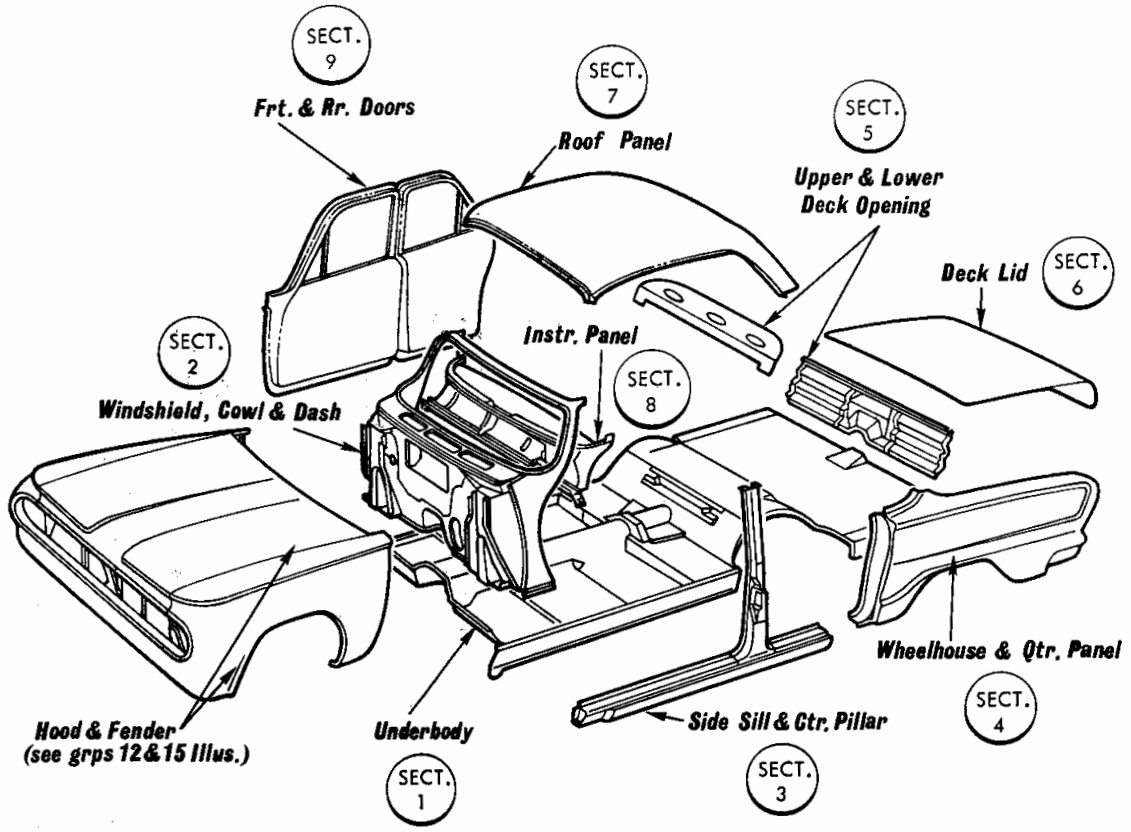

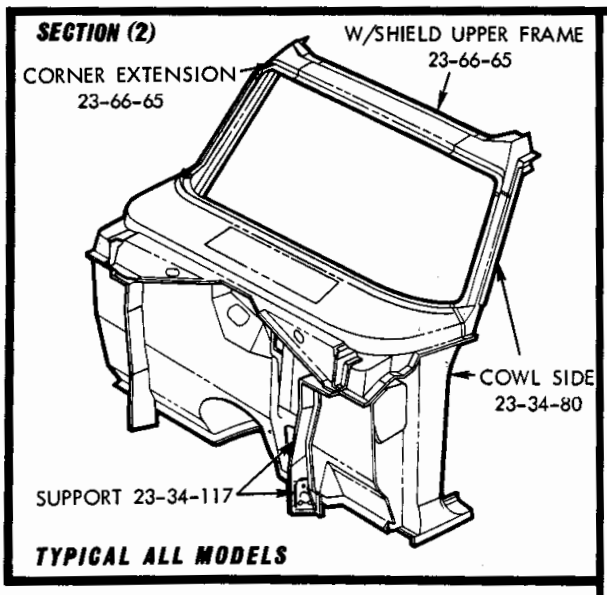

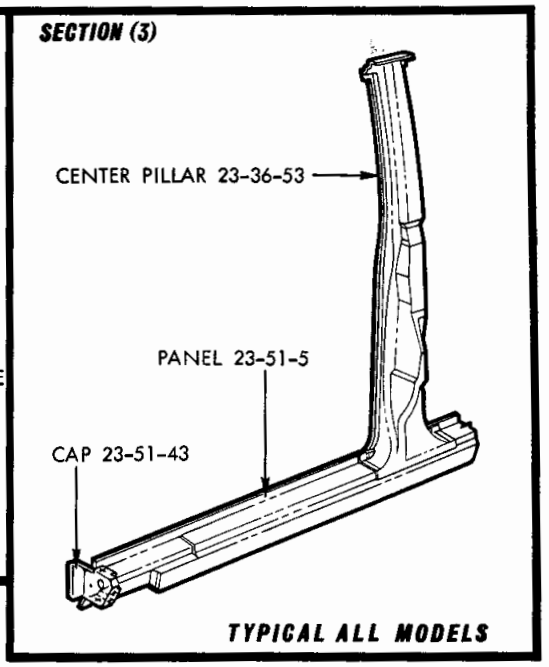

19a4556

BODY AND SHEET METAL INDEX

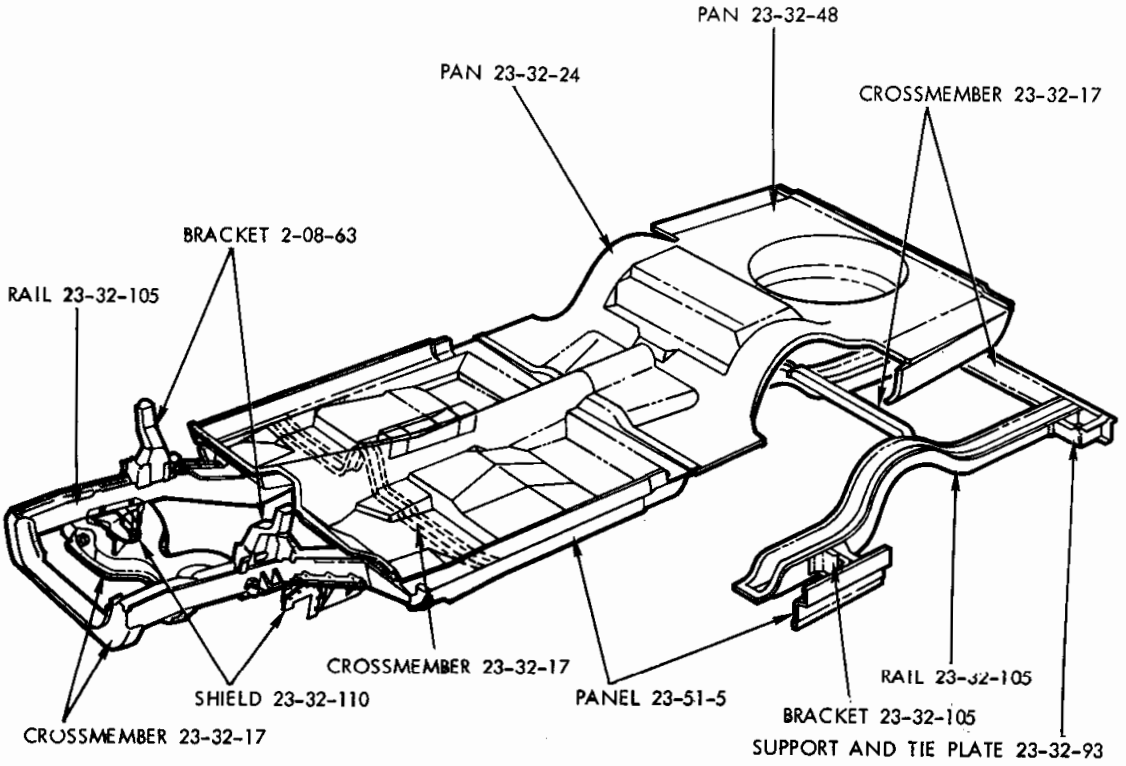

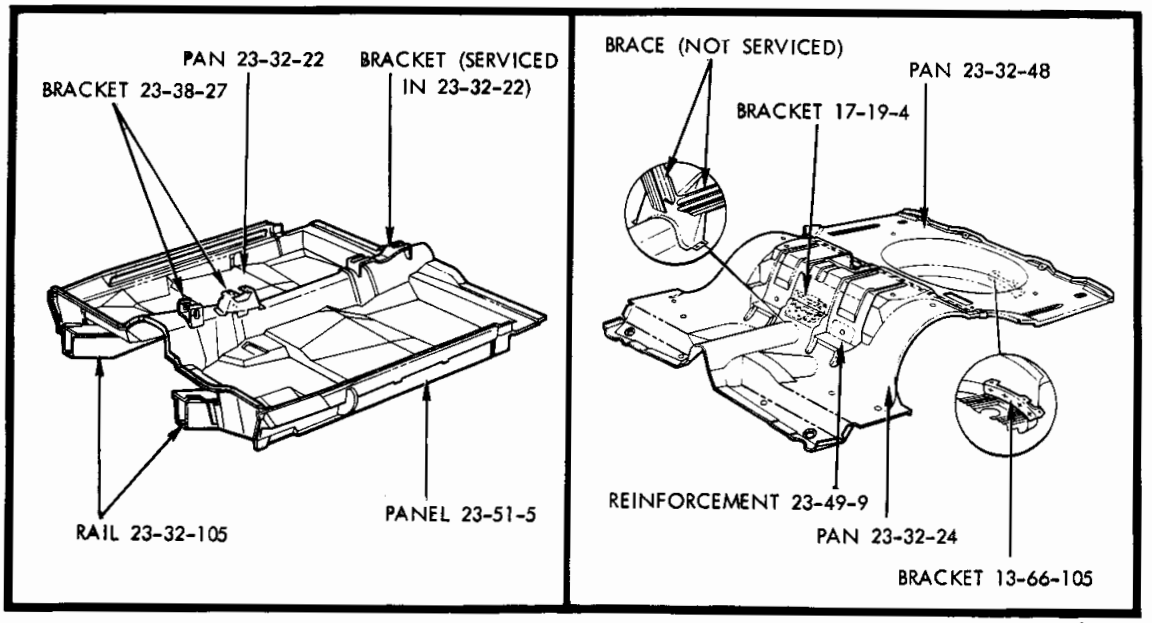

19a4551

SECTION 1
UNDERBODY - V, L

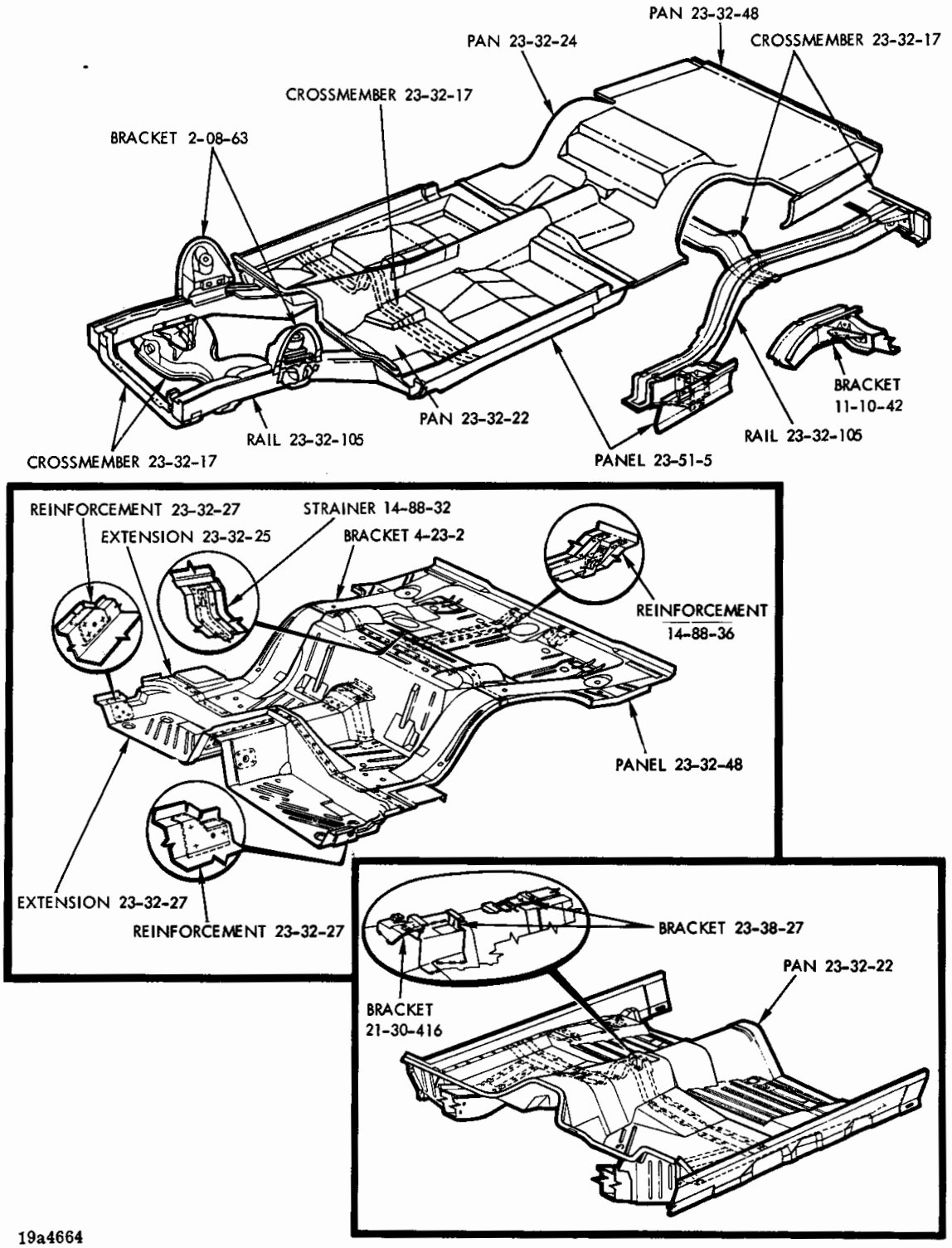
PAN 23-32-48
PAN 23-32-24
CROSSMEMBER 23-32-17
CROSSMEMBER 23-32-17
BRACKET 2-08-63
BRACKET 11-10-42
PAN 23-32-22
RAIL 23-32-105
RAIL 23-32-105
CROSSMEMBER 23-32-17
PANEL 23-51-5
REINFORCEMENT 23-32-27
STRAINER 14-88-32
EXTENSION 23-32-25
BRACKET 4-23-2
REINFORCEMENT 14-88-36
PANEL 23-32-48
EXTENSION 23-32-27
REINFORCEMENT 23-32-27
BRACKET 23-38-27
PAN 23-32-22
BRACKET 21-30-416

19a4664

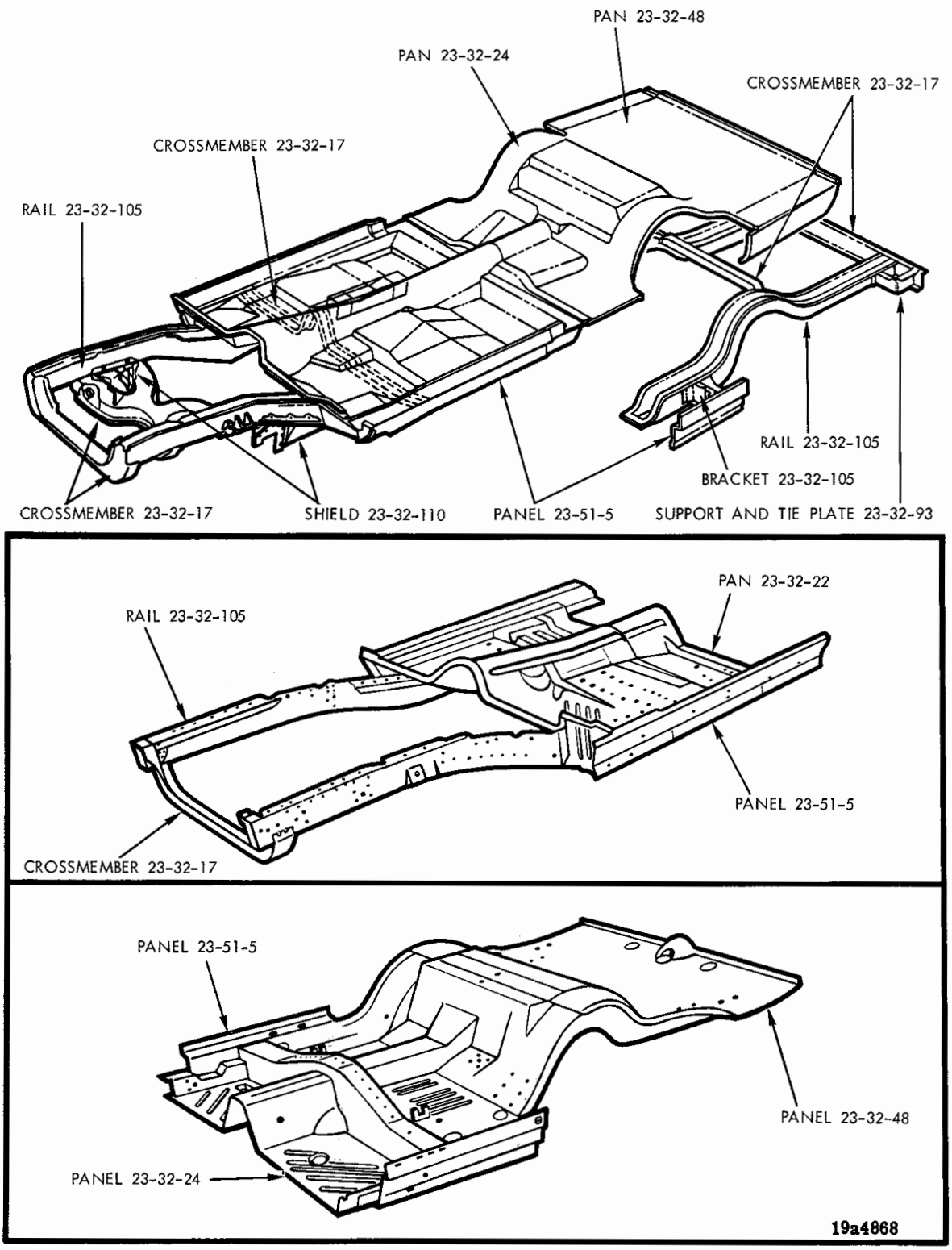

SECTION 1
UNDERBODY - R, W

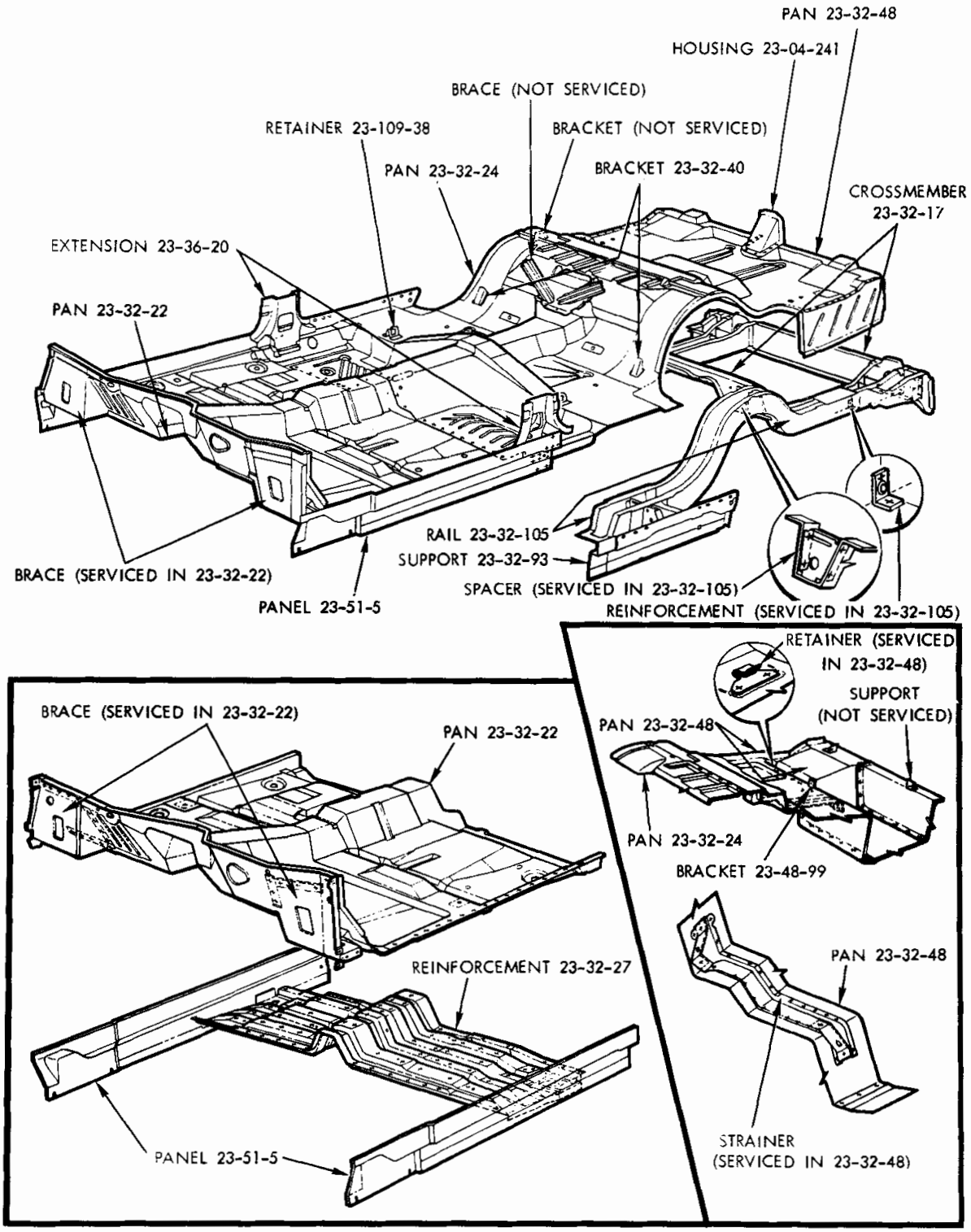
PAN 23-32-48
HOUSING 23-04-241
BRACE (NOT SERVICED)
RETAINER 23-109-38
BRACKET (NOT SERVICED)
PAN 23-32-24
BRACKET 23-32-40
CROSSMEMBER 23-32-17
EXTENSION 23-36-20
PAN 23-32-22
RAIL 23-32-105
SUPPORT 23-32-93
BRACE (SERVICED IN 23-32-22)
PANEL 23-51-5
SPACER (SERVICED IN 23-32-105)
REINFORCEMENT (SERVICED IN 23-32-105)
RETAINER (SERVICED IN 23-32-48)
SUPPORT (NOT SERVICED)
BRACE (SERVICED IN 23-32-22)
PAN 23-32-22
PAN 23-32-48
PAN 23-32-24
BRACKET 23-48-99
REINFORCEMENT 23-32-27
PAN 23-32-48
PANEL 23-51-5
STRAINER (SERVICED IN 23-32-48)

19a4869

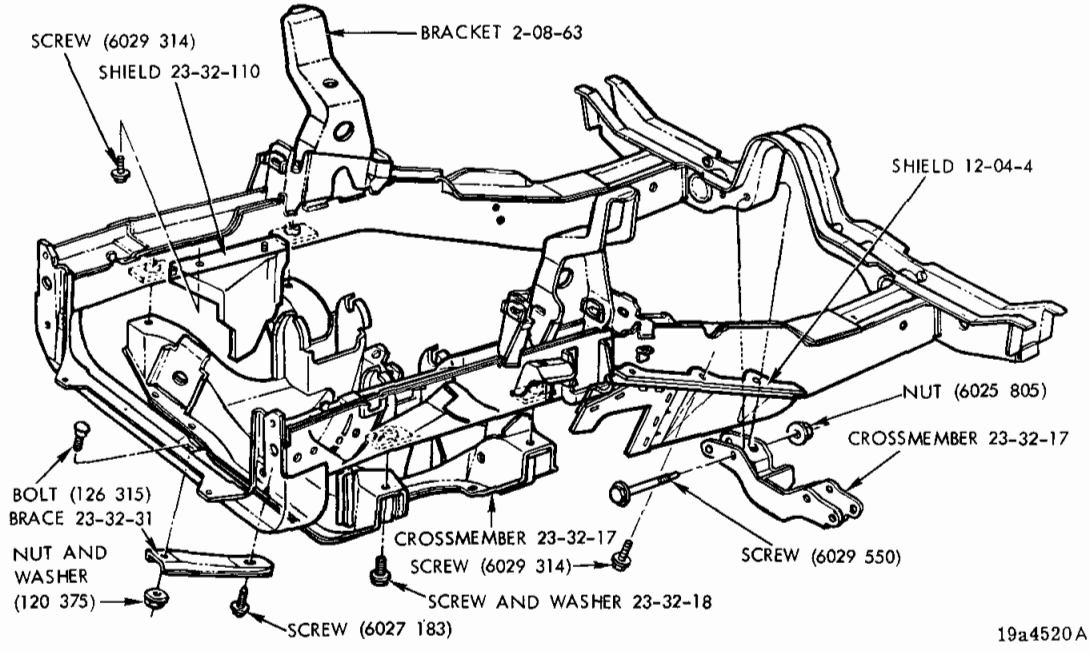

SECTION 1
FRAME - V, L

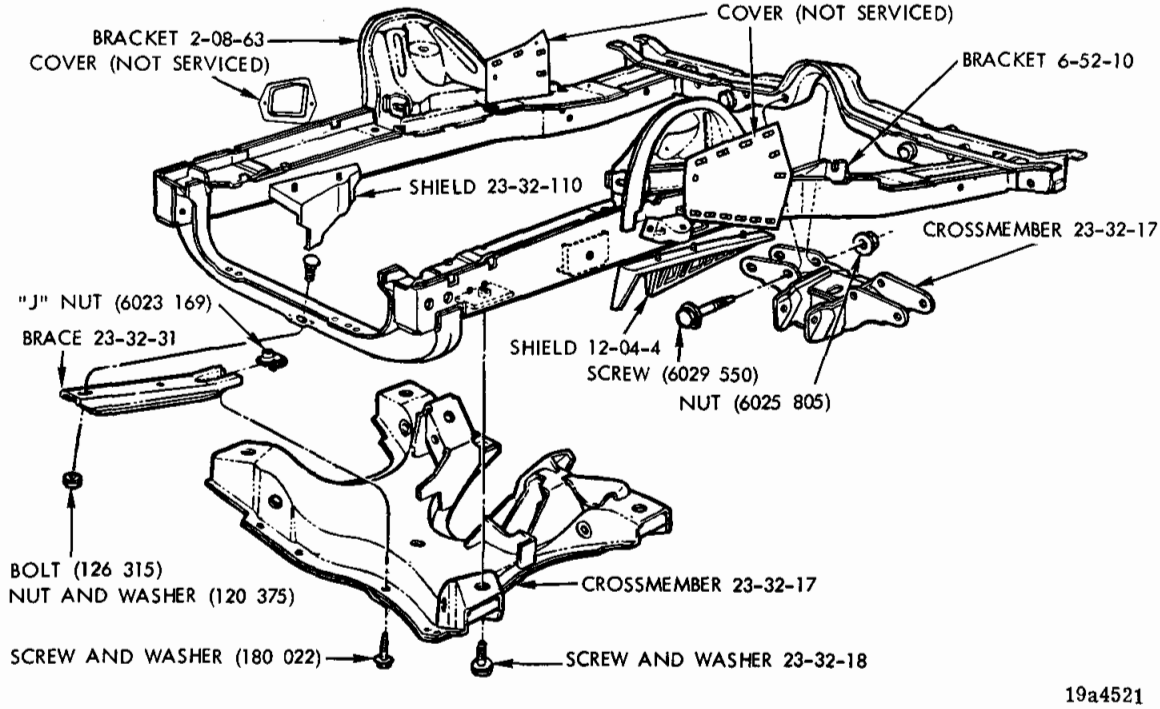

SECTION 1
FRAME - B, J

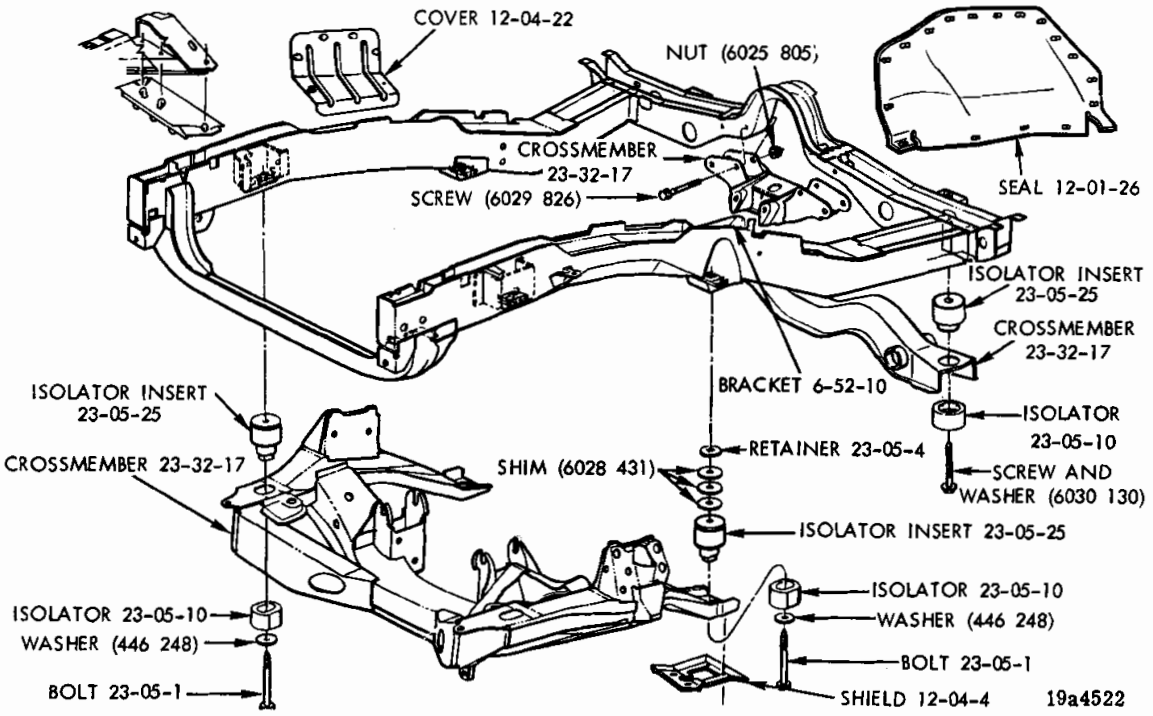

SECTION 1
FRAME - R, W

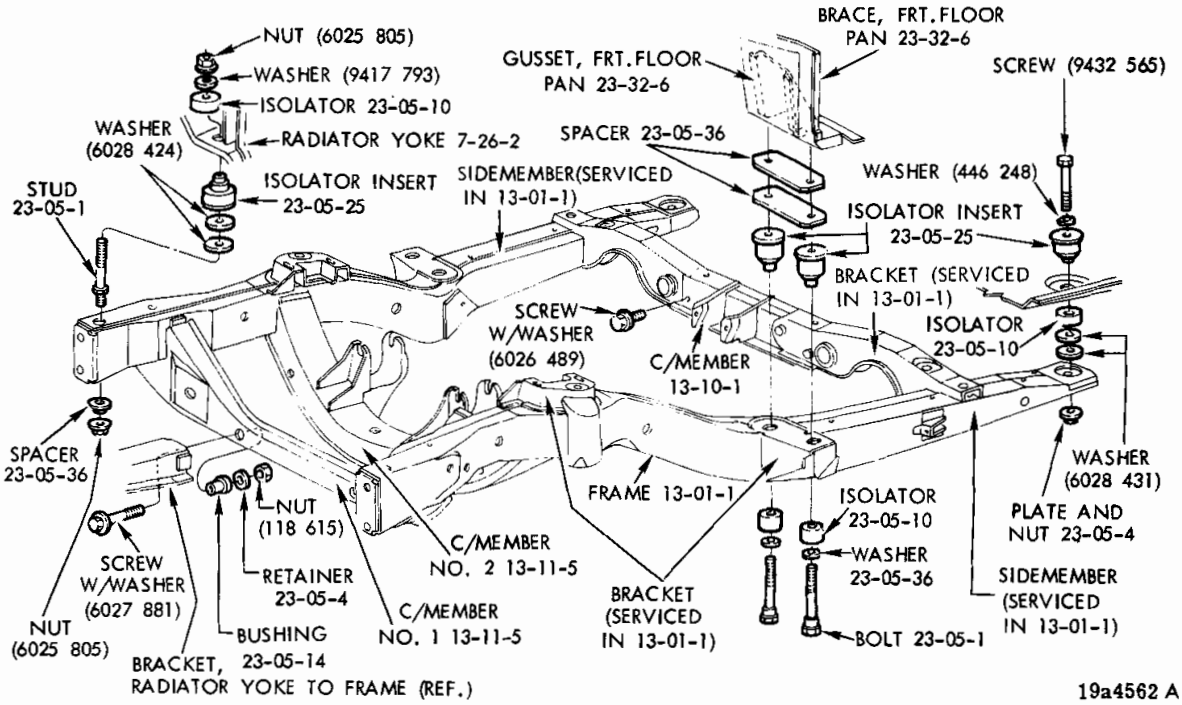

SECTION 1
FRAME - P, D, C, Y

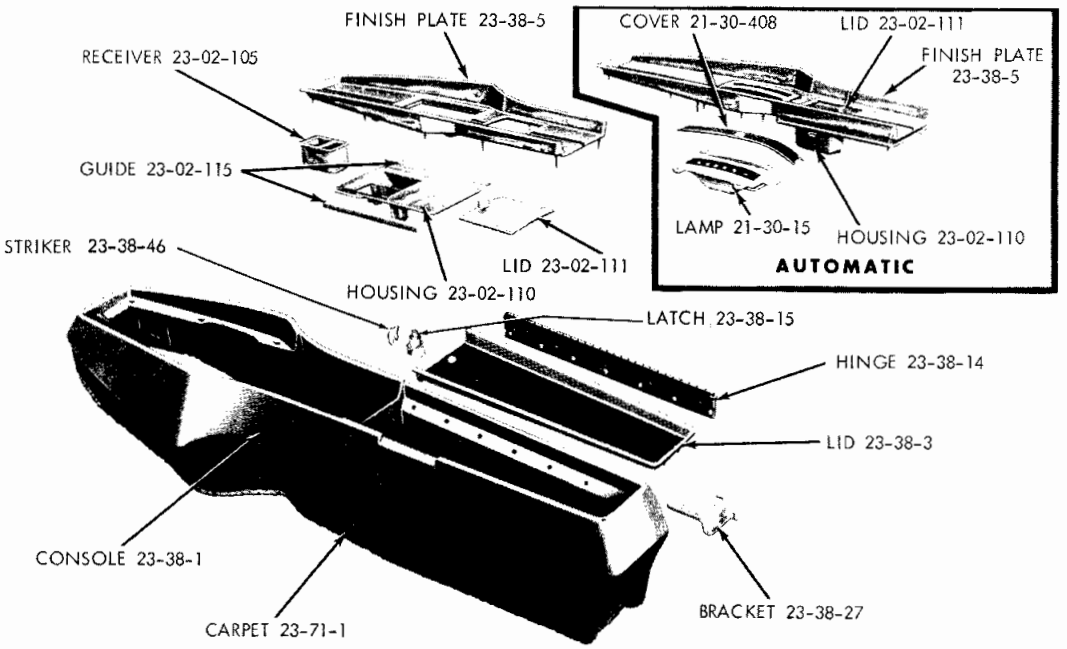

SECTION 1
FLOOR CONSOLE - V, L

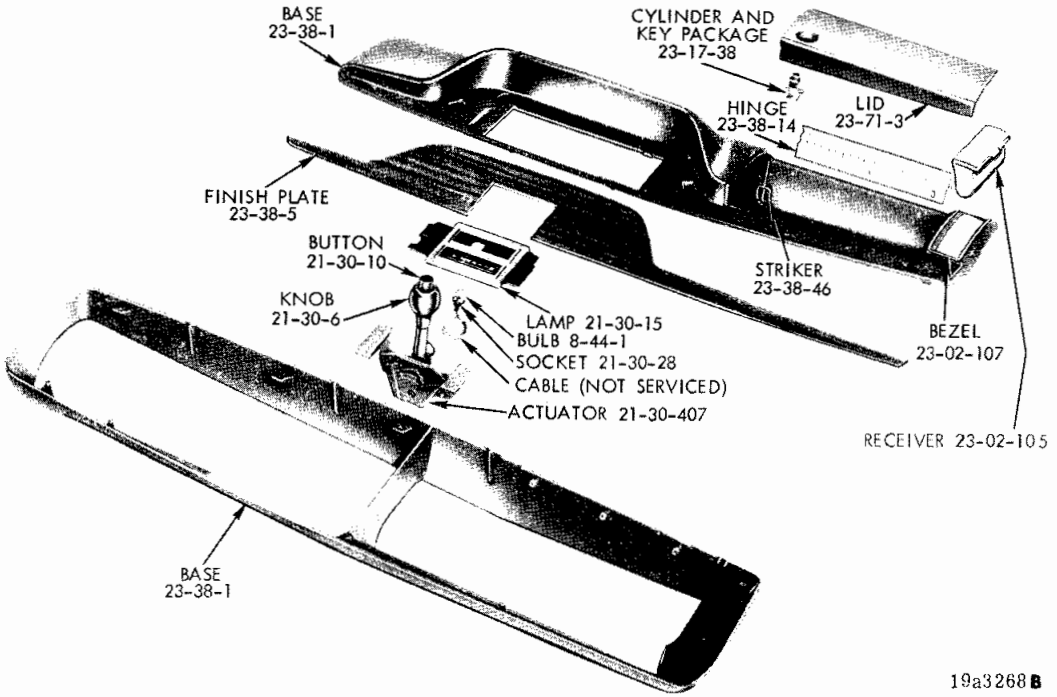

SECTION 1
FLOOR CONSOLE (WITH AUTOMATIC TRANSMISSION - B, J

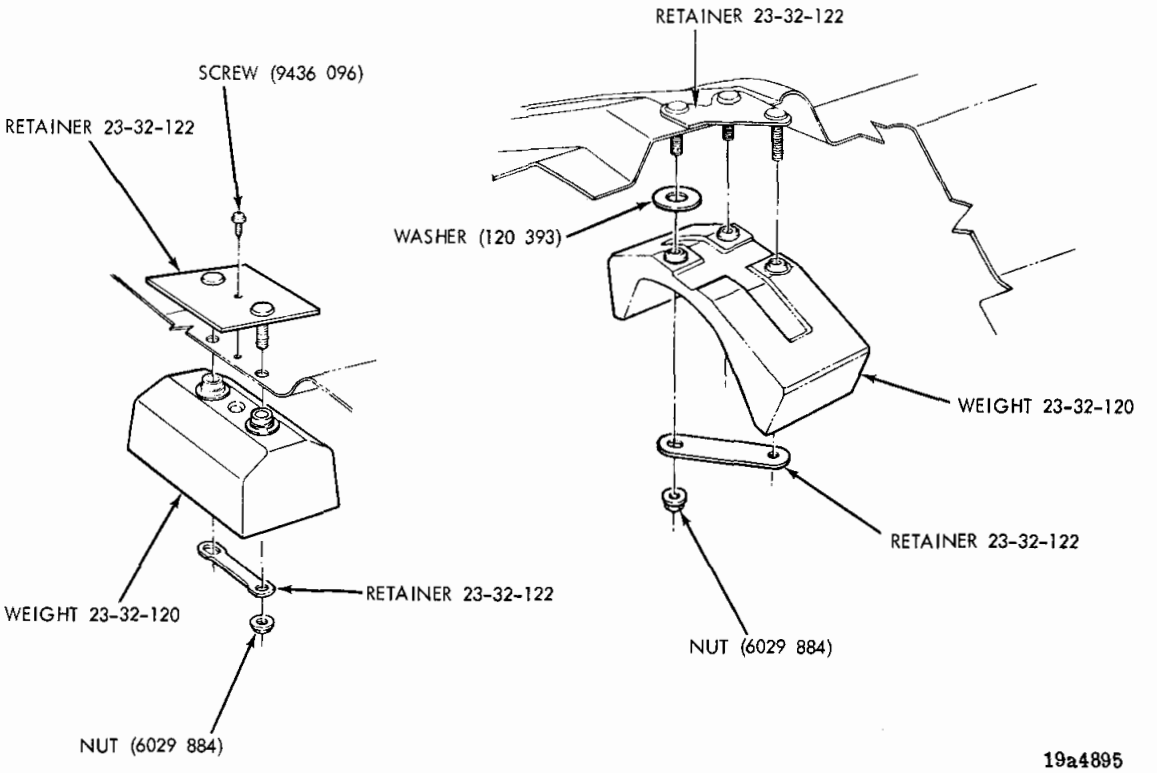

SECTION 1
CENTER FLOOR PAN DAMPER - V, L, R, W

NOTES

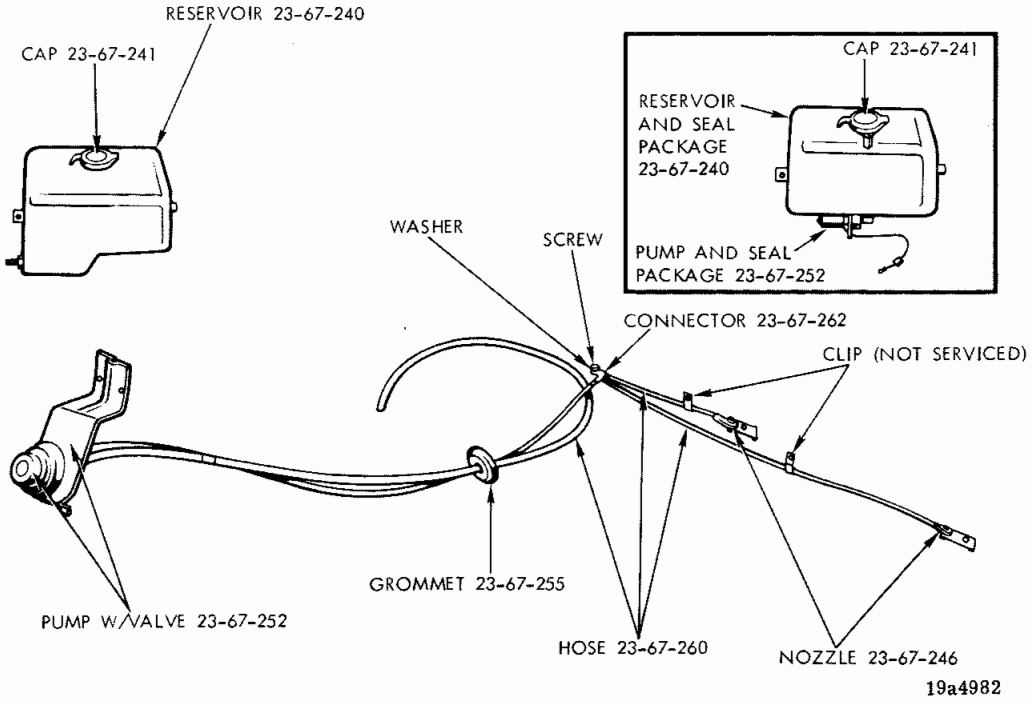

SECTION 2
WINDSHIELD WASHER SYSTEM (FOOT OPERATED) - V, L

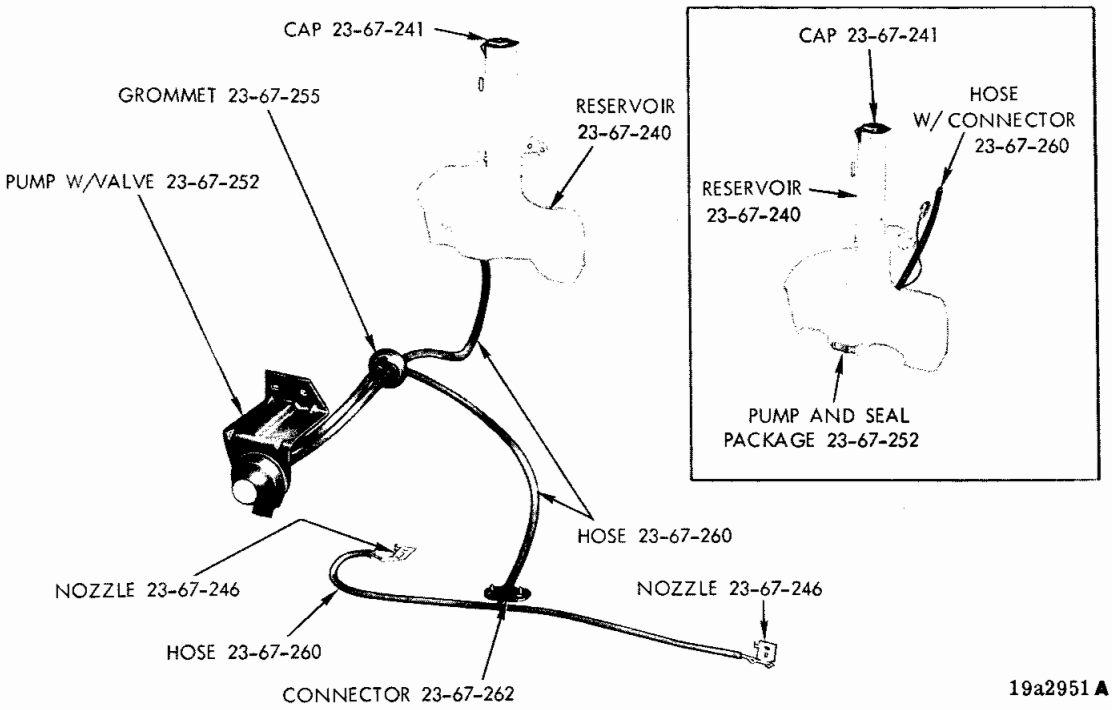

SECTION 2
WINDSHIELD WASHER SYSTEM (FOOT OPERATED) - B, J

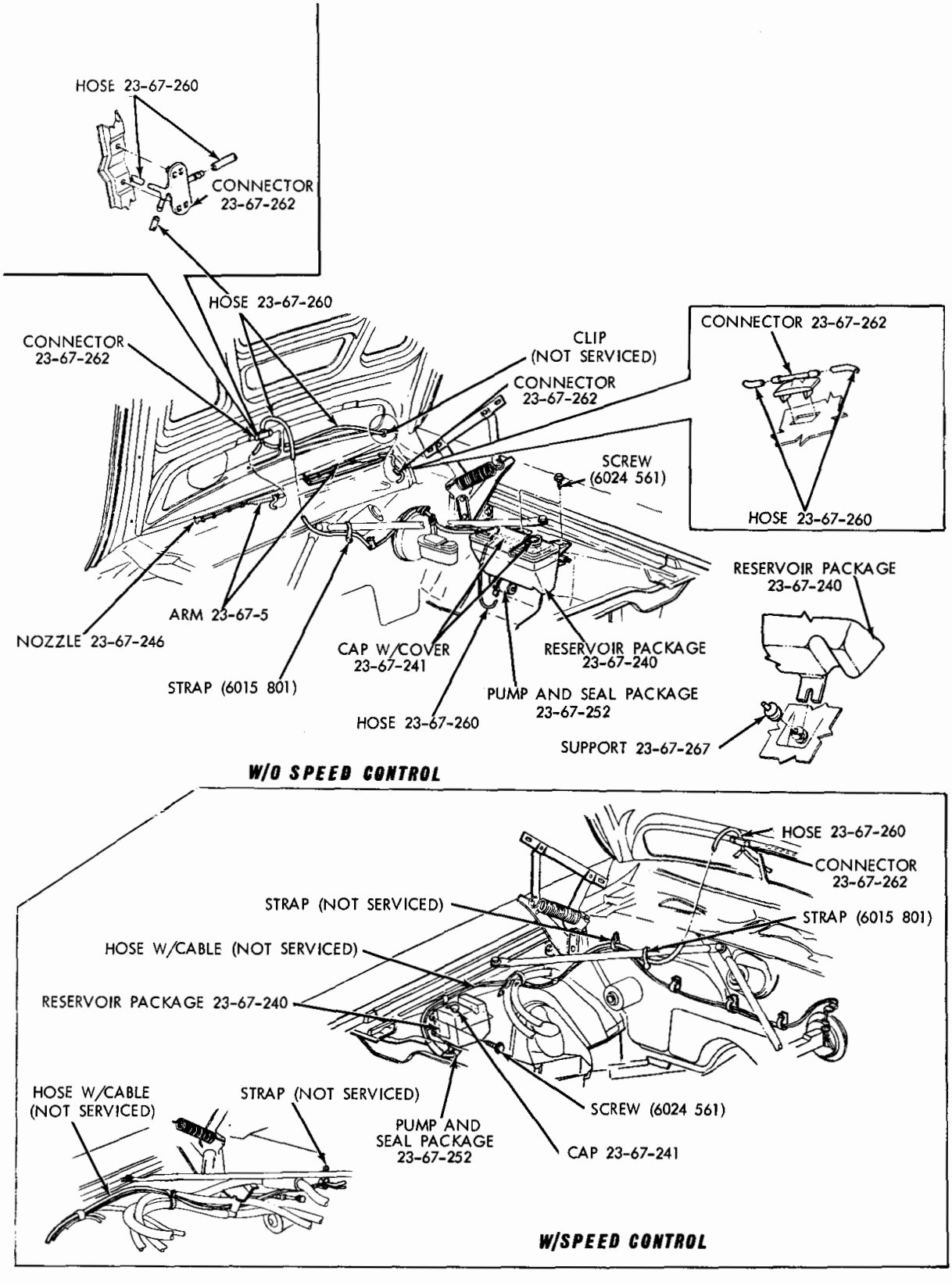

19a4850

SECTION 2
WINDSHIELD WASHER SYSTEM - R, W

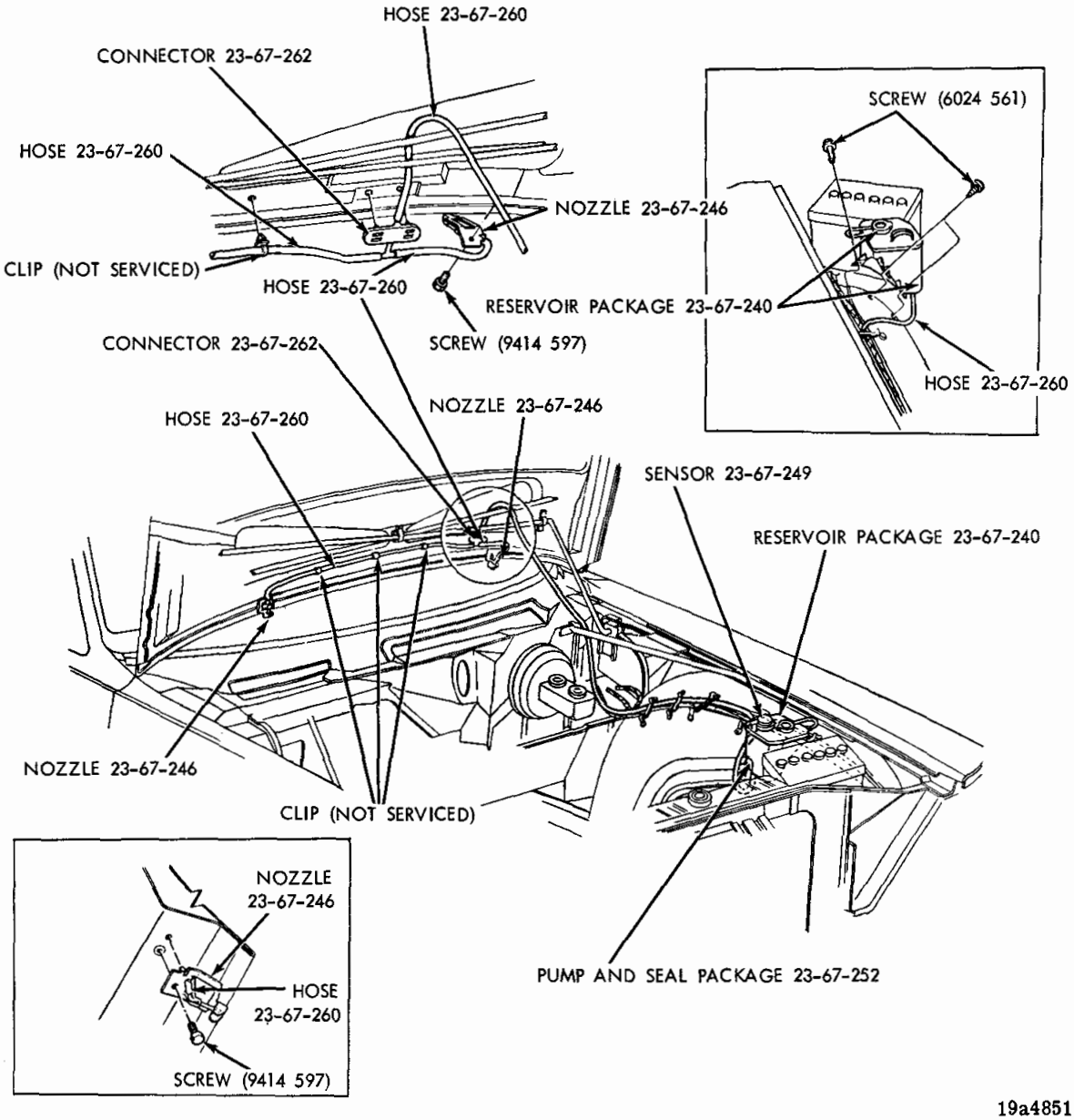

19a4851

SECTION 2
WINDSHIELD WASHER SYSTEM - P, D, C, Y

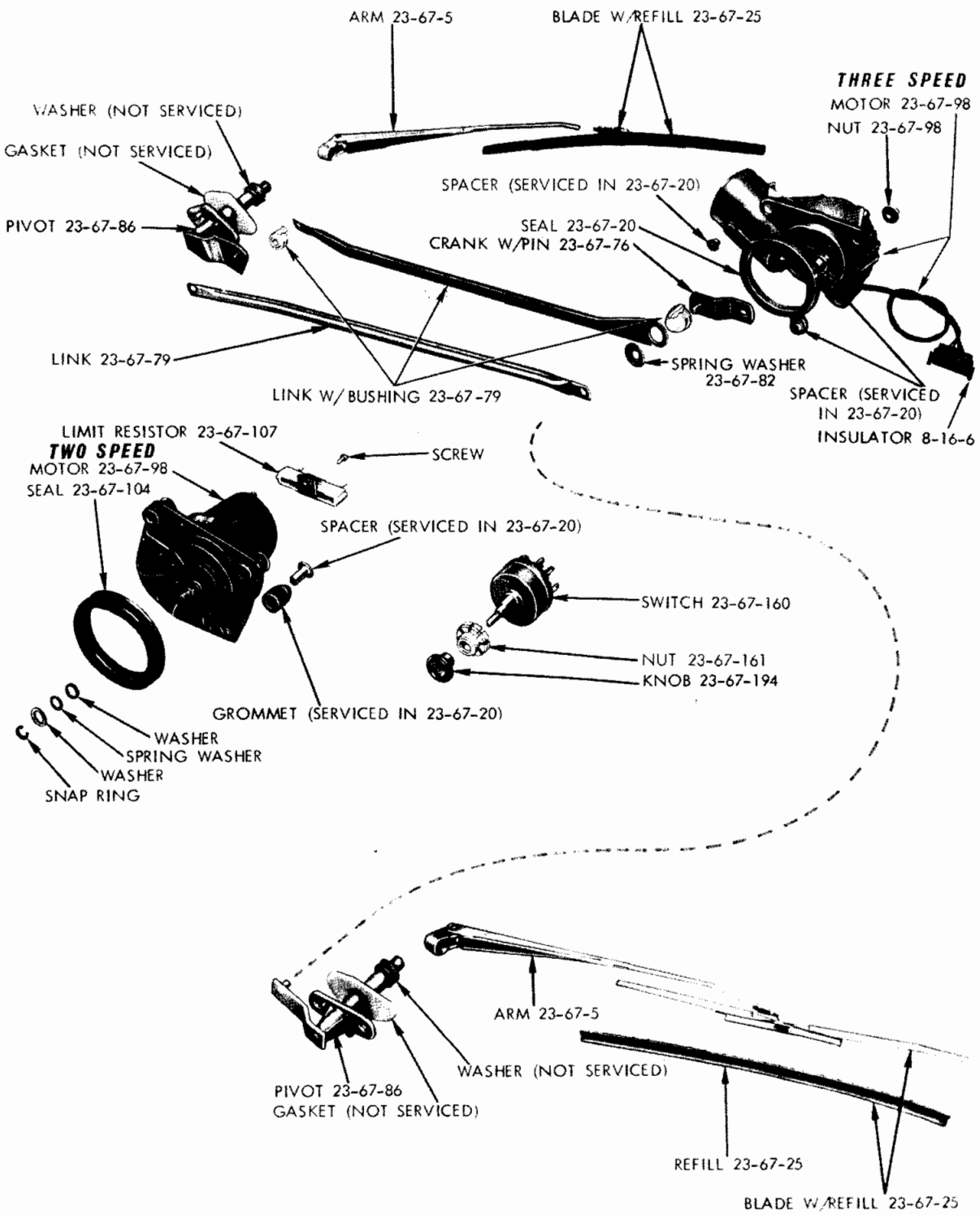

PARTS INDICATED BY NAME ONLY - ORDER BY DESCRIPTION

19a2657C

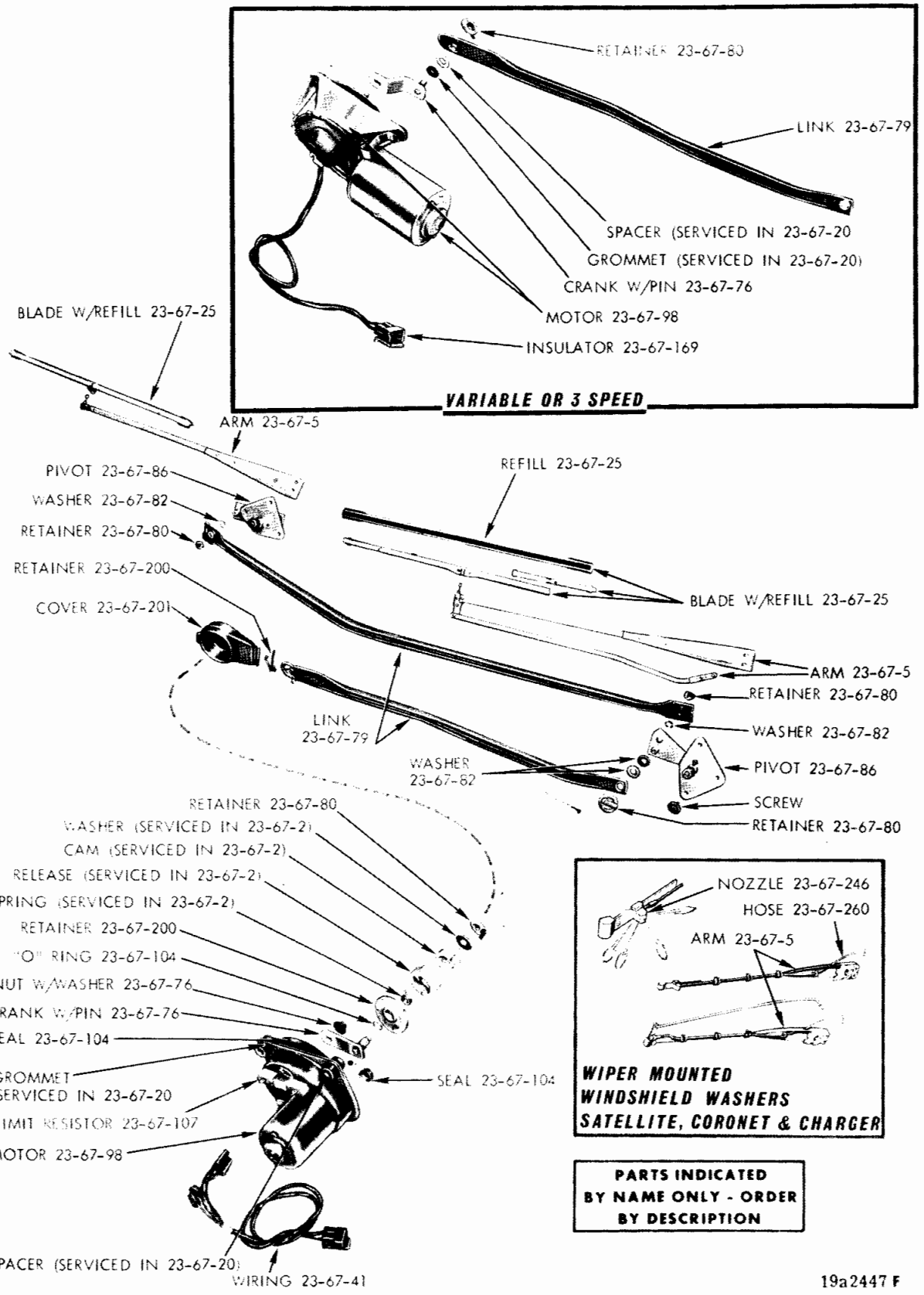

SECTION 2
WINDSHIELD WIPER (2 SPEED AND 3 SPEED) - B, J
(TYPICAL OF R, W, P, D, C, Y)

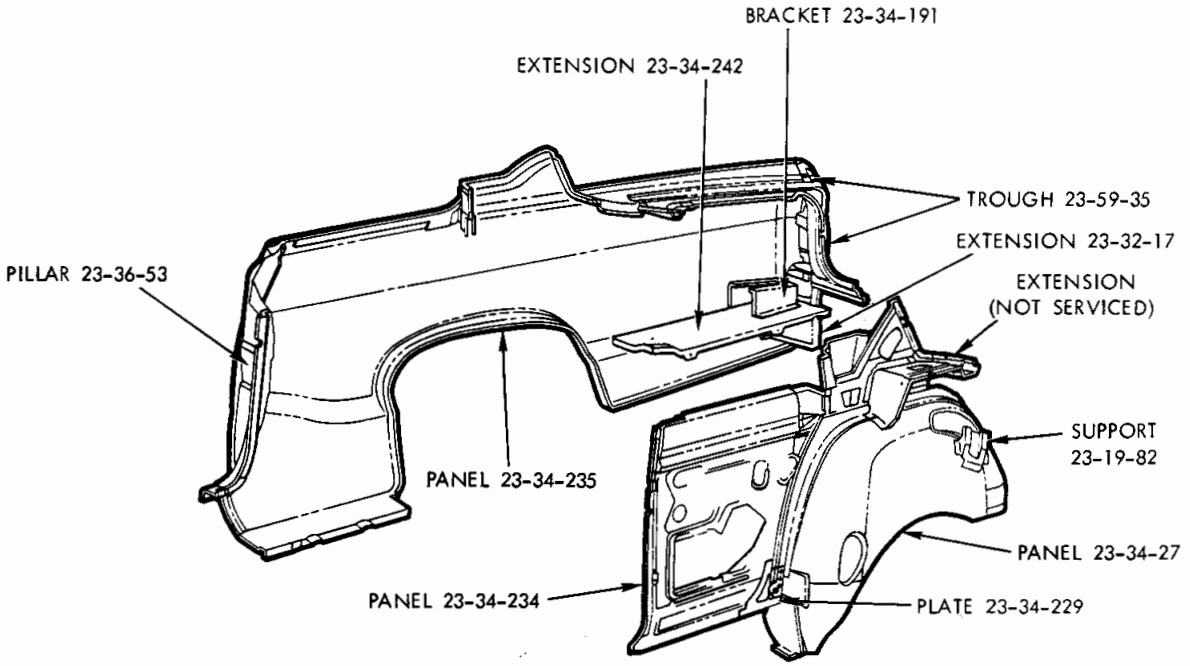
BRACKET 23-34-191
EXTENSION 23-34-242
TROUGH 23-59-35
EXTENSION 23-32-17
EXTENSION
(NOT SERVICED)
PILLAR 23-36-53
SUPPORT
23-19-82
PANEL 23-34-235
PANEL 23-34-27
PANEL 23-34-234
PLATE 23-34-229
V,L-41

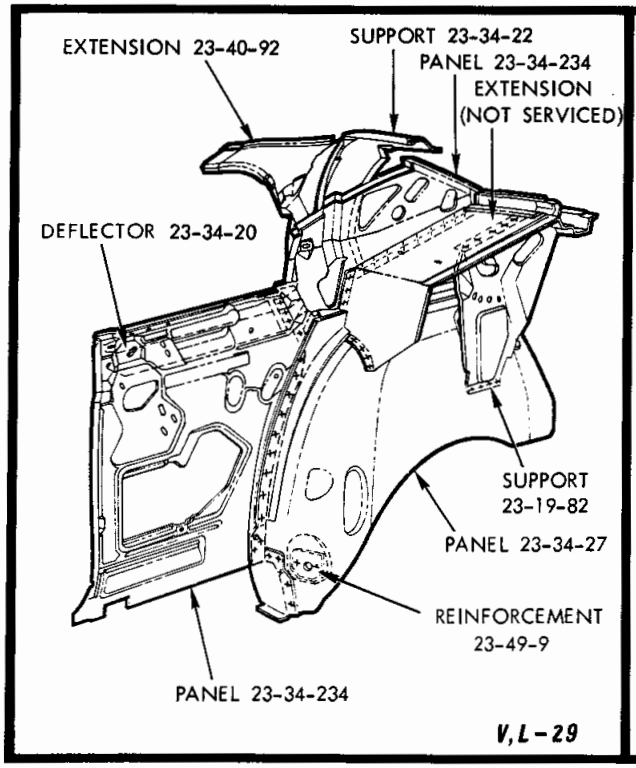
EXTENSION 23-40-92
SUPPORT 23-34-22
PANEL 23-34-234
EXTENSION
(NOT SERVICED)
DEFLECTOR 23-34-20
SUPPORT
23-19-82
PANEL 23-34-27
REINFORCEMENT
23-49-9
PANEL 23-34-234
V,L-29

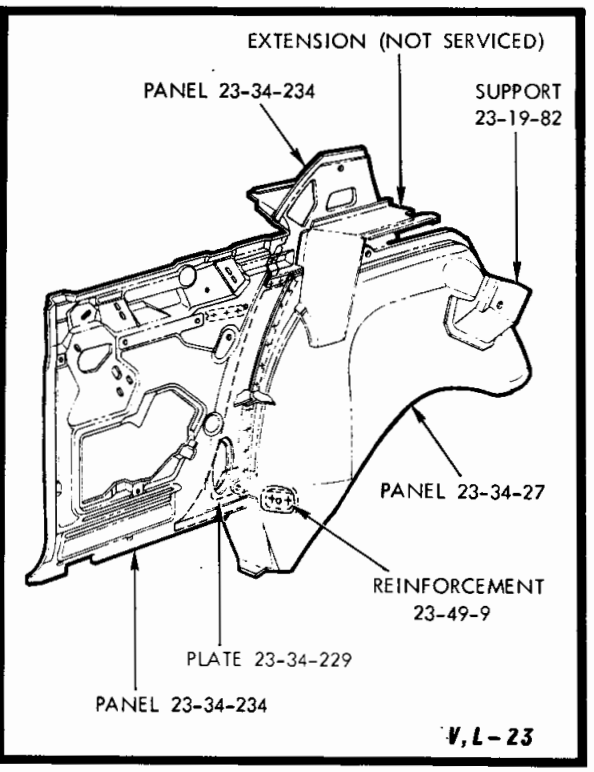
EXTENSION (NOT SERVICED)
PANEL 23-34-234
SUPPORT
23-19-82
PANEL 23-34-27
REINFORCEMENT
23-49-9
PLATE 23-34-229
PANEL 23-34-234
V,L-23

19a4595

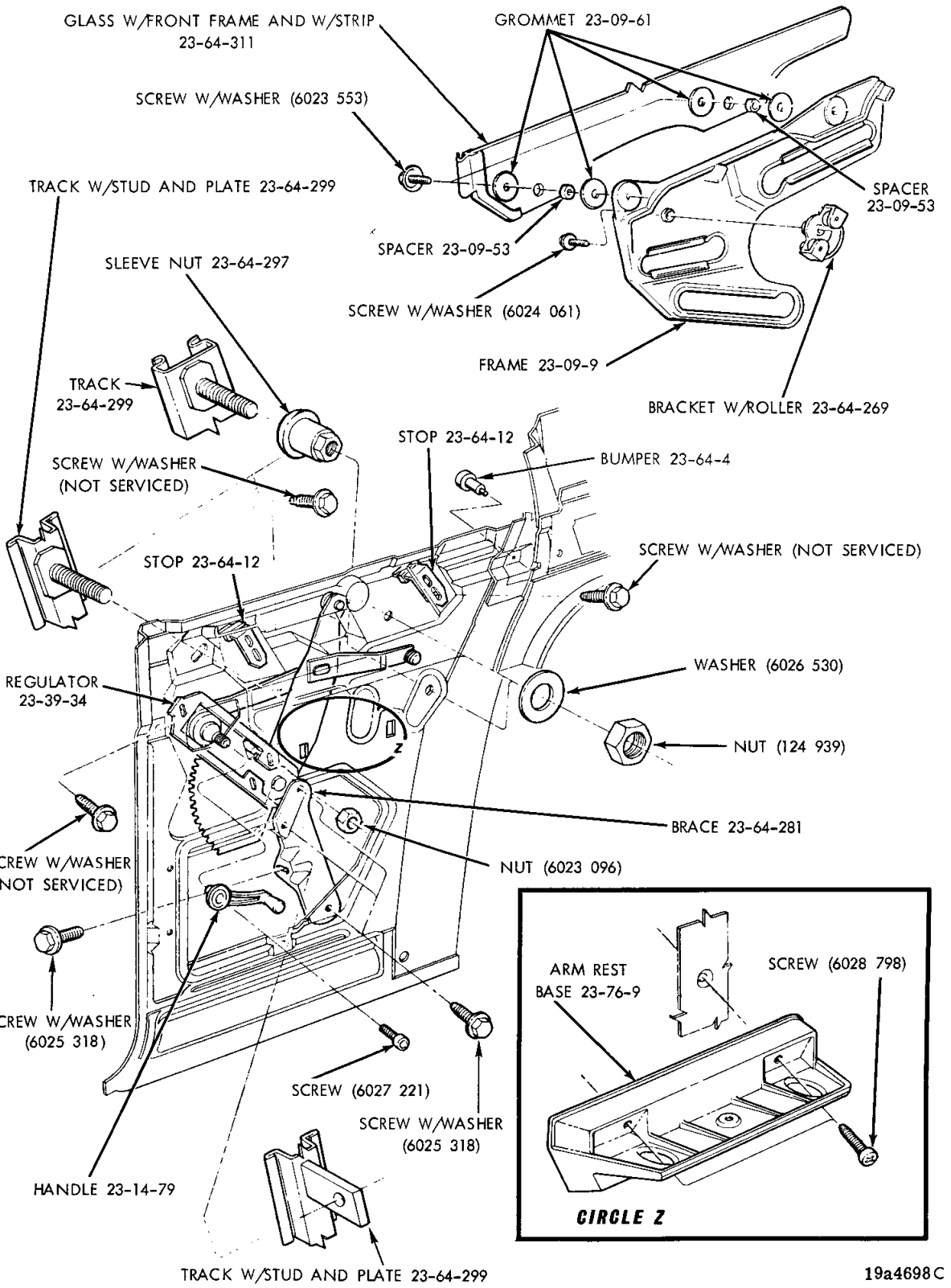

SECTION 4
QUARTER INSIDE PANEL - VALIANT AND DART 2 DOOR HARDTOP

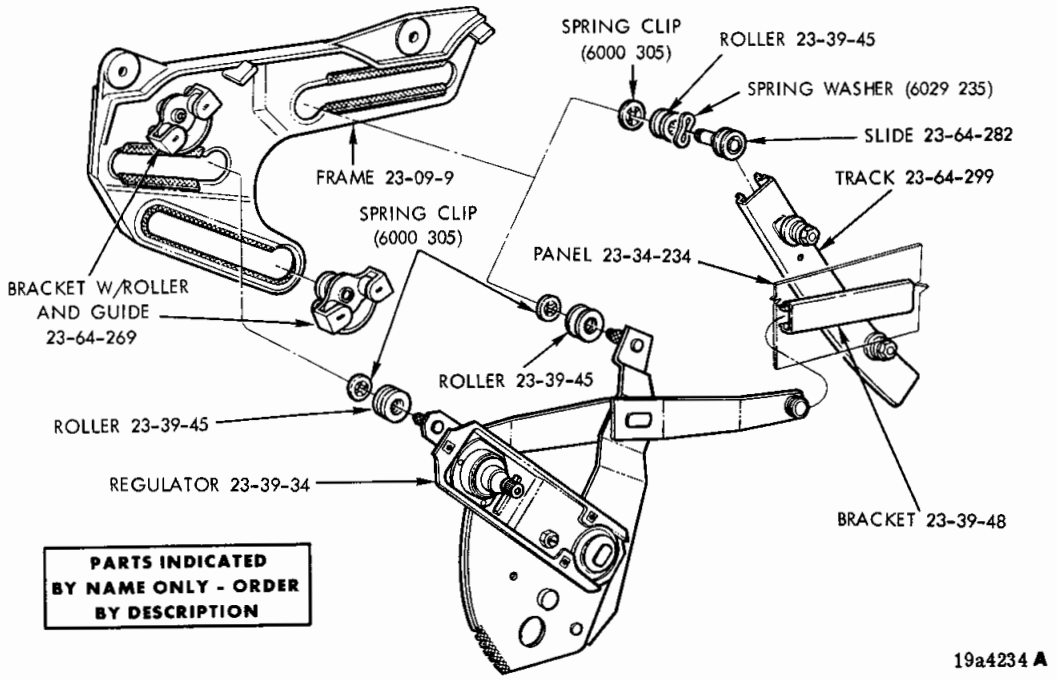

SECTION 4
QUARTER WINDOW REGULATOR AREA - VALIANT AND DART 2 DOOR HARDTOP

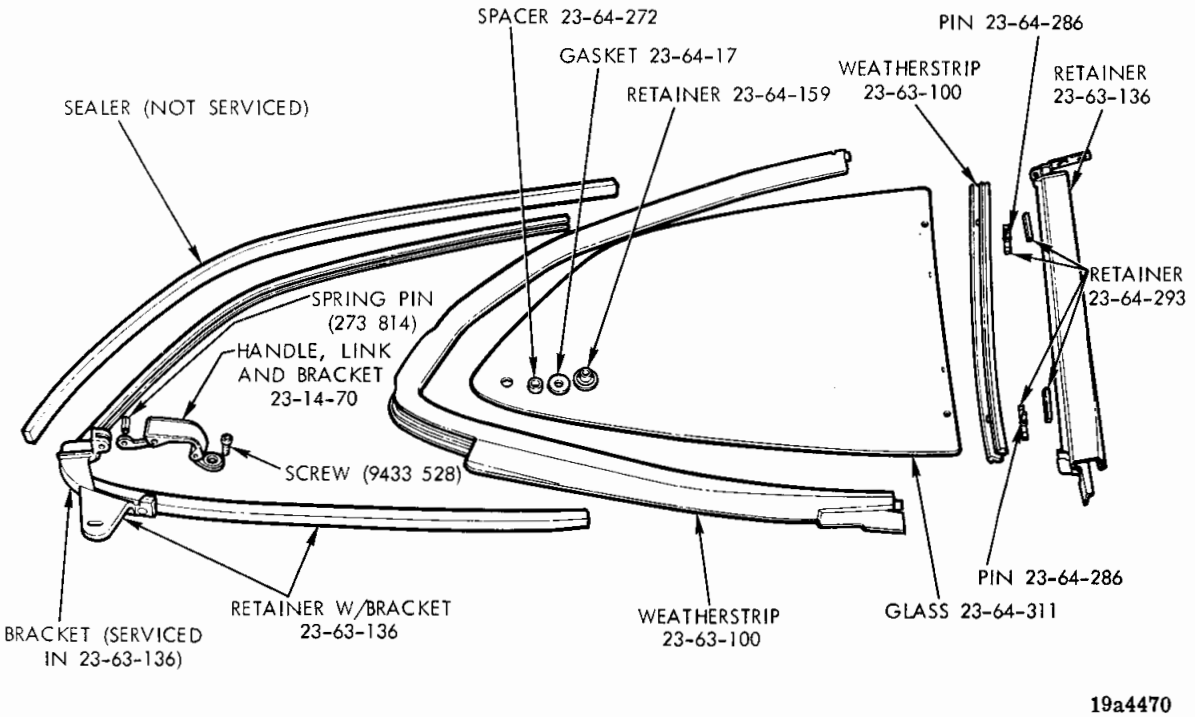

SECTION 4
QUARTER WINDOW (VENT TYPE) - VALIANT AND DART FASTBACK

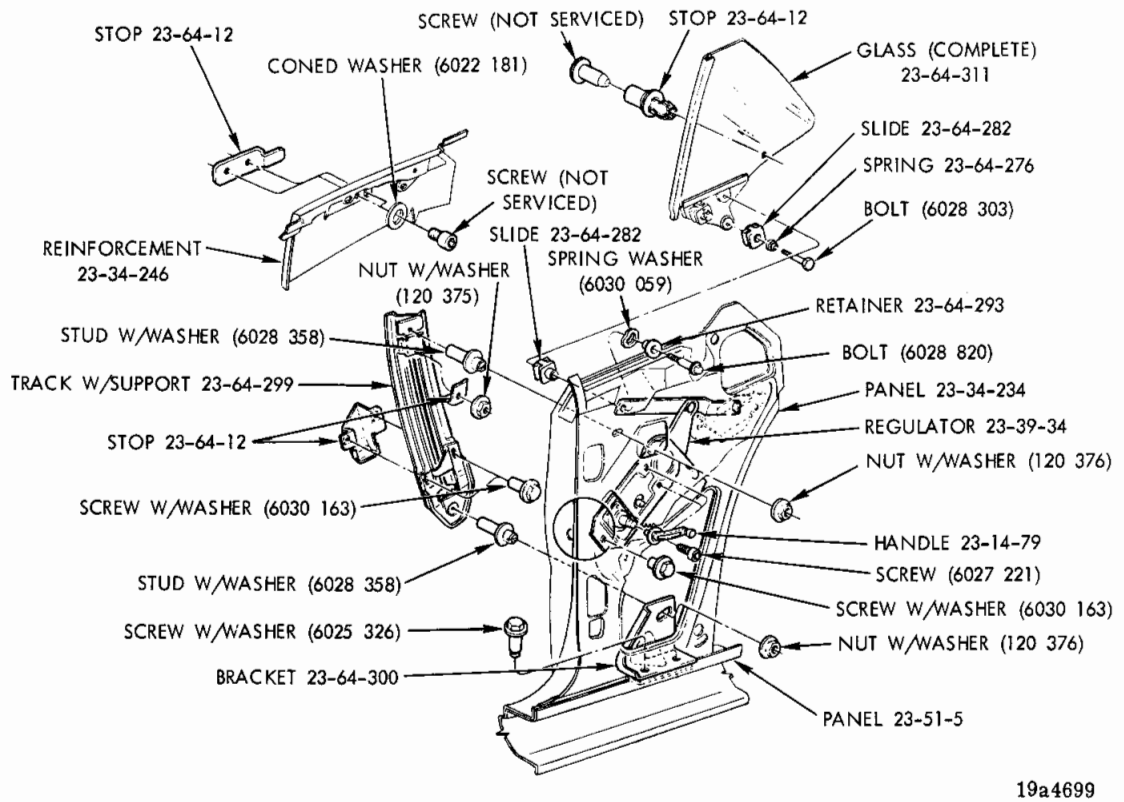

SECTION 4
QUARTER INSIDE PANEL - BARRACUDA AND CHALLENGER 2 DOOR HARDTOP

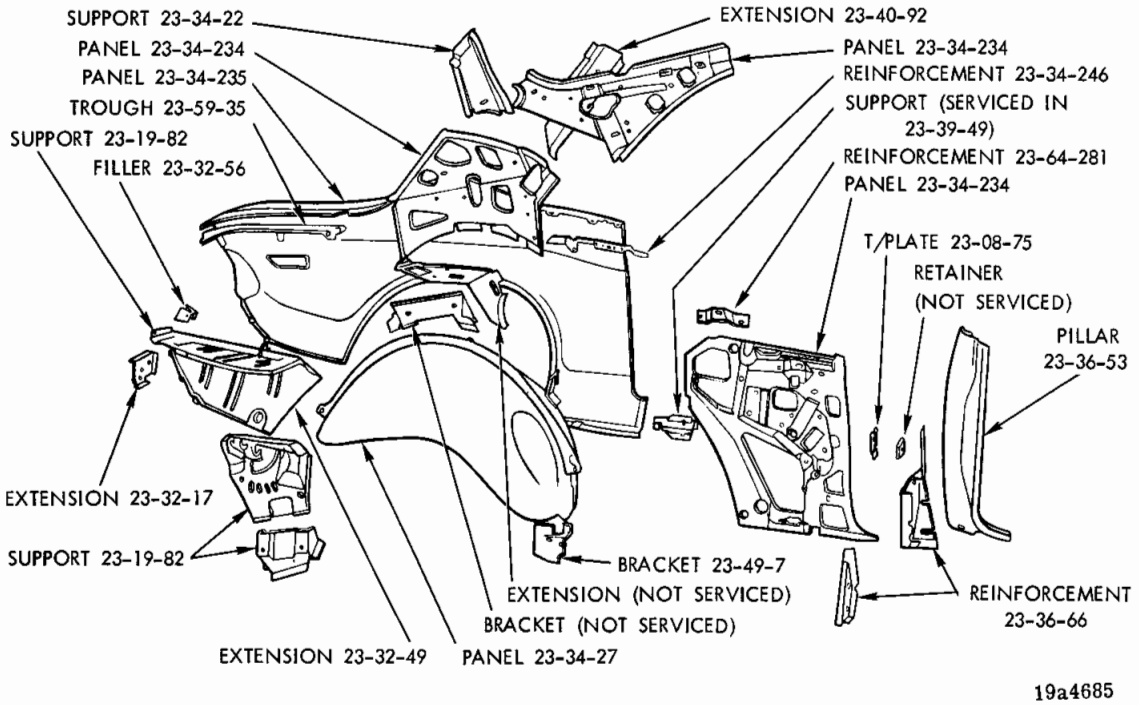

SECTION 4
REAR QUARTER PANEL - B, J 2 DOOR HARDTOP

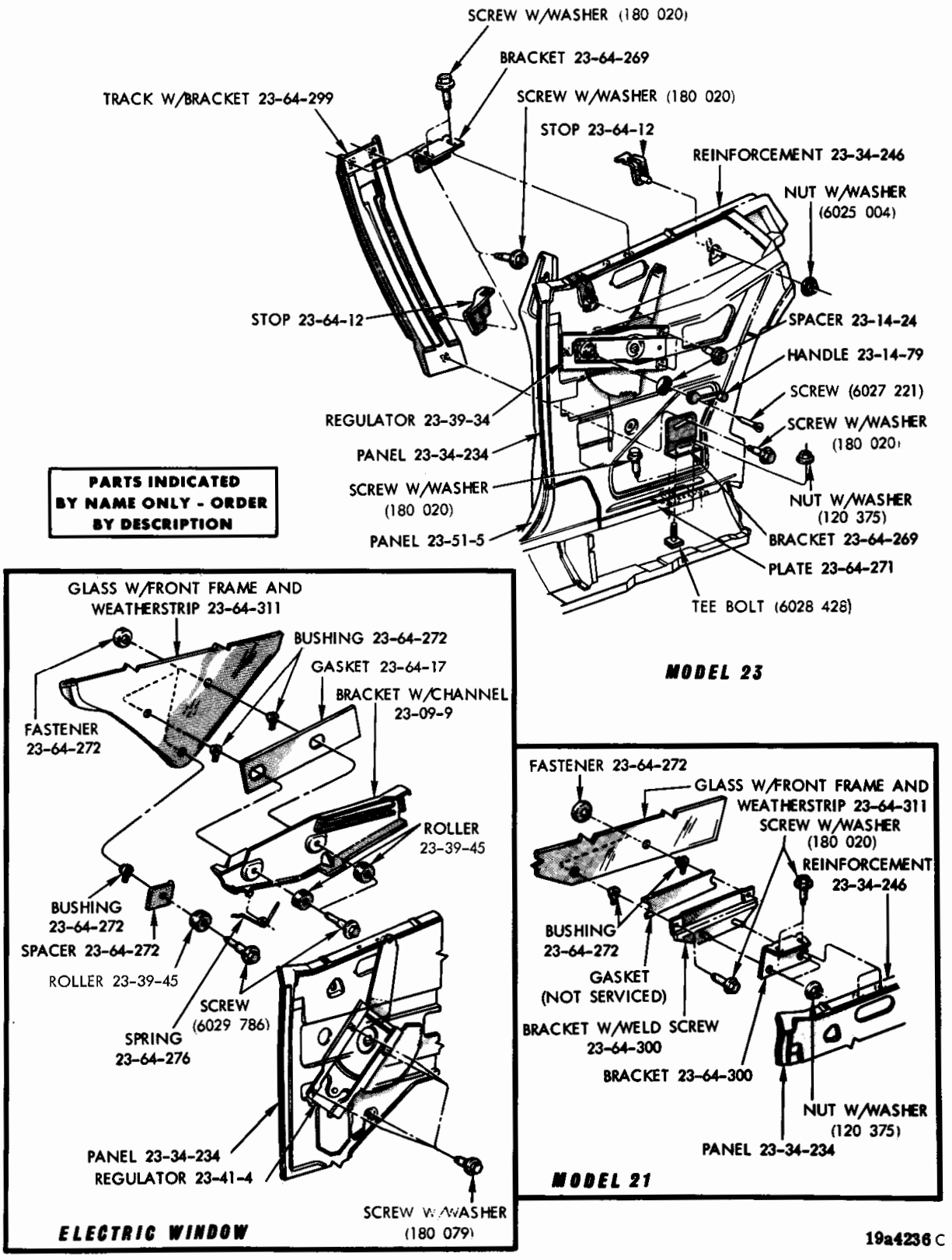

19a4236 C

SECTION 4
QUARTER INSIDE PANEL - SATELLITE AND CHARGER 2 DOOR SEDAN AND 2 DOOR HARDTOP

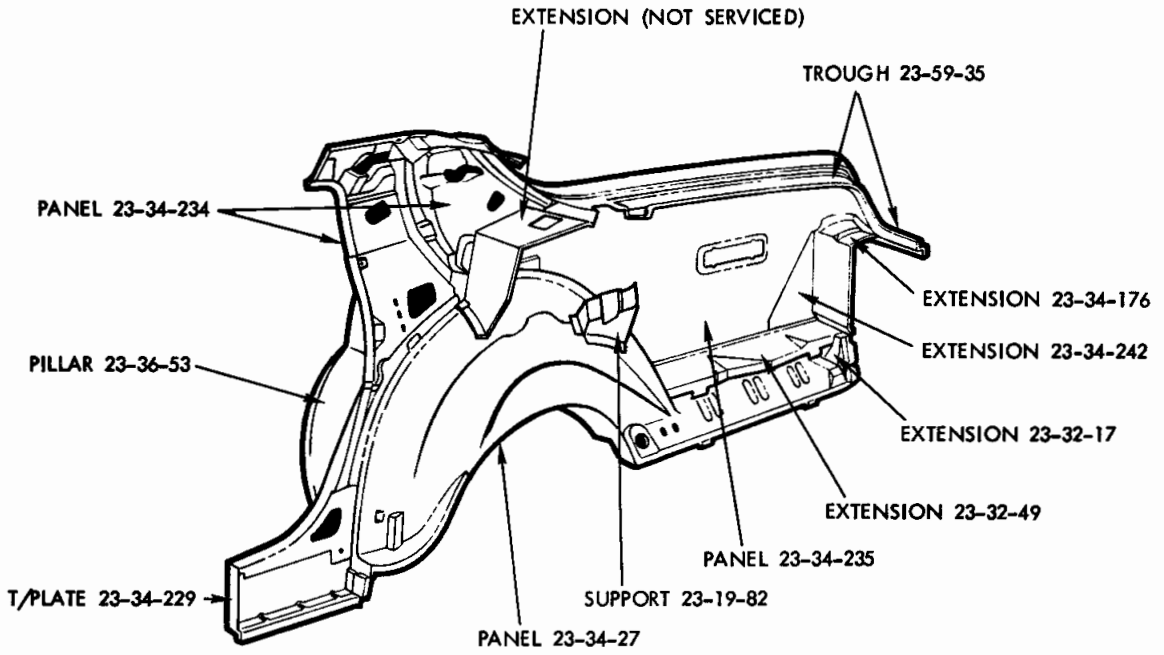

41

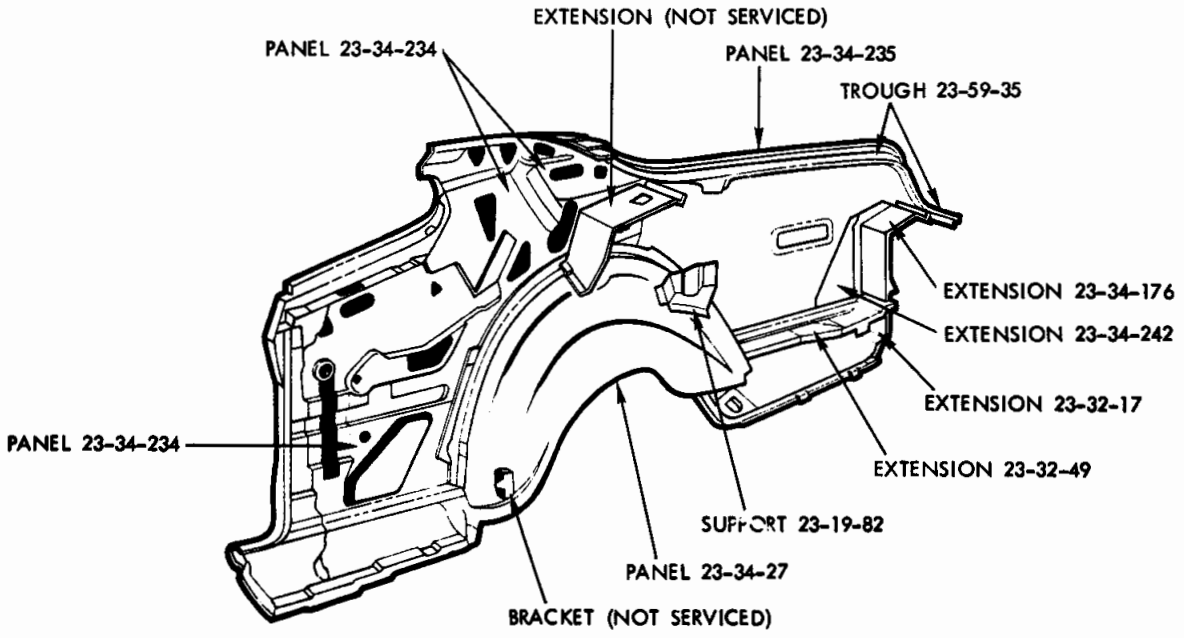

23, 29

19a4835

SECTION 4

REAR QUARTER PANEL - SATELLITE AND CORONET 4 DOOR SEDAN, 2 DOOR HARDTOP, FASTBACK

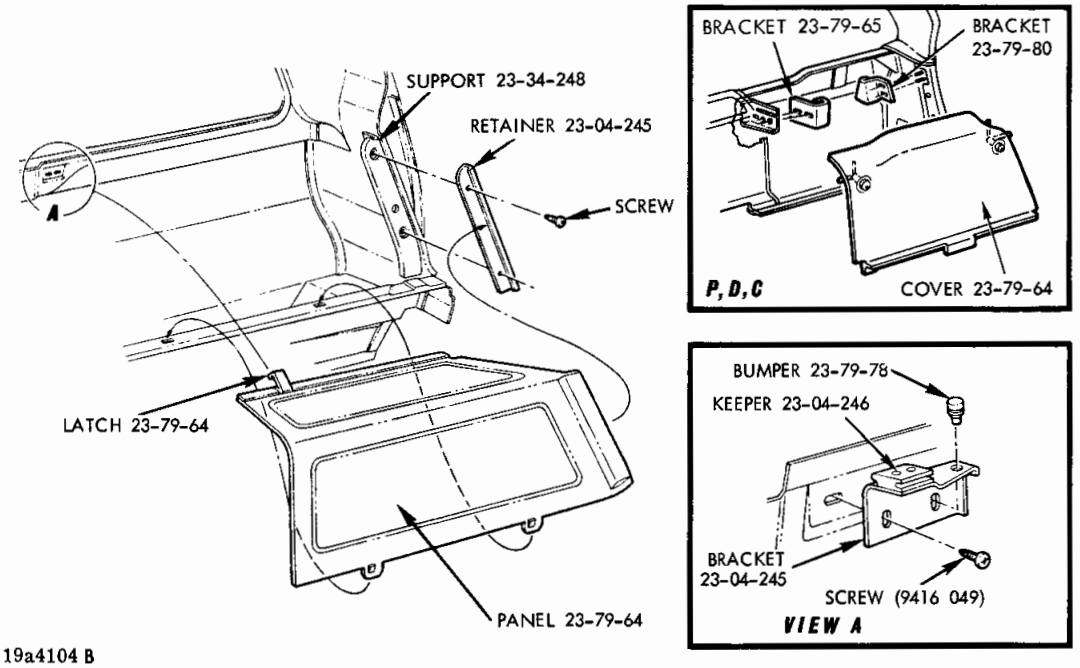

19a4104 B

SECTION 4
SPARE TIRE COVER OR PANEL - R, W STATION WAGON

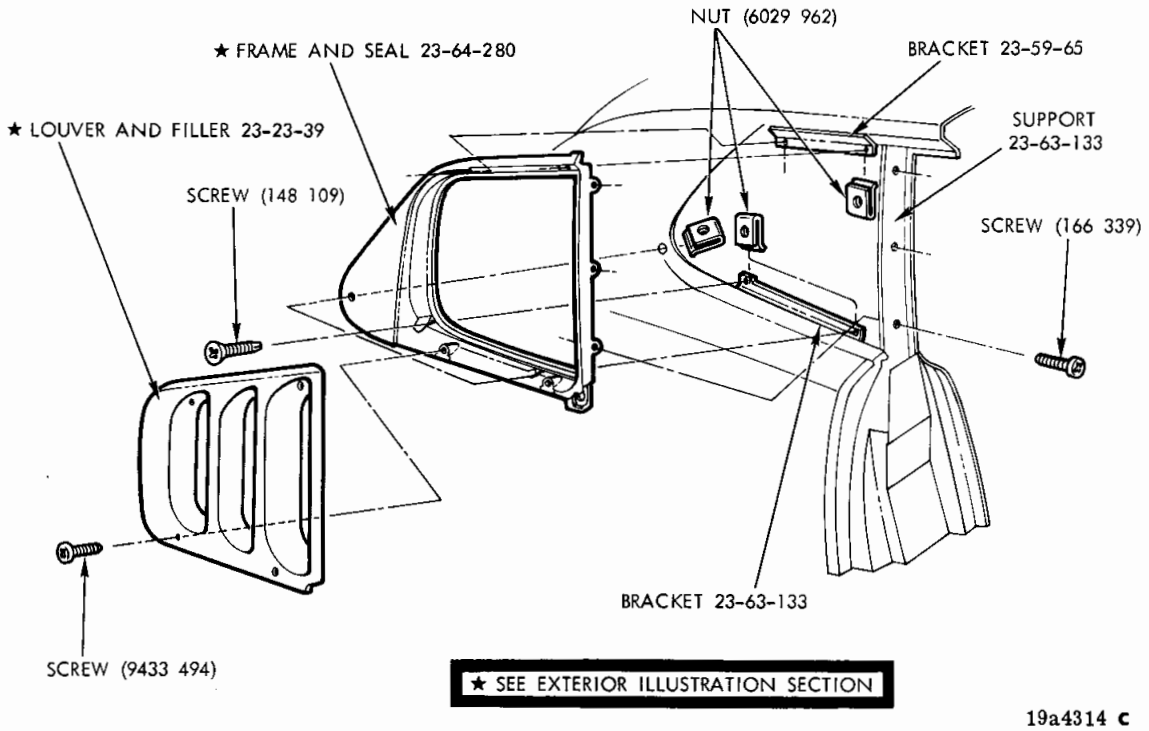

19a4314 C

SECTION 4
QUARTER WINDOW OPENING FRAME - CHARGER SE W-P FASTBACK

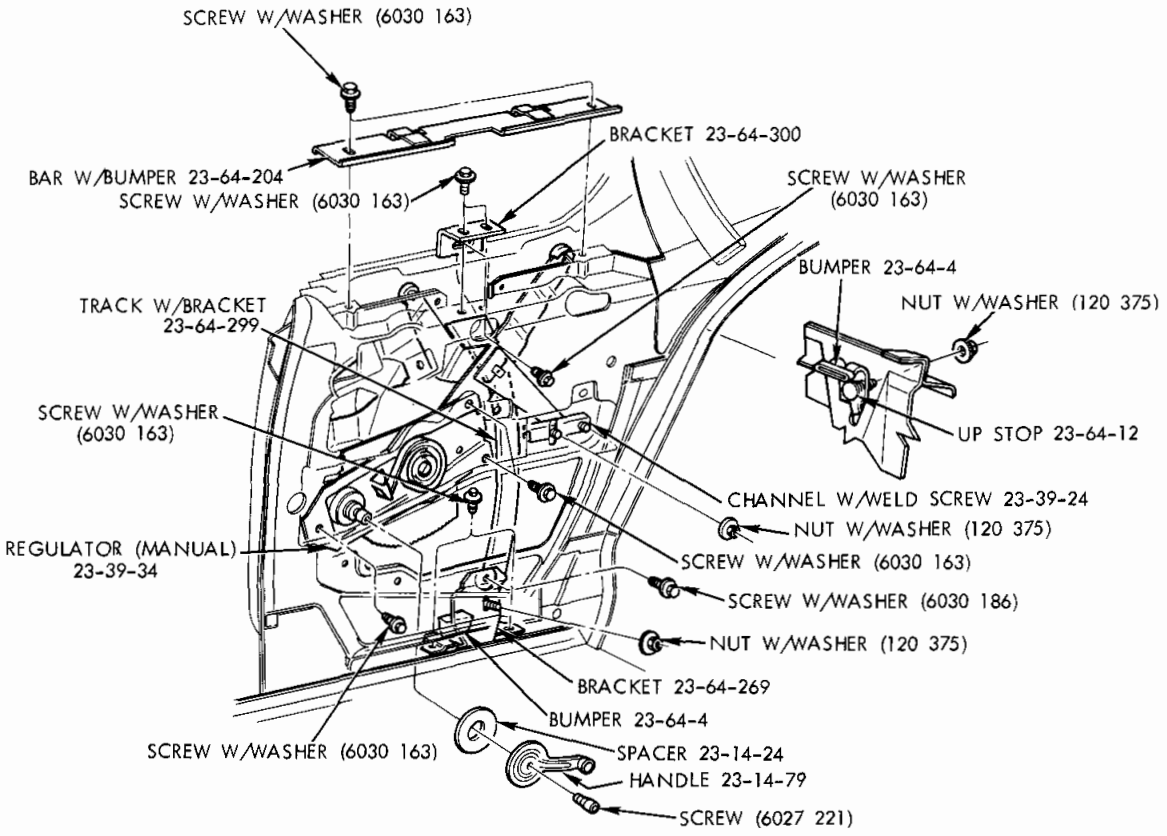

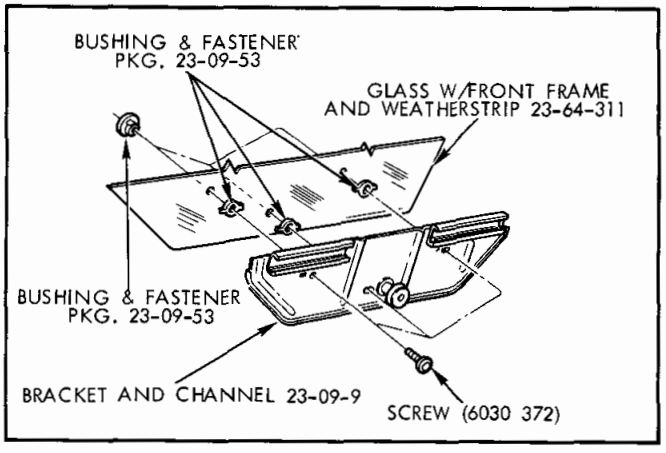

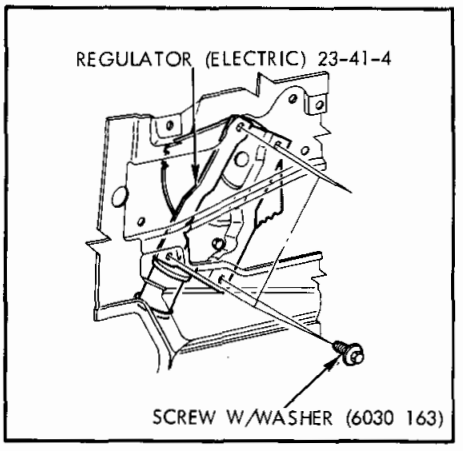

19a4830

SECTION 4
QUARTER INSIDE PANEL - P, D, C, Y 2 DOOR HARDTOP

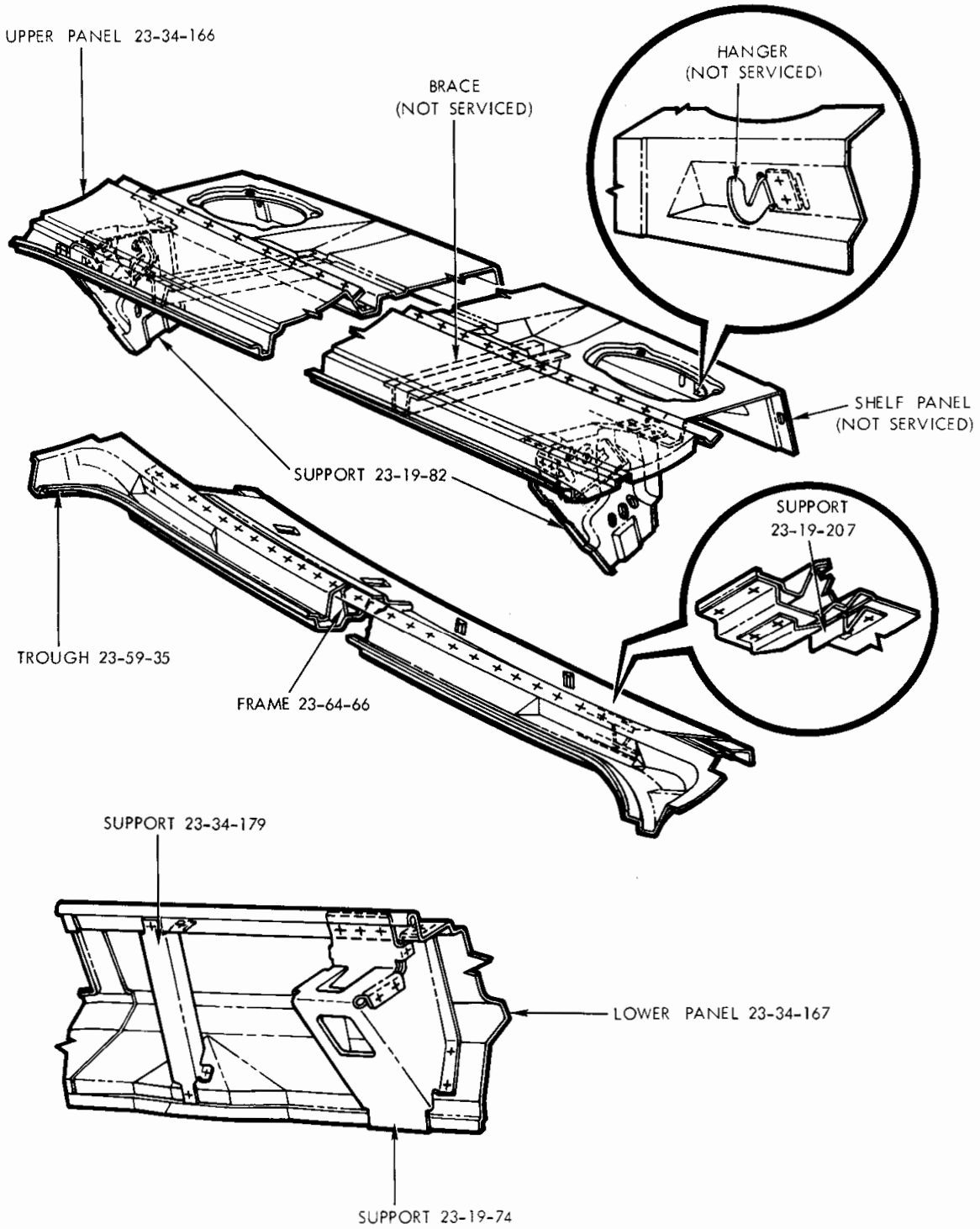

19a4596

SECTION 5
UPPER AND LOWER DECK OPENING - V, L

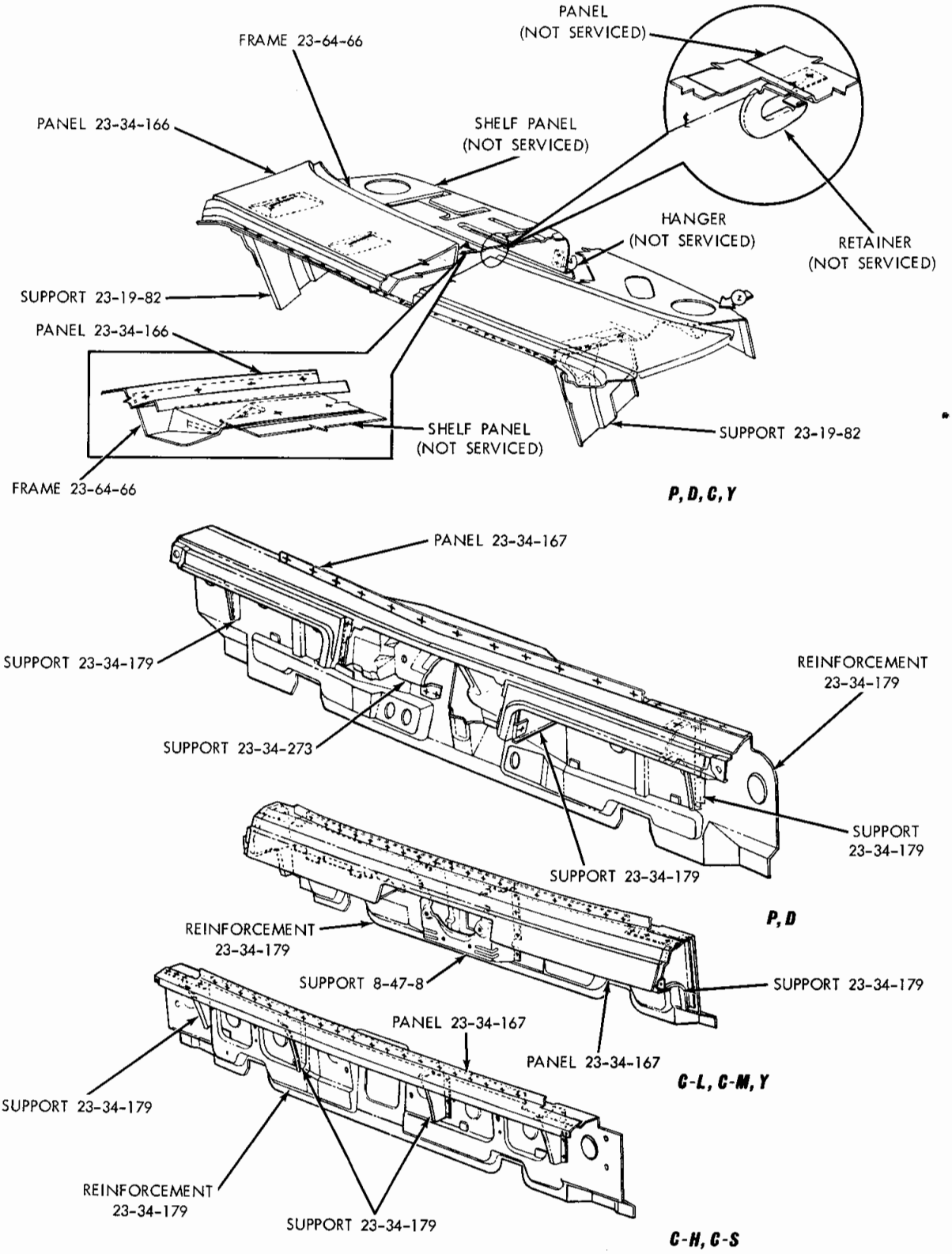

19a4870

SECTION 5
UPPER AND LOWER DECK OPENING - P, D, C, Y

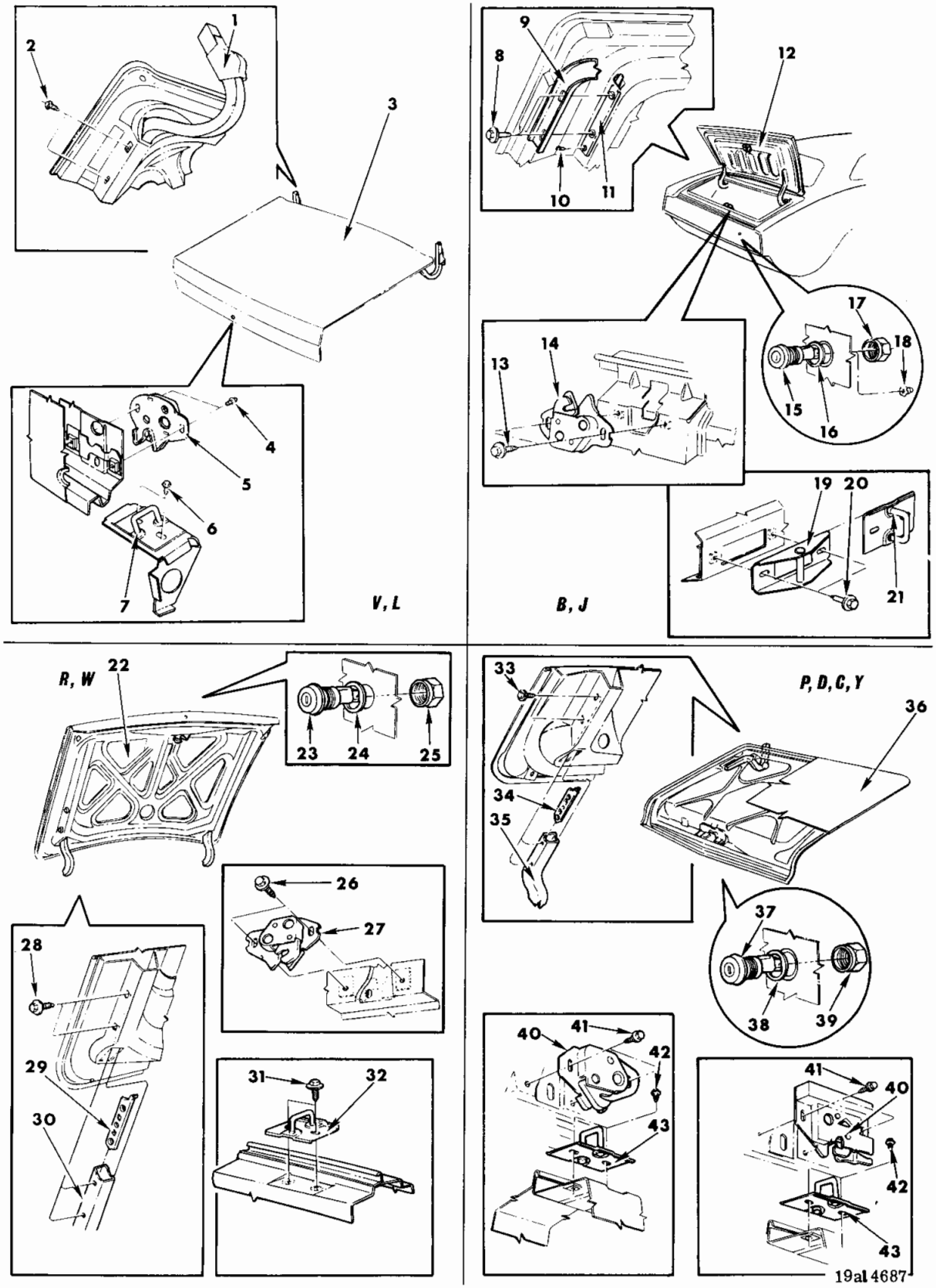

SECTION 6
DECK LIDS

SECTION 6
DECK LIDS

Ref. No.	Name	Part Type Code
1	Hinge	23-19-84
2	Screw and Washer (Part No. 6025 359)	
3	Lid	23-19-8
4	Screw and Washer (Part No. 180 077)	
5	Latch	23-19-105
6	Screw and Washer (Part No. 180 077)	
7	Striker	23-19-70
8	Screw and Washer (Part No. 180 079)	
9	Hinge	23-19-84
10	Screw and Washer (Part No. 121 832)	
11	T/Plate	23-19-99
12	Lid	23-19-8
13	Screw and Washer (Part No. 180 077)	
14	Latch	23-19-105
15	Cylinder and Key Package	23-17-2
	Cylinder and Key Package	23-17-4
16	Gasket	23-17-9
17	Nut	23-17-16
18	Nut (Part No. 6029 920)	
19	Striker	23-19-70
20	Screw and Washer (Part No. 180 077)	
21	Striker	23-19-70
22	Lid	23-19-8
23	Cylinder and Key Package	23-17-2
	Cylinder and Key Package	23-17-4
24	Gasket	23-17-9
25	Nut	23-17-16
26	Screw and Washer (Part No. 180 077)	
27	Latch	23-19-105
28	Screw and Washer (Part No. 6025 359)	
29	T/Plate	23-19-99
30	Hinge	23-19-84
31	Screw and Washer (Part No. 6025 341)	
32	Striker	23-19-70
33	Screw and Washer (Part No. 6025 359)	
34	T/Plate	23-19-99
35	Hinge	23-19-84
36	Lid	23-19-8
37	Cylinder and Key Package	23-17-2
	Cylinder and Key Package	23-17-4
38	Gasket	23-17-9
39	Nut	23-17-16
40	Latch	23-19-105
41	Screw and Washer (Part No. 180 077)	
42	Screw and Washer (Part No. 180 077)	
43	Striker	23-19-70

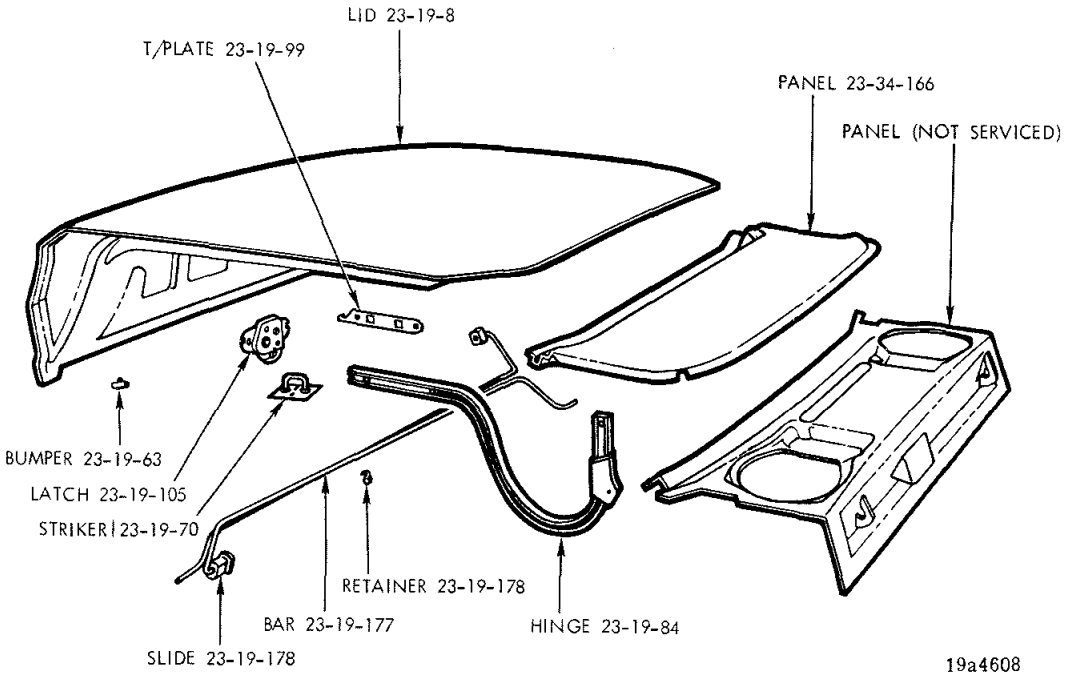

SECTION 6
DECK LID HINGES AND LOCK - V, L 4 DOOR SEDAN

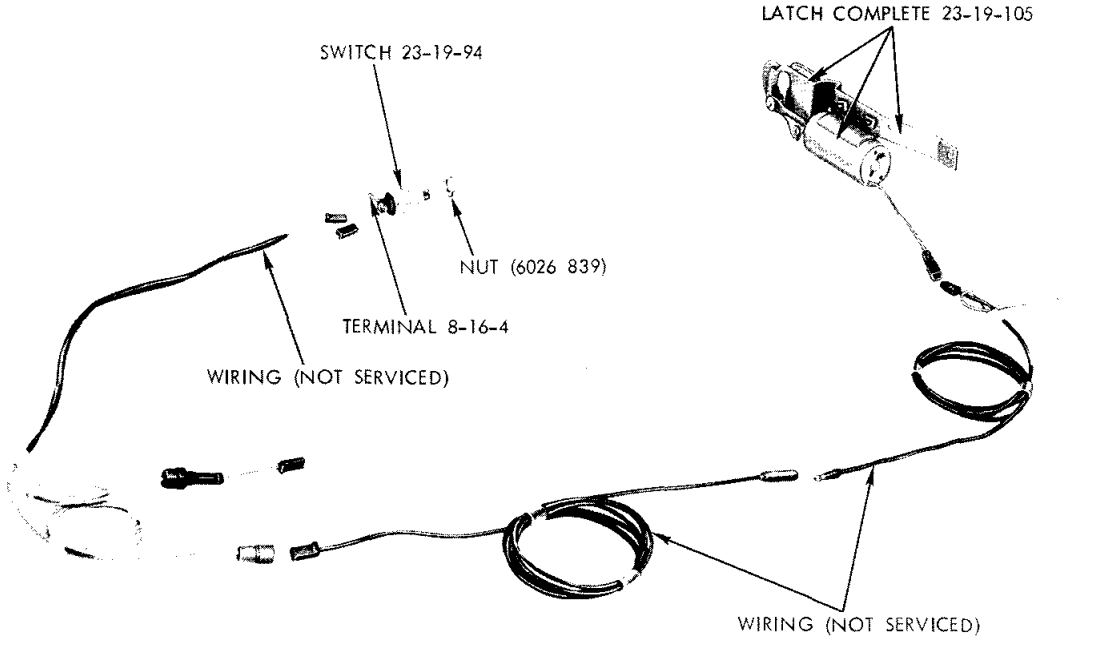

SECTION 6
DECK LID ELECTRIC LATCH - SATELLITE AND CORONET (TYPICAL OF P, D, C, Y)

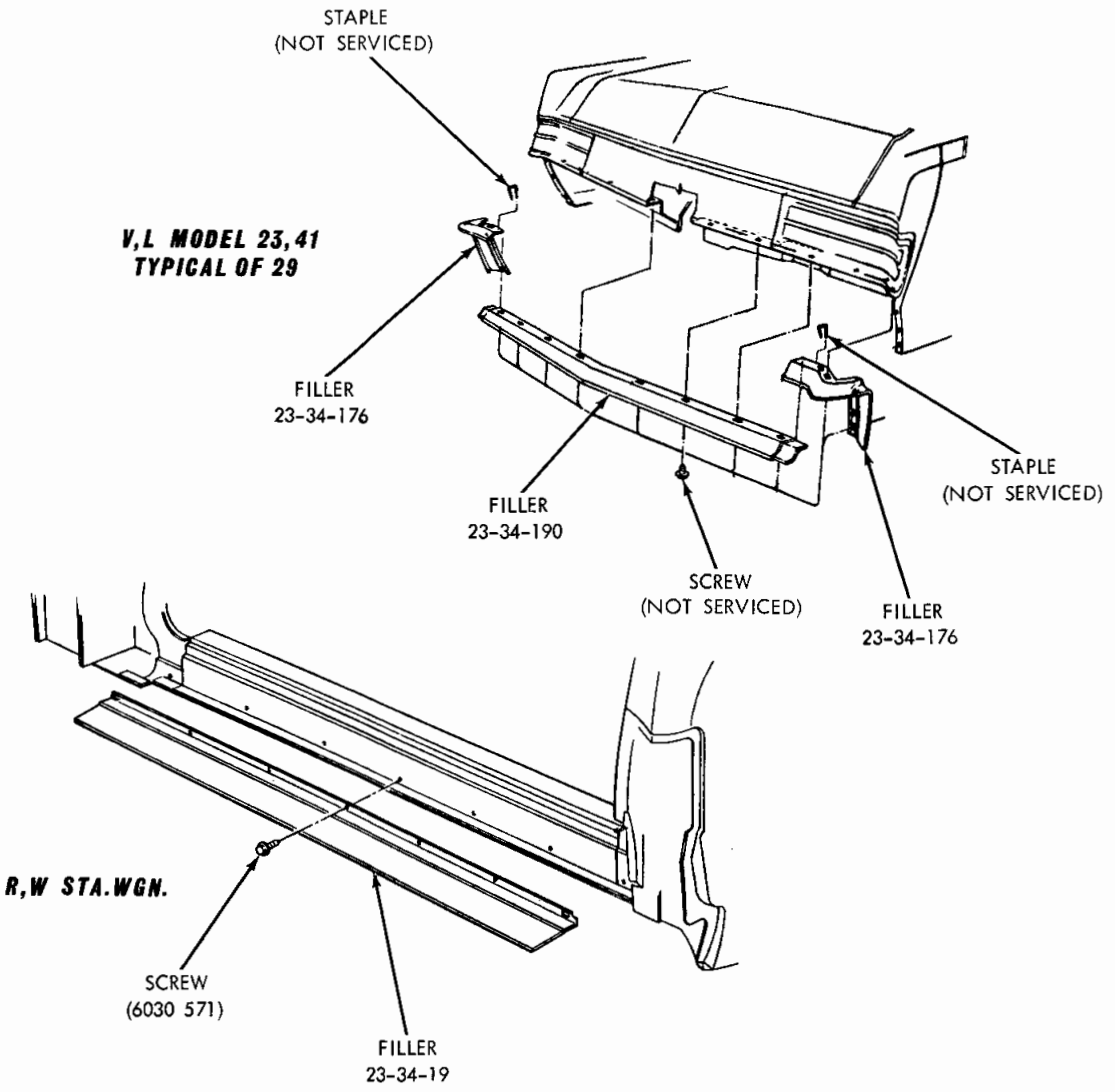

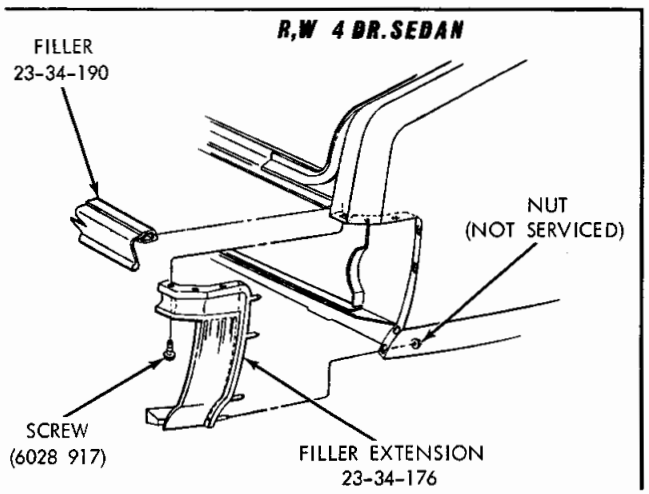

19a4915A

SECTION 6
REAR BUMPER FILLERS - V, L, R, W

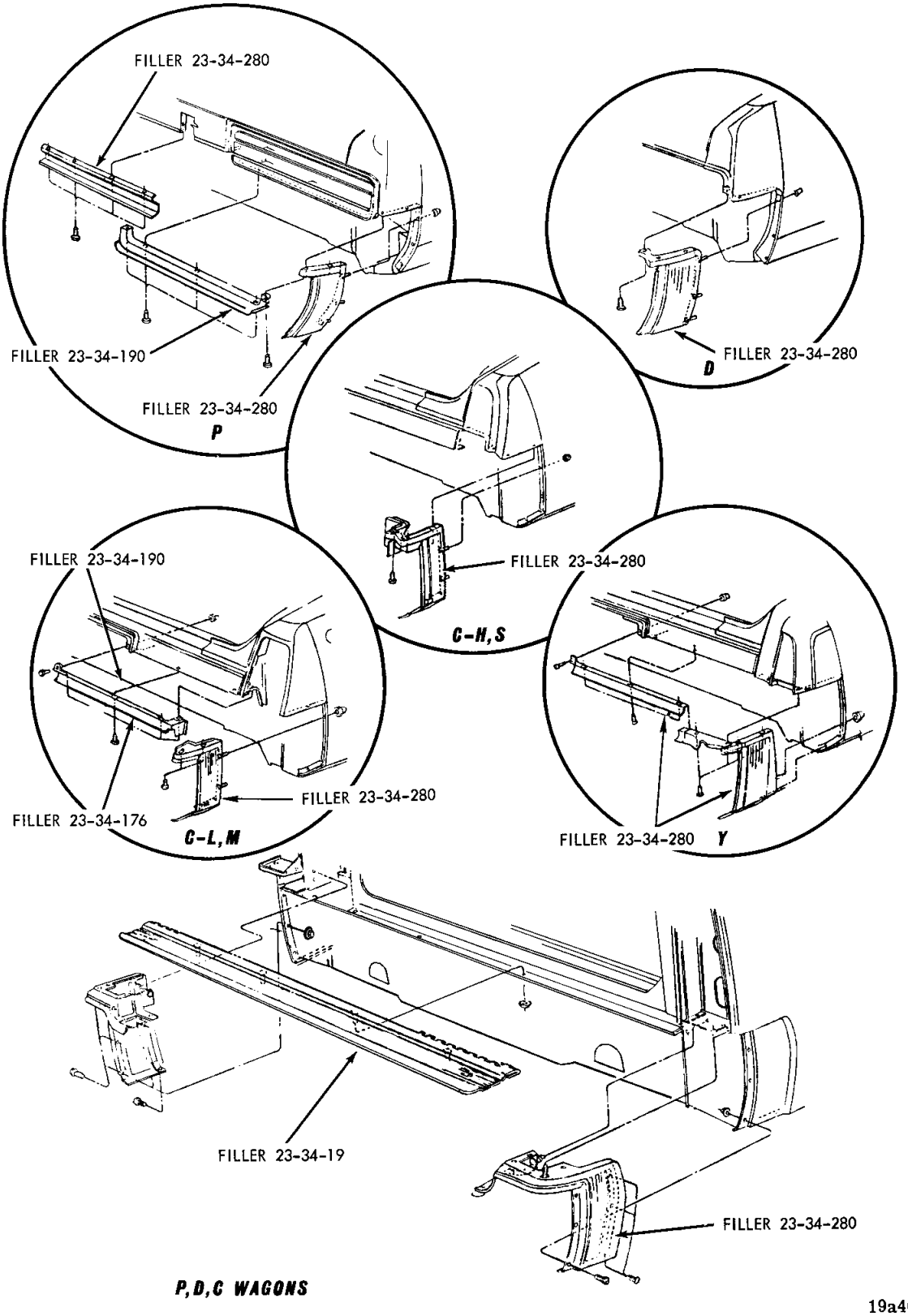

19a4667 A

SECTION 6
REAR BUMPER FILLERS CHART - P, D, C, Y

NOTES

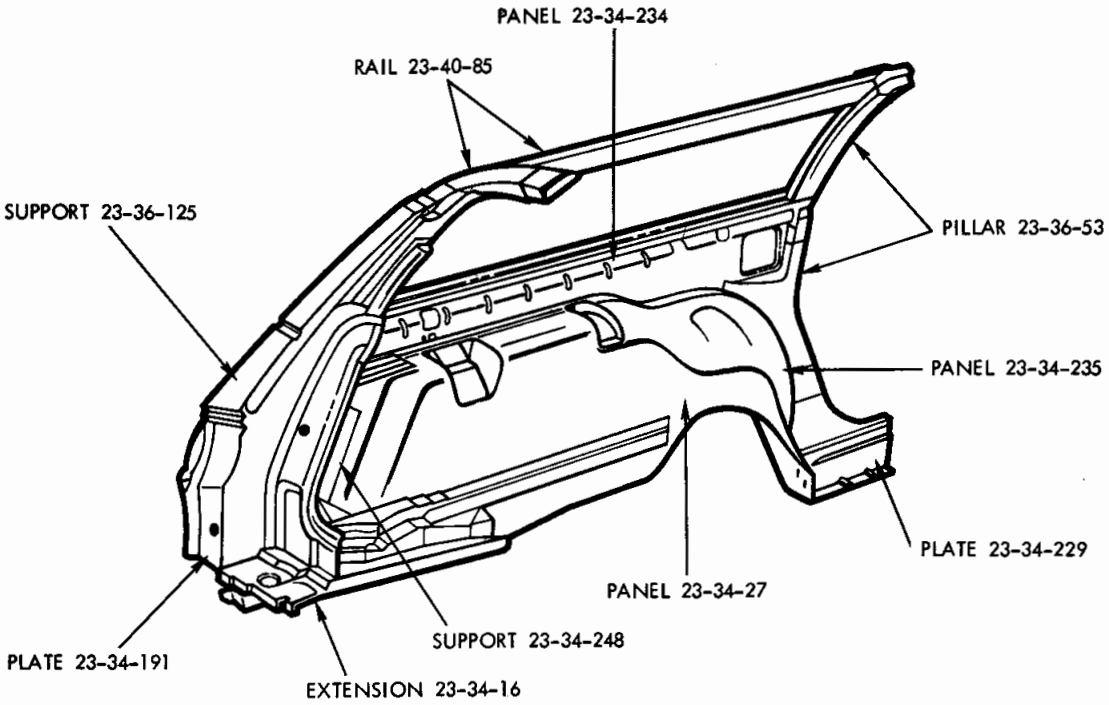

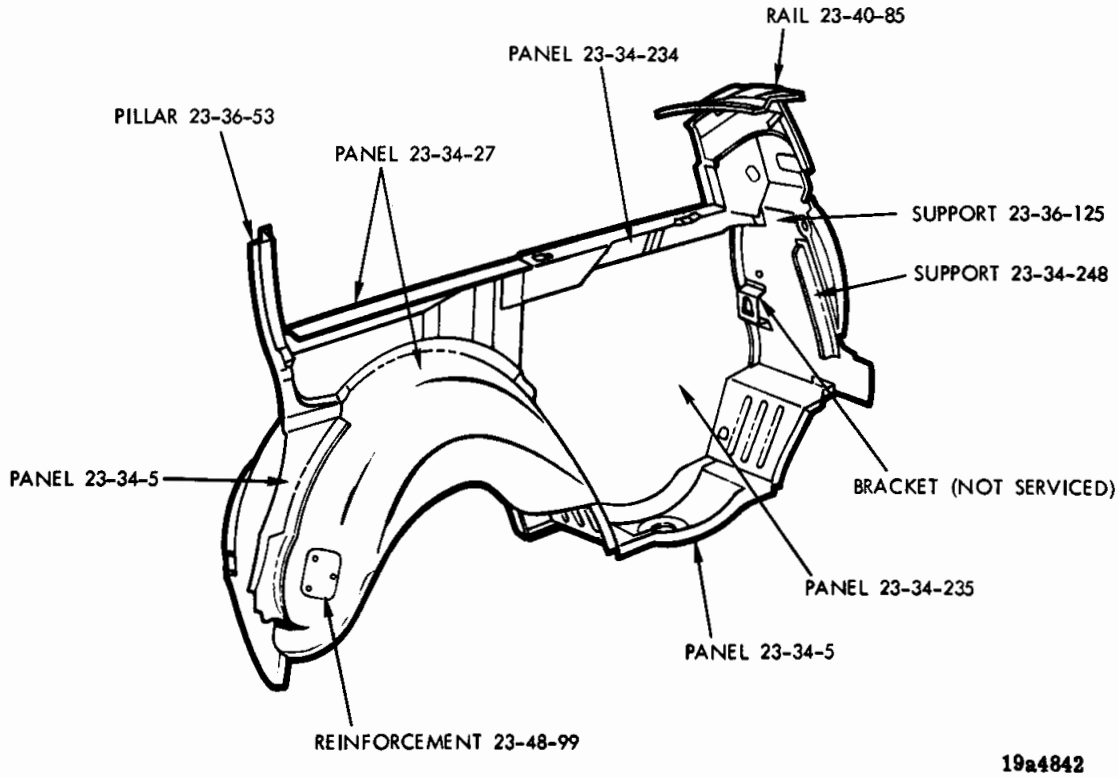

19a4842

SECTION 4
REAR QUARTER PANEL AND SPARE TIRE CARRIER - R, W STATION WAGON

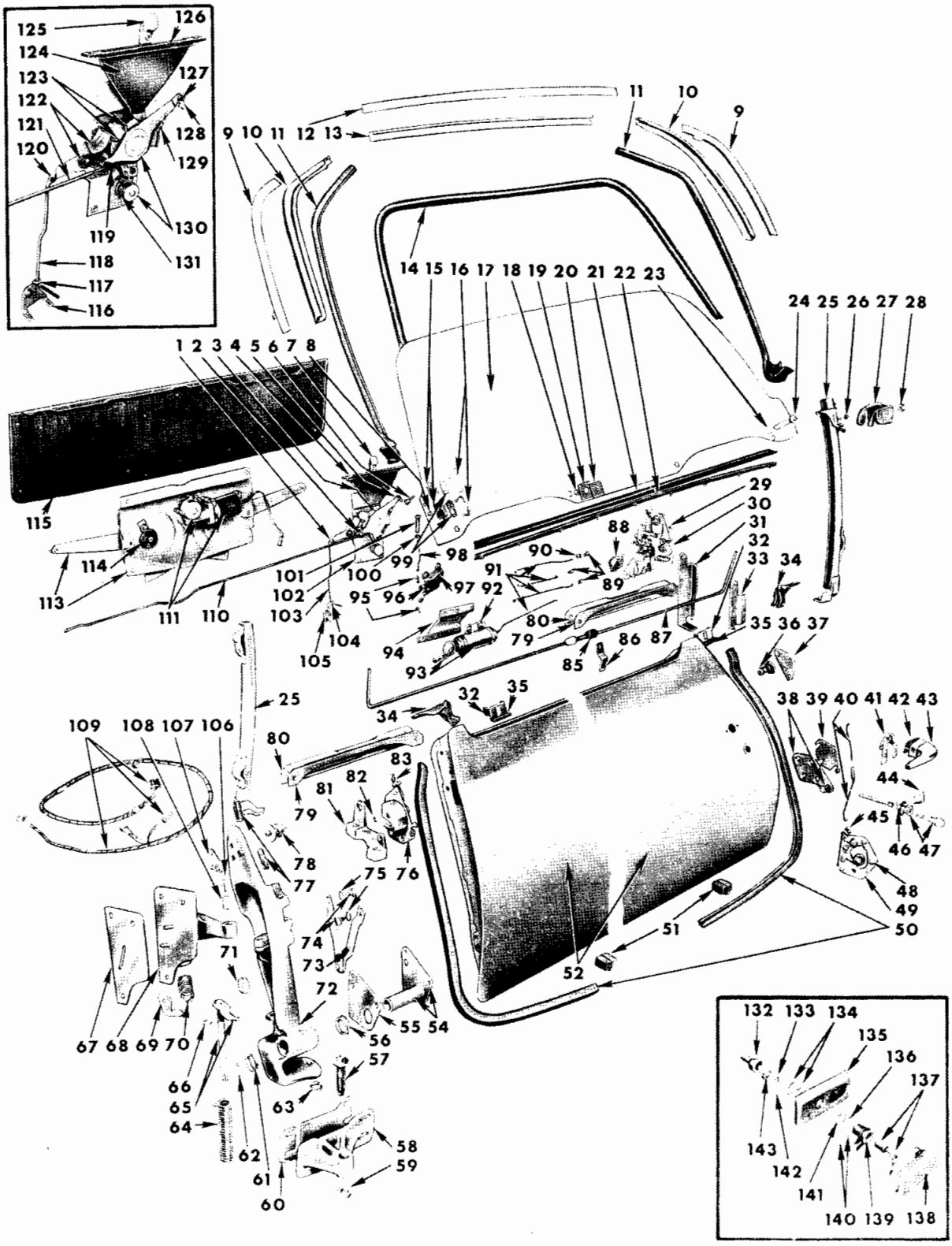

SECTION 6
TAILGATE (TWO WAY) - SATELLITE AND CORONET

SECTION 6

TAILGATE (TWO WAY) - SATELLITE AND CORONET

Ref. No.	Name	Part Type Code
1	Clip Retainer	23-54-217
2	Swivel	23-54-216
3	Boot	23-54-222
4	Bezel	23-54-221
5	Clip	23-54-217
6	Screw	23-54-88
7	Knob	23-54-214
8	Sleeve Nut	23-54-88
9	Moulding	23-23-60
10	Retainer	23-42-32
11	Weatherstrip (Inner)	23-63-181
12	Moulding	23-23-60
13	Retainer	23-42-32
14	Weatherstrip (Outer)	23-63-181
15	Base	23-54-18
16	Spring	23-54-31
17	Glass	23-64-10
18	Spacer	23-64-272
19	Gasket	23-63-181
20	Gasket	23-63-181
21	Weatherstrip (Inner)	23-63-181
22	Weatherstrip (Outer)	23-63-181
23	Pin (Inner)	23-54-126
24	Pin (Outer)	23-54-126
25	Channel w/Bracket	23-09-67
26	Sleeve Nut	23-54-143
27	Bracket	23-54-143
28	Jam Nut	23-54-143
29	Bumper	23-54-205
30	Latch	23-54-1
31	Bracket	23-54-143
32	Bracket w/Stud	23-64-12
33	Clamp	23-54-144
34	Seal	23-63-37
35	Bumper	23-54-103
36	Striker	23-54-6
37	Plate	23-54-6
38	Striker	23-54-6
39	Plate	23-54-6
40	Link	23-54-216
41	Bracket w/Cam	23-54-187
42	Gasket	23-54-92
43	Handle	23-54-73
44	Retainer	23-17-52
45	Clip	23-54-217
46	Gasket	23-17-51
47	Cylinder and Key Package	23-17-2
48	Bumper	23-54-205
49	Latch	23-54-1
50	Weatherstrip	23-63-171
51	Bumper	23-54-103
52	Tailgate	23-54-3
53		
54	Support	23-54-5
55	Clamp	23-54-144
56	Bushing	23-54-20
57	Bolt	23-54-4
58	Support	23-54-5
59	Nut	23-54-4
60	Plate	23-54-136
61	Bushing	23-54-20
62	Ring	23-54-20
63	Bushing	23-54-20
64	Spring	23-54-31
65	Lever w/Shaft	23-54-189
66	Ring	23-54-20
67	Plate	23-54-30
68	Hinge	23-54-4
69	Lever (Serviced in Hinge 23-54-4).	
70	Spring (Serviced in Hinge 23-54-4).	
71	Bearing	23-54-142
72	Hinge	23-54-4
73	Link	23-54-56
74	Bolt	23-54-56
75	Washer	23-54-56
76	Latch	23-54-1
77	Stud	23-54-4
78	Striker	23-54-6
79	Gasket	23-63-181
80	Frame w/Channel	23-09-64

CONTINUED ON NEXT PAGE

SECTION 6
TAILGATE (TWO WAY) - SATELLITE AND CORONET - Continued

Ref. No.	Name	Part Type Code
81	Wedge	23-54-21
82	Bumper	23-54-205
83	Clip	23-54-217
84		
85	Bearing	23-54-142
86	Retainer	23-54-141
87	Bar	23-54-140
88	Switch	23-54-167
89	Clip	23-54-217
90	Swivel	23-54-216
91	Link	23-54-216
92	U-Nut	23-54-179
93	Solenoid	23-54-179
94	Bracket	23-54-187
95	Clip	23-54-217
96	Clip Retainer	23-54-217
97	Control	23-54-218
98	Rod	23-54-223
99	Slide	23-54-88
100	Escutcheon	23-54-221
101	Knob	23-54-214
102	Control	23-54-218
103	Link	23-54-216
104	Bushing	23-54-20
105	Bracket	23-54-187
106	Pin	23-54-4
107	T/Plate	23-54-6
108	Bushing	23-54-20
109	Wiring	23-54-178
110	Link	23-54-216
111	Motor w/Mechanism	23-54-160
112		
113	Regulator	23-54-72
114	Spring	23-54-74
115	Cover	23-54-150
116	Bracket	23-54-187
117	Bushing	23-54-20
118	Link	23-54-216
119	Swivel	23-54-216
120	Clip Retainer	23-54-217
121	Link	23-54-216
122	Spring (Serviced in 23-54-218)	
123	Spring (Serviced in 23-54-218)	
124	Boot	23-54-222
125	Knob	23-54-214
126	Bezel	23-54-221
127	Clip Retainer	23-54-217
128	Clip	23-54-217
129	Spring	23-54-228
130	Control	23-54-218
131	Spring (Serviced in 23-54-218)	
132	Housing	23-54-100
133	Pawl (Serviced in 23-54-73)	
134	Ring	23-54-77
135	Base (Serviced in 23-54-73)	
136	Pin (Serviced in 23-54-73)	
137	Cylinder and Key Package	23-17-2
138	Handle	23-54-73
139	Lever (Serviced in 23-54-73)	
140	Set Screw	23-54-102
141	Retainer	23-54-79
142	Spring (Serviced in 23-54-73)	
143	Clip	23-54-128

NOTES

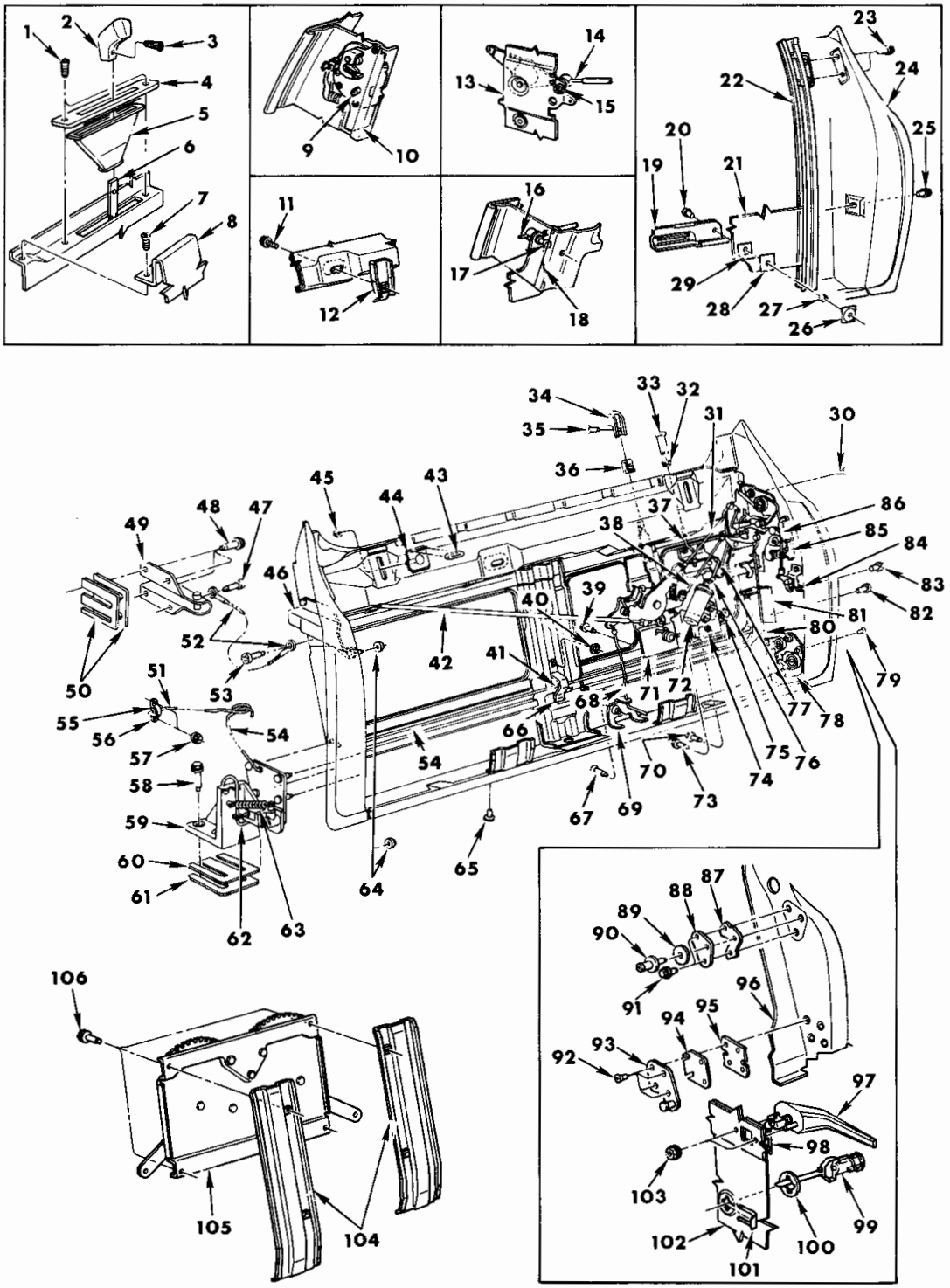
1
2
3
4
5
6
7
8
9
10
11
12
13
14
15
16
17
18
19
20
21
22
23
24
25
26
27
28
29
30
31
32
33
34
35
36
37
38
39
40
41
42
43
44
45
46
47
48
49
50
51
52
53
54
55
56
57
58
59
60
61
62
63
64
65
66
67
68
69
70
71
72
73
74
75
76
77
78
79
80
81
82
83
84
85
86
87
88
89
90
91
92
93
94
95
96
97
98
99
100
101
102
103
104
105
106

19a14775

SECTION 6

TAILGATE (TWO WAY) - PLYMOUTH, DODGE AND CHRYSLER

Ref. No.	Name	Part Type Code
1	Screw (Part No. 9416 208)	
2	Knob	23-54-214
3	Screw	Not Serviced
4	Bezel	23-54-221
5	Boot	23-54-222
6	Control	23-54-218
7	Screw (Part No. 6024 403)	
8	Cover	23-54-150
9	Screw (Part No. 6029 409)	
10	Latch	23-54-1
11	Screw w/Washer (Part No. 180 077)	
12	Bracket	23-54-143
13	Control	23-54-218
14	Link w/Sleeve	23-54-216
15	Screw (Part No. 6030 236)	
16	Link	23-54-216
17	Screw (Part No. 6029 474)	
18	Latch	23-54-1
19	Channel w/Bracket	23-09-64
20	Lock Screw (Part No. 6030 180)	
21	Glass	23-64-10
22	Channel w/Run	23-09-67
23	Screw w/Washer (Part No. 6022 226)	
24	Pillar	23-36-53
25	Screw w/Washer (Part No. 180 077)	
26	Tee-Nut (Part No. 6029 135)	
27	Spacer	23-64-272
28	Gasket	23-63-181
29	Gasket	23-63-181
30	Screw (Part No. 166 412)	
31	Link	23-54-216
32	Escutcheon	23-54-221
33	Knob Package	23-54-214
34	Knob	23-54-214
35	Screw	Not Serviced
36	U-Nut (Part No. 6025 919)	
37	Rod	23-54-223
38	Link	23-54-216
39	Screw w/Washer (Part No. 6030 303)	
40	Nut w/Washer (Part No. 120 375)	
41	Bearing	23-54-142
42	Link w/Sleeve	23-54-216
43	Bumper	23-54-103
44	Bracket	23-64-12
45	Nut w/Washer (Part No. 120 376)	
46	Latch w/Hinge	23-54-1
47	Screw (Part No. 6030 472)	
48	Screw (Part No. 181 126)	
49	Hinge w/Striker	23-54-4
50	Plate	23-54-30
51	Link	23-54-216
52	Cable	23-54-19
53	Screw (Part No. 6030 472)	
54	Bar	23-54-140
55	Bushing	23-54-20
56	Bracket	23-54-143
57	Nut w/Washer (Part No. 120 376)	
58	Screw (Part No. 181 126)	
59	Hinge	23-54-4
60	Plate	23-54-136
61	Plate	23-54-6
62	Bar	23-54-140
63	Spring	23-54-31
64	Nut w/Washer (Part No. 6025 020)	
65	Screw w/Washer (Part No. 6030 303)	
66	Retainer	23-54-141
67	Screw (Part No. 166 412)	
68	Link	23-54-216
69	Bracket	23-54-187
70	Screw w/Washer (Part No. 6030 303)	
71	Control	23-54-218
72	Solenoid	23-54-179
73	Screw w/Washer (Part No. 6030 306)	
74	Control	23-54-218
75	U-Nut (Part No. 152 449)	
76	Link	23-54-216
77	Link	23-54-216
78	Latch	23-54-1
79	Screw (Part No. 166 412)	
80	Link	23-54-216
81	Clamp	23-54-144
82	Screw w/Washer (Part No. 180 077)	
83	Screw w/Washer (Part No. 6030 303)	
84	Bracket w/Lever	23-54-187
85	Latch	23-54-1
86	Link	23-54-216
87	T/Plate	23-54-6
88	Plate	23-54-6
89	Washer (Part No. 6026 361)	
90	Striker	23-54-6
91	Screw w/Washer (Part No. 180 077)	
92	Screw (Part No. 6028 546)	
93	Striker	23-54-6
94	Plate	23-54-6
95	T/Plate	23-36-54
96	Pillar	23-36-53
97	Handle	23-54-73
98	Link	23-54-216
99	Cylinder and Key Package	23-17-2
100	Gasket	23-17-51
101	Retainer	23-17-52
102	Tailgate	23-54-3
103	Nut w/Washer (Part No. 6025 004)	
104	Support (Serviced in 23-54-3)	
105	Regulator	23-54-72
106	Screw w/Washer (Part No. 6030 306)	

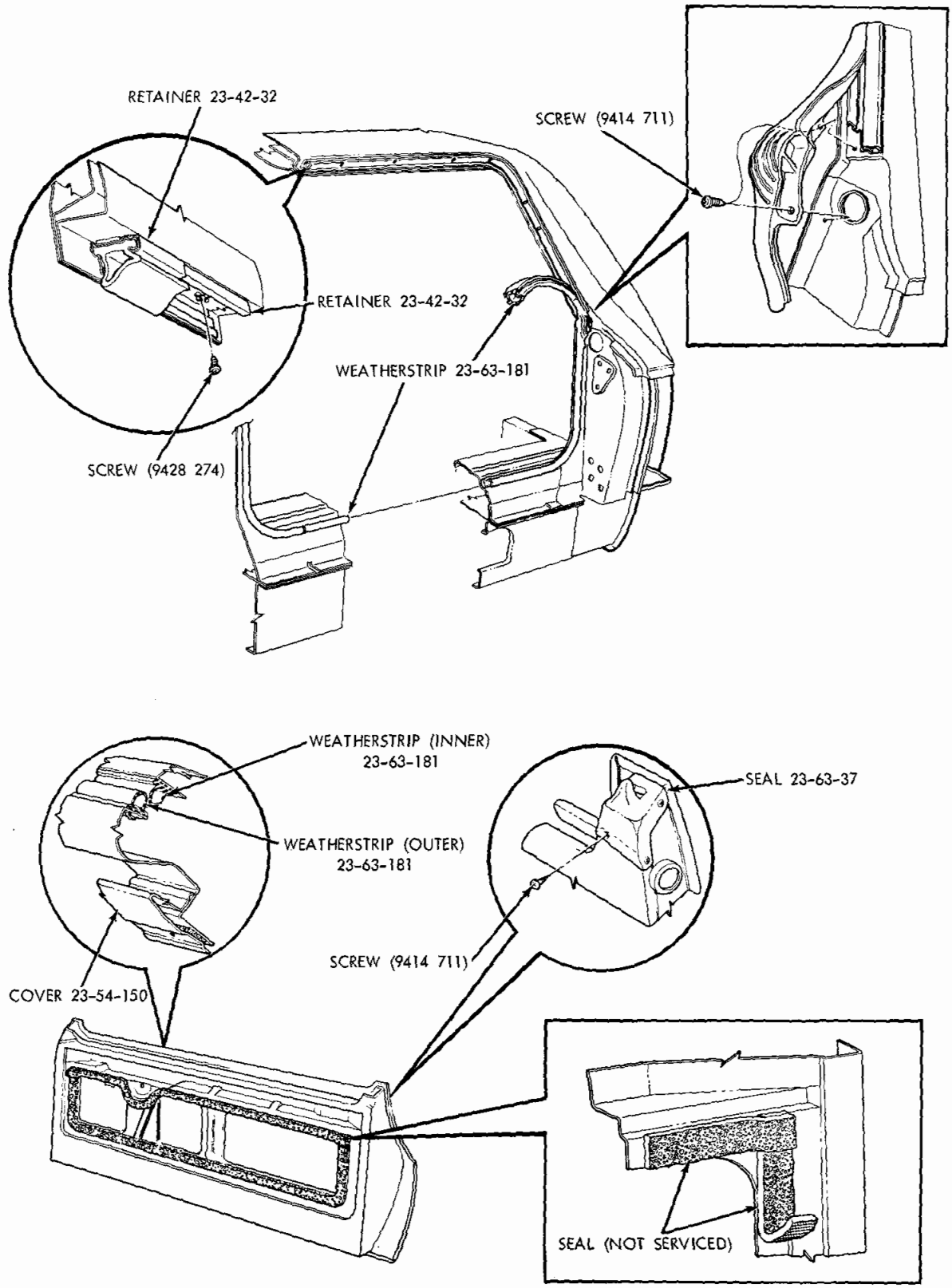

19a4657 A

SECTION 6
TAILGATE, WEATHERSTRIPING - P, D, C

NOTES

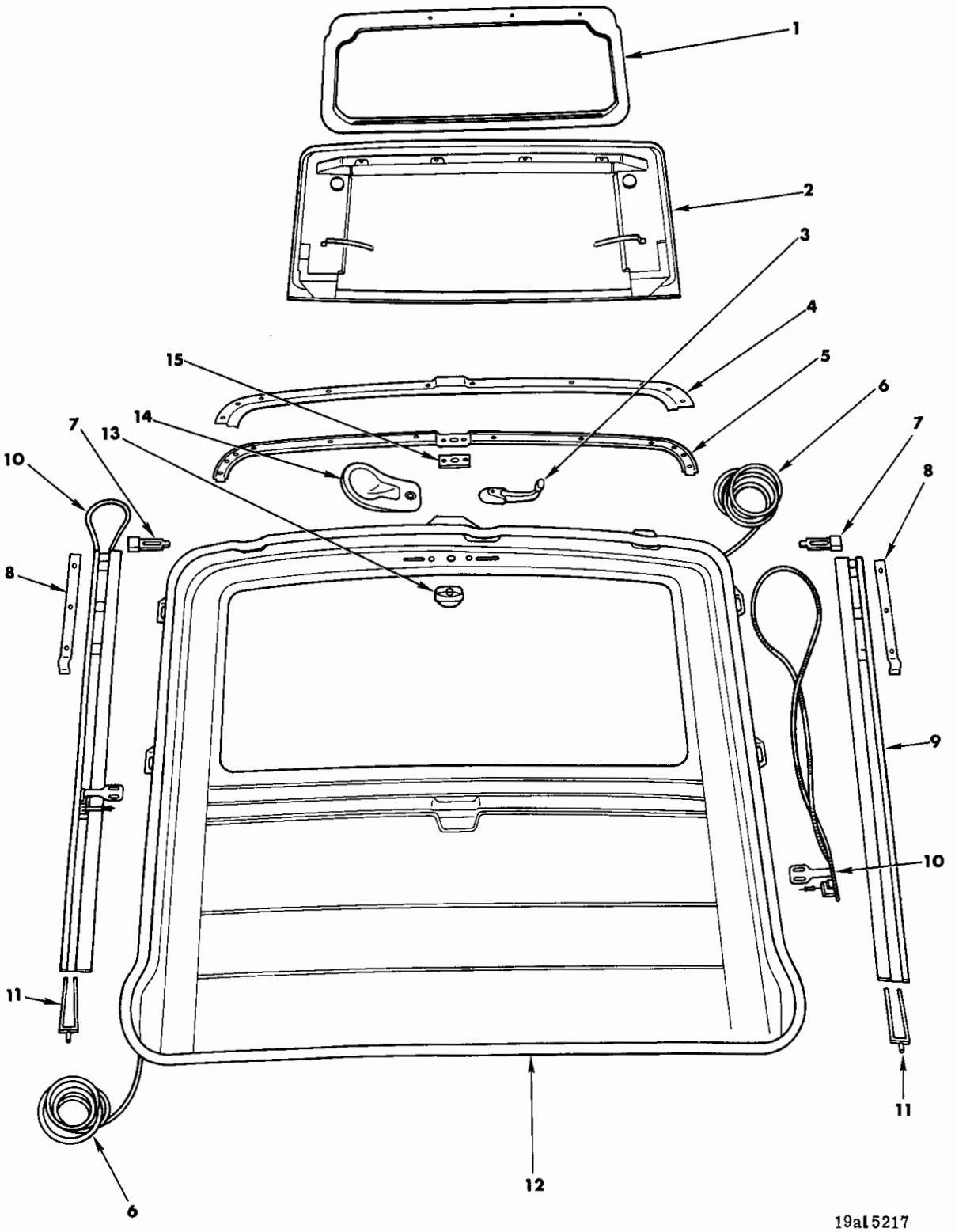

SECTION 7
SUN ROOF - MANUAL TYPE

SECTION 7
SUN ROOF - MANUAL TYPE

REF. NO.	DESCRIPTION	PART NUMBER
1	FRAME (Serviced in Panel Assembly)	---- ---
2	PANEL	
	V, L (29)	3696 892
	V, L (23)	3696 893
	R, W, Vinyl Top	3767 424
	R, W, Except Vinyl Top	3759 037
3	HANDLE	
	V, L, R, W	3696 955
4	COVER	
	V, L	3696 864
	R, W	3759 030
5	GUIDE	
	V, L	3696 865
	R, W	3759 031
6	HOSE	
	V, L, R, W	3696 973
7	GUIDE	
	V, L, R, W	3696 966
8	COVER	
	V, L, R, W	3696 863
9	TRACK, Right and Left	
	V, L, R, W	3696 942-3
10	GUIDE and CABLE	
	V, L, R, W	3767 826-7
11	RETAINER	
	V, L (29)	3696 862
	V, L (23)	3759 153
	R, W	3767 556
12	HOUSING	
	V, L (29)	3696 850
	V, L (23)	3696 851
	R, W	3759 021
13	DRIVE ASSEMBLY	
	V, L, R, W	3759 823
14	ESCUTCHEON	
	V, L	3767 874
	R, W	3759 045
15	RETAINER	
	V, L, R, W	3696 879

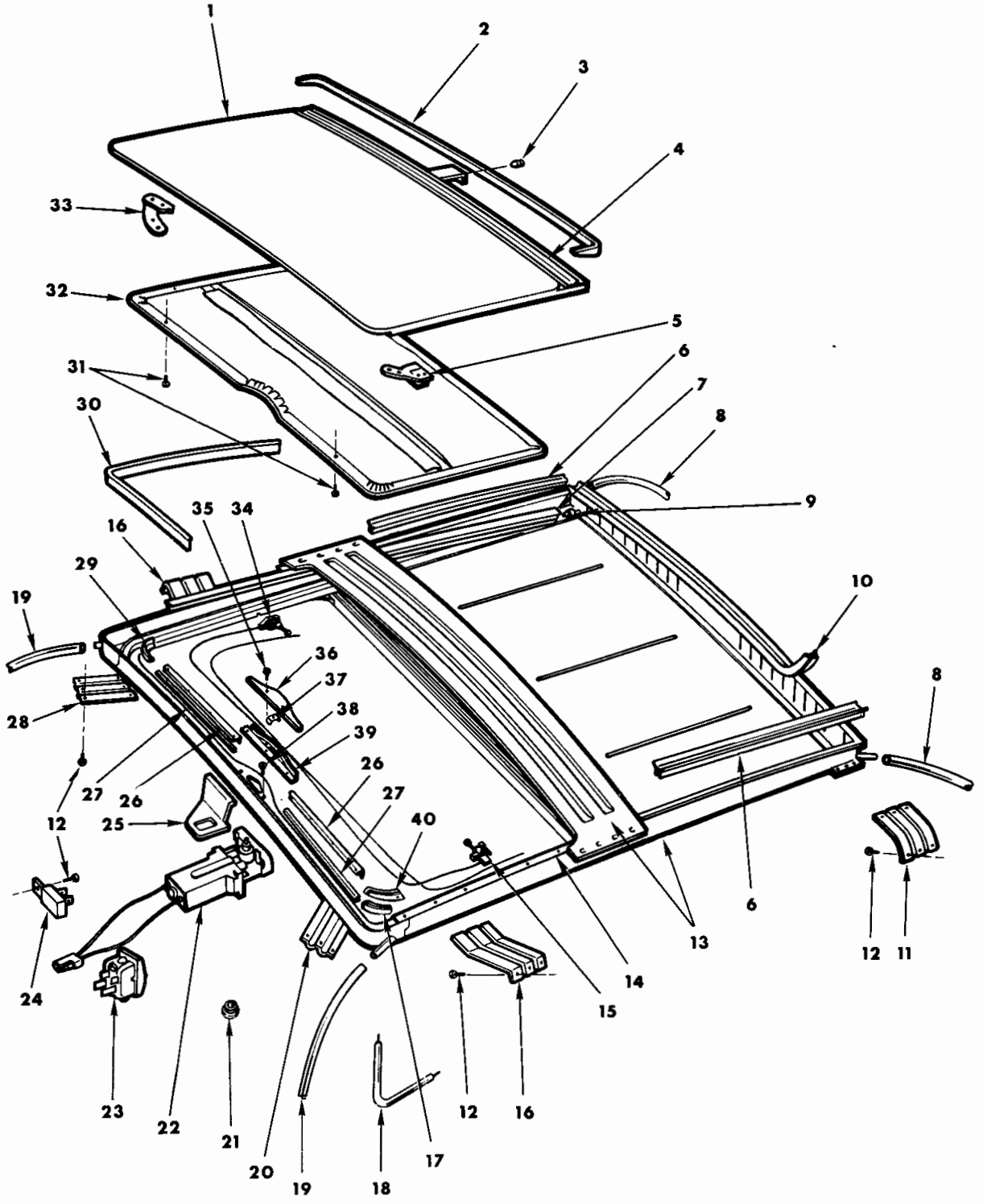
1
2
3
4
33
32
5
31
6
7
30
8
9
35
34
16
29
10
19
36
37
8
28
38
39
26
27
26
27
12
25
40
6
13
12
11
24
14
15
23
22
21
12
16
20
19
18
17

19al4867

SECTION 7
SUN ROOF - ELECTRIC

FOR FURTHER INFORMATION SEE CODE 23-34-308

Ref. No.	Name	Part Number
1	Panel	3674 967
2	Welt	3674 968
3	Bumper	3674 942
4	Seal	3674 950
5	Slide	3674 985
6	Seal	3674 906
7	Guide	3674 987
8	Tube	3696 973
9	Pin	3674 923
10	Seal	3674 907
11	Bracket	3674 905
12	Screw	167 084
13	Frame	3674 954
14	Guide	3674 983 3674 987
15	Cable and Slide	3674 921
16	Bracket	3674 904
17	Cable Guide	3674 979
18	Handle	3674 948
19	Tube	3696 971
20	Bracket	3674 903
21	Plug Button (Code 23-86-43)	3674 928
22	Motor	3674 926
23	Switch	3674 931
24	Circuit Breaker	3674 933
25	Bracket	3674 945
26	Cable Guide	3674 916
27	Cable Guide	3674 915
28	Bracket	3674 902
29	Cable Guide	3674 978
30	Welt	3674 966
31	Screw	9425 894
32	Headlining and Frame	9581 JX9
33	Plate (Serviced in Slide)	
34	Cable and Slide	3674 920
35	Screw	3674 943
36	Cover	3674 918
37	Clip	3674 919
38	Screw	3674 944
39	Housing	3674 917
40	Cable Guide	3674 981

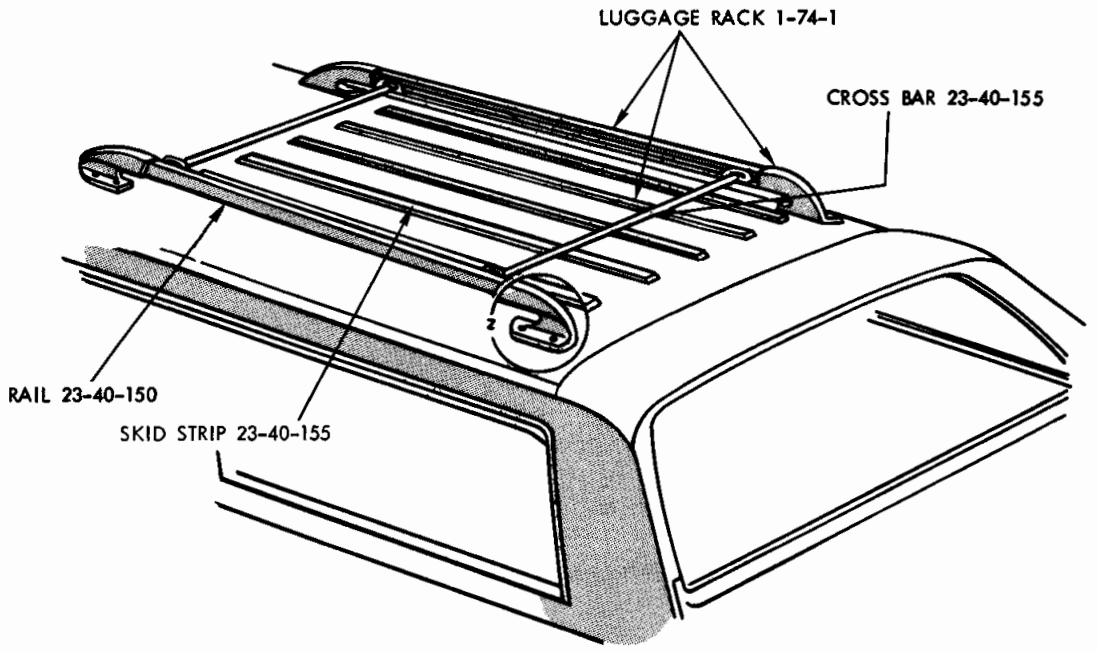

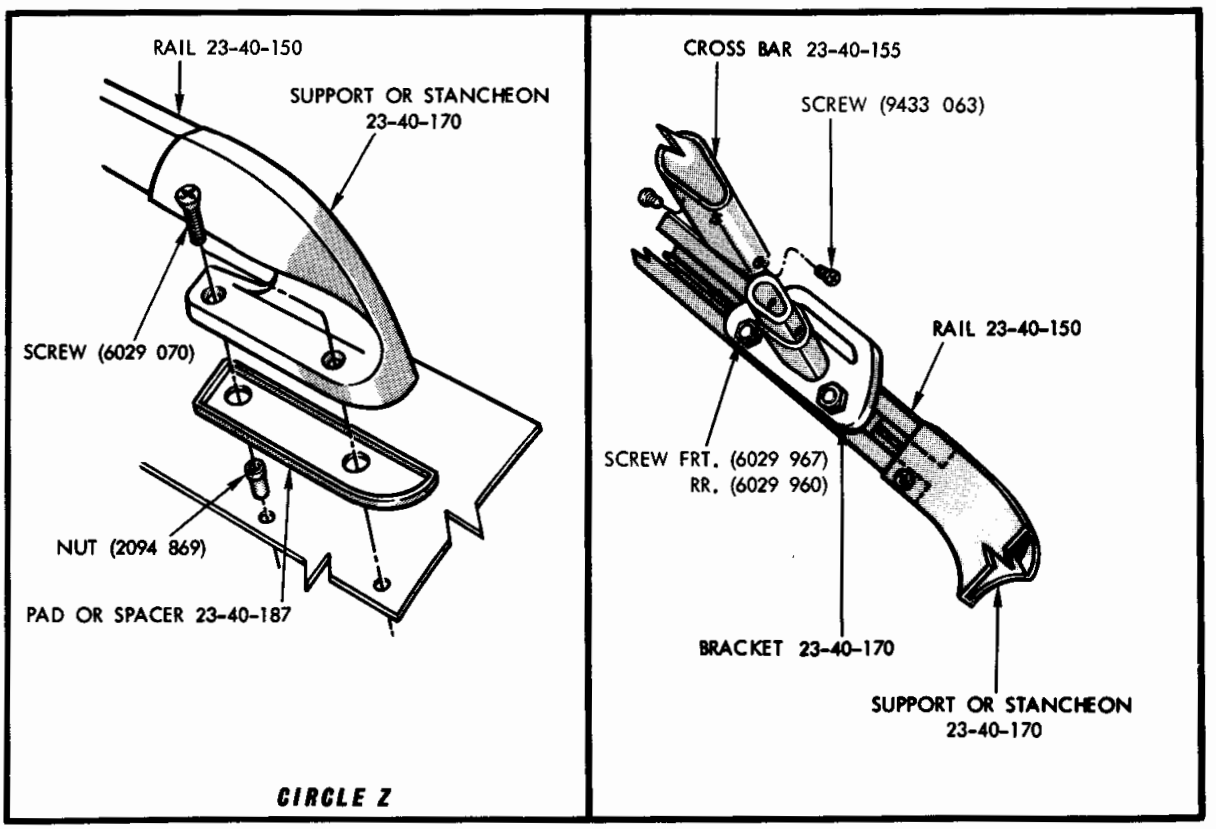

19a4209B

SECTION 7
ROOF LUGGAGE RACK - R, W

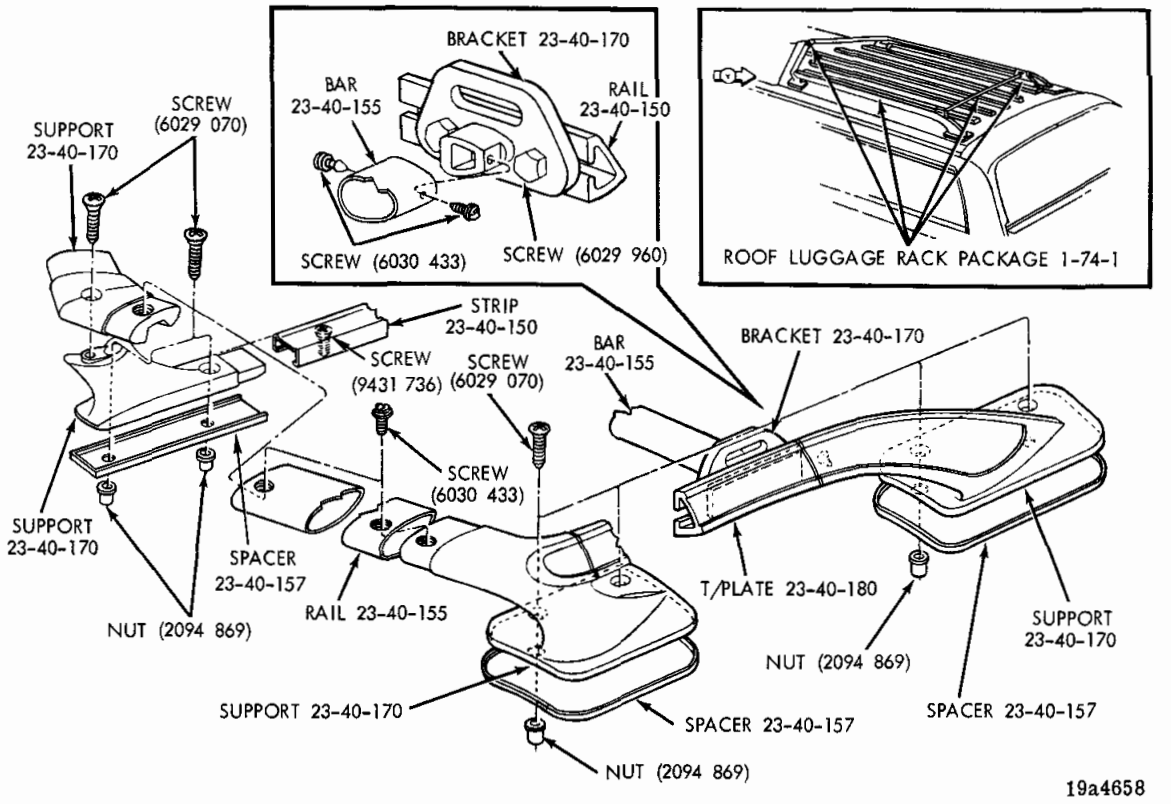

SECTION 7
ROOF LUGGAGE RACK - P, D, C

NOTES

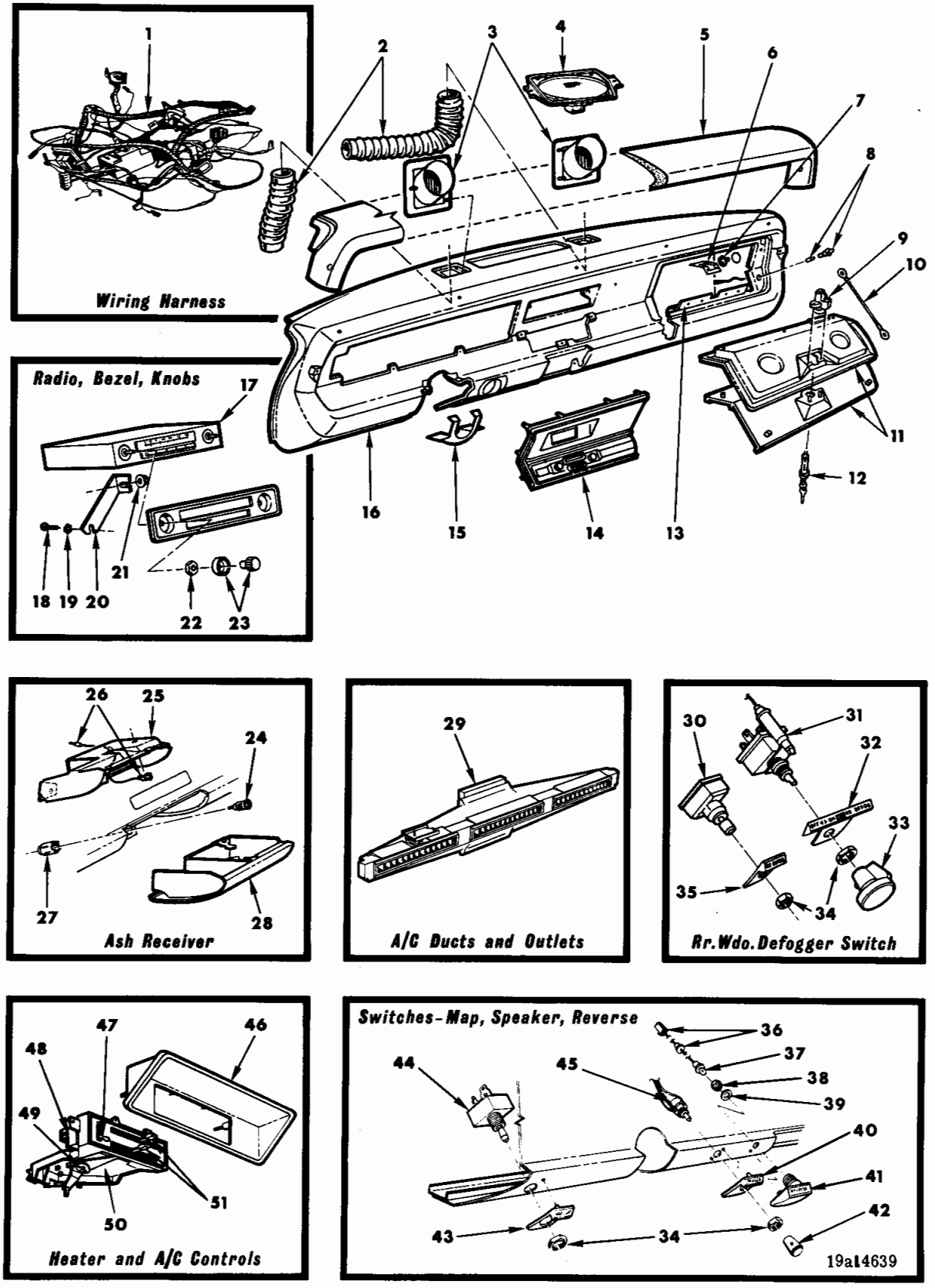

SECTION 8
INSTRUMENT PANEL - V, L

SECTION 8
INSTRUMENT PANEL - V, L

Ref. No.	Name	Part Type Code
1	Wiring	8-19-3
2	Tube	1-48-151
3	Grille	1-48-158
4	Speaker	1-87-2
5	Pad	23-84-3
6	Catch	23-06-15
7	Lens	8-38-3
8	Lamp	8-38-23
9	Latch	23-06-15
10	Cable	23-06-46
11	Door	23-06-10
12	Cylinder and Key Package	23-06-28, 23-17-4
13	Hinge	23-06-21
14	Bezel	23-33-135
15	Cover	23-33-132
16	Panel	23-33-109
17	Radio	1-87-1
18	Screw	(Part No. 9433 546)
19	Lockwasher	
20	Bracket	
21	Nut and Washer	(Part No. 6023 205)
22	Nut	
23	Knob	1-87-180
24	Shell	8-20-10
25	Housing	23-02-19
26	Lamp	8-19-83
27	Clamp	8-20-10
28	Receptacle w/Face Plate	23-02-18
29	Duct	24-28-73
30	Switch	1-47-7
31	Switch and Lamp	8-37-63
32	Bezel	8-37-64
33	Knob	8-37-68
34	Nut	(Part No. 1439 758)
35	Name Plate	1-47-15
36	Socket	8-37-88
37	Bulb	8-44-1
38	Washer	
39	Nut	
40	Bezel	1-87-22
41	Lamp	8-37-75
42	Knob	1-87-180
43	Bezel	8-42-29
44	Switch	8-42-25
45	Control	1-87-58
46	Bezel	1-48-70
47	Switch	24-24-5
48	Switch	24-24-150
49	Pin	24-24-39
50	Control	24-24-161
51	Knob	24-24-156

PARTS INDICATED BY NAME ONLY - ORDER BY DESCRIPTION

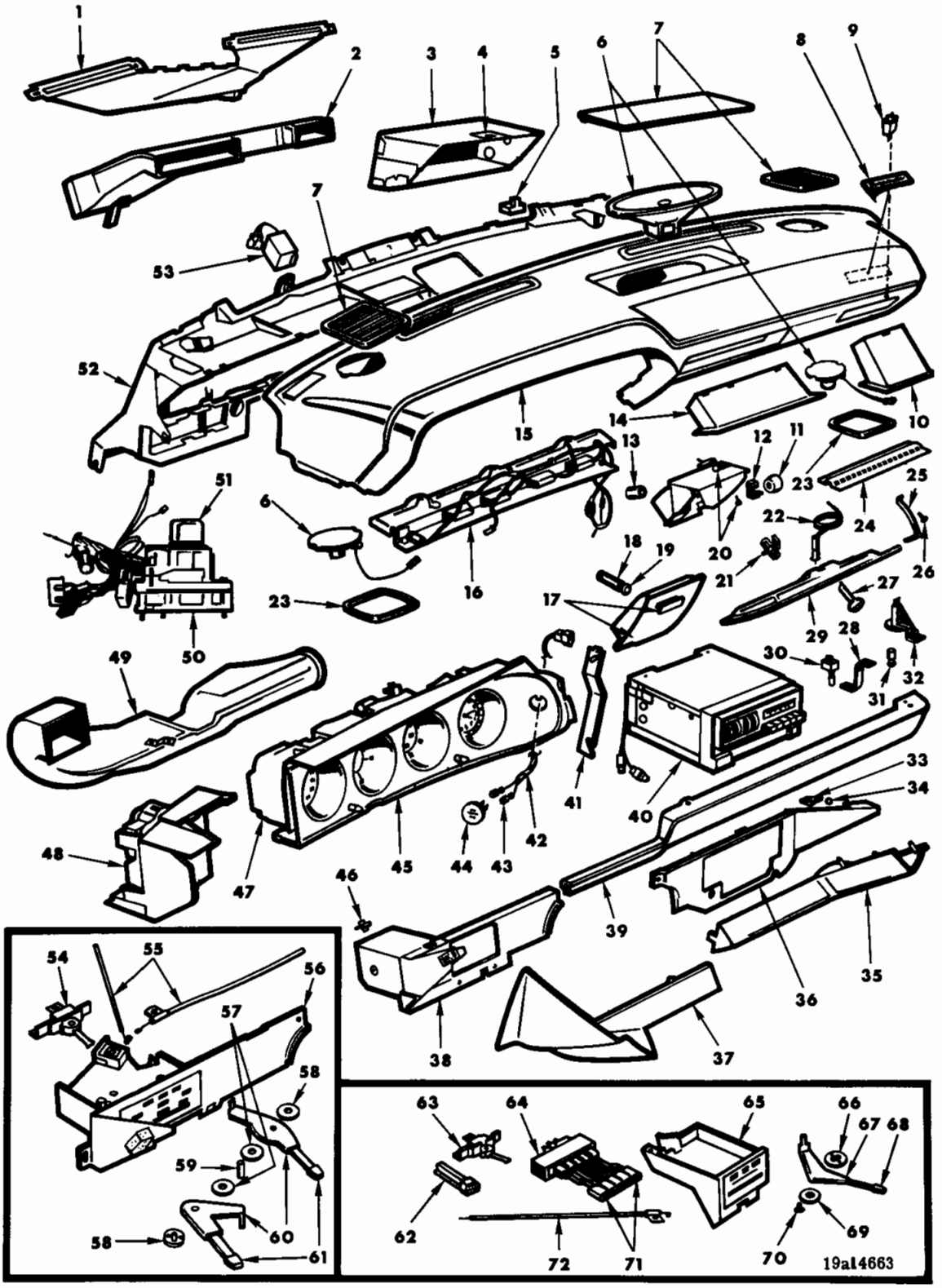

SECTION 8
INSTRUMENT PANEL - CHALLENGER (TYPICAL OF BARRACUDA)

SECTION 8
INSTRUMENT PANEL - CHALLENGER
(TYPICAL OF BARRACUDA)

Ref. No.	Name	Part Type Code
1	Duct	1-48-141
2	Duct, Center	24-28-73
	Duct, Right	24-28-73
3	Box	23-06-4
4	Catch	23-06-15
5	Buzzer	8-35-66
6	Speaker	1-87-2
7	Grille	23-33-42
8	Name Plate	23-33-96
9		
10	Spot Cooler	24-28-78
11	Flasher	8-50-186
12	Clip	8-50-191
13	Shell (Serviced in 8-20-10)	
14	Air Outlet	24-28-78
15	Pad	23-84-3
16	Panel	8-41-41
17	Receptacle, w/Face Plate	23-02-18
	Handle, w/Face Plate	23-02-42
18	Clamp (Serviced in 8-20-10)	
19	Knob	8-20-8
20	Housing	23-02-19
	Bumper (Serviced in Housing)	
21	Latch	23-06-15
22	Lamp	8-38-23
23	Plate	1-87-30
24	Hinge	23-06-21
25	Arm	23-06-13
26	Bumper	23-06-14
27	Cylinder	23-06-28
	Cylinder and Key Package	23-17-4
28	Ground Strap	Not Serviced
29	Door	23-06-10
30	Switch	8-42-25
31	Bulb	8-44-1
32	Lamp	8-42-1
33	Bezel	8-42-29
34	Nut	
35	Panel	23-84-3
36	Bezel	1-87-22
37	Panel	23-84-3
38	Spot Cooler Lt. w/Control Bezel	24-28-78
39	Shield	23-33-119
40	Radio	1-87-1
41	Bracket	Not Serviced
42	Wiring	8-19-3
43	Insulator (See Chart Group 8-16-0)	
44		
45	Bezel	8-37-90
46	Clip	24-28-72
47	Housing	8-37-178
48	Bezel	8-53-294
49	Duct	24-28-73
50	Insulator, Gasket and Clip, Bulkhead Conn.	8-19-83
51	Relay	8-33-164
52	Panel	23-33-109
53	Crossover	1-87-19
54	Switch	1-48-770
55	Cable	1-48-941
56	Bezel	1-48-70
57	Pad (Serviced in 1-48-4)	
58	Spacer (Serviced in 1-48-4)	
59	Pin (Serviced in 1-48-4)	
60	Control	1-48-4
61	Knob and Clip	1-48-942
62	Hose w/Connector	24-28-24
63	Switch	24-24-5
64	Switch	24-24-150
65	Control	24-24-39
66	Clip (Serviced in 24-24-161)	
67	Lever (Serviced in 24-24-161)	
68	Knob (Serviced in 1-48-942)	
69	Spacer (Serviced in 24-24-161)	
70	Pin (Serviced in 24-24-161)	
71	Extension and Cover	24-24-164
72	Cable	24-01-65

PARTS INDICATED BY NAME ONLY - ORDER BY DESCRIPTION

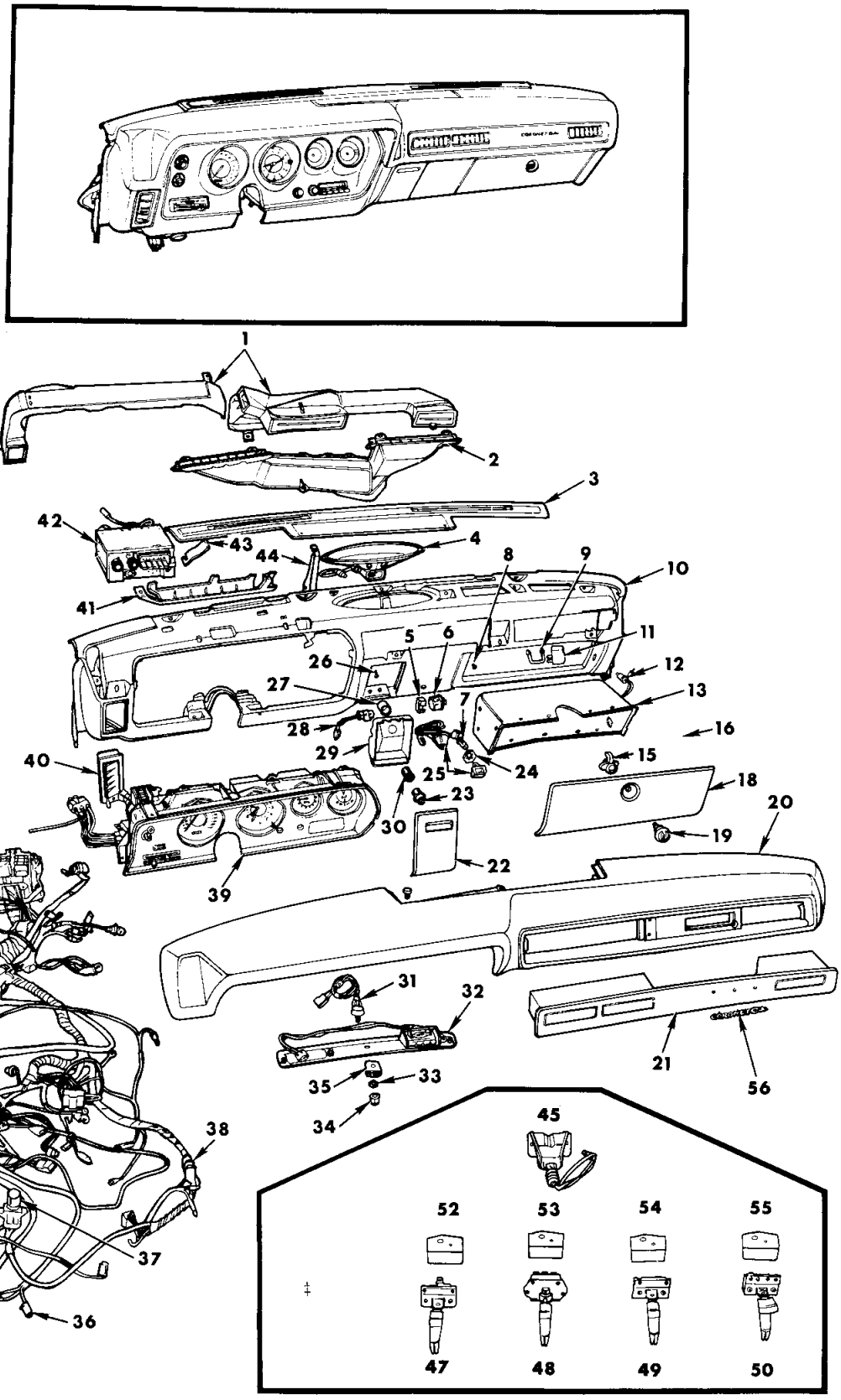

‡ FOR SWITCH MOUNTING BRACKET
SEE PART TYPE CODE 8-37-15

SECTION 8
INSTRUMENT PANEL - SATELLITE, CORONET AND CHARGER

SECTION 8
INSTRUMENT PANEL - SATELLITE,
CORONET AND CHARGER

Ref. No.	Name	Part Type Code
1	Duct	24-28-73
2	Duct	1-48-141
3	Plate	23-33-42
4	Speaker	1-87-2
5	Clip	8-50-191
6	Flasher	8-50-186
7	Bulb	8-44-1
8	Bumper	23-06-14
9	Catch	23-06-15
10	Panel	23-33-109
11	Relay	8-37-70
12	Lamp	8-38-23
13	Box	23-06-4
14		
15	Latch	23-06-15
16	Bumper	23-06-14
17		
18	Door Comp.	23-06-10
19	Cylinder and Key Package	23-06-28
	Cylinder and Key Package	23-17-4
20	Pad	23-84-3
21	Air Outlet, Center and Right	24-28-78
22	Receiver	23-02-18
23	Knob	8-20-8
	Element	8-20-9
24	Nut	
25	Lamp	8-37-75
26	Bumper	23-02-38
27	Shell and Clamp	8-20-10
28	Lamp	8-19-83
29	Housing	23-02-19
30	Shell and Clamp	8-20-10
31	Control	1-87-58
32	Lamp	8-42-1
33	Nut	
34	Knob	1-87-180
35	Bezel	1-87-22
36	Connectors (See PTC 8-16-0)	
37	Switch	8-53-150
38	Wiring	8-19-3
39	Cluster (See Illustration on Instrument Cluster)	
40	Spot Cooler	24-28-78
41	Retainer	8-19-10
42	Radio	1-87-1
43	Bracket	
44	Brace	23-33-10
45	Lamp	8-37-15
46		
47	Switch	23-54-167
48	Switch	23-54-167
49	Switch	8-34-281
50	Switch	1-47-7
51		
52	Bezel	23-54-170
53	Bezel	23-54-170
54	Bezel	8-34-289
55	Bezel	1-47-9
56	Name Plate	23-33-96

PARTS INDICATED BY NAME ONLY - ORDER BY DESCRIPTION

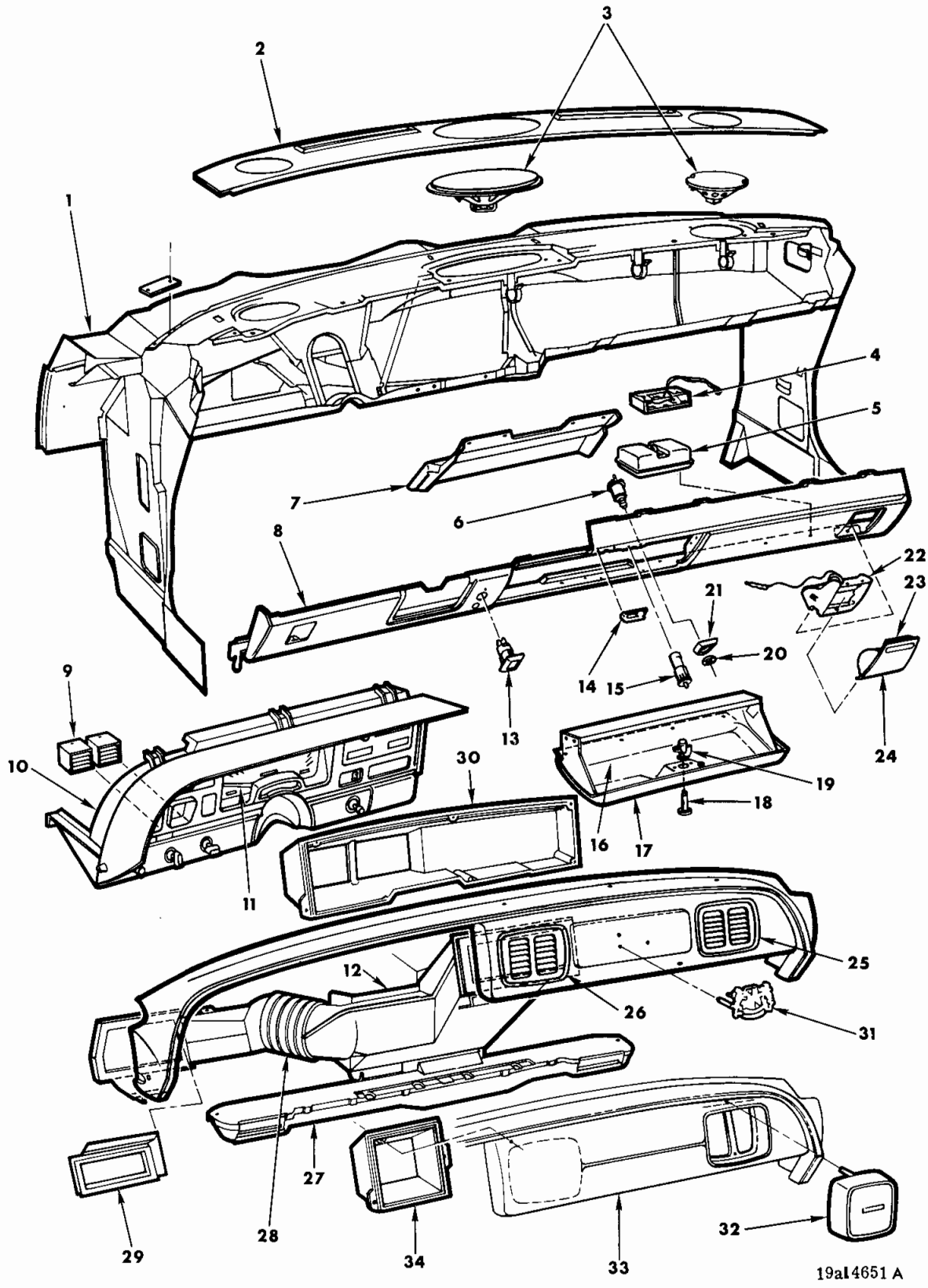

SECTION 8
INSTRUMENT PANEL - P, D, C, Y

SECTION 8
INSTRUMENT PANEL - P, D, C, Y

Ref. No.	Name	Part Type Code
1	Panel	23-34-80
2	Cover	23-33-22
3	Speaker	1-87-2
4	Lamp	8-42-2
5	Amplifier	8-53-301
6	Switch	23-19-94
7	Shroud	23-06-60
8	Panel	23-33-109
9	Air Outlet	24-28-78
10	Carrier	8-37-178
11	Speedometer	8-37-372
12	Duct, Ctr.	24-28-73
13	Switch	8-62-4
14	Catch	23-06-15
15	Lamp	8-38-23
16	Box	23-06-4
17	Door and Hinge	23-06-10
18	Cylinder and Key Package	23-06-28, 23-17-4
19	Latch	23-06-15
20	Nut	(Part No. 6026 839)
21	Bezel	23-19-100
22	Housing	23-02-19
23	Receptacle	23-02-18
24	Face Plate	23-02-50
25	Air Outlet, Right	24-28-78
26	Air Outlet, Center	24-28-78
27	Duct, Lap	24-28-73
28	Duct, Left	24-28-73
29	Adapter	24-28-84
30	Plate	23-33-135
31	Medallion	23-33-96
32	Cover	23-33-65
33	Pad	23-84-3
34	Plate	1-48-945

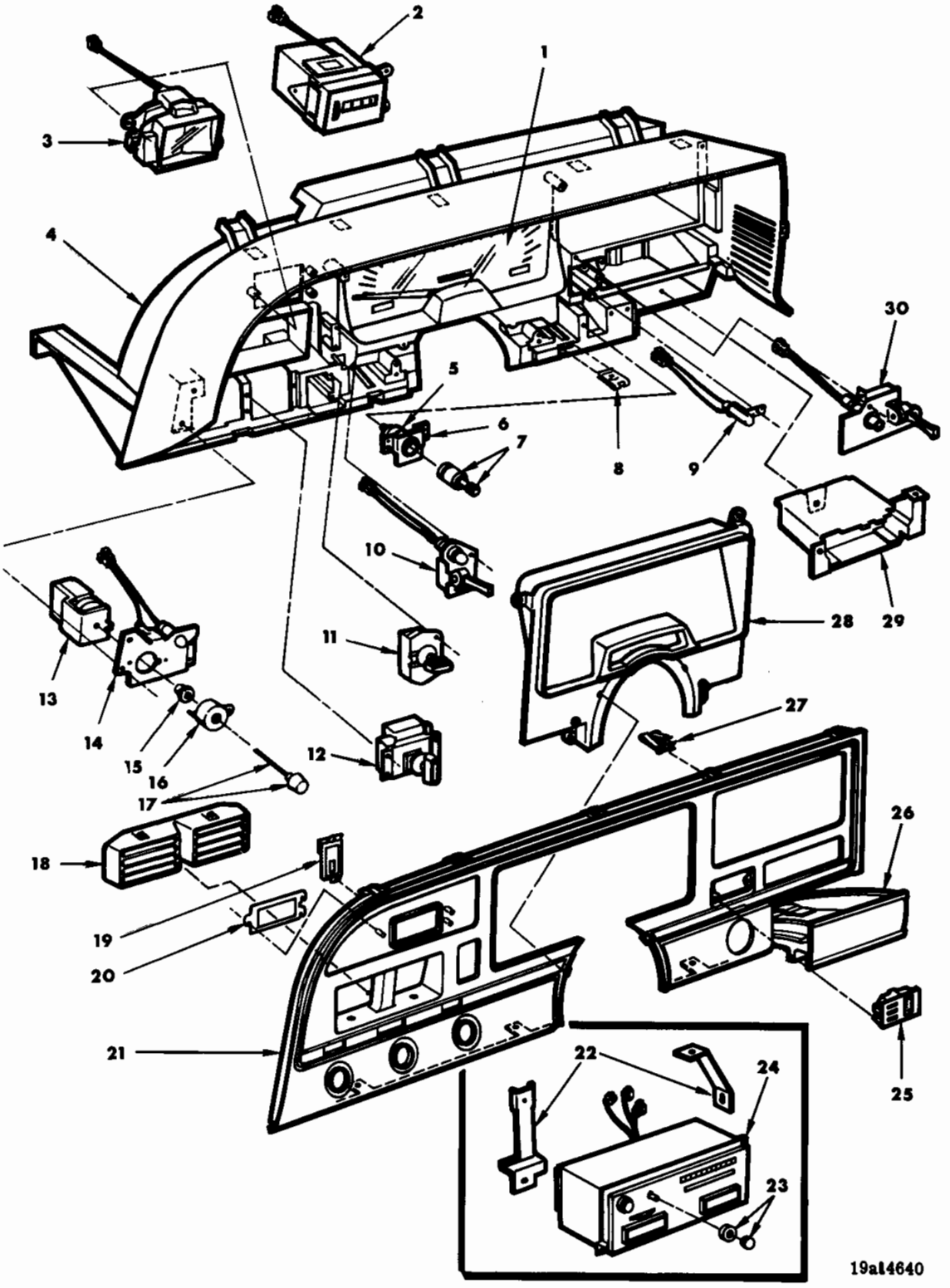

SECTION 8
INSTRUMENT PANEL CARRIER - P,D

SECTION 8
INSTRUMENT PANEL CARRIER - P, D

Ref. No.	Name	Part Type Code
1	Speedometer	8-37-372
2	Clock	8-37-14
3	Oil and Temperature Gauge	8-37-316
4	Housing	8-37-178
5	Shell and Clamp	8-20-20
6	Plate	23-33-152
7	Knob	8-20-8
8	Spring Nut (Part No. 152 490)	
9	Lamp	8-37-15
10	Switch and Lamp	23-54-167
11	Switch	23-54-167
12	Switch	23-67-160
13	Switch	8-53-270
14	Plate	8-53-289
15	Retainer	8-53-312
16	Escutcheon	8-53-274
17	Knob and Shaft	8-53-296
18	Cover	23-33-65
19	Bezel	23-54-170
20	Cover	23-33-20
21	Bezel	8-37-90
22	Bracket	1-87-61
23	Knob	1-87-180
24	Radio	1-87-1
25	Bezel	1-47-9
26	Receptacle	23-02-18
27	Clip (Part No. 6030 276)	
28	Lens	8-37-162
29	Housing	23-02-19
30	Switch and Lamp	1-47-7

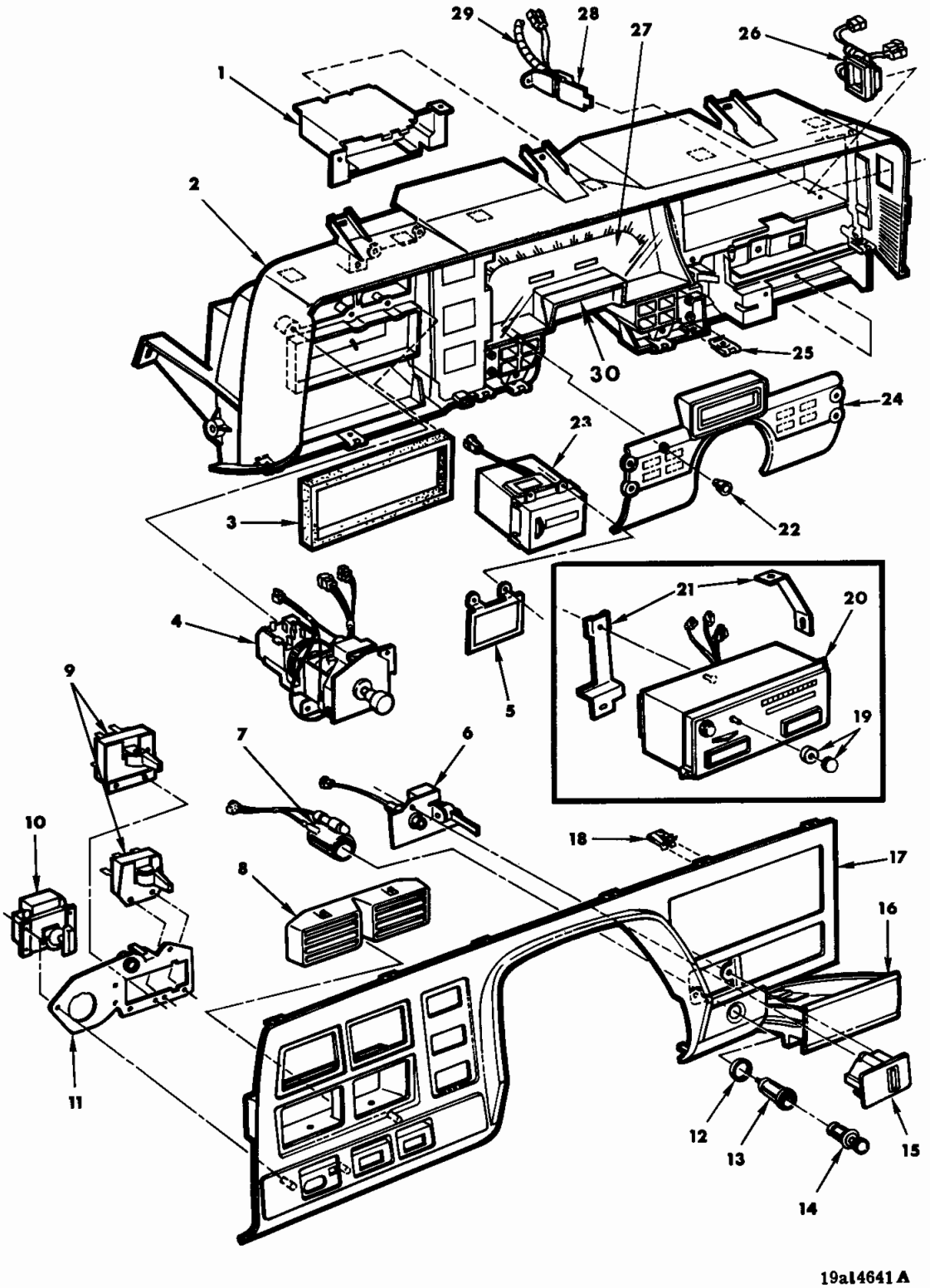

SECTION 8
INSTRUMENT PANEL CARRIER - C, Y

SECTION 8
INSTRUMENT PANEL CARRIER - C, Y

Ref. No.	Name	Part Type Code
1	Housing	23-02-19
2	Housing	8-37-178
3	Seal	8-37-191
4	Switch	8-53-270
5	Cover	23-33-20
6	Switch and Lamp	1-47-7
7	Lamp	8-37-15
8	Cover	23-33-65
9	Switch	23-54-167
10	Switch	23-67-160
11	Bracket	23-67-161
12	Bezel	8-20-16
13	Shell and Clamp	8-20-10
14	Knob	8-20-8
15	Bezel	1-48-70
16	Receiver	23-02-18
17	Bezel	8-37-90
18	Clip (Part No. 6030 276)	
19	Knob	1-87-180
20	Radio	1-87-1
21	Bracket	1-87-61
22	Knob	8-37-454
23	Clock	8-37-14
24	Bezel	8-37-90
25	Spring Nut (Part No. 152 490)	
26	Lamp and Switch	8-42-1
27	Speedometer	8-37-372
28	Sensor	24-24-44
29	Hose, Aspirator	24-28-24
30	Lens	8-37-162

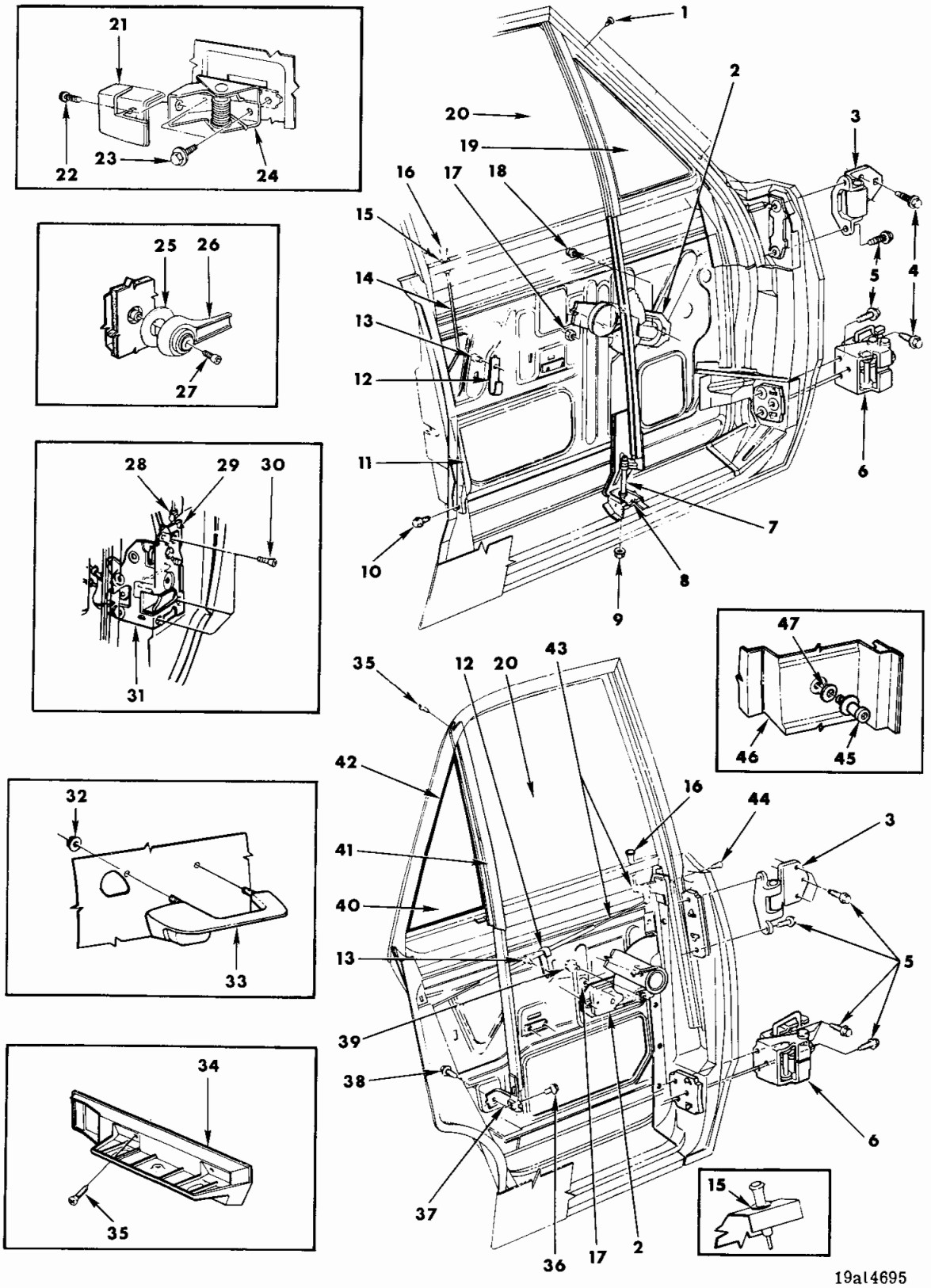

SECTION 9
FRONT AND REAR DOOR INSIDE PANEL
VALIANT AND DART 4 DOOR SEDAN

SECTION 9

FRONT AND REAR DOOR INSIDE PANEL
VALIANT AND DART 4 DOOR SEDAN

Ref. No.	Name	Part Type Code
1	Screw (Part No. 9414 711)	
2	Regulator	23-39-5
3	Hinge	23-15-1
4	Screw, Washer and Seal (Part No. 6026 532)	
5	Screw and Washer (Part No. 6026 531)	
6	Hinge	23-15-3
7	Rod	23-64-40
8	Retainer	23-64-44
9	Nut w/Washer (Part No. 120 376)	
10	Screw w/Washer (Part No. 454 542)	
11	Channel w/Nut	23-09-51
12	Clip (See Clip Chart)	23-18-29
13	Screw and Washer (Part No. 454 542)	
14	Rod	23-18-26
15	Escutcheon	23-18-49
16	Knob Package	23-18-27
17	Nut (Part No. 6028 437)	
18	Screw w/Washer	Not Serviced
19	Glass w/Lower Pivot Base	23-64-306
20	Glass	23-64-308
21	Handle	23-14-27
22	Screw and Washer (Part No. 180 020)	
23	Screw and Washer (Part No. 180 020)	
24	Remote Control	23-18-13
25	Spacer	23-14-24
26	Handle	23-14-18
27	Screw (Part No. 6027 221)	
28	Link	23-18-26
29	Screw and Washer (Part No. 6026 625)	
30	Screw (Part No. 6026 884)	
31	Latch	23-18-5
32	Nut (Part No. 6028 800)	
33	Handle	23-14-10
34	Base	23-76-9
35	Screw (Part No. 6028 798)	
36	Screw w/Washer (Part No. 180 077)	
37	Support	23-64-273
38	Screw w/Washer (Part No. 180 020)	
39	Screw w/Washer (Part No. 6030 163)	
40	Glass (Stationary)	23-64-308
41	Channel w/Lower Bracket	23-09-56
42	Weatherstrip	23-63-97
43	Control w/Link	23-18-25
44	Screw (Part No. 6026 928)	
45	Striker	23-08-60
46	Pillar	23-36-53
47	Washer	23-08-54

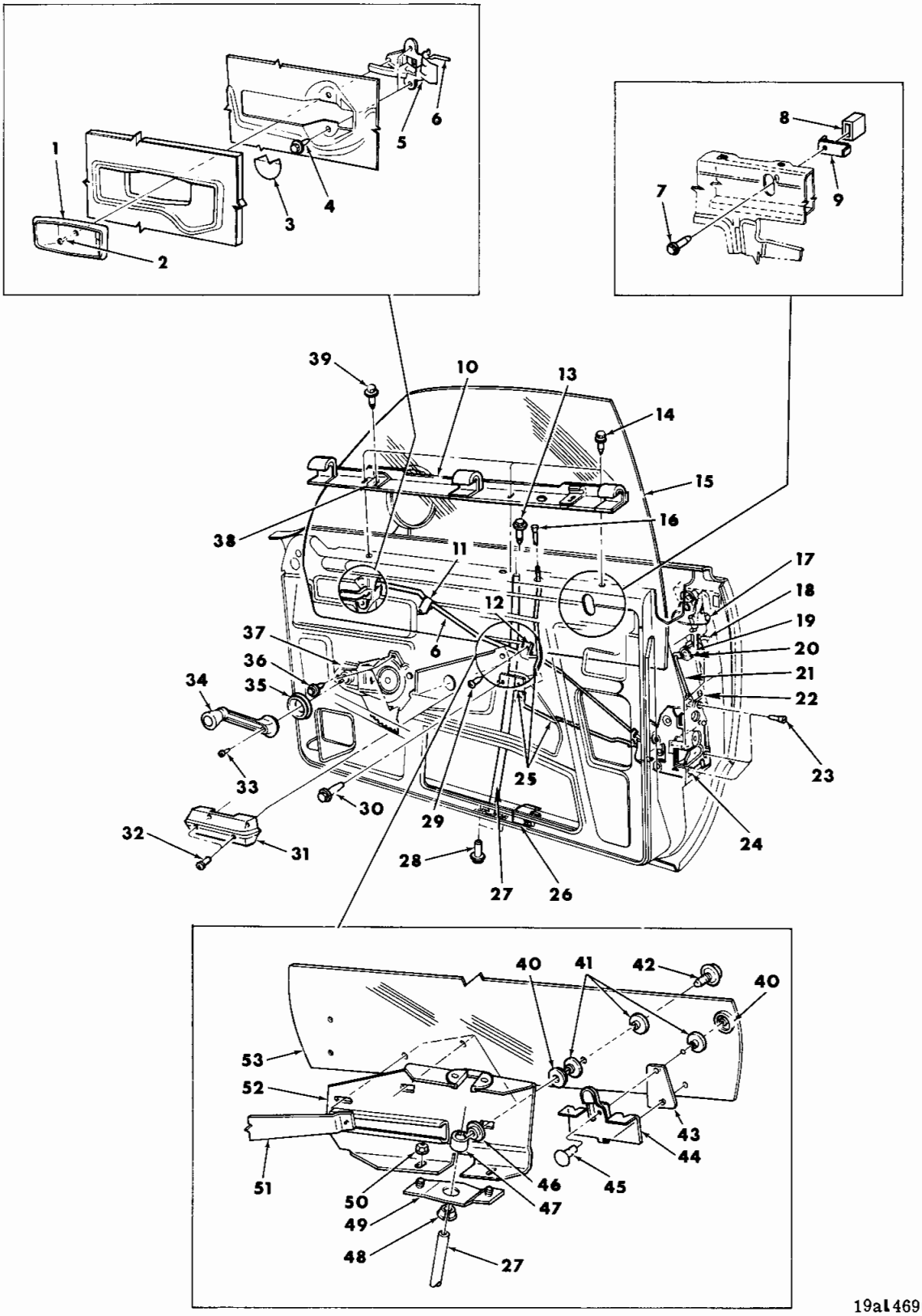

19al4696

SECTION 9
FRONT DOOR INSIDE PANEL - VALIANT AND DART
2 DOOR HARDTOP AND FASTBACK

SECTION 9
FRONT DOOR INSIDE PANEL - VALIANT AND DART
2 DOOR HARDTOP AND FASTBACK

Ref. No.	Name	Part Type Code
1	Bezel and Seal	23-18-37
2	Screw (Part No. 155 053)	
3	Seal	23-63-33
4	Screw w/Washer (Part No. 180 020)	
5	Remote Control and Handle	23-18-13
6	Link w/Sleeve	23-18-11
7	Screw w/Washer (Part No. 6030 163)	
8	Bumper	23-64-4
9	Up-Stop	23-64-12
10	Bracket and Support	23-11-29
11	See Clip Chart	23-18-29
12	See Clip Chart	23-18-29
13	Screw and Washer (Part No. 6030 498)	
14	Screw and Washer (Part No. 6030 306)	
15	Glass	23-64-308
16	Knob	23-18-27
17	Handle	23-14-10
18	Retainer	23-17-28
19	Link	23-18-20
20	Cylinder and Key Package	23-17-2
21	Link	23-18-26
22	Screw and Washer (Part No. 6026 625)	
23	Screw (Part No. 166 412)	
24	Latch	23-18-5
25	Control w/Link	23-18-25
26	Bumper	23-64-4
27	Track w/Bracket	23-64-254
28	Screw w/Washer (Part No. 6030 163)	
29	Screw and Washer (Part No. 454 542)	
30	Screw & Washer Seal (Part No. 6024 100)	
31	Arm Rest	23-76-3
32	Screw (Part No. 6028 798)	
33	Screw (Part No. 6027 221)	
34	Handle	23-14-18
35	Spacer	23-14-24
36	Screw w/Washer (Part No. 6030 163)	
37	Regulator	23-39-5
38	Stabilizer	23-64-198
39	Screw w/Washer (Part No. 6030 306)	
40	T/Nut (Part No. 6028 587)	
41	Gasket	23-64-17
42	Washer w/Stud (Part No. 6029 998)	
43	Spacer	23-64-272
44	Hook	23-64-19
45	Bolt (Part No. 6030 382)	
46	Nut w/Washer (Part No. 120 375)	
47	Sleeve	23-64-295
48	Guide	23-64-197
49	Retainer	23-64-293
50	Nut w/Washer (Part No. 6025 004)	
51	Regulator	23-39-5
52	Bracket	23-09-52
53	Glass	23-64-308

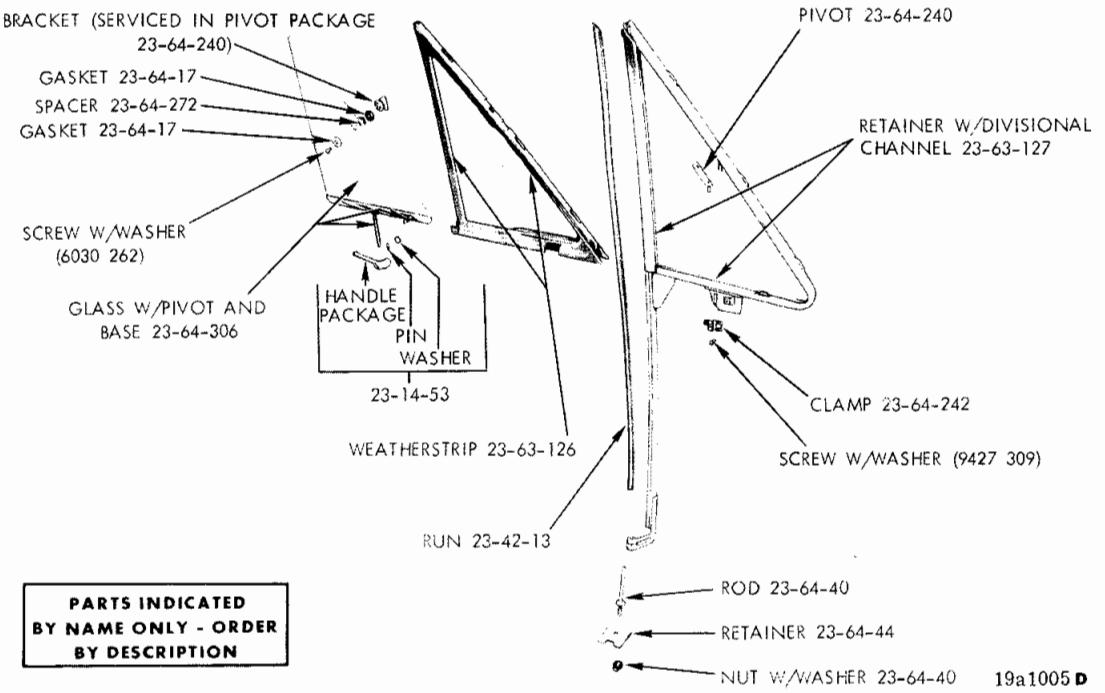

SECTION 9
DOOR VENT WING AND GLASS - VALIANT AND DART 4 DOOR SEDAN

NOTES

NOTES

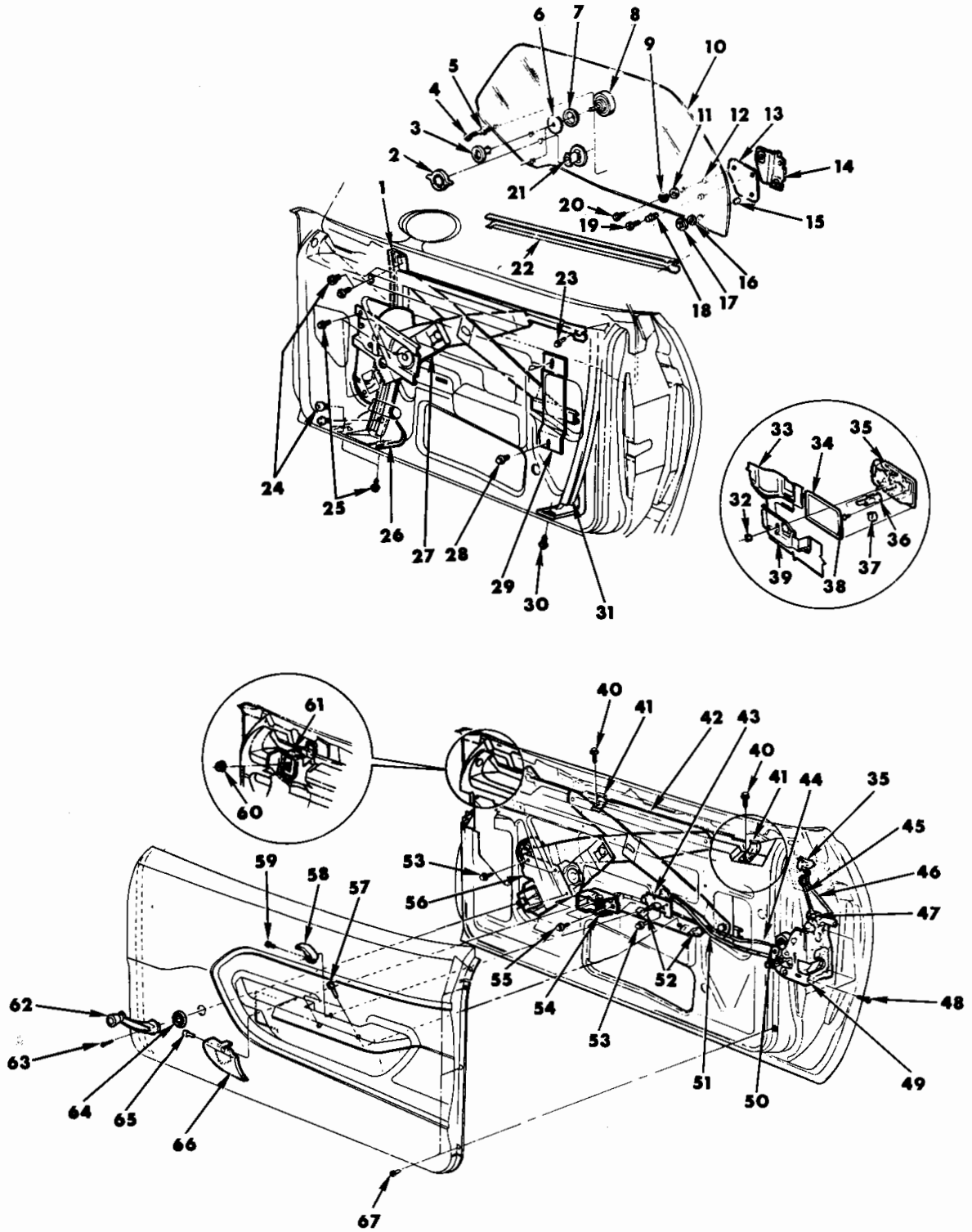

19a14697

SECTION 9
FRONT DOOR INSIDE PANEL
BARRACUDA AND CHALLENGER 2 DOOR HARDTOP

SECTION 9
FRONT DOOR INSIDE PANEL
BARRACUDA AND CHALLENGER
2 DOOR HARDTOP

Ref. No.	Name	Part Type Code
1	Track w/ Bracket	23-64-254
2	Bushing	23-09-53
3	Fastener	23-64-272
4	Screw (Part No. 6028 313)	
5	Stop	23-64-12
6	Gasket	23-64-17
7	Washer (Part No. 6028 349)	
8	Slide	23-64-282
9	Washer (Part No. 6028 349)	
10	Glass	23-64-308
11	Washer	23-64-272
12	Spacer	23-64-272
13	Gasket	23-64-199
14	Guide w/ Support	23-64-197
15	Spacer	23-64-272
16	Washer	23-64-272
17	Nut w/ Washer (Part No. 6025 080)	
18	Stop	23-64-12
19	Screw (Part No. 6028 313)	
20	Screw w/ Washer (Part No. 6022 213)	
21	Fastener	23-64-272
22	Channel	23-09-52
23	Screw and Washer (Part No. 180 020)	
24	Screw (Part No. 6028 652)	
25	Screw w/ Washer (Part No. 6030 163)	
26	Support w/ Retainer	23-64-269
27	Regulator	23-39-5
28	Screw w/ Washer (Part No. 6030 186)	
29	Support w/ Guide	23-39-24
30	Screw (Part No. 180 077)	
31	Track w/ Bracket	23-64-254
32	Nut w/ Washer (Part No. 6025 004)	
33	Reinforcement (Serviced in Door)	
34	Gasket	23-14-147
35	Handle	23-14-10
36	Cylinder and Key Package	23-17-2
37	Spacer	23-14-147
38	Screw (Part No. 456 867)	
39	Bracket (Serviced in Door)	
40	Screw w/ Washer (Part No. 180 020)	
41	Bracket	23-64-200
42	Reinforcement (Serviced in Door)	
43	Control w/ Link	23-18-25
44	Link w/ Sleeve	23-18-11
45	Link	23-18-20
46	Link	23-18-26
47	Screw w/ Washer (Part No. 6026 625)	
48	Screw (Part No. 166 412)	
49	Latch	23-18-5
50	See Clip Chart	23-18-29
51	Link w/ Sleeve	23-18-11
52	J-Nut (Part No. 6028 315)	
53	Screw w/ Washer (Part No. 6030 163)	
54	Remote Control	23-18-13
55	Screw w/ Washer (Part No. 180 020)	
56	Regulator	23-39-5
57	Screw (Part No. 6029 520)	
58	Knob	23-18-27
59	Screw (Part No. 6028 900)	
60	Nut w/ Washer (Part No. 120 375)	
61	Bracket w/ Weld Screw	23-64-12
62	Handle	23-14-18
63	Screw (Part No. 6027 221)	
64	Spacer	23-14-24
65	Screw and Washer (Part No. 180 020)	
66	Handle	23-14-27
67	Screw (Part No. 6028 157)	

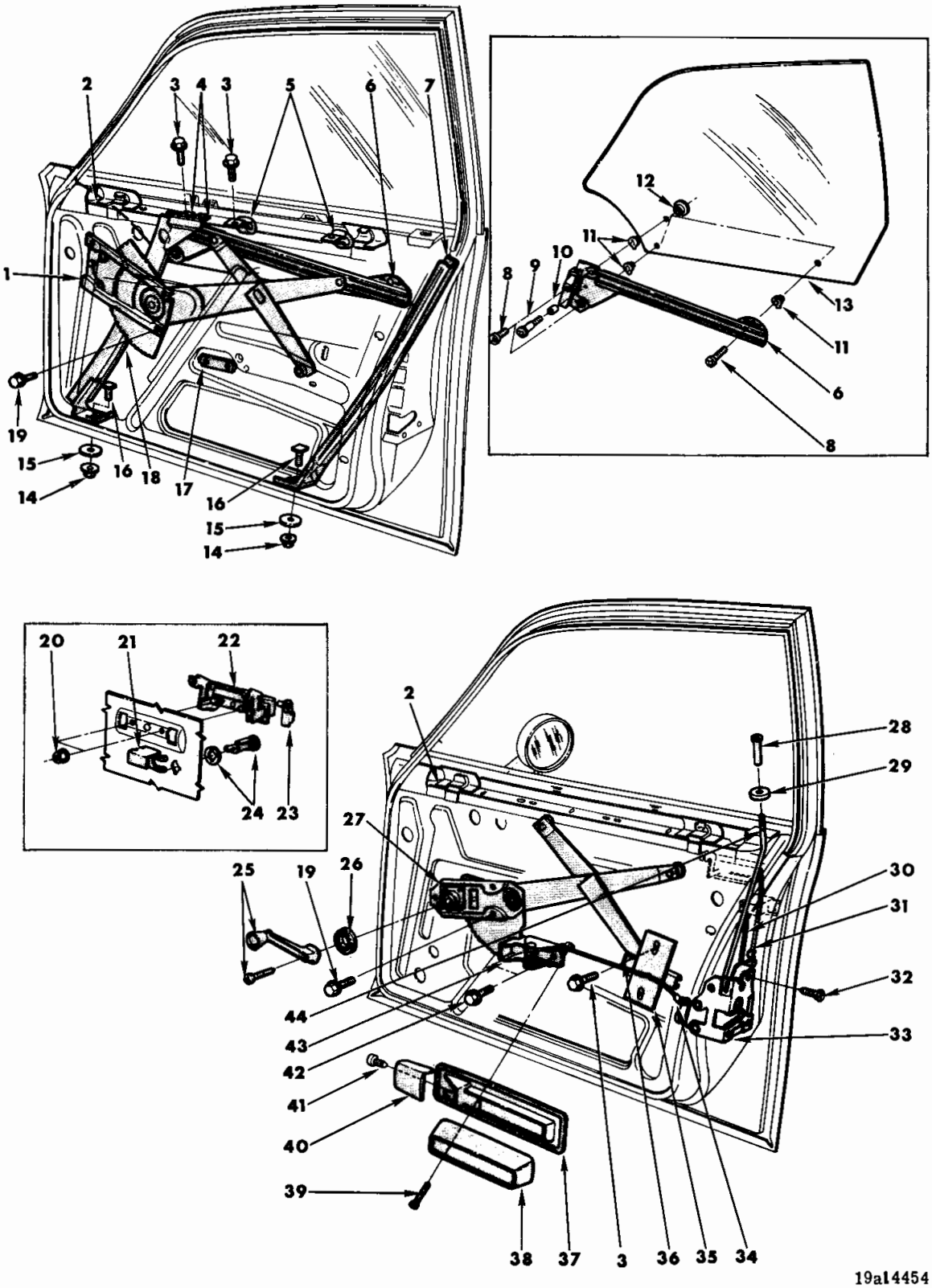

SECTION 9

FRONT DOOR INSIDE PANEL - SATELLITE AND CORONET
4 DOOR SEDAN AND STATION WAGON

SECTION 9
FRONT DOOR INSIDE PANEL - SATELLITE AND CORONET
4 DOOR SEDAN AND STATION WAGON

Ref. No.	Name	Part Type Code
1	Regulator (Electric)	23-41-4
2	Reinforcement (Serviced in Door Assy.)	
3	Screw w/Washer (Part No. 6030 186)	
4	U-Nut (Part No. 152 449)	
5	Bracket	23-64-200
6	Stabilizer and Channel	23-09-52
7	Channel and Run	23-09-51
8	Screw (Part No. 6030 181)	
9	Screw (Part No. 6029 467)	
10	Roller	23-39-45
11	Bushing	23-09-53
12	Fastener	23-64-272
13	Glass	23-64-308
14	Nut w/Washer (Part No. 120 376)	
15	Washer (Part No. 6028 588)	
16	Bolt (Part No. 6027 541)	
17	T/Plate (Serviced in Door Assy.)	
18	Track	23-64-254
19	Screw w/Washer (Part No. 6030 163)	
20	Nut (Part No. 6029 372)	
21	Retainer	23-17-28
22	Handle and Link Package	23-14-10
23	Clip (See Clip Chart)	23-18-29
24	Cylinder and Key Package	23-17-2
25	Handle	23-14-18
26	Spacer	23-14-24
27	Regulator (Manual)	23-39-5
28	Knob Package	23-18-27
29	Grommet	23-18-54
30	Link	23-18-26
31	Link	23-18-20
32	Screw (Part No. 6026 884)	
33	Latch	23-18-5
34	Link w/Sleeve	23-18-11
35	Support	23-39-24
36	Guide	23-39-24
37	Base	23-76-9
38	Pad and Plate	23-76-11
39	Screw (Part No. 6028 798)	
40	Handle	23-14-27
41	Screw and Washer (Part No. 180 020)	
42	Screw and Washer (Part No. 180 020)	
43	Remote Control	23-18-13
44	Rod	23-18-26

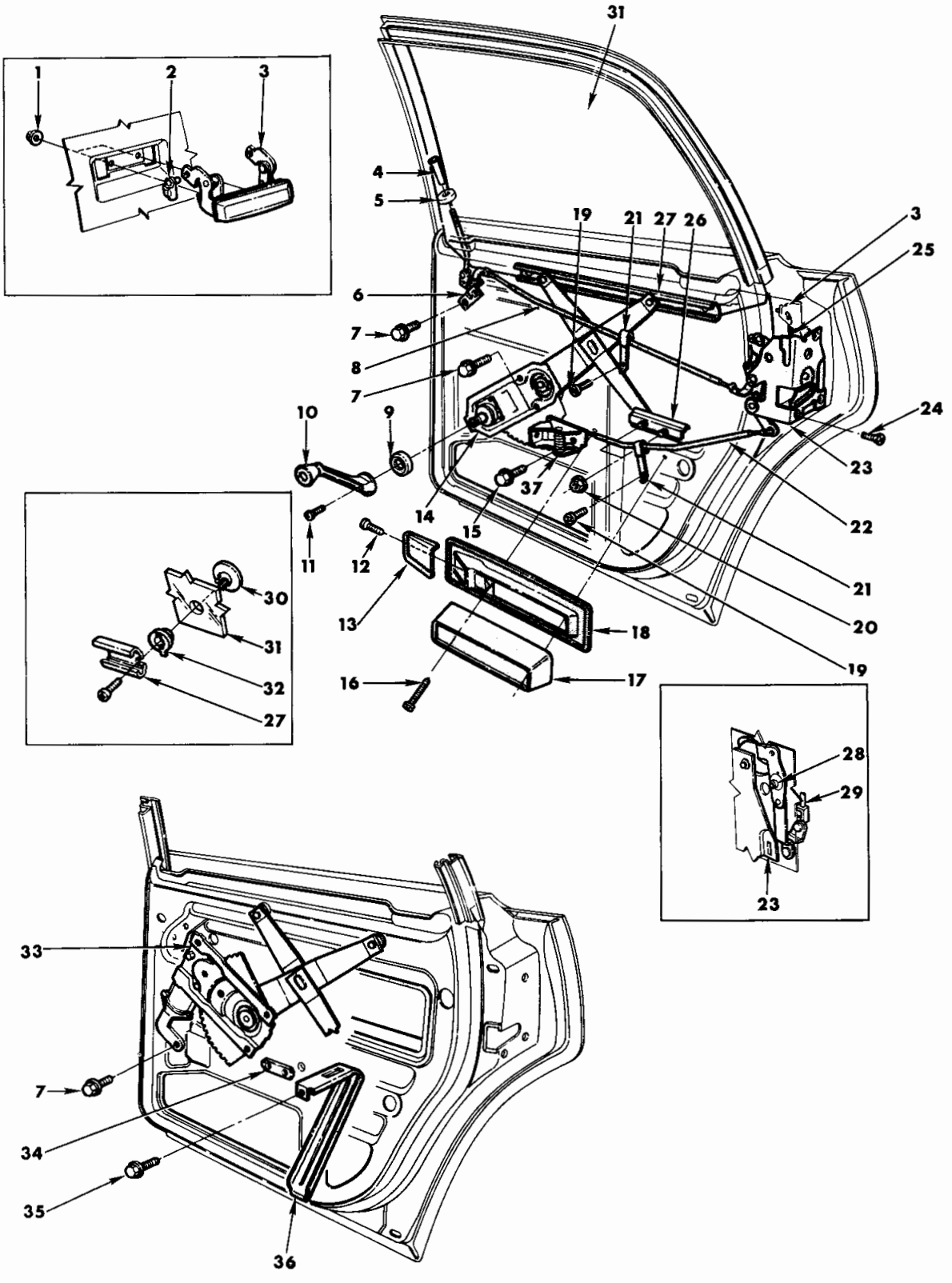

19a14455A

SECTION 9

REAR DOOR INSIDE PANEL - SATELLITE AND CORONET
4 DOOR SEDAN AND STATION WAGON

SECTION 9
REAR DOOR INSIDE PANEL - SATELLITE AND CORONET
4 DOOR SEDAN AND STATION WAGON

Ref. No.	Name	Part Type Code
1	Nut (Part No. 6029 372)	
2	Clip (See Clip Chart)	23-18-29
3	Handle and Link Package	23-14-10
4	Knob Package	23-18-27
5	Grommet	23-18-54
6	Control w/Link	23-18-25
7	Screw w/Washer (Part No. 6030 163)	
8	Link w/Sleeve	23-18-11
9	Spacer	23-14-24
10	Handle	23-14-18
11	Screw (Part No. 6027 221)	
12	Screw and Washer (Part No. 180 020)	
13	Handle	23-14-27
14	Regulator (Manual)	23-39-5
15	Screw and Washer (Part No. 180 020)	
16	Screw (Part No. 6028 798)	
17	Base	23-76-9
18	Pad and Plate	23-76-11
19	Screw and Washer (Part No. 454 542)	
20	Nut w/Washer (Part No. 120 375)	
21	Clip (See Clip Chart)	23-18-29
22	Link w/Sleeve	23-18-11
23	Latch	23-18-5
24	Screw (Part No. 6026 884)	
25	Link	23-18-20
26	Bracket	23-39-19
27	Channel	23-09-58
28	Screw and Washer (Part No. 6026 625)	
29	Link	23-18-20
30	Fastener	23-64-272
31	Glass	23-64-308
32	Bushing	23-09-53
33	Regulator (Electric)	23-41-4
34	Serviced in Door Assy.	
35	Screw w/Washer (Part No. 6030 186)	
36	Bracket	23-64-12
37	Remote Control	23-18-13

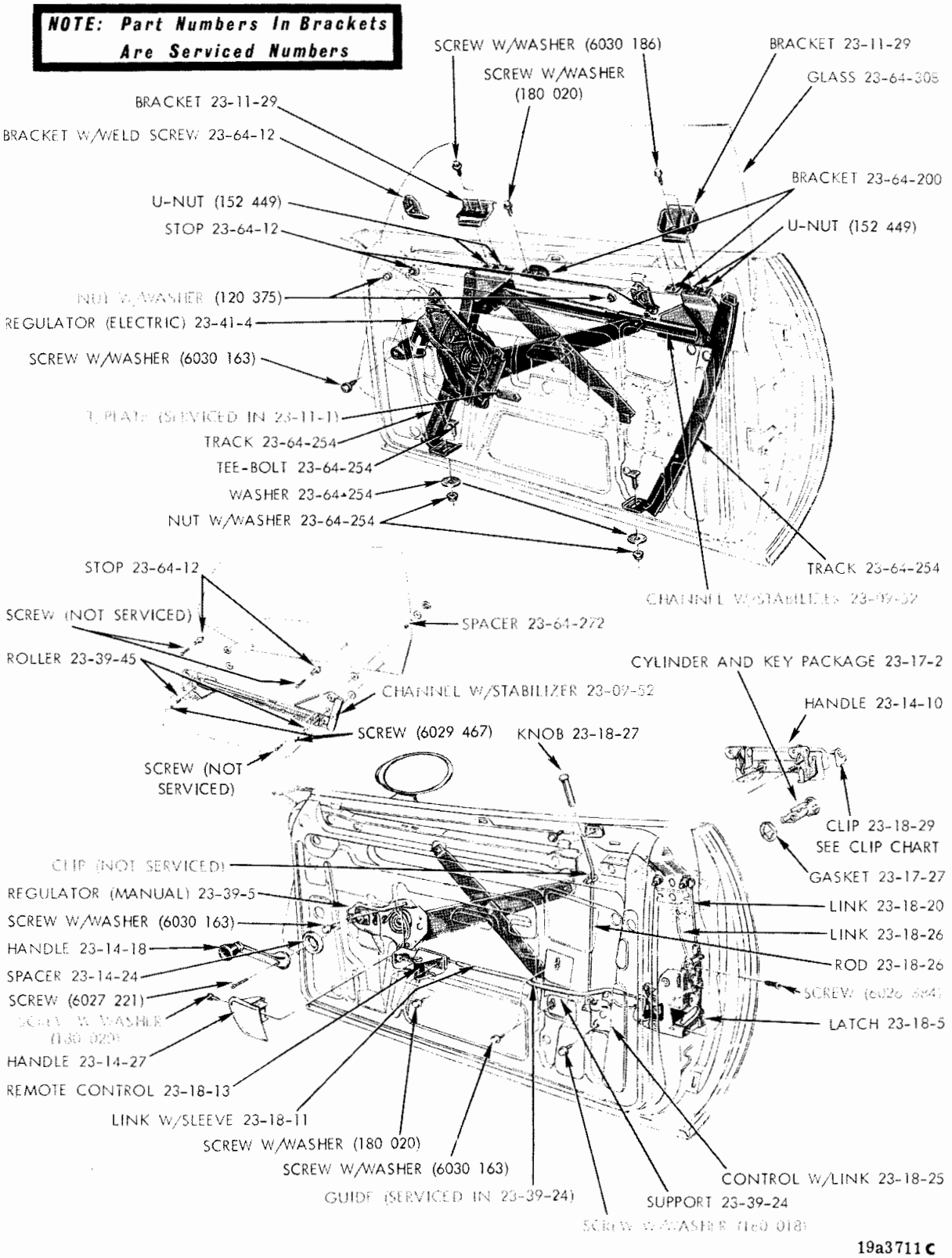

SECTION 9
FRONT DOOR INSIDE PANEL - SATELLITE AND CORONET
2 DOOR SEDAN, 2 DOOR HARDTOP AND FASTBACK

NOTES

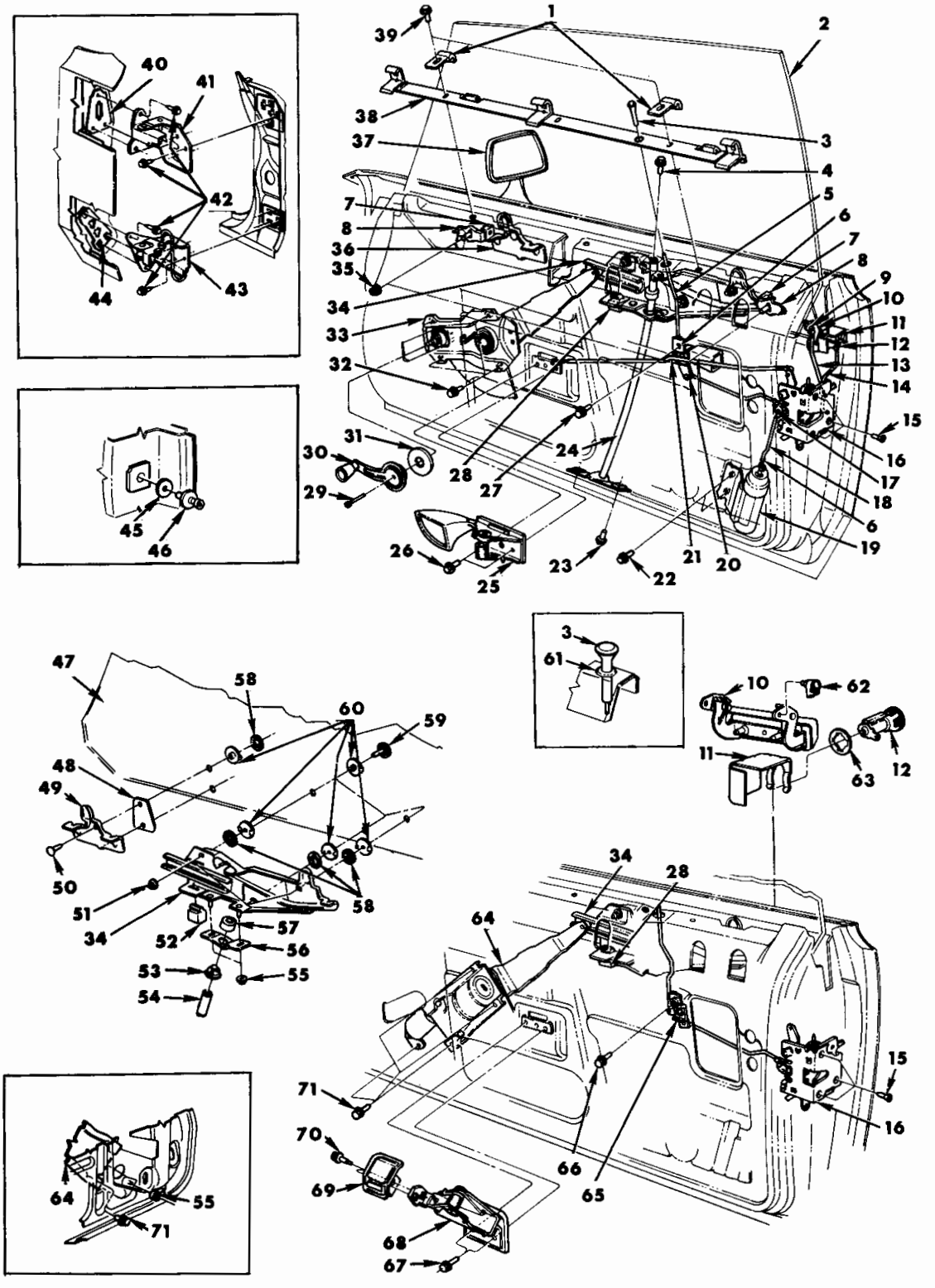

19a14837

SECTION 9

FRONT DOOR INSIDE PANEL - PLYMOUTH, DODGE, CHRYSLER AND IMPERIAL 2 DOOR HARDTOP

SECTION 9
FRONT DOOR INSIDE PANEL - PLYMOUTH, DODGE,
CHRYSLER AND IMPERIAL 2 DOOR HARDTOP

Ref. No.	Name	Part Type Code
1	Stabilizer	23-64-198
2	Glass	23-64-308
3	Knob Package	23-18-27
4	Screw and Washer (Part No. 6030 498)	
5	Rod	23-18-125
6	Clip	23-18-109
7	Bumper	23-64-4
8	Up Stop	23-64-12
9	Clip	23-18-29
10	Handle	23-14-10
11	Retainer	23-17-28
12	Cylinder and Key Package	23-17-2
13	Link	23-18-20
14	Link	23-18-26
15	Screw (Part No. 6026 884)	
16	Latch	23-18-5
17	Clip	23-18-29
18	Link	23-18-107
19	Solenoid	23-18-115
20	Bracket and Sw.	23-18-103
21	Link w/Sleeve	23-18-11
22	Screw and Washer (Part No. 6030 186)	
23	Screw w/Washer (Part No. 6030 186)	
24	Track	23-64-254
25	Remote Control	23-18-13
26	Screw and Washer (Part No. 6030 186)	
27	Screw and Washer (Part No. 6030 163)	
28	Bumper	23-64-4
29	Screw (Part No. 6027 221)	
30	Handle	23-14-18
31	Spacer	23-14-24
32	Screw w/Washer (Part No. 6030 163)	
33	Regulator (Manual)	23-39-5
34	Bracket	23-09-52
35	Nut w/Washer (Part No. 120 375)	
36	Bracket	23-64-12
37	Mirror Package	23-21-3
38	Bracket and Support	23-11-29
39	Screw w/Washer (Part No. 6030 186)	
40	T/Plate (Serviced in Assembly)	
41	Hinge, Upper	23-15-1
42	Screw and Washer (Part No. 6030 282)	
43	Hinge, Lower	23-15-3
44	T/Plate	23-15-13
45	Washer	23-08-54
46	Striker	23-08-60
47	Glass	23-64-308
48	Spacer	23-64-272
49	Bracket	23-64-12
50	Bolt (Part No. 6030 382)	
51	Nut w/Washer (Part No. 120 375)	
52	Bumper	23-64-4
53	Guide	23-64-197
54	Track	23-64-254
55	Nut w/Washer (Part No. 120 375)	
56	Retainer	23-64-28
57	Sleeve	23-64-295
58	T/Nut (Part No. 6028 587)	
59	Washer w/Stud (Part No. 6029 998)	
60	Gasket	23-64-17
61	Grommet	23-18-54
62	Clip	23-18-29
63	Gasket	23-17-27
64	Regulator (Electric)	23-41-4
65	Control w/Link	23-18-25
66	Screw and Washer (Part No. 6030 163)	
67	Screw and Washer (Part No. 6030 186)	
68	Remote Control	23-18-13
69	Cover and Handle	23-14-27
70	Screw and Washer (Part No. 180 020)	
71	Screw w/Washer (Part No. 6030 163)	

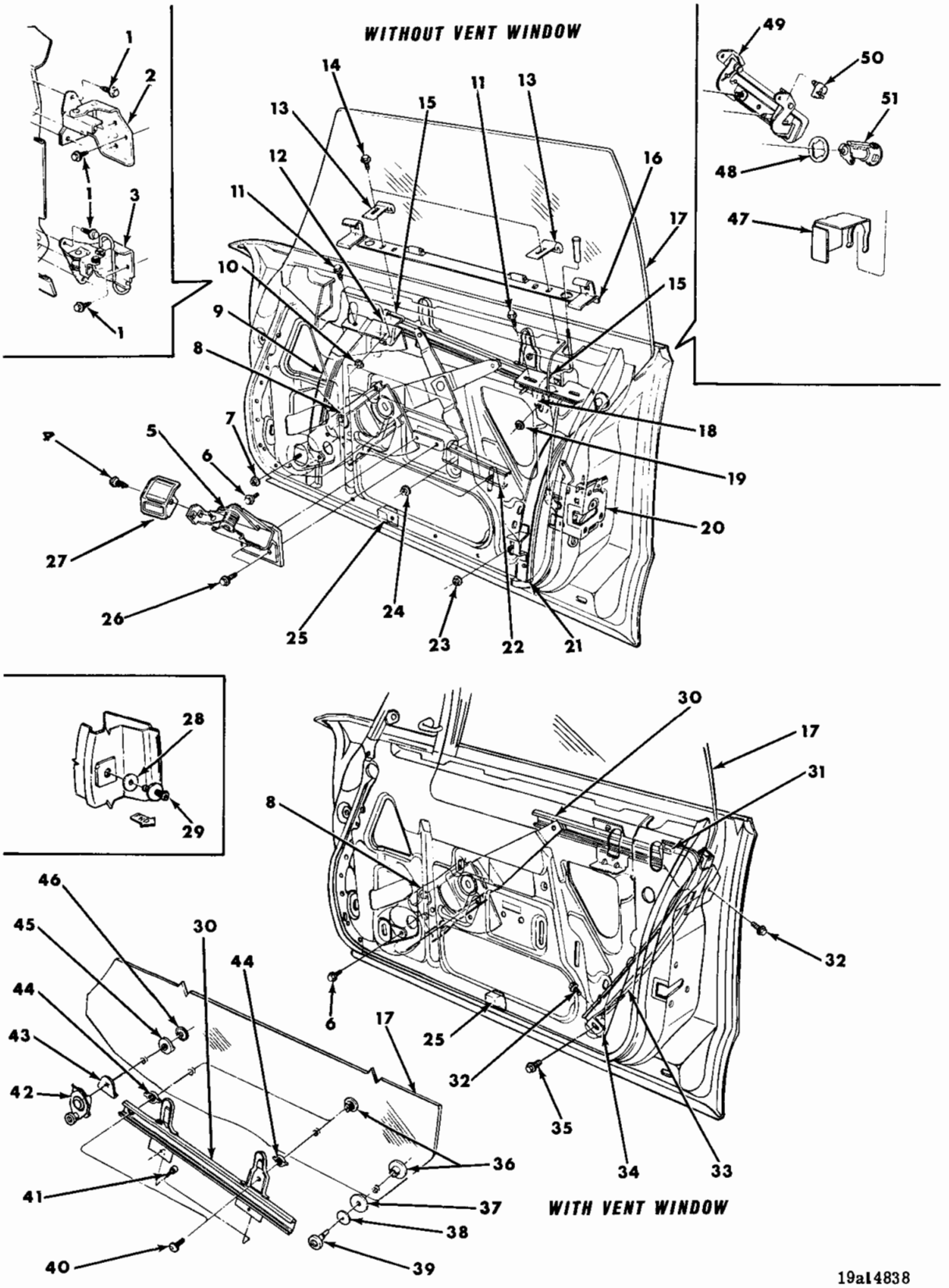

19a14838

SECTION 9
FRONT DOOR INSIDE PANEL - PLYMOUTH, DODGE,
CHRYSLER AND IMPERIAL 4 DOOR HARDTOP

SECTION 9
FRONT DOOR INSIDE PANEL - PLYMOUTH, DODGE,
CHRYSLER AND IMPERIAL 4 DOOR HARDTOP

Ref. No.	Name	Part Type Code
1	Screw and Washer (Part No.	6030 282)
2	Hinge	23-15-1
3	Hinge	23-15-3
4	Screw and Washer (Part No.	180 020)
5	Remote Control	23-18-13
6	Screw w/Washer (Part No.	6030 163)
7	Nut w/Washer (Part No.	120 375)
8	Regulator (Electric)	23-41-4
9	Track	23-64-254
10	Nut w/Washer (Part No.	120 375)
11	Screw w/Washer (Part No.	6030 186)
12	Stop	23-64-12
13	Stabilizer	23-64-198
14	Screw w/Washer (Part No.	6030 186)
15	Bumper	23-64-4
16	Bracket and Support	23-11-29
17	Glass	23-64-308
18	Stop	23-64-12
19	Nut w/Washer (Part No.	120 375)
20	Latch	23-18-5
21	Track	23-64-254
22	Channel w/Bracket	23-39-19
23	Nut w/Washer (Part No.	120 375)
24	Nut w/Washer (Part No.	6025 004)
25	Bumper	23-64-4
26	Screw and Washer (Part No.	180 020)
27	Cover and Handle	23-14-27
28	Washer	23-08-54
29	Striker	23-08-60
30	Bracket and Channel	23-09-52
31	Bumper	23-64-4
32	Screw and Washer (Part No.	180 077)
33	Channel and Bracket	23-09-51
34	Bracket	23-64-269
35	Screw w/Washer (Part No.	180 020)
36	Fastener	23-64-272
37	Gasket	23-64-17
38	Washer (Part No.	6028 349)
39	Slide	23-64-282
40	Screw (Part No.	6030 182)
41	Bumper	23-64-266
42	Bell Crank	23-64-21
43	Gasket	23-64-17
44	Bushing	23-09-53
45	Gasket	23-64-17
46	T/Nut (Part No.	6028 587)
47	Retainer	23-17-28
48	Gasket	23-17-27
49	Handle	23-14-10
50	Clip	23-18-29
51	Cylinder and Key Package	23-17-2

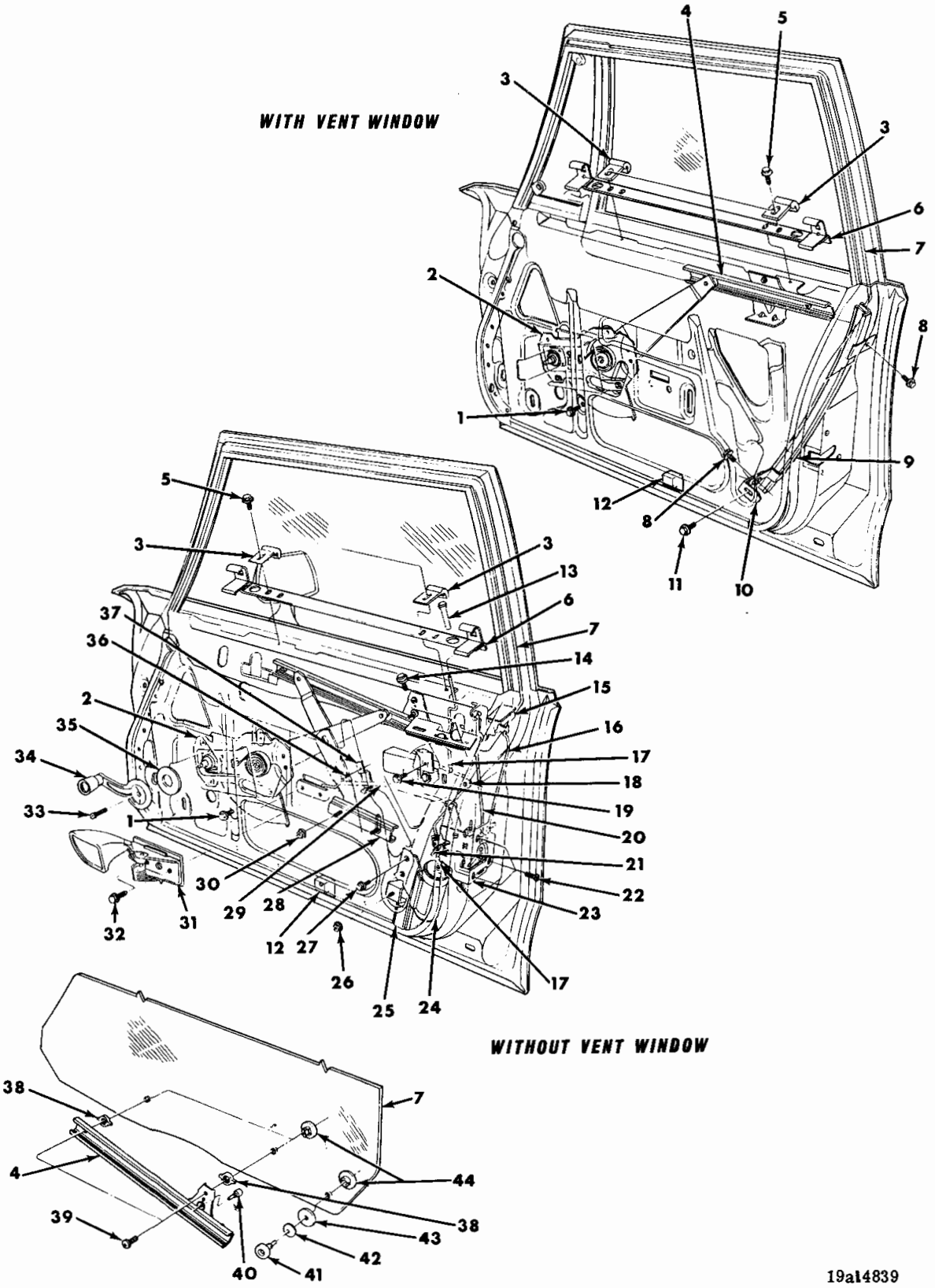

SECTION 9
FRONT DOOR INSIDE PANEL - PLYMOUTH, DODGE,
CHRYSLER 4 DOOR SEDAN AND STATION WAGON

SECTION 9
FRONT DOOR INSIDE PANEL - PLYMOUTH, DODGE,
CHRYSLER 4 DOOR SEDAN AND STATION WAGON

Ref. No.	Name	Part Type Code
1	Screw w/Washer (Part No. 6030 163)	
2	Regulator (Manual)	23-39-5
3	Stabilizer	23-64-198
4	Bracket and Channel	23-09-52
5	Screw w/Washer (Part No. 6030 186)	
6	Bracket and Support	23-11-29
7	Glass	23-64-308
8	Screw and Washer (Part No. 180 077)	
9	Channel and Bracket	23-09-51
10	Bracket	23-64-269
11	Screw w/Washer (Part No. 180 020)	
12	Bumper	23-64-4
13	Knob Package	23-18-27
14	Screw and Washer (Part No. 6030 186)	
15	Cylinder and Key Package	23-17-2
16	Link	23-18-26
17	Clip	23-18-109
18	Bracket and Switch	23-18-103
19	Screw and Washer (Part No. 6030 186)	
20	Link	23-18-20
21	Link	23-18-107
22	Screw (Part No. 6026 884)	
23	Latch	23-18-5
24	Solenoid	23-18-115
25	Track	23-64-254
26	Nut w/Washer (Part No. 120 375)	
27	Screw w/Washer (Part No. 6030 186)	
28	Channel w/Bracket	23-39-19
29	Link w/Sleeve	23-18-11
30	Nut w/Washer (Part No. 6025 004)	
31	Remote Control	23-18-13
32	Screw and Washer (Part No. 180 020)	
33	Screw (Part No. 6027 221)	
34	Handle	23-14-18
35	Spacer	23-14-24
36	Screw and Washer (Part No. 454 542)	
37	Clip	23-18-29
38	Bushing	23-09-53
39	Screw (Part No. 6030 372)	
40	Bumper	23-64-266
41	Slide	23-64-282
42	Washer (Part No. 6028 349)	
43	Gasket	23-64-17
44	Fastener	23-64-272

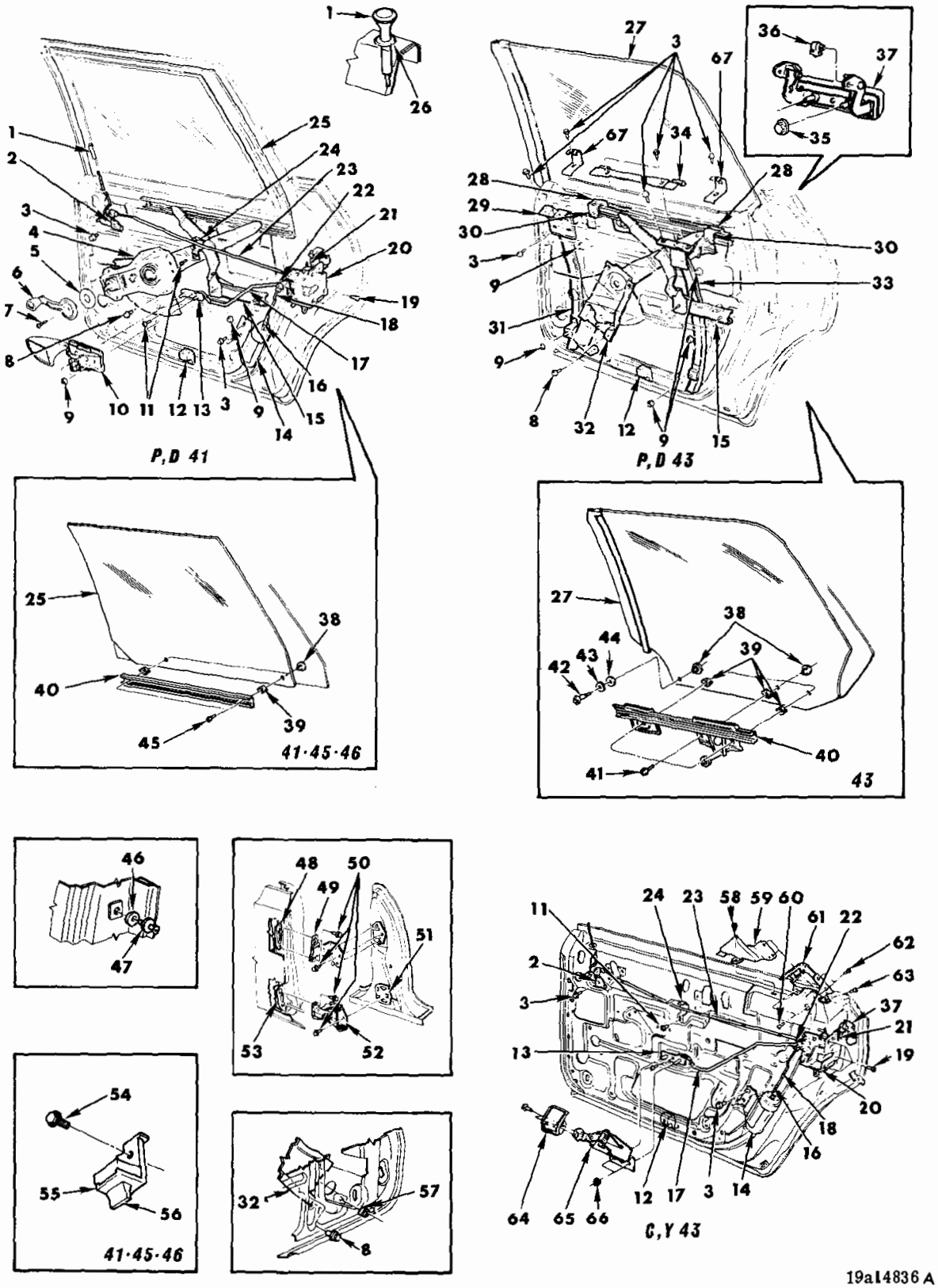

SECTION 9
REAR DOOR INSIDE PANEL - PLYMOUTH, DODGE, CHRYSLER,
AND IMPERIAL 4 DOOR SEDAN, 4 DOOR HARDTOP AND STATION WAGON

SECTION 9
REAR DOOR INSIDE PANEL
PLYMOUTH, DODGE, CHRYSLER AND IMPERIAL
4 DOOR SEDAN, 4 DOOR HARDTOP AND STATION WAGON

Ref. No.	Name	Part Type Code
1	Knob Package	23-18-27
2	Control w/Link	23-18-25
3	Screw (Part No. 6030 186)	
4	Regulator (Manual)	23-39-5
5	Spacer	23-14-24
6	Handle	23-14-18
7	Screw (Part No. 6027 221)	
8	Screw w/Washer (Part No. 6030 163)	
9	Nut w/Washer (Part No. 6025 004)	
10	Remote Control	23-18-13
11	Screw and Washer (Part No. 454 542)	
12	Bumper	23-64-4
13	Plate w/Screw	23-18-56
14	Solenoid	23-18-115
15	Channel w/Bracket	23-39-19
16	Clip	23-18-109
17	Link w/Sleeve	23-18-11
18	Link	23-18-107
19	Screw (Part No. 6026 884)	
20	Latch	23-18-5
21	Link	23-18-20
22	Clip	23-18-29
23	Link w/Sleeve	23-18-26
24	Clip	23-18-29
25	Glass	23-64-308
26	Grommet	23-18-54
27	Glass w/Front Frame and Weatherstrip	23-64-308
28	Bumper	23-64-4
29	Bracket	23-64-269
30	Up Stop	23-64-12
31	Track	23-64-254
32	Regulator (Electric)	23-41-4
33	Track	23-64-254
34	Stabilizer w/Bracket	23-64-198
35	Nut and Washer (Part No. 6028 800)	
36	Clip	23-18-29
37	Handle	23-14-10
38	Fastener	23-09-53
39	Bushing	23-09-53
40	Channel	23-09-58
41	Screw (Part No. 6030 482)	
42	Slide	23-64-282
43	Washer (Part No. 6028 349)	
44	Gasket	23-64-17
45	Screw (Part No. 6030 182)	
46	Washer	23-08-54
47	Striker	23-08-60
48	T/Plate	23-15-13
49	Hinge	23-15-1
50	Screw and Washer (Part No. 6030 282)	
51	T/Plate	23-15-13
52	Hinge	23-15-3
53	T/Plate	23-15-13
54	Screw w/Washer (Part No. 6030 481)	
55	Bumper	23-64-266
56	Bracket	23-64-12
57	Nut w/Washer (Part No. 120 375)	
58	Screw (Part No. 9414 722)	
59	Ornament and Weatherstrip	23-11-23
60	Screw (Part No. 166 336)	
61	Ornament and Gasket	23-11-23
62	Screw (Part No. 9418 326)	
63	Screw (Part No. 456 867)	
64	Cover and Handle	23-14-27
65	Remote Control	23-18-13
66	Screw and Washer (Part No. 180 020)	
67	Bracket	23-26-60

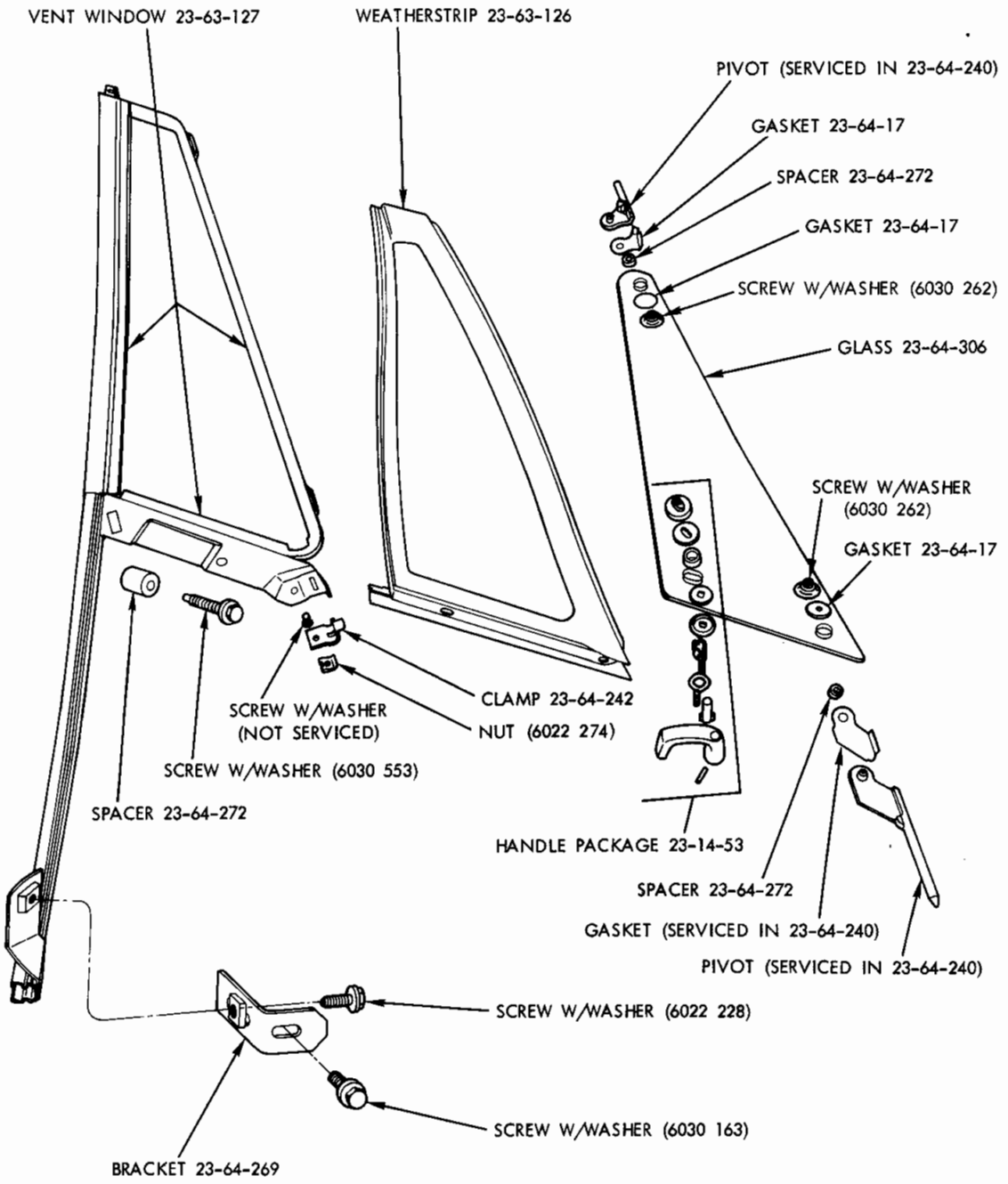

19a4875 A

SECTION 9
MANUAL VENT WINDOW - PLYMOUTH, DODGE AND CHRYSLER
4 DOOR SEDAN AND STATION WAGON

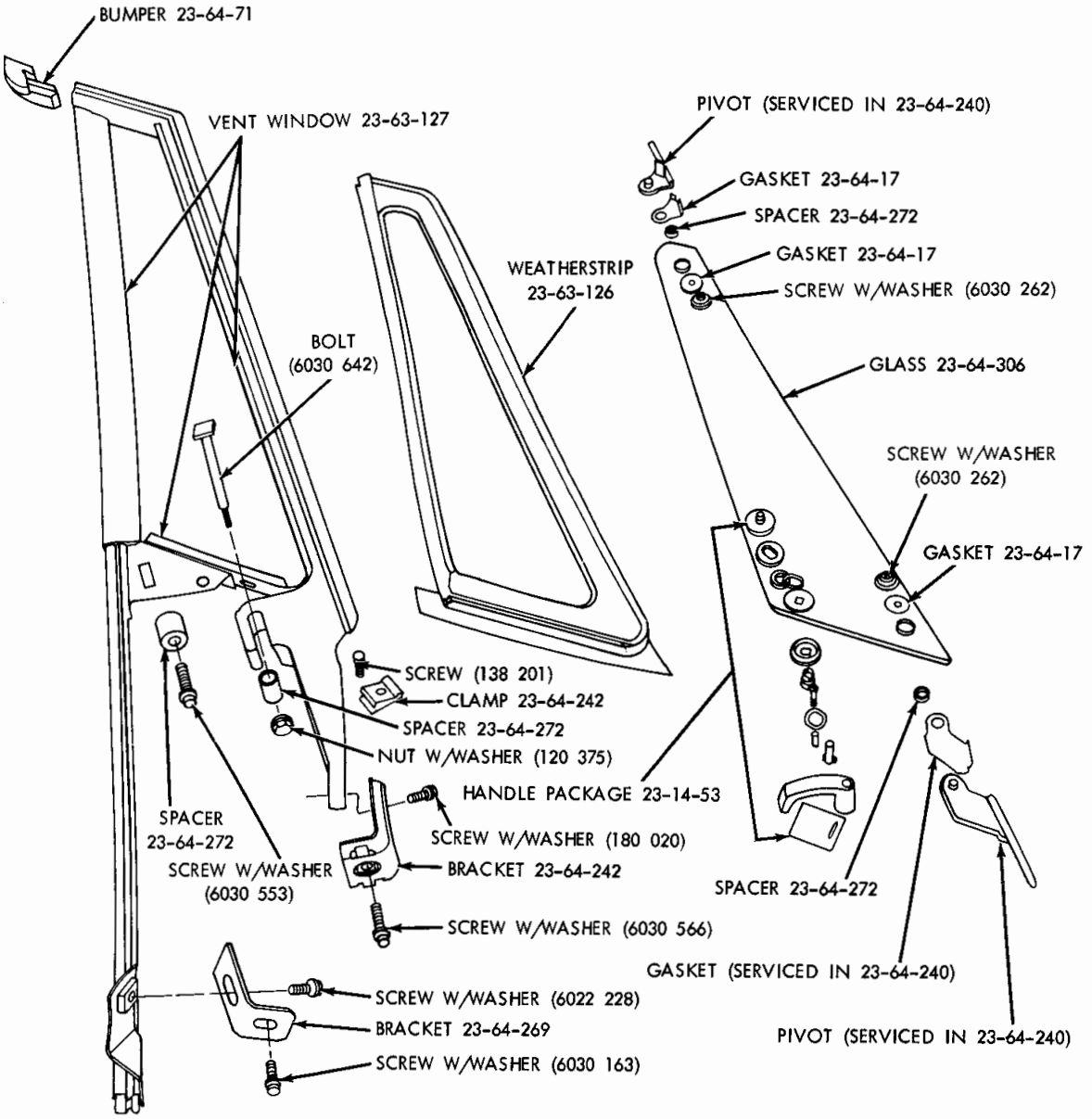

19a4884 A

SECTION 9
MANUAL VENT WINDOW - PLYMOUTH, DODGE, CHRYSLER AND IMPERIAL 4 DOOR HARDTOP

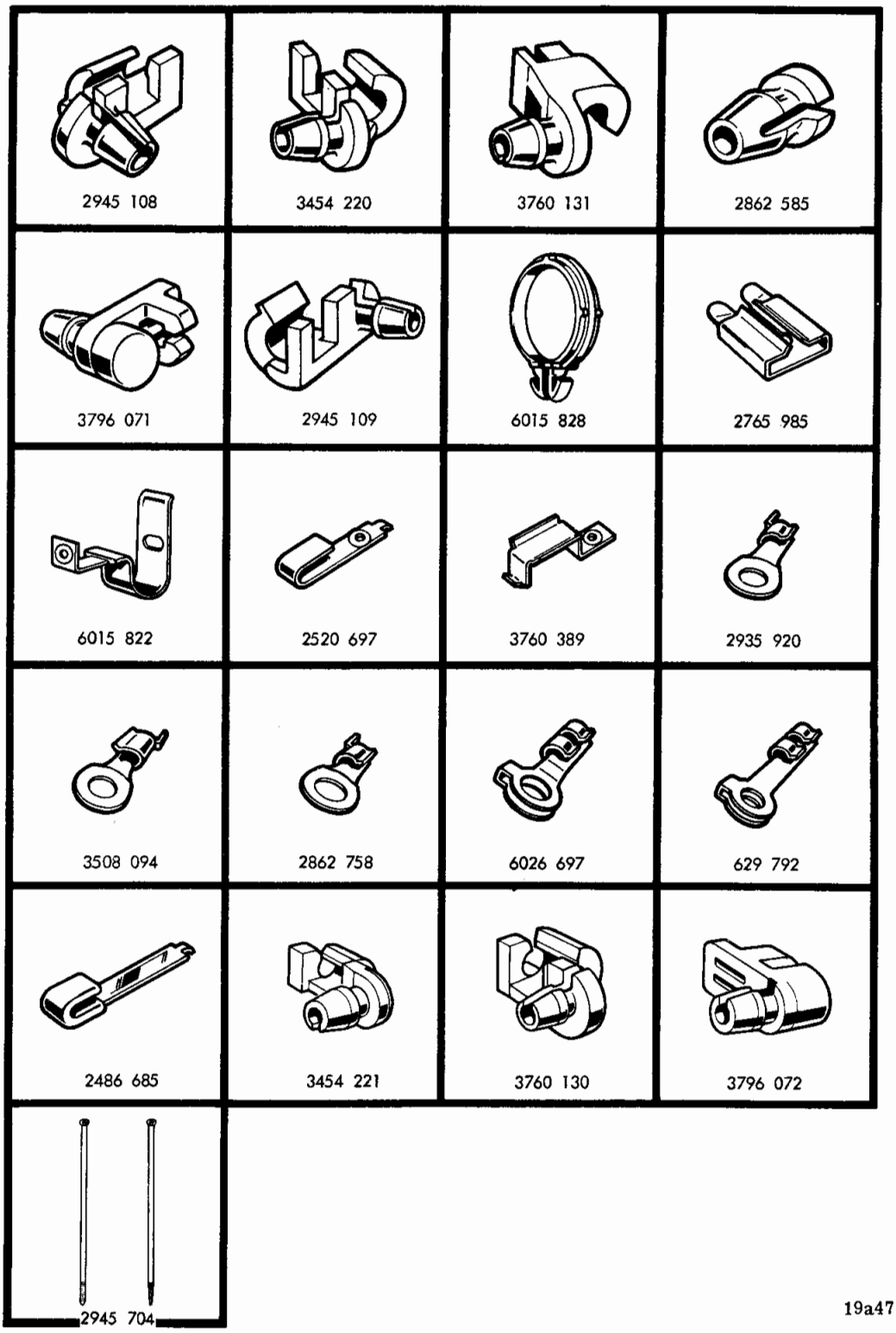

19a4717 A

SECTION 9
CLIP CHART

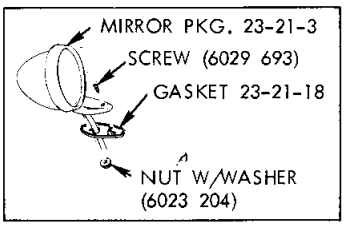

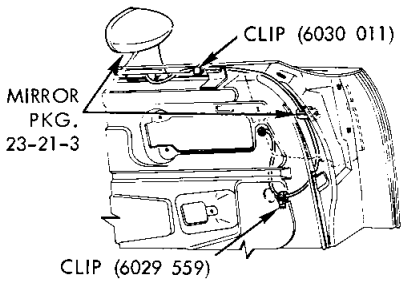

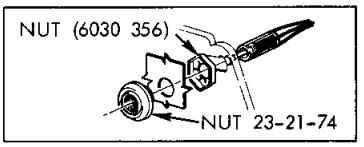

V,L 23, 29

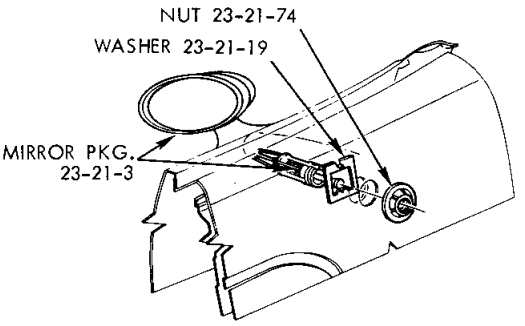

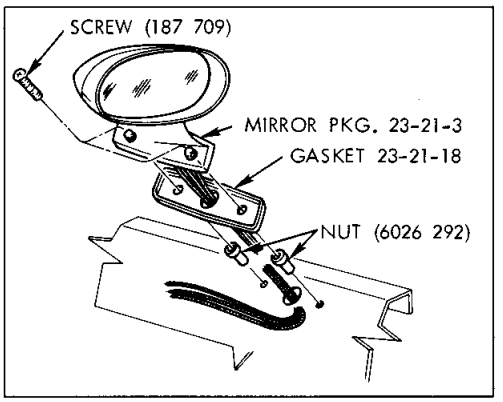

B,J

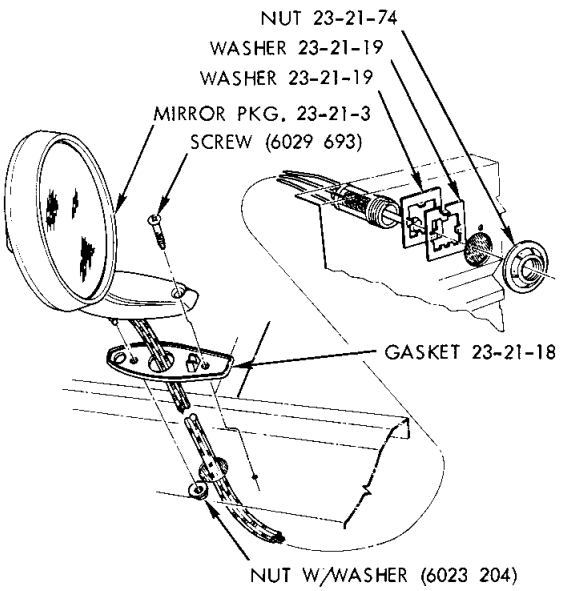

V,L 41

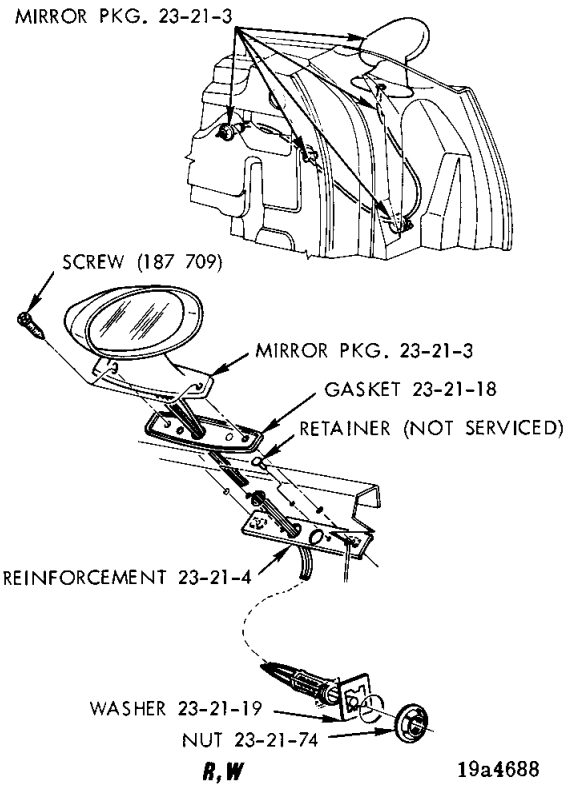

R,W

19a4688

SECTION 9
MIRROR CHART

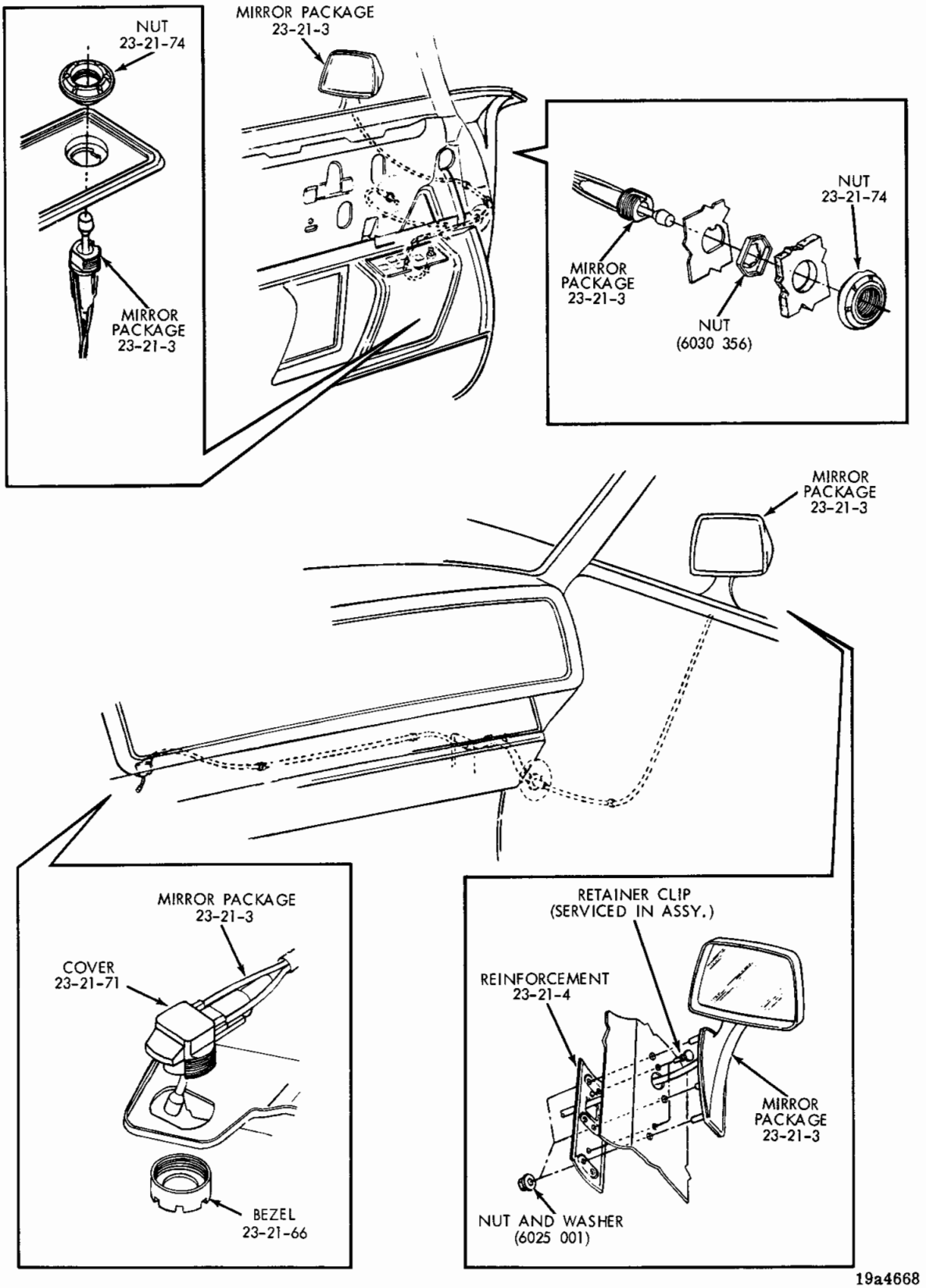

19a4668

SECTION 9
REMOTE CONTROL MIRROR - DOOR MOUNTED -
RT. AND LT. SIDE - P, D, C, Y

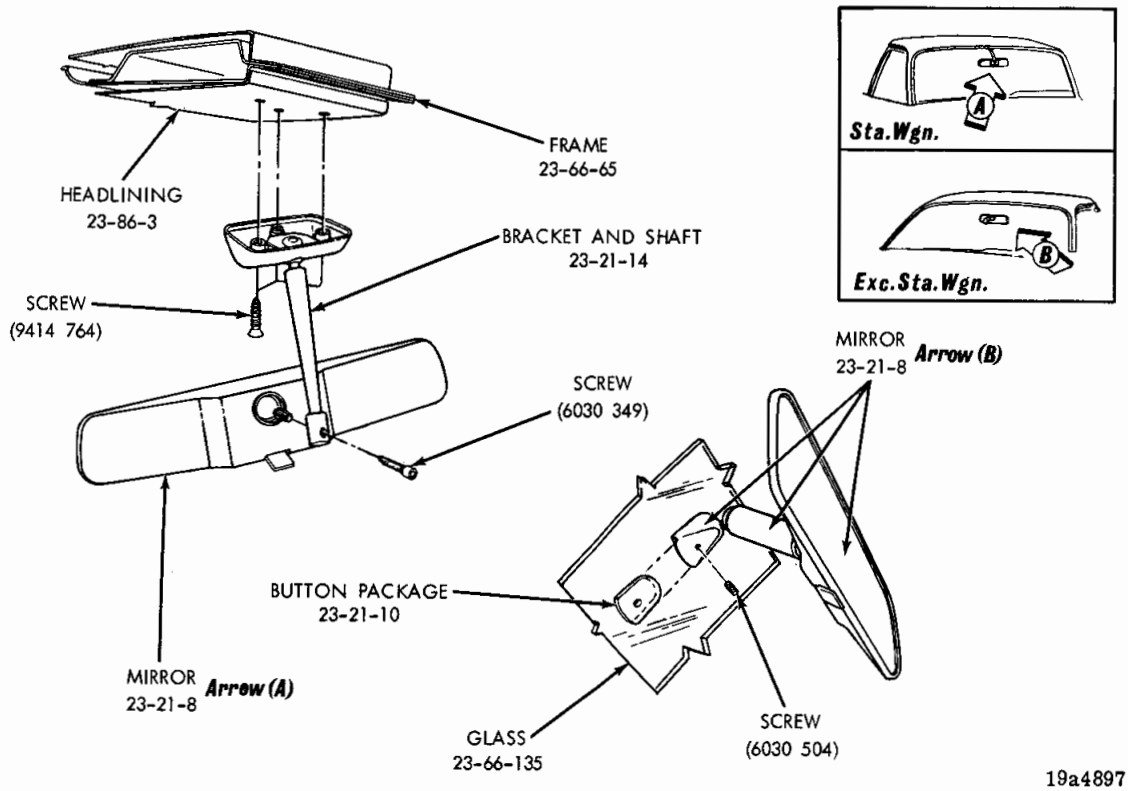

SECTION 9
INSIDE REAR VIEW MIRROR - P, D, C, Y

NOTES

NOTES

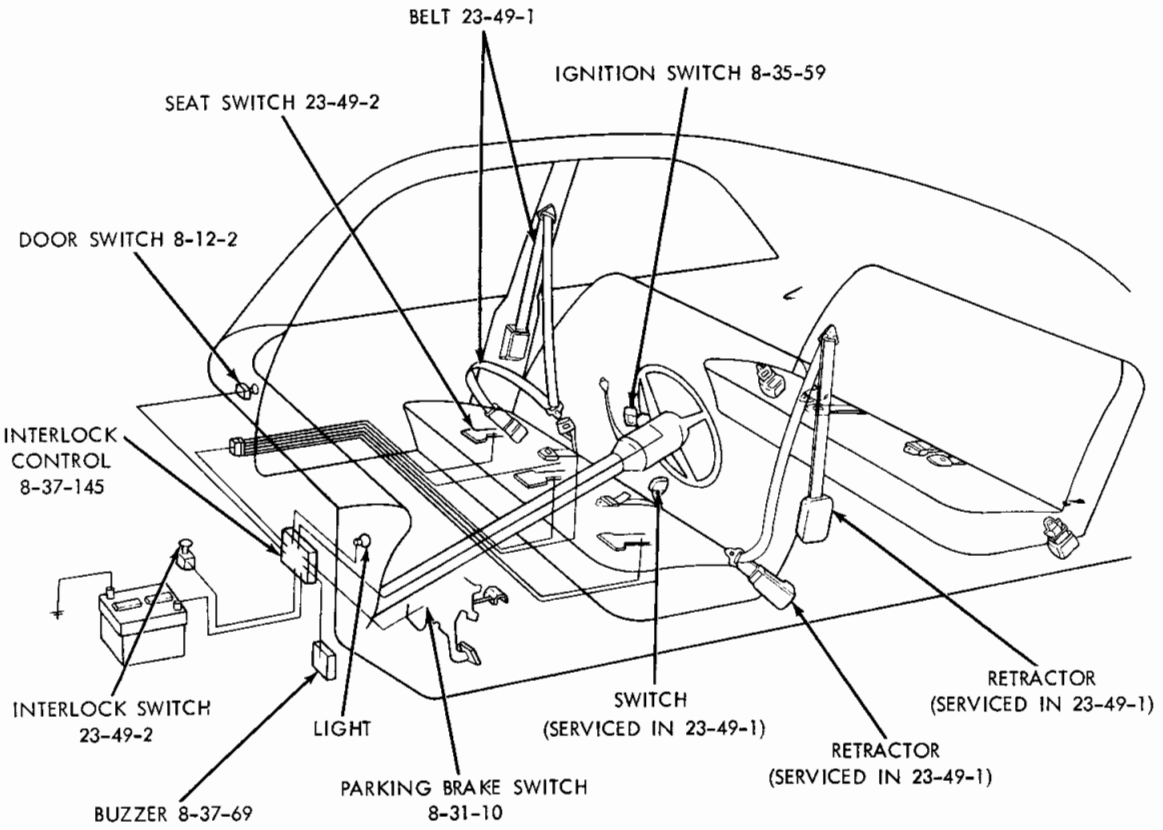

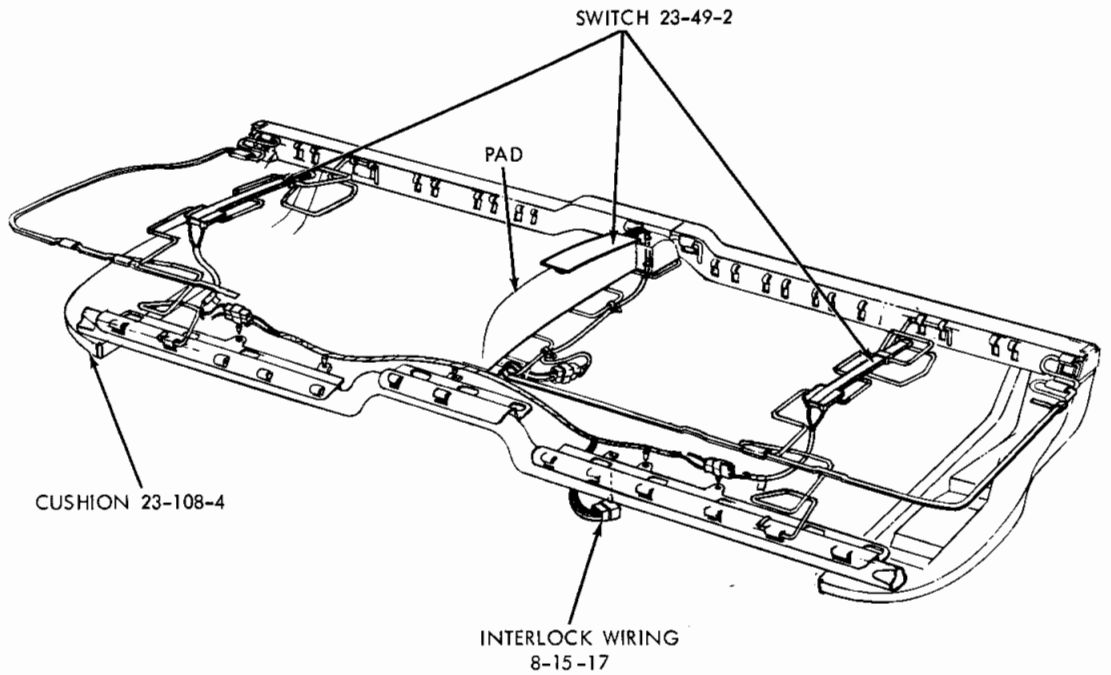

19a4846 A

INTERLOCK AND SEAT BELT SYSTEM

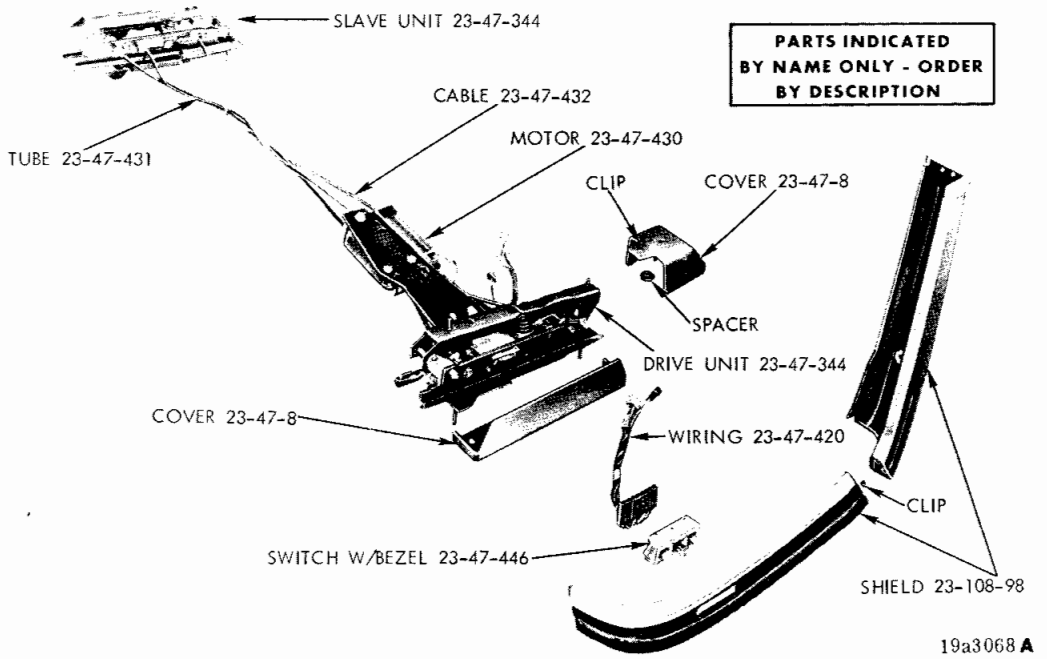

ELECTRIC SEAT ADJUSTER (BENCH TYPE) - P, D, C, Y

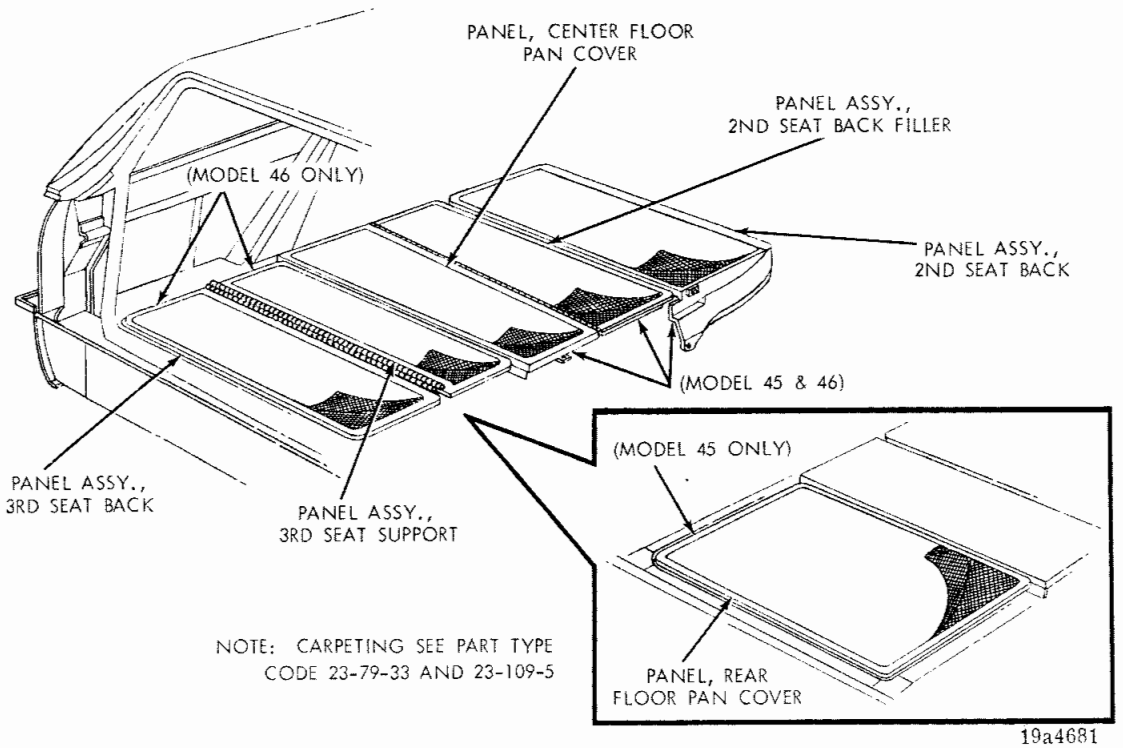

2ND AND 3RD SEAT BACK COVER PANEL

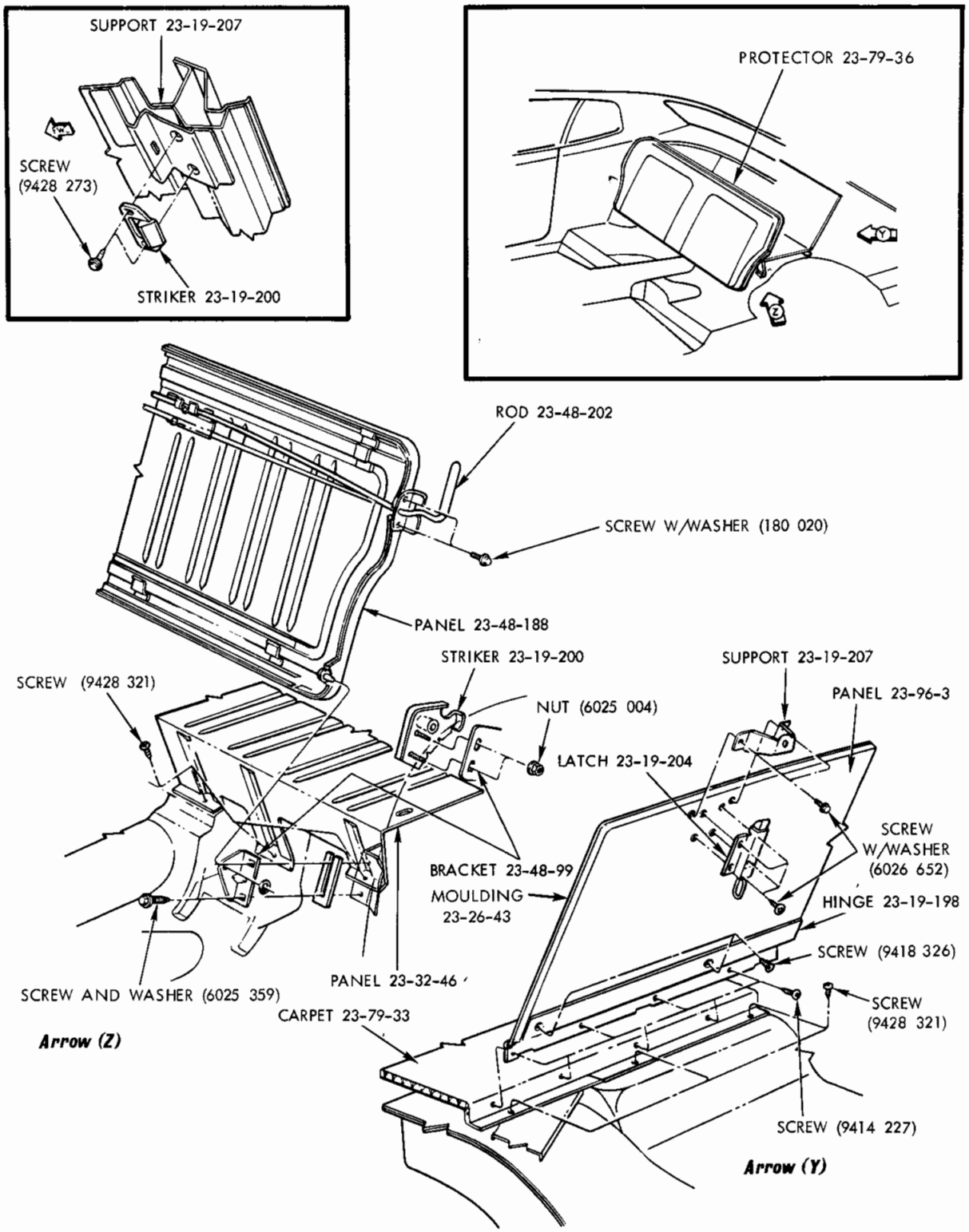

19a4307 E

FOLDING REAR SEAT BACK AND SECURITY PANEL - VALIANT AND DART FASTBACK

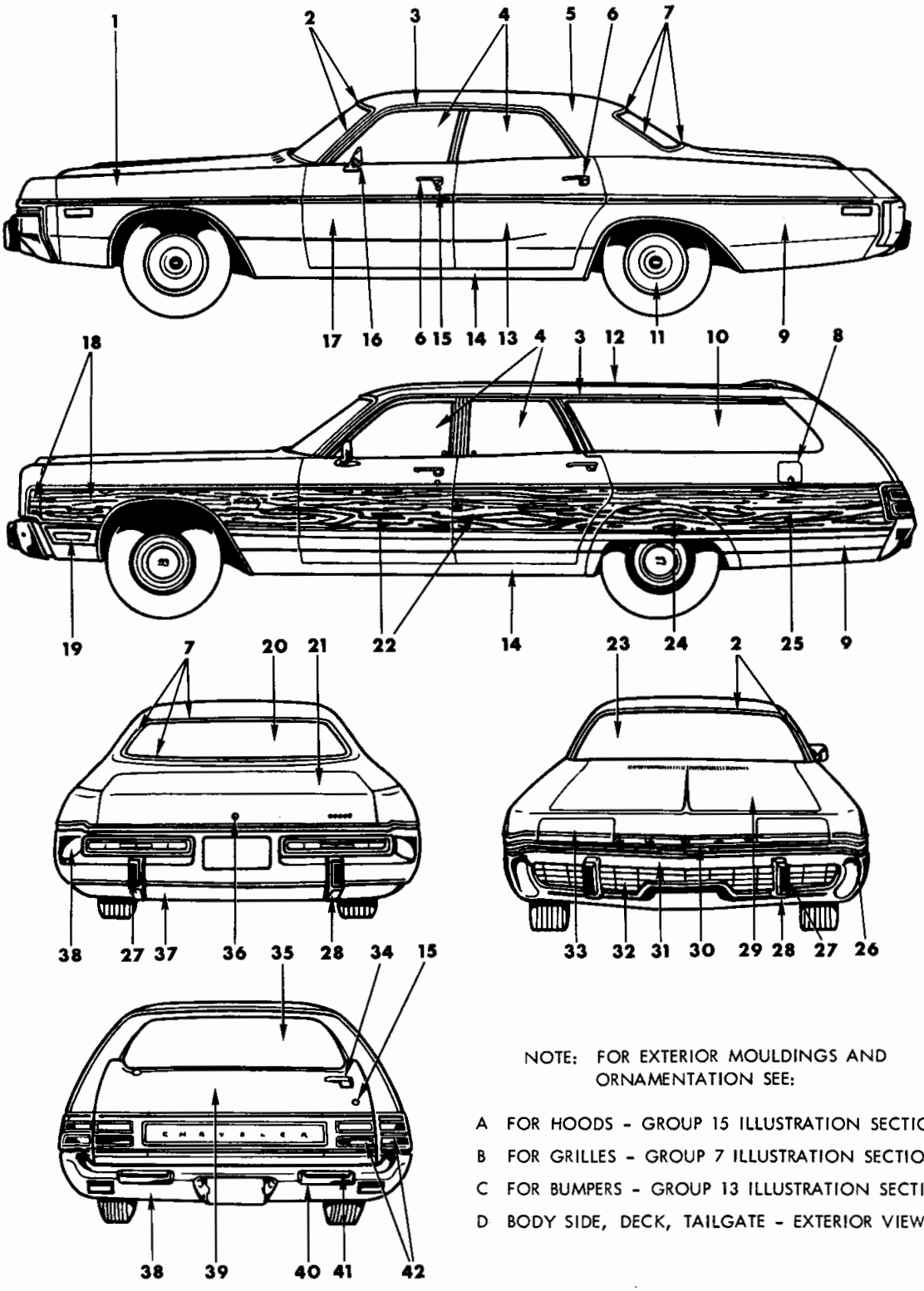

NOTE: FOR EXTERIOR MOULDINGS AND ORNAMENTATION SEE:

A FOR HOODS - GROUP 15 ILLUSTRATION SECTION

B FOR GRILLES - GROUP 7 ILLUSTRATION SECTION

C FOR BUMPERS - GROUP 13 ILLUSTRATION SECTION

D BODY SIDE, DECK, TAILGATE - EXTERIOR VIEWS

19al4316

EXTERIOR VIEW - CODED REFERENCE

EXTERIOR VIEW - CODED REFERENCE

Ref. No.	Name	Part Type Code
1	Fender	12-01-5
2	Moulding Package	23-23-65
3	Trough	23-59-56
4	Glass	23-64-308
5	Panel	23-34-301
	Cover	23-86-2
6	Handle	23-14-10
7	Moulding Package	23-23-52
8	Door	23-34-253
9	Panel	23-34-235
10	Glass	23-64-311
11	Cover	22-01-42
12	Panel	23-34-301
13	Shell	23-11-3
	Panel	23-34-120
14	Panel	23-51-5
15	Cylinder and Key Package	23-17-2
16	Mirror Package	23-21-3
17	Shell	23-11-1
	Panel	23-34-120
18	Overlay	12-15-32
19	Lamp	8-14-1
20	Glass	23-64-314
21	Deck Lid	23-19-8
22	Overlay	23-11-10
23	Glass	23-66-135
24	Panel	23-34-212
25	Overlay	23-34-329
26	Insert	8-50-342
27	Cushion	13-68-18
28	Guard	13-68-6
29	Panel	15-03-3
30	Moulding	7-16-36
31	Bar	13-64-3
32	Grille	7-16-11
33	Door	8-34-40
34	Handle	23-54-73
35	Glass	23-64-10
36	Cylinder and Key Package	23-17-2, 23-17-4
37	Shield	13-66-3
38	Bar	13-66-3
39	Tailgate	23-54-3
	Overlay	23-54-2
40	Step-Pad	13-66-147
41	Cushion	13-66-148
42	Lamp	8-55-7

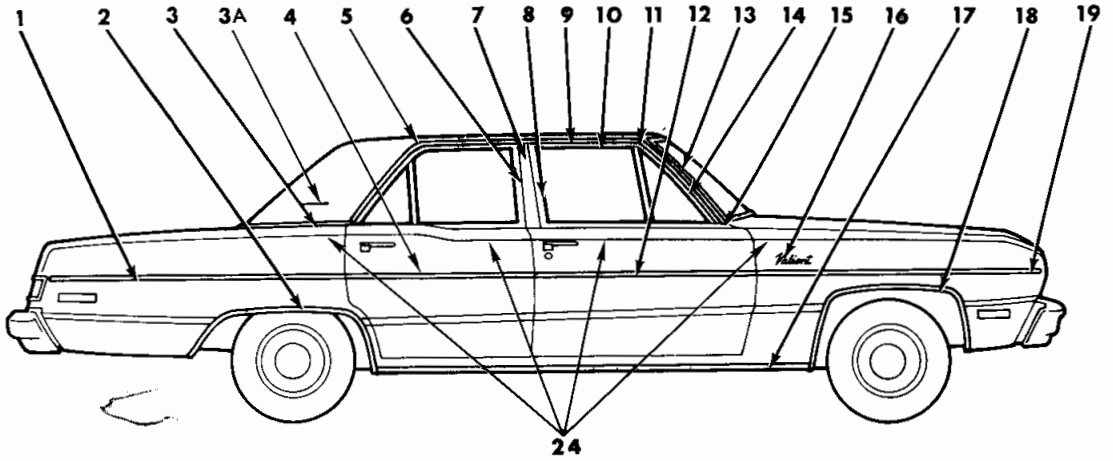

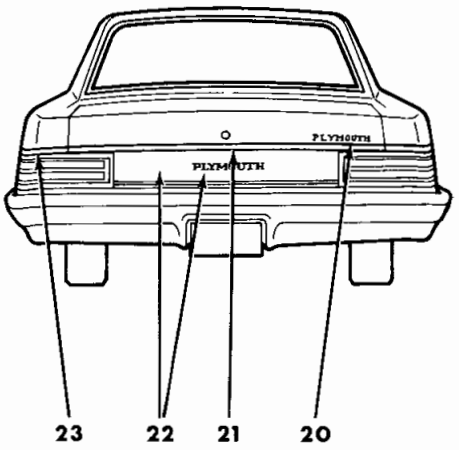

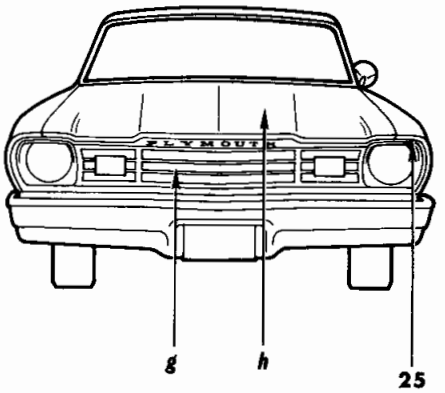

19a4727 B

EXTERIOR VIEW - VALIANT 4 DOOR SEDAN V-L
VALIANT BROUGHAM 4 DOOR SEDAN V-P

REF. NO.	QTY	PART NUMBER	DESCRIPTION
1	2	3749 834	MOULDING, Qtr. Pnl., Black, V-L, V-P
2	1	2842 528-9	MOULDING, Qtr. Pnl. Wheel Opng., V-L, V-P
	-	6028 674	Screw
3	1	2809 684-5	MOULDING PACKAGE, Qtr. Outside Belt, V-L, V-P
	-	6003 507	Retainer
	-	6002 507	Retainer w/Seal
3A	2	3810 287	NAME PLATE, Qtr. Outside, "Brougham", V-P
	-	6025 860	Clip
4	2	3749 042	MOULDING, Rear Door Outside, Black, V-L, V-P
5	1	2664 814-5	MOULDING, Rr. Door Wdo. Opng. Frame, Upr., V-L, V-P
6	1	2664 812-3	MOULDING, Rr. Door Wdo. Opng. Frame, Frt., V-L, V-P
7	1	2811 902-3	MOULDING, Body Center Pillar Outside Finish, V-L
	-	6029 541	Screw
	1	3810 214-5	MOULDING, Body Center Pillar, Lwr., V-P
	-	---- ---	Screw
	4	3810 232	RETAINER, Body Center Pillar Vinyl Cover, V-P
	-	---- ---	Screw
8	1	2663 442-3	MOULDING, Frt. Door Wdo. Opng. Frame, Rear, V-L, V-P
9	1	2783 026-7	MOULDING, Roof Side Drain Trough, w/o Vinyl Roof, V-L, V-P
	1	2840 980-1	MOULDING, Roof Side Drain Trough, w/Vinyl Roof, V-L, V-P
10	1	2663 440-1	MOULDING, Frt. Door Wdo. Opng. Frame, Upr., V-L, V-P
11	2	2783 028	COVER, Roof Side Drain Trough Mldg. Joint, V-L, V-P
g		NOTE:	For Grille Mouldings and Ornamentation see Illustration in Group 7
h		NOTE:	For Hood Mouldings and Ornamentation see Illustration in Group 15
12	2	3749 042	MOULDING, Frt. Door Outside, Black, V-L, V-P
13	1	2783 024-5	MOULDING, Body Front Pillar Drain Trough, w/o Vinyl Roof, V-L, V-P
	1	3749 378-9	MOULDING, Body Front Pillar Drain Trough, w/Vinyl Roof, V-L, V-P
14	1	2663 434-5	MOULDING, Frt. Door Wdo. Opng. Frame, Frt., V-L, V-P
15	1	3749 382-3	MOULDING, Body Frt. Pillar Trim, Lwr., V-L, V-P
	-	9427 804	Screw
16	2	3680 462	NAME PLATE, Fender, "Valiant", V-L, V-P
	-	6002 852	Retainer
	2	3680 038	"Valiant", V-P, Use After 1-23-74
17	2	3744 365	MOULDING PACKAGE, Body Side Sill, V-L, Use Up to April 29, 1974
	2	3811 392	MOULDING, Body Side Sill, V-L, Use After April 29, 1974
	-	6003 201	Retainer
	-	6024 271	Screw
	-	6028 939	Screw
	1	3810 218-9	MOULDING, Body Side Sill, V-P
	-	6003 279	Retainer
	-	6028 680	Screw
18	1	2582 076-7	MOULDING, Fender Wheel Opng., V-L, V-P
	-	6028 674	Screw
19	2	3749 042	MOULDING, Fender Side, Black, V-L, V-P
20	1	3749 326	NAME PLATE, Deck Lid, "Plymouth", V-L, V-P
21	1	3481 718	MOULDING PACKAGE, Deck Lid, V-L, V-P
	-	6029 259	Nut
22	1	3780 426	PANEL, Deck Opng. Lwr. Finish, V-L, V-P
	-	6002 404	Retainer
	-	6024 679	Nut
23	1	3749 838-9	MOULDING, Qtr. Pnl. Outside End Ext., V-L, V-P
	-	---- ---	Screw
24	1	3810 238-9	TAPE, Fender, Gold, V-L, V-P
	1	3810 244-5	TAPE, Frt. Dr., Gold, V-L, V-P
	1	3810 246-7	TAPE, Rr. Dr., Gold, V-L, V-P
	1	3810 250-1	TAPE, Qtr. Pnl., Gold, V-L, V-P
25	1	3691 684-5	MOULDING, Fender, Frt., V-P

EXTERIOR VIEW - VALIANT 4 DOOR SEDAN V-L
VALIANT BROUGHAM 4 DOOR SEDAN V-P

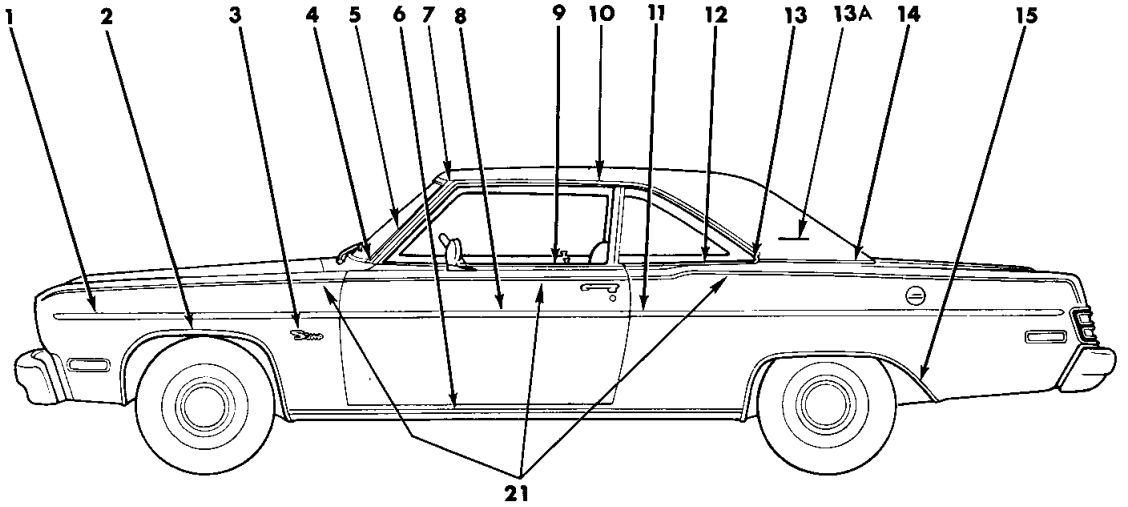

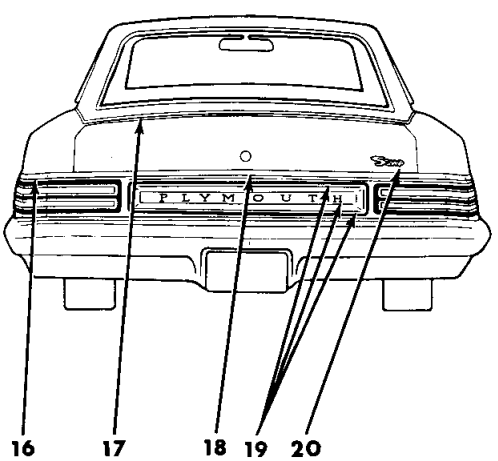

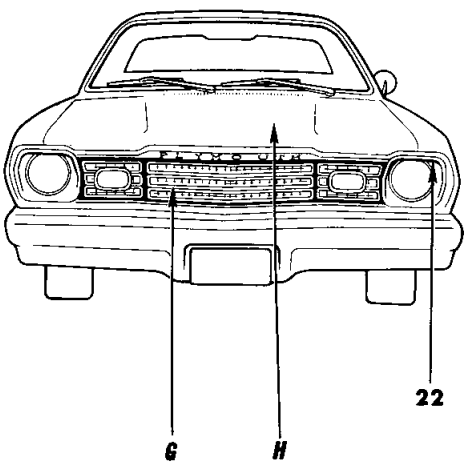

19a4680 **B**

EXTERIOR VIEW - VALIANT SCAMP 2 DOOR HARDTOP V-H
VALIANT BROUGHAM 2 DOOR HARDTOP V-P

REF. NO.	QTY	PART NUMBER	DESCRIPTION
1	2	3749 042	MOULDING, Fender Side, Black Insert, V-H, V-P
2	1	2582 076-7	MOULDING, Fender Wheel Opng., V-H, V-P
	-	6028 674	Screw
3	2	3810 058	NAME PLATE, Fender Side, "Scamp", V-H
	-	6002 852	Retainer
	2	3680 462	NAME PLATE, Fender Side, "Valiant", V-P
	-	6002 852	Retainer
	2	3680 038	"Valiant", V-P, Use After 1-23-74
4	1	3749 382-3	MOULDING, Body Frt. Pillar Trim, Lwr., V-H, V-P
	-	9427 804	Screw
5	1	2783 018-9	MOULDING, Body Front Pillar Drain Trough, w/o Vinyl Roof, V-H, V-P
	1	3749 380-1	MOULDING, Body Front Pillar Drain Trough, w/Vinyl Roof, V-H, V-P
6	2	3744 365	MOULDING PACKAGE, Body Side Sill, V-H
	-	6003 201	Retainer
	-	---- ---	Screw
	1	3810 218-9	MOULDING, Body Side Sill, V-P
	-	6003 279	Retainer
	-	6028 680	Screw
7	2	2783 028	COVER, Roof Side Drain Trough Mldg. Joint, V-H, V-P
8	2	3749 042	MOULDING, Door Side, Black Insert, V-H, V-P
9	1	3004 244-5	MOULDING, Door Outside Belt, V-P
	-	3744 667	Clip Pkg.
	-	6002 398	Retainer
10	1	2783 020-1	MOULDING, Roof Side Drain Trough, w/o Vinyl Roof, V-H, V-P
	1	2840 982-3	MOULDING, Roof Side Drain Trough, w/Vinyl Roof, V-H, V-P
11	2	3749 834	MOULDING, Qtr. Pnl., Black Insert, V-H, V-P
12	1	3004 242-3	MOULDING, Qtr. Outside Belt, Frt., V-P
	-	3744 667	Clip Pkg.
	-	6002 398	Retainer
13	1	2839 794-5	MOULDING, Qtr. Outside Belt, Rear, V-P
	-	9427 804	Screw
13A	2	3810 287	NAME PLATE, Qtr. Outside, "Brougham", V-P
	-	6025 860	Clip
14	1	2807 700-1	MOULDING PACKAGE, Roof Outside Belt, V-H, V-P
	-	9427 804	Screw
	-	6003 507	Fastener
	-	6002 297	Retainer and Seal
	-	9420 263	Nut w/Seal
15	1	2842 528-9	MOULDING, Qtr. Wheel Opng., V-H, V-P
	-	6028 674	Screw
16	1	3749 838-9	MOULDING, Qtr. Outside End Ext., V-H, V-P
	-	9414 510	Screw
17	1	2807 702-3	MOULDING PACKAGE, Deck Opng. Upr. Pnl., V-H, V-P
	-	6003 507	Fastener
	-	6002 297	Retainer and Seal
	-	9420 263	Nut w/Seal
18	1	3481 718	MOULDING PACKAGE, Deck Lid, V-H, V-P
	-	---- ---	Retainer Stud and Seal
	-	6029 259	Nut
19	1	3780 426	PANEL, Deck Opng. Lwr. Finish, V-H, V-P
	-	6002 404	Retainer
	-	6024 679	Nut w/Seal
20	1	3810 058	NAME PLATE, Deck Lid, "Scamp", V-H
	1	3749 326	NAME PLATE, Deck Lid, "Plymouth", V-H, V-P
21	1	3810 238-9	TAPE, Fender, Gold, V-H, V-P
	1	3810 242-3	TAPE, Door, Gold, V-H, V-P
	1	3810 248-9	TAPE, Qtr. Pnl., Gold, V-H, V-P
22	1	3691 684-5	MOULDING, Fender Frt., V-P
g		NOTE:	For Grille Mouldings and Ornamentation see Illustration in Group 7
h		NOTE:	For Hood Mouldings and Ornamentation see Illustration in Group 15

EXTERIOR VIEW - VALIANT SCAMP 2 DOOR HARDTOP - V-H
VALIANT BROUGHAM 2 DOOR HARDTOP - V-P

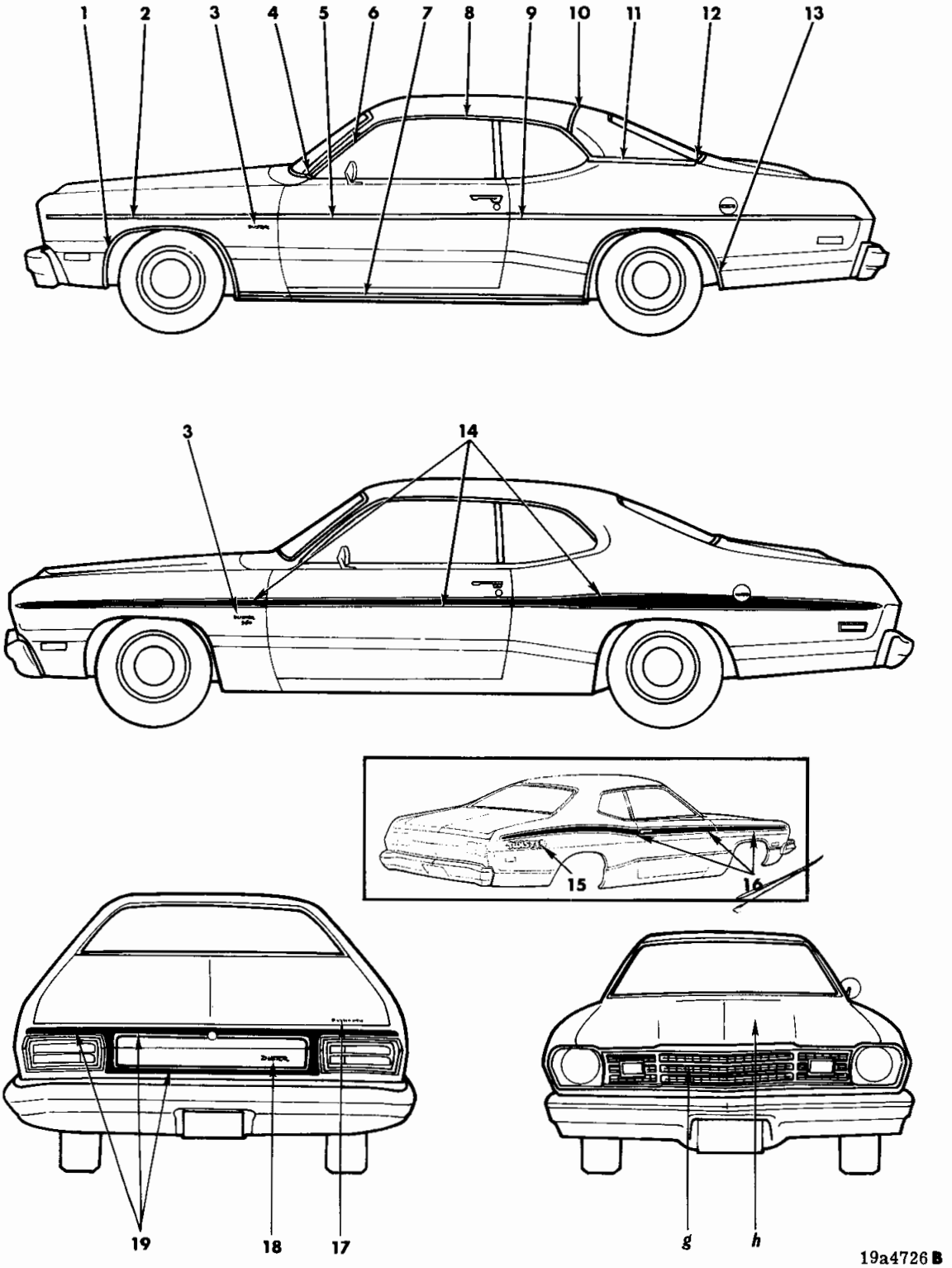

EXTERIOR VIEW - VALIANT (DUSTER) FASTBACK V-L
VALIANT (DUSTER 360) FASTBACK V-S

REF. NO.	QTY	PART NUMBER	DESCRIPTION
1	1	2582 076-7	MOULDING, Fender Wheel Opng., V-L, V-S
	-	6028 674	Screw
2	2	3749 042	MOULDING, Fender Side, Black, V-L, V-S
3	2	3680 304	NAME PLATE, Fender Side, "Duster", V-L, V-S
	-	6002 852	Retainer
	2	3810 255	"360", V-S
	-	6002 852	Retainer
	2	3570 896	DECAL, Fender, "Gold Duster", V-L
4	1	3504 414-5	MOULDING, Body Frt. Pillar Lwr., V-L, V-S
	-	9427 804	Screw
5	2	3749 042	MOULDING, Door, Black, V-L, V-S
6	1	3444 930-1	MOULDING, Body Front Pillar Drain Trough, w/o Vinyl Roof, V-L, V-S
	1	3445 932-3	MOULDING, Body Front Pillar Drain Trough, w/Vinyl Roof, V-L, V-S
7	2	3744 365	MOULDING PACKAGE, Body Side Sill, V-L, V-S
	-	6003 201	Retainer
	-	6024 271	Screw
	-	6028 939	Screw
8	1	3444 932-3	MOULDING, Roof Side Drain Trough, w/o Vinyl Roof, V-L, V-S
	1	3445 934-5	MOULDING, Roof Side Drain Trough, w/Vinyl Roof, V-L, V-S
9	2	3749 834	MOULDING, Qtr. Pnl., Black, V-L, V-S
10	1	3680 778-9	MOULDING, Roof Outside Transverse, V-L, V-S
	-	6003 241	Retainer
	-	6029 846	Screw
11	1	3444 412-3	MOULDING, Qtr. Outside Belt, Frt., V-L, V-S
	-	6003 241	Retainer
	-	6002 297	Retainer
	-	9420 291	Nut
12	1	3445 204-5	MOULDING, Qtr. Outside Belt, Rear, V-L, V-S
	-	9427 804	Screw
13	1	3444 414-5	MOULDING, Qtr. Pnl. Wheel Opng., V-L, V-S
	-	6028 674	Screw
14	1	E122-3KW1	TAPE, Fender Outside, White, V-L, V-S
	1	E122-3JX9	Black, V-L, V-S
	1	E122-3JY8	Gold, V-L, V-S
	1	E124-5KW1	TAPE, Door, Outside, White, V-L, V-S
	1	E124-5JX9	Black, V-L, V-S
	1	E124-5JY8	Gold, V-L, V-S
	1	E126-7KW1	TAPE, Qtr. Pnl. Outside, White, V-L, V-S
	1	E126-7JX9	Black, V-L, V-S
	1	E126-7JY8	Gold, V-L, V-S
15	2	E172 KWX	DECAL, Qtr. Outside, "Twister", White on Black, V-L
	2	E172 KXW	Black on White, V-L
16	1	E166-7 KW1	TAPE, Fender Side, White, V-L, V-S
	1	E166-7 JX9	Black, V-L, V-S
	1	E168-9 KW1	TAPE, Door, White, V-L, V-S
	1	E168-9 JX9	Black, V-L, V-S
	1	E170-1 KW1	TAPE, Qtr. Pnl., White, V-L, V-S
	1	E170-1 JX9	Black, V-L, V-S
17	1	3444 927	NAME PLATE, Deck Lid, "Plymouth", V-L, V-S
	-	6002 852	Retainer
18	1	3680 304	NAME PLATE, Deck Opng. Lwr. Pnl., "Duster", V-L, V-S
	-	6002 852	Retainer
19	1	E128 KW1	TAPE APPLIQUE, Deck Opng. Lwr. Pnl., White, V-L, V-S
	1	E128 JX9	Black, V-L, V-S
	1	E128 JY8	Gold, V-L, V-S
g		NOTE:	For Grille Mouldings and Ornamentation see Illustration in Group 7
h		NOTE:	For Hood Mouldings and Ornamentation see Illustration in Group 15

EXTERIOR VIEW - VALIANT (DUSTER) FASTBACK V-L
VALIANT (DUSTER 360) FASTBACK V-S

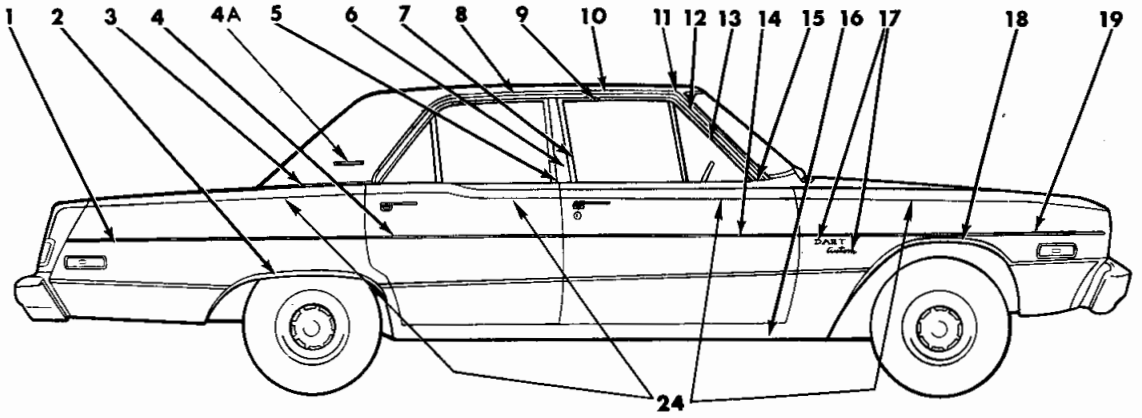

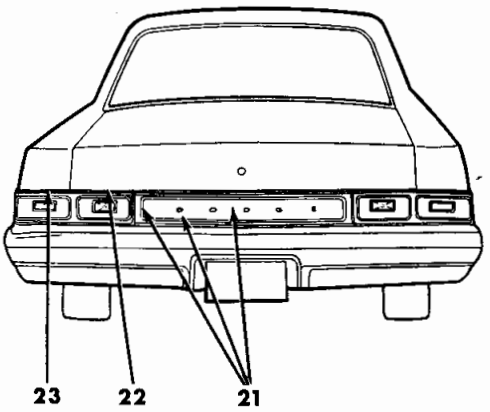

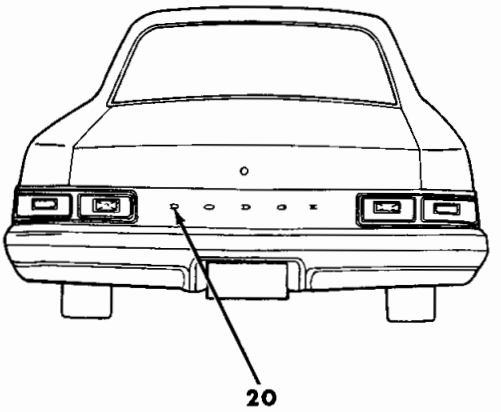

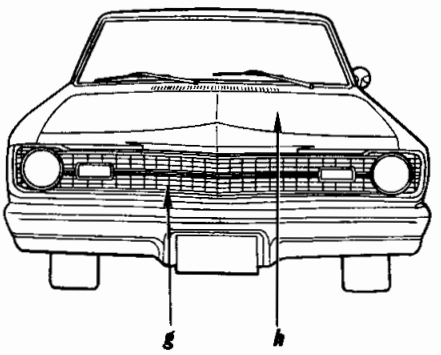

19a4730 A

EXTERIOR VIEW - DART 4 DOOR SEDAN L-L
DART CUSTOM 4 DOOR SEDAN L-H
DART SPECIAL EDITION 4 DOOR SEDAN L-P

REF. NO.	QTY	PART NUMBER	DESCRIPTION
1	2	3749 834	MOULDING, Qtr. Pnl., Black Insert, L-L, L-H, L-P
	1	3579 144-5	MOULDING PACKAGE, Qtr. Pnl., w/o Insert, L-H
	-	3744 367	Retainer Pkg.
	-	6002 920	Retainer
2	1	2842 528-9	MOULDING, Qtr. Pnl. Wheel Opng., L-L, L-H, L-P
	-	6028 674	Screw
3	1	2809 684-5	MOULDING PACKAGE, Qtr. Outside Belt, L-L, L-H, L-P
	-	6003 507	Retainer
	-	6002 507	Retainer w/Seal
4	2	3749 042	MOULDING, Rr. Dr. O/Side, Black Insert, L-L, L-H, L-P
	1	3579 142-3	MOULDING PACKAGE, Rr. Dr. O/Side, w/o Insert, L-H
	-	3744 367	Retainer Pkg.
	-	6002 920	Retainer
4A	2	3613 273	NAME PLATE, Qtr. Outside, "Special Edition", L-P
	-	6025 860	Clip
5	1	2664 812-3	MOULDING, Rear Door Wdo. Opng. Frame, Frt., L-L, L-H, L-P
6	1	2811 902-3	MOULDING, Body Center Pillar Outside Finish, L-L, L-H, L-P
	-	6029 541	Screw
	1	3810 214-5	MOULDING, Body Center Pillar, Lwr., L-P
	-	---- ---	Screw
	4	3810 232	RETAINER, Body Center Pillar Vinyl Cover, L-P
	-	---- ---	Screw
7	1	2663 442-3	MOULDING, Frt. Door Wdo. Opng. Frame, Rear, L-L, L-H, L-P
8	1	2664 814-5	MOULDING, Rear Door Wdo. Opng. Frame, Rear, L-L, L-H, L-P
9	1	2663 440-1	MOULDING, Frt. Door Wdo. Opng. Frame, Upr., L-L, L-H, L-P
10	1	2783 026-7	MOULDING, Roof Side Drain Trough, w/o Vinyl Roof, L-L, L-H, L-P
	1	2840 980-1	MOULDING, Roof Side Drain Trough, w/Vinyl Roof, L-L, L-H, L-P
11	2	2783 028	COVER, Roof Side Drain Trough Mldg. Joint, L-L, L-H, L-P
12	1	2783 024-5	MOULDING, Body Front Pillar Drain Trough, w/o Vinyl Roof, L-L, L-H, L-P
	1	3749 378-9	MOULDING, Body Front Pillar Drain Trough, w/Vinyl Roof, L-L, L-H, L-P
13	1	2663 434-5	MOULDING, Frt. Door Wdo. Opng. Frame, Frt., L-L, L-H, L-P
h		NOTE:	For Hood Mouldings and Ornamentation see Illustration in Group 15
14	2	3749 042	MOULDING, Frt. Dr. O/Side, Black Insert, L-L, L-H, L-P
	1	3579 138-9	MOULDING PACKAGE, Frt. Dr. O/Side, w/o Insert, L-H
	-	3744 367	Retainer Pkg.
	-	6002 920	Retainer
15	1	3749 382-3	MOULDING, Body Frt. Pillar Trim, Lwr., L-L, L-H, L-P
	-	9427 804	Screw
16	2	3744 365	MOULDING PACKAGE, Body Side Sill, L-L, L-H
	-	6003 201	Retainer
	-	6024 271	Screw
	-	6028 939	Screw
	1	3810 220-1	MOULDING, Body Side Sill, L-P
	-	6003 279	Retainer
	-	6028 680	Screw
17	2	3505 419	NAME PLATE, Fender Side, "Dart", L-L, L-H, L-P
	-	6002 852	Retainer
	2	3505 056	NAME PLATE, Fender Side, "Custom", L-H
	-	6002 852	Retainer
18	1	2785 856-7	MOULDING, Fender Wheel Opng., L-L, L-H, L-P
	-	6028 674	Screw
19	2	3749 042	MOULDING, Fender Side, Black Insert, L-L, L-H, L-P
	1	3579 584-5	MOULDING PACKAGE, Fender Side, w/o Insert, L-H
	-	3744 367	Retainer Pkg.
	-	6002 920	Retainer
20	1	3443 365	NAME LETTERS, Deck Opng. Lwr. Pnl., "D", L-L
	1	3443 367	"O", L-L
	1	3443 369	"D", L-L
	1	3443 371	"G", L-L
	1	3443 373	"E", L-L
	-	6027 352	Nut
	1	3613 151	NAME PLATE, Deck Opng. Lwr. Pnl., "Dodge", L-L, After 11-22-73
21	1	3780 427	PANEL PACKAGE, Deck Opng. Lwr. Finish, L-H, L-P
	-	6002 404	Retainer
	-	6024 679	Nut
22	1	3481 718	MOULDING PACKAGE, Deck Lid, L-L, L-H, L-P
	-	6029 259	Nut
23	1	3749 838-9	MOULDING, Qtr. Pnl. End Ext., L-L, L-H, L-P
	-	---- ---	Screw
24	1	3810 240-1	TAPE, Fender, Gold, L-L, L-H, L-P
	1	3810 244-5	TAPE, Frt. Door, Gold, L-L, L-H, L-P
	1	3810 246-7	TAPE, Rear Door, Gold, L-L, L-H, L-P
	1	3810 250-1	TAPE, Qtr. Pnl., Gold, L-L, L-H, L-P
g		NOTE:	For Grille Mouldings and Ornamentation see Illustration in Group 7

EXTERIOR VIEW - DART 4 DOOR SEDAN L-L
DART CUSTOM 4 DOOR SEDAN L-H
DART SPECIAL EDITION 4 DOOR SEDAN L-P

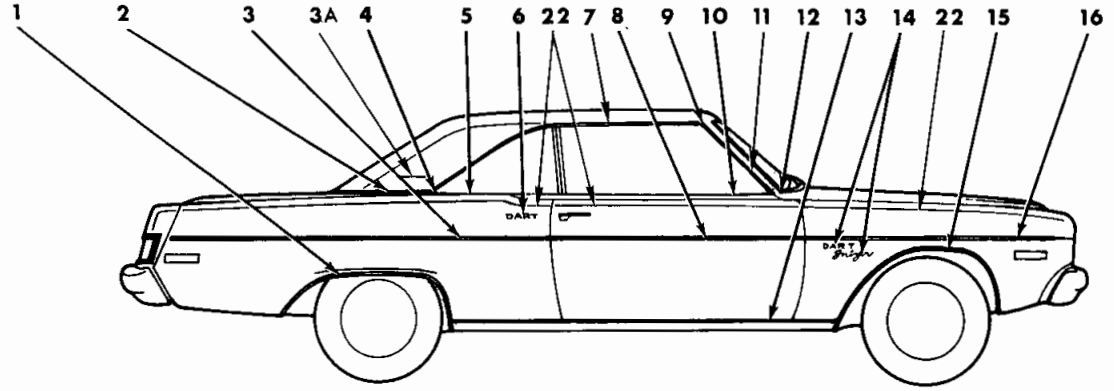

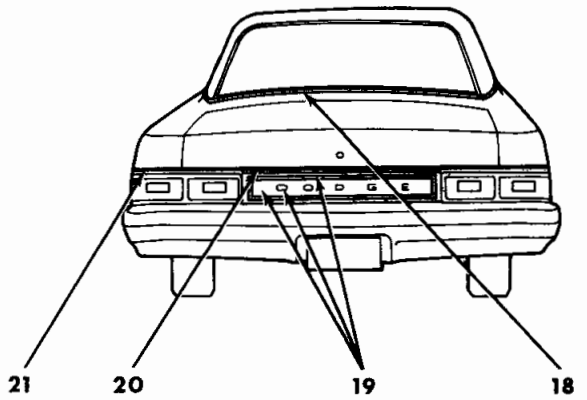

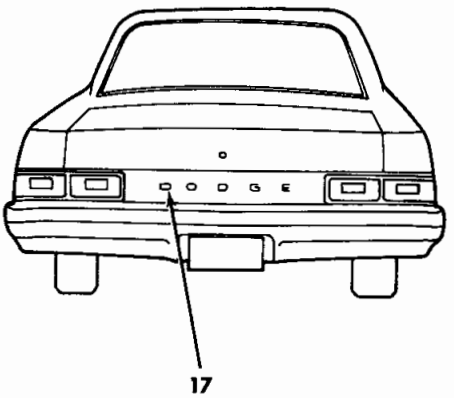

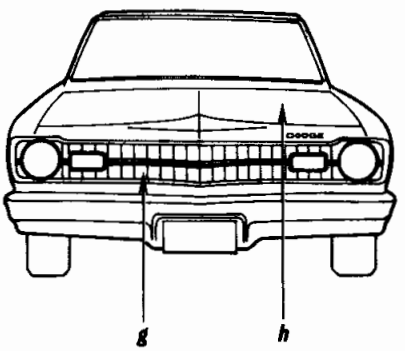

19a4728B

EXTERIOR VIEW - DART SWINGER (SPECIAL) 2 DOOR HARDTOP L-L
DART SWINGER 2 DOOR HARDTOP L-H
DART SPECIAL EDITION 2 DOOR HARDTOP L-P

REF. NO.	QTY	PART NUMBER	DESCRIPTION
1	1	2842 528-9	MOULDING, Qtr. Wheel Opng., L-L, L-H, L-P
	-	6028 674	Screw
2	1	2807 700-1	MOULDING PACKAGE, Roof Outside Belt, L-L, L-H, L-P
	-	6003 507	Fastener
	-	6002 297	Retainer w/Seal
	-	9420 263	Nut w/Seal
3	2	3749 834	MOULDING, Qtr. Pnl., Black Insert, L-L, L-H, L-P
	1	3683 468-9	MOULDING PACKAGE, Qtr. Pnl., w/o Insert, L-H
	-	6002 056	Retainer
	-	6024 679	Nut
	-	6003 133	Retainer
	-	6024 271	Screw
3A	2	3613 273	NAME PLATE, Qtr. Outside, "Special Edition", L-P
	-	6025 860	Clip
4	1	2839 794-5	MOULDING PACKAGE, Qtr. Outside Belt, Rear, L-P
	-	9427 804	Screw
5	1	3004 242-3	MOULDING PACKAGE, Qtr. Outside Belt, Frt., L-P
	-	3744 667	Clip Pkg.
	-	6002 398	Retainer
6	2	3505 419	NAME PLATE, Qtr. Outside, "Dart", L-L
	-	6002 852	Retainer
7	1	2783 020-1	MOULDING, Roof Side Drain Trough, w/o Vinyl Roof, L-L, L-H, L-P
	1	2840 982-3	MOULDING, Roof Side Drain Trough, w/Vinyl Roof, L-L, L-H, L-P
8	2	3749 042	MOULDING, Door Outside, Black Insert, L-L, L-H, L-P
	2	3683 462	MOULDING PACKAGE, Door Outside, w/o Insert, L-H
	-	3744 367	Retainer Pkg.
	-	6002 920	Retainer
9	2	2783 028	COVER, Roof Side Drain Trough Mldg. Joint, L-L, L-H, L-P
10	1	3004 244-5	MOULDING PACKAGE, Door Outside Belt, L-P
	-	3744 667	Clip Pkg.
	-	6002 398	Retainer
11	1	2783 018-9	MOULDING, Body Front Pillar Drain Trough, w/o Vinyl Roof, L-L, L-H, L-P
	1	3749 380-1	MOULDING, Body Front Pillar Drain Trough, w/Vinyl Roof, L-L, L-H, L-P
12	1	3749 382-3	MOULDING, Body Front Pillar Trim, Lwr., L-L, L-H, L-P
	-	9427 804	Screw
13	2	3744 365	MOULDING PACKAGE, Body Side Sill, L-L, L-H
	-	6003 201	Retainer
	-	6024 271	Screw
	-	6028 939	Screw
	1	3810 220-1	MOULDING, Body Side Sill, L-P
	-	6003 279	Retainer
	-	6028 680	Screw
14	2	3505 419	NAME PLATE, Fender Side, "Dart", L-H, L-P
	2	3570 983	"Special", L-L
	2	3549 645	"Swinger", L-H, L-P
	-	6002 852	Retainer
15	1	2785 856-7	MOULDING, Fender Wheel Opng., L-L, L-H, L-P
	-	6028 674	Screw
16	2	3749 042	MOULDING, Fender Side, Black Insert, L-L, L-H, L-P
	1	3579 584-5	MOULDING PACKAGE, Fender Side, w/o Insert, L-H
	-	3744 367	Retainer Pkg.
	-	6002 920	Retainer
17	1	3443 365	NAME LETTERS, Deck Opng. Lwr. Pnl., "D", L-L
	1	3443 367	"O", L-L
	1	3443 369	"D", L-L
	1	3443 371	"G", L-L
	1	3443 373	"E", L-L
	-	6027 352	Nut
	1	3613 151	NAME PLATE, Deck Opng. Lwr. Pnl., "Dodge", L-L, After 11-22-73
18	1	2807 702-3	MOULDING PACKAGE, Deck Opng. Upr. Pnl., L-L, L-H, L-P
	-	6003 507	Fastener
	-	6002 297	Retainer w/Seal
	-	9420 263	Nut w/Seal
19	1	3780 427	PANEL PACKAGE, Deck Opng. Lwr. Finish, L-H, L-P
	-	6002 404	Retainer
	-	6024 679	Nut
20	1	3481 718	MOULDING PACKAGE, Deck Lid, L-L, L-H, L-P
	-	6029 259	Nut
21	1	3749 838-9	MOULDING, Qtr. Pnl. End Ext., L-L, L-H, L-P
	-	---- ---	Screw
22	1	3810 240-1	TAPE, Fender, Gold, L-L, L-H, L-P
	1	3810 242-3	TAPE, Door, Gold, L-L, L-H, L-P
	1	3810 248-9	TAPE, Qtr. Pnl., Gold, L-L, L-H, L-P
g		NOTE:	For Grille Mouldings and Ornamentation see Illustration in Group 7
h		NOTE:	For Hood Mouldings and Ornamentation see Illustration in Group 15

EXTERIOR VIEW - DART SWINGER (SPECIAL) 2 DOOR HARDTOP L-L
DART SWINGER 2 DOOR HARDTOP L-H
DART SPECIAL EDITION 2 DOOR HARDTOP L-P

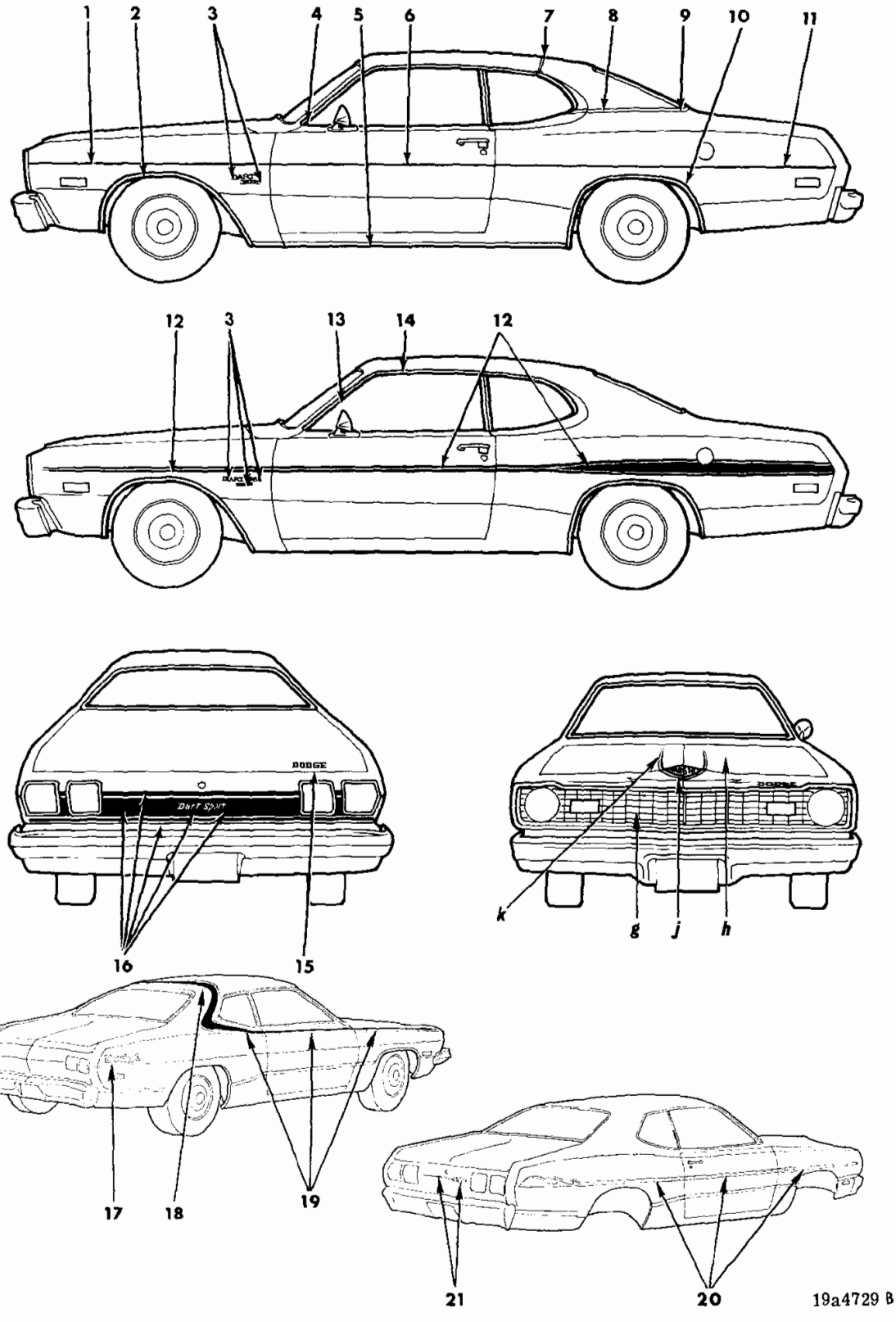

EXTERIOR VIEW - DART (SPORT) FASTBACK L-L
DART (SPORT 360) FASTBACK L-M

REF. NO.	QTY	PART NUMBER	DESCRIPTION
1	2	3749 042	MOULDING, Fender Side, Black, L-L, L-M
2	1	2785 856-7	MOULDING, Fender Wheel Opng., L-L, L-M
	-	6028 674	Screw
3	2	3505 419	NAME PLATE, Fender Side, "Dart", L-L, L-M
	-	6002 852	Retainer
	2	3749 083	"Sport", L-L, L-M
	-	6002 852	Retainer
	2	3810 255	"360", L-M
	-	6002 852	Retainer
4	1	3504 414-5	MOULDING, Body Frt. Pillar Lwr. Vinyl Roof, L-L, L-M
	-	9427 804	Screw
5	2	3744 364	MOULDING PACKAGE, Body Side Sill, L-L, L-M
	-	6003 201	Retainer
	-	6024 271	Screw
	-	6028 939	Screw
6	2	3749 042	MOULDING, Door Outside,
*			Black, L-L, L-M
7	1	3680 778-9	MOULDING, Roof Outside Transverse, L-L, L-M
	-	6003 241	Retainer
	-	6029 846	Screw
8	1	3444 412-3	MOULDING, Qtr. Outside Belt, Frt., L-L, L-M
	-	6003 241	Retainer
	-	6002 297	Retainer
	-	9420 291	Nut
9	1	3445 204-5	MOULDING, Qtr. Outside Belt, Rear, L-L, L-M
	-	9427 804	Screw
10	1	3444 414-5	MOULDING, Qtr. Pnl. Wheel Opng., L-L, L-M
	-	6028 674	Screw
11	2	3749 834	MOULDING, Qtr. Pnl., Black, L-L, L-M
12	1	E140-1KW1	TAPE STRIPE, Fender, White, L-L, L-M
	1	E140-1JX8	Black, L-L, L-M
	1	E142-3KW1	TAPE STRIPE, Door, White, L-L, L-M
	1	E142-3JX8	Black, L-L, L-M
	1	E144-5KW1	TAPE STRIPE, Qtr. Pnl., White, L-L, L-M
	1	E144-5JX8	Black, L-L, L-M
g		NOTE:	For Grille Mouldings and Ornamentation see Illustration in Group 7
h		NOTE:	For Hood Mouldings and Ornamentation see Illustration in Group 15
j		NOTE:	For Tape see Code 7-17-23
k		NOTE:	For Tape see Code 15-03-69

REF. NO.	QTY	PART NUMBER	DESCRIPTION
13	1	3444 930-1	MOULDING, Body Front Pillar Drain Trough, w/o Vinyl Roof, L-L, L-M
	1	3445 932-3	MOULDING, Body Front Pillar Drain Trough, w/Vinyl Roof, L-L, L-M
14	1	3444 932-3	MOULDING, Roof Side Drain Trough, w/o Vinyl Roof, L-L, L-M
	1	3445 934-5	MOULDING, Roof Side Drain Trough, w/Vinyl Roof, L-L, L-M
15	1	3613 151	NAME PLATE, Deck Lid, "Dodge", L-L, L-M
16	1	3780 996	TAPE PACKAGE, Deck Opng. Upr. and Lwr., Black, L-L, L-M
	1	3780 997	White, L-L, L-M
	1	E175 KW1	TAPE STRIPE, Deck Opng. Lwr. Pnl., White, use After Dec. 3, 1973, L-L, L-M
	1	E175 KX8	Black, use After Dec. 3, 1973, L-L, L-M
	1	E175 KL2	Parchment, use After Dec. 3, 1973, L-L, L-M
17	2	3494 942	DECAL, Qtr. Outside, "Dodge", White, L-L
	2	3810 204	Black, L-L
	2	3810 205	Parchment, L-L
18	1	E152 JW1	TAPE STRIPE, Roof Transverse, White, L-M
	1	E152 JX8	Black, L-M
	1	E152 KL2	Parchment, L-M
19	1	E146-7JW1	TAPE STRIPE, Fender, White, L-M
	1	E146-7JX8	Black, L-M
	1	E146-7KL2	Parchment, L-M
	1	E148-9JW1	TAPE STRIPE, Door, White, L-M
	1	E148-9JX8	Black, L-M
	1	E148-9KL2	Parchment, L-M
	1	E150-1JW1	TAPE STRIPE, Qtr. Panel, White, L-M
	1	E150-1JX8	Black, L-M
	1	E150-1KL2	Parchment, L-M
20	1	3810 298-9	TAPE, Fender Side, "Hang 10", L-L, L-M
	1	3810 300-1	TAPE, Door, "Hang 10", L-L, L-M
	1	3810 302-3	TAPE, Qtr. Pnl., "Hang 10", L-L, L-M
21	1	3810 297	TAPE, Deck Opng. Lwr. Pnl., "Hang 10", L-L, L-M

EXTERIOR VIEW - DART (SPORT) FASTBACK L-L
DART (SPORT 360) FASTBACK L-M

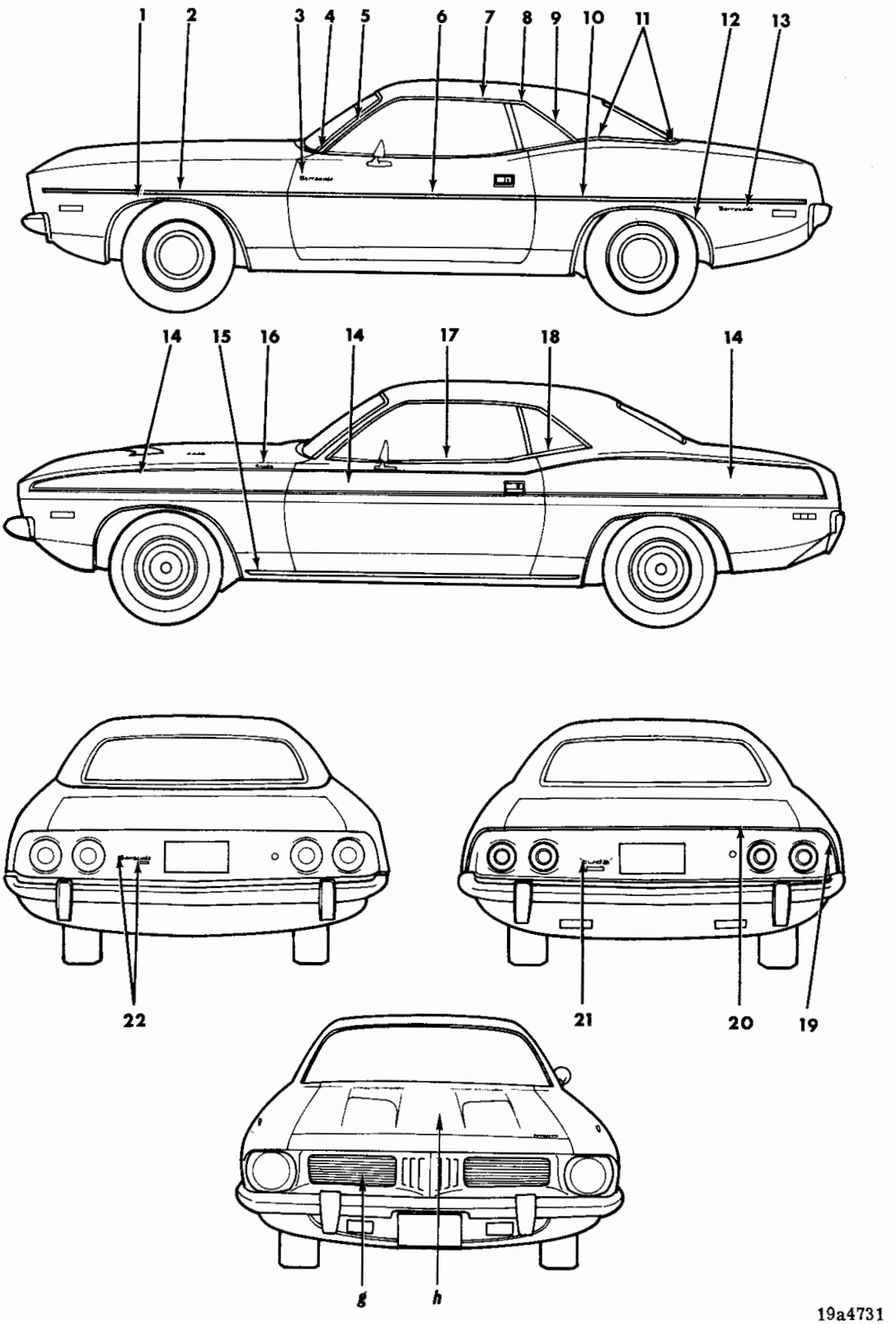

EXTERIOR VIEW - BARRACUDA 2 DOOR HARDTOP B-H
CUDA 2 DOOR HARDTOP B-S

REF. NO.	QTY	PART NUMBER	DESCRIPTION
1	1	2965 368-9	MOULDING, Fender Wheel Opng., B-H, B-S
	-	6028 674	Screw
2	2	3749 042	MOULDING, Fender Side, Black, B-H, B-S
3	2	3505 456	NAME PLATE, Door Outside, "Barracuda", B-H
4	1	3446 456-7	MOULDING, Body Frt. Pillar, Lwr., B-H, B-S
	-	6028 674	Screw
5	1	2964 628-9	MOULDING, Body Front Pillar Drain Trough, B-H, B-S
	-	6028 721	Screw
6	2	3749 042	MOULDING, Door Outside, Black, B-H, B-S
7	1	3444 584-5	MOULDING w/CAP, Roof Side Drain Trough, Front, B-H, B-S
	-	6028 721	Screw
8	1	3444 582-3	CAP, Roof Side Drain Trough, Front to Rear Corner, B-H, B-S
	-	6028 721	Screw
9	1	2964 632-3	MOULDING, Roof Side Drain Trough, Rear, B-H, B-S
	-	6028 721	Screw
10	2	3749 042	MOULDING, Qtr. Pnl., B-H, B-S
11	1	3419 782-3	MOULDING PACKAGE, Qtr. Outside Belt, B-H, B-S
	-	6002 957	Retainer
	-	6003 241	Retainer
	-	9420 291	Nut
12	1	2965 370-1	MOULDING, Qtr. Pnl. Wheel Opng., B-H, B-S
	-	6028 674	Screw
13	2	3505 456	NAME PLATE, Qtr. Outside, "Barracuda", B-H
	-	6027 352	Nut
14	1	E116-7KW1	TAPE STRIPE, Fender, White, B-H, B-S
	1	E116-7JX8	Black, B-H, B-S
	1	E118-9KW1	TAPE STRIPE, Door, White, B-H, B-S
	1	E118-9JX8	Black, B-H, B-S
	1	E120-1KW1	TAPE STRIPE, Qtr. Pnl., White, B-H, B-S
	1	E120-1JX8	Black, B-H, B-S
15	2	3744 364	MOULDING PACKAGE, Body Side Sill, B-H, B-S
	-	6003 201	Retainer
	-	6024 271	Screw
	-	6028 939	Screw
16	2	3570 071	NAME PLATE, Fender Side, "Cuda", B-S
17	1	3419 778-9	MOULDING PACKAGE, Door Outside Belt, B-H, B-S
	-	6003 133	Retainer
	-	6003 124	Retainer
	-	116 000	Nut
18	1	3620 324-5	MOULDING PACKAGE, Qtr. Wdo. Belt, B-H, B-S
	-	6003 133	Retainer
	-	6028 721	Screw
19	1	3419 706-7	MOULDING PACKAGE, Qtr. Pnl. Outside, Rear, B-H, B-S
	-	6002 885	Retainer
	-	6029 259	Nut
	-	6002 402	Retainer w/Seal
	-	9420 867	Nut
20	1	3419 701	MOULDING PACKAGE, Deck Lid, B-H, B-S
	-	6002 872	Retainer w/Seal
21	1	3570 071	NAME PLATE, Deck Opening Lower Panel, "Cuda", B-S
	1	3569 542	"By Plymouth", B-H, B-S
	-	9420 263	Nut
22	1	3505 456	NAME PLATE, Deck Opening Lower Panel, "Barracuda", B-H
	1	3569 542	"By Plymouth", B-H, B-S
	-	9420 263	Nut
g		NOTE:	For Grille Mouldings and Ornamentation see Illustration in Group 7
h		NOTE:	For Hood Mouldings and Ornamentation see Illustration in Group 15

EXTERIOR VIEW - BARRACUDA 2 DOOR HARDTOP B-H
CUDA 2 DOOR HARDTOP B-S

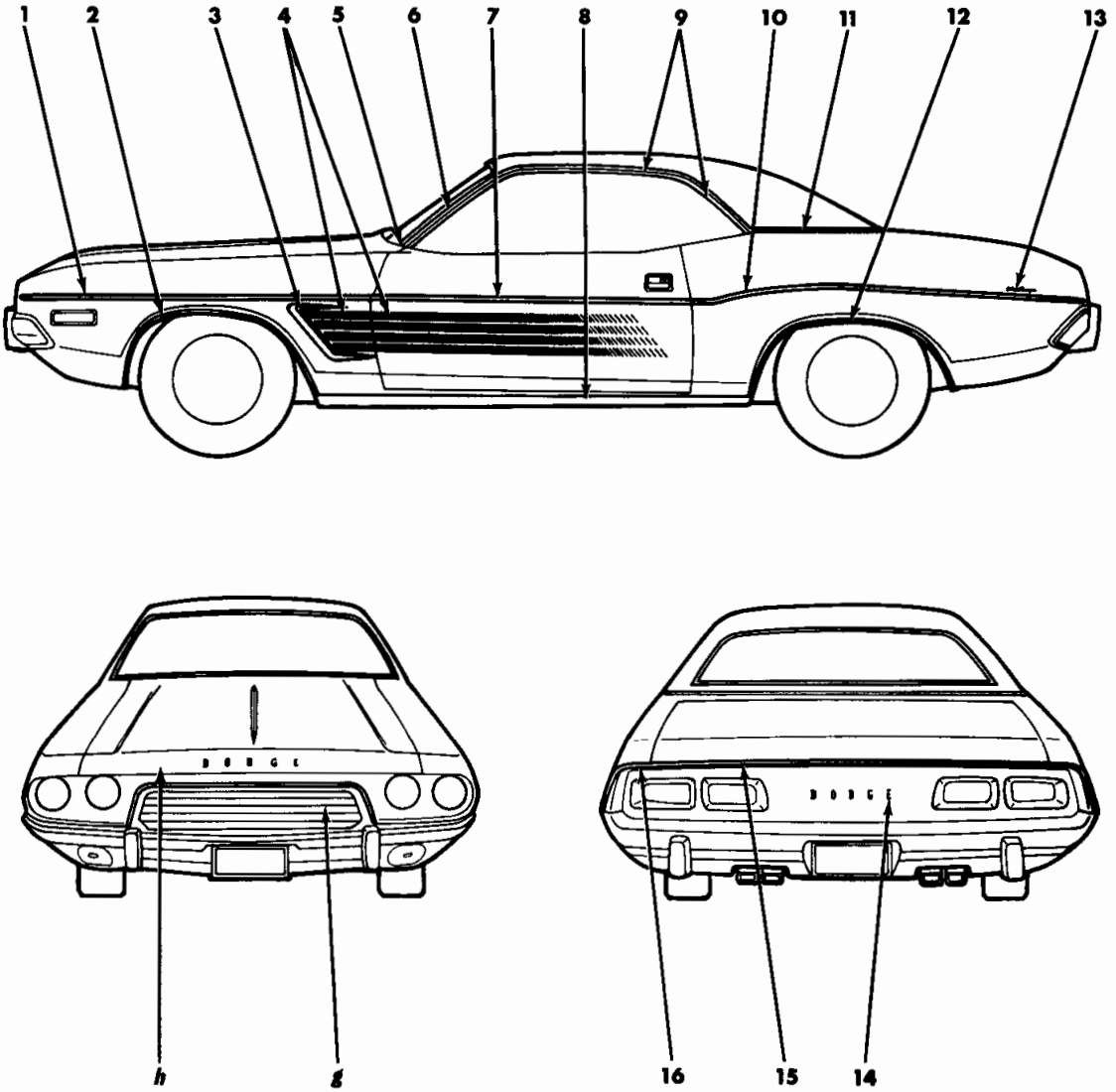

19a4258

EXTERIOR VIEW - CHALLENGER 2 DOOR HARDTOP J-H

REF. NO.	QTY	PART NUMBER	DESCRIPTION
1	1	3579 596-7	MOULDING PACKAGE, Fender Side, Black
	-	6003 133	Retainer
	-	6000 709	Retainer and Seal
	-	9420 218	Nut
2	1	2965 416-7	MOULDING, Fender Wheel Opng.
	-	6028 674	Screw
3	1	3613 190-1	ORNAMENT, Fender Side Scoop
	-	6027 466	Nut
	1	3613 896-7	INSERT, Fender Side Scoop Ornament
4	1	3613 892-3	TAPE, Fender Side, Black
	1	3613 894-5	TAPE, Door, Black
5	1	3446 456-7	MOULDING, Body Frt. Pillar, Lwr.
	-	6028 674	Screw
6	1	2964 628-9	MOULDING, Body Front Pillar Drain Trough
	-	6028 721	Screw
7	1	3419 794-5	MOULDING PACKAGE, Door Outside, Black
	-	3744 367	Retainer Package
	-	6002 920	Retainer
8	2	3744 364	MOULDING PACKAGE, Body Side Sill
	-	6003 201	Retainer
	-	6024 271	Screw
	-	6028 939	Screw
9	1	2965 412-3	MOULDING, Roof Side Drain Trough
	-	6028 721	Screw
10	1	3419 796-7	MOULDING PACKAGE, Qtr. Pnl., Black
	-	3744 367	Retainer Package
	-	6002 920	Retainer
11	1	3683 206-7	MOULDING PACKAGE, Qtr. Outside Belt
	-	6002 957	Retainer
	-	9420 291	Nut
	-	6002 297	Retainer
	-	6003 241	Retainer
12	1	2965 418-9	MOULDING, Qtr. Pnl. Wheel Opng.
	-	6028 674	Screw
13	2	3444 938	NAME PLATE, Qtr. Outside Pnl., "Challenger"
14	2	3612 986	NAME LETTER "D", Deck Opng. Lwr. Pnl.
	1	3612 987	"O"
	1	3612 988	"G"
	1	3612 989	"E"
15	1	3579 590	MOULDING, Deck Lid
	-	3780 450	Retainer Package
	-	6002 013	Retainer
16	1	3579 592-3	MOULDING PACKAGE, Qtr. Pnl., Rear
	-	6002 402	Retainer w/Seal
	-	9420 867	Nut
g		NOTE:	For Grille Mouldings and Ornamentation see Illustration in Group 7
h		NOTE:	For Hood Mouldings and Ornamentation see Illustration in Group 15

EXTERIOR VIEW - CHALLENGER 2 DOOR HARDTOP - J-H

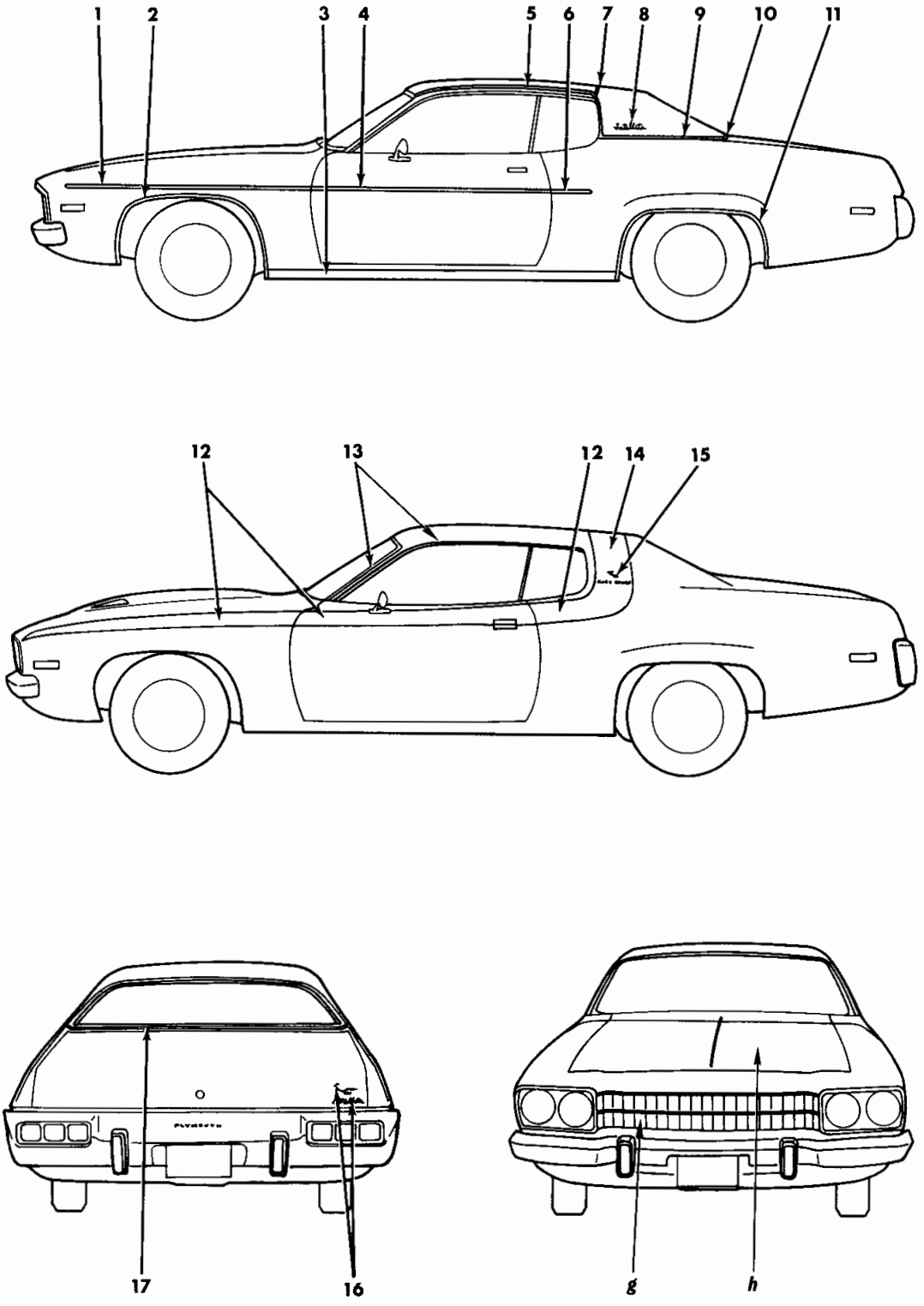

19a4732

EXTERIOR VIEW - SATELLITE 2 DOOR SEDAN R-L
ROAD RUNNER 2 DOOR SEDAN R-M

REF. NO.	QTY	PART NUMBER	DESCRIPTION
1	1	3780 444-5	MOULDING PACKAGE, Fender Side, Black Insert, R-L
	-	3744 367	Retainer Pkg.
	-	6002 920	Retainer
2	1	3685 866-7	MOULDING PACKAGE, Fender Wheel Opng., R-L, R-M
	-	6006 496	Retainer
	-	6003 417	Retainer
3	1	3685 894-5	MOULDING PACKAGE, Body Side Sill, R-L, R-M
	-	6002 443	Retainer
	-	9420 867	Nut
	-	6028 679	Screw
	-	6003 194	Retainer
	-	6024 271	Screw
4	1	3685 874-5	MOULDING PACKAGE, Door Outside, Black Insert, R-L
	-	3744 367	Retainer Pkg.
	-	6002 920	Retainer
5	1	3680 478-9	MOULDING, Roof Side, R-L, R-M
	-	6003 416	Retainer
	-	6028 674	Screw
	-	6003 460	Retainer
6	1	3685 890-1	MOULDING and RETAINER PACKAGE, Qtr.Pnl., Black Insert, R-L
	-	6003 417	Retainer and Seal
7	1	3744 662-3	MOULDING PACKAGE, Roof Outside Transverse, R-L, R-M
	-	3744 670	Retainer Pkg.
	-	6003 460	Retainer - 6028 674 Screw
	-	152 621	Screw
	-	6003 241	Retainer
	-	6002 920	Retainer Stud and Seal
	-	6029 259	Nut
8	2	3505 020	NAME PLATE, Qtr. Outside, "Satellite", R-L
	2	3505 944	"Road", R-M
	2	3505 945	"Runner", R-M
9	1	3680 806-7	MOULDING and CAP, Qtr. Belt, Frt., R-L, R-M
	-	9427 804	Screw
	-	6003 460	Retainer
	-	6006 496	Retainer
	-	9420 867	Nut
10	1	3680 482-3	MOULDING, Qtr.Belt, Rear, R-L, R-M
	-	9420 294	Nut
11	1	3685 892-3	MOULDING PACKAGE, Qtr. Pnl.Wheel Opng., R-L, R-M
	-	6003 417	Clip
	-	9431 735	Screw
12	1	E104-5JW1	TAPE, Fender Side, White, R-M
	1	E104-5JX9	Black, R-M
	1	E104-5JR2	Red, R-M
	1	E101 JW1	TAPE, Door, Rt., White, R-M
	1	E101 JX9	Black, R-M
	1	E101 JR2	Red, R-M
	1	E102 JW1	TAPE, Door, Lt., White, R-M
	1	E102 JX9	Black, R-M
	1	E102 JR2	Red, R-M
	1	E106-7JW1	TAPE, Qtr.Pnl., White, R-M
	1	E106-7JX9	Black, R.M
	1	E106-7JR2	Red, R-M
13	1	3749 062-3	MOULDING, Roof Side Drain Trough, w/o Canopy Vinyl Roof, R-L, R-M
	1	3749 060-1	MOULDING, Roof Side Drain Trough, w/Canopy Vinyl Roof, R-L, R-M
14	1	E103 JW1	TAPE, Roof Transverse, White, R-M
	1	E103 JX9	Black, R-M
	1	E103 JR2	Red, R-M
15	1	2964 112-3	DECAL, Qtr.Pnl., "Bird", R-M
16	1	3505 020	NAME PLATE, Deck Lid, "Satellite", R-L
	1	3505 490	"Road", R-M
	1	3505 491	"Runner", R-M
	1	3749 059	DECAL, Deck Lid, "Bird", R-M
17	1	3680 484-5	MOULDING, Deck Opng. Upr. Pnl., R-L, R-M
	-	6003 460	Retainer
	-	6006 496	Retainer
	-	9420 867	Nut
g		NOTE:	For Grille Mouldings and Ornamentation see Illustration in Group 7
h		NOTE:	For Hood Mouldings and Ornamentation see Illustration in Group 15

EXTERIOR VIEW - SATELLITE 2 DOOR SEDAN R-L
ROAD RUNNER 2 DOOR SEDAN R-M

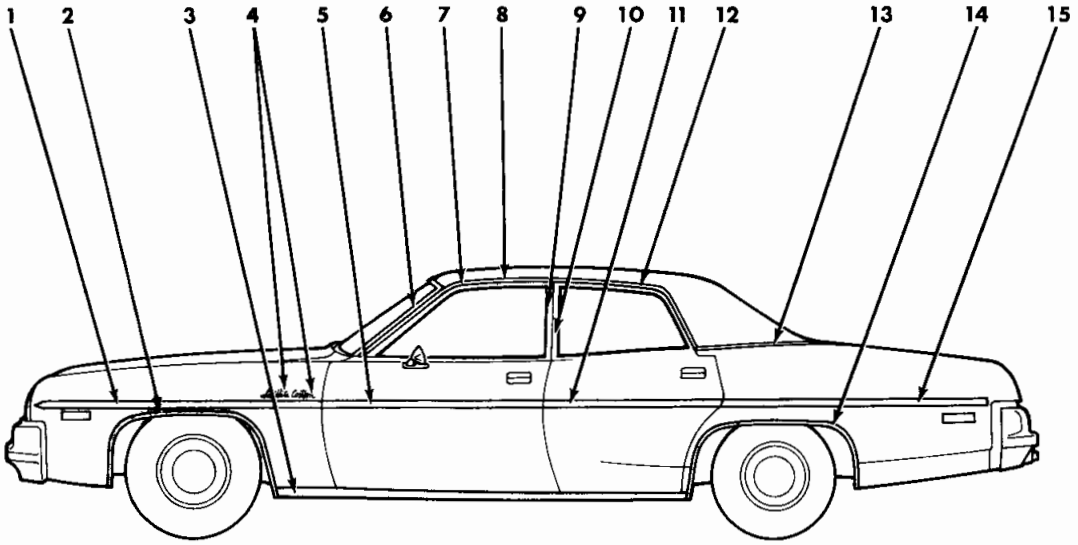

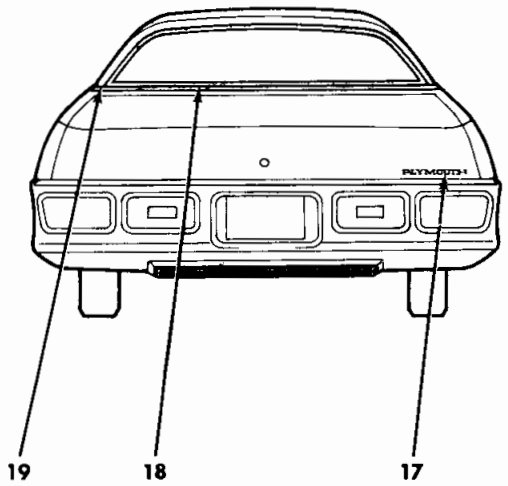

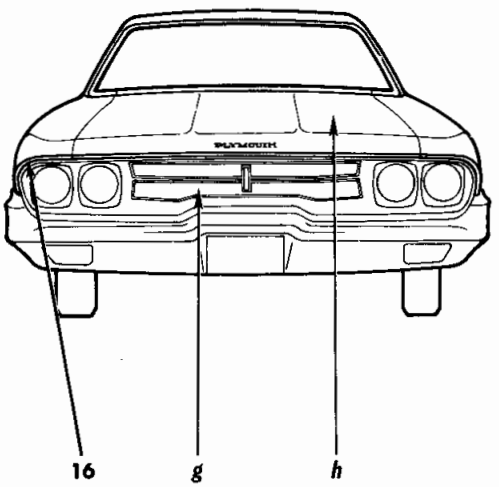

19a4734

EXTERIOR VIEW - SATELLITE 4 DOOR SEDAN R-L
SATELLITE CUSTOM 4 DOOR SEDAN R-H

REF. NO.	QTY	PART NUMBER	DESCRIPTION
1	1	3579 308-9	MOULDING PACKAGE, Fender Side, Black Insert, R-L, R-H
	1	3579 306-7	w/o Insert, R-H
	-	3780 434	Retainer Pkg.
	-	6001 915	Retainer
2	1	3685 864-5	MOULDING PACKAGE, Fender Wheel Opng., R-L, R-H
	-	6028 674	Screw
3	2	3579 401	MOULDING PACKAGE, Body Side Sill, Narrow, R-L
	-	6024 271	Screw
	-	6003 141	Retainer
	1	3579 348-9	MOULDING PACKAGE, Body Side Sill, Wide, R-H
	-	6002 977	Retainer
	-	9420 218	Nut
	-	6003 194	Retainer
	-	6028 680	Screw
4	2	3505 020	NAME PLATE, Fender Side, "Satellite", R-L, R-H
	2	3506 496	"Custom", R-H
5	1	3579 326-7	MOULDING PACKAGE, Frt. Door, Black Insert, R-L, R-H
	1	3579 322-3	w/o Insert, R-H
	-	3780 434	Retainer Pkg.
	-	6001 915	Retainer
6	1	3810 168-9	MOULDING, Body Front Pillar Drain Trough, w/o Vinyl Roof, R-L, R-H
	1	3810 172-3	MOULDING, Body Front Pillar Drain Trough, w/Vinyl Roof, R-L, R-H
7	1	3439 712-3	MOULDING, Frt. Door Wdo. Opng. Frame, Frt., R-L, R-H
8	1	3810 170-1	MOULDING, Roof Side Drain Trough, w/o Vinyl Roof, R-L, R-H
	1	3810 174-5	MOULDING, Roof Side Drain Trough, w/Vinyl Roof, R-L, R-H
9	1	3439 716-7	MOULDING, Frt. Door Wdo. Opng. Frame, Rear, R-L, R-H
10	1	3440 030-1	MOULDING, Rear Door Wdo. Opng. Frame, Frt., R-L, R-H
11	1	3579 328-9	MOULDING PACKAGE, Rear Door, Black Insert, R-L, R-H
	1	3579 324-5	w/o Insert, R-H
	-	3780 434	Retainer Pkg.
	-	6001 915	Retainer
12	1	3440 032-3	MOULDING, Rear Door Wdo. Opng. Frame, Upr., R-L, R-H
13	1	3579 330-1	MOULDING and CAP PACKAGE, Qtr. Belt, Frt., R-L, R-H
	-	3744 670	Retainer Pkg.
	-	6003 133	Retainer
14	1	3505 002-3	MOULDING, Qtr. Pnl. Wheel Opng., R-L, R-H
	-	6028 674	Screw
15	1	3780 428-9	MOULDING PACKAGE, Qtr. Pnl., Black Insert, R-L, R-H
	1	3780 430-1	w/o Insert, R-H
	-	3780 434	Retainer Pkg.
	-	6001 915	Retainer
16	1	3573 438-9	MOULDING, Fender Frt., R-L, R-H
	-	---- ---	Screw
17	1	3445 250	NAME PLATE, Deck Lid, "Plymouth", R-L, R-H
18	1	3579 334-5	MOULDING PACKAGE, Deck Opng. Upr. Pnl., R-L, R-H
	-	6003 133	Retainer
	-	6002 920	Retainer w/Seal
	-	9420 867	Nut
19	1	3810 292-3	MOULDING, Qtr. Belt, Rear, R-L, R-H
	-	9720 804	Screw
	-	6000 960	Clip
g		NOTE:	For Grille Mouldings and Ornamentation see Illustration in Group 7
h		NOTE:	For Hood Mouldings and Ornamentation see Illustration in Group 15

EXTERIOR VIEW - SATELLITE 4 DOOR SEDAN R-L
SATELLITE CUSTOM 4 DOOR SEDAN R-H

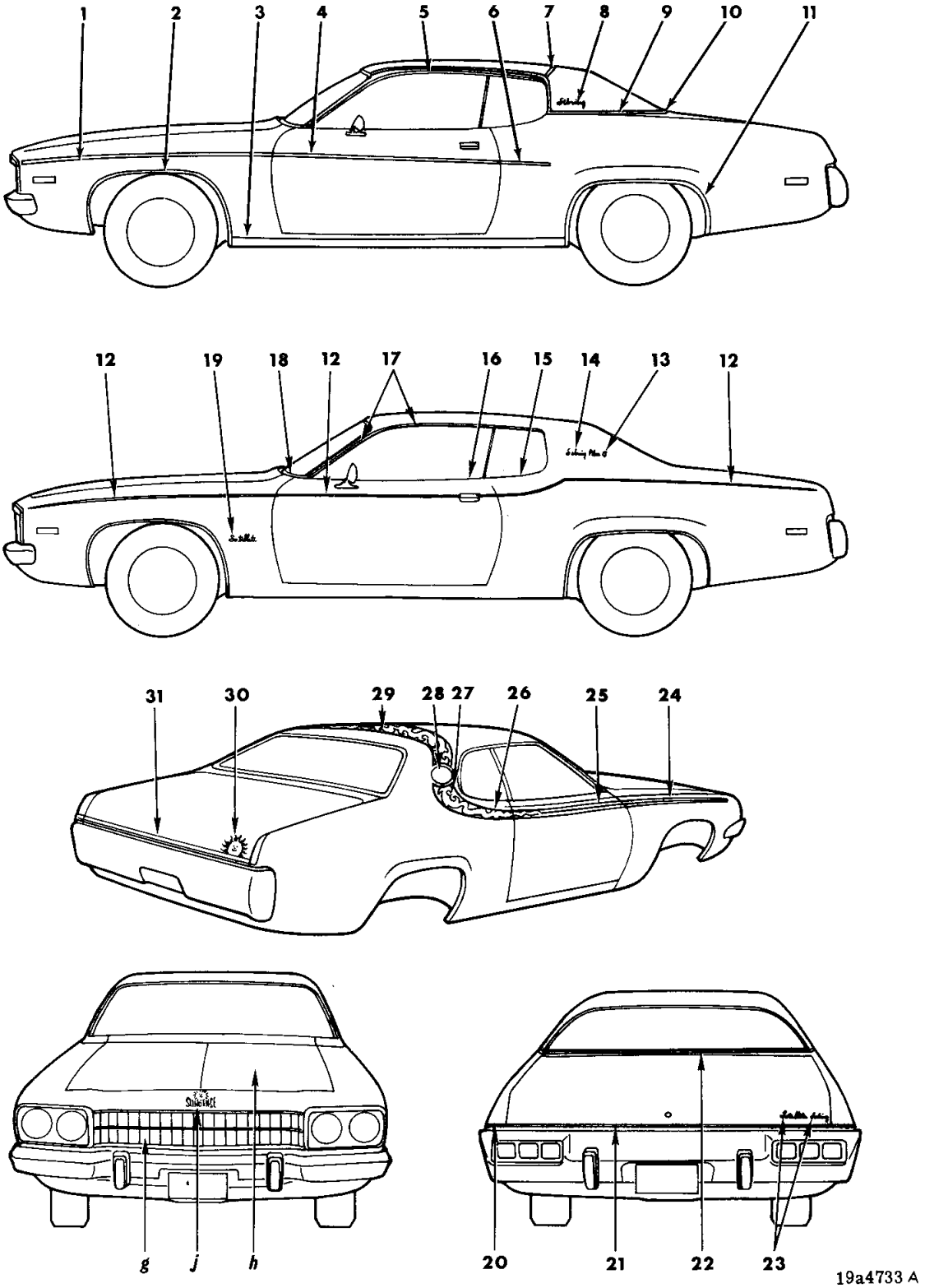

EXTERIOR VIEW - SATELLITE SEBRING 2 DOOR HARDTOP R-H
SATELLITE SEBRING PLUS 2 DOOR HARDTOP R-P

REF. NO.	QTY	PART NUMBER	DESCRIPTION
1	1	3744 602-3	MOULDING PACKAGE, Fender Side, w/o Insert, R-H
	1	3780 444-5	Black Insert, R-P
	-	3744 367	Retainer Pkg.
	-	6002 920	Retainer
2	1	3685 866-7	MOULDING PACKAGE, Fender Wheel Opng., R-H, R-P
	-	6006 496	Retainer
	-	6003 417	Retainer
3	1	3685 894-5	MOULDING PACKAGE, Body Side Sill, R-H, R-P
	-	6002 443	Retainer
	-	9420 867	Nut
	-	6028 679	Screw
	-	6003 194	Retainer
	-	6024 271	Screw
4	1	3744 604-5	MOULDING PACKAGE, Door Outside, without Insert, R-H
	1	3685 874-5	Black Insert, R-P
	-	3744 367	Retainer Pkg.
	-	6002 920	Retainer
5	1	3680 478-9	MOULDING, Roof Side, R-H, R-P
	-	6003 416	Retainer
	-	6028 674	Screw
	-	6003 460	Retainer
6	1	3744 606-7	MOULDING and RETAINER PACKAGE, Qtr.Pnl., w/o Insert, R-H
	1	3685 890-1	Black Insert, R-P
	-	6003 417	Retainer and Seal
7	1	3744 662-3	MOULDING PACKAGE, Roof Outside Transverse, R-H, R-P
	-	3744 670	Retainer Pkg.
	-	6003 460	Retainer - 6028 674 Screw
	-	152 621	Screw
	-	6003 241	Retainer
	-	6002 920	Retainer Stud and Seal
	-	6029 259	Nut
8	2	3612 859	NAME PLATE, Qtr. Outside, "Sebring", R-H
9	1	3680 806-7	MOULDING and CAP, Qtr. Belt, Frt., R-H, R-P
	-	9427 804	Screw
	-	6003 460	Retainer
	-	6006 496	Retainer
	-	9420 867	Nut
10	1	3680 482-3	MOULDING, Qtr. Belt, Rear, R-H, R-P
	-	9420 294	Nut
11	1	3685 892-3	MOULDING PACKAGE, Qtr. Pnl. Wheel Opng., R-H, R-P
	-	6003 417	Clip
	-	9431 735	Screw
12	1	E108-9KG5	TAPE STRIPE, Fender Side, Green, R-P
	1	E108-9JL1	Parchment, R-P
	1	E108-9KR2	Red, R-P
	1	E108-9KW1	White, R-P
	1	E108-9JX9	Black, R-P
	1	E108-9KY1	Gold, R-P
12 Cont'd.	1	3780 464-5	TAPE STRIPE PACKAGE, Door, Frt. and Rear, Green, R-P
	1	3780 466-7	Red, R-P
	1	3780 468-9	White, R-P
	1	3780 470-1	Gold, R-P
	1	3780 462-3	Parchment, R-P
	1	3780 460-1	Black, R-P
	1	E114-5KG5	TAPE STRIPE, Qtr. Pnl., Green, R-P
	1	E114-5JL1	Parchment, R-P
	1	E114-5KR2	Red, R-P
	1	E114-5KW1	White, R-P
	1	E114-5JX9	Black, R-P
	1	E114-5KY1	Gold, R-P
13	2	3680 702	MEDALLION, Qtr. Outside, w/Vinyl Roof, R-P
	2	3680 873	w/o Vinyl Roof, R-P
	-	6025 860	Clip
14	2	3680 872	NAME PLATE, Qtr. Outside, "Sebring Plus", R-P
	-	6025 860	Clip
15	1	3680 954-5	MOULDING, Qtr. Wdo. Outside Belt, R-P
	-	152 621	Screw
16	1	3680 810-1	MOULDING, Door Outside Belt, R-P
	-	6029 259	Nut
	-	6003 394	Retainer Stud and Seal
	-	6003 386	Clip
17	1	3749 062-3	MOULDING, Roof Side Drain Trough, w/o Canopy Vinyl Roof, R-H, R-P
	1	3749 060-1	MOULDING, Roof Side Drain Trough, w/Canopy Vinyl Roof, R-H, R-P
18	1	3680 548-9	MOULDING, Fender, Rear Edge, R-P
19	2	3505 020	NAME PLATE, Fender, "Satellite", R-H, R-P
20	1	3685 886-7	MOULDING PACKAGE, Qtr. Outside, Rear End, R-P
	-	9423 804	Screw
21	1	3685 861	MOULDING and BRACKET, Deck Lid, R-P
	-	6028 674	Screw
22	1	3680 484-5	MOULDING, Deck Opng. Upr. Pnl., R-H, R-P
	-	6003 460	Retainer
	-	6006 496	Retainer
	-	9420 867	Nut
23	1	3505 020	NAME PLATE, Deck Lid, "Satellite", R-H
	1	3612 859	"Sebring", R-H
	1	3680 804	"Sebring Plus", R-P
24	1	3810 310-1	TAPE, Fender Side, "Sundance", R-H, R-P

CONTINUED ON NEXT PAGE

EXTERIOR VIEW - SATELLITE SEBRING 2 DOOR HARDTOP R-H
SATELLITE SEBRING PLUS 2 DOOR HARDTOP R-P

REF. NO.	QTY	PART NUMBER	DESCRIPTION
25	1	3810 312	TAPE, Door, Rt., "Sundance", w/Cutout for Racing Mirror, R-H, R-P
	1	3810 370	TAPE, Door, Rt., "Sundance", w/o Cutout, use w/or w/o Mirror, R-H, R-P
	1	3810 313	TAPE, Door, Lt., "Sundance", R-H, R-P
26	1	3810 314-5	TAPE, Qtr. Pnl., "Sundance", R-H, R-P
27	1	3810 306-7	TAPE, Qtr. Pnl., Rear, "Sundance", R-H, R-P
28	1	3810 322-3	DECAL, Qtr. Pnl., "Sundance", R-H, R-P
29	1	3810 316	TAPE, Roof, "Sundance", R-H, R-P
30	1	3810 317	DECAL, Deck Lid, "Sundance", R-H, R-P
31	1	3810 304	TAPE, Deck Lid, "Sundance", R-H, R-P
g		NOTE:	For Grille Mouldings and Ornamentation see Illustration in Group 7
h		NOTE:	For Hood Mouldings and Ornamentation see Illustration in Group 15
j		NOTE:	For Decal see Code 7-17-23

EXTERIOR VIEW - SATELLITE SEBRING 2 DOOR HARDTOP R-H
SATELLITE SEBRING PLUS 2 DOOR HARDTOP R-P

NOTES

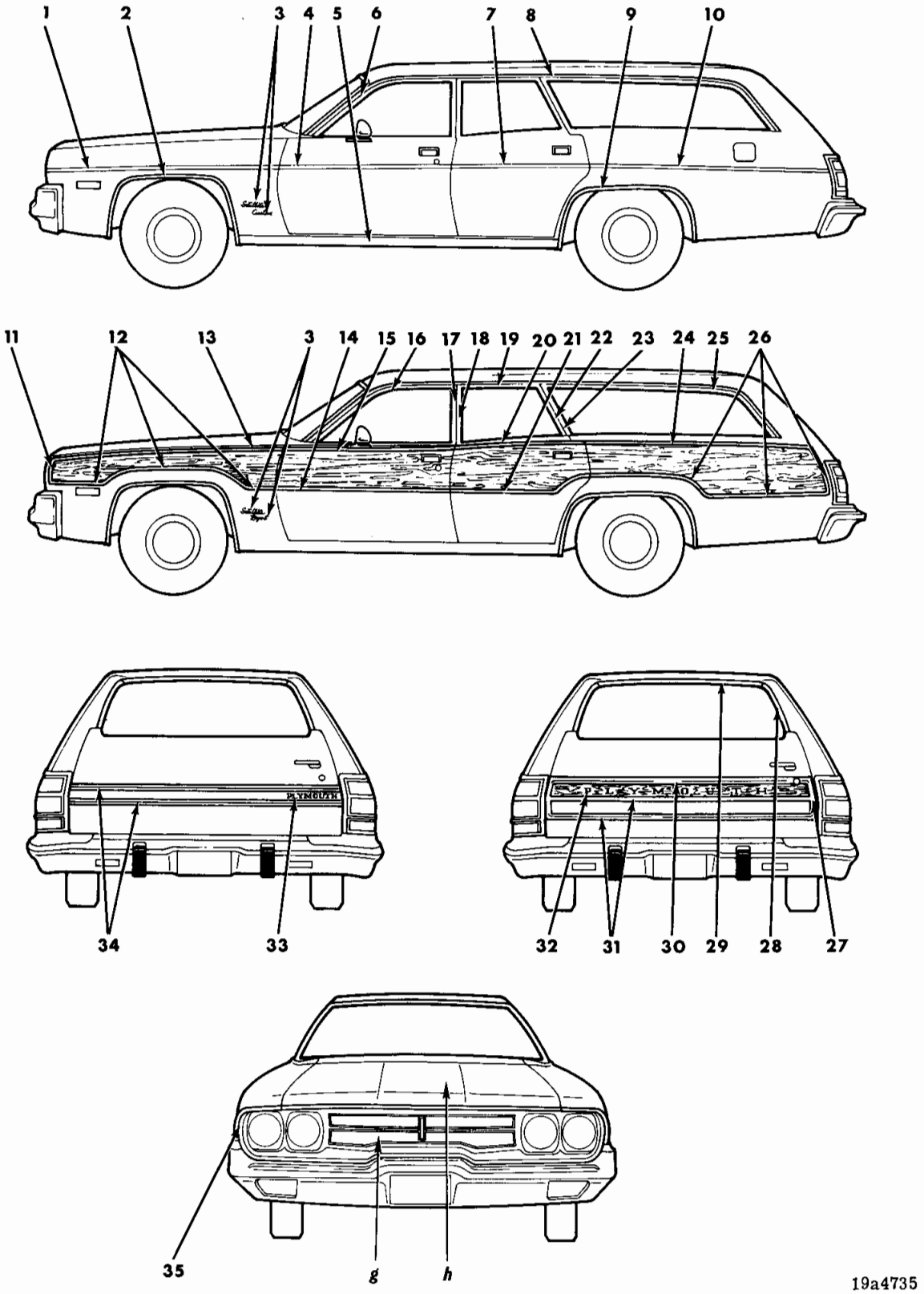

EXTERIOR VIEW - SATELLITE STATION WAGON R-L
SATELLITE CUSTOM STATION WAGON R-H
SATELLITE REGENT STATION WAGON R-P

REF. NO.	QTY	PART NUMBER	DESCRIPTION
1	1	3579 308-9	MOULDING PACKAGE, Fender Side, Black Insert, R-L, R-H
	1	3579 306-7	w/o Insert, R-H
	-	3780 434	Retainer Pkg.
	-	6001 915	Retainer
2	1	3685 864-5	MOULDING PACKAGE, Fender Wheel Opng., R-L, R-H, R-P
	-	6028 674	Screw
3	2	3505 020	NAME PLATE, Fender Side, "Satellite", R-L, R-H, R-P
	2	3506 496	"Custom", R-H
	2	3612 858	"Regent", R-P
4	1	3579 326-7	MOULDING PACKAGE, Frt. Door, Black Insert, R-L, R-H
	1	3579 322-3	w/o Insert, R-H
	-	3780 434	Retainer Pkg.
	-	6001 915	Retainer
5	2	3579 401	MOULDING PACKAGE, Body Side Sill, Narrow, R-L
	-	6024 271	Screw
	-	6003 141	Retainer
	1	3579 348-9	MOULDING PACKAGE, Body Side Sill, Wide, R-H, R-P
	-	6002 977	Retainer
	-	9420 218	Nut
	-	6003 194	Retainer
	-	6028 680	Screw
6	1	3810 168-9	MOULDING, Body Front Pillar Drain Trough, R-L, R-H, R-P
7	1	3579 328-9	MOULDING PACKAGE, Rear Door, Black Insert, R-L, R-H
	1	3579 324-5	w/o Insert, R-H
	-	3780 434	Retainer Pkg.
	-	6001 915	Retainer
8	1	3810 176-7	MOULDING, Roof Side Drain Trough, R-L, R-H, R-P
9	1	3505 006-7	MOULDING, Qtr. Pnl. Wheel Opng., R-L, R-H, R-P
	-	6028 674	Screw
10	1	3620 072-3	MOULDING PACKAGE, Qtr. Pnl., Black Insert, R-L, R-H
	1	3620 070-1	w/o Insert, R-H
	-	3780 434	Retainer Pkg.
11	1	3685 862-3	MOULDING PACKAGE, Fender Side, Frt., R-P
	-	6024 271	Screw
12	1	3685 872-3	MOULDING PACKAGE, Fender Side, Lwr., R-P
	-	6002 975	Retainer
	-	6002 920	Retainer
	-	6024 679	Nut
13	1	3685 870-1	MOULDING PACKAGE, Fender Side, Upr., R-P
	-	6002 920	Retainer
	-	6024 679	Nut
	-	6002 871	Retainer
	-	6024 271	Screw
14	1	3579 586-7	MOULDING PACKAGE, Frt. Door, Lwr., R-P
	-	3744 667	Clip Pkg.
	-	6002 920	Retainer
15	1	3685 882	MOULDING PACKAGE, Frt. Door Upr. Frt., Rt., use w/Mirror, R-P
	-	3780 452	Retainer Pkg.
	-	6002 920	Retainer
	1	3744 223	MOULDING PACKAGE, Frt. Door Upr., Rt., use w/o Mirror, R-P
	-	3780 452	Retainer Pkg.
	-	6002 920	Retainer
	1	3685 883	MOULDING PACKAGE, Frt. Door Upr. Frt., Lt., use w/Mirror, R-P
	-	3780 452	Retainer Pkg.
	-	6002 920	Retainer
	1	3685 880	MOULDING PACKAGE, Frt. Door Upr. Rear, Rt., use w/Mirror, R-P
	-	3780 452	Retainer Pkg.
	1	3685 881	MOULDING PACKAGE, Frt. Door Upr. Rear, Lt., use w/Mirror, R-P
	-	3780 452	Retainer Pkg.
16	1	3439 712-3	MOULDING, Frt. Door Wdo. Opng. Frame, Frt., R-L, R-H, R-P
17	1	3439 716-7	MOULDING, Frt. Door Wdo. Opng. Frame, Rear, R-L, R-H, R-P
18	1	3440 030-1	MOULDING, Rear Door Wdo. Opng. Frame, Frt., R-L, R-H, R-P
19	1	3440 034-5	MOULDING, Rear Door Wdo. Opng. Frame, Upr., R-L, R-H, R-P
20	1	3685 876-7	MOULDING PACKAGE, Rear Door, Upr., R-P
	-	6002 871	Retainer
	-	6024 271	Screw
21	1	3579 398-9	MOULDING PACKAGE, Rear Door, Lwr., R-P
	-	6002 604	Retainer Stud and Seal
	-	6029 259	Nut
	-	6002 975	Retainer
	-	6002 460	Retainer and Seal
22	1	3440 036-7	MOULDING, Rear Door Wdo. Opng. Frame, Rear, R-L, R-H, R-P
23	1	3440 186-7	MOULDING, Qtr. Wdo. Outside, Frt., Stainless Steel, R-L, R-H, R-P
	-	9418 246	Screw
	1	3620 086-7	MOULDING PACKAGE, Qtr. Wdo. Outside, Frt., Galvanized Steel, R-L, R-H, R-P
	-	9418 246	Screw
24	1	3685 888-9	MOULDING PACKAGE, Qtr. Pnl., Upr., R-P
	-	6002 871	Retainer
	-	6024 271	Screw
	-	6002 460	Retainer and Seal

CONTINUED ON NEXT PAGE

EXTERIOR VIEW - SATELLITE STATION WAGON R-L
SATELLITE CUSTOM STATION WAGON R-H
SATELLITE REGENT STATION WAGON R-P

REF. NO.	QTY	PART NUMBER	DESCRIPTION
25	1	3620 082-3	MOULDING PACKAGE, Qtr. Wdo., Upr. and Rear, Stainless Steel, R-L, R-H, R-P
	1	3620 088-9	MOULDING PACKAGE, Qtr. Wdo., Upr. and Rear, Galvanized Steel, R-L, R-H, R-P
	-	6003 238	Clip
26	1	3685 884-5	MOULDING PACKAGE, Qtr. Pnl., Lwr. Frt. and Rear, R-P
	-	6002 975	Retainer
	-	6002 460	Retainer and Seal
	-	6024 271	Screw
27	1	3680 952-3	MOULDING, Tailgate End, R-P
	-	9428 256	Screw
	-	6028 305	Spacer
28	1	3440 194-5	MOULDING PACKAGE, Qtr. Pnl. Outside Tailgate Pillar Upr., R-L, R-H, R-P
	-	9414 732	Screw
29	1	3440 120	MOULDING PACKAGE, Roof Pnl. Outside Tailgate Opng., Upr., R-L, R-H, R-P
	-	9414 732	Screw
	-	9428 274	Screw
30	1	3685 896	MOULDING PACKAGE, Tailgate, Upr., R-P
	-	6003 486	Retainer
31	1	3685 897	MOULDING, Tailgate, Center, R-P
	-	6003 132	Retainer
	-	6024 271	Screw
32	1	3613 988	LETTER "P", Tailgate Outside Panel, R-L, R-P
	1	3613 989	"L", R-L, R-P
	1	3613 990	"Y", R-L, R-P
	1	3613 991	"M", R-L, R-P
	1	3613 992	"O", R-L, R-P
	1	3613 993	"U", R-L, R-P
	1	3613 994	"T", R-L, R-P
	1	3613 995	"H", R-L, R-P
	-	6002 852	Retainer
33	1	3445 250	NAME PLATE, Tailgate Outside Panel, "Plymouth", R-H
34	1	3685 860	MOULDING PACKAGE, Tailgate Outside, Upr. and Lwr., R-H
	-	6003 248	Retainer
	-	6024 271	Screw
	-	6003 384	Retainer
	-	6026 523	Nut
35	1	3573 438-9	MOULDING, Fender Frt., R-L, R-H, R-P
	-	---- ---	Screw
g		NOTE:	For Grille Mouldings and Ornamentation see Illustration in Group 7
h		NOTE:	For Hood Mouldings and Ornamentation see Illustration in Group 15

EXTERIOR VIEW - SATELLITE STATION WAGON R-L
SATELLITE CUSTOM STATION WAGON R-H
SATELLITE REGENT STATION WAGON R-P

NOTES

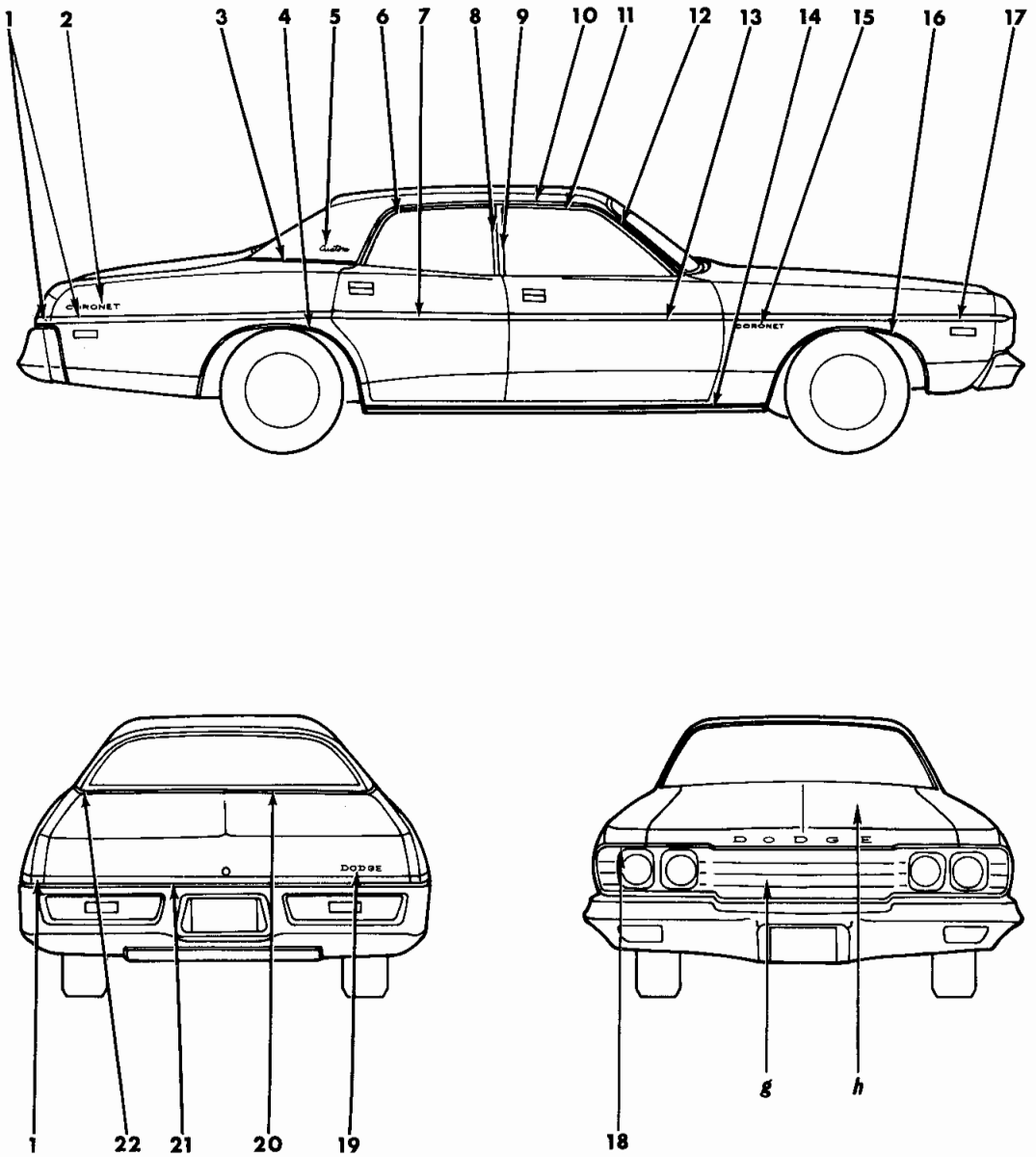

19a4739A

EXTERIOR VIEW - CORONET 4 DOOR SEDAN W-L
CORONET CUSTOM 4 DOOR SEDAN W-H

REF. NO.	QTY	PART NUMBER	DESCRIPTION
1	2	3749 042	MOULDING, Qtr. Pnl. Frt. and Rear, w/Black Insert, W-L
	1	3837 398-9	MOULDING PACKAGE, Qtr. Pnl. Frt. and Rear, w/o Insert, W-H
	1	3837 400-1	w/Black Insert, W-H
	-	6002 633	Retainer
	-	6001 738	Retainer and Stud
	-	6027 625	Nut
	-	6028 674	Screw
	-	3780 434	Retainer Pkg.
	-	6001 915	Retainer
2	2	3504 801	NAME PLATE, Qtr. Outside, "Coronet", W-H
3	1	3620 264-5	MOULDING PACKAGE, Qtr. Outside Belt, Frt., W-L, W-H
	-	6002 920	Retainer
	-	9420 867	Nut
	-	6003 147	Retainer
4	1	3504 730-1	MOULDING, Qtr. Pnl., Wheel Opng., W-L, W-H
	-	6028 674	Screw
5	2	3505 432	NAME PLATE, Qtr. Outside, "Custom", w/Vinyl Roof, W-H
	2	3505 056	"Custom", w/o Vinyl Roof, W-H
	-	6025 860	Clip
6	1	3440 032-3	MOULDING, Rear Door Wdo. Opng. Frame, Upr., W-L, W-H
7	2	3749 042	MOULDING, Rear Door, w/Black Insert, W-L
	1	3685 006-7	MOULDING PACKAGE, Rear Door, without Insert, W-H
	1	3837 390-1	w/Black Insert, W-H
	-	6003 312	Retainer Stud and Seal
	-	6002 556	Retainer w/Seal
	-	3780 434	Retainer Pkg.
	-	6001 915	Retainer
8	1	3440 030-1	MOULDING, Rear Door Wdo. Opng. Frame, Frt., W-L, W-H
9	1	3439 716-7	MOULDING, Frt. Door Wdo. Opng. Frame, Rear, W-L, W-H
10	1	3810 170-1	MOULDING, Roof Side Drain Trough, w/o Vinyl Roof, W-L, W-H
	1	3810 174-5	MOULDING, Roof Side Drain Trough, w/Vinyl Roof, W-L, W-H
g		NOTE:	For Grille Mouldings and Ornamentation see Illustration in Group 7
h		NOTE:	For Hood Mouldings and Ornamentation see Illustration in Group 15
11	1	3439 712-3	MOULDING, Frt. Door Wdo. Opng. Frame, Frt., W-L, W-H
12	1	3810 168-9	MOULDING, Body Front Pillar Drain Trough, w/o Vinyl Roof, W-L, W-H
	1	3810 172-3	MOULDING, Body Front Pillar Drain Trough, w/Vinyl Roof, W-L, W-H
13	2	3749 042	MOULDING, Frt. Door, w/Black Insert, W-L
	1	3685 002-3	MOULDING PACKAGE, Frt. Door, without Insert, W-H
	1	3837 386-7	w/Black Insert, W-H
	-	6002 633	Retainer
	-	6003 313	Retainer and Stud
	-	3780 434	Retainer Pkg.
	-	6001 915	Retainer
14	2	3579 401	MOULDING PACKAGE, Body Side Sill, W-L, W-H
	-	6003 141	Retainer
	-	6024 271	Screw
15	2	3504 801	NAME PLATE, Fender Side, "Coronet", W-L
16	1	3685 898-9	MOULDING PACKAGE, Fender Wheel Opng., W-L, W-H
	-	6028 674	Screw
17	2	3749 834	MOULDING, Fender Side, w/Black Insert, W-L
	1	3685 500-1	MOULDING PACKAGE, Fender Side, without Insert, W-H
	1	3837 384-5	w/Black Insert, W-H
	-	6002 633	Retainer
	-	6001 738	Retainer
	-	6027 625	Nut w/Cap
	-	9420 867	Nut
	-	3780 434	Retainer Pkg.
18	1	3837 444-5	MOULDING PACKAGE, Fender, Frt., W-L, W-H
	-	3691 446	Retainer
19	1	3443 554	NAME PLATE, Deck Lid, "Dodge", W-L, W-H
20	1	3579 428-9	MOULDING PACKAGE, Deck Opng. Upr. Pnl., W-L, W-H
	-	6002 920	Retainer
	-	9420 867	Nut
	-	6003 147	Retainer
21	1	3613 250	MOULDING, Deck Lid, Lwr., Black, w/o Insert, W-H
	1	3837 359	MOULDING PACKAGE, Deck Lid Lwr., w/Black Insert, W-H
	-	6003 318	Retainer
	-	6029 259	Nut
22	1	3506 250-1	MOULDING, Qtr. Outside Belt, Rear, W-L, W-H
	-	9420 294	Nut

EXTERIOR VIEW - CORONET 4 DOOR SEDAN W-L
CORONET CUSTOM 4 DOOR SEDAN W-H

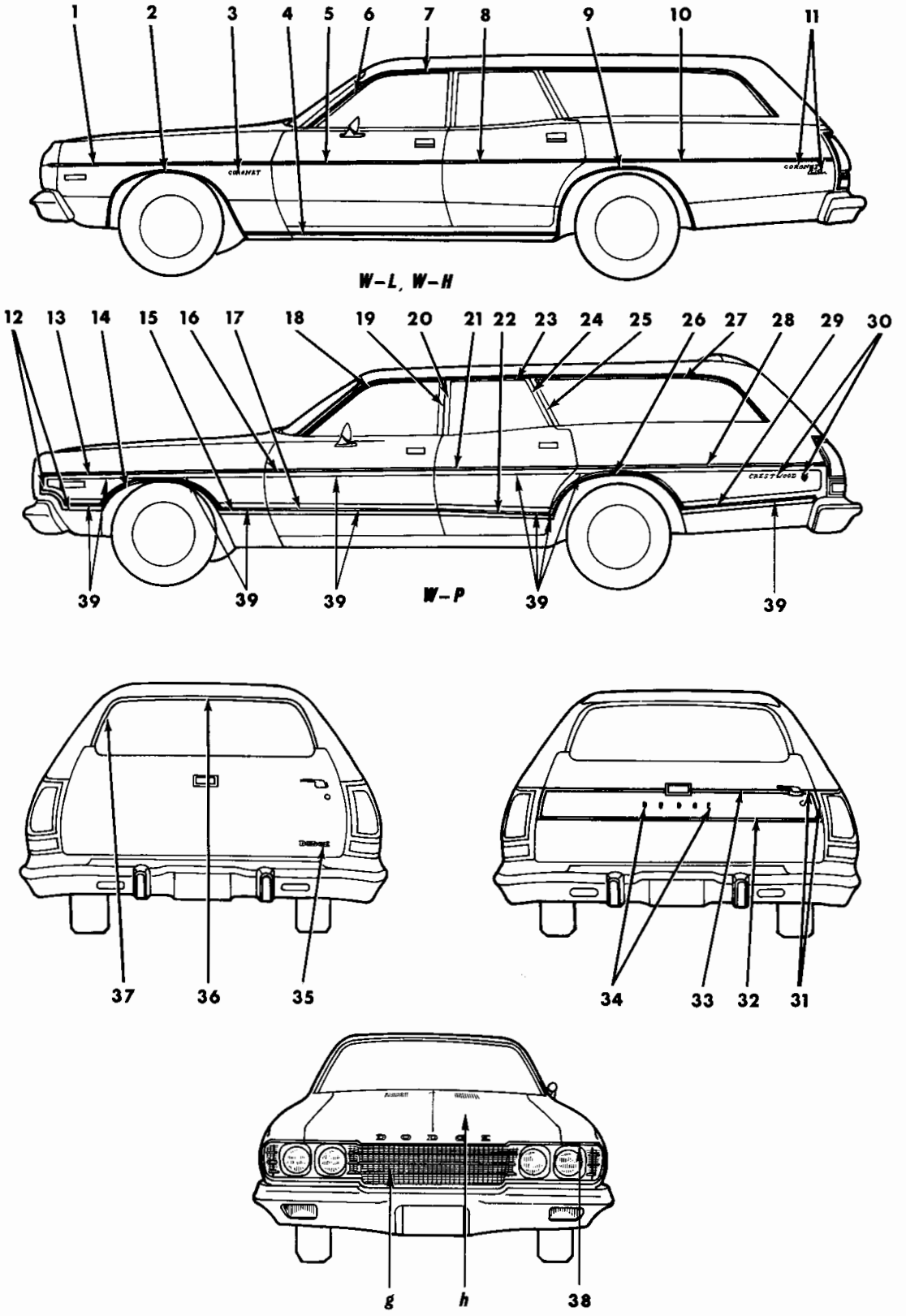

EXTERIOR VIEW - CORONET STATION WAGON W-L
CORONET CUSTOM STATION WAGON W-H
CORONET CRESTWOOD STATION WAGON W-P

REF. NO.	QTY	PART NUMBER	DESCRIPTION
1	2	3749 834	MOULDING, Fender Side, w/Black Insert, W-L
	1	3685 500-1	MOULDING PACKAGE, Fender Side, without Insert, W-H
	1	3837 384-5	w/Black Insert, W-H
	-	6002 633	Retainer
	-	6001 738	Retainer
	-	6027 625	Nut w/Cap
	-	9420 867	Nut
	-	3780 434	Retainer Pkg.
2	1	3685 898-9	MOULDING PACKAGE, Fender Wheel Opng., W-L, W-H
	-	6028 674	Screw
3	2	3504 801	NAME PLATE, Fender Side, "Coronet", W-L
4	2	3579 401	MOULDING PACKAGE, Body Side Sill, W-L, W-H
	-	6003 141	Retainer
	-	6024 271	Screw
5	2	3749 042	MOULDING, Frt.Door, w/Black Insert, W-L
	1	3685 002-3	MOULDING PACKAGE, Frt. Door, without Insert, W-H
	1	3837 386-7	w/Black Insert, W-H
	-	6002 633	Retainer
	-	6003 313	Retainer and Stud
	-	3780 434	Retainer Pkg.
	-	6001 915	Retainer
6	1	3810 168-9	MOULDING, Body Front Pillar Drain Trough, W-L, W-H, W-P
7	1	3810 176-7	MOULDING, Roof Side Drain Trough, W-L, W-H, W-P
8	2	3749 042	MOULDING, Rear Door, w/Black Insert, W-L
	1	3685 006-7	MOULDING PACKAGE, Rear Door, without Insert, W-H
	1	3837 390-1	w/Black Insert, W-H
	-	6003 313	Retainer and Stud
	-	6002 556	Retainer w/Seal
	-	3780 434	Retainer Pkg.
	-	6001 915	Retainer
9	1	3504 732-3	MOULDING, Qtr.Pnl., Wheel Opng., W-L, W-H
	-	6028 674	Screw
10	2	3749 042	MOULDING, Qtr. Pnl., w/Black Insert, W-L
	1	3685 024-5	MOULDING PACKAGE, Qtr. Pnl., w/o Insert, W-H
	1	3879 672-3	w/o Insert, W-H, Use After Jan. 14, 1974
	1	3837 446-7	w/Black Insert, W-H
	-	3780 434	Retainer Pkg.
	-	6001 915	Retainer
11	2	3504 801	NAME PLATE, Qtr.Outside, "Coronet", W-H
	2	3505 432	"Custom", W-H
12	1	E534-5 KTT	MOULDING, Fender Side, Frt., w/Tan Insert, W-P
	-	6027 466	Nut
13	1	3837 382-3	MOULDING PACKAGE, Fender Side Rear, Upr., w/Tan Insert, W-P
	-	6002 633	Retainer
14	1	3749 004-5	MOULDING, Fender Wheel Opng., W-P
	-	6028 674	Screw
15	1	3579 374-5	MOULDING PACKAGE, Fender Side Rear, Lwr., W-P
	-	3780 434	Retainer Pkg.
	-	6001 915	Retainer
16	1	3837 388-9	MOULDING PACKAGE, Frt. Door, w/Tan Insert, W-P
	-	6002 633	Retainer
17	1	3579 414-5	MOULDING PACKAGE, Frt. Door, Lwr., W-P
	-	3780 434	Retainer Pkg.
	-	6001 915	Retainer
18	1	3439 712-3	MOULDING, Frt.Door Wdo. Opng.Frame, Frt., W-L, W-H, W-P
19	1	3439 716-7	MOULDING, Frt.Door Wdo. Opng.Frame, Rear, W-L, W-H, W-P
20	1	3440 030-1	MOULDING, Rear Door Wdo. Opng.Frame, Frt., W-L, W-H, W-P
21	1	3837 392-3	MOULDING PACKAGE, Rear Door, w/Tan Insert, W-P
	-	6002 633	Retainer
22	1	3579 416-7	MOULDING PACKAGE, Rear Door, Lwr., W-P
	-	3780 434	Retainer Pkg.
	-	6001 915	Retainer
23	1	3440 034-5	MOULDING, Rear Door Wdo. Opng.Frame, Upr., W-L, W-H, W-P
24	1	3440 036-7	MOULDING, Rear Door Wdo. Opng.Frame, Rear, W-L, W-H, W-P
25	1	3440 186-7	MOULDING, Qtr.Wdo.Outside, Frt., Stainless Steel, W-L, W-H, W-P
	-	9418 246	Screw
	1	3620 086-7	MOULDING PACKAGE, Qtr. Wdo.Outside, Frt., Galvanized Steel, W-L, W-H, W-P
	-	9418 246	Screw
26	1	3570 246-7	MOULDING, Qtr.Pnl., Frt. and Wheel Opng., W-P
	-	6028 674	Screw
27	1	3620 082-3	MOULDING PACKAGE, Qtr. Wdo.Upr.& Rear, Stainless Steel, W-L, W-H, W-P
	1	3620 088-9	Galvanized Steel, W-L, W-H, W-P
	-	6003 238	Clip
28	1	3837 448-9	MOULDING PACKAGE, Qtr. Pnl., w/Tan Insert, W-P
	-	3780 434	Retainer Pkg.
	-	6001 915	Retainer

CONTINUED ON NEXT PAGE

EXTERIOR VIEW - CORONET STATION WAGON W-L
CORONET CUSTOM STATION WAGON W-H
CORONET CRESTWOOD STATION WAGON W-P

REF. NO.	QTY	PART NUMBER	DESCRIPTION
29	1	3780 956-7	MOULDING PACKAGE, Qtr. Pnl., Lwr., Rear
	-	6001 482	Retainer
	-	9431 735	Screw w/Seal
30	2	3680 827	NAME PLATE, Qtr. Outside, "Crestwood", W-P
	2	3680 716	MEDALLION, Qtr. Outside, W-P
31	1	3680 946-7	MOULDING, Tailgate Outside, End, W-H, W-P
	-	9428 256	Screw
	-	6028 305	Spacer
32	1	3685 909	MOULDING PACKAGE, Tailgate Outside, Lwr., W-H, W-P
	-	6003 385	Retainer
	-	6024 271	Screw
33	1	3685 906	MOULDING PACKAGE, Tailgate Outside, Upr. Center, Rt., Manual Reg., W-H, W-P
	1	3685 907	MOULDING PACKAGE, Tailgate Outside, Upr. Center, Lt., Manual Reg., W-H, W-P
	-	6003 385	Retainer
	-	6024 271	Screw
	1	3685 908	MOULDING PACKAGE, Tailgate Outside, Upr. Center, Elect. Reg., W-H, W-P
	-	6003 385	Retainer
	-	6024 271	Screw
g		NOTE:	For Grille Mouldings and Ornamentation see Illustration in Group 7
h		NOTE:	For Hood Mouldings and Ornamentation see Illustration in Group 15

REF. NO.	QTY	PART NUMBER	DESCRIPTION
34	2	3749 006	LETTER "D", Tailgate Outside Panel, W-H, W-P
	1	3749 007	"O", W-H, W-P
	1	3749 008	"G", W-H, W-P
	1	3749 009	"E", W-H, W-P
	-	6002 852	Retainer
35	1	2965 502	NAME PLATE, Tailgate Outside Panel, "Dodge", W-L
	-	6002 852	Retainer
36	1	3440 120	MOULDING PACKAGE, Roof Pnl. Outside Tailgate Opng., Upr., W-L, W-H, W-P
	-	9414 732	Screw
	-	9428 274	Screw
37	1	3440 194-5	MOULDING PACKAGE, Qtr. Pnl. Outside Tailgate Pillar, Upr., W-L, W-H, W-P
	-	9414 732	Screw
38	1	3837 444-5	MOULDING PACKAGE, Fender, Frt., W-L, W-H, W-P
	-	3691 466	Retainer
39	1	3810 148-9	TAPE, Fender Side, Frt., W-P
	1	3744 718-9	TAPE, Fender Side, Rear, Upr., W-P
	1	3744 718-9	TAPE, Fender Side, Frt., Upr., W-P
	2	3744 718	TAPE, Fender Side, Rear. Lwr., W-P
	4	3744 713	TAPE, Frt. Door, Upr. & Lwr., W-P
	2	3744 700	TAPE, Rear Door, Upr., W-P
	2	3744 700	TAPE, Rear Door, Lwr., W-P
	1	3810 146-7	TAPE, Qtr. Pnl., Rear, W-P
	1	3744 716-7	TAPE, Qtr. Pnl., Frt., Upr., W-P
	2	3744 716	TAPE, Qtr. Pnl., Frt. Lwr., W-P

EXTERIOR VIEW - CORONET STATION WAGON W-L
CORONET CUSTOM STATION WAGON W-H
CORONET CRESTWOOD STATION WAGON W-P

NOTES

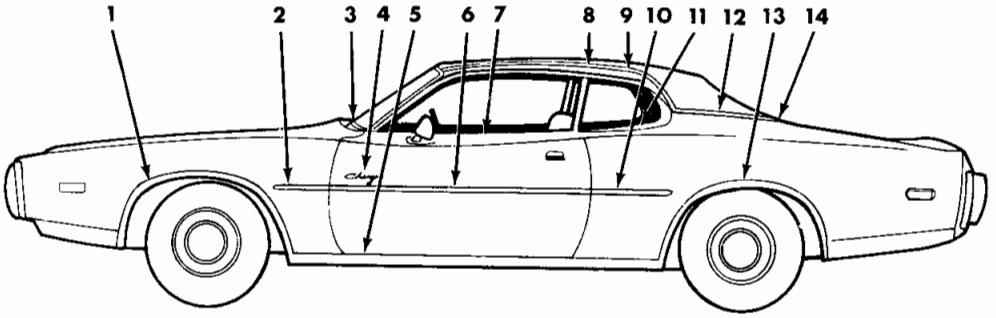

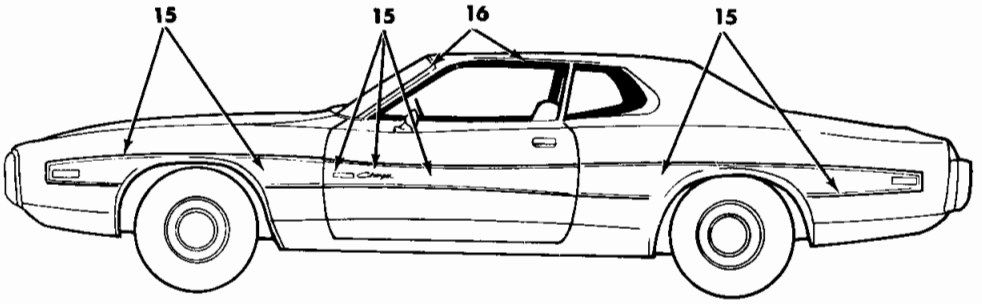

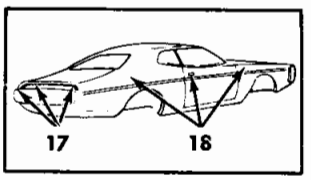

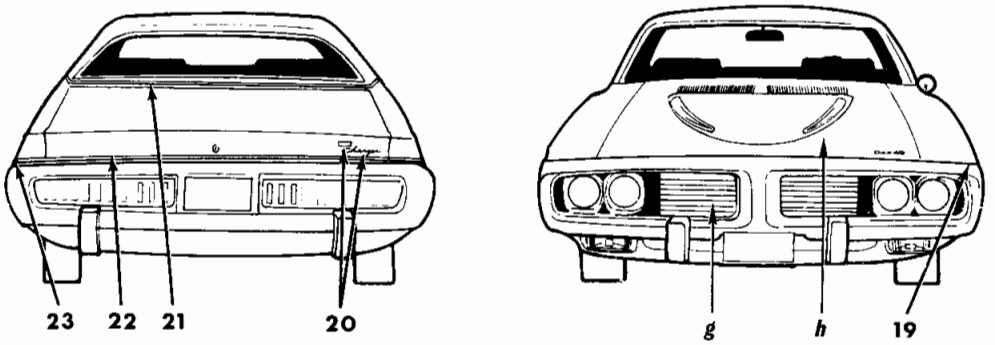

19a4736

EXTERIOR VIEW - CHARGER COUPE 2 DOOR SEDAN W-L

REF. NO.	QTY	PART NUMBER	DESCRIPTION
1	1	3685 900-1	MOULDING PACKAGE, Fender Wheel Opng.
	-	6028 674	Screw
2	2	3749 042	MOULDING, Fender Side, Black
3	1	3680 966-7	MOULDING, Fender, Rear Edge
4	2	3504 807	NAME PLATE, Door Side, "Charger"
5	1	3685 902-3	MOULDING PACKAGE, Body Side Sill
	-	6002 601	Retainer
	-	6028 674	Screw
	-	6029 846	Screw
6	2	3749 042	MOULDING, Door Outside, Black
7	1	E528-9 JX9	MOULDING, Door Outside Belt, Black
	1	E528-9 JS1	Argent
	-	6003 390	Nut
	-	9414 732	Screw
	-	6003 458	Retainer
	-	6029 259	Nut
8	1	3680 816-7	MOULDING, Roof Side
	-	6003 147	Retainer
	-	6028 674	Washer
9	1	3744 374-5	MOULDING PACKAGE, Roof Outside Transverse
	-	6002 920	Retainer Stud and Seal
	-	9420 867	Nut
	-	6029 259	Nut
10	2	3749 042	MOULDING, Qtr. Pnl., Black
11	1	3680 976-7	MOULDING, Qtr. Wdo., Belt
	-	9420 294	Nut
	-	9416 628	Screw
	-	6003 390	Nut
12	1	3680 822-3	MOULDING and CAP, Qtr. Outside Belt, Frt.
	-	6002 920	Retainer Stud and Seal
	-	9420 867	Nut
	-	6003 147	Retainer
	-	9431 736	Screw
13	1	3685 904-5	MOULDING PACKAGE, Qtr. Pnl. Wheel Opng.
	-	6028 674	Screw
14	1	3749 696-7	MOULDING and SEAL, Qtr. Outside Belt, Rear
	-	9420 294	Nut
15	1	3780 994-5	TAPE PACKAGE, Fender, Frt. and Rear, Gold
	1	3780 454-5	Black
	1	3780 456-7	Red
	1	3879 002-3	Copper
	1	E134-5 JX8	TAPE, Door, Black
	1	E136-7 JRR	Red
	1	E136-7 KYY	Gold
	1	E136-7 KKK	Copper
	1	E138-9 JX8	TAPE, Qtr. Pnl., Black
	1	E138-9 JRR	Red
	1	E138-9 KYY	Gold
	1	E138-9 KKK	Copper
16	1	3749 068-9	MOULDING, Roof Side Drain Trough, w/o Canopy Vinyl Roof, W-L
	1	3749 070-1	MOULDING, Roof Side Drain Trough, w/ Canopy Vinyl Roof, W-L
17	1	3680 926	TAPE SET, Deck Lid and Qtr. Pnl. End Ext.
18	AR	3810 253	TAPE, Body Side Stripe, White (84" long)
19	1	3672 486-7	MOULDING, Fender, Frt.
	-	9432 524	Screw
20	1	3613 272	NAME PLATE, Deck Lid, "Dodge"
	1	3680 687	"Charger"
21	1	3579 450-1	MOULDING PACKAGE, Deck Opng. Upr. Pnl.
	-	6002 920	Retainer
	-	9420 867	Nut
	-	6003 147	Retainer
	-	6024 271	Screw
22	1	3505 544	MOULDING and BRACKET, Deck Lid Lwr.
	-	6028 674	Screw
23	1	3504 764-5	MOULDING, Qtr. Outside Bumper Periphery
	-	9432 524	Screw
g		NOTE:	For Grille Mouldings and Ornamentation see Illustration in Group 7
h		NOTE:	For Hood Mouldings and Ornamentation see Illustration in Group 15

EXTERIOR VIEW - CHARGER COUPE 2 DOOR SEDAN W-L

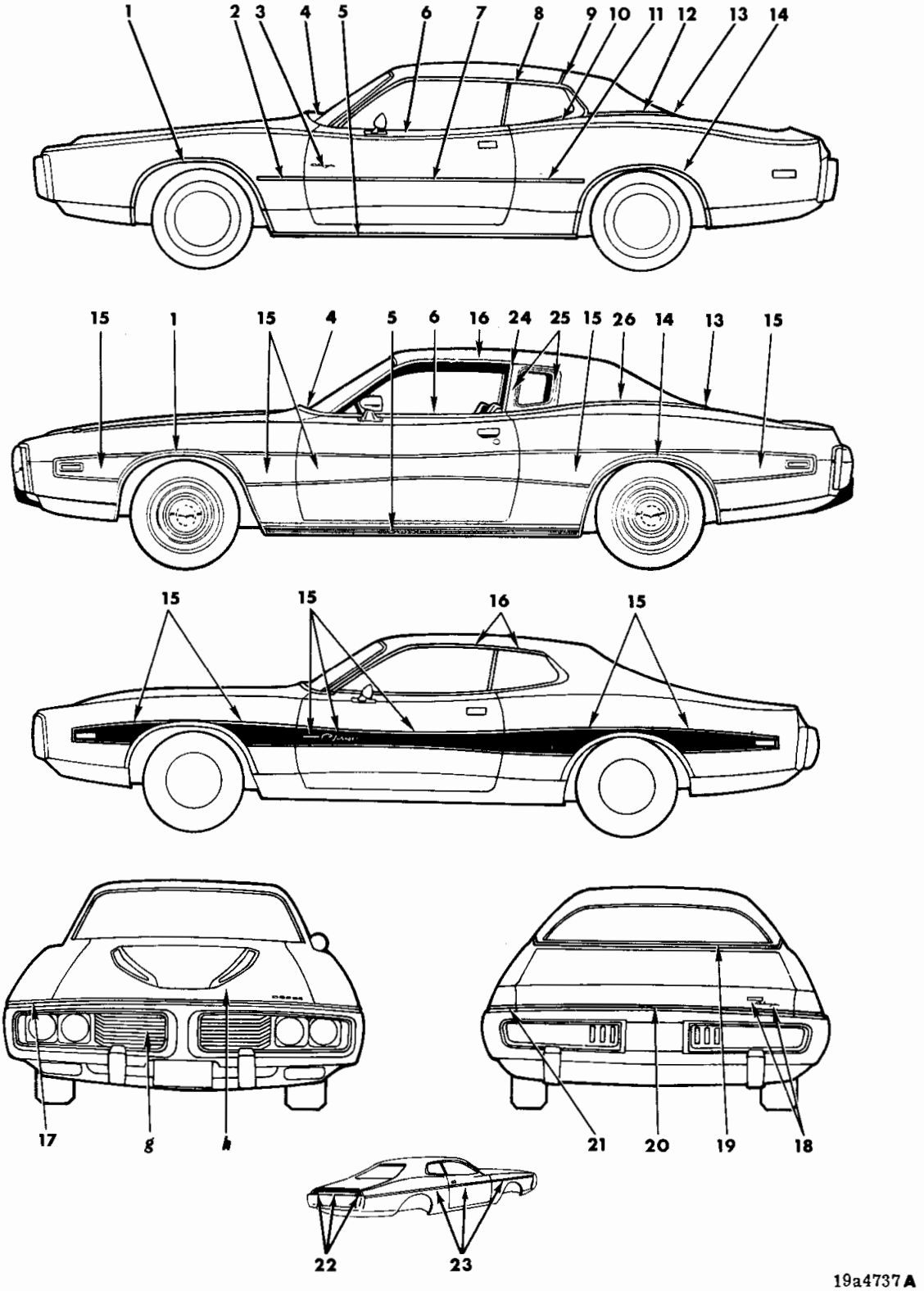

EXTERIOR VIEW - CHARGER 2 DOOR HARDTOP W-H

REF. NO.	QTY	PART NUMBER	DESCRIPTION
1	1	3685 900-1	MOULDING PACKAGE, Fender Wheel Opng.
	-	6028 674	Screw
2	2	3749 042	MOULDING, Fender Side, Black
3	2	3504 807	NAME PLATE, Door Side, "Charger"
4	1	3680 966-7	MOULDING, Fender, Rear Edge
5	1	3685 902-3	MOULDING PACKAGE, Body Side Sill
	-	6002 601	Retainer
	-	6028 674	Screw
	-	6029 846	Screw
6	1	E528-9 JX9	MOULDING, Door Outside Belt, Black
	1	E528-9 JS1	Argent
	-	6003 390	Nut
	-	9414 732	Screw
	-	6003 458	Retainer
	-	6029 259	Nut
7	2	3749 042	MOULDING, Door Outside, Black
8	1	3680 816-7	MOULDING, Roof Side, w/o Opera Wdo.
	-	6003 147	Retainer
	-	6028 674	Washer
9	1	3744 374-5	MOULDING PACKAGE, Roof Outside Transverse
	-	6002 920	Retainer Stud and Seal
	-	9420 867	Nut
	-	6029 259	Nut
10	1	3680 976-7	MOULDING, Qtr. Wdo., Belt
	-	9420 294	Nut
	-	9416 628	Screw
	-	6003 390	Nut
11	2	3749 042	MOULDING, Qtr. Pnl., Black
12	1	3680 822-3	MOULDING and CAP, Qtr. Outside Belt, Frt., w/o Opera Wdo.
	-	6002 920	Retainer Stud and Seal
	-	9420 867	Nut
	-	6003 147	Retainer
	-	9431 736	Screw
13	1	3749 696-7	MOULDING and SEAL, Qtr. Outside Belt, Rear, w/ or w/o Opera Wdo.
	-	9420 294	Nut
14	1	3685 904-5	MOULDING PACKAGE, Qtr. Pnl. Wheel Opng.
	-	6028 674	Screw
15	1	3780 994-5	TAPE PACKAGE, Fender, Frt. and Rear, Gold
	1	3780 454-5	Black
	1	3780 456-7	Red
	1	3879 002-3	Copper
	1	E134-5 JX8	TAPE, Door, Black
	1	E136-7 JRR	Red
	1	E136-7 KYY	Gold
	1	E136-7 KKK	Copper
	1	E138-9 JX8	TAPE, Qtr. Pnl., Black
	1	E138-9 JRR	Red
	1	E138-9 KYY	Gold
	1	E138-9 KKK	Copper
16	1	3749 068-9	MOULDING, Roof Side Drain Trough, w/o Canopy Vinyl Roof, w/ Opera Wdo., W-H
	1	3749 070-1	MOULDING, Roof Side Drain Trough, w/ Canopy Vinyl Roof, w/o Opera Wdo., W-H
	1	E524-5 KL2	MOULDING, Roof Side Drain Trough, w/ Full Vinyl Roof, w/ Opera Wdo., Parchment
	1	E524-5 JW1	White
	1	E524-5 JX9	Black
	1	E524-5 KG9	Green
	1	E524-5 KY4	Gold
17	1	3672 486-7	MOULDING, Fender, Frt.
	-	9432 524	Screw
18	1	3613 272	NAME PLATE, Deck Lid, "Dodge"
	1	3680 687	"Charger"
19	1	3579 450-1	MOULDING PACKAGE, Deck Opng. Upr. Pnl., w/or w/o Opera Wdo.
	-	6002 920	Retainer
	-	9420 867	Nut
	-	6003 147	Retainer
	-	6024 271	Screw
20	1	3505 544	MOULDING and BRACKET, Deck Lid Lwr.
	-	6028 674	Screw
21	1	3504 764-5	MOULDING, Qtr. Outside Bumper Periphery
	-	9432 524	Screw
22	1	3680 926	TAPE SET, Deck Lid and Qtr. Pnl. End Ext.
23	AR	3810 253	TAPE, Body Side Stripe, White (84" long)
24	1	E526-7 KL2	MOULDING, Qtr. Wdo., Frt., use w/ Opera Wdo., Parchment
	1	E526-7 JW1	White
	1	E526-7 JX9	Black
	1	E526-7 KG9	Green
	1	E526-7 KY4	Gold
	-	6028 492	Rivet
25	1	E604-5 KL2	FRAME, Qtr. Wdo. Outside, use w/ Opera Wdo., Parchment
	1	E604-5 KW1	White
	1	E604-5 KX9	Black
	1	E604-5 KG9	Green
	1	E604-5 KY4	Gold
	NOTE:		See 23-64-280 for Frame w/Seal, Qtr. Wdo. Inside
26	1	3879 006-7	MOULDING PACKAGE, Qtr. Outside Belt, Frt., use w/ Opera Wdo.
	-	3744 670	Retainer Pkg.
	-	6002 920	Retainer
g		NOTE:	For Grille Mouldings and Ornamentation see Illustration in Group 7
h		NOTE:	For Hood Mouldings and Ornamentation see Illustration in Group 15

EXTERIOR VIEW - CHARGER 2 DOOR HARDTOP W-H

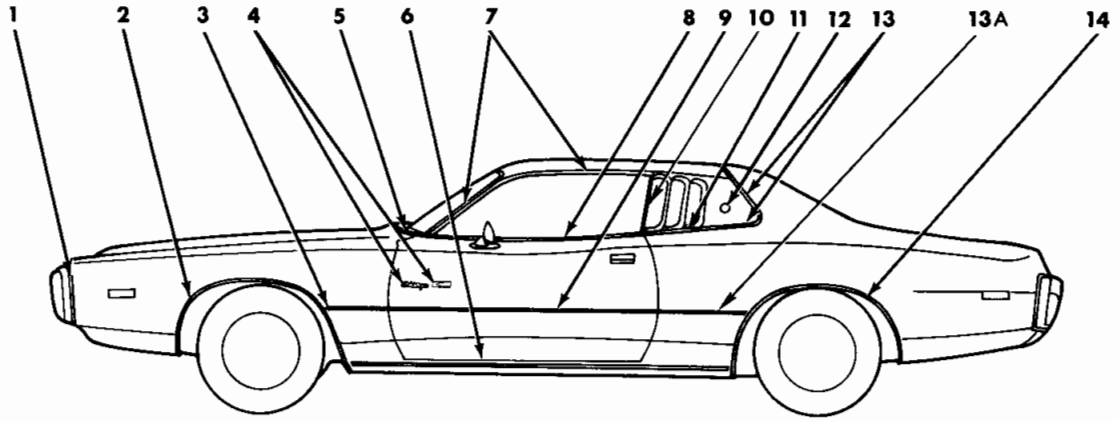

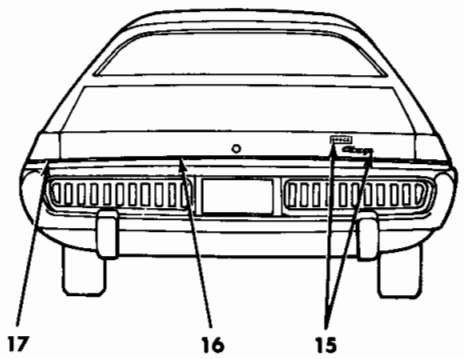

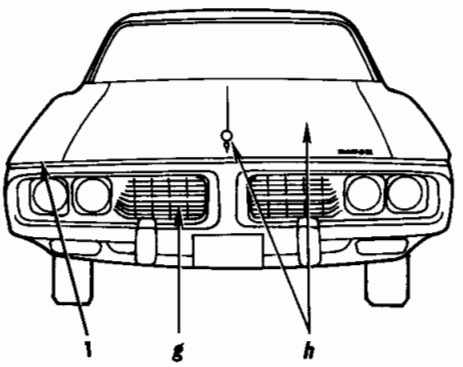

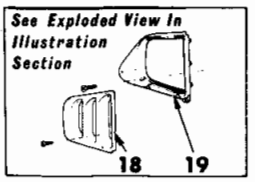

19a4738A

EXTERIOR VIEW - CHARGER (SE) FASTBACK W-P

REF. NO.	QTY	PART NUMBER	DESCRIPTION
1	1	3672 486-7	MOULDING, Fender, Frt.
	-	9432 524	Screw
2	1	3685 900-1	MOULDING PACKAGE, Fender Wheel Opng.
	-	6028 674	Screw
3	2	3749 042	MOULDING, Fender Side, Black
4	2	3504 807	NAME PLATE, Door Side, "Charger"
	2	3506 410	MEDALLION, Door Side
5	1	3680 966-7	MOULDING, Fender, Rear Edge
6	1	3685 902-3	MOULDING PACKAGE, Body Side Sill
	-	6002 601	Retainer
	-	6028 674	Screw
	-	6029 846	Screw
7	1	E524-5 KL2	MOULDING, Roof Side Drain Trough, Parchment
	1	E524-5 JW1	White
	1	E524-5 JX9	Black
	1	E524-5 KG9	Green
	1	E524-5 KY4	Gold
8	1	E528-9 JX9	MOULDING, Door Outside Belt, Black
	-	6003 390	Nut
	-	9414 732	Screw
	-	6003 458	Retainer
	-	6029 259	Nut
9	2	3749 042	MOULDING, Door Outside, Black
10	1	E526-7 KL2	MOULDING, Qtr. Wdo., Frt., Parchment
	1	E526-7 JW1	White
	1	E526-7 JX9	Black
	1	E526-7 KG9	Green
	1	E526-7 KY4	Gold
	-	6028 492	Rivet
11	1	3837 366-7	MOULDING PACKAGE, Qtr. Wdo. Belt, Frt., Parchment
	1	3837 364-5	White
	1	3837 362-3	Black
	1	3837 368-9	Green
	1	3837 370-1	Gold
	-	6003 400	Retainer and Screw
	-	6003 398	Retainer and Screw
12	2	3680 828	MEDALLION, Qtr. Outside, "SE"
	-	9420 294	Nut
13	1	E532-3 KL2	MOULDING, Qtr. Wdo. Belt, Rear and Roof Transverse, Parchment
	1	E532-3 JW1	White
	1	E532-3 JX9	Black
	1	E532-3 KG9	Green
	1	E532-3 KY4	Gold
	-	6003 405	Retainer
	-	6001 606	Retainer Stud and Seal
	-	9420 219	Nut
13A	2	3749 042	MOULDING, Qtr. Pnl., Black
14	1	3685 904-5	MOULDING PACKAGE, Qtr. Pnl. Wheel Opng.
	-	6028 674	Screw
15	1	3613 272	NAME PLATE, Deck Lid, "Dodge"
	1	3680 687	"Charger"
16	1	3505 544	MOULDING and BRACKET, Deck Lid, Lwr.
	-	6028 674	Screw
17	1	3504 764-5	MOULDING, Qtr. Outside Bumper Periphery
	-	9432 524	Screw
18	1	E602-3 KL2	LOUVER and FILLER, Qtr. Wdo., Outer, Parchment
	1	E602-3 JW1	White
	1	E602-3 JX9	Black
	1	E602-3 KG9	Green
	1	E602-3 KY4	Gold
	-	---- ---	Screw
19	1	3720 360-1	FRAME w/SEAL, Qtr. Wdo. Louver, Up to Jan. 21, 1974
	1	3767 812-3	After Jan. 21, 1974
g		NOTE:	For Grille Mouldings and Ornamentation see Illustration in Group 7
h		NOTE:	For Hood Mouldings and Ornamentation see Illustration in Group 15

EXTERIOR VIEW - CHARGER (SE) FASTBACK W-P

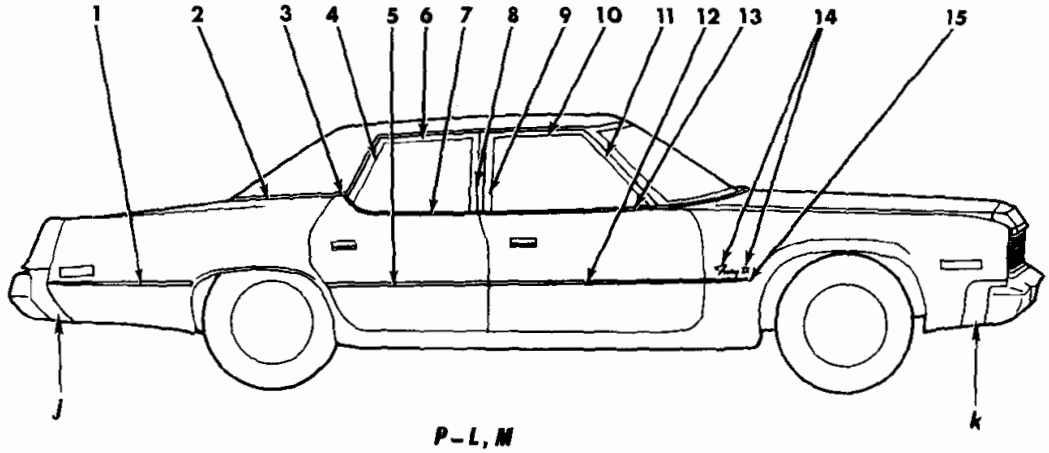

P-L, M

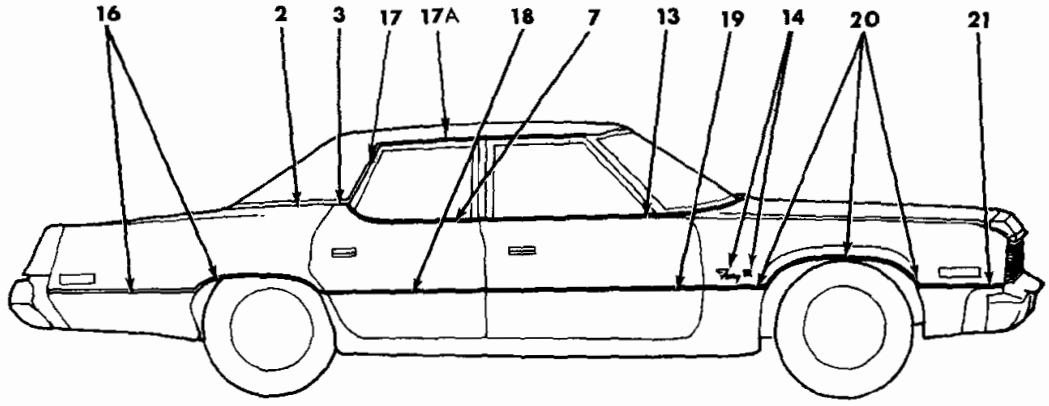

P-H

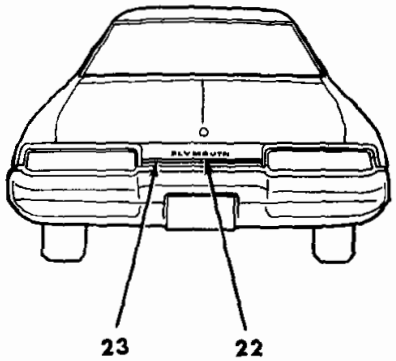

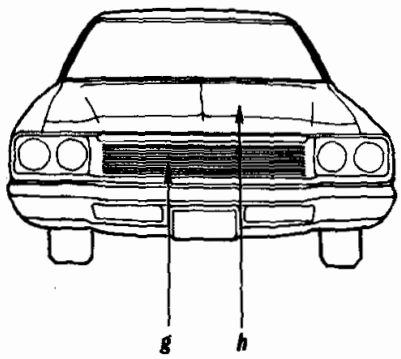

19a4741 B

EXTERIOR VIEW - PLYMOUTH FURY I 4 DOOR SEDAN P-L
PLYMOUTH FURY II 4 DOOR SEDAN P-M
PLYMOUTH FURY III 4 DOOR SEDAN P-H

REF. NO.	QTY	PART NUMBER	DESCRIPTION
1	1	3780 988-9	MOULDING PACKAGE, Qtr. Pnl., Rear, w/Black Insert, P-L, P-M
	1	3780 986-7	Chrome, w/o Insert, P-M
	-	3780 434	Retainer Pkg.
2	1	3749 624-5	MOULDING, Qtr. Outside Belt, Vinyl Roof, P-L, P-H, P-H
	-	6003 442	Retainer - 6003 462 Ret.
3	1	3749 610-1	MOULDING, Rear Door Outside, Vinyl Roof, Bright, P-L, P-M, P-H
	-	6028 674	Screw - 116 000 Nut
4	1	3749 552-3	MOULDING, Rear Door Wdo. Opng. Frame, Rear, P-L, P-M, P-H
5	1	3780 858-9	MOULDING PACKAGE, Rear Door, w/Black Insert, P-L, P-M
	-	3744 671	Retainer Pkg.
	1	3780 856-7	Chrome, w/o Insert, P-M
	-	3780 434	Retainer Pkg.
6	1	3749 548-9	MOULDING, Rear Door Wdo. Opng. Frame, Upr., P-L, P-M, P-H
7	1	3749 950-1	MOULDING, Rear Door Belt, P-L, P-M, P-H
	-	6028 674	Screw
8	1	3749 544	MOULDING, Rear Door Wdo. Opng. Frame, Frt., Lt., P-L, P-M, P-H
	1	3749 545	MOULDING, Rear Door Wdo. Opng. Frame, Frt., Rt., P-L, P-M, P-H
9	1	3749 544-5	MOULDING, Frt. Door Wdo. Opng. Frame, Rear, P-L, P-M, P-H
10	1	3749 542-3	MOULDING, Frt. Door Wdo. Opng. Frame, Upr., P-L, P-M, P-H
11	1	3749 540-1	MOULDING, Frt. Door Wdo. Opng. Frame, Frt., P-L, P-M, P-H
12	1	3780 854-5	MOULDING PACKAGE, Frt. Door, w/Black Insert, P-L, P-M
	1	3780 852-3	Chrome, w/o Insert, P-M
	-	3744 671	Retainer Pkg.
13	1	3749 948-9	MOULDING, Frt. Door Belt, P-L, P-M
	1	3749 506-7	P-H
	-	6028 674	Screw
g		NOTE:	For Grille Mouldings and Ornamentation see Illustration in Group 7
h		NOTE:	For Hood Mouldings and Ornamentation see Illustration in Group 15
j		NOTE:	For Fillers see Code 23-34-280
k		NOTE:	For Fillers see Code 12-02-6
14	2	3504 152	NAME PLATE, Fender Side, "Fury", P-L, P-M, P-H
	-	6000 050	Nut
	2	3749 842	NUMERAL, Fender Side, "I", P-L
	2	3749 844	"II", P-M
	2	3749 846	"III", P-H
	-	6002 852	Retainer
15	1	3780 494-5	MOULDING PACKAGE, Fender Side, w/Black Insert, P-L, P-M
	1	3780 492-3	Chrome, w/o Insert, P-M
	-	3744 671	Retainer Pkg.
	-	6002 920	Retainer
16	1	3780 482-3	MOULDING PACKAGE, Qtr. Pnl., w/Black Insert, P-H
	1	3780 480-1	Black Paint, w/o Insert, P-H
	-	3780 434	Retainer Pkg.
17	1	3749 448-9	MOULDING, Roof Side Drain Trough, Rear, Up to 1-2-74, P-L, P-M, P-H
	1	3810 264-5	After 1-2-74, P-L, P-M, P-H
17A	1	3749 446-7	MOULDING, Roof Side Drain Trough, Front, Up to 1-2-74, P-L, P-M, P-H
	1	3810 266-7	After 1-2-74, P-L, P-M, P-H
18	1	3780 878-9	MOULDING PACKAGE, Rear Door, w/Black Insert, P-H
	1	3780 876-7	Black Paint, w/o Insert, P-H
	-	---- ---	Retainer Pkg.
19	1	3780 874-5	MOULDING PACKAGE, Front Door, w/Black Insert, P-H
	1	3780 872-3	Black Paint, w/o Insert, P-H
	-	3780 434	Retainer Pkg.
20	1	3780 484-5	MOULDING PACKAGE, Fender Wheel Opng., w/Black Insert, P-H
	1	3780 486-7	Black Paint, w/o Insert, P-H
	-	3780 434	Retainer Pkg.
21	1	3780 990-1	MOULDING PACKAGE, Fender Side, Frt., Black, P-H
	-	3780 434	Retainer Pkg.
	-	6001 915	Retainer
22	1	3749 326	NAME PLATE, Deck Opng. Lwr. Pnl. Fuel Filler Door, "Plymouth", P-L, P-M
	1	3749 638	NAME LETTER "P", Deck Opng. Lwr. Pnl. Fuel Filler Door, P-H
	1	3749 639	"L", P-H
	1	3749 640	"Y", P-H
	1	3749 641	"M", P-H
	1	3749 642	"O", P-H
	1	3749 643	"U", P-H
	1	3749 644	"T", P-H
	1	3749 645	"H", P-H
23	1	3749 216	MOULDING, Deck Opng. Lwr. Pnl. Fuel Filler Door, P-H
	-	6028 674	Screw

EXTERIOR VIEW - PLYMOUTH FURY I 4 DOOR SEDAN P-L
PLYMOUTH FURY II 4 DOOR SEDAN P-M
PLYMOUTH FURY III 4 DOOR SEDAN P-H

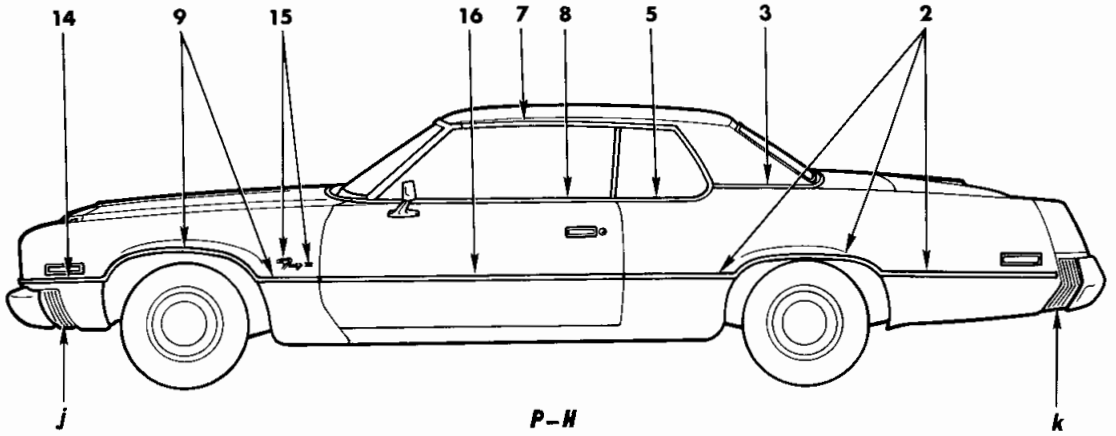

P-H

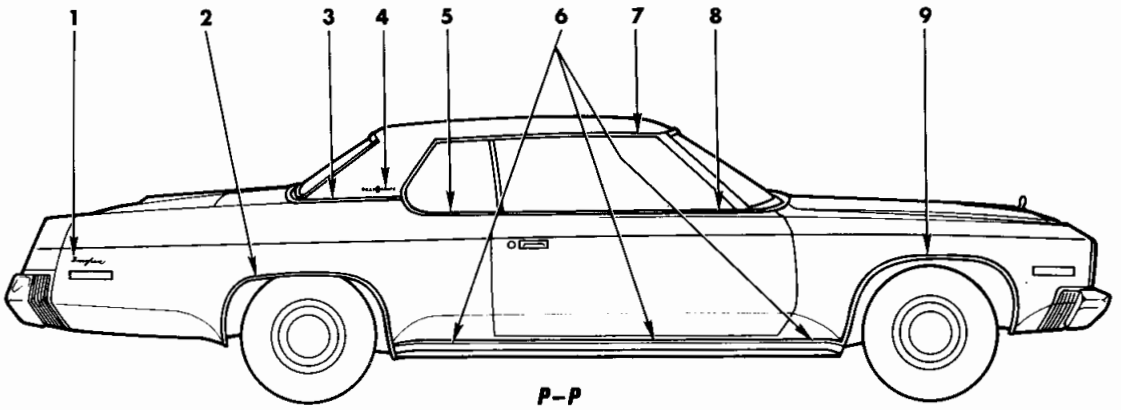

P-P

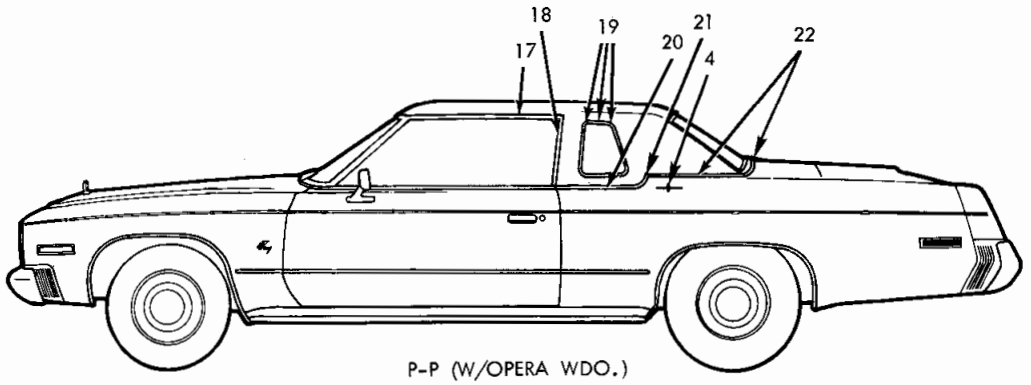

P-P (W/OPERA WDO.)

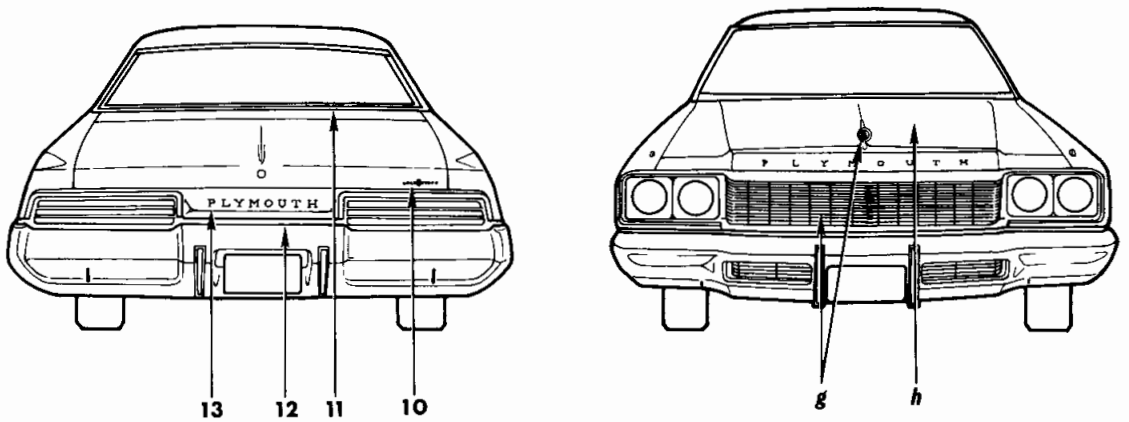

EXTERIOR VIEW - PLYMOUTH FURY III 2 DOOR HARDTOP P-H
PLYMOUTH GRAN COUPE 2 DOOR HARDTOP P-P

19a4820 C

REF. NO.	QTY	PART NUMBER	DESCRIPTION
1	2	3613 476	NAME PLATE, Qtr. Outside, "Brougham", P-P
	-	6027 352	Nut
2	1	3780 478-9	MOULDING PACKAGE, Qtr. Pnl. Wheel Opng., w/Black Insert, P-H
	1	3780 476-7	Black Paint, w/o Insert, P-H
	-	3780 434	Retainer Pkg.
	-	6001 915	Retainer
	1	3749 228-9	MOULDING, Qtr. Wheel Opng., P-P
	-	6028 674	Screw
3	1	3780 432-3	MOULDING PACKAGE, Qtr. Outside Belt, P-H, P-P
	-	3780 451	Retainer Pkg.
4	2	3749 942	NAME PLATE, Qtr. Pnl., "Gran Coupe", P-P
	-	6025 860	Clip
5	1	3749 972-3	MOULDING, Qtr. Wdo. Belt, P-H, P-P
6	1	3749 528-9	MOULDING, Body Side Sill, Frt. and Center, P-P
	-	6029 846	Screw
	-	6003 556	Retainer
	1	3749 526-7	MOULDING, Body Side Sill, Rear, P-P
	-	6029 846	Screw
	-	6003 556	Retainer
7	1	3749 896-7	MOULDING w/CAP, Roof Side Drain Trough, P-H, P-P
	-	---- ---	Rivet
8	1	3749 502-3	MOULDING, Door Outside Belt, P-H, P-P
	-	6028 674	Screw
9	1	3780 484-5	MOULDING PACKAGE, Fender Wheel Opng., w/Black Insert, P-H
	1	3780 486-7	Black Paint, w/o Insert, P-H
	-	3780 434	Retainer Pkg.
	1	3749 226-7	MOULDING, Fender Wheel Opng., P-P
	-	6028 674	Screw
10	1	3749 899	NAME PLATE, Deck Lid, "Gran Coupe", P-P
11	1	3780 435	MOULDING PACKAGE, Deck Opng. Upr. Pnl., P-H, P-P
	-	3744 367	Retainer Pkg.
12	1	3749 216	MOULDING, Deck Opng. Lwr. Pnl. Fuel Filler Door, P-H, P-P
	-	6028 674	Screw
13	1	3749 638	NAME LETTER "P", Deck Opng. Lwr. Pnl. Fuel Filler Door, P-H, P-P
	1	3749 639	"L", P-H, P-P
	1	3749 640	"Y", P-H, P-P
	1	3749 641	"M", P-H, P-P
	1	3749 642	"O", P-H, P-P
	1	3749 643	"U", P-H, P-P
	1	3749 644	"T", P-H, P-P
	1	3749 645	"H", P-H, P-P
14	1	3780 990-1	MOULDING PACKAGE, Fender Side, Frt., Black, P-H
	-	3780 434	Retainer Pkg.
	-	6001 915	Retainer
15	2	3504 152	NAME PLATE, Fender Side, "Fury", P-H
	-	6000 052	Nut
	2	3749 846	NUMERAL, Fender Side, "III", P-H
	-	6002 852	Retainer
16	1	3780 870-1	MOULDING PACKAGE, Door, w/Black Insert, P-H
	1	3780 868-9	Black Paint, w/o Insert, P-H
	-	3780 434	Retainer Pkg.
17	1	3810 326-7	MOULDING, Roof Side Drain Trough, Frt., use w/Opera Wdo., P-P
	-	---- ---	Rivet
18	1	3810 362-3	MOULDING, Roof Side Drain Trough, Rr., use w/Opera Wdo., P-P
	-	9431 768	Screw
19	1	3810 334-5	MOULDING, Qtr. Wdo. Outside, use w/Opera Wdo., P-P
20	1	3810 372-3	MOULDING, Qtr. Outside Belt, use w/Opera Wdo., P-P
	-	3780 451	Retainer Pkg., Frt. Mldg.
	-	3744 667	Retainer Pkg., Ctr. Mldg.
	-	6002 460	Retainer, Ctr. Mldg.
21	2	3810 340	CAP, Qtr. Outside Belt, Center to Rear, use w/Opera Wdo., P-P
22	1	3810 344-5	MOULDING, Qtr. Outside Belt, Rr. and Ctr., use w/Opera Wdo., P-P
	-	6002 920	Retainer and Seal
	-	6003 460	Retainer
	-	3780 451	Retainer Pkg.
	-	9420 867	Nut
	-	9431 768	Screw
g		NOTE:	For Grille Mouldings and Ornamentation see Illustration in Group 7
h		NOTE:	For Hood Mouldings and Ornamentation see Illustration in Group 15
j		NOTE:	For Filler see Code 12-02-6
k		NOTE:	For Filler see Code 23-34-280

EXTERIOR VIEW - PLYMOUTH FURY III 2 DOOR HARDTOP P-H
PLYMOUTH GRAN COUPE 2 DOOR HARDTOP P-P

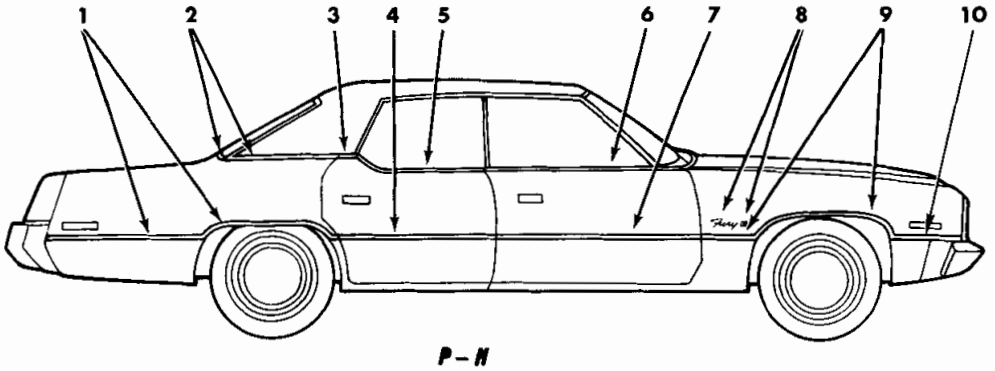

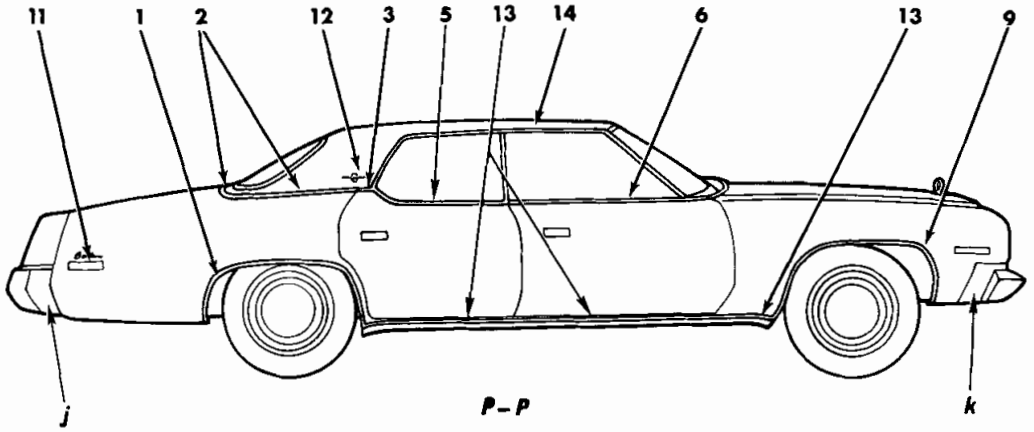

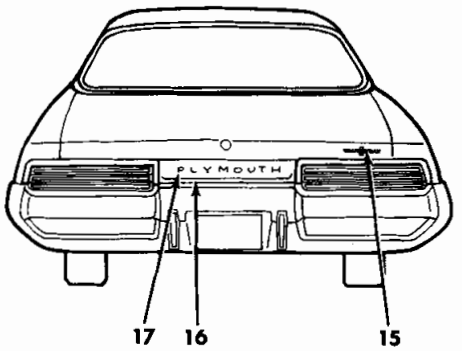

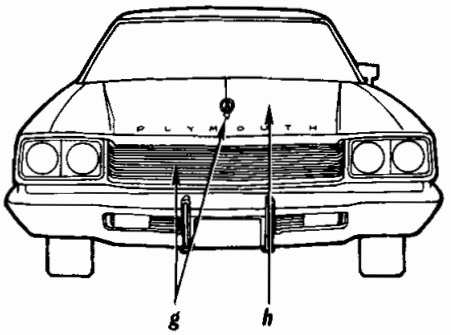

19a4776 A

EXTERIOR VIEW - PLYMOUTH FURY III 4 DOOR HARDTOP P-H
PLYMOUTH GRAN SEDAN 4 DOOR HARDTOP P-P

REF. NO.	QTY	PART NUMBER	DESCRIPTION
1	1	3780 482-3	MOULDING PACKAGE, Qtr. Pnl. Wheel Opng., w/Black Insert, P-H
	1	3780 480-1	Black Paint, w/o Insert, P-H
	-	3780 434	Retainer Pkg.
	1	3749 228-9	MOULDING, Qtr. Wheel Opng., P-P
	-	6028 674	Screw
2	1	3749 606-7	MOULDING, Deck Opng. Upr. Pnl., P-H, P-P
	-	6003 442	Retainer
	-	6006 496	Retainer
	-	9420 867	Nut
3	1	3749 610-1	MOULDING, Rear Door Outside, Vinyl Roof, Bright, P-H, P-P
	-	116 000	Nut
	-	6028 674	Screw
4	1	3780 878-9	MOULDING PACKAGE, Rear Door, w/Black Insert, P-H
	1	3780 876-7	Black Paint, w/o Insert, P-H
	-	3780 434	Retainer Pkg.
5	1	3749 950-1	MOULDING, Rear Door Belt, P-H, P-P
	-	6028 674	Screw
6	1	3749 506-7	MOULDING, Frt. Door Belt, P-H, P-P
	-	6028 674	Screw
7	1	3780 874-5	MOULDING PACKAGE, Frt. Door, w/Black Insert, P-H
	1	3780 872-3	Black Paint, w/o Insert, P-H
	-	3780 434	Retainer Pkg.
8	2	3504 152	NAME PLATE, Fender Side, "Fury", P-H
	-	6000 052	Nut
	2	3749 846	NUMERAL, Fender Side, "III", P-H
	-	6002 852	Retainer
9	1	3780 484-5	MOULDING PACKAGE, Fender Wheel Opng., w/Black Insert, P-H
	1	3780 486-7	Black Paint, w/o Insert, P-H
	-	3780 434	Retainer Pkg.
	1	3749 226-7	MOULDING, Fender Wheel Opng., P-P
	-	6028 674	Screw
10	1	3780 990-1	MOULDING PACKAGE, Fender Side, Frt., Black, P-H
	-	3780 434	Retainer Pkg.
	-	6001 915	Retainer
11	2	3810 287	NAME PLATE, Qtr. Outside, "Brougham", P-P
	-	6027 352	Nut
12	2	3749 943	NAME PLATE, Qtr. Pnl., "Gran Sedan", P-P
	-	6025 860	Clip
13	1	3749 528-9	MOULDING, Body Side Sill, Frt. and Center, P-P
	-	6029 846	Screw
	-	6003 556	Retainer
	1	3749 526-7	MOULDING, Body Side Sill, Rear, P-P
	-	6003 556	Retainer - 6029 846 Screw
14	1	3749 450-1	MOULDING, Roof Side Drain Trough, P-H, P-P
	-	---- ---	Rivet
15	1	3749 898	NAME PLATE, Deck Lid, "Gran Sedan", P-P
16	1	3749 216	MOULDING, Deck Opng. Lwr. Pnl. Fuel Filler Door, P-H, P-P
	-	6028 674	Screw
17	1	3749 638	NAME LETTER "P", Deck Opng. Lwr. Pnl. Fuel Filler Door, P-H, P-P
	1	3749 639	"L", P-H, P-P
	1	3749 640	"Y", P-H, P-P
	1	3749 641	"M", P-H, P-P
	1	3749 642	"O", P-H, P-P
	1	3749 643	"U", P-H, P-P
	1	3749 644	"T", P-H, P-P
	1	3749 645	"H", P-H, P-P
g		NOTE:	For Grille Mouldings and Ornamentation see Illustration in Group 7
h		NOTE:	For Hood Mouldings and Ornamentation see Illustration in Group 15
j		NOTE:	For Filler see Code 23-34-280
k		NOTE:	For Filler see Code 12-02-6

EXTERIOR VIEW - PLYMOUTH FURY III 4 DOOR HARDTOP P-H
PLYMOUTH GRAN SEDAN 4 DOOR HARDTOP P-P

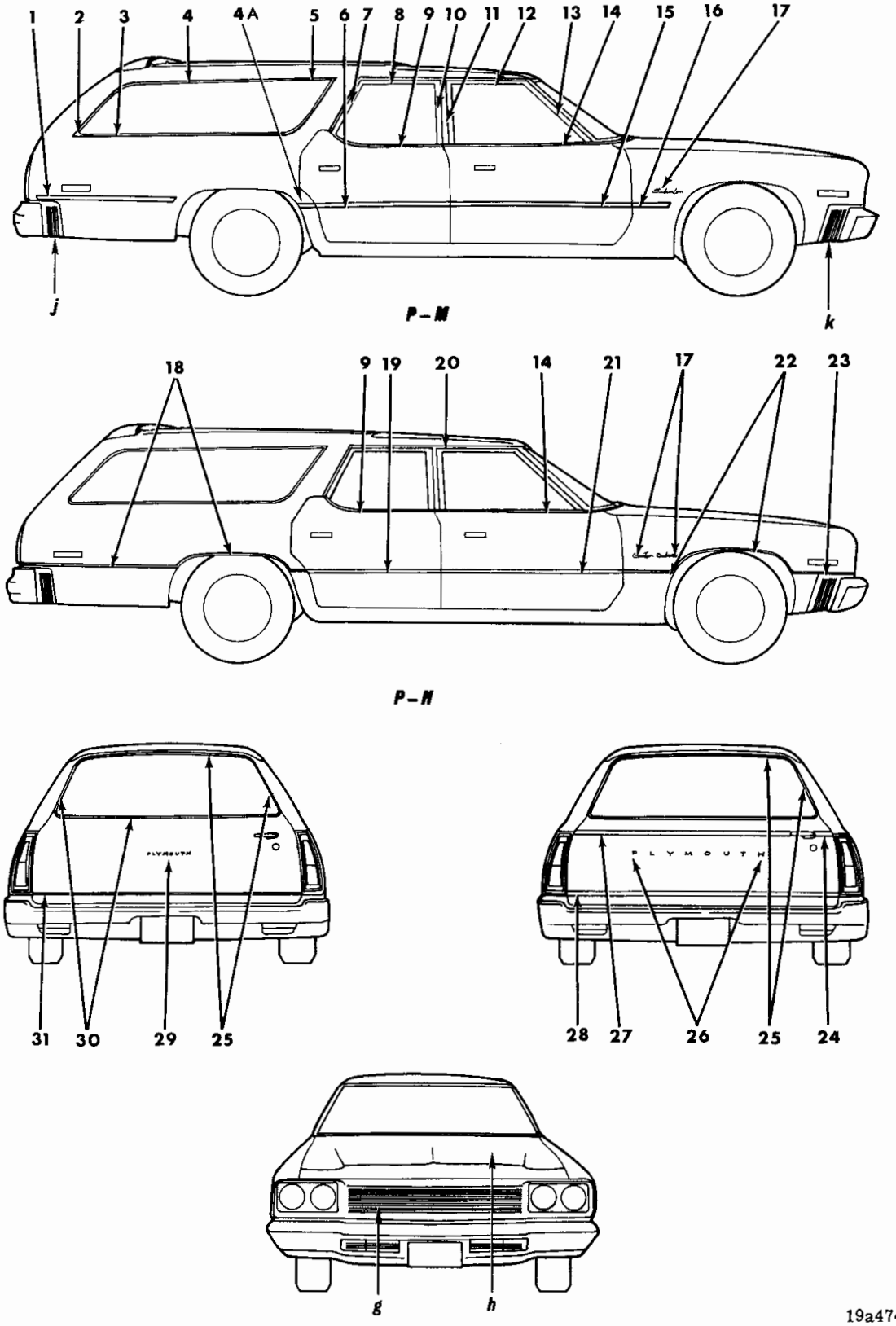

EXTERIOR VIEW - PLYMOUTH FURY SUBURBAN P-M
PLYMOUTH FURY CUSTOM SUBURBAN P-H

REF. NO.	QTY	PART NUMBER	DESCRIPTION
1	1	3780 866-7	MOULDING PACKAGE, Qtr. Pnl., Rear, w/Black Insert, P-M
	1	3780 864-5	Chrome, w/o Insert, P-M
	-	3744 671	Retainer Pkg.
2	2	3749 198	MOULDING, Qtr. Wdo. Outside Lwr. Rear, Corner, P-M, P-H
	-	6003 409	Retainer
3	1	3749 194-5	MOULDING, Qtr. Wdo. Outside, Lwr., P-M, P-H
	1	3793 734-5	MOULDING, Qtr. Wdo. Outside, Lwr., Use After Dec. 1, 1973, P-M, P-H
	-	6003 409	Retainer
4	1	3749 192-3	MOULDING, Qtr. Wdo. Outside, Upr., P-M, P-H
	1	3793 732-3	MOULDING, Qtr. Wdo. Outside, Upr., Use After Dec. 1, 1973, P-M, P-H
	-	6003 409	Retainer
4A	1	3749 626-7	MOULDING, Qtr. Pnl., Frt., Chrome, w/o Insert, P-M
	1	3749 628-9	w/Black Insert, P-M
	-	6003 219	Retainer
5	2	3749 196	MOULDING, Qtr. Wdo. Outside, Upr. Frt., Corner, P-M, P-H
	-	6003 409	Retainer
6	1	3780 858-9	MOULDING PACKAGE, Rear Door, w/Black Insert, P-M
	-	3744 671	Retainer Pkg.
	1	3780 856-7	Chrome, w/o Insert, P-M
	-	3744 671	Retainer Pkg.
7	1	3749 934-5	MOULDING, Rear Door Wdo. Opng. Frame, Rear, P-M, P-H
8	1	3749 932-3	MOULDING, Rear Door Wdo. Opng. Frame, Upr., P-M, P-H
9	1	3749 950-1	MOULDING, Rear Door Belt, P-M, P-H
	-	6028 674	Screw
10	1	3749 544	MOULDING, Rear Door Wdo. Opng. Frame, Frt., Lt., P-M, P-H
	1	3749 545	MOULDING, Rear Door Wdo. Opng. Frame, Frt., Rt., P-M, P-H
11	1	3749 544-5	MOULDING, Frt. Door Wdo. Opng. Frame, Rr., P-M, P-H
12	1	3749 542-3	MOULDING, Frt. Door Wdo. Opng. Frame, Upr., P-M, P-H
13	1	3749 540-1	MOULDING, Frt. Door Wdo. Opng. Frame, Frt., P-M, P-H
14	1	3749 948-9	MOULDING, Frt. Door Belt, P-M
	1	3749 506-7	P-H
	-	6028 674	Screw
15	1	3780 854-5	MOULDING PACKAGE, Frt. Door, w/Black Insert, P-M
	1	3780 852-3	Chrome, w/o Insert, P-M
	-	3744 671	Retainer Pkg.
16	1	3780 494-5	MOULDING PACKAGE, Fender Side, w/Black Insert, P-M
	1	3780 492-3	Chrome, w/o Insert, P-M
	-	3744 671	Retainer Pkg.
	-	6002 920	Retainer
17	2	3446 765	NAME PLATE, Fender Side, "Suburban", P-M
	2	3446 764	"Custom Suburban", P-H
	-	6002 852	Retainer
18	1	3780 490-1	MOULDING PACKAGE, Qtr. Pnl. Wheel Opng., w/Black Insert, P-H
	1	3780 488-9	Black Paint, w/o Insert, P-H
	-	3780 434	Retainer Pkg.
19	1	3780 878-9	MOULDING PACKAGE, Rear Door, w/Black Insert, P-H
	1	3780 876-7	Black Paint, w/o Insert, P-H
	-	3780 434	Retainer Pkg.
20	1	3749 894-5	MOULDING, Roof Side Drain Trough, Up to 1-2-74, P-M, P-H
	-	---- ---	Rivet
	1	3810 274-5	After 1-2-74, P-M, P-H
	-	---- ---	Rivet
21	1	3780 874-5	MOULDING PACKAGE, Frt. Door, w/Black Insert, P-H
	1	3780 872-3	Black Paint, w/o Insert, P-H
	-	3780 434	Retainer Pkg.
22	1	3780 484-5	MOULDING PACKAGE, Fender Wheel Opng., w/Black Insert, P-H
	1	3780 486-7	Black Paint, w/o Insert, P-H
	-	3780 434	Retainer Pkg.
23	1	3780 990-1	MOULDING PACKAGE, Fender Side, Black, P-H
	-	3780 434	Retainer Pkg.
	-	6001 915	Retainer
24	1	3780 927	MOULDING PACKAGE, Tailgate, Upr., Outer, P-H
	-	3780 434	Retainer Pkg.
	-	6001 915	Retainer
25	1	3788 006-7	MOULDING and RETAINER, Tailgate Glass Weatherstrip Upr., P-M, P-H
	1	3788 402-3	After March 1, 1974

CONTINUED ON NEXT PAGE

EXTERIOR VIEW - PLYMOUTH FURY SUBURBAN P-M
PLYMOUTH FURY CUSTOM SUBURBAN P-H

REF. NO.	QTY	PART NUMBER	DESCRIPTION
26	1	3749 638	LETTER "P", Tailgate Outside Panel, P-H
	1	3749 639	"L", P-H
	1	3749 640	"Y", P-H
	1	3749 641	"M", P-H
	1	3749 642	"O", P-H
	1	3749 643	"U", P-H
	1	3749 644	"T", P-H
	1	3749 645	"H", P-H
	-	6002 852	Retainer
27	1	3780 926	MOULDING PACKAGE, Tailgate, Upr., P-H
	-	3780 434	Retainer Pkg.
	-	6001 915	Retainer
28	1	3780 851	MOULDING PACKAGE, Tailgate Outside, Lwr., P-H
	-	3780 434	Retainer Pkg.
	-	6001 915	Retainer
29	1	3613 880	NAME PLATE, Tailgate Outside Panel, P-M
30	1	3781 000	MOULDING PACKAGE, Tailgate Belt, P-M, P-H
	-	3780 975	Retainer Pkg.
	-	6028 679	Screw
	-	6029 259	Nut
	-	6002 404	Retainer
31	1	3780 500	MOULDING PACKAGE, Tailgate Outside, P-M
	-	3744 671	Retainer Pkg.
	-	6002 920	Retainer
g		NOTE:	For Grille Mouldings and Ornamentation see Illustration in Group 7
h		NOTE:	For Hood Mouldings and Ornamentation see *Illustration in Group* 15
j		NOTE:	For Filler see Code 23-34-280
k		NOTE:	For Filler see Code 12-02-6

EXTERIOR VIEW - PLYMOUTH FURY SUBURBAN P-M
PLYMOUTH FURY CUSTOM SUBURBAN P-H

NOTES

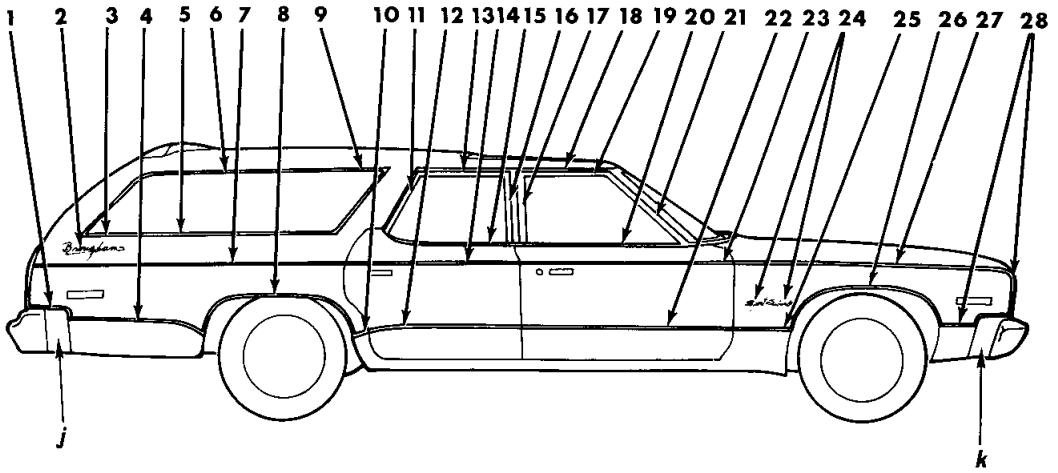

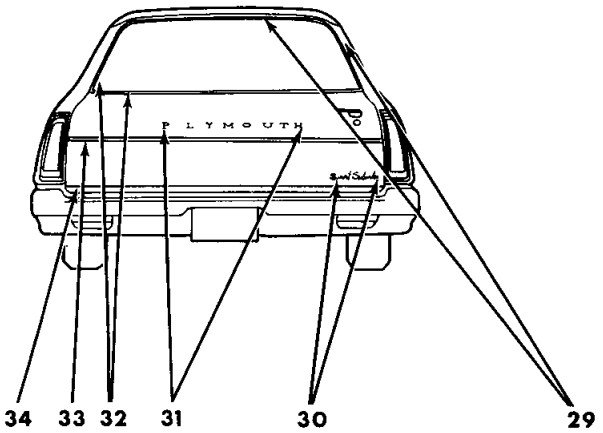

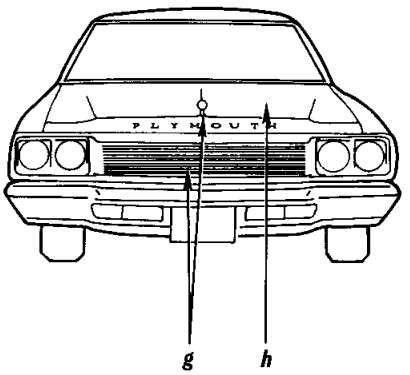

19a4743A

EXTERIOR VIEW - PLYMOUTH SPORT SUBURBAN P-P

REF. NO.	QTY	PART NUMBER	DESCRIPTION
1	1	3749 692-3	MOULDING, Qtr. Pnl., Bumper Periphery, P-P
	-	6028 674	Screw
2	2	3613 476	NAME PLATE, Qtr. Outside, "Brougham", P-P
	-	6002 852	Retainer
3	2	3749 198	MOULDING, Qtr. Wdo. Outside, Lwr. Rear Corner, P-P
	-	6003 409	Retainer
4	1	3780 880-1	MOULDING PACKAGE, Qtr. Pnl., Lwr. Rear, P-P
	-	3744 671	Retainer Pkg.
5	1	3749 194-5	MOULDING, Qtr. Wdo. Outside, Lwr., P-P
	1	3793 734-5	Use After Dec. 1, 1973, P-P
	-	6003 409	Retainer
6	1	3749 192-3	MOULDING, Qtr. Wdo. Outside, Upr., P-P
	1	3793 732-3	Use After Dec. 1, 1973, P-P
	-	6003 409	Retainer
7	1	3780 882-3	MOULDING PACKAGE, Qtr. Pnl., Upr., P-P
	-	3744 671	Retainer Pkg.
8	1	3749 688-9	MOULDING, Qtr. Pnl. Wheel Opng., P-P
	-	6028 674	Screw
9	2	3749 196	MOULDING, Qtr. Wdo. Outside, Upr. Frt., Corner, P-P
	-	6003 409	Retainer
10	1	3749 686-7	MOULDING, Qtr. Pnl., Lwr. Frt., P-P
	-	6026 006	Fastener
11	1	3749 934-5	MOULDING, Rear Door Wdo. Opng. Frame, Rear, P-P
12	1	3780 884-5	MOULDING PACKAGE, Rear Door, Lwr., P-P
	-	3744 671	Retainer Pkg.
13	1	3749 932-3	MOULDING, Rear Door Wdo. Opng. Frame, Upr., P-P
14	1	3780 942-3	MOULDING PACKAGE, Rear Door, Upr., P-P
	-	3744 671	Retainer Pkg.
15	1	3749 950-1	MOULDING, Rr. Door Belt, P-P
	-	6028 674	Screw
16	1	3749 544	MOULDING, Rear Door Wdo. Opng. Frame, Frt., Lt., P-P
	1	3749 545	MOULDING, Rear Door Wdo. Opng. Frame, Frt., Rt., P-P
17	1	3749 544-5	MOULDING, Frt. Door Wdo. Opng. Frame, Rear, P-P
18	1	3749 894-5	MOULDING, Roof Side Drain Trough, Up to 1-2-74, P-P
	-	---- ---	Rivet
	1	3810 274-5	After 1-2-74, P-P
	-	---- ---	Rivet
19	1	3749 542-3	MOULDING, Frt. Door Wdo. Opng. Frame, Upr., P-P
20	1	3749 506-7	MOULDING, Frt. Door Belt, P-P
	-	6028 674	Screw
21	1	3749 540-1	MOULDING, Frt. Door Wdo. Opng. Frame, Frt., P-P
22	1	3780 886-7	MOULDING PACKAGE, Frt. Door, Lwr., P-P
	-	3744 671	Retainer Pkg.
23	1	3780 944-5	MOULDING PACKAGE, Frt. Door, Upr., P-P
	-	3744 671	Retainer Pkg.
24	2	3446 766	NAME PLATE, Fender Side, "Sport Suburban", P-P
	-	6002 852	Retainer
25	1	3780 890-1	MOULDING PACKAGE, Fender Side, Lwr., Rear, P-P
	-	3744 671	Retainer Pkg.
26	1	3749 678-9	MOULDING, Fender wheel Opng., P-P
	-	6028 674	Screw
27	1	3780 888-9	MOULDING PACKAGE, Fender Side, Upr., P-P
	-	3744 671	Retainer Pkg.
28	1	3810 212-3	MOULDING, Fender Side, Frt., P-P
	-	6027 316	Nut and Washer
	-	6001 915	Retainer
	-	6029 259	Nut
	-	6025 860	Clip
29	1	3788 006-7	MOULDING and RETAINER, Tailgate Glass Weather-strip Upr., P-P
30	1	3446 766	NAME PLATE, Tailgate Outside Pnl., "Sport Suburban", P-P
	-	6002 852	Retainer
31	1	3749 638	LETTER "P", Tailgate Outside Panel, P-P
	1	3749 639	"L", P-P
	1	3749 640	"Y", P-P
	1	3749 641	"M", P-P
	1	3749 642	"O", P-P
	1	3749 643	"U", P-P
	1	3749 644	"T", P-P
	1	3749 645	"H", P-P
	-	6002 852	Retainer
32	1	3781 000	MOULDING PACKAGE, Tailgate Belt, P-P
	-	3780 975	Retainer Pkg.
	-	6028 679	Screw
	-	6029 259	Nut
	-	6002 404	Retainer
33	1	3780 992	MOULDING PACKAGE, Tailgate, Upr., P-P
	-	3744 671	Retainer Pkg.
	-	6002 920	Retainer
34	1	3780 929	MOULDING PACKAGE, Tailgate, Lwr., P-P
	-	3780 999	Retainer Pkg.
	-	3780 963	Retainer Pkg.
g		NOTE:	For Grille Mouldings and Ornamentation see Illustration in Group 7
h		NOTE:	For Hood Mouldings and Ornamentation see Illustration in Group 15
j		NOTE:	For Filler see Code 23-34-280
k		NOTE:	For Filler see Code 12-02-6

EXTERIOR VIEW - PLYMOUTH SPORT SUBURBAN P-P

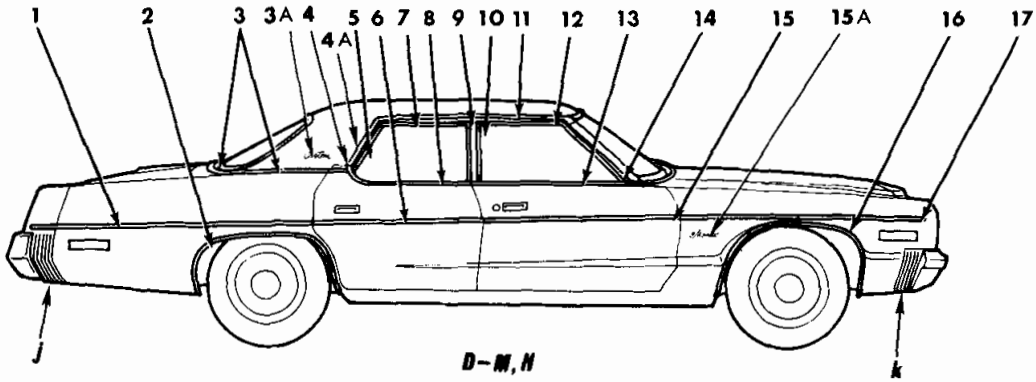

D-M,H

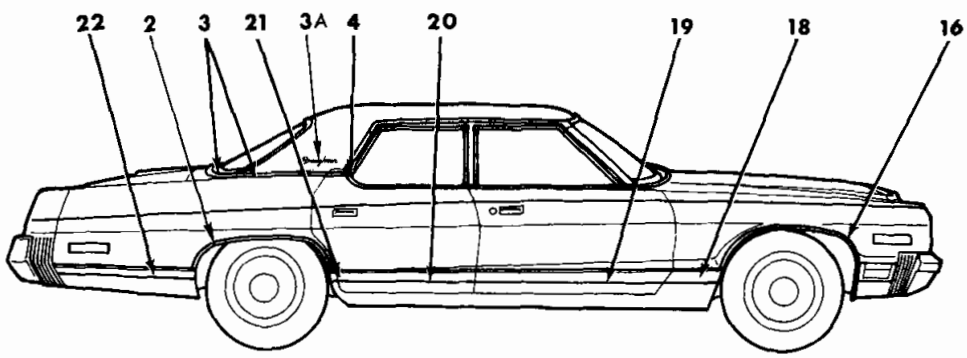

D-P

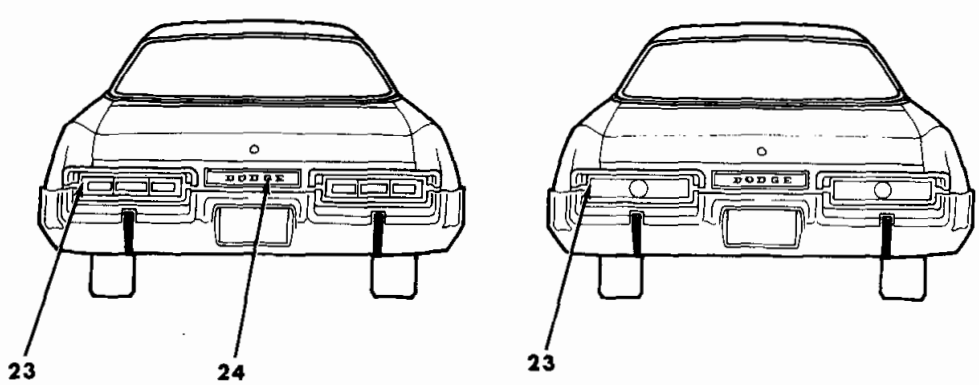

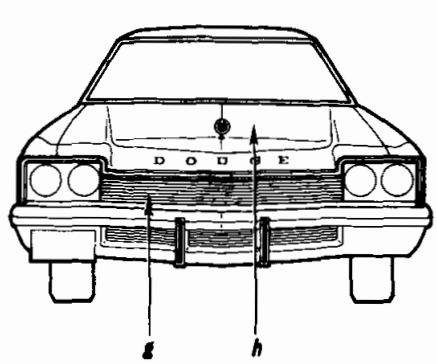

19a4777C

EXTERIOR VIEW - DODGE MONACO 4 DOOR SEDAN D-M
DODGE MONACO CUSTOM 4 DOOR SEDAN D-H
DODGE MONACO BROUGHAM 4 DOOR SEDAN D-P

REF. NO.	QTY	PART NUMBER	DESCRIPTION
1	2	3780 899	MOULDING PACKAGE, Qtr. Pnl., w/Black Insert, D-M, D-H
	-	3744 367	Retainer Pkg.
	-	6002 920	Retainer
	2	3780 901	MOULDING PACKAGE, Qtr. Pnl., w/o Insert, D-M
	-	3744 667	Retainer Pkg.
	-	6002 920	Retainer
2	1	3749 220-1	MOULDING, Qtr. Pnl. Wheel Opng., D-H
	1	3749 224-5	D-P
	-	6028 674	Screw
3	1	3749 624-5	MOULDING, Qtr. Outside Belt, Vinyl Roof, D-M, D-H, D-P
	-	6003 442	Retainer
	-	6003 462	Retainer
3A	2	3810 284	NAME PLATE, Qtr. Outside, "Custom", D-H
	-	6025 860	Clip
	2	3810 287	"Brougham", D-P
	-	6025 860	Clip
4	1	3749 610-1	MOULDING, Rear Door Outside, Vinyl Roof, Bright, D-M, D-H, D-P
	-	6028 674	Screw - 116 000 Nut
4A	1	3749 448-9	MOULDING, Roof Side Drain Trough, Rear, Up to 1-2-74, D-M, D-H, D-P
	1	3810 264-5	After 1-2-74, D-M, D-H, D-P
5	1	3749 552-3	MOULDING, Rr. Dr. Wdo. Opng. Frame, Rr., D-M, D-H, D-P
6	1	3780 924-5	MOULDING PACKAGE, Rr. Dr., w/Black Insert, D-M, D-H
	-	3744 367	Retainer Pkg.
	-	6002 920	Retainer
	2	3780 903	MOULDING PACKAGE, Rear Door, w/o Insert, D-M
	-	3744 667	Retainer Pkg.
	-	6002 920	Retainer
7	1	3749 548-9	MOULDING, Rear Door Wdo. Opng. Frame, Upr., D-M, D-H, D-P
8	1	3749 950-1	MOULDING, Rear Door Outside Belt, D-M, D-H, D-P
	-	6028 674	Screw
9	1	3749 544	MOULDING, Rear Door Wdo. Opng. Frame, Frt., Lt., D-M, D-H, D-P
	1	3749 545	MOULDING, Rear Door Wdo. Opng. Frame, Frt., Rt., D-M, D-H, D-P
10	1	3749 544-5	MOULDING, Frt. Door Wdo. Opng. Frame, Rear, D-M, D-H, D-P
11	1	3749 446-7	MOULDING, Roof Side Drain Trough, Front, Up to 1-2-74, D-M, D-H, D-P
	1	3810 266-7	After 1-2-74, D-M, D-H, D-P
12	1	3749 542-3	MOULDING, Frt. Door Wdo. Opng. Frame, Upr., D-M, D-H, D-P
13	1	3749 948-9	MOULDING, Frt. Dr. Belt, D-M
	1	3749 506-7	D-H, D-P
	-	6028 674	Screw
14	1	3749 540-1	MOULDING, Frt. Door Wdo. Opng. Frame, Frt., D-M, D-H, D-P
15	1	3780 904-5	MOULDING PACKAGE, Frt. Door, w/Black Insert, D-M, D-H
	-	3744 367	Retainer Pkg.
	-	6002 920	Retainer
	2	3780 902	MOULDING PACKAGE, Frt. Door, w/o Insert, D-M
	-	3744 667	Retainer Pkg.
	-	6002 920	Retainer
15A	2	3749 810	NAME PLATE, Fender Side, "Monaco", D-M, D-H, D-P
16	1	3749 218-9	MOULDING, Fender Wheel Opng., D-H
	1	3749 222-3	D-P
	-	6028 674	Screw
17	1	3780 910-1	MOULDING PACKAGE, Fender Side, w/Black Insert, D-M, D-H
	-	3744 367	Retainer Pkg.
	-	6002 920	Retainer
	1	3780 906-7	MOULDING PACKAGE, Fender Side, w/o Insert, D-M
	-	3744 667	Retainer Pkg.
	-	6002 920	Retainer
18	1	3749 310-1	MOULDING, Fender Side, Black, D-P
	-	6003 498	Retainer
19	1	3749 314-5	MOULDING, Frt. Door, Black, D-P
	-	6003 498	Retainer
	-	6003 451	Retainer - 6029 259 Nut
20	1	3749 316-7	MOULDING, Rear Door, Black, D-P
	-	6003 451	Retainer - 6029 259 Nut
	-	6003 453	Retainer - 6003 497 Retainer
21	1	3749 320-1	MOULDING, Qtr. Pnl., Frt., Black, D-P
	-	6028 674	Screw
22	1	3749 322-3	MOULDING, Qtr. Pnl., Rear, Black, D-P
	-	6001 548	Retainer - ---- --- Nut
23	1	3749 800-1	MOULDING, Deck Opng. Lwr. Pnl. Tail Lamp Periphery, D-M, D-H
	1	3749 798-9	D-P
	-	9434 079	Screw
24	2	3691 552	NAME LETTER "D", Deck Opng. Lwr. Pnl. Fuel Filler Door, D-M, D-H
	1	3691 553	"O", D-M, D-H
	1	3691 555	"G", D-M, D-H
	1	3691 556	"E", D-M, D-H
	-	6002 852	Retainer
g		NOTE:	For Grille Mouldings and Ornamentation see Illustration in Group 7
h		NOTE:	For Hood Mouldings and Ornamentation see Illustration in Group 15
j		NOTE:	For Fillers see Code 23-34-280
k		NOTE:	For Fillers see Code 12-02-6

EXTERIOR VIEW - DODGE MONACO 4 DOOR SEDAN D-M
DODGE MONACO CUSTOM 4 DOOR SEDAN D-H
DODGE MONACO BROUGHAM 4 DOOR SEDAN D-P

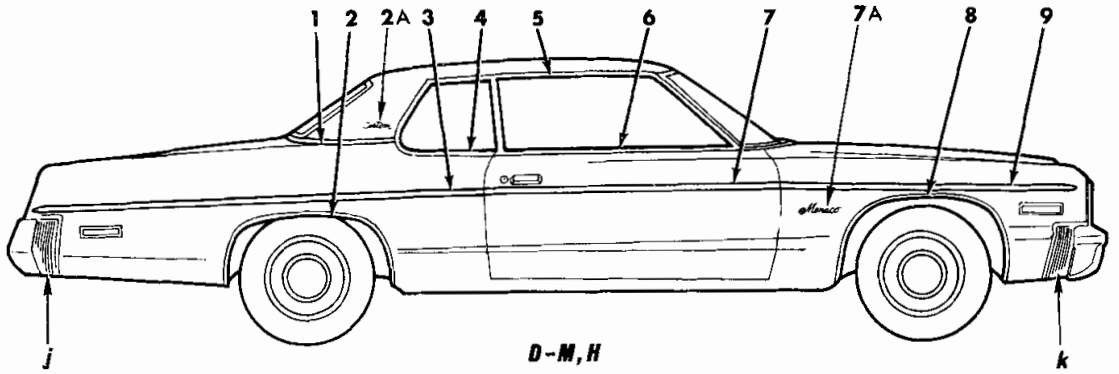

D-M,H

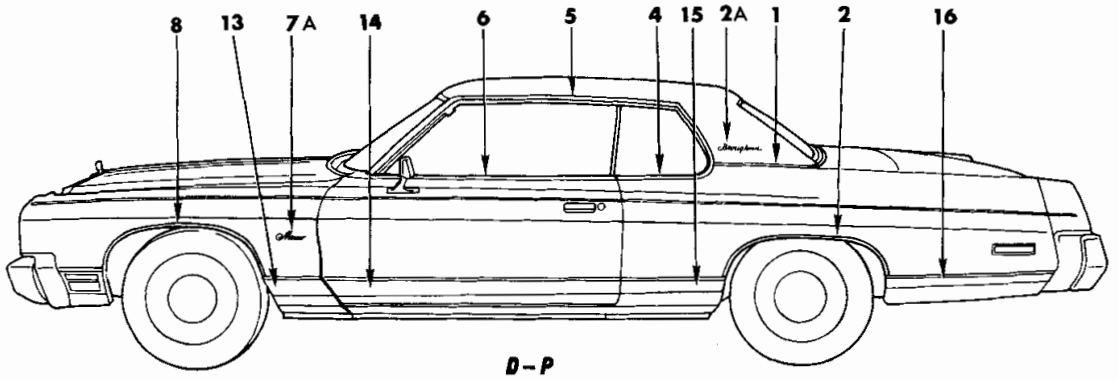

D-P

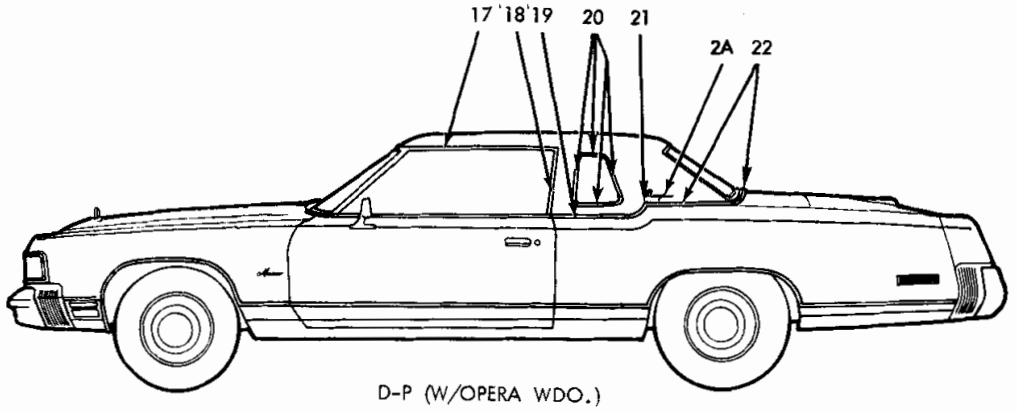

D-P (W/OPERA WDO.)

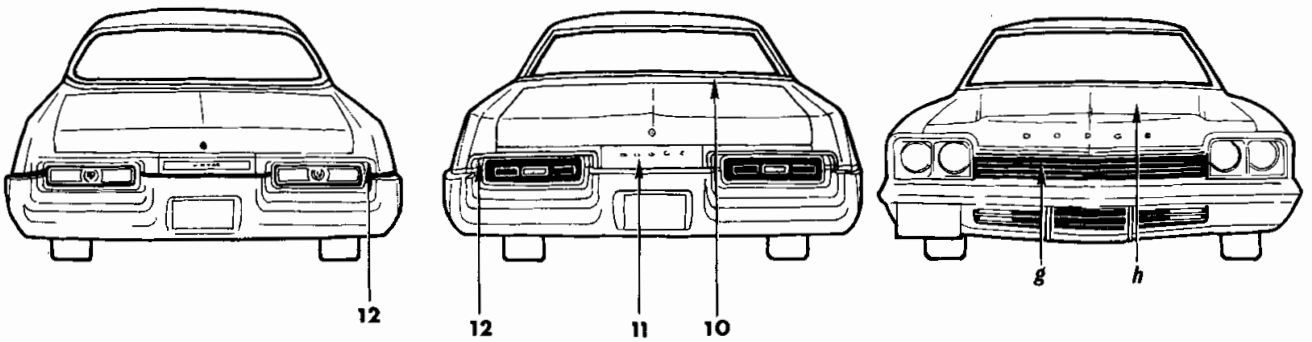

19a4821 C

EXTERIOR VIEW - DODGE MONACO 2 DOOR HARDTOP D-M
DODGE MONACO CUSTOM 2 DOOR HARDTOP D-H
DODGE MONACO BROUGHAM 2 DOOR HARDTOP D-P

REF. NO.	QTY	PART NUMBER	DESCRIPTION
1	1	3780 432-3	MOULDING PACKAGE, Qtr. Outside Belt, D-M, D-H, D-P
	-	3780 451	Retainer Pkg.
2	1	3749 220-1	MOULDING, Qtr. Pnl. Wheel Opng., D-H
	1	3749 224-5	D-P
	-	6028 674	Screw
2A	2	3810 284	NAME PLATE, Qtr. Outside, "Custom", D-H
	-	6025 860	Clip
	2	3810 287	NAME PLATE, Qtr. Outside, "Brougham", D-P
	-	6025 860	Clip
3	2	3780 900	MOULDING PACKAGE, Qtr. Pnl., w/Black Insert, D-M, D-H
	-	3744 367	Retainer Pkg.
	-	6002 920	Retainer
	2	3780 898	MOULDING PACKAGE, Qtr. Pnl., w/o Insert, D-M
	-	3744 667	Retainer Pkg.
	-	6002 920	Retainer
4	1	3749 972-3	MOULDING, Qtr. Outside Belt, D-M, D-H, D-P
5	1	3749 896-7	MOULDING w/CAP, Roof Side Drain Trough, D-M, D-H, D-P
	-	---- ---	Rivet
6	1	3749 946-7	MOULDING, Door Outside Belt, D-M .
	1	3749 502-3	D-H, D-P
	-	6028 674	Screw
7	1	3780 922-3	MOULDING PACKAGE, Door Outside, w/Black Insert, D-M, D-H
	-	3744 367	Retainer Pkg.
	-	6002 920	Retainer
	2	3780 893	MOULDING PACKAGE, Door Outside, w/o Insert, D-M
	-	3744 667	Retainer Pkg.
	-	6002 920	Retainer
7A	2	3749 810	NAME PLATE, Fender Side, "Monaco", D-M, D-H, D-P
	-	6025 860	Clip
8	1	3749 218-9	MOULDING, Fender Wheel Opng., D-H
	1	3749 222-3	D-P
	-	6028 674	Screw
9	1	3780 910-1	MOULDING PACKAGE, Fender Side, w/Black Insert, D-M, D-H
	-	3744 367	Retainer Pkg.
	-	6002 920	Retainer
	1	3780 906-7	MOULDING PACKAGE, Fender Side, w/o Insert, D-M
	-	3744 667	Retainer Pkg.
	-	6002 920	Retainer
g		NOTE:	For Grille Mouldings and Ornamentation see Illustration in Group 7
h		NOTE:	For Hood Mouldings and Ornamentation see Illustration in Group 15
10	1	3780 435	MOULDING PACKAGE, Deck Opng. Upr. Pnl., D-M, D-H, D-P
	-	3744 367	Retainer Pkg.
11	2	3691 552	NAME LETTER "D", Deck Opng. Lwr. Fuel Filler Door Pnl., D-M, D-H
	1	3691 553	"O", D-M, D-H
	1	3691 555	"G", D-M, D-H
	1	3691 556	"E", D-M, D-H
	-	6002 852	Retainer
12	1	3749 800-1	MOULDING, Deck Opng. Lwr. Pnl. Tail Lamp Periphery, D-H, D-M
	1	3749 798-9	D-P
	-	9434 079	Screw
13	1	3749 310-1	MOULDING, Fender Side, Black, D-P
	-	6003 498	Retainer
14	1	3749 312-3	MOULDING, Door Outside, Black, D-P
	-	6003 498	Retainer
	-	6003 497	Retainer
	-	6003 452	Retainer
	-	6029 259	Nut
15	1	3749 318-9	MOULDING, Qtr. Pnl. Outside, Frt., Black, D-P
	-	6003 497	Retainer
16	1	3749 322-3	MOULDING, Qtr. Pnl. Outside, Rear, Black, D-P
	-	6001 548	Retainer
	-	---- ---	Nut
17	1	3810 326-7	MOULDING, Roof Side Drain Trough, Frt., use w/Opera Wdo., D-P
	-	---- ---	Rivet
18	1	3810 362-3	MOULDING, Roof Side Drain Trough, Rr., use w/Opera Wdo., D-P
	-	9431 768	Screw
19	1	3810 372-3	MOULDING, Qtr. Outside Belt, use w/Opera Wdo., D-P
	-	3780 451	Retainer Pkg., Frt. Mldg.
	-	3744 667	Retainer Pkg., Ctr. Mldg.
	-	6002 460	Retainer, Ctr. Mldg.
20	1	3810 334-5	MOULDING, Qtr. Wdo. Outside, use w/Opera Wdo., D-P
21	2	3810 340	CAP, Qtr. Outside Belt, Ctr. to Rr., use w/Opera Wdo., D-P
22	1	3810 344-5	MOULDING, Qtr. Outside Belt, Rr. and Ctr., use w/Opera Wdo., D-P
	-	6002 920	Retainer and Seal
	-	6003 460	Retainer
	-	3780 451	Retainer Pkg.
	-	9420 867	Nut
	-	9431 768	Screw
j		NOTE:	For Filler see Code 23-34-280
k		NOTE:	For Filler see Code 12-02-6

EXTERIOR VIEW - DODGE MONACO 2 DOOR HARDTOP D-M
DODGE MONACO CUSTOM 2 DOOR HARDTOP D-H
DODGE MONACO BROUGHAM 2 DOOR HARDTOP D-P

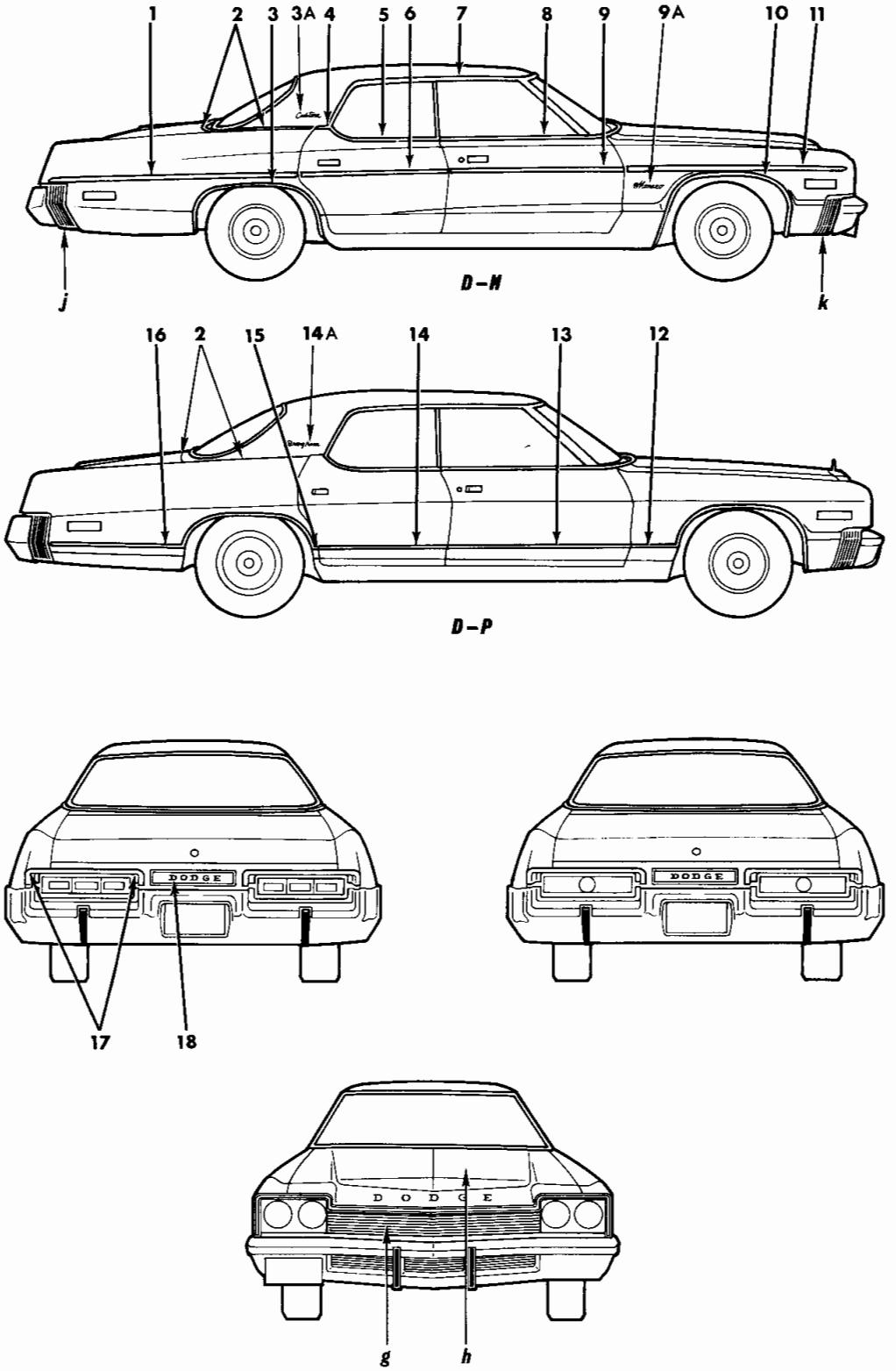

EXTERIOR VIEW - DODGE MONACO CUSTOM 4 DOOR HARDTOP D-H
DODGE MONACO BROUGHAM 4 DOOR HARDTOP D-P

REF. NO.	QTY	PART NUMBER	DESCRIPTION
1	2	3780 899	MOULDING PACKAGE, Qtr. Pnl., w/Black Insert, D-H
	-	3744 367	Retainer Pkg.
	-	6002 920	Retainer
2	1	3749 606-7	MOULDING, Deck Opng. Upr. Pnl., D-H, D-P
	-	6003 442	Retainer
	-	6006 496	Retainer
	-	9420 867	Nut
3	1	3749 220-1	MOULDING, Qtr. Pnl. Wheel Opng., D-H
	1	3749 224-5	D-P
	-	6028 674	Screw
3A	2	3810 284	NAME PLATE, Qtr. Outside, "Custom", D-H
	-	6025 860	Clip
4	1	3749 610-1	MOULDING, Rear Door Outside Vinyl Roof, Bright, D-H, D-P
	-	116 000	Nut
	-	6028 674	Screw
5	1	3749 950-1	MOULDING, Rear Door Outside Belt, D-H, D-P
	-	6028 674	Screw
6	1	3780 924-5	MOULDING PACKAGE, Rear Door, w/Black Insert, D-H
	-	3744 367	Retainer Pkg.
	-	6002 920	Retainer
7	1	3749 450-1	MOULDING, Roof Side Drain Trough, D-H, D-P
	-	---- ---	Rivet
8	1	3749 506-7	MOULDING, Frt. Door Belt, D-H, D-P
	-	6028 674	Screw
9	1	3780 904-5	MOULDING PACKAGE, Frt. Door, w/Black Insert, D-H
	-	3744 367	Retainer Pkg.
	-	6002 920	Retainer
9A	2	3749 810	NAME PLATE, Fender Side, "Monaco", D-H, D-P
	-	6025 860	Clip
10	1	3749 218-9	MOULDING, Fender Wheel Opng., D-H
	1	3749 222-3	D-P
	-	6028 674	Screw
11	1	3780 910-1	MOULDING PACKAGE, Fender Side, w/Black Insert, D-H
	-	3744 367	Retainer Pkg.
	-	6002 920	Retainer
12	1	3749 310-1	MOULDING, Fender Side, Black, D-P
	-	6003 498	Retainer
13	1	3749 314-5	MOULDING, Frt. Door, Black, D-P
	-	6003 498	Retainer
	-	6029 259	Nut
	-	6003 451	Retainer
14	1	3749 316-7	MOULDING, Rear Door, Black, D-P
	-	6003 451	Retainer
	-	6029 259	Nut
	-	6003 453	Retainer
	-	6003 497	Retainer
14A	2	3810 287	NAME PLATE, Qtr. Outside, "Brougham", D-P
	-	6025 860	Clip
15	1	3749 320-1	MOULDING, Qtr. Pnl., Frt., Black, D-P
	-	6028 674	Screw
16	1	3749 322-3	MOULDING, Qtr. Pnl., Rear, Black, D-P
	-	6001 548	Retainer
	-	---- ---	Nut
17	1	3749 800-1	MOULDING, Deck Opng. Lwr. Pnl. Tail Lamp Periphery, D-H
	1	3749 798-9	D-P
	-	9434 079	Screw
18	2	3691 552	NAME LETTER "D", Deck Opng. Lwr. Pnl. Fuel Filler Door, D-H
	1	3691 553	"O", D-H
	1	3691 555	"G", D-H
	1	3691 556	"E", D-H
	-	6002 852	Retainer
g		NOTE:	For Grille Mouldings and Ornamentation see Illustration in Group 7
h		NOTE:	For Hood Mouldings and Ornamentation see Illustration in Group 15
j		NOTE:	For Fillers see Code 23-34-280
k		NOTE:	For Fillers see Code 12-02-6

EXTERIOR VIEW - DODGE MONACO CUSTOM 4 DOOR HARDTOP D-H
DODGE MONACO BROUGHAM 4 DOOR HARDTOP D-P

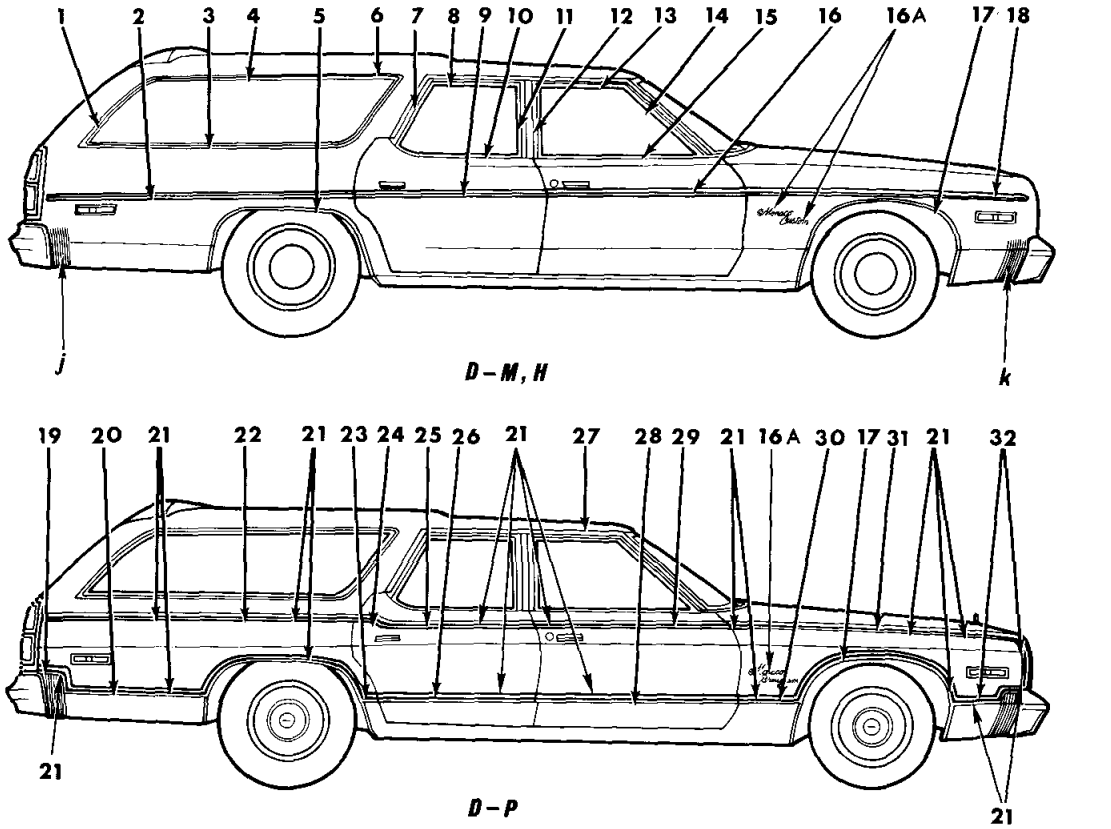

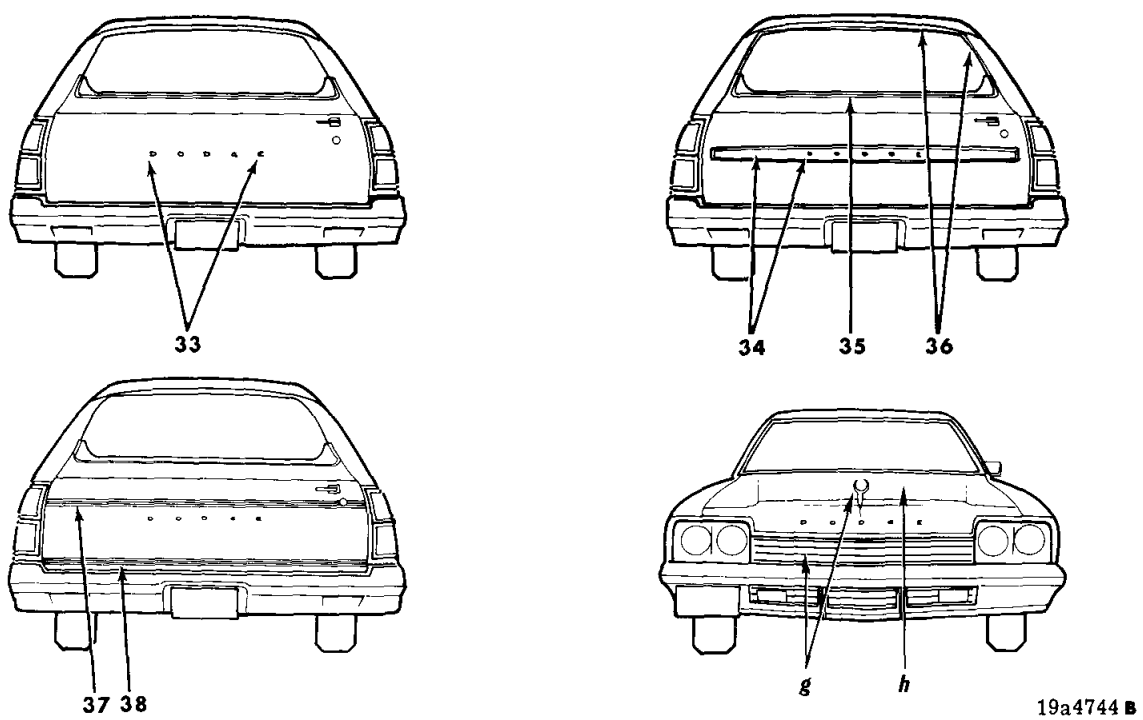

EXTERIOR VIEW - DODGE MONACO STATION WAGON D-M
DODGE MONACO CUSTOM STATION WAGON D-H
DODGE MONACO BROUGHAM STATION WAGON D-P

REF. NO.	QTY	PART NUMBER	DESCRIPTION
1	2	3749 198	MOULDING, Qtr. Wdo. Lwr., Rear Corner, D-M, D-H, D-P
	-	6003 409	Retainer
2	1	3780 936	MOULDING and RETAINER PACKAGE, Qtr. Pnl., Rt., w/Black Insert, D-M, D-H
	-	3744 367	Retainer Pkg.
	1	3780 933	MOULDING PACKAGE, Qtr. Pnl., Rt., w/o Insert, D-M
	-	3744 667	Retainer Pkg.
	1	3780 937	MOULDING and RETAINER PACKAGE, Qtr. Pnl., Frt., Lt., w/Black Insert, D-M, D-H
	-	3744 367	Retainer Pkg.
	1	3780 931	MOULDING PACKAGE, Qtr. Pnl., Frt., Lt., w/o Insert, D-M
	-	3744 667	Retainer Pkg.
	1	3780 935	MOULDING PACKAGE, Qtr. Pnl. Fuel Filler Door, w/Black Insert, D-M, D-H
	-	3744 367	Retainer Pkg.
	1	3780 934	MOULDING PACKAGE, Qtr. Pnl. Fuel Filler Door, w/o Insert, D-M
	-	3744 667	Retainer Pkg.
	1	3780 938	MOULDING and RETAINER PACKAGE, Qtr. Pnl., Rear, Lt., w/Black Insert, D-M, D-H
	-	3744 367	Retainer Pkg.
	1	3780 932	MOULDING PACKAGE, Qtr. Pnl., Rear, Lt., w/o Insert, D-M
	-	3744 667	Retainer Pkg.
3	1	3749 194-5	MOULDING, Qtr. Wdo., Lwr., D-M, D-H, D-P
	1	3793 734-5	MOULDING, Qtr. Wdo. Outside, Lwr., use After Dec. 1, 1973, D-M, D-H, D-P
	-	6003 409	Retainer
4	1	3749 192-3	MOULDING, Qtr. Wdo., Upr., D-M, D-H, D-P
	1	3793 732-3	MOULDING, Qtr. Wdo. Outside, Upr., use After Dec. 1, 1973, D-M, D-H, D-P
	-	6003 409	Retainer
5	1	3749 730-1	MOULDING, Qtr. Pnl. Wheel Opng., D-M, D-H, D-P
	-	6028 674	Screw
6	1	3749 196	MOULDING, Qtr. Wdo. Outside Upr., Frt. Corner, D-M, D-H, D-P
	-	6003 409	Retainer
7	1	3749 934-5	MOULDING, Rear Door Wdo. Opng. Frame, Rear, D-M, D-H, D-P
8	1	3749 932-3	MOULDING, Rear Door Wdo. Opng. Frame, Upr., D-M, D-H, D-P
9	1	3780 924-5	MOULDING PACKAGE, Rear Door, w/Black Insert, D-M, D-H
	-	3744 367	Retainer Pkg.
	-	6002 920	Retainer
	2	3780 903	MOULDING PACKAGE, Rear Door, w/o Insert, D-M
	-	3744 667	Retainer Pkg.
	-	6002 920	Retainer
10	1	3749 950-1	MOULDING, Rear Door Outside Belt, D-M, D-H, D-P
	-	6028 674	Screw
11	1	3749 544	MOULDING, Rear Door Wdo. Opng. Frame, Frt., Lt., D-M, D-H, D-P
	1	3749 545	MOULDING, Rear Door Wdo. Opng. Frame, Frt., Rt., D-M, D-H, D-P
12	1	3749 544-5	MOULDING, Frt. Door Wdo. Opng. Frame, Rear, D-M, D-H, D-P
13	1	3749 542-3	MOULDING, Frt. Door Wdo. Opng. Frame, Upr., D-M, D-H, D-P
14	1	3749 540-1	MOULDING, Frt. Door Wdo. Opng. Frame, Frt., D-M, D-H, D-P
15	1	3749 948-9	MOULDING, Frt. Door Belt, D-M
	1	3749 506-7	D-H, D-P
	-	6028 674	Screw
16	1	3780 904-5	MOULDING PACKAGE, Frt. Door, w/Black Insert, D-M, D-H
	-	3744 367	Retainer Pkg.
	-	6002 920	Retainer
	2	3780 902	MOULDING PACKAGE, Frt. Door, w/o Insert, D-M
	-	3744 667	Retainer Pkg.
	-	6002 920	Retainer
16A	2	3749 810	NAME PLATE, Fender Side, "Monaco", D-M, D-H
	2	3505 432	"Custom", D-H
	2	3680 360	"Brougham", D-P
	-	6025 860	Clip
17	1	3749 218-9	MOULDING PACKAGE, Fender Wheel Opng., D-M, D-H, D-P
	-	6028 674	Screw
18	1	3780 910-1	MOULDING PACKAGE, Fender Side, w/Black Insert, D-M, D-H
	-	3744 367	Retainer Pkg.
	-	6002 920	Retainer
	1	3780 906-7	MOULDING PACKAGE, Fender Side, w/o Insert, D-M
	-	3744 667	Retainer Pkg.
	-	6002 920	Retainer
19	1	3749 734-5	MOULDING, Qtr. Pnl. Bumper Periphery, D-P
	-	9432 524	Screw
	-	6028 674	Screw

CONTINUED ON NEXT PAGE

EXTERIOR VIEW - DODGE MONACO STATION WAGON D-M
DODGE MONACO CUSTOM STATION WAGON D-H
DODGE MONACO BROUGHAM STATION WAGON D-P

REF. NO.	QTY	PART NUMBER	DESCRIPTION
20	1	3780 908-9	MOULDING PACKAGE, Qtr. Pnl., Lwr. Rear, D-P
	-	3744 671	Retainer Pkg.
21	1	3810 100-1	TAPE STRIPE, Fender Side, Frt., D-P
	1	3810 102-3	TAPE STRIPE, Rear Door, Upr. Rear, D-P
	1	3810 104-5	TAPE STRIPE, Qtr. Panel, Lwr. Rear, D-P
	AR	3810 252	TAPE STRIPE, Body Side, D-P
22	1	3780 940-1	MOULDING PACKAGE, Qtr. Pnl., Upr., D-P
	-	3744 671	Retainer Pkg.
23	1	3749 728-9	MOULDING, Qtr. Pnl., Lwr. Frt., D-P
	-	6026 006	Push Nut
24	1	3749 940-1	MOULDING, Rear Door, Upr., Rear, D-P
	-	9432 524	Screw
	-	6030 344	Cup Washer
25	1	3780 920-1	MOULDING PACKAGE, Rear Door, Upr. Frt., D-P
	-	3744 671	Retainer Pkg.
26	1	3780 918-9	MOULDING PACKAGE, Rear Door, Lwr., D-P
	-	3744 671	Retainer Pkg.
	-	6002 920	Retainer
27	1	3749 894-5	MOULDING, Roof Side Drain Trough, Up to 1-2-74, D-M, D-H, D-P
	-	---- ---	Rivet
	1	3810 274-5	After 1-2-74, D-M, D-H, D-P
	-	---- ---	Rivet
28	1	3780 916-7	MOULDING PACKAGE, Frt. Door, Lwr., D-P
	-	3744 671	Retainer Pkg.
	-	6002 920	Retainer
29	1	3780 894-5	MOULDING PACKAGE, Frt. Door, Upr., Frt., use w/Mirror, D-P
	1	3780 892	MOULDING PACKAGE, Frt. Door, Upr., Rt., use w/o Mirror, D-P
	1	3780 896-7	MOULDING PACKAGE, Frt. Door, Upr., Rear, use w/Mirror, D-P
	-	3744 671	Retainer Pkg.
30	1	3780 914-5	MOULDING PACKAGE, Fender, Lwr. Rear, D-P
	-	3744 671	Retainer Pkg.
31	1	3780 912-3	MOULDING PACKAGE, Fender Side, Upr., D-P
	-	3744 671	Retainer Pkg.
32	1	3810 210-1	MOULDING, Fender Side, Frt., D-P
	-	9432 524	Screw
	-	6027 316	Nut and Cup Washer
	-	6025 860	Clip
33	2	3691 552	LETTER "D", Tailgate Outside Panel, D-M, D-P
	1	3691 553	"O", D-M, D-P
	1	3691 555	"G", D-M, D-P
	1	3691 556	"E", D-M, D-P
	-	6002 852	Retainer
34	1	3749 902	PANEL, Tailgate Finish, D-H
	-	---- ---	Nut
35	1	3781 000	MOULDING PACKAGE, Tailgate Belt, D-M, D-H, D-P
	-	3780 975	Retainer Pkg.
	-	6028 679	Screw
	-	6029 259	Nut
	-	6002 404	Retainer
36	1	3788 006-7	MOULDING and RETAINER, Tailgate Glass Weatherstrip Upr., D-M, D-H, D-P
	1	3788 402-3	Use After March 1, 1974
37	1	3780 437	MOULDING PACKAGE, Tailgate, Upr., D-P
	-	3744 671	Retainer Pkg.
38	1	3780 929	MOULDING PACKAGE, Tailgate, Lwr., D-P
	-	3780 999	Retainer Pkg.
	-	3780 963	Retainer Pkg.
g		NOTE:	For Grille Mouldings and Ornamentation see Illustration in Group 7
h		NOTE:	For Hood Mouldings and Ornamentation See Illustration in Group 15
j		NOTE:	For Filler see Code 23-34-280
k		NOTE:	For Filler see Code 12-02-6

EXTERIOR VIEW - DODGE MONACO STATION WAGON D-M
DODGE MONACO CUSTOM STATION WAGON D-H
DODGE MONACO BROUGHAM STATION WAGON D-P

NOTES

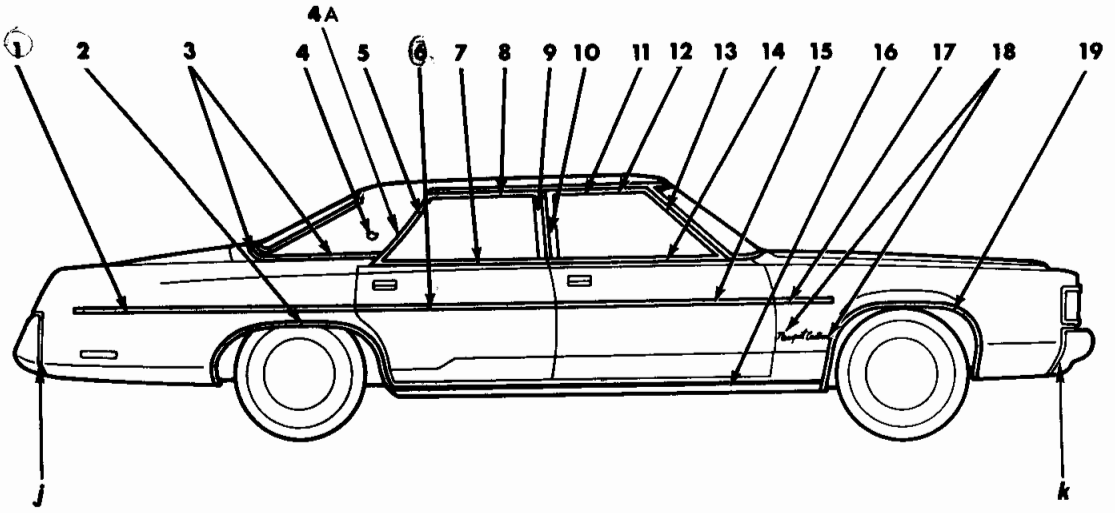

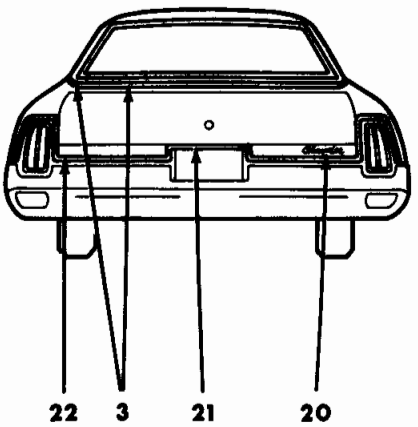

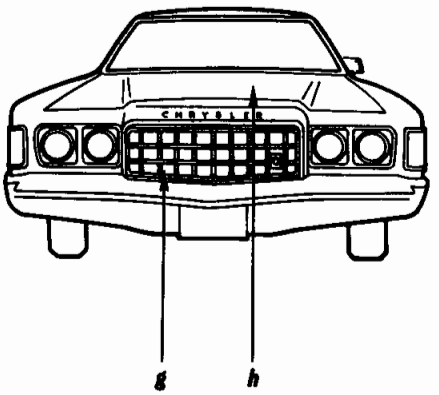

19a4745 B

EXTERIOR VIEW - CHRYSLER NEWPORT 4 DOOR SEDAN C-L
CHRYSLER NEWPORT CUSTOM 4 DOOR SEDAN C-M

REF. NO.	QTY	PART NUMBER	DESCRIPTION
1	1	3780 954-5	MOULDING PACKAGE, Qtr. Pnl., Black, C-L, C-M
	1	3879 584-5	Black, C-L, C-M, Use After July 1, 1974
	-	3744 367	Retainer Pkg.
	-	6002 920	Retainer
2	1	3749 470-1	MOULDING, Qtr. Outside Wheel Opng., C-L, C-M
	-	6028 674	Screw
	1	3749 826-7	MOULDING, Qtr. Outside Wheel Opng. Panel, C-L, C-M
	1	3749 916-7	MOULDING, Qtr. Outside Wheel Opng. Pnl., Frt., C-L, C-M
	-	6029 259	Nut
	-	9417 316	Screw
3	1	3780 958-9	MOULDING PACKAGE, Qtr. Outside and Deck Opng. Upr. Panel Belt, C-L, C-M
	-	3780 451	Retainer Pkg.
	-	6002 920	Retainer
	-	6003 518	Retainer
	-	6003 551	Retainer
4	2	3749 874	MEDALLION, Qtr. Outside, C-L, C-M
	-	6025 860	Clip
4A	1	3749 460-1	MOULDING, Roof Side Drain Trough, Rear, Up to 1-2-74, C-L, C-M
	1	3810 272-3	After 1-2-74, C-L, C-M
5	1	3749 554-5	MOULDING, Rear Door Wdo. Opng. Frame, Rear, C-L, C-M
6	1	3780 950-1	MOULDING PACKAGE, Rear Door, Black, C-L, C-M
	-	3744 367	Retainer Pkg.
	-	6002 920	Retainer
7	1	3780 982-3	MOULDING PACKAGE, Rear Door Belt, C-L, C-M
	-	3780 949	Retainer Pkg.
8	1	3749 550-1	MOULDING, Rear Door Wdo. Opng. Frame, Upr., C-L, C-M
9	1	3749 544	MOULDING, Rear Door Wdo. Opng. Frame, Frt., Lt., C-L, C-M
	1	3749 545	MOULDING, Rear Door Wdo. Opng. Frame, Frt., Rt., C-L, C-M
10	1	3749 544-5	MOULDING, Frt. Door Wdo. Opng. Frame, Rear, C-L, C-M
11	1	3749 458-9	MOULDING, Roof Side Drain Trough, Front, Up to 1-2-74, C-L, C-M
	1	3810 270-1	After 1-2-74, C-L, C-M
12	1	3749 542-3	MOULDING, Frt. Door Wdo. Opng. Frame, Upr., C-L, C-M
13	1	3749 540-1	MOULDING, Frt. Door Wdo. Opng. Frame, Frt., C-L, C-M
14	1	3780 978-9	MOULDING PACKAGE, Frt. Door Belt, C-L, C-M
	-	3780 949	Retainer Pkg.
15	2	3780 948	MOULDING PACKAGE, Frt. Door, Black, C-L, C-M
	-	3744 367	Retainer Pkg.
	-	6002 920	Retainer
16	1	3749 332-3	MOULDING, Body Side Sill, C-M
	-	6003 424	Retainer
17	2	3780 946	MOULDING PACKAGE, Fender Side, Black, C-L, C-M
	-	3744 671	Retainer Pkg.
	-	6001 915	Retainer
18	2	3613 641	NAME PLATE, Fender Side, "Newport", C-L
	2	3810 064	"Newport Custom", C-M
19	1	3749 468-9	MOULDING, Fender Wheel Opng., C-L, C-M
	-	6028 674	Screw
20	1	3810 059	NAME PLATE, Deck Opng. Lwr. Pnl., "Chrysler", C-L, C-M
	-	---- ---	Nut
21	1	3749 969	MOULDING PACKAGE, Deck Opng. Lwr. Pnl., Center, C-L, C-M
	-	6023 247	Screw
	-	9432 524	Screw
22	1	3749 536-7	MOULDING, Deck Opng. Lwr. Pnl., Outer, C-M
	-	6023 247	Screw
g		NOTE:	For Grille Mouldings and Ornamentation see Illustration in Group 7
h		NOTE:	For Hood Mouldings and Ornamentation see Illustration in Group 15
j		NOTE:	For Fillers see Code 23-34-280
k		NOTE:	For Fillers see Code 12-02-6

EXTERIOR VIEW - CHRYSLER NEWPORT 4 DOOR SEDAN C-L
CHRYSLER NEWPORT CUSTOM 4 DOOR SEDAN C-M

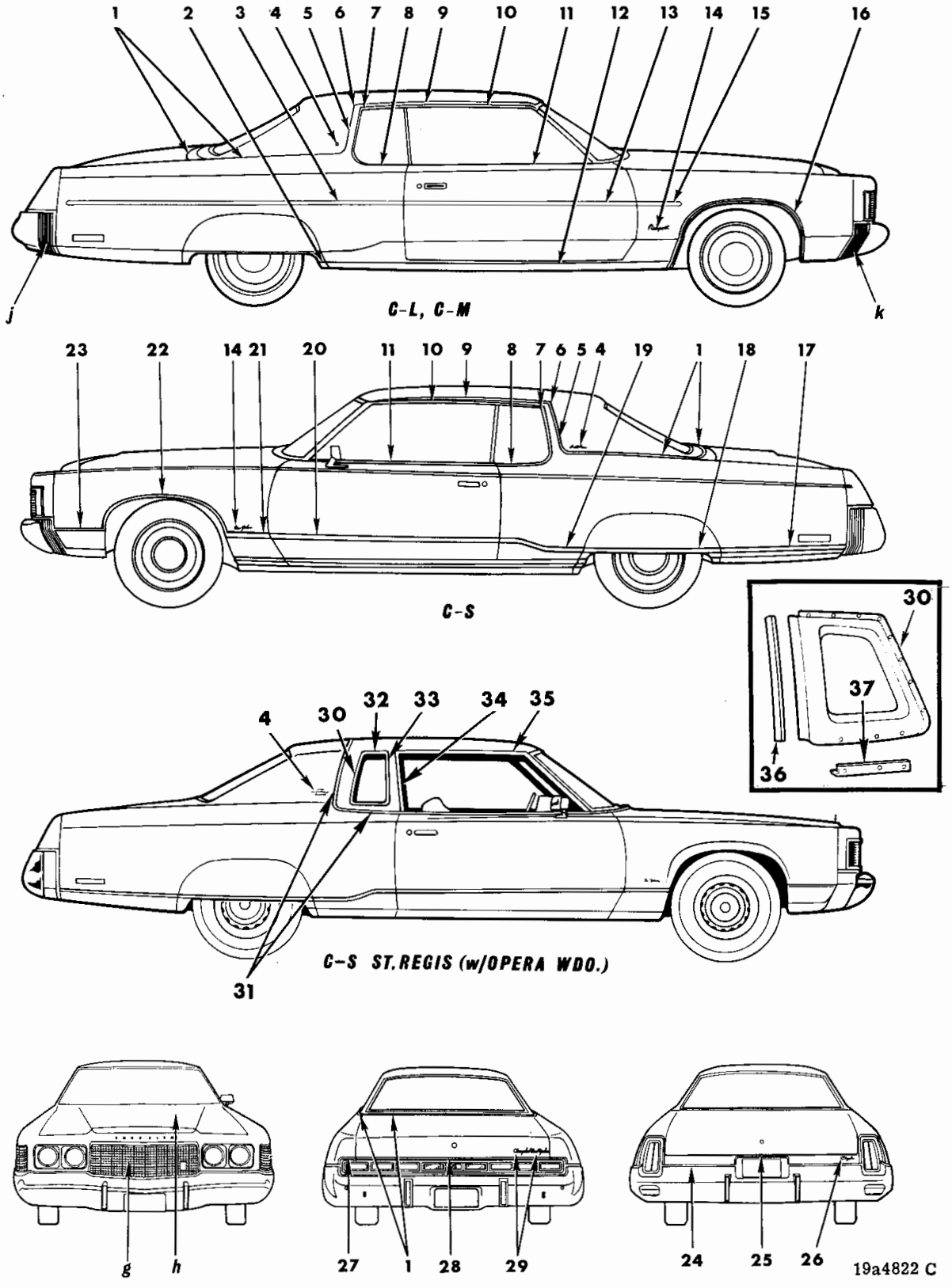

EXTERIOR VIEW - CHRYSLER NEWPORT 2 DOOR HARDTOP C-L
CHRYSLER NEWPORT CUSTOM 2 DOOR HARDTOP C-M
CHRYSLER NEW YORKER (BROUGHAM) 2 DOOR HARDTOP C-S
CHRYSLER NEW YORKER (ST.REGIS) (W/OPERA WDO.) 2 DOOR HARDTOP C-S

REF. NO.	QTY	PART NUMBER	DESCRIPTION
1	1	3837 422-3	MOULDING PACKAGE, Qtr. Outside and Deck Opng. Upr. Belt, Blue, C-L, C-M, C-S
	1	3837 424-5	Green, C-L, C-M, C-S
	1	3837 426-7	Parchment, C-L, C-M, C-S
	1	3837 420-1	Black, C-L, C-M, C-S
	1	3837 430-1	White, C-L, C-M, C-S
	1	3837 432-3	Gold, C-L, C-M, C-S
	-	3780 451	Retainer Pkg.
	-	6002 920	Retainer
	-	9420 867	Nut
	-	6003 518	Retainer
	-	6003 551	Retainer
2	1	3749 916-7	MOULDING, Qtr. Outside Wheel Opng. Pnl., Frt., C-L, C-M
	-	6029 259	Nut
	1	3749 826-7	MOULDING, Qtr. Outside Wheel Opng. Pnl., C-L, C-M
	-	6029 259	Nut
	1	3749 470-1	MOULDING, Qtr. Outside Wheel Opng., C-L, C-M
	-	6028 674	Screw
3	1	3780 952-3	MOULDING PACKAGE, Qtr. Pnl., Black, C-L, C-M
	2	3879 551	Black, C-L, C-M, Use After June 1, 1974
	-	3744 367	Retainer Pkg.
	-	6002 920	Retainer
4	2	3749 874	MEDALLION, Qtr. Outside, C-L, C-M
	-	6025 860	Clip
	2	3810 011	MEDALLION, Qtr. Pnl. Outside, "Brougham", C-S
	-	6025 860	Clip
5	1	E514-5 KB7	MOULDING, Roof Side, Rear, Blue, C-L, C-M, C-S
	1	E514-5 KG9	Green, C-L, C-M, C-S
	1	E514-5 KL2	Parchment, C-L, C-M, C-S
	1	E514-5 KX9	Black, C-L, C-M, C-S
	1	E514-5 KW1	White, C-L, C-M, C-S
	1	E514-5 KY4	Gold, C-L, C-M, C-S
	-	3780 451	Retainer Pkg.
	-	6003 551	Retainer
	-	6003 518	Retainer
6	2	E509 KB7	CAP, Roof Side Frt. to Roof Side Rear, Blue, C-L, C-M, C-S
	2	E509 KG9	Green, C-L, C-M, C-S
	2	E509 KL2	Parchment, C-L, C-M, C-S
	2	E509 KX9	Black, C-L, C-M, C-S
	2	E509 KW1	White, C-L, C-M, C-S
	2	E509 KY4	Gold, C-L, C-M, C-S
7	2	3749 864	CAP, Roof Side Drain Trough to Qtr. Wdo. Belt Mldg., C-L, C-M, C-S
8	1	3749 952-3	MOULDING, Qtr. Wdo. Belt, C-L, C-M, C-S
	-	3780 949	Retainer Pkg.
	-	6029 329	Screw
9	1	E506-7 KB7	MOULDING, Roof Side, Frt., Blue, C-L, C-M, C-S
	1	E506-7 KG9	Green, C-L, C-M, C-S
	1	E506-7 KL2	Parchment, C-L, C-M, C-S
	1	E506-7 KX9	Black, C-L, C-M, C-S
	1	E506-7 KW1	White, C-L, C-M, C-S
	1	E506-7 KY4	Gold, C-L, C-M, C-S
	-	3744 667	Retainer Pkg.
	-	3780 451	Retainer Pkg.
	-	6003 518	Retainer
	-	6003 551	Retainer
10	1	3749 452-3	MOULDING, Roof Side Drain Trough, C-L, C-M, C-S
	-	---- ---	Rivet
11	1	3780 980-1	MOULDING PACKAGE, Door Belt, C-L, C-M, C-S
	-	3780 949	Retainer Pkg.
12	1	3749 332-3	MOULDING, Body Side Sill, C-M
	-	6003 424	Retainer
13	2	3780 947	MOULDING PACKAGE, Door, Black, C-L, C-M
	-	3744 367	Retainer Pkg.
	-	6002 920	Retainer
14	2	3613 641	NAME PLATE, Fender Side, "Newport", C-L
	2	3810 064	"Newport Custom", C-M
	2	3569 955	"New Yorker", C-S
15	2	3780 946	MOULDING PACKAGE, Fender Side, Black, C-L, C-M
	-	3744 671	Retainer Pkg.
	-	6001 915	Retainer
16	1	3749 468-9	MOULDING, Fender Wheel Opng., C-L, C-M
	-	6028 674	Screw
17	1	3749 574-5	MOULDING, Qtr. Pnl., Rear, C-S
	-	6029 259	Nut
	-	6003 495	Retainer
	-	6003 496	Retainer
	-	6003 536	Retainer
	-	6003 538	Retainer
18	1	3749 572-3	MOULDING, Qtr. Outside Wheel Opng. Pnl., C-S
	-	3810 196	Retainer and Stud
	-	3810 197	Retainer
	-	3810 195	Retainer
	-	9426 925	Nut
19	1	3749 568-9	MOULDING, Qtr. Outside, Frt., C-S
	-	3810 188	Retainer
	-	3810 189	Retainer
	-	3810 190	Retainer
20	1	3749 562-3	MOULDING, Door Outside, C-S
	-	3810 188	Retainer
	-	3810 193	Retainer
	-	6029 259	Nut
	-	6003 528-9	Retainer Stud and Seal

CONTINUED ON NEXT PAGE

EXTERIOR VIEW - CHRYSLER NEWPORT 2 DOOR HARDTOP C-L
CHRYSLER NEWPORT CUSTOM 2 DOOR HARDTOP C-M
CHRYSLER NEW YORKER (BROUGHAM) 2 DOOR HARDTOP C-S
CHRYSLER NEW YORKER (ST. REGIS) (W/ OPERA WDO.) 2 DOOR HARDTOP C-S

REF. NO.	QTY	PART NUMBER	DESCRIPTION
21	1	3749 560-1	MOULDING, Fender Side, Rear, C-S
	-	6028 674	Screw
	-	3810 188	Retainer
	-	6029 259	Nut
	-	6003 528-9	Retainer Stud and Seal
22	1	3749 472-3	MOULDING, Fender Wheel Opng., C-S
	-	6028 674	Screw
23	1	3749 556-7	MOULDING, Fender Side, Frt., w/o Cornering Lamps, C-S
	1	3749 820-1	w/Cornering Lamps, C-S
	-	3728 613	Spacer
	-	3810 191	Retainer
	-	6028 625	Nut
	-	6028 674	Screw
24	1	3749 536-7	MOULDING, Deck Opng. Lwr. Pnl., Outer, C-M
	-	6023 247	Screw
25	1	3749 969	MOULDING PACKAGE, Deck Opng. Lwr. Pnl., Center, C-L, C-M
	-	6023 247	Screw
	-	9432 524	Screw
26	1	3810 059	NAME PLATE, Deck Opng. Lwr. Pnl., "Chrysler", C-L, C-M
	1	3810 308	After 2-1-74
	-	6027 352	Nut
27	1	3749 532-3	MOULDING, Qtr. Pnl. End Ext., C-S
	-	9414 510	Screw
28	1	3749 401	MOULDING and BRACKET, Deck Lid, Lwr., C-S
	-	6028 674	Screw
29	1	3613 046	NAME PLATE, Deck Lid, "Chrysler", C-S
	1	3613 047	"New Yorker", C-S
30	1	3879 968-9	FRAME, Qtr. Opera Wdo., (23-64-280) St. Regis, C-S
31	1	3879 960-1	MOULDING, Roof Side and Transverse, St. Regis, C-S
	-	3879 959	Clip
	1	3879 951	CAP and CLIP, Roof Side and Transverse Mldg., St. Regis, C-S
32	2	3879 953	MOULDING, Joint Clip, Qtr. Wdo., St. Regis, C-S
33	1	3879 970-1	MOULDING, Qtr. Opera Wdo., St. Regis, C-S
34	1	3879 972-3	MOULDING, Drain Trough Rr., St. Regis, C-S
35	1	3879 962-3	MOULDING, Drain Trough, Frt., St. Regis, C-S
36	2	3879 956	SEAL or WEATHERSTRIP (23-63-33) St. Regis, C-S
37	2	3879 957	BRACKET (23-64-300) St. Regis, C-S
g		NOTE:	For Grille Mouldings and Ornamentation see Illustration in Group 7
h		NOTE:	For Hood Mouldings and Ornamentation see Illustration in Group 15
j		NOTE:	For Filler see Code 23-34-280
k		NOTE:	For Filler see Code 12-02-6

EXTERIOR VIEW - CHRYSLER NEWPORT 2 DOOR HARDTOP C-L
CHRYSLER NEWPORT CUSTOM 2 DOOR HARDTOP C-M
CHRYSLER NEW YORKER (BROUGHAM) 2 DOOR HARDTOP C-S
CHRYSLER NEW YORKER (ST. REGIS) (W/OPERA WDO.) 2 DOOR HARDTOP C-S

NOTES

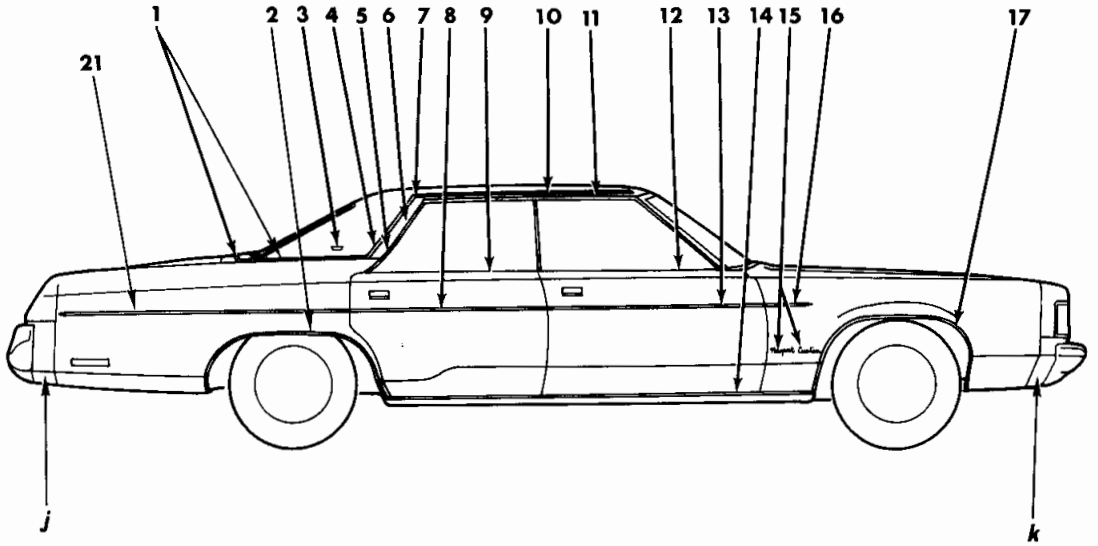

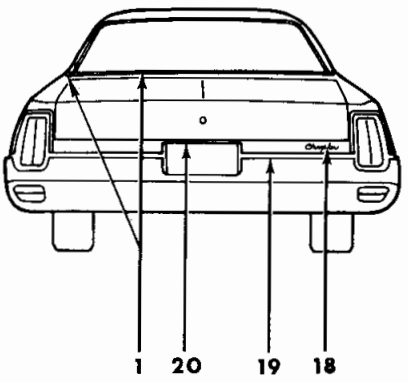

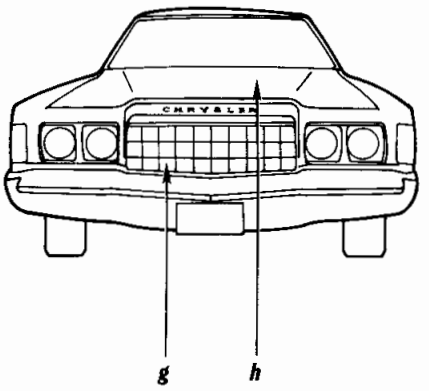

19a4746 B

EXTERIOR VIEW - CHRYSLER NEWPORT 4 DOOR HARDTOP C-L
CHRYSLER NEWPORT CUSTOM 4 DOOR HARDTOP C-M

REF. NO.	QTY	PART NUMBER	DESCRIPTION
1	1	3837 408-9	MOULDING PACKAGE, Qtr. Outside and Deck Opng. Upr. Belt, Blue, C-L, C-M
	1	3837 410-1	Green, C-L, C-M
	1	3837 412-3	Parchment, C-L, C-M
	1	3837 406-7	Black, C-L, C-M
	1	3837 416-7	White, C-L, C-M
	1	3837 418-9	Gold, C-L, C-M
	-	3780 451	Retainer Pkg.
	-	6002 920	Retainer
	-	6003 518	Retainer
	-	6003 551	Retainer
	-	9420 867	Nut
2	1	3749 470-1	MOULDING, Qtr. Outside Wheel Opng., C-L, C-M
	-	6028 674	Screw
	1	3749 826-7	MOULDING, Qtr. Outside Wheel Opng. Pnl., C-L, C-M
	1	3749 916-7	MOULDING, Qtr. Outside Wheel Opng. Pnl., Frt., C-L, C-M
	-	6029 259	Nut
	-	9417 316	Screw
3	2	3749 874	MEDALLION, Qtr. Outside, C-L, C-M
	-	6025 860	Clip
4	1	E510-1 KB7	MOULDING, Roof Side, Rear, Blue, C-L, C-M
	1	E510-1 KG9	Green, C-L, C-M
	1	E510-1 KL2	Parchment, C-L, C-M
	1	E510-1 KX9	Black, C-L, C-M
	1	E510-1 KW1	White, C-L, C-M
	1	E510-1 KY4	Gold, C-L, C-M
	-	3780 451	Retainer Pkg.
	-	6003 518	Retainer
	-	6003 551	Retainer
5	1	3749 854-5	ORNAMENT, Rear Door Rear, Outer, C-L, C-M
	1	3810 202-3	ORNAMENT and GASKET, Rear Door, Outer, C-L, C-M
	1	3788 018-9	ORNAMENT and WEATHER-STRIP, Rear Door, Inner, C-L, C-M
6	1	3749 822-3	MOULDING, Roof Side Drain Trough, Rear, C-L, C-M
	-	---- ---	Rivet
7	2	E508 KB7	CAP, Roof Side Front to Roof Side Rear, Blue, C-L, C-M
	2	E508 KG9	Green, C-L, C-M
	2	E508 KL2	Parchment, C-L, C-M
	2	E508 KX9	Black, C-L, C-M
	2	E508 KW1	White, C-L, C-M
	2	E508 KY4	Gold, C-L, C-M
8	1	3780 950-1	MOULDING PACKAGE, Rear Door, Black, C-L, C-M
	-	3744 367	Retainer Pkg.
	-	6002 920	Retainer
9	1	3780 982-3	MOULDING PACKAGE, Rear Door Belt, C-L, C-M
	-	3744 367	Retainer Pkg.
	-	6002 920	Retainer
10	1	E506-7 KB7	MOULDING, Roof Side, Frt., Blue, C-L, C-M
	1	E506-7 KG9	Green, C-L, C-M
	1	E506-7 KL2	Parchment, C-L, C-M
	1	E506-7 KX9	Black, C-L, C-M
	1	E506-7 KW1	White, C-L, C-M
	1	E506-7 KY4	Gold, C-L, C-M
	-	3744 667	Retainer Pkg.
	-	3780 451	Retainer Pkg.
	-	6003 518	Retainer
	-	6003 551	Retainer
11	1	3749 466-7	MOULDING, Roof Side Drain Trough, Front, C-L, C-M
	-	---- ---	Rivet
12	1	3780 978-9	MOULDING PACKAGE, Frt. Door Belt, C-L, C-M
	-	3780 949	Retainer Pkg.
13	2	3780 948	MOULDING PACKAGE, Frt. Door, Black, C-L, C-M
	-	3744 367	Retainer Pkg.
	-	6002 920	Retainer
14	1	3749 332-3	MOULDING, Body Side Sill, C-M
	-	6003 424	Retainer
15	2	3613 641	NAME PLATE, Fender Side, "Newport", C-L
	2	3810 064	"Newport Custom", C-M
16	2	3780 946	MOULDING PACKAGE, Fender Side, Black, C-L, C-M
	-	3744 671	Retainer Pkg.
	-	6001 915	Retainer
17	1	3749 468-9	MOULDING, Fender Wheel Opng., C-L, C-M
	-	6028 674	Screw
18	1	3810 059	NAME PLATE, Deck Opng. Lwr. Pnl., "Chrysler", C-L, C-M
	-	---- ---	Nut
19	1	3749 536-7	MOULDING, Deck Opng. Lwr. Pnl., Outer, C-M
	-	6023 247	Screw
20	1	3749 969	MOULDING PACKAGE, Deck Opng. Lwr. Pnl., Center, C-L, C-M
	-	6023 247	Screw
	-	9432 524	Screw
21	1	3780 954-5	MOULDING PACKAGE, Qtr. Pnl., Black, C-L, C-M
	1	3879 584-5	Black, C-L, C-M, Use After July 1, 1974
	-	3744 367	Retainer Pkg.
	-	6002 920	Retainer
g		NOTE:	For Grille Mouldings and Ornamentation see Illustration in Group 7
h		NOTE:	For Hood Mouldings and Ornamentation see Illustration in Group 15
j		NOTE:	For Fillers see Code 23-34-280
k		NOTE:	For Fillers see Code 12-02-6

EXTERIOR VIEW - CHRYSLER NEWPORT 4 DOOR HARDTOP C-L
CHRYSLER NEWPORT CUSTOM 4 DOOR HARDTOP C-M

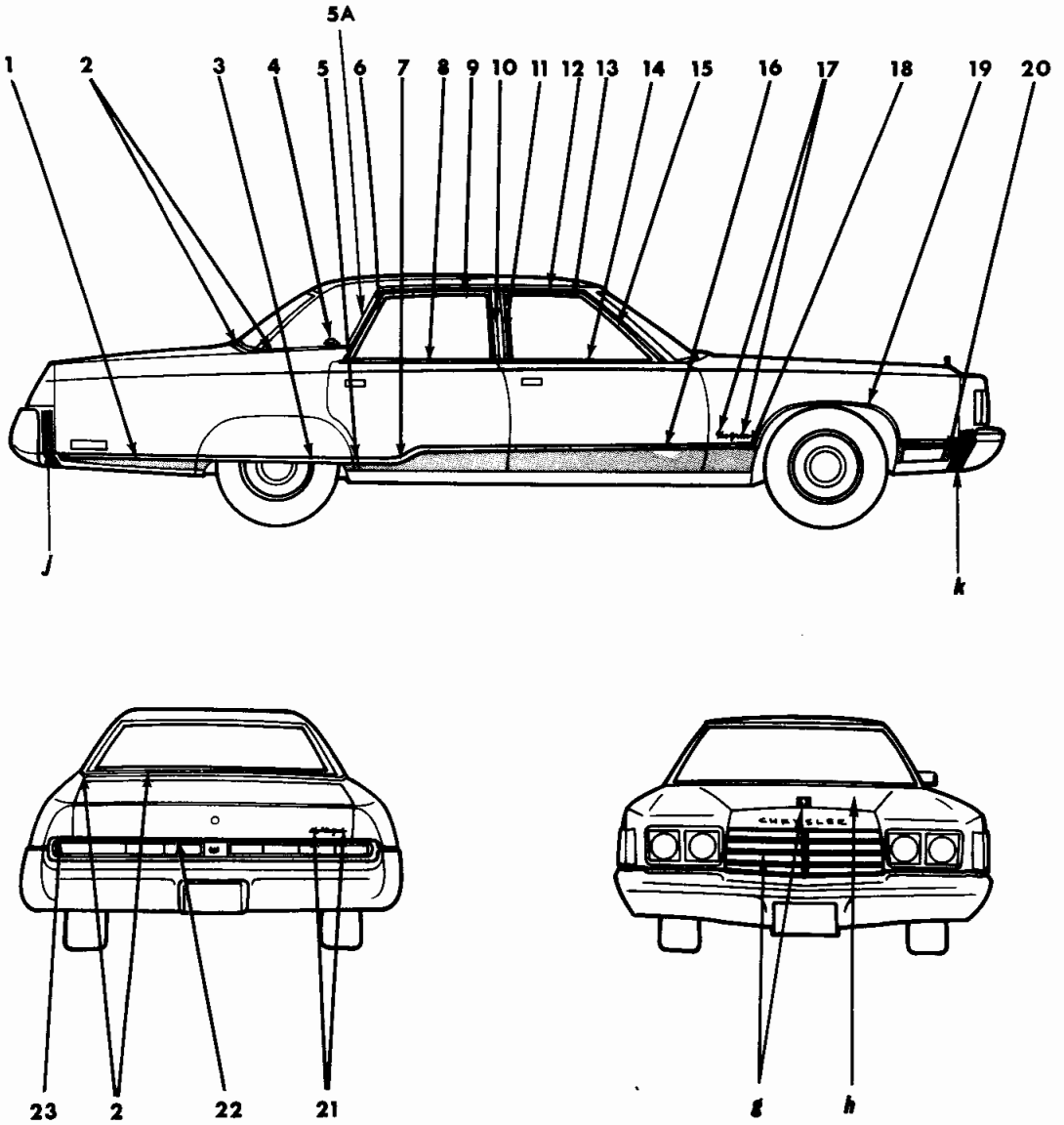

19a4747 B

EXTERIOR VIEW - CHRYSLER NEW YORKER 4 DOOR SEDAN C-H
CHRYSLER NEW YORKER (BROUGHAM) 4 DOOR SEDAN C-S

REF. NO.	QTY	PART NUMBER	DESCRIPTION
1	1	3749 574-5	MOULDING, Qtr. Pnl., Rear, C-H, C-S
	-	6003 495	Retainer
	-	6003 496	Retainer
	-	6029 259	Nut
	-	6003 536	Retainer
	-	6003 538	Retainer
2	1	3780 958-9	MOULDING PACKAGE, Qtr. Outside and Deck Opng. Upr. Panel Belt, C-H, C-S
	-	3780 451	Retainer Pkg.
	-	6002 920	Retainer
	-	6003 518	Retainer
	-	6003 551	Retainer
3	1	3749 572-3	MOULDING, Qtr. Outside Wheel Opng. Pnl., C-H, C-S
	-	3810 196	Retainer and Stud
	-	3810 197	Retainer
	-	3810 195	Retainer
	-	9426 925	Nut
4	2	3810 011	MEDALLION, Qtr. Pnl. Outside, "Brougham", C-S
	2	3810 060	NAME PLATE and MEDALLION, Qtr. Pnl., "New Yorker", C-H
	-	6025 860	Clip
5	1	3749 900-1	MOULDING, Qtr. Pnl., Frt., C-H, C-S
	-	6000 960	Clip
	-	6026 983	Seal
5A	1	3749 460-1	MOULDING, Roof Side Drain Trough, Rear, Up to 1-2-74, C-H, C-S
	1	3810 272-3	After 1-2-74, C-H, C-S
6	1	3749 554-5	MOULDING, Rear Door Wdo. Opng. Frame, Rear, C-H, C-S
7	1	3749 566-7	MOULDING, Rear Door, C-H, C-S
	-	3810 188	Retainer
	-	3810 189	Retainer
	-	6029 259	Nut
	-	6003 530-1	Retainer Stud and Seal
	-	3810 194	Retainer Stud and Seal
8	1	3780 982-3	MOULDING PACKAGE, Rear Door Belt, C-H, C-S
	-	3780 949	Retainer Pkg.
9	1	3749 550-1	MOULDING, Rear Door Wdo. Opng. Frame, Upr., C-H, C-S
10	1	3749 544	MOULDING, Rear Door Wdo. Opng. Frame, Frt., Lt., C-H, C-S
	1	3749 545	MOULDING, Rear Door Wdo. Opng. Frame, Frt., Rt., C-H, C-S
11	1	3749 544-5	MOULDING, Frt. Door Wdo. Opng. Frame, Rear, C-H, C-S
12	1	3749 458-9	MOULDING, Roof Side Drain Trough, Front, Up to 1-2-74, C-H, C-S
	1	3810 270-1	Front, After 1-2-74, C-H, C-S
13	1	3749 542-3	MOULDING, Frt. Door Wdo. Opng. Frame, Upr., C-H, C-S
14	1	3780 978-9	MOULDING PACKAGE, Frt. Door Belt, C-H, C-S
	-	3780 949	Retainer Pkg.
15	1	3749 540-1	MOULDING, Frt. Door Wdo. Opng. Frame, Frt., C-H, C-S
16	1	3749 564-5	MOULDING, Frt. Door, C-H, C-S
	-	3810 188	Retainer
	-	6028 674	Screw
	-	3810 192	Retainer Stud and Seal
	-	6029 259	Nut
	-	6003 528-9	Retainer Stud and Seal
17	2	3569 955	NAME PLATE, Fender Side, "New Yorker", C-S
18	1	3749 560-1	MOULDING, Fender Side, Rear, C-H, C-S
	-	6029 259	Nut
	-	3810 188	Retainer
	-	6003 528-9	Retainer Stud and Seal
	-	6028 674	Screw
19	1	3749 472-3	MOULDING, Fender Wheel Opng., C-H, C-S
	-	6028 674	Screw
20	1	3749 556-7	MOULDING, Fender Side, Frt., w/o Cornering Lamps, C-H, C-S
	1	3749 820-1	MOULDING, Fender Side, Frt., w/ Cornering Lamps, C-H, C-S
	-	3728 613	Spacer
	-	3810 191	Retainer
	-	6027 625	Nut
	-	6028 674	Screw
21	1	3613 046	NAME PLATE, Deck Lid, "Chrysler", C-H, C-S
	1	3613 047	"New Yorker", C-H, C-S
22	1	3749 401	MOULDING and BRACKET, Deck Lid, Lwr., C-H, C-S
	-	6028 674	Screw
23	1	3749 532-3	MOULDING, Qtr. Pnl. End Ext., C-H, C-S
	-	9414 510	Screw
g		NOTE:	For Grille Mouldings and Ornamentation see Illustration in Group 7
h		NOTE:	For Hood Mouldings and Ornamentation see Illustration in Group 15
j		NOTE:	For Filler see Code 23-34-280
k		NOTE:	For Filler see Code 12-02-6

EXTERIOR VIEW - CHRYSLER NEW YORKER 4 DOOR SEDAN C-H
CHRYSLER NEW YORKER (BROUGHAM) 4 DOOR SEDAN C-S

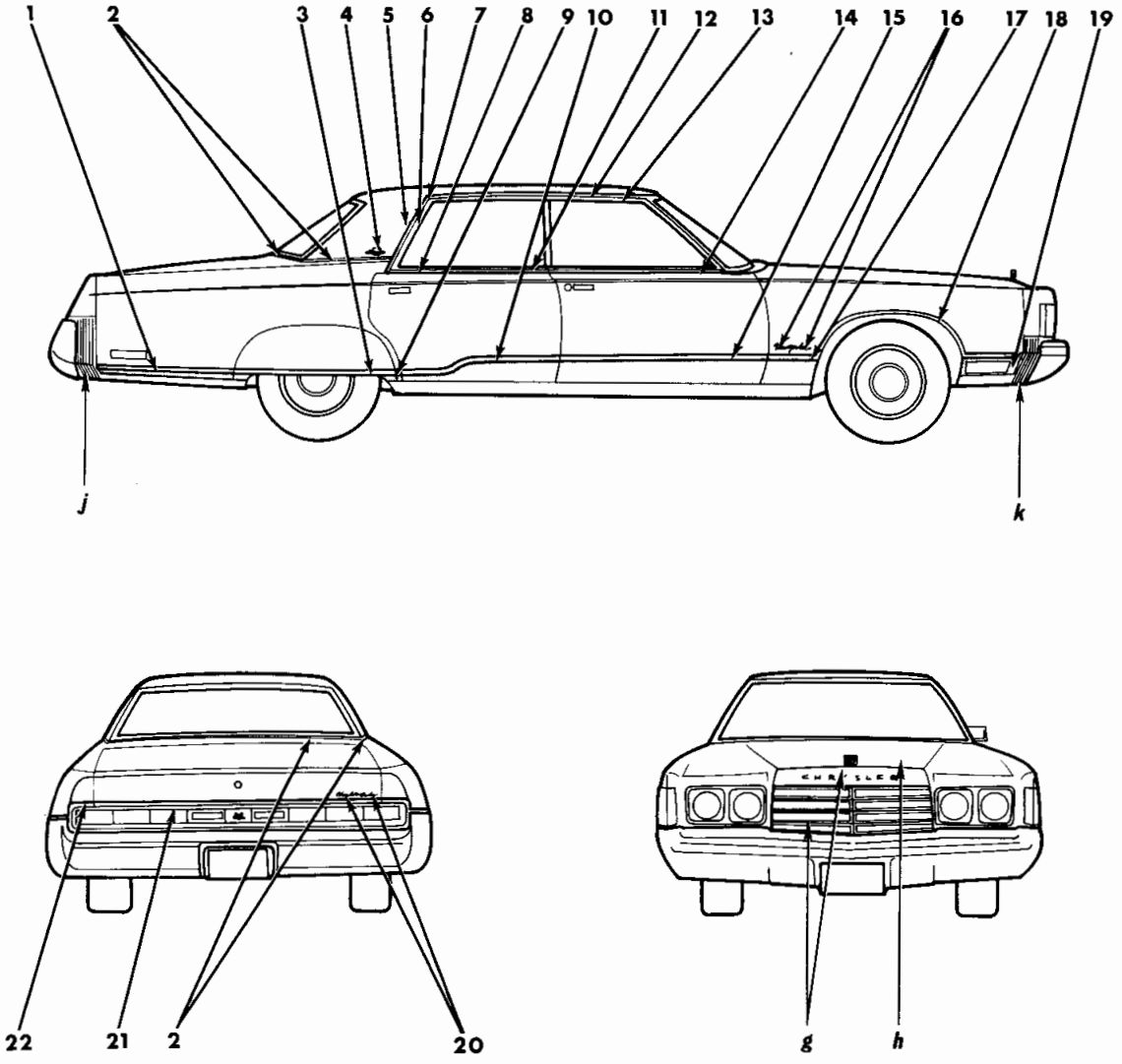

19a4748 A

EXTERIOR VIEW - CHRYSLER NEW YORKER 4 DOOR HARDTOP C-H
CHRYSLER NEW YORKER (BROUGHAM) 4 DOOR HARDTOP C-S

REF. NO.	QTY	PART NUMBER	DESCRIPTION
1	1	3749 574-5	MOULDING, Qtr. Pnl., Rear, C-H, C-S
	-	6003 495	Retainer
	-	6003 496	Retainer
	-	6029 259	Nut
	-	6003 536	Retainer
	-	6003 538	Retainer
2	1	3837 408-9	MOULDING PACKAGE, Qtr. Outside and Deck Opng. Upr. Belt, Blue, C-H, C-S
	1	3837 410-1	Green, C-H, C-S
	1	3837 412-3	Parchment, C-H, C-S
	1	3837 406-7	Black, C-H, C-S
	1	3837 416-7	White, C-H, C-S
	1	3837 418-9	Gold, C-H, C-S
	-	3780 451	Retainer Pkg.
	-	6002 920	Retainer - 6003 551 Ret.
	-	6003 518	Retainer - 9420 867 Nut
3	1	3749 572-3	MOULDING, Qtr. Outside Wheel Opng. Pnl., C-H, C-S
	-	3810 196	Retainer and Stud
	-	3810 197	Retainer
	-	3810 195	Retainer - 9426 925 Nut
4	2	3810 011	MEDALLION, Qtr. Pnl. Outside, "Brougham", C-S
	2	3810 060	NAME PLATE and MEDALLION, Qtr. Pnl., "New Yorker", C-H
	-	6025 860	Clip
5	1	E510-1 KB7	MOULDING, Roof Side, Rear, Blue, C-H, C-S
	1	E510-1 KG9	Green, C-H, C-S
	1	E510-1 KL2	Parchment, C-H, C-S
	1	E510-1 KX9	Black, C-H, C-S
	1	E510-1 KW1	White, C-H, C-S
	1	E510-1 KY4	Gold, C-H, C-S
	-	3780 451	Retainer Pkg.
	-	6003 518	Retainer - 6003 551 Ret.
6	1	3749 822-3	MOULDING, Roof Side Drain Trough, Rear, C-H, C-S
	-	---- ---	Rivet
7	2	E508 KB7	CAP, Roof Side Frt. to Roof Side Rear, Blue, C-H, C-S
	2	E508 KG9	Green, C-H, C-S
	2	E508 KL2	Parchment, C-H, C-S
	2	E508 KX9	Black, C-H, C-S
	2	E508 KW1	White, C-H, C-S
	2	E508 KY4	Gold, C-H, C-S
8	1	3749 854-5	ORNAMENT, Rear Door Rear, Outer, C-H, C-S
	1	3810 202-3	ORNAMENT and GASKET, Rear Door, Outer, C-H, C-S
	1	3788 018-9	ORNAMENT and WEATHER-STRIP, Rear Door, Inner, C-H, C-S
9	1	3749 900-1	MOULDING, Qtr. Pnl., Frt., C-H, C-S
	-	6000 960	Clip
	-	6026 983	Seal
10	1	3749 566-7	MOULDING, Rear Door, C-H, C-S
	-	3810 188	Retainer
	-	3810 189	Retainer
	-	6029 259	Nut
	-	6003 530-1	Retainer Stud and Seal
	-	3810 194	Retainer Stud and Seal
11	1	3780 982-3	MOULDING PACKAGE, Rear Door Belt, C-H, C-S
	-	3780 949	Retainer Pkg.
12	1	E506-7KB7	MOULDING, Roof Side, Frt., Blue, C-H, C-S
	1	E506-7KG9	Green, C-H, C-S
	1	E506-7KL2	Parchment, C-H, C-S
	1	E506-7KX9	Black, C-H, C-S
	1	E506-7KW1	White, C-H, C-S
	1	E506-7KY4	Gold, C-H, C-S
	-	3744 667	Retainer Pkg.
	-	3780 451	Retainer Pkg.
	-	6003 518	Retainer - 6003 551 Ret.
13	1	3749 466-7	MOULDING, Roof Side Drain Trough, Frt., C-H, C-S
	-	---- ---	Rivet
14	1	3780 978-9	MOULDING PACKAGE, Frt. Door Belt, C-H, C-S
	-	3780 949	Retainer Pkg.
15	1	3749 564-5	MOULDING, Frt. Door, C-H, C-S
	-	6028 674	Screw - 6029 259 Nut
	-	3810 188	Retainer
	-	6003 528-9	Retainer Stud and Seal
	-	3810 192	Retainer Stud and Seal
16	2	3569 955	NAME PLATE, Fender Side, "New Yorker", C-S
17	1	3749 560-1	MOULDING, Fender Side, Rear, C-H, C-S
	-	6028 674	Screw
	-	3810 188	Retainer
	-	6029 259	Nut
	-	6003 528-9	Retainer Stud and Seal
18	1	3749 472-3	MOULDING, Fender Wheel Opng., C-H, C-S
	-	6028 674	Screw
19	1	3749 556-7	MOULDING, Fender Side, Frt., w/o Cornering Lamps, C-H, C-S
	1	3749 820-1	MOULDING, Fender Side, Frt., w/ Cornering Lamps, C-H, C-S
	-	3728 613	Spacer
	-	3810 191	Retainer
	-	6027 625	Nut
	-	6028 674	Screw
20	1	3613 046	NAME PLATE, Deck Lid, "Chrysler", C-H, C-S
	1	3613 047	"New Yorker", C-H, C-S
21	1	3749 401	MOULDING and BRACKET, Deck Lid, Lwr., C-H, C-S
	-	6028 674	Screw
22	1	3749 532-3	MOULDING, Qtr. Pnl. End Ext., C-H, C-S
	-	9414 510	Screw
g		NOTE:	For Grille Mouldings and Ornamentation see Illustration in Group 7
h		NOTE:	For Hood Mouldings and Ornamentation see Illustration in Group 15
j		NOTE:	For Fillers see Code 23-34-280
k		NOTE:	For Fillers see Code 12-02-6

EXTERIOR VIEW - CHRYSLER NEW YORKER 4 DOOR HARDTOP C-H
CHRYSLER NEW YORKER (BROUGHAM) 4 DOOR HARDTOP C-S

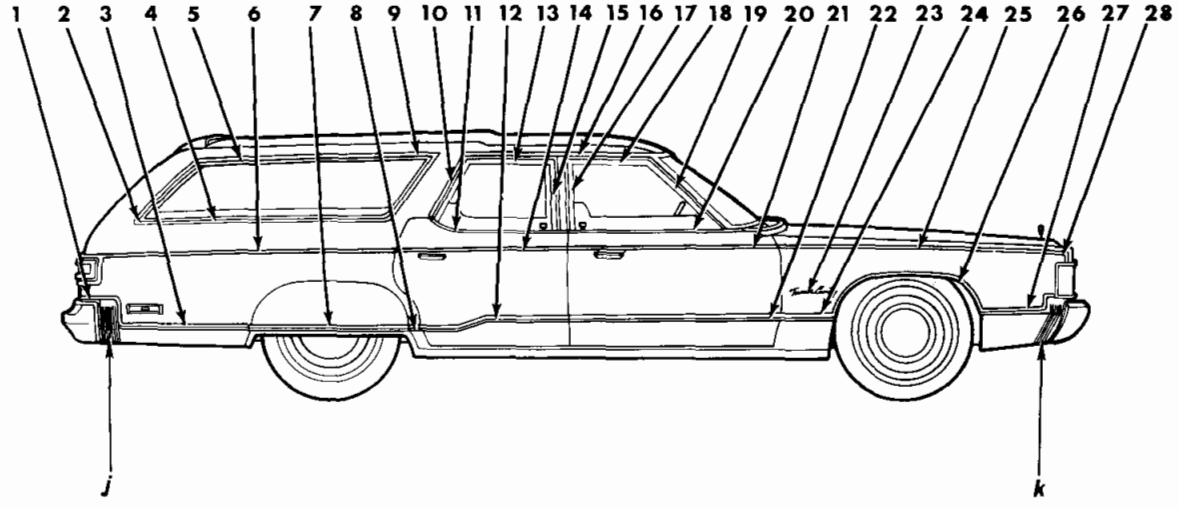

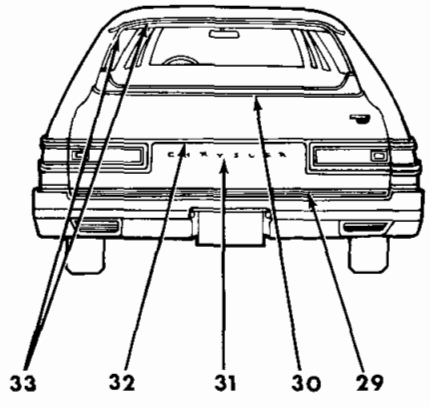

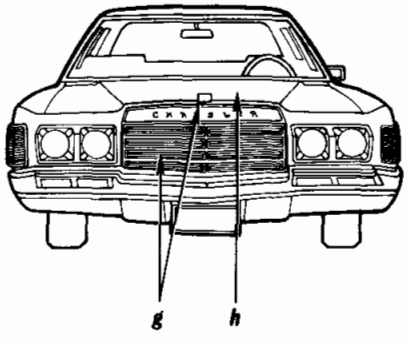

19a4749A

EXTERIOR VIEW - CHRYSLER TOWN & COUNTRY C-P

REF. NO.	QTY	PART NUMBER	DESCRIPTION
1	1	3749 774-5	MOULDING, Qtr. Pnl. Bumper Periphery
	-	6024 271	Screw
2	2	3749 788	MOULDING, Qtr. Wdo. Lwr., Rear Corner
	-	6003 409	Retainer
3	1	3780 960-1	MOULDING PACKAGE, Qtr. Pnl., Lwr. Rear
	-	3780 453	Retainer Pkg.
4	1	3749 194-5	MOULDING, Qtr. Wdo., Lwr.
	-	6003 409	Retainer
5	1	3749 192-3	MOULDING, Qtr. Wdo., Upr.
	-	6003 409	Retainer
6	2	3780 962	MOULDING PACKAGE, Qtr. Pnl., Upr.
	-	3780 453	Retainer Pkg.
7	2	3749 770	MOULDING, Qtr. Wheel Opng. Pnl.
	-	6002 013	Retainer and Stud
	-	6029 259	Nut
	2	3879 011	MOULDING PACKAGE, Qtr. Outside Wheel Opng. Pnl.
	-	3780 453	Retainer Pkg.
8	1	3749 768-9	MOULDING, Qtr. Pnl., Lwr. Frt.
	-	6026 006	Push Nut
9	1	3749 196	MOULDING, Qtr. Wdo. Outside Upr., Frt. Corner
	-	6003 409	Retainer
10	1	3749 934-5	MOULDING, Rear Door Wdo. Opng. Frame, Rear
11	1	3780 976-7	MOULDING PACKAGE, Rear Door Belt
	-	3780 949	Retainer Pkg.
12	1	3780 972-3	MOULDING PACKAGE, Rear Door, Lwr.
	-	3780 453	Retainer Pkg.
	-	6002 013	Retainer
13	1	3749 932-3	MOULDING, Rear Door Wdo. Opng. Frame, Upr.
14	1	3780 968-9	MOULDING PACKAGE, Rear Door, Upr.
	-	3780 453	Retainer Pkg.
	-	6002 013	Retainer
15	1	3749 544	MOULDING, Rear Door Wdo. Opng. Frame, Frt., Lt.
	1	3749 545	MOULDING, Rear Door Wdo. Opng. Frame, Frt., Rt.
16	1	3749 894-5	MOULDING, Roof Side Drain Trough, Up to 1-2-74
	-	---- ---	Rivet
	1	3810 274-5	After 1-2-74
	-	---- ---	Rivet
17	1	3749 544-5	MOULDING, Frt. Door Wdo. Opng. Frame, Rear
18	1	3749 542-3	MOULDING, Frt. Door Wdo. Opng. Frame, Upr.
19	1	3749 540-1	MOULDING, Frt. Door Wdo. Opng. Frame, Frt.
20	1	3780 978-9	MOULDING PACKAGE, Frt. Door Belt
	-	3780 949	Retainer Pkg.
21	1	3780 966-7	MOULDING PACKAGE, Frt. Door, Upr.
	-	3780 453	Retainer Pkg.
	-	6002 013	Retainer
22	1	3780 970-1	MOULDING PACKAGE, Frt. Door, Lwr.
	-	3780 453	Retainer Pkg.
	-	6002 013	Retainer
23	2	3810 230	NAME PLATE, Fender Side, "Town & Country"
24	1	3749 960-1	MOULDING, Fender Side, Lwr., Rear
25	1	3780 964-5	MOULDING PACKAGE, Fender Side, Upr.
	-	3780 453	Retainer Pkg.
	-	6002 013	Retainer
26	1	3749 472-3	MOULDING, Fender Wheel Opng.
	-	6028 674	Screw
27	1	3749 974-5	MOULDING, Fender Side, Lwr. Frt.
	-	6027 466	Nut
28	1	3749 748-9	MOULDING, Fender Side, Frt.
	-	9433 494	Screw
29	1	3780 436	MOULDING PACKAGE, Tailgate, Lwr.
	-	3744 670	Retainer Pkg.
30	1	3781 000	MOULDING PACKAGE, Tailgate Belt
	-	3780 975	Retainer Pkg.
	-	6028 679	Screw
	-	6029 259	Nut
	-	6002 404	Retainer
31	1	3672 816	LETTER "C", Tailgate Outside Panel
	1	3672 817	"H"
	2	3672 818	"R"
	1	3672 819	"Y"
	1	3672 820	"S"
	1	3672 821	"L"
	1	3672 822	"E"
	-	6002 852	Retainer
32	1	3780 984	MOULDING PACKAGE, Tailgate, Upr.
	-	3780 453	Retainer Pkg.
33	1	3788 006-7	MOULDING and RETAINER, Tailgate Glass Weatherstrip Upper
	1	3788 402-3	After March 1, 1974
g		NOTE:	For Grille Mouldings and Ornamentation see Illustration in Group 7
h		NOTE:	For Hood Mouldings and Ornamentation see Illustration in Group 15
j		NOTE:	For Filler see Code 23-34-280
k		NOTE:	For Filler see Code 12-02-6

EXTERIOR VIEW - CHRYSLER TOWN & COUNTRY C-P

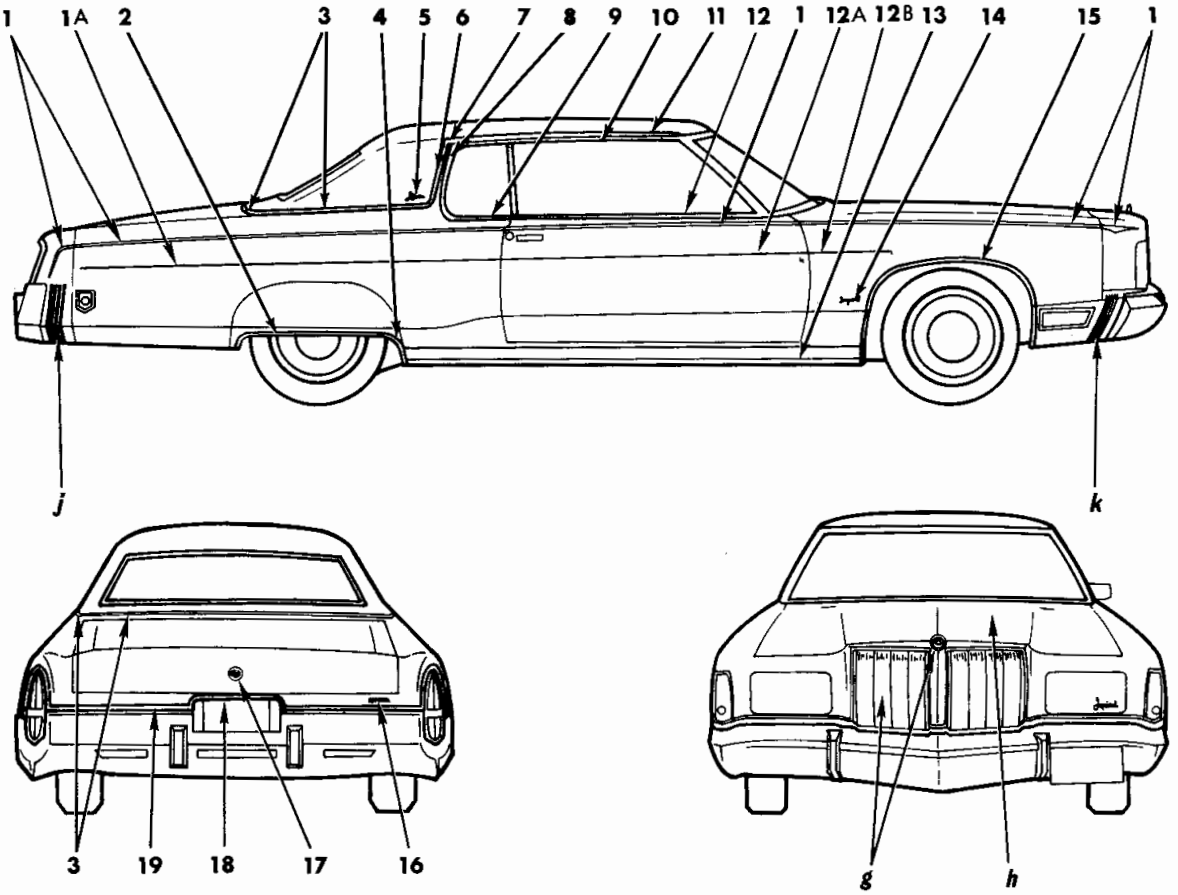

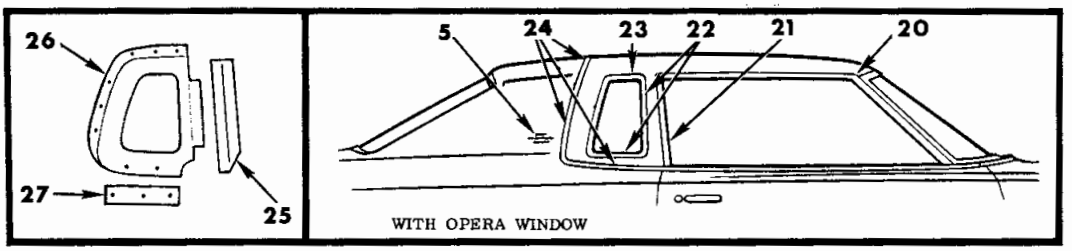

REF. NO.	QTY	PART NUMBER	DESCRIPTION
20	1	3879 962-3	MOULDING, Roof Side Drain Trough, Frt., use w/Opera Wdo.
21	1	3879 972-3	MOULDING, Roof Side Drain Trough, Rear, use w/Opera Wdo.
22	1	3879 970-1	MOULDING, Quarter Opera Window
23	2	3879 953	MOULDING, Joint Clip, Quarter Opera Window
24	1	3879 974-5	MOULDING, Roof side and Transverse
	-	3879 959	Clip
	1	3879 951	CAP and CLIP, Roof Side and Transverse Moulding
25	2	3879 956	SEAL or WEATHERSTRIP, Opera Wdo. "B" Pillar Mldg. (23-63-33)
26	1	3879 968-9	FRAME, Quarter Opera Window, Outer (23-64-280)
27	2	3879 957	BRACKET, Quarter Opera Window Glass Filler Mtg. (23-64-300)

19a4750B

EXTERIOR VIEW - IMPERIAL LE BARON 2 DOOR HARDTOP Y-M

REF. NO.	QTY	PART NUMBER	DESCRIPTION
1	1	E156-7KB4	TAPE STRIPE, Fender Side, Frt., Blue
	1	E156-7KG5	Green
	1	E156-7KL1	Parchment
	1	E156-7KT6	Chestnut
	1	E156-7KW1	White
	1	E156-7KX9	Black
	1	E156-7KY1	Gold
	AR	E176 KB4	TAPE STRIPE, Body Side, 88 inches long, Blue
	AR	E176 KG5	Green
	AR	E176 KL1	Parchment
	AR	E176 KT6	Chestnut
	AR	E176 KW1	White
	AR	E176 KX9	Black
	AR	E176 KY1	Gold
	1	E158-9KB4	TAPE STRIPE, Qtr. Pnl., Rear, Blue
	1	E158-9KG5	Green
	1	E158-9KL1	Parchment
	1	E158-9KT6	Chestnut
	1	E158-9KW1	White
	1	E158-9KX9	Black
	1	E158-9KY1	Gold
1A	1	3780 952-3	MOULDING PACKAGE, Qtr. Pnl., Black
	2	3879 551	Black, use After July 1, 1974
	-	3744 367	Retainer Pkg.
	-	6002 920	Retainer
2	1	3749 826-7	MOULDING, Qtr. Wheel Opng. Pnl.
	-	9417 316	Screw - 6029 259 Nut
3	1	3837 422-3	MOULDING PACKAGE, Qtr. Outside & Deck Opng. Upr. Belt, Blue
	1	3837 424-5	Green
	1	3837 426-7	Parchment
	1	3837 428-9	Chestnut
	1	3837 420-1	Black
	1	3837 430-1	White
	1	3837 432-3	Gold
	-	3780 451	Retainer Pkg.
	-	6002 920	Retainer - 9420 867 Nut
	-	6003 518	Retainer - 6003 551 Ret.
	7	3810 228	Retainer, Deck Opng. Upr. Pnl. Vinyl Roof, Inner
	2	3810 229	Retainer, Deck Opng. Upr. Pnl. Vinyl Roof, Outer
4	1	3749 904-5	MOULDING, Qtr. Wheel Opng. Pnl., Frt.
	-	---- ---	Nut
5	2	3810 012	NAME PLATE, Qtr. Outside Pnl., "Le Baron"
	-	6025 860	Retainer
6	1	E514-5 KB7	MOULDING, Roof Side Rear, Blue
	1	E514-5 KG9	Green
	1	E514-5 KL2	Parchment
	1	E514-5 KT8	Chestnut
	1	E514-5 KX9	Black
	1	E514-5 KW1	White
	1	E514-5 KY4	Gold
	-	3780 451	Retainer Pkg.
	-	6003 518	Retainer - 6003 551 Ret.
7	2	E509 KB7	CAP, Roof Side Frt. to Roof Side Rear, Blue
	2	E509 KG9	Green
	2	E509 KL2	Parchment
	2	E509 KT8	Chestnut
	2	E509 KX9	Black
	2	E509 KW1	White
	2	E509 KY4	Gold
8	2	3749 864	CAP, Roof Side Drain Trough to Qtr. Wdo. Belt Mldg.
9	1	3749 952-3	MOULDING, Qtr. Wdo. Outside Belt
	-	3780 949	Retainer Pkg.
	-	6029 329	Screw
10	1	3749 452-3	MOULDING, Roof Side Drain Trough
	-	---- ---	Rivet
11	1	E506-7KB7	MOULDING, Roof Side, Frt., Blue
	1	E506-7KG9	Green
	1	E506-7KL2	Parchment
	1	E506-7KX9	Black
	1	E506-7KT8	Chestnut
	1	E506-7KW1	White
	1	E506-7KY4	Gold
	-	3744 667	Retainer Pkg.
	-	3780 451	Retainer Pkg.
	-	6003 518	Retainer - 6003 551 Ret.
12	1	3780 980-1	MOULDING PACKAGE, Door Belt
	-	3780 949	Retainer Pkg.
12A	2	3780 947	MOULDING PACKAGE, Door Outside, Black
	-	3744 367	Retainer Pkg.
	-	6002 920	Retainer
12B	2	3780 946	MOULDING PACKAGE, Fender Side, Black
	-	3744 671	Retainer Pkg.
	-	6001 915	Retainer
13	1	3749 408-9	MOULDING, Body Side Sill
	-	6003 429	Retainer - 6028 057 Screw
14	2	3505 034	NAME PLATE, Fender Side, "Imperial"
	-	6002 852	Retainer
15	1	3749 476-7	MOULDING, Fender Whl. Opng.
	-	6028 674	Screw
16	1	3749 875	NAME PLATE, Deck Opng. Lwr. Pnl., "Imperial"
	-	6027 352	Nut and Seal
17	1	3796 057	MEDALLION, Deck Lid Lock Cyl.
	-	---- ---	Nut
18	1	3749 969	MOULDING, Deck Opng. Lwr. Pnl., Center
	-	6024 271	Screw - 9432 524 Screw
19	1	3749 538-9	MOULDING, Deck Opng. Lwr. Pnl., Outer
	-	6024 271	Screw - 9425 247 Screw
g		NOTE:	For Grille Mouldings and Ornamentation see Illustration in Group 7
h		NOTE:	For Hood Mouldings and Ornamentation see Illustration in Group 15
j		NOTE:	For Filler see Code 23-34-280
k		NOTE:	For Filler see Code 12-02-6

EXTERIOR VIEW - IMPERIAL LE BARON 2 DOOR HARDTOP Y-M

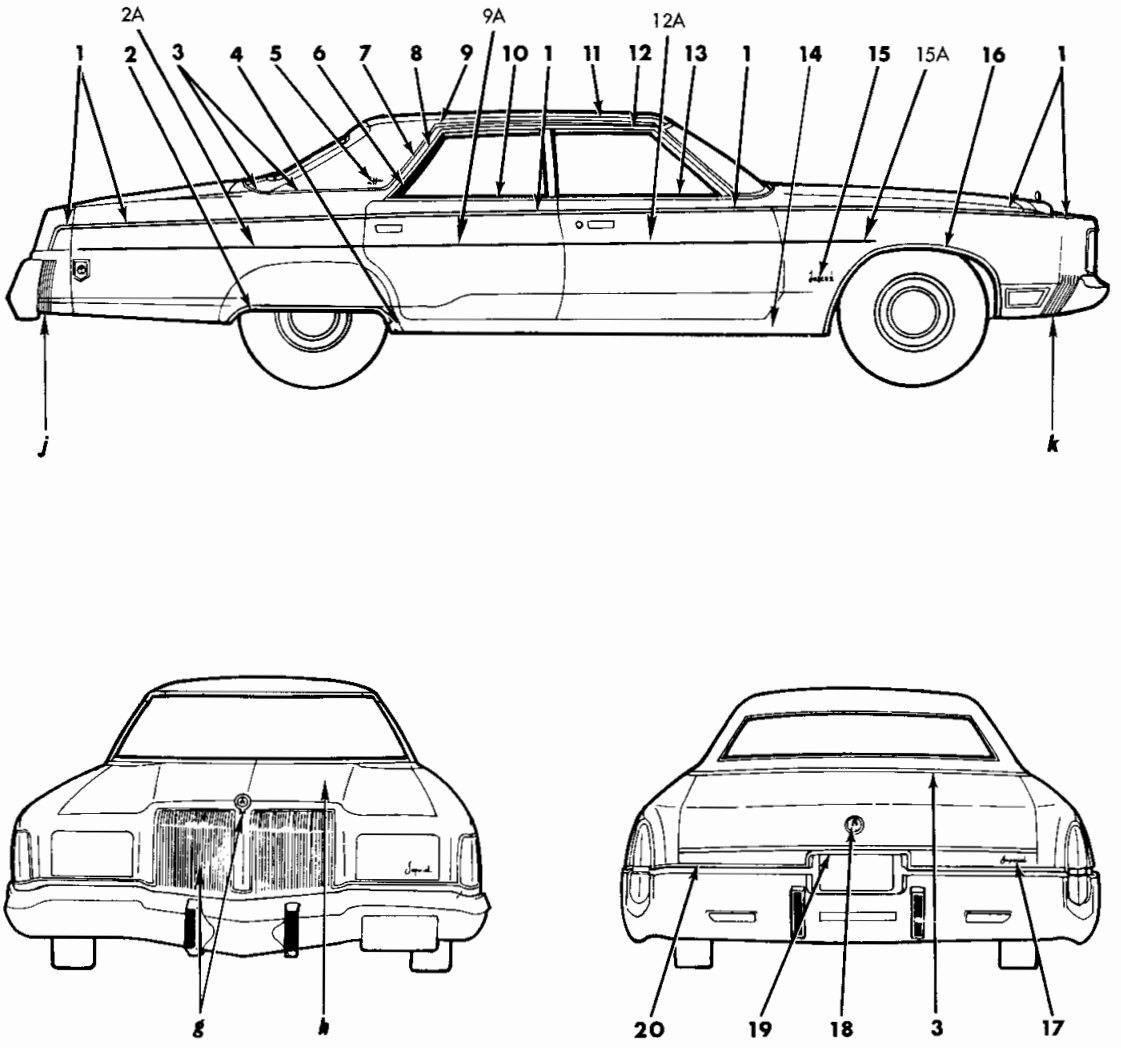

19a4779 B

EXTERIOR VIEW - IMPERIAL LE BARON 4 DOOR HARDTOP Y-M

REF. NO.	QTY	PART NUMBER	DESCRIPTION
1	1	E156-7 KB4	TAPE STRIPE, Fender Side, Frt., Blue
	1	E156-7 KG5	Green
	1	E156-7 KL1	Parchment
	1	E156-7 KT6	Chestnut
	1	E156-7 KW1	White
	1	E156-7 KX9	Black
	1	E156-7 KY1	Gold
	AR	E176 KB4	TAPE STRIPE, Body Side, 88 inches long, Blue
	AR	E176 KG5	Green
	AR	E176 KL1	Parchment
	AR	E176 KT6	Chestnut
	AR	E176 KW1	White
	AR	E176 KX9	Black
	AR	E176 KY1	Gold
	1	E158-9 KB4	TAPE STRIPE, Qtr. Pnl., Rear, Blue
	1	E158-9 KG5	Green
	1	E158-9 KL1	Parchment
	1	E158-9 KT6	Chestnut
	1	E158-9 KW1	White
	1	E158-9 KX9	Black
	1	E158-9 KY1	Gold
2	1	3749 826-7	MOULDING, Qtr. Wheel Opng. Pnl.
	-	9417 316	Screw
	-	6029 259	Nut
2A	1	3780 954-5	MOULDING PACKAGE, Qtr. Pnl., Black
	1	3879 584-5	Black, Use After July 1, 1974
	-	3744 367	Retainer Pkg.
	-	6002 920	Retainer
3	1	3837 408-9	MOULDING PACKAGE, Qtr. Outside and Deck Opng. Upr. Belt, Blue
	1	3837 410-1	Green
	1	3837 412-3	Parchment
	1	3837 414-5	Chestnut
	1	3837 406-7	Black
	1	3837 416-7	White
	1	3837 418-9	Gold
	-	3780 451	Retainer Pkg.
	-	6002 920	Retainer
	-	9420 867	Nut
	-	6003 518	Retainer
	-	6003 551	Retainer
	7	3810 228	RETAINER, Deck Opng. Upr. Pnl. Vinyl Roof, Inner
	2	3810 229	Outer
4	1	3749 904-5	MOULDING, Qtr. Wheel Opng. Pnl., Frt.
	-	---- ---	Nut
5	2	3810 012	NAME PLATE, Qtr. Outside Pnl., "Le Baron"
	-	6025 860	Retainer
6	1	3749 854-5	ORNAMENT, Rear Door Rear, Outer
	1	3810 202-3	ORNAMENT and GASKET, Rear Door, Outer
	1	3788 018-9	ORNAMENT and WEATHER-STRIP, Rear Door, Inner
7	1	E510-1 KB7	MOULDING, Roof Side, Rear, Blue
	1	E510-1 KG9	Green
	1	E510-1 KL2	Parchment
	1	E510-1 KT8	Chestnut
	1	E510-1 KX9	Black
	1	E510-1 KW1	White
	1	E510-1 KY4	Gold
	-	3780 451	Retainer Pkg.
	-	6003 518	Retainer
	-	6003 551	Retainer
8	1	3749 822-3	MOULDING, Roof Side Drain Trough, Rear
	-	---- ---	Rivet
9	2	E508 KB7	CAP, Roof Side Frt. to Roof Side Rear, Blue
	2	E508 KG9	Green
	2	E508 KL2	Parchment
	2	E508 KT8	Chestnut
	2	E508 KX9	Black
	2	E508 KW1	White
	2	E508 KY4	Gold
9A	1	3780 950-1	MOULDING PACKAGE, Rear Door Outside, Black
	-	3744 367	Retainer Pkg.
	-	6002 920	Retainer
10	1	3780 982-3	MOULDING PACKAGE, Rear Door Belt
	-	3780 949	Retainer Pkg.
11	1	E506-7 KB7	MOULDING, Roof Side, Frt., Blue
	1	E506-7 KG9	Green
	1	E506-7 KL2	Parchment
	1	E506-7 KT8	Chestnut
	1	E506-7 KX9	Black
	1	E506-7 KW1	White
	1	E506-7 KY4	Gold
	-	3744 667	Retainer Pkg.
	-	3780 451	Retainer Pkg.
	-	6003 518	Retainer
	-	6003 551	Retainer
12	1	3749 466-7	MOULDING, Roof Side Drain Trough, Front
	-	---- ---	Rivet
12A	2	3780 948	MOULDING PACKAGE, Frt. Door, Black
	-	3744 367	Retainer Pkg.
	-	6002 920	Retainer
13	1	3780 978-9	MOULDING PACKAGE, Frt. Door Belt
	-	3780 949	Retainer Pkg.
14	1	3749 408-9	MOULDING, Body Side Sill
	-	6028 057	Screw
	-	6003 429	Retainer
15	2	3505 034	NAME PLATE, Fender Side, "Imperial"
	-	6002 852	Retainer
15A	2	3780 946	MOULDING PACKAGE, Fender Side, Black
	-	3744 671	Retainer Pkg.
	-	6001 915	Retainer

CONTINUED ON NEXT PAGE

EXTERIOR VIEW - IMPERIAL LE BARON 4 DOOR HARDTOP Y-M

REF. NO.	QTY	PART NUMBER	DESCRIPTION
16	1	3749 476-7	MOULDING, Fender Wheel Opng.
	-	6028 674	Screw
17	1	3749 875	NAME PLATE, Deck Opng. Lwr. Pnl., "Imperial"
	-	6027 352	Nut and Seal
18	1	3796 057	MEDALLION, Deck Lid Lock Cyl.
	-	---- ---	Nut
19	1	3749 969	MOULDING, Deck Opng. Lwr. Pnl., Center
	-	6024 271	Screw
	-	9432 524	Screw
20	1	3749 538-9	MOULDING, Deck Opng. Lwr. Pnl., Outer
	-	6024 271	Screw
	-	9425 247	Screw
g		NOTE:	For Grille Mouldings and Ornamentation see Illustration in Group 7
h		NOTE:	For Hood Mouldings and Ornamentation see Illustration in Group 15
j		NOTE:	For Filler see Code 23-34-280
k		NOTE:	For Filler see Code 12-02-6

EXTERIOR VIEW - IMPERIAL LE BARON 4 DOOR HARDTOP Y-M

NOTES

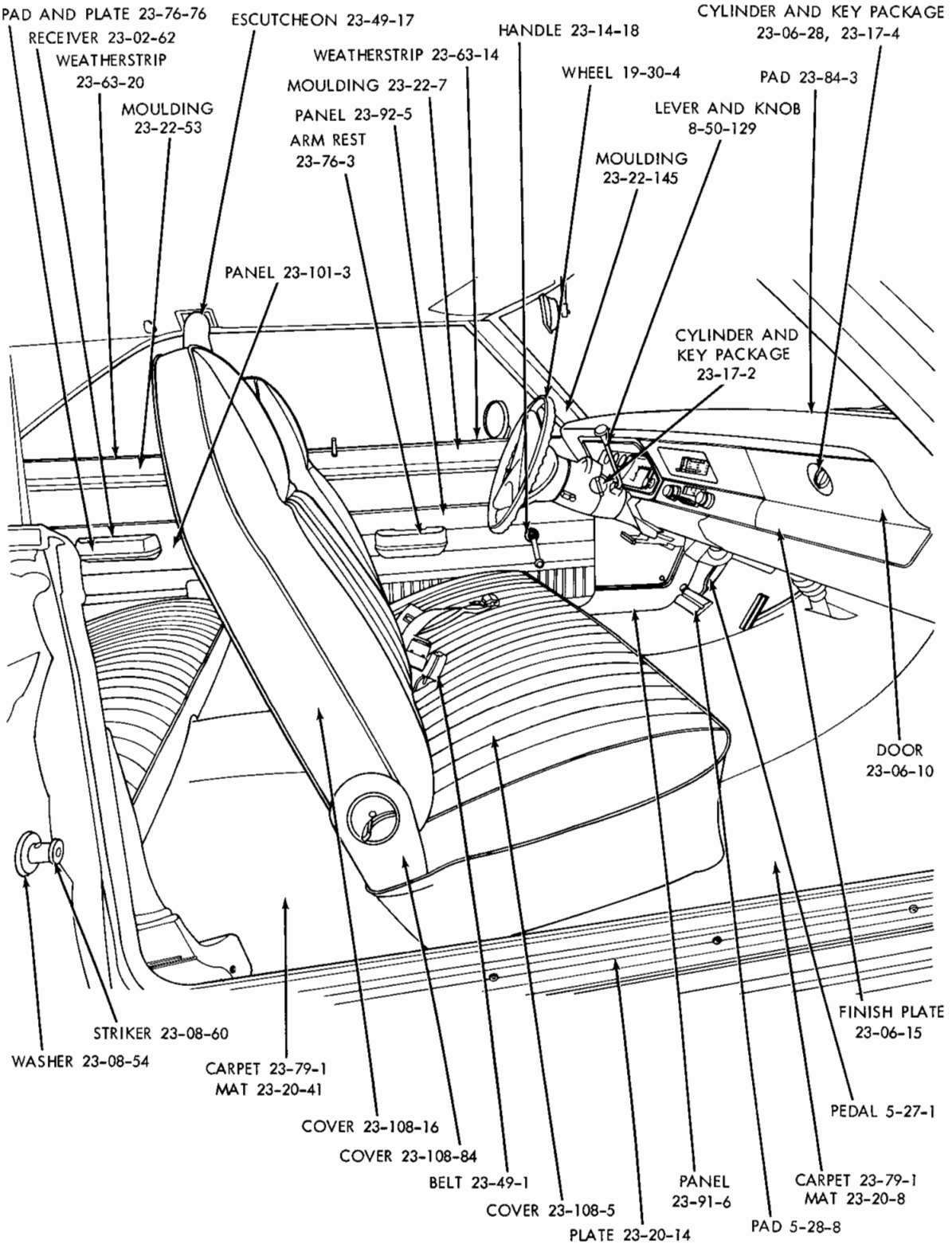

19a4876

FRONT INTERIOR - VALIANT SCAMP V-H 2 DOOR HARDTOP

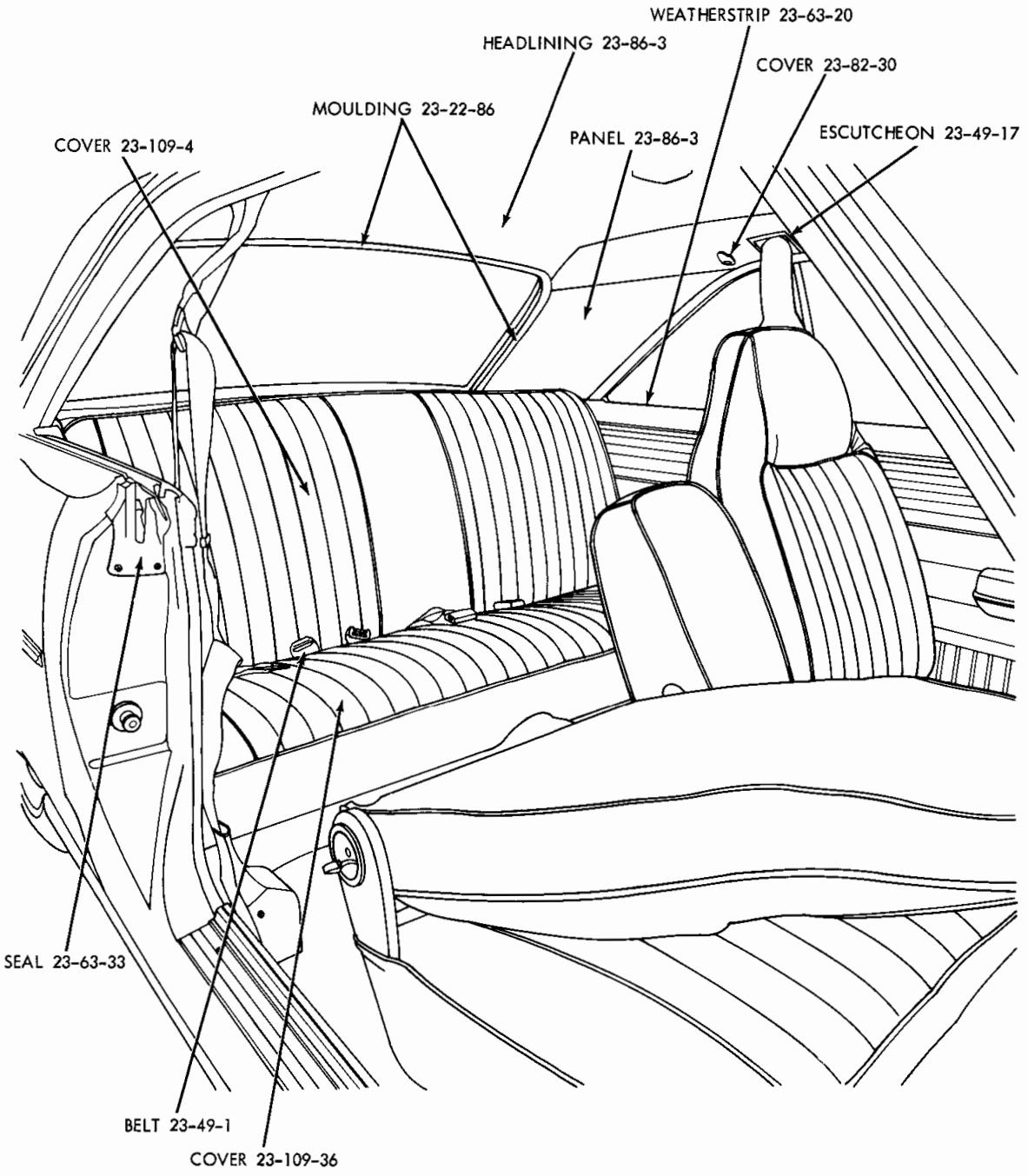

19a4877

REAR INTERIOR - VALIANT SCAMP V-H 2 DOOR HARDTOP

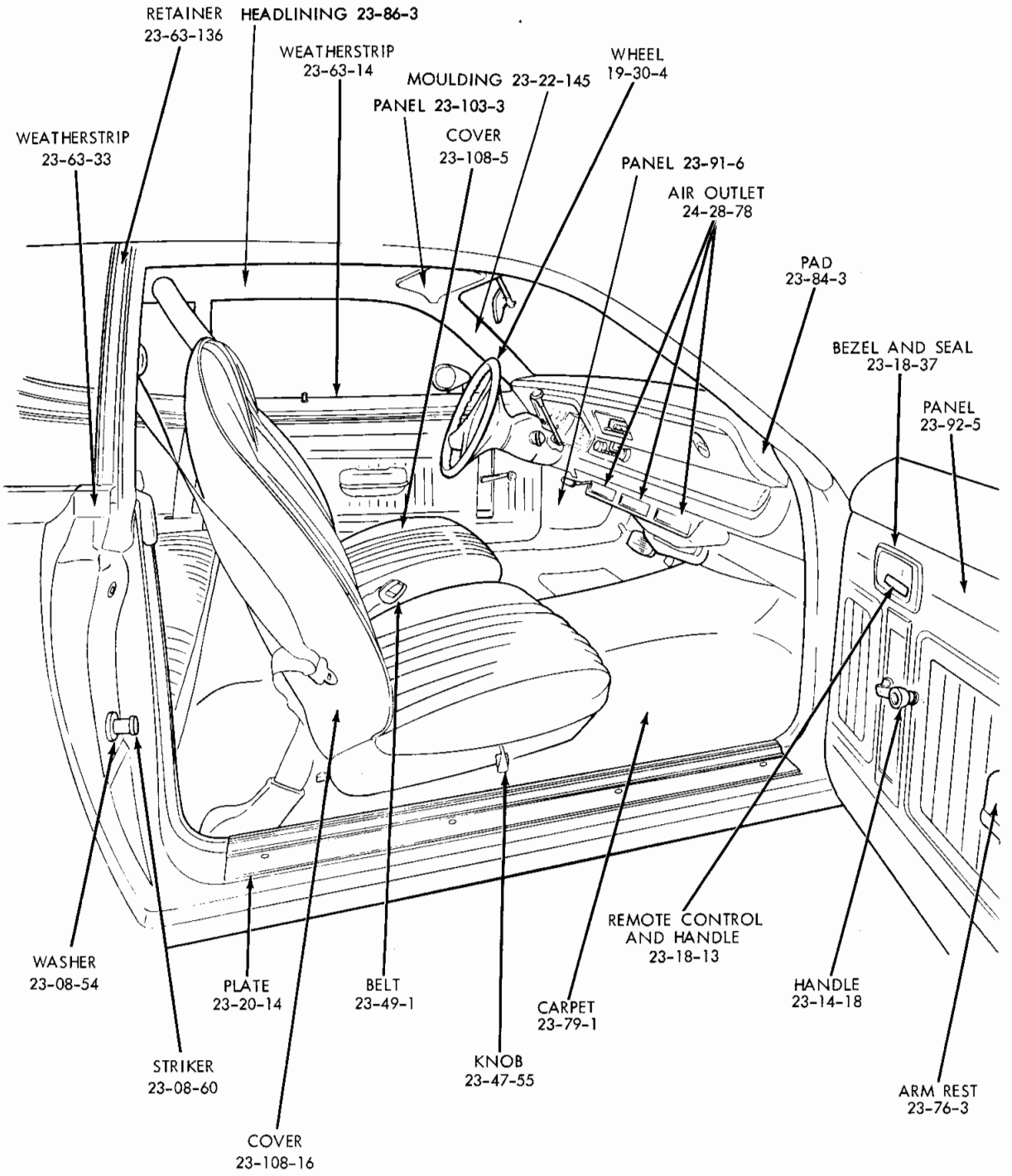

19a4780A

FRONT INTERIOR - VALIANT DUSTER 360 V-S FASTBACK

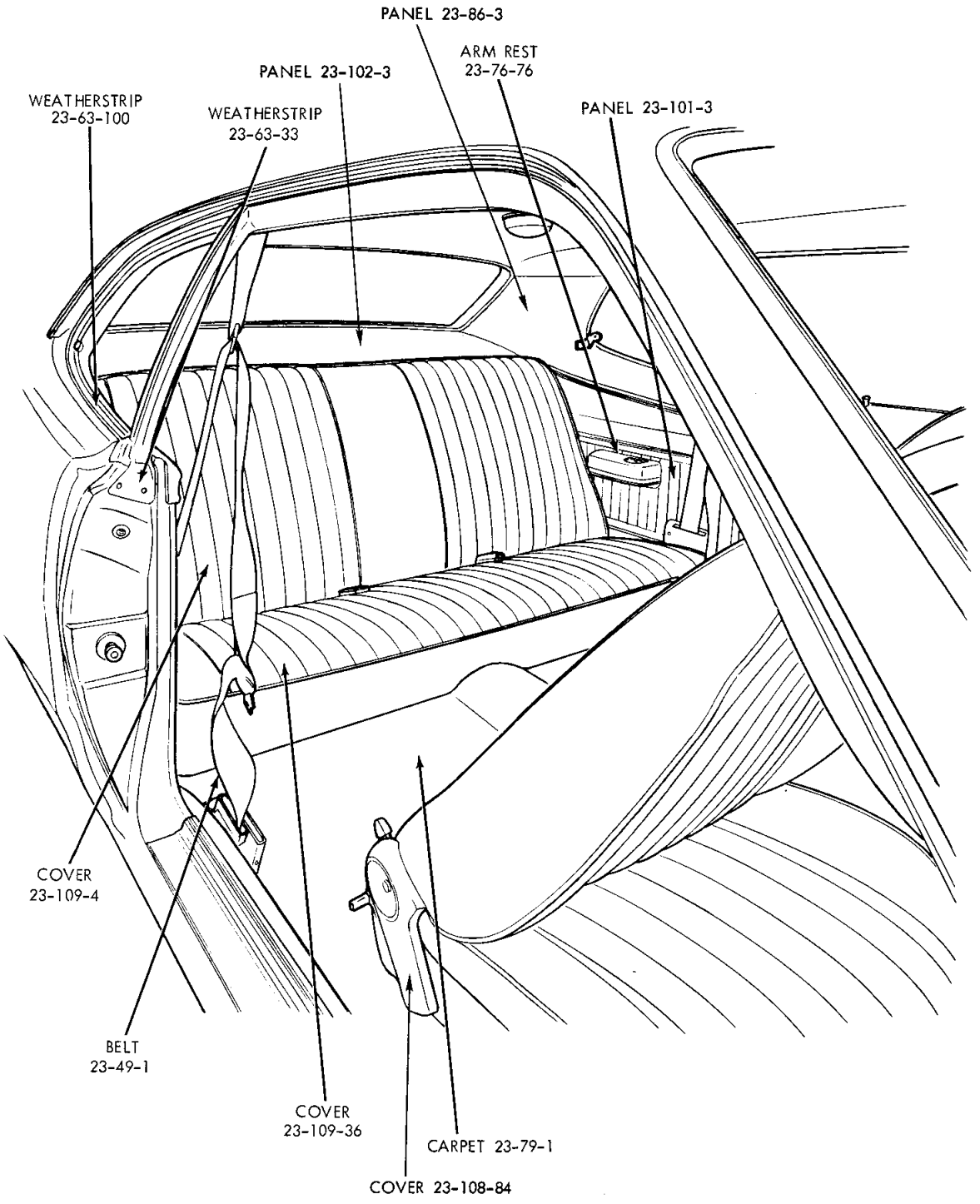

19a4781A

REAR INTERIOR - VALIANT DUSTER 360 V-S FASTBACK

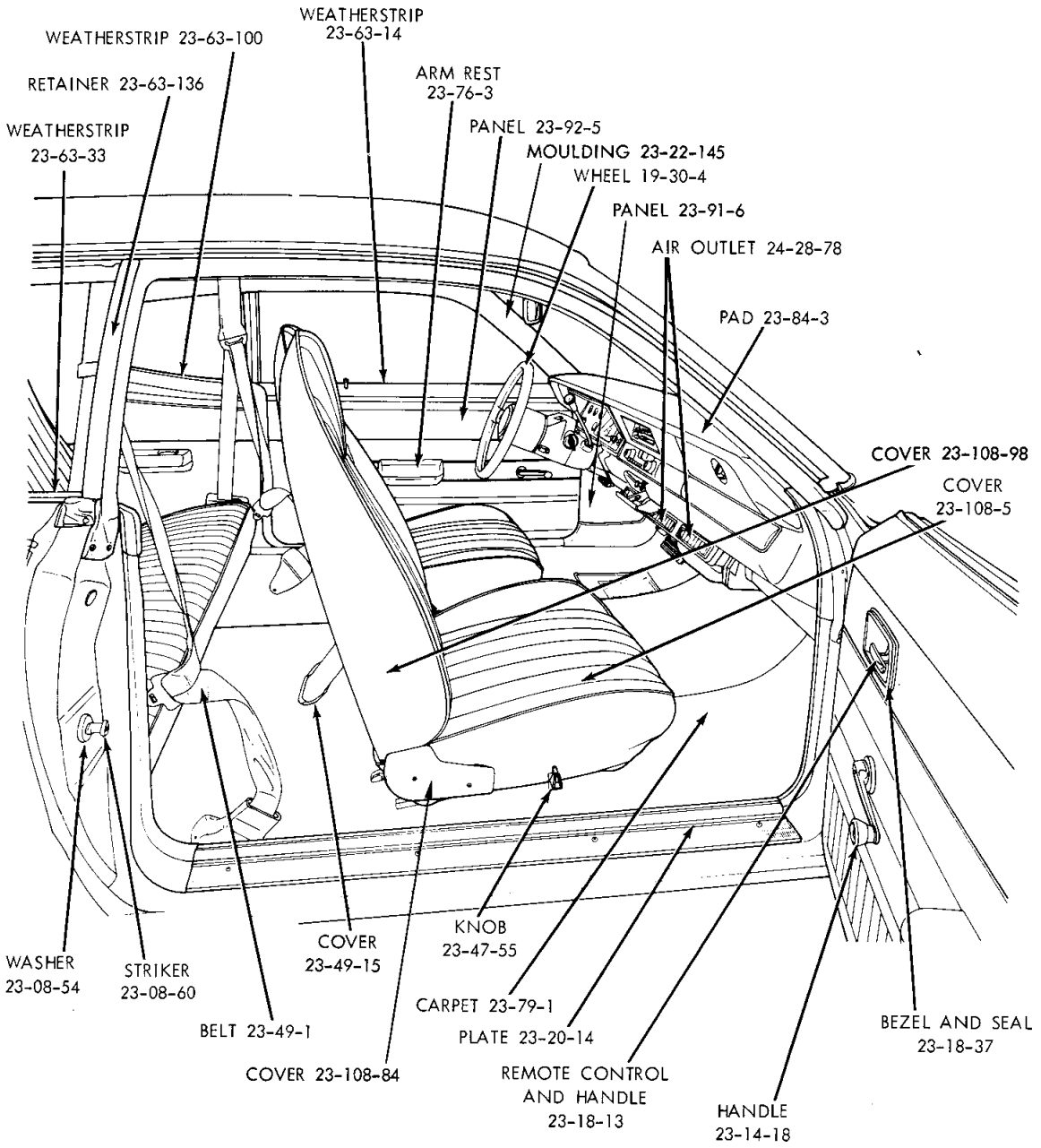

19a4782 B

FRONT INTERIOR - DART SPORT L-L FASTBACK

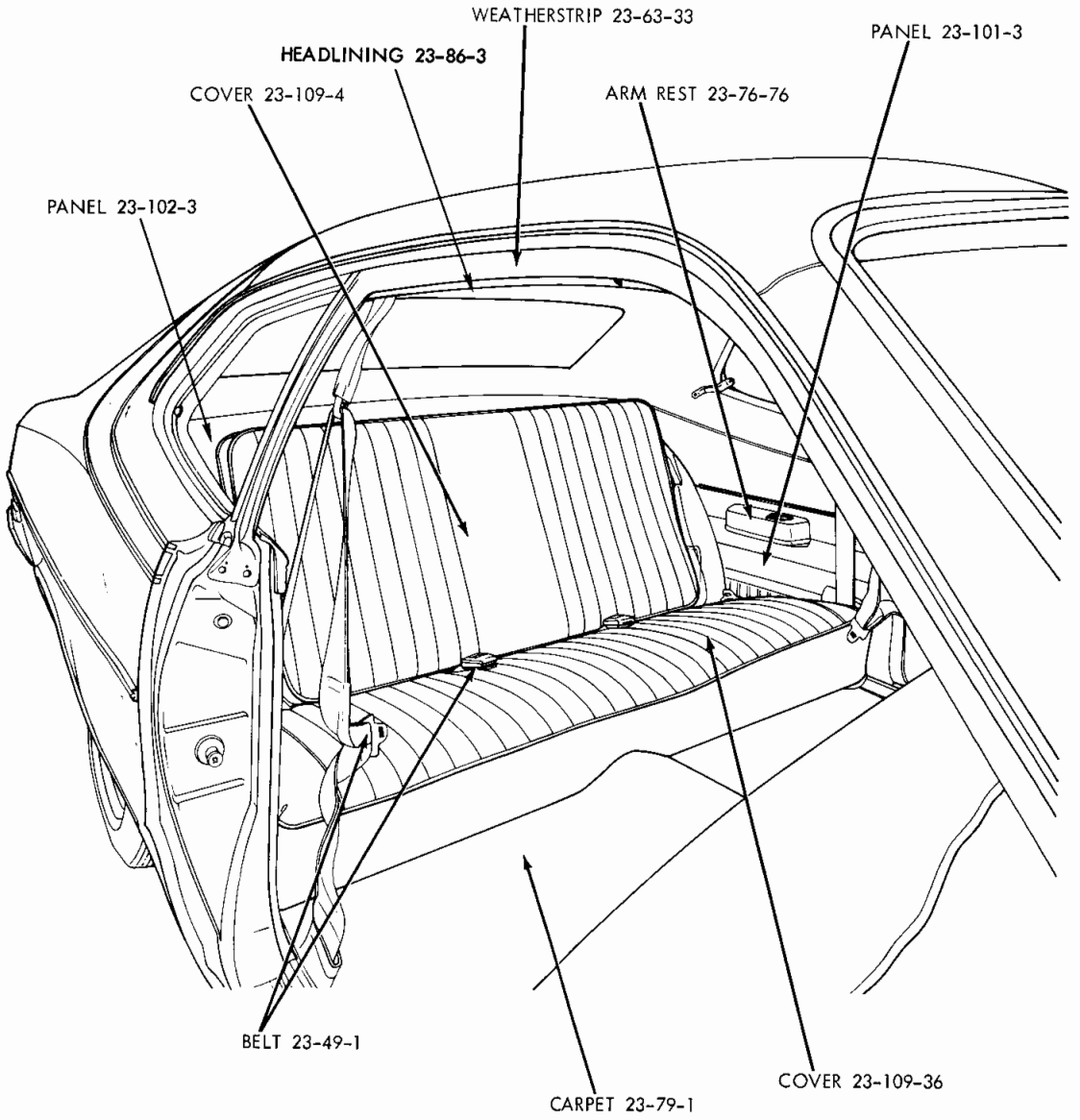

19a4783 **A**

REAR INTERIOR - DART SPORT L-L FASTBACK

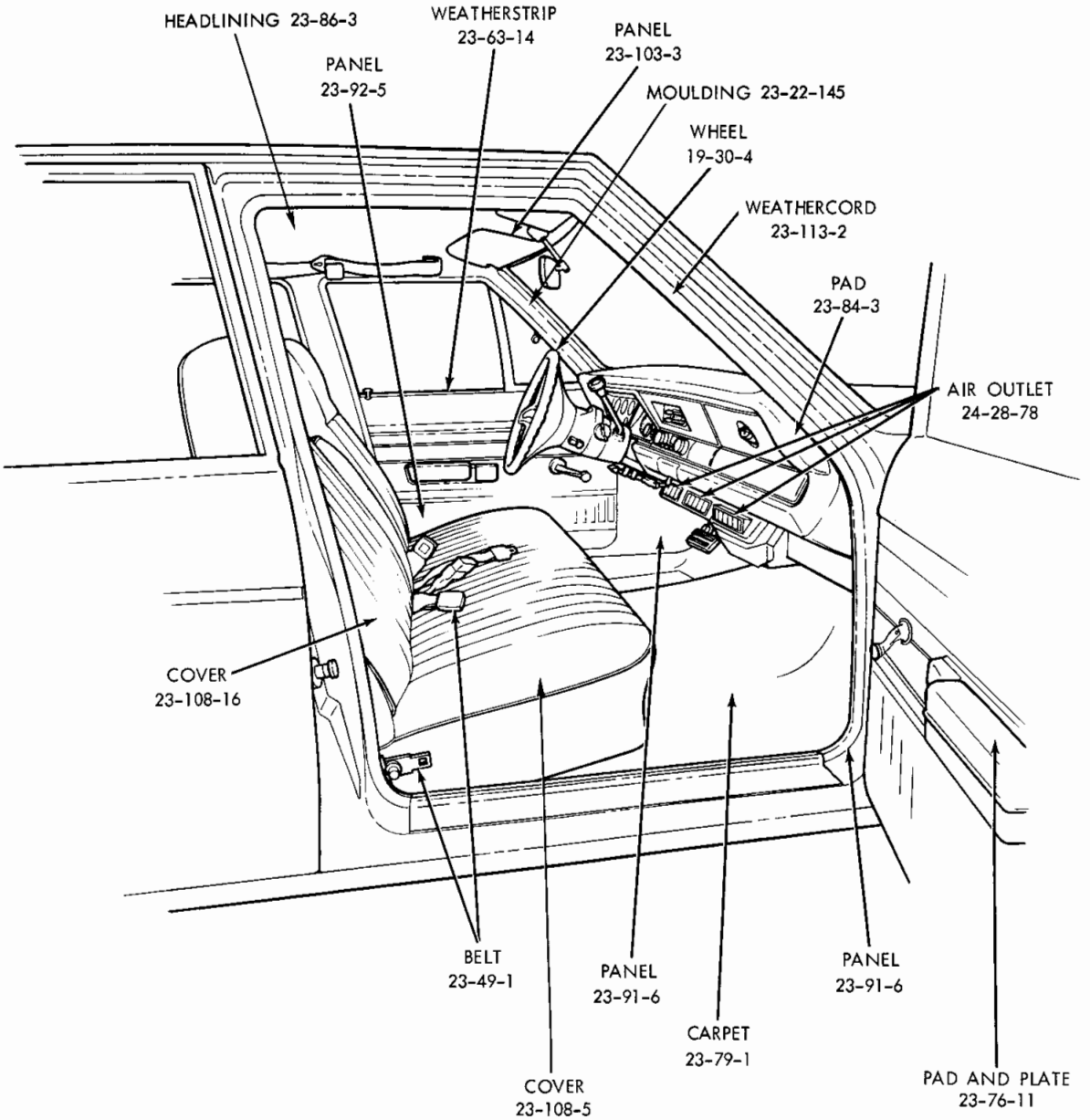

19a4672 A

FRONT INTERIOR - DART CUSTOM L-H 4 DOOR SEDAN

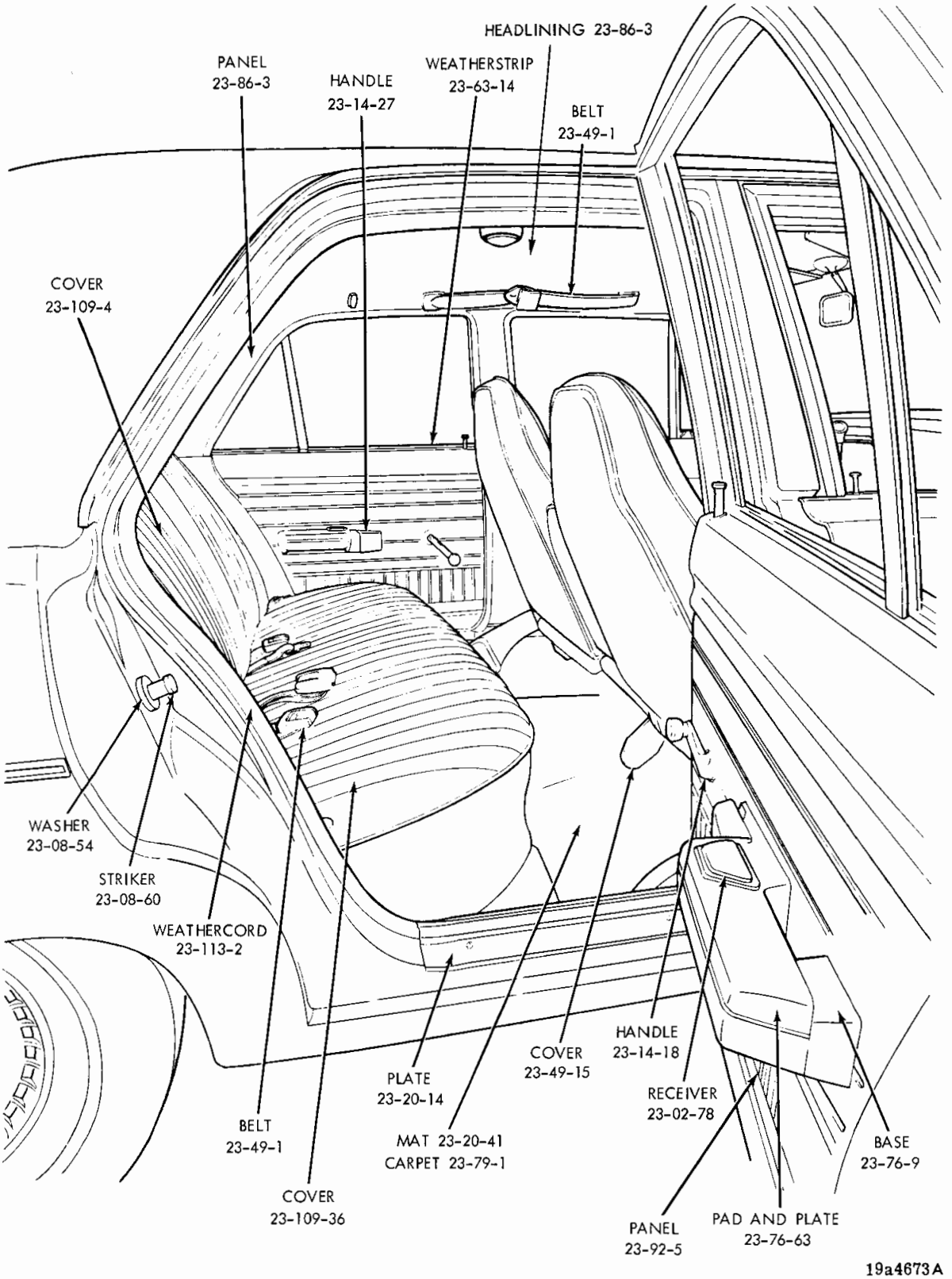

REAR INTERIOR - DART CUSTOM L-H 4 DOOR SEDAN

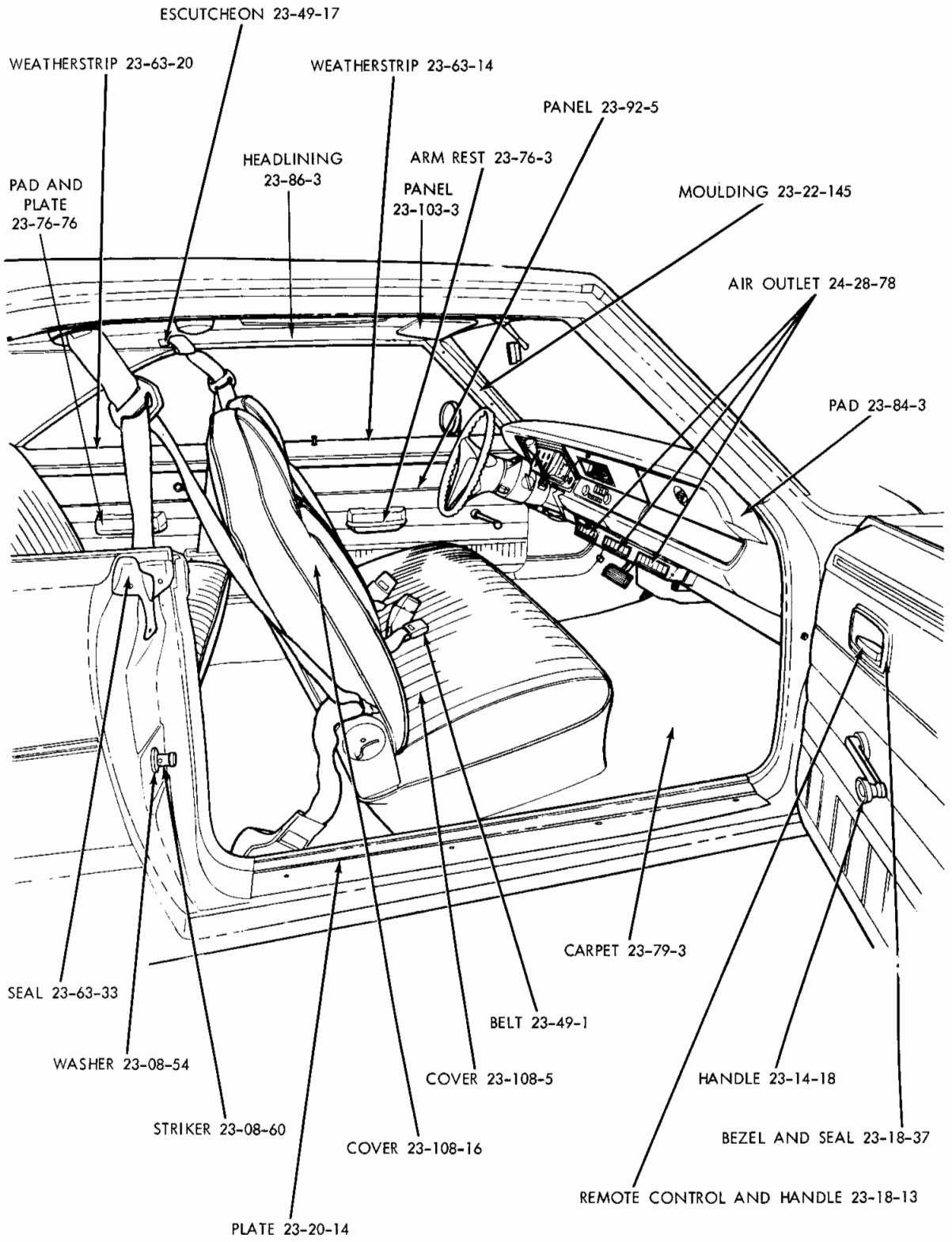

FRONT INTERIOR - DART SWINGER L-H 2 DOOR HARDTOP

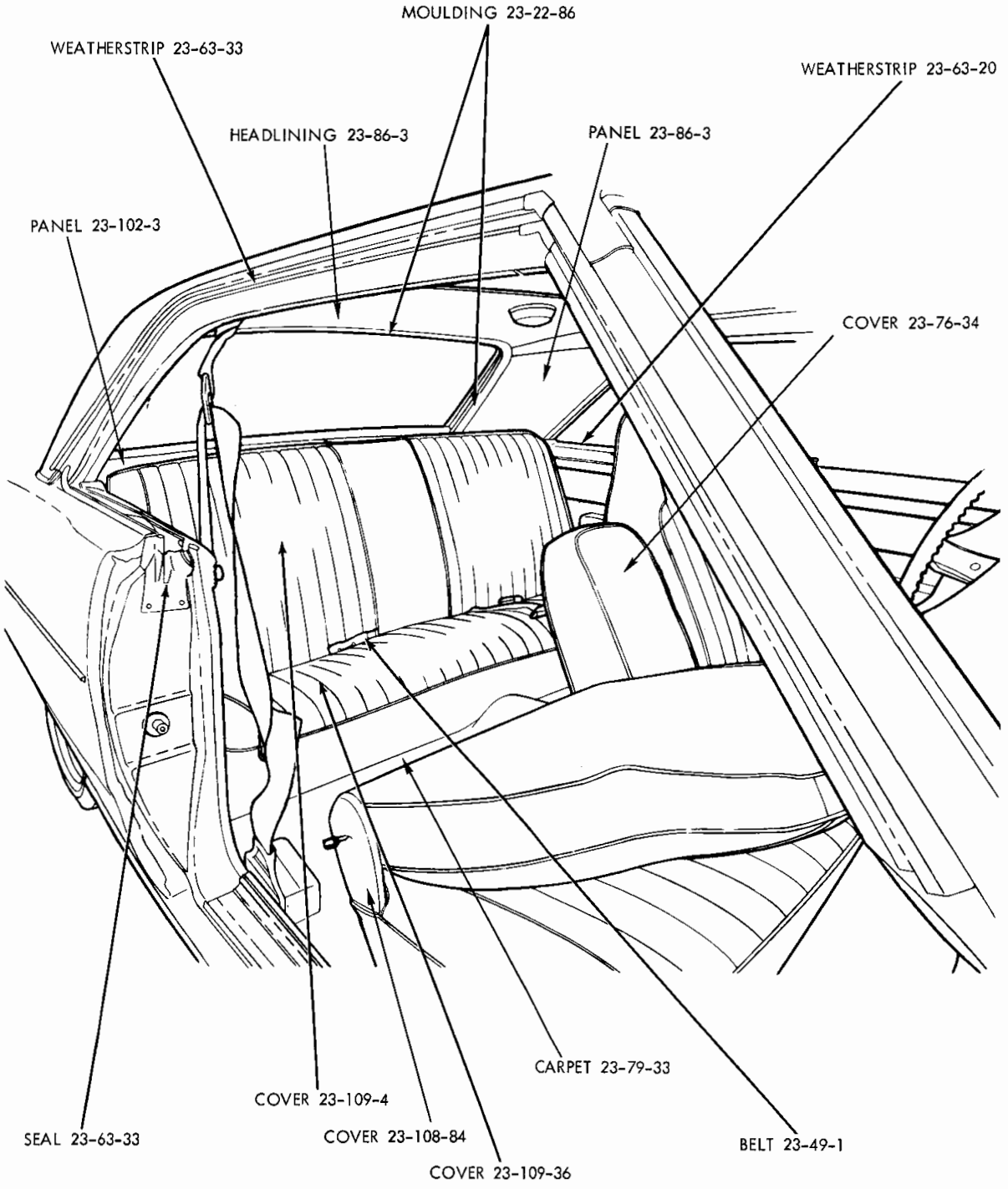

19a4785 A

REAR INTERIOR - DART SWINGER L-H 2 DOOR HARDTOP

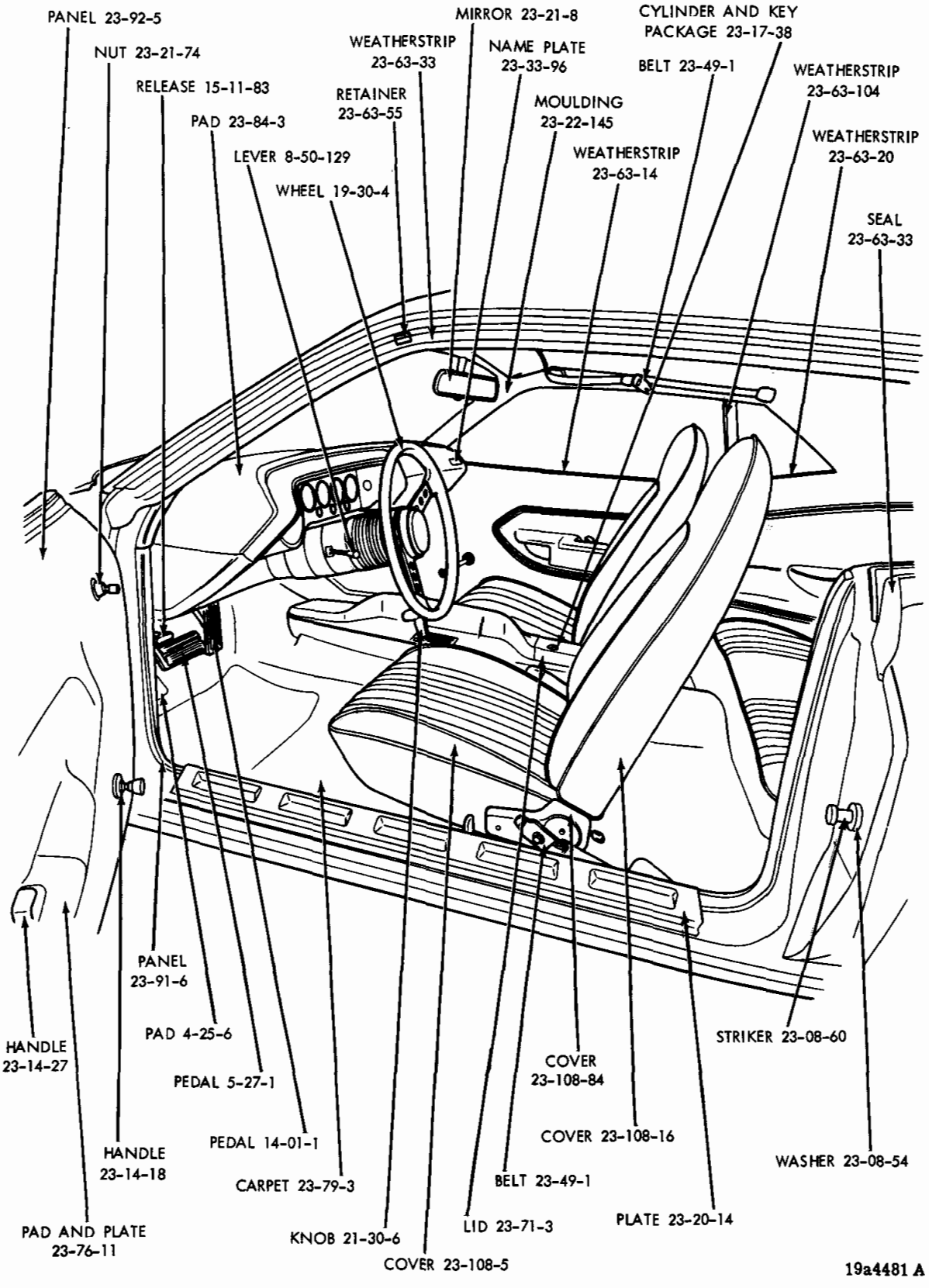

FRONT INTERIOR - BARRACUDA B-H 2 DOOR HARDTOP

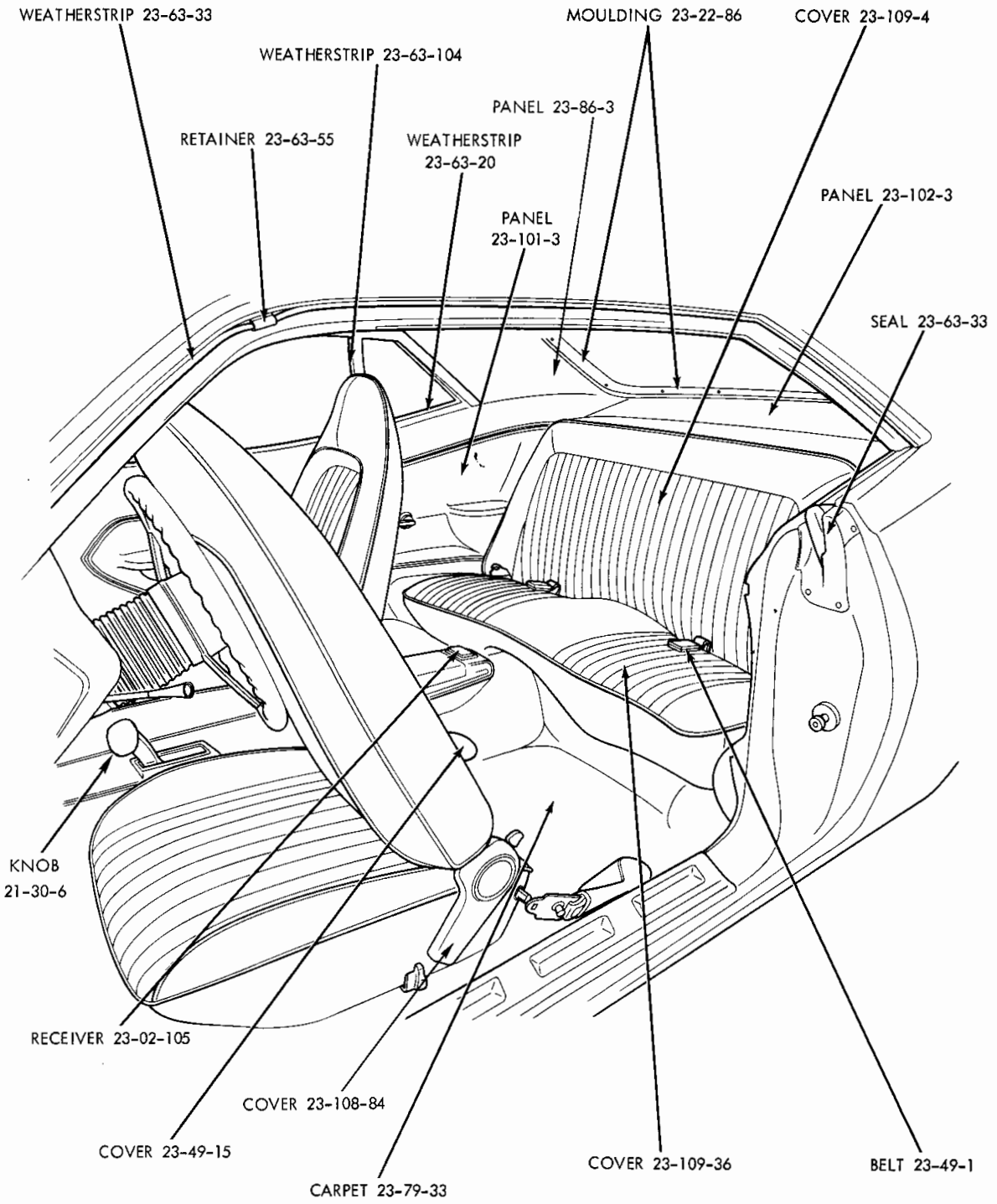

19a4482 B

REAR INTERIOR - BARRACUDA B-H 2 DOOR HARDTOP

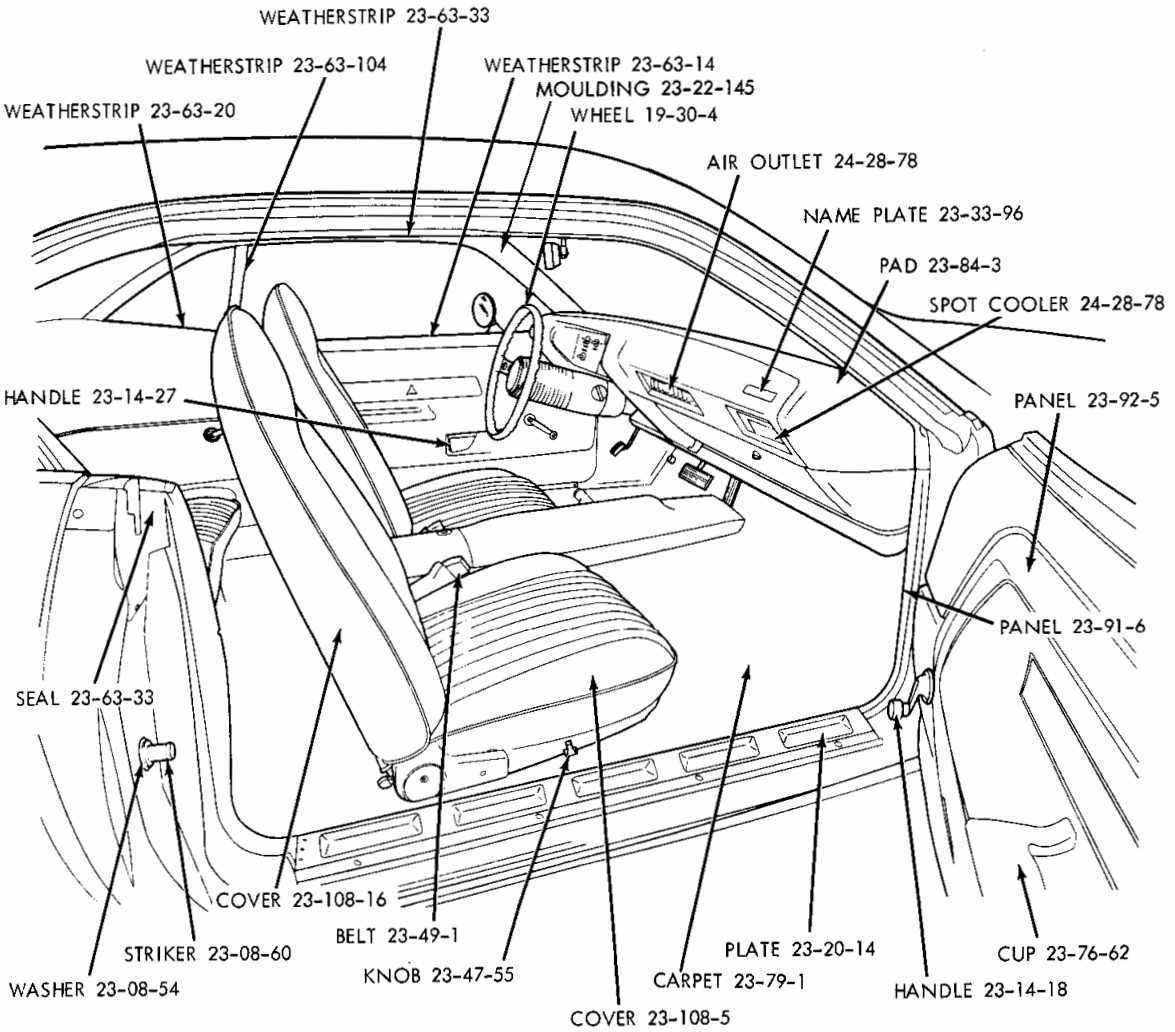

19a4786A

FRONT INTERIOR - CHALLENGER J-H 2 DOOR HARDTOP

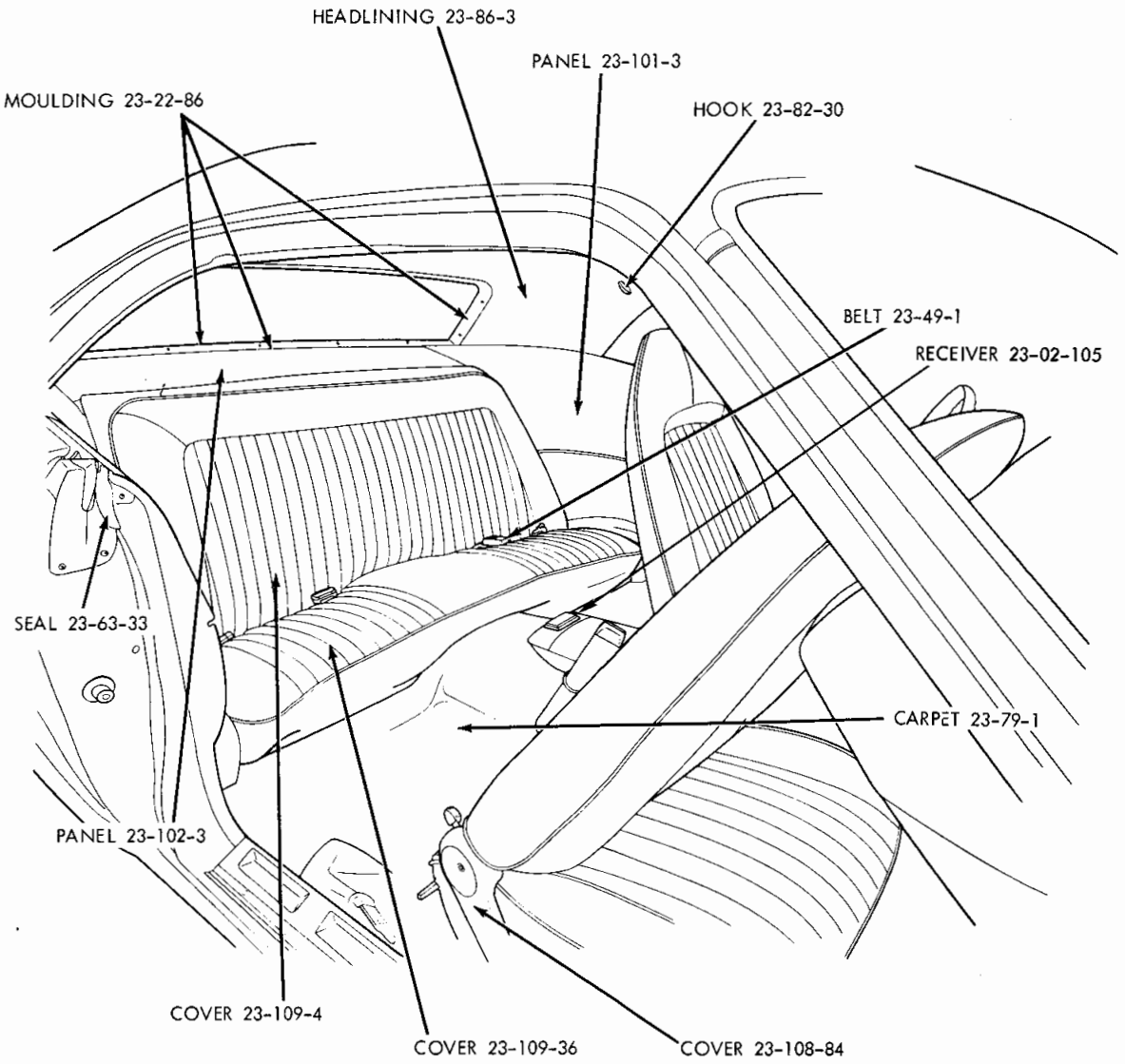

19a4787A

REAR INTERIOR - CHALLENGER J-H 2 DOOR HARDTOP

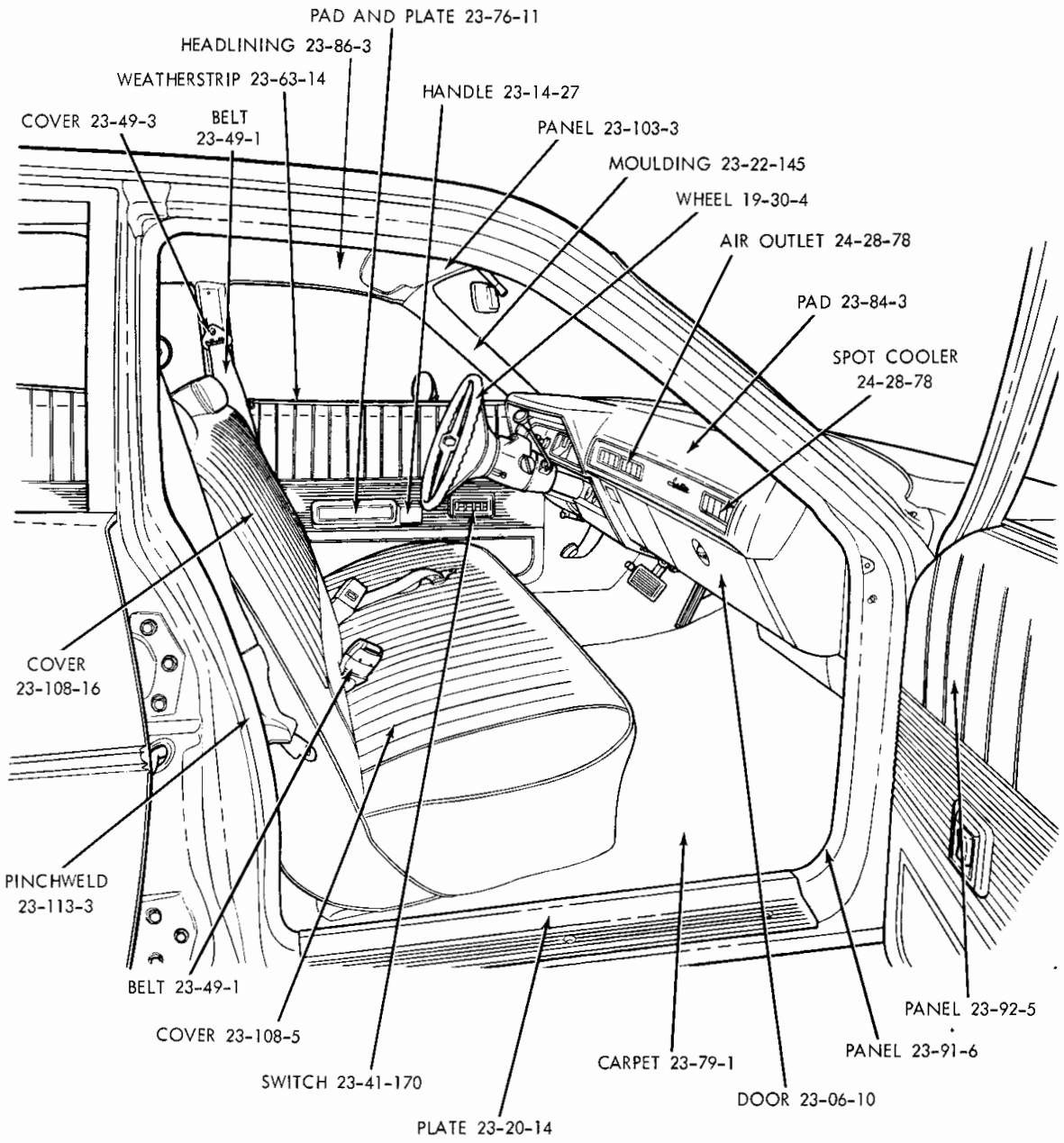

19a4755A

FRONT INTERIOR - SATELLITE R-L 4 DOOR SEDAN

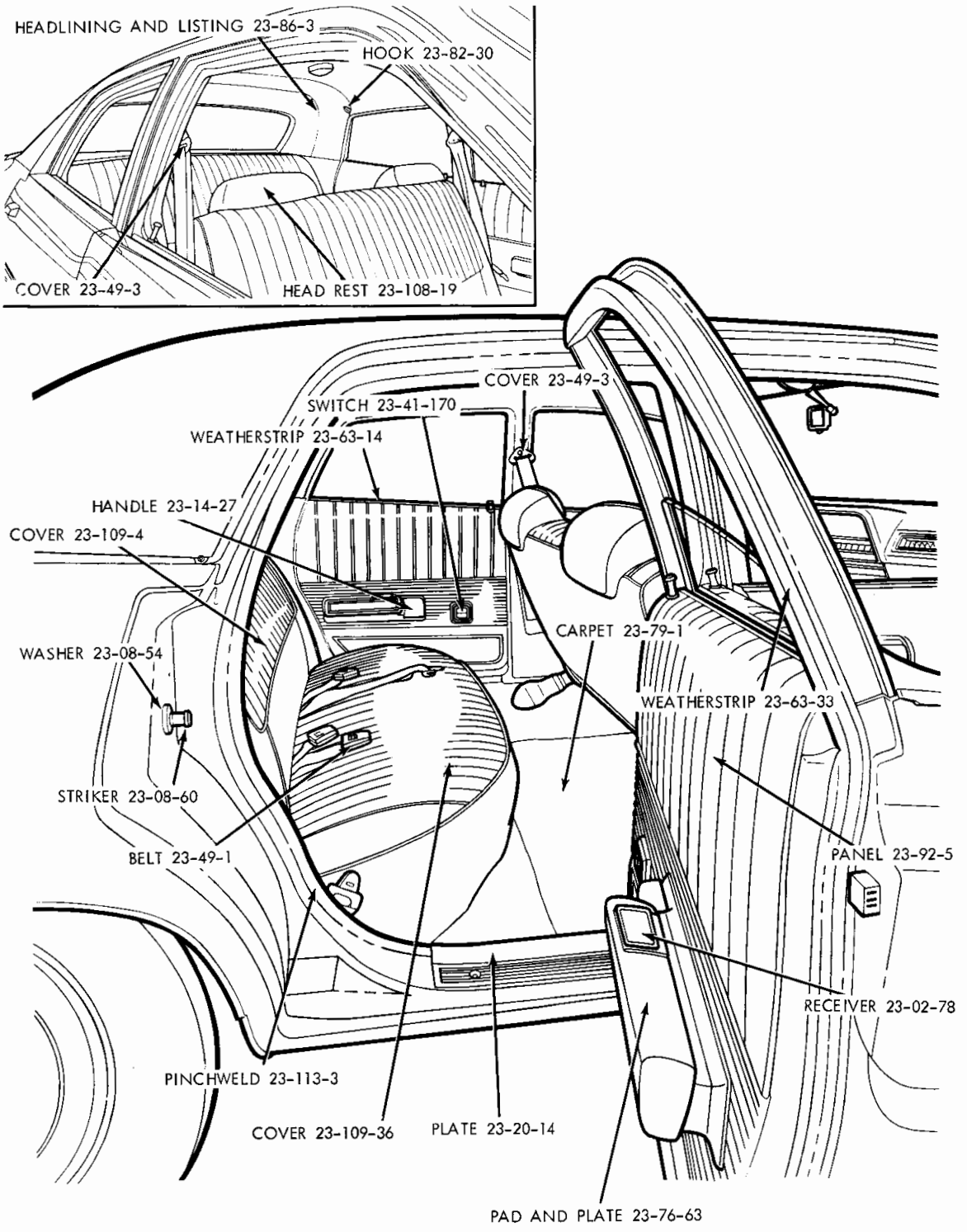

19a4756

REAR INTERIOR - SATELLITE R-L 4 DOOR SEDAN

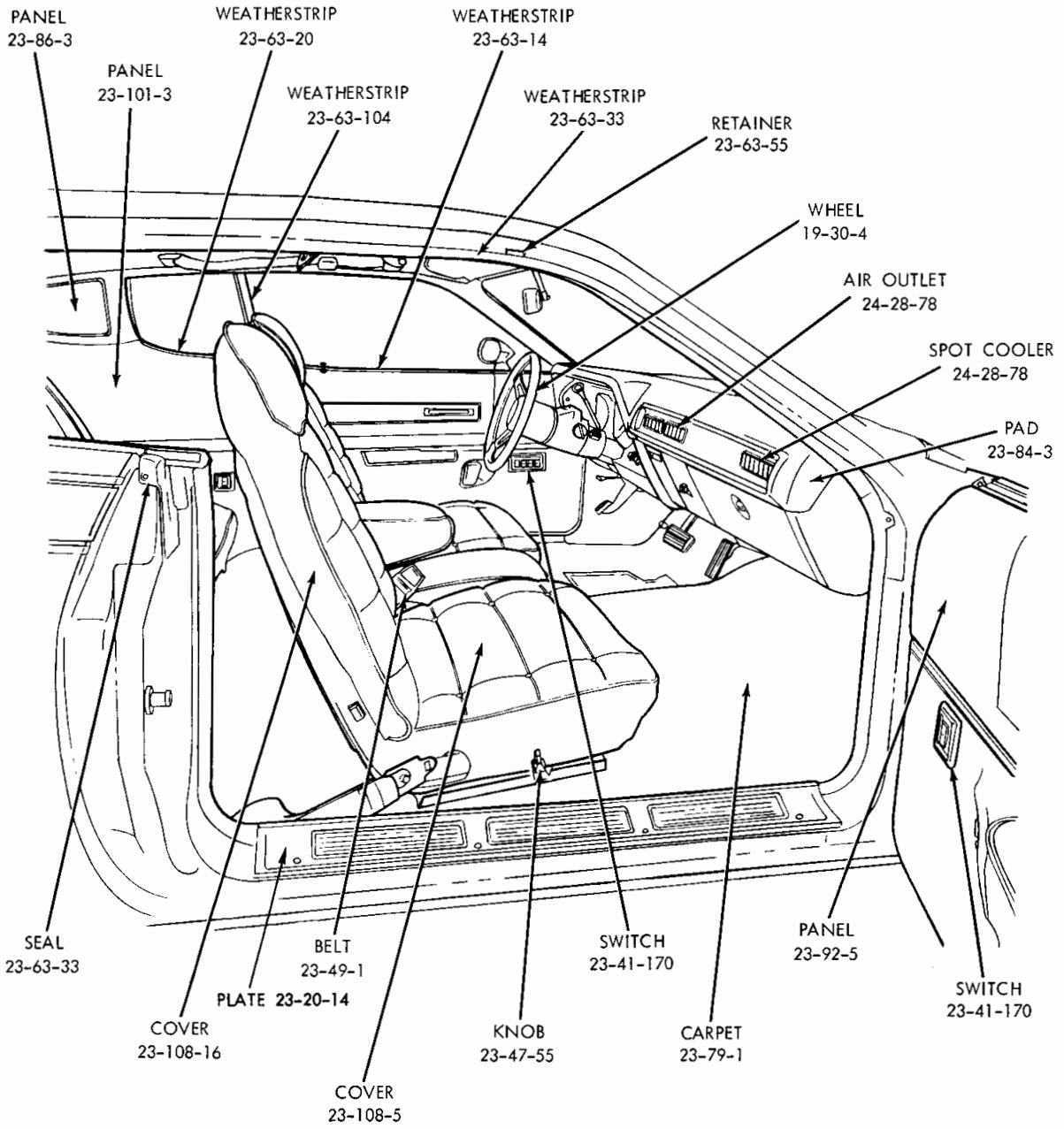

19a4788A

FRONT INTERIOR - ROAD RUNNER R-M 2 DOOR SEDAN

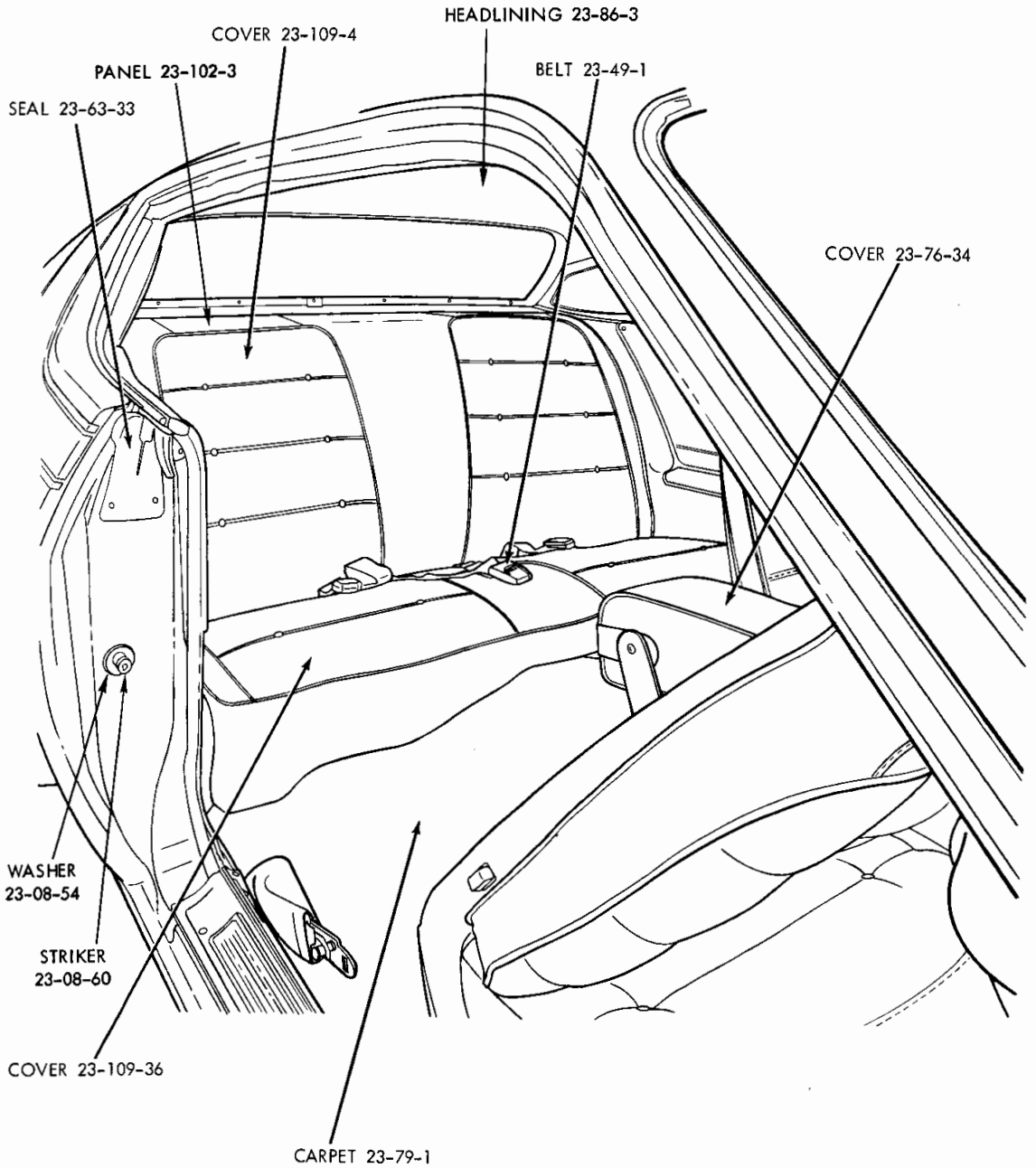

19a4789A

REAR INTERIOR - ROAD RUNNER R-M 2 DOOR SEDAN

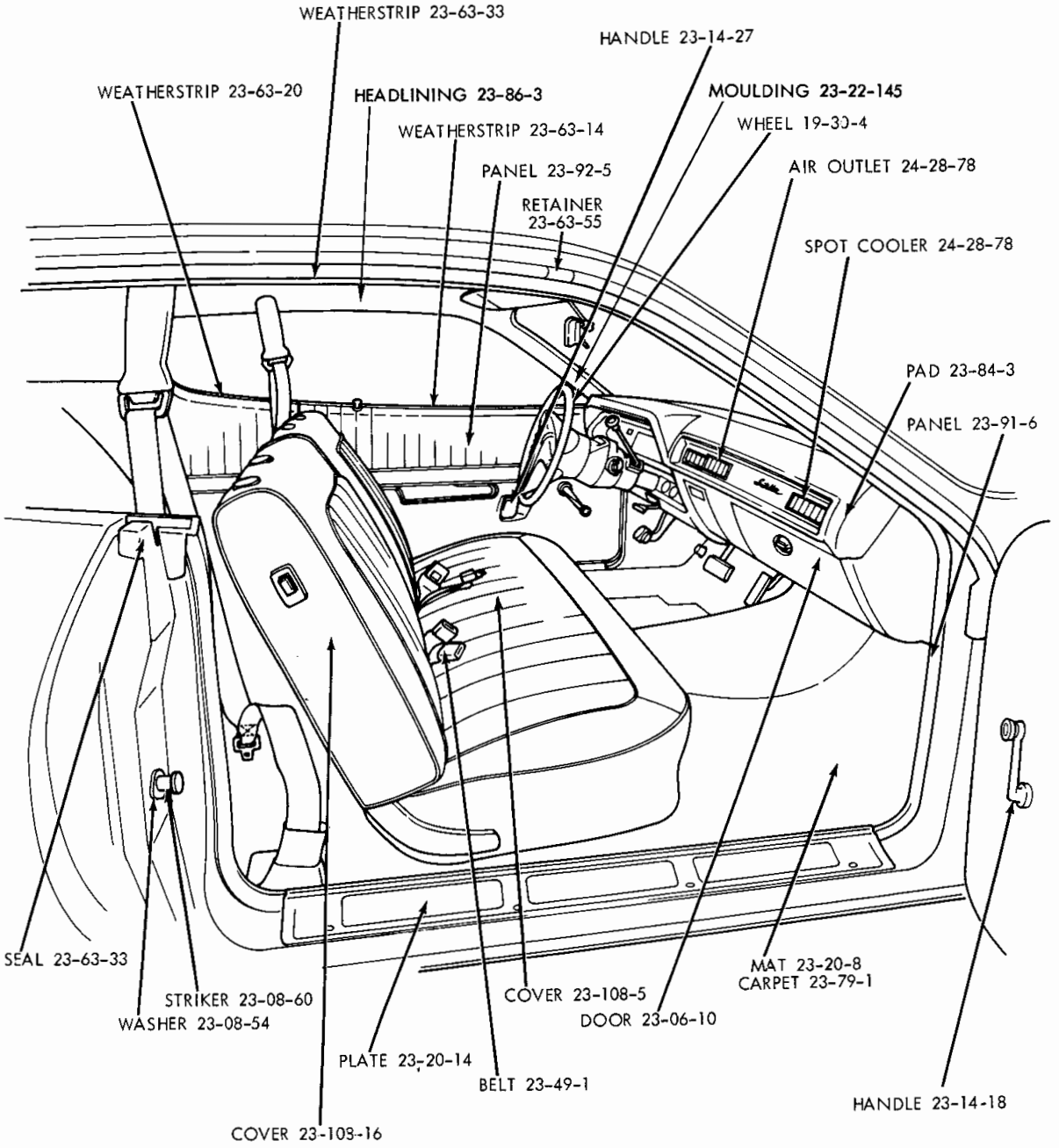

19a4790 A

FRONT INTERIOR - SATELLITE SEBRING R-H 2 DOOR HARDTOP

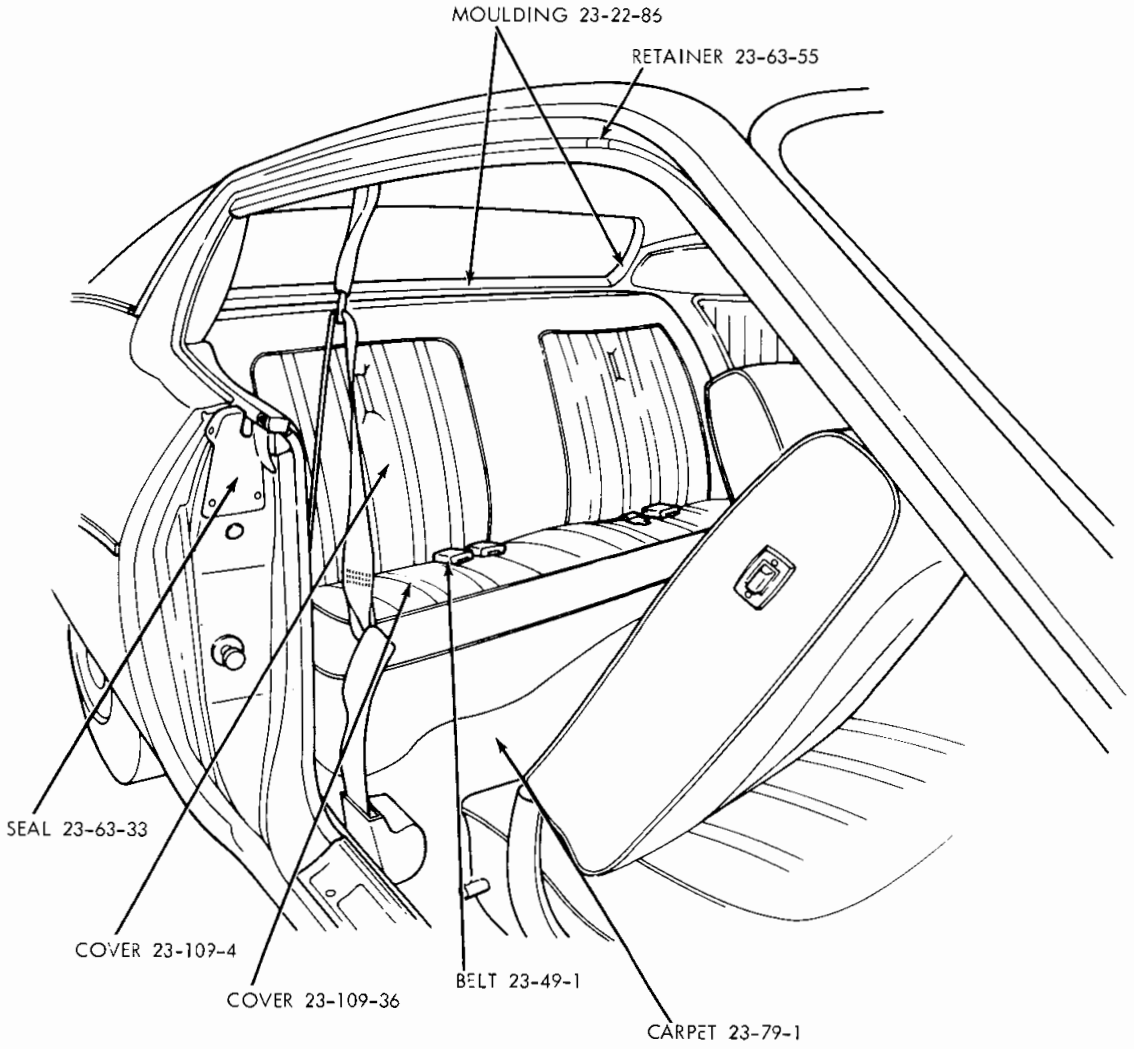

19a4791

REAR INTERIOR - SATELLITE SEBRING R-H 2 DOOR HARDTOP

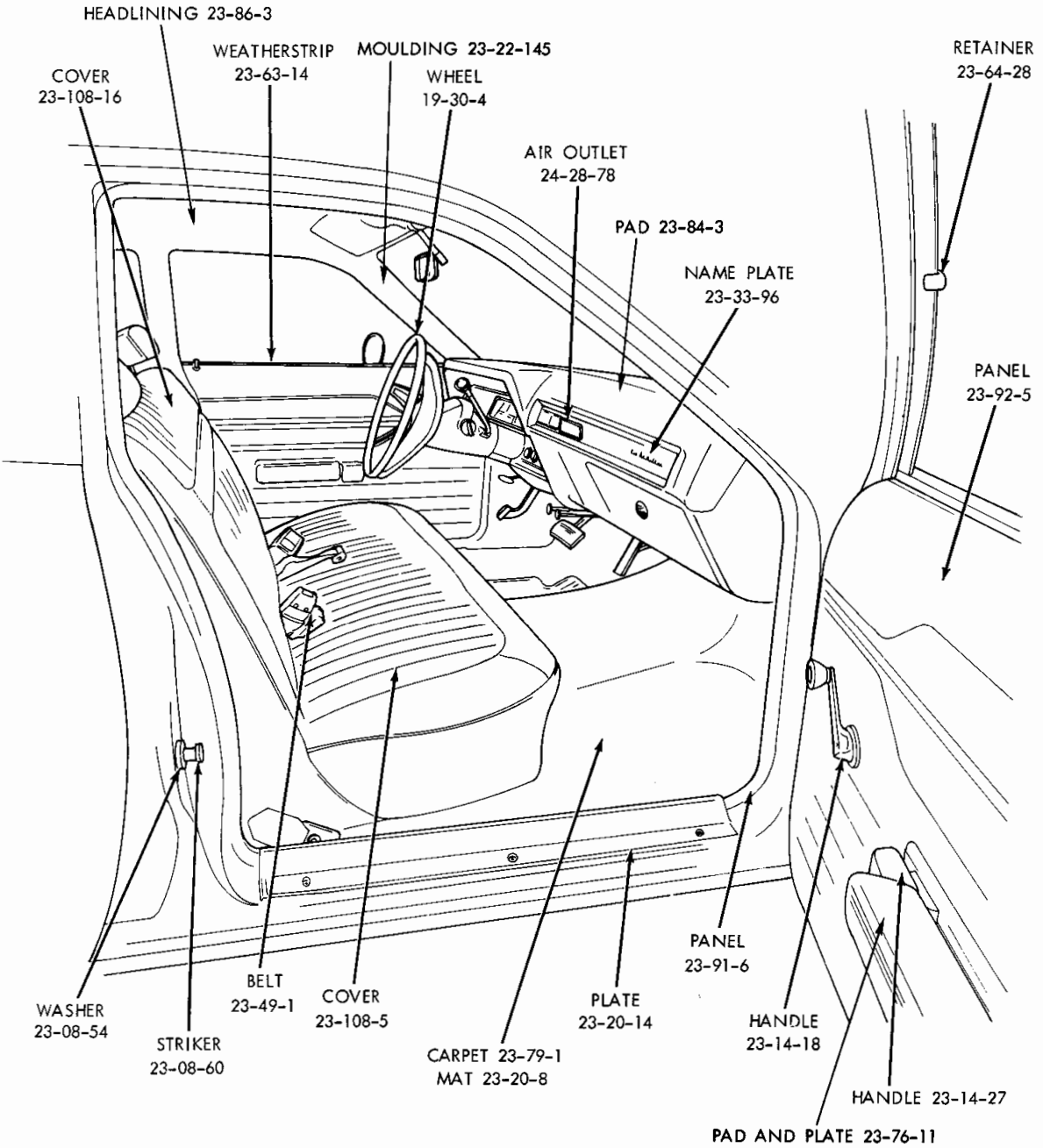

19a4792 A

FRONT INTERIOR - CORONET CUSTOM W-H 4 DOOR SEDAN

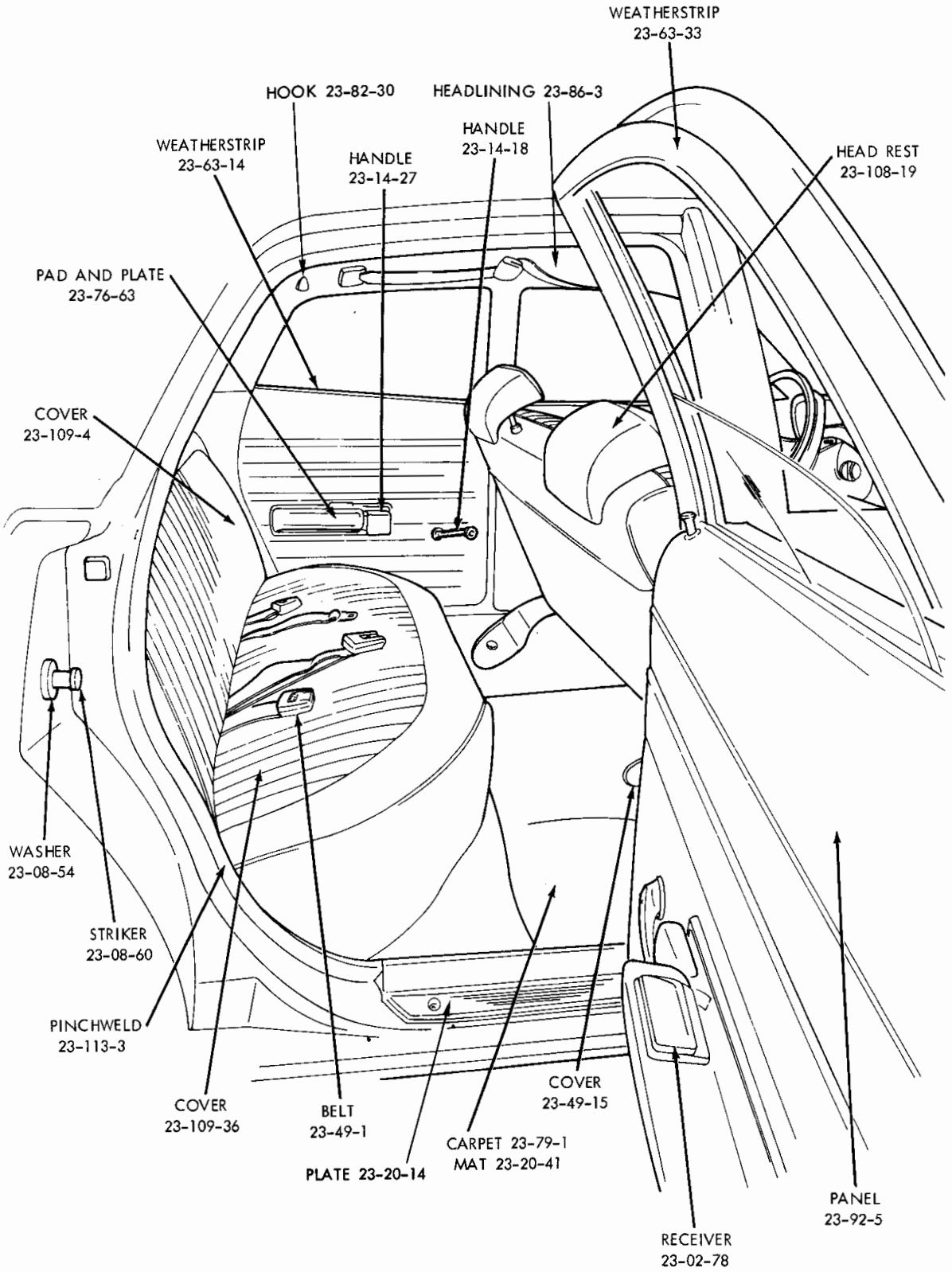

19a4793 A

REAR INTERIOR - CORONET CUSTOM W-H 4 DOOR SEDAN

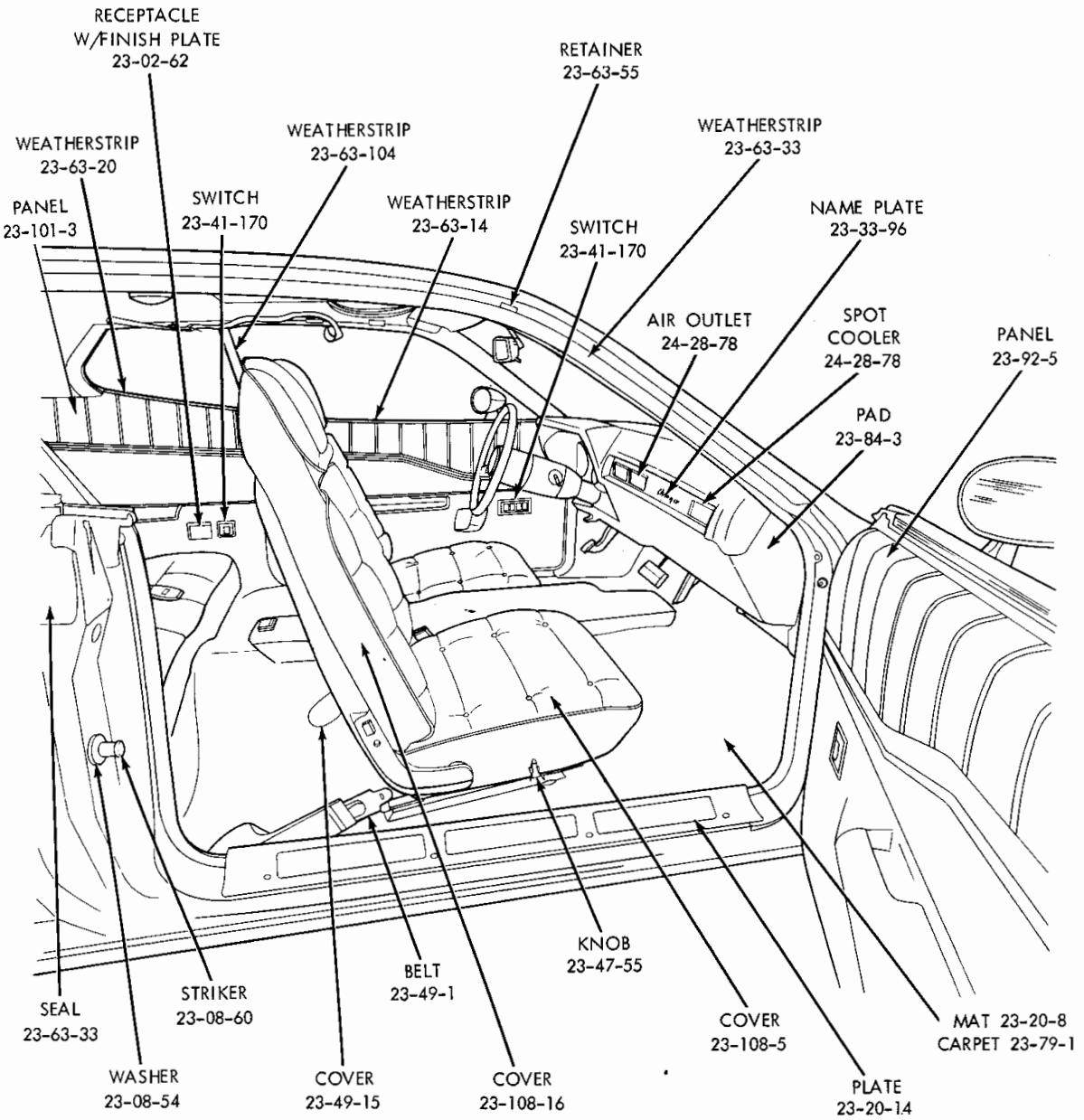

19a4794 A

FRONT INTERIOR - CHARGER RALLYE W-H 2 DOOR HARDTOP

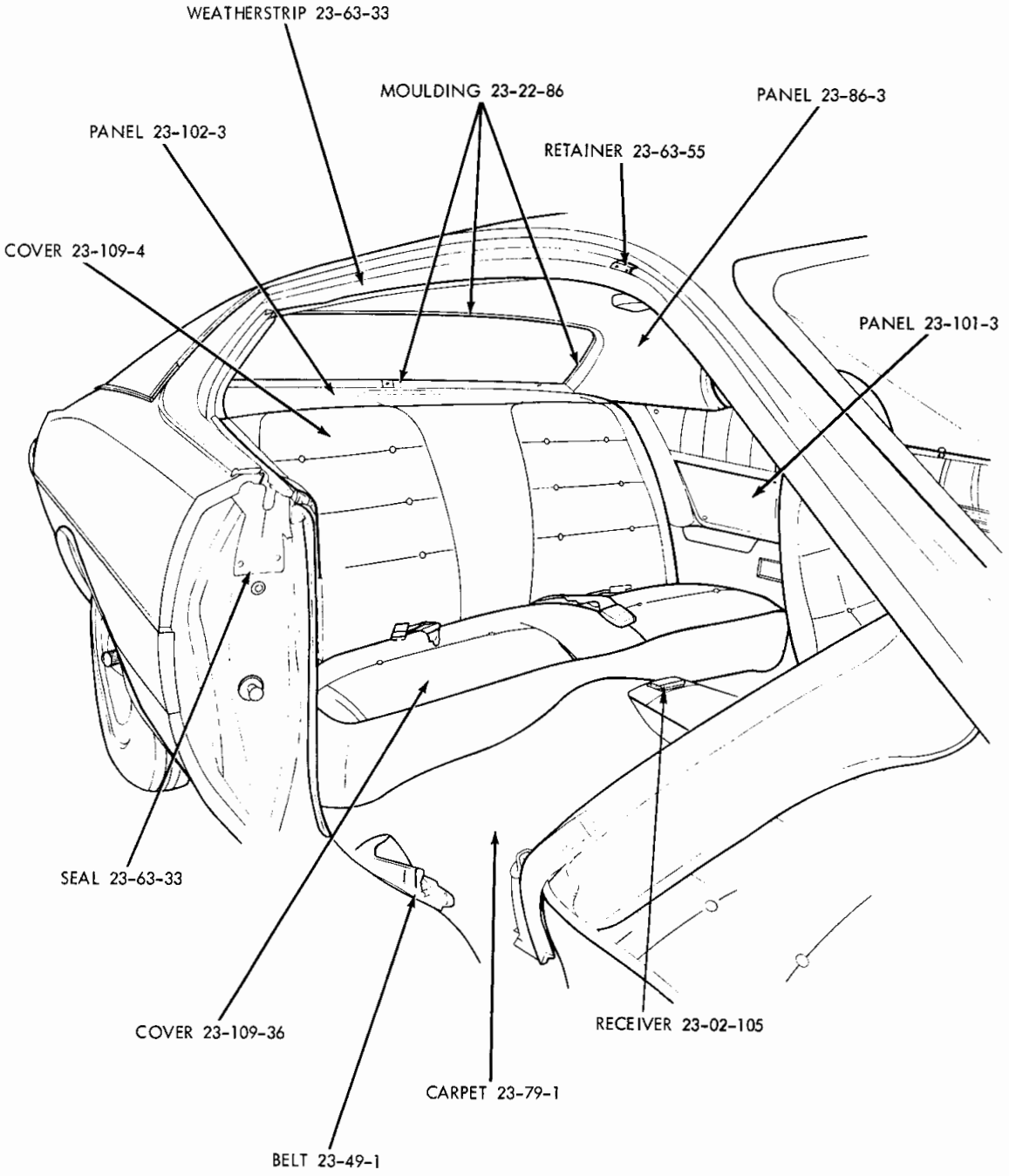

19a4795 A

REAR INTERIOR - CHARGER RALLYE W-H 2 DOOR HARDTOP

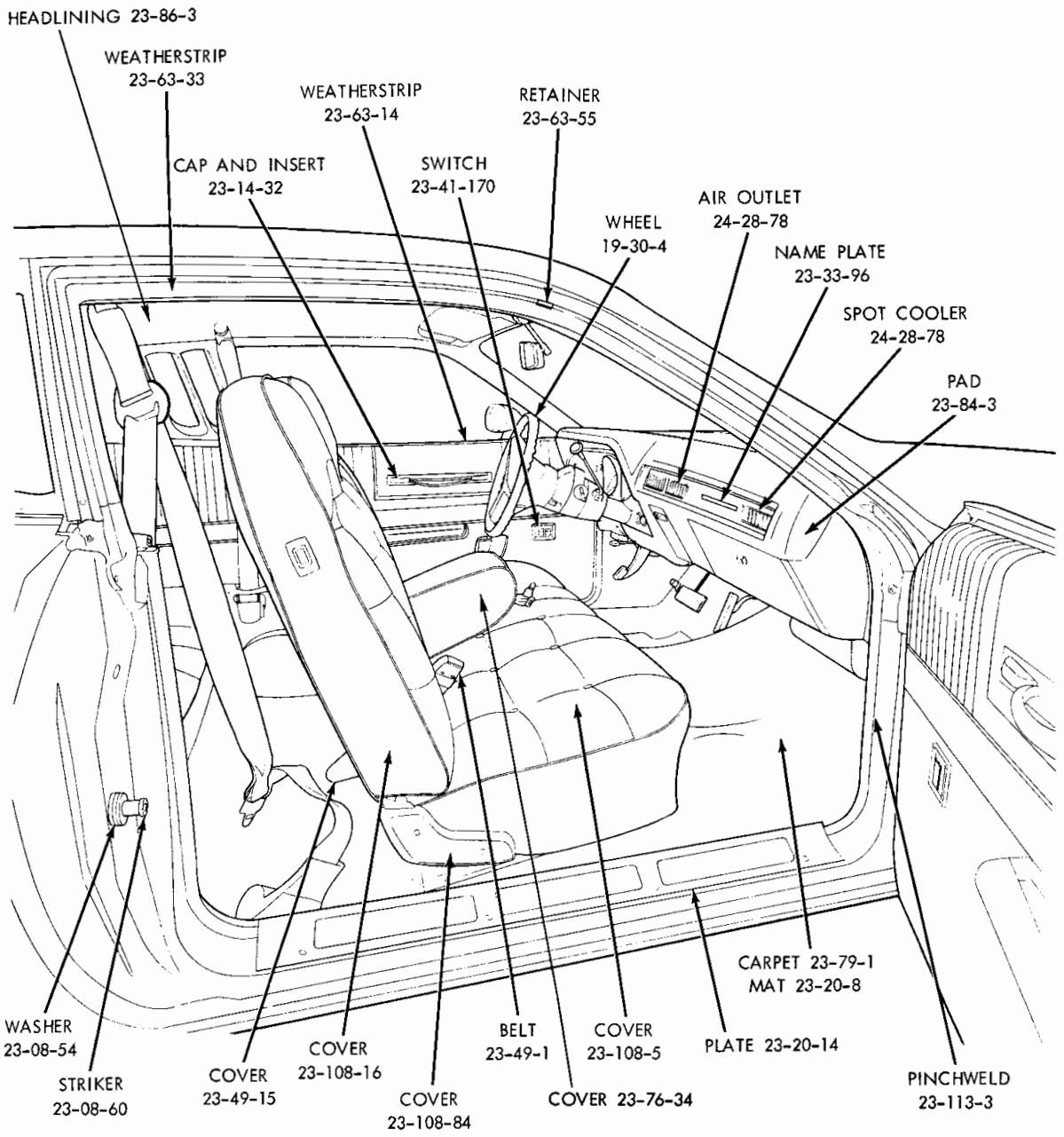

19a4796 A

FRONT INTERIOR - CHARGER SE W-P FASTBACK

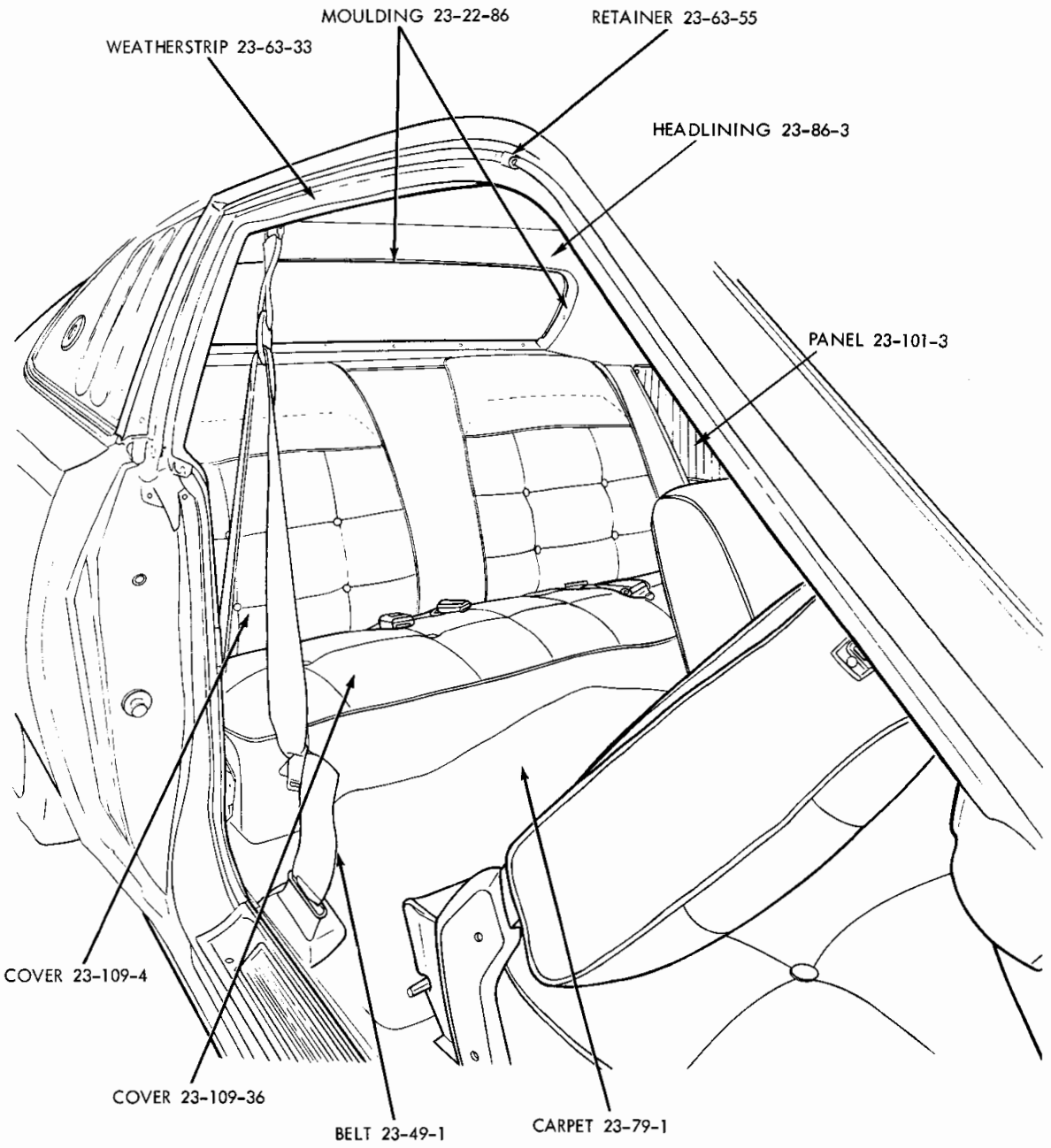

19a4797A

REAR INTERIOR - CHARGER SE W-P FASTBACK

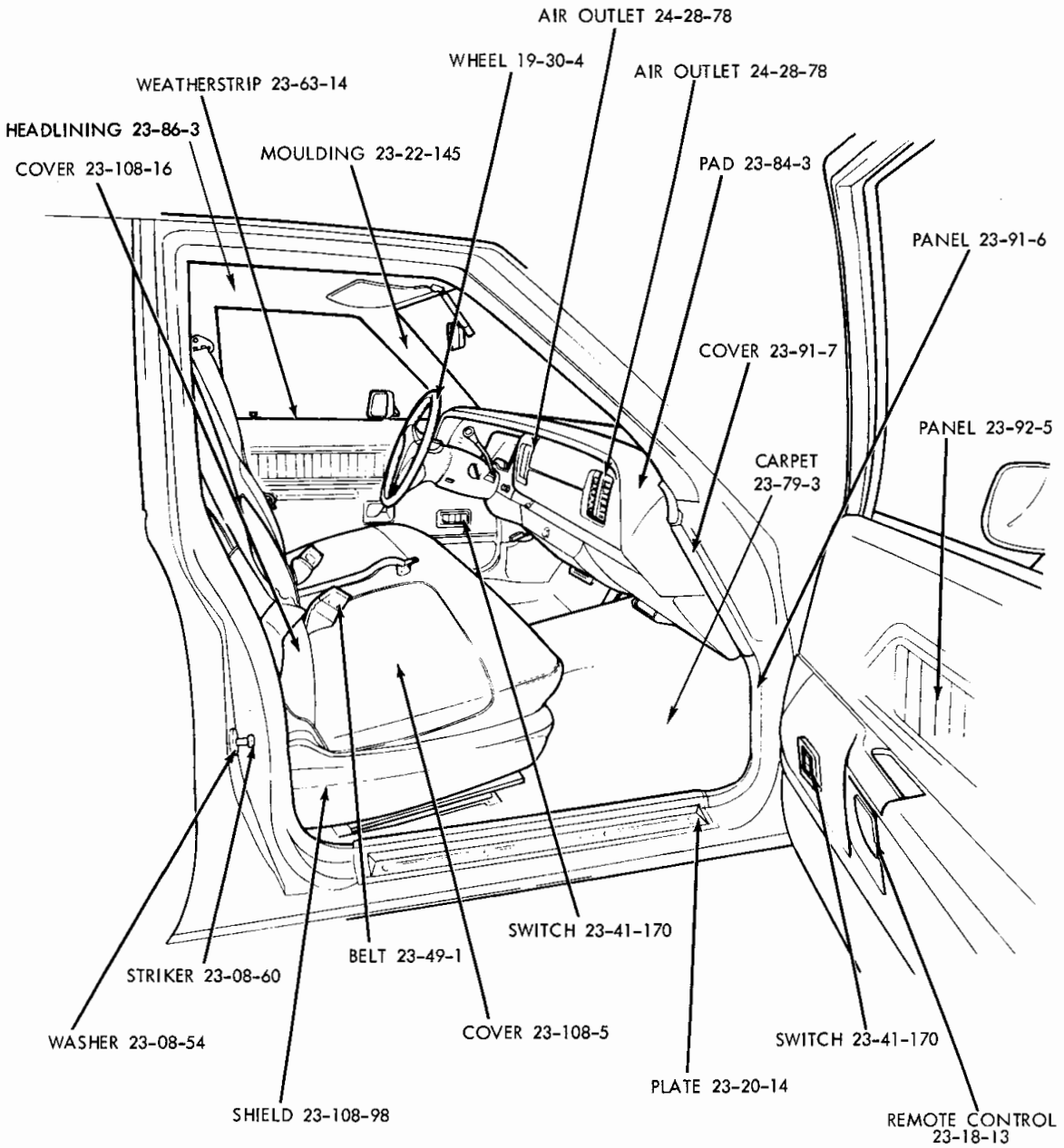

19a4759 A

FRONT INTERIOR - PLYMOUTH FURY SUBURBAN P-M

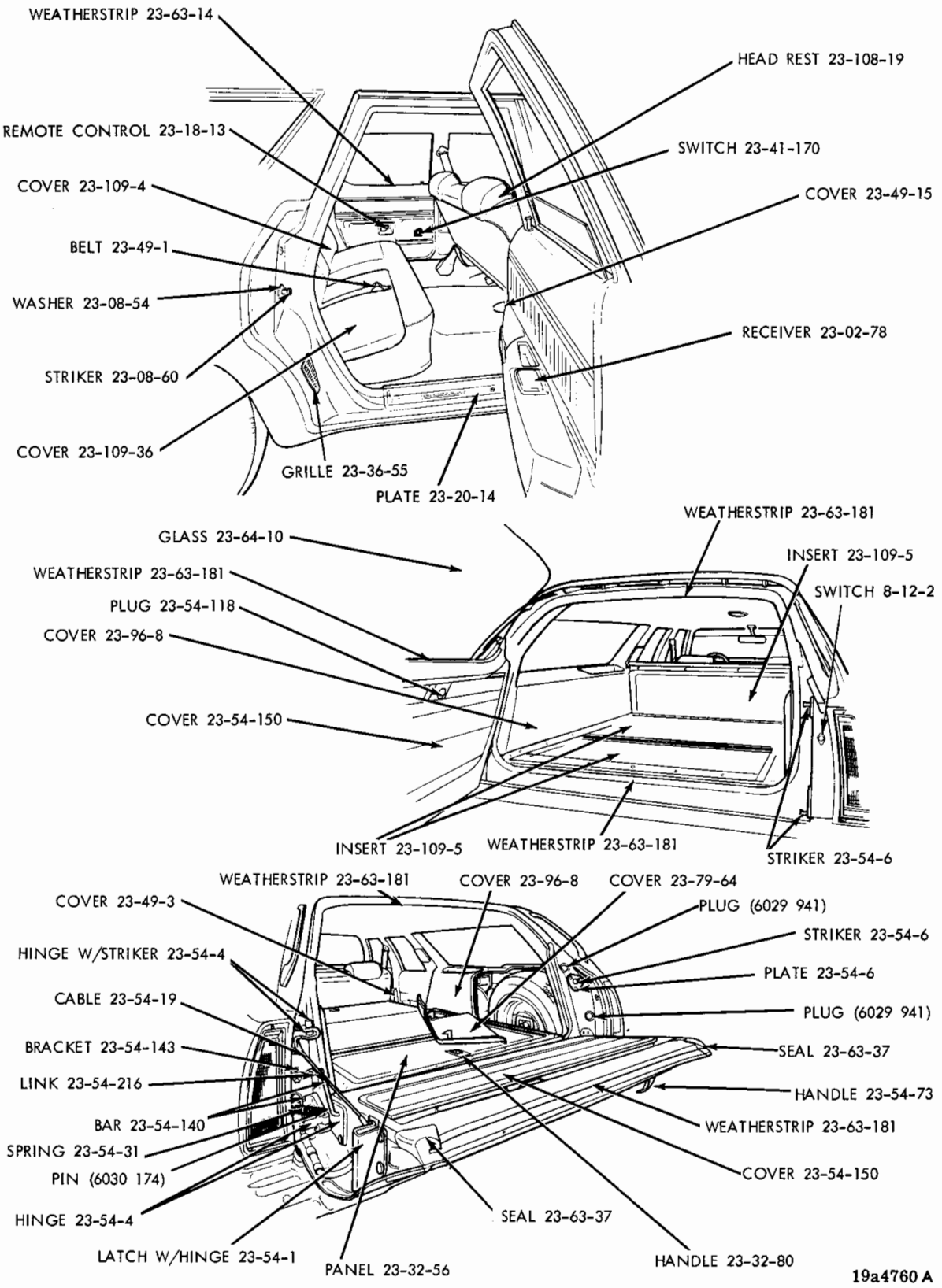

REAR INTERIOR - PLYMOUTH FURY P-M SUBURBAN

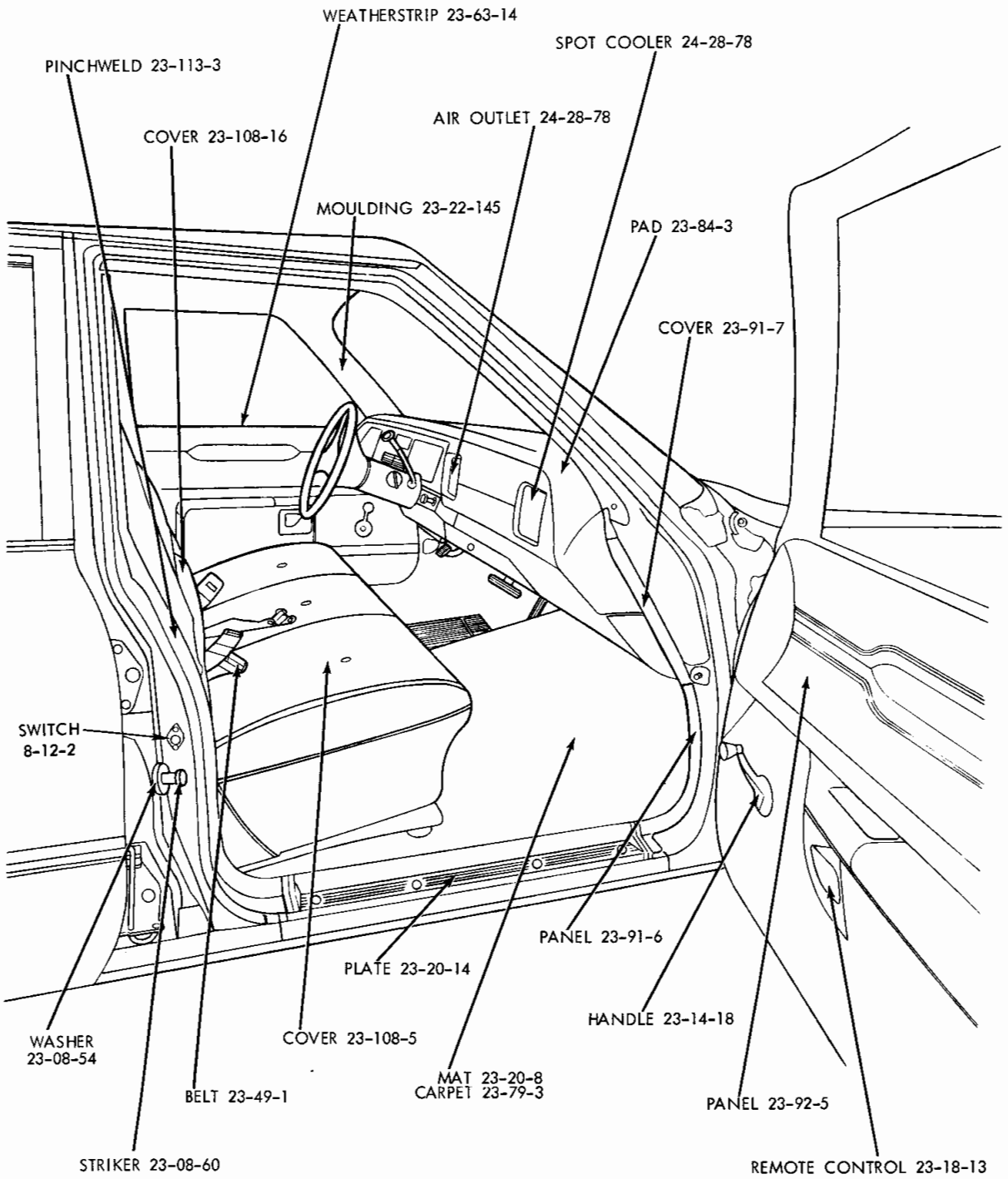

19a4798A

FRONT INTERIOR - PLYMOUTH FURY III P-H 4 DOOR SEDAN

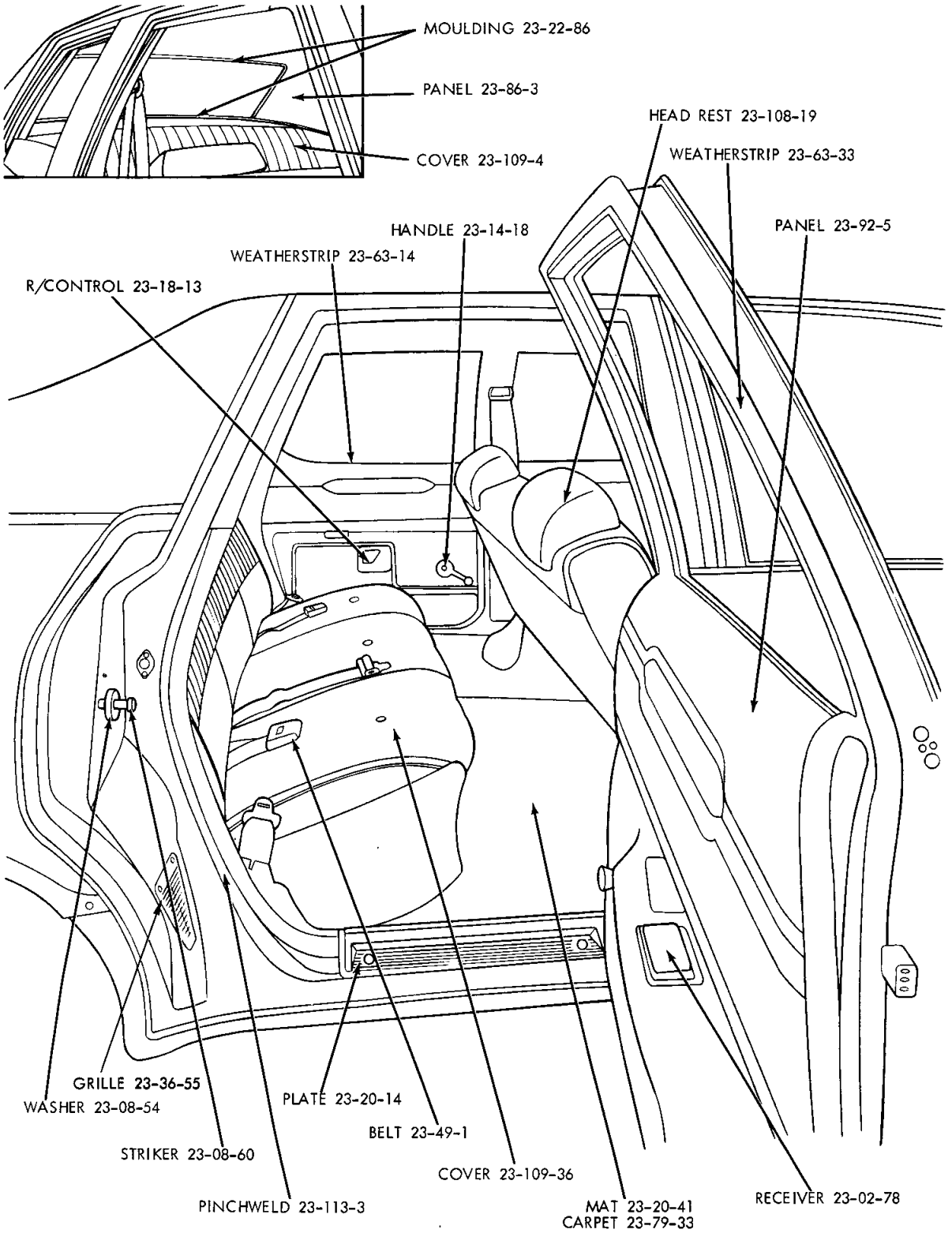

19a4799A

REAR INTERIOR - PLYMOUTH FURY III P-H 4 DOOR SEDAN

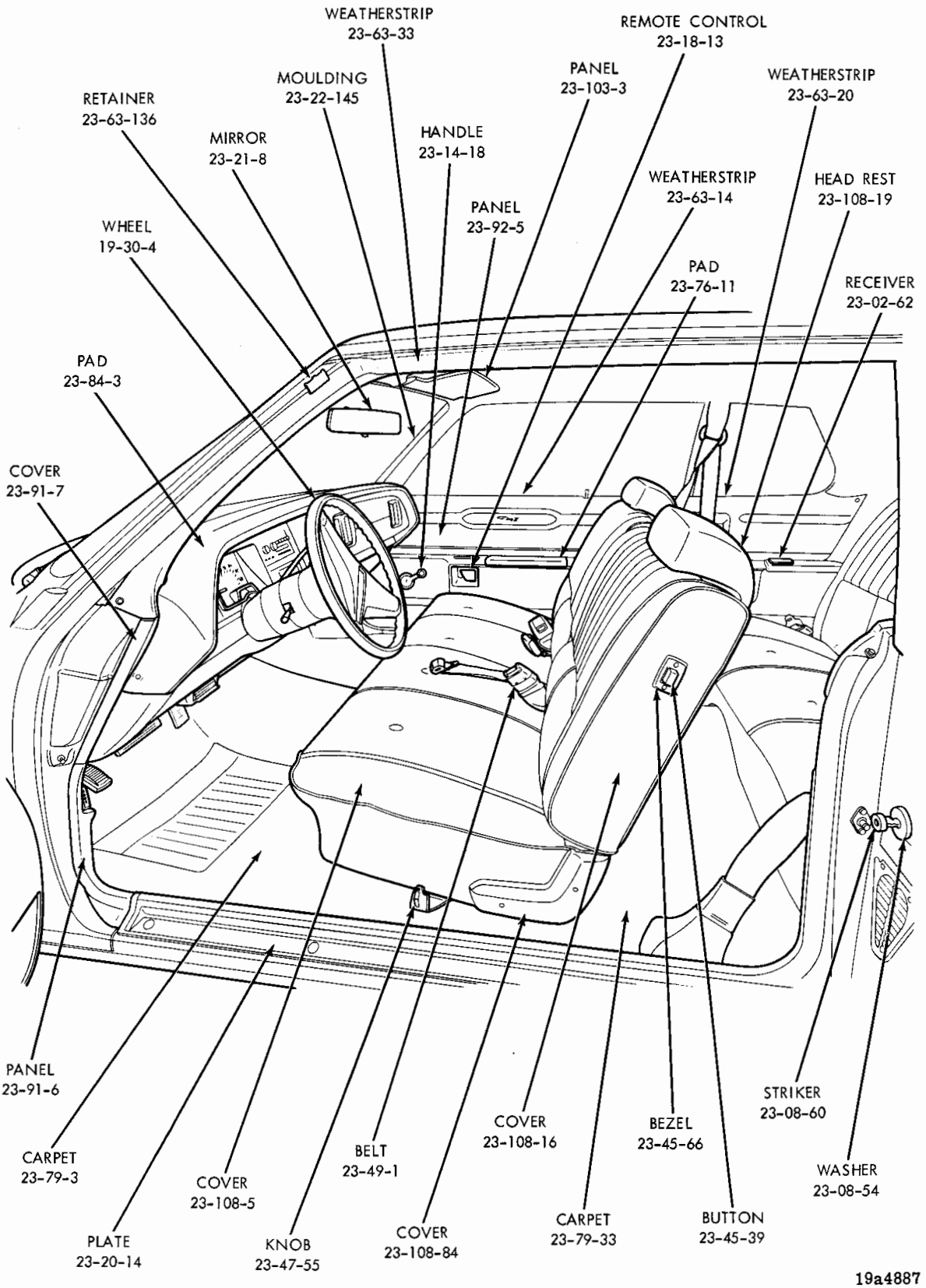

FRONT INTERIOR - PLYMOUTH FURY III P-H 2 DOOR HARDTOP

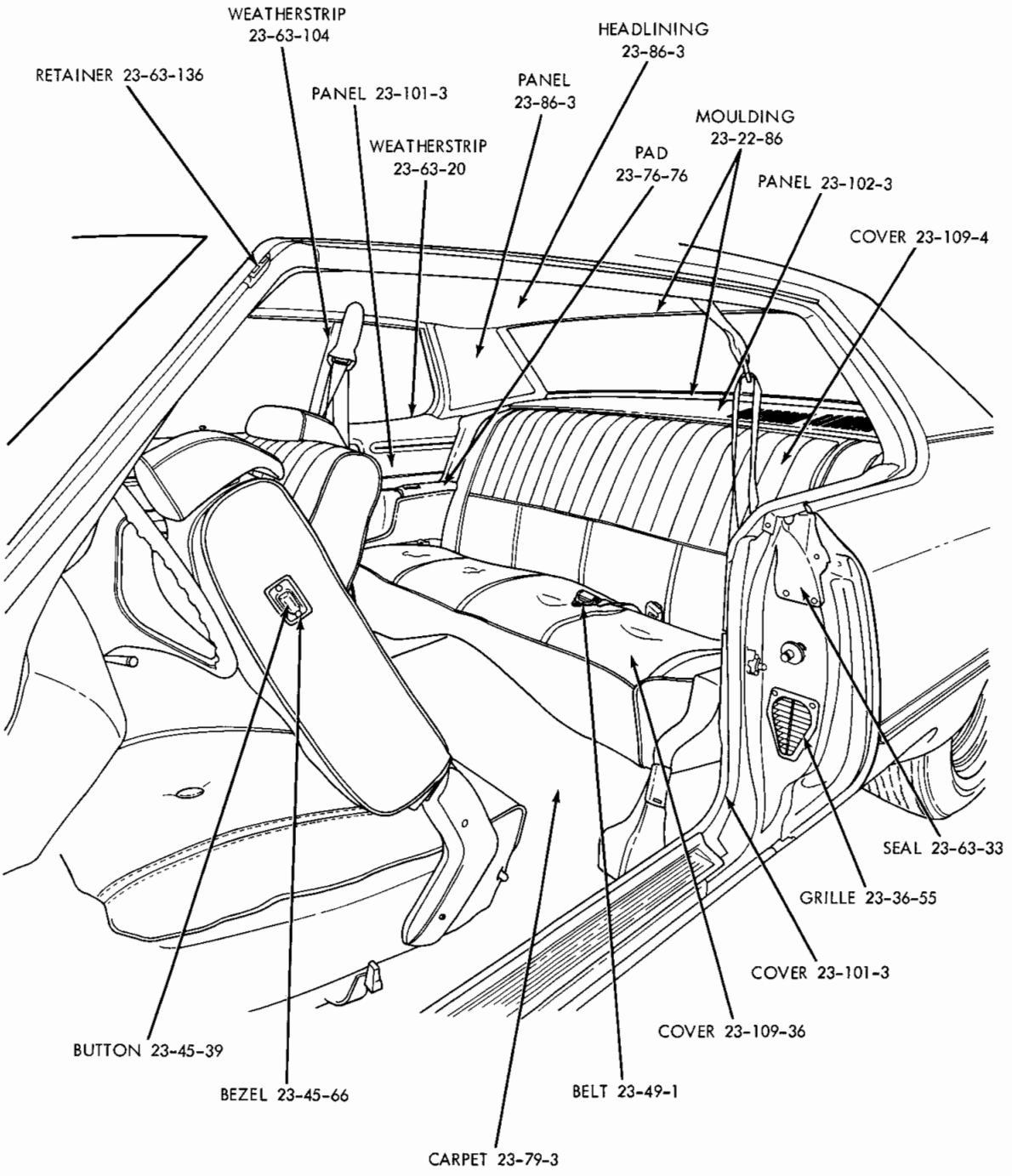

19a4888

REAR INTERIOR - PLYMOUTH FURY III P-H 2 DOOR HARDTOP

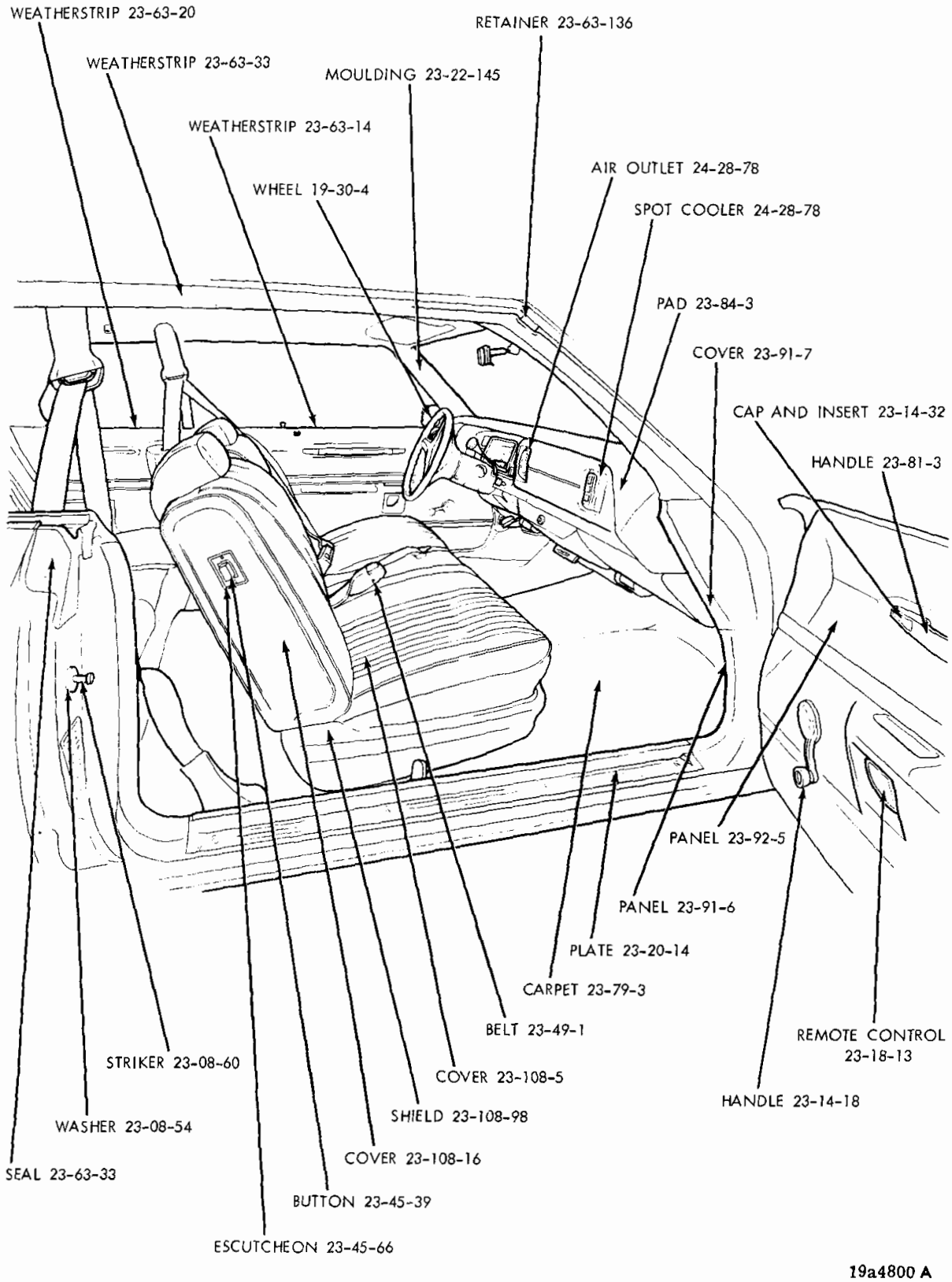

19a4800 A

FRONT INTERIOR - PLYMOUTH GRAN COUPE P-P 2 DOOR HARDTOP

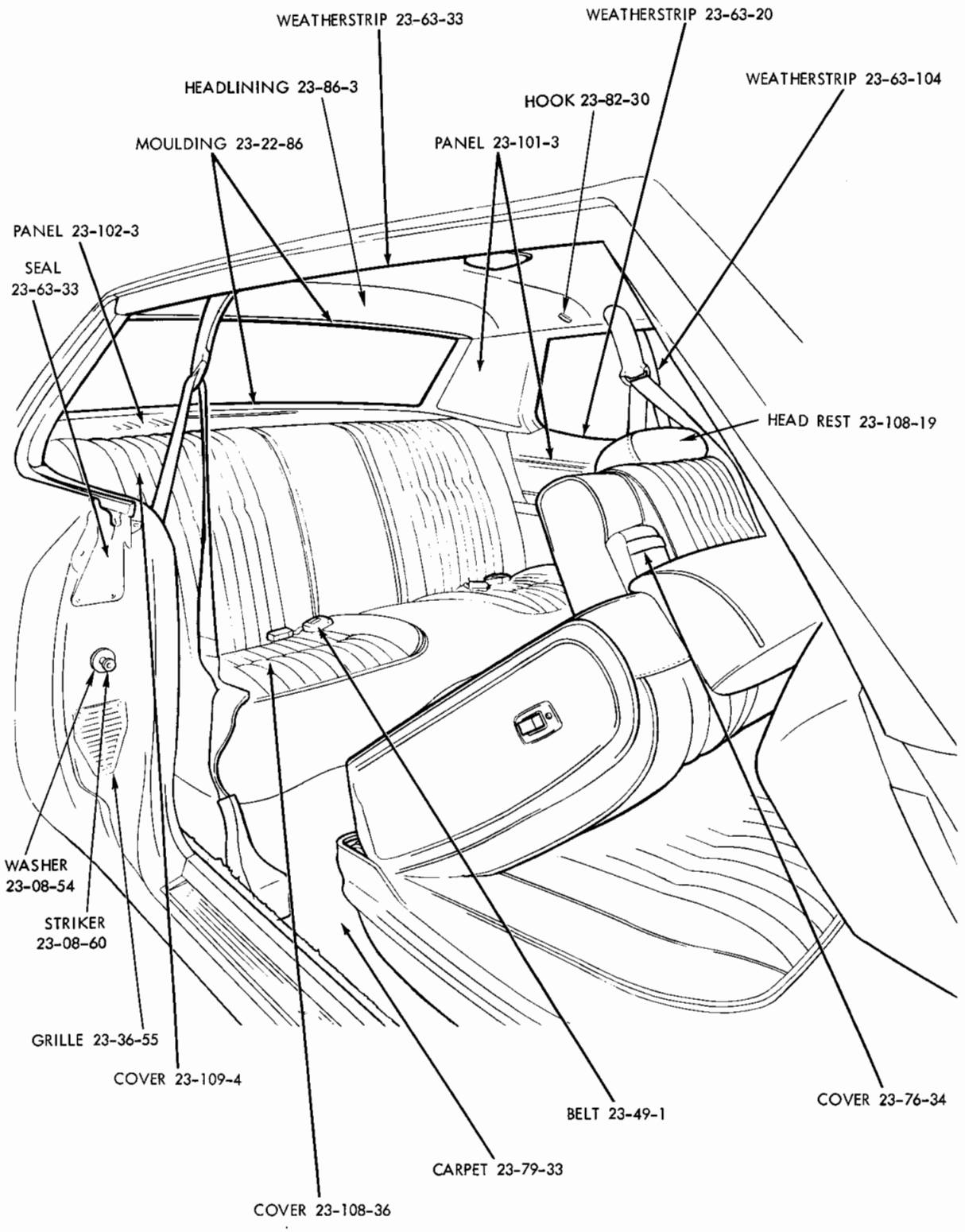

REAR INTERIOR - PLYMOUTH GRAN COUPE P-P 2 DOOR HARDTOP

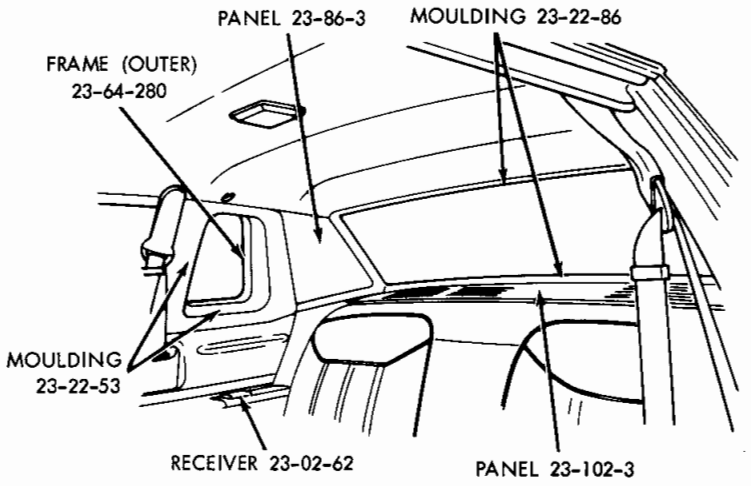

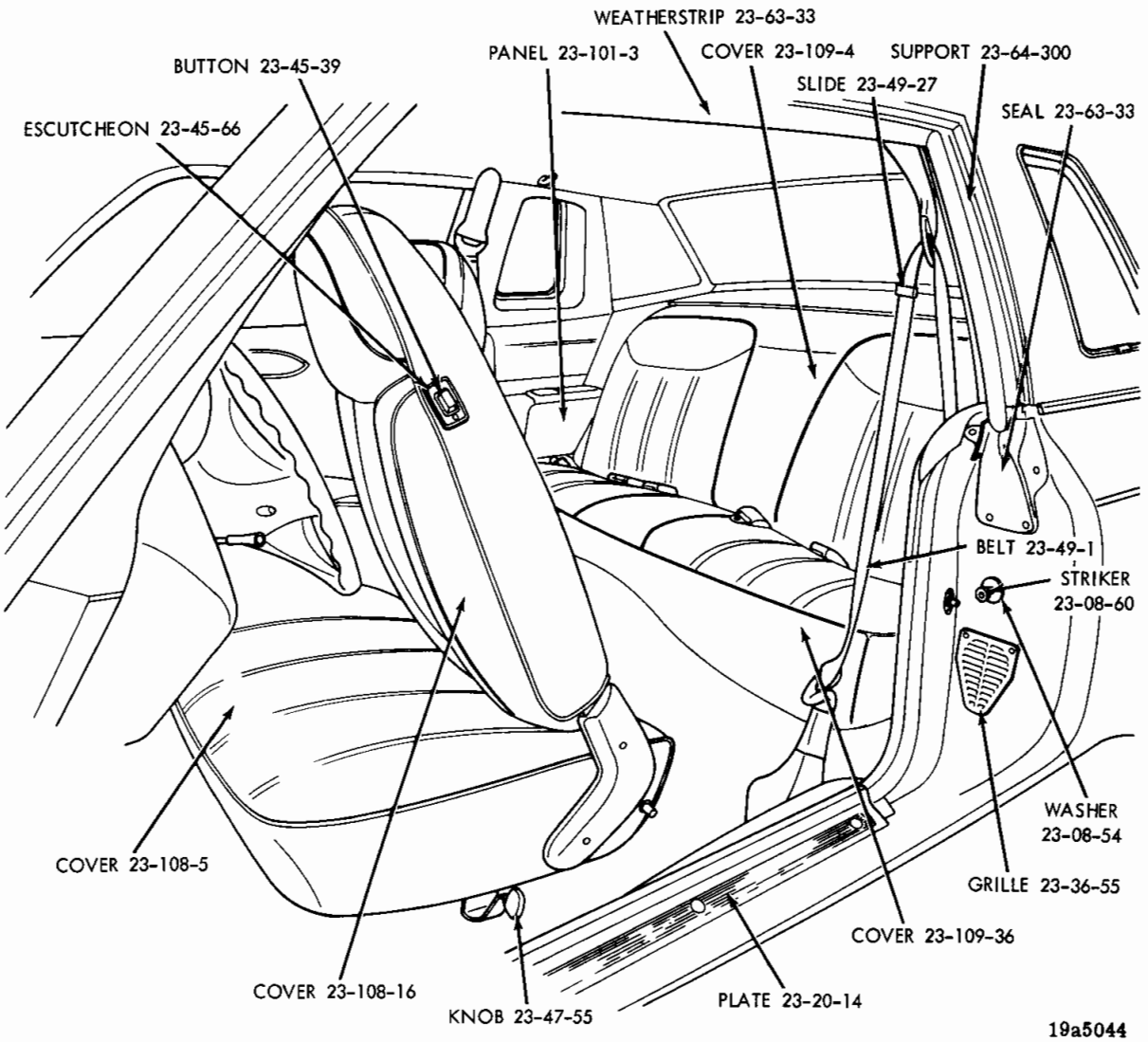

REAR INTERIOR - PLYMOUTH GRAN COUPE P-P
2 DOOR HARDTOP (WITH OPERA WINDOW)

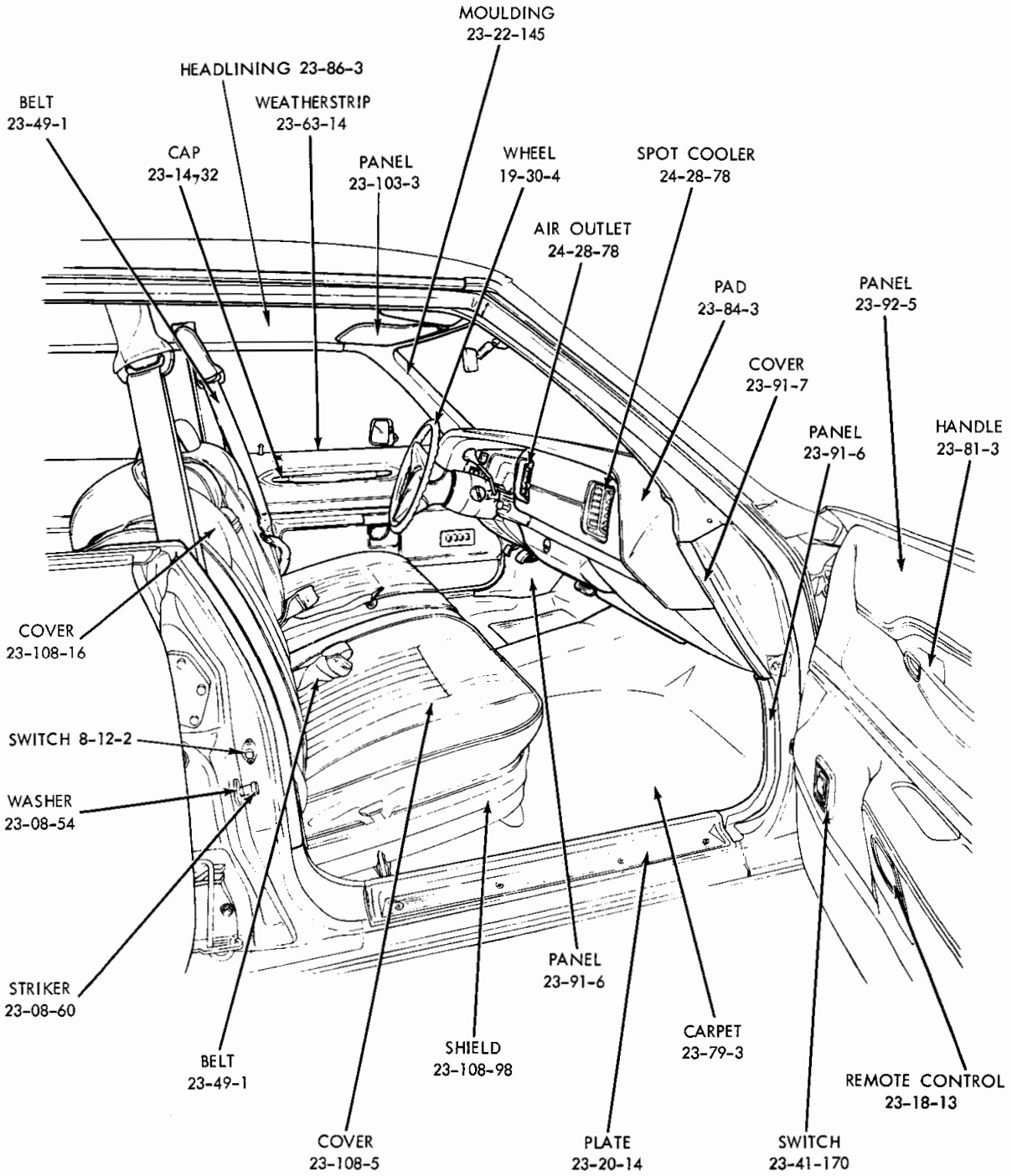

19a4757A

FRONT INTERIOR - PLYMOUTH GRAN SEDAN P-P 4 DOOR HARDTOP

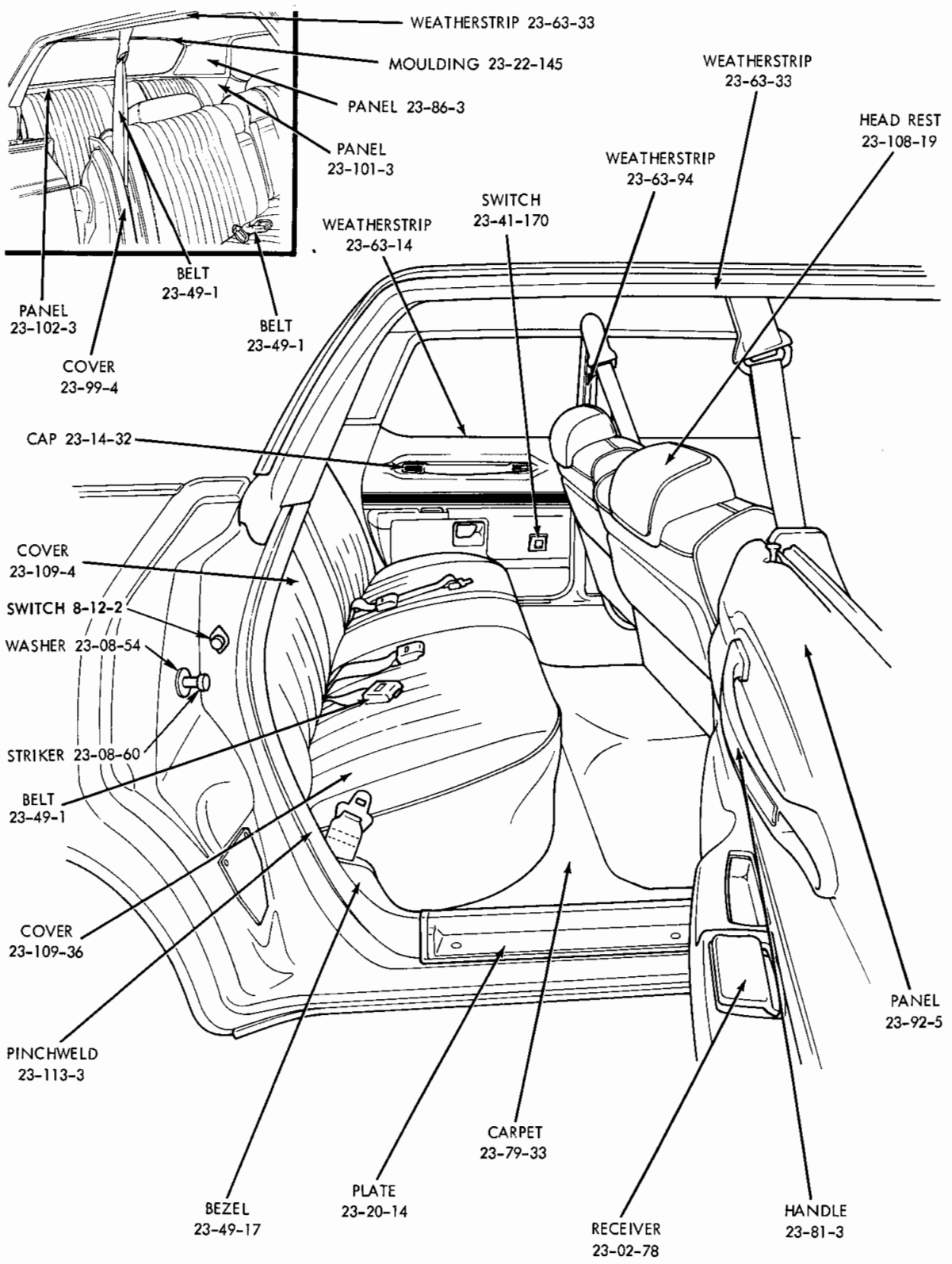

19a4758 A

REAR INTERIOR - PLYMOUTH GRAN SEDAN P-P 4 DOOR HARDTOP

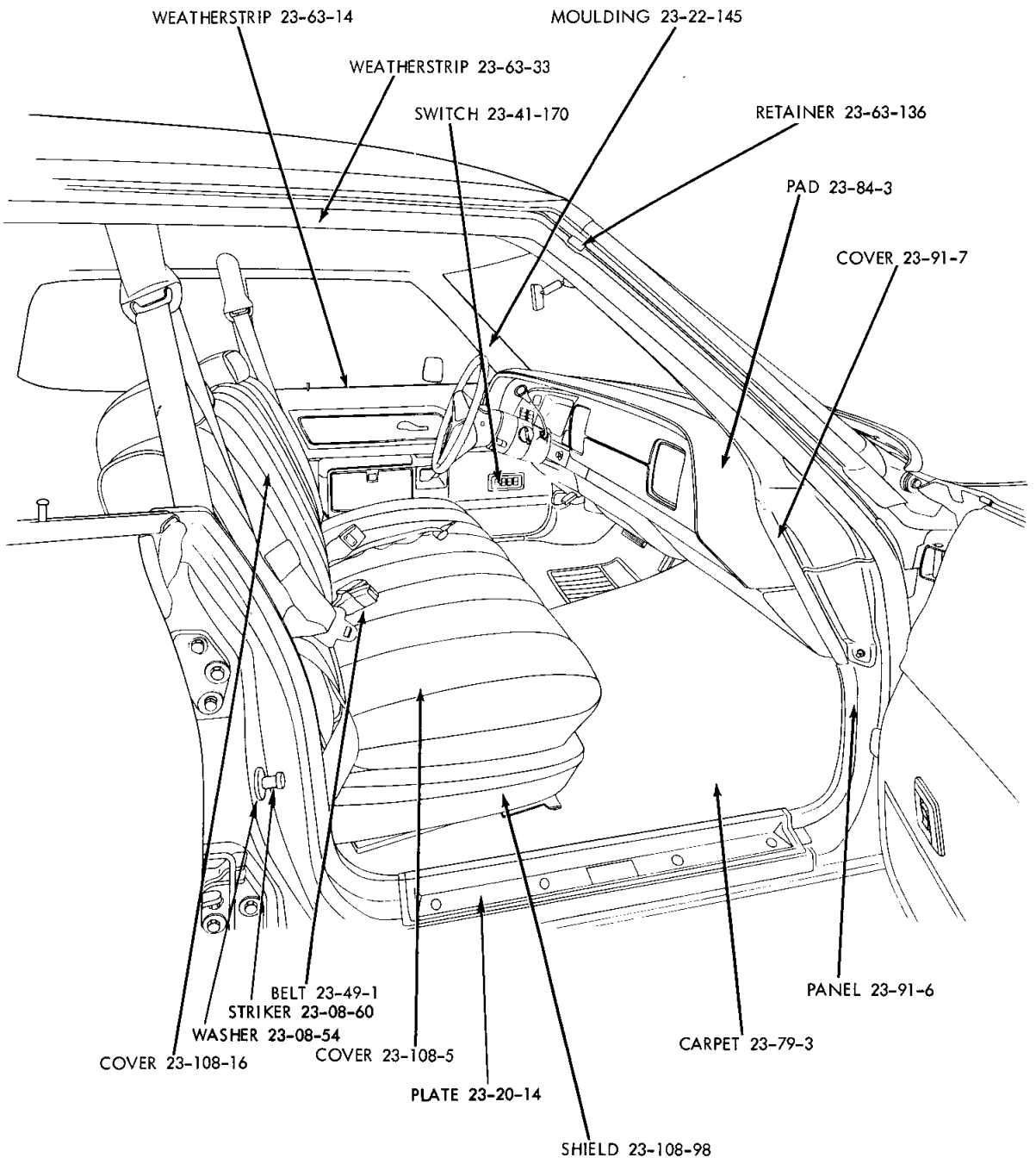

19a4802A

FRONT INTERIOR - DODGE CUSTOM D-H 4 DOOR HARDTOP

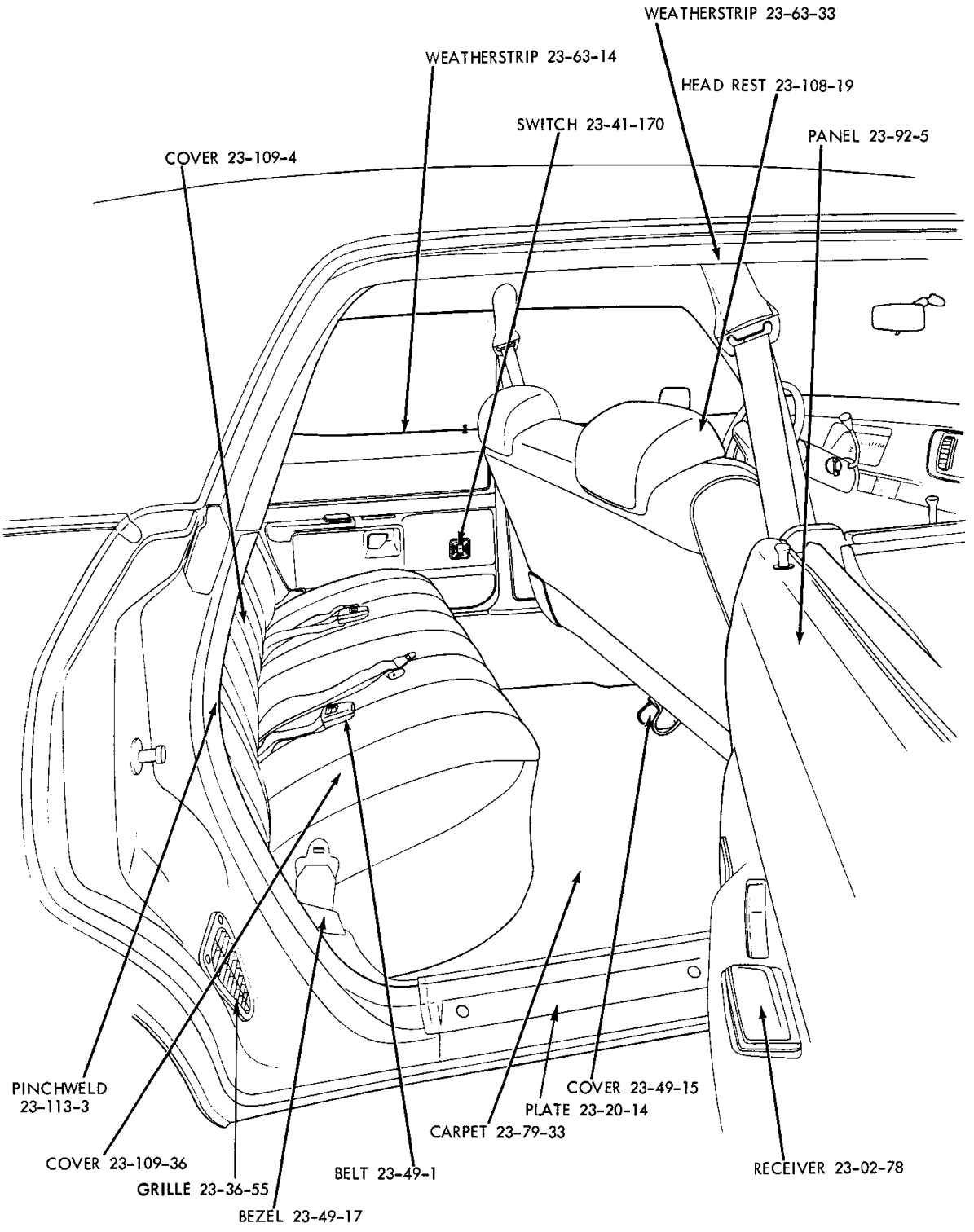

REAR INTERIOR - DODGE CUSTOM D-H 4 DOOR HARDTOP

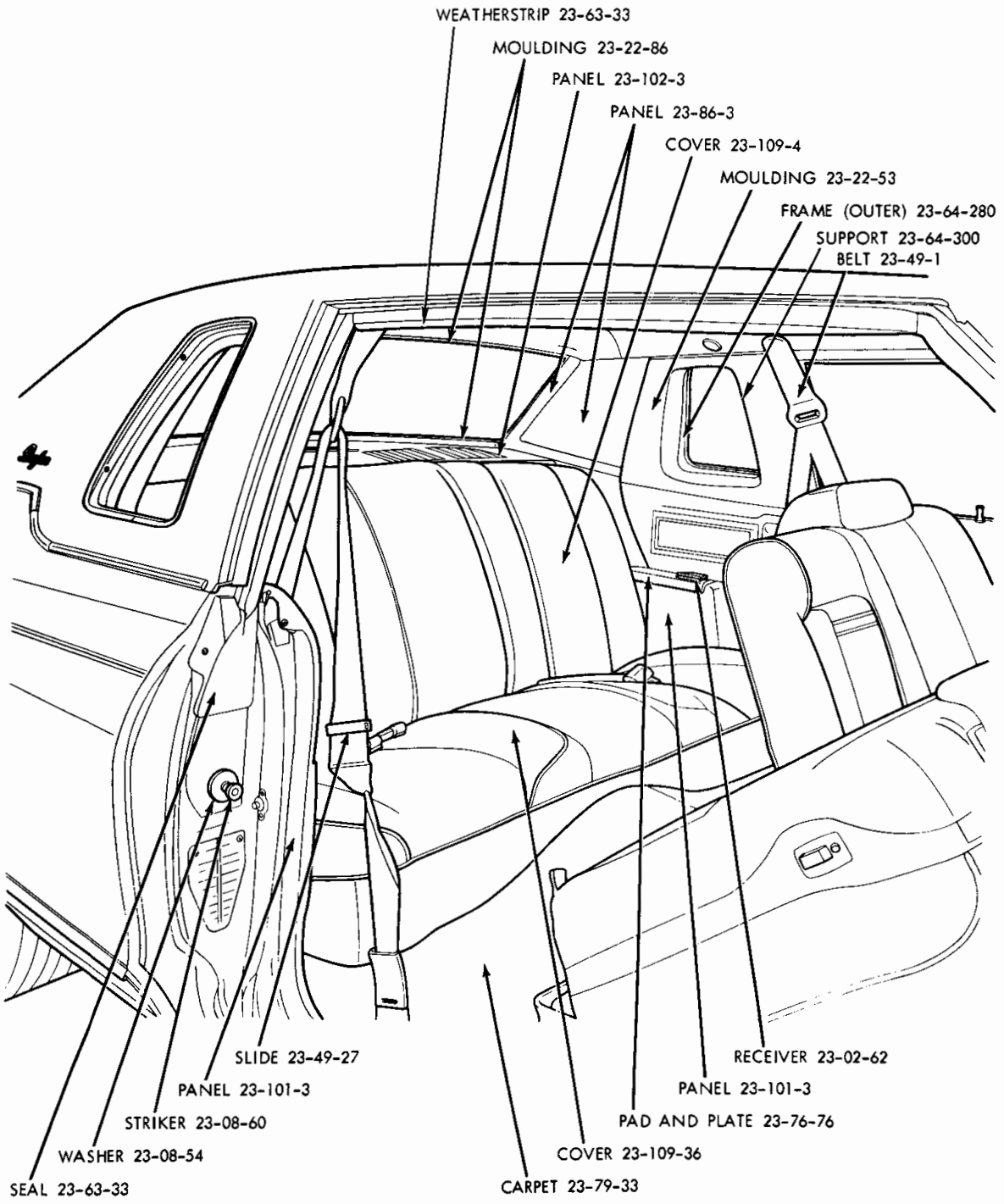

19a5022

REAR INTERIOR - DODGE MONACO BROUGHAM
2 DOOR HARDTOP (WITH OPERA WINDOW)

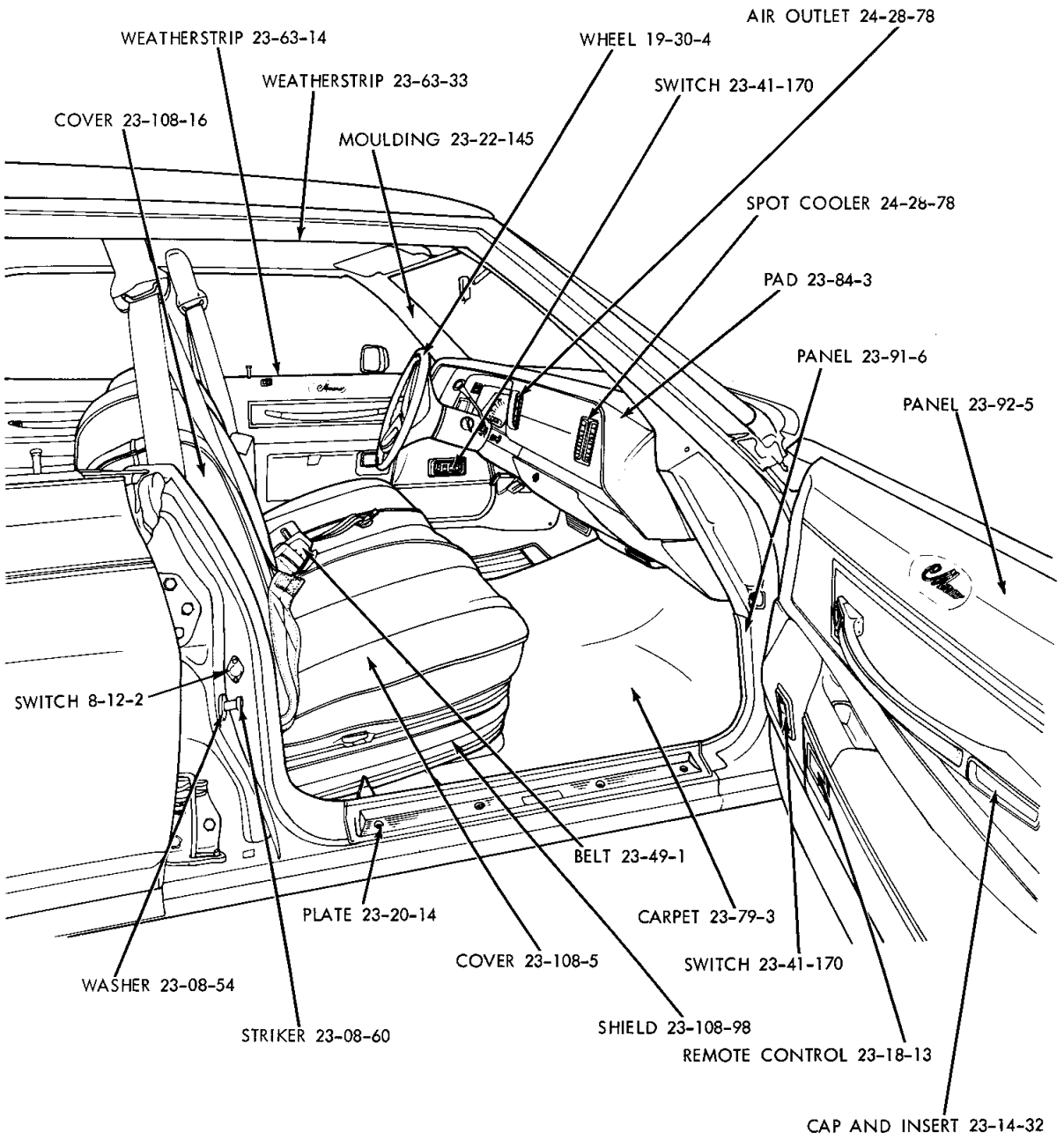

19a4804 A

FRONT INTERIOR - DODGE MONACO D-P 4 DOOR HARDTOP

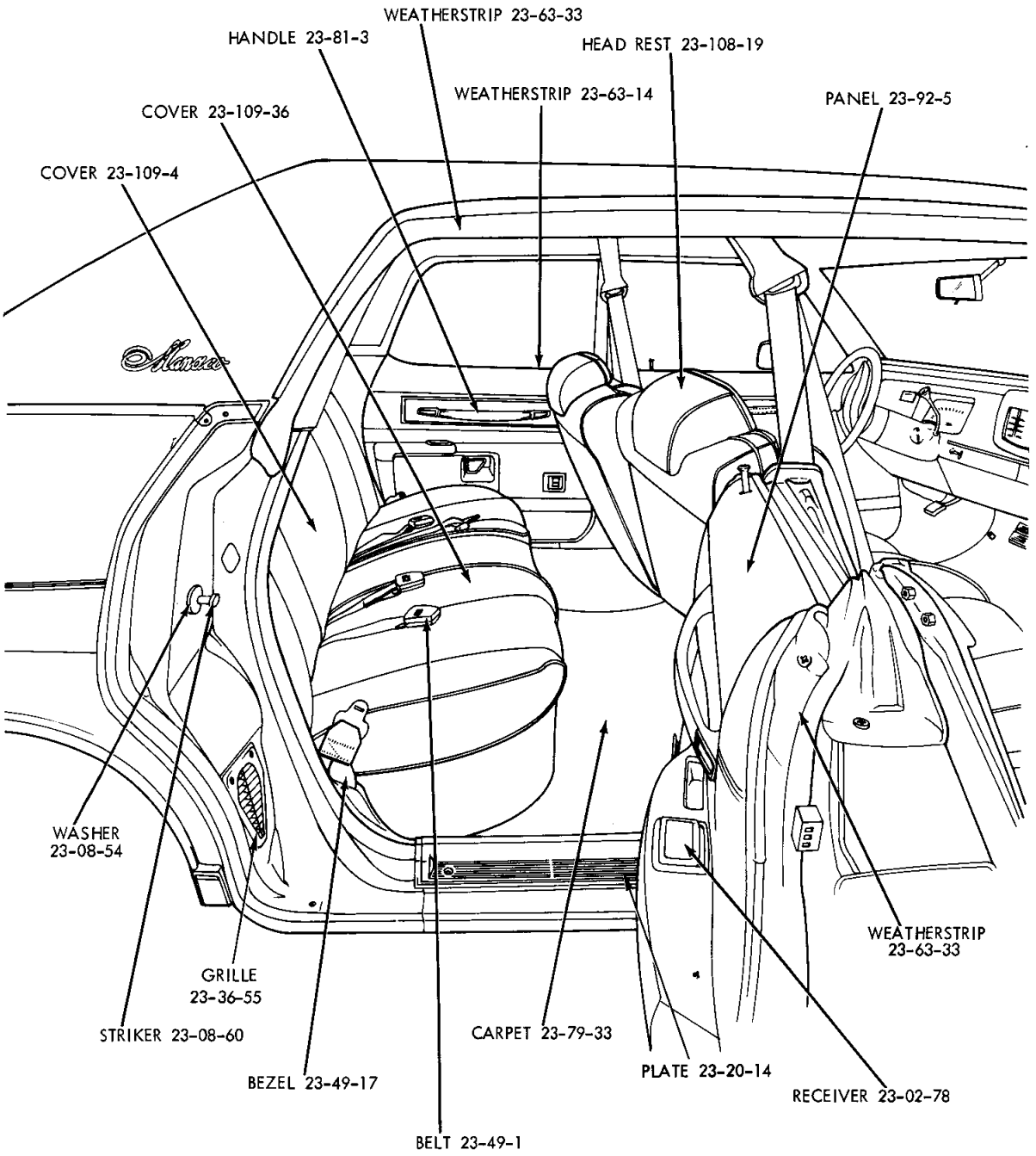

19a4805 A

REAR INTERIOR - DODGE MONACO D-P 4 DOOR HARDTOP

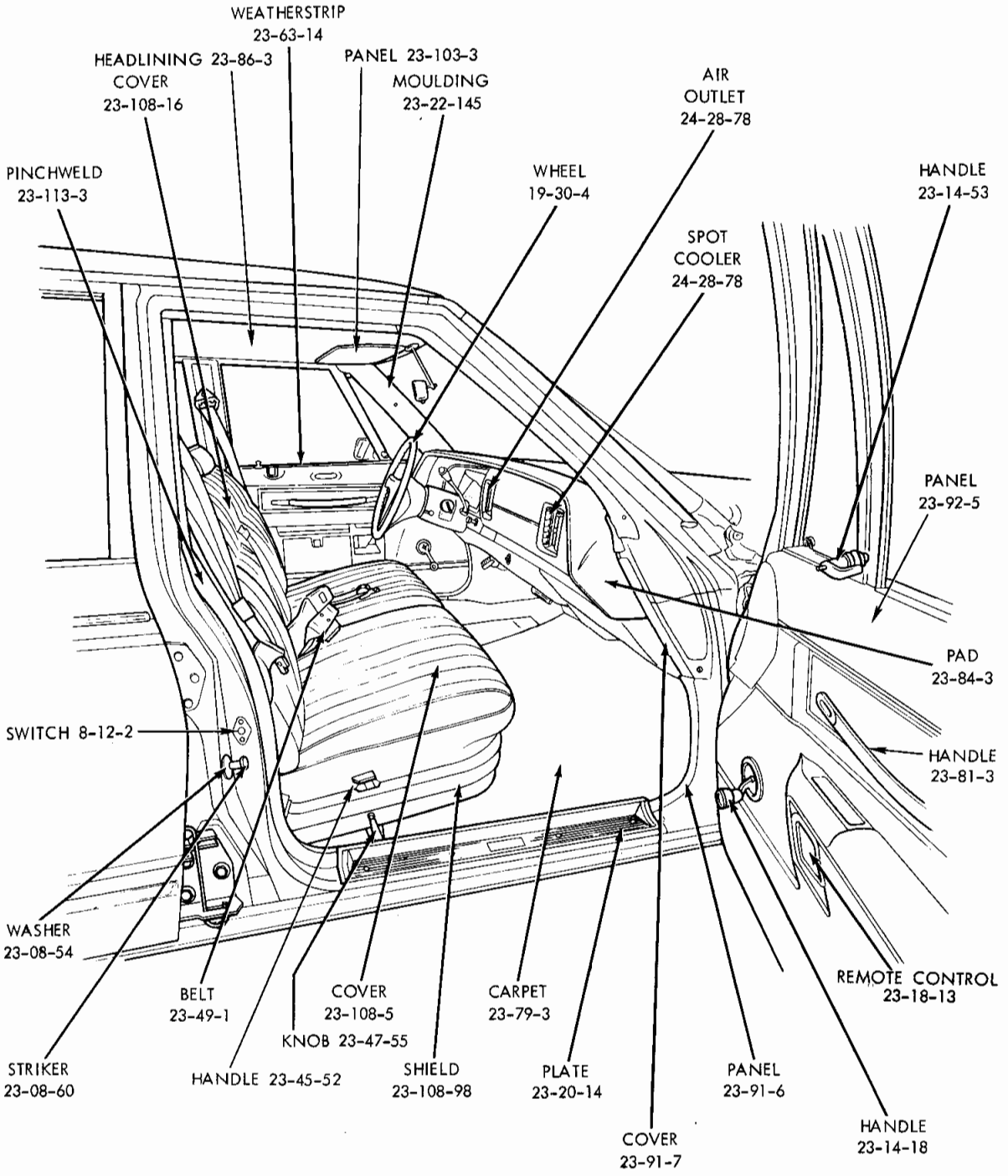

19a4806A

FRONT INTERIOR - DODGE MONACO WAGON D-P

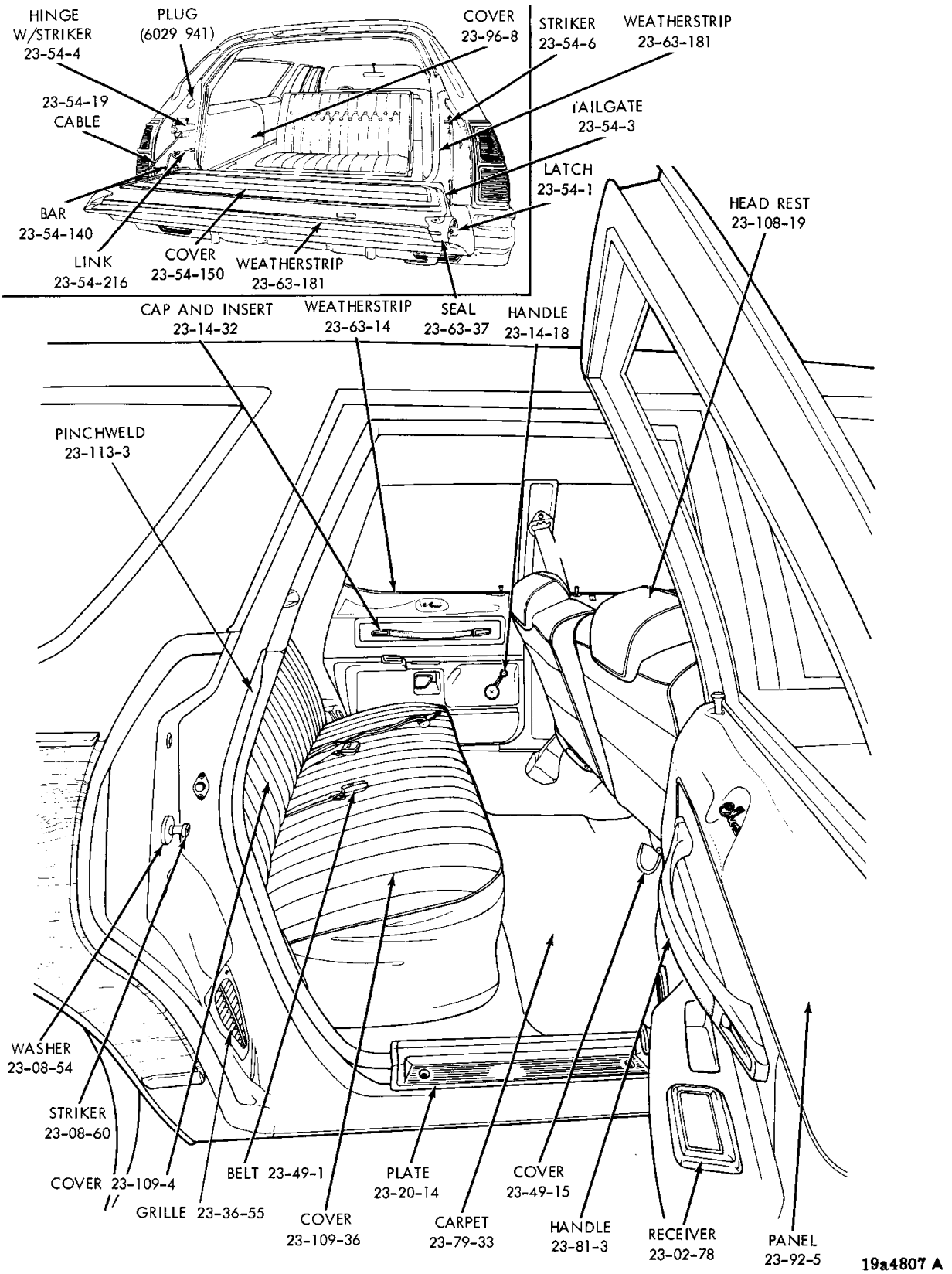

REAR INTERIOR - DODGE MONACO WAGON D-P

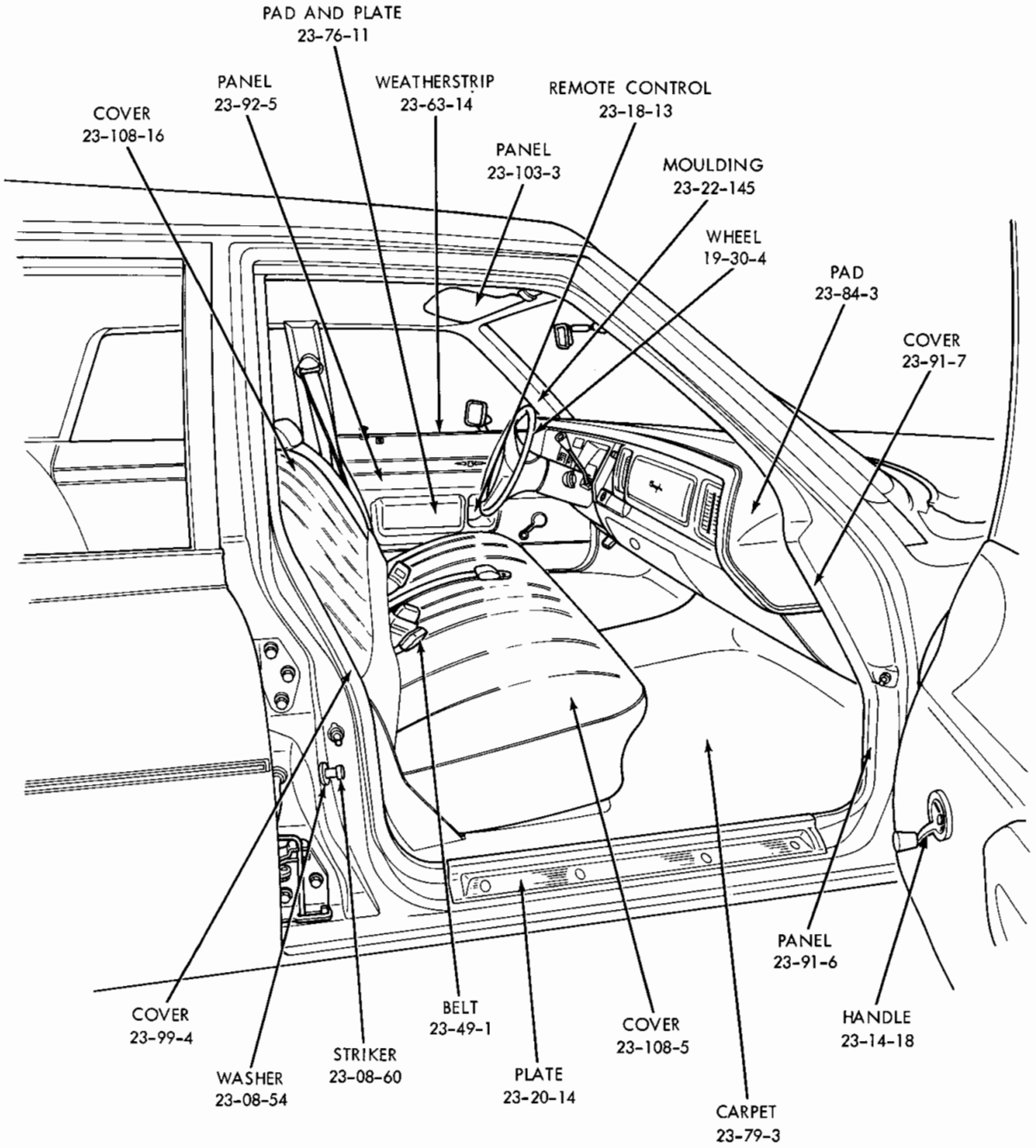

19a4889

FRONT INTERIOR - CHRYSLER NEWPORT C-L 4 DOOR SEDAN

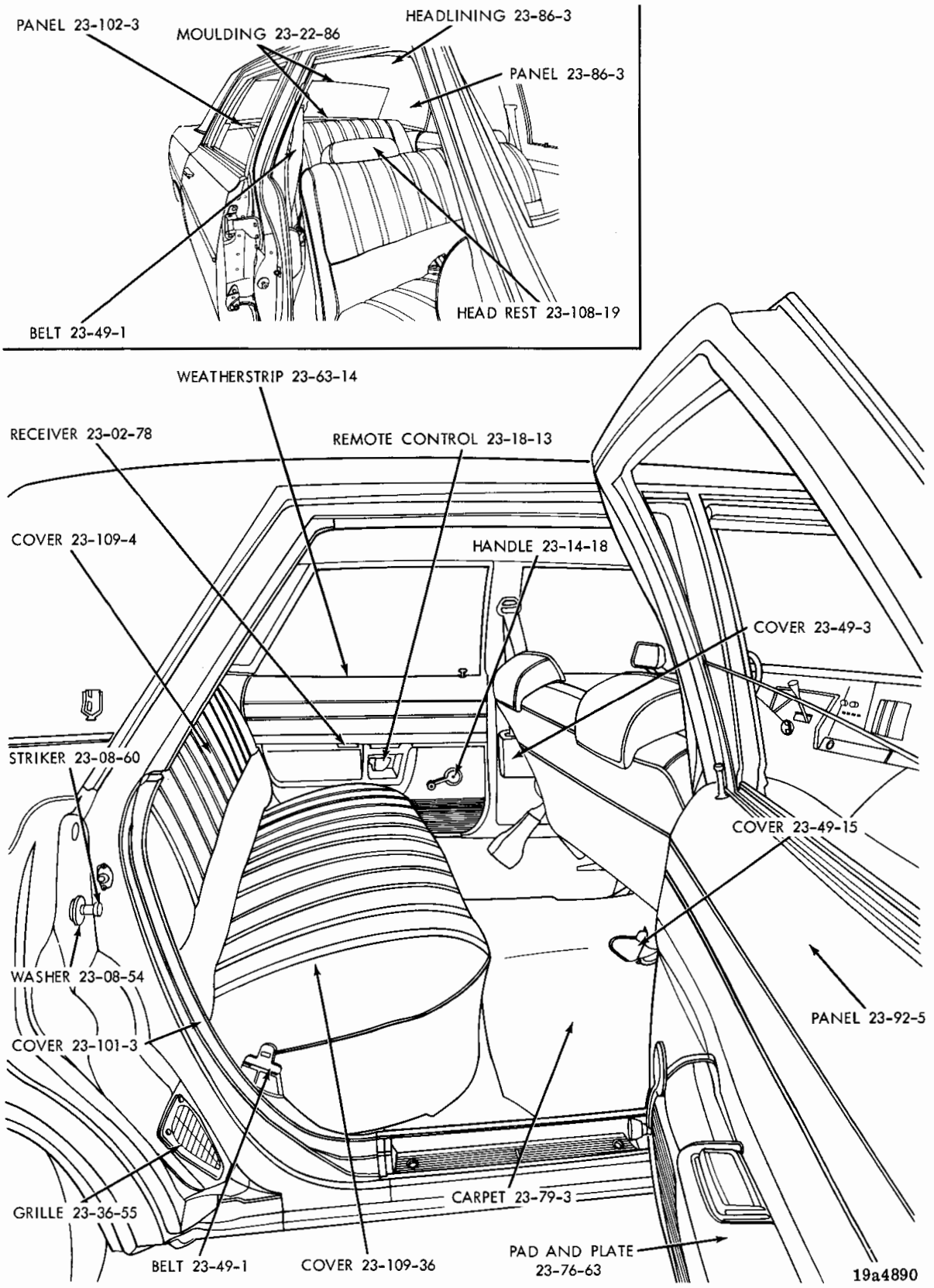

REAR INTERIOR - CHRYSLER NEWPORT C-L 4 DOOR SEDAN

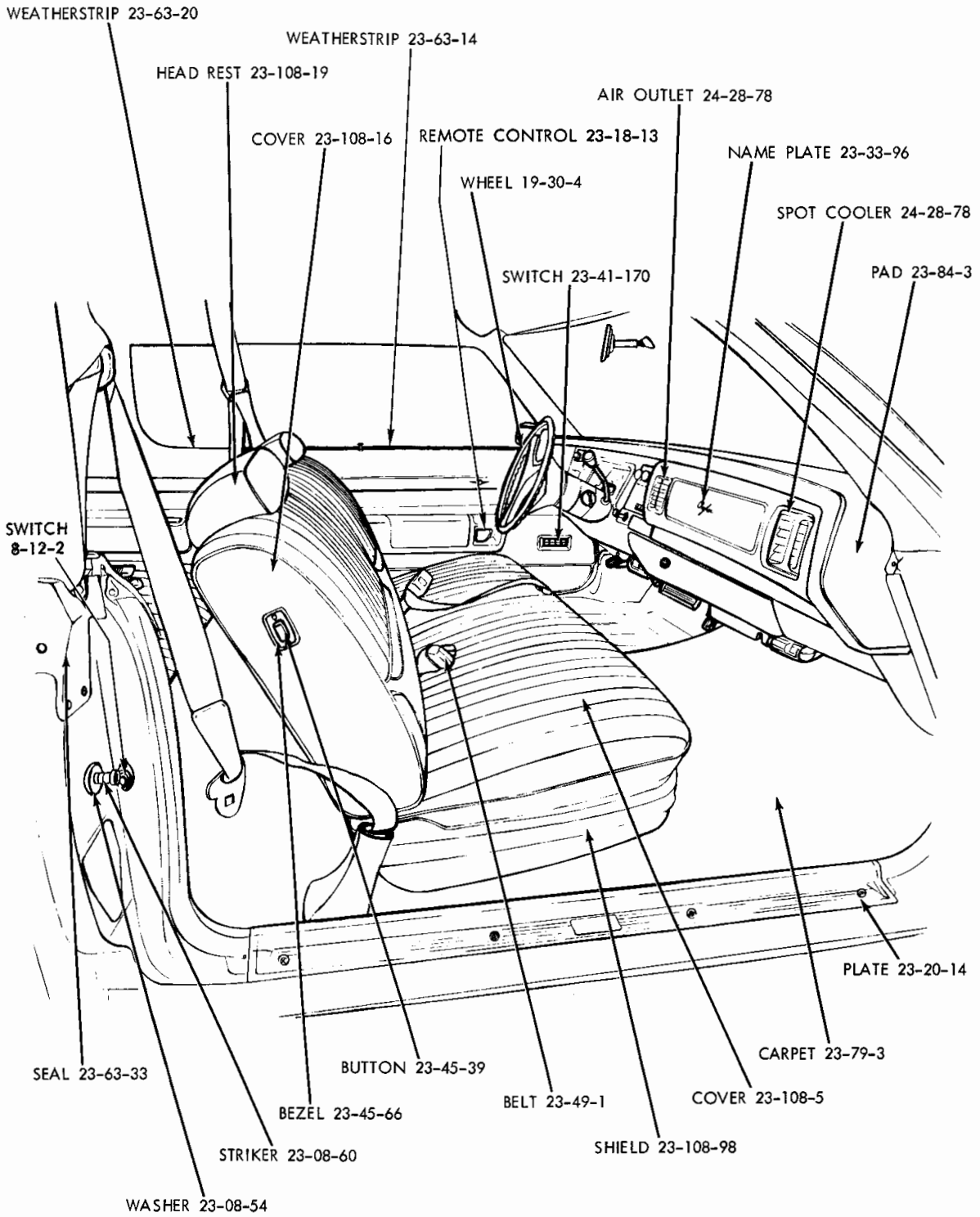

19a4808 A

FRONT INTERIOR - CHRYSLER NEWPORT C-L 2 DOOR HARDTOP

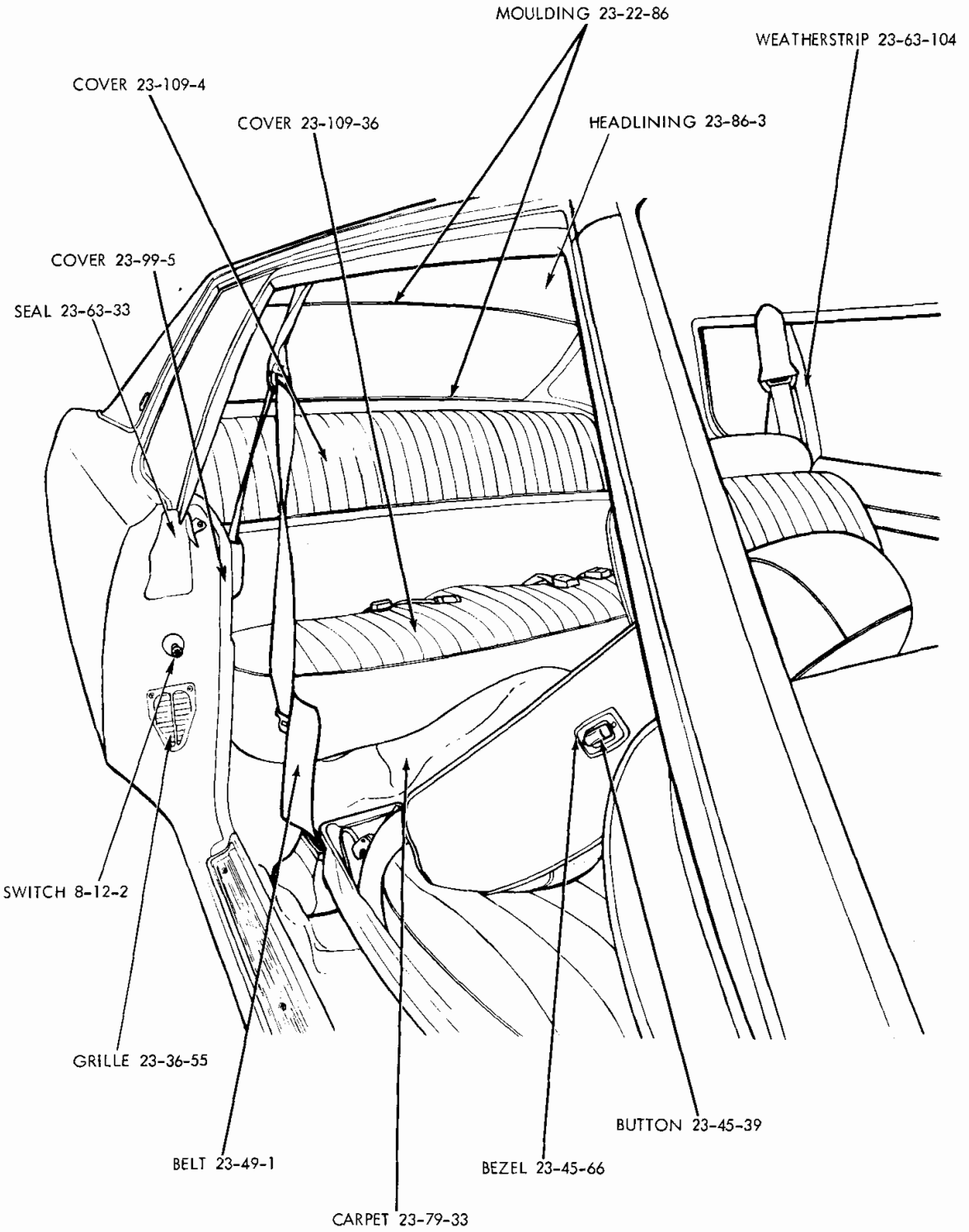

19a4809 B

REAR INTERIOR - CHRYSLER NEWPORT C-L 2 DOOR HARDTOP

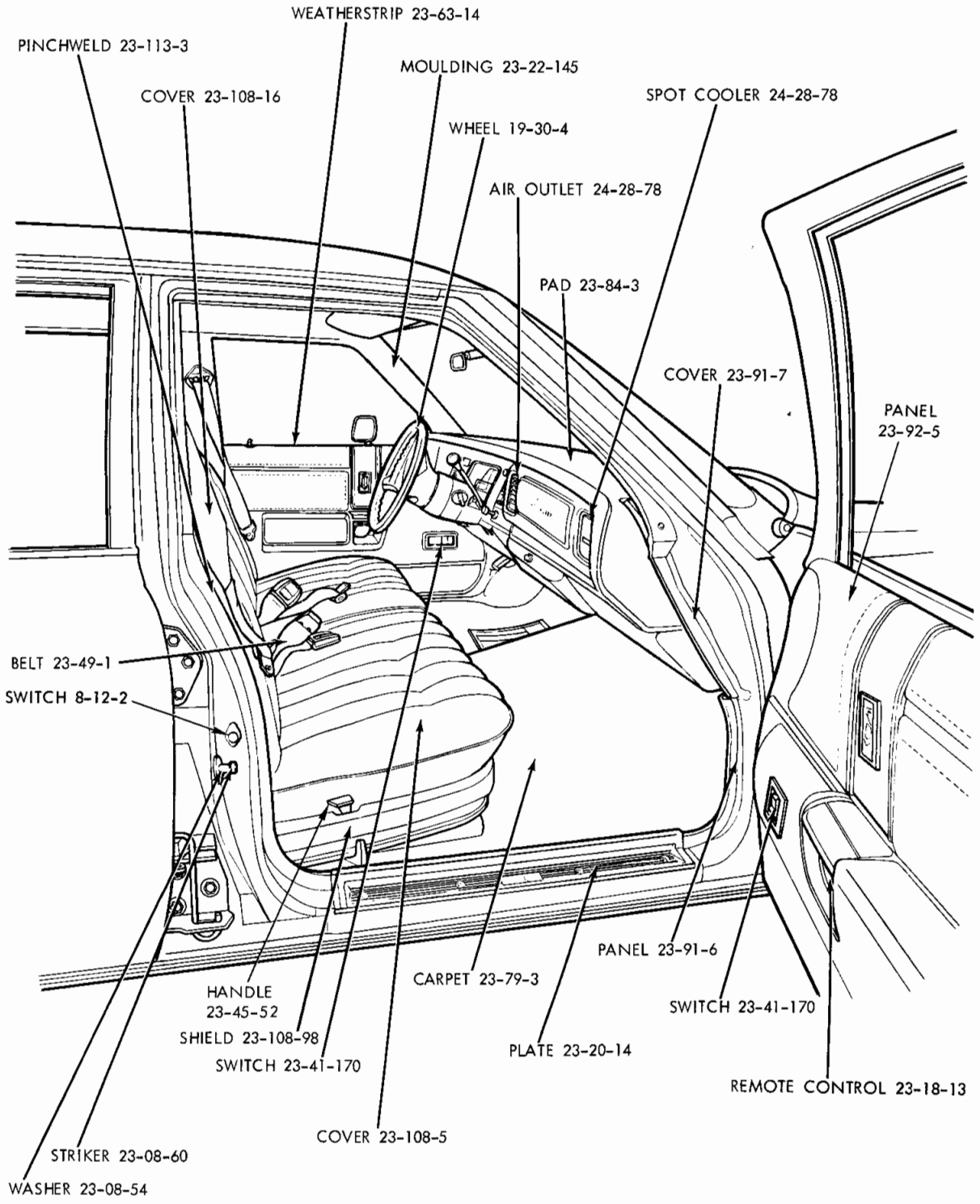

19a4761 A

FRONT INTERIOR - CHRYSLER NEWPORT CUSTOM C-M 4 DOOR SEDAN

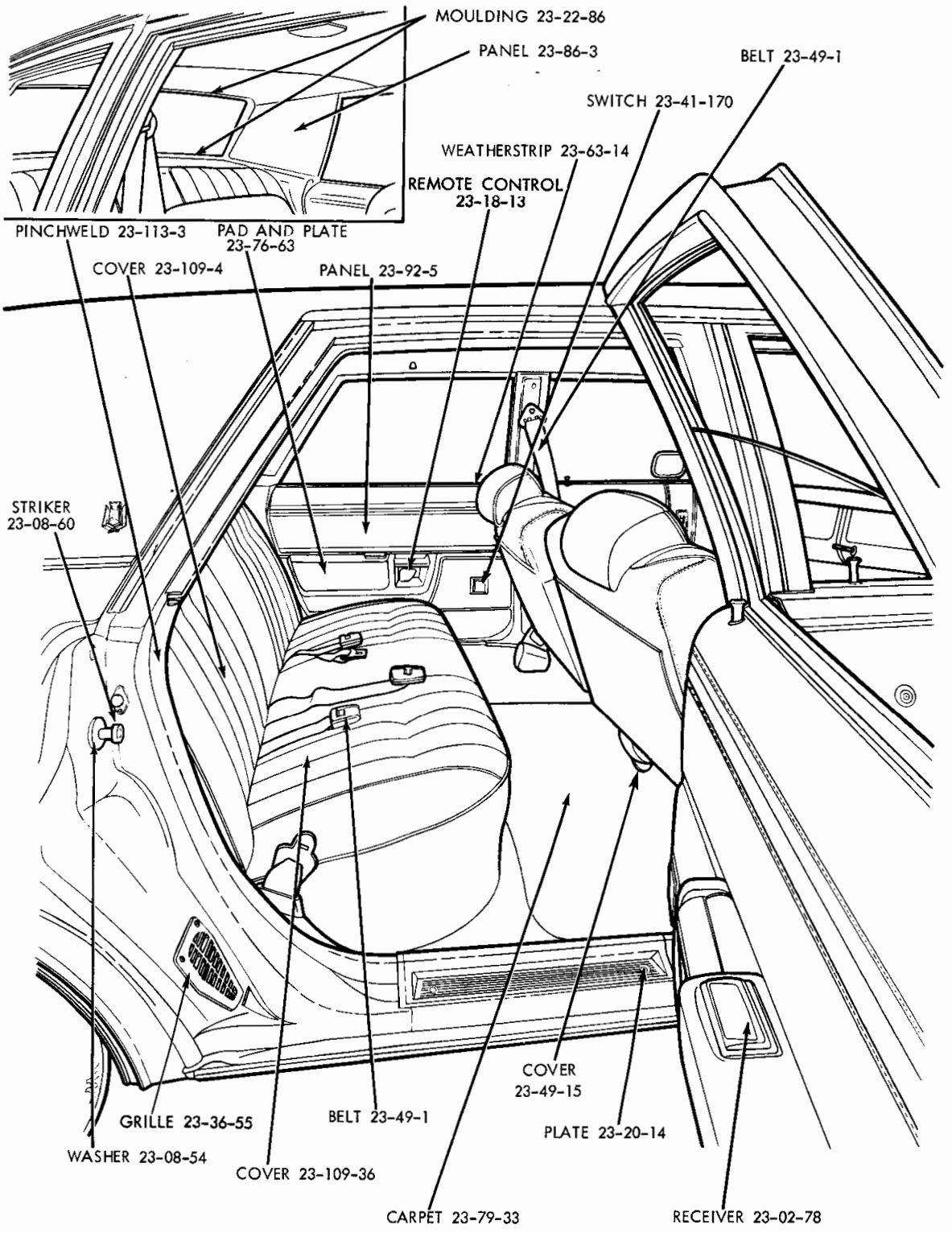

19a4762 B

REAR INTERIOR - CHRYSLER NEWPORT CUSTOM C-M 4 DOOR SEDAN

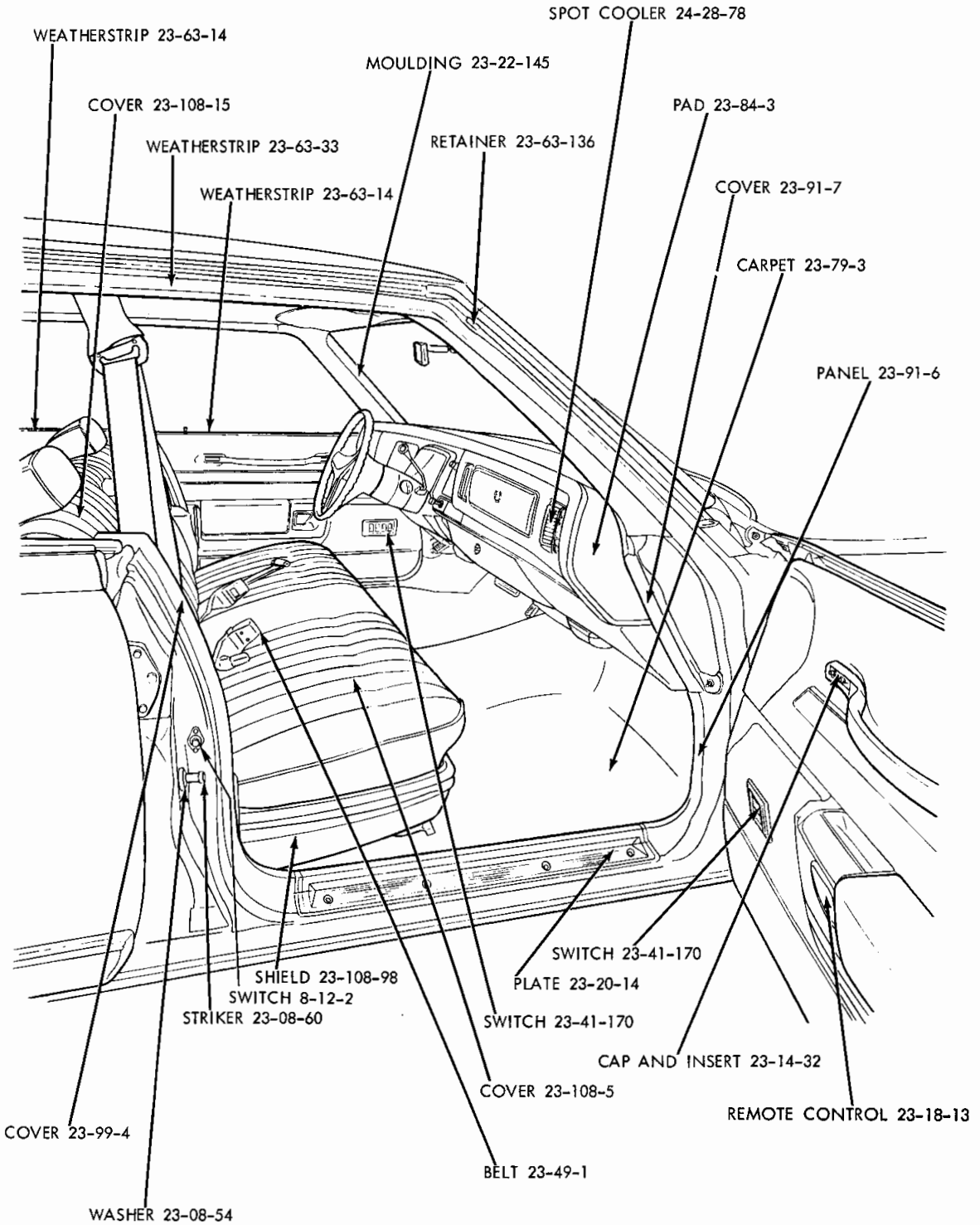

19a4810A

FRONT INTERIOR - CHRYSLER NEW YORKER C-H 4 DOOR HARDTOP

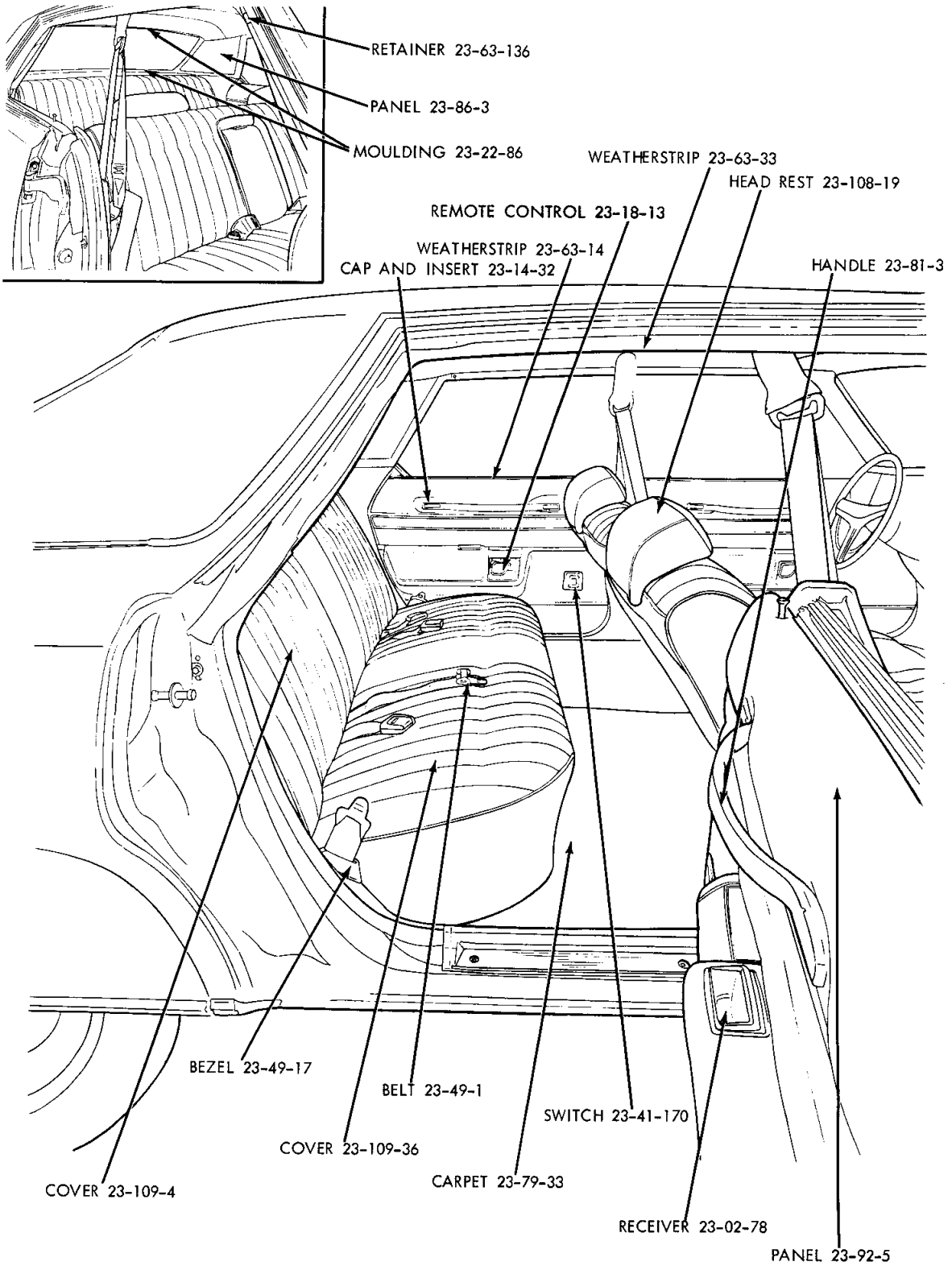

19a4811A

REAR INTERIOR - CHRYSLER NEW YORKER C-H 4 DOOR HARDTOP

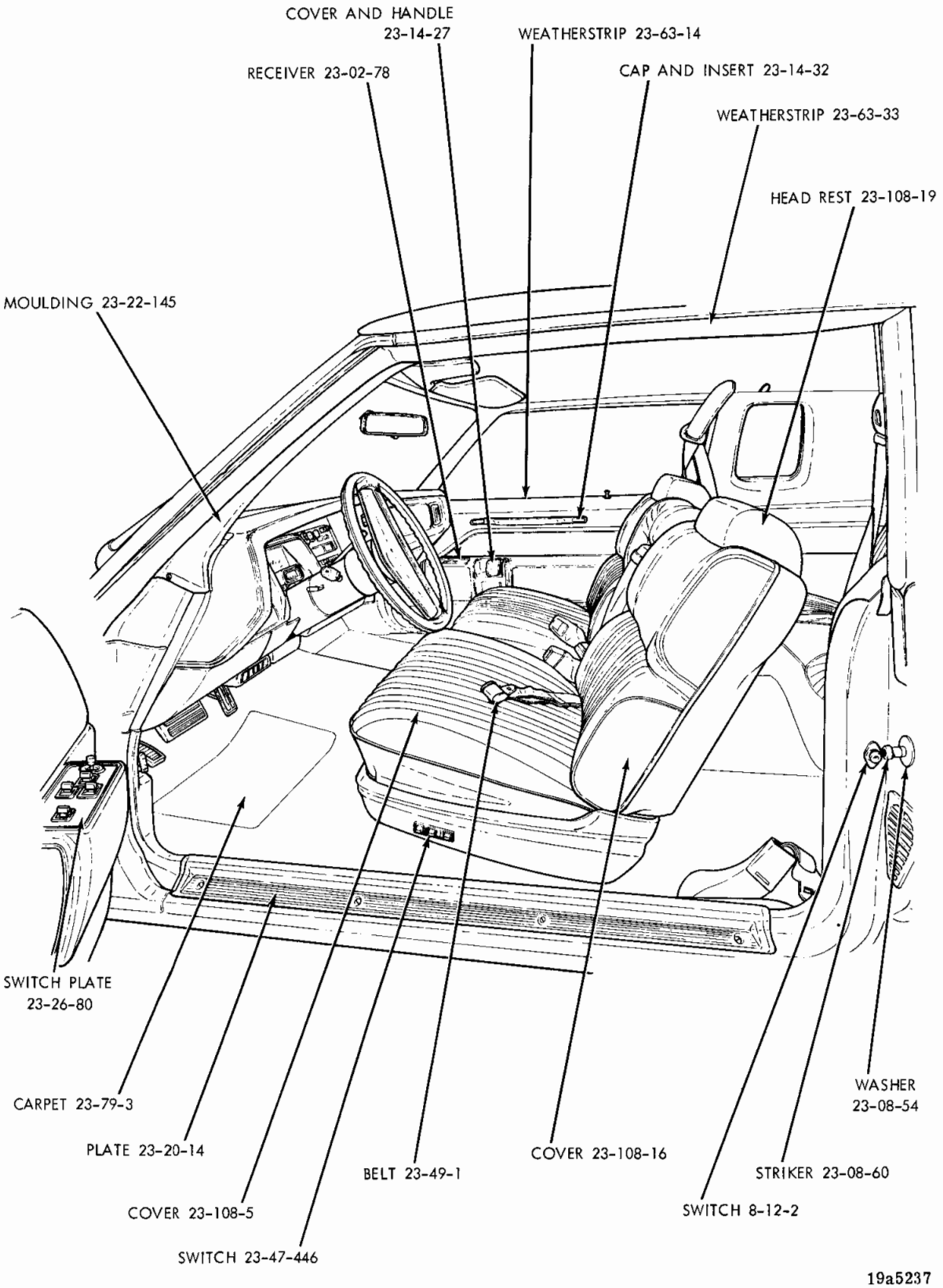

FRONT INTERIOR - CHRYSLER NEW YORKER BROUGHAM (ST. REGIS) C-S
2 DOOR HARDTOP (WITH OPERA WINDOW)

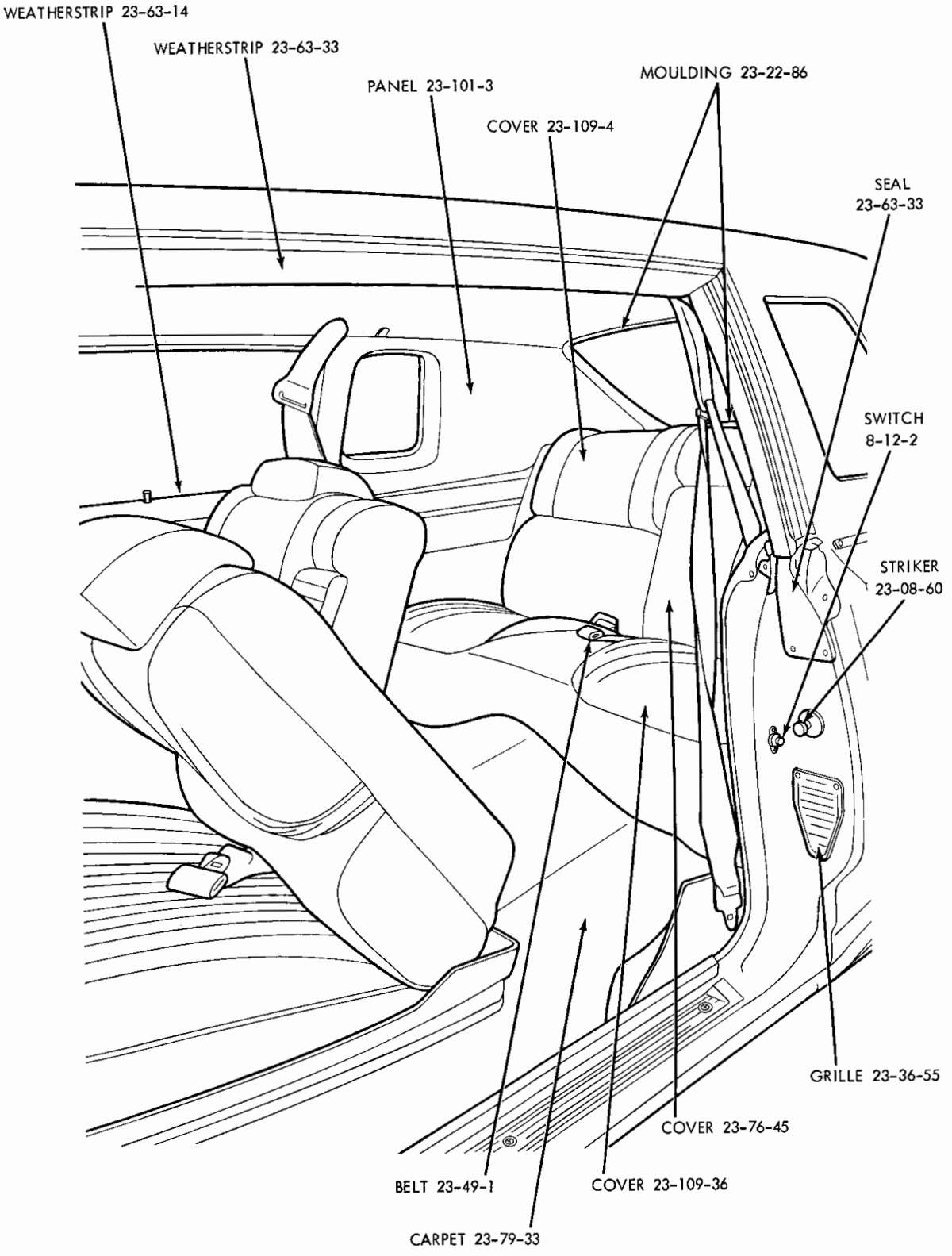

19a5238

REAR INTERIOR - CHRYSLER NEW YORKER BROUGHAM (ST. REGIS) C-S
2 DOOR HARDTOP (WITH OPERA WINDOW)

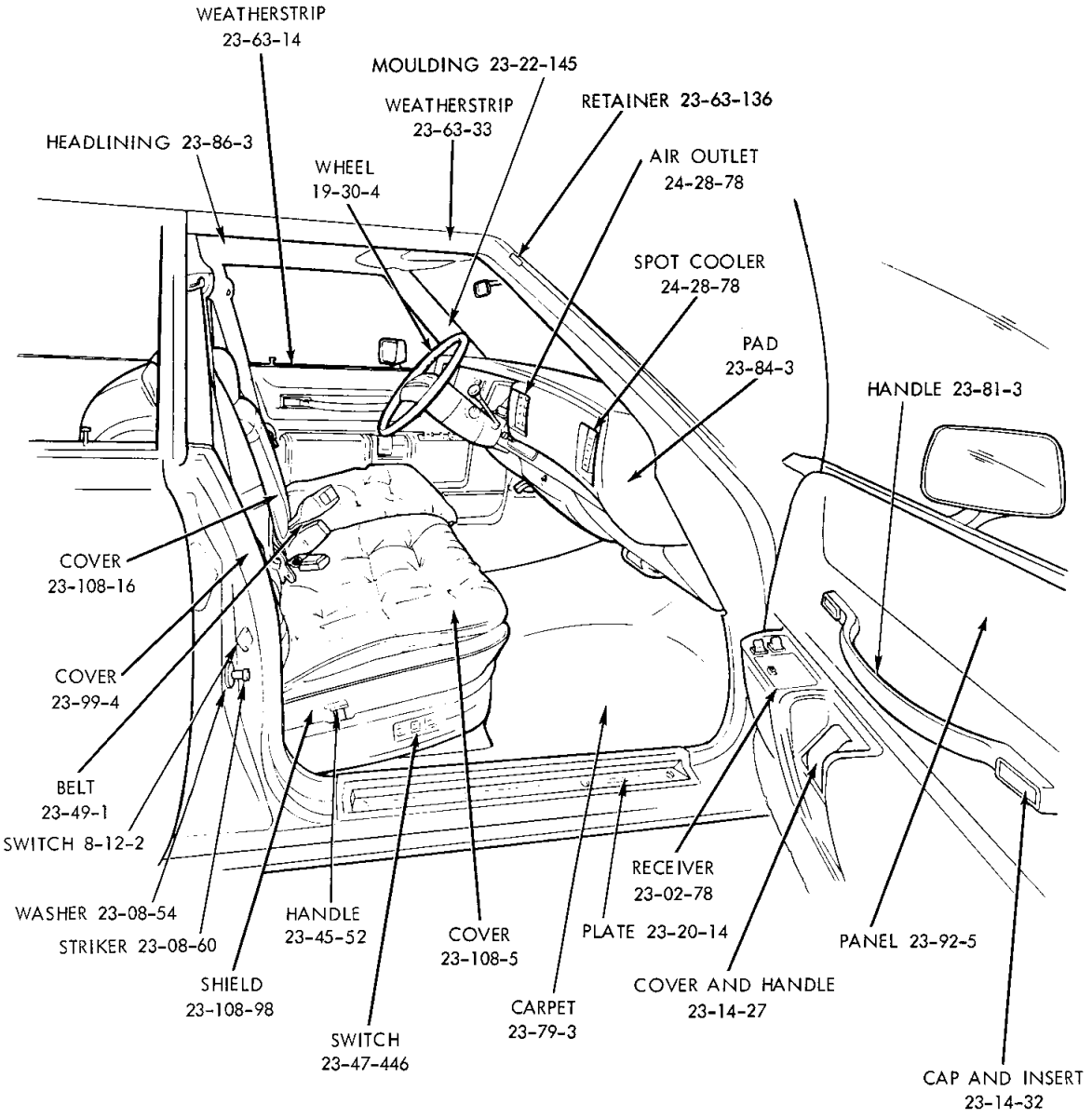

19a4812 B

FRONT INTERIOR - IMPERIAL LE BARON Y-M 4 DOOR HARDTOP

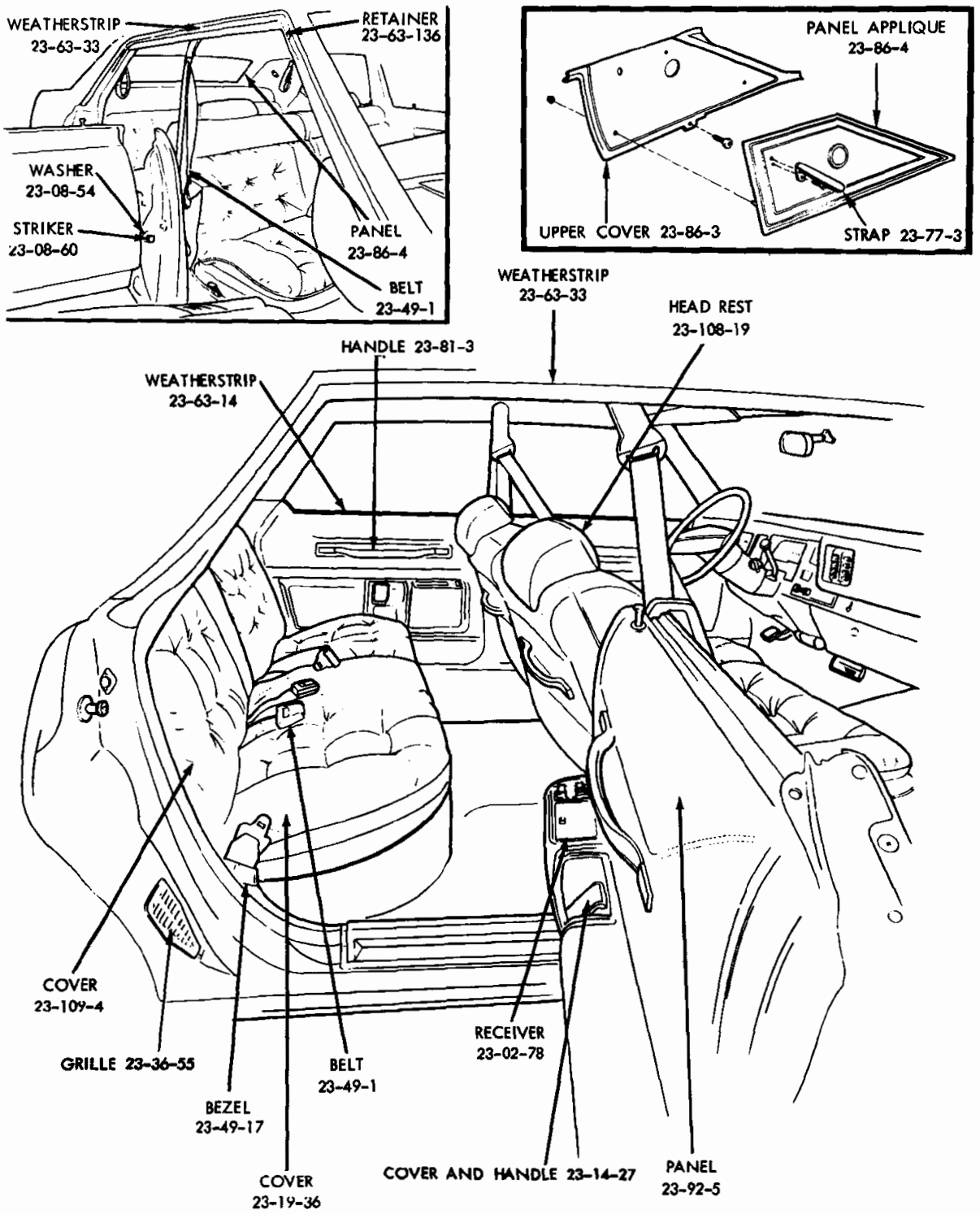

19a4813B

REAR INTERIOR - IMPERIAL LE BARON Y-M 4 DOOR HARDTOP

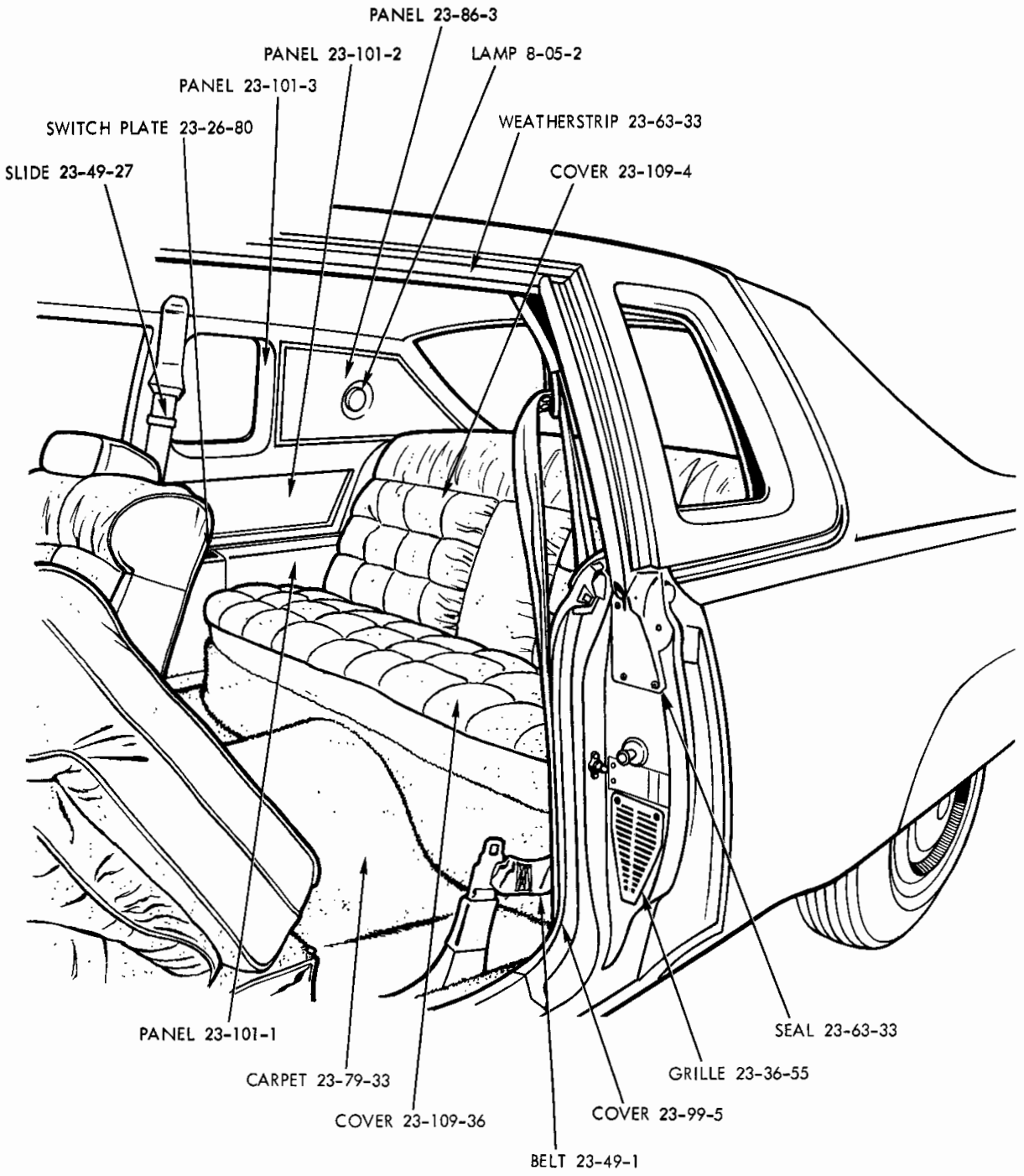

19a5325

REAR INTERIOR - IMPERIAL 2 DOOR HARDTOP
WITH OPERA WINDOW

GROUP 23 - BODY

ADJUSTERS, FRONT SEAT 23-47
ARM, DOOR CHECK 23-10
ASH RECEIVER 23-02
BELTS, SEAT 23-49
BOLT, BODY HOLD DOWN 23-05
BUMPERS AND STRIKERS, DOOR 23-08
CHANNELS, GLASS 23-09
CONSOLE, FLOOR TUNNEL 23-38
COWL VENT OR AIR INTAKE 23-61
CYLINDER AND KEYS, LOCK 23-17
DOORS 23-11
FLOOR PANELS AND CROSSMEMBERS 23-32
GLASS, WINDSHIELD 23-66
GLASS, WINDOW AND VENT WING 23-64
GLASS RUN, WINDOW 23-42
GLOVE BOX AND DOOR 23-06
HANDLES, REGULATOR AND REMOTE CONTROL 23-14
HINGE, DOOR 23-15
LID, DECK 23-19
LIFT, WINDOW (MANUAL) 23-39
LIFT, WINDOW (ELECTRIC) 23-41
LOCK AND REMOTE CONTROL, DOOR 23-18
MATS AND SCUFF PLATES, FLOOR 23-20
MIRROR 23-21
MOULDING, GARNISH 23-22
MOULDING AND ORNAMENTATION, INSIDE 23-26
MOULDING AND ORNAMENTATION, OUTSIDE 23-23
PAD, LINER, INSULATOR, SEAL, ANTI-SQUEAK 23-31
PANEL, BODY 23-34
PANEL, FLOOR 23-04
PANEL, INSTRUMENT 23-33
PILLARS 23-36
PLATE, VEHICLE IDENTIFICATION 23-12
ROCKER PANEL AND BELT BAR 23-51
ROOF RAIL AND LUGGAGE RACK 23-40
SEAT, FRONT 23-45
SEAT, SECOND AND THIRD 23-48
TAILGATE 23-54
TROUGH, DRAIN 23-59
WEATHER STRIP 23-63
WIPER AND WASHER, WINDSHIELD 23-67

Printed in U.S.A.
November, 1974

CODE	PART NAME	MODEL CODES	SEE BOTTOM NOTE 21	23	29	41	43	45	46	PART NUMBER
23-02-2	**RETAINER, w/BEZEL, 3rd Seat Ash Receiver**	D,C	—	—	—	—	—	—	1	3510 868
	SCREW	D,C	—	—	—	—	—	—	2	9416 049
23-02-18	RECEPTACLE, Inst. Pnl. Ash Receiver w/FACE PLATE	V,L	—	1	—	1	1	—	—	— 2771 725
	w/FACE PLATE	B,J	—	1	—	—	—	—	—	2984 345
	w/FACE PLATE, Except C-S	D,C	—	1	—	—	1	1	1	1 3590 476
	RECEPTACLE, Inst. Pnl. Ash Receiver Cluster	P,D,C,Y	—	1	—	—	1	1	1	1 3590 409
	Use After May 29, 1974	P,D,C,Y	—	1	—	—	1	1	1	1 # 3590 707
	RECEIVER, Inst. Panel Ash Comp., Blue	R,W	1	1	—	1	1	—	1	1 P607 KB7
	Comp., Green	R,W	1	1	—	1	1	—	1	1 P607 KG6
	Comp., Black	R,W	1	1	—	1	1	—	1	1 P607 KX9
	Comp., Gold	R,W	1	1	—	1	1	—	1	1 P607 KY7
	Comp., Parchment	R,W	1	1	—	1	1	—	1	1 P607 KL5
	Comp., Chestnut	R,W	1	1	—	1	1	—	1	1 P607 KT8
23-02-19	HOUSING, Inst. Pnl. Ash Receiver	V,L	—	1	—	1	1	—	—	— 2771 277
		B,J	—	1	—	—	—	—	—	— 2984 262
	Except C-S	D,C	—	1	—	—	1	1	1	1 3590 482
	HOUSING, Inst. Pnl. Ash Rec., Cluster	P,D,C,Y	—	1	—	—	1	1	1	1 3590 413
23-02-38	BUMPER, Inst. Pnl. Ash Receiver	R,W	2	2	—	2	2	—	2	2 1707 384
		V,L	—	2	—	2	2	—	—	— 1839 301
	BUMPER, Inst. Pnl. Ash Receiver Stop	R,W	1	1	—	1	1	—	1	1 2985 816
		P,D,C,Y	—	1	—	—	1	1	1	1 2985 816
	Use After May 29, 1974	P,D,C,Y	—	1	—	—	1	1	1	1 # 3590 708
23-02-42	HANDLE, Inst. Pnl. Ash Receiver w/FACE PLATE, Prime	B,J	—	1	—	—	—	—	—	— 2984 859
23-02-50	FACE PLATE, Inst. Pnl. Ash Receiver Cluster									
	Except P-H, P-P, D-H, D-P	P,D	—	1	—	—	1	1	1	1 3590 506
		P-H,P-P	—	1	—	—	1	1	1	1 3590 507
		D-H,D-P	—	1	—	—	1	1	1	1 3590 507
		C-L,C-M	—	1	—	—	1	1	—	— 3590 504
	Except C-L, C-M	C	—	1	—	—	1	1	1	1 3590 505
		Y	—	1	—	—	—	1	—	— 3590 508
23-02-58	SHIELD, Inst. Pnl. Ash Receiver Hsg., Cluster	P,D,C,Y	—	1	—	1	1	1	1	1 # 3590 778
23-02-62	RECEIVER, Qtr. Arm Rest Ash	V,L	—	2	—	2	—	—	—	— 2788 032
	Comp.	P,D	—	2	—	—	—	—	—	— 2589 587
	Comp.	C-L,C-M	—	2	—	—	—	—	—	— 2589 587
		C-S,Y	—	2	—	—	—	—	—	— 3589 898
	RECEPTACLE, w/FINISH PLATE, Qtr. Ash Receiver	R,W	2	2	—	2	—	—	—	— 3416 839
23-02-68	BEZEL, Qtr. Arm Rest Ash Receiver	V,L	—	2	—	2	—	—	—	— 2788 701
		P,D	—	2	—	—	—	—	—	— 2879 652
	Except C-S	C	—	2	—	—	—	—	—	— 2879 652
	BEZEL, w/RETAINER, Qtr. Ash Receiver	R,W	2	2	—	2	—	—	—	— 3416 846
	BEZEL, Rear Door Arm Rest Ash Receiver	V,L	—	—	—	—	2	—	—	— 2788 701
	BEZEL, Rear Door Arm Rest Ash Receiver Retaining	R,W	—	—	—	—	2	—	2	2 2657 877
		P,D	—	—	—	—	2	2	2	2 2879 652
	Except C-S	C	—	—	—	—	2	2	2	2 2879 652
23-02-78	RECEIVER, Rear Door Arm Rest Ash									
	Comp.	V,L	—	—	—	—	2	—	—	— 2788 032
	Comp.	R,W	—	—	—	—	2	—	2	2 2589 587
	Comp.	P,D	—	—	—	—	2	2	2	2 2589 587

TYPE LETTERS Indicates J - Challenger, B - Barracuda, V - Valiant, L - Dart, R - Satellite, W - Coronet, P - Plymouth, D - Dodge, C - Chrysler, Y - Imperial

NUMERALS INDICATE: 21 - 2 DR. SED., 23 - 2 DR. H.T., 29 - FAST BACK, 41 - 4 DR. SED., 43 - 4 DR. H.T., 45 - 6 PASS. STA. WGN., 46 - 9 PASS. STA. WGN.

AR Indicates use as required.
# Indicates parts not listed in any previous parts book
Numerals in parentheses ( ) refer to notes.
★ Indicates change or addition.

Printed in U.S.A.
November, 1974

Right and left part numbers are on same line, first number is right, second number is left.

CODE	PART NAME	MODEL CODES	SEE BOTTOM NOTE 21	23	29	41	43	45	46	PART NUMBER
23-02-78	RECEIVER Cont'd.									
	Except C-S Comp.	C	—	—	—	2	2	2	2	2589 587
		C-S,Y	—	—	—	2	2	—	—	3589 898
	RECEIVER, Frt. Door Arm Rest Ash Receiver, Rt.	C-S,Y	—	1	—	1	1	—	—	3589 898
23-02-82	SPRING, Floor Console Ash Rec.	B,J	—	1	—	—	—	—	—	2292 503
		R,W	1	1	—	1	—	—	—	2292 503
	SPRING, Qtr. Arm Rest Ash Receiver	V,L	—	2	—	2	—	—	—	2292 503
		P,D,C	—	2	—	—	—	—	—	2292 503
	SPRING, Qtr. Arm Rest Ash Receiver Cover	C-S,Y	—	2	—	—	—	—	—	3589 894
	SPRING, Rear Door Ash Receiver Lid	V,L,R,W	—	—	—	2	—	2	2	2292 503
		P,D	—	—	—	2	2	2	2	2292 503
	Except C-S	C	—	—	—	2	2	2	2	2292 503
	SPRING, Rear Door Arm Rest Ash Receiver Lid	C-S,Y	—	—	—	2	2	—	—	3589 894
	SPRING, Frt. Door Arm Rest Ash Receiver Cover, Rt.	C-S,Y	—	1	—	1	1	—	—	3589 894
23-02-105	RECEIVER, Floor Console Ash	V,L	—	1	—	1	—	—	—	2657 284
		B,J	—	1	—	—	—	—	—	2589 587
		R,W	1	1	—	1	—	—	—	2589 587
23-02-107	BEZEL, Console Ash Rec.	B,J,R,W	1	1	—	1	—	—	—	2879 652
23-02-110	HOUSING, Console Ash Receiver	V,L	—	1	—	1	—	—	—	2656 391
23-02-111	LID, Floor Console Ash Receiver	V,L	—	1	—	1	—	—	—	2589 615
23-02-115	GUIDE, Floor Console Ash Receiver Lid	V,L	—	2	—	2	—	—	—	2656 087
23-02-145	RECEPTACLE, w/FINISH PLATE, 3rd Seat Ash Receiver	D,C	—	—	—	—	—	—	1	3416 839
23-02-149	BRACKET, 3rd. Seat Ash Rec. Mtg.	D,C	—	—	—	—	—	—	1	3589 854
23-04-205	**MOULDING, Rear Floor Pan Cover Pnl.**	R,W	—	—	—	—	—	1	—	2254 668
	MOULDING, Rear Floor Well Carpet Side Ret. Rear	R,W	—	—	—	—	—	—	1	3416 344-5
	SKID STRIP, Ctr. Floor Pan 3rd. Seat Back Supt.	R,W	—	—	—	—	—	—	2	2251 868
	MOULDING, Spare Tire Cover, Frt.	R,W	—	—	—	—	—	1	1	3509 221
	MOULDING, Spare Tire Cover, Rear	R,W	—	—	—	—	—	1	1	3509 966
	SPRING NUT, Spare Tire Cover Frt. Mldg.	RW	—	—	—	—	—	1	1	2197 678
	Rear Mldg.	R,W	—	—	—	—	—	4	4	2197 678
23-04-229	COVER, Spare Tire	V,L	—	1	—	1	1	—	—	2419 361
	NOTE: See Code 23-79-64									
23-04-241	HOUSING, Qtr. Pnl. Fuel Filler Tube	R	—	—	—	—	—	1	1	3440 902
		W	—	—	—	—	—	1	1	3440 903
		P	—	—	—	—	—	1	1	3674 774
		D	—	—	—	—	—	1	1	3674 775
		C	—	—	—	—	—	1	1	3720 220
	HOUSING, Rear Floor Pan Fuel Filler Tube	P,D	—	1	—	—	1	1	—	— 3756 104
		C,Y	—	1	—	—	1	1	—	— 3756 272
23-04-245	BRACKET w/KEEPER, Spare Tire Cover Mtg.	R,W	—	—	—	—	—	1	1	3509 973
	BRACKET, Spare Tire Cover Mtg. Frt.	R,W	—	—	—	—	—	1	1	3509 922
	RETAINER, Spare Tire Cover, Rt.	R,W	—	—	—	—	—	1	1	3550 062
23-04-246	KEEPER, Spare Tire Cover Latch	R,W	—	—	—	—	—	1	1	3416 997
23-04-249	GASKET, Qtr. Pnl. Fuel Filler Hsg. to W/House	R	—	—	—	—	—	1	1	3440 909
	to Outer W/House	W	—	—	—	—	—	1	1	3500 402
23-05-1	**BOLT, Frame to Body Attaching** Sta. 1-2	R,W	2	2	—	2	2	—	2	2 6029 990

TYPE LETTERS Indicates	J - Challenger B - Barracuda	V - Valiant L - Dart	R - Satellite W - Coronet	P - Plymouth D - Dodge	C - Chrysler Y - Imperial
NUMERALS INDICATE:	21 - 2 DR. SED. 23 - 2 DR. H.T.	29 - FAST BACK	41 - 4 DR. SED. 43 - 4 DR. H.T.		45 - 6 PASS. STA. WGN. 46 - 9 PASS. STA. WGN.

AR Indicates use as required.
# Indicates parts not listed in any previous parts book
Numerals in parentheses ( ) refer to notes.
★ Indicates change or addition.

Printed in U.S.A.
November, 1974

Right and left part numbers are on same line, first number is right, second number is left.

CODE	PART NAME	MODEL CODES	SEE BOTTOM NOTE 21	23	29	41	43	45	46	PART NUMBER
23-05-1	BOLT Cont'd.									
	STUD, Sta. 1	P,D,C,Y	—	2	—	2	2	2	2	6028 998
	Sta. 2-2A	P,D,C,Y	—	4	—	4	4	4	4	6028 647
	Sta. 2-2A	P,D,C,Y	—	4	—	4	4	4	4	6030 243
	BOLT, Body Hold Down									
	Sta. 2-2A	P,D,C,Y	—	4	—	4	4	4	4	6030 552
23-05-4	RETAINER, Body Hold Down Isolator to Wa.									
	Sta. 2, Plastic	R,W	AR	AR	—	AR	AR	—	AR	AR 3642 833
	RETAINER, Body Hold Down to Yoke									
	Sta. 1A	P,D,C,Y	—	2	—	2	2	2	2	3722 001
	PLATE and NUT, Body Hold Down									
	Sta. 3	P,D,C,Y	—	2	—	2	2	2	2	3642 597
23-05-6	BASE and SLEEVE, Body Hold Down									
	Sta. 1-2	R,W	4	4	—	4	4	—	4	4 3642 854
23-05-10	ISOLATOR, Body Hold Down									
	Sta. 1-2	R,W	4	4	—	4	4	—	4	4 3642 851
	Sta. 3, Bottom	R,W	2	2	—	2	2	—	2	2 3466 584
	Sta. 3, Use After Feb. 1, 1974	R,W	2	2	—	2	2	—	2	2 3726 760
	Sta. 3, Top	R,W	2	2	—	2	2	—	2	2 3466 587
	Sta. 3, Use After Feb. 1, 1974	R,W	2	2	—	2	2	—	2	2 3726 759
	Sta. 1	P,D,C,Y	—	2	—	—	2	2	2	2 3466 014
	Sta. 1, Use After Jan. 1, 1974	P,D,C,Y	—	2	—	—	2	2	2	2 3817 106
	Sta. 2-2A	P,D,C,Y	—	4	—	—	4	4	4	4 3466 018
	Sta. 2-2A, After Type	P,D,C,Y	—	4	—	—	4	4	4	4 3726 768
	Sta. 3	P,D,C,Y	—	2	—	—	2	2	2	2 3466 020
23-05-14	BUSHING, Body Hold Down to Yoke									
	Sta. 1A	P,D,C,Y	—	2	—	—	2	2	2	2 3722 006
	Use After April 15, 1974	P,D,C,Y	—	2	—	—	2	2	2	2 2206 923
23-05-25	ISOLATOR INSERT, Body Hold Down									
	Sta. 1-2	R,W	4	4	—	4	4	—	4	4 3642 852
	Sta. 3	R,W	2	2	—	2	2	—	2	2 3466 588
	Sta. 1	P,D,C,Y	—	2	—	—	2	2	2	2 3466 008
	Sta. 1, Use After Jan. 1, 1974	P,D,C,Y	—	2	—	—	2	2	2	2 3817 108
	Sta. 2-2A	P,D,C,Y	—	4	—	—	4	4	4	4 3466 007
	Sta. 3	P,D,C,Y	—	2	—	—	2	2	2	2 3466 005
23-05-27	PLUG, Body Hold Down Isolator to Shim									
	Sta. 2-2A, Plastic	P,D,C,Y	—	AR	—	—	AR	AR	—	— 3466 023
23-05-31	BRACKET, Rear Side Rail Hold Down	B,J	—	1	—	—	—	—	—	— 2964 706-7
23-05-36	SPACER, Body Hold Down									
	Sta. 1	P,D,C,Y	—	2	—	—	2	2	2	2 3466 029
	Sta. 2-2A, Rt.	P,D,C,Y	—	AR	—	—	AR	AR	AR	AR 3466 024
	Sta. 2-2A, Lt.	P,D,C,Y	—	AR	—	—	AR	AR	AR	AR 3466 025
	WASHER, Body Hold Down									
	Sta. 2	R,W	AR	AR	—	AR	AR	—	AR	AR 6028 431
	Sta. 1	P,D,C,Y	—	AR	—	—	AR	AR	AR	AR 6028 424
	Sta. 2-2A	P,D,C,Y	—	4	—	—	4	4	4	4 3642 878
	Sta. 3	P,D,C,Y	—	AR	—	—	AR	AR	AR	AR 6028 431
23-06-4	**BOX, Inst. Pnl. Glove**	V,L	—	1	—	1	1	—	—	— 3590 298
	Use After Dec. 5, 1973	V,L	—	1	—	1	1	—	—	— 3590 655
	Upr.	B,J	—	1	—	—	—	—	—	— 2984 457
	Lwr.	B,J	—	1	—	—	—	—	—	— 2984 456
	Upr. and Lwr.	B,J	—	1	—	—	—	—	—	— 2984 819
		R,W	1	1	—	1	1	—	1	1 2985 747
	Bin Type	P,D,C,Y	—	1	—	—	1	1	1	1 3590 462
23-06-10	DOOR, Inst. Panel Glove Box	V,L	—	1	—	1	1	—	—	— 3590 656
		B,J	—	1	—	—	—	—	—	— 3590 222
		R,W	1	1	—	1	1	—	1	1 3590 280

TYPE LETTERS Indicates: J - Challenger, B - Barracuda, V - Valiant, L - Dart, R - Satellite, W - Coronet, P - Plymouth, D - Dodge, C - Chrysler, Y - Imperial

NUMERALS INDICATE: 21 - 2 DR. SED., 23 - 2 DR. H.T., 29 - FAST BACK, 41 - 4 DR. SED., 43 - 4 DR. H.T., 45 - 6 PASS. STA. WGN., 46 - 9 PASS. STA. WGN.

AR Indicates use as required.
# Indicates parts not listed in any previous parts book
Numerals in parentheses ( ) refer to notes.
★ Indicates change or addition.

Printed in U.S.A.
November, 1974

Right and left part numbers are on same line, first number is right, second number is left.

CODE	PART NAME	MODEL CODES	SEE BOTTOM NOTE 21	23	29	41	43	45	46	PART NUMBER
23-06-10	DOOR Cont'd.									
	DOOR and HINGE, Inst. Pnl. Glove Box	P,D,C,Y	—	1	—	—	1	1	1	1	3590 399
	Use After March 11, 1974	P,D,C,Y	—	1	—	—	1	1	1	1	3590 561
23-06-13	ARM, Glove Box Door Check	B,J	—	1	—	—	—	—	—	—	2984 038
23-06-14	**BUMPER, Inst. Pnl. to Glove Box Door**	V,L	—	2	—	2	2	—	—	—	2218 683
		B,J	—	2	—	—	—	—	—	—	2218 683
		R,W	2	2	—	2	2	—	2	2	729 152
		P,D,C,Y	—	2	—	—	2	2	2	2	2218 683
	Use After Jan. 1, 1974	P,D,C,Y	—	2	—	—	2	2	2	2	3590 551
	BUMPER, Glove Box Door Check Arm	B,J	—	1	—	—	—	—	—	—	1943 547
23-06-15	LATCH, Glove Box Lock Cylinder	V,L,B,J	—	1	—	1	1	—	—	—	2999 806
		P,D,C,Y	—	1	—	—	1	1	1	1	3695 759
		R,W	1	1	—	1	1	—	1	1	3508 886
	CATCH, Glove Box Door Lock	V,L	—	1	—	1	1	—	—	—	3590 183
		B,J	—	1	—	—	—	—	—	—	2984 283
		R,W	1	1	—	1	1	—	1	1	2985 267
		P,D,C,Y	—	1	—	—	1	1	1	1	3590 404
	Use After May 6, 1974	P,D,C,Y	—	1	—	—	1	1	1	1	3590 557
23-06-17	FINISH PLATE, Inst. Pnl. Glove Box Door									
	Wood Grain Specs.	V,L	—	1	—	1	1	—	—	—	2985 982
	Hang Ten, Sprg. Special	L	—	—	—	1	—	—	—	—	3590 597
23-06-21	**HINGE, Glove Box Door**	V,L	—	1	—	1	1	—	—	—	2889 452
	Use After Dec. 5, 1973	V,L	—	1	—	1	1	—	—	—	3590 664
		B,J	—	1	—	—	—	—	—	—	2984 034
23-06-22	SPRING, Glove Box Door Hinge	V,L	—	1	—	1	1	—	—	—	2984 545
	Use After Dec. 5, 1973	V,L	—	1	—	1	1	—	—	—	3590 668
23-06-28	CYLINDER and KEY PACKAGE, Glove Box Lock	V,L,B,J	—	1	—	1	1	—	—	—	2999 464
		R,W	1	1	—	1	1	—	1	1	3508 887
		P,D,C,Y	—	1	—	—	1	1	1	1	3760 378
	CYLINDER PACKAGE, Glove Box Lock Non Locking	V,L	—	1	—	1	1	—	—	—	3695 719
23-06-38	LITTER BAG, Glove Box Door	All	1	1	—	1	1	1	1	1	3551 489
23-06-39	**FASTENER, Litter Bag Mtg.**	All	2	2	—	2	2	2	2	2	3550 051
23-06-46	CABLE, Glove Box Door	V,L	—	1	—	1	1	—	—	—	2927 281
		R,W	1	1	—	1	1	—	1	1	2927 281
	CABLE, Glove Box Door Check	P,D,C,Y	—	2	—	—	2	2	2	2	3590 437
23-06-55	BEZEL, Inst. Pnl. Glove Box Door Lock, Blue	V,L	—	1	—	1	1	—	—	—	P601 KB7
	Green	V,L	—	1	—	1	1	—	—	—	P601 KG6
	Black	V,L	—	1	—	1	1	—	—	—	P601 JX9
	Gold	V,L	—	1	—	1	1	—	—	—	P601 JY7
	Parchment	V,L	—	1	—	1	1	—	—	—	P601 JL5
	Screw	V,L	—	2	—	2	2	—	—	—	9421 776
23-06-60	SHROUD, Inst. Pnl. Glove Box	P,D,C,Y	—	1	—	—	1	1	1	1	3590 449
	Use After March 11, 1974	P,D,C,Y	—	1	—	—	1	1	1	1	3590 562
23-06-61	CLIP, Inst. Pnl. Glove Box Shroud Attach.	P,D,C,Y	—	2	—	—	2	2	2	2	3590 458
23-08-12	**BUMPER, Door**	All	AR	AR	—	AR	AR	AR	AR	AR	3788 114
23-08-54	WASHER, Door Latch Striker	All	AR	AR	—	AR	AR	AR	AR	AR	6026 361
	WASHER, Frt. Door Latch Striker Barbed Type	R,W	—	—	—	—	2	—	2	2	6029 646
23-08-60	STRIKER, Door Latch Frt.	V,L,B,J	—	2	—	2	2	—	—	—	3454 485
	Frt.	R,W	2	2	—	2	—	—	—	—	3454 485
	Frt.	P,D,C,Y	—	2	—	—	—	—	—	—	3670 038
	Frt.	R,W	—	—	—	—	2	—	2	2	3454 484

TYPE LETTERS Indicates J - Challenger, B - Barracuda, V - Valiant, L - Dart, R - Satellite, W - Coronet, P - Plymouth, D - Dodge, C - Chrysler, Y - Imperial

NUMERALS INDICATE: 21 - 2 DR. SED., 23 - 2 DR. H.T., 29 - FAST BACK, 41 - 4 DR. SED., 43 - 4 DR. H.T., 45 - 6 PASS. STA. WGN., 46 - 9 PASS. STA. WGN.

AR Indicates use as required.
# Indicates parts not listed in any previous parts book
Numerals in parentheses ( ) refer to notes.
★ Indicates change or addition.

Printed in U.S.A.
November, 1974

Right and left part numbers are on same line, first number is right, second number is left.

CODE	PART NAME	MODEL CODES	SEE BOTTOM NOTE 21	23		29	41	43	45	46	PART NUMBER
23-08-60	STRIKER Cont'd.										
	Frt.	P,D,C,Y	—	—	—	—	2	2	2	2	3670 038
	Rear	V,L,R,W	—	—	—	—	2	—	2	2	3454 485
	Rear	P,D,C,Y	—	—	—	—	2	2	2	2	3670 038
23-08-75	TAPPED PLATE, Center Pillar Frt. Door Lock Striker	R,W	—	—	—	—	2	—	2	2	3767 427
	TAPPED PLATE, Body Lock Pillar Lock Striker	V,L	—	2	—	2	2	—	—	—	2893 939
23-09-9	**FRAME, Qtr. Wdo. Glass Lwr.**										
	w/CAPS	V,L	—	1	—	—	—	—	—	—	3788 058-9
	BRACKET w/CHANNEL, Qtr. Wdo. Glass Lift, Use w/o Pwr. Wdo.	R,W	—	1	—	—	—	—	—	—	3582 844-5
	Use w/Pwr. Wdo.	R,W	1	1	—	—	—	—	—	—	3582 844-5
	BRACKET w/CHANNEL, Qtr. Wdo. Glass Lift	P,D,C,Y	—	1	—	—	—	—	—	—	3788 112-3
23-09-27	CAP, Qtr. Wdo. Glass Lwr. Frame Reg. Roller Slot Frt.	V,L	—	4	—	—	—	—	—	—	2218 301
	Rear	V,L	—	4	—	—	—	—	—	—	2218 301
23-09-35	CHANNEL, Qtr. Wdo. Glass Rear Upr.	C,Y	—	1	—	—	—	—	—	—	3720 822-3
23-09-51	CHANNEL, w/NUT, Frt. Door Glass Run Rear	V,L	—	—	—	—	1	—	—	—	2811 158-9
	CHANNEL w/BRKT., Frt. Door Glass Run, Rear										
	Use w/Manual Vent Wing	P,D,C	—	—	—	—	1	—	1	1	3759 866-7
	Use After Oct. 5, 1973	P,D,C	—	—	—	—	1	—	1	1	3788 468-9
	Use w/Manual Vent Wing	P,D,C,Y	—	—	—	—	—	1	—	—	3759 290-1
	Use After Oct. 5, 1973	P,D,C,Y	—	—	—	—	—	1	—	—	3788 458-9
	CHANNEL and RUN, Frt. Door Upr. Frame Extension	R,W	—	—	—	—	1	—	1	1	3581 680-1
	CHANNEL and RUN, Frt. Door Glass, Rear CANADA	R,W	—	—	—	—	1	—	1	1	3581 680-1
23-09-52	BRACKET, Frt. Door Glass Channel and Guide, Comp.	V,L	—	1	—	1	—	—	—	—	3759 946-7
	Use After Oct. 11, 1973	V,L	—	1	—	1	—	—	—	—	3788 282-3
	BRACKET and GUIDE, Frt. Door Glass Lift	V,L	—	—	—	—	2	—	—	—	2664 256
	CHANNEL, Frt. Door Glass Lift	B,J	—	2	—	—	—	—	—	—	3759 615
	STABILIZER and CHANNEL, Frt. Door Glass	R,W	1	1	—	1	—	—	—	—	3759 602-3
		R,W	—	—	—	—	1	—	1	1	3759 606-7
	CHANNEL and BRACKET, Frt. Door Glass Lift, w/o Vent Wdo.	P,D,C	—	—	—	—	1	—	1	1	3759 956-7
		P,D,C,Y	—	—	—	—	—	1	—	—	3788 328-9
	CHANNEL, Frt. Door Glass Lift w/Vent Wdo.	P,D,C,Y	—	—	—	—	2	2	2	2	3582 563
	BRACKET, W/CHANNEL, Frt. Door Glass Downstop, w/Vent Wdo.	P,D,C	—	—	—	—	1	—	1	1	3788 310-1
		P,D,C,Y	—	—	—	—	—	1	—	—	3788 222-3
	Use After April 3, 1974	P,D,C	—	—	—	—	1	—	1	1	3788 494-5
	Use After April 18, 1974	P,D,C	—	—	—	—	1	—	1	1	# 3788 594-5
	BRACKET, Frt. Door Glass Guide and Hook, Comp.	P,D,C,Y	—	1	—	—	—	—	—	—	3759 992-3
23-09-53	SPACER, Qtr. Wdo. Glass to Qtr. Wdo. Glass Lwr. Frame	V,L	—	4	—	—	—	—	—	—	2216 544
	Channel Attach.	V,L	—	4	—	4	—	—	—	—	2216 544
	SPACER, Frt. Door Glass Lift Channel Attach. Bolt	V,L	—	4	—	4	—	—	—	—	3696 760

TYPE LETTERS Indicates: J - Challenger, B - Barracuda, V - Valiant, L - Dart, R - Satellite, W - Coronet, P - Plymouth, D - Dodge, C - Chrysler, Y - Imperial

NUMERALS INDICATE: 21 - 2 DR. SED., 23 - 2 DR. H.T., 29 - FAST BACK, 41 - 4 DR. SED., 43 - 4 DR. H.T., 45 - 6 PASS. STA. WGN., 46 - 9 PASS. STA. WGN.

AR Indicates use as required.
# Indicates parts not listed in any previous parts book
Numerals in parentheses ( ) refer to notes.
★ Indicates change or addition.

Printed in U.S.A.
November, 1974

Right and left part numbers are on same line, first number is right, second number is left.

CODE	PART NAME	MODEL CODES	SEE BOTTOM NOTE 21	23	29	41	43	45	46	PART NUMBER
23-09-53	SPACER Cont'd.									
	BUSHING, Frt. Door Glass Lift Fastener to Stabilizer									
		B,J	—	2	—	—	—	—	—	3696 693
		R,W	8	8	—	8	—	—	—	3696 693
		R,W	—	—	—	—	6	—	6	6 3696 693
		P,D,C,Y	—	—	—	—	4	4	4	4 3696 693
	BUSHING, Rear Door Glass to Lift Channel	R,W	—	—	—	—	4	—	4	4 3696 693
		P,D,C,Y	—	—	—	—	4	—	4	4 3696 693
		P,D,C,Y	—	—	—	—	—	6	—	— 3696 693
	BUSHING and FASTENER PACKAGE, Door Glass Lift Contains: BUSHING, 3696 693 FASTENER, 3759 193	All	AR	AR	—	AR	AR	AR	AR	AR 3744 734
23-09-54	GASKET, Frt. Door Glass Lift Brkt. Manual	V,L	—	—	—	—	2	—	—	— 2217 351
	GASKET, Frt. Door Glass Lift Channel	V,L	—	8	—	8	—	—	—	— 3581 798
	GASKET, Rear Door Wdo. Frt. Glass Lift Brkt.	V,L	—	—	—	—	2	—	—	— 2217 351
23-09-56	CHANNEL, w/LWR. BRACKET, Rear Door Glass Division Attaching	V,L	—	—	—	—	1	—	—	— 2663 572-3
23-09-58	BRACKET, w/GUIDE, Rear Door Wdo. Frt. Glass Lift	V,L	—	—	—	—	2	—	—	— 2664 256
	RIVET	V,L	—	—	—	—	2	—	—	— 6023 546
	CHANNEL, Rear Door Wdo. Glass Lift	R,W	—	—	—	—	2	—	2	2 3759 610
	CHANNEL, Rear Door Glass Lift	P,D,C,Y	—	—	—	—	2	—	2	2 3759 913
	CHANNEL and BRACKET, Rear Door Glass Lift	P,D,C,Y	—	—	—	—	—	2	—	— 3696 410-1
23-09-61	GROMMET, Qtr. Wdo. Glass to Qtr. Wdo. Glass Lwr. Frame	V,L	—	8	—	—	—	—	—	— 2216 546
23-09-63	SEAL, Rear Door Rear Glass Div. Channel	V,L	—	—	—	—	2	—	—	— 2860 324
23-09-64	FRAME, Tailgate Glass Lwr. w/Channel	R,W	—	—	—	—	—	—	2	2 3696 754
	CHANNEL, w/BRKT., Tailgate Glass Lift	P,D,C	—	—	—	—	—	—	1	1 3696 526-7
23-09-67	CHANNEL, w/BRKTS., Tailgate Glass Run Lwr.	R,W	—	—	—	—	—	—	1	1 3440 246-7
	CHANNEL, w/BRKTS., Tailgate Glass Run	P,D,C	—	—	—	—	—	—	1	1 3696 514-5
	CHANNEL and RUN, Tailgate Glass	P,D,C	—	—	—	—	—	—	1	1 3788 386-7
23-10-18	**SPRING, Door Lwr. Hge.**									
	Frt. Door, Door Half	R,W	2	2	—	2	2	—	2	2 3696 446
	Rear Door, Door Half (Also See Code 23-15-14)	R,W	—	—	—	—	2	—	2	2 3454 813
23-11-1	**SHELL, Frt. Door**									
		V,L	—	1	—	1	—	—	—	— 3752 744-5
	Use After Feb. 1, 1974	V,L	—	1	—	1	—	—	—	— 3752 346-7
		V,L	—	—	—	—	1	—	—	— 3684 244-5
		B	—	1	—	—	—	—	—	— 3684 236-7
		J	—	1	—	—	—	—	—	— 3684 240-1
		R	1	1	—	—	—	—	—	— 3684 142-3
		R	—	—	—	—	1	—	1	1 3684 126-7
	Use After Oct. 10, 1973	R	—	—	—	—	1	—	1	1 3833 332-3
		W	1	1	—	1	—	—	—	— 3684 132-3
		W	—	—	—	—	1	—	1	1 3684 122-3
	Use After Oct. 10, 1973	W	—	—	—	—	1	—	1	1 3833 328-9
		P	—	1	—	—	—	—	—	— 3752 262-3
		P	—	—	—	—	1	—	1	1 3752 268-9

TYPE LETTERS Indicates: J - Challenger, B - Barracuda, V - Valiant, L - Dart, R - Satellite, W - Coronet, P - Plymouth, D - Dodge, C - Chrysler, Y - Imperial

NUMERALS INDICATE: 21 - 2 DR. SED., 23 - 2 DR. H.T., 29 - FAST BACK, 41 - 4 DR. SED., 43 - 4 DR. H.T., 45 - 6 PASS. STA. WGN., 46 - 9 PASS. STA. WGN.

AR Indicates use as required.
# Indicates parts not listed in any previous parts book
Numerals in parentheses ( ) refer to notes.
★ Indicates change or addition.

Printed in U.S.A.
November, 1974

Right and left part numbers are on same line, first number is right, second number is left.

CODE	PART NAME	MODEL CODES	SEE BOTTOM NOTE 21	23	29	41	43	45	46	PART NUMBER
23-11-1	SHELL Cont'd.									
		P	—	—	—	—	1	—	—	3752 274-5
		D	—	1	—	—	—	—	—	3752 280-1
		D	—	—	—	1	—	1	1	3752 286-7
		D	—	—	—	—	1	—	—	3752 292-3
		C,Y	—	1	—	—	—	—	—	3752 256-7
		C,Y	—	—	—	—	1	—	—	3752 250-1
		C	—	—	—	1	—	1	1	3752 298-9
23-11-3	SHELL, Rear Door									
		V,L	—	—	—	1	—	—	—	3611 230-1
		R	—	—	—	1	—	—	—	3684 336-7
		R	—	—	—	—	—	1	1	3684 340-1
		W	—	—	—	1	—	—	—	3684 344-5
		W	—	—	—	—	—	1	1	3684 348-9
		P	—	—	—	1	—	—	—	3752 050-1
		P	—	—	—	—	1	—	—	3752 056-7
		P	—	—	—	—	—	1	1	3752 062-3
		D	—	—	—	1	—	—	—	3752 066-7
		D	—	—	—	—	1	—	—	3752 072-3
		D	—	—	—	—	—	1	1	3752 078-9
		C	—	—	—	1	—	—	—	3752 082-3
	Use After Feb. 2, 1974	C	—	—	—	1	—	—	—	3833 376-7
		C,Y	—	—	—	—	1	—	—	3752 088-9
	Use After Feb. 2, 1974	C,Y	—	—	—	—	1	—	—	3833 380-1
		C	—	—	—	—	—	1	1	3752 094-5
23-11-10	OVERLAY, Door Outside	R-P	—	—	—	—	—	4	4	3680 714
		W-P	—	—	—	—	—	4	4	3680 734
		P-P	—	—	—	—	—	4	4	3810 201
	Frt.	D-P	—	—	—	—	—	1	1	3680 107
	Rear	D-P	—	—	—	—	—	1	1	3680 107
		C-P	—	—	—	—	—	4	4	3680 107
23-11-21	NAME PLATE, Door Outside (See Exterior Ornamentation Illustrations)									
23-11-23	ORNAMENT, Rear Door, Rear, Outer	C,Y	—	—	—	—	1	—	—	3749 854-5
	ORNAMENT and GASKET, Rear Door, Outer	C,Y	—	—	—	—	1	—	—	3810 258-9
	Use After Jan. 15, 1974	C,Y	—	—	—	—	1	—	—	3810 320-1
	ORNAMENT and W/STRIP, Rear Door, Inner	C,Y	—	—	—	—	1	—	—	3788 018-9
23-11-27	GASKET, Rear Door Outer Ornament	C,Y	—	—	—	—	2	—	—	3788 090
23-11-29	BRACKET, Frt. Door Inside Pnl. to Trim Pnl.	R,W	2	2	—	2	—	—	—	— 3499 270
	BRACKET and SUPPORT, Frt. Door Inside Panel Garnish Mldg. Comp.	V,L	—	1	—	1	—	—	—	— 3696 596-7
	Use After Jan. 1, 1974	V,L	—	1	—	1	—	—	—	— 3788 052-3
	BRACKET and SUPPORT, Frt. Door Inside Trim Pnl.	P,D,C,Y	—	1	—	—	—	—	—	— 3759 838-9
	Use After Feb., 15, 1974	P,D,C,Y	—	1	—	—	—	—	—	# 3788 396-7
	w/o Vent Wdo., Comp.	P,D,C	—	—	—	2	—	2	2	3759 089
	Use After Jan. 15, 1974	P,D,C	—	—	—	1	—	1	1	3788 498-9
		P,D,C,Y	—	—	—	—	2	—	—	3759 089
	Use After Feb. 15, 1974	P,D,C,Y	—	—	—	—	2	—	—	3788 395
	w/Vent Wdo's	P,D,C	—	—	—	2	—	2	2	# 3788 014
	w/Vent Wdo's	P,D,C,Y	—	—	—	—	1	—	—	3788 372-3
23-12-23	**PLATE, Vehicle Identification**	V,L,B,J	—	1	—	1	1	—	—	2927 369
		R,W	1	1	—	1	1	—	1	1 2927 369
23-14-10	**HANDLE, Door Outside**									
	Frt.	V,L	—	1	—	1	1	—	—	— 3796 130-1
		B,J	—	1	—	—	—	—	—	— 3796 132-3

new 3760214-5 3760215

TYPE LETTERS Indicates J - Challenger, B - Barracuda, V - Valiant, L - Dart, R - Satellite, W - Coronet, P - Plymouth, D - Dodge, C - Chrysler, Y - Imperial

NUMERALS INDICATE: 21 - 2 DR. SED., 23 - 2 DR. H.T., 29 - FAST BACK, 41 - 4 DR. SED., 43 - 4 DR. H.T., 45 - 6 PASS. STA. WGN., 46 - 9 PASS. STA. WGN.

AR Indicates use as required.
# Indicates parts not listed in any previous parts book
Numerals in parentheses ( ) refer to notes.
★ Indicates change or addition.

Printed in U.S.A.
November, 1974

Right and left part numbers are on same line, first number is right, second number is left.

CODE	PART NAME	MODEL CODES	SEE BOTTOM NOTE 21	23		29	41	43	45	46	PART NUMBER
23-14-10	HANDLE Cont'd.										
	Frt.	P,D,C,Y	—	2	—	—	2	2	2	2	3695 750
	Rear	V,L	—	—	—	—	1	—	—	—	3454 394-5
	Rear	P,D, C,Y	—	—	—	—	2	2	2	2	3695 750
	HANDLE and LINK PACKAGE, Door outside										
	Frt.	R,W	2	2	—	2	2	—	2	2	3621 755
	Rear	R,W	—	—	—	—	2	—	2	2	3621 755
23-14-15	RETAINER, Door Pull Handle	W	—	4	—	4	—	—	—	—	3509 860
		R	4	4	—	—	—	—	—	—	3509 860
		V,L	—	4	—	—	4	—	—	—	3509 860
		P,D	—	4	—	—	4	4	4	4	3509 860
		C-H,C-S,Y	—	4	—	—	4	4	—	—	6000 176
	RETAINER, Rear Door Pull Handle	P,D	—	—	—	—	4	4	4	4	3509 860
		V,L	—	—	—	—	4	—	—	—	3509 860
		C-H,C-S,Y	—	—	—	—	4	4	—	—	6000 176
	BRACKET, Door Pull Handle Attach.	V,L	—	2	—	—	—	—	—	—	3762 446
	BRACKET, Door Upr. Trim Panel Pull Handle, Attach.	W	—	4	—	4	—	—	—	—	3510 465
		R	4	4	—	—	—	—	—	—	3510 465
	BRACKET, Door Pull Handle to Door Inner Pnl., Frt. and Rear	P-P	—	2	—	—	—	—	—	—	3762 036
		C-S	—	4	—	—	—	—	—	—	3762 036
		C-H,C-S	—	—	—	—	2	2	—	—	3762 036
	BRACKET, Rear Door Pull Handle to Inner Pnl., Frt. and Rear	P-P	—	—	—	—	—	4	4	4	3762 036
		C-H,C-S	—	—	—	—	2	2	—	—	3762 036
23-14-18	HANDLE, Door Manual Wdo. Reg.	V,L,B,J	—	AR	—	AR	AR	—	—	3861477	2862 167
		R,W	AR	AR	—	AR	AR	—	AR	AR	2862 167
		P,D,C	—	AR	—	—	AR	AR	AR	AR	2999 644
	Use After Jan. 22, 1974	P,D,C	—	AR	—	—	AR	AR	AR	AR	# 3861 496
23-14-24	SPACER, Door Manual Wdo. Reg. Handle	V,L	—	—	—	—	AR	—	—	—	2935 231
		V,L	—	2	—	2	—	—	—	—	2935 232
		B	—	2	—	—	—	—	—	—	2935 231
		J	—	2	—	—	—	—	—	—	2935 232
	Frt. Door	R,W	2	2	—	2	2	—	2	2	2935 231
	Rear Door	R,W	—	—	—	—	2	—	2	2	2935 232
		P	—	AR	—	—	AR	AR	AR	AR	2945 511
	Except D-P	D	—	AR	—	—	AR	AR	AR	AR	2945 511
		C-H	—	—	—	—	AR	AR	—	—	2945 511
		D-P	—	AR	—	—	AR	AR	AR	AR	2945 512
	Except C-H, C-S	C	—	AR	—	—	AR	AR	AR	AR	2945 512
	SPACER, Qtr. Wdo. Manual Reg. Handle	V,L	—	2	—	—	—	—	—	—	2935 232
		B	—	2	—	—	—	—	—	—	2999 870
		J	—	2	—	—	—	—	—	—	2935 231
		R,W	—	2	—	—	—	—	—	—	2935 232
		W	—	—	—	2	—	—	—	—	2935 232
		P	—	2	—	—	—	—	—	—	2945 511
		D-M,D-H	—	2	—	—	—	—	—	—	2945 511
		D-P	—	2	—	—	—	—	—	—	2945 512
		C-L,C-M	—	2	—	—	—	—	—	—	2945 512
23-14-27	HANDLE, Door Latch Remote Control	B	—	1	—	—	—	—	—	—	3454 842-3
		J	—	1	—	—	—	—	—	—	3454 170-1
		V,L	—	—	—	—	AR	—	—	—	2935 214-5
		R,W	1	1	—	1	—	—	—	—	3508 916-7
		R,W	—	—	—	—	AR	—	AR	AR	2935 214-5
	COVER and HANDLE, Door Latch Remote Control	C-S	—	AR	—	—	AR	AR	—	—	3760 456-7
		Y	—	AR	—	—	—	AR	—	—	3760 458-9
	(NOTE:) See 23-18-13 REMOTE CONTROL										

TYPE LETTERS Indicates: J - Challenger; V - Valiant; R - Satellite; P - Plymouth; C - Chrysler; B - Barracuda; L - Dart; W - Coronet; D - Dodge; Y - Imperial

NUMERALS INDICATE: 21 - 2 DR. SED.; 23 - 2 DR. H.T.; 29 - FAST BACK; 41 - 4 DR. SED.; 43 - 4 DR. H.T.; 45 - 6 PASS. STA. WGN.; 46 - 9 PASS. STA. WGN.

AR Indicates use as required.
# Indicates parts not listed in any previous parts book
Numerals in parentheses ( ) refer to notes.
★ Indicates change or addition.

Printed in U.S.A.
November, 1974

Right and left part numbers are on same line, first number is right, second number is left.

CODE	PART NAME	MODEL CODES	SEE BOTTOM NOTE 21	23	29	41	43	45	46	PART NUMBER
23-14-32	CAP and INSERT, Door Pull Handle End									
	American Walnut	W	—	4	4	—	—	—	—	3509 898
		R	4	4	—	—	—	—	—	3509 898
		V,L	—	4	—	4	—	—	—	3509 898
	Walnut	P,D-P	—	AR	—	AR	AR	AR	AR	3589 977
	Crossfire Walnut	C-H, C-S	—	AR	—	AR	AR	—	—	3762 004
	Rose Wood	Y	—	AR	—	—	AR	—	—	3762 010
23-14-50	BASE, Door Pull Handle Attach.	C-H,C-S	—	AR	—	AR	AR	—	—	3762 011
	Use After Oct. 26, 1973	C-H,C-S	—	AR	—	AR	AR	—	—	3762 588
		Y	—	AR	—	—	AR	—	—	3762 011
	Use After Oct. 26, 1973	Y	—	AR	—	—	AR	—	—	3762 588
23-14-53	HANDLE PACKAGE, Frt. Door Vent									
	Wing	V,L	—	—	—	1	—	—	—	2809 940-1
	Use After Jan. 7, 1974	V,L	—	—	—	1	—	—	—	2933 204-5
	HANDLE PACKAGE, Frt. Door Vent Wdo.									
	w/o Locking Button on Hdle.	P,D,C,Y	—	—	—	1	1	1	1	3837 970-1
	w/Locking Button on Hdle.	P,D,C,Y	—	—	—	1	1	1	1	3780 422-3
	Use After April 2, 1974	P,D,C,Y	—	—	—	1	1	1	1	★3879 368-9
23-14-54	RETAINER, Frt. Door V/Wdo. Handle Shaft	P,D,C,Y	—	—	—	2	2	2	2	3788 264
	Use After April 2, 1974	P,D,C,Y	—	—	—	2	2	2	2	# 3788 553
23-14-70	HANDLE, LINK and BRACKET, Qtr.									
	Wdo. Latch	V,L	—	—	1	—	—	—	—	3696 700-1
23-14-79	HANDLE, Qtr. Manual Wdo. Regulator	V,L,B,J	—	2	—	—	—	—	—	2862 167
		R,W	—	2	—	—	—	—	—	2862 167
	w/Halo Roof	W	—	—	2	—	—	—	—	2862 167
		P,D,C	—	2	—	—	—	—	—	2999 644
	Use After Jan. 22, 1974	P,D,C	—	2	—	—	—	—	—	3861 496
23-14-82	SPRING, Qtr. Wdo. Reg. Handle	J	—	2	—	—	—	—	—	3509 056
23-14-147	GASKET, Door Outside Handle	B,J	—	2	—	—	—	—	—	2999 813
	Frt., Frt.	V,L	—	2	—	2	2	—	—	3454 334
	Frt., Rear	V,L	—	2	—	2	2	—	—	3454 335
	Rear, Frt.	V,L	—	—	—	—	2	—	—	3454 334
	Rear, Rear	V,L	—	—	—	—	2	—	—	3454 335
	GASKET, Door Outside Handle Base	R,W	AR	AR	—	AR	AR	—	AR	AR 3454 572
		P,D,C,Y	—	AR	—	—	AR	AR	AR	AR 3454 572
	SPACER, Frt. Door Outside Handle	B,J	—	1	—	—	—	—	—	3454 304-5
23-14-153	BUMPER, Frt. Door Outside Handle	B,J	—	2	—	—	—	—	—	1707 384
	BUMPER, Door Outside Handle Push									
	Button	V,L	—	AR	—	AR	AR	—	—	— 2216 279
23-15-1	**HINGE, Door Upr.**									
	Frt.	V,L	—	1	—	1	1	—	—	— 3789 082-3
	Frt.	B,J	—	1	—	—	—	—	—	— 2999 368-9
	Frt.	R,W	2	2	—	2	2	—	2	2 3454 510
	Frt.	P,D,C,Y	—	1	—	—	1	1	1	1 3582 600-1
	Frt., Rt., Use After April 12, 1974	P,D,C,Y	—	1	—	—	1	1	1	1 3788 518
	Frt., Lt., Use After Feb. 15, 1974	P,D,C,Y	—	1	—	—	1	1	1	1 3788 287
	Frt., Lt., Use After April 12, 1974	P,D,C,Y	—	1	—	—	1	1	1	1 3788 521
	Rear	V,L	—	—	—	—	1	—	—	— 2765 790-1
	Rear	R,W	—	—	—	—	1	—	1	1 3454 504-5
	Rear	P,D,C,Y	—	—	—	—	1	1	1	1 3582 652-3
23-15-3	HINGE, Door Lwr.									
	Frt., w/Integral Check	V,L	—	1	—	1	1	—	—	— 3789 084-5
	Frt.	B,J	—	1	—	—	—	—	—	— 2999 370-1
	Frt.	R,W	1	1	—	1	1	—	1	1 3788 022-3
	Frt.	P,D,C,Y	—	1	—	—	1	1	1	1 3582 602-3
	Frt. Rt., Use After Feb. 15, 1974	P,D,C,Y	—	1	—	—	1	1	1	1 3788 292
	Frt. Lt., Use After Feb. 15, 1974	P,D,C,Y	—	1	—	—	1	1	1	1 3788 291
	Frt., Rt., Use After April 12, 1974	P,D,C,Y	—	1	—	—	1	1	1	1 3788 510
	Frt., Lt., Use After April 12, 1974	P,D,C,Y	—	1	—	—	1	1	1	1 3788 513

TYPE LETTERS Indicates: J - Challenger, B - Barracuda, V - Valiant, L - Dart, R - Satellite, W - Coronet, P - Plymouth, D - Dodge, C - Chrysler, Y - Imperial

NUMERALS INDICATE: 21 - 2 DR. SED., 23 - 2 DR. H.T., 29 - FAST BACK, 41 - 4 DR. SED., 43 - 4 DR. H.T., 45 - 6 PASS. STA. WGN., 46 - 9 PASS. STA. WGN.

AR Indicates use as required.
# Indicates parts not listed in any previous parts book
Numerals in parentheses ( ) refer to notes.
★ Indicates change or addition.

Printed in U.S.A.
November, 1974

Right and left part numbers are on same line, first number is right, second number is left.

CODE	PART NAME	MODEL CODES	SEE BOTTOM NOTE 21	23	29	41	43	45	46	PART NUMBER
23-15-3	HINGE Cont'd.									
	Rear, w/Integral Check	V,L	—	—	—	1	—	—	—	2583 002-3
	Rear	R,W	—	—	—	1	—	1	1	3454 506-7
	Rear	P,D,C,Y	—	—	—	1	1	1	1	3582 654-5
23-15-9	PIN, Frt. Door Upr. Hinge	V,L	—	2	—	2	2	—	—	— 6023 576
		V,L	—	2	—	2	2	—	—	— 6029 018
		B,J	—	2	—	—	—	—	—	— 6029 018
		P,D,C,Y	—	2	—	—	2	2	2	2 6029 041
		P,D,C,Y	—	2	—	—	2	2	2	2 6023 576
	PIN, Frt. Door Lwr. Hinge	V,L,B,J	—	2	—	2	2	—	—	— 6022 891
	PIN, Frt. Door Lwr. Hinge Check Arm	P,D,C,Y	—	2	—	—	2	2	2	2 6026 889
	PIN, Rear Door Upr. Hinge	V,L	—	—	—	—	2	—	—	— 6006 043
		P,D,C,Y	—	—	—	—	2	2	2	2 6006 043
	PIN, Rear Door Lwr. Hinge	V,L	—	—	—	—	2	—	—	— 6022 891
	PIN, Frt. and Rear Door Upr. Hge. CANADA	R,W	2	2	—	2	4	—	4	4 6025 892
	PIN, Frt. Door Lwr. Hinge, Body Half to Door Half	R,W	2	2	—	2	2	—	2	2 6029 041
	PIN, Frt. Door Lwr. Hinge Cam Door Half	R,W	2	2	—	2	2	—	2	2 9414 469
	PIN, Rear Door Lwr. Hinge, Body Half to Door Half	R,W	—	—	—	—	2	—	2	2 6029 041
23-15-13	TAPPING PLATE, Frt. Door Hge. Pillar Lwr.	R,W	2	2	—	2	2	—	2	2 3439 709
	Lwr.	P,D,C,Y	—	1	—	—	1	1	1	1 3759 786-7
	Upr.	P,D,C,Y	—	1	—	—	1	1	1	1 3674 418-9
	TAPPING PLATE, Rear Door Hge. Pillar	R,W	—	—	—	—	2	—	2	2 3439 709
	Lwr.	P,D,C,Y	—	—	—	—	1	1	1	1 3759 784-5
	Lwr.	V,L	—	—	—	—	2	—	—	— 2491 448
	Upr.	R,W	—	—	—	—	2	—	2	2 2893 958
	Upr.	P,D,C,Y	—	—	—	—	2	2	2	2 3696 332
	TAPPING PLATE, Center Pillar Upr.	P,D,C,Y	—	—	—	—	2	2	2	2 3674 459
	Lwr.	P,D,C,Y	—	—	—	—	2	2	2	2 3674 460
	TAPPING PLATE, Frt. Pillar Upr. Hge.	P,D,C,Y	—	1	—	—	1	1	1	1 3674 418-9
	TAPPING PLATE, Body Ctr. Pillar Lwr. Hge.	V,L	—	—	—	—	2	—	—	— 2254 270
	TAPPING PLATE, Ctr. Pillar Rear Door Upr. Hge. Reinf.	R,W	—	—	—	—	2	—	2	2 3439 508
23-15-14	SPRING, Door Lwr. Hge. Rear Door, Door Half (Also see Code 23-10-18)	R,W	—	—	—	—	2	—	2	2 3454 813
23-15-30	BAR, Door Lwr. Hge. Torsion Frt.	V,L,B,J	—	2	—	2	2	—	—	— 2583 568
	Frt.	R,W	1	1	—	1	1	—	1	1 3788 028-9
	Frt.	P,D,C,Y	—	1	—	—	1	1	1	1 3696 540-1
	Frt., Use After Feb. 15, 1974	P,D,C,Y	—	1	—	—	1	1	1	1 # 3788 302-3
	Rear	V,L	—	—	—	—	2	—	—	— 2583 468
	Rear	P,D,C,Y	—	—	—	—	1	1	1	1 3696 538-9
23-15-38	BUSHING, Door Hinge Frt., Upr.	V,L,B,J	—	4	—	4	4	—	—	— 2486 468
	Rear, Upr., Body Half	V,L	—	—	—	—	4	—	—	— 2486 468
	Rear, Upr., Body Half	P,D,C,Y	—	—	—	—	4	4	4	4 2486 468
23-17-1	**KEY BLANK, Door & Ignition CANADA**	All	2	2	—	2	2	2	2	2 3454 327
	Deck Lid, Glove Box, Console CANADA	All	2	2	—	2	2	2	—	— 2999 041
	Tailgate CANADA	All	—	—	—	—	—	—	2	2 3454 327
	Rear Floor Cover Pnl. CANADA	P,D,C	—	—	—	—	—	—	2	2 2999 041

TYPE LETTERS Indicates	J - Challenger B - Barracuda	V - Valiant L - Dart	R - Satellite W - Coronet	P - Plymouth D - Dodge	C - Chrysler Y - Imperial
NUMERALS INDICATE:	21 - 2 DR. SED. 23 - 2 DR. H.T.	29 - FAST BACK	41 - 4 DR. SED. 43 - 4 DR. H.T.		45 - 6 PASS. STA. WGN. 46 - 9 PASS. STA. WGN.

AR Indicates use as required.
# Indicates parts not listed in any previous parts book
Numerals in parentheses ( ) refer to notes.
★ Indicates change or addition.
Printed in U.S.A.
November, 1974

Right and left part numbers are on same line, first number is right, second number is left.

CODE	PART NAME	MODEL CODES	SEE BOTTOM NOTE 21	23	29	41	43	45	46	PART NUMBER
23-17-2	CYLINDER and KEY PACKAGE, Door and Ignition	V,L	—	1	—	1	1	—	—	— 3695 555
		R,W	1	1	—	1	1	—	—	— 3695 555
		P,D,	—	1	—	—	1	1	—	— 3695 555
		C,Y	—	1	—	—	1	1	—	— 3695 555
		B,J	—	1	—	—	—	—	—	— 3695 556
	CYLINDER and KEY PACKAGE, Door and Ignition									
	Use w/Tilt and Tel. Strg.	P,D,C,Y	—	1	—	—	1	1	—	— 3548 955
	Use w/Tilt and Tel. Strg. and Security Alarm System	P,D,C,Y	—	1	—	—	1	1	—	— 3695 679
	Use w/Security Alarm Systems w/o Tilt and Tel. Strg.	P,D,C,Y	—	1	—	—	1	1	—	— 3695 678
	CYLINDER and KEY PACKAGE, Door, Ign., Glove Box, Deck Lid	R,W	1	1	—	1	1	—	—	— 3744 117
		P	—	—	—	—	1	—	—	— 3760 376
	CYLINDER and KEY PACKAGE, Door, Ign., and Manual Tailgate	R,W	—	—	—	—	—	—	1	1 3695 557
	CYLINDER and KEY PACKAGE, Door, Ign., and Electric Tailgate	R,W	—	—	—	—	—	—	1	1 3695 558
	CYLINDER and KEY PACKAGE, Door, Ign. Tailgate									
	w/o Tilt and Tel. Strg.	P,D,C	—	—	—	—	—	—	1	1 3760 351
	w/Tilt and Tel. Strg.	P,D,C	—	—	—	—	—	—	1	1 3760 361
	w/Security Alarm System, w/o Tilt and Tel. Strg.	P,D,C	—	—	—	—	—	—	1	1 3760 371
	w/Security Alarm System, w/Tilt and Tel. Strg.	P,D,C	—	—	—	—	—	—	1	1 3760 373
23-17-4	CYLINDER and KEY PACKAGE, Deck Lid and Glove Box	V,L	—	1	—	1	1	—	—	— 3744 119
		B	—	1	—	—	—	—	—	— 3695 289
		J	—	1	—	—	—	—	—	— 3744 119
		R,W	1	1	—	1	1	—	—	— 3744 120
		P,D,C,Y	—	1	—	—	1	1	—	— 3780 740
	CYLINDER PACKAGE, Deck Lid Lock Complete									
	w/Man. Handle	P,D	—	—	—	—	1	—	—	— 3780 738
	w/Man. Handle	R,W	—	—	—	—	1	—	—	— 3744 118
23-17-9	GASKET, Deck Lid Lock Cylinder	All	1	1	—	1	1	1	—	— 3695 321
	GASKET, Deck Lid Lock Cyl. Medallion	Y	—	1	—	—	—	1	—	— 3796 056
23-17-11	SPRING, Deck Lid Lock Cylinder Medallion Retainer									
		Y	—	1	—	—	—	1	—	— 3760 600
23-17-16	NUT, Deck Lid Lock Cyl. Retainer	All	1	1	—	1	1	1	—	— 3695 360
23-17-19	MEDALLION, Deck Lid Lock Cyl. (See Exterior Ornamentation Illustrations)									
23-17-27	GASKET, Frt. Door Lock Cyl.	V,L,R,W	2	2	—	2	2	—	2	2 2583 860
		P,D,C	—	2	—	—	2	2	2	2 2583 860
23-17-28	RETAINER, Frt. Door Lock Cylinder Attaching	V,L	—	2	—	2	2	—	—	— 2583 377
		R,W	1	1	—	1	1	—	1	1 3548 350-1
		P,D,C,Y	—	1	—	—	1	1	1	1 3760 302-3
23-17-38	CYLINDER and KEY PACKAGE, Floor Console Lock	B,J,R,W	1	1	—	1	—	—	—	— 3454 987
23-17-51	GASKET, Tailgate Door Lock Cylinder	R,W	—	—	—	—	—	—	1	1 2583 860
		P,D,C	—	—	—	—	—	—	1	1 2583 860
23-17-52	RETAINER, Tailgate Lock Cylinder Attach.	R,W	—	—	—	—	—	—	1	1 2583 377
		P,D,C	—	—	—	—	—	—	1	1 2583 377

TYPE LETTERS Indicates J - Challenger, B - Barracuda, V - Valiant, L - Dart, R - Satellite, W - Coronet, P - Plymouth, D - Dodge, C - Chrysler, Y - Imperial

NUMERALS INDICATE: 21 - 2 DR. SED., 23 - 2 DR. H.T., 29 - FAST BACK, 41 - 4 DR. SED., 43 - 4 DR. H.T., 45 - 6 PASS. STA. WGN., 46 - 9 PASS. STA. WGN.

AR Indicates use as required.
# Indicates parts not listed in any previous parts book
Numerals in parentheses ( ) refer to notes.
★ Indicates change or addition.

Printed in U.S.A.
November, 1974

Right and left part numbers are on same line, first number is right, second number is left.

CODE	PART NAME	MODEL CODES	SEE BOTTOM NOTE 21	23	29	41	43	45	46	PART NUMBER
23-17-72	CYLINDER and KEY PACKAGE, Rear Floor Pan Cover Pnl. Lock	R,W	—	—	—	—	—	—	1	—	2935 916
		P,D,C	—	—	—	—	—	—	1	—	2935 916
	CYLINDER and KEY PACKAGE, 3rd Seat Back Lock	R,W	—	—	—	—	—	—	—	1	2935 916
		P,D,C	—	—	—	—	—	—	—	1	2935 916
	NOTE: Parts Listed Below Not Contained in Pkgs.										
	SCREW and L/WASHER	P,D,C	—	—	—	—	—	—	1	1	6026 336
	NUT	P,D,C	—	—	—	—	—	—	1	1	6025 196
	WASHER	P,D,C	—	—	—	—	—	—	1	1	121 753
	SPRING WASHER	P,D,C	—	—	—	—	—	—	1	1	6025 198
23-17-74	LEVER, Rear Floor Pan Cover Pnl. Lock Cylinder	P,D,C	—	—	—	—	—	—	1	—	2520 621
	LEVER, 3rd Seat Back Release Handle Lock Cylinder	P,D,C	—	—	—	—	—	—	—	1	2520 621
23-18-5	**LATCH, Door**										
	Frt. Non-Override, Rt.	V,L	—	1	—	1	—	—	—	—	3695 448
	Frt., Override Lt.	V,L	—	1	—	1	—	—	—	—	3695 447
	Frt., Non-Override, Rt.	V,L	—	—	—	—	1	—	—	—	3695 448
	Frt., Override, Lt.	V,L	—	—	—	—	1	—	—	—	3695 447
	Rear, Non-Override	V,L	—	—	—	—	1	—	—	—	3695 458-9
	Non-Override, Rt.	B,J	—	1	—	—	—	—	—	—	3695 456
	Override, Lt.	B,J	—	1	—	—	—	—	—	—	3695 455
	Frt., Non Override, Rt.	R,W	1	1	—	1	—	—	—	—	3695 442
	Frt., Override, Lt.	R,W	1	1	—	1	—	—	—	—	3695 453
	Frt., Non-Override, Rt.	R,W	—	—	—	—	1	—	1	1	3695 442
	Frt., Override, Lt.	R,W	—	—	—	—	1	—	1	1	3695 453
	Rear, Non-Override	R,W	—	—	—	—	1	—	1	1	3695 460-1
	Frt., Non-Override, Rt.	P,D,C,Y	—	1	—	—	—	—	—	—	3760 006
	Frt., Override, Lt.	P,D,C,Y	—	1	—	—	—	—	—	—	3760 003
	Frt., Non-Override, Rt.	P,D,C,Y	—	—	—	—	1	1	1	1	3760 006
	Frt., Override, Lt.	P,D,C,Y	—	—	—	—	1	1	1	1	3760 003
	Rear, Non-Override	P,D,C,Y	—	—	—	—	1	1	1	1	3760 010-1
23-18-11	LINK, w/SLEEVE, Frt. Door Latch Remote Control	V,L	—	1	—	1	—	—	—	—	3760 868-9
		V,L	—	—	—	—	1	—	—	—	3586 162-3
		B,J	—	1	—	—	—	—	—	—	3586 160-1
		R,W	1	1	—	1	—	—	—	—	3548 772-3
		R,W	—	—	—	—	1	—	1	1	3586 668-9
	to Latch, Rt. Up to Jan. 2, 1974	P,D,C,Y	—	1	—	—	—	—	—	—	3796 204
	Use After Jan. 2, 1974	P,D,C,Y	—	1	—	—	—	—	—	—	# 3695 796
	to Latch, Lt., Up to Jan. 2, 1974	P,D,C,Y	—	1	—	—	—	—	—	—	3796 203
	Use After Jan. 2, 1974	P,D,C,Y	—	1	—	—	—	—	—	—	# 3695 797
	to Latch	P,D,C,Y	—	—	—	—	1	1	1	1	3796 208-9
	LINK, Frt. Door Latch Locking Control w/SLEEVE	B,J	—	1	—	—	—	—	—	—	3454 450-1
	LINK, Rear Door Latch Locking Control w/SLEEVE	R,W	—	—	—	—	2	—	2	2	3548 390
	LINK, Rear Door Latch Remote Control	V,L	—	—	—	—	1	—	—	—	3586 166-7
	w/Sleeve	R,W	—	—	—	—	1	—	1	1	3508 782-3
	w/SLEEVE, Up to Jan. 2, 1974	P,D	—	—	—	—	1	1	1	1	3796 212-3
	Use After Jan. 2, 1974	P,D	—	—	—	—	1	1	1	1	# 3695 822-3
	w/SLEEVE, Up to Jan. 2, 1974	C	—	—	—	—	—	—	1	1	3796 212-3
	Use After Jan. 2, 1974	C	—	—	—	—	—	—	1	1	# 3695 822-3
	w/SLEEVE, Except C-S	C	—	—	—	—	1	1	—	—	3796 216-7
		C-S,Y	—	—	—	—	1	1	—	—	3796 820-1
	Use After Oct. 8, 1973	C-S,Y	—	—	—	—	1	1	—	—	3861 184-5

TYPE LETTERS Indicates J - Challenger, B - Barracuda, V - Valiant, L - Dart, R - Satellite, W - Coronet, P - Plymouth, D - Dodge, C - Chrysler, Y - Imperial

NUMERALS INDICATE: 21 - 2 DR. SED., 23 - 2 DR. H.T., 29 - FAST BACK, 41 - 4 DR. SED., 43 - 4 DR. H.T., 45 - 6 PASS. STA. WGN., 46 - 9 PASS. STA. WGN.

AR Indicates use as required.
# Indicates parts not listed in any previous parts book
Numerals in parentheses ( ) refer to notes.
★ Indicates change or addition.

Printed in U.S.A.
November, 1974

Right and left part numbers are on same line, first number is right, second number is left.

CODE	PART NAME	MODEL CODES	SEE BOTTOM NOTE 21	23	29	41	43	45	46	PART NUMBER
23-18-13	REMOTE CONTROL and HANDLE, Door Latch	V,L	—	1	—	1	—	—	—	—	3796 134-5
	REMOTE CONTROL, Door Latch	V,L	—	—	—	—	AR	—	—	—	3695 208-9
		B	—	1	—	—	—	—	—	—	3454 172-3
		J	—	1	—	—	—	—	—	—	2999 384-5
		R,W	1	1	—	1	—	—	—	—	3796 136-7
		R,W	—	—	—	—	AR	—	AR	AR	3796 138-9
	w/HANDLE	P,D	—	AR	—	—	AR	AR	AR	AR	3796 196-7
	w/HANDLE, Except C-S	C	—	AR	—	—	AR	AR	AR	AR	3796 196-7
	Frt. Door, w/o HANDLE	C-S, Y	—	1	—	—	1	1	—	—	3796 198-9
	Rear Door, w/o HANDLE	C-S,Y	—	—	—	—	1	1	—	—	3796 810-1
	(NOTE:) See 23-14-27 COVER AND HANDLE										
23-18-20	LINK, Frt. Door Latch to Outside Handle to Latch	V,L	—	2	—	2	—	—	—	—	3508 718
		V,L	—	—	—	—	2	—	—	—	3508 720
		B,J	—	1	—	—	—	—	—	—	2999 374-5
		R,W	2	2	—	2	—	—	—	—	3670 422
		R,W	—	—	—	—	1	—	1	1	3695 150-1
		P,D	—	2	—	—	—	—	—	—	3695 762-3
		C,Y	—	2	—	—	—	—	—	—	3695 770-1
		P,D	—	—	—	—	1	1	1	1	3796 806-7
	Use After Dec. 10, 1973	P,D	—	—	—	—	1	1	1	1	3861 250-1
		C,Y	—	—	—	—	1	1	1	1	3796 808-9
	Use After Dec. 10, 1973	C,Y	—	—	—	—	1	1	1	1	3861 248-9
	LINK, Rear Door Latch to Outside Handle to Latch	R,W	—	—	—	—	2	—	2	2	3670 780
		P	—	—	—	—	2	2	2	2	3695 826
		D	—	—	—	—	2	2	2	2	3695 828
		C,Y	—	—	—	—	2	2	—	—	3695 832
		C	—	—	—	—	—	—	2	2	3695 830
23-18-24	SPRING, Rear Door Latch Remote Actuator	V,L	—	—	—	—	2	—	—	—	2802 116
		R,W	—	—	—	—	2	—	2	2	2802 116
23-18-25	CONTROL, w/LINK, Frt. Door Latch Locking	V,L	—	1	—	1	—	—	—	—	3760 870-1
		B	—	1	—	—	—	—	—	—	3796 192-3
		J	—	1	—	—	—	—	—	—	3796 194-5
		R,W	1	1	—	1	—	—	—	—	3796 142-3
	w/o Pwr. Door Locks	P,D,C,Y	—	1	—	—	—	—	—	—	3796 218-9
	w/Pwr. Door Locks	C-S,Y	—	1	—	—	—	—	—	—	3796 218-9
	CONTROL, w/LINK, Rear Door Latch Locking	V,L	—	—	—	—	1	—	—	—	2802 104-5
		R,W	—	—	—	—	1	—	1	1	3796 140-1
		P,D,C,Y	—	—	—	—	1	1	1	1	3796 200-1
	CONTROL, Rear Door Latch Locking	P-K,D-K	—	—	—	—	1	—	—	—	# 3740 938-9
23-18-26	LINK, Door Lock Key Cylinder	V,L	—	1	—	1	—	—	—	—	3760 112-3
		V,L	—	—	—	—	1	—	—	—	3760 110-1
		B,J	—	1	—	—	—	—	—	—	3760 114-5
		R,W	1	1	—	1	—	—	—	—	3760 118-9
		R,W	—	—	—	—	1	—	1	1	3760 116-7
	LINK, Door Lock Key Cylinder to Latch	P	—	1	—	—	—	—	—	—	3695 774-5
		P	—	—	—	—	1	1	1	1	3796 800-1
		D	—	1	—	—	—	—	—	—	3695 778-9
		D	—	—	—	—	1	1	1	1	3796 802-3
		C,Y	—	1	—	—	—	—	—	—	3695 782-3
		C,Y	—	—	—	—	1	1	1	1	3796 804-5
	LINK, w/SLEEVE, Rear Door Latch Locking Knob to Latch, Up to Jan. 2, 1974	P,D	—	—	—	—	1	1	1	1	3796 224-5
	Use After Jan. 2, 1974	P,D	—	—	—	—	1	1	1	1	# 3695 818-9
	Up to Jan. 2, 1974	C	—	—	—	—	—	—	1	1	3695 224-5
	Use After Jan. 2, 1974	C	—	—	—	—	—	—	1	1	# 3695 818-9

TYPE LETTERS Indicates: J - Challenger, B - Barracuda, V - Valiant, L - Dart, R - Satellite, W - Coronet, P - Plymouth, D - Dodge, C - Chrysler, Y - Imperial

NUMERALS INDICATE: 21 - 2 DR. SED., 23 - 2 DR. H.T., 29 - FAST BACK, 41 - 4 DR. SED., 43 - 4 DR. H.T., 45 - 6 PASS. STA. WGN., 46 - 9 PASS. STA. WGN.

AR Indicates use as required.
# Indicates parts not listed in any previous parts book
Numerals in parentheses ( ) refer to notes.
★ Indicates change or addition.

Printed in U.S.A.
November, 1974

Right and left part numbers are on same line, first number is right, second number is left.

CODE	PART NAME	MODEL CODES	SEE BOTTOM NOTE 21	23		29	41	43	45	46	PART NUMBER
23-18-26	LINK Cont'd.										
	Up to Jan. 2, 1974	C,Y	—	—	—	—	1	1	—	—	3796 228-9
	Use After Jan. 2, 1974	C,Y	—	—	—	—	1	1	—	—	3695 820-1
	ROD, Frt. Door Latch Locking Control Push	V,L	—	—	—	—	1	—	—	—	2862 774-5
		R,W	1	1	—	1	—	—	—	—	3548 776-7
		R,W	—	—	—	—	1	—	1	1	3670 628-9
	w/o Pwr. Door Locks	P,D,C,Y	—	—	—	—	1	1	1	1	3796 220-1
	W/Pwr Door Locks	C-S,Y	—	—	—	—	1	1	—	—	3796 220-1
	ROD, Rear Door Latch Locking Control Push	R,W	—	—	—	—	1	—	1	1	3508 778-9
23-18-27	PACKAGE, Door Lock Locking Control Knob Except B, J	All	AR	AR	—	AR	AR	AR	AR	AR	3419 209
	KNOB, Door Latch Locking Control	B,J	—	2	—	—	—	—	—	—	2999 950
23-18-29	NOTE: See Clip Chart										
23-18-37	SEAL, Door Latch Remote Control Inside Pnl.	V,L	—	—	—	—	AR	—	—	—	2802 973
	SEAL, Door Latch Remote Control Air	J	—	1	—	—	—	—	—	—	3508 536-7
		R,W	AR	AR	—	AR	AR	—	AR	AR	3508 536-7
	BEZEL and SEAL, Frt. Door Latch Remote Control	V,L	—	1	—	1	—	—	—	—	3695 204-5
	Blue	V,L	—	1	—	1	—	—	—	—	D752-3 KB7
	Green	V,L	—	1	—	1	—	—	—	—	D752-3 KG6
	Parchment	V,L	—	1	—	1	—	—	—	—	D752-3 KL2
	Black	V,L	—	1	—	1	—	—	—	—	D752-3 JX9
	Gold	V,L	—	1	—	1	—	—	—	—	D752-3 KY4
	White	V,L	—	1	—	1	—	—	—	—	D752-3 JW1
23-18-48	BUMPER, Door Latch Remote Control Handle Lever	V,L	—	2	—	2	—	—	—	—	3670 930
		V,L	—	—	—	—	AR	—	—	—	2862 052-3
		B	—	1	—	—	—	—	—	—	2862 052-3
		R,W	2	2	—	2	—	—	—	—	2583 391
		R,W	—	—	—	—	AR	—	AR	AR	2862 052-3
23-18-49	ESCUTCHEON, Door Latch Locking Control Knob	V,L	—	—	—	—	AR	—	—	—	2862 309
23-18-54	GROMMET, Door Trim Pnl. Lock Knob	V,L	—	AR	—	AR	AR	—	—	—	3610 447
		R,W	AR	AR	—	AR	AR	—	AR	AR	3510 447
		P,D,C,Y	—	AR	—	—	AR	AR	AR	AR	3510 447
23-18-56	PLATE and SCREW, Rear Door Latch Remote Control, Attach.	P,D,C,Y	—	—	—	—	2	2	2	2	3760 855
23-18-103	SWITCH, Frt. Door Elect. Latch Locking Remote Button Actuated Except C-S	P,D,C	—	2	—	—	2	2	2	2	2661 746
	BRACKET and SWITCH, Frt. Door Latch Elect. Locking, Rt.	P,D	—	1	—	—	—	—	—	—	3796 236
	Use After March 5, 1974	P,D	—	1	—	—	—	—	—	—	3760 294
		C-L,C-M	—	1	—	—	—	—	—	—	3796 236
	Use After March 5, 1974	C-L,C-M	—	1	—	—	—	—	—	—	3760 294
	BRACKET and SWITCH, Frt. Door Latch Elect. Locking, Lt.	P,D	—	1	—	—	—	—	—	—	3760 341
		C-L,C-M	—	1	—	—	—	—	—	—	3760 341
	BRACKET and SWITCH, Frt. Door Elect. Latch Locking, Rt., Except C-S	P,D,C	—	—	—	—	1	1	1	1	3796 234
	BRACKET and SWITCH, Frt. Door Elect. Latch Locking, Lt., Except C-S	P,D,C	—	—	—	—	1	1	1	1	3760 305
	NOTE: See Code (23-41-170) SWITCHES										

TYPE LETTERS Indicates: J - Challenger, B - Barracuda, V - Valiant, L - Dart, R - Satellite, W - Coronet, P - Plymouth, D - Dodge, C - Chrysler, Y - Imperial

NUMERALS INDICATE: 21 - 2 DR. SED., 23 - 2 DR. H.T., 29 - FAST BACK, 41 - 4 DR. SED., 43 - 4 DR. H.T., 45 - 6 PASS. STA. WGN., 46 - 9 PASS. STA. WGN.

AR Indicates use as required.
# Indicates parts not listed in any previous parts book
Numerals in parentheses ( ) refer to notes.
★ Indicates change or addition.

Printed in U.S.A.
November, 1974

Right and left part numbers are on same line, first number is right, second number is left.

CODE	PART NAME	MODEL CODES	SEE BOTTOM NOTE 21	23	29	41	43	45	46	PART NUMBER
23-18-104	SPRING, Elect. Door Lock Sw. Return									
	Except C-S	P,D,C	—	2	— —	2	2	2	2	2661 118
23-18-106	RELAY, Elect. Door Lock	P,D,C,Y	—	1	— —	1	1	1	1	3764 558
23-18-107	LINK, Door Elect. Latch Solenoid to Latch	P,D,C,Y	—	2	— —	—	—	—	—	3695 806
	Frt.	P,D,C,Y	—	—	— —	1	1	1	1	3695 804-5
	Rear	P,D,C,Y	—	—	— —	2	2	2	2	3796 231
23-18-109	CLIP and INSULATOR, Frt. Door Elect. Latch Solenoid Wiring	P,D,C,Y	—	2	— —	2	2	2	2	3764 849
	CLIP and INSULATOR, Rear Door Elect. Latch Solenoid Wiring	P,D,C,Y	—	—	— —	2	2	2	2	3764 849
	CLIP, Frt. Door Elect. Lock Push Rod to Sw. Attach.	P,D,C	—	2	— —	2	2	2	2	629 792
	CLIP, Frt. Door Elect. Latch Solenoid Link Attach., Rt.	P,D,C,Y	—	1	— —	1	1	1	1	629 792
	CLIP, Rear Door Elect. Latch Solenoid Link, Rt.	P,D,C,Y	—	—	— —	1	1	1	1	6029 792
	CLIP, Door Elect. Latch Solenoid Link to Actuator	P,D,C,Y	—	2	— —	2	2	2	2	3796 071
23-18-115	SOLENOID, Door Elect. Latch									
	Frt.	P,D,C,Y	—	1	— —	1	1	1	1	3695 808-9
	Rear	P,D,C,Y	—	—	— —	1	1	1	1	3695 808-9
23-18-125	ROD, Frt. Door Elect. Latch Sw. Push	P,D	—	1	— —	—	—	—	—	3760 996-7
	Except C-S	C	—	1	— —	—	—	—	—	3760 996-7
	Except C-S, Rt.	P,D,C	—	—	— —	1	1	1	1	3760 310
	Except C-S, Lt.	P,D,C	—	—	— —	1	1	1	1	3760 311
	NOTE: See 23-18-25, 23-18-26									
23-18-126	BOOT, Elect. Frt. Door Lock Switch Except C-S	P,D,C	—	2	— —	2	2	2	2	2661 572
23-19-6	**DECAL, Deck Lid Bird (See Exterior Ornamentation Illustrations)**									
23-19-8	LID, Deck	V,L	—	—	— 1	—	—	—	—	3611 553
		V,L	—	1	— —	1	—	—	—	3684 497
		B	—	1	— —	—	—	—	—	3482 802
		J	—	1	— —	—	—	—	—	3482 687
		R	1	1	— —	—	—	—	—	3684 491
		R	—	—	— —	1	—	—	—	3684 485
		W	1	1	— 1	—	—	—	—	3684 494
		W	—	—	— —	1	—	—	—	3684 488
		P,D	—	1	— —	1	1	—	—	3752 384
		C	—	1	— —	1	1	—	—	3752 027
		Y	—	1	— —	—	1	—	—	3752 670
23-19-63	BUMPER, Deck Lid Inside Pnl.	V,L	—	2	— 2	2	—	—	—	2784 714
		B,J	—	2	— —	—	—	—	—	2784 714
		R,W	2	2	— 2	2	—	—	—	2484 307
		P,D	—	2	— —	2	2	—	—	2784 714
		C,Y	—	2	— —	2	2	—	—	2842 869
23-19-70	STRIKER, Deck Lid Latch	V,L	—	1	— 1	1	—	—	—	2244 149
		B	—	1	— —	—	—	—	—	1867 661
		J	—	1	— —	—	—	—	—	2244 149
		R,W	1	1	— 1	1	—	—	—	2244 149
		P,D,C,Y	—	1	— —	1	1	—	—	2244 149
23-19-74	SUPPORT, w/NUT, Deck Opng. Lwr. Pnl. Lock	V,L	—	1	— —	1	—	—	—	3756 051
		B	—	1	— —	—	—	—	—	2965 691
		J	—	1	— —	—	—	—	—	3616 642
23-19-82	SUPPORT, Deck Lid Hinge w/PIN, to Wheel House	V,L	—	—	— 1	—	—	—	—	3446 882-3

TYPE LETTERS Indicates: J - Challenger, B - Barracuda, V - Valiant, L - Dart, R - Satellite, W - Coronet, P - Plymouth, D - Dodge, C - Chrysler, Y - Imperial

NUMERALS INDICATE: 21 - 2 DR. SED., 23 - 2 DR. H.T., 29 - FAST BACK, 41 - 4 DR. SED., 43 - 4 DR. H.T., 45 - 6 PASS. STA. WGN., 46 - 9 PASS. STA. WGN.

AR Indicates use as required.
# Indicates parts not listed in any previous parts book
Numerals in parentheses ( ) refer to notes.
★ Indicates change or addition.

Printed in U.S.A.
November, 1974

Right and left part numbers are on same line, first number is right, second number is left.

CODE	PART NAME	MODEL CODES	SEE BOTTOM NOTE 21	23	29	41	43	45	46	PART NUMBER
23-19-82	SUPPORT Cont'd.									
	Use After Feb. 25, 1974	V,L	—	—	1	—	—	—	—	# 3756 874-5
	w/PIN, to Upr. Pnl.	V,L	—	1	—	1	—	—	—	3756 144-5
	to Wheel House	V,L	—	1	—	1	—	—	—	2603 642-3
	Use After Jan. 1, 1974	V,L	—	1	—	1	—	—	—	3756 870-1
	Lwr.	B	—	1	—	—	—	—	—	2963 422-3
	w/PIN, to Upr. Pnl.	B	—	1	—	—	—	—	—	3570 862-3
	Lwr.	J	—	1	—	—	—	—	—	2965 504-5
	w/PIN, to Upr. Pnl.	J	—	1	—	—	—	—	—	3444 688-9
	Lwr., Rt.	R,W	1	1	—	1	1	—	—	3445 074
	Lwr., Lt.	R,W	1	1	—	1	1	—	—	3445 075
	w/PIN, Upr.	R,W	1	1	—	1	—	—	—	3506 278-9
	w/PIN, Upr.	R,W	—	—	—	—	1	—	—	3506 210-1
	WHEEL HOUSE, Lwr.	P,D,C,Y	—	1	—	—	1	1	—	3616 314-5
	w/PIN, Upr.	P,D,C,Y	—	1	—	—	1	1	—	3616 598-9
23-19-84	HINGE, Deck Lid									
	w/CAM	V,L	—	—	—	1	—	—	—	3417 768-9
	w/CAM	V,L	—	1	—	—	1	—	—	3417 078-9
		B,J	—	1	—	—	—	—	—	3615 014-5
	w/CAM	R,W	1	1	—	1	1	—	—	3752 748-9
	w/CAM	P,D,C,Y	—	1	—	—	1	1	—	3752 748-9
23-19-87	PLATE, Deck Lid Inside Pnl. Lock Mtg. Reinf.	P,D,C,Y	—	1	—	—	1	1	—	3756 168
23-19-94	SWITCH, Remote Deck Lid Release									
	Use w/Pwr. Deck Lid Release	R,W	1	1	—	1	1	—	—	3488 827
		P,D,C,Y	—	1	—	—	1	1	—	3488 827
	NUT	R,W	1	1	—	1	1	—	—	6026 839
		P,D,C,Y	—	1	—	—	1	1	—	6026 839
23-19-99	TAPPING PLATE, Deck Lid Hinge	V,L	—	2	—	2	2	—	—	2243 327
		B,J	—	2	—	—	—	—	—	2963 374
		R,W	2	2	—	2	2	—	—	2243 327
		P,D,C,Y	—	2	—	—	2	2	—	2243 327
23-19-100	BEZEL, Remote Deck Lid Release Sw.									
	Use w/Pwr. Deck Lid Release	P,D,C,Y	—	1	—	—	1	1	—	3746 633
23-19-105	LATCH, Deck Lid	V,L,J	—	1	—	1	1	—	—	3760 024
		B	—	1	—	—	—	—	—	3760 022
		R,W	1	1	—	1	1	—	—	3760 024
		P,D,C,Y	—	1	—	—	1	1	—	3760 024
	LATCH, Elect. Deck Lid									
	Comp.	R,W	1	1	—	1	1	—	—	3695 415
	Comp.	P,D,C,Y	—	1	—	—	1	1	—	3695 415
23-19-111	LINK, Deck Lid Lock Cyl. to Latch	B	—	1	—	—	—	—	—	3586 371
23-19-112	CLIP, Deck Lid Latch Rel. Link to Lock Cyl. Lever Attach.	B	—	1	—	—	—	—	—	2999 986
	CLIP, Deck Lid Latch Rel. Lever to Rel. Link Attach.	B	—	1	—	—	—	—	—	2999 986
23-19-113	SHIELD, Deck Opng. Lwr. Pnl. Lock Linkage	B	—	1	—	—	—	—	—	3615 096
23-19-114	NAME PLATE, MEDALLION or ORNAMENT, Deck Lid (See Exterior Ornamentation Illustrations)									
23-19-123	GASKET, Deck Lid Lock Cyl. Medallion	Y	—	1	—	—	—	1	—	3796 056
23-19-177	BAR, Deck Lid Hinge Torsion									
		V,L	—	—	—	1	—	—	—	2965 678-9
		V,L	—	1	—	—	1	—	—	3756 092-3
		B	—	1	—	—	—	—	—	3570 332
		J	—	1	—	—	—	—	—	2963 360-1
		R	1	1	—	—	1	—	—	3445 134-5

TYPE LETTERS Indicates: J - Challenger; B - Barracuda; V - Valiant; L - Dart; R - Satellite; W - Coronet; P - Plymouth; D - Dodge; C - Chrysler; Y - Imperial

NUMERALS INDICATE: 21 - 2 DR. SED.; 23 - 2 DR. H.T.; 29 - FAST BACK; 41 - 4 DR. SED.; 43 - 4 DR. H.T.; 45 - 6 PASS. STA. WGN.; 46 - 9 PASS. STA. WGN.

AR Indicates use as required.
# Indicates parts not listed in any previous parts book
Numerals in parentheses ( ) refer to notes.
★ Indicates change or addition.

Printed in U.S.A.
November, 1974

Right and left part numbers are on same line, first number is right, second number is left.

CODE	PART NAME	MODEL CODES	SEE BOTTOM NOTE 21	23		29	41	43	45	46	PART NUMBER
23-19-177	BAR Cont'd.										
		W	—	—	—	—	1	—	—	—	3445 134-5
		W	1	1	—	1	—	—	—	—	3445 882-3
		P,D	—	1	—	—	1	1	—	—	3616 356-7
		C,Y	—	1	—	—	1	1	—	—	3615 976-7
23-19-178	SLIDE, Deck Lid Hge. Torsion Bar	V,L	—	2	—	2	2	—	—	—	2480 230
		B	—	1	—	—	—	—	—	—	2480 231
		J	—	2	—	—	—	—	—	—	2480 231
		R,W	2	2	—	2	2	—	—	—	2480 230
		P,D,C,Y	—	2	—	—	2	2	—	—	2480 230
	RETAINER, Deck Lid Hge. Torsion Bar	V,L	—	1	—	—	1	—	—	—	6000 594
		R,W	1	1	—	1	1	—	—	—	6000 594
23-19-198	HINGE, Rear Compartment Security Pnl.	V,L	—	—	—	1	—	—	—	—	3616 787
23-19-200	STRIKER, Security Pnl. Latch	V,L	—	—	—	2	—	—	—	—	2520 650
	STRIKER, 2nd Seat Back Latch	V,L	—	—	—	1	—	—	—	—	3760 580-1
23-19-204	LATCH, Security Pnl.	V,L	—	—	—	2	—	—	—	—	2520 645
23-19-206	BUMPER, Shelf Pnl. Latch Striker Supt. to Security Pnl.	V,L	—	—	—	2	—	—	—	—	2842 789
23-19-207	SUPPORT, Security Pnl. Latch Striker	V,L	—	—	—	2	—	—	—	—	3616 796
	SUPPORT, Security Pnl. Down Stop Bumper	V,L	—	—	—	2	—	—	—	—	3616 789
23-20-8	**MAT, Frt. Floor**										
	Blue and Black, Column Shift	V	—	1	—	1	1	—	—	—	M008 KBX
	Green and Black, Column Shift	V	—	1	—	1	1	—	—	—	M008 KGX
	Parchment and Black, Column Shift	V	—	1	—	1	1	—	—	—	M008 JLX
	Gold and Black, Column Shift	V	—	1	—	1	1	—	—	—	M008 JYX
	Blue and Black, Column Shift	L	—	1	—	—	1	—	—	—	M008 KBX
	Green and Black, Column Shift	L	—	1	—	—	1	—	—	—	M008 KGX
	Parchment and Black, Column Shift	L	—	1	—	—	1	—	—	—	M008 JLX
	Gold and Black, Column Shift	L	—	1	—	—	1	—	—	—	M008 JYX
	Black, Column Shift	V	—	1	—	1	1	—	—	—	M009 JX9
	Black, Column Shift	L	—	1	—	—	1	—	—	—	M009 JX9
	Black, Floor Shift	V	—	1	—	1	1	—	—	—	M010 JX9
	Black, Floor Shift	L	—	1	—	—	1	—	—	—	M010 JX9
	Blue and Black, Floor Shift	R	1	1	—	—	—	—	—	—	M003 KBX
	Use After Sept. 11, 1973	R	1	1	—	—	—	—	—	—	M025 KBX
	Green and Black, Floor Shift	R	1	1	—	—	—	—	—	—	M003 KGX
	Use After Sept. 11, 1973	R	1	1	—	—	—	—	—	—	M025 KGX
	Black, Floor Shift	R	1	1	—	—	—	—	—	—	M004 JX9
	Use After Sept. 11, 1973	R	1	1	—	—	—	—	—	—	M026 KX9
	Blue and Black, Column Shift	R,W	1	1	—	1	1	—	1	1	M000 KBX
	Use After Sept. 11, 1973	R,W	1	1	—	1	1	—	1	1	M022 KBX
	Green and Black, Column Shift	R,W	1	1	—	1	1	—	1	1	M000 KGX
	Use After Sept. 11, 1973	R,W	1	1	—	1	1	—	1	1	M022 KGX
	Chestnut and Black, Column Shift	R,W	1	1	—	1	1	—	1	1	M000 KTX
	Use After Sept. 11, 1973	R,W	1	1	—	1	1	—	1	1	M022 KTX
	Black, Column Shift	R,W	1	1	—	1	—	—	—	—	M001 JX9
	Use After Sept. 11, 1973	R,W	1	1	—	1	—	—	—	—	M023 KX9
	Black, Heavy Duty	R,W	—	—	—	—	1	—	1	1	M002 JX8
	Use After Sept. 11, 1973	R,W	—	—	—	—	1	—	1	1	M024 KX8
	Green and Black	P	—	—	—	—	1	—	1	1	M011 KGX
	Chestnut and Black	P	—	—	—	—	1	—	1	1	M011 KTX
	Black	P	—	—	—	—	1	—	1	1	M011 KX9
	Gold and Black	P	—	—	—	—	1	—	1	1	M011 KYX
	Black, Heavy Duty	P,D	—	—	—	—	1	—	1	1	M012 KX8

TYPE LETTERS Indicates: J - Challenger, B - Barracuda, V - Valiant, L - Dart, R - Satellite, W - Coronet, P - Plymouth, D - Dodge, C - Chrysler, Y - Imperial

NUMERALS INDICATE: 21 - 2 DR. SED., 23 - 2 DR. H.T., 29 - FAST BACK, 41 - 4 DR. SED., 43 - 4 DR. H.T., 45 - 6 PASS. STA. WGN., 46 - 9 PASS. STA. WGN.

AR Indicates use as required.
# Indicates parts not listed in any previous parts book
Numerals in parentheses ( ) refer to notes.
★ Indicates change or addition.

Printed in U.S.A.
November, 1974

Right and left part numbers are on same line, first number is right, second number is left.

CODE	PART NAME	MODEL CODES	SEE BOTTOM NOTE 21	23		29	41	43	45	46	PART NUMBER
23-20-14	PLATE, Body Side Sill Door Scuff	V,L	—	2	—	2	—	—	—	—	2788 080
	Frt.	V,L	—	—	—	—	1	—	—	—	2788 252-3
	Rear	V,L	—	—	—	—	1	—	—	—	2788 084-5
		B,J	—	2	—	—	—	—	—	—	2879 600
		R,W	2	2	—	2	—	—	—	—	3416 002
	Frt.	R,W	—	—	—	—	1	—	1	1	3416 004-5
	Rear	R,W	—	—	—	—	1	—	1	1	3416 006-7
		P,D,C,Y	—	2	—	—	—	—	—	—	3589 362
	Frt.	P,D,C,Y	—	—	—	—	2	2	2	2	3589 360
	Rear	P,D,C,Y	—	—	—	—	2	2	2	2	3589 368
23-20-24	EXTENSION, Body Side Sill Door Scuff Plate	V,L	—	1	—	1	—	—	—	—	3551 744-5
23-20-29	MAT, Luggage Compartment Floor										
		V,L	—	—	—	1	—	—	—	—	3762 263
		V,L	—	1	—	—	1	—	—	—	3762 261
	Rubber	B	—	1	—	—	—	—	—	—	3415 648
	Latex Foam Back, Gray and Black	B	—	1	—	—	—	—	—	—	3509 765
	Rubber	J	—	1	—	—	—	—	—	—	3415 640
	Latex Foam Back, Gray and Black	J	—	1	—	—	—	—	—	—	3509 766
	Rubber, Black and Gray	R,W	1	1	—	1	—	—	—	—	3762 409
	Rubber, Black and Gray	R,W	—	—	—	—	1	—	—	—	3762 268
		P,D	—	1	—	—	1	1	—	—	3589 284
	Use After May 15, 1974	P,D	—	1	—	—	1	1	—	—	# 3762 788
		C	—	1	—	—	1	1	—	—	3589 286
	Use After May 1, 1974	C	—	1	—	—	1	1	—	—	# 3762 784
23-20-41	MAT, Rear Floor										
	Blue and Black, Column Shift	V,L	—	1	—	—	—	—	—	—	M312 KBX
	Green and Black, Column Shift	V,L	—	1	—	—	—	—	—	—	M312 KGX
	Parchment and Black, Column Shift	V,L	—	1	—	—	—	—	—	—	M312 JLX
	Gold and Black, Column Shift	V,L	—	1	—	—	—	—	—	—	M312 JYX
	Black, Column or Floor Shift	V,L	—	1	—	—	—	—	—	—	M316 JX9
	Blue and Black, Column Shift	V	—	—	—	1	—	—	—	—	M309 KBX
	Green and Black, Column Shift	V	—	—	—	1	—	—	—	—	M309 KGX
	Parchment and Black, Column Shift	V	—	—	—	1	—	—	—	—	M309 JLX
	Gold and Black, Column Shift	V	—	—	—	1	—	—	—	—	M309 JYX
	Black, Column or Floor Shift	V	—	—	—	1	—	—	—	—	M313 JX9
	Blue and Black Column Shift	V,L	—	—	—	—	1	—	—	—	M311 KBX
	Green and Black, Column Shift	V,L	—	—	—	—	1	—	—	—	M311 KGX
	Black, Column or Floor Shift	V,L	—	—	—	—	1	—	—	—	M315 JX9
	Black, Heavy Duty	L	—	—	—	—	1	—	—	—	M321 JX8
	Blue and Black	R,W	1	—	—	—	—	—	—	—	M302 KBX
	Green and Black	R,W	1	—	—	—	—	—	—	—	M302 KGX
	Black	R,W	1	—	—	—	—	—	—	—	M305 JX9
	Blue and Black	R,W	—	—	—	—	1	—	—	—	M300 KBX
	Green and Black	R,W	—	—	—	—	1	—	—	—	M300 KGX
	Chestnut and Black	R,W	—	—	—	—	1	—	—	—	M300 KTX
	Black, Heavy Duty	R,W	—	—	—	—	1	—	—	—	M306 JX8
	Blue and Black	R,W	—	—	—	—	—	—	1	—	M301 KBX
	Green and Black	R,W	—	—	—	—	—	—	1	—	M301 KGX
	Chestnut and Black	R,W	—	—	—	—	—	—	1	—	M301 KTX
	Black, Heavy Duty	R,W	—	—	—	—	—	—	1	—	M307 JX8
	Green and Black	P	—	—	—	—	1	—	—	—	M317 KGX
	Gold and Black	P	—	—	—	—	1	—	—	—	M317 KYX
	Black Heavy Duty	P,D	—	—	—	—	1	—	—	—	M319 KX8
	Green and Black	P	—	—	—	—	—	—	1	—	M318 KGX
	Chestnut and Black	P	—	—	—	—	—	—	1	—	M318 KTX
	Black, Heavy Duty	P,D	—	—	—	—	—	—	1	—	M320 KX8
	MAT, Rear Floor Well	R,W	—	—	—	—	—	—	1	—	3416 343
		P,D	—	—	—	—	—	—	1	—	3589 257

TYPE LETTERS Indicates J - Challenger, B - Barracuda, V - Valiant, L - Dart, R - Satellite, W - Coronet, P - Plymouth, D - Dodge, C - Chrysler, Y - Imperial

NUMERALS INDICATE: 21 - 2 DR. SED., 23 - 2 DR. H.T., 29 - FAST BACK, 41 - 4 DR. SED., 43 - 4 DR. H.T., 45 - 6 PASS. STA. WGN., 46 - 9 PASS. STA. WGN.

AR Indicates use as required.
# Indicates parts not listed in any previous parts book
Numerals in parentheses ( ) refer to notes.
★ Indicates change or addition.

Printed in U.S.A.
November, 1974

Right and left part numbers are on same line, first number is right, second number is left.

CODE	PART NAME	MODEL CODES	SEE BOTTOM NOTE 21	23	29	41	43	45	46	PART NUMBER
23-20-65	PLATE, Body Side Sill Ctr. Pillar Scuff	V,L	—	—	—	—	2	—	—	—	2788 088
23-21-3	**MIRROR, Door Outside REMOTE CONTROL**									
	Round, Chrome, Lt.	V,L	—	—	—	—	1	—	—	—	3586 641
	MIRROR PACKAGE, Door Outside REMOTE CONTROL									
	Round, Chrome, Lt.	V,L	—	1	—	1	1	—	—	—	3695 508
	Racing, Prime, Lt.	V,L	—	—	—	1	—	—	—	—	3695 506
	Racing, Chrome, Lt.	V,L	—	—	—	1	—	—	—	—	3695 507
	Racing, Prime, Lt.	B,J	—	1	—	—	—	—	—	—	3586 649
	Racing, Chrome, Lt.	B,J	—	1	—	—	—	—	—	—	3586 642
	Round, Chrome, Lt.	R,W	—	—	—	—	1	—	1	1	3695 509
	Racing, Prime, Lt.	R,W	1	1	—	1	—	—	—	—	3695 513
	Racing, Chrome, Lt.	R,W	1	1	—	1	—	—	—	—	3695 514
	Rectangular, Chrome, Lt.	P	—	1	—	—	—	—	—	—	3760 927
	Rectangular, Chrome, Rt.	P	—	1	—	—	—	—	—	—	3760 937
	Rectangular, Chrome, Lt.	P	—	—	—	—	1	1	1	1	3760 928
	Rectangular, Chrome, Rt.	P	—	—	—	—	1	1	1	1	3760 938
	Rectangular, Chrome, Lt.	D	—	1	—	—	—	—	—	—	3760 929
	Rectangular, Chrome, Rt.	D	—	1	—	—	—	—	—	—	3760 939
	Rectangular, Chrome, Lt.	D	—	—	—	—	1	1	1	1	3760 930
	Rectangular, Chrome, Rt.	D	—	—	—	—	1	1	1	1	3760 942
	Rectangular, Chrome, Rt. and Lt.	P,D	—	1	—	—	1	1	1	1	# 3837 966-7
	Rectangular, Chrome, Lt., Except C-S	C	—	1	—	—	1	1	1	1	3760 931
	Rectangular, Chrome, Lt. w/o vent	C-S,Y	—	1	—	—	1	1	—	—	3760 934
	Rectangular, Chrome, Rt.	C,Y	—	1	—	—	1	1	1	1	3760 941
	Rectangular Chrome, Lt., w/Vent Wdo., Except C-S	C	—	—	—	—	1	1	1	1	3796 871
		C-S,Y	—	—	—	—	1	1	—	—	3796 872
		P,D	—	—	—	—	1	1	1	1	3837 968
	MIRROR PACKAGE, Door Outside MANUAL									
	Round, Chrome, Lt.	V,L	—	1	—	1	1	—	—	—	2802 834
	Round, Chrome, Rt., Companion to Remote Control	V,L	—	1	—	1	1	—	—	—	2802 869
	Racing, Prime, Rt.	V,L	—	—	—	1	—	—	—	—	3586 176
	Racing, Chrome, Rt.	V,L	—	—	—	1	—	—	—	—	3586 174
	Round, Chrome, Lt.	B,J	—	1	—	—	—	—	—	—	3586 645
	Racing, Prime, Rt., Companion to Remote Control	B,J	—	1	—	—	—	—	—	—	3586 650
	Racing, Chrome, Rt., Companion to Remote Control	B,J	—	1	—	—	—	—	—	—	3586 644
	Round, Chrome, Lt.	R,W	1	1	—	1	1	—	1	1	3695 517
	Round, Chrome, Rt. Companion to Remote Control	R,W	—	—	—	—	1	—	1	1	3695 510
	Racing, Prime, Rt., Companion to Remote Control	R,W	1	1	—	1	—	—	—	—	3695 512
	Racing, Chrome, Rt., Companion to Remote Control	R,W	1	1	—	1	—	—	—	—	3695 511
	Rectangular, Chrome, Lt.	P,D	—	1	—	—	1	1	1	1	3760 925
	Rectangular, Chrome, Lt., Except C-S	C	—	1	—	—	1	1	1	1	3760 926
	Rectangular, Chrome, Rt., Companion to Remote Control	P,D	—	1	—	—	1	1	1	1	3760 936
		C,Y	—	1	—	—	1	1	1	1	3760 935
23-21-4	REINF., Door Rear View Mirror Rt., Lt.	P	—	1	—	—	1	1	1	1	3695 856
	Rt., Lt.	D	—	1	—	—	1	1	1	1	3760 782
	Rt., Lt.	C,Y	—	1	—	—	1	1	1	1	3695 884

TYPE LETTERS Indicates J - Challenger, B - Barracuda, V - Valiant, L - Dart, R - Satellite, W - Coronet, P - Plymouth, D - Dodge, C - Chrysler, Y - Imperial

NUMERALS INDICATE: 21 - 2 DR. SED., 23 - 2 DR. H.T., 29 - FAST BACK, 41 - 4 DR. SED., 43 - 4 DR. H.T., 45 - 6 PASS. STA. WGN., 46 - 9 PASS. STA. WGN.

AR Indicates use as required.
# Indicates parts not listed in any previous parts book
Numerals in parentheses ( ) refer to notes.
★ Indicates change or addition.

Printed in U.S.A.
November, 1974

Right and left part numbers are on same line, first number is right, second number is left.

CODE	PART NAME	MODEL CODES	SEE BOTTOM NOTE 21	23	29	41	43	45	46	PART NUMBER
23-21-4	REINF. Cont'd.									
	REINFORCEMENT PLATE and NUT, Door Rear View Mirror Rt., Lt.	R	1	1	—	—	1	—	1	1	3695 466
	Rt., Lt.	W	1	1	—	1	—	—	—	—	3695 464
	Rt., Lt.	W	—	—	—	—	1	—	1	1	3695 466
23-21-8	MIRROR, Inside Rear View Prismatic	V,L	—	1	—	1	1	—	—	—	3695 130
		B,J	—	1	—	—	—	—	—	—	3695 130
		R,W	1	1	—	1	1	—	1	1	3695 130
		P,D,C,Y	—	1	—	—	1	1	—	—	3695 892
	Use After July 8, 1974	P,D,C,Y	—	1	—	—	1	1	—	—	# 3861 581
	12 Inch.	P,D,C	—	—	—	—	—	—	1	1	3695 128
	MIRROR, Inside Rear View, w/o Prismatic	V,L,R,W	1	1	—	1	1	—	1	1	3695 132
23-21-10	BUTTON PACKAGE, Inside Rear View Mirror Attach. Consists of: 1- Button 1-Primer 1-Adhesive	P,D,C,Y	—	1	—	—	1	1	—	—	3796 906
23-21-14	BRACKET and SHAFT, Inside Rear View Mirror	V-P,L-P	—	1	—	—	1	—	—	—	3796 912
		V,L,B,J	—	1	—	1	1	—	—	—	3695 429
		R,W	1	1	—	1	1	—	1	1	3508 523
		P,D,C	—	—	—	—	—	—	1	1	3760 510
23-21-18	GASKET, Door Outside Mirror Rt. or Lt. Side	V,L	—	1	—	1	1	—	—	—	2802 303
	Use w/Racing Mirror, Rt.	B,J	—	1	—	—	—	—	—	—	3548 741
	Use w/Racing Mirror, Rt.	W	1	1	—	1	—	—	—	—	3695 476
	Use w/Racing Mirror, Lt.	B,J	—	1	—	—	—	—	—	—	3548 741
	Use w/Racing Mirror, Lt.	W	1	1	—	1	—	—	—	—	3695 477
	Use w/o R/Control, Lt.	B,J	—	1	—	—	—	—	—	—	3670 971
	Use w/o R/Control, Lt.	R,W	—	—	—	—	1	—	1	1	3670 971
	Use w/Non Racing, Rt.	R,W	—	—	—	—	1	—	1	1	3670 971
	Use w/R/Control, Lt.	R,W	1	1	—	1	1	—	1	1	3670 971
	Use w/Manual, Rt.	P	—	1	—	—	1	1	1	1	3695 854
	Use w/R/Control, Rt.	P	—	1	—	—	1	1	1	1	3695 854
	Use w/R/Control, Rt. or Lt.	P,D	—	1	—	—	1	1	1	1	3695 868
	Use w/Manual, Rt.	C,Y	—	1	—	—	1	1	1	1	3695 882
	Use w/o R/Control, Lt.	C,Y	—	1	—	—	1	1	1	1	3695 882
23-21-19	WASHER, Door Outside Remote Control Rear View Mirror Cont. Attach.	V,L	—	—	—	—	1	—	—	—	2945 603
		B,J	—	1	—	—	—	—	—	—	2945 603
		R,W	1	1	—	1	1	—	1	1	2999 115
	NUT, Door Outside Remote Control Rear View Mirror Cont. Index, Lt.	V,L	—	1	—	1	—	—	—	—	6030 356
		P,D,C	—	1	—	—	1	1	1	1	6030 356
		R,W	1	1	—	1	1	—	1	1	6030 356
23-21-66	BEZEL, Door Outside Remote Control Mirror Cont., Rt.	P,D,C,Y	—	1	—	—	1	1	1	1	3760 401
	Use After June 12, 1974	P,D,C,Y	—	1	—	—	1	1	1	1	# 3882 011
23-21-71	COVER, Door Outside Remote Control Mirror Cont., Rt.	P,D,C,Y	—	1	—	—	1	1	1	1	3760 405
23-21-74	NUT, Door Outside Remote Control Rear View Mirror Cont. Attach.	V,L	—	1	—	1	—	—	—	—	2999 001

TYPE LETTERS Indicates J - Challenger, B - Barracuda, V - Valiant, L - Dart, R - Satellite, W - Coronet, P - Plymouth, D - Dodge, C - Chrysler, Y - Imperial

NUMERALS INDICATE: 21 - 2 DR. SED., 23 - 2 DR. H.T., 29 - FAST BACK, 41 - 4 DR. SED., 43 - 4 DR. H.T., 45 - 6 PASS. STA. WGN., 46 - 9 PASS. STA. WGN.

AR Indicates use as required.
# Indicates parts not listed in any previous parts book
Numerals in parentheses ( ) refer to notes.
★ Indicates change or addition.

Printed in U.S.A.
November, 1974

Right and left part numbers are on same line, first number is right, second number is left.

CODE	PART NAME	MODEL CODES	SEE BOTTOM NOTE 21	23	29	41	43	45	46	PART NUMBER
23-21-74	NUT Cont'd.									
		B,J	—	1	—	—	—	—	—	6027 749
		R,W	1	1	—	1	1	—	1	1 2999 001
	Except C-S	P,D,C	—	1	—	—	1	1	1	1 2999 001
	NUT, Door Outside Remote Control Mirror Bezel, Lt.	C-S,Y	—	1	—	—	1	1	—	— 3760 795
23-22-7	**MOULDING, Door Garnish**									
	Black	V,L	—	1	—	1	—	—	—	— D754-5 JX9
23-22-53	MOULDING, Qtr. Garnish									
	Black	V,L	—	1	—	—	—	—	—	— D716-7 JX9
NOTE:	See 23-86-3, PANEL W/GARNISH MLDG	V,L	—	—	—	1	—	—	—	—
	Retainer	V,L	—	AR	—	—	—	—	—	— 6002 186
	MOULDING, Qtr. Wdo. Garnish, Frt.	R,W	—	—	—	—	—	—	1	1 3509 300-1
	SCREW	R,W	—	—	—	—	—	—	AR	AR 9414 753
	MOULDING, Qtr. Wdo. Garnish, Upr.	R,W	—	—	—	—	—	—	1	1 3440 220-1
	SCREW	R,W	—	—	—	—	—	—	AR	AR 9423 434
	SPACER	R,W	—	—	—	—	—	—	AR	AR 6002 369
	SPACER	R,W	—	—	—	—	—	—	AR	AR 6002 685
	MOULDING, Qtr. Upr. Inner Garnish									
	Use w/Qtr. Opera Wdo., Blue	P,D	—	1	—	—	—	—	—	— D764-5 KB6
	Green	P,D	—	1	—	—	—	—	—	— D764-5 KG6
	Parchment	P,D	—	1	—	—	—	—	—	— D764-5 KL3
	White	P,D	—	1	—	—	—	—	—	— D764-5 KW1
	Gold	P,D	—	1	—	—	—	—	—	— D764-5 KY3
	Black	P,D	—	1	—	—	—	—	—	— D764-5 KX9
	MOULDING, Qtr. Trim Belt Garnish									
	Rt., Frt.	P,D,C	—	—	—	—	—	—	1	1 3589 352
	Rt., Rear	P,D,C	—	—	—	—	—	—	1	1 3589 856
	Lt., Frt.	P,D,C	—	—	—	—	—	—	1	1 3589 353
	RETAINER	P,D,C	—	—	—	—	—	—	4	4 6003 182
	MOULDING, Qtr. Wdo. Garnish, Upr.	P,D,C	—	—	—	—	—	—	1	1 3720 610-11
	SCREW	P,D,C	—	—	—	—	—	—	AR	AR 9414 752
23-22-78	MOULDING, Roof Rear Garnish Tailgate Opening	R,W	—	—	—	—	—	—	1	1 3499 817
		P,D,C	—	—	—	—	—	—	1	1 3720 714
	RETAINER	P,D,C	—	—	—	—	—	AR	AR	AR 6003 475
23-22-86	MOULDING, Rear Wdo. Garnish									
	Side and Upr.	V,L	—	1	—	—	—	—	—	— 2782 080-1
	Side	B	—	1	—	—	—	—	—	— 3444 072-3
	Upr.	B	—	1	—	—	—	—	—	— 3444 060
	Lwr.	B	—	1	—	—	—	—	—	— 2964 584-5
	Side and Upr.	J	—	1	—	—	—	—	—	— 3444 056-7
	Lwr.	J	—	1	—	—	—	—	—	— 3444 064-5
	Side and Upr.	R,W	1	1	—	1	—	—	—	— 3720 678-9
	Side and Upr.	R,W	—	—	—	—	1	—	—	— 3446 594-5
	Lwr.	R,W	—	1	—	1	—	—	—	— 3499 866-7
	Lwr.	R,W	—	—	—	—	1	—	—	— 3499 868-9
	Upr.	P,D	—	1	—	—	—	—	—	— 3720 260
	2 Screw Holes in Mldg. Lwr.	P,D	—	1	—	—	—	—	—	— 3720 261
	5 Screw Holes in Mldg. Lwr.	P,D	—	1	—	—	—	—	—	— 3793 342
	Upr.	P,D	—	—	—	—	1	—	—	— 3674 612
	Upr.	C	—	—	—	—	1	—	—	— 3674 628
	2 Screw Holes in Mldg. Lwr.	P,D	—	—	—	—	1	—	—	— 3720 613
	5 Screw Holes in Mldg. Lwr.	P,D	—	—	—	—	1	—	—	— # 3793 346
	2 Screw Holes in Mldg. Lwr.	C	—	—	—	—	1	—	—	— 3674 629
	5 Screw Holes in Mldg. Lwr.	C	—	—	—	—	1	—	—	— # 3793 350
	Upr.	P,D	—	—	—	—	—	1	—	— 3674 604
	Upr.	C	—	1	—	—	—	1	—	— 3674 620

TYPE LETTERS Indicates: J - Challenger, B - Barracuda, V - Valiant, L - Dart, R - Satellite, W - Coronet, P - Plymouth, D - Dodge, C - Chrysler, Y - Imperial

NUMERALS INDICATE: 21 - 2 DR. SED., 23 - 2 DR. H.T., 29 - FAST BACK, 41 - 4 DR. SED., 43 - 4 DR. H.T., 45 - 6 PASS. STA. WGN., 46 - 9 PASS. STA. WGN.

AR Indicates use as required.
# Indicates parts not listed in any previous parts book
Numerals in parentheses ( ) refer to notes.
★ Indicates change or addition.

Printed in U.S.A.
November, 1974

Right and left part numbers are on same line, first number is right, second number is left.

CODE	PART NAME		MODEL CODES	SEE BOTTOM NOTE 21	23	29	41	43	45	46	PART NUMBER
23-22-86	MOULDING Cont'd.										
	2 Screw Holes in Mldg.	Lwr.	P,D	—	—	—	—	1	—	—	3674 605
	5 Screw Holes in Mldg.	Lwr.	P,D	—	—	—	—	1	—	—	# 3793 344
	2 Screw Holes in Mldg.	Lwr.	C	—	1	—	—	1	—	—	3674 621
	5 Screw Holes in Mldg.	Lwr.	C	—	1	—	—	1	—	—	# 3793 348
	Retainer, Lwr.		P,D,C,	—	AR	—	AR	AR	—	—	6003 414
	Screw		P,D,C	—	5	—	5	5	—	—	9414 753
23-22-145	MOULDING, Windshield Garnish										
	Side, Black		V,L	—	1	—	—	—	—	—	F222-3 JX9
	Side, Black		V,L	—	—	1	—	—	—	—	F224-5 JX9
	Side, Black		V,L	—	—	—	1	—	—	—	F226-7 JX9
	Upr.		B,J	—	1	—	—	—	—	—	2895 803
	Side, Black		B,J	—	1	—	—	—	—	—	F220-1 JX9
	Side, Black		R,W	1	1	—	1	—	—	—	F228-9 JX9
	Side, Black		R,W	—	—	—	—	1	—	—	F230-1 JX9
	Side, Chestnut		R,W	—	—	—	—	—	1	1	F232-3 KT8
	Upr.		R,W	1	1	—	1	—	—	—	3439 488
	Upr.		R,W	—	—	—	—	1	—	1	3439 489
	Side, Frt., Black		P,D,C,Y	—	1	—	—	—	1	—	F234-5 KX9
	Side, Rear, Black		P,D,C,Y	—	1	—	—	—	1	—	F236-7 KX9
	Side, Frt., Black		P,D,C	—	—	—	—	1	—	1	F238-9 KX9
	Side, Rear, Black		P,D,C	—	—	—	—	1	—	1	F240-1 KX9
	Upr.		P,D,C,Y	—	1	—	—	1	1	1	3674 806
	SCREW, Side		V,L	—	4	—	—	—	—	—	6025 211
	SCREW, Side		V,L	—	—	—	4	—	—	—	6027 281
	SCREW, Side		B,J	—	4	—	—	—	—	—	6027 281
	SCREW, Upr.		B,J	—	5	—	—	—	—	—	9414 752
	SCREW, Side		R,W	4	4	—	4	4	—	4	6027 281
	SCREW, Upr.		R,W	4	4	—	4	4	—	4	9414 753
23-23-2	**MOULDING, Body Side Sill Finish (See Exterior Ornamentation Illustrations)**										
23-23-12	TAPE, Deck Lid or Deck Lid Finish Pnl. (See Exterior Ornamentation Illustrations)										
	TAPE, Fender, Door and Qtr. (See Exterior Ornamentation Illustrations)										
23-23-14	MOULDING, Frt. Pillar (See Exterior Ornamentation Illustrations)										
23-23-15	RETAINER, Frt. Door Outside Mldg.		C-H,C-S	—	2	—	—	—	—	—	3810 193
			C-H,C-S	—	12	—	—	—	—	—	3810 188
	RETAINER, Frt. Door Outside Mldg.		C-H,C-S	—	—	—	—	2	2	—	3810 192
			C-H,C-S	—	—	—	—	10	10	—	3810 188
	RETAINER, Rear Door Outside Mldg.		C-H,C-S	—	—	—	—	2	2	—	3810 194
			C-H,C-S	—	—	—	—	4	4	—	3810 188
	RETAINER, Rear Door Outside Mldg.		C-H,C-S	—	—	—	—	2	2	—	3810 189
	RETAINER, Qtr. Outside, Frt. Mldg.		C-H,C-S	—	2	—	—	—	—	—	3810 190
			C-H,C-S	—	2	—	—	—	—	—	3810 188
			C-H,C-S	—	2	—	—	—	—	—	3810 189
	RETAINER, Qtr. Outside Wheel Opng. Pnl. Mldg.		C-H,C-S	—	2	—	—	2	2	—	3810 195
	RETAINER, Qtr. Qutside Wheel Opng. Pnl. Mldg.		C-H,C-S	—	6	—	—	6	6	—	3810 196
	RETAINER, Qtr. Outside Wheel Opng. Pnl. Mldg.		C-H,C-S	—	2	—	—	2	2	—	3810 197
	RETAINER PACKAGE, Mldg. Contains: 6-600 3467 Retainer		AR	AR	AR	—	AR	AR	AR	AR	AR	3780 949

TYPE LETTERS Indicate: J - Challenger, B - Barracuda, V - Valiant, L - Dart, R - Satellite, W - Coronet, P - Plymouth, D - Dodge, C - Chrysler, Y - Imperial

NUMERALS INDICATE: 21 - 2 DR. SED., 23 - 2 DR. H.T., 29 - FAST BACK, 41 - 4 DR. SED., 43 - 4 DR. H.T., 45 - 6 PASS. STA. WGN., 46 - 9 PASS. STA. WGN.

AR Indicates use as required.
# Indicates parts not listed in any previous parts book
Numerals in parentheses ( ) refer to notes.
★ Indicates change or addition.

Printed in U.S.A.
November, 1974

Right and left part numbers are on same line, first number is right, second number is left.

CODE	PART NAME	MODEL CODES	SEE BOTTOM NOTE 21	23	29	41	43	45	46	PART NUMBER
23-23-15	RETAINER Cont'd.									
	RETAINER PACKAGE, Mldg. Contains: 6-600 3445 Retainer	AR	AR	AR	— AR	AR	AR	AR	AR	3780 963
	RETAINER PACKAGE, Mldg. Contains: 6-600 3489 Retainer	AR	AR	AR	— AR	AR	AR	AR	AR	3780 975
23-23-16	PANEL, Center Pillar Upr. Finish (See Exterior Ornamentation Illustrations)									
23-23-23	MOULDING, Deck Opng. Lwr. Pnl. (See Exterior Ornamentation Illustrations)									
23-23-28	PANEL, Deck Opng. Lwr. Finish (See Exterior Ornamentation Illustrations)									
23-23-30	MOULDING, Deck Lid Finish (See Exterior Ornamentation Illustrations)									
23-23-31	MOULDING, Deck Opng. Upr. Pnl. Finish (See Exterior Ornamentation Illustrations)									
23-23-32	MOULDING, Frt. Door Outside Finish (See Exterior Ornamentation Illustrations)									
23-23-33	MOULDING, Rear Door Outside Finish (See Exterior Ornamentation Illustrations)									
23-23-39	MOULDING, Qtr. Pnl. Outside Finish (See Exterior Ornamentation Illustrations)									
23-23-42	MOULDING, Roof Panel Finish (See Exterior Ornamentation Illustrations)									
23-23-52	MOULDING, Pkg., Rear Wdo. Outside									
	Stainless Steel, Lwr.	V,L	—	1	— —	—	—	—	—	2807 614-5
	Alum., Use After March 1, 1974, Lwr.	V,L	—	1	— —	—	—	—	—	3749 980-1
	Stainless Steel, Upr. and Side	V,L	—	1	— —	—	—	—	—	2807 616-7
	Alum., Use After March 1, 1974, Upr. and Side	V,L	—	1	— —	—	—	—	—	3749 976-7
	Stainless Steel, Lwr.	V,L	—	—	— 1	—	—	—	—	3419 990-1
	Alum., Use After March 1, 1974, Lwr.	V,L	—	—	— 1	—	—	—	—	3749 986-7
	Stainless Steel, Upr. and Side	V,L	—	—	— 1	—	—	—	—	3419 988-9
	Stainless Steel, Lwr.	V,L	—	—	— —	1	—	—	—	2807 612-3
	Alum., Use After March 1, 1974, Lwr.	V,L	—	—	— —	1	—	—	—	3749 982-3
	Stainless Steel, Upr. and Side	V,L	—	—	— —	1	—	—	—	2807 610-1
	Alum., Use After March 1, 1974, Upr. and Side	V,L	—	—	— —	1	—	—	—	3749 978-9
	RETAINER, Lwr.	V,L	—	AR	— —	AR	—	—	—	6002 893
	RETAINER, Upr. and Side	V,L	—	AR	— —	AR	—	—	—	6002 893
	SCREW, Lwr.	V,L	—	—	— AR	—	—	—	—	6028 674
	RETAINER and SCREW, Upr. and Side	V,L	—	—	— AR	—	—	—	—	6002 615
	MOULDING PACKAGE, Rear Wdo. Outside Upr.	B	—	1	— —	—	—	—	—	3419 806
	Upr. Corner	B	—	1	— —	—	—	—	—	3419 802-3
	Side and Lwr.	B	—	1	— —	—	—	—	—	3419 804-5
	RETAINER, Upr.	B	—	AR	— —	—	—	—	—	6002 893
	RETAINER, Upr., Upr. Corner, Lwr.	B	—	AR	— —	—	—	—	—	6003 304
	RETAINER, Upr. Corner	B	—	AR	— —	—	—	—	—	6002 893
	SCREW, Side and Lwr.	B	—	AR	— —	—	—	—	—	6002 688
	MOULDING PACKAGE, Rear Wdo. Outside Upr. and Side,	J	—	1	— —	—	—	—	—	3419 810-1
	Lwr.	J	—	1	— —	—	—	—	—	3419 808-9
	RETAINER, Upr. and Side	J	—	AR	— —	—	—	—	—	6002 893
	RETAINER and SCREW, Upr. and Side	J	—	AR	— —	—	—	—	—	6003 304
	RETAINER, SCREW and SEAL, Side	J	—	AR	— —	—	—	—	—	6002 688
	RETAINER, Lwr.	J	—	AR	— —	—	—	—	—	6002 893
	RETAINER and SCREW, Lwr.	J	—	AR	— —	—	—	—	—	6003 304

TYPE LETTERS Indicates: J - Challenger, B - Barracuda, V - Valiant, L - Dart, R - Satellite, W - Coronet, P - Plymouth, D - Dodge, C - Chrysler, Y - Imperial

NUMERALS INDICATE: 21 - 2 DR. SED., 23 - 2 DR. H.T., 29 - FAST BACK, 41 - 4 DR. SED., 43 - 4 DR. H.T., 45 - 6 PASS. STA. WGN., 46 - 9 PASS. STA. WGN.

AR Indicates use as required.
# Indicates parts not listed in any previous parts book
Numerals in parentheses ( ) refer to notes.
★ Indicates change or addition.

Printed in U.S.A.
November, 1974

Right and left part numbers are on same line, first number is right, second number is left.

CODE	PART NAME	MODEL CODES	SEE BOTTOM NOTE 21	23	29	41	43	45	46	PART NUMBER
23-23-52	MOULDING Cont'd.									
	MOULDING PACKAGE, Rear Wdo. Outside									
	Upr. and Side	R,W	1	1	—	1	—	—	—	— 3579 576-7
	Lwr.	R,W	1	1	—	1	—	—	—	— 3579 588-9
	Upr. and Side	R,W	—	—	—	—	1	—	—	— 3579 562-3
	Lwr.	R,W	—	—	—	—	1	—	—	— 3579 560-1
	RETAINER and SCREW, Side	R,W	AR	AR	—	AR	AR	—	—	— 6001 084
	RETAINER and SCREW	R,W	AR	AR	—	AR	AR	—	—	— 6003 304
	RETAINER	R,W	AR	AR	—	AR	AR	—	—	— 6002 893
	MOULDING, Rear Window Outside									
	Lwr.	P,D	—	1	—	—	—	—	—	— 3749 407
	Upr.	P,D	—	1	—	—	—	—	—	— 3749 412-3
	Side	P,D	—	1	—	—	—	—	—	— 3749 414-5
	Lwr.	P,D	—	—	—	—	1	—	—	— 3749 264
	Upr.	P,D	—	—	—	—	1	—	—	— 3749 258
	Upr. Corner	P,D	—	—	—	—	1	—	—	— 3749 260-1
	Side	P,D	—	—	—	—	1	—	—	— 3749 262-3
	Upr.	P,D,	—	—	—	—	—	1	—	— 3749 259
	Upr. Corner	P,D	—	—	—	—	—	1	—	— 3749 266-7
	Side and Lwr.	P,D	—	—	—	—	—	1	—	— 3749 268-9
	Upr.	C	—	—	—	—	1	—	—	— 3749 270-1
	Side	C	—	—	—	—	1	—	—	— 3749 272-3
	Lwr.	C	—	—	—	—	1	—	—	— 3749 274
	Upr.	C	—	1	—	—	—	1	—	— 3749 276-7
	Side	C	—	1	—	—	—	1	—	— 3749 278-9
	Lwr.	C	—	1	—	—	—	1	—	— 3749 280
	Blue, Upr.	Y	—	1	—	—	—	1	—	— E500-1 KB7
	Green, Upr.	Y	—	1	—	—	—	1	—	— E500-1 KG9
	Parchment, Upr.	Y	—	1	—	—	—	1	—	— E500-1 KL2
	White, Upr.	Y	—	1	—	—	—	1	—	— E500-1 KW1
	Chestnut, Lwr.	Y	—	1	—	—	—	1	—	— E500-1 KX9
	Chestnut Upr.	Y	—	1	—	—	—	1	—	— E500-1 KT8
	Gold, Upr.	Y	—	1	—	—	—	1	—	— E500-1 KY4
	Blue, Side	Y	—	1	—	—	—	1	—	— E502-3 KB7
	Green, Side	Y	—	1	—	—	—	1	—	— E502-3 KG9
	Parchment Side	Y	—	1	—	—	—	1	—	— E502-3 KL2
	White, Side	Y	—	1	—	—	—	1	—	— E502-3 KW1
	Black, Side	Y	—	1	—	—	—	1	—	— E502-3 KX9
	Chestnut, Side	Y	—	1	—	—	—	1	—	— E502-3 KT8
	Gold, Side	Y	—	1	—	—	—	1	—	— E502-3 KY4
	Blue, Lwr.	Y	—	1	—	—	—	1	—	— E504 KB7
	Green, Lwr.	Y	—	1	—	—	—	1	—	— E504 KG9
	Parchment, Lwr.	Y	—	1	—	—	—	1	—	— E504 KL2
	White, Lwr.	Y	—	1	—	—	—	1	—	— E504 KW1
	Black, Lwr.	Y	—	1	—	—	—	1	—	— E504 KX9
	Chestnut, Lwr.	Y	—	1	—	—	—	1	—	— E504 KT8
	Gold, Lwr.	Y	—	1	—	—	—	1	—	— E504 KY4
	RETAINER, Lwr., Upr., Side	P,D	—	AR	—	—	—	—	—	— 6003 409
	RETAINER, Lwr., Upr., Upr. Corner, Side	P,D	—	—	—	—	AR	—	—	— 6003 409
	RETAINER, Upr., Upr. Corner, Side and Lwr.	P,D	—	—	—	—	—	AR	—	— 6003 409
	RETAINER, Upr., Side, Lwr.	C	—	AR	—	—	AR	AR	—	— 6003 409
	Retainer, Upr., Side, Lwr.	Y	—	AR	—	—	—	AR	—	— 6003 457

TYPE LETTERS Indicates	J - Challenger B - Barracuda	V - Valiant L - Dart	R - Satellite W - Coronet	P - Plymouth D - Dodge	C - Chrysler Y - Imperial
NUMERALS INDICATE:	21 - 2 DR. SED. 23 - 2 DR. H.T.	29 - FAST BACK	41 - 4 DR. SED. 43 - 4 DR. H.T.		45 - 6 PASS. STA. WGN. 46 - 9 PASS. STA. WGN.

AR Indicates use as required.
# Indicates parts not listed in any previous parts book
Numerals in parentheses ( ) refer to notes.
★ Indicates change or addition.

Printed in U.S.A.
November, 1974

Right and left part numbers are on same line, first number is right, second number is left.

CODE	PART NAME	MODEL CODES	SEE BOTTOM NOTE 21	23	29	41	43	45	46	PART NUMBER
23-23-60	MOULDING, Tailgate Opng. Outside Finish (See Exterior Ornamentation Illustrations)									
	MOULDING, Roof Rear Air Deflector (See Exterior Ornamentation Illustrations)									
	MOULDING, Roof Rear Tailgate Opng. (See Exterior Ornamentation Illustrations)									
23-23-61	MOULDING, Tailgate Outside Finish (See Exterior Ornamentation Illustrations)									
23-23-65	MOULDING PACKAGE, w/Shield Outside Side	V,L	—	1	—	—	—	—	—	— 2932 446-7
	Side	V,L	—	—	—	—	1	—	—	— 2932 448-9
	Upr.	V,L	—	1	—	—	—	—	—	— 2932 450-1
	Upr.	V,L	—	—	—	—	1	—	—	— 2932 452-3
	Upr. and Side	V,L	—	—	—	1	—	—	—	— 3481 772-3
	Lwr.	V,L	—	1	—	—	1	—	—	— 2932 445
	Lwr.	V,L	—	—	—	1	—	—	—	— 3481 771
	Lwr. Corner	V,L	—	—	—	1	—	—	—	— 3444 796-7
	RETAINER, Side	V,L	—	AR	—	—	AR	—	—	— 6002 615
	RETAINER, Upr.	V,L	—	AR	—	—	AR	—	—	— 6002 615
	SCREW, Upr. and Side	V,L	—	—	—	AR	—	—	—	— 6002 615
	RETAINER, Lwr.	V,L	—	AR	—	AR	AR	—	—	— 6002 615
	RETAINER, SCREW and SEAL	V,L	—	AR	—	AR	AR	—	—	— 6002 263
	MOULDING, w/Shield Outside Upr. and Side	B,J	—	1	—	—	—	—	—	— 3419 818-9
	Lwr.	B,J	—	1	—	—	—	—	—	— 2895 565
	Lwr. Corner	B,J	—	1	—	—	—	—	—	— 3444 786-7
	RETAINER, Upr. and Side	B,J	—	AR	—	—	—	—	—	— 6002 688
	RETAINER, Upr. and Side	B,J	—	AR	—	—	—	—	—	— 6002 893
	RETAINER, Upr. and Side	B,J	—	AR	—	—	—	—	—	— 6003 304
	SCREW, Lwr.	B,J	—	AR	—	—	—	—	—	— 6024 421
	SCREW, Lwr. Corner	B,J	—	AR	—	—	—	—	—	— 6024 421
	MOULDING, W/Shield Outside Side and Upr.	R,W	1	1	—	1	—	—	—	— 3579 580-1
	Side and Upr.	R,W	—	—	—	—	1	—	1	1 3579 564-5
	Lwr.	R,W	1	1	—	1	1	—	1	1 3439 432
	Lwr. Corner	R,W	1	1	—	1	—	—	—	— 3505 024-5
	Lwr. Corner	R,W	—	—	—	—	1	—	1	1 3504 200-1
	RETAINER, Side and Upr.	R,W	AR	AR	—	AR	AR	—	AR	AR 6002 893
	RETAINER, Side and Upr.	R,W	AR	AR	—	AR	AR	—	AR	AR 6003 304
	SCREW, Lwr.	R,W	AR	AR	—	AR	AR	—	AR	AR 9433 063
	SCREW, Lwr. Corner	R,W	AR	AR	—	AR	AR	—	AR	AR 9433 063
	WASHER, Lwr., Lt. Side Only	R,W	AR	AR	—	AR	AR	—	AR	AR 6025 269
	MOULDING, w/Shield Outside Upr.	P,D,C,Y	—	1	—	—	1	1	1	1 3749 416
	Upr. Corner	P,D,C,Y	—	1	—	—	—	1	—	— 3749 424-5
	Upr. Corner	P,D,C	—	—	—	—	1	—	1	1 3749 418-9
	Use After Jan. 2, 1974 Upr. Corner	P,D,C	—	—	—	—	1	—	1	1 3810 260-1
	Lwr.	P,D,C,Y	—	1	—	—	1	1	1	1 3749 428
	Side	P,D,C,Y	—	1	—	—	—	1	—	— 3749 426-7
	Side	P,D,C	—	—	—	—	1	—	1	1 3749 422-3
	RETAINER, Upr., Upr. Corner	P,D,C,Y	—	AR	—	—	AR	AR	AR	AR 6003 409
	SCREW, Lwr.	P,D,C,Y	—	AR	—	—	AR	AR	AR	AR 9433 063
	RETAINER, Lwr., Side	P,D,C,Y	—	AR	—	—	AR	AR	AR	AR 6003 500
	SEAL, w/Shield, Outside Side Mldg.	P,D,C,Y	—	6	—	—	6	6	6	6 3810 183
23-23-69	PAD, W/Shield Outside Lwr. Mldg.	P,D,C,Y	—	2	—	—	2	2	2	2 3810 289
23-23-73	MOULDING, Qtr. Wdo. Outside Finish (See Exterior Ornamentation Illustrations)									

TYPE LETTERS Indicates: J - Challenger; B - Barracuda; V - Valiant; L - Dart; R - Satellite; W - Coronet; P - Plymouth; D - Dodge; C - Chrysler; Y - Imperial

NUMERALS INDICATE: 21 - 2 DR. SED.; 23 - 2 DR. H.T.; 29 - FAST BACK; 41 - 4 DR. SED.; 43 - 4 DR. H.T.; 45 - 6 PASS. STA. WGN.; 46 - 9 PASS. STA. WGN.

AR Indicates use as required.
# Indicates parts not listed in any previous parts book
Numerals in parentheses ( ) refer to notes.
★ Indicates change or addition.

Printed in U.S.A.
November, 1974

Right and left part numbers are on same line, first number is right, second number is left.

CODE	PART NAME	MODEL CODES	SEE BOTTOM NOTE 21	23	29	41	43	45	46	PART NUMBER
23-23-77	PANEL and NAME LETTERS, Tailgate Outside Finish (See Exterior Ornamentation Illustrations)									
23-23-85	PANEL, Qtr. Outside Panel Finish (See Exterior Ornamentation Illustrations)									
23-26-41	**MOULDING, Roof Side Rail Garnish**									
	Prime, Frt.	V,L	—	—	—	1	—	—	—	— 3720 294-5
	Prime	V,L	—	1	—	—	—	—	—	— 3720 176-7
	Prime	B	—	1	—	—	—	—	—	— 3767 324-5
	Prime	J	—	1	—	—	—	—	—	— 3767 266-7
	Prime	R	1	1	—	—	—	—	—	— 3720 022-3
	Prime	W	2	2	—	—	—	—	—	— 3445 838
	w/Halo Roof, Prime	W	—	—	—	1	—	—	—	— 3445 838-9
	w/o Halo Roof, Prime	W	—	—	—	2	—	—	—	— 3674 868
	Prime	P,D	—	—	—	—	—	1	—	— 3674 600-1
	Prime	P,D	—	1	—	—	—	—	—	— 3720 552-3
	Prime	C,Y	—	1	—	—	—	1	—	— 3674 616-7
	Prime, Frt.	P,D,C	—	—	—	—	1	—	1	1 3674 606-7
	Prime, Rr.	P,D,C	—	—	—	—	—	—	1	1 3720 556-7
	Prime, Rear	P,D	—	—	—	—	1	—	—	— 3674 608-9
	Prime, Rear	C	—	—	—	—	1	—	—	— 3674 624-5
	CLIP, Roof Side Rail Garnish Mldg.	V,L	—	8	—	—	—	—	—	— 6002 178
	RETAINER, Roof Rail Garnish Mldg.	B,J	—	AR	—	—	—	—	—	— 6002 940
		V,L	—	—	—	4	—	—	—	— 6003 007
		R,W	—	6	—	4	—	—	—	— 6003 227
		P,D,C,Y	—	—	—	—	—	6	—	— 6003 440
		C,Y	—	6	—	—	—	—	—	— 6003 440
		P,D,C	—	—	—	—	4	—	4	4 6003 441
23-26-43	MOULDING, Shelf Trim Panel									
	Blue	V,L	—	—	—	1	—	—	—	— H136-7 KB7
	Green		—	—	—	1	—	—	—	— H136-7 KG6
	Parchment		—	—	—	1	—	—	—	— H136-7 JL5
	Black		—	—	—	1	—	—	—	— H136-7 JX9
	Gold		—	—	—	1	—	—	—	— H136-7 JY7
23-26-47	MOULDING, Rr. Compt. Security Panel	V,L	—	—	—	1	—	—	—	— 3756 593
	MOULDING, Wheelhouse Cover Finish	R,W	—	—	—	—	—	—	1	1 3416 312-3
23-26-58	CAP, Center Pillar Upr. Trim									
	Prime	V,L	—	—	—	—	2	—	—	— 2789 135
23-26-60	BRACKET, Rr. Door Trim Support									
	Frt.	P,D,C,Y	—	—	—	—	2	2	2	2 3759 965
	Rr.	P,D	—	—	—	—	2	2	2	2 3759 966
	Rr.	C	—	—	—	—	—	—	2	2 3759 966
	Rr.	C,Y	—	—	—	—	2	2	—	— 3759 967
23-26-76	MEDALLION, Seat Back									
	3 1/4" x 1/2" Frt. and Rear	R,W	—	2	—	—	2	—	2	2 2981 980
	2 27/32" x 1/2" Front	P	—	—	—	—	2	2	—	— 2981 970
	2 27/32" x 1/2" Rear	P	—	—	—	—	2	2	—	— 2981 970
	Frt. and Rr.	C	—	2	—	—	2	2	2	2 2981 978
23-26-80	NAME PLATE, Door Inside Trim Pnl.									
	"CUDA"	B-S	—	2	—	—	—	—	—	— 3510 863
	"BROUGHAM" CANADA	W	—	—	—	2	—	—	—	— 3510 794
	NAME PLATE, Frt. Door Elect. Door Lock	P,D,C	—	2	—	—	2	2	2	2 2589 046
	NAME PLATE, Door Trim Panel									
	"Monaco" CANADA	D	—	2	—	—	2	2	2	2 3415 350
	BASE and MEDALLION, Door Trim Pnl. Finish Plate	J	—	2	—	—	—	—	—	— 3509 253
	LID, Rr. Door Arm Rest Switch Plate Ash Receiver	C-S	—	—	—	—	1	1	—	— 3589 952-3
		Y	—	—	—	—	—	1	—	— 3589 884-5

TYPE LETTERS Indicates: J - Challenger, B - Barracuda, V - Valiant, L - Dart, R - Satellite, W - Coronet, P - Plymouth, D - Dodge, C - Chrysler, Y - Imperial

NUMERALS INDICATE: 21 - 2 DR. SED., 23 - 2 DR. H.T., 29 - FAST BACK, 41 - 4 DR. SED., 43 - 4 DR. H.T., 45 - 6 PASS. STA. WGN., 46 - 9 PASS. STA. WGN.

AR Indicates use as required.
# Indicates parts not listed in any previous parts book
Numerals in parentheses ( ) refer to notes.
★ Indicates change or addition.

Printed in U.S.A.
November, 1974

Right and left part numbers are on same line, first number is right, second number is left.

CODE	PART NAME	MODEL CODES	SEE BOTTOM NOTE 21	23	29	41	43	45	46	PART NUMBER
23-26-80	NAME PLATE Cont'd.									
	LID, Door Arm Rest Switch Plate Ash Receiver Rt.	Y	—	1	—	—	—	1	—	—	3589 884
	LID, Quarter Arm Rest Switch Plate Ash Receiver	C-S	—	1	—	—	—	—	—	—	3589 952-3
		Y	—	1	—	—	—	—	—	—	3589 884-5
	SWITCH PLATE, Frt. Door Arm Rest w/Power Windows, w/Power Door Locks Rt.	C-S	—	1	—	—	1	1	—	—	3589 872
	w/Power Windows, w/Power Door Locks Lt.	C-S	—	1	—	—	1	1	—	—	3589 893
	w/Power Windows, w/o Power Door Locks Rt.	C-S	—	1	—	—	1	1	—	—	3589 874
	w/Power Windows, w/o Power Door Locks Lt.	C-S	—	1	—	—	1	1	—	—	3589 873
	w/Power Door Locks, w/Opera Window Lt.	C-S	—	1	—	—	—	—	—	—	# 3879 954
	w/o Power Door Locks, w/Opera Window Lt.	C-S	—	1	—	—	—	—	—	—	# 3879 955
	w/Power Windows, w/Power Door Locks	Y	—	1	—	—	—	1	—	—	3589 944-5
	w/Power Windows, w/o Power Door Locks	Y	—	1	—	—	—	1	—	—	3589 942-3
	SWITCH PLATE, Rear Door Arm Rest									
		Y	—	—	—	—	1	1	—	—	3589 878-9
		C-S	—	—	—	—	1	1	—	—	3762 168-9
	SWITCH PLATE, Qtr. Arm Rest w/Opera Window	C-S	—	1	—	—	—	—	—	—	# 3879 966-7
		C-S	—	1	—	—	—	—	—	—	3762 168-9
		Y	—	1	—	—	—	—	—	—	3589 878-9
	PLATE and SEAL, Door Air	J	—	2	—	—	—	—	—	—	3499 182
23-26-84	RETAINER, Seat Back Medallion Frt. and Rear	R,W	—	2	—	—	2	—	2	2	2981 981
	3 7/16" x 1 3/32" Frt.	P	—	—	—	—	—	—	2	2	2981 971
	3 7/16" x 1 3/32" Rear	P	—	—	—	—	2	2	—	—	2981 971
	Frt. and Rear	C	—	2	—	—	2	2	2	2	2981 979
23-31-33	**LINER, Dash**									
	w/or w/o Heater and A/Cond. Rt.	V,L	—	1	—	1	1	—	—	—	3720 104
	w/Heater and A/Cond. Rt.	V,L	—	1	—	1	1	—	—	—	3720 102
	w/or w/o Heater and A/Cond. Lt.	V,L	—	1	—	1	1	—	—	—	3767 623
	w/Heater and A/Cond. Ctr.	V,L	—	1	—	1	1	—	—	—	2664 975
	w/Heater and A/Cond. Upr.	V,L	—	1	—	1	1	—	—	—	3720 101
	w/or w/o Heater, w/o A/Cond. Rt.	B,J	—	1	—	—	—	—	—	—	2895 561
	Lt.	B,J	—	1	—	—	—	—	—	—	2895 560
	w/Heater and A/Cond. Rt.	B,J	—	1	—	—	—	—	—	—	2895 564
	w/Heater and A/Cond. Ctr.	B,J	—	1	—	—	—	—	—	—	2895 563
	w/or w/o Heater, w/o A/Cond. Rt.	R,W	—	1	—	—	1	—	1	1	2895 561
	Lt.	R,W	—	1	—	—	1	—	1	1	2895 560
	w/Heater and A/Cond. Rt.	R,W	—	1	—	—	1	—	1	1	2895 564
	w/Heater and A/Cond. Lt.	R,W	—	1	—	1	1	—	1	1	3499 957
	w/Heater and A/Cond. Center	R,W	—	1	—	—	1	—	1	1	2895 563
	w/Heater w/o A/Cond. Rt.	R,W	—	1	—	—	1	—	1	1	3439 433
	w/Heater w/o A/Cond. Center	R,W	—	1	—	—	1	—	1	1	3720 103
	w/or w/o Heater and A/Cond.	P,D,C,Y	—	1	1	—	1	1	1	1	3767 423
	FASTENER	All	AR	AR	AR	AR	AR	AR	AR	AR	6008 109
		V,L,B,J,R,W	AR	AR	—	AR	AR	—	AR	AR	3720 539
23-31-137	SILENCER, Dash Pnl. Plenum Area	B,J	—	1	—	—	—	—	—	—	3440 560-1
	Rt.	R,W	—	1	—	—	1	—	1	1	3439 435
	w/Heater w/A/Cond. Lt.	R,W	—	1	—	—	1	—	1	1	3499 957
	SILENCER Dash Pnl.	P,D,C,Y	—	1	—	—	1	1	1	1	3767 508-9
	SILENCER, Center Dash Panel Insert	V,L	—	1	—	—	1	—	—	—	3767 225
23-31-145	SEAL, Cowl Side Outer Upr. Drain Rt.	P,D,C,Y	—	1	—	—	1	1	1	1	3767 087
23-31-146	RETAINER, Door Air Seal and Plate to Inside Pnl. Attach.	J	—	4	—	—	—	—	—	—	2898 909

TYPE LETTERS Indicates J - Challenger, B - Barracuda, V - Valiant, L - Dart, R - Satellite, W - Coronet, P - Plymouth, D - Dodge, C - Chrysler, Y - Imperial

NUMERALS INDICATE: 21 - 2 DR. SED., 23 - 2 DR. H.T., 29 - FAST BACK, 41 - 4 DR. SED., 43 - 4 DR. H.T., 45 - 6 PASS. STA. WGN., 46 - 9 PASS. STA. WGN.

AR Indicates use as required.
# Indicates parts not listed in any previous parts book
Numerals in parentheses ( ) refer to notes.
★ Indicates change or addition.

Printed in U.S.A.
November, 1974

Right and left part numbers are on same line, first number is right, second number is left.

CODE	PART NAME	MODEL CODES	SEE BOTTOM NOTE 21	23		29	41	43	45	46	PART NUMBER
23-31-146	RETAINER Cont'd.										
	RETAINER, Quarter Outside Panel to Bumper Filler	P,D,C	—	—	—	—	—	—	13	13	2898 909
	Section 5	P,D,C	—	—	—	—	—	—	1	1	3762 205
	Section 3	C	—	—	—	—	1	—	—	—	**3762 243**
	RETAINER, Dash Panel Fender Shield	B,J,R,W	2	2	—	2	2	—	2	2	2898 909
23-31-205	SILENCER, Roof Panel, 1/2" x 25 1/2" x 67"	All	AR	AR	—	AR	AR	AR	AR	AR	1774 621
	Section 2	V,L	—	1	—	—	—	—	—	—	3762 402
	Section 5	P,D,C	—	—	—	—	—	—	1	1	3762 205
	Section 3	C	—	—	—	—	1	—	—	—	3762 243
23-32-6	**BRACE, w/GUSSET, Frt. Floor Pan** Hold Down	P,D,C,Y	1	1	—	—	1	1	1	1	3752 304-5
23-32-7	SILENCER, Floor Pan Under Front Seat	P-L,P-M,P-H, D-L,D-M,D-H	—	1	—	—	1	1	1	1	3589 675
	SILENCER, Frt. Floor at Strg. Column	V,L	—	1	—	1	1	—	—	—	3551 736
		R,W	1	1	—	—	—	—	—	—	3551 736
	SILENCER, Frt. Floor Pan	P-P,D-P,C,Y	—	1	—	—	1	1	1	1	3589 676
		V,L	—	1	—	1	1	—	—	—	3762 308-9
	SILENCER, Frt. Floor Tunnel	V,L	—	1	—	1	1	—	—	—	3762 380-1
	SILENCER, Rr. Floor Tunnel	V,L	—	1	—	1	1	—	—	—	3762 383
	SILENCER, Under Space Tire	V,L	—	—	—	1	—	—	—	—	3762 302
	SILENCER, Wheelhouse Front	V,L	—	—	—	1	—	—	—	—	**3762 292-3**
	SILENCER, Wheelhouse Rear	V,L	—	—	—	1	—	—	—	—	3762 530-1
	SILENCER, Wheelhouse Top and Rr. Inner	V,L	—	—	—	1	—	—	—	—	3762 294-5
	SILENCER, Deck Opening Lower Panel	V,L	—	—	—	1	—	—	—	—	3762 304-5
	SILENCER, Rr. Floor Pan and Axle Kick Up	V,L	—	—	—	1	—	—	—	—	3762 299
	SILENCER, Luggage, Compartment Floor Rt.	V,L	—	—	—	1	—	—	—	—	3762 300
	SILENCER, Front Floor Lt.	V,L	—	1	—	1	1	—	—	—	**3762 381**
	SILENCER, Rear Floor Rt.	V,L	—	1	—	1	1	—	—	—	3762 382
	SILENCER, Rr. Floor Tunnel	P-P,D-P	—	1	—	—	1	1	1	1	3762 314
	SILENCER, Wheelhouse Center Lt.	P,D,C	—	—	—	—	—	—	1	1	3762 245
	Rr. Lt.	P,D,C	—	—	—	—	—	—	1	1	3589 672
	SILENCER, Wheelhouse Cover	P,D,C	—	—	—	—	—	—	1	1	3762 234
	SILENCER, Rr. Floor Pan Under Rr. Seat	V,L	—	—	—	1	—	—	—	—	**3762 291**
	Under Rr. Seat	P-P,D-P,C,Y	—	1	—	—	1	1	1	1	3589 682
	Rr. Floor Pan	P,D,C	—	1	—	—	—	—	1	1	3589 680-1
	SILENCER, "D" Pillar Upr. Trim Panel	P,D,C	—	—	—	—	—	—	1	1	3762 246-7
	SILENCER, Tailgate Opening Pillar Cover	P,D,C	—	—	—	—	—	—	1	1	3589 674
	SILENCER, Floor Pan Axle Kickup Rr,	P,D,C	—	—	—	—	—	—	—	1	3589 669
	SILENCER, Rr. Floor Pan	Y	—	1	—	—	—	1	—	—	**3762 512-3**
	SILENCER, Frt. Floor Pan	Y	—	1	—	—	—	1	—	—	3762 508
	SILENCER, Rr. Floor Pan Over Tunnel	Y	—	2	—	—	—	2	—	—	3762 510
	SILENCER, Rr. Floor Upper Rt.	Y	—	1	—	—	—	1	—	—	3762 514
	Insulation Floor Pan Over Muffler	P,D,C	—	—	—	—	—	—	1	1	3589 673
	INSULATOR, Thermal Under 2nd Seat	R,W	—	1	—	—	1	—	—	—	3762 624
		R,W	—	—	—	—	—	—	1	1	**3762 625**
		P,D,C,Y	—	1	—	—	1	1	—	—	3762 599
		P,D,C	—	—	—	—	—	—	1	1	3762 640
23-32-15	PLUG, Floor Pan										
	1/2" Hole	All	AR	AR	—	AR	AR	AR	AR	AR	2094 984
	1" Hole	All	AR	—	—	AR	AR	AR	AR	AR	2480 957
	1 1/4" Hole	V,L,B,J,R,W	AR	AR	—	AR	AR	—	AR	AR	3506 419
	1 1/2" Hole	B,J,R,W	—	2	—	2	2	—	2	2	3569 356
	1 1/2" Hole	B,J,P,D,C,Y	—	2	—	—	2	2	2	2	6029 935
	1 1/4" x 3 1/4" Hole	P,D,C,Y	—	AR	—	—	AR	AR	AR	AR	2664 330
	1 1/4" Hole	All	AR	AR	—	AR	AR	AR	AR	AR	6029 940
	1 3/4" Hole	All	AR	AR	—	AR	AR	AR	AR	AR	2424 864

TYPE LETTERS Indicates J - Challenger, B - Barracuda, V - Valiant, L - Dart, R - Satellite, W - Coronet, P - Plymouth, D - Dodge, C - Chrysler, Y - Imperial

NUMERALS INDICATE: 21 - 2 DR. SED., 23 - 2 DR. H.T., 29 - FAST BACK, 41 - 4 DR. SED., 43 - 4 DR. H.T., 45 - 6 PASS. STA. WGN., 46 - 9 PASS. STA. WGN.

AR Indicates use as required.
# Indicates parts not listed in any previous parts book
Numerals in parentheses ( ) refer to notes.
★ Indicates change or addition.

Printed in U.S.A.
November, 1974

Right and left part numbers are on same line, first number is right, second number is left.

CODE	PART NAME	MODEL CODES	SEE BOTTOM NOTE 21	23		29	41	43	45	46	PART NUMBER
23-32-15	PLUG Cont'd.										
	2" Hole	All	AR	AR	—	AR	AR	AR	AR	AR	1878 303
	2 1/2" Hole	P,D,C,Y	AR	AR	—	—	AR	AR	AR	AR	2083 111
	2 1/2" Hole	All	AR	AR	—	AR	AR	AR	AR	AR	2189 093
	2 1/2" Hole	R,W,P,D,C	—	—	—	—	—	—	AR	AR	2861 730
	3 7/16" Hole	P,D,C	AR	AR	—	AR	AR	AR	AR	AR	3444 809
	D Shaped Hole	All	AR	AR	—	AR	AR	AR	AR	AR	2484 575
23-32-17	CROSSMEMBER, Frt. Suspension										
	Use w/198, 225 Eng. Complete	V,L	—	1	—	1	1	—	—	—	3726 777
	Use w/318, 360 Eng. Complete	V,L	—	1	—	1	1	—	—	—	3466 471
	Use w/318, 360 Eng. w/Skid Comp.	B,J	—	1	—	—	—	—	—	—	3726 799
	Use w/318, 360 Eng. Comp.	R,W	1	1	—	1	1	—	1	1	3642 745
	After 10-15-73	R,W	1	1	—	1	1	—	1	1	3817 139
	Use w/225 Eng.	R,W	1	1	—	1	1	—	1	1	3726 807
	After 10-19-73	R,W	1	1	—	1	1	—	1	1	3817 137
	Use w/400, 440 Eng. Comp.	R,W	1	1	—	1	1	—	1	1	3642 749
	After 10-15-73	R,W	1	1	—	1	1	—	1	1	3817 135
	CROSSMEMBER, Frt. Suspension Rear Anchor	R-L, R-M, R-H, R-P, W-L, W-H, W-P	1	1	—	—	1	—	1	1	3642 776
		R-K, R-T, W-K,W-T,W-G	—	—	—	—	1	—	—	—	3642 926
	CROSSMEMBER, Frame Trans. Mounting	V,L	—	1	—	1	1	—	—	—	3466 462
		B,J,R,W	1	1	—	1	1	—	1	1	3642 794
	CROSSMEMBER and REINFORCEMENT, Floor Rear Floor Shock Absorber	V,L	—	1	—	1	1	—	—	—	2859 409
	CROSSMEMBER, Torsion Bar Anchor	V,L	—	1	—	1	1	—	—	—	3611 393
	w/Anchors	B,J	—	1	—	—	—	—	—	—	3684 405
	w/Brkts.	R,W	1	1	—	1	1	—	1	1	3752 991
	CROSSMEMBER, Frt. Side Rail Frt.	V,L	—	1	—	1	1	—	—	—	3726 027
		B,J	—	1	—	—	—	—	—	—	2962 076
		R,W	1	1	—	1	1	—	1	1	3642 774
	CROSSMEMBER, Frt. Side Rail Frt. w/Bumper Brkts. Upr.	V,L	—	1	—	1	1	—	—	—	3752 961
	CROSSMEMBER, Rear Floor Pan Rear Center	V,L	—	1	—	1	1	—	—	—	2838 999
	w/Brkt	V,L	—	1	—	1	1	—	—	—	# 3752 558
	w/NUT	B,J	—	1	—	—	—	—	—	—	3444 119
		R,W	1	1	—	1	—	—	—	—	3445 022
		R,W	—	—	—	—	1	—	—	—	3616 920
		R,W	—	—	—	—	—	—	1	1	3720 475
		P,D,C,Y	—	1	—	—	1	1	—	—	3615 862
		P,D,C	—	—	—	—	—	—	1	1	3674 646
	CROSSMEMBER, Rear Floor Pan Rr. Shock Absorber	B,J	—	1	—	—	—	—	—	—	3504 640
		P,D,C,Y	—	1	—	—	1	1	1	1	# 3615 863
		R,W	1	1	—	1	1	—	1	1	3615 816
	CROSSMEMBER, Rr. Floor Pan Shock Absorber and T/Pipe Support	P,D,C,Y	—	1	—	—	1	1	1	1	3752 108
	EXTENSION, Rear Floor Pan Rear Crossmember	V,L	—	—	—	1	1	—	—	—	3756 362-3
		B,J	—	1	—	—	—	—	—	—	2963 672-3
		R	—	—	—	—	1	—	—	—	3616 926-7
		R	1	1	—	—	—	—	—	—	3504 582-3
		W	1	1	—	1	—	—	—	—	3504 584-5
		W	—	—	—	—	1	—	—	—	3616 928-9

TYPE LETTERS Indicates: J - Challenger, B - Barracuda, V - Valiant, L - Dart, R - Satellite, W - Coronet, P - Plymouth, D - Dodge, C - Chrysler, Y - Imperial

NUMERALS INDICATE: 21 - 2 DR. SED., 23 - 2 DR. H.T., 29 - FAST BACK, 41 - 4 DR. SED., 43 - 4 DR. H.T., 45 - 6 PASS. STA. WGN., 46 - 9 PASS. STA. WGN.

AR Indicates use as required.
# Indicates parts not listed in any previous parts book
Numerals in parentheses ( ) refer to notes.
★ Indicates change or addition.

Printed in U.S.A.
November, 1974

Right and left part numbers are on same line, first number is right, second number is left.

CODE	PART NAME	MODEL CODES	SEE BOTTOM NOTE 21	23	29	41	43	45	46	PART NUMBER
23-32-17	CROSSMEMBER Cont'd.									
	EXTENSION, Floor Pan Rear Side Rail to Rear Crossmember w/Nut	B,J	—	1	—	—	—	—	—	3445 312-3
	EXTENSION, Rr. Floor Foot Well Pan Rr. Crossmember Lt.	P,D,C	—	—	—	—	—	1	1	3674 649
23-32-18	SCREW and WASHER, Frt. Suspension Crossmember	V,L,B,J	4	4	—	4	4	—	—	2467 693
23-32-22	PAN, Front Floor	V,L	—	1	—	—	1	—	—	# 3756 070
		V,L	—	—	—	1	—	—	—	# 3756 073
		B,J	—	1	—	—	—	—	—	3570 436
		R,W	1	1	—	1	1	—	1	1	3615 983
	PAN, w/NUT, Frt. Floor	P,D,C,Y	—	1	—	—	1	1	1	1	3615 985
	After 2-14-74	P,D,C,Y	—	1	—	—	1	1	1	1	# 3792 557
23-32-24	PAN, Center Floor	V,L	—	1	—	1	1	—	—	—	3615 680
		B,J	—	1	—	—	—	—	—	—	3756 524
		R,W	1	1	—	1	1	—	—	—	3445 001
		R,W	—	—	—	—	—	—	1	1	3440 824
		P,D	—	1	—	—	1	1	—	—	3615 831
		P,D	—	—	—	—	—	—	1	1	3616 670
		C,Y	—	1	—	—	1	1	1	1	3616 670
23-32-25	EXTENSION, Center Floor Pan	V,L	—	1	—	—	1	—	—	—	2604 166-7
		J	—	1	—	—	—	—	—	—	3616 832-3
		B	—	1	—	—	—	—	—	—	3616 830-1
		R,W	—	1	—	1	—	—	—	—	3615 692-3
		R,W	—	—	—	—	1	—	1	1	3615 690-1
23-32-27	REINFORCEMENT, Frt. Floor Pan Seat Guide Frt.	V,L	—	1	—	1	1	—	—	—	2603 606-7
	Rr.	V,L	—	1	—	1	1	—	—	—	2603 608-9
	Frt.	B,J	—	2	—	—	—	—	—	—	2963 052
	Rear	B,J	—	2	—	—	—	—	—	—	2963 054
	Frt.	R,W	2	2	—	2	2	—	2	2	2963 052
	Rr.	R,W	2	2	—	2	2	—	2	2	2963 054
	REINFORCEMENT, Frt. Floor Pan Seat Track Rr. Corssmember	P,D,C,Y	—	1	—	—	1	1	1	1	3615 854
	REINFORCEMENT, Floor to Center Pillar Lower Extension	P,D,C,Y	—	—	—	—	—	1	—	—	3756 768-9
	REINFORCEMENT and NUT, Center Floor Pan Frt. Extension Frt. Seat Belt Outer	B,J	—	1	—	—	—	—	—	—	3616 828-9
	REINFORCEMENT, Floor Pan to Center Pillar Support	P,D,C,Y	—	—	—	—	1	1	—	—	3756 202-3
	REINFORCEMENT, Rr. Shock Absorber Tail Pipe Mtg. Rt.	P,D,C,Y	—	1	—	—	1	1	1	1	# 3615 884
23-32-29	COVER, Frt. Floor Pan Gear Shift Opng.	V,L	—	1	—	1	1	—	—	—	2784 440
		B,J	—	1	—	—	—	—	—	—	2963 017
	w/Console	R,W	1	1	—	1	—	—	1	1	3616 207
	w/o Console	R,W	1	1	—	1	1	—	1	1	3616 408
23-32-31	BRACE, Frt. Crossmember to Frt. Suspension Crossmember	V,L	—	1	—	1	1	—	—	—	2768 492
		B,J	—	1	—	—	—	—	—	—	2962 003
23-32-40	BRACKET and T/PLATE, Center Floor Pan Rear Seat Back	P,D	—	2	—	—	—	—	—	—	3756 271
		P,D	—	—	—	—	2	2	—	—	3616 558
		C,Y	—	2	—	—	2	2	—	—	3616 558

TYPE LETTERS Indicates J - Challenger, B - Barracuda, V - Valiant, L - Dart, R - Satellite, W - Coronet, P - Plymouth, D - Dodge, C - Chrysler, Y - Imperial

NUMERALS INDICATE: 21 - 2 DR. SED., 23 - 2 DR. H.T., 29 - FAST BACK, 41 - 4 DR. SED., 43 - 4 DR. H.T., 45 - 6 PASS. STA. WGN., 46 - 9 PASS. STA. WGN.

AR Indicates use as required.
# Indicates parts not listed in any previous parts book
Numerals in parentheses ( ) refer to notes.
★ Indicates change or addition.

Printed in U.S.A.
November, 1974

Right and left part numbers are on same line, first number is right, second number is left.

CODE	PART NAME	MODEL CODES	SEE BOTTOM NOTE 21	23		29	41	43	45	46	PART NUMBER
23-32-46	PANEL, Supt. and Hsg., Ctr. Floor Pan Cover	R,W	—	—	—	—	—	—	1	—	3674 366
		R,W	—	—	—	—	—	—	—	1	3674 364
	PANEL and P/Nut Ctr. and Rear Floor Pan Cover	P,D,C	—	—	—	—	—	—	1	1	3767 052
	PANEL, Center Floor Pan Cover Finished w/Fold Down Rr. Seat	V,L	—	—	—	1	—	—	—	—	# 3616 784
23-32-48	PAN, Rear Floor	V,L	—	1	—	1	1	—	—	—	3756 029
		B	—	1	—	—	—	—	—	—	2963 038
		J	—	1	—	1	—	—	—	—	2965 425
		R,W	1	1	—	1	—	—	—	—	3756 742
		R,W	—	—	—	—	1	—	—	—	3792 158
		R,W	—	—	—	—	—	—	1	1	3440 566
		P,D,C,Y	—	1	—	—	1	1	—	—	3615 839
	PANEL, Rear Floor Side Upr. Rt.	R,W	—	—	—	—	—	—	1	1	3440 894
	Lt.	R,W	—	—	—	—	—	—	1	1	3499 877
	Pan Side Upr.	P,D,C	—	—	—	—	—	—	1	1	3674 652-3
	PANEL, Rear Floor Pan Filler	R,W	—	—	—	—	—	—	1	1	3720 147
	PANEL, Rr. Floor Pan Foot Well Rear Crossmember	P,D,C	—	—	—	—	—	—	1	1	3720 488
	PANEL, Rr. Floor Pan Foot Well	P,D,C	—	—	—	—	—	—	1	1	3720 486
	Frt.	P,D,C	—	—	—	—	—	—	1	1	3720 487
23-32-49	EXTENSION, Rear Floor Pan Side	R	1	1	—	—	—	—	—	—	3445 524-5
		R	—	—	—	—	1	—	—	—	3616 940-1
		W	—	—	—	—	1	—	—	—	3616 942-3
		P,D,C,Y	—	1	—	—	1	1	—	—	3756 102-3
	Upr. Pnl.	P,D,C	—	—	—	—	—	—	1	1	2894 582-3
	EXTENSION, Qtr. Pnl. Rear Floor Pan Side	V,L	—	1	—	—	1	—	—	—	3756 160-1
		V,L	—	—	—	1	—	—	—	—	3756 162-3
		B	—	1	—	—	—	—	—	—	3616 528-9
		J	—	1	—	—	—	—	—	—	3616 706-7
		D	—	1	—	—	—	1	—	—	3756 100-1
		C,Y	—	1	—	—	1	1	—	—	3615 922-3
	NOTE: See Code 23-34-242										
23-32-51	BUMPER, Security Panel Down Stop	V,L	—	—	—	2	—	—	—	—	2664 681
	BUMPER, Center Floor Pan Cover Pnl.	R,W	—	—	—	—	—	—	AR	AR	2811 861
	BUMPER, Rear Floor Pan Side Upr. Pnl.	R,W	—	—	—	—	—	—	4	4	2252 184
	BUMPER, Ctr. Floor Pan to 2nd Seat Cvr. Inner	R,W	—	—	—	—	—	—	2	2	2664 268
	BUMPER, Rr. Floor Tailgate Opening Sill	R,W	—	—	—	—	—	—	4	—	2811 861
		R,W	—	—	—	—	—	—	—	4	3500 818
	BUMPER, Rear Floor Pan Side Upr. Pnl.	R,W	—	—	—	—	—	—	—	6	3500 392
		R,W	—	—	—	—	—	—	5	—	2811 861
		P,D,C	—	—	—	—	—	—	2	—	3500 390
	BUMPER, Ctr. and Rear Floor Pan Cvr. Pnl. 2nd Seat Back Support Pnl.	P,D,C	—	—	—	—	—	—	8	8	2664 681
	BUMPER, Ctr. and Rear Floor Pan Cvr. BUMPER, Rr. Floor Pan Tailgate Opening Upr. Sill Scuff Plate	P,D,C	—	—	—	—	—	—	2	2	3767 396
23-32-56	PANEL, w/TEE NUTS, Rear Floor Pan Cover	R,W	—	—	—	—	—	—	1	—	3674 482
	FILLER, Qtr. Outside Pnl. to Rear Floor Pan Side Extension	B	—	1	—	—	—	—	—	—	3616 142-3
	INSERT, Rear Floor Pan Cover	R,W	—	—	—	—	—	—	1	—	3674 343
	COVER, Rear Floor Pan Complete w/o Cargo Compt. Dressup	P,D	—	—	—	—	—	—	1	—	3752 660
	w/Cargo Compt. Dressup	P,D,C	—	—	—	—	—	—	1	—	3752 648
23-32-58	STRIKER, Rear Floor Pan Cvr. Pnl. Release Handle	P,D,C	—	—	—	—	—	—	1	—	3760 658

TYPE LETTERS Indicates: J - Challenger, B - Barracuda, V - Valiant, L - Dart, R - Satellite, W - Coronet, P - Plymouth, D - Dodge, C - Chrysler, Y - Imperial

NUMERALS INDICATE: 21 - 2 DR. SED., 23 - 2 DR. H.T., 29 - FAST BACK, 41 - 4 DR. SED., 43 - 4 DR. H.T., 45 - 6 PASS. STA. WGN., 46 - 9 PASS. STA. WGN.

AR Indicates use as required.
# Indicates parts not listed in any previous parts book
Numerals in parentheses ( ) refer to notes.
★ Indicates change or addition.

Printed in U.S.A.
November, 1974

Right and left part numbers are on same line, first number is right, second number is left.

CODE	PART NAME	MODEL CODES	SEE BOTTOM NOTE 21	23		29	41	43	45	46	PART NUMBER
23-32-65	HINGE, Rear Floor Pan Cvr. Pnl.	R,W	—	—	—	—	—	—	1	—	2254 675
23-32-79	BRACKET, w/RETAINER, Rear Floor Pan Cvr. Pnl. Prop. Rod	R,W	—	—	—	—	—	—	1	—	2254 810
	BRACKET, Rr. Floor Side Jack Stowage	V,L,B,J	—	1	—	1	1	—	—	—	2243 216
	BRACKET, Rr. Floor Pan Cover	P,D,C	—	—	—	—	—	—	2	—	3720 788
23-32-80	HANDLE, Rear Floor Pan Cvr. Pnl. Release Use w/Rear Compt. Lock	R,W	—	—	—	—	—	—	1	—	3548 674
		P,D,C	—	—	—	—	—	—	1	—	3760 650
	HANDLE and RETAINER, Rr. Floor Pan Cover Panel Lift w/o Rr. Compt. Lock	P,D	—	—	—	—	—	—	1	—	W407 KX9
	HANDLE, Rear Floor Pan Cvr. Inner Rear Pnl. Prime	P,D,C	—	—	—	—	—	—	1	—	2895 262
23-32-88	ROD, Rear Floor Pan Cover Prop	R,W	—	—	—	—	—	—	1	—	1960 061
23-32-92	GUSSET, Center Floor Pan Rear Support Frt. Hanger Brkt.	B,J	—	1	—	—	—	—	—	—	2963 030-1
	GUSSETT, Frt. Floor Pan No. 1 Hold Down Brace w/Nut	P,D,C,Y	—	1	—	—	1	1	1	1	3752 950-1
23-32-93	SUPPORT and T/PLATE, Rear Floor Pan Rear Suspension Rear Hgr. Brkt.	V,L	—	1	—	1	1	—	—	—	2081 004-5
	SUPPORT, Center Floor Pan Rear Suspension Frt. Hgr. Brkt.	B,J	—	1	—	—	—	—	—	—	2963 078-9
	w/Nut	B,J	—	1	—	—	—	—	—	—	3756 624-5
		R,W	1	1	—	1	1	—	1	1	3445 018-9
	SUPPORT, Rr. Floor Pan Rear Suspension Hanger Brkt.	R,W	—	—	—	—	—	—	1	1	3499 028-9
	SUPPORT, Rear Floor Pan Rear Suspension Rear Brkt.	R,W	1	1	—	1	1	—	—	—	3445 040-1
		P,D,C,Y	—	1	—	—	1	1	—	—	3616 610-1
		P,D,C	—	—	—	—	—	—	1	1	3674 656-7
	SUPPORT, Ctr. Floor Pan Rear Suspension Frt. Brkt.	P,D,C,Y	—	1	—	—	1	1	1	1	3616 602-3
	BRACKET, Rear Floor Pan Rear Suspension Hanger	R,W	—	—	—	—	—	—	1	1	3752 324-5
	BRACKET and W/NUT, Floor Pan Side Rr. Rail Shock Absorber Mtg.	R,W	—	—	—	—	—	—	1	1	3720 482-3
	T/PLATE, Rear Floor Pan Rear Suspension Hanger Brkt.	R,W	—	—	—	—	—	—	1	1	2588 899
	PLATE, Rear Floor Pan Rear Suspension Hanger Bracket Use w/440 Eng.	R,W	—	2	—	2	2	—	2	2	3504 198
23-32-105	RAIL, Frt. Side Comp.	B,J	—	1	—	—	—	—	—	—	3752 888-9
	Comp.	R.W.	—	—	—	—	1	—	1	1	3752 606-7
	RAIL, Frt. Side and Side Rail Reinforcement	V,L	—	1	—	1	1	—	—	—	3752 514-5
	RAIL and REINFORCEMENT, Frt. Side	R,W	1	1	—	1	—	—	—	—	3752 604-5
	RAIL and REAR HANGER, Rear Floor Pan Side	R,W	1	1	—	—	—	—	—	—	3684 448-9
		R,W	—	—	—	—	1	—	—	—	# 3752 338-9
		R,W	—	—	—	—	—	—	1	1	3752 856-7
	RAIL and FRT. HANGER, Rear Floor Pan Side	P,D,C,Y	—	1	—	—	1	1	—	—	3752 150-1
	RAIL and SILL INNER, Rear Floor Pan Side	V,L	—	1	—	1	1	—	—	—	# 3752 562-3
	RAIL, SILL and Frt. Hanger Gusset, Rr. Floor Pan Side	B,J	—	1	—	—	—	—	—	—	3752 936-7
	RAIL and BRACKET, Floor Pan Rear Side	P,D,C	—	—	—	—	—	—	1	1	3752 866-7
23-32-106	RETAINER, Rear Floor Pan Tailgate Opening Lower Sill Seal	R,W	—	—	—	—	—	—	1	1	3500 366
	RETAINER, Rear Floor Pan Cover	P,D	—	—	—	—	—	—	1	—	3674 041
23-32-107	SUPPORT, Center Floor Pan Cover Panel to Center Floor Pan	R,W	—	—	—	—	—	—	1	1	3499 936-7
	w/Nut	R,W	—	—	—	—	—	—	1	1	3500 288-9

TYPE LETTERS Indicates J - Challenger, B - Barracuda, V - Valiant, L - Dart, R - Satellite, W - Coronet, P - Plymouth, D - Dodge, C - Chrysler, Y - Imperial

NUMERALS INDICATE: 21 - 2 DR. SED., 23 - 2 DR. H.T., 29 - FAST BACK, 41 - 4 DR. SED., 43 - 4 DR. H.T., 45 - 6 PASS. STA. WGN., 46 - 9 PASS. STA. WGN.

AR Indicates use as required.
# Indicates parts not listed in any previous parts book
Numerals in parentheses ( ) refer to notes.
★ Indicates change or addition.

Printed in U.S.A.
November, 1974

Right and left part numbers are on same line, first number is right, second number is left.

CODE	PART NAME	MODEL CODES	SEE BOTTOM NOTE 21	23	29	41	43	45	46	PART NUMBER
23-32-110	SHIELD, Frt. Suspension Crossmember to Frt. Side Rail Splash	V,L,B,J	—	1	—	1	1	—	—	—	3642 974-5
23-32-111	SUPPORT, Floor Pan Rear Side Rail to Inner Sill	B,J	—	1	—	—	—	—	—	—	2963 754-5
23-32-112	REINFORCEMENT, Rear Suspension Frt. *Brkt. Support* to Rail and Sill	P,D,C,Y	—	1	—	—	1	1	1	1	3616 604-5
	REINFORCEMENT, Rear Suspension Frt. Brkt. Support to Rail and Sill	R,W	1	1	—	1	1	—	1	1	3445 034-5
	REINFORCEMENT, Center Floor Pan to Inner Sill and Rear Rail Sprg. Hanger Support Use w/360 Eng.	V,L	—	—	—	1	—	—	—	—	2604 902-3
	REINFORCEMENT, Center Floor Pan Extension Sill to Rail Use w/440 Eng.	R,W	—	1	—	1	—	—	1	1	3569 560-1
23-32-115	REINFORCEMENT, Frt. Side Rail to Side Sill Inner	V,L	—	1	—	1	1	—	—	—	2603 610-11
		R,W	1	1	—	1	1	—	1	1	3446 242-3
	REINFORCEMENT, Frt. Side Rail Frt. Rt.	V,L	—	1	—	1	1	—	—	—	2768 486
	Lt.	V,L	—	1	—	1	1	—	—	—	2768 487
		B,J	—	1	—	—	—	—	—	—	2962 066-7
		R,W	—	—	—	—	1	—	1	1	3726 158-9
	REINFORCEMENT, Floor Pan Frt. Side *Rail to Side Sill* Inner	B,J	—	1	—	—	—	—	—	—	2963 058-9
	w/440 Eng. Frt.	R,W	1	1	—	1	1	—	1	1	3615 158-9
	BRACKET, Front Side Rail Torsion Bar Support Crossmember	R,W	1	1	—	1	1	—	1	1	3642 816-7
23-32-116	EXTENSION, Rr. Side Rail w/Rr. Spring Hanger Sleeve *Canada*	B,J	—	1	—	—	—	—	—	—	2934 816-7
23-32-120	WEIGHT, Body Center Floor Pan Damper	R,W	1	1	—	1	1	—	1	1	3466 721
		V,L	—	1	—	1	1	—	—	—	3642 923
23-32-121	BUSHING, Body Center Floor Pan Damper	R,W	3	3	—	3	3	—	3	3	3466 711
		V,L	—	2	—	2	2	—	—	—	3642 921
23-32-122	RETAINER, Body Center Floor Pan Damper Upr.	R,W	1	1	—	1	1	—	1	1	3466 701
		V,L	—	1	—	1	1	—	1	—	3642 918
	Lower	V,L	—	1	—	1	1	—	—	—	3642 920
	Lwr.	R,W	1	1	—	1	1	—	1	1	3466 723
23-33-7	**BUMPER, Instrument Panel Cowl Top**	P,D,C,Y	—	2	—	—	2	2	2	2	3590 527
23-33-10	BRACE, Instrument Panel Lower Reinforcement to Cowl Top Support	V,L	—	1	—	1	1	—	—	—	3590 342
	BRACE, Instrument Panel Center w/Screw	R,W	1	1	—	1	1	—	1	1	2985 732
	BRACE, *Instrument Panel Strg. Col.* Support to Cowl Top	P,D,C,Y	—	1	—	—	1	1	1	1	3590 332
	BRACKET, Instrument Panel Strg. Col. Support to Inter. Reinf. Lt.	P,D,C,Y	—	1	—	—	1	1	1	1	3590 355
23-33-20	COVER, Instrument Panel Clock Hole	B,J	—	1	—	—	—	—	—	—	2984 140
		P,D	—	1	—	—	1	1	1	1	3592 624
		C	—	1	—	—	1	1	1	1	3592 519
		R,W	1	1	—	1	1	—	1	1	2985 423
23-33-22	COVER, Instrument Panel Upper w/Stereo	P,D,C,Y	—	1	—	—	1	1	1	1	3590 386
	w/o Stereo	P,D,C,Y	—	1	—	—	1	1	1	1	3590 382
	CLIP, Frt.	P,D,C,Y	—	3	—	—	3	3	3	3	3590 389
	CLIP, Rr.	P,D,C,Y	—	2	—	—	2	2	2	2	3590 454

TYPE LETTERS Indicates: J - Challenger; B - Barracuda; V - Valiant; L - Dart; R - Satellite; W - *Coronet*; P - Plymouth; D - Dodge; C - Chrysler; Y - Imperial

NUMERALS INDICATE: 21 - 2 DR. SED.; 23 - 2 DR. H.T.; 29 - FAST BACK; 41 - 4 DR. SED.; 43 - 4 DR. H.T.; 45 - 6 PASS. STA. WGN.; 46 - 9 PASS. STA. WGN.

AR Indicates use as required.
# Indicates parts not listed in any previous parts book
Numerals in parentheses ( ) refer to notes.
★ Indicates change or addition.

Printed in U.S.A.
November, 1974

Right and left part numbers are on same line, first number is right, second number is left.

CODE	PART NAME	MODEL CODES	SEE BOTTOM NOTE 21	23	29	41	43	45	46	PART NUMBER
23-33-42	GRILLE, Instrument Panel Radio Speaker									
	Blue	B,J	—	1	—	—	—	—	—	P604 KB7
	Green	B,J	—	1	—	—	—	—	—	P604 KG6
	Black	B,J	—	1	—	—	—	—	—	P604 JX9
	GRILLE, Instrument Panel Stereo Speaker Used w/A/M Radio and A/M, F/M Multiplex Radio Rt.	B,J	—	1	—	—	—	—	—	2884 691
	Lt	B,J	—	1	—	—	—	—	—	2884 687
	PLATE, Instrument Panel, Defroster and Radio Speaker Opening Finish	R,W	1	1	—	—	1	—	1	1 2985 029
23-33-65	COVER, Heater Control Opening	R,W	1	1	—	—	1	—	1	1 3431 175
		C	—	1	—	—	1	1	1	1 2985 571
	COVER, Spot Cooler Opening	P,D,C	—	1	—	—	1	1	1	1 3503 373-4
	Blue Rt.	P,D,C	—	1	—	—	1	1	1	1 P504 KB7
	Golden Fawn, Rt.	P,D,C	—	1	—	—	1	1	1	1 P504 KY7
	Parchment Rt.	P,D,C	—	1	—	—	1	1	1	1 P504 KL5
	Green Rt.	P,D,C	—	1	—	—	1	1	1	1 P504 KG6
	Black Rt.	P,D,C	—	1	—	—	1	1	1	1 P504 KY9
23-33-86	MOULDING, Instrument Panel									
	Lower	P-P,D-P	—	1	—	—	1	1	1	1 3590 391
	Lower	C-L,C-M	—	1	—	—	1	1	—	— 3590 393
	Lower	C-H,C-P,C-S	—	1	—	—	1	1	1	1 3590 395
	Lower	Y	—	1	—	—	—	1	—	— 3590 442
23-33-96	NAMEPLATE, Instrument Panel									
	Barracuda	B	—	1	—	—	—	—	—	— 3590 126
	Challenger	J	—	1	—	—	—	—	—	— 3590 127
	"Roadrunner"	R-M	1	—	—	—	—	—	—	— 2985 767
	"Satellite"	R-H, R-P	—	1	—	—	1	—	1	1 2985 768
	"Charger"	W-H	—	1	—	—	—	—	—	— 2985 775
	"Coronet Custom"	W-H	—	—	—	—	1	—	1	1 2985 776
	"Crestwood"	W-P	—	—	—	—	—	—	1	1 2985 909
	"Charger S/E"	W-P	—	—	—	1	—	—	—	— 2985 809
	"CHRYSLER"	C-L,C-M,C-P	—	1	—	—	1	1	1	1 3590 330
	"LE BARON"	Y	—	1	—	—	—	1	—	— 2927 738
	MEDALLION, Instrument Panel Trim Pad "BROUGHAM"	C-S	—	1	—	—	1	1	—	— 3590 328
	"NEW YORKER"	C-H	—	—	—	—	1	1	—	— 3590 329
23-33-109	PANEL, Instrument	V,L	—	1	—	1	1	—	—	— 3590 549
	After 6-1-74	V,L	—	1	—	1	1	—	—	— # 3590 651
		B,J	—	1	—	—	—	—	—	— 3590 460
	w/A/Cond.	R,W	1	1	—	1	1	—	1	1 3590 310
	w/o A/Cond.	R,W	1	1	—	1	1	—	1	1 3590 309
	Lower	P	—	1	—	—	1	1	1	1 3590 358
	Lower	D,C-L,C-M, C-H,C-P	—	1	—	—	1	1	1	1 3590 465
	Lower	C-S,Y	—	1	—	—	1	1	—	— 3590 530
23-33-112	GUSSET, Instrument Panel Inter. Reinf. to Cowl Top Rt.	P,D,C,Y	—	1	—	—	1	1	1	1 3590 436
23-33-132	COVER, Instrument Panel Steering Column Opening									
	Blue	V,L	—	1	—	1	1	—	—	— P608 KB7
	Green	V,L	—	1	—	1	1	—	—	— P608 KG6
	Gold	V,L	—	1	—	1	1	—	—	— P608 KY7
	Black	V,L	—	1	—	1	1	—	—	— P608 KX9
	Parchment	V,L	—	1	—	1	1	—	—	— P608 KL5
	COVER, Instrument Panel Strg. Col. Opening Cover Mtg. w/A/Cond.	P,D,C,Y	—	1	—	—	1	1	1	1 3503 337

TYPE LETTERS Indicates J - Challenger, B - Barracuda, V - Valiant, L - Dart, R - Satellite, W - Coronet, P - Plymouth, D - Dodge, C - Chrysler, Y - Imperial

NUMERALS INDICATE: 21 - 2 DR. SED., 23 - 2 DR. H.T., 29 - FAST BACK, 41 - 4 DR. SED., 43 - 4 DR. H.T., 45 - 6 PASS. STA. WGN., 46 - 9 PASS. STA. WGN.

AR Indicates use as required.
# Indicates parts not listed in any previous parts book
Numerals in parentheses ( ) refer to notes.
★ Indicates change or addition.

Printed in U.S.A.
November, 1974

Right and left part numbers are on same line, first number is right, second number is left.

CODE	PART NAME	MODEL CODES	SEE BOTTOM NOTE 21	23		29	41	43	45	46	PART NUMBER
23-33-135	FINISH PLATE, Instrument Panel										
	w/o Heater or A/Cond.	R,W	1	1	—	1	1	—	1	1	2985 986
	w/o Heater or A/Cond., Woodgrain	R,W	—	1	—	1	1	—	1	1	2985 985
	FINISH PLATE & Air Outlet Vent Louvers,										
	Upper Level Vent, Black CANADA	R,W	1	1	—	1	1	—	1	1	3502 010
	Wood Grain CANADA	R,W	1	1	—	1	1	—	1	1	3502 009
	W/Air Cond. Black CANADA	R,W	1	1	—	1	1	—	1	1	3502 005
	Wood Grain CANADA	R,W	1	1	—	1	1	—	1	1	3502 007
	BEZEL, Instrument Panel Trim										
	HEATER CONTROL, w/o Wood Grain CANADA	V,L	—	1	—	1	1	—	—	—	3501 609
	w/Radio, w/Woodgrain, w/o Heater	V,L	—	1	—	1	1	—	—	—	3501 604
	w/Heater, w/o Radio, w/Woodgrain	V,L	—	1	—	1	1	—	—	—	3501 606
	w/A/Cond. and Radio, w/Woodgrain	V,L	—	1	—	1	1	—	—	—	3501 602
	w/Heater and Radio, w/Woodgrain	V,L	—	1	—	1	1	—	—	—	3501 602
	w/o Heater or A/Cond.	V,L	—	1	—	1	1	—	—	—	3501 611
	Radio Control Opening Cover, Wood Trim, w/o Heater	V,L	—	1	—	1	1	—	—	—	2884 784
	w/Heater or A/Cond., w/Radio										
	Hang Ten Spring Special After 1-17-74	L	—	—	—	1	—	—	—	—	3501 442
	w/Heater or A/Cond., w/o Radio										
	Hang Ten Spring Special After 1-17-74	L	—	—	—	1	—	—	—	—	3501 444
	w/o Radio Openings	B,J	—	1	—	—	—	—	—	—	2884 877
	PLATE, Instrument Panel Trim Pad										
	Ret. A/Con. Duct	P,D	—	1	—	—	1	1	1	1	3590 371
		C,Y	—	1	—	—	1	1	1	1	3590 379
	Inst. Panel Bezel Upr. and Lwr.	Y	—	1	—	—	—	1	—	—	2985 793
23-33-152	PLATE, Instrument Panel Cigar Lighter Mtg.	P,D	—	1	—	—	1	1	1	1	3746 618
23-33-173	SUPPORT, Instrument Panel to Cowl Top and Rt. and Lt. Reinf.	P,D,C,Y	—	1	—	—	1	1	1	1	3590 435
23-33-231	BEZEL, Parking Brake Release Knob	P,D,C	—	1	—	—	1	1	1	1	3748 419
23-34-5	**PANEL, Quarter Panel Spare Tire**										
	Housing Lwr.	R	—	—	—	—	—	—	1	1	3439 570
	Lwr.	W	—	—	—	—	—	—	1	1	3499 380
	Rr.	P,D,C	—	—	—	—	—	—	1	1	3720 670
	PANEL, Quarter Wheelhouse Spare Tire										
	Housing Frt.	P	—	—	—	—	—	—	1	1	3720 619
	Frt.	D	—	—	—	—	—	—	1	1	3674 730
	Frt.	C	—	—	—	—	—	—	1	1	3720 618
	Inner	P,D,C	—	—	—	—	—	—	1	1	3674 731
	Lower	P,D,C	—	—	—	—	—	—	1	1	3674 732
	Inner	R,W	—	—	—	—	—	—	1	1	3440 129
	PANEL, Quarter Inside Rr. Compartment Bottom Lt.	P,D,C	—	—	—	—	—	—	1	1	3720 541
	PANEL, Quarter Panel Stowage Compartment Rr.	P,D,C	—	—	—	—	—	—	1	1	3720 656
	PANEL, Quarter Panel Lock Pillar to Wheelhouse Rt.	R,W	—	—	—	—	—	—	1	1	3440 866
	PANEL, Inside Rr. Compartment Inner Panel w/Nut Lt.	P,D,C	—	—	—	—	—	—	1	1	3767 620
23-34-10	COVER, Rr. Floor Pan Cover Panel Latch Opening Prime	R,W	—	—	—	—	—	—	1	—	2664 625
23-34-15	BRACKET, Wheelhouse Inner Panel Fuel Tank Rr. Strap Att. Outside										
	Frt.	R,W	—	—	—	—	—	—	1	1	3499 455
	Rr.	R,W	—	—	—	—	—	—	1	1	3499 457

TYPE LETTERS Indicates: J - Challenger, B - Barracuda, V - Valiant, L - Dart, R - Satellite, W - Coronet, P - Plymouth, D - Dodge, C - Chrysler, Y - Imperial

NUMERALS INDICATE: 21 - 2 DR. SED., 23 - 2 DR. H.T., 29 - FAST BACK, 41 - 4 DR. SED., 43 - 4 DR. H.T., 45 - 6 PASS. STA. WGN., 46 - 9 PASS. STA. WGN.

AR Indicates use as required.
# Indicates parts not listed in any previous parts book
Numerals in parentheses ( ) refer to notes.
★ Indicates change or addition.

Printed in U.S.A.
November, 1974

Right and left part numbers are on same line, first number is right, second number is left.

CODE	PART NAME	MODEL CODES	SEE BOTTOM NOTE 21	23	29	41	43	45	46	PART NUMBER
23-34-16	PANEL, Rr. Floor Pan Tailgate Opening Sill Upr.	R,W	—	—	—	—	—	1	1	3500 938
	Lwr.	R,W	—	—	—	—	—	1	1	3720 480
	Lwr.	P,D,C	—	—	—	—	—	1	1	3674 647
	Upr.	P,D,C	—	—	—	—	—	1	1	3720 470
	EXTENSION, Quarter Panel Tailgate Support to Qtr. Outer Panel	P	—	—	—	—	—	1	1	3720 630-1
		D	—	—	—	—	—	1	1	3720 632-3
		C	—	—	—	—	—	1	1	3720 634-5
	To Pillar Lt.	R,W	—	—	—	—	—	1	1	3720 085
	To Wheelhouse Lt.	R,W	—	—	—	—	—	1	1	3440 931
	EXTENSION, Quarter Panel Rr. Compt. Lower Hinge Reinf. Lt.	P,D,C	—	—	—	—	—	1	1	3720 657
23-34-17	BRACE, Tailgate Opening Sill at Lock Opening	R,W	—	—	—	—	—	1	1	3720 274
	BRACE and P/NUT, Floor Foot Well Tailgate Opening Upper Sill Panel	P,D,C	—	—	—	—	—	1	1	3767 788
	SUPPORT, Rr. Floor Pan Tailgate Opening Sill Panel	R,W	—	—	—	—	—	2	2	3720 272
	SUPPORT, Tailgate Opening Sill Panel to Wheelhouse Extension Lt.	R,W	—	—	—	—	—	1	1	3499 905
	SUPPORT and NUT, Quarter Panel Tailgate Pillar to Roof Rail Rr. Lt.	P,D	—	—	—	—	—	1	1	3767 315
	Rt.	C	—	—	—	—	—	1	1	3767 080
	Lt.	C	—	—	—	—	—	1	1	3767 313
	REINFORCEMENT, Quarter Panel Spare Tire Inside Panel Anchor	R,W	—	—	—	—	—	1	1	3500 324
	REINFORCEMENT, Rr. Floor Pan Rr. Corssmember Tailgate Lower Hinge Lt.	R,W	—	—	—	—	—	1	1	3720 481
	REINFORCEMENT, Quarter Panel Tailgate Lwr. Hinge Lt.	P,D,C	—	—	—	—	—	1	1	3720 658
	GUSSET, Tailgate Opening Sill Lower to Rr. Crossmember	R,W	—	—	—	—	—	2	2	3499 042
23-34-19	FILLER, Rr. Floor Pan Tailgate Opening Sill Panel to Rr. Bumper	P,D,C	—	—	—	—	—	1	1	3767 706
	FILLER, Tailgate Opening Lower Panel to Bumper Center	R,W	—	—	—	—	—	1	1	3720 804
23-34-20	DEFLECTOR, Quarter Inside Panel Water	V,L	—	—	1	—	—	—	—	3615 986-7
	SHIELD, Quarter Inside Upper Water	C,Y	—	1	—	—	—	—	—	3720 828-9
	w/Seal	P,D	—	1	—	—	—	—	—	3767 552-3
	w/Seal	C,Y	—	1	—	—	—	—	—	3767 544-5
23-34-22	SUPPORT, Wheelhouse to Quarter Panel	V	—	—	1	—	—	—	—	2965 630-1
		V,L	—	1	—	—	—	—	—	2782 160-1
		V,L	—	—	—	1	—	—	—	2603 652-3
		J	—	1	—	—	—	—	—	2963 702-3
		B	—	1	—	—	—	—	—	2963 712-3
	SUPPORT, Wheelhouse to Rr. Window Opening Upper Frame	R,W	1	1	—	—	—	—	—	3720 412-3
23-34-27	PANEL, Wheelhouse Inner	V,L	—	1	—	1	1	—	—	3615 682-3
	After 12-1-73 Inner	V,L	—	1	—	1	1	—	—	3756 868-9
	Outer	V,L	—	—	—	1	—	—	—	3444 208-9
	Outer	V,L	—	1	—	—	1	—	—	2603 644-5
	Inner	B	—	1	—	—	—	—	—	2963 162-3
	Outer	B	—	1	—	—	—	—	—	2963 158-9

TYPE LETTERS Inaicates J - Challenger, B - Barracuda, V - Valiant, L - Dart, R - Satellite, W - Coronet, P - Plymouth, D - Dodge, C - Chrysler, Y - Imperial

NUMERALS INDICATE: 21 - 2 DR. SED., 23 - 2 DR. H.T., 29 - FAST BACK, 41 - 4 DR. SED., 43 - 4 DR. H.T., 45 - 6 PASS. STA. WGN., 46 - 9 PASS. STA. WGN.

AR Indicates use as required.
# Indicates parts not listed in any previous parts book
Numerals in parentheses ( ) refer to notes.
★ Indicates change or addition.

Printed in U.S.A.
November, 1974

Right and left part numbers are on same line, first number is right, second number is left.

CODE	PART NAME	MODEL CODES	SEE BOTTOM NOTE 21	23	29	41	43	45	46	PART NUMBER
23-34-27	PANEL Cont'd.									
	Inner	J	—	1	—	—	—	—	—	2963 162-3
	Outer	J	—	1	—	—	—	—	—	2963 160-1
	Inner	R,W	—	—	—	—	—	1	1	3439 534-5
	Outer Rt.	R	—	—	—	—	—	1	1	3439 528
	Lt.	R	—	—	—	—	—	1	1	3720 007
	Outer Rt.	W	—	—	—	—	—	1	1	3439 530
	Lt.	W	—	—	—	—	—	1	1	3720 009
	Inner	R,W	1	1	—	1	1	—	—	3445 058-9
	Outer	R	1	1	—	—	1	—	—	3615 310-1
	Outer	W	1	1	—	1	1	—	—	3615 312-3
	Inner	P,D,C	—	—	—	—	—	1	1	3674 724-5
	Outer	P	—	—	—	—	—	1	1	3674 726-7
	Outer	D	—	—	—	—	—	1	1	3674 728-9
	Outer	C	—	—	—	—	—	1	1	3720 074-5
	Inner	P,D,C,Y	—	1	—	—	1	1	—	— 3615 912-3
	Outer	P	—	1	—	—	1	1	—	— 3616 280-1
	Outer	D	—	1	—	—	1	1	—	— 3616 282-3
	Outer	C,Y	—	1	—	—	1	1	—	— 3615 910-11
23-34-29	EXTENSION, Wheelhouse to Quarter Panel Fuel Filler Opening	P	—	—	—	—	—	1	1	3720 561
		D	—	—	—	—	—	1	1	3720 560
		C	—	—	—	—	—	1	1	3720 562
	EXTENSION, Quarter Panel Wheelhouse to Roof Side Rail Support	P,D	—	—	—	—	1	—	—	— 3674 836-7
		C,Y	—	—	—	—	—	1	—	— 3674 838-9
		C,Y	—	1	—	—	—	—	—	— 3720 826-7
23-34-36	REINFORCEMENT, Wheel House to Center Floor Pan w/Fold Down Rear Seat	V,L	—	—	—	1	—	—	—	— 3616 810-11
23-34-38	PAD, Tailgate Opening Sill Step	R,W	—	—	—	—	—	—	—	1 3416 654
	PLATE, Tailgate Opening Sill Step	P,D,C	—	—	—	—	—	—	1	1 3720 604
23-34-80	PANEL, Cowl Top and Dash w/or w/o A/Cond.	B,J	—	1	—	—	—	—	—	— 3752 958
		R,W	1	1	—	1	1	—	1	1 3752 774
	After 6-3-74	R,W	1	1	—	1	1	—	1	1 # 3833 430
	PANEL, Cowl Top	B,J	—	1	—	—	—	—	—	— 3720 044
	CHAMBER, Cowl Top and Plenum	V,L	—	1	—	1	1	—	—	— 3752 943
		P,D,C,Y	1	1	—	—	1	1	1	1 3752 699
	PANEL, Cowl Side	V,L	—	—	—	—	1	—	—	— 3684 652-3
		V,L	—	1	—	—	—	—	—	— 3752 690-1
		V,L	—	—	—	1	—	—	—	— 3833 096-7
		B,J	—	1	—	—	—	—	—	— 3752 644-5
		R,W	1	1	—	1	—	—	—	— 3684 752-3
		R,W	—	—	—	—	1	—	1	1 3684 750-1
		P,D,C,Y	—	1	—	—	—	1	—	— 3752 834-5
		P,D,C	—	—	—	—	1	—	1	1 3752 824-5
	Inner, w/Nut Rt.	P,D,C,Y	—	1	—	—	1	1	1	1 3767 596
	Inner, w/Nut, w/Heater Lt.	P,D,C	—	1	—	—	1	1	1	1 3767 597
	Inner, w/Nut, w/A/Cond. Lt.	P,D,C,Y	—	1	—	—	1	1	1	1 3767 599
	Lower Outer	P,D,C,Y	—	1	—	—	1	1	1	1 3674 432-3
23-34-82	BRACKET and NUT, Cowl Side Inner	P,D,C,Y	—	1	—	—	1	1	1	1 3767 328
	BRACKET and NUT, Cowl Side Outer Lower Strut	P,D,C,Y	—	1	—	—	1	1	1	1 3767 688-9

TYPE LETTERS Indicates: J - Challenger; V - Valiant; R - Satellite; P - Plymouth; C - Chrysler; B - Barracuda; L - Dart; W - Coronet; D - Dodge; Y - Imperial

NUMERALS INDICATE: 21 - 2 DR. SED.; 23 - 2 DR. H.T.; 29 - FAST BACK; 41 - 4 DR. SED.; 43 - 4 DR. H.T.; 45 - 6 PASS. STA. WGN.; 46 - 9 PASS. STA. WGN.

AR Indicates use as required.
# Indicates parts not listed in any previous parts book
Numerals in parentheses ( ) refer to notes.
★ Indicates change or addition.

Printed in U.S.A.
November, 1974

Right and left part numbers are on same line, first number is right, second number is left.

CODE	PART NAME	MODEL CODES	SEE BOTTOM NOTE							PART NUMBER
			21	23		29	41	43	45	46	
23-34-88	STRUT, Dash Panel Strg. Col. Support to Brake Pedal Bracket Rt.	R,W	1	1	—	1	1	—	1	1	3499 951
	Lt.	R,W	1	1	—	1	1	—	1	1	3500 675
	STRUT, Dash Panel Strg. Col. Support to Cowl Side Panel Lt.	R,W	1	1	—	1	1	—	1	1	3500 676
	STRUT, Cowl Side Panel to Dash Panel Support Lt.	R,W	—	1	—	1	—	—	—	—	3500 799
23-34-89	EXTENSION, Cowl Side Inner Panel to Outer Sill	P,D,C,Y	—	1	—	—	1	1	1	1	3674 670-1
23-34-102	SEAL, Cowl Top Drain Hole	P,D,C,Y	—	1	—	—	1	1	1	1	3674 691
23-34-103	INSULATION, Cowl Side Plaster	P,D,C,Y	—	1	—	—	1	1	1	1	3764 659
23-34-110	PANEL, Dash w/or w/o A/Cond.	V,L	—	1	—	1	1	—	—	—	3752 848
23-34-116	COVER, Dash Panel Heater Motor Opening	V,L	—	1	—	1	1	—	—	—	3720 286
	COVER, Cowl Top Panel Duct Drain Hole	B,J,R,W	1	1	—	—	1	1	1	1	2894 318
	COVER, Dash Panel Heater and A/Cond. Opening	R,W	1	1	—	1	1	—	1	1	3439 431
	COVER, w/Seal, Dash Hole, w/Upper Level Vent, Canada	P,D,C	—	1	—	—	1	1	1	1	3503 477
23-34-117	SUPPORT, Dash Panel to Fender Side Shield	V,L	—	1	—	1	1	—	—	—	2663 054-5
	BRACKET, Clutch Shaft Mtg. to Dash Support w/Manual Trans. Lt.	V,L	—	1	—	1	1	—	—	—	3500 525
	BRACKET, Dash Panel Clip Mtg.	B,J,R,W	—	AR	—	AR	AR	AR	AR	AR	3764 718
	BRACKET, Dash Panel to Fender Splash	R,W	1	1	—	1	1	—	1	1	3439 428-9
23-34-119	GASKET, Dash Panel Heater Motor Opening Cover	V,L	—	1	—	1	1	—	—	—	3720 285
	SEAL, Dash Hole w/Upr. Level Vent	P,D,C,Y	—	1	—	—	1	1	1	1	3503 436
23-34-120	PANEL, Front Door Outside Repair	V,L	—	1	—	1	—	—	—	—	3696 426-7
	Rt.	V,L	—	—	—	—	1	—	—	—	2663 354
	Lt.	V,L	—	—	—	—	1	—	—	—	2860 403
		B	—	1	—	—	—	—	—	—	3482 960-1
		J	—	1	—	—	—	—	—	—	3482 962-3
		R	1	1	—	—	—	—	—	—	3684 140-1
		R	—	—	—	—	1	—	1	1	3833 334-5
		W	—	—	—	—	1	—	1	1	3833 330-1
		W	1	1	—	1	—	—	—	—	3684 130-1
		P	—	1	—	—	—	—	—	—	3752 266-7
		P	—	—	—	—	—	1	—	—	3752 278-9
		P	—	—	—	—	1	—	1	1	3752 272-3
		D	—	1	—	—	—	—	—	—	3752 284-5
		D	—	—	—	—	—	1	—	—	3752 296-7
		D	—	—	—	—	1	—	1	1	3752 290-1
		C	—	—	—	—	1	—	1	1	3752 428-9
		C,Y	—	1	—	—	—	—	—	—	3752 260-1
		C,Y	—	—	—	—	—	1	—	—	3752 254-5
	PANEL, Rear Door Outside Repair	V,L	—	—	—	—	1	—	—	—	2663 762-3
		R	—	—	—	—	1	—	1	1	3440 000-1
		W	—	—	—	—	1	—	1	1	3440 004-5
		P	—	—	—	—	1	1	1	1	3752 052-3
		D	—	—	—	—	1	1	1	1	3752 068-9
		C	—	—	—	—	1	—	—	—	3582 640-1
		C	—	—	—	—	—	—	1	1	3696 444-5
		C,Y	—	—	—	—	—	1	—	—	3752 090-1

TYPE LETTERS Indicates: J - Challenger, B - Barracuda, V - Valiant, L - Dart, R - Satellite, W - Coronet, P - Plymouth, D - Dodge, C - Chrysler, Y - Imperial

NUMERALS INDICATE: 21 - 2 DR. SED., 23 - 2 DR. H.T., 29 - FAST BACK, 41 - 4 DR. SED., 43 - 4 DR. H.T., 45 - 6 PASS. STA. WGN., 46 - 9 PASS. STA. WGN.

AR Indicates use as required.
# Indicates parts not listed in any previous parts book
Numerals in parentheses ( ) refer to notes.
★ Indicates change or addition.

Printed in U.S.A.
November, 1974

Right and left part numbers are on same line, first number is right, second number is left.

CODE	PART NAME	MODEL CODES	SEE BOTTOM NOTE 21	23		29	41	43	45	46	PART NUMBER
23-34-121	SHIELD, Dash Panel to Fender										
		L	—	1	—	1	1	—	—	—	3674 306-7
		V	—	1	—	1	1	—	—	—	3674 632-3
	Side	B,J	—	1	—	—	—	—	—	—	2895 554-5
	Side	R	—	—	—	—	1	—	1	1	3674 488-9
	Side	R	1	1	—	—	—	—	—	—	3674 492-3
		W	—	—	—	—	1	—	1	1	3674 490-1
		W	1	1	—	1	—	—	—	—	3674 486-7
23-34-123	PLUG, Cowl Side Panel Antenna Hole	V,L,B,J,R,W	1	1	—	1	1	—	1	1	2860 332
	PLUG, Dash Panel, 1.39" Hole CANADA	V,L,B,J	—	1	—	1	1	—	—	—	2889 843
	PLUG, Dash Panel to Fender Shield Supt.										
	Lt.	V,L	—	1	—	1	1	—	—	—	6029 936
	PLUG, Dash Panel Clutch Rod	V,L,B,J	1	1	—	1	1	—	—	—	2811 825
		R,W	1	1	—	1	1	—	1	1	2811 825
	PLUG, Front Floor Pan Radio Antenna Cable Access	P,D,C,Y	—	1	—	—	1	1	1	1	2860 332
	PLUG, Cowl Side Panel Forward Welding Access Hole Inner Panel Lt.	P,D,C,Y	—	—	—	—	1	1	1	1	2664 330
23-34-130	GUSSET, Dash Panel Support to Cowl Side Inner Panel	P,D,C,Y	—	1	—	—	1	1	1	1	3767 768-9
23-34-166	PANEL, Deck Opening Upper										
		V,L	—	1	—	—	—	—	—	—	2604 073
		V,L	—	—	—	—	1	—	—	—	2603 665
		B	—	1	—	—	—	—	—	—	2963 262
		J	—	1	—	—	—	—	—	—	2963 263
		R	1	1	—	—	—	—	—	—	3445 776
		R	—	—	—	—	1	—	—	—	3445 778
		W	1	1	—	1	—	—	—	—	3445 777
		W	—	—	—	—	1	—	—	—	3445 086
		P,D	—	—	—	—	1	—	—	—	3616 347
		P,D	—	1	—	—	—	—	—	—	3616 668
		P,D	—	—	—	—	—	1	—	—	3616 346
		C,Y	—	1	—	—	—	1	—	—	3615 944
		C	—	—	—	—	1	—	—	—	3616 348
23-34-167	PANEL, Deck Opening Lower										
		V,L	—	1	—	—	1	—	—	—	3756 034
		V	—	—	—	1	—	—	—	—	3756 036
		L	—	—	—	1	—	—	—	—	3756 197
		B	—	1	—	—	—	—	—	—	3684 258
		J	—	1	—	—	—	—	—	—	3616 141
		R	1	1	—	—	—	—	—	—	3616 206
		R	—	—	—	—	1	—	—	—	3756 414
		W	—	—	—	—	1	—	—	—	3756 415
		W	1	1	—	1	—	—	—	—	3616 499
		P	—	1	—	—	1	1	—	—	3616 349
		D	—	1	—	—	1	1	—	—	3616 350
		C-L,C-M,Y	—	1	—	—	1	1	—	—	3615 945
		C-H, C-S	—	1	—	—	1	1	—	—	3616 669
23-34-171	RETAINER, Deck Opening Lower Panel Filler Extension Upper	C-L,C-M	—	1	—	—	1	1	—	—	3756 296-7
	RETAINER, Quarter Panel Rr. Bumper Filler Side Frt.	D	—	1	—	—	1	1	—	—	3756 574
	RETAINER, Quarter Panel Rr.	C-H,C-S	—	1	—	—	1	1	—	—	3756 236-7
23-34-176	EXTENSION, Deck Opening Lower Panel	R	—	—	—	—	1	—	—	—	3616 956-7
		W	—	—	—	—	1	—	—	—	3616 958-9

TYPE LETTERS Indicates J - Challenger, B - Barracuda, V - Valiant, L - Dart, R - Satellite, W - Coronet, P - Plymouth, D - Dodge, C - Chrysler, Y - Imperial

NUMERALS INDICATE: 21 - 2 DR. SED., 23 - 2 DR. H.T., 29 - FAST BACK, 41 - 4 DR. SED., 43 - 4 DR. H.T., 45 - 6 PASS. STA. WGN., 46 - 9 PASS. STA. WGN.

AR Indicates use as required.
# Indicates parts not listed in any previous parts book
Numerals in parentheses ( ) refer to notes.
★ Indicates change or addition.

Printed in U.S.A.
November, 1974

Right and left part numbers are on same line, first number is right, second number is left.

CODE	PART NAME	MODEL CODES	SEE BOTTOM NOTE 21	23	29	41	43	45	46	PART NUMBER
23-34-176	EXTENSION Cont'd.									
	EXTENSION, Deck Opening Lower Panel Reinforcement	V,L	—	—	—	1	1	—	—	—	3756 166-7
		R	1	1	—	—	—	—	—	—	3615 628-9
		R	—	—	—	—	1	—	—	—	3616 680-1
		W	—	—	—	—	1	—	—	—	3616 690-1
		W	1	1	—	1	—	—	—	—	3504 312-3
	EXTENSION, Deck Opening Lower Panel Filler	V,L	—	—	—	1	—	—	—	—	3756 330-1
		V,L	—	1	—	—	1	—	—	—	3756 326-7
		B	—	1	—	—	—	—	—	—	3616 582-3
		J	—	1	—	—	—	—	—	—	3616 708-9
	Silver Frost Met.	R	—	—	—	—	1	—	—	—	E722-3 KA5
	Powder Blue		—	—	—	—	1	—	—	—	E722-3 KB1
	Lucerne Blue Met.		—	—	—	—	1	—	—	—	E722-3 KB5
	Rallye Red		—	—	—	—	1	—	—	—	E722-3 KE5
	Frosty Green Met.		—	—	—	—	1	—	—	—	E722-3 KG2
	Deep Sherwood Met.		—	—	—	—	1	—	—	—	E722-3 KG8
	Avocado Gold Met.		—	—	—	—	1	—	—	—	E722-3 KJ6
	Sahara Beige		—	—	—	—	1	—	—	—	E722-3 KL4
	Dark Moonstone Met.		—	—	—	—	1	—	—	—	E722-3 KL8
	Sienna Met.		—	—	—	—	1	—	—	—	E722-3 KT5
	White		—	—	—	—	1	—	—	—	E722-3 KW1
	Formal Black		—	—	—	—	1	—	—	—	E722-3 KX9
	Golden Fawn		—	—	—	—	1	—	—	—	E722-3 KY4
	Yellow Blaze		—	—	—	—	1	—	—	—	E722-3 KY5
	Golden Haze Met.		—	—	—	—	1	—	—	—	E722-3 KY6
	Tahitian Gold Met.		—	—	—	—	1	—	—	—	E722-3 KY9
	Dark Silver Met.	W	—	—	—	—	1	—	—	—	E720-1 KA5
	Powder Blue		—	—	—	—	1	—	—	—	E720-1 KB1
	Lucerne Blue Met.		—	—	—	—	1	—	—	—	E720-1 KB5
	Bright Red		—	—	—	—	1	—	—	—	E720-1 KE5
	Frosty Green Met.		—	—	—	—	1	—	—	—	E720-1 KG2
	Deep Sherwood Met.		—	—	—	—	1	—	—	—	E720-1 KG8
	Avocado Gold Met.		—	—	—	—	1	—	—	—	E720-1 KJ6
	Parchment		—	—	—	—	1	—	—	—	E720-1 KL4
	Dark Moonstone Met.		—	—	—	—	1	—	—	—	E720-1 KL8
	Sienna Met.		—	—	—	—	1	—	—	—	E720-1 KT5
	White		—	—	—	—	1	—	—	—	E720-1 KW1
	Black		—	—	—	—	1	—	—	—	E720-1 KX9
	Golden Fawn		—	—	—	—	1	—	—	—	E720-1 KY4
	Yellow Blaze		—	—	—	—	1	—	—	—	E720-1 KY5
	Gold Met.		—	—	—	—	1	—	—	—	E720-1 KY6
	Dark Gold Met.		—	—	—	—	1	—	—	—	E720-1 KY9
		C-L,C-M	—	1	—	—	1	1	—	—	3756 292-3
23-34-179	REINFORCEMENT, Deck Opening Upper or Lower Panel Lwr.	V,L	—	—	—	—	1	—	—	—	3756 038
	w/Nut Lwr.	W	1	1	—	1	—	—	—	—	3505 470
	Lwr.	P	—	1	—	—	1	1	—	—	3616 612
		C-L,C-M,Y	—	1	—	—	1	1	—	—	3616 615
		C-H,C-S	—	1	—	—	1	1	—	—	3616 616
	Lwr.	D	—	1	—	—	1	1	—	—	3616 613
	REINFORCEMENT, Deck Opening Lower Panel Extension Flange	R	—	—	—	—	1	—	—	—	3756 664
		W	—	—	—	—	1	—	—	—	3756 666-7

TYPE LETTERS Indicates	J - Challenger B - Barracuda	V - Valiant L - Dart	R - Satellite W - Coronet	P - Plymouth D - Dodge	C - Chrysler Y - Imperial
NUMERALS INDICATE:	21 - 2 DR. SED. 23 - 2 DR. H.T.	29 - FAST BACK	41 - 4 DR. SED. 43 - 4 DR. H.T.		45 - 6 PASS. STA. WGN. 46 - 9 PASS. STA. WGN.

AR Indicates use as required.
# Indicates parts not listed in any previous parts book
Numerals in parentheses ( ) refer to notes.
★ Indicates change or addition.

Printed in U.S.A.
November, 1974

Right and left part numbers are on same line, first number is right, second number is left.

CODE	PART NAME		MODEL CODES	SEE BOTTOM NOTE 21	23	29	41	43	45	46	PART NUMBER
23-34-179	REINFORCEMENT Cont'd.										
	SUPPORT, Deck Opening Lower Panel w/NUT	Lid Lock	V,L	—	—	—	1	—	—	—	—	3616 640
		Lower	V,L	—	—	—	2	—	—	—	—	3616 191
			R	2	2	—	—	—	—	—	—	3615 640
			R	—	—	—	—	2	—	—	—	3616 962
		To Bumper	R,W	2	2	—	2	—	—	—	—	3504 166
		To Bumper	R,W	—	—	—	—	2	—	—	—	3446 048
		Inner	W	—	—	—	—	2	—	—	—	3616 963
	Outer		R	—	—	—	—	2	—	—	—	3756 406
		Outer	W	—	—	—	—	2	—	—	—	3756 407
	w/Nut		W	2	2	—	2	—	—	—	—	3615 061
		Inner	P	—	1	—	—	1	1	—	—	3756 350-1
		Outer	P	—	1	—	—	1	1	—	—	3756 352-3
			D	—	1	—	—	1	1	—	—	3756 710-11
		Outer	C-L,C-M,Y	—	1	—	—	1	1	—	—	3756 234-5
		Inner	C-H, C-S	—	1	—	—	1	1	—	—	3756 230-1
		Outer	C-H,C-S	—	1	—	—	1	1	—	—	3756 232-3
	SUPPORT, Deck Opening Lower Panel Tail Lamp Opening		D	—	1	—	—	1	1	—	—	3756 374-5
	SUPPORT, Deck Opening Lower Panel and License Plate Mtg. Panel	Canada	C-L, C-M									
			Y	—	1	—	—	1	1	—	—	# 3756 451
23-34-184	LETTER, NAMEPLATE or MEDALLION, Deck Opening Lower Panel (See Exterior Ornamentation Illustrations)										
23-34-190	FILLER, Deck Opening Lower Panel		V,L	—	—	—	1	—	—	—	—	3756 319
		w/Retainer	V,L	—	1	—	—	1	—	—	—	3756 317
		w/Retainer	B	—	1	—	—	—	—	—	—	3616 494
			J	—	1	—	—	—	—	—	—	3616 627
			R,W	—	—	—	—	1	—	—	—	3616 974
		T/Lamp Bumper	P	—	1	—	—	1	1	—	—	3756 494-5
			C-L,C-M,Y	—	1	—	—	1	1	—	—	3756 456-7
	FILLER, Deck Opening Lower Panel Reinf. License Plate Mtg. Panel Supt. After 2-18-74		C-L,C-M,Y	—	1	—	—	1	1	—	—	3756 885
23-34-191	BRACKET, Quarter Panel Rear Bumper Impact										
			R,W	—	—	—	—	—	—	1	1	3440 834-5
	SUPPORT, Quarter Outside Panel Wheel Opening Panel Mtg. Brkt.		C,Y	—	2	—	—	2	2	—	—	3756 772-3
23-34-193	SPACER, Deck Opening Upper Panel to Rr. Window Glass		B,J	—	AR	—	—	—	—	—	—	2964 590
23-34-212	PANEL, Quarter Wheel Opening										
			C	—	—	—	—	—	—	1	1	3767 088-9
			C,Y	—	1	—	—	1	1	—	—	3756 800-1
	Wing Screw		C,Y	—	2	—	—	2	2	2	2	6028 934
23-34-225	COVER, Quarter Panel Upper Inner Access Hole		P,D,C,Y	—	2	—	—	—	2	—	—	3720 691
23-34-229	PLATE, Body Side Sill to Quarter Inside Panel Tie		P,D,C,Y	—	1	—	—	—	—	—	—	3616 228-9
			R,W	1	1	—	1	—	—	—	—	3756 512-3
	PLATE, Body Side Sill to Wheelhouse Tie		R,W	—	—	—	—	—	1	1	1	3505 494-5
			P,D,C	—	—	—	—	—	—	1	1	3720 746-7
			P,D	—	—	—	—	1	—	—	—	3756 358-9
			C,Y	—	—	—	—	1	—	—	—	3756 360-1
	PLATE, Quarter Panel to Wheelhouse to Side Sill Quarter Panel Tie		V	—	—	—	—	1	—	—	—	3446 362-3
			L	—	—	—	—	1	—	—	—	3446 360-1

TYPE LETTERS Indicates J - Challenger, B - Barracuda, V - Valiant, L - Dart, R - Satellite, W - Coronet, P - Plymouth, D - Dodge, C - Chrysler, Y - Imperial

NUMERALS INDICATE: 21 - 2 DR. SED., 23 - 2 DR. H.T., 29 - FAST BACK, 41 - 4 DR. SED., 43 - 4 DR. H.T., 45 - 6 PASS. STA. WGN., 46 - 9 PASS. STA. WGN.

AR Indicates use as required.
# Indicates parts not listed in any previous parts book
Numerals in parentheses ( ) refer to notes.
★ Indicates change or addition.

Printed in U.S.A.
November, 1974

Right and left part numbers are on same line, first number is right, second number is left.

CODE	PART NAME	MODEL CODES	SEE BOTTOM NOTE 21	23	29	41	43	45	46	PART NUMBER
23-34-229	PLATE Cont'd.									
	PLATE, Body Side Sill Quarter Window Track Bracket Tie	B,J	—	2	—	—	—	—	—	3446 384
	PLATE, Body Side Sill To Center Pillar Tie	P,D,C,Y	—	—	—	—	1	—	—	3616 218-9
	GUSSET, Inner Wheelhouse to Tailgate Hinge Pillar Lt.	R,W	—	—	—	—	—	1	1	3440 901
23-34-231	BRACKET, Quarter Outside Panel Wheel Opening Panel Mounting (Plastic)	C,Y	—	2	—	2	2	—	—	3756 208
	BRACKET, Quarter Panel Wheel Opening Spare Tire Hsg. Frt.		—	—	—	—	—	1	1	3767 688-9
	BRACKET, Quarter Wheelhouse Opening Locking Rod	C	—	—	—	—	—	2	2	3756 206
	BRACKET, Quarter Outside Wheel Opening Panel Mtg.	C,Y	—	2	—	2	2	—	—	3505 509
	RETAINER, Quarter Wheel Opening Panel	C,Y	—	4	—	4	4	4	4	3756 205
	RETAINER, Quarter Panel Wheel Opening Mtg.	C	—	—	—	—	—	2	2	9431 953
23-34-234	PANEL, Quarter Inside									
	Rr. Upr.	V,L	—	—	1	—	—	—	—	3720 458-9
	Rr. Upr.	V,L	—	1	—	—	—	—	—	3684 548-9
	w/Nut Rr. Upr.	V,L	—	1	—	—	—	—	—	# 3752 734-4
	Use w/Soft Headlining Rr. Upr.	V,L	—	—	1	—	—	—	—	3720 056-7
	Use w/Soft Headlining Lwr.	V,L	—	—	1	—	—	—	—	3720 866-7
	Lwr.	V,L	—	—	1	—	—	—	—	3720 530-1
	Upr.	V,L	—	—	—	1	—	—	—	3720 992-3
		V,L	—	1	—	—	—	—	—	3756 500-1
	After Oct. 10, 1973 w/Nut	V,L	—	1	—	—	—	—	—	792 372-3
		V,L	—	—	1	—	—	—	—	3756 502-3
	Lwr.	V,L	—	—	—	1	—	—	—	2603 640-1
	Rr. Lwr.	V,L	—	1	—	—	—	—	—	2604 224-5
	w/Nut	B	—	1	—	—	—	—	—	3756 720-1
	w/Nut	J	—	1	—	—	—	—	—	3756 722-3
	Rr. Lwr.	B	—	1	—	—	—	—	—	2963 154-5
	w/Reinf. Rr. Upr.	B	—	1	—	—	—	—	—	3611 444-5
	w/Reinf. Rr. Upr.	J	—	1	—	—	—	—	—	3611 446-7
	Rr. Upr. Rt.	R	—	—	—	1	—	—	—	3674 004
	Rr. Upr. Rt.	W	—	—	—	1	—	—	—	3500 994
	Rr. Upr. Lt.	R,W	—	—	—	1	—	—	—	3500 995
		J	—	1	—	—	—	—	—	2963 666-7
		B	—	1	—	—	—	—	—	2963 148-9
	Rr. Lwr.	J	—	1	—	—	—	—	—	2963 156-7
		R,W	—	—	—	—	—	1	1	3439 526-7
	Upr. Frt.	R,W	—	—	—	1	—	—	—	3445 052-3
		R,W	1	1	—	1	—	—	—	3756 508-9
	Rr. Rt.	R,W	—	—	—	—	—	1	1	3499 454
	Rr. Lt.	R,W	—	—	—	—	—	1	1	3440 897
	Center Rt.	R,W	—	—	—	—	—	1	1	3500 964
	Center Lt.	R,W	—	—	—	—	—	1	1	3611 633
		P,D	—	1	—	—	—	—	—	3616 276-7
	After 10-25-73	P,D	—	1	—	—	—	—	—	3756 850-1
	Upr. to Roof	P,D	—	1	—	—	—	—	—	3720 212-3
	Upr.	C,Y	—	—	—	—	1	—	—	3674 820-1
		C,Y	—	1	—	—	—	—	—	3616 278-9
	After 10-25-73	C,Y	—	1	—	—	—	—	—	3756 852-3
	Upr.	P,D	—	—	—	1	—	—	—	3767 734-5
	Upr.	P,D	—	—	—	—	1	—	—	3674 816-7
	Frt. Upr.	P,D,C	—	—	—	—	—	1	1	3674 720-1
	Frt. Lwr.	P,D,C,	—	—	—	—	—	1	1	3720 668-9

TYPE LETTERS Indicates: J - Challenger, B - Barracuda, V - Valiant, L - Dart, R - Satellite, W - Coronet, P - Plymouth, D - Dodge, C - Chrysler, Y - Imperial

NUMERALS INDICATE: 21 - 2 DR. SED., 23 - 2 DR. H.T., 29 - FAST BACK, 41 - 4 DR. SED., 43 - 4 DR. H.T., 45 - 6 PASS. STA. WGN., 46 - 9 PASS. STA. WGN.

AR Indicates use as required.
# Indicates parts not listed in any previous parts book
Numerals in parentheses ( ) refer to notes.
★ Indicates change or addition.

Printed in U.S.A.
November, 1974

Right and left part numbers are on same line, first number is right, second number is left.

CODE	PART NAME	MODEL CODES	SEE BOTTOM NOTE 21	23	29	41	43	45	46	PART NUMBER
23-34-234	PANEL Cont'd.									
	After 5-6-74 Frt. Lwr.	P,D,C	—	—	—	—	—	1	1	# 3793 334-5
	Rr.	P,D,C	—	—	—	—	—	1	1	3752 970-1
	Upr.	C	—	—	—	1	—	—	—	3767 732-3
23-34-235	PANEL, Quarter Outside Repair									
		V,L	—	—	—	1	—	—	—	3756 158-9
		V,L	—	1	—	—	—	—	—	3756 016-7
		V,L	—	—	1	—	—	—	—	3756 154-5
		B	—	1	—	—	—	—	—	3616 580-1
		J	—	1	—	—	—	—	—	3616 138-9
		R	—	—	—	1	—	—	—	3616 944-5
		W	—	—	—	1	—	—	—	3616 946-7
		R	1	1	—	—	—	—	—	3756 756-7
		W	1	1	1	—	—	—	—	3756 758-9
		R	—	—	—	—	—	1	1	3720 002-3
	After 9-25-73	R	—	—	—	—	—	1	1	3767 774-5
		W	—	—	—	—	—	1	1	3720 004-5
	After 9-25-73	W	—	—	—	—	—	1	1	3767 776-7
		P	—	1	—	—	—	—	—	3616 260-1
		P	—	—	—	1	—	—	—	3616 262-3
		P	—	—	—	—	1	—	—	3616 264-5
		P	—	—	—	—	—	1	1	3674 716-7
		D	—	1	—	—	—	—	—	3616 266-7
		D	—	—	—	1	—	—	—	3616 268-9
		D	—	—	—	—	1	—	—	3616 270-1
		D	—	—	—	—	—	1	1	3674 718-9
		C	—	1	—	—	—	—	—	3616 272-3
		C	—	—	—	1	—	—	—	3616 274-5
		C	—	—	—	—	1	—	—	3615 904-5
		C	—	—	—	—	—	1	1	3720 072-3
		Y	—	1	—	—	—	—	—	3756 402-3
		Y	—	—	—	—	1	—	—	3756 400-1
23-34-236	EXTENSION, *Quarter Panel Wheelhouse* to Roof Side Rail Supt.	P,D	—	—	—	—	1	—	—	3674 834-5
	EXTENSION, Quarter Inside Upr. *Frt.*	C,Y	—	1	—	—	—	—	—	3720 824-5
23-34-237	PLUG, Quarter Inside Panel Access Hole	V,L	—	2	—	—	—	—	—	2783 355
23-34-238	NAMEPLATE, *Quarter Outside (See Exterior Ornamentation Illustrations)*									
23-34-242	EXTENSION, Quarter Outside *Panel*	V,L	—	1	—	—	1	—	—	3756 014-5
	Rr. Flange	R	1	1	—	—	—	—	—	3615 608-9
	After 3-25-74 Rr. Flange Lt.	R	1	1	—	—	—	—	—	3756 878
	End	W	1	1	—	1	—	—	—	3615 808-9
	Rr. Supt. to Frt. Supt.	W	—	—	—	—	—	1	1	3720 012
	Rr. Flange	W	1	1	—	1	—	—	—	3504 318-9
	Rr. Flange w/Nut	W	1	1	—	1	—	—	—	# 3756 878-9
	Rr. Upr.	R,W	—	—	—	—	—	1	1	3440 514-5
	To Rr. Floor Pan Side	W	1	1	—	1	—	—	—	3445 528-9
	End	P	—	1	—	—	1	1	—	3616 238-9
	To Rr. Floor Pan Side	P	—	1	—	—	1	1	—	3616 248-9
	End	D	—	1	—	—	1	1	—	3616 242-3
	Upr. Frt.	P,D,C	—	—	—	—	—	1	1	3720 416-7
	End	C-L, C-M	—	1	—	—	1	1	—	3615 918-9
	End	C-H, C-S	—	1	—	—	1	1	—	3616 246-7
	Rr. Lwr. Lamp Attaching	C	—	—	—	—	—	1	1	3587 240-1
	End	Y	—	1	—	—	—	1	—	3616 770-1

TYPE LETTERS Indicates J - Challenger, V - Valiant, R - Satellite, P - Plymouth, C - Chrysler; B - Barracuda, L - Dart, W - Coronet, D - Dodge, Y - Imperial

NUMERALS INDICATE: 21 - 2 DR. SED., 23 - 2 DR. H.T., 29 - FAST BACK, 41 - 4 DR. SED., 43 - 4 DR. H.T., 45 - 6 PASS. STA. WGN., 46 - 9 PASS. STA. WGN.

AR Indicates use as required.
# Indicates parts not listed in any previous parts book
Numerals in parentheses ( ) refer to notes.
★ Indicates change or addition.

Printed in U.S.A.
November, 1974

Right and left part numbers are on same line, first number is right, second number is left.

CODE	PART NAME	MODEL CODES	SEE BOTTOM NOTE 21	23	29	41	43	45	46	PART NUMBER
23-34-242	EXTENSION Cont'd.									
	EXTENSION, Quarter Panel Wheelhouse to Roof Side Rail	P,D	—	1	—	—	—	—	—	3720 226-7
		C	—	—	—	—	—	—	—	3674 840-1
23-34-245	**RETAINER, Quarter Panel Tail Lamp Opening Upper Gusset Seal**									
		R	—	—	—	—	—	1	1	3499 970-1
		W	—	—	—	—	—	1	1	3499 928-9
	RETAINER, Quarter Panel Tail Lamp Opening Upr. Lt.	P	—	—	—	—	—	1	1	3767 394
	Upr. Lt.	D	—	—	—	—	—	1	1	3767 395
23-34-246	REINFORCEMENT, Quarter Outside Panel at Belt	V,L	—	1	—	—	—	—	—	2604 286-7
		B	—	1	—	—	—	—	—	2963 174-5
		J	—	1	—	—	—	—	—	2963 706-7
	REINFORCEMENT, Quarter Outside Panel **End**	W	1	1	—	1	—	—	—	3615 810-11
	End	P,D	—	1	—	—	1	1	—	3616 304-5
	Belt Bar Rt.	P,D,C	—	—	—	—	—	1	1	3720 786
	End	C-L, C-M	—	1	—	—	1	1	—	3615 928-9
	End	C-H, C-S	—	1	—	—	1	1	—	3756 242-3
	End	Y	—	1	—	—	—	1	—	3615 928-9
23-34-248	**SUPPORT, Quarter Panel Inside Trim Panel** to Tailgate Pillar Frt. Support									
		R,W	—	—	—	—	—	1	1	3499 214-5
23-34-249	REINFORCEMENT, Quarter Inside Panel Impact	B,J	—	1	—	—	—	—	—	3756 714-5
	W/Nut Rr. Upr.	V,L	—	1	—	—	—	—	—	3611 440-1
	To Tie Plate	R,W	1	1	—	1	—	—	—	3756 570-1
	at Belt	R,W	1	1	—	1	—	—	—	3756 668-9
	at Belt	P,D	—	1	—	—	—	—	—	3756 468-9
	at Belt	C,Y	—	1	—	—	—	—	—	3756 466-7
	After 10-25-73 at Belt	C,Y	—	1	—	—	—	—	—	3756 860-1
23-34-253	DOOR, Quarter Panel Fuel Filler									
		R	—	—	—	—	—	1	1	3440 987
		W	—	—	—	—	—	1	1	3440 988
		P	—	—	—	—	—	1	1	3674 792
		D	—	—	—	—	—	1	1	3674 793
		C	—	—	—	—	—	1	1	3720 221
	DOOR, Tail Lamp Opening Fuel **Filler Complete**	C-H,C-S	—	1	—	—	1	1	—	3756 840
	PANEL, Deck Opening Lower Panel Fuel Filler Door		—	—	—	—	—	—	—	
		P	—	1	—	—	1	1	—	3756 393
		D-K,D-T,D-L								
		D-M,D-H	—	1	—	—	1	1	—	3756 395
		D-P	—	1	—	—	1	1	—	3756 431
23-34-255	**SPRING, Quarter Panel Fuel Filler Door**									
		R,W	—	—	—	—	—	1	1	3500 661
		P,D,C	—	—	—	—	—	1	1	3767 521
	SPRING, Deck Opening Lower Panel Fuel Filler Door Hinge	P,D-K,D-T								
		D-L,D-M,D-H	—	2	—	—	2	2	—	3756 379
		D-P	—	2	—	—	2	2	—	3756 382
		C-H,C-S	—	1	—	—	1	1	—	3756 364
23-34-257	GUSSET, Quarter Panel Tail Lamp Opening Upr.	R	—	—	—	—	—	1	1	3499 124-5
	Upr.	W	—	—	—	—	—	1	1	3499 122-3
		C	—	—	—	—	—	1	1	3500 806-7

TYPE LETTERS Indicates: J - Challenger; B - Barracuda; V - Valiant; L - Dart; R - Satellite; W - Coronet; P - Plymouth; D - Dodge; C - Chrysler; Y - Imperial

NUMERALS INDICATE: 21 - 2 DR. SED.; 23 - 2 DR. H.T.; 29 - FAST BACK; 41 - 4 DR. SED.; 43 - 4 DR. H.T.; 45 - 6 PASS. STA. WGN.; 46 - 9 PASS. STA. WGN.

AR Indicates use as required.
# Indicates parts not listed in any previous parts book
Numerals in parentheses ( ) refer to notes.
★ Indicates change or addition.

Printed in U.S.A.
November, 1974

Right and left part numbers are on same line, first number is right, second number is left.

CODE	PART NAME		MODEL CODES	SEE BOTTOM NOTE 21	23	29	41	43	45	46	PART NUMBER
23-34-257	GUSSET Cont'd.										
	GUSSET, Quarter Panel Floor Pan Side Extension to Deck Opening Lower Extension	Rt.	R	—	—	—	1	—	—	—	3616 948
		Lt.	R	—	—	—	1	—	—	—	3756 659
		Rt.	W	—	—	—	1	—	—	—	3616 950
		Lt.	W	—	—	—	1	—	—	—	3756 661
23-34-260	HINGE, Deck Opening Lower Panel Fuel Filler Door		P,D-K,D-T								
			D-L,D-M,D-H	—	1	—	1	1	—	—	3756 426-7
23-34-268	RETAINER, Quarter Panel Wheelhouse Outer Fuel Filler Opening	Lt.	P,D,C	—	—	—	—	—	1	1	3720 840
23-34-270	BUMPER, Quarter Panel Fuel Filler Door		P,D,C	—	—	—	—	—	1	1	3720 758
	BUMPER Wheelhouse to Quarter Panel Fuel Filler Opening Extension		P,D,C	—	—	—	—	—	2	2	2811 139
	BUMPER, Deck Opening Lower Panel Fuel Filler Door		P,D	—	2	—	—	2	2	—	—	3756 357
	BUMPER, Tail Lamp Opening Fuel Filler Door Hinge Brkt.		C-H,C-S	—	—	—	—	2	2	—	—	3756 357
	BUMPER, Quarter Panel Gas Filler Door		R,W	—	—	—	—	—	—	2	2	2811 139
23-34-272	BEZEL, Quarter Panel Fuel Filler Door Opening		P	—	—	—	—	—	—	1	1	3767 575
			D	—	—	—	—	—	—	1	1	3767 576
			C	—	—	—	—	—	—	1	1	3767 576
23-34-273	SUPPORT, Deck Opening Lower Panel Fuel Filler Door Mtg.		P	—	1	—	—	1	1	—	—	3756 413
			D-K,D-T,D-L D-M, D-H	—	1	—	—	1	1	—	—	3756 412
			D-P	—	1	—	—	1	1	—	—	3756 444
23-34-275	BUMPER, Quarter Outside Panel Jack		V,L	—	—	—	2	2	—	—	—	2782 827
23-34-280	FILLER, Quarter Panel Tail Lamp Opening	Rt.	P	—	—	—	—	—	—	1	1	3767 329
		Upr. Lt.	D	—	—	—	—	—	—	1	1	3767 331
			C	—	—	—	—	—	—	1	1	3720 628-9
	FILLER, Quarter Panel Tail Lamp Opening to Tailgate Opening		R	—	—	—	—	—	—	1	1	3767 360-1
			W	—	—	—	—	—	—	1	1	3767 358-9
	FILLER, Quarter Panel Rr. Bumper		P	—	1	—	—	1	1	—	—	3756 124-5
			D	—	1	—	—	1	1	—	—	3756 126-7
			C-L,C-M	—	1	—	—	1	1	—	—	3756 292-3
		w/Extension	C-H,C-S	—	1	—	—	1	1	—	—	3756 700-1
			P	—	—	—	—	—	—	1	1	3767 090-1
			D	—	—	—	—	—	—	1	1	3767 316-7
			C	—	—	—	—	—	—	1	1	3767 368-9
		w/Extension	Y	—	1	—	—	—	1	—	—	3756 694-5
		After 4-1-74	Y	—	1	—	—	—	1	—	—	3756 894-5
	FILLER, Quarter Panel to Tail Lamp	Lt.	D	—	—	—	—	—	—	1	1	3674 769
			C	—	—	—	—	—	—	1	1	3720 218-9
	FILLER, Quarter Outside Panel to Tailgate Opening Pillar	Rt.	P,D	—	—	—	—	—	—	1	1	3674 766
	To Tailgate Opening Ext.	Lt.	P	—	—	—	—	—	—	1	1	3674 767
	FILLER, Deck Opening Lower Panel Fuel Filler Door Panel		P	—	1	—	—	1	1	—	—	3756 383
23-34-282	RETAINER, Quarter Panel Tail Lamp Opening Filler Upper		C	—	—	—	—	—	—	1	1	3767 092-3
	RETAINER, Quarter Panel Rr. Bumper Filler		P,D,C	—	—	—	—	—	—	4	4	3672 942

TYPE LETTERS Indicates: J - Challenger, B - Barracuda, V - Valiant, L - Dart, R - Satellite, W - Coronet, P - Plymouth, D - Dodge, C - Chrysler, Y - Imperial

NUMERALS INDICATE: 21 - 2 DR. SED., 23 - 2 DR. H.T., 29 - FAST BACK, 41 - 4 DR. SED., 43 - 4 DR. H.T., 45 - 6 PASS. STA. WGN., 46 - 9 PASS. STA. WGN.

AR Indicates use as required.
# Indicates parts not listed in any previous parts book
Numerals in parentheses ( ) refer to notes.
★ Indicates change or addition.

Printed in U.S.A.
November, 1974

Right and left part numbers are on same line, first number is right, second number is left.

CODE	PART NAME	MODEL CODES	SEE BOTTOM NOTE 21	23	29	41	43	45	46	PART NUMBER
23-34-293	HEADER, Roof Rear	R,W	—	—	—	—	—	1	1	3482 547
		P,D,C	—	—	—	—	—	1	1	3752 460
23-34-301	PANEL, Roof	V,L	—	—	1	—	—	—	—	3720 975
	After Sept. 1973	V,L	—	—	1	—	—	—	—	2965 661
		V,L	—	1	—	—	—	—	—	3720 978
	After Sept. 1973	V,L	—	1	—	—	—	—	—	2842 323
		V,L	—	—	—	1	—	—	—	3720 980
	After Sept. 1973	V,L	—	—	—	1	—	—	—	2842 326
		B	—	1	—	—	—	—	—	2963 296
		J	—	1	—	—	—	—	—	2963 297
		R,W	1	1	—	1	—	—	—	3445 833
		R,W	—	—	—	1	—	—	—	3445 101
		R,W	—	—	—	—	—	1	1	3440 088
		P,D	—	—	—	1	—	—	—	3674 518
		P,D	—	—	—	—	1	—	—	3674 517
		P,D,C	—	—	—	—	—	1	1	3674 520
		P,D	—	1	—	—	—	—	—	3720 174
		P,D,C,Y	—	1	—	—	—	—	—	3720 494
		C	—	—	—	1	—	—	—	3674 519
		C,Y	—	—	—	—	1	—	—	3674 469
23-34-308	SUN ROOF, Electric									
	BRACKET, Frame to Windshield Header	P,D,C,Y	—	AR	—	—	AR	AR	—	— 3674 902-3
	PAD, Sun Roof Opening Header, Canada	P,D,C,Y	—	1	—	—	1	1	—	— 3674 927
	HOUSING, Drive Cable	P,D,C,Y	—	AR	—	—	AR	AR	—	— 3674 917
	COVER, Drive Cable Housing	P,D,C,Y	—	AR	—	—	AR	AR	—	— 3674 918
	CLIP, Drive Cable Retaining	P,D,C,Y	—	AR	—	—	AR	AR	—	— 3674 919
	PIN, Guide Rail Rear	P,D,C,Y	—	AR	—	—	AR	AR	—	— 3674 923
	BREAKER, Circuit	P,D,C,Y	—	AR	—	—	AR	AR	—	— 3674 933
	BUMPER, Sliding Roof Panel Rear	P,D,C,Y	—	AR	—	—	AR	AR	—	— 3674 942
	SCREW, Drive Cable Housing Cover Att.	P,D,C,Y	—	AR	—	—	AR	AR	—	— 3674 943
	SCREW, Motor to Frame	P,D,C,Y	—	AR	—	—	AR	AR	—	— 3674 944
	SCREW, Switch to Frame Mtg.	P,D,C,Y	—	AR	—	—	AR	AR	—	— 3674 945
	SEAL, Sliding Roof Panel Rr. To Roof Panel	P,D,C,Y	—	AR	—	—	AR	AR	—	— 3674 950
	FRAME, Sliding Roof Complete	P,D,C,Y	—	AR	—	—	AR	AR	—	— 3674 954
	BRACKET, Frame to Roof Side Rail Inner Frt.	P,D,C,Y	—	AR	—	—	AR	AR	—	— 3674 955
	Rr.	P,D,C,Y	—	AR	—	—	AR	AR	—	— 3674 956
	SEAL, Frame Sliding Roof Compartment Side to Rr. Panel	P,D,C,Y	—	AR	—	—	AR	AR	—	— 3674 957
	GUIDE, Rail	P,D,C,Y	—	AR	—	—	AR	AR	—	— 3674 960-1
	PANEL, Sliding Roof Outer	P,D,C,Y	—	AR	—	—	AR	AR	—	— 3674 962
	GUIDE, Corner Cable Upr.	P,D,C,Y	—	AR	—	—	AR	AR	—	— 3674 980-1
	Lwr.	P,D,C,Y	—	AR	—	—	AR	AR	—	— 3674 978-9
	SEAL, Frame Sliding Roof Compartment Rr. to Rr. Panel	P,D,C,Y	—	AR	—	—	AR	AR	—	— 3674 907
	CABLE, Guide Upr. Frt.	P,D,C,Y	—	AR	—	—	AR	AR	—	— 3674 916
	Lwr. Frt.	P,D,C,Y	—	AR	—	—	AR	AR	—	— 3674 915
	CABLE and Rr. Slide	P,D,C,Y	—	AR	—	—	AR	AR	—	— 3674 920-1
	MOTOR Complete	P,D,C,Y	—	AR	—	—	AR	AR	—	— 3674 926
	SWITCH, Header Mounted Motor	P,D,C,Y	—	AR	—	—	AR	AR	—	— 3674 931
	HANDLE, Manual Operating	P,D,C,Y	—	AR	—	—	AR	AR	—	— 3674 948
	WELT, Sliding Roof Panel Frt. Black	P,D,C,Y	—	AR	—	—	AR	AR	—	— 3674 964
	Rr. Black	P,D,C,Y	—	AR	—	—	AR	AR	—	— 3674 949
	Rr. Gray	P,D,C,Y	—	AR	—	—	AR	AR	—	— 3674 968
	Gray	P,D,C,Y	—	AR	—	—	AR	AR	—	— 3674 965
	SLIDE, Sliding Roof Panel Frt.	P,D,C,Y	—	AR	—	—	AR	AR	—	— 3674 984-5
	Relay	P,D,C,Y	—	1	—	—	1	1	—	— 2932 834
	RETAINER, Drive Assy. Pinion Gear Snap Ring	P,D,C,Y	—	AR	—	—	AR	AR	—	— 3788 435
	LOCK WASHER, Motor Clutch Adj. Screw	P,D,C,Y	—	AR	—	—	AR	AR	—	— 3788 434
	WASHER, Clutch Spacer	P,D,C,Y	—	AR	—	—	AR	AR	—	— 3788 432

TYPE LETTERS Indicates J - Challenger, B - Barracuda, V - Valiant, L - Dart, R - Satellite, W - Coronet, P - Plymouth, D - Dodge, C - Chrysler, Y - Imperial

NUMERALS INDICATE: 21 - 2 DR. SED., 23 - 2 DR. H.T., 29 - FAST BACK, 41 - 4 DR. SED., 43 - 4 DR. H.T., 45 - 6 PASS. STA. WGN., 46 - 9 PASS. STA. WGN.

AR Indicates use as required.
# Indicates parts not listed in any previous parts book
Numerals in parentheses ( ) refer to notes.
★ Indicates change or addition.

Printed in U.S.A.
November, 1974

Right and left part numbers are on same line, first number is right, second number is left.

CODE	PART NAME	MODEL CODES	SEE BOTTOM NOTE 21	23	29	41	43	45	46	PART NUMBER
23-34-308	SUN ROOF Cont'd.									
	SCREW, Motor Clutch Adjusting	P,D,C,Y	—	AR	—	AR	AR	—	—	3788 433
	GEAR, Drive Assy. Pinion Gear	P,D,C,Y	—	AR	—	AR	AR	—	—	3788 436
	RELAY, Window Regulator Safety (Use w/None Power Windows)	P,D,C,Y	—	AR	—	AR	AR	—	—	3788 483
23-34-309	SUN ROOF, Manual									
	PANEL and REINFORCEMENT, Roof	V,L	—	1	—	—	—	—	—	3767 016
		R,W	1	1	—	1	—	—	—	— 3720 592
		V,L	—	—	—	1	—	—	—	— 3767 017
		W	—	—	—	1	—	—	—	— 3720 645
	ESCUTCHEON, Roof Sliding Panel Handle	V,L	—	1	—	1	—	—	—	— 3696 965
		R,W	1	1	—	1	—	—	—	— 3759 045
	SUPPORT, Inside Rr. Upr. to Roof Side Panel Housing	V,L	—	2	—	—	—	—	—	— 3720 519
	Rr.	R,W	2	2	—	2	—	—	—	— 3767 710-11
		V,L	—	—	—	2	—	—	—	— 3720 526-7
	BRACKET, Roof Side Inner Rail to Roof Side Panel Housing	V,L	—	2	—	—	—	—	—	— 3720 520
		R,W	—	2	—	2	—	—	—	— 3720 593
		V,L	—	—	—	2	—	—	—	— 3720 522
	PANEL, Roof Sliding Prime	V,L	—	1	—	—	—	—	—	— 3696 893
	Prime	V,L	—	—	—	1	—	—	—	— 3696 892
	Prime	R,W	1	1	—	1	—	—	—	— 3759 037
	HOUSING, Roof Sliding Panel Complete	V,L	—	1	—	—	—	—	—	— 3696 851
	Complete	V,L	—	—	—	1	—	—	—	— 3696 850
	Complete	R,W	1	1	—	1	—	—	—	— 3759 021
	Painted	R,W	1	1	—	1	—	—	—	— 3759 022
	GUIDE, Roof Sliding Panel Cable Frt.	R,W	1	1	—	1	—	—	—	— 3759 031
	COVER, Roof Sliding Panel Cable Frt.	R,W	1	1	—	1	—	—	—	— 3759 030
	RETAINER, Roof Sliding Panel Hsg. Track	V,L	—	1	—	—	—	—	—	— 3759 153
	COVER, Roof Sliding Panel Opening Side Reinf. Tab.	V,L,R,W	2	2	—	2	—	—	—	— 3759 649
	SLIDE, Roof Sliding Panel	V,L,R,W	2	2	—	2	—	—	—	— 3759 648
	HANDLE, Roof Sliding Panel	V,L,R,W	1	1	—	1	—	—	—	— 3696 955
	GUIDE, Roof Sliding Panel Frt.	V,L,R,W	1	1	—	1	—	—	—	— 3696 966
	HOSE, Roof Sliding Panel Hsg. Drain Frt.	V,L	—	2	—	2	—	—	—	— 3696 971
	Rr.	V,L	—	2	—	2	—	—	—	— 3696 973
	RETAINER, Roof Sliding Panel Hsg. Track	V,L	—	2	—	2	—	—	—	— 3696 862
	After 10-1-73	V,L	—	2	—	2	—	—	—	— 3767 556
	TUBE, Roof Sliding Panel Hsg. Drain Frt.	V,L,R,W	—	2	—	2	—	—	—	— 3696 860
	Rr.	V,L,R,W	—	2	—	2	—	—	—	— 3696 859
	COVER, Roof Sliding Panel Cable Side	V,L,R,W	2	2	—	2	—	—	—	— 3696 863
	Frt.	V,L	—	—	—	1	—	—	—	— 3696 864
	Frt.	V,L	—	1	—	—	—	—	—	— 3696 865
	RETAINER, Roof Sliding Panel Rr. Guide	V,L,R,W	1	1	—	1	—	—	—	— 3696 879
	DRIVE, Roof Sliding Panel	V,L,R,W	1	1	—	1	—	—	—	— 3759 823
	TRACK, Roof Sliding Panel Hsg.	V,L,R,W	1	1	—	1	—	—	—	— 3696 942-3
	GUIDE, Roof Sliding Panel Rear w/Cable	V,L,R,W	1	1	—	1	—	—	—	— 3759 792-3
	After 10-1-73	V,L,R,W	1	1	—	1	—	—	—	— 3767 560-1
	SUPPORT, Rear Window Upper Frame to Hsg. Brkt.	R,W	2	2	—	2	—	—	—	— 3759 578

TYPE LETTERS Indicates: J - Challenger, B - Barracuda, V - Valiant, L - Dart, R - Satellite, W - Coronet, P - Plymouth, D - Dodge, C - Chrysler, Y - Imperial

NUMERALS INDICATE: 21 - 2 DR. SED., 23 - 2 DR. H.T., 29 - FAST BACK, 41 - 4 DR. SED., 43 - 4 DR. H.T., 45 - 6 PASS. STA. WGN., 46 - 9 PASS. STA. WGN.

AR Indicates use as required.
# Indicates parts not listed in any previous parts book
Numerals in parentheses ( ) refer to notes.
★ Indicates change or addition.

Printed in U.S.A.
November, 1974

Right and left part numbers are on same line, first number is right, second number is left.

CODE	PART NAME	MODEL CODES	SEE BOTTOM NOTE 21	23	29	41	43	45	46	PART NUMBER
23-34-309	SUN ROOF Cont'd.									
	SEAL, Roof Sliding Panel	V,L	—	1	—	—	—	—	—	3696 975
	Rr.	R,W	1	1	—	1	—	—	—	3759 048
		V,L	—	—	—	1	—	—	—	3696 974
	SEAL, Roof Sliding Panel									
	w/Paint	V,L,R,W	1	1	—	1	—	—	—	3720 533
	w/Vinyl	V,L,R,W	1	1	—	1	—	—	—	3720 535
	SUPPORT, Rr. Window Frame to Rr. Headlining Bow	R,W	1	1	—	1	—	—	—	3716 028
	WEATHERSTRIP, Roof Sliding Panel Rr.	R,W	1	1	—	1	—	—	—	3759 655
	WELT, Roof Sliding Panel Headlining Opening Parchment	V,L	—	—	—	1	—	—	—	H601 KL2
	Parchment	V,L	—	1	—	—	—	—	—	H602 KL2
	Parchment	R,W	1	1	—	1	—	—	—	H602 KL2
	White	V,L	—	1	—	—	—	—	—	H602 JW1
	White	R,W	1	1	—	1	—	—	—	H602 JW1
	SCREW, Roof Sliding Panel Adjuster and Plate Att.	V,L,R,W	2	2	—	2	—	—	—	6030 671
	NUT, Roof Sliding Panel Rr. Guide Adj.	V,L,R,W	2	2	—	2	—	—	—	6030 672
23-34-328	BRACE, Shelf Panel to Deck Opening Upper Panel	V,L	—	2	—	—	2	—	—	2782 746
	REINFORCEMENT, Shelf Panel to Deck Opening Upper Panel									
		R	2	2	—	—	—	—	—	3445 782
		W	2	2	—	2	—	—	—	3505 492
23-34-329	OVERLAY, Quarter Outside Panel	R	—	—	—	—	—	2	2	3680 714
		W	—	—	—	—	—	2	2	3680 734
		P	—	—	—	—	—	2	2	3810 201
		D	—	—	—	—	—	2	2	3680 107
		C	—	—	—	—	—	2	2	3680 107
	OVERLAY, Quarter Outside Fuel Filler Door	P	—	—	—	—	—	1	1	3810 123
		D,C	—	—	—	—	—	1	1	3810 141
	OVERLAY, Quarter Panel Extension	C	—	—	—	—	—	1	1	3810 142-3
	OVERLAY, Quarter Outside Wheel Opening Panel	C	—	—	—	—	—	2	2	3680 107
23-34-330	EXTENSION, Shelf Panel									
	Rr.	V,L	—	1	—	—	—	—	—	2839 402-3
	Rr.	V,L	—	—	—	1	—	—	—	2604 996
23-34-334	MEDALLION, ORNAMENT or LOUVER, Quarter Panel (See Exterior Ornamentation Illustrations)									
23-34-346	BRACKET, Quarter Panel Wheelhouse to Fuel Tank Stone Deflector									
	Upr.	R,W	—	—	—	—	—	1	1	3499 986
	Lwr.	R,W	—	—	—	—	—	1	1	3500 360
23-36-3	**FILLER, Body Front Pillar Lower** to Inst. Panel	V,L	—	—	—	1	—	—	—	2664 532-3
23-36-5	PILLAR, Body Center									
		V,L	—	—	—	1	—	—	—	3752 738-9
		R,W	—	—	—	1	—	1	1	3752 666-7
		P,D,C	—	—	—	1	—	1	1	3752 358-9
		P,D,C,Y	—	—	—	—	1	—	—	3752 364-5
23-36-10	REINFORCEMENT and T/Plate, Body Center Piller Retainer	V,L	—	—	—	1	—	—	—	3752 366
		R,W,P,D,C	—	—	—	1	1	1	1	3752 366
23-36-12	SUPPORT, Front Floor to Center Pillar	P,D	—	—	—	—	1	—	—	3756 432-3
		C,Y	—	—	—	—	1	—	—	3615 832-3

TYPE LETTERS Indicates J - Challenger, B - Barracuda, V - Valiant, L - Dart, R - Satellite, W - Coronet, P - Plymouth, D - Dodge, C - Chrysler, Y - Imperial

NUMERALS INDICATE: 21 - 2 DR. SED., 23 - 2 DR. H.T., 29 - FAST BACK, 41 - 4 DR. SED., 43 - 4 DR. H.T., 45 - 6 PASS. STA. WGN., 46 - 9 PASS. STA. WGN.

AR Indicates use as required.
# Indicates parts not listed in any previous parts book
Numerals in parentheses ( ) refer to notes.
★ Indicates change or addition.

Printed in U.S.A.
November, 1974

Right and left part numbers are on same line, first number is right, second number is left.

CODE	PART NAME	MODEL CODES	SEE BOTTOM NOTE 21	23		29	41	43	45	46	PART NUMBER
23-36-18	PLUG, Body Lock Pillar Gauge Hole 1/2" Dia.	V,L	—	—	—	2	—	—	—	—	1878 752
		R,W	2	2	—	2	—	—	—	—	1878 752
	PLUG, Quarter Panel Tailgate Lock Inner Pillar	R,W	—	—	—	—	—	—	1	1	2894 902
23-36-20	EXTENSION, Floor Pan to Center Pillar w/NUT	P,D,C,Y	—	—	—	—	—	1	—	—	3616 544-5
23-36-29	FILLER, Body Lock Pillar	V,L	—	—	—	1	—	—	—	—	3445 232-3
	FILLER, Quarter Panel Tailgate Rr. Support Lock Pillar Rt.	P	—	—	—	—	—	—	1	1	3720 756
	Rt.	D	—	—	—	—	—	—	1	1	3720 712
23-36-53	PILLAR, Body Lock	V,L	—	—	—	1	—	—	—	—	2965 620-1
		V,L	—	1	—	—	—	—	—	—	3616 764-5
		V,L	—	—	—	—	1	—	—	—	2604 260-1
		B	—	1	—	—	—	—	—	—	2963 166-7
		J	—	1	—	—	—	—	—	—	2963 668-9
		R	—	—	—	—	1	—	—	—	3445 618-9
		R	1	1	—	—	—	—	—	—	3756 628-9
		W	—	—	—	1	—	—	—	—	3756 626-7
		W	1	1	—	—	—	—	—	—	3756 608-9
		W	—	—	—	—	1	—	—	—	3445 060-1
		P	—	1	—	—	—	—	—	—	3616 284-5
		D	—	1	—	—	—	—	—	—	3616 290-1
		C,Y	—	1	—	—	—	—	—	—	3616 296-7
		P	—	—	—	—	1	—	1	1	3616 286-7
		P	—	—	—	—	—	1	—	—	3756 600-1
		D	—	—	—	—	—	1	—	—	3756 602-3
		D	—	—	—	—	1	—	1	1	3616 292-3
		C	—	—	—	—	1	—	—	—	3616 298-9
		C,Y	—	—	—	—	—	1	—	—	3615 914-5
	PILLAR, Quarter Panel Rear Door Lwr.	C	—	—	—	—	—	—	1	1	3720 076-7
	Lwr.	R	—	—	—	—	—	—	1	1	3439 536-7
	Lwr.	W	—	—	—	—	—	—	1	1	3439 538-9
	Upr. Inner	R,W	—	—	—	—	—	—	1	1	3439 546-7
	Upr. Outer	R,W	—	—	—	—	—	—	1	1	3439 550-1
	Upr.	P,D,C	—	—	—	—	—	—	1	1	3674 736-7
	PILLAR, Quarter Panel Tailgate Lock Lower Inner Rt.	R,W	—	—	—	—	—	—	1	1	3482 528
	Lower Inner Lt.	R,W	—	—	—	—	—	—	1	1	3767 637
	Lower Inner Lt.	P,D,C	—	—	—	—	—	—	1	1	3674 747
	Lower Inner	P,D	—	—	—	—	—	—	1	1	3752 491
		C	—	—	—	—	—	—	1	1	3752 492
23-36-54	TAPPING PLATE, Quarter Panel Tailgate Hinge Pillar Lt.	P,D,C	—	—	—	—	—	—	1	1	3720 717
	TAPPING PLATE, Quarter Panel Tailgate Lwr. Latch Striker	R,W,P,D,C	—	—	—	—	—	—	1	1	2860 544
	PANEL, Quarter Panel Tailgate Lower Hinge Reinf. Lt.	P,D,C	—	—	—	—	—	—	1	1	3720 621
23-36-55	GRILLE, Body Lock Pillar Exhaust	P,D,C,Y	—	2	—	—	2	2	2	2	3756 639
23-36-58	BRACKET, Quarter Panel Wheelhouse to Rr. Door Lock Pillar Brace	R,W	—	—	—	—	—	—	1	1	3499 822-3
23-36-66	REINFORCEMENT, Body Lock Pillar	V,L	—	1	—	1	—	—	—	—	2604 850-1
	To Side Sill	B,J	—	1	—	—	—	—	—	—	3444 616-7
	To Side Sill Complete	B,J	—	1	—	—	—	—	—	—	3417 608-9
	Upr.	R	1	1	—	—	—	—	—	—	3615 618-9
	Upr.	W	1	1	—	1	—	—	—	—	3615 468-9

TYPE LETTERS Indicates: J - Challenger, B - Barracuda, V - Valiant, L - Dart, R - Satellite, W - Coronet, P - Plymouth, D - Dodge, C - Chrysler, Y - Imperial

NUMERALS INDICATE: 21 - 2 DR. SED., 23 - 2 DR. H.T., 29 - FAST BACK, 41 - 4 DR. SED., 43 - 4 DR. H.T., 45 - 6 PASS. STA. WGN., 46 - 9 PASS. STA. WGN.

AR Indicates use as required.
# Indicates parts not listed in any previous parts book
Numerals in parentheses ( ) refer to notes.
★ Indicates change or addition.

Printed in U.S.A.
November, 1974

Right and left part numbers are on same line, first number is right, second number is left.

CODE	PART NAME	MODEL CODES	SEE BOTTOM NOTE 21	23	29	41	43	45	46	PART NUMBER
23-36-66	REINFORCEMENT Cont'd.									
	To Side Sill	R,W	1	1	1	—	—	—	—	3756 514-5
	Upr.	P,D	—	1	—	—	—	—	—	3756 056-7
	Upr.	C,Y	—	1	—	—	—	—	—	3756 046-7
		P,D,C,Y	—	1	—	—	—	—	—	3756 118-9
	REINFORCEMENT, Body Lock Pillar Lock Striker									
		V,L	—	2	—	2	—	—	—	3615 579
		V,L	—	—	—	—	2	—	—	— 2964 648
		R,W	—	—	—	—	2	—	2	2 3440 180
		P,D,C,Y	—	2	—	—	2	2	2	2 3440 180
23-36-118	PILLAR, Quarter Panel Tailgate									
	Upr.	R,W	—	—	—	—	—	—	1	1 3440 148-9
	PILLAR, Quarter Panel Tailgate Opening Upper									
	Outer Rr.	P	—	—	—	—	—	—	1	1 3720 614-5
	Outer Rr.	C	—	—	—	—	—	—	1	1 3720 616-7
	EXTENSION, Quarter Panel Tailgate Opening Upper Outer Rr.	D	—	—	—	—	—	—	1	1 3674 742-3
	EXTENSION, Quarter Panel Tailgate Opening Rr. Supt. to Lock Pillar Rt.	P,D,C	—	—	—	—	—	—	1	1 3674 748
23-36-123	HANDLE, Quarter Panel Outside Tailgate Pillar Upper Assist	P,D,C	—	—	—	—	—	—	1	1 3767 334-5
23-36-125	REINFORCEMENT and T/PLATE, Quarter Panel Tailgate Hinge Pillar Upr.	P,D,C	—	—	—	—	—	—	1	1 3752 424
	REINFORCEMENT, Tailgate Hinge Pillar Lower Lt.	P,D,C	—	—	—	—	—	—	1	1 3696 480
	REINFORCEMENT, Quarter Panel Tailgate Inner to Outer Pillar Hinge Inner Rt.	R,W	—	—	—	—	—	—	1	1 3440 884
	Outer Lt.	R,W	—	—	—	—	—	—	1	1 3440 885
	REINFORCEMENT and T/Plate, Quarter Panel Tailgate Lower Hinge	P,D,C	—	—	—	—	—	—	1	1 3752 497
	SUPPORT, Quarter Panel Tailgate Pillar To Roof Rail Rr.	R	—	—	—	—	—	—	1	1 3767 204-5
	To Roof Rail Rr.	W	—	—	—	—	—	—	1	1 3767 206-7
	To Roof Rail Frt. Rt.	R,W	—	—	—	—	—	—	1	1 3767 520
	Lt.	R,W	—	—	—	—	—	—	1	1 3767 449
	w/Screw To Roof Rail Frt. Rt.	P,D,C	—	—	—	—	—	—	1	1 3767 452
	Lt.	P,D,C	—	—	—	—	—	—	1	1 3767 061
	BRACE, Quarter Panel Wheelhouse to Rr. Door Lock Pillar									
		R,W	—	—	—	—	—	—	1	1 3499 820-1
23-36-134	DEFLECTOR, Roof Rr. Air, w/Stud	P,D,C	—	—	—	—	—	—	1	1 3720 785
	w/Stud	R,W	—	—	—	—	—	—	1	1 3579 672
	Nut and Seal	R,W,P,D,C	—	—	—	—	—	—	AR	AR 6028 886
23-36-138	GASKET, Quarter Panel Tailgate Outside Assist Handle, Upr.	P,D,C,	—	—	—	—	—	—	—	1 3767 336-7
	Lwr.	P,D,C	—	—	—	—	—	—	—	2 3767 338
23-38-1	**CONSOLE, Floor Tunnel**	V,L	—	1	—	1	—	—	—	— 3415 844
	BASE, Floor Console Upper	B,J,R,W	1	1	—	1	—	—	—	— 3500 HX9
	Standard Trans. Lower	B,J,R,W	1	1	—	1	—	—	—	— 3542 GX9
	Auto Trans. Lower	B,J,R,W	1	1	—	1	—	—	—	— 3541 GX9
23-38-3	LID, Floor Console Compartment	V,L	—	1	—	1	—	—	—	— 3415 685
	Hang Ten Spring Spec. After 1-17-74	L	—	—	—	1	—	—	—	— 3762 654
23-38-5	FINISH PLATE, Floor Console Manual Trans. w/Vinyl Insert	V,L	—	—	—	1	—	—	—	— 2877 234
	Auto Trans. w/Vinyl Insert	V,L	—	1	—	1	—	—	—	— 2877 233

TYPE LETTERS Indicates: J - Challenger, B - Barracuda, V - Valiant, L - Dart, R - Satellite, W - Coronet, P - Plymouth, D - Dodge, C - Chrysler, Y - Imperial

NUMERALS INDICATE: 21 - 2 DR. SED., 23 - 2 DR. H.T., 29 - FAST BACK, 41 - 4 DR. SED., 43 - 4 DR. H.T., 45 - 6 PASS. STA. WGN., 46 - 9 PASS. STA. WGN.

AR Indicates use as required.
# Indicates parts not listed in any previous parts book
Numerals in parentheses (.) refer to notes.
★ Indicates change or addition.

Printed in U.S.A.
November, 1974

Right and left part numbers are on same line, first number is right, second number is left.

CODE	PART NAME	MODEL CODES	SEE BOTTOM NOTE 21	23	29	41	43	45	46	PART NUMBER
23-38-5	FINISH PLATE Cont'd.									
	Auto. Trans. Spring Special Frt.	L	—	—	—	1	—	—	—	— 3762 656
	Plate Base, Manual	B,J,R,W	1	1	—	1	—	—	—	— 3550 074
	Plate Base, Auto.	B,J,R,W	1	1	—	1	—	—	—	— 3550 076
23-38-14	HINGE, Floor Console Compartment Lid	V,L	—	1	—	1	—	—	—	— 3415 686
		B,J,R,W	1	1	—	1	—	—	—	— 3415 131
23-38-15	LATCH, Console	V,L	—	1	—	1	—	—	—	— 3508 038
23-38-27	BRACKET, Floor Console Compartment Lid Opening Stop	V,L	—	1	—	1	—	—	—	— 2589 598
	BRACKET, Console to Floor Pan Mounting Frt.	V,L	—	1	—	1	—	—	—	— 2839 184
	BRACKET, Console Gear Selector to Floor Pan Mtg. w/Nut	V,L	—	1	—	1	—	—	—	— 2839 186
	BRACKET, Console to Floor Frt.	B,J,R,W	1	1	—	1	—	—	—	— 3444 275
	Rr.	B,J,R,W	1	1	—	1	—	—	—	— 3444 277
23-38-29	BUMPER, Floor Tunnel Console Lid	V,L	—	2	—	2	—	—	—	— 1651 493
23-38-45	REINFORCEMENT, Console Compartment Lid Opening Stop Brkt.	V,L	—	1	—	1	—	—	—	— 2656 088
23-38-46	STRIKER, Floor Console Lid Latch	V,L	—	1	—	1	—	—	—	— 3415 687
		B,J,R,W	1	1	—	1	—	—	—	— 2879 805
23-38-48	PLATE, Console Rear Opening	V,L	—	1	—	1	—	—	—	— 2656 090
23-39-2	**SPRING, Door Manual Window Regulator**									
	Assist Frt.	V,L	—	2	—	2	—	—	—	— 3796 512
	Frt.	V,L	—	—	—	—	2	—	—	— 2583 559
	Rr.	V,L	—	—	—	—	2	—	—	— 2520 534
	Frt.	R,W	—	—	—	—	2	—	2	2 2520 490
	Rr.	R,W	—	—	—	—	2	—	2	2 3508 121
	Frt.	B,J	—	2	—	—	—	—	—	— 3454 237
	Frt.	R,W	2	2	—	2	—	—	—	— 3695 009
	Frt.	P,D,C	—	—	—	—	2	2	2	2 3796 513
	Rr.	P,D,C	—	—	—	—	2	2	2	2 3796 513
	Frt.	P,D,C	—	2	—	—	—	—	—	— 3796 510
23-39-5	REGULATOR, Door Window Frt.	V,L	—	1	—	1	—	—	—	— 3695 604-5
	Frt.	V,L	—	—	—	—	1	—	—	— 2765 792-3
	Rr.	V,L	—	—	—	—	1	—	—	— 2583 064-5
	Frt.	B	—	1	—	—	—	—	—	— 3796 472-3
	Frt.	J	—	1	—	—	—	—	—	— 3796 474-5
	Frt.	R,W	1	1	—	1	—	—	—	— 3695 672-3
	Frt.	R,W	—	—	—	—	1	—	1	1 3695 674-5
	Rr.	R,W	—	—	—	—	1	—	1	1 3695 002-3
	Frt.	P,D,C	—	1	—	—	—	—	—	— 3695 138-9
	w/Vent Window Frt.	P,D,C	—	—	—	—	1	—	1	1 3760 338-9
	w/Vent Window Frt.	P,D,C	—	—	—	—	—	1	—	— 3796 790-1
	w/o Vent Window Frt.	P,D,C	—	—	—	—	1	1	1	1 3695 140-1
	Rr.	P,D,C	—	—	—	—	1	1	1	1 3760 860-1
	Screw and Washer	All	AR	AR	—	AR	AR	AR	AR	AR 6030 163
	ARM, Frt. Door Manual Window Regulator Manual Vent, w/o Power Windows	P,D,C	—	—	—	—	—	2	—	— 3796 793
23-39-15	STOP, Window Regulator Down on Plate Frt.	V,L,P,D,C	—	2	—	2	2	2	2	2 1909 918
	Rr.	V,L	—	—	—	—	2	—	—	— 1909 918
	Rr.	P,D,C	—	—	—	—	2	2	2	2 1909 918
	Qtr.	V,L,B,J	—	2	—	—	—	—	—	— 1909 918

NOTE: Also see Code 23-64-12

TYPE LETTERS Indicates J - Challenger, B - Barracuda, V - Valiant, L - Dart, R - Satellite, W - Coronet, P - Plymouth, D - Dodge, C - Chrysler, Y - Imperial

NUMERALS INDICATE: 21 - 2 DR. SED., 23 - 2 DR. H.T., 29 - FAST BACK, 41 - 4 DR. SED., 43 - 4 DR. H.T., 45 - 6 PASS. STA. WGN., 46 - 9 PASS. STA. WGN.

AR Indicates use as required.
# Indicates parts not listed in any previous parts book
Numerals in parentheses ( ) refer to notes.
★ Indicates change or addition.

Printed in U.S.A.
November, 1974

Right and left part numbers are on same line, first number is right, second number is left.

CODE	PART NAME	MODEL CODES	SEE BOTTOM NOTE 21	23		29	41	43	45	46	PART NUMBER
23-39-19	BRACKET, Door Regulator Arm Pivot Rr.	P,D,C,Y	—	—	—	—	1	1	1	1	3788 196-7
	CHANNEL and BRACKET, Front Door Window Regulator Pivot w/o Manual Vent	P,D,C,Y	—	—	—	—	2	2	2	2	3788 134
	w/Vent	P,D,C,Y	—	—	—	—	—	2	—	—	3788 530
	BRACKET, Rear Door Window Regulator Arm Pivot w/Screw	R,W	—	—	—	—	2	—	2	2	3759 611
23-39-24	SUPPORT and GUIDE, Door Window Regulator Arm Pivot	B	—	2	—	—	—	—	—	—	3417 250
		J	—	2	—	—	—	—	—	—	3417 445
	GUIDE, Frt. Door Window Regulator Arm Pivot w/Clip	R,W	2	2	—	2	—	—	—	—	3684 712
		R,W	2	2	—	2	—	—	—	—	3684 713
	SUPPORT, Frt. Door Window Regulator Arm Pivot Guide	R,W	2	2	—	2	2	—	2	2	3499 282
	CHANNEL, Quarter Window Regulator Pivot w/Screw	P,D,C,Y	—	2	—	—	—	—	—	—	3759 363
	NOTE: Also see Code 23-09-52										
23-39-34	REGULATOR, Quarter Window	V,L	—	1	—	—	—	—	—	—	2862 224-5
		B	—	1	—	—	—	—	—	—	2999 380-1
		J	—	1	—	—	—	—	—	—	2999 382-3
		R,W	—	1	—	1	—	—	—	—	3670 290-1
		P,D,C	—	1	—	—	—	—	—	—	3695 312-3
	Screw and Washer	All	—	6	—	—	—	—	—	—	6030 163
23-39-44	SPRING, Quarter Window Regulator Assist.	V,L	—	2	—	—	—	—	—	—	2583 824
	SPRING, Quarter Manual Window Regulator Anti-Rattle	B,J	—	2	—	—	—	—	—	—	3760 020
23-39-45	ROLLER, Door Window Regulator Arm Frt. and Rr. Door	V,L	—	—	—	—	2	—	—	—	2486 982
	Frt. Door	B,J	—	2	—	—	—	—	—	—	1697 607
	ROLLER, Frt. Door Glass Stabilizer Adjusting	R,W	—	2	—	2	2	—	2	2	3582 015
	Adj. Screw	R,W	—	2	—	2	2	—	2	2	6029 281
	ROLLER, Quarter Window Glass Track	R,W	4	4	—	—	—	—	—	—	3759 531
	Frt.	R,W	2	2	—	—	—	—	—	—	3582 184
	ROLLER, Quarter Window Rr. Track Slide	V,L	—	2	—	—	—	—	—	—	2862 330
	ROLLER, Quarter Window Regulator Frt. Arm	V,L	—	2	—	—	—	—	—	—	2486 982
	Rr. Arm	V,L	—	2	—	—	—	—	—	—	2486 982
	Pivot Arm	V,L	—	2	—	—	—	—	—	—	1697 607
		P,D,C	—	2	—	—	—	—	—	—	1697 607
	SLIDE PACKAGE, Manual Window Regulator Arm, Canada	All	AR	AR	—	AR	AR	AR	AR	AR	3744 735
23-39-48	BRACKET, Quarter Window Regulator Arm Pivot	V,L	—	2	—	—	—	—	—	—	2782 680
		B,J	—	2	—	—	—	—	—	—	2963 098
23-39-49	BRACKET, Quarter Window Regulator Arm Pivot	B,J	—	2	—	2	—	—	—	—	3417 174
23-40-82	**SUPPORT, Rr. Window Frame to Rr. Headlining Bow**	V,L	—	—	—	2	—	—	—	—	3415 840
		V	—	—	—	—	2	—	—	—	2657 042
		L	—	2	—	—	—	—	—	—	2788 320
		L	—	—	—	—	2	—	—	—	2879 742
		B,J	—	2	—	—	—	—	—	—	2879 971
		R,W	2	2	—	2	—	—	—	—	3416 027

TYPE LETTERS Indicates J - Challenger, B - Barracuda, V - Valiant, L - Dart, R - Satellite, W - Coronet, P - Plymouth, D - Dodge, C - Chrysler, Y - Imperial

NUMERALS INDICATE: 21 - 2 DR. SED., 23 - 2 DR. H.T., 29 - FAST BACK, 41 - 4 DR. SED., 43 - 4 DR. H.T., 45 - 6 PASS. STA. WGN., 46 - 9 PASS. STA. WGN.

AR Indicates use as required.
# Indicates parts not listed in any previous parts book
Numerals in parentheses ( ) refer to notes.
★ Indicates change or addition.

Printed in U.S.A.
November, 1974

Right and left part numbers are on same line, first number is right, second number is left.

CODE	PART NAME	MODEL CODES	SEE BOTTOM NOTE 21	23	29	41	43	45	46	PART NUMBER
23-40-82	SUPPORT Cont'd.									
		R,W	—	—	—	2	—	—	—	3416 028
		P,D	—	2	—	—	—	—	—	3762 130
		C,Y	—	2	—	—	—	—	—	3762 129
		C	—	—	—	2	—	—	—	3762 128
		P,D	—	—	—	2	—	—	—	3762 127
		P,D,C	—	—	—	—	—	2	2	3762 130
	SUPPORT, Rear Headlining and Listing Wire									
		V,L	—	—	—	2	—	—	—	2879 742
23-40-85	RAIL, Roof Side	V,L	—	—	—	1	—	—	—	3611 448-9
	w/Soft Headlining Inner	V,L	—	1	—	—	—	—	—	3674 394-5
	Inner	V,L	—	1	—	—	—	—	—	3767 348-9
	w/Reinf. Inner	V,L	—	—	1	—	—	—	—	# 3752 674-5
	Outer	V,L	—	—	1	—	—	—	—	2965 668-9
	Outer	V,L	—	1	—	—	—	—	—	3446 198-9
	Inner	B	—	1	—	—	—	—	—	3767 132-3
	Outer Rr.	B	—	1	—	—	—	—	—	3500 592-3
	Outer Frt.	B,J	—	1	—	—	—	—	—	3767 134-5
	Inner	J	—	1	—	—	—	—	—	3767 180-1
	Outer Rr.	J	—	1	—	—	—	—	—	3500 590-1
	Outer Frt.	R,W	—	—	—	—	—	1	1	3767 118-9
	Outer Rr.	R,W	—	—	—	—	—	1	1	3440 092-3
	Rr. Corner Inner	R,W	—	—	—	—	—	1	1	3440 100-1
	Rr. Corner Outer	R,W	—	—	—	—	—	1	1	3440 094-5
	Inner Frt.	R,W	—	—	—	—	—	1	1	3767 110-11
	Inner. Rr.	R,W	—	—	—	—	—	1	1	3440 098-9
		R,W	1	1	—	1	—	—	—	3674 174-5
	Inner	R,W	1	1	—	1	—	—	—	3767 564-5
	w/Reinf. and Nut Inner	R,W	1	1	—	1	—	—	—	3752 998-9
	Outer	R,W	1	1	—	1	—	—	—	3445 842-3
	Inner	R,W	—	—	—	—	1	—	—	3767 186-7
	w/Nut Inner	R,W	—	—	—	—	1	—	—	3674 192-3
	Outer	R,W	—	—	—	—	1	—	—	3767 108-9
	w/Reinf. and Nut Inner	P,D	—	1	—	—	—	—	—	3752 994-5
	w/Reinf. and Nut Inner	P,D	—	—	—	—	1	—	—	3752 996-7
	w/Reinf. and Nut Inner	C,Y	—	1	—	—	1	1	—	3752 420-1
	Lower	P,D,C	—	—	—	—	1	—	—	3674 894-5
	Frt. Inner	P,D,C	—	—	—	—	—	1	1	3674 532-3
	Lower Frt.	P,D,C	—	—	—	—	—	1	1	3720 318-9
	Rr. Corner Outer	P,D,C	—	—	—	—	—	1	1	3674 310-1
	Outer Frt.	P,D,C	—	—	—	—	—	1	1	3674 544-5
	Outer Rr.	P,D,C	—	—	—	—	—	1	1	3674 546-7
	Inner Rr.	P,D,C	—	—	—	—	—	1	1	3674 536-7
	Outer	P,D	—	1	—	—	—	—	—	3720 246-7
	Outer	P,D,C	—	—	—	—	1	—	—	3674 542-3
	Outer	P,D,C,Y	—	—	—	—	—	1	—	3674 538-9
	Outer	C,Y	—	1	—	—	—	—	—	3674 538-9
	Bottom	P,D,C	—	1	—	—	—	—	—	3720 430-1
	Bottom	P,D,C	—	—	—	—	1	—	—	3720 516-7
23-40-86	REINFORCEMENT, Roof Bow to Windshield Header for Roof Flasher Signal	R,W	—	—	—	—	1	—	—	3445 854
		R,W	—	—	—	—	—	1	1	3499 906
	SUPPORT, Roof Panel Outside Flasher Light or Siren	P,D,C	—	—	—	—	—	1	1	3720 920
		P,D,C	—	—	—	—	1	—	—	3720 921
23-40-91	WELT, Roof to Roof Side Rail Sealing	P,D,C,Y	—	2	—	—	2	2	2	2 3767 500
	WELT, Roof to Side Rail Supt. Sealing	P,D,C,Y	—	—	—	—	2	2	2	2 3767 503

TYPE LETTERS Indicates J - Challenger V - Valiant R - Satellite P - Plymouth C - Chrysler
B - Barracuda L - Dart W - Coronet D - Dodge Y - Imperial

NUMERALS INDICATE: 21 - 2 DR. SED. 41 - 4 DR. SED. 45 - 6 PASS. STA. WGN.
23 - 2 DR. H.T. 29 - FAST BACK 43 - 4 DR. H.T. 46 - 9 PASS. STA. WGN.

AR Indicates use as required. Numerals in parentheses ( ) refer to notes. Printed in U.S.A.
# Indicates parts not listed in any previous parts book ★ Indicates change or addition. November, 1974

Right and left part numbers are on same line, first number is right, second number is left.

CODE	PART NAME	MODEL CODES	SEE BOTTOM NOTE 21	23		29	41	43	45	46	PART NUMBER
23-40-92	EXTENSION, Roof Side Rail										
	Outer	V,L	—	—	—	1	—	—	—	—	3720 462-3
	Outer Rr.	B	—	1	—	—	—	—	—	—	3500 582-3
	Outer Rr.	J	—	1	—	—	—	—	—	—	3500 574-5
		R,W	1	1	—	1	—	—	—	—	3720 450-1
23-40-96	SUPPORT, Wheelhouse to Roof Side Rail	P,D	—	1	—	—	—	1	—	—	3720 160-1
		P,D	—	—	—	—	1	—	—	—	3720 162-3
		C	—	—	—	—	1	—	—	—	3720 164-5
		C,Y	—	1	—	—	—	1	—	—	3720 166-7
		R,W	—	—	—	—	1	—	—	—	3445 078-9
	SUPPORT, Quarter Panel Wheelhouse to Roof Side Rail	P,D	—	1	—	—	—	—	—	—	3720 224-5
	SUPPORT, Roof Side Rail Extension to Quarter Outside Panel Seal										
		R,W	1	1	—	1	—	—	—	—	3499 600-1
23-40-150	RAIL, Roof Luggage Rack										
	Side	R,W	—	—	—	—	—	—	2	2	3720 125
	Side	P,D,C	—	—	—	—	—	—	2	2	3767 474
23-40-155	CROSS BAR, Roof Lugg. Rack Frt. & Rr.	RW	—	—	—	—	—	—	2	2	3720 133
	Frt.	P,D,C	—	—	—	—	—	—	2	2	3767 484
	Rr.	P,D,C	—	—	—	—	—	—	1	1	3767 465
	SCREW, Roof Luggage Rack Rr. Cross Bar to Brkt.	P,D,C	—	—	—	—	—	—	4	4	6030 433
	STRIP, Roof Luggage Rack Skid										
		R,W	—	—	—	—	—	—	5	5	3720 139
	Center	P,D,C	—	—	—	—	—	—	1	1	3810 112
	Intermediate	P,D,C	—	—	—	—	—	—	2	2	3810 182
	Outer	P,D,C	—	—	—	—	—	—	2	2	3767 467
23-40-157	SPACER, Roof Luggage Rack Skid Strip	R,W	—	—	—	—	—	—	15	15	3499 754
	SPACER, Roof Luggage Rack Side Rail Supt.										
	Frt.	P,D,C	—	—	—	—	—	—	1	1	3767 468-9
	Rr.	P,D,C	—	—	—	—	—	—	1	1	3767 470-1
	Center	P,D,C	—	—	—	—	—	—	1	1	3810 066
23-40-170	SUPPORT or STANCHION, Roof Luggage Rack Side	R,W	—	—	—	—	—	—	2	2	3720 126-7
	BRACKET, Roof Luggage Rack Cross Bar	P,D,C	—	—	—	—	—	—	1	1	3810 128-9
	SUPPORT, Roof Luggage Rack Side Rail Frt.	P,D,C	—	—	—	—	—	—	1	1	3767 480-1
	Rr.	P,D,C	—	—	—	—	—	—	1	1	3767 478-9
	SUPPORT, Roof Luggage Rack Center										
	Upr.	P,D,C	—	—	—	—	—	—	1	1	3810 158
	Lwr.	P,D,C	—	—	—	—	—	—	1	1	3767 482
	BRACKET, Roof Luggage Rack Cross Bar	R,W	—	—	—	—	—	—	2	2	3720 732-3
23-40-171	NUT, Roof Luggage Rack to Roof Screw	R,W,P,D,C,	—	—	—	—	—	—	8	8	2094 869
23-40-180	T/PLATE, Roof Luggage Rack Cross Bar	R,W,P,D,C	—	—	—	—	—	—	AR	AR	3720 135
23-40-187	PAD, Roof Luggage Rack Skid Strip	R,W	—	—	—	—	—	—	5	5	3720 137
	PAD, Luggage Rack Support To Roof Canada	R,W	—	—	—	—	—	—	2	2	3720 130-1
23-41-4	**REGULATOR, Electric Window**										
	Frt.	R,W	1	1	—	1	—	—	—	—	3548 750-1
	Qtr.	R,W	1	1	—	1	—	—	—	—	3695 114-5
	Frt.	R,W	—	—	—	—	1	—	1	1	3548 748-9
	Rr.	R,W	—	—	—	—	1	—	1	1	3548 802-3
	Qtr.	P,D,C,Y	—	1	—	—	—	—	—	—	3695 316-7
	Frt.	P,D,C,Y	—	1	—	—	—	—	—	—	3760 276-7

TYPE LETTERS Indicates J - Challenger, B - Barracuda, V - Valiant, L - Dart, R - Satellite, W - Coronet, P - Plymouth, D - Dodge, C - Chrysler, Y - Imperial

NUMERALS INDICATE: 21 - 2 DR. SED., 23 - 2 DR. H.T., 29 - FAST BACK, 41 - 4 DR. SED., 43 - 4 DR. H.T., 45 - 6 PASS. STA. WGN., 46 - 9 PASS. STA. WGN.

AR Indicates use as required.
# Indicates parts not listed in any previous parts book
Numerals in parentheses ( ) refer to notes.
★ Indicates change or addition.

Printed in U.S.A.
November, 1974

Right and left part numbers are on same line, first number is right, second number is left.

CODE	PART NAME	MODEL CODES	SEE BOTTOM NOTE 21	23	29	41	43	45	46	PART NUMBER
23-41-4	REGULATOR Cont'd.									
	w/o Vent Frt.	P,D,C,Y	—	—	—	—	1	1	1	1	3760 248-9
	w/Vent Frt.	P,D,C,Y	—	—	—	—	1	1	1	1	3796 794-5
	Rr.	P,D,C,Y	—	—	—	—	1	1	1	1	3760 858-9
23-41-7	SPRING, Electric Window Regulator Assist. Frt.	R,W	2	2	—	2	—	—	—	—	3548 637
	Frt.	R,W	—	—	—	—	2	—	2	2	2520 556
	Rr.	R,W	—	—	—	—	2	—	2	2	3548 665
	Frt.	P,D,C,Y	—	2	—	—	—	—	—	—	3796 511
	Frt.	P,D,C,Y	—	—	—	—	2	2	2	2	3796 514
	Rr.	P,D,C,Y	—	—	—	—	2	2	2	2	3796 514
23-41-27	RELAY w/Bracket, Electric Window Lift	R,W	—	1	—	1	1	—	1	1	2932 834
		P,D,C	—	1	—	—	1	1	1	1	2932 834
		Y	—	1	—	—	—	1	—	—	2932 834
23-41-34	GEAR and SEAL PACKAGE, Electric Window Regulator Mechanism	R,W									
		P,D,C,Y	—	AR	—	AR	AR	AR	AR	AR	2932 973
	Door & Qtr. Window Canada	R,W	AR	AR	—	AR	—	—	—	—	2808 914
23-41-53	BRACKET, Frt. Door Electric Window Regulator Mechanism and Motor Mtg. Lt.	P,D,C	—	1	—	—	1	1	1	1	3796 341
23-41-55	WIRING, Electric Window Lift Qtr.	R,W	2	2	—	2	—	—	—	—	3513 501
	Door Rt.	R,W	1	1	—	1	1	—	1	1	3513 377
	Door Lt.	R,W	1	1	—	1	1	—	1	1	3513 633
	w/o Halo Roof, Frt. Door Lt.	W	—	—	—	1	—	—	—	—	3588 981
	Rr. Door	R,W	—	—	—	—	2	—	2	2	3513 500
	w/Power Windows, w/o Power Door Locks	P,D,C-L, C-M,C-H,C-P	—	2	—	—	2	2	2	2	3764 252
	w/o Power Windows, w/Power Door Locks	P,D,C	—	1	—	—	1	1	1	1	# 3764 253
	w/o Power Door Locks	C-S,Y	—	2	—	—	2	2	—	—	3764 257
	w/Power Door Locks	C-S,Y	—	—	—	—	2	2	—	—	3764 541
	w/Power Door Locks, w/o Power Windows Rr. Door	C-L,C-M,C-H	—	—	—	—	2	2	—	—	3764 885
	w/Power Door Locks, w/Power Windows Rr. Door	C-L,C-M,C-H	—	—	—	—	2	2	—	—	3764 829
	w/Power Windows, w/Power Door Locks w/Opera Window After 1-18-74	P,D	—	1	—	—	—	—	—	—	3764 341
	w/Power Door Locks, w/Power Windows Rr. Door	P,D	—	—	—	—	2	2	2	2	3764 535
	w/Power Door Locks, w/Power Windows Rr. Door	C	—	—	—	—	—	—	2	2	3764 535
	w/Power Windows, w/o Power Door Locks Rr. Door	P,D,C-L, C-M,C-H,C-P	—	—	—	—	2	2	—	—	3764 537
	w/Power Windows, w/o Power Door Locks Rr. Door	C-S	—	—	—	—	2	2	—	—	3764 542
	w/Power Windows, w/o Power Door Locks Rr. Door	Y	—	—	—	—	—	2	—	—	3764 542
	w/Power Windows, w/Power Seats w/Power Tailgate Inst. Panel	P,D,C	—	1	—	—	1	1	1	1	3764 239
	w/Power Windows Rr. Qtr.	P,D,C-L, C-M,C-H	—	2	—	—	—	—	—	—	3764 538
	w/Power Windows, w/Power Seats	P,D,C	—	1	—	—	1	1	—	—	3764 239
	w/Power Windows w/Power Door Locks	P,D,C-L, C-M,C-H,C-P	—	1	—	—	1	1	1	1	3764 254
	w/Power Windows, w/Power Door Locks	C-S,Y	—	1	—	—	1	1	—	—	3764 255

TYPE LETTERS Indicates J - Challenger, B - Barracuda, V - Valiant, L - Dart, R - Satellite, W - Coronet, P - Plymouth, D - Dodge, C - Chrysler, Y - Imperial

NUMERALS INDICATE: 21 - 2 DR. SED., 23 - 2 DR. H.T., 29 - FAST BACK, 41 - 4 DR. SED., 43 - 4 DR. H.T., 45 - 6 PASS. STA. WGN., 46 - 9 PASS. STA. WGN.

AR Indicates use as required.
# Indicates parts not listed in any previous parts book
Numerals in parentheses ( ) refer to notes.
★ Indicates change or addition.

Printed in U.S.A.
November, 1974

Right and left part numbers are on same line, first number is right, second number is left.

CODE	PART NAME	MODEL CODES	SEE BOTTOM NOTE 21	23	29	41	43	45	46	PART NUMBER
23-41-55	WIRING Cont'd.									
	WIRING, Window Lift Safety Relay	R,W	—	1	— 1	1	—	1	1	3588 176
23-41-95	GROMMET, Electric Window Lift and Door Locks Wiring Frt. Pillar	P,D,C,Y	—	2	— —	2	2	2	2	3764 770
23-41-106	MOTOR and MECHANISM, Electric Window Lift Frt. Door	R,W	1	1	— 1	—	—	—	—	3548 746-7
	Frt. Door	R,W	—	—	— —	1	—	1	1	3508 206-7
	Rr. Door	R,W	—	—	— —	1	—	1	1	3586 312-3
	Rt. Frt. and Rr. Door	P,D,C,Y	—	1	— —	1	1	1	1	3548 364
	Lt. Frt. and Rr. Door	P,D,C,Y	—	1	— —	1	1	1	1	3760 247
	Qtr.	R,W	1	1	— 1	—	—	—	—	3760 528-9
	After 10-27-73 Qtr.	R,W	1	1	— 1	—	—	—	—	# 3861 106-7
	Qtr.	P,D,C,Y	—	1	— —	—	—	—	—	3760 586-7
23-41-170	SWITCH, Right Front Door Window Lift w/Power Door Locks	C-S,Y	—	1	— —	1	1	—	—	3746 689
	SWITCH, Left Front Door Window Lift and Lock Out w/o Power Door Locks,	C-S,Y	—	1	— —	1	1	—	—	3746 688
	w/Power Door Locks	C-S,Y	—	1	— —	1	1	—	—	3746 687
	SWITCH, Door and Quarter Window Lift Single	R,W,								
	Except C-S	P,D,C,	—	2	— 2	2	2	2	2	2926 118
	Single	C-S,Y	—	2	— —	2	2	—	—	2926 304
	SWITCH, Electric Window Lift Lt. Frt. Door 4 Gang except C-S	R,W								
		P,D,C	1	1	— 1	1	1	1	1	2926 117
	w/o Halo Roof, Dual	W	—	—	— 1	—	—	—	—	3488 919
23-41-176	INSULATOR and CLIP, Door and Quarter Electric Window Regulator	P,D,C,Y	—	AR	— —	AR	—	AR	AR	3764 849
23-41-182	SPACER, Door Electric Window Lift Switch Frt. Lt. Black	R,W	—	—	— —	1	—	1	1	D733 JX9
	Rr. Black	R,W	—	—	— —	2	—	2	2	D732 JX9
23-41-184	RETAINER, Window Lift Switch Right Frt. Door Rear Door and Quarter Single	R,W								
		P,D,C	AR	AR	— AR	AR	AR	AR	AR	2926 122
	Lt. Frt. Door 4 Gang	R,W								
		P,D,C	AR	AR	— AR	AR	AR	AR	AR	2926 121
	Lt. Frt. Door Double	W	—	—	— AR	—	—	—	—	3488 920
23-41-250	ROLLER, Electric Window Regulator Pivot Arm Qtr.	P,D,C,Y	—	2	— —	—	—	—	—	1697 607
23-41-270	HOUSING w/SHAFT, Electric Window Regulator Mechanism Frt. Door, Rear Door and Quarter	R,W	4	4	— 4	4	—	4	4	2520 914-5
23-41-286	O-RING, Frt. Door Electric Window Regulator Mechanism and Motor	R,W,P, D,C,Y	2	2	— 2	2	2	2	2	1316 863
	O-RING, Quarter Electric Window Regulator	P,D,C,Y	—	2	— —	—	—	—	—	1316 863
23-42-13	**RUN, Frt. Door V/Wing Divisional Channel Door Glass**	V,L	—	—	— —	2	—	—	—	2570 243
	RUN, Rr. Door Divisional Channel Door Glass	V,L	—	—	— —	2	—	—	—	2570 243
23-42-16	RUN, Frt. Door Glass w/Retainer	R,W	—	—	— —	1	—	1	1	3696 440-1

TYPE LETTERS Indicates	J - Challenger B - Barracuda	V - Valiant L - Dart	R - Satellite W - Coronet	P - Plymouth D - Dodge	C - Chrysler Y - Imperial
NUMERALS INDICATE:	21 - 2 DR. SED. 23 - 2 DR. H.T.	29 - FAST BACK	41 - 4 DR. SED. 43 - 4 DR. H.T.		45 - 6 PASS. STA. WGN. 46 - 9 PASS. STA. WGN.

AR Indicates use as required.
# Indicates parts not listed in any previous parts book
Numerals in parentheses ( ) refer to notes.
★ Indicates change or addition.

Printed in U.S.A.
November, 1974

Right and left part numbers are on same line, first number is right, second number is left.

CODE	PART NAME	MODEL CODES	SEE BOTTOM NOTE 21	23	29	41	43	45	46	PART NUMBER
23-42-16	RUN Cont'd.									
	RUN, Frt. Door Glass Track Stabilizer Guide									
		B,J	—	2	—	—	—	—	—	—	3582 025
		R,W	2	2	—	2	2	—	2	2	3582 882
	RUN, Frt. Door Glass Rr. Channel	V,L	—	—	—	—	2	—	—	—	2663 479
	CANADA	R,W	—	—	—	—	2	—	2	2	3581 478
	RUN, Frt. Door Upper Frame Extension Channel									
		R,W	—	—	—	—	2	—	2	2	3581 478
	RUN, Frt. Door Glass									
	w/o Vent Wdo.	P,D,C	—	—	—	—	2	—	2	2	3759 183
	w/Vent Wdo.	P,D,C	—	—	—	—	2	—	2	2	3788 261
23-42-23	RUN, Rear Door Glass Front	V,L	—	—	—	—	2	—	—	—	2663 790
	RUN, Rear Door Glass	R,W	—	—	—	—	2	—	—	—	3440 038
		R,W	—	—	—	—	—	—	2	2	3581 877
		P,D	—	—	—	—	2	—	—	—	3759 186
		C	—	—	—	—	2	—	—	—	3759 780
		P,D,C	—	—	—	—	—	—	2	2	3759 781
23-42-32	RETAINER, Quarter Panel Tailgate Glass Weatherstrip									
		R,W	—	—	—	—	—	—	1	1	3581 208-9
	RETAINER and MLDG., Tailgate Glass Weatherstrip Upper	P,D,C	—	—	—	—	—	—	1	1	3788 006-7
	After March 1, 1974	P,D,C	—	—	—	—	—	—	1	1	3788 402-3
	CAP, Tailgate Weatherstrip Upper Retainer	P,D,C	—	—	—	—	—	—	1	1	3759 517
	RETAINER, Rr. Tailgate Glass Opening Upper Weatherstrip									
		R,W	—	—	—	—	—	—	1	1	3440 126
23-45-29	**PLATE, Front Seat Cushion Bumper** w/Bucket Seats									
		R,W	2	2	—	2	—	—	—	—	3447 740
23-45-30	BUMPER, Frt. Seat Back to Cushion									
	w/Bucket Seats	R,W	AR	AR	—	AR	—	—	—	—	3594 092
	w/Spring & Washer	R,W	AR	AR	—	AR	—	—	—	—	3594 091
	Split Bench w/Center Arm Rest	R,W,P,D	—	AR	—	AR	AR	AR	AR	—	3594 995
23-45-31	WASHER, Front Seat Back To Cushion Center Hinge Anti-Rattle	R,W,P,D	—	1	—	1	1	1	1	1	3689 638
	SCREW Frt. Seat Back To Cushion Mtg. Bench Seat	V,L,R,W,P,D,C	—	—	—	—	4	4	4	4	6030 581
	Bucket Seat Canada	R,W	4	4	—	4	—	—	—	—	6029 529
	PIVOT, (Shoulder Bolt) Frt. Seat Back Hinge Canada	V,L,B,J	—	AR	—	AR	AR	—	—	—	6029 579
	WASHER,	V,L,B,J,R,W	AR	AR	—	AR	—	—	—	—	6029 223
	SNAP RING, Lock & Latch Retaining Canada	V,L,R,W,P,D,C	AR	AR	—	AR	AR	AR	AR	AR	6024 440
	WASHER, Nylon Frt. Seat Latch Canada	All	2	2	—	2	—	—	—	—	6027 330
	RING, Retaining, 50-50 Seat Pivot Pin Canada	P,D,C,Y	—	2	—	—	1	1	1	1	6023 878
	NUT Plastic, Latch Rel. Cable Lower, Canada	P,D,C,Y	—	2	—	—	—	—	—	—	6029 501
23-45-34	SUPPORT, Frt. Seat Back Auto Release Manual Handle Bezel Split Bench	C,Y,	—	1	—	—	—	—	—	—	3765 044
23-45-39	KNOB, Front Seat Back Release Lever									
	Bucket and Straight Bench	V,L,B,J	—	2	—	2	—	—	—	—	3594 536
	KNOB, Frt. Seat Auto, Latch Manual Release Lever Chrome	C,Y	—	2	—	—	—	—	—	—	2888 762
	BUTTON, Frt. Seat Back Latch Release Black	V,L,R,W,P, D,C	2	2	—	2	—	—	—	—	S500 JX9

TYPE LETTERS Indicates: J - Challenger, B - Barracuda, V - Valiant, L - Dart, R - Satellite, W - Coronet, P - Plymouth, D - Dodge, C - Chrysler, Y - Imperial

NUMERALS INDICATE: 21 - 2 DR. SED., 23 - 2 DR. H.T., 29 - FAST BACK, 41 - 4 DR. SED., 43 - 4 DR. H.T., 45 - 6 PASS. STA. WGN., 46 - 9 PASS. STA. WGN.

AR Indicates use as required.
# Indicates parts not listed in any previous parts book
Numerals in parentheses ( ) refer to notes.
★ Indicates change or addition.

Printed in U.S.A.
November, 1974

Right and left part numbers are on same line, first number is right, second number is left.

CODE	PART NAME	MODEL CODES	SEE BOTTOM NOTE							PART NUMBER
			21	23		29	41	43	45	46	
23-45-47	WIRE, Seat Reclining Handle Return Spring Connecting w/Split Seats	P,D,C,Y	—	—	—	—	1	1	1	1	2858 151
23-45-51	SPACER, Frt. Seat Latch Striker Bucket Seats	R,W	2	2	—	2	—	—	—	—	2942 849
23-45-52	**HANDLE, Reclining Front Seat Back** Release	P,D,C,Y	—	—	—	—	1	1	1	1	3594 775
	ACTUATOR, Frt. Seat Back Latch Bench Seats	R,W	1	1	—	1	—	—	—	—	3520 790-1
	Bench Seats	V,L,P,D,C	—	1	—	—	—	—	—	—	3520 972-3
	Split Bench	C,Y	—	1	—	—	—	—	—	—	3765 038-9
	LEVER, Frt. Seat Back Auto. Manual Release Split Bench	C,Y	—	1	—	—	—	—	—	—	3765 040-1
	ACTUATOR, Frt. Seat Latch Release, Bench Seat w/Center Arm Rest CANADA	R,W,P,D,C	—	1	—	1	—	—	—	—	3520 276-7
23-45-55	**SPRING, Front Seat Back Latch** Return	V,L,B,J,R, W,P,D,C,	1	1	—	1	—	—	—	—	2888 738-9
	SPRING, Front Seat Back Latch Return w/Bucket Seats and Auto. Latch	C,Y	—	1	—	—	—	—	—	—	3594 448-9
	SPRING, Front Seat Back Latch Return	V,L	—	2	—	2	—	—	—	—	3594 455
		R,W	1	1	—	1	—	—	—	—	2942 688-9
	SPRING, Front Seat Back Latch Detent	R,W	1	1	—	1	—	—	—	—	3447 974-5
23-45-57	**LOCK, Front Seat Back to Cushion** w/Split Back	V,L	—	—	—	—	2	—	—	—	3689 545
		R,W,P,D,C	—	—	—	—	2	2	2	2	2888 659
	LATCH w/LEVER, Frt. Seat Back Release w/Bench Seats	V,L	—	1	—	1	—	—	—	—	3689 330-1
	LATCH, Front Seat Back w/Bucket Seats	V,L,B,J,R,W	2	2	—	2	—	—	—	—	3689 418
	LATCH and CABLE, Front Seat Rack Manual Release w/Split Bench	P,D,C	—	1	—	—	—	—	—	—	3765 034-5
	LATCH and CONNECTOR, Frt. Seat Back Auto. Release w/Split Bench	C,Y	—	1	—	—	—	—	—	—	3765 236-7
	w/Bucket Seats	R,W	1	1	—	1	—	—	—	—	3689 782-3
23-45-66	**ESCUTCHEON, Front Seat Back** Release Lever	C,Y	—	2	—	—	—	—	—	—	3447 872
	BEZEL, Frt. Seat Latch Release Button	V,L,R,W P,D,C									
	Black		2	2	—	2	—	—	—	—	S501 JX9
	RETAINER, Front Seat Back Latch Release Button w/Bucket Seats	R,W	2	2	—	2	—	—	—	—	3594 211
23-45-76	STRIKER, Bucket Front Seat Back Latch	R,W	1	1	—	1	—	—	—	—	2942 690-1
23-45-184	PIN, Reclining Seat Release Cable to Handle Split Seats	P,D,C,Y	—	—	—	—	1	1	1	1	2609 262
23-45-192	CLIP, Reclining Front Seat Adjusting Cable Split Seats	P,D,C	—	—	—	—	1	1	1	1	2858 422

TYPE LETTERS Indicates: J - Challenger, B - Barracuda, V - Valiant, L - Dart, R - Satellite, W - Coronet, P - Plymouth, D - Dodge, C - Chrysler, Y - Imperial

NUMERALS INDICATE: 21 - 2 DR. SED., 23 - 2 DR. H.T., 29 - FAST BACK, 41 - 4 DR. SED., 43 - 4 DR. H.T., 45 - 6 PASS. STA. WGN., 46 - 9 PASS. STA. WGN.

AR Indicates use as required.
# Indicates parts not listed in any previous parts book
Numerals in parentheses ( ) refer to notes.
★ Indicates change or addition.

Printed in U.S.A.
November, 1974

Right and left part numbers are on same line, first number is right, second number is left.

CODE	PART NAME	MODEL CODES	SEE BOTTOM NOTE 21	23		29	41	43	45	46	PART NUMBER
23-45-194	ADJUSTER, Reclining Seat Back										
	w/Split Seats	P,D,C	—	—	—	—	1	1	1	1	3447 991
	w/Split Seats	Y	—	—	—	—	—	1	—	—	3447 992
23-45-204	CABLE, Seat Back Latch Release, w/Latch Lt.	C-S,Y	—	1	—	—	—	—	—	—	3689 461
	w/Bench Seats, w/Latch	V,L	—	1	—	—	—	—	—	—	3689 254-5
	w/Latch, Bench Seats	R,W	1	1	—	1	—	—	—	—	3520 928-9
	Split Bench, w/Center Arm Rest, w/Latch	R,W	—	1	—	1	—	—	—	—	3520 288-9
	w/Latch, Split Bench, Frt. w/Center Arm Rest	P,D	—	1	—	—	—	—	—	—	3520 280-1
	w/Latch, Bench Seats	P,D,C	—	1	—	—	—	—	—	—	3520 958-9
	CABLE, Seat Back Reclining Adjusting										
	w/Split Seats	P,D,C,Y	—	—	—	—	1	1	1	1	3447 978
23-47-6	**ADJUSTER, Manual Seat**										
	W/Bench Seats	V,L	—	1	—	1	1	—	—	—	3670 234-5
	w/Bucket Seats Inner	V,L	—	—	—	1	—	—	—	—	3670 230-1
	w/Bucket Seats Outer	V,L	—	—	—	1	—	—	—	—	3670 232-3
	w/Bucket Seats Inner	B,J	—	2	—	—	—	—	—	—	3670 228
	w/Bucket Seats Outer	B,J	—	1	—	—	—	—	—	—	3670 226-7
	w/Bench Seats	R,W	1	1	—	1	1	—	1	1	3670 242-3
	w/Bench Seats	P,D,C	—	1	—	—	1	1	1	1	3695 846-7
	New York Taxi	W-G	—	—	—	—	1	—	—	—	3670 578-9
	w/BUCKET or SPLIT SEATS										
	PASSENGER SEAT Inner	R,W	1	1	—	1	—	—	—	—	3670 238
	Outer	R,W	1	1	—	1	1	—	1	1	3670 240
	Split Outer	P,D,C,Y	—	1	—	—	1	1	1	1	3760 390
	Split Inner	P,D,C,Y	—	1	—	—	1	1	1	1	3670 254
	Driver Seat Inner	R,W	1	1	—	1	1	—	1	1	3670 239
	Outer	R,W	1	1	—	1	1	—	1	1	3670 241
	Split Outer	P,D,C,Y	—	1	—	—	1	1	1	1	3760 391
	Split Inner	P,D,C,Y	—	1	—	—	1	1	1	1	3670 255
	ADJUSTER, Front Seat Electric										
	w/Split Seats	P,D,C,Y	—	1	—	—	1	1	1	1	3454 386-7
	NOTE: For Bench Seats See 23-47-344										
23-47-8	COVER, Front Seat Adjuster										
	(Paint as Required) Upr.	P,D,C,Y	—	AR	—	AR	AR	AR	AR	AR	S528 JX9
	Lower	P,D,C,Y	—	AR	—	AR	AR	AR	AR	AR	S527 JX9
23-47-15	SPACER, Front Seat Manual Adjuster										
	Steel Type	V,L,B,J, R,W	AR	AR	—	AR	AR	—	AR	AR	2999 991
	After Feb. 1, 1974	V,L,R,W,P,D	AR	AR	—	AR	AR	AR	AR	AR	3796 949
	New York Taxi	W-G	—	—	—	—	2	—	—	—	2945 544
	SPACER, Front Seat Electric										
	Adjuster	P,D,C,Y	—	AR	—	—	AR	AR	AR	AR	3454 555
23-47-26	SPRING, Front Seat Manual										
	Adjuster Tension	V,L, B,J,R,W	AR	AR	—	AR	AR	—	AR	AR	2999 995
		P,D,C,Y	—	2	—	—	2	2	2	2	3760 152
23-47-28	HOOK, Manual Seat Guide Wire Tension	P,D,C,Y	—	AR	—	—	AR	AR	AR	AR	2942 556
	HOOK, Bucket Front Seat Guide Wire	V,L,R,W	2	2	—	2	2	—	2	2	2942 556
	BRACKET, Frt. Seat Cushion Guide Wire Hook w/Bench Seats	V,L	—	1	—	1	1	—	—	—	3689 384
23-47-55	KNOB, Manual Seat Adjuster Release Lever Black	All	AR	AR	—	AR	AR	AR	AR	AR	3695 160

TYPE LETTERS Indicates J - Challenger, B - Barracuda, V - Valiant, L - Dart, R - Satellite, W - Coronet, P - Plymouth, D - Dodge, C - Chrysler, Y - Imperial

NUMERALS INDICATE: 21 - 2 DR. SED., 23 - 2 DR. H.T., 29 - FAST BACK, 41 - 4 DR. SED., 43 - 4 DR. H.T., 45 - 6 PASS. STA. WGN., 46 - 9 PASS. STA. WGN.

AR Indicates use as required.
# Indicates parts not listed in any previous parts book
Numerals in parentheses ( ) refer to notes.
★ Indicates change or addition.

Printed in U.S.A.
November, 1974

Right and left part numbers are on same line, first number is right, second number is left.

CODE	PART NAME	MODEL CODES	SEE BOTTOM NOTE 21	23		29	41	43	45	46	PART NUMBER
23-47-66	WIRE, Manual Seat Adjuster										
	Latch Connector w/Bench Seats	V,L	—	1	—	1	1	—	—	—	2486 968
	w/Bench Seats	R,W	1	1	—	1	1	—	1	1	2486 966
	w/Bench Seats	P,D,C	—	1	—	—	1	1	1	1	3861 041
	w/Split Seats	P,D,C,Y	—	1	—	—	1	1	1	1	2765 434
23-47-67	GUIDE, Manual Seat Adjuster Latch Connecting Wire										
	w/Split Seats Rt.	P,D,C,Y	—	1	—	—	1	1	1	1	2486 994
23-47-75	SPRING, Manual Seat Adjuster Release Lever	V,L,B,J, R,W,P, D,C,Y	AR	AR	—	AR	AR	AR	AR	AR	2428 388
	w/Bench Seats	V,L	—	1	—	1	1	—	—	—	3760 212
23-47-344	DRIVE UNIT, Frt. Seat Electric Adjuster w/Bench Seats	P,D,C,Y	—	1	—	—	1	1	1	1	3695 189
	SLAVE UNIT, Frt. Seat Electric Adjuster w/Bench Seats	P,D,C,Y	—	1	—	1	1	1	1	1	3695 188
23-47-345	BRACKET, Seat Back Stop	W-G	—	—	—	—	2	—	—	—	3796 045
	BRACKET, Frt. Seat Back Reclining Adj. Cable Attaching	P,D,C,Y	—	—	—	—	1	1	1	1	3594 412
23-47-420	WIRING, Seat Adjuster Feed w/Split Bench Rt. & Lt.	C,Y	—	1	—	—	1	1	1	1	3764 287
	WIRING, Seat Adjuster Switch to Motor Wiring w/Split Bench Rt.	C	—	1	—	—	1	1	1	1	3764 286
	Rt.	Y	—	—	—	—	—	1	—	—	3764 286
	Rt.	Y	—	1	—	—	—	—	—	—	3764 284
	WIRING, Power Seat Back Release Relay	C,Y	—	1	—	—	—	—	—	—	3764 285
23-47-425	RELAY, Seat Automatic Forward Actuator	Y	—	1	—	—	—	—	—	—	2926 862
	RELAY AND BRACKET, Seat Back Release Single Hi-Ram	C-S,Y	—	1	—	—	—	—	—	—	3764 577
	ACTUATOR, Split Bench W/Center Arm Rest Frt. Seat Latch Release	R,W,P, D,C	—	1	—	1	—	—	—	—	3520 276-7
23-47-430	MOTOR, Electric Seat Adjuster w/Bench Seats	P,D,C,Y	—	1	—	—	1	1	1	1	3861 021
	w/Split Seats Rt.	C,Y	—	1	—	—	1	1	1	1	2945 940
	w/Split Seats Lt.	P,D,C,Y	—	1	—	—	1	1	1	1	3861 023
23-47-431	TUBE, Electric Seat Adjuster Horizontal Transmission w/Bench Seats Rt.	P,D,C,Y	—	1	—	—	1	1	1	1	2945 926
	w/Bench Seats Lt.	P,D,C,Y	—	1	—	—	1	1	1	1	2945 927
	w/Split Seats Rt.	P,D,C,Y	—	1	—	—	1	1	1	1	2945 924
	Lt.	P,D,C,Y	—	1	—	—	1	1	1	1	2945 923
	TUBE, Electric Seat Adjuster Vertical Transmission w/Bench Seats Frt. Rt.	P,D,C,Y	—	1	—	—	1	1	1	1	2945 926
	w/Bench Seats Frt. Lt.	P,D,C,Y	—	1	—	—	1	1	1	1	2945 925
	w/Split Seat Frt. Rt.	P,D,C,Y	—	AR	—	—	AR	AR	AR	AR	2945 921
	w/Bench Seats Rr. Rt.	P,D,C,Y	—	1	—	—	1	1	1	1	2945 926
	w/Bench Seats Rr. Lt.	P,D,C,Y	—	1	—	—	1	1	1	1	2945 922

TYPE LETTERS Indicates J - Challenger, B - Barracuda, V - Valiant, L - Dart, R - Satellite, W - Coronet, P - Plymouth, D - Dodge, C - Chrysler, Y - Imperial

NUMERALS INDICATE: 21 - 2 DR. SED., 23 - 2 DR. H.T., 29 - FAST BACK, 41 - 4 DR. SED., 43 - 4 DR. H.T., 45 - 6 PASS. STA. WGN., 46 - 9 PASS. STA. WGN.

AR Indicates use as required.
# Indicates parts not listed in any previous parts book
Numerals in parentheses ( ) refer to notes.
★ Indicates change or addition.

Printed in U.S.A.
November, 1974

Right and left part numbers are on same line, first number is right, second number is left.

CODE	PART NAME	MODEL CODES	SEE BOTTOM NOTE 21	23	29	41	43	45	46	PART NUMBER
23-47-432	CABLE, Electric Seat Adjuster Transmission w/Bench Seats Frt. Vertical Rt.	P,D,C,Y	—	1	—	1	1	1	1	2945 798
	Frt. Vertical Lt.	P,D,C,Y	—	1	—	1	1	1	1	2945 801
	Rr. Vertical	P,D,C,Y	—	1	—	1	1	1	1	2945 798-9
	Horizontal Rt.	P,D,C,Y	—	1	—	1	1	1	1	2945 798
	Horizontal Lt.	P,D,C,Y	—	1	—	1	1	1	1	2999 811
	Split Seats Frt. Vertical	P,D,C,Y	—	AR	—	AR	AR	AR	AR	2945 786
	Split Seats Rr. Vertical	P,D,C,Y	—	AR	—	AR	AR	AR	AR	2945 797
	Split Seat Horizontal Rt.	P,D,C,Y	—	AR	—	AR	AR	AR	AR	2945 796
	Split Seats Horizontal Lt.	P,D,C,Y	—	AR	—	AR	AR	AR	AR	2945 795
23-47-433	GROMMET, Front Seat Electric Adjuster Tube Bracket to Motor Mount Screw Sleeve	P,D,C,Y	—	AR	—	AR	AR	AR	AR	2945 679
23-47-436	STRAP, Frt. Seat Electric Adjuster Tube Ty-Rap. w/Bench Seats Rt.	P,D,C,Y	—	2	—	2	2	2	2	2945 704
	STRAP, Frt. Seat Electric Adjuster Rr. Vertical Tube to Rr. Torsion Bar w/Bench Seats	P,D,C,Y	—	AR	—	AR	AR	AR	AR	2945 704
23-47-439	BRACKET, Front Seat Electric Adjuster Motor and Tube	P,D,C,Y	—	AR	—	AR	AR	AR	AR	2999 722
	BRACKET, Frt. Seat Reclining Adjuster Release Cable w/Split Seats	P,D,C,Y	—	1	—	1	1	1	1	3447 979
23-47-446	SWITCH, Electric Seat Adjuster w/Bench Seats Lt.	P,D,C	—	1	—	1	1	1	1	2926 202
	w/Bench Seats Lt.	Y	—	1	—	—	1	—	—	2926 202
	w/Split Seats	P,D,C,Y	—	—	—	AR	AR	AR	AR	2926 202
	SWITCH, Seat Automatic Forword Limit	Y	—	1	—	—	—	—	—	2926 593
	SWITCH, Seat Automatic Forward Activating w/Brkt.	Y	—	1	—	—	—	—	—	3746 601
23-47-456	BRACKET, Seat Adjuster Switch w/Split Seats	P,D,C,Y	—	AR	—	AR	AR	AR	AR	2926 422
23-48-17	**RING, 3rd Seat Back Release Latch** Retaining	P,D,C	—	—	—	—	—	—	2	1922 183
23-48-19	STRIKER, 2nd Seat Back Latch	R,W,P,D,C	—	—	—	—	—	1	1	2583 144
	STRIKER, 3rd Seat Back Release Handle	R,W	—	—	—	—	—	—	1	2251 678
		P,D,C	—	—	—	—	—	—	1	3760 658
23-48-20	HANDLE, 3rd Seat Back Release	R,W	—	—	—	—	—	—	1	3548 674
		P,D,C	—	—	—	—	—	—	1	3760 650
	HANDLE, 3rd Seat Back Release Latch	R,W	—	—	—	—	—	—	1	2862 612
		P,D,C	—	—	—	—	—	—	1	3760 649
23-48-21	ESCUTCHEON, 2nd Seat Back Latch	R,W,P,D,C	—	—	—	—	—	1	1	2588 818
	ESCUTCHEON, 2nd Seat Back Latch Push Rod	R,W	—	—	—	—	—	1	1	2765 025
	GROMMET, 3rd Seat Back Latch Release Handle	P,D,C	—	—	—	—	—	—	2	3548 609
23-48-22	SPRING, 3rd Seat Back Release Handle Outer	R,W	—	—	—	—	—	—	1	2251 676
	Inner	R,W	—	—	—	—	—	—	1	2945 442
23-48-24	BRACKET, 3rd Seat Back Release Latch Handle	R,W	—	—	—	—	—	—	1	2862 614
23-48-43	RETAINER, 2nd Seat Back Panel Frame Rt.	R,W	—	—	—	—	—	1	1	2254 575
23-48-44	BUSHING, 3rd Seat Back Release Handle	R,W	—	—	—	—	—	—	1	2583 429

TYPE LETTERS Indicates J - Challenger, B - Barracuda, V - Valiant, L - Dart, R - Satellite, W - Coronet, P - Plymouth, D - Dodge, C - Chrysler, Y - Imperial

NUMERALS INDICATE: 21 - 2 DR. SED., 23 - 2 DR. H.T., 29 - FAST BACK, 41 - 4 DR. SED., 43 - 4 DR. H.T., 45 - 6 PASS. STA. WGN., 46 - 9 PASS. STA. WGN.

AR Indicates use as required.
# Indicates parts not listed in any previous parts book
Numerals in parentheses ( ) refer to notes.
★ Indicates change or addition.

Printed in U.S.A.
November, 1974

Right and left part numbers are on same line, first number is right, second number is left.

CODE	PART NAME	MODEL CODES	SEE BOTTOM NOTE 21	23	29	41	43	45	46	PART NUMBER
23-48-51	KNOB, 2nd Seat Back Lock Push Rod									
	Blue	R,W	—	—	—	—	—	1	1	W406 KB7
	Green		—	—	—	—	—	1	1	W406 KG6
	Parchment		—	—	—	—	—	1	1	W406 KL2
	Chestnut		—	—	—	—	—	1	1	W406 KT8
23-48-65	PANEL, 2nd Seat Back W/Filler	P,D,C	—	—	—	—	—	1	1	3752 659
	Complete	P,D,C	—	—	—	—	—	1	1	3752 658
23-48-67	ROD and LATCH, 3rd Seat Back Release Passenger Position									
		R,W	—	—	—	—	—	—	1	3548 675
23-48-68	COVER and HINGE, 2nd Seat Back Inner and Outer	R,W	—	—	—	—	—	1	1	3482 434
	PANEL, Second Seat Back Inner and Outer w/o Cargo Compt. Dress Up Complete	R,W	—	—	—	—	—	1	1	3611 630
23-48-70	LATCH, 3rd. Seat Back Complete	P,D,C	—	—	—	—	—	—	1	3861 102
23-48-71	BUTTON, Second Seat Back Latch Release Blue	P,D,C	—	—	—	—	—	1	1	S539 KB7
	Green		—	—	—	—	—	1	1	S539 KG6
	Gold		—	—	—	—	—	1	1	S539 KY4
	Parchment		—	—	—	—	—	1	1	S539 KL2
	Chestnut		—	—	—	—	—	1	1	S539 KT8
	Black		—	—	—	—	—	1	1	S539 KX9
23-48-72	BEZEL, 2nd. Seat Back Latch Release Button Blue	P,D,C	—	—	—	—	—	1	1	S501 KB7
	Green		—	—	—	—	—	1	1	S501 KG6
	Gold		—	—	—	—	—	1	1	S501 KY4
	Parchment		—	—	—	—	—	1	1	S501 KL2
	Chestnut		—	—	—	—	—	1	1	S501 KT8
	Black		—	—	—	—	—	1	1	S501 JX9
	BEZEL, 3rd. Seat Back Latch Release Blue	P,D,C	—	—	—	—	—	—	1	S538 KB7
	Green		—	—	—	—	—	—	1	S538 KG7
	Parchment		—	—	—	—	—	—	1	S538 KL2
	Chestnut		—	—	—	—	—	—	1	S538 KT8
	Black		—	—	—	—	—	—	1	S538 KX9
	Gold		—	—	—	—	—	—	1	S538 KY4
23-48-73	MOULDING, 3rd. Seat Back Finish Blue	P,D,C	—	—	—	—	—	—	1	S536-7 KB7
	Green		—	—	—	—	—	—	1	S536-7 KG7
	Parchment		—	—	—	—	—	—	1	S536-7 KL2
	Chestnut		—	—	—	—	—	—	1	S536-7 KT8
	Black		—	—	—	—	—	—	1	S536-7 KX9
	Gold		—	—	—	—	—	—	1	S536-7 KY4
23-48-88	SKID STRIP, Seat Back Support Panel									
	3rd Seat	P,D,C	—	—	—	—	—	—	2	3720 601
23-48-90	PLATE, w/SCREW, Rr. Floor Pan 3rd Seat Back Latch	R,W	—	—	—	—	—	—	2	2945 460
	PLATE w/SCREW, Rr. Floor Pan 3rd Seat Back Hinge	P,D,C	—	—	—	—	—	—	2	3760 061
	PLATE, Rr. Floor Pan Bracket w/Screw	R,W	—	—	—	—	—	—	2	3499 855
	T/PLATE, 2nd. Seat Back Filler Inner Panel Lock Striker	P,D,C	—	—	—	—	—	1	1	3767 344
23-48-91	COVER, 2nd Seat Back Hinge Reinforcement Blue	P,D,C	—	—	—	—	—	1	1	S554-5 KB7
	Green		—	—	—	—	—	1	1	S554-5 KG7
	Parchment		—	—	—	—	—	1	1	S554-5 KL2

TYPE LETTERS Indicates	J - Challenger B - Barracuda	V - Valiant L - Dart	R - Satellite W - Coronet	P - Plymouth D - Dodge	C - Chrysler Y - Imperial
NUMERALS INDICATE:	21 - 2 DR. SED. 23 - 2 DR. H.T.	29 - FAST BACK	41 - 4 DR. SED. 43 - 4 DR. H.T.		45 - 6 PASS. STA. WGN. 46 - 9 PASS. STA. WGN.

AR Indicates use as required.
# Indicates parts not listed in any previous parts book
Numerals in parentheses ( ) refer to notes.
★ Indicates change or addition.
Printed in U.S.A.
November, 1974

Right and left part numbers are on same line, first number is right, second number is left.

CODE	PART NAME	MODEL CODES	SEE BOTTOM NOTE 21	23	29	41	43	45	46	PART NUMBER
23-48-91	COVER Cont'd.									
	Chestnut		—	—	—	—	—	1	1	S554-5 KT8
	Black		—	—	—	—	—	1	1	S554-5 KX9
	Gold		—	—	—	—	—	1	1	S554-5 KY4
23-48-93	**BUMPER, 3rd Seat Back Support**									
	Upper Frame	R,W	—	—	—	—	—	—	6	2252 184
	BUMPER, Wheelhouse Rr. Seat Latch Brkt.	V,L	—	—	2	—	—	—	—	2842 869
	BUMPER, 3rd Seat Back Release Handle	R,W,P,D,C	—	—	—	—	—	—	1	2765 393
	BUMPER w/INSERT, 3rd Seat Back Inner Frt. Panel	P,D,C	—	—	—	—	—	—	2	3767 422
	BUMPER w/INSERT, 3rd Seat Back Support Panel	P,D,C	—	—	—	—	—	—	2	3767 699
	BUMPER, 2nd Seat Back Filler Inr. Pnl.	P,D,C	—	—	—	—	—	2	2	2664 268
23-48-99	BRACKET, 2nd Seat Back Hinge to Wheelhouse Inner Panel w/Retainer and Nut	R,W	—	—	—	—	—	1	1	3499 396-7
	BRACKET and T/PLATE, Rr. Seat Back Hinge to Wheelhouse Inner Panel	V,L	—	—	1	—	—	—	—	2838 976-7
	BRACKET, Wheelhouse Rr. Seat Latch w/Folding Rr. Seat	V,L	—	—	1	—	—	—	—	3756 836-7
	BRACKET and STUD, 3rd Seat Back Hinge to Floor Pan	R,W	—	—	—	—	—	—	1	3499 400-1
		P,D,C	—	—	—	—	—	—	2	2861 656
	REINFORCEMENT AND STUD, 2nd Seat Pivot Brkt. Quarter Panel Wheelhouse Inner	P,D,C	—	—	—	—	—	1	1	3720 745
	BRACKET, 2nd Seat Back Pivot	P,D,C,	—	—	—	—	—	2	2	3720 748
	w/Nut and Retainer	P,D,C	—	—	—	—	—	2	2	3767 798
	BRACKET and SCREW, 2nd Seat Back **Hinge to Floor Pan**	P,D,C	—	—	—	—	—	1	1	3674 122-3
	BRACKET, 3rd. Seat Cushion to Floor Pan Mtg.	P,D,C,	—	—	—	—	—	—	2	3765 325
	BRACKET, Folding Rr. Seat Back Attaching	V,L	—	—	2	—	—	—	—	3689 582
	REINFORCEMENT, Folding Rear Seat Back	V,L	—	—	1	—	—	—	—	3689 562-3
	REINFORCEMENT and SCREW, Wheelhouse **Inner Panel 2nd Seat Back Hinge**	R,W	—	—	—	—	—	2	2	2588 662
23-48-105	SHIM, Folding Rear Seat Back Hinge	V,L	—	—	AR	—	—	—	—	2802 951
23-48-109	LINK, 2nd Seat Back Cover Inner Panel to 2nd Seat Back Frame	R,W	—	—	—	—	—	1	1	3499 388-9
	LINK, 2nd. Seat Back Hinge Outer Panel to Inner Filler	P,D,C	—	—	—	—	—	1	1	3767 070-1
	SHOULDER BOLT, 2nd Seat Back Link To 2nd Seat Cover Panel	R,W	—	—	—	—	—	2	2	6024 972
	Link To 2nd Seat Back Frame	R,W	—	—	—	—	—	2	2	6025 724
	2nd Back Frame Side Ext. Canada	R,W	—	—	—	—	—	2	2	6030 540
	2nd Back Hinge Link	P,D,C	—	—	—	—	—	4	4	6024 972
	2nd Seat Back Hinge Canada	P,D,C	—	—	—	—	—	2	2	6030 540
	WASHER, Coned, 5/16" Canada	R,W,P,D,C	—	—	—	—	—	AR	AR	6022 185
	3/8" Canada	R,W,P,D,C	—	—	—	—	—	AR	AR	6022 191
23-48-121	HINGE, 3rd Seat Back Frame to Support Hinge (Piano Type)	R,W	—	—	—	—	—	—	1	2664 696
	HINGE and STUD, 3rd Seat Back	P,D,C	—	—	—	—	—	—	1	3760 732
	HINGE, 3rd Seat Back to Support Panel w/Cargo Dress Up Pkg.	P,D,C	—	—	—	—	—	—	1	2895 203
	w/o Cargo Dress Up Pkg.	P,D	—	—	—	—	—	—	1	2895 204
	HINGE, Rr. Floor Pan Frt. and Rr. Cover w/o Cargo Dress Up Pkg.	P,D	—	—	—	—	—	1	—	2895 204
	w/Cargo Dress Up Pkg.	P,D,C	—	—	—	—	—	1	—	2895 203

TYPE LETTERS Indicates J - Challenger, B - Barracuda, V - Valiant, L - Dart, R - Satellite, W - Coronet, P - Plymouth, D - Dodge, C - Chrysler, Y - Imperial

NUMERALS INDICATE: 21 - 2 DR. SED., 23 - 2 DR. H.T., 29 - FAST BACK, 41 - 4 DR. SED., 43 - 4 DR. H.T., 45 - 6 PASS. STA. WGN., 46 - 9 PASS. STA. WGN.

AR Indicates use as required.
# Indicates parts not listed in any previous parts book
Numerals in parentheses ( ) refer to notes.
★ Indicates change or addition.

Printed in U.S.A.
November, 1974

Right and left part numbers are on same line, first number is right, second number is left.

CODE	PART NAME	MODEL CODES	SEE BOTTOM NOTE 21	23	29	41	43	45	46	PART NUMBER
23-48-121	HINGE Cont'd.									
	HINGE, 3rd. Seat Back Frame to Support Piano Type	R,W	—	—	—	—	—	—	1	2664 696
	HINGE and STUD, 3rd. Seat Back Seat Half	P,D,C	—	—	—	—	—	—	1	3760 778-9
	Seat Half Complete	P,D,C	—	—	—	—	—	—	1	3760 732-3
23-48-188	PANEL and SUPPORT, 3rd Seat Back Complete	R,W	—	—	—	—	—	—	1	3611 627
	w/Cargo Dress Up Pkg.	R,W	—	—	—	—	—	—	1	2861 864
	BACK, 2nd Seat w/o Cargo Dress Up Pkg.	R,W	—	—	—	—	—	1	1	3611 626
	w/Cargo Dress Up Pkg.	R,W	—	—	—	—	—	1	1	3482 435
	Complete	P,D,C	—	—	—	—	—	—	1	3752 654
	PANEL, 3rd Seat Back w/Cargo Dress Up Pkg. Complete	P,D,C	—	—	—	—	—	—	1	3752 647
	PANEL, Folding Rear Seat Back	V,L	—	—	1	—	—	—	—	3689 551
	Pivot Pin	V,L	—	—	2	—	—	—	—	6030 033
23-48-201	LATCH, 2nd Seat Back	R,W	—	—	—	—	—	1	1	2583 142
		P,D,C	—	—	—	—	—	1	1	3760 833
23-48-202	ROD, 2nd Seat Back Latch	V,L	—	—	1	—	—	—	—	3760 582
		P,D,C	—	—	—	—	—	1	1	3760 834
	Washer	P,D,C	—	—	—	—	—	1	1	6030 038
23-48-203	SPRING, 3rd Seat Back Release Rod Tension	R,W	—	—	—	—	—	—	1	2862 478-9
	SPRING, 3rd Seat Back Release Latch Tension	P,D,C	—	—	—	—	—	—	1	3861 100-1
23-49-1	**BELT, Front Seat Lap and Shoulder Outer**									
	Label No. 3796 314-5									
	Blue	V,L	—	1	—	1	—	—	—	— F458-9 KB7
	Green	V,L	—	1	—	1	—	—	—	— F458-9 KG7
	Parchment	V,L	—	1	—	1	—	—	—	— F458-9 KL2
	Gold	V,L	—	1	—	1	—	—	—	— F458-9 KY4
	White Black	V,L	—	1	—	1	—	—	—	— F458-9 KXW
	Black	V,L	—	1	—	1	—	—	—	— F458-9 KX9
	Label No. 3861 196-7									
	Black	V,L	—	1	—	1	—	—	—	— F476-7 KX9
	Parchment	V,L	—	1	—	1	—	—	—	— F476-7 KL2
	Label No. 3796 312-3									
	Blue	V,L	—	—	—	—	1	—	—	— F460-1 KB7
	Green	V,L	—	—	—	—	1	—	—	— F460-1 KG7
	Parchment	V,L	—	—	—	—	1	—	—	— F460-1 KL2
	Gold	V,L	—	—	—	—	1	—	—	— F460-1 KY4
	Black	V,L	—	—	—	—	1	—	—	— F460-1 KX9
	Label No. 3861 198-9									
	Black	V,L	—	—	—	—	1	—	—	— F478-9 KX9
	Parchment	V,L	—	—	—	—	1	—	—	— F478-9 KL2
	Label No. 3796 316-7									
	Blue	B,J	—	1	—	—	—	—	—	— F462-3 KB7
	Green	B,J	—	1	—	—	—	—	—	— F462-3 KG7
	White Black	B,J	—	1	—	—	—	—	—	— F462-3 KXW
	Black	B,J	—	1	—	—	—	—	—	— F462-3 KX9
	Label No. 3861 200-1									
	Black	B,J	—	1	—	—	—	—	—	— F480-1 KX9
	Label No. 3796 310-1									
	Blue	R,W	1	1	—	1	—	—	—	— F456-7 KB7
	Green	R,W	1	1	—	1	—	—	—	— F456-7 KG7

TYPE LETTERS Indicates J - Challenger, B - Barracuda, V - Valiant, L - Dart, R - Satellite, W - Coronet, P - Plymouth, D - Dodge, C - Chrysler, Y - Imperial

NUMERALS INDICATE: 21 - 2 DR. SED., 23 - 2 DR. H.T., 29 - FAST BACK, 41 - 4 DR. SED., 43 - 4 DR. H.T., 45 - 6 PASS. STA. WGN., 46 - 9 PASS. STA. WGN.

AR Indicates use as required.
# Indicates parts not listed in any previous parts book
Numerals in parentheses ( ) refer to notes.
★ Indicates change or addition.

Printed in U.S.A.
November, 1974

Right and left part numbers are on same line, first number is right, second number is left.

CODE	PART NAME		MODEL CODES	SEE BOTTOM NOTE 21	23		29	41	43	45	46	PART NUMBER
23-49-1	BELT Cont'd.											
		Parchment	R,W	1	1	—	1	—	—	—	—	F456-7 KL2
		Gold	R,W	1	1	—	1	—	—	—	—	F456-7 KY4
		White Black,	R,W	1	1	—	1	—	—	—	—	F456-7 KXW
		Black	R,W	1	1	—	1	—	—	—	—	F456-7 KX9
	Label No. 3861 194-5											
		Black	R,W	1	1	—	1	—	—	—	—	F474-5 KX9
	Label No. 3796 308-9											
		Blue	R,W	—	—	—	—	1	—	1	1	F464-5 KB7
		Green	R,W	—	—	—	—	1	—	1	1	F464-5 KG7
		Parchment	R,W	—	—	—	—	1	—	1	1	F464-5 KL2
		Chestnut	R,W	—	—	—	—	1	—	1	1	F464-5 KT8
		Gold	R,W	—	—	—	—	1	—	1	1	F464-5 KY4
		Black	R,W	—	—	—	—	1	—	1	1	F464-5 KX9
	Label No. 3861 192-3											
		Black	R,W	—	—	—	—	1	—	1	1	F472-3 KX9
	Label No. 3796 302-3											
		Blue	P,D,C,Y	—	1	—	—	—	—	—	—	F450-1 KB7
		Green	P,D,C,Y	—	1	—	—	—	—	—	—	F450-1 KG7
		Parchment	P,D,C,Y	—	1	—	—	—	—	—	—	F450-1 KL2
		Chestnut	P,D,C,Y	—	1	—	—	—	—	—	—	F450-1 KT8
		Gold	P,D,C,Y	—	1	—	—	—	—	—	—	F450-1 KY4
		White Black	P,D,C,Y	—	1	—	—	—	—	—	—	F450-1 KXW
		Black	P,D,C,Y	—	1	—	—	—	—	—	—	F450-1 KX9
	Label No. 3861202-3											
		Blue	P,D,C,Y	—	1	—	—	—	—	—	—	F482-3 KB7
		Green	P,D,C,Y	—	1	—	—	—	—	—	—	F482-3 KG7
		Parchment	P,D,C,Y	—	1	—	—	—	—	—	—	F482-3 KL2
		Chestnut	P,D,C,Y	—	1	—	—	—	—	—	—	F482-3 KT8
		Gold	P,D,C,Y	—	1	—	—	—	—	—	—	F482-3 KY4
		White Black	P,D,C,Y	—	1	—	—	—	—	—	—	F482-3 KXW
		Black	P,D,C,Y	—	1	—	—	—	—	—	—	F482-3 KX9
	Label No. 3861 202-3											
		Blue Black	P,D,C,Y	—	1	—	—	—	—	—	—	F482-3 KBX
		Green Black	P,D,C,Y	—	1	—	—	—	—	—	—	F482-3 KGX
		Parchment Black	P,D,C,Y	—	1	—	—	—	—	—	—	F482-3 KLX
		Gold Black	P,D,C,Y	—	1	—	—	—	—	—	—	F482-3 KYX
		Black	P,D,C,Y	—	1	—	—	—	—	—	—	F482-3 KX9
	Label No. 3861 242-3											
		Blue	P,D,C,Y	—	1	—	—	—	—	—	—	F482-3 KB7
		Green	P,D,C,Y	—	1	—	—	—	—	—	—	F482-3 KG7
		Parchment	P,D,C,Y	—	1	—	—	—	—	—	—	F482-3KL2
		Chestnut	P,D,C,Y	—	1	—	—	—	—	—	—	F482-3 KT8
		Gold	P,D,C,Y	—	1	—	—	—	—	—	—	F482-3 KY4
		White Black	P,D,C,Y	—	1	—	—	—	—	—	—	F482-3 KXW
		Black	P,D,C,Y	—	1	—	—	—	—	—	—	F482-3 KX9
	Label No. 3796 304-5											
		Blue	P,D,C,Y	—	—	—	—	—	1	—	—	F452-3 KB7
		Green	P,D,C,Y	—	—	—	—	—	1	—	—	F452-3 KG7
		Parchment	P,D,C,Y	—	—	—	—	—	1	—	—	F452-3 KL2
		Chestnut	P,D,C,Y	—	—	—	—	—	1	—	—	F452-3 KT8
		Gold	P,D,C,Y	—	—	—	—	—	1	—	—	F452-3 KY4
	w/White Hanger Cover	White Black	P,D,C,Y	—	—	—	—	—	1	—	—	F452-3 KXW
	w/Black Hanger Cover	White Black	P,D,C,Y	—	—	—	—	—	1	—	—	F452-3 KXN
		Black	P,D,C,Y	—	—	—	—	—	1	—	—	F452-3 KX9

TYPE LETTERS Indicates	J - Challenger B - Barracuda	V - Valiant L - Dart	R - Satellite W - Coronet	P - Plymouth D - Dodge	C - Chrysler Y - Imperial
NUMERALS INDICATE:	21 - 2 DR. SED. 23 - 2 DR. H.T.	29 - FAST BACK	41 - 4 DR. SED. 43 - 4 DR. H.T.		45 - 6 PASS. STA. WGN. 46 - 9 PASS. STA. WGN.

AR Indicates use as required.
# Indicates parts not listed in any previous parts book
Numerals in parentheses ( ) refer to notes.
★ Indicates change or addition.
Printed in U.S.A.
November, 1974

Right and left part numbers are on same line, first number is right, second number is left.

CODE	PART NAME		MODEL CODES	SEE BOTTOM NOTE 21	23	29	41	43	45	46	PART NUMBER
23-49-1	BELT Cont'd.										
	Label No. 3861 190-1										
		Blue	P,D,C,Y	—	—	—	—	1	—	—	F470-1 KB7
		Green	P,D,C,Y	—	—	—	—	1	—	—	F470-1 KG7
		Parchment	P,D,C,Y	—	—	—	—	1	—	—	F470-1 KL2
		Chestnut	P,D,C,Y	—	—	—	—	1	—	—	F470-1 KT8
		Gold	P,D,C,Y	—	—	—	—	1	—	—	F470-1 KY4
	w/White Hanger Cover	White Black	P,D,C,Y	—	—	—	—	1	—	—	F470-1 KXW
	w/Black Hanger Cover	White Black	P,D,C,Y	—	—	—	—	1	—	—	F470-1 KXN
		Black	P,D,C,Y	—	—	—	—	1	—	—	F470-1 KX9
	Label No. 3796 306-7										
		Blue	P,D,C	—	—	—	1	—	1	1	F454-5 KB7
		Green	P,D,C	—	—	—	1	—	1	1	F454-5 KG7
		Parchment	P,D,C	—	—	—	1	—	1	1	F454-5 KL2
		Chestnut	P,D,C	—	—	—	1	—	1	1	F454-5 KT8
		Gold	P,D,C	—	—	—	1	—	1	1	F454-5 KY4
		Black	P,D,C	—	—	—	1	—	1	1	F454-5 KX9
	Label No. 3861 188-9										
		Blue	P,D,C	—	—	—	1	—	1	1	F468-9 KB7
		Green	P,D,C	—	—	—	1	—	1	1	F468-9 KG7
		Parchment	P,D,C	—	—	—	1	—	1	1	F468-9 KL2
		Chestnut	P,D,C	—	—	—	1	—	1	1	F468-9 KT8
		Gold	P,D,C	—	—	—	1	—	1	1	F468-9 KY4
		Black	P,D,C	—	—	—	1	—	1	1	F468-9 KX9
	Label No. 3861 188-9										
		Blue Black	P,D,C	—	—	—	1	—	1	1	F468-9 KBX
		Green Black	P,D,C	—	—	—	1	—	1	1	F468-9 KGX
		Parchment Black	P,D,C	—	—	—	1	—	1	1	F468-9 KLX
		Chestnut Black	P,D,C	—	—	—	1	—	1	1	F468-9 KTX
		Gold Black	P,D,C	—	—	—	1	—	1	1	F468-9 KYX
		Black	P,D,C	—	—	—	1	—	1	1	F468-9 KX9
	BELT, Front Seat Lap Buckle Half Inner										
	Label No. 3796 282-3										
		Blue	V,L	—	1	—	1	1	—	—	— F402-3 KB7
		Green	V,L	—	1	—	1	1	—	—	— F402-3 KG7
		Parchment	V,L	—	1	—	1	1	—	—	— F402-3 KL2
		Gold	V,L	—	1	—	1	1	—	—	— F402-3 KY4
		Black	V,L	—	1	—	1	1	—	—	— F402-3 KX9
	Label No. 3796 284-5										
		Blue	V,L	—	1	—	1	1	—	—	— F404-5 KB7
		Green	V,L	—	1	—	1	1	—	—	— F404-5 KG7
		Parchment	V,L	—	1	—	1	1	—	—	— F404-5 KL2
		Black	V,L	—	1	—	1	1	—	—	— F404-5 KX9
	Label No. 3696 278										
		Parchment	V,L	—	2	—	2	2	—	—	— F410 KL2
		Black	V,L	—	2	—	2	2	—	—	— F410 KX9
	Label No. 3861 126										
		Black	V,L	—	—	—	1	—	—	—	— F417 KX9
	Label No. 3861 082-3										
		Black	V,L	—	1	—	1	1	—	—	— F414-5 KX9
	Label No. 3861 127										
		Black	V,L	—	2	—	2	2	—	—	— F416 KX9
	Label No. 3861 214-5										
		Black	V,L	—	1	—	1	1	—	—	— F402-3 KX9
	Label No. 3861 216-7										
		Black	V,L	—	1	—	1	1	—	—	— F404-5 KX9

TYPE LETTERS Indicates	J - Challenger B - Barracuda	V - Valiant L - Dart	R - Satellite W - Coronet	P - Plymouth D - Dodge	C - Chrysler Y - Imperial
NUMERALS INDICATE:	21 - 2 DR. SED. 23 - 2 DR. H.T.	29 - FAST BACK	41 - 4 DR. SED. 43 - 4 DR. H.T.		45 - 6 PASS. STA. WGN. 46 - 9 PASS. STA. WGN.

AR Indicates use as required.
# Indicates parts not listed in any previous parts book
Numerals in parentheses ( ) refer to notes.
★ Indicates change or addition.

Printed in U.S.A.
November, 1974

Right and left part numbers are on same line, first number is right, second number is left.

CODE	PART NAME		MODEL CODES	SEE BOTTOM NOTE 21	23		29	41	43	45	46	PART NUMBER
23-49-1	BELT Cont'd.											
	Label No. 3861 222											
		Black	V,L	—	1	—	1	1	—	—	—	F414 KX9
	Label No. 3861 221											
		Black	V,L	—	1	—	—	1	—	—	—	F415 KX9
	Label No. 3861 223											
		Black	V,L	—	—	—	1	—	—	—	—	F417 KX9
	Label No. 3861 224											
		Black	V,L	—	2	—	2	2	—	—	—	F416 KX9
	Label No. 3861 356-7											
		Black	V,L	—	1	—	1	1	—	—	—	F438-9 KX9
	Label No. 3861 358-9											
		Black	V,L	—	1	—	1	1	—	—	—	F438-9 KX9
	Label No. 3796 284 or 3861 216											
		Parchment	V,L	—	1	—	1	1	—	—	—	3879 659
		Black	V,L	—	1	—	1	1	—	—	—	3879 658
	Label No. 3796 285 or 3861 217											
		Parchment	V,L	—	1	—	1	1	—	—	—	3879 661
		Black	V,L	—	1	—	1	1	—	—	—	3879 660
	Label No. 3861 127 or 3861 224											
		Parchment	V,L	—	1	—	1	1	—	—	—	3879 668
		Black	V,L	—	1	—	1	1	—	—	—	3879 667
	Label No. 3796 278											
		Blue	B,J	—	2	—	—	—	—	—	—	F410 KB7
		Green	B,J	—	2	—	—	—	—	—	—	F410 KG7
		Black	B,J	—	2	—	—	—	—	—	—	F410 KX9
	Label No. 3861 220											
		Black	B,J	—	2	—	—	—	—	—	—	F410 KX9
	Label No. 3861 224											
		Black	B,J	—	2	—	—	—	—	—	—	F416 KX9
	Label No. 3861 127											
		Black	B,J	—	2	—	—	—	—	—	—	F416 KX9
	Label No. 3861 127 or 3861 224											
		Parchment	B,J	—	1	—	—	—	—	—	—	3879 668
		Black	B,J	—	1	—	—	—	—	—	—	3879 667
	Label No. 3796 276											
		Blue	R,W	2	2	—	2	2	—	2	2	F412 KB7
		Green	R,W	2	2	—	2	2	—	2	2	F412 KG7
		Gold	R,W	2	2	—	2	2	—	2	2	F412 KY4
		Black	R,W	2	2	—	2	2	—	2	2	F412 KX9
	Label No. 3796 277											
		Blue	R,W	2	2	—	2	—	—	—	—	F413 KB7
		Green	R,W	2	2	—	2	—	—	—	—	F413 KG7
		Gold	R,W	2	2	—	2	—	—	—	—	F 413 KY4
		Black	R,W	2	2	—	2	—	—	—	—	F413 KX9
	Label No. 3861 525											
		Black	R,W	2	2	—	2	—	—	—	—	F413 KX9
	Label No. 3796 274-5											
		Blue	R,W	1	1	—	1	1	—	1	1	F406-7 KB7
		Green	R,W	1	1	—	1	1	—	1	1	F406-7 KG7
		Parchment	R,W	1	1	—	1	1	—	1	1	F406-7 KL2
		Chestnut	R,W	1	1	—	1	1	—	1	1	F406-7 KT8
		Gold	R,W	1	1	—	1	1	—	1	1	F406-7 KY4
		Black	R,W	1	1	—	1	1	—	1	1	F406-7 KX9

TYPE LETTERS Indicates: J - Challenger, B - Barracuda, V - Valiant, L - Dart, R - Satellite, W - Coronet, P - Plymouth, D - Dodge, C - Chrysler, Y - Imperial

NUMERALS INDICATE: 21 - 2 DR. SED., 23 - 2 DR. H.T., 29 - FAST BACK, 41 - 4 DR. SED., 43 - 4 DR. H.T., 45 - 6 PASS. STA. WGN., 46 - 9 PASS. STA. WGN.

AR Indicates use as required.
# Indicates parts not listed in any previous parts book
Numerals in parentheses ( ) refer to notes.
★ Indicates change or addition.

Printed in U.S.A.
November, 1974

Right and left part numbers are on same line, first number is right, second number is left.

CODE	PART NAME		MODEL CODES	SEE BOTTOM NOTE 21	23		29	41	43	45	46	PART NUMBER
23-49-1	BELT Cont'd.											
	Label No. 3861 083	Black	R,W	1	1	—	1	1	—	1	1	F415 KX9
	Label No. 3861 127	Black	R,W	1	1	—	1	1	—	1	1	F416 KX9
	Label No. 3861 082	Black	R,W	1	1	—	1	1	—	1	1	F414 KX9
	Label No. 3861 126	Black	R,W	1	1	—	1	1	—	1	1	F417 KX9
	Label No. 3861 218-9	Black	R,W	1	1	—	1	1	—	1	1	F406-7 KX9
	Label No. 3861 222	Black	R,W	1	1	—	1	1	—	1	1	F414 KX9
	Label No. 3861 221	Black	R,W	1	1	—	1	1	—	1	1	F415 KX9
	Label No. 3861 223	Black	R,W	1	1	—	1	1	—	1	1	F417 KX9
	Label No. 3861 224	Black	R,W	1	1	—	1	1	—	1	1	F416 KX9
	Label No. 3861 360-1	Black	R,W	1	1	—	1	1	—	1	1	F440-1 KX9
	Label No. 3861 362-3	Black	R,W	1	1	—	1	1	—	1	1	F440-1 KX9
	Label No. 3796 274 or 3861 218	Black	R,W	1	1	—	1	1	—	1	1	3879 662
	Label No. 3796 275 or 3861 219	Black	R,W	1	1	—	1	1	—	1	1	3879 663
	Label No. 3796 277 or 3861 525	Black	R,W	1	1	—	1	1	—	1	1	3879 666
	Label No. 3861 127 or 3861 224	Parchment	R,W	1	1	—	1	1	—	1	1	3879 668
		Black	R,W	1	1	—	1	1	—	1	1	3879 667
	Label No. 3796 282-3	Blue	P,D,C,Y	—	1	—	—	1	1	1	1	F402-3 KB7
		Green	P,D,C,Y	—	1	—	—	1	1	1	1	F402-3 KG-7
		Parchment	P,D,C,Y	—	1	—	—	1	1	1	1	F402-3 KL2
		Chestnut	P,D,C,Y	—	1	—	—	1	1	1	1	F402-3 KT8
		Gold	P,D,C,Y	—	1	—	—	1	1	1	1	F402-3 KY4
		Black	P,D,C,Y	—	1	—	—	1	1	1	1	F402-3 KX9
	Label No. 3796 272-3	Blue	P,D,C,Y	—	1	—	—	1	1	1	1	F400-1 KB7
		Green	P,D,C,Y	—	1	—	—	1	1	1	1	F400-1 KG7
		Parchment	P,D,C,Y	—	1	—	—	1	1	1	1	F400-1 KL2
		Chestnut	P,D,C,Y	—	1	—	—	1	1	1	1	F400-1 KT8
		Gold	P,D,C,Y	—	1	—	—	1	1	1	1	F400-1 KY4
		Black	P,D,C,Y	—	1	—	—	1	1	1	1	F400-1 KX9
	Label No. 3861 214-5	Blue	P,D,C,Y	—	1	—	—	1	1	1	1	F402-3 KB7
		Green	P,D,C,Y	—	1	—	—	1	1	1	1	F402-3 KG7
		Parchment	P,D,C,Y	—	1	—	—	1	1	1	1	F402-3 KL2
		Chestnut	P,D,C,Y	—	1	—	—	1	1	1	1	F402-3 KT8
		Gold	P,D,C,Y	—	1	—	—	1	1	1	1	F402-3 KY4
		Black	P,D,C,Y	—	1	—	—	1	1	1	1	F402-3 KX9

CODE	PART NAME		MODEL CODES	SEE BOTTOM NOTE 21	23	29	41	43	45	46	PART NUMBER
23-49-1	BELT Cont'd.										
	Label No. 3861 212-3										
		Blue	P,D,C,Y	—	1	—	—	1	1	1	1	F400-1 KB7
		Green	P,D,C,Y	—	1	—	—	1	1	1	1	F400-1 KG7
		Parchment	P,D,C,Y	—	1	—	—	1	1	1	1	F400-1 KL2
		Chestnut	P,D,C,Y	—	1	—	—	1	1	1	1	F400-1 KT8
		Gold	P,D,C,Y	—	1	—	—	1	1	1	1	F400-1 KY4
		Black	P,D,C,Y	—	1	—	—	1	1	1	1	F400-1 KX9
	Label No. 3861 348-9										
		Blue	P,D,C,Y	—	1	—	—	1	1	1	1	F434-5 KB7
		Green	P,D,C,Y	—	1	—	—	1	1	1	1	F434-5 KG7
		Parchment	P,D,C,Y	—	1	—	—	1	1	1	1	F434-5 KL2
		Chestnut	P,D,C,Y	—	1	—	—	1	1	1	1	F434-5 KT8
		Gold	P,D,C,Y	—	1	—	—	1	1	1	1	F434-5 KY4
		Black	P,D,C,Y	—	1	—	—	1	1	1	1	F434-5 KX9
	Label No. 3861 350-1										
		Blue	P,D,C,Y	—	1	—	—	1	1	1	1	F434-5 KB7
		Green	P,D,C,Y	—	1	—	—	1	1	1	1	F434-5 KG7
		Parchment	P,D,C,Y	—	1	—	—	1	1	1	1	F434-5 KL2
		Chestnut	P,D,C,Y	—	1	—	—	1	1	1	1	F434-5 KT8
		Gold	P,D,C,Y	—	1	—	—	1	1	1	1	F434-5 KY4
		Black	P,D,C,Y	—	1	—	—	1	1	1	1	F434-5 KX9
	Label No. 3861 352-3										
		Blue	P,D,C,Y	—	1	—	—	1	1	1	1	F436-7 KB7
		Green	P,D,C,Y	—	1	—	—	1	1	1	1	F436-7 KG7
		Parchment	P,D,C,Y	—	1	—	—	1	1	1	1	F436-7 KL2
		Chestnut	P,D,C,Y	—	1	—	—	1	1	1	1	F436-7 KT8
		Gold	P,D,C,Y	—	1	—	—	1	1	1	1	F436-7 KY4
		Black	P,D,C,Y	—	1	—	—	1	1	1	1	F436-7 KX9
	Label No. 3861 354-5										
		Blue	P,D,C,Y	—	1	—	—	1	1	1	1	F436-7 KB7
		Green	P,D,C,Y	—	1	—	—	1	1	1	1	F436-7 KG7
		Parchment	P,D,C,Y	—	1	—	—	1	1	1	1	F436-7 KL2
		Chestnut	P,D,C,Y	—	1	—	—	1	1	1	1	F436-7 KT8
		Gold	P,D,C,Y	—	1	—	—	1	1	1	1	F436-7 KY4
		Black	P,D,C,Y	—	1	—	—	1	1	1	1	F436-7 KX9
	Label No. 3796 272 or 3861 212										
		Blue	P,D,C,Y	—	1	—	—	1	1	1	1	3879 635
		Green	P,D,C,Y	—	1	—	—	1	1	1	1	3879 636
		Parchment	P,D,C,Y	—	1	—	—	1	1	1	1	3879 637
		Chestnut	P,D,C,Y	—	1	—	—	1	1	1	1	3879 638
		Gold	P,D,C,Y	—	1	—	—	1	1	1	1	3879 639
		Black	P,D,C,Y	—	1	—	—	1	1	1	1	3879 634
	Label No. 3796 273 or 3861 213										
		Blue	P,D,C,Y	—	1	—	—	1	1	1	1	3879 641
		Green	P,D,C,Y	—	1	—	—	1	1	1	1	3879 642
		Parchment	P,D,C,Y	—	1	—	—	1	1	1	1	3879 643
		Chestnut	P,D,C,Y	—	1	—	—	1	1	1	1	3879 644
		Gold	P,D,C,Y	—	1	—	—	1	1	1	1	3879 645
		Black	P,D,C,Y	—	1	—	—	1	1	1	1	3879 640
	Label No. 3796 282 or 3861 214										
		Blue	P,D,C,Y	—	1	—	—	1	1	1	1	3879 647
		Green	P,D,C,Y	—	1	—	—	1	1	1	1	3879 648
		Parchment	P,D,C,Y	—	1	—	—	1	1	1	1	3879 649

TYPE LETTERS Indicates: J - Challenger, B - Barracuda, V - Valiant, L - Dart, R - Satellite, W - Coronet, P - Plymouth, D - Dodge, C - Chrysler, Y - Imperial

NUMERALS INDICATE: 21 - 2 DR. SED., 23 - 2 DR. H.T., 29 - FAST BACK, 41 - 4 DR. SED., 43 - 4 DR. H.T., 45 - 6 PASS. STA. WGN., 46 - 9 PASS. STA. WGN.

AR Indicates use as required.
# Indicates parts not listed in any previous parts book
Numerals in parentheses ( ) refer to notes.
★ Indicates change or addition.

Printed in U.S.A.
November, 1974

Right and left part numbers are on same line, first number is right, second number is left.

CODE	PART NAME		MODEL CODES	SEE BOTTOM NOTE 21	23	29	41	43	45	46	PART NUMBER
23-49-1	BELT Cont'd.										
		Chestnut	P,D,C,Y	—	1	—	—	1	1	1	1	3879 650
		Gold	P,D,C,Y	—	1	—	—	1	1	1	1	3879 651
		Black	P,D,C,Y	—	1	—	—	1	1	1	1	3879 646
	Label No. 3796 283 or 3861 215										
		Blue	P,D,C,Y	—	1	—	—	1	1	1	1	3879 653
		Green	P,D,C,Y	—	1	—	—	1	1	1	1	3879 654
		Parchment	P,D,C,Y	—	1	—	—	1	1	1	1	3879 655
		Chestnut	P,D,C,Y	—	1	—	—	1	1	1	1	3879 656
		Gold	P,D,C,Y	—	1	—	—	1	1	1	1	3879 657
		Black	P,D,C,Y	—	1	—	—	1	1	1	1	3879 652
	BELT, Front Seat Lap Center Tip Half										
	Label No. 3796 266										
		Parchment	V,L	—	1	—	—	1	—	—	—	F509 KL2
		Black	V,L	—	1	—	—	1	—	—	—	F509 KX9
	Label No. 3861 365										
		Parchment	V,L	—	1	—	—	1	—	—	—	F603 KL2
		Black	V,L	—	1	—	—	1	—	—	—	F603 KX9
		Blue	R,W	1	1	—	1	1	—	1	1	F509 KB7
		Green	R,W	1	1	—	1	1	—	1	1	F509 KG7
		Gold	R,W	1	1	—	1	1	—	1	1	F509 KY4
		Black	R,W	1	1	—	1	1	—	1	1	F509 KX9
	Label No. 3861 365										
		Black	R,W	1	1	—	1	1	—	1	1	F603 KX9
	Label No. 3796 266										
		Blue	P,D,C,Y	—	1	—	—	1	1	1	1	F509 KB7
		Green	P,D,C,Y	—	1	—	—	1	1	1	1	F509 KG7
		Parchment	P,D,C,Y	—	1	—	—	1	1	1	1	F509 KL2
		Chestnut	P,D,C,Y	—	1	—	—	1	1	1	1	F509 KT8
		Gold	P,D,C,Y	—	1	—	—	1	1	1	1	F509 KY4
		Black	P,D,C,Y	—	1	—	—	1	1	1	1	F509 KX9
	BELT, Front Seat Lap Center Buckle Half										
	Label No. 3796 286										
		Parchment	V,L	—	1	—	—	1	—	—	—	F408 KL2
		Black	V,L	—	1	—	—	1	—	—	—	F408 KX9
	Label No. 3861 205										
		Black	V,L	—	1	—	—	1	—	—	—	F408 KX9
	Label No. 3861 364										
		Parchment	V,L	—	1	—	—	1	—	—	—	F442 KL2
		Black	V,L	—	1	—	—	1	—	—	—	F442 KX9
	Label No. 3796 286 or 3861 205										
		Parchment	V,L	—	1	—	1	1	—	—	—	3879 665
		Black	V,L	—	1	—	1	1	—	—	—	3879 664
	Label No. 3796 286										
		Blue	R,W	1	1	—	1	1	—	1	1	F408 KB7
		Green	R,W	1	1	—	1	1	—	1	1	F408 KG7
		Gold	R,W	1	1	—	1	1	—	1	1	F408 KY4
		Black	R,W	1	1	—	1	1	—	1	1	F408 KX9
	Label No. 3861 205										
		Black	R,W	1	1	—	1	1	—	1	1	F408 KX9
	Label No. 3861 364										
		Black	R,W	1	1	—	1	1	—	1	1	F442 KX9
	Label No. 3796 286 or 3861 205										
		Parchment	R,W	1	1	—	1	1	—	1	1	3879 665
		Black	R,W	1	1	—	1	1	—	1	1	3879 664

TYPE LETTERS Indicates J - Challenger, B - Barracuda, V - Valiant, L - Dart, R - Satellite, W - Coronet, P - Plymouth, D - Dodge, C - Chrysler, Y - Imperial

NUMERALS INDICATE: 21 - 2 DR. SED., 23 - 2 DR. H.T., 29 - FAST BACK, 41 - 4 DR. SED., 43 - 4 DR. H.T., 45 - 6 PASS. STA. WGN., 46 - 9 PASS. STA. WGN.

AR Indicates use as required.
# Indicates parts not listed in any previous parts book
Numerals in parentheses ( ) refer to notes.
★ Indicates change or addition.

Printed in U.S.A.
November, 1974

Right and left part numbers are on same line, first number is right, second number is left.

CODE	PART NAME	MODEL CODES	SEE BOTTOM NOTE 21	23	29	41	43	45	46	PART NUMBER
23-49-1	BELT Cont'd.									
	BELT, Rear Seat Lap Outboard Tip Half									
	Label No. 3760 181									
	Blue Black	V,L	—	2	—	2	—	—	—	— F504 KBX
	Green Black	V,L	—	2	—	2	—	—	—	— F504 KGX
	Parchment Black	V,L	—	2	—	2	—	—	—	— F504 KLX
	Gold Black	V,L	—	2	—	2	—	—	—	— F504 KYX
	Black	V,L	—	2	—	2	—	—	—	— F504 JX9
	Label No. 3796 891									
	Blue Black	V,L	—	2	—	2	—	—	—	— F522 KBX
	Green Black	V,L	—	2	—	2	—	—	—	— F522 KGX
	Parchment Black	V,L	—	2	—	2	—	—	—	— F522 KLX
	Parchment	V,L	—	2	—	2	—	—	—	— F522 KL2
	Gold Black	V,L	—	2	—	2	—	—	—	— F522 KYX
	Black	V,L	—	2	—	2	—	—	—	— F522 KX9
	Label No. 3760 182									
	Blue Black	V,L	—	—	—	—	2	—	—	— F502 KBX
	Green Black	V,L	—	—	—	—	2	—	—	— F502 KGX
	Parchment Black	V,L	—	—	—	—	2	—	—	— F502 KLX
	Gold Black	V,L	—	—	—	—	2	—	—	— F502 KYX
	Black	V,L	—	—	—	—	2	—	—	— F502 JX9
	Label No. 3796 889									
	Blue Black	V,L	—	—	—	—	2	—	—	— F520 KBX
	Green Black	V,L	—	—	—	—	2	—	—	— F520 KGX
	Parchment Black	V,L	—	—	—	—	2	—	—	— F520 KLX
	Parchment	V,L	—	—	—	—	2	—	—	— F520 KL2
	Gold Black	V,L	—	—	—	—	2	—	—	— F520 KYX
	Black	V,L	—	—	—	—	2	—	—	— F520 KX9
	Label No. 3760 183									
	Blue Black	B,J	—	2	—	—	—	—	—	— F500 KBX
	Green Black	B,J	—	2	—	—	—	—	—	— F500 KGX
	Black	B,J	—	2	—	—	—	—	—	— F500 JX9
	Label No. 3796 887									
	Blue Black	B,J	—	2	—	—	—	—	—	— F518 KBX
	Green Black	B,J	—	2	—	—	—	—	—	— F518 KGX
	Black	B,J	—	2	—	—	—	—	—	— F518 KX9
	Label No. 3760 184									
	Blue Black	R,W	2	2	—	2	—	—	—	— F503 KBX
	Green Black	R,W	2	2	—	2	—	—	—	— F503 KGX
	Parchment Black	R,W	2	2	—	2	—	—	—	— F503 KLX
	Gold Black	R,W	2	2	—	2	—	—	—	— F503 KYX
	Black	R,W	2	2	—	2	—	—	—	— F503 JX9
	Label No. 3796 890									
	Blue Black	R,W	2	2	—	2	—	—	—	— F521 KBX
	Green Black	R,W	2	2	—	2	—	—	—	— F521 KGX
	Parchment Black	R,W	2	2	—	2	—	—	—	— F521 KLX
	Gold Black	R,W,	2	2	—	2	—	—	—	— F521 KYX
	Black	R,W	2	2	—	2	—	—	—	— F521 KX9
	Label No. 3760 185									
	Blue Black	R,W	—	—	—	—	2	—	2	2 F501 KBX
	Green Black	R,W	—	—	—	—	2	—	2	2 F501 KGX
	Parchment Black	R,W	—	—	—	—	2	—	2	2 F501 KLX
	Chestnut Black	R,W	—	—	—	—	2	—	2	2 F501 KTX
	Gold Black	R,W	—	—	—	—	2	—	2	2 F501 KYX
	Black	R,W	—	—	—	—	2	—	2	2 F501 JX9
	Label No. 3796 888									
	Blue Black	R,W	—	—	—	—	2	—	2	2 F519 KBX
	Green Black	R,W	—	—	—	—	2	—	2	2 F519 KGX

TYPE LETTERS Indicates: J - Challenger, B - Barracuda, V - Valiant, L - Dart, R - Satellite, W - Coronet, P - Plymouth, D - Dodge, C - Chrysler, Y - Imperial

NUMERALS INDICATE: 21 - 2 DR. SED., 23 - 2 DR. H.T., 29 - FAST BACK, 41 - 4 DR. SED., 43 - 4 DR. H.T., 45 - 6 PASS. STA. WGN., 46 - 9 PASS. STA. WGN.

AR Indicates use as required.
# Indicates parts not listed in any previous parts book
Numerals in parentheses ( ) refer to notes.
★ Indicates change or addition.

Printed in U.S.A.
November, 1974

Right and left part numbers are on same line, first number is right, second number is left.

CODE	PART NAME	MODEL CODES	SEE BOTTOM NOTE 21	23	29	41	43	45	46	PART NUMBER
23-49-1	BELT Cont'd.									
	Parchment Black	R,W	—	—	—	2	—	2	2	F519 KLX
	Chestnut Black	R,W	—	—	—	2	—	2	2	F519 KTX
	Gold Black	R,W	—	—	—	2	—	2	2	F519 KYX
	Black	R,W	—	—	—	2	—	2	2	F519 KX9
	Label No. 3796 269									
	Blue Black	P	—	2	—	—	—	—	—	F508 KBX
	Green Black	P	—	2	—	—	—	—	—	F508 FGX
	Parchment Black	P	—	2	—	—	—	—	—	F508 KLX
	Gold Black	P	—	2	—	—	—	—	—	F508 KYX
	Black	P	—	2	—	—	—	—	—	F508 KX9
	Label No. 3796 270									
	Blue Black	D,C,Y	—	2	—	—	—	—	—	F507 KBX
	Green Black	D,C,Y	—	2	—	—	—	—	—	F507 KGX
	Parchment Black	D,C,Y	—	2	—	—	—	—	—	F507 KLX
	Chestnut Black	D,C,Y	—	2	—	—	—	—	—	F507 KTX
	Gold Black	D,C,Y	—	2	—	—	—	—	—	F507 KYX
	Black	D,C,Y	—	2	—	—	—	—	—	F507 KX9
	Label No. 3796 268									
	Blue Black	P,D,C,Y	—	—	—	2	2	—	—	F505 KBX
	Green Black	P,D,C,Y	—	—	—	2	2	—	—	F505 KGX
	Parchment Black	P,D,C,Y	—	—	—	2	2	—	—	F505 KLX
	Chestnut Black	P,D,C,Y	—	—	—	2	2	—	—	F505 KTX
	Gold Black	P,D,C,Y	—	—	—	2	2	—	—	F505 KYX
	Black	P,D,C,Y	—	—	—	2	2	—	—	F505 KX9
	Label No. 3796 271									
	Blue Black	P,D,C,Y	—	2	—	2	2	2	2	F506 KBX
	Green Black	P,D,C,Y	—	2	—	2	2	2	2	F506 KGX
	Parchment Black	P,D,C,Y	—	2	—	2	2	2	2	F506 KLX
	Chestnut Black	P,D,C,Y	—	2	—	2	2	2	2	F506 KTX
	Gold Black	P,D,C,Y	—	2	—	2	2	2	2	F506 KYX
	Black	P,D,C,Y	—	2	—	2	2	2	2	F506 KX9
	Label No. 3796 892									
	Blue Black	P,D,C,Y	—	2	—	2	2	2	2	F523 KBX
	Green Black	P,D,C,Y	—	2	—	2	2	2	2	F523 KGX
	Parchment Black	P,D,C,Y	—	2	—	2	2	2	2	F523 KLX
	Chestnut Black	P,D,C,Y	—	2	—	2	2	2	2	F523 KTX
	Gold Black	P,D,C,Y	—	2	—	2	2	2	2	F523 KYX
	Black	P,D,C,Y	—	2	—	2	2	2	2	F523 KX9
	BELT, Rear Seat Lap Buckle Half Inner									
	Label No. 3760 191									
	Blue	V,L,B,J	—	2	—	2	2	—	—	—	F512 KB7
	Green	V,L,B,J	—	2	—	2	2	—	—	—	F512 KG7
	Parchment	V,L,B,J	—	2	—	2	2	—	—	—	F512 KL2
	Gold	V,L,B,J	—	2	—	2	2	—	—	—	F512 KY4
	Black	V,L,B,J	—	2	—	2	2	—	—	—	F512 JX9
	Label No. 3760 194									
	Blue	R,W	2	2	—	2	2	—	2	2	F511 KB7
	Green	R,W	2	2	—	2	2	—	2	2	F511 KG7
	Parchment	R,W	2	2	—	2	2	—	2	2	F511 KL2
	Chestnut	R,W	2	2	—	2	2	—	2	2	F511 KT8
	Gold	R,W	2	2	—	2	2	—	2	2	F511 KY4
	Black	R,W	2	2	—	2	2	—	2	2	F511 JX9
	Label No. 3760 192									
	Blue	P,D,C,Y	—	2	—	—	2	2	2	2	F510 KB7
	Green	P,D,C,Y	—	2	—	—	2	2	2	2	F510 KG7
	Parchment	P,D,C,Y	—	2	—	—	2	2	2	2	F510 KL2

TYPE LETTERS Indicates: J - Challenger, B - Barracuda, V - Valiant, L - Dart, R - Satellite, W - Coronet, P - Plymouth, D - Dodge, C - Chrysler, Y - Imperial

NUMERALS INDICATE: 21 - 2 DR. SED., 23 - 2 DR. H.T., 29 - FAST BACK, 41 - 4 DR. SED., 43 - 4 DR. H.T., 45 - 6 PASS. STA. WGN., 46 - 9 PASS. STA. WGN.

AR Indicates use as required.
# Indicates parts not listed in any previous parts book
Numerals in parentheses ( ) refer to notes.
★ Indicates change or addition.

Printed in U.S.A.
November, 1974

Right and left part numbers are on same line, first number is right, second number is left.

CODE	PART NAME		MODEL CODES	SEE BOTTOM NOTE 21	23	29	41	43	45	46	PART NUMBER
23-49-1	BELT Cont'd.										
		Chestnut	P,D,C,Y	—	2	—	2	2	2	2	F510 KT8
		Gold	P,D,C,Y	—	2	—	2	2	2	2	F510 KY4
		Black	P,D,C,Y	—	2	—	2	2	2	2	F510 JX9
	Label No. 3760 191										
		Blue	P,D,C,Y	—	2	—	2	2	2	2	F512 KB7
		Green	P,D,C,Y	—	2	—	2	2	2	2	F512 KG7
		Parchment	P,D,C,Y	—	2	—	2	2	2	2	F512 KL2
		Chestnut	P,D,C,Y	—	2	—	2	2	2	2	F512 KT8
		Gold	P,D,C,Y	—	2	—	2	2	2	2	F512 KY4
		Black	P,D,C,Y	—	2	—	2	2	2	2	F512 JX9
	BELT, Rear Seat Lap Center Tip Half										
	Label No. 3861 365										
		Parchment	V,L	—	1	—	1	—	—	—	F603 KL2
		Black	V,L	—	1	—	1	—	—	—	F603 KX9
	Label No. 3796 266										
		Blue	V,L,R,W	1	1	1	1	—	1	1	F509 KB7
		Green	V,L,R,W	1	1	1	1	—	1	1	F509 KG7
		Parchment	V,L,R,W	1	1	1	1	—	1	1	F509 KL2
		Chestnut	V,L,R,W	1	1	1	1	—	1	1	F509 KT8
		Gold	V,L,R,W	1	1	1	1	—	1	1	F509 KY4
		Black	V,L,R,W	1	1	1	1	—	1	1	F509 KX9
	Label No. 3796 266										
		Blue	P,D,C,Y	—	1	—	1	1	1	1	F509 KB7
		Green	P,D,C,Y	—	1	—	1	1	1	1	F509 KG7
		Parchment	P,D,C,Y	—	1	—	1	1	1	1	F509 KL2
		Chestnut	P,D,C,Y	—	1	—	1	1	1	1	F509 KT8
		Gold	P,D,C,Y	—	1	—	1	1	1	1	F509 KY4
		Black	P,D,C,Y	—	1	—	1	1	1	1	F509 KX9
	BELT, Rear Seat Lap Center Buckle Half										
	Label No. 3760 191										
		Blue	V,L	—	1	1	1	—	—	—	F512 KB7
		Green	V,L	—	1	1	1	—	—	—	F512 KG7
		Parchment	V,L	—	1	1	1	—	—	—	F512 KL2
		Gold	V,L	—	1	1	1	—	—	—	F512 KY4
		Black	V,L	—	1	1	1	—	—	—	F512 JX9
	Label No. 3760 194										
		Blue	R,W	1	1	1	1	—	1	1	F511 KB7
		Green	R,W	1	1	1	1	—	1	1	F511 KG7
		Parchment	R,W	1	1	1	1	—	1	1	F511 KL2
		Chestnut	R,W	1	1	1	1	—	1	1	F511 KT8
		Gold	R,W	1	1	1	1	—	1	1	F511 KY4
		Black	R,W	1	1	1	1	—	1	1	F511 JX9
	Label No. 3760 191										
		Blue	P,D,C,Y	—	1	—	1	1	1	1	F512 KB7
		Green	P,D,C,Y	—	1	—	1	1	1	1	F512 KG7
		Parchment	P,D,C,Y	—	1	—	1	1	1	1	F512 KL2
		Chestnut	P,D,C,Y	—	1	—	1	1	1	1	F512 KT8
		Gold	P,D,C,Y	—	1	—	1	1	1	1	F512 KY4
		Black	P,D,C,Y	—	1	—	1	1	1	1	F512 JX9
	BELT, 3rd Seat Lap Tip Half										
	Label No. 3796 266										
		Blue	R,W	—	—	—	—	—	—	2	F509 KB7
		Green	R,W	—	—	—	—	—	—	2	F509 KG7
		Parchment	R,W	—	—	—	—	—	—	2	F509 KL2
		Chestnut	R,W	—	—	—	—	—	—	2	F509 KT8
		Black	R,W	—	—	—	—	—	—	2	F509 KX9

TYPE LETTERS Indicates: J - Challenger, B - Barracuda, V - Valiant, L - Dart, R - Satellite, W - Coronet, P - Plymouth, D - Dodge, C - Chrysler, Y - Imperial

NUMERALS INDICATE: 21 - 2 DR. SED., 23 - 2 DR. H.T., 29 - FAST BACK, 41 - 4 DR. SED., 43 - 4 DR. H.T., 45 - 6 PASS. STA. WGN., 46 - 9 PASS. STA. WGN.

AR Indicates use as required.
# Indicates parts not listed in any previous parts book
Numerals in parentheses ( ) refer to notes.
★ Indicates change or addition.

Printed in U.S.A.
November, 1974

Right and left part numbers are on same line, first number is right, second number is left.

CODE	PART NAME		MODEL CODES	SEE BOTTOM NOTE 21	23	29	41	43	45	46	PART NUMBER
23-49-1	BELT Cont'd.										
	Label No. 3796 266										
		Blue	P,D,C,	—	—	—	—	—	—	2	F509 KB7
		Green	P,D,C	—	—	—	—	—	—	2	F509 KG7
		Parchment	P,D,C	—	—	—	—	—	—	2	F509 KL2
		Chestnut	P,D,C	—	—	—	—	—	—	2	F509 KT8
		Gold	P,D,C	—	—	—	—	—	—	2	F509 KY4
		Black	P,D,C	—	—	—	—	—	—	2	F509 KX9
	BELT, 3rd Seat Lap Buckle Half										
	Label No. 3760 194										
		Blue	R,W	—	—	—	—	—	—	2	F511 KB7
		Green	R,W	—	—	—	—	—	—	2	F511 KG7
		Parchment	R,W	—	—	—	—	—	—	2	F511 KL2
		Chestnut	R,W	—	—	—	—	—	—	2	F511 KT8
		Black	R,W	—	—	—	—	—	—	2	F511 JX9
	Label No. 3760 192										
		Blue	P,D,C	—	—	—	—	—	—	2	F510 KB7
		Green	P,D,C	—	—	—	—	—	—	2	F510 KG7
		Parchment	P,D,C	—	—	—	—	—	—	2	F510 KL2
		Chestnut	P,D,C	—	—	—	—	—	—	2	F510 KT8
		Gold	P,D,C	—	—	—	—	—	—	2	F510 KY4
		Black	P,D,C	—	—	—	—	—	—	2	F510 JX9
	Label No. 3760 191										
		Blue	P,D,C	—	—	—	—	—	—	2	F512 KB7
		Green	P,D,C	—	—	—	—	—	—	2	F512 KG7
		Parchment	P,D,C	—	—	—	—	—	—	2	F512 KL2
		Chestnut	P,D,C	—	—	—	—	—	—	2	F512 KT8
		Gold	P,D,C	—	—	—	—	—	—	2	F512 KY4
		Black	P,D,C	—	—	—	—	—	—	2	F512 JX9
	BELT PACKAGE, Rear Seat Shoulder										
		Black	V,L	—	2	—	2	2	—	—	—	F805 JX9
		Black	B	—	2	—	—	—	—	—	—	F803 JX9
		Black	J	—	2	—	—	—	—	—	—	F804 JX9
		Black	R,W	2	2	—	2	2	—	—	—	F808 JX9
		Black	R,W	—	—	—	—	—	—	2	2	F806 JX9
		Black	P,D,C,Y	—	2	—	—	2	2	—	—	F808 JX9
		Black	P,D,C	—	—	—	—	—	—	2	2	F807 JX9
	SHOULDER BOLT, Seat Belt and Shoulder Belt Attaching										
	Stamping No. K-10	Clear	All	AR	AR	—	AR	AR	AR	AR	AR	6030 451
	Stamping No. K-11	Black	All	AR	AR	—	AR	AR	AR	AR	AR	6030 452
	Stamping No. K-12	Clear	All	AR	AR	—	AR	AR	AR	AR	AR	6030 453
	Stamping No. K-13	Red	All	AR	AR	—	AR	AR	AR	AR	AR	6030 454
	Stamping No. K-14	Green	All	AR	AR	—	AR	AR	AR	AR	AR	6030 455
	Stamping No. K-15	Clear	All	AR	AR	—	AR	AR	AR	AR	AR	6030 456
	Stamping No. K-17	Bronze	All	AR	AR	—	AR	AR	AR	AR	AR	6030 458
	Stamping No. K-20	Clear	All	AR	AR	—	AR	AR	AR	AR	AR	6030 506
	Stamping No. C-10	Clear	All	AR	AR	—	AR	AR	AR	AR	AR	6027 310
	Stamping No. C-11	Black	All	AR	AR	—	AR	AR	AR	AR	AR	6027 311
	Stamping No. C-12	Bronze	All	AR	AR	—	AR	AR	AR	AR	AR	6027 312
	Stamping No. C-13	Clear	All	AR	AR	—	AR	AR	AR	AR	AR	6029 171
	Stamping No. C-14	Red	All	AR	AR	—	AR	AR	AR	AR	AR	6030 034
	Stamping No. C-15	Clear	All	AR	AR	—	AR	AR	AR	AR	AR	6030 101
	Stamping No. C-16	Yellow	All	AR	AR	—	AR	AR	AR	AR	AR	6030 357
	Stamping No. DT-4	Clear	All	AR	AR	—	AR	AR	AR	AR	AR	6030 112
	Stamping No. C and 4-Dots										
		Bronze	All	AR	AR	—	AR	AR	AR	AR	AR	6029 835

TYPE LETTERS Indicates: J - Challenger, B - Barracuda, V - Valiant, L - Dart, R - Satellite, W - Coronet, P - Plymouth, D - Dodge, C - Chrysler, Y - Imperial

NUMERALS INDICATE: 21 - 2 DR. SED., 23 - 2 DR. H.T., 29 - FAST BACK, 41 - 4 DR. SED., 43 - 4 DR. H.T., 45 - 6 PASS. STA. WGN., 46 - 9 PASS. STA. WGN.

AR Indicates use as required.
# Indicates parts not listed in any previous parts book
Numerals in parentheses ( ) refer to notes.
★ Indicates change or addition.

Printed in U.S.A.
November, 1974

Right and left part numbers are on same line, first number is right, second number is left.

CODE	PART NAME	MODEL CODES	SEE BOTTOM NOTE 21	23		29	41	43	45	46	PART NUMBER
23-49-1	BELT Cont'd.										
	Stamping No. w/3-CCC										
	Bronze	All	AR	AR	—	AR	AR	AR	AR	AR	6029 898
	Stamping No. A Bronze	All	AR	AR	—	AR	AR	AR	AR	AR	6030 670
	BOLT, 7/16" - 20 x 1 5/16" Long										
	Stamping No. C-01 Clear	All	AR	AR	—	AR	AR	AR	AR	AR	6028 044
	SLEEVE BOLT, 3/4"-16x3/4" Long	All	AR	AR	—	AR	AR	AR	AR	AR	6029 185
	"E" RING, Front Seat Belt Retractor Sensor Bracket Pin	All	2	2	—	2	2	2	2	2	6028 872
23-49-2	SWITCH, Front Seat Cushion (Beam)										
	Up To Oct. 29, 1973										
	w/Bench Seats	V,L	—	2	—	2	2	—	—	—	3780 473
	After Oct. 29, 1973										
	w/Bench Seats	V,L	—	2	—	2	2	—	—	—	3746 841
	w/Bench Seats										
	w/Switch Tagged 3746 730	R,W	2	2	—	2	2	—	2	2	3746 846
	w/Bench Seats										
	w/Switch Tagged 3746 731	R,W	2	2	—	2	2	—	2	2	3746 841
	Up To Oct. 29, 1973										
	w/Bench Seats	P,D,C	—	2	—	—	2	2	2	2	3780 473
	After Oct. 29, 1973										
	w/Bench Seats	P,D,C	—	2	—	—	2	2	2	2	3746 841
	Up To Oct. 29, 1973										
	w/Bucket Seats	V,L,B,J	—	2	—	2	2	—	—	—	3620 863
	From Oct. 29, 1973 To Feb. 19, 1974										
	w/Bucket Seats	V,L,B,J	—	2	—	2	2	—	—	—	3746 843
	After Feb. 19, 1974										
	w/Bucket Seats	V,L,B,J	—	2	—	2	2	—	—	—	3746 981
	Up To Oct. 29, 1973										
	w/Bucket Seats	R,W	2	2	—	2	2	—	2	2	3620 863
	From Oct. 29, 1973 To April 1, 1974										
	w/Bucket Seats	R,W	2	2	—	2	2	—	2	2	3746 843
	After April 1, 1974										
	w/Bucket Seats	R,W	2	2	—	2	2	—	2	2	3879 005
	w/Split Bench Seats	P,D,C	—	2	—	—	2	2	2	2	3780 473
	w/Split Bench Seats	Y	—	2	—	—	—	2	—	—	3746 842
	SWITCH, Front Seat Center Cushion										
		V,L,R,W	1	1	—	1	1	—	1	1	3780 472
		P,D,C,Y	—	1	—	—	1	1	1	1	3780 472
	SWITCH, Front Seat Belt Interlock Override										
	Up To Approximately Sept. 24, 1973 (Stamped-Interlock By-Pass)	V,L	—	1	—	1	1	—	—	—	3746 723
	From Approximately Sept. 24, 1973 To Approximately Nov. 16, 1973 (Stamped-Emergency Start)	V,L	—	1	—	1	1	—	—	—	3746 910
	After Approximately Nov. 16, 1973 (Stamped - Emergency Start)	V,L	—	1	—	1	1	—	—	—	3746 916
	Up To Approximately Sept. 24, 1973 (Stamped-Interlock By-Pass)	B,J	—	1	—	—	—	—	—	—	3746 724
	From Approximately Sept. 24, 1973 To Approximately Nov. 16, 1973 (Stamped-Emergency Start)	B,J	—	1	—	—	—	—	—	—	3746 910
	After Approximately Nov. 16, 1973 (Stamped - Emergency Start)	B,J	—	1	—	—	—	—	—	—	3746 916
	Up To Approximately Sept. 24, 1973	R,W	1	1	—	1	1	—	1	1	3746 723
	After Approximately Sept. 24, 1973	R,W	1	1	—	1	1	—	1	1	3746 901
	Up To Approximately Sept. 24, 1973	P,D,C,Y	—	1	—	—	1	1	1	1	3746 723
	After Approximately Sept. 24, 1973	P,D,C,Y	—	1	—	—	1	1	1	1	3746 901

TYPE LETTERS Indicates J - Challenger, B - Barracuda, V - Valiant, L - Dart, R - Satellite, W - Coronet, P - Plymouth, D - Dodge, Chrysler, Y - Imperial

NUMERALS INDICATE: 21 - 2 DR. SED., 23 - 2 DR. H.T., 29 - FAST BACK, 41 - 4 DR. SED., 43 - 4 DR. H.T., 45 - 6 PASS. STA. WGN., 46 - 9 PASS. STA. WGN.

AR Indicates use as required.
# Indicates parts not listed in any previous parts book
Numerals in parentheses ( ) refer to notes.
★ Indicates change or addition.

Printed in U.S.A.
November, 1974

Right and left part numbers are on same line, first number is right, second number is left.

CODE	PART NAME	MODEL CODES	SEE BOTTOM NOTE 21	23	29	41	43	45	46	PART NUMBER
23-49-3	COVER, Front Seat Shoulder Belt Hanger									
	Blue	V,L,R,W	—	—	—	2	—	2	2	F802 KB7
	Green	V,L,R,W	—	—	—	2	—	2	2	F802 KG7
	Parchment	V,L,R,W	—	—	—	2	—	2	2	F802 KL2
	Chestnut	V,L,R,W	—	—	—	2	—	2	2	F802 KT8
	Gold	V,L,R,W	—	—	—	2	—	2	2	F802 KY4
	White	V,L,R,W	—	—	—	2	—	2	2	F802 KW1
	Black	V,L,R,W	—	—	—	2	—	2	2	F802 KX9
	Blue	P,D,C	—	—	—	2	—	2	2	F802 KB7
	Green	P,D,C	—	—	—	2	—	2	2	F802 KG7
	Parchment	P,D,C	—	—	—	2	—	2	2	F802 KL2
	Chestnut	P,D,C	—	—	—	2	—	2	2	F802 KT8
	Gold	P,D,C	—	—	—	2	—	2	2	F802 KY4
	White	P,D,C	—	—	—	2	—	2	2	F802 KW1
	Black	P,D,C	—	—	—	2	—	2	2	F802 KX9
	COVER, Seat Belt Retractor Center Pillar									
	Blue	V,L	—	—	—	1	—	—	—	F344-5 KB7
	Green	V,L	—	—	—	1	—	—	—	F344-5 KG7
	Parchment	V,L	—	—	—	1	—	—	—	F344-5 KL2
	Gold	V,L	—	—	—	1	—	—	—	F344-5 KY4
	Black	V,L	—	—	—	1	—	—	—	F344-5 KX9
	Blue	R,W	—	—	—	1	—	1	1	F338-9 KB7
	Green	R,W	—	—	—	1	—	1	1	F338-9 KG7
	Parchment	R,W	—	—	—	1	—	1	1	F338-9 KL2
	Chestnut	R,W	—	—	—	1	—	1	1	F338-9 KT8
	Gold	R,W	—	—	—	1	—	1	1	F338-9 KY4
	Black	R,W	—	—	—	1	—	1	1	F338-9 KX9
	Blue	P,D,C	—	—	—	1	—	1	1	F336-7 KB7
	Green	P,D,C	—	—	—	1	—	1	1	F336-7 KG7
	Parchment	P,D,C	—	—	—	1	—	1	1	F336-7 KL2
	Chestnut	P,D,C	—	—	—	1	—	1	1	F336-7 KT8
	White	P,D,C	—	—	—	1	—	1	1	F336-7 KW1
	Gold	P,D,C	—	—	—	1	—	1	1	F336-7 KY4
	Black	P,D,C	—	—	—	1	—	1	1	F336-7 KX9
	Blue	P,D,C,Y	—	—	—	—	1	—	—	F340-1 KB7
	Green	P,D,C,Y	—	—	—	—	1	—	—	F340-1 KG7
	Parchment	P,D,C,Y	—	—	—	—	1	—	—	F340-1 KL2
	Chestnut	P,D,C,Y	—	—	—	—	1	—	—	F340-1 KT8
	White	P,D,C,Y	—	—	—	—	1	—	—	F340-1 KW1
	Gold	P,D,C,Y	—	—	—	—	1	—	—	F340-1 KY4
	Black	P,D,C,Y	—	—	—	—	1	—	—	F340-1 KX9
	COVER, Seat Belt Retractor Qtr. Trim Panel									
	Blue	R,W	1	1	—	1	—	—	—	D748-9 KB7
	Green	R,W	1	1	—	1	—	—	—	D748-9 KG7
	Parchment	R,W	1	1	—	1	—	—	—	D748-9 KL2
	White	R,W	1	1	—	1	—	—	—	D748-9 KW1
	Gold	R,W	1	1	—	1	—	—	—	D748-9 KY4
	Black	R,W	1	1	—	1	—	—	—	D748-9 KX9
	Blue	P,D,C,Y	—	1	—	—	—	—	—	D750-1 KB7
	Green	P,D,C,Y	—	1	—	—	—	—	—	D750-1 KG7
	Parchment	P,D,C,Y	—	1	—	—	—	—	—	D750-1 KL2
	Chestnut	P,D,C,Y	—	1	—	—	—	—	—	D750-1 KT8
	White	P,D,C,Y	—	1	—	—	—	—	—	D750-1 KW1
	Gold	P,D,C,Y	—	1	—	—	—	—	—	D750-1 KY4
	Black	P,D,C,Y	—	1	—	—	—	—	—	D750-1 KX9
	Blue	P,D,C	—	—	—	—	—	1	1	W228-9 KB7
	Green	P,D,C	—	—	—	—	—	1	1	W228-9 KG7
	Parchment	P,D,C	—	—	—	—	—	1	1	W228-9 KL2
	Chestnut	P,D,C	—	—	—	—	—	1	1	W228-9 KT8
	Gold	P,D,C	—	—	—	—	—	1	1	W228-9 KY4
	Black	P,D,C	—	—	—	—	—	1	1	W228-9 KX9

TYPE LETTERS Indicates J - Challenger, B - Barracuda, V - Valiant, L - Dart, R - Satellite, W - Coronet, P - Plymouth, D - Dodge, C - Chrysler, Y - Imperial

NUMERALS INDICATE: 21 - 2 DR. SED., 23 - 2 DR. H.T., 29 - FAST BACK, 41 - 4 DR. SED., 43 - 4 DR. H.T., 45 - 6 PASS. STA. WGN., 46 - 9 PASS. STA. WGN.

AR Indicates use as required.
# Indicates parts not listed in any previous parts book
Numerals in parentheses ( ) refer to notes.
★ Indicates change or addition.

Printed in U.S.A.
November, 1974

Right and left part numbers are on same line, first number is right, second number is left.

CODE	PART NAME	MODEL CODES	SEE BOTTOM NOTE 21	23		29	41	43	45	46	PART NUMBER
23-49-7	BRACKET, Roof Side Rail Shoulder Harness Stowage										
	Frt.	B,J	—	2	—	—	—	—	—	—	3720 352
	Rr.	B,J	—	2	—	—	—	—	—	—	3720 353
	BRACKET, Seat Belt Cover Hinge Reinforcement	P,D,C,Y	—	1	—	—	—	—	—	—	3762 714-5
	BRACKET, Front Seat Belt Bezel Center Pillar	P,D,C,Y	—	—	—	—	—	1	—	—	3796 364-5
	LOOP, Floor Console Seat Belt Inboard Support										
		V,L	—	2	—	2	—	—	—	—	3550 160
		B,J	—	2	—	—	—	—	—	—	3550 156
		R,W	2	2	—	2	—	—	—	—	3550 160
23-49-8	RETAINER, Retractor Cover Opening Plug Attaching	D	—	—	—	—	—	—	—	2	3762 451
23-49-9	REINFORCEMENT, Rear Seat Shoulder Belt Shelf Panel	B	—	1	—	—	—	—	—	—	3454 584-5
		J	—	1	—	—	—	—	—	—	3454 578-9
		R,W	2	2	—	2	2	—	—	—	3548 851
		P,D,C,Y	—	2	—	—	2	2	—	—	3548 851
	REINFORCEMENT, Front Floor Pan Seat Belt Inner										
		V,L	—	2	—	2	2	—	—	—	2483 098
		P,D,C,Y	—	2	—	—	2	2	2	2	2483 098
	REINFORCEMENT, Rear Shoulder Belt Shelf Extension										
		V,L	—	2	—	2	2	—	—	—	2999 030
	REINFORCEMENT, Inner Wheelhouse Panel Rear Seat Belt	V,L	—	2	—	2	2	—	—	—	3615 722
	REINFORCEMENT, Side Sill to Wheelhouse Outer Rear Seat Belt										
		R,W	1	1	—	1	—	—	—	—	3616 998-9
		P,D,C,Y	—	1	—	—	—	—	—	—	3756 280-1
	REINFORCEMENT, 3rd Seat Lap Belt to Floor Pan Outboard										
		R,W	—	—	—	—	—	—	—	2	3548 926
	REINFORCEMENT, 3rd Seat Lap Belt Inboard										
		R,W	—	—	—	—	—	—	—	2	2862 441
		P,D,C	—	—	—	—	—	—	—	2	2862 441
	REINFORCEMENT, 3rd Seat Lap Belt Outboard	P,D,C	—	—	—	—	—	—	—	2	3760 667
	REINFORCEMENT, Center Floor Pan Front Extension Front Seat Belt Inner	B,J	—	2	—	—	—	—	—	—	2483 098
		R,W	2	2	—	2	2	—	2	2	3615 743
		P,D,C,Y	—	2	—	—	2	2	2	2	3615 743
	REINFORCEMENT, Roof Side Rail Shoulder Harness										
		V,L	—	—	—	2	—	—	—	—	2842 153
	REINFORCEMENT, Body Center Pillar Shoulder Harness	V,L	—	—	—	—	2	—	—	—	2842 153
		P,D,C,Y	—	2	—	—	—	2	—	—	2842 153
	REINFORCEMENT, Qtr. Inside Panel Seat Belt Anchor	V,L	—	2	—	2	—	—	—	—	3756 588
	REINFORCEMENT, Qtr. Inside Panel 2nd Seat Shoulder Belt Anchor	R,W	—	—	—	—	—	—	2	2	2842 153
	REINFORCEMENT, Qtr. Inside Rear Panel Shoulder Harness										
		P,D,C	—	—	—	—	—	—	2	2	2842 153

TYPE LETTERS Indicates J - Challenger, B - Barracuda, V - Valiant, L - Dart, R - Satellite, W - Coronet, P - Plymouth, D - Dodge, C - Chrysler, Y - Imperial

NUMERALS INDICATE: 21 - 2 DR. SED., 23 - 2 DR. H.T., 29 - FAST BACK, 41 - 4 DR. SED., 43 - 4 DR. H.T., 45 - 6 PASS. STA. WGN., 46 - 9 PASS. STA. WGN.

AR Indicates use as required.
# Indicates parts not listed in any previous parts book
Numerals in parentheses ( ) refer to notes.
★ Indicates change or addition.

Printed in U.S.A.
November, 1974

Right and left part numbers are on same line, first number is right, second number is left.

CODE	PART NAME	MODEL CODES	SEE BOTTOM NOTE 21	23		29	41	43	45	46	PART NUMBER
23-49-9	REINFORCEMENT Cont'd.										
	REINFORCEMENT, Center Floor Pan Rear Seat Belt Inner										
		V,L,R,W	2	2	—	2	2	—	2	2	3616 910
		P,D,C,Y	—	2	—	—	2	2	2	2	3616 910
	REINFORCEMENT, Floor Pan Rear Side Rail Seat Belt	B,J	—	2	—	—	—	—	—	—	2842 153
	NOTE: Also See Code 23-32-27										
23-49-11	SPACER, Rear Seat Lap Belt To Floor	V,L	—	2	—	2	2	—	—	—	3729 157
	SPACER, Front Seat Lap and Shoulder Belt Hanger										
	Up To July 15, 1974	V,L	—	2	—	2	—	—	—	—	3796 913
	After July 15, 1974	V,L	—	2	—	2	—	—	—	—	3861 551
		B,J	2	2	—	2	—	—	—	—	3796 911
	w/o Manual Sun Roof	R,W,	2	2	—	2	—	—	—	—	3796 911
	w/Manual Sun Roof	R,W	2	2	—	2	—	—	—	—	3796 716
		P,D	—	2	—	—	—	—	—	—	3796 911
	Up To Nov. 30, 1973	P,D	—	—	—	—	—	2	—	—	3796 911
	After Nov. 30, 1973	P,D	—	—	—	—	—	2	—	—	3796 913
		C,Y	—	2	—	—	—	2	—	—	3796 911
	SPACER, Seat Belt Hanger										
	w/Manual Sun Roof	R,W	1	1	—	1	—	—	—	—	3767 740-1
	SPACER, Front Seat Shoulder Belt Bolt to Roof Rail										
	w/Manual Sun Roof	R,W	2	2	—	2	—	—	—	—	3767 621
	SPACER, Roof Side Inner Rail Seat Belt Hanger										
	w/Manual Sun Roof	R,W	1	1	—	1	—	—	—	—	3793 152-3
23-49-15	COVER, Frt. Seat Lap Belt Tunnel Anchor Bolt	All	2	2	—	2	2	2	2	2	F814 JX9
23-49-17	BEZEL, Front Seat Belt Qtr. Inside Panel										
	Blue	B,J	—	1	—	—	—	—	—	—	F812-3 KB7
	Green	B,J	—	1	—	—	—	—	—	—	F812-3 KG7
	White	B,J	—	1	—	—	—	—	—	—	F812-3 KW1
	Black	B,J	—	1	—	—	—	—	—	—	F812-3 KX9
	BEZEL, Front Seat Lap Belt Center Pillar										
		P,D,C,Y	—	—	—	—	—	1	—	—	3796 362-3
	BEZEL, Rear Seat Lap Belt										
	Blue	P,D,C,Y	—	2	—	—	2	2	—	—	F811 KB7
	Green	P,D,C,Y	—	2	—	—	2	2	—	—	F811 KG7
	Parchment	P,D,C,Y	—	2	—	—	2	2	—	—	F811 KL2
	Chestnut	P,D,C,Y	—	2	—	—	2	2	—	—	F811 KT8
	Gold	P,D,C,Y	—	2	—	—	2	2	—	—	F811 KY4
	White	P,D,C,Y	—	2	—	—	2	2	—	—	F811 KW1
	Black	P,D,C,Y	—	2	—	—	2	2	—	—	F811 KX9
	Blue	P,D,C	—	—	—	—	—	—	1	1	F800-1 KB7
	Green	P,D,C	—	—	—	—	—	—	1	1	F800-1 KG7
	Parchment	P,D,C	—	—	—	—	—	—	1	1	F800-1 KL2
	Chestnut	P,D,C	—	—	—	—	—	—	1	1	F800-1 KT8
	Gold	P,D,C	—	—	—	—	—	—	1	1	F800-1 KY4
	Black	P,D,C	—	—	—	—	—	—	1	1	F800-1 KX9
	ESCUTCHEON, Headlining Seat Belt Hanger										
	Blue	V,L	—	2	—	—	—	—	—	—	H511 KB7
	Green	V,L	—	2	—	—	—	—	—	—	H511 KG7
	Parchment	V,L	—	2	—	—	—	—	—	—	H511 KL2
	Gold	V,L	—	2	—	—	—	—	—	—	H511 KY4
	Black	V,L	—	2	—	—	—	—	—	—	H511 KX9

TYPE LETTERS Indicates: J - Challenger; B - Barracuda; V - Valiant; L - Dart; R - Satellite; W - Coronet; P - Plymouth; D - Dodge; C - Chrysler; Y - Imperial

NUMERALS INDICATE: 21 - 2 DR. SED.; 23 - 2 DR. H.T.; 29 - FAST BACK; 41 - 4 DR. SED.; 43 - 4 DR. H.T.; 45 - 6 PASS. STA. WGN.; 46 - 9 PASS. STA. WGN.

AR Indicates use as required.
# Indicates parts not listed in any previous parts book
Numerals in parentheses ( ) refer to notes.
★ Indicates change or addition.

Printed in U.S.A.
November, 1974

Right and left part numbers are on same line, first number is right, second number is left.

CODE	PART NAME		MODEL CODES	SEE BOTTOM NOTE 21	23		29	41	43	45	46	PART NUMBER
23-49-19	GROMMET, Frt. Seat Lap and Shoulder Belt Guide		P,D,C,Y	—	2	—	—	2	2	2	2	3594 847
	GROMMET, Rear Seat Shoulder Belt Shelf Panel		V,L	—	2	—	2	2	—	—	—	2999 033
23-49-26	BUSHING, Front Seat Belt Retractor Frame Shaft	Rt.	All	2	2	—	2	2	2	2	2	3796 418
23-49-27	SLIDE, Shoulder Belt Tension Reliever		All	2	2	—	2	2	2	2	2	3861 155
23-51-5	**PANEL, Rocker**	**Outer**	V,L	—	—	—	1	—	—	—	—	3756 596-7
			V,L	—	1	—	—	—	—	—	—	3756 572-3
			V,L	—	—	—	—	1	—	—	—	2603 628-9
			B	—	1	—	—	—	—	—	—	2963 086-7
			J	—	1	—	—	—	—	—	—	2963 088-9
			R,W	1	1	—	1	—	—	—	—	3756 760-1
			R,W	—	—	—	—	1	—	—	—	3616 504-5
	Up To Sept. 25, 1973		R,W	—	—	—	—	—	—	1	1	3720 456-7
	After Sept. 25, 1973		R,W	—	—	—	—	—	—	1	1	3767 772-3
			P,D	—	1	—	—	—	—	—	—	3756 808-9
			P,D	—	—	—	—	1	1	—	—	3756 274-5
			C,Y	—	1	—	—	—	—	—	—	3756 812-3
			C	—	—	—	—	1	—	—	—	3615 902-3
			C,Y	—	—	—	—	—	1	—	—	3756 276-7
			P,D,C	—	—	—	—	—	—	1	1	3615 902-3
	INNER FRONT		V,L	—	1	—	1	1	—	—	—	3756 060-1
			B,J	—	1	—	—	—	—	—	—	3570 392-3
			R,W	1	1	—	1	1	—	1	1	3616 180-1
			P,D,C,Y	—	1	—	—	1	1	1	1	3616 560-1
	INNER REAR		V,L	—	1	—	—	1	—	—	—	3756 064-5
			V,L	—	—	—	1	—	—	—	—	3756 068-9
			B	—	1	—	—	—	—	—	—	2963 042-3
			J	—	1	—	—	—	—	—	—	2963 044-5
			R,W	1	1	—	1	1	—	1	1	3756 150-1
			P,D	—	1	—	—	1	1	—	—	3616 378-9
			P,D	—	—	—	—	—	—	1	1	3615 822-3
			C,Y	—	1	—	—	1	1	1	1	3615 822-3
23-51-6	REINFORCEMENT, Front Floor Pan Sill to Rail		V,L	—	—	—	1	—	—	—	—	2604 900-1
	REINFORCEMENT, Floor Pan Side Sill Inner Rear		V,L	—	2	—	2	2	—	—	—	2842 153
23-51-16	EXTENSION, Body Side Sill Outer Panel Front		B,J	—	1	—	—	—	—	—	—	2963 940-1
			R,W	1	1	—	1	1	—	1	1	3446 416-7
	EXTENSION, Qtr. Panel Belt Bar to Wheelhouse Outer	Lt.	P,D,C	—	—	—	—	—	—	1	1	3720 710
23-51-19	GUSSET, Body Side Sill Outer Panel	Frt.	R,W	2	2	—	2	2	—	2	2	3445 430
		Rr.	R,W	1	1	—	1	—	—	—	—	3445 432-3
		Rt. Side	R,W	—	—	—	—	2	—	2	2	3446 418
		Lt. Side	R,W	—	—	—	—	2	—	2	2	3570 391
		Frt.	P,D,C,Y	—	—	—	—	—	1	—	—	3756 366-7
		Rr.	P,D,Y	—	1	—	—	1	1	1	1	3616 210-1
		Rr.	C	—	1	—	—	1	—	1	1	3616 210-1
	NOTE: Also See Code 23-34-257											
23-51-41	BAR, Qtr. Panel Belt Side Front		P,D,C	—	—	—	—	—	—	1	1	3674 750-1
	BAR, Qtr. Panel Belt Side Rear		P,D,C	—	—	—	—	—	—	1	1	3674 752-3

TYPE LETTERS Indicates J - Challenger, B - Barracuda, V - Valiant, L - Dart, R - Satellite, W - Coronet, P - Plymouth, D - Dodge, C - Chrysler, Y - Imperial

NUMERALS INDICATE: 21 - 2 DR. SED., 23 - 2 DR. H.T., 29 - FAST BACK, 41 - 4 DR. SED., 43 - 4 DR. H.T., 45 - 6 PASS. STA. WGN., 46 - 9 PASS. STA. WGN.

AR Indicates use as required.
# Indicates parts not listed in any previous parts book
Numerals in parentheses ( ) refer to notes.
★ Indicates change or addition.

Printed in U.S.A.
November, 1974

Right and left part numbers are on same line, first number is right, second number is left.

CODE	PART NAME	MODEL CODES	SEE BOTTOM NOTE 21	23	29	41	43	45	46	PART NUMBER
23-51-43	CAP, Rocker Outer Panel Front	V,L	—	1	—	1	1	—	—	— 2782 844-5
		B,J	—	1	—	—	—	—	—	— 3444 086-7
		R,W	1	1	—	1	1	—	1	1 3445 428-9
		P,D,C,Y	—	1	—	—	1	1	1	1 3616 214-5
23-54-1	**LATCH, TAILGATE**									
	T/GATE AND DOOR									
	Up to April 15, 1974									
	Upr. Rt. Manual	R,W	—	—	—	—	—	—	1	1 3760 491
	After April 15, 1974									
	Upr. Rt. Manual	R,W	—	—	—	—	—	—	1	1 3861 234
	Up To Nov. 15, 1973									
	Upr. Rt. Electric	R,W	—	—	—	—	—	—	1	1 3760 490
	After Nov. 15, 1973									
	Upr. Rt. Electric	R,W	—	—	—	—	—	—	1	1 3796 926
	T/GATE Lwr. Rt.	R,W	—	—	—	—	—	—	1	1 3508 084
	T/GATE Upr. Lt.	R,W	—	—	—	—	—	—	1	1 3508 059
	T/GATE AND DOOR									
	Up To Oct. 31, 1973									
	Upr. Rt.	P,D,C	—	—	—	—	—	—	1	1 3695 318
	After Oct. 31, 1973									
	Upr. Rt.	P,D,C	—	—	—	—	—	—	1	1 3861 232
	T/GATE Lwr. Rt.	P,D,C	—	—	—	—	—	—	1	1 3695 322
	LATCH w/HINGE, T/Gate and Door Gate Half Upr. Lt.	P,D,C	—	—	—	—	—	—	1	1 3695 323
23-54-2	OVERLAY, T/Gate Outside Panel	R-H	—	—	—	—	—	—	1	1 3810 288
		R-P	—	—	—	—	—	—	1	1 3680 713
		W-H	—	—	—	—	—	—	1	1 3680 735
	Upr.	W-P	—	—	—	—	—	—	1	1 3680 735
	Lwr.	W-P	—	—	—	—	—	—	1	1 3680 734
		P-P	—	—	—	—	—	—	1	1 3810 201
		D-P	—	—	—	—	—	—	1	1 3680 107
		C	—	—	—	—	—	—	1	1 3680 107
23-54-3	TAILGATE Manual	R,W	—	—	—	—	—	—	1	1 3482 297
	Electric	R,W	—	—	—	—	—	—	1	1 3482 284
		P,D	—	—	—	—	—	—	1	1 3752 400
		C	—	—	—	—	—	—	1	1 3752 405
23-54-4	HINGE, T/Gate									
	T/Gate Half Lt.	R,W	—	—	—	—	—	—	1	1 3696 284
	T/Gate Door Lwr. Lt.	P,D,C	—	—	—	—	—	—	1	1 3696 483
	HINGE, T/Gate Door Upper Body Half Lt.	R,W	—	—	—	—	—	—	1	1 3548 019
	HINGE w/Striker, T/Gate Door Upper Body Half Upr. Lt.	P,D,C	—	—	—	—	—	—	1	1 3696 481
	BOLT, T/Gate Door Lower Hinge to Door 3/4" - 10 x 3 1/2"	R,W	—	—	—	—	—	—	1	1 6029 417
	NUT 3/4" - 10	R,W	—	—	—	—	—	—	1	1 272 919
	STUD, T/Gate Hinge Left									
	1/2" - 13 x 1 5/8" Frt.	R,W	—	—	—	—	—	—	1	1 6026 976
	1/2" - 13 x 1 7/8" Rr.	R,W	—	—	—	—	—	—	1	1 6029 093
	PIN, T/Gate Upper Hinge Body Half Attaching 1/2" x 2 3/8" (Knurled End)	R,W	—	—	—	—	—	—	1	1 6027 476
	PIN, T/Gate Door Lower	P,D,C	—	—	—	—	—	—	1	1 6026 889
	PIN, T/Gate Door Hinge Anti Slam	P,D,C	—	—	—	—	—	—	1	1 6030 174
23-54-5	SUPPORT, T/Gate Door Lower Hinge Pivot Lt.	R,W	—	—	—	—	—	—	1	1 3696 999
	SUPPORT, T/Gate Lower Hinge Gate Pivot Lt.	R,W	—	—	—	—	—	—	1	1 3508 245

TYPE LETTERS Indicates J - Challenger, B - Barracuda, V - Valiant, L - Dart, R - Satellite, W - Coronet, P - Plymouth, D - Dodge, C - Chrysler, Y - Imperial

NUMERALS INDICATE: 21 - 2 DR. SED., 23 - 2 DR. H.T., 29 - FAST BACK, 41 - 4 DR. SED., 43 - 4 DR. H.T., 45 - 6 PASS. STA. WGN., 46 - 9 PASS. STA. WGN.

AR Indicates use as required.
# Indicates parts not listed in any previous parts book
Numerals in parentheses ( ) refer to notes.
★ Indicates change or addition.

Printed in U.S.A.
November, 1974

Right and left part numbers are on same line, first number is right, second number is left.

CODE	PART NAME		MODEL CODES	SEE BOTTOM NOTE 21	23	29	41	43	45	46	PART NUMBER
23-54-6	STRIKER, T/Gate Latch										
	T/Gate Upr. Latch	Rt.	All	—	—	—	—	—	1	1	3508 046
	T/Gate Lwr. Latch	Rt.	All	—	—	—	—	—	1	1	3454 480
	T/Gate Upr. Latch	Lt.	R,W	—	—	—	—	—	1	1	3508 801
	T/PLATE, Qtr. Panel T/Gate Upper Latch Striker	Rt.	All	—	—	—	—	—	1	1	2860 542
	T/PLATE, Qtr. Panel T/Gate Lower Hinge	Lt.	P,D,C	—	—	—	—	—	1	1	3767 327
	T/PLATE, Qtr. Panel T/Gate Pillar Lower Latch Striker	Rt.	All	—	—	—	—	—	1	1	2860 544
	PLATE, T/Gate Door Lower Latch Striker		All	—	—	—	—	—	AR	AR	3454 492
	PLATE, T/Gate Latch Striker	Rt.	All	—	—	—	—	—	1	1	3454 474
	PLATE, T/Gate Door Hinge Lower Body Reinforcement		P,D,C	—	—	—	—	—	1	1	3759 158
	PLATE, T/Gate Latch Upper Striker Mtg.	Lt.	R,W	—	—	—	—	—	1	1	3548 029
	PLATE w/WELD SCREW, Rear Floor Pan Crossmember T/Gate Lower Hinge Support Attaching		R,W	—	—	—	—	—	2	2	3720 801
	SCREW, w/WASHER, T/Gate Lower Latch Striker Attaching 5/16"-18 x 1 1/8"	Rt.	R,W	—	—	—	—	—	4	4	6028 546
	SCREW w/WASHER, T/Gate Latch Striker Plate Attaching 5/16" - 18 x 7/8"	Rt.	R,W	—	—	—	—	—	2	2	6026 067
23-54-11	NAME PLATES, NAME LETTERS and ORNAMENTS, Tailgate (See Exterior Ornamentation Illustrations)										
23-54-18	BASE, T/Gate Glass Stabilizer Slide		R,W	—	—	—	—	—	2	2	3581 890-1
23-54-19	CABLE, T/Gate Down Position Support		P,D	—	—	—	—	—	1	1	3696 490
			C	—	—	—	—	—	1	1	3759 633
23-54-20	BUSHING, T/Gate Upper Hinge Body Half		R,W	—	—	—	—	—	1	1	2862 122
	BUSHING, T/Gate Door Lower Hinge		R,W	—	—	—	—	—	1	1	2862 127
		Lt.	P,D,C	—	—	—	—	—	2	2	2486 468
	BUSHING, T/Gate Lower Hinge Support	Lt.	R,W	—	—	—	—	—	AR	AR	2862 133
	BUSHING, T/Gate Remote Control Intrusion Link		All	—	—	—	—	—	1	1	2583 429
	BUSHING, T/Gate Door Hinge Lower T/Gate Pivot		P,D,C	—	—	—	—	—	1	1	3759 394
	BUSHING, T/Gate Torsion Bar Idler Link		P,D,C	—	—	—	—	—	1	1	3759 379
	RING, T/Gate Lower Hinge Support Attaching	Lt.	R,W	—	—	—	—	—	1	1	6026 972
	RING, T/Gate Door Hinge to Anti-Slam Lever *Torsion Spring*	Lt.	R,W	—	—	—	—	—	1	1	1922 183
	ROLLER, T/Gate Door Upper Hinge Body Half		R,W	—	—	—	—	—	1	1	3548 018
23-54-21	WEDGE, T/Gate Door	Lt.	R,W	—	—	—	—	—	1	1	3548 025

TYPE LETTERS Indicates	J - Challenger B - Barracuda	V - Valiant L - Dart	R - Satellite W - Coronet	P - Plymouth D - Dodge	C - Chrysler Y - Imperial
NUMERALS INDICATE:	21 - 2 DR. SED. 23 - 2 DR. H.T.	29 - FAST BACK	41 - 4 DR. SED. 43 - 4 DR. H.T.	45 - 6 PASS. STA. WGN. 46 - 9 PASS. STA. WGN.	

AR Indicates use as required.
# Indicates parts not listed in any previous parts book
Numerals in parentheses ( ) refer to notes.
★ Indicates change or addition.
Printed in U.S.A.
November, 1974

Right and left part numbers are on same line, first number is right, second number is left.

CODE	PART NAME	MODEL CODES	SEE BOTTOM NOTE 21	23	29	41	43	45	46	PART NUMBER
23-54-21	WEDGE Cont'd.									
	SCREW, w/WASHER, T/Gate Door Wedge Attaching									
	Lt.	R,W	—	—	—	—	—	2	2	456 792
	Lt.	R,W	—	—	—	—	—	1	1	6027 838
23-54-22	ADJUSTER, T/Gate and Door Upper Latch Release Lever									
	Rt.	R,W	—	—	—	—	—	1	1	3670 084
23-54-30	PLATE, T/Gate Door Upper Hinge Shim Body Half									
	Lt.	R,W	—	—	—	—	—	AR	AR	3548 634
	PLATE, T/Gate and Door Upper Body Hinge and									
	Striker Shim Thin	P,D,C	—	—	—	—	—	AR	AR	3696 482
	Thick	P,D,C	—	—	—	—	—	AR	AR	3759 395
23-54-31	SPRING, T/Gate Door Anti-Slam Lever Torsion									
		R,W	—	—	—	—	—	1	1	3508 975
	SPRING, T/Gate Glass Stabilizer Slide									
		R,W	—	—	—	—	—	4	4	3439 098
	SPRING, T/Gate Door Hinge Anti-Slam	P,D,C	—	—	—	—	—	1	1	3759 393
	SPRING, T/Gate and Door Latch Locking Control									
	Lever	R,W	—	—	—	—	—	1	1	3508 631
		P,D,C	—	—	—	—	—	1	1	3760 622
	SPRING, T/Gate Latch Remote Control to Upper									
	Right Latch Tension	All	—	—	—	—	—	1	1	3760 492
	SPRING T/Gate and Door Upper Latch									
	Lock Blocking Assist Lever Rt.	All	—	—	—	—	—	1	1	3796 936
	RING, T/Gate Door Hinge to Anti-Slam Lever Torsion Spring									
	Lt.	R,W	—	—	—	—	—	1	1	1922 183
23-54-56	LINK, T/Gate Support Lt.	R,W	—	—	—	—	—	1	1	3508 667
	SHOULDER BOLT, T/Gate Support Link Attaching	R,W	—	—	—	—	—	2	2	6026 984
	WASHER	R,W	—	—	—	—	—	2	2	6024 888
23-54-70	LABEL, T/Gate Door Hinge Release Direction									
		All	—	—	—	—	—	1	1	2895 183
23-54-72	REGULATOR, Window Manual	R,W	—	—	—	—	—	1	1	3586 393
	Electric	R,W	—	—	—	—	—	1	1	3695 501
	Electric	P,D,C	—	—	—	—	—	1	1	3695 501
23-54-73	HANDLE, T/Gate and Door Manual Wdo. Regulator Outside	R,W	—	—	—	—	—	1	1	3670 003
	HANDLE, T/Gate Door Outside									
		R,W	—	—	—	—	—	1	1	3586 858
		P,D,C	—	—	—	—	—	1	1	3695 341
23-54-74	SPRING, Wdo. Regulator Assist									
	Manual	R,W	—	—	—	—	—	1	1	3695 549
	Electric	R,W	—	—	—	—	—	1	1	3695 549
	Electric	P,D,C	—	—	—	—	—	1	1	3695 549
23-54-77	RING, Manual Wdo. Regulator Outside Handle Interlocking	R,W	—	—	—	—	—	1	1	2428 071
23-54-79	RETAINER, Manual Wdo. Regulator Outside Handle Knob									
		R,W	—	—	—	—	—	1	1	3670 005
	SNAP RING, T/Gate Door Handle Shaft									
		All	—	—	—	—	—	1	1	1626 749

TYPE LETTERS Indicates J - Challenger, B - Barracuda, V - Valiant, L - Dart, R - Satellite, W - Coronet, P - Plymouth, D - Dodge, C - Chrysler, Y - Imperial

NUMERALS INDICATE: 21 - 2 DR. SED., 23 - 2 DR. H.T., 29 - FAST BACK, 41 - 4 DR. SED., 43 - 4 DR. H.T., 45 - 6 PASS. STA. WGN., 46 - 9 PASS. STA. WGN.

AR Indicates use as required.
# Indicates parts not listed in any previous parts book
Numerals in parentheses ( ) refer to notes.
★ Indicates change or addition.

Printed in U.S.A.
November, 1974

Right and left part numbers are on same line, first number is right, second number is left.

CODE	PART NAME	MODEL CODES	SEE BOTTOM NOTE 21	23	29	41	43	45	46	PART NUMBER
23-54-84	BUMPER, T/Gate Outside Manual Wdo. Regulator Handle	R,W	—	—	—	—	—	1	1	3586 427
23-54-88	SLIDE, T/Gate Wdo. Regulator Track Manual	R,W	—	—	—	—	—	2	2	3454 363
	Electric	R,W	—	—	—	—	—	2	2	3454 363
		P,D,C	—	—	—	—	—	2	2	3454 363
	SLIDE, T/Gate Glass Stabilizer	R,W	—	—	—	—	—	4	4	3439 101
	SLIDE, T/Gate Glass Block	R,W	—	—	—	—	—	4	4	3582 404
	SLEEVE-NUT, T/Gate Glass Stabilizer Slide	R,W	—	—	—	—	—	4	4	6028 417
	SCREW, T/Gate Glass Stabilizer Slide	R,W	—	—	—	—	—	4	4	6028 418
23-54-92	GASKET, T/Gate and Door Manual Wdo. Regulator Outside Handle	R,W	—	—	—	—	—	1	1	3508 675
	GASKET, T/Gate Door Outside Handle	All	—	—	—	—	—	1	1	3586 916
23-54-100	HOUSING, Manual Wdo. Regulator Outside Handle Shaft	R,W	—	—	—	—	—	1	1	3548 243
23-54-102	SET SCREW, Manual Wdo. Regulator Outside Handle to Lever Pivot Pin	R,W	—	—	—	—	—	2	2	179 117
23-54-103	BUMPER, T/Gate Glass Up Stop	R,W	—	—	—	—	—	2	2	3582 012
		P,D,C	—	—	—	—	—	2	2	3696 512
	BUMPER, T/Gate Glass Down Stop	R,W	—	—	—	—	—	2	2	3440 270
		P,D,C	—	—	—	—	—	2	2	3759 187
23-54-118	PLUG, T/Gate Opening Lower Sill and Sill Extension	R,W	—	—	—	—	—	2	2	3499 913
	PLUG, T/Gate Glass Up Stop Adjusting Access Hole	All	—	—	—	—	—	2	2	2811 825
	PLUG, T/Gate Inside Panel Access Hole	R,W	—	—	—	—	—	1	1	3760 482
		P,D,C	—	—	—	—	—	1	1	3760 482
	PLUG, T/Gate Latch Adjusting Hole	P,D,C,	—	—	—	—	—	1	1	2811 825
	PLUG, T/Gate Glass Lift Channel	P,D,C	—	—	—	—	—	4	4	142 026
	PLUG, T/Gate Inside Panel Lateral Position Access Hole	P,D,C	—	—	—	—	—	1	1	2811 825
23-54-126	PIN, T/Gate Glass Lateral Position Inner	R,W	—	—	—	—	—	1	1	3581 864
	Outer	R,W	—	—	—	—	—	1	1	3581 865
23-54-128	CLIP, Manual Wdo. Regulator Handle Pawl Spring Retaining	R,W	—	—	—	—	—	1	1	1961 318
23-54-136	PLATE, T/Gate Door Upper Hinge Body Half Lt.	R,W	—	—	—	—	—	AR	AR	3508 679
	PLATE, T/Gate Door Lower Hinge Pivot Support Shim Lt.	R,W	—	—	—	—	—	AR	AR	3759 001
	PLATE, T/Gate Door Hinge Lower Body Shim Lt.	P,D,C	—	—	—	—	—	AR	AR	3759 152
23-54-140	BAR, T/Gate Hinge Torsion	R,W	—	—	—	—	—	1	1	3508 660
	Up to Sept. 14, 1973	P,D,C	—	—	—	—	—	1	1	3696 486
	After Sept. 14, 1973	P,D,C	—	—	—	—	—	1	1	3788 213
	BAR, T/Gate Door Hinge Lower Torsion	P,D,C	—	—	—	—	—	1	1	3759 392

TYPE LETTERS Indicates J - Challenger, B - Barracuda, V - Valiant, L - Dart, R - Satellite, W - Coronet, P - Plymouth, D - Dodge, C - Chrysler, Y - Imperial

NUMERALS INDICATE: 21 - 2 DR. SED., 23 - 2 DR. H.T., 29 - FAST BACK, 41 - 4 DR. SED., 43 - 4 DR. H.T., 45 - 6 PASS. STA. WGN., 46 - 9 PASS. STA. WGN.

AR Indicates use as required.
# Indicates parts not listed in any previous parts book
Numerals in parentheses ( ) refer to notes.
★ Indicates change or addition.

Printed in U.S.A.
November, 1974

Right and left part numbers are on same line, first number is right, second number is left.

CODE	PART NAME	MODEL CODES	SEE BOTTOM NOTE 21	23	29	41	43	45	46	PART NUMBER
23-54-141	RETAINER, T/Gate Hinge Torsion Bar Center	R,W	—	—	—	—	—	1	1	2862 113
	RETAINER, T/Gate Torsion Bar T/Gate Center Retainer	P,D,C	—	—	—	—	—	1	1	3696 488
23-54-142	BEARING, T/Gate Hinge Torsion Bar Center Support	All	—	—	—	—	—	1	1	2583 614
	BEARING, T/Gate Hinge Torsion Bar Pivot Bracket	R,W	—	—	—	—	—	1	1	2935 571
23-54-143	BRACKET, T/Gate Hinge Torsion Bar Clamp	R,W	—	—	—	—	—	1	1	3586 257
	BRACKET, T/Gate Lock Pillar Glass Side Adjusting Rt.	R,W	—	—	—	—	—	1	1	3440 251
	BRACKET, T/Gate Glass Lateral Adjusting	P,D,C	—	—	—	—	—	1	1	3759 800
	BRACKET, T/Gate Torsion Bar to Pillar Idler Arm	P,D,C	—	—	—	—	—	1	1	3696 485
	SLEEVE NUT	R,W	—	—	—	—	—	1	1	6029 337
	JAM NUT	R,W	—	—	—	—	—	1	1	271 502
23-54-144	CLAMP, T/Gate Hinge Torsion Bar End	R,W	—	—	—	—	—	1	1	3586 255
	CLAMP, T/Gate Torsion Bar T/Gate End Retainer	P,D,C	—	—	—	—	—	1	1	2935 569
	CLAMP, T/Gate Lower Hinge Support Outer Lt.	R,W	—	—	—	—	—	1	1	3508 673
23-54-150	COVER, T/Gate Inside Panel Regulator Access Hole	R,W	—	—	—	—	—	1	1	3440 266
		P,D,C	—	—	—	—	—	1	1	3696 523
23-54-156	GEAR w/PINION and SEAL PACKAGE, Mechanism and Motor T/Gate Electric Wdo. Regulator	R,W	—	—	—	—	—	1	1	3744 280
		P,D,C	—	—	—	—	—	1	1	3744 280
23-54-159	RELAY w/BRACKET, T/Gate Wdo. Lift.	All	—	—	—	—	—	1	1	2932 834
23-54-160	MOTOR w/MECHANISM, Electric Wdo. Regulator	R,W	—	—	—	—	—	1	1	3695 496
		P,D,C	—	—	—	—	—	1	1	3796 675
23-54-167	SWITCH, Electric Wdo. Lift On Inst. Panel	R,W	—	—	—	—	—	1	1	3514 428
	On Inst. Panel	P,D	—	—	—	—	—	1	1	3746 543
	On Inst. Panel	C	—	—	—	—	—	1	1	3746 507
	SWITCH, T/Gate Door Unlock On Inst. Panel	R,W	—	—	—	—	—	1	1	3488 516
	On Inst. Panel (Includes Lamp)	P,D	—	—	—	—	—	1	1	3746 545
	On Inst. Panel	C	—	—	—	—	—	1	1	3746 505
	SWITCH, Electric Wdo. Lift Gate Mounted	All	—	—	—	—	—	1	1	3488 943
23-54-170	BEZEL, T/Gate Wdo. Lift Switch	R,W	—	—	—	—	—	1	1	3488 528
	BEZEL, T/Gate Door Unlock Switch	R,W	—	—	—	—	—	1	1	3488 524
		P,D	—	—	—	—	—	1	1	3746 546

TYPE LETTERS Indicates J - Challenger, B - Barracuda, V - Valiant, L - Dart, R - Satellite, W - Coronet, P - Plymouth, D - Dodge, C - Chrysler, Y - Imperial

NUMERALS INDICATE: 21 - 2 DR. SED., 23 - 2 DR. H.T., 29 - FAST BACK, 41 - 4 DR. SED., 43 - 4 DR. H.T., 45 - 6 PASS. STA. WGN., 46 - 9 PASS. STA. WGN.

AR Indicates use as required.
# Indicates parts not listed in any previous parts book
Numerals in parentheses ( ) refer to notes.
★ Indicates change or addition.

Printed in U.S.A.
November, 1974

Right and left part numbers are on same line, first number is right, second number is left.

CODE	PART NAME	MODEL CODES	SEE BOTTOM NOTE 21	23	29	41	43	45	46	PART NUMBER
23-54-178	WIRING, Body and T/Gate Wdo. Lift and Lock	R,W	—	—	—	—	—	1	1	3764 649
	WIRING, Body and T/Gate Lock									
	Up To Nov. 1, 1973	R,W	—	—	—	—	—	1	1	3764 648
	After Nov. 1, 1973	R,W	—	—	—	—	—	1	1	3764 331
	WIRING, T/Gate Wdo. Lift and Lock	R,W	—	—	—	—	—	1	1	3513 595
	WIRING, T/Gate Power Lock	R,W	—	—	—	—	—	1	1	3588 361
	WIRING, T/Gate and Power Wdo.	R,W	—	—	—	—	—	1	1	3588 177
	WIRING, T/Gate Wdo. Lift									
	Up to Nov. 1, 1973	P,D	—	—	—	—	—	1	1	3764 878
	After Nov. 1, 1973	P,D	—	—	—	—	—	1	1	3764 983
	WIRING, T/Gate Wdo. Lift and Power Wdos. w/o Security Alarm System	P,D,	—	—	—	—	—	1	1	3764 240
	WIRING, T/Gate Lock w/o Security Alarm System	P,D,C	—	—	—	—	—	1	1	3764 241
	WIRING, T/Gate									
	Up To Nov. 1, 1973	C	—	—	—	—	—	1	1	3764 827
	After Nov. 1, 1973	C	—	—	—	—	—	1	1	3764 982
	w/A.T.C. and w/o Security Alarm System	C	—	—	—	—	—	1	1	3764 245
	w/o A.T.C. and w/o Security Alarm System	C	—	—	—	—	—	1	1	3764 240
23-54-179	SOLENOID, T/Gate and Door Latch Locking	R,W	—	—	—	—	—	1	1	3586 707
		P,D,C	—	—	—	—	—	1	1	3796 287
	U-NUT, T/Gate Door Latch Locking Solenoid	All	—	—	—	—	—	2	2	152 449
23-54-187	BRACKET, T/Gate and Door Automatic Electric Latch Locking Solenoid Mtg.	R,W	—	—	—	—	—	1	1	3548 306
	BRACKET, T/Gate and Door Latch Intrusion Link Guide	R,W	—	—	—	—	—	1	1	3508 103
		P,D,C	—	—	—	—	—	1	1	3695 335
	BRACKET w/CAM, T/Gate Door Release	R,W	—	—	—	—	—	1	1	3670 061
	BRACKET W/LEVER, T/Gate Door Outside Handle Release	P,D,C	—	—	—	—	—	1	1	3760 199
23-54-189	LEVER w/SHAFT, T/Gate Door Anti-Slam	R,W	—	—	—	—	—	1	1	3508 671
23-54-205	BUMPER, T/Gate Latch Lwr. Hsg. Rt.	All	—	—	—	—	—	1	1	3670 146
	Upr. Hsg. Lt.	R,W	—	—	—	—	—	1	1	3670 146
	Door Upr. Rt.	All	—	—	—	—	—	1	1	3670 146
23-54-206	"O" RING, T/Gate Electric Wdo. Regulator Mechanism	All	—	—	—	—	—	1	1	1316 863
23-54-214	KNOB, T/Gage and Door Latch Remote Control Handle	All	—	—	—	—	—	1	1	3508 810
	KNOB PACKAGE, T/Gate and Door Latch Locking Control	All	—	—	—	—	—	1	1	3419 209
	NUT, T/Gate Door Latch Remote Control Handle Knob Attaching	All	—	—	—	—	—	1	1	6025 919
23-54-216	LINK, T/Gate and Door Latch Locking Control to Upper Latch Rt.	R,W	—	—	—	—	—	1	1	3508 098
	LINK, T/Gate Latch Remote Control to Upper Latch Rt.	R,W	—	—	—	—	—	1	1	3508 100

TYPE LETTERS Indicates J - Challenger, B - Barracuda, V - Valiant, L - Dart, R - Satellite, W - Coronet, P - Plymouth, D - Dodge, C - Chrysler, Y - Imperial

NUMERALS INDICATE: 21 - 2 DR. SED., 23 - 2 DR. H.T., 29 - FAST BACK, 41 - 4 DR. SED., 43 - 4 DR. H.T., 45 - 6 PASS. STA. WGN., 46 - 9 PASS. STA. WGN.

AR Indicates use as required.
# Indicates parts not listed in any previous parts book
Numerals in parentheses ( ) refer to notes.
★ Indicates change or addition.

Printed in U.S.A.
November, 1974

Right and left part numbers are on same line, first number is right, second number is left.

CODE	PART NAME		MODEL CODES	SEE BOTTOM NOTE 21	23	29	41	43	45	46	PART NUMBER
23-54-216	LINK Cont'd.										
	LINK, T/Gate Door Remote Control Upper Latch	Rt.	R,W	—	—	—	—	—	1	1	3760 489
	LINK w/SWIVEL, T/Gate and Door Latch Remote Control to Upper Latch	Lt.	R,W	—	—	—	—	—	1	1	3695 407
	LINK, T/Gate and Door Latch Intrusion		R,W	—	—	—	—	—	1	1	3586 636
	LINK, T/Gate Door Upper to Lower Latch	Rt.	R,W	—	—	—	—	—	1	1	3670 057
	LINK, T/Gate and Door Remote Control to Upper Latch	Lt.	R,W	—	—	—	—	—	1	1	3760 483
	LINK, T/Gate Automatic Electric Latch Locking Solenoid to Latch		R,W	—	—	—	—	—	1	1	3508 813
	LINK, T/Gate Door Remote Control to Upper Latch	Rt.	P,D,C	—	—	—	—	—	1	1	3760 493
	LINK, T/Gate and Door Latch Remote Control Intrusion		P,D,C	—	—	—	—	—	1	1	3695 333
	LINK, T/Gate and Door Latch Locking Control Lever to Solenoid		P,D,C	—	—	—	—	—	1	1	3796 560
	LINK, T/Gate and Door Latch Locking Control to Upper Latch	Rt.	P,D,C	—	—	—	—	—	1	1	3695 340
	LINK, T/Gate Door Release Lever to Upper Latch	Rt.	P,D,C	—	—	—	—	—	1	1	3760 198
	LINK, T/Gate Remote Control to Upper Latch	Rt.	P,D,C	—	—	—	—	—	1	1	3760 563
		Lt.	P,D,C	—	—	—	—	—	1	1	3695 331
	LINK, T/Gate and Door Upper to Lower Latch	Rt.	P,D,C	—	—	—	—	—	1	1	3695 334
	LINK, T/Gate Torsion Bar to Pillar Idler										
	Up To Sept. 14, 1973		P,D,C	—	—	—	—	—	1	1	3696 484
	After Sept. 14, 1973		P,D,C	—	—	—	—	—	1	1	3788 212
	LINK, T/Gate Door Outside Handle to Release Lever		P,D,C	—	—	—	—	—	1	1	3760 197
	LINK w/SLEEVE, T/Gate Latch Remote Control to Upper Latch	Lt.	P,D,C	—	—	—	—	—	1	1	3796 505
	SWIVEL, T/Gate Door Upper to Lower Latch Link	Rt.	R,W	—	—	—	—	—	1	1	6029 974
	SWIVEL, T/Gate Remote Control To Upper Latch Link Attaching	Rt.	R,W	—	—	—	—	—	1	1	6029 974
	SWIVEL, T/Gate Latch Remote Control to Upper Latch Link	Lt.	R,W	—	—	—	—	—	1	1	6029 974
	SWIVEL, T/Gate and Door Upper Latch Release Lever to Upper to Lower Latch Link	Rt.	R,W	—	—	—	—	—	1	1	3586 662
		Rt.	P,D,C	—	—	—	—	—	1	1	3586 662
	SWIVEL, T/Gate and Door Upper Latch to Remote Control Link		All	—	—	—	—	—	1	1	3586 662

TYPE LETTERS Indicates J - Challenger, B - Barracuda, V - Valiant, L - Dart, R - Satellite, W - Coronet, P - Plymouth, D - Dodge, C - Chrysler, Y - Imperial

NUMERALS INDICATE: 21 - 2 DR. SED., 23 - 2 DR. H.T., 29 - FAST BACK, 41 - 4 DR. SED., 43 - 4 DR. H.T., 45 - 6 PASS. STA. WGN., 46 - 9 PASS. STA. WGN.

AR Indicates use as required.
# Indicates parts not listed in any previous parts book
Numerals in parentheses ( ) refer to notes.
★ Indicates change or addition.

Printed in U.S.A.
November, 1974

Right and left part numbers are on same line, first number is right, second number is left.

CODE	PART NAME		MODEL CODES	SEE BOTTOM NOTE 21	23	29	41	43	45	46	PART NUMBER
23-54-216	LINK Cont'd.										
	SWIVEL, T/Gate Door Latch Locking Control Solenoid Adjusting		P,D,C	—	—	—	—	—	1	1	3586 662
	"E" RING, T/Gate Door Latch Remote Control Swivel Attaching		All	—	—	—	—	—	1	1	6023 878
	"E" RING, T/Gate Latch Remote Control Release Lever Swivel Screw Retaining										
	Up To April 15, 1974		All	—	—	—	—	—	1	1	6023 878
	After April 15, 1974		All	—	—	—	—	—	1	1	6030 747
	"E" RING, T/Gate and Door Upper Latch to Remote Control Link		All	—	—	—	—	—	1	1	6025 857
	"E" RING, T/Gate and Door Upper Latch Outside Door Release Lever Upper to Lower Latch Lock Swivel	Rt.	R,W	—	—	—	—	—	1	1	6025 857
	STRAP, T/Gate Upper Left Latch Remote Control Link Anti-Rattle		R,W	—	—	—	—	—	1	1	2945 704
23-54-217	CLIP RETAINER, T/Gate Upper Latch Release Lever		R,W	—	—	—	—	—	1	1	6026 697
	CLIP RETAINER, T/Gate and Door Upper Latch	Rt.	R,W	—	—	—	—	—	1	1	2935 920
	CLIP RETAINER, T/Gate Door Lower Latch	Rt.	R,W	—	—	—	—	—	1	1	3508 094
	Lower Latch	Rt.	P,D,C	—	—	—	—	—	1	1	2935 920
	CLIP RETAINER, T/Gate Lower Latch Locking Lever		R,W	—	—	—	—	—	1	1	3508 094
	CLIP RETAINER, T/Gate and Door Latch Remote Control		R,W	—	—	—	—	—	3	3	2862 758
	CLIP RETAINER, T/Gate Latch Remote Control to Upper Latch Link Attaching		R,W	—	—	—	—	—	1	1	2935 920
	CLIP, T/Gate Upper Latch Release Lever	Lt.	R,W	—	—	—	—	—	1	1	2862 585
	CLIP, T/Gate and Door Upper Latch Retaining	Rt.	All	—	—	—	—	—	2	2	2862 758
	CLIP, T/Gate and Door Upper Latch	Rt.	All	—	—	—	—	—	2	2	2862 585
	CLIP, T/Gate Lower Latch Locking Lever	Rt.	R,W	—	—	—	—	—	1	1	2862 585
	CLIP, T/Gate and Door Latch Remote Control		R,W	—	—	—	—	—	3	3	2862 585
	CLIP RETAINER, T/Gate and Door Latch Locking Control Push Rod Attaching		R,W	—	—	—	—	—	1	1	2862 758
	CLIP RETAINER, T/Gate and Door Latch Locking Control		R,W	—	—	—	—	—	2	2	2862 758
	CLIP RETAINER, T/Gate and Door Latch Locking Control Locking Lever		R,W	—	—	—	—	—	2	2	2862 758
	CLIP RETAINER, T/Gate Door Upper Right Latch to Outside Release Link		P,D,C	—	—	—	—	—	1	1	2862 758
	CLIP RETAINER, T/Gate Door Outside Handle Lever Link		P,D,C	—	—	—	—	—	1	1	2862 758
	CLIP, T/Gate and Door Latch Locking Control Push Rod Attaching		R,W	—	—	—	—	—	1	1	2862 585

TYPE LETTERS Indicates: J - Challenger, B - Barracuda, V - Valiant, L - Dart, R - Satellite, W - Coronet, P - Plymouth, D - Dodge, C - Chrysler, Y - Imperial

NUMERALS INDICATE: 21 - 2 DR. SED., 23 - 2 DR. H.T., 29 - FAST BACK, 41 - 4 DR. SED., 43 - 4 DR. H.T., 45 - 6 PASS. STA. WGN., 46 - 9 PASS. STA. WGN.

AR Indicates use as required.
# Indicates parts not listed in any previous parts book
Numerals in parentheses ( ) refer to notes.
★ Indicates change or addition.

Printed in U.S.A.
November, 1974

Right and left part numbers are on same line, first number is right, second number is left.

CODE	PART NAME	MODEL CODES	SEE BOTTOM NOTE 21	23	29	41	43	45	46	PART NUMBER
23-54-217	CLIP RETAINER Cont'd.									
	CLIP, T/Gate and Door Latch Locking Control Lever									
		R,W	—	—	—	—	—	2	2	2862 585
		P,D,C	—	—	—	—	—	AR	AR	2945 108
	CLIP, T/Gate Door Outside Handle Release Lever	P,D,C	—	—	—	—	—	1	1	2862 585
	CLIP, T/Gate Door Upper Right Latch to Outside Release Link	P,D,C	—	—	—	—	—	1	1	2862 585
	CLIP, T/Gate Door Outside Handle Release Assist Lever	P,D,C	—	—	—	—	—	1	1	2862 585
	CLIP, T/Gate Door Outside Handle Lever Link	P,D,C	—	—	—	—	—	1	1	2862 585
	CLIP, T/Gate Door Lower Latch	P,D,C	—	—	—	—	—	1	1	2862 585
	CLIP, T/Gate Latch Remote Control Intrusion Lever	P,D,C	—	—	—	—	—	1	1	2945 108
	CLIP, T/Gate Door Latch Remote Control Release Lever	P,D,C	—	—	—	—	—	1	1	2945 108
	CLIP, T/Gate Latch Remote Control Release Lever	P,D,C	—	—	—	—	—	1	1	2945 108
	CLIP, T/Gate and Door Upper Latch and Hinge Release Lever Lt.	P,D,C	—	—	—	—	—	1	1	2945 108
	CLIP, T/Gate Door Lower Latch and Release Pawl									
	Up to Nov. 15, 1973 Rt.	P,D,C	—	—	—	—	—	1	1	2945 109
	After Nov. 15, 1973 Rt.	P,D,C	—	—	—	—	—	1	1	2935 920
	CLIP, T/Gate and Door Latch Locking Lever	P,D,C	—	—	—	—	—	2	2	3454 220
	CLIP, T/Gate and Door Latch Locking Control Lever to Solenoid Lock to Solenoid Attaching	All	—	—	—	—	—	1	1	629 792
	CLIP, T/Gate Ajar Cable	P,D,C	—	—	—	—	—	1	1	2945 704
	NOTE: Also See Clip Chart in Illustration Section									
23-54-218	CONTROL, T/Gate and Door Latch Remote									
	Up To April 15, 1974 Manual	R,W	—	—	—	—	—	1	1	3760 486
	After April 15, 1974 Manual	R,W	—	—	—	—	—	1	1	3861 491
	Up To April 15, 1974 Electric	R,W	—	—	—	—	—	1	1	3760 485
	After April 15, 1974 Electric	R,W	—	—	—	—	—	1	1	3861 490
	Up To April 15, 1974 Manual	P,D,C	—	—	—	—	—	1	1	3695 325
	After April 15, 1974 Manual	P,D,C	—	—	—	—	—	1	1	3861 489
	Up To April 15, 1974 Electric	P,D,C	—	—	—	—	—	1	1	3695 327
	After April 15, 1974 Electric	P,D,C	—	—	—	—	—	1	1	3861 488

TYPE LETTERS Indicates: J - Challenger, B - Barracuda, V - Valiant, L - Dart, R - Satellite, W - Coronet, P - Plymouth, D - Dodge, C - Chrysler, Y - Imperial

NUMERALS INDICATE: 21 - 2 DR. SED., 23 - 2 DR. H.T., 29 - FAST BACK, 41 - 4 DR. SED., 43 - 4 DR. H.T., 45 - 6 PASS. STA. WGN., 46 - 9 PASS. STA. WGN.

AR Indicates use as required.
# Indicates parts not listed in any previous parts book
Numerals in parentheses ( ) refer to notes.
★ Indicates change or addition.

Printed in U.S.A.
November, 1974

Right and left part numbers are on same line, first number is right, second number is left.

CODE	PART NAME	MODEL CODES	SEE BOTTOM NOTE 21	23	29	41	43	45	46	PART NUMBER
23-54-218	CONTROL Cont'd.									
	CONTROL, T/Gate and Door Latch Locking									
	Up To Nov. 15, 1973	R,W	—	—	—	—	—	—	1	1	3508 069
	After Nov. 15, 1973	R,W	—	—	—	—	—	—	1	1	3796 927
	Manual	P,D,C	—	—	—	—	—	—	1	1	3695 337
	Up To Nov. 15, 1973 Electric	P,D,C	—	—	—	—	—	—	1	1	3796 562
	After Nov. 15, 1973 Electric	P,D,C	—	—	—	—	—	—	1	1	3796 931
	SCREW w/WASHER, T/Gate and Door Latch Remote Control Attaching	R,W	—	—	—	—	—	—	AR	AR	6023 092
		P,D,C	—	—	—	—	—	—	AR	AR	6030 303
23-54-221	BEZEL, Latch Remote Control Handle	All	—	—	—	—	—	—	1	1	2935 603
	ESCUTCHEON, T/Gate and Door Latch Locking Control Knob	All	—	—	—	—	—	—	1	1	2428 178
	SCREW, Latch Remote Control Handle Bezel Attaching	All	—	—	—	—	—	—	2	2	9416 208
23-54-222	BOOT, Latch Remote Control Handle Dust	R,W	—	—	—	—	—	—	1	1	3508 798
		P,D,C	—	—	—	—	—	—	1	1	3508 798
23-54-223	ROD, T/Gate and Door Latch Locking Control Push	R,W	—	—	—	—	—	—	1	1	3586 638
		P,D,C	—	—	—	—	—	—	1	1	3695 338
23-54-227	BUSHING, Remote Control Intrusion Link	All	—	—	—	—	—	—	1	1	2583 429
23-54-228	SPRING, T/Gate Latch Remote Control Release Lever Return	All	—	—	—	—	—	—	1	1	3548 296
23-59-35	**TROUGH, Qtr. Deck Drain**	J	—	1	—	—	—	—	—	—	2963 222-3
		R	1	1	—	—	—	—	—	—	3445 688-9
		R	—	—	—	—	1	—	—	—	3616 952-3
		W	1	1	—	1	—	—	—	—	3445 684-5
		W	—	—	—	—	1	—	—	—	3616 954-5
	TROUGH, Qtr. Deck Drain Side	V,L	—	—	—	1	—	—	—	—	3756 030-1
		V,L	—	1	—	—	1	—	—	—	2604 298-9
		R	1	1	—	—	—	—	—	—	3615 624-5
		C,Y	—	1	—	—	1	1	—	—	3615 940-1
	TROUGH, Deck Opening Drain Upper	V,L	—	—	—	1	—	—	—	—	3444 210
	TROUGH, Qtr. Deck Drain Upper Corner	V,L	—	1	—	—	1	—	—	—	3615 302-3
	TROUGH, Qtr. Deck Drain Lower Corner	V,L	—	1	—	—	1	—	—	—	3756 020-1
	TROUGH, Qtr. Deck Drain Center	V	—	—	—	—	1	—	—	—	2604 298-9
	TROUGH, Qtr. Deck Drain Upper and Side	B	—	1	—	—	—	—	—	—	2963 220-1
	TROUGH, Qtr. Deck Drain Side and Upper Corner	P,D	—	1	—	—	1	1	—	—	3616 330-1
	NOTE: Also See Code 23-63-175									
23-59-37	SUPPORT, Qtr. Deck Drain Trough to W/House	R	—	—	—	—	1	—	—	—	3615 020
		P,D,C,Y	—	2	—	—	2	2	—	—	3616 318
	SUPPORT, Deck Drain Trough to Rear Floor Extension	V,L	—	—	—	1	—	—	—	—	3756 184-5
	SUPPORT, Deck Drain Trough to Rear Floor Pan	V,L	—	1	—	—	1	—	—	—	3756 186-7

TYPE LETTERS Indicates J - Challenger, B - Barracuda, V - Valiant, L - Dart, R - Satellite, W - Coronet, P - Plymouth, D - Dodge, C - Chrysler, Y - Imperial

NUMERALS INDICATE: 21 - 2 DR. SED., 23 - 2 DR. H.T., 29 - FAST BACK, 41 - 4 DR. SED., 43 - 4 DR. H.T., 45 - 6 PASS. STA. WGN., 46 - 9 PASS. STA. WGN.

AR Indicates use as required.
# Indicates parts not listed in any previous parts book
Numerals in parentheses ( ) refer to notes.
★ Indicates change or addition.

Printed in U.S.A.
November, 1974

Right and left part numbers are on same line, first number is right, second number is left.

CODE	PART NAME	MODEL CODES	SEE BOTTOM NOTE 21	23		29	41	43	45	46	PART NUMBER
23-59-41	BRACE, Deck Side Drain Trough to Qtr. Inside Panel	R	—	—	—	—	1	—	—	—	3615 018
23-59-56	TROUGH, Front Pillar Drain	R,W	1	1	—	1	—	—	—	—	3720 548-9
		R,W	—	—	—	—	1	—	1	1	3767 610-1
	TROUGH, Roof Side Drain	V,L	—	1	—	—	—	—	—	—	3767 122-3
		V,L	—	—	—	1	—	—	—	—	3767 126-7
		V,L	—	—	—	—	1	—	—	—	3767 130-1
		J	—	1	—	—	—	—	—	—	2963 324-5
		R	1	1	—	—	—	—	—	—	3767 548-9
		W	1	1	—	—	—	—	—	—	3767 546-7
		W	—	—	—	1	—	—	—	—	3767 114-5
	FRONT	B	—	1	—	—	—	—	—	—	2963 322-3
		R,W	—	—	—	—	1	—	—	—	3767 606-7
		R,W	—	—	—	—	—	—	1	1	3767 600-1
	REAR	B	—	1	—	—	—	—	—	—	2963 426-7
		R,W	—	—	—	—	1	—	—	—	3767 608-9
		R,W	—	—	—	—	—	—	1	1	3767 604-5
	Intermediate	R,W	—	—	—	—	—	—	1	1	3767 602-3
23-59-57	COVER, Front Pillar to Roof Side Drain Trough	V,L	—	2	—	—	2	—	—	—	2588 330
		V,L	—	—	—	2	—	—	—	—	2571 768
		R,W	2	2	—	2	—	—	—	—	2571 768
		R,W	—	—	—	—	2	—	2	2	3767 612
	COVER, Roof Side Drain Trough Rr.	R,W	—	—	—	—	—	—	4	4	3767 612
	Interm.	R,W	—	—	—	—	—	—	4	4	3767 612
	Frt.	R,W	—	—	—	—	AR	—	AR	AR	3767 612
	Rr.	R,W	—	—	—	—	AR	—	AR	AR	3767 612
	CAP or COVER, Roof Side Drain Trough Moulding (See Exterior Ornamentation Illustrations)										
23-59-61	MOULDING, Roof Side Drain Trough (See Exterior Ornamentation Illustrations)										
23-59-65	BRACKET, Roof Drain Trough to Quarter Wdo. Louver	W	—	—	—	1	—	—	—	—	3720 172-3
23-59-72	RETAINER, Vinyl Roof Drain Trough	P,D	—	14	—	—	—	14	—	—	3762 319
23-61-42	**SEAL, w/RETAINERS, Cowl Top Panel to Hood Inner**										
	Panel	P,D,C,Y	—	1	—	—	1	1	1	1	3674 697
	RETAINER, Cowl Top Panel to Hood Inner Panel										
	Seal	P,D,C,Y	—	15	—	—	15	15	15	15	2964 547
	SEAL w/CLIPS, Cowl Top to Hood Panel	B,J,R,W	1	1	—	1	1	—	1	1	3440 865
23-61-117	SCREEN, Cowl Top Windshield Wiper Opening	B,J	—	1	—	—	—	—	—	—	3500 760-1
		P,D,C,Y	—	1	—	—	1	1	1	1	3674 694-5
	SCREW, Cowl Top Windshield Wiper Opening Screen to Cowl Top Panel	B,J	—	10	—	—	—	—	—	—	6028 307
	SCREEN, Cowl Top Fresh Air Opening	R,W	1	1	—	1	1	—	1	1	3500 758-9
	SCREW, Cowl Top Fresh Air Opening	R,W	10	10	—	10	10	—	10	10	6029 230
23-61-120	HOUSING, Complete, Ventilation w/o Heater Rt.	R,W	1	1	—	1	1	—	1	1	2607 002
23-63-14	**WEATHERSTRIP, Wdo. Belt**										
	FRONT DOOR INNER	V,L	—	1	—	1	—	—	—	—	3551 270-1
	w/o Stainless Steel Strip	V,L	—	—	—	—	1	—	—	—	3440 558-9

TYPE LETTERS Indicates: J - Challenger, B - Barracuda, V - Valiant, L - Dart, R - Satellite, W - Coronet, P - Plymouth, D - Dodge, C - Chrysler, Y - Imperial

NUMERALS INDICATE: 21 - 2 DR. SED., 23 - 2 DR. H.T., 29 - FAST BACK, 41 - 4 DR. SED., 43 - 4 DR. H.T., 45 - 6 PASS. STA. WGN., 46 - 9 PASS. STA. WGN.

AR Indicates use as required.
# Indicates parts not listed in any previous parts book
Numerals in parentheses ( ) refer to notes.
★ Indicates change or addition.

Printed in U.S.A.
November, 1974

Right and left part numbers are on same line, first number is right, second number is left.

CODE	PART NAME	MODEL CODES	SEE BOTTOM NOTE 21	23	29	41	43	45	46	PART NUMBER
23-63-14	WEATHERSTRIP Cont'd.									
	w/Stainless Steel Strip	V,L	—	—	—	1	—	—	—	3762 388-9
		B,J	—	1	—	—	—	—	—	2879 950-1
		R,W	1	1	—	1	—	—	—	3551 366-7
	Up To Oct. 10, 1973	R,W	—	—	—	2	—	2	2	3416 360
	After Oct. 10, 1973	R,W	—	—	—	1	—	1	1	3762 504-5
		P,D,C,Y	—	1	—	—	—	—	—	3589 216-7
		P,D,C,Y	—	—	—	—	1	—	—	3589 214-5
		P,D,C	—	—	—	1	—	1	1	3589 212-3
	REAR DOOR INNER									
	w/o Stainless Steel Strip	V,L	—	—	—	1	—	—	—	3440 558-9
	w/ Stainless Steel Strip	V,L	—	—	—	1	—	—	—	3762 388-9
		R,W	—	—	—	2	—	2	2	3416 362
		P,D	—	—	—	1	—	1	1	3589 222-3
		C	—	—	—	1	—	—	—	3589 220-1
		C	—	—	—	—	—	1	1	3589 222-3
		P,D	—	—	—	—	1	—	—	3589 224-5
		C,Y	—	—	—	—	1	—	—	3589 226-7
23-63-15	WEATHERSTRIP, Wdo. Belt FRONT DOOR OUTER									
		V,L	—	1	—	1	—	—	—	3759 652-3
		V,L	—	—	—	—	1	—	—	2860 024-5
		B	—	1	—	—	—	—	—	3581 280-1
		J	—	1	—	—	—	—	—	3581 282-3
		R,W	1	1	—	1	—	—	—	3759 678-9
		R,W	—	—	—	—	1	—	1	3582 318-9
		P,D	—	1	—	—	—	—	—	3759 456-7
		C,Y	—	1	—	—	—	—	—	3759 470-1
	w/o Vent Wdos.	P,D	—	—	—	—	1	—	1	1 3759 460-1
	w/Vent Wdos.	P,D	—	—	—	—	1	—	1	1 3788 216-7
	Up To Feb. 2, 1974									
	w/o Vent Wdos.	C	—	—	—	—	1	—	1	1 3759 476-7
	After Feb. 2, 1974									
	w/o Vent Wdos.	C	—	—	—	—	1	—	1	1 3788 536-7
	Up To Feb. 2, 1974									
	w/Vent Wdos.	C	—	—	—	—	1	—	1	1 3788 218-9
	After Feb. 2, 1974									
	w/Vent Wdos.	C	—	—	—	—	1	—	1	1 3788 538-9
	w/o Vent Wdos.	P,D	—	—	—	—	—	1	—	— 3759 464-5
	w/Vent Wdos.	P,D	—	—	—	—	—	1	—	— 3788 226-7
	w/o Vent Wdos.	C,Y	—	—	—	—	—	1	—	— 3759 472-3
	w/Vent Wdos.	C,Y	—	—	—	—	—	1	—	— 3788 228-9
	REAR DOOR OUTER	V,L	—	—	—	—	1	—	—	— 2860 024-5
		R,W	—	—	—	—	1	—	1	1 3759 690-1
		P,D	—	—	—	—	1	—	1	1 3759 458-9
	Up To Feb. 2, 1974	C	—	—	—	—	1	—	—	— 3759 478-9
	After Feb. 2, 1974	C	—	—	—	—	1	—	—	— 3788 540-1
		P,D	—	—	—	—	—	1	—	— 3788 208-9
		C,Y	—	—	—	—	—	1	—	— 3788 210-1
	Up To Feb. 2, 1974	C	—	—	—	—	—	—	1	1 3759 858-9
	After Feb. 2, 1974	C	—	—	—	—	—	—	1	1 3788 542-3
23-63-16	CLIP, Front Door Wdo. Belt Inner Weatherstrip									
	Up To April 12, 1974	V,L	—	—	—	—	10	—	—	— 2217 508
	After April 12, 1974	V,L	—	—	—	—	10	—	—	— 6030 771
	CLIP, Front Door Wdo. Belt Outer Weatherstrip	V,L	—	—	—	—	10	—	—	— 2217 508
		R,W	—	—	—	—	16	—	16	16 2861 594

TYPE LETTERS Indicates: J - Challenger, B - Barracuda, V - Valiant, L - Dart, R - Satellite, W - Coronet, P - Plymouth, D - Dodge, C - Chrysler, Y - Imperial

NUMERALS INDICATE: 21 - 2 DR. SED., 23 - 2 DR. H.T., 29 - FAST BACK, 41 - 4 DR. SED., 43 - 4 DR. H.T., 45 - 6 PASS. STA. WGN., 46 - 9 PASS. STA. WGN.

AR Indicates use as required.
# Indicates parts not listed in any previous parts book
Numerals in parentheses ( ) refer to notes.
★ Indicates change or addition.

Printed in U.S.A.
November, 1974

Right and left part numbers are on same line, first number is right, second number is left.

CODE	PART NAME	MODEL CODES	SEE BOTTOM NOTE 21	23	29	41	43	45	46	PART NUMBER
23-63-16	CLIP Cont'd.									
	CLIP, Front Door W/Strip to Trim Panel Attaching	R	6	6	—	—	—	—	—	3416 956
	CLIP, Rear Door Wdo. Belt Inner Weatherstrip									
	Up To April 12, 1974	V,L	—	—	—	—	10	—	—	— 2217 508
	After April 12, 1974	V,L	—	—	—	—	10	—	—	— 6030 771
	CLIP, Rear Door Wdo. Belt Outer Weatherstrip	V,L	—	—	—	—	10	—	—	— 2217 508
		R,W	—	—	—	—	14	—	14	14 2861 594
	CLIP, Quarter Wdo. Belt Inner Weatherstrip	V,L	—	16	—	—	—	—	—	— 2217 508
	CLIP, Quarter Upper Trim Panel Weatherstrip Attaching	W	6	6	—	6	—	—	—	— 3416 956
	CLIP, Quarter Wdo. Belt Outer Weatherstrip	L	—	2	—	—	—	—	—	— 2839 442
		B,J	—	6	—	—	—	—	—	— 2480 904
		R	6	6	—	—	—	—	—	— 2861 594
		R,W	AR	AR	—	—	—	—	—	— 2839 442
		L	—	12	—	—	—	—	—	— 2217 508
		R,W	AR	AR	—	AR	—	—	—	— 2217 508
	FASTENER, Front Door Weatherstrip to Inside Panel	V,L	—	46	—	46	48	—	—	— 2664 040
		B,J	—	48	—	—	—	—	—	— 2664 040
		R,W	44	44	—	44	44	—	44	44 2664 040
		P,D,C,Y	—	38	—	—	50	32	50	50 2664 040
	FASTENER, Rear Door Weatherstrip to Inside Panel	V,L	—	—	—	—	38	—	—	— 2664 040
		W	—	—	—	—	34	—	34	34 2664 040
		P,D,C,Y	—	—	—	—	AR	AR	AR	AR 2664 040
	FASTENER, Front Door Weatherstrip	V,L	—	12	—	12	—	—	—	— 2964 547
		R,W	2	2	—	2	—	—	—	— 2964 547
	SCREW, Front Door Weatherstrip	V,L	—	12	—	12	—	—	—	— 6029 396
23-63-20	WEATHERSTRIP, Wdo. Belt QUARTER INNER	V,L	—	2	—	—	—	—	—	— 3551 262
		B	—	2	—	—	—	—	—	— 2879 954
		J	—	2	—	—	—	—	—	— 2879 955
		R	1	1	—	—	—	—	—	— 3551 306-7
	Upr.	R	1	1	—	—	—	—	—	— 3551 302-3
	w/o Qtr. Opera Wdo.	W	1	1	—	—	—	—	—	— 3551 364-5
		P,D	—	1	—	—	—	—	—	— 3589 418-9
		C,Y	—	1	—	—	—	—	—	— 3589 422-3
	WEATHERSTRIP, Upper Qtr. Trim Cover	C,Y	—	1	—	—	—	—	—	— 3589 402-3
23-63-21	WEATHERSTRIP, Wdo. Belt QUARTER OUTER	V,L	—	1	—	—	—	—	—	— 2839 568-9
		B	—	1	—	—	—	—	—	— 2963 228-9
		J	—	1	—	—	—	—	—	— 3444 222-3
		R	1	1	—	—	—	—	—	— 3759 736-7
		W	1	1	—	—	—	—	—	— 3759 702-3
		P,D	—	1	—	—	—	—	—	— 3759 454-5
		C,Y	—	1	—	—	—	—	—	— 3696 492-3
23-63-33	WEATHERSTRIP ON FRONT DOOR	V,L	—	1	—	1	—	—	—	— 3696 534-5
		V,L	—	—	—	—	1	—	—	— 2860 004-5

TYPE LETTERS Indicates J - Challenger, B - Barracuda, V - Valiant, L - Dart, R - Satellite, W - Coronet, P - Plymouth, D - Dodge, C - Chrysler, Y - Imperial

NUMERALS INDICATE: 21 - 2 DR. SED., 23 - 2 DR. H.T., 29 - FAST BACK, 41 - 4 DR. SED., 43 - 4 DR. H.T., 45 - 6 PASS. STA. WGN., 46 - 9 PASS. STA. WGN.

AR Indicates use as required.
# Indicates parts not listed in any previous parts book
Numerals in parentheses ( ) refer to notes.
★ Indicates change or addition.

Printed in U.S.A.
November, 1974

Right and left part numbers are on same line, first number is right, second number is left.

CODE	PART NAME	MODEL CODES	SEE BOTTOM NOTE 21	23	29	41	43	45	46	PART NUMBER
23-63-33	WEATHERSTRIP Cont'd.									
		B,J	—	1	—	—	—	—	—	2895 478-9
		R,W	1	1	—	1	—	—	—	3439 734-5
		R,W	—	—	—	—	1	—	1	3439 736-7
		P,D,C,Y	—	1	—	—	—	—	—	3759 428-9
		P,D,C,Y	—	—	—	—	—	1	—	3696 260-1
		P,D,C	—	—	—	—	1	—	1	3759 434-5
	ON REAR DOOR	V,L	—	—	—	—	1	—	—	2860 006-7
		R,W	—	—	—	—	1	—	—	3440 042-3
		R,W	—	—	—	—	—	1	1	3440 044-5
		P,D	—	—	—	—	1	—	—	3759 436-7
		C	—	—	—	—	1	—	—	3759 438-9
		P,D	—	—	—	—	—	1	—	3759 432-3
		C,Y	—	—	—	—	—	1	—	3696 266-7
		P,D,C	—	—	—	—	—	—	1	3759 436-7
	FRONT DOOR ON FRONT EDGE OF GLASS WEATHERSTRIP PACKAGE	V,L	—	—	—	—	2	—	—	2932 230
	WEATHERSTRIP w/Vent Wdos.	P,D,C,Y	—	—	—	—	—	1	—	3759 996-7
	w/Vent Wdos. Up To Dec. 17, 1973	P,D,C	—	—	—	—	1	—	1	3759 994-5
	w/Vent Wdos. After Dec. 17, 1973 Cata C. Jan	P,D,C	—	—	—	—	1	—	1	3788 262-3
	ON ROOF SIDE RAIL	V,L	—	—	—	1	—	—	—	3582 742-3
		V,L	—	1	—	—	—	—	—	3582 744-5
		B,J	—	1	—	—	—	—	—	3582 356-7
	w/o Qtr. Opera Wdo.	R,W	1	1	—	—	—	—	—	3581 958-9
	w/Qtr. Opera Wdo.	W	—	1	—	—	—	—	—	3582 950-1
		W	—	—	—	1	—	—	—	3582 950-1
		P,D,C,Y	—	1	—	—	—	—	—	3759 480-1
		P,D	—	—	—	—	—	1	—	3759 496-7
		C,Y	—	—	—	—	—	1	—	3759 506-7
	ROOF SIDE DRAIN TROUGH w/Qtr. Opera Wdo. Rr.	P,D	—	1	—	—	—	—	—	3810 364-5
	SEAL, Front Door Lock Pillar at Belt	B,J	—	1	—	—	—	—	—	2895 664-5
		R,W	1	1	—	1	—	—	—	3581 894-5
	SEAL, Front Door Hinge Pillar at Belt	R,W	1	1	—	1	—	—	—	3581 878-9
		P,D,C,Y	—	1	—	—	—	—	—	3759 406-7
	w/o Vent Wdos.	P,D,C,Y	—	—	—	—	—	1	—	3759 406-7
	w/Vent Wdos.	P,D,C,Y	—	—	—	—	—	1	—	3759 424-5
	SEAL, Front Door Trim Panel to Door Inside Panel	V,L	—	1	—	1	—	—	—	3551 124-5
	SEAL, Qtr. Panel Lock Pillar At Belt	V,L	—	1	—	—	—	—	—	3696 640-1
		B,J	—	1	—	—	—	—	—	2963 180-1
		R,W	1	1	—	—	—	—	—	3504 324-5
		P,D,C,Y	—	1	—	—	—	—	—	3759 420-1
	SEAL, Qtr. Wdo. Glass	W	—	—	—	2	—	—	—	3674 882
	SEAL or WEATHERSTRIP, "B" Pillar Moulding (St. Regis) w/Opera Wdo.	C-S	—	2	—	—	—	—	—	3879 956
23-63-37	SEAL, T/Gate Pillar at Belt	P,D,C	—	—	—	—	—	—	1	3759 526-7
	SEAL, T/Gate Opening at Belt	R,W	—	—	—	—	—	—	1	3582 148-9

TYPE LETTERS Indicates: J - Challenger, B - Barracuda, V - Valiant, L - Dart, R - Satellite, W - Coronet, P - Plymouth, D - Dodge, C - Chrysler, Y - Imperial

NUMERALS INDICATE: 21 - 2 DR. SED., 23 - 2 DR. H.T., 29 - FAST BACK, 41 - 4 DR. SED., 43 - 4 DR. H.T., 45 - 6 PASS. STA. WGN., 46 - 9 PASS. STA. WGN.

AR Indicates use as required.
# Indicates parts not listed in any previous parts book
Numerals in parentheses ( ) refer to notes.
★ Indicates change or addition.

Printed in U.S.A.
November, 1974

Right and left part numbers are on same line, first number is right, second number is left.

CODE	PART NAME	MODEL CODES	SEE BOTTOM NOTE 21	23	29	41	43	45	46	PART NUMBER
23-63-37	SEAL Cont'd.									
	RETAINER, T/Gate Opening at Belt Seal Attaching									
		R,W	—	—	—	—	—	—	2	2	2964 547
23-63-55	RETAINER, Front Pillar and Roof Side Rail W/Strip									
	Up To Dec. 1, 1973	R	1	1	—	—	—	—	—	—	3439 452-3
	From Dec. 1, 1973 To Jan. 15, 1974	R	1	1	—	—	—	—	—	—	3788 258-9
	After Jan. 15, 1974 (Also Specify 1-3788 524 RET., Glass Blow Off)	R	1	1	—	—	—	—	—	—	3788 180-1
	Up To Dec. 1, 1973	W	1	1	—	—	—	—	—	—	3499 546-7
	From Dec. 1, 1973 To Jan. 15, 1974 w/o Qtr. Opera Wdo.	W	1	1	—	—	—	—	—	—	3788 256-7
	After Jan. 15, 1974 w/o Qtr. Opera Wdo. (Also Specify 1-3788 524 RET., Glass Blow Off)	W	1	1	—	—	—	—	—	—	3788 182-3
	RETAINER, Roof Side Rail W/Strip	V,L	—	1	—	—	—	—	—	—	3582 808-9
		V,L	—	—	—	1	—	—	—	—	3696 102-3
		B	—	1	—	—	—	—	—	—	3500 310-1
		J	—	1	—	—	—	—	—	—	3500 312-3
	w/Qtr. Opera Wdo.	W	—	1	—	—	—	—	—	—	3788 184-5
	Up To Dec. 1, 1973	W	—	—	—	1	—	—	—	—	3696 122-3
	From Dec. 1, 1973 To Jan. 15, 1974	W	—	—	—	1	—	—	—	—	3788 254-5
	After Jan. 15, 1974 (Also Specify 1-3788 524 RET., Glass Blow Off)	W	—	—	—	1	—	—	—	—	3788 184-5
		P,D,C,Y	—	1	—	—	—	—	—	—	3759 224-5
		P,D	—	—	—	—	—	1	—	—	3759 230-1
		C,Y	—	—	—	—	—	1	—	—	3759 224-5
	RETAINER, Roof Side Rail w/Strip Front	P,D,C,Y	—	1	—	—	—	1	—	—	3759 332-3
	RETAINER, Roof Side Rail W/Strip Rear	C,Y	—	—	—	—	—	1	—	—	3759 212-3
	RETAINER, Roof Side Rail W/Strip Attaching	V,L	—	2	—	8	—	—	—	—	2964 547
		P,D,C,Y	—	AR	—	—	—	AR	—	—	2964 547
	RETAINER, Roof Side Rail W/Strip Lower Attaching	R,W	4	4	—	AR	—	—	—	—	3759 944
		P,D,C,Y	—	AR	—	—	—	AR	—	—	2964 547
	RETAINER, Roof Side Rail W/Strip (Glass Anti Blow Off)	B,J	—	2	—	—	—	—	—	—	6003 257
	Up To Jan. 15, 1974	R,W	2	2	—	2	—	—	—	—	6003 257
	After Jan. 15, 1974	R,W	2	2	—	2	—	—	—	—	3788 524
		P,D,C,Y	—	2	—	—	—	2	—	—	3788 100
	RETAINER, Roof Side Rail Qtr. Wdo. (Glass Anti Blow Off)	B,J,R,W	2	2	—	—	—	—	—	—	6003 257
	NOTE: Also See Code 23-63-136										
23-63-94	WEATHERSTRIP, Rear Door Wdo. Glass Front Frame	P,D,C,Y	—	—	—	—	—	1	—	—	3759 452-3
23-63-97	WEATHERSTRIP, Rear Door Rear Stationary Glass	V,L	—	—	—	—	2	—	—	—	2664 408
23-63-100	WEATHERSTRIP, Qtr. Wdo. Glass Front	V,L	—	—	—	1	—	—	—	—	2965 638-9
	WEATHERSTRIP, Qtr. Wdo. Glass	V,L	—	—	—	1	—	—	—	—	2965 640-1
	WEATHERSTRIP, Qtr. Wdo. Lower	R,W	—	—	—	—	—	—	2	2	3500 986

TYPE LETTERS Indicates: J - Challenger, B - Barracuda, V - Valiant, L - Dart, R - Satellite, W - Coronet, P - Plymouth, D - Dodge, C - Chrysler, Y - Imperial

NUMERALS INDICATE: 21 - 2 DR. SED., 23 - 2 DR. H.T., 29 - FAST BACK, 41 - 4 DR. SED., 43 - 4 DR. H.T., 45 - 6 PASS. STA. WGN., 46 - 9 PASS. STA. WGN.

AR Indicates use as required.
# Indicates parts not listed in any previous parts book
Numerals in parentheses ( ) refer to notes.
★ Indicates change or addition.

Printed in U.S.A.
November, 1974

Right and left part numbers are on same line, first number is right, second number is left.

CODE	PART NAME	MODEL CODES	SEE BOTTOM NOTE 21	23	29	41	43	45	46	PART NUMBER
23-63-104	WEATHERSTRIP, Qtr. Wdo. Glass Front Frame	V,L	—	1	—	—	—	—	—	3582 772-3
		B,J	—	1	—	—	—	—	—	3500 286-7
		R,W	1	1	—	—	—	—	—	3582 136-7
		P,D,C,Y	—	1	—	—	—	—	—	3759 140-1
23-63-111	DEFLECTOR, Qtr. Wdo. Water	P,D	—	2	—	—	—	—	—	3767 563
		C,Y	—	1	—	—	—	—	—	3767 716-7
	DEFLECTOR w/RETAINER, QTR. Wdo. Water	C,Y	—	1	—	—	—	—	—	3767 796-7
	RETAINER, Qtr. Wdo. Water	C,Y	—	2	—	—	—	—	—	2898 909
23-63-112	WEATHERSTRIP, Rear Wdo. Glass									
	NOTE: Weatherstripping is Not used with Cemented-in Type Rear Window Glass. See Part Type Code 23-64-1 for Installation Kit.									
		V,L	—	—	—	1	—	—	—	2839 646
		V,L	—	—	1	—	—	—	—	3500 481
		V,L	—	1	—	—	—	—	—	2784 577
23-63-114	LOCKING STRIP, Rear Wdo. Glass W/Strip	V,L	—	—	1	—	—	—	—	3446 646
23-63-126	WEATHERSTRIP, Front Door V/Wing	V,L	—	—	—	1	—	—	—	3696 848-9
		P,D,C	—	—	—	1	—	1	1	3759 306-7
		P,D,C,Y	—	—	—	—	1	—	—	3759 260-1
23-63-127	RETAINER w/Divisional Channel, Front Door V/Wing W/Strip	V,L	—	—	—	1	—	—	—	2663 558-9
	VENT WINDOW, Front Door (Less Glass)									
	Up To Feb. 8, 1974	P,D,C	—	—	—	1	—	1	1	3788 072-3
	After Feb. 8, 1974	P,D,C	—	—	—	1	—	1	1	3788 528-9
	Up to Feb. 8, 1974	P,D,C,Y	—	—	—	—	1	—	—	3788 074-5
	After Feb. 8, 1974	P,D,C,Y	—	—	—	—	1	—	—	3788 526-7
	T BOLT, Vent Frame to Door Belt CANADA	P,D,C,Y	—	—	—	—	2	—	—	6030 374
23-63-133	BRACKET, Qtr. Wdo. Frame to Qtr. Panel	W	—	—	—	1	—	—	—	3674 874-5
	SUPPORT, Qtr. Wdo. Frame	W	—	—	—	1	—	—	—	3674 886-7
23-63-136	RETAINER w/BRACKET, Qtr. Wdo. W/Strip	V,L	—	—	—	1	—	—	—	3696 626-7
	RETAINER, Qtr. Wdo. Front Frame W/Strip	V,L	—	—	—	1	—	—	—	3616 502-3
	RETAINER, Qtr. Wdo. Glass W/Strip	V,L	—	—	—	2	—	—	—	2964 547
	RETAINER, Qtr. Wdo. Glass Upper Edge	R,W	2	—	—	—	—	—	—	6003 257
	RETAINER, Roof and Front Door Glass Upper W/Strip (Blow Off)	P,D,C,Y	—	2	—	—	—	2	—	—	3788 100
23-63-171	WEATHERSTRIP, T/Gate Opening Lower	R,W	—	—	—	—	—	—	1	1	3581 168-9
23-63-172	WEATHERSTRIP, Deck Lid Opening	V,L	—	1	—	1	1	—	—	—	3756 829
		B,J	—	1	—	—	—	—	—	—	3756 829
		R,W	1	1	—	1	1	—	—	—	3756 829
		P,D	—	1	—	—	1	1	—	—	3756 844
	Up To Nov. 15, 1973	C,Y	—	1	—	—	1	1	—	—	3756 681
	After Nov. 15, 1973	C,Y	—	1	—	—	1	1	—	—	3756 844
23-63-175	RETAINER, Deck Opening Lower Panel W/Strip	R	1	1	—	—	—	—	—	—	3446 530
		R,W	—	—	—	—	1	—	—	—	3446 527
	RETAINER W/SEAL, T/Gate Opening Lower Weatherstrip	R,W	—	—	—	—	—	—	1	1	3788 496
23-63-181	WEATHERSTRIP, T/Gate Glass Inner Belt	P,D,C	—	—	—	—	—	—	1	1	3759 521
	Outer Belt	P,D,C	—	—	—	—	—	—	1	1	3759 524
	Inner Belt	R,W	—	—	—	—	—	—	1	1	3788 493
	Outer Belt	R,W	—	—	—	—	—	—	1	1	3581 909

TYPE LETTERS Indicates J - Challenger, B - Barracuda, V - Valiant, L - Dart, R - Satellite, W - Coronet, P - Plymouth, D - Dodge, C - Chrysler, Y - Imperial

NUMERALS INDICATE: 21 - 2 DR. SED., 23 - 2 DR. H.T., 29 - FAST BACK, 41 - 4 DR. SED., 43 - 4 DR. H.T., 45 - 6 PASS. STA. WGN., 46 - 9 PASS. STA. WGN.

AR Indicates use as required.
# Indicates parts not listed in any previous parts book
Numerals in parentheses ( ) refer to notes.
★ Indicates change or addition.

Printed in U.S.A.
November, 1974

Right and left part numbers are on same line, first number is right, second number is left.

CODE	PART NAME	MODEL CODES	SEE BOTTOM NOTE 21	23	29	41	43	45	46	PART NUMBER
23-63-181	WEATHERSTRIP Cont'd.									
	WEATHERSTRIP, T/Gate Glass Opening									
	Inner	R,W	—	—	—	—	—	1	1	3582 998-9
	Outer	R,W	—	—	—	—	—	1	1	3582 996
		P,D,C	—	—	—	—	—	1	1	3759 520
	GASKET, T/Gate Glass Lower Frame	All	—	—	—	—	—	4	4	3581 844
	GASKET, T/Gate Glass to Lower Frame Tee-Nut	All	—	—	—	—	—	4	4	3581 134
	GASKET, T/Gate Glass Lift Channel to Glass	P,D,C	—	—	—	—	—	4	4	3581 134
	GASKET, T/Gate Glass Lift Channel Tee-Nut to Glass	P,D,C	—	—	—	—	—	3	3	3581 844
	GASKET, T/Gate Glass Lift Channel Bracket Lt.	P,D,C	—	—	—	—	—	1	1	3759 194
	TEE-NUT, T/Gate Glass to Lower Frame Attaching	R,W	—	—	—	—	—	4	4	6029 135
23-63-183	CLIP, T/Gate Glass W/Strip									
	Inner Belt	P,D,C	—	—	—	—	—	9	9	2217 508
	Outer Belt	P,D,C	—	—	—	—	—	9	9	2217 508
	Inner Belt End	P,D,C	—	—	—	—	—	2	2	2861 594
	Outer Belt End	P,D,C	—	—	—	—	—	2	2	2861 594
23-64-1	**KIT, Cemented In Rear Wdo.**									
	Installation	B,J	—	1	—	—	—	—	—	2807 425
		R,W	1	1	—	1	1	—	—	2807 425
		Y	—	1	—	—	—	1	—	2807 425
	SPACER, Rear Wdo. Glass									
	(Approximately 3/8" Thick)	P,D,C,Y	—	AR	—	—	AR	AR	—	3582 864
		R,W	AR	AR	—	AR	AR	—	—	3582 864
	(Approximately 5/16" Thick)	P,D,C,Y	—	AR	—	—	AR	AR	—	3582 865
		R,W	AR	AR	—	AR	AR	—	—	3582 865
	Up To April 1, 1974									
	Lower	R,W	2	2	—	2	2	—	—	3720 182
	After April 1, 1974									
	Lower	R,W	2	2	—	2	2	—	—	3767 820
	Lower	P,D,C	—	2	—	—	2	2	—	3674 699
	SHIM, Rear Wod. Lower Spacer	C	—	—	—	—	—	2	—	3767 196
	TAPE, Rear Wdo. Glass Bonding (171" Long)	B,J,R,W	1	1	—	1	1	—	—	3500 883
23-64-4	BUMPER, Front Door Glass Down Stop									
		V,L	—	2	—	2	—	—	—	3759 936
		B,J	—	2	—	—	—	—	—	3439 163
		R	2	2	—	—	—	—	—	3499 785
		W	2	2	—	2	—	—	—	3499 785
		R,W	—	—	—	—	2	—	2	2 3499 252
		P,D,C,Y	—	2	—	—	—	—	—	3759 566
		P,D,C,Y	—	—	—	—	2	2	2	2 3788 274
	BUMPER, Front Door Glass Up Stop									
		V,L	—	4	—	4	—	—	—	3759 822
		R,W	4	4	—	4	—	—	—	3440 830
	w/o Vent Wdos.	P,D,C,Y	—	—	—	—	—	4	—	3759 962
	w/Vent Wdos.	P,D,C,Y	—	—	—	—	—	2	—	3788 106
	BUMPER, Front Door Glass Belt									
		B,J	—	2	—	—	—	—	—	3581 579

TYPE LETTERS Indicates: J - Challenger, B - Barracuda, V - Valiant, L - Dart, R - Satellite, W - Coronet, P - Plymouth, D - Dodge, C - Chrysler, Y - Imperial

NUMERALS INDICATE: 21 - 2 DR. SED., 23 - 2 DR. H.T., 29 - FAST BACK, 41 - 4 DR. SED., 43 - 4 DR. H.T., 45 - 6 PASS. STA. WGN., 46 - 9 PASS. STA. WGN.

AR Indicates use as required.
# Indicates parts not listed in any previous parts book
Numerals in parentheses ( ) refer to notes.
★ Indicates change or addition.

Printed in U.S.A.
November, 1974

Right and left part numbers are on same line, first number is right, second number is left.

CODE	PART NAME	MODEL CODES	SEE BOTTOM NOTE 21	23	29	41	43	45	46	PART NUMBER
23-64-4	BUMPER Cont'd.									
	BUMPER, Front Door Glass Up Stop Bracket	P,D,C,Y	—	2	—	—	—	—	—	3759 844
	BUMPER, Qtr. Inside Panel to Glass	V,L	—	2	—	—	—	—	—	3788 362
	BUMPER, Qtr. Wdo. Glass Down Stop	R,W	—	2	—	—	—	—	—	3445 501
	Electric	R,W	2	—	—	—	—	—	—	3445 501
		P,D,C,Y	—	2	—	—	—	—	—	3788 101
	BUMPER, Qtr. Wdo. Glass Up Stop Upper	V,L	—	4	—	—	—	—	—	3759 954
		P,D,C,Y	—	4	—	—	—	—	—	3759 954
		B,J	—	2	—	—	—	—	—	2784 715
	BUMPER, Rear Door Glass Down Stop	P,D,C,Y	—	—	—	—	2	2	2	2	3788 274
	BUMPER, Rear Door Glass Up Stop	P,D,C,Y	—	—	—	—	—	4	—	—	3759 954
	BUMPER, Elect. Wdo. Lift Down Stop Rr.	R,W	—	—	—	—	2	—	2	2	1954 083
23-64-10	GLASS TAILGATE WINDOW									
	Clear	R,W	—	—	—	—	—	—	1	1	3581 900
	Tinted	R,W	—	—	—	—	—	—	1	1	3581 901
	Clear	P,D,C	—	—	—	—	—	—	1	1	3696 511
	Tinted	P,D,C	—	—	—	—	—	—	1	1	3696 510
23-64-11	LABEL, T/Gate Door Hinge Release Direction	All	—	—	—	—	—	—	1	1	2895 183
23-64-12	UP STOP, Front Door Glass Up To Feb. 1, 1974	V,L	—	4	—	4	—	—	—	—	3696 575
	After Feb. 1, 1974	V,L	—	4	—	4	—	—	—	—	3788 476
	STOP, Front Door Glass, Up Position On Glass Frt.	B,J	—	2	—	—	—	—	—	—	2894 599
	Rr.	B,J	—	2	—	—	—	—	—	—	2894 599
		R,W	4	4	—	4	—	—	—	—	3582 011
	STOP, Front, Door, Glass Up Position Front w/o Vent Wdos.	P,D,C,Y	—	—	—	—	—	2	—	—	3759 854
	STOP, Front Door Glass Up Position Rear w/o Vent Wdos.	P,D,C,Y	—	—	—	—	—	2	—	—	3759 850
	UP STOP, Front Door Glass Up Bracket Up To April 19, 1974	P,D,C,Y	—	4	—	—	—	—	—	—	3759 843
	After April 19, 1974	P,D,C,Y	—	4	—	—	—	—	—	—	3795 222
	UP STOP, Rear Door Glass	P,D,C,Y	—	—	—	—	—	4	—	—	3788 118-9
	STOP, Qtr. Wdo. Glass Up Position	B,J	—	2	—	—	—	—	—	—	3506 066
		V,L	—	4	—	—	—	—	—	—	3788 194
	STOP, Qtr. Wdo. Glass Upper Rear	B,J	—	2	—	—	—	—	—	—	2963 185
	STOP, Qtr. Wdo. Glass Up Position On Glass	B,J	—	2	—	—	—	—	—	—	2965 900
	STOP, Qtr. Wdo. Glass Down	B,J	—	1	—	—	—	—	—	—	3444 718-9
	STOP, Qtr. Wdo. Glass Up	R,W	4	4	—	4	—	—	—	—	3582 115
	STOP, Qtr. Wdo. Glass Down	R,W	1	1	—	—	—	—	—	—	3582 854-5
	UP STOP, Qtr. Wdo. Glass Upper	P,D,C,Y	—	2	—	—	—	—	—	—	3759 980-1
	BRACKET w/WELD SCREW, Front Door Glass Up Stop Frt.	B,J	—	2	—	—	—	—	—	—	3582 548
	Rr.	B,J	—	2	—	—	—	—	—	—	3582 548
		R,W	4	4	—	4	—	—	—	—	3581 439

TYPE LETTERS Indicates: J - Challenger, B - Barracuda, V - Valiant, L - Dart, R - Satellite, W - Coronet, P - Plymouth, D - Dodge, C - Chrysler, Y - Imperial

NUMERALS INDICATE: 21 - 2 DR. SED., 23 - 2 DR. H.T., 29 - FAST BACK, 41 - 4 DR. SED., 43 - 4 DR. H.T., 45 - 6 PASS. STA. WGN., 46 - 9 PASS. STA. WGN.

AR Indicates use as required.
# Indicates parts not listed in any previous parts book
Numerals in parentheses ( ) refer to notes.
★ Indicates change or addition.

Printed in U.S.A.
November, 1974

Right and left part numbers are on same line, first number is right, second number is left.

CODE	PART NAME	MODEL CODES	SEE BOTTOM NOTE 21	23	29	41	43	45	46	PART NUMBER
23-64-12	UP STOP Cont'd.									
	BRACKET, Front Door Glass Hook and Up Stop	P,D,C,Y	—	2	—	—	—	—	—	3759 833
	BRACKET, Rear Door Glass Down Stop Electric Regulator	R,W	—	—	—	—	2	—	2	2 3581 488
	BRACKET, Rear Door Down Stop	P,D,C,Y	—	—	—	—	2	2	2	2 3759 911
	BRACKET, Qtr. Wdo. Glass Down Stop	P,D,C,Y	—	2	—	—	—	—	—	— 3788 102
	BRACKET w/STUD, T/Gate Glass Up Stop	R,W	—	—	—	—	—	—	2	2 3696 752
		P,D,C	—	—	—	—	—	—	2	2 3759 801
	SCREW, 1/4"-14 x 1 1/8"	B,J,V,L	—	AR	—	AR	—	—	—	— 9428 368
		R,W	AR	AR	—	AR	—	—	—	— 9428 368
	SCREW w/WASHER, Hex. Socket Head, Pilot Point 1/4"-20 x 3/4"	B,J	—	AR	—	—	—	—	—	— 6027 992
	NUT w/WASHER, T/Gate Glass Up Stop Bracket Attaching	R,W	—	—	—	—	—	—	2	2 120 376
	NOTE: Also See Code 23-39-15.									
23-64-14	WEDGE, Front Door Glass Stop Up Position	B,J	—	2	—	—	—	—	—	— 3439 317
23-64-17	ANTI-RATTLER, V/Wing Adjusting Rod	V,L	—	—	—	—	2	—	—	— 2861 704
	ANTI-RATTLER, Front Door Wdo. Regulator Arm	B,J	—	4	—	—	—	—	—	— 3506 486
	ANTI-RATTLER, Qtr. Wdo. Glass Stop	B,J	—	2	—	—	—	—	—	— 2782 878
	ANTI-RATTLER, Qtr. Wdo. Glass Stop Up Position	V,L,R,W	—	4	—	—	—	—	—	— 3506 486
	Electric	R,W	4	—	—	—	—	—	—	— 3506 486
		P,D,C,Y	—	4	—	—	—	—	—	— 3759 696
	GASKET, Front Door V/Wing Upper Pivot Bracket to Glass	V,L	—	—	—	—	2	—	—	— 3759 079
	GASKET, Front Door V/Wing Upper Pivot Screw and Washer to Glass	V,L	—	—	—	—	2	—	—	— 3759 080
	GASKET, Front Door V/Wing Upper Pivot Outer	P,D,C,Y	—	—	—	—	2	2	2	2 3759 890
	Inner	P,D,C,Y	—	—	—	—	4	4	4	4 3759 080
	GASKET, Front Door Glass Hook Up Stop Bracket	V,L	—	8	—	8	—	—	—	— 3788 004
	GASKET, Front Door Glass Guide Bracket to Glass	V,L	—	12	—	12	—	—	—	— 3788 004
	GASKET, Front Door Glass - Isolater	P,D,C,Y	—	14	—	—	—	—	—	— 3788 004
	w/o Vent Wdos.	P,D,C,Y	—	—	—	—	AR	AR	AR	AR 3788 004
	GASKET, Front Door Bell Crank to Glass	V,L	—	2	—	2	—	—	—	— 3696 090
	w/o Vent Wdos.	P,D,C,Y	—	—	—	—	—	2	—	— 3696 090
	GASKET, Front Door Glass to Front Track Fastener	B,J,R,W	4	4	—	4	—	—	—	— 3440 623
	GASKET, Front Door Glass to Up Stop Tee-Nut	R,W	4	4	—	4	—	—	—	— 3440 623

TYPE LETTERS Indicates J - Challenger, B - Barracuda, V - Valiant, L - Dart, R - Satellite, W - Coronet, P - Plymouth, D - Dodge, C - Chrysler, Y - Imperial

NUMERALS INDICATE: 21 - 2 DR. SED., 23 - 2 DR. H.T., 29 - FAST BACK, 41 - 4 DR. SED., 43 - 4 DR. H.T., 45 - 6 PASS. STA. WGN., 46 - 9 PASS. STA. WGN.

AR Indicates use as required.
# Indicates parts not listed in any previous parts book
Numerals in parentheses ( ) refer to notes.
★ Indicates change or addition.

Printed in U.S.A.
November, 1974

Right and left part numbers are on same line, first number is right, second number is left.

CODE	PART NAME	MODEL CODES	SEE BOTTOM NOTE 21	23	29	41	43	45	46	PART NUMBER
23-64-17	ANTI-RATTLER Cont'd.									
	GASKET, Front Door Wdo. Glass Track Slide									
		B,J	—	4	—	—	—	—	—	—	3582 698
	w/o Vent Wdos.	P,D,C,Y	—	—	—	—	2	2	2	2	3582 698
	GASKET, Rear Door Glass Front Track Slide									
		P,D,C,Y	—	—	—	—	—	2	—	—	3582 698
	GASKET, Qtr. Wdo. Pivot Bracket Retainer to Glass	V,L	—	—	—	2	—	—	—	—	3759 079
	GASKET, Qtr. Wdo. Slide to Glass									
		B,J	—	4	—	—	—	—	—	—	3440 623
	GASKET, Qtr. Wdo. Lift Bracket									
		R,W	2	2	—	—	—	—	—	—	3788 051
	GASKET, Qtr. Wdo. Glass Lift Channel Att. Screw									
		P,D,C,Y	—	4	—	—	—	—	—	—	3788 004
	GASKET, Qtr. Wdo. Glass Guide Ball Stud									
		P,D,C,Y	—	2	—	—	—	—	—	—	3788 004
	GASKET, Qtr. Wdo. Glass Stabilizer Bracket									
		P,D,C,Y	—	2	—	—	—	—	—	—	3696 491
	GASKET, Qtr. Wdo. Glass Guide Ball Stud									
		P,D,C,Y	—	2	—	—	—	—	—	—	3759 671
	SPACER, Rear Door Glass Front Track Slide Tee-Nut									
		P,D,C,Y	—	—	—	—	—	2	—	—	3759 860
	SPACER, Qtr. Wdo. Glass to Qtr. Wdo. Glass Lower Frame									
		V,L	—	4	—	—	—	—	—	—	2216 544
23-64-19	HOOK, Front Door Glass Up Stop									
		V,L	—	4	—	4	—	—	—	—	3696 587
23-64-21	BELL CRANK, Front Door Glass to Front Track w/o Vent Wdos.	P,D,C,Y	—	—	—	—	—	2	—	—	3696 565
23-64-28	RETAINER, Front Door Glass Blow Off									
		R,W	—	—	—	—	2	—	2	2	3581 888
	RETAINER, Front Door Glass Guide Lower	P,D,C,Y	—	2	—	—	—	—	—	—	3759 836
	NOTE: Also See Code 23-64-293									
23-64-40	ROD, Front Door V/Wing Adjusting Lower	V,L	—	—	—	—	2	—	—	—	2860 010
	NUT, Door V/Wing Lower Adjusting Rod to Inside Panel	V,L	—	—	—	—	2	—	—	—	120 376
23-64-44	RETAINER, Front Door V/Wing Lower Rod to Lower Brace	V,L	—	—	—	—	2	—	—	—	2860 036
23-64-66	FRAME, Rear Wdo. Opening (Plastic)	Y	—	1	—	—	—	1	—	—	3674 562
	FRAME, Rear Wdo. Opening Upper									
		V	—	—	—	1	—	—	—	—	2965 653
	Used w/o Soft Headlining	L	—	—	—	1	—	—	—	—	2965 653
	Used w/Soft Headlining	L	—	—	—	1	—	—	—	—	3720 873
		V,L	—	—	—	—	1	—	—	—	2603 675
		V,L	—	1	—	—	—	—	—	—	2769 490
		B	—	1	—	—	—	—	—	—	3417 036
		J	—	1	—	—	—	—	—	—	3417 049
		R,W	1	1	—	1	—	—	—	—	3482 546
		R,W	—	—	—	—	1	—	—	—	3445 107
		P,D	—	1	—	—	—	—	—	—	3752 376
		P,D	—	—	—	—	—	1	—	—	3752 004
		P,D	—	—	—	—	1	—	—	—	3674 557
		C	—	—	—	—	1	—	—	—	3674 559
		C,Y	—	1	—	—	—	1	—	—	3752 375

TYPE LETTERS Indicates J - Challenger, B - Barracuda, V - Valiant, L - Dart, R - Satellite, W - Coronet, P - Plymouth, D - Dodge, C - Chrysler, Y - Imperial

NUMERALS INDICATE: 21 - 2 DR. SED., 23 - 2 DR. H.T., 29 - FAST BACK, 41 - 4 DR. SED., 43 - 4 DR. H.T., 45 - 6 PASS. STA. WGN., 46 - 9 PASS. STA. WGN.

AR Indicates use as required.
# Indicates parts not listed in any previous parts book
Numerals in parentheses ( ) refer to notes.
★ Indicates change or addition.

Printed in U.S.A.
November, 1974

Right and left part numbers are on same line, first number is right, second number is left.

CODE	PART NAME	MODEL CODES	SEE BOTTOM NOTE 21	23	29	41	43	45	46	PART NUMBER
23-64-66	FRAME Cont'd.									
	FRAME, Rear Wdo. Opening Lower	V,L	—	—	—	1	—	—	—	—	2965 656
		P,D	—	1	—	—	—	—	—	—	3767 212
		P,D	—	—	—	—	1	—	—	—	3767 213
		P,D	—	—	—	—	—	1	—	—	3767 214
		C,Y	—	1	—	—	—	1	—	—	3767 216
		C	—	—	—	—	1	—	—	—	3767 215
23-64-68	EXTENSION, Rear Wdo. Opening Lower Frame	V,L	—	—	—	1	—	—	—	—	3444 206-7
23-64-71	BUMPER, V/WING Upper Frame										
	Up To Feb. 12, 1974	P,D,C,Y	—	—	—	—	—	1	—	—	3759 222-3
	After Feb. 12, 1974	P,D,C,Y	—	—	—	—	—	1	—	—	3788 602-3
	PLUG, Front Door Inside Panel V/Wing Attaching Access Hole Lwr.	V,L	—	—	—	—	2	—	—	—	2811 998
	PLUG, Rear Door On Center Pillar Outer	P,D,C,Y	—	—	—	—	AR	AR	AR	AR	2811 953
23-64-74	SEAL, V/Wing W/Strip Retainer to Door Frame	V,L	—	—	—	—	2	—	—	—	2811 523
23-64-84	FILLER, Rear Wdo. Opening Lower Corner	V,L	—	—	—	—	1	—	—	—	2604 888-9
		V	—	1	—	—	—	—	—	—	2782 066-7
	Used w/o Soft Headlining	L	—	1	—	—	—	—	—	—	2782 066-7
	Used w/Soft Headlining	L	—	1	—	—	—	—	—	—	3720 870-1
23-64-159	RETAINER, Qtr. Wdo. Glass Pivot Bracket	V,L	—	—	—	2	—	—	—	—	3582 868
23-64-187	GASKET, Qtr. Wdo. Mtg. Bracket	R,W	2	—	—	—	—	—	—	—	3581 776
23-64-197	GUIDE w/SUPPORT, Front Door Glass Rear Track Stabilizer	B,J	—	1	—	—	—	—	—	—	3582 042-3
	GUIDE, Front Door Glass Stabilizer Bracket to Tube Upper	V,L	—	4	—	4	—	—	—	—	3696 433
		P,D,C,Y	—	4	—	—	—	—	—	—	3696 433
	GUIDE, Front Door Glass Lower	V,L	—	2	—	2	—	—	—	—	3788 272
		P,D,C,Y	—	2	—	—	—	—	—	—	3788 273
23-64-198	STABILIZER, Front Door Glass										
	Up To Nov. 15, 1973	V,L	—	4	—	4	—	—	—	—	3788 035
	After Nov. 15, 1973	V,L	—	4	—	4	—	—	—	—	3788 400
	Up To Nov. 15, 1973	P,D,C,Y	—	AR	—	—	AR	AR	AR	AR	3788 035
	After Nov. 15, 1973	P,D,C,Y	—	AR	—	—	AR	AR	AR	AR	3788 400
	STABILIZER w/BRACKET, Rear Door Glass	P,D,C,Y	—	—	—	—	—	2	—	—	3788 376
23-64-199	GASKET, Front Door Glass Stabilizer Guide and Support	B,J	—	2	—	—	—	—	—	—	3439 115
23-64-200	BRACKET, Front Door Glass Stabilizer	B,J	—	4	—	—	—	—	—	—	3621 798
		R,W	4	4	—	4	4	—	4	4	3621 799
23-64-204	BAR w/BUMPER, Qtr. Wdo. Glass Stabilizer										
	Up To Nov. 6, 1973	P,D,C,Y	—	2	—	—	—	—	—	—	3788 033
	After Nov. 6, 1973	P,D,C,Y	—	2	—	—	—	—	—	—	3788 377
23-64-213	FILLER, Qtr. O/Side Panel Rear Wdo. Opening Corner	V,L	—	1	—	—	—	—	—	—	2782 164-5
		V,L	—	—	—	—	1	—	—	—	2782 162-3
	FILLER, Qtr. Wdo. Opening Lower Corner	V,L	—	—	—	1	—	—	—	—	2965 584-5

TYPE LETTERS Indicates J - Challenger, B - Barracuda, V - Valiant, L - Dart, R - Satellite, W - Coronet, P - Plymouth, D - Dodge, C - Chrysler, Y - Imperial

NUMERALS INDICATE: 21 - 2 DR. SED., 23 - 2 DR. H.T., 29 - FAST BACK, 41 - 4 DR. SED., 43 - 4 DR. H.T., 45 - 6 PASS. STA. WGN., 46 - 9 PASS. STA. WGN.

AR Indicates use as required.

= Indicates parts not listed in any previous parts book

Numerals in parentheses ( ) refer to notes.

★ Indicates change or addition.

Printed in U.S.A.
November, 1974

Right and left part numbers are on same line, first number is right, second number is left.

CODE	PART NAME		MODEL CODES	SEE BOTTOM NOTE 21	23	29	41	43	45	46	PART NUMBER
23-64-213	FILLER Cont'd.										
	FILLER, Qtr. Outside Panel Rear Wdo. Opening Lower Corner		P,D	—	1	—	—	—	—	—	—	3756 142-3
			P,D	—	—	—	—	1	—	—	—	3756 140-1
	FILLER, Qtr. Wdo. Opening Rear Lower Corner		R,W	—	—	—	—	—	—	1	1	3500 950-1
23-64-240	PIVOT PACKAGE, V/Wing Upper		V,L	—	—	—	—	1	—	—	—	2932 436-7
	PIVOT, V/Wing Upper		V,L	—	—	—	—	1	—	—	—	2663 754-5
	PIVOT PACKAGE, V/Wing										
		Upper	P,D,C	—	—	—	—	1	—	1	1	3780 414-5
		Lower	P,D,C	—	—	—	—	1	—	1	1	3780 416-7
	Up To Feb. 4, 1974	Upper	P,D,C,Y	—	—	—	—	—	1	—	—	3780 418-9
	After Feb. 4, 1974	Upper	P,D,C,Y	—	—	—	—	—	1	—	—	3780 414-5
	Up To Feb. 4, 1974	Lower	P,D,C,Y	—	—	—	—	—	1	—	—	3780 420-1
	After Feb. 4, 1974	Lower	P,D,C,Y	—	—	—	—	—	1	—	—	3879 370-1
23-64-242	CLAMP, V/Wing Lower Pivot Tension										
	Up To Oct. 3, 1973		V,L	—	—	—	—	2	—	—	—	2663 742
	After Oct. 3, 1973		V,L	—	—	—	—	2	—	—	—	3788 477
	Up To Oct. 3, 1973		P,D,C	—	—	—	—	2	—	2	2	2663 742
	After Oct. 3, 1973		P,D,C	—	—	—	—	2	—	2	2	3788 477
			P,D,C,Y	—	—	—	—	—	2	—	—	3759 989
	BRACKET, V/Wdo. Frame to Hinge Pillar										
	Up To Oct. 5, 1973		P,D,C,Y	—	—	—	—	—	2	—	—	3759 330
	After Oct. 5, 1973		P,D,C,Y	—	—	—	—	—	2	—	—	3788 490
	SCREW, V/Wing Clamp to Upper Pivot Bracket		V,L	—	—	—	—	2	—	—	—	6000 379
	SPEED NUT, V/Wing Lower Pivot Bracket to Clamp		V,L	—	—	—	—	—	2	—	—	6022 274
23-64-254	TRACK w/BRACKETS, Front Door Glass										
			V,L	—	1	—	—	—	—	—	—	3759 924-5
			V,L	—	—	—	1	—	—	—	—	3759 926-7
		Frt.	B,J	—	2	—	—	—	—	—	—	3759 614
		Rr.	B,J	—	1	—	—	—	—	—	—	2895 416-7
	TRACK, Front Door Glass										
		Frt.	R,W	1	1	—	1	—	—	—	—	3499 274-5
		Rr.	R,W	1	1	—	1	—	—	—	—	3581 914-5
			R,W	—	—	—	—	1	—	1	1	3499 272-3
			P,D,C,Y	—	1	—	—	—	—	—	—	3788 002-3
	w/o Vent Wdos.		P,D,C	—	—	—	—	1	—	1	1	3696 368-9
	w/o Vent Wdos.	Frt.	P,D,C,Y	—	—	—	—	—	1	—	—	3696 362-3
	w/o Vent Wdos.	Rr.	P,D,C,Y	—	—	—	—	—	1	—	—	3696 366-7
	TRACK, Rear Door Glass Up To Nov. 30, 1973										
		Frt.	P,D,C,Y	—	—	—	—	—	1	—	—	3696 384-5
	After Nov. 30, 1973										
		Frt.	P,D,C,Y	—	—	—	—	—	1	—	—	3788 390-1
		Rr.	P,D,C,Y	—	—	—	—	—	1	—	—	3696 388-9
	TEE-BOLT		R,W	4	4	—	4	—	—	—	—	6027 541
	NUT w/WASHER		R,W	4	4	—	4	—	—	—	—	120 376
	WASHER		R,W	4	4	—	4	—	—	—	—	6028 588
23-64-266	BUMPER, Door Glass Front Track Upper Attaching Bracket		B,J	—	2	—	—	—	—	—	—	3440 798
	BUMPER, Door Glass Lift Channel		B,J	—	2	—	—	—	—	—	—	3440 798
	BUMPER, Door Inside Panel		B,J	—	4	—	—	—	—	—	—	3440 798

TYPE LETTERS Indicates: J - Challenger, B - Barracuda, V - Valiant, L - Dart, R - Satellite, W - Coronet, P - Plymouth, D - Dodge, C - Chrysler, Y - Imperial

NUMERALS INDICATE: 21 - 2 DR. SED., 23 - 2 DR. H.T., 29 - FAST BACK, 41 - 4 DR. SED., 43 - 4 DR. H.T., 45 - 6 PASS. STA. WGN., 46 - 9 PASS. STA. WGN.

AR Indicates use as required.
# Indicates parts not listed in any previous parts book
Numerals in parentheses ( ) refer to notes.
★ Indicates change or addition.

Printed in U.S.A.
November, 1974

Right and left part numbers are on same line, first number is right, second number is left.

CODE	PART NAME	MODEL CODES	SEE BOTTOM NOTE 21	23	29	41	43	45	46	PART NUMBER
23-64-266	BUMPER Cont'd.									
	BUMPER, Front Door Outside Panel Belt Reinforcement									
		R,W	—	—	—	4	—	4	4	3581 055
	BUMPER, Front Door Glass Lift Bracket									
	w/o Vent Wdos.	P,D,C,Y	—	—	—	AR	AR	AR	AR	3440 798
	w/Vent Wdos.	P,D,C,Y	—	—	—	—	2	—	—	3440 798
	BUMPER, Front Door Glass Down Stop									
	w/Vent Wdos.	P,D,C,Y	—	—	—	2	2	2	2	3440 798
	BUMPER, Rear Door Glass Track Lower Bracket Down Stop	P,D,C	—	—	—	2	—	2	2	3759 910
23-64-269	BRACKET w/ROLLER and GUIDE, Qtr. Wdo. Track	V,L	—	2	—	—	—	—	—	2520 658
	BRACKET w/ROLLER, Qtr. Wdo. Track	V,L	—	2	—	—	—	—	—	2520 659
	BRACKET, Qtr. Wdo. Glass Track Lower	R,W	—	1	—	—	—	—	—	3696 724-5
	Electric	R,W	1	—	—	—	—	—	—	3696 724-5
	BRACKET, Qtr. Wdo. Track to Inside Panel Belt Reinforcement	R,W	—	2	—	—	—	—	—	3696 722
	Electric	R,W	2	—	—	—	—	—	—	3696 722
	BRACKET, Qtr. Wdo. Lower Track Support and Down Stop	P,D,C,Y	—	1	—	—	—	—	—	3788 132-3
	BRACKET, Front Door Glass Run Rear Lower to Inside Panel Lower w/Vent Wdos. Up to Oct. 5, 1973	P,D,C,Y	—	—	—	2	2	2	2	3788 270
	w/Vent Wdos. After Oct. 5, 1973	P,D,C,Y	—	—	—	2	2	2	2	3788 472
	BRACKET, Front Door Vent Wdo. Divisional Channel to Inside Panel Lower									
	Up To Oct. 5, 1973	P,D,C,Y	—	—	—	2	2	2	2	3788 270
	After Oct. 5, 1973	P,D,C,Y	—	—	—	2	2	2	2	3788 472
	BRACKET, w/PLATE and RIVET, Front Door Upper Glass Rear Track Attaching	P,D,C	—	—	—	2	—	2	2	
	BRACKET w/WELD NUT, Rear Door Front Glass Track Upper	P,D,C,Y	—	—	—	—	2	—	—	366 392
	SUPPORT w/RETAINER, Front Door Glass Front Track Lower	B,J	—	2	—	—	—	—	—	3417 627
23-64-271	PLATE, Qtr. Wdo. Glass Track Lower Bracket Mounting	R,W	—	2	—	—	—	—	—	3696 723
	Electric	R,W	2	—	—	—	—	—	—	3696 723
	PLATE, Qtr. Wdo. Roller Track Lower Support	R,W	—	2	—	—	—	—	—	3581 286
	Electric	R,W	2	—	—	—	—	—	—	3581 286
23-64-272	FASTENER, Front Door Glass to Hook Up Stop	V,L	—	4	—	4	—	—	—	2811 852
	FASTENER, Front Door Glass to Lift Channel	V,L	—	AR	—	AR	AR	—	—	2811 852
		B,J,R,W	AR	AR	—	AR	AR	—	AR	AR 2811 852
	FASTENER, w/Retainer, Front Door Glass Lift	B,J	—	2	—	—	—	—	—	3759 193
		R,W	8	8	—	8	6	—	6	6 3759 193
		P,D,C,Y	—	—	—	—	4	4	4	4 3759 193
	FASTENER, w/Retainer, Front Door Wdo. Track Slide to Glass	B,J	—	4	—	—	—	—	—	— 3759 193

TYPE LETTERS Indicates: J - Challenger, B - Barracuda, V - Valiant, L - Dart, R - Satellite, W - Coronet, P - Plymouth, D - Dodge, C - Chrysler, Y - Imperial

NUMERALS INDICATE: 21 - 2 DR. SED., 23 - 2 DR. H.T., 29 - FAST BACK, 41 - 4 DR. SED., 43 - 4 DR. H.T., 45 - 6 PASS. STA. WGN., 46 - 9 PASS. STA. WGN.

AR Indicates use as required.
= Indicates parts not listed in any previous parts book
Numerals in parentheses ( ) refer to notes.
★ Indicates change or addition.

Printed in U.S.A.
November, 1974

Right and left part numbers are on same line, first number is right, second number is left.

CODE	PART NAME	MODEL CODES	SEE BOTTOM NOTE 21	23	29	41	43	45	46	PART NUMBER
23-64-272	FASTENER Cont'd.									
	FASTENER, Rear Door Glass to Lift Channel w/Retainer	R,W	—	—	—	4	—	4	4	3759 193
	w/Retainer	P,D,C,Y	—	—	—	4	4	4	4	3759 193
	w/o Retainer	R,W	AR	AR	—	AR	AR	—	AR	AR 2811 852
	FASTENER w/RETAINER, Qtr. Wdo. Glass Bracket	R,W	6	6	—	6	—	—	—	— 3759 193
	FASTENER and BUSHING PACKAGE, Qtr. Wdo. Glass Bracket	R,W	1	1	—	1	—	—	—	— 3744 734
	SPACER, Front Door Glass Rear Track Stabilizer Guide and Support to Glass	B,J	—	4	—	—	—	—	—	— 2216 544
	SPACER, Front Door Belt Hook to Glass	V,L	—	4	—	4	—	—	—	— 3759 783
	SPACER, Front Door Glass Hook and Up-Stop	P,D,C,Y	—	2	—	—	—	—	—	— 3759 783
	SPACER, Front Door Glass Stabilizer	R,W	8	8	—	8	—	—	—	— 2216 544
	SPACER, Front Door V/Wdo. Upper Pivot Bracket to Glass	V,L	—	—	—	—	2	—	—	— 3759 081
		P,D,C,Y	—	—	—	—	4	4	4	4 3759 081
	SPACER, Front Door V/Wdo. Pivot	P,D,C,Y	—	—	—	—	4	4	4	4 3759 081
	SPACER, Front Door V/Wdo. Belt Att. Front	P,D,C,Y	—	—	—	—	—	2	—	— 3759 896
	Rear	P,D,C,Y	—	—	—	—	—	2	—	— 3788 215
		P,D,C	—	—	—	—	2	—	2	2 3788 233
	SPACER, Qtr. Wdo. Pivot Bracket to Glass	V,L	—	—	—	2	—	—	—	— 3759 081
	SPACER, Qtr. Wdo. Lower Slide to Glass	B,J	—	2	—	—	—	—	—	— 3582 132
	SPACER, Qtr. Wdo. Glass Lower Roller	R,W	2	2	—	—	—	—	—	— 3582 860
	SPACER, Qtr. Wdo. Glass Lower	R,W	—	—	—	—	—	—	4	4 3674 325
		P,D,C	—	—	—	—	—	—	4	4 3767 197
	SPACER, T/Gate Glass to Lower Frame Att.	All	—	—	—	—	—	—	4	4 2216 544
	BUSHING, Qtr. Wdo. Lower Slide to Glass	B,J	—	2	—	—	—	—	—	— 3582 534
	BUSHING, Qtr. Wdo. Glass Lift Fastener	R,W	6	6	—	6	—	—	—	— 3788 050
	WASHER, Front Door Glass Rear Track Stabilizer Guide and Support to Glass	B,J	—	4	—	—	—	—	—	— 2423 535
	TEE-NUT, T/Gate Glass to Lower Frame Att.	R,W	—	—	—	—	—	—	4	4 6029 135
	SCREW, T/Gate Glass to Lower Frame Att.	R,W	—	—	—	—	—	—	4	4 6016 005
23-64-273	SUPPORT, Rear Door Glass Rear Run Channel Lower	V,L	—	—	—	2	—	—	—	— 2216 673
23-64-276	SPRING, Front Door Glass Wedge to Track Front and Rear	B,J	—	2	—	—	—	—	—	— 3439 311
	SPRING, Qtr. Wdo. Lower Frame Slide	B,J	—	1	—	—	—	—	—	— 3505 728-9
	SPRING, Qtr. Wdo. Track Slide	B,J	—	2	—	—	—	—	—	— 3581 664
	SPRING, Qtr. Wdo. Lower Bracket Front Roller	R,W	—	2	—	—	—	—	—	— 3759 516
	Electric	R,W	2	—	—	—	—	—	—	— 3759 516

TYPE LETTERS Indicates J - Challenger, B - Barracuda, V - Valiant, L - Dart, R - Satellite, W - Coronet, P - Plymouth, D - Dodge, C - Chrysler, Y - Imperial

NUMERALS INDICATE: 21 - 2 DR. SED., 23 - 2 DR. H.T., 29 - FAST BACK, 41 - 4 DR. SED., 43 - 4 DR. H.T., 45 - 6 PASS. STA. WGN., 46 - 9 PASS. STA. WGN.

AR Indicates use as required.
# Indicates parts not listed in any previous parts book
Numerals in parentheses ( ) refer to notes.
★ Indicates change or addition.

Printed in U.S.A.
November, 1974

Right and left part numbers are on same line, first number is right, second number is left.

CODE	PART NAME	MODEL CODES	SEE BOTTOM NOTE 21	23		29	41	43	45	46	PART NUMBER
23-64-277	SPRING WASHER, Front Door Wdo. Regulator Track Slide	B,J	—	2	—	—	—	—	—	—	2983 010
	SPRING WASHER, Rear Door Glass Front Track Slide	P,D,C,Y	—	—	—	—	—	2	—	—	6028 349
	SPRING WASHER, Qtr. Wdo. Glass Guide Ball Stud	P,D,C,Y	—	2	—	—	—	—	—	—	6028 349
23-64-280	FRAME w/SEAL, Qtr. Window Louver Up To Jan. 21, 1974	W	—	—	—	1	—	—	—	—	3720 360-1
	After Jan. 21, 1974	W	—	—	—	1	—	—	—	—	3767 812-3
	w/Opera Wdo. (Inside)	W	—	1	—	—	—	—	—	—	3767 812-3
	w/Opera Wdo. (Outside) Parchment	W	—	1	—	—	—	—	—	—	E604-5 KL2
	White	W	—	1	—	—	—	—	—	—	E604-5 KW1
	Black	W	—	1	—	—	—	—	—	—	E604-5 KX9
	Green	W	—	1	—	—	—	—	—	—	E604-5 KG9
	Gold	W	—	1	—	—	—	—	—	—	E604-5 KY4
	FRAME, Qtr. Window Outer w/Opera Wdo.	P,D	—	1	—	—	—	—	—	—	3767 872-3
	FRAME, Qtr. Window Outer (St. Regis) W/Opera Wdo.	C-S	—	1	—	—	—	—	—	—	3879 968-9
	FRAME, Qtr. Window Glass Frt. CANADA	V,L	—	—	—	1	—	—	—	—	2965 588-9
23-64-281	BRACE, Qtr. Inside Panel to Front Roller Track	V,L	—	1	—	—	—	—	—	—	2840 300-1
	REINFORCEMENT, Qtr. Inside Panel Track Upper Attaching	B,J	—	1	—	—	—	—	—	—	3504 078-9
	REINFORCEMENT, Qtr. Outside Panel Qtr. Wdo. Opening	R	1	1	—	—	—	—	—	—	3759 814-5
		W	1	1	—	1	—	—	—	—	3445 630-1
		P,D	—	1	—	—	—	—	—	—	3756 052-3
		C,Y	—	1	—	—	—	—	—	—	3756 042-3
	REINFORCEMENT, Qtr. Outside Panel Qtr. Wdo. Flange	R	1	1	—	—	—	—	—	—	3615 614-5
23-64-282	SLIDE, Qtr. Wdo. Regulator Arm to Glass Lower Frame	B,J	—	2	—	—	—	—	—	—	3445 149
	SLIDE, Qtr. Wdo. Track Lower Inner and Outer (2-Piece Type-Black Plastic)	B,J	—	2	—	—	—	—	—	—	3505 064
	(2-Piece Type-Black and White Plastic)	B,J	—	2	—	—	—	—	—	—	3506 031
	SLIDE, Qtr. Wdo. Rear Track	V,L	—	2	—	—	—	—	—	—	2802 211
	SLIDE, Qtr. Wdo. Track	P,D,C,Y	—	2	—	—	—	—	—	—	3759 943
	SLIDE, Front Door Wdo. Track	B,J	—	4	—	—	—	—	—	—	3759 568
	SLIDE, Front Door Glass Rear Track w/o Vent Wdos.	P,D,C,Y	—	—	—	—	2	2	2	2	3759 105
	SLIDE, Rear Door Glass Front Track	P,D,C,Y	—	—	—	—	—	2	—	—	3759 914
	SLIDE PACKAGE, Front, Rear or Qtr. Wdo. Regulator Arm Manual	All	AR	AR	—	AR	AR	AR	AR	AR	3744 735
	BALL STUD, Qtr. Wdo. Glass Guide	P,D,C,Y	—	2	—	—	—	—	—	—	3759 670
	SHOULDER BOLT, Qtr. Wdo. Track Regulator arm Retaining Inner and Outer Slide Attaching 1/4" - 20 x 2"	B,J	—	2	—	—	—	—	—	—	6028 820
	SHOULDER BOLT, Qtr. Wdo. Slide Attaching 1/4" - 20 x 1"	B,J	—	2	—	—	—	—	—	—	6028 303
	SHOULDER BOLT, Qtr. Glass Slide Att. 1 5/16" Long	B,J	—	2	—	—	—	—	—	—	6028 304

TYPE LETTERS Indicates J - Challenger, B - Barracuda, V - Valiant, L - Dart, R - Satellite, W - Coronet, P - Plymouth, D - Dodge, C - Chrysler, Y - Imperial

NUMERALS INDICATE: 21 - 2 DR. SED., 23 - 2 DR. H.T., 29 - FAST BACK, 41 - 4 DR. SED., 43 - 4 DR. H.T., 45 - 6 PASS. STA. WGN., 46 - 9 PASS. STA. WGN.

AR Indicates use as required.

= Indicates parts not listed in any previous parts book

Numerals in parentheses ( ) refer to notes.

★ Indicates change or addition.

Printed in U.S.A.
November, 1974

Right and left part numbers are on same line, first number is right, second number is left.

CODE	PART NAME	MODEL CODES	SEE BOTTOM NOTE 21	23	29	41	43	45	46	PART NUMBER
23-64-286	PIN, Front Door Glass Retainer									
	w/Vent Wdos.	V,L	—	—	—	4	—	—	—	2861 744
	w/Vent Wdos.	P,D,C,Y	—	—	—	4	4	4	4	2861 744
	PIN, Qtr. Wdo. Glass Front Retainer	V,L	—	—	4	—	—	—	—	2861 744
23-64-288	SHIELD, Qtr. Wdo. Opening Rear Corner	V,L	—	—	2	—	—	—	—	3505 339
23-64-293	RETAINER, Qtr. Wdo. Regulator Arm to Glass Lower Frame Slide	B,J	—	2	—	—	—	—	—	3445 164
	RETAINER, Front Door Glass									
	w/Vent Wdos.	V,L	—	—	—	8	—	—	—	3582 315
	w/Vent Wdos. Cote Glass	P,D,C,Y	—	—	—	8	8	8	8	~~3582~~ 315
	RETAINER, Qtr. Wdo. Glass	V,L	—	—	8	—	—	—	—	3582 315
	RETAINER, Front Door Glass Guide Lower									
	Up To Oct. 11, 1973	V,L	—	2	—	2	—	—	—	3788 078
	After Oct. 11, 1973	V,L	—	2	—	2	—	—	—	3788 279
	NOTE: Also See Code 23-64-28									
23-64-295	SLEEVE, Front Door Glass Track Lub.									
		V,L	—	2	—	2	—	—	—	3788 079
		P,D,C,Y	—	2	—	—	—	—	—	3788 080
23-64-296	BALL END, Front Door Glass Rear Track w/o Vent Wdos.	P,D,C,Y	—	—	—	2	2	2	2	3582 584
	BALL END, Rear Door Glass Front Track	P,D,C,Y	—	—	—	—	2	—	—	3759 915
23-64-297	SLEEVE NUT, Qtr. Wdo. Roller Front or Rear Track	V,L	—	AR	—	—	—	—	—	2588 202
23-64-299	TRACK w/SUPPORT, Qtr. Wdo. Slide	B,J	—	1	—	—	—	—	—	3504 148-9
	TRACK w/STUD and PLATE, Qtr. Wdo. Roller Front	V,L	—	1	—	—	—	—	—	2840 312-3
	TRACK, Qtr. Wdo. Roller Rear	V,L	—	2	—	—	—	—	—	3685 952
	TRACK, w/BRACKET, Qtr. Wdo. Glass	R,W	—	1	—	—	—	—	—	3582 852-3
	Electric	R,W	1	—	—	—	—	—	—	3582 852-3
		P,D,C,Y	—	1	—	—	—	—	—	3759 364-5
	STUD, Qtr. Wdo. Slide Track Attaching Upper	B,J	—	2	—	—	—	—	—	6027 538
	Lower	B,J	—	2	—	—	—	—	—	6028 359
	STUD & WASHER, Qtr Window Track Att.	B,J	—	4	—	—	—	—	—	6028 358
	WASHER, Qtr. Wdo. Roller Front or Rear Track	V,L	—	AR	—	—	—	—	—	6026 530
23-64-300	BRACKET, Qtr. Wdo. Track to Outer Sill	B,J	—	1	—	—	—	—	—	3446 386-7
	BRACKET, Qtr. Wdo. Glass to Belt Reinforcement									
	Up To Oct. 15, 1973	R,W	1	—	—	—	—	—	—	3759 908-9
	After Oct. 15, 1973	R,W	1	—	—	—	—	—	—	3788 304-5
	BRACKET w/WELD SCREW, Qtr. Wdo. Glass									
	Up To Oct. 15, 1973	R,W	2	—	—	—	—	—	—	3582 847
	After Oct. 15, 1973	R,W	2	—	—	—	—	—	—	3788 306
	BRACKET, Qtr. Wdo. Glass Lift	R,W	1	—	—	—	—	—	—	3788 308-9
	BRACKET, Qtr. Wdo. Track to Inside Panel Belt Reinforcement	P,D,C,Y	—	2	—	—	—	—	—	3696 530
	BRACKET, Qtr. Wdo. Glass Filler Mounting (St. Regis) w/Opera Wdo.	C-S	—	2	—	—	—	—	—	3879 957
	SUPPORT, Qtr. Wdo. Track Lower Bracket	P,D,C,Y	—	1	—	—	—	—	—	3759 674-5
	SUPPORT, Qtr. Wdo. Outer Frame w/Opera Wdo.	P,D	—	1	—	—	—	—	—	3767 870-1

TYPE LETTERS Indicates	J - Challenger B - Barracuda	V - Valiant L - Dart	R - Satellite W - Coronet	P - Plymouth D - Dodge	C - Chrysler Y - Imperial
NUMERALS INDICATE:	21 - 2 DR. SED. 23 - 2 DR. H.T.	29 - FAST BACK	41 - 4 DR. SED. 43 - 4 DR. H.T.		45 - 6 PASS. STA. WGN. 46 - 9 PASS. STA. WGN.

AR Indicates use as required.
# Indicates parts not listed in any previous parts book
Numerals in parentheses ( ) refer to notes.
★ Indicates change or addition.

Printed in U.S.A.
November, 1974

Right and left part numbers are on same line, first number is right, second number is left.

CODE	PART NAME	MODEL CODES	SEE BOTTOM NOTE 21	23	29	41	43	45	46	PART NUMBER
23-64-306	GLASS									
	VENT WING									
	NOTE: Glass Only Unless Otherwise Indicated.									
	Clear, w/Lower Pivot Base	V,L	—	—	—	1	—	—	—	2861 634-5
	Tinted, w/Lower Pivot Base	V,L	—	—	—	1	—	—	—	2861 636-7
	Tinted, w/Manual Vent Wdos.	P,D,C	—	—	—	1	—	1	1	3788 238-9
	Tinted, w/Manual Vent Wdos.	P,D,C,Y	—	—	—	—	1	—	—	3788 240-1
23-64-308	GLASS									
	FRONT DOOR WINDOW									
	NOTE: Glass Only Unless Otherwise Indicated.									
	Clear	V,L	—	1	—	—	—	—	—	3759 808-9
	Tinted	V,L	—	1	—	—	—	—	—	3759 810-1
	Clear	V,L	—	—	—	1	—	—	—	3759 812-3
	Tinted	V,L	—	—	—	1	—	—	—	3759 814-5
	Clear	V,L	—	—	—	—	1	—	—	2663 734-5
	Tinted	V,L	—	—	—	—	1	—	—	2663 502-3
	Clear	B,J	—	1	—	—	—	—	—	3582 552-3
	Tinted	B,J	—	1	—	—	—	—	—	3582 554-5
	Clear	R,W	1	1	—	1	—	—	—	3439 900-1
	Tinted	R,W	1	1	—	1	—	—	—	3439 902-3
	Clear	R,W	—	—	—	—	1	—	1	3581 768-9
	Tinted	R,W	—	—	—	—	1	—	1	3581 770-1
	Clear	P,D,C,Y	—	1	—	—	—	—	—	3696 268-9
	Tinted	P,D,C,Y	—	1	—	—	—	—	—	3696 270-1
	Clear, Use w/o Vent Wdo.	P,D	—	—	—	—	1	—	—	3582 556-7
	Tinted, Use w/o Vent Wdo.	P,D	—	—	—	—	1	—	—	3582 558-9
	Tinted, Use w/Vent Wdo.	P,D	—	—	—	—	1	—	—	3759 280-1
	Clear, Use w/o Vent Wdo.	C,Y	—	—	—	—	1	—	—	3582 556-7
	Tinted, Use w/o Vent Wdo.	C,Y	—	—	—	—	1	—	—	3582 558-9
	Tinted, Use w/Vent Wdo.	C,Y	—	—	—	—	1	—	—	3759 280-1
	Tinted, Use w/Vent Wdo.									
	Up To April 18, 1974	P,D,C	—	—	—	—	1	—	1	1	3759 272-3
	After April 18, 1974	P,D,C	—	—	—	—	1	—	1	1	3788 596-7
	Clear, Use w/o Vent Wdo.	P,D,C	—	—	—	—	1	—	1	1	3696 272-3
	Tinted, Use w/o Vent Wdo.	P,D,C	—	—	—	—	1	—	1	1	3696 274-5
	REAR DOOR WINDOW									
	NOTE: Glass Only Unless Otherwise Indicated.									
	Clear	V,L	—	—	—	—	1	—	—	—	2663 782-3
	Tinted	V,L	—	—	—	—	1	—	—	—	2663 610-1
	Clear, Stationary	V,L	—	—	—	—	1	—	—	—	2663 784-5
	Tinted, Stationary	V,L	—	—	—	—	1	—	—	—	2663-612-3
	Clear	R,W	—	—	—	—	1	—	—	—	3440 070-1
	Tinted	R,W	—	—	—	—	1	—	—	—	3440 072-3
	Clear	R,W	—	—	—	—	—	—	1	1	3440 074-5
	Tinted	R,W	—	—	—	—	—	—	1	1	3440 076-7
	Clear	P,D	—	—	—	—	1	—	—	—	3696 276-7
	Tinted	P,D	—	—	—	—	1	—	—	—	3696 278-9
	Clear	C	—	—	—	—	1	—	—	—	3759 352-3
	Tinted	C	—	—	—	—	1	—	—	—	3759 354-5
	Clear, w/Frt. Frame and W/Strip	P,D	—	—	—	—	—	1	—	—	3759 370-1
	Tinted, w/Frt. Frame and W/Strip	P,D	—	—	—	—	—	1	—	—	3759 372-3
	Clear, w/Frt. Frame and W/Strip	C,Y	—	—	—	—	—	1	—	—	3759 374-5
	Tinted, w/Frt. Frame and W/Strip	C,Y	—	—	—	—	—	1	—	—	3759 376-7
	Clear	P,D,C	—	—	—	—	—	—	1	1	3696 280-1
	Tinted	P,D,C	—	—	—	—	—	—	1	1	3696 282-3

TYPE LETTERS Indicates	J - Challenger B - Barracuda	V - Valiant L - Dart	R - Satellite W - Coronet	P - Plymouth D - Dodge	C - Chrysler Y - Imperial
NUMERALS INDICATE:	21 - 2 DR. SED. 23 - 2 DR. H.T.	29 - FAST BACK	41 - 4 DR. SED. 43 - 4 DR. H.T.		45 - 6 PASS. STA. WGN. 46 - 9 PASS. STA. WGN.

AR Indicates use as required.
# Indicates parts not listed in any previous parts book
Numerals in parentheses ( ) refer to notes.
★ Indicates change or addition.
Printed in U.S.A.
November, 1974

Right and left part numbers are on same line, first number is right, second number is left.

CODE	PART NAME	MODEL CODES	SEE BOTTOM NOTE 21	23	29	41	43	45	46	PART NUMBER
23-64-311	GLASS									
	QUARTER WINDOW									
	NOTE: Glass Only Unless Otherwise Indicated.									
	Clear, w/Frt. Frame and W/Strip	V,L	—	1	—	—	—	—	—	—	3696 560-1
	Tinted, w/Frt. Frame and W/Strip	V,L	—	1	—	—	—	—	—	—	3696 562-3
	Clear	V,L	—	—	—	1	—	—	—	—	3696 622-3
	Tinted	V,L	—	—	—	1	—	—	—	—	3696 624-5
	Clear, Complete	B	—	1	—	—	—	—	—	—	3500 272-3
	Tinted, Complete	B	—	1	—	—	—	—	—	—	3500 274-5
	Clear, Complete	J	—	1	—	—	—	—	—	—	3500 280-1
	Tinted, Complete	J	—	1	—	—	—	—	—	—	3500 282-3
	Clear, w/Frt. Frame and W/Strip Stationary	R,W	1	—	—	—	—	—	—	—	3582 986-7
	Tinted, w/Frt. Frame and W/Strip Stationary	R,W	1	—	—	—	—	—	—	—	3582 988-9
	Clear, w/Frt. Frame and W/Strip Electric	R,W	1	—	—	—	—	—	—	—	3582 978-9
	Tinted, w/Frt. Frame and W/Strip Electric	R,W	1	—	—	—	—	—	—	—	3582 980-1
	Clear, w/Frt. Frame and W/Strip	R,W	—	1	—	—	—	—	—	—	3582 978-9
	Tinted, w/Frt. Frame and W/Strip	R,W	—	1	—	—	—	—	—	—	3582 980-1
	Clear, w/Opera Wdo.	W	—	1	—	—	—	—	—	—	3767 816-7
	Tinted, w/Opera Wdo.	W	—	1	—	—	—	—	—	—	3767 818-9
	Up To Jan. 21, 1974									
	Clear	W	—	—	—	1	—	—	—	—	3674 878-9
	Tinted	W	—	—	—	1	—	—	—	—	3674 880-1
	After Jan. 21, 1974									
	Clear	W	—	—	—	1	—	—	—	—	3767 816-7
	Tinted	W	—	—	—	1	—	—	—	—	3767 818-9
	Clear	R,W	—	—	—	—	—	—	1	1	3440 204-5
	Tinted	R,W	—	—	—	—	—	—	1	1	3440 206-7
	Clear, w/Frt. Frame and W/Strip	P,D	—	1	—	—	—	—	—	—	3788 320-1
	Tinted, w/Frt. Frame andW/Strip	P,D,	—	1	—	—	—	—	—	—	3788 322-3
	Clear, w/Frt. Frame and W/Strip	C,Y	—	1	—	—	—	—	—	—	3788 324-5
	Tinted, w/Frt. Frame and W/STRIP	C,Y	—	1	—	—	—	—	—	—	3788 326-7
	Clear	P,D,C	—	—	—	—	—	—	1	1	3674 796-7
	Tinted	P,D,C	—	—	—	—	—	—	1	1	3674 798-9
23-64-314	GLASS									
	REAR WINDOW									
	ORDER FROM YOUR LOCAL MOPAR GLASS DISTRIBUTOR									
	Clear	V,L	—	1	—	—	—	—	—	—	2604 006
	Tinted	V,L	—	1	—	—	—	—	—	—	2604 007
	Tinted (Electric Heated)	V,L	—	1	—	—	—	—	—	—	3767 005
	Clear	V,L	—	—	—	1	—	—	—	—	2965 657
	Tinted	V,L	—	—	—	1	—	—	—	—	2965 658
	Tinted (Electric Heated)	V,L	—	—	—	1	—	—	—	—	3793 260
	Clear	V,L	—	—	—	—	1	—	—	—	2603 690
	Tinted	V,L	—	—	—	—	1	—	—	—	2603 691
	Tinted (Electric Heated)	V,L	—	—	—	—	1	—	—	—	3767 003
	Clear	B	—	1	—	—	—	—	—	—	2963 272
	Tinted	B	—	1	—	—	—	—	—	—	2963 273
	Clear	J	—	1	—	—	—	—	—	—	2963 274
	Tinted	J	—	1	—	—	—	—	—	—	2963 275
	Clear	R,W	1	1	—	1	—	—	—	—	3445 827
	Tinted	R,W	1	1	—	1	—	—	—	—	3445 828
	Tinted (Electric Heated)	R,W	1	1	—	1	—	—	—	—	3720 563
	Clear	R,W	—	—	—	—	1	—	—	—	3445 126
	Tinted	R,W	—	—	—	—	1	—	—	—	3445 127

TYPE LETTERS Indicates: J - Challenger, B - Barracuda, V - Valiant, L - Dart, R - Satellite, W - Coronet, P - Plymouth, D - Dodge, C - Chrysler, Y - Imperial

NUMERALS INDICATE: 21 - 2 DR. SED., 23 - 2 DR. H.T., 29 - FAST BACK, 41 - 4 DR. SED., 43 - 4 DR. H.T., 45 - 6 PASS. STA. WGN., 46 - 9 PASS. STA. WGN.

AR Indicates use as required.
# Indicates parts not listed in any previous parts book
Numerals in parentheses ( ) refer to notes.
★ Indicates change or addition.

Printed in U.S.A.
November, 1974

Right and left part numbers are on same line, first number is right, second number is left.

CODE	PART NAME	MODEL CODES	SEE BOTTOM NOTE 21	23	29	41	43	45	46	PART NUMBER
23-64-314	GLASS Cont'd.									
	Tinted (Electric Heated)	R,W	—	—	—	—	1	—	—	— 3720 565
	Clear	P,D	—	1	—	—	—	—	—	— 3720 258
	Tinted	P,D	—	1	—	—	—	—	—	— 3720 259
	Clear	C	—	1	—	—	—	—	—	— 3674 480
	Tinted	C	—	1	—	—	—	—	—	— 3674 481
	Clear	P,D	—	—	—	—	1	—	—	— 3674 592
	Tinted	P,D	—	—	—	—	1	—	—	— 3674 593
	Clear	P,D	—	—	—	—	—	1	—	— 3674 590
	Tinted	P,D	—	—	—	—	—	1	—	— 3674 591
	Clear	C	—	—	—	—	1	—	—	— 3674 594
	Tinted	C	—	—	—	—	1	—	—	— 3674 595
	Clear	C	—	—	—	—	—	1	—	— 3674 480
	Tinted	C	—	—	—	—	—	1	—	— 3674 481
	Tinted	Y	—	1	—	—	—	1	—	— 3720 830
23-64-315	SUPPORT, Deck Opening Upper Panel to Rear Wdo. Glass	B,J	—	2	—	—	—	—	—	— 2964 592
23-66-65	**FRAME, W/Shield Opening Upper**	R,W	1	1	—	1	—	—	—	— 3482 145
		R,W	—	—	—	—	1	—	1	1 3482 144
	FRAME, W/Shield Opening Upper Center	P,D,C,Y	—	1	—	—	1	1	1	1 3752 472
	FRAME w/Reinforcement, W/Shield Opening Upper	B,J	—	1	—	—	—	—	—	— 3752 741
	FRAME w/REINFORCEMENT, W/Shield Opening Upper Center	V,L	—	—	—	1	—	—	—	— 3752 742
		V,L	—	1	—	—	—	—	—	— 3752 740
		V,L	—	—	—	—	1	—	—	— 2769 208
	EXTENSION, W/Shield Opening Side Frame Upper Inner Corner	B,J	—	1	—	—	—	—	—	— 3767 256-7
	EXTENSION, W/Shield Opening Side Frame Upper Corner	V,L	—	1	—	—	—	—	—	— 3767 246-7
		V,L	—	—	—	—	1	—	—	— 3674 168-9
		R,W	1	1	—	1	—	—	—	— 3767 550-1
		R,W	—	—	—	—	1	—	1	1 3439 416-7
	EXTENSION, W/Shield Side Inner Frame Upper Corner	V,L	—	—	—	1	—	—	—	— 3767 392-3
	EXTENSION, W/Shield Opening Side Frame Corner Inner	P,D,C	—	—	—	—	1	—	1	1 3720 198-9
	Outer	P,D,C,Y	—	1	—	—	—	1	—	— 3674 416-7
	EXTENSION, W/Shield Opening Upper Corner Inner	P,D,C,Y	—	1	—	—	—	1	—	— 3720 040-1
	Outer	P,D,C	—	—	—	—	1	—	1	1 3720 194-5
	REINFORCEMENT, W/Shield Opening Side Frame Inner	P,D,C,Y	—	1	—	—	—	1	—	— 3767 642-3
23-66-75	KIT, Cemented-in W/Shield Glass Installation	B,J	—	1	—	—	—	—	—	— 2807 425
		R,W	1	1	—	1	1	—	1	1 2807 425
		P,D,C,Y	—	1	—	—	1	1	1	1 2807 425
	SPACER, W/Shield Glass (Wedge Type) Lower	B,J	—	2	—	—	—	—	—	— 2895 577
	Lower	R,W	2	2	—	2	—	—	—	— 3674 698
	Lower	R,W	—	—	—	—	2	—	2	2 3793 290
	Lower	P,D,C,Y	—	2	—	—	2	2	2	2 3674 698

TYPE LETTERS Indicates J - Challenger, B - Barracuda, V - Valiant, L - Dart, R - Satellite, W - Coronet, P - Plymouth, D - Dodge, C - Chrysler, Y - Imperial

NUMERALS INDICATE: 21 - 2 DR. SED., 23 - 2 DR. H.T., 29 - FAST BACK, 41 - 4 DR. SED., 43 - 4 DR. H.T., 45 - 6 PASS. STA. WGN., 46 - 9 PASS. STA. WGN.

AR Indicates use as required.
# Indicates parts not listed in any previous parts book
Numerals in parentheses ( ) refer to notes.
★ Indicates change or addition.

Printed in U.S.A.
November, 1974

Right and left part numbers are on same line, first number is right, second number is left.

CODE	PART NAME		MODEL CODES	SEE BOTTOM NOTE 21	23		29	41	43	45	46	PART NUMBER
23-66-75	SPACER, Cont'd.											
		Normal	R,W	AR	AR	—	AR	AR	—	AR	AR	3500 975
		Thin	R,W	AR	AR	—	AR	AR	—	AR	AR	3500 976
		Thick	B,J	—	AR	—	—	—	—	—	—	2842 569
	Approximately 3/8" Thick		B,J,R,W	AR	AR	—	AR	AR	—	AR	AR	3582 864
			P,D,C,Y	—	AR	—	—	AR	AR	AR	AR	3582 864
	Approximately 5/16" Thick		B,J,R,W	AR	AR	—	AR	AR	—	AR	AR	3582 865
			P,D,C,Y	—	AR	—	—	AR	AR	AR	AR	3582 865
	TAPE, W/Shield Glass Bonding (171" Long)		B,J,R,W	1	1	—	1	1	—	1	1	3500 883
			P,D,C,Y	—	1	—	—	1	1	1	1	3500 883
23-66-76	SHIM, W/Shield Glass Spacer											
		Lower	R,W	AR	AR	—	AR	AR	—	AR	AR	3767 767
		Lower	P,D,C,Y	—	AR	—	—	AR	AR	AR	AR	3767 767
23-66-77	BRACKET, W/Shield Side Frame to Dash Panel Support		B,J	—	1	—	—	—	—	—	—	3767 262-3
			R,W	1	1	—	1	1	—	1	1	3439 404-5
	BRACKET, W/Shield Opening Side Frame Fender Mtg.											
			R,W	1	1	—	1	—	—	—	—	3500 816-7
23-66-135	GLASS WINDSHIELD ORDER FROM YOUR LOCAL MOPAR GLASS DISTRIBUTOR											
	Clear		V,L	—	1	—	—	—	—	—	—	2663 149
	Tinted		V,L	—	1	—	—	—	—	—	—	2663 150
	Clear		V,L	—	—	—	1	—	—	—	—	2895 862
	Tinted		V,L	—	—	—	1	—	—	—	—	2895 863
	Clear		V,L	—	—	—	—	1	—	—	—	2663 141
	Tinted		V,L	—	—	—	—	1	—	—	—	2663 142
	Clear		B,J	—	1	—	—	—	—	—	—	2895 592
	Tinted		B,J	—	1	—	—	—	—	—	—	2895 593
	Clear		R,W	1	1	—	1	—	—	—	—	3439 472
	Tinted		R,W	1	1	—	1	—	—	—	—	3439 473
	Clear		R,W	—	—	—	—	1	—	1	1	3439 480
	Tinted		R,W	—	—	—	—	1	—	1	1	3439 481
	Clear, w/Mirror Mtg. Button		P,D,C,Y	—	1	—	—	—	1	—	—	3767 048
	Tinted, w/Mirror Mtg. Button		P,D,C,Y	—	1	—	—	—	1	—	—	3767 049
	Clear, w/Mirror Mtg. Button		P,D,C	—	—	—	—	1	—	—	—	3767 100
	Tinted, w/Mirror Mtg. Button		P,D,C	—	—	—	—	1	—	—	—	3767 101
	Clear, w/o Mirror Mtg. Button		P,D,C	—	—	—	—	1	—	1	1	3720 200
	Tinted, w/o Mirror Mtg. Button		P,D,C	—	—	—	—	1	—	1	1	3720 201
23-66-235	WEATHERSTRIP, W/Shield Glass											
	NOTE: Weatherstripping is Not used with Cemented-In Type Windshield Glass. See Part Type Code 23-66-75 for Installation Kit.											
			V,L	—	1	—	—	—	—	—	—	3767 240
			V,L	—	—	—	1	—	—	—	—	3767 277
			V,L	—	—	—	—	1	—	—	—	2861 408
23-66-239	LOCKING STRIP, W/Shield Glass Weatherstrip		V,L	—	—	—	1	—	—	—	—	3440 791
23-67-2	**CAM RELEASE PACKAGE, Wiper Parking**	2 Speed	B,J	—	1	—	—	—	—	—	—	3879 325
		2 Speed	R,W	1	1	—	1	1	—	1	1	3879 325
		2 Speed	P,D,C	—	1	—	—	1	1	1	1	3879 325
23-67-5	ARM, W/Shield Wiper w/o Blade Up To Oct. 2, 1973		V,L	—	2	—	2	2	—	—	—	3431 727

TYPE LETTERS Indicates	J - Challenger B - Barracuda	V - Valiant L - Dart	R - Satellite W - Coronet	P - Plymouth D - Dodge	C - Chrysler Y - Imperial
NUMERALS INDICATE:	21 - 2 DR. SED. 23 - 2 DR. H.T.	29 - FAST BACK	41 - 4 DR. SED. 43 - 4 DR. H.T.	45 - 6 PASS. STA. WGN. 46 - 9 PASS. STA. WGN.	

AR Indicates use as required.
# Indicates parts not listed in any previous parts book
Numerals in parentheses ( ) refer to notes.
★ Indicates change or addition.
Printed in U.S.A.
November, 1974

Right and left part numbers are on same line, first number is right, second number is left.

CODE	PART NAME		MODEL CODES	SEE BOTTOM NOTE 21	23	27	29	41	43	45	46	PART NUMBER
23-67-5	ARM Cont'd.											
	After Oct. 2, 1973		V,L	—	2	—	2	2	—	—	—	3431 950
		Rt.	B,J	—	1	—	—	—	—	—	—	3420 816
		Lt.	B,J	—	1	—	—	—	—	—	—	3620 828
		Rt.	R,W	1	1	—	1	1	—	1	1	3431 864
		Lt.	R,W	1	1	—	1	1	—	1	1	3431 867
			P,D,C,Y	—	1	—	—	1	1	1	1	3431 788-9
	For State of Washington Fleet											
		Lt.	P,D	—	1	—	—	1	1	1	1	# 3740 797
23-67-10	INTERMEDIATE GEAR PACKAGE, Wiper Motor											
		2 Speed	All	1	1	—	1	1	1	1	1	3431 735
	REPAIR PACKAGE, Wiper Motor											
		3 Speed	All	1	1	—	1	1	1	1	1	3837 118
23-67-16	BRUSH & HOLDER PACKAGE, 2 Speed Wiper Motor											
		CANADA	V,L	—	1	—	1	1	—	—	—	3677 379
		CANADA	B,J	—	1	—	—	—	—	—	—	3677 380
		CANADA	R,W,P,D,C	1	1	—	1	1	1	1	1	3677 380
23-67-20	GROMMET and SPACER PACKAGE, Motor Mtg.	2 Speed	All	1	1	—	1	1	1	1	1	2932 708
	GROMMET, EYELET and SEAL PACKAGE, Motor Mtg.											
		3 Speed	All	1	1	—	1	1	1	1	1	3837 117
23-67-25	BLADE W/REFILL, W/Shield Wiper											
			V,L	—	2	—	—	2	—	—	—	2889 962
			V,L	—	—	—	2	—	—	—	—	2889 961
			B,J	—	2	—	—	—	—	—	—	3431 465
			R,W	2	2	—	2	2	—	2	2	3431 465
			P,D,C,Y	—	2	—	—	2	2	2	2	3431 783
	REFILL, W/Shield Wiper Blade											
			V,L	—	2	—	—	2	—	—	—	2771 967
			V,L	—	—	—	2	—	—	—	—	3431 466
			B,J	—	2	—	—	—	—	—	—	3431 466
			R,W	2	2	—	2	2	—	2	2	3431 466
			P,D,C,Y	—	2	—	—	2	2	2	2	3431 781
23-67-41	WIRING, W/Shield Wiper Motor Engine Compartment	2 Speed	V,L	—	1	—	1	1	—	—	—	3588 704
		2 Speed	B,J	—	1	—	—	—	—	—	—	3764 023
		2 Speed	R,W	1	1	—	1	1	—	1	1	3764 023
		2 Speed	P,D,C	—	1	—	—	1	1	1	1	3764 692
23-67-76	CRANK W/PIN, Wiper Drive											
		2 Speed	V,L	—	1	—	1	1	—	—	—	3431 741
		3 Speed	V,L	—	1	—	1	1	—	—	—	3431 687
		2 Speed	B,J	—	1	—	—	—	—	—	—	3431 553
		3 Speed	B,J	—	1	—	—	—	—	—	—	3431 518
		2 Speed	R,W	1	1	—	1	1	—	1	1	3431 553
		3 Speed	R,W	1	1	—	1	1	—	1	1	3431 635
		2 Speed	P,D,C	—	1	—	—	1	1	1	1	3431 757
		3 Speed	P,D,C,Y	—	1	—	—	1	1	1	1	3431 752
	NUT, Crank Mounting		All	1	1	—	1	1	1	1	1	6030 352
23-67-79	LINK, Wiper Pivot Connecting											
			V,L	—	1	—	1	1	—	—	—	3431 688
			B,J	—	1	—	—	—	—	—	—	2822 291
	w/Bushing		R,W	1	1	—	1	1	—	1	1	3431 663
	w/Bushing		P,D,C,Y	—	1	—	—	1	1	1	1	3431 762
	LINK, Wiper Drive w/Bushing	2 Speed	V,L	—	1	—	1	1	—	—	—	3431 684

TYPE LETTERS Indicates: J - Challenger, B - Barracuda, V - Valiant, L - Dart, R - Satellite, W - Coronet, P - Plymouth, D - Dodge, C - Chrysler, Y - Imperial

NUMERALS INDICATE: 21 - 2 DR. SED., 23 - 2 DR. H.T., 27 - CONV. CPE., 29 - FAST BACK, 41 - 4 DR. SED., 43 - 4 DR. H.T., 45 - 6 PASS. STA. WGN., 46 - 9 PASS. STA. WGN.

AR Indicates use as required.
# Indicates parts not listed in any previous parts book
Numerals in parentheses ( ) refer to notes.
★ Indicates change or addition.

Printed in U.S.A.
November, 1974

Right and left part numbers are on same line, first number is right, second number is left.

CODE	PART NAME		MODEL CODES	SEE BOTTOM NOTE 21	23		29	41	43	45	46	PART NUMBER
23-67-79	LINK Cont'd.											
	w/Bushing	3 Speed	V,L	—	1	—	1	1	—	—	—	3431 685
		2 Speed	B,J	—	1	—	—	—	—	—	—	2822 292
		3 Speed	B,J	—	1	—	—	—	—	—	—	3431 514
	w/Bushing	2 Speed	R,W	1	1	—	1	1	—	1	1	3431 646
	w/Bushing	3 Speed	R,W	1	1	—	1	1	—	1	1	3431 647
	w/Bushing	2 Speed	P,D,C	—	1	—	—	1	1	1	1	3431 759
	w/Bushing	3 Speed	P,D,C,Y	—	1	—	—	1	1	1	1	3431 754
23-67-80	RETAINER, Drive Link to Crank Arm											
		2 Speed	B,J,R,W	1	1	—	1	1	—	1	1	2983 017
		2 Speed	P,D,C	—	1	—	—	1	1	1	1	2983 017
			B,J	—	3	—	—	—	—	—	—	2580 929
	RETAINER, Wiper Link Mtg.											
			B,J	—	1	—	—	—	—	—	—	1642 029
	RETAINER, Wiper Crank Mtg.		B,J,R,W	1	1	—	1	1	—	1	1	6026 958
			P,D,C,Y	—	1	—	—	1	1	1	1	6026 958
	LOCK CLIP, W/Shield Wiper Articulating Arm											
		Lt.	R,W	1	1	—	1	1	—	1	1	3431 696
23-67-82	SPRING WASHER, Link Mtg.											
			B,J	—	1	—	—	—	—	—	—	2983 010
	WASHER, Wiper Link Mtg.											
		Sponge	B,J	—	AR	—	—	—	—	—	—	2983 031
		Steel	B,J	—	AR	—	—	—	—	—	—	2983 034
	WASHER, Wiper Pivot Shaft											
		Steel	R,W	2	2	—	2	2	—	2	2	2983 034
23-67-86	PIVOT											
		Rt.	V,L	—	—	—	1	—	—	—	—	3431 680
		Lt.	V,L	—	—	—	1	—	—	—	—	3431 682
			V,L	—	1	—	—	1	—	—	—	3431 680-1
			B,J	—	1	—	—	—	—	—	—	3420 832-3
			R,W	1	1	—	1	1	—	1	1	3621 898-9
			P,D,C,Y	—	1	—	—	1	1	1	1	3780 574-5
23-67-98	MOTOR											
		2 Speed	V,L	—	1	—	1	1	—	—	—	3431 730
		3 Speed	V,L	—	1	—	1	1	—	—	—	3431 905
		2 Speed	B,J	—	1	—	—	—	—	—	—	3431 790
		3 Speed	B,J,	—	1	—	—	—	—	—	—	3431 906
		2 Speed	R,W	1	1	—	1	1	—	1	1	3431 790
		3 Speed	R,W	1	1	—	1	1	—	1	1	3431 906
		2 Speed	P,D,C	—	1	—	—	1	1	1	1	3431 790
		3 Speed	P,D,C,Y	—	1	—	—	1	1	1	1	3431 780
	NUT, Motor Mtg.		All	3	3	—	3	3	3	3	3	6025 413
23-67-104	SEAL, Wiper Motor Mtg.											
		2 Speed	All	1	1	—	1	1	1	1	1	2926 168
	SEAL, Wiper Motor Output Shaft											
		2 Speed	B,J	—	1	—	—	—	—	—	—	2770 048
		2 Speed	R,W	1	1	—	1	1	—	1	1	2770 048
		2 Speed	P,D,C	—	1	—	—	1	1	1	1	2770 048
	"O" RING, Parking Mechanism											
		2 Speed	B,J	—	1	—	—	—	—	—	—	2983 016
		2 Speed	R,W	1	1	—	1	1	—	1	1	2983 016
		2 Speed	P,D,C	—	1	—	—	1	1	1	1	2983 016
23-67-106	ARMATURE PACKAGE, Wiper Motor											
		2 Speed	V,L	—	1	—	1	1	—	—	—	3635 030
		2 Speed	B,J,R,W	1	1	—	1	1	—	1	1	3431 510
		2 Speed	P,D,C	—	1	—	—	1	1	1	1	3431 510
23-67-107	LIMIT RESISTOR, W/Shield Wiper Motor	2 Speed	All	1	1	—	1	1	1	1	1	2822 261

TYPE LETTERS Indicates J - Challenger, B - Barracuda, V - Valiant, L - Dart, R - Satellite, W - Coronet, P - Plymouth, D - Dodge, C - Chrysler, Y - Imperial

NUMERALS INDICATE: 21 - 2 DR. SED., 23 - 2 DR. H.T., 29 - FAST BACK, 41 - 4 DR. SED., 43 - 4 DR. H.T., 45 - 6 PASS. STA. WGN., 46 - 9 PASS. STA. WGN.

AR Indicates use as required.
# Indicates parts not listed in any previous parts book
Numerals in parentheses ( ) refer to notes.
★ Indicates change or addition.

Printed in U.S.A.
November, 1974

Right and left part numbers are on same line, first number is right, second number is left.

CODE	PART NAME	MODEL CODES	SEE BOTTOM NOTE 21	23		29	41	43	45	46	PART NUMBER
23-67-112	HOUSING PACKAGE, Wiper Motor										
	2 Speed	All	1	1	—	1	1	1	1	1	3431 509
	HOUSING W/COVER,Wiper Motor Gear										
	2 Speed	V,L	—	1	—	1	1	—	—	—	3431 732
	2 Speed	B,J,R,W	1	1	—	1	1	—	1	1	3431 713
	2 Speed	P,D,C	—	1	—	—	1	1	1	1	3431 713
23-67-160	SWITCH, W/Shield Wiper										
	Up To June 3, 1974 2 Speed	V,L	—	1	—	1	1	—	—	—	3488 839
	After June 3, 1974 2 Speed	V,L	—	1	—	1	1	—	—	—	3746 851
	3 Speed	V,L	—	1	—	1	1	—	—	—	3621 670
	2 Speed	B,J	—	1	—	—	—	—	—	—	3621 666
	3 Speed	B,J	—	1	—	—	—	—	—	—	3621 670
	w/o Rallye Inst. Panel										
	2 Speed	R,W	1	1	—	1	1	—	1	1	3621 667
	w/Rallye Inst. Panel										
	2 Speed	R,W	1	1	—	1	1	—	1	1	3621 668
	w/o Rallye Inst. Panel										
	3 Speed	R,W	1	1	—	1	1	—	1	1	3621 671
	w/Rallye Inst. Panel										
	3 Speed	R,W	1	1	—	1	1	—	1	1	3621 672
	w/Knob 2 Speed	P,D	—	1	—	—	1	1	1	1	3746 530
	w/Knob 3 Speed	P,D	—	1	—	—	1	1	1	1	3746 531
	w/Knob 2 Speed	C-L,C-M	—	1	—	—	1	1	—	—	3746 537
	w/Knob 3 Speed	C-L,C-M	—	1	—	—	1	1	—	—	3746 539
	w/Knob 3 Speed	C-H,C-P	—	—	—	—	1	1	1	1	3746 538
	w/Knob 3 Speed	C-S,Y	—	1	—	—	1	1	—	—	3746 538
	SWITCH, W/Shield Washer										
	2 Speed	V,L	—	1	—	1	1	—	—	—	3746 851
	3 Speed	V,L	—	1	—	1	1	—	—	—	3621 670
	3 Speed	B,J	—	1	—	—	—	—	—	—	3621 670
	w/o Rallye Inst. Panel										
	2 Speed	R,W	1	1	—	1	1	—	1	1	3621 667
	w/Rallye Inst. Panel										
	2 Speed	R,W	1	1	—	1	1	—	1	1	3621 668
	w/o Rallye Inst. Panel										
	3 Speed	R,W	1	1	—	1	1	—	1	1	3621 671
	w/Rallye Inst. Panel										
	3 Speed	R,W	1	1	—	1	1	—	1	1	3621 672
	w/Knob 2 Speed	P,D	—	1	—	—	1	1	1	1	3746 530
	w/Knob 3 Speed	P,D	—	1	—	—	1	1	1	1	3746 531
	w/Knob 2 Speed	C-L,C-M	—	1	—	—	1	1	—	—	3746 537
	w/Knob 3 Speed	C-L,C-M	—	1	—	—	1	1	—	—	3746 539
	w/Knob 3 Speed	C-H,C-P	—	—	—	—	1	1	1	1	3746 538
	w/Knob 3 Speed	C-S,Y	—	1	—	—	1	1	—	—	3746 538
23-67-161	BRACKET, Wiper Switch or Washer Switch Mtg.	C,Y	—	1	—	—	1	1	1	1	3746 500
	NUT, Wiper Switch or Washer Switch Mtg.	V,L	—	1	—	1	1	—	—	—	3488 693
		B,J	—	2	—	—	—	—	—	—	6008 060
	w/Rallye Inst. Panel	R,W	1	1	—	1	1	—	1	1	3488 693
	NUT, Wiper and Washer Switch Mtg.										
	w/o Rallye Inst. Panel	R,W	1	1	—	1	1	—	1	1	3488 055
23-67-166	TERMINAL, Wiper Switch Wiring	R,W	AR	AR	—	AR	AR	—	AR	AR	2889 467
		P,D,C,Y	—	AR	—	—	AR	AR	AR	AR	2889 467

TYPE LETTERS Indicates: J - Challenger; B - Barracuda; V - Valiant; L - Dart; R - Satellite; W - Coronet; P - Plymouth; D - Dodge; C - Chrysler; Y - Imperial

NUMERALS INDICATE: 21 - 2 DR. SED.; 23 - 2 DR. H.T.; 29 - FAST BACK; 41 - 4 DR. SED.; 43 - 4 DR. H.T.; 45 - 6 PASS. STA. WGN.; 46 - 9 PASS. STA. WGN.

AR Indicates use as required.
# Indicates parts not listed in any previous parts book
Numerals in parentheses ( ) refer to notes.
★ Indicates change or addition.

Printed in U.S.A.
November, 1974

Right and left part numbers are on same line, first number is right, second number is left.

CODE	PART NAME		MODEL CODES	SEE BOTTOM NOTE								PART NUMBER
				21	23	27	29	41	43	45	46	
23-67-169	INSULATOR, Wiring Terminal		V,L,B,J	—	AR	—	AR	AR	—	—	—	2889 432
			R,W,P,D	AR	AR	—	AR	AR	AR	AR	AR	2889 432
	INSULATOR, Wiper Switch Wiring		R,W,P,D	AR	AR	—	AR	AR	AR	AR	AR	2889 044
	INSULATOR, Wiper Motor Wiring											
		3 Speed	P,D,C,Y	—	1	—	—	1	1	1	1	2926 255
	INSULATOR, W/Shield Wiper and Wheelhouse		V,L,B,J	—	AR	—	AR	AR	—	—	—	3588 024
			R,W	AR	AR	—	AR	AR	—	AR	AR	3588 024
23-67-194	KNOB, Wiper Switch											
			V,L	—	1	—	1	1	—	—	—	3488 840
			B,J	—	1	—	—	—	—	—	—	2947 380
	w/o Rallye Inst. Panel		R,W	1	1	—	1	1	—	1	1	3488 619
	w/Rallye Inst. Panel		R,W	1	1	—	1	1	—	1	1	3488 265
	KNOB, Washer Switch											
			V,L	—	1	—	1	1	—	—	—	3488 840
			B,J	—	1	—	—	—	—	—	—	2947 380
	w/o Rallye Inst. Panel		R,W	1	1	—	1	1	—	1	1	3488 619
	w/Rallye Inst. Panel		R,W	1	1	—	1	1	—	1	1	3488 265
23-67-200	RETAINER, Wiper Parking Mechanism Cover	2 Speed	B,J	—	1	—	—	—	—	—	—	2497 596
		2 Speed	R,W	1	1	—	1	1	—	1	1	2497 596
		2 Speed	P,D,C	—	1	—	—	1	1	1	1	2497 596
	RETAINER, Wiper Parking Mechanism											
		2 Speed	B,J	—	1	—	—	—	—	—	—	2983 014
		2 Speed	R,W	1	1	—	1	1	—	1	1	2983 014
		2 Speed	P,D,C	—	1	—	—	1	1	1	1	2983 014
23-67-201	COVER, Wiper Parking Mechanism											
		2 Speed	B,J	—	1	—	—	—	—	—	—	2983 015
		2 Speed	R,W	1	1	—	1	1	—	1	1	2983 015
		2 Speed	P,D,C	—	1	—	—	1	1	1	1	2983 015
23-67-206	RELEASE, Wiper Parking Spring											
		2 Speed	P,D,C	—	1	—	—	1	1	1	1	3431 761
23-67-240	RESERVOIR, W/Shield Washer											
		2 Speed	V,L	—	1	—	1	1	—	—	—	2983 067#
		2 Speed	B,J	—	1	—	—	—	—	—	—	3431 587
			P,D,C,Y	—	1	—	—	1	1	1	1	3431 919
	RESERVOIR PACKAGE, W/Shield Washer											
		3 Speed	V,L	—	1	—	1	1	—	—	—	2809 011
		3 Speed	B,J	—	1	—	—	—	—	—	—	3431 590
	w/o Speed Control		R,W	1	1	—	1	1	—	1	1	3431 691
	w/Speed Control		R,W	1	1	—	1	1	—	1	1	3431 965
			P,D,C,Y	—	1	—	—	1	1	1	1	3431 968
23-67-241	CAP, W/Shield Washer Reservoir											
			V,L,B,J	—	1	—	1	1	—	—	—	2497 500
	w/Speed Control		R,W	1	1	—	1	1	—	—	—	3431 724
	CAP w/COVER, W/Shield Washer Reservoir											
	w/o Speed Control		R,W	1	1	—	1	1	—	1	1	3431 672
23-67-242	FILTER, W/Shield Washer Pump											
	Up To Jan. 7, 1974		All	1	1	—	1	1	1	1	1	2771 976
	After Jan. 7, 1974		All	1	1	—	1	1	1	1	1	3431 975
23-67-246	NOZZLE, W/Shield Wiper Arm											
		Rt.	R,W	1	1	—	1	1	1	1	1	3431 868
		Lt.	R,W	1	1	—	1	1	1	1	1	3431 865
	NOZZLE, W/Shield Washer		V,L	—	1	—	1	1	—	—	—	2926 962-3
			B,J	—	2	—	—	—	—	—	—	2983 078
	Up To Sept. 11, 1973	Rt.	P,D,C,Y	—	1	—	—	1	1	1	1	3431 855
	Up To Sept. 11, 1973	Lt.	P,D,C,Y	—	1	—	—	1	1	1	1	3431 858
	After Sept. 11, 1973		P,D,C,Y	—	1	—	—	1	1	1	1	3431 954-5

TYPE LETTERS Indicates J - Challenger, B - Barracuda, V - Valiant, L - Dart, R - Satellite, W - Coronet, P - Plymouth, D - Dodge, C - Chrysler, Y - Imperial

NUMERALS INDICATE: 21 - 2 DR. SED., 23 - 2 DR. H.T., 27 - CONV. CPE., 29 - FAST BACK, 41 - 4 DR. SED., 43 - 4 DR. H.T., 45 - 6 PASS. STA. WGN., 46 - 9 PASS. STA. WGN.

AR Indicates use as required.
# Indicates parts not listed in any previous parts book
Numerals in parentheses ( ) refer to notes.
★ Indicates change or addition.

Printed in U.S.A.
November, 1974

Right and left part numbers are on same line, first number is right, second number is left.

CODE	PART NAME	MODEL CODES	SEE BOTTOM NOTE 21	23	27	29	41	43	45	46	PART NUMBER
23-67-247	PLUG, Button Dash										
	3 Speed	V,L,B,J	—	1	—	1	1	—	—	—	2889 843
23-67-248	RETAINER, W/Shield Wiper Arm Nozzle and Hose										
		R,W	1	1	—	1	1	—	1	1	3431 870-1
23-67-249	SENSOR, Washer Fluid Level	P,D,C,Y	—	1	—	—	1	1	1	1	3746 813
23-67-252	PUMP and SEAL PACKAGE, W/Shield Washer										
	3 Speed	V,L	—	1	—	1	1	—	—	—	2809 013
	3 Speed	B,J	—	1	—	—	—	—	—	—	3431 599
	w/o Speed Control	R,W	1	1	—	1	1	—	1	1	2809 013
	w/Speed Control	R,W	1	1	—	1	1	—	1	1	3431 599
		P,D,C,Y	—	1	—	—	1	1	1	1	3431 969
	PUMP, W/Shield Washer	P,D,C,Y	—	1	—	—	1	1	1	1	3431922
	FOOT PUMP and CHECK VALVE PACKAGE, W/Shield Washer W/o Mtg. Brkt.	V,L,B,J	—	1	—	1	1	—	—	—	2932 868
	PUMP W/Valve, W/Shield Washer (Foot Operated) W/Mtg. Brkt. 2 Speed	V,L	—	1	—	1	1	—	—	—	3431 058
	2 Speed	B,J	—	1	—	—	—	—	—	—	2983 076
23-67-255	GROMMET, W/Shield Washer Hose Dash 2 Speed	V,L,B,J	—	1	—	1	1	—	—	—	2889 809
23-67-260	HOSE,W/Shield Wiper Arm Nozzle										
	Rt.	R,W	1	1	—	1	1	—	1	1	3431 866
	Lt.	R,W	1	1	—	1	1	—	1	1	3431 869
	HOSE, W/Shield Washer (50" Ft. Roll)	P,D,C,Y	—	1	—	—	1	1	1	1	3837 036
	HOSE, W/Shield Washer Connector to Nozzle	All	2	2	—	2	2	2	2	2	2096 623
	HOSE, W/Shield Washer Foot Pump to Reservoir 2 Speed	V,L	—	1	—	1	1	—	—	—	3780 798
	HOSE, W/Shield Washer Reservoir to Foot Pump 7/16" O.D. x 96" Lgh. 2 Speed	V,L	—	1	—	1	1	—	—	—	2097 055
	2 Speed	V,L	—	1	—	1	1	—	—	—	3780 798
	HOSE, W/Shield Washer Reservoir to Connector	All	1	1	—	1	1	1	1	1	3780 798
	HOSE, W/Shield Washer Reservoir to Foot Pump 2 Speed	B,J	—	1	—	—	—	—	—	—	3431 092
	HOSE, W/Shield Washer Foot Pump to Connector and Reservoir 2 Speed	B,J	—	1	—	—	—	—	—	—	3431 589
	HOSE, W/Shield Washer Foot Pump to Connector										
	2 Speed	B,J	—	1	—	—	—	—	—	—	3780 798
	HOSE, W/Shield Washer Pump 3 Speed	B,J	—	1	—	—	—	—	—	—	3780 798
	HOSE W/Connector, W/Shield Washer 3 Speed	B,J	—	1	—	—	—	—	—	—	3431 598
	HOSE, Reservoir to Connector										
		R,W	1	1	—	1	1	—	1	1	3780 798
		P,D,C,Y	—	1	—	—	1	1	1	1	3780 798
	HOSE, W/Shield Washer Reservoir to "Y" Connector	R,W	1	1	—	1	1	—	1	1	3780 798
23-67-262	CONNECTOR, W/Shield Washer Hose	V,L	—	1	—	1	1	—	—	—	2258 912
		B,J	—	1	—	—	—	—	—	—	2983 077
		P,D,C,Y	—	1	—	—	1	1	1	1	2983 077
	CONNECTOR, "Y" W/Shield Washer Hose	R,W	1	1	—	1	1	—	1	1	3431 926

TYPE LETTERS Indicates J - Challenger, B - Barracuda, V - Valiant, L - Dart, R - Satellite, W - Coronet, P - Plymouth, D - Dodge, C - Chrysler, Y - Imperial

NUMERALS INDICATE: 21 - 2 DR. SED., 23 - 2 DR. H.T., 27 - CONV. CPE., 29 - FAST BACK, 41 - 4 DR. SED., 43 - 4 DR. H.T., 45 - 6 PASS. STA. WGN., 46 - 9 PASS. STA. WGN.

AR Indicates use as required.
# Indicates parts not listed in any previous parts book
Numerals in parentheses ( ) refer to notes.
★ Indicates change or addition.

Printed in U.S.A.
November, 1974

Right and left part numbers are on same line, first number is right, second number is left.

CODE	PART NAME	MODEL CODES	SEE BOTTOM NOTE								PART NUMBER
			21	23	27	29	41	43	45	46	
23-67-262	CONNECTOR Cont'd.										
	CONNECTOR, W/Shield Washer Hose (In Line)	R,W	1	1	—	1	1	—	1	1	3431 939
23-67-267	SUPPORT, W/Shield Washer Reservoir and Pump Mtg. Button Head w/o Speed Control	R,W	1	1	—	1	1	—	1	1	3431 703

NOTES

TYPE LETTERS Indicates	J - Challenger B - Barracuda	V - Valiant L - Dart	R - Satellite W - Coronet	P - Plymouth D - Dodge	C - Chrysler Y - Imperial
NUMERALS INDICATE:	21 - 2 DR. SED. 23 - 2 DR. H.T.	27 - CONV. CPE. 29 - FAST BACK	41 - 4 DR. SED. 43 - 4 DR. H.T.		45 - 6 PASS. STA. WGN. 46 - 9 PASS. STA. WGN.

AR Indicates use as required.
# Indicates parts not listed in any previous parts book
Numerals in parentheses ( ) refer to notes.
★ Indicates change or addition.

Printed in U.S.A.
November, 1974

Right and left part numbers are on same line, first number is right, second number is left.

1974 PASSENGER CAR

TRIM SECTION

NOVEMBER, 1974

LOOSE LEAF PARTS CATALOG

SERVICE & PARTS SALES DIVISION CHRYSLER MOTORS CORPORATION

Printed in U.S.A.

SUPERSEDES
81-690-1139

81-690-1172

NOTE:

A new color coded Trim Numbering System has been introduced for 1974. The new number consists of one alpha, three numerics and the three character alpha numeric suffix; e.g. E810 JX9, while the comparable prior year number would be 6197 JX9.

Provision has been made in order processing to handle supersedence in a routine manner.

GENERAL TRIM INFORMATION

COLOR CODED OR COMBINED PART NUMBERS

Appearing throughout this catalog are part numbers containing both letters and numbers. For example: D500 KB7. This is a good serviceable part number. The combination of letters and numbers merely indicates the part is keyed to the interior color of the vehicles on which it is used. In addition, Right and Left part numbers are frequently combined on one line; e.g.: D500-1 KB7. Such numbers are interpreted as D500 KB7, Right Side application, and D501 KB7 Left Side. Right and Left Sides are always determined by their relationship to the driver when normally seated and looking forward.

BODY CODE PLATE

The body code plate contains information relative to the vehicle trim and paint codes which are required to specify proper trim items. The plate is located on the left front fender side shield or wheel housing on compact, Sport and intermediate models and on the left side of the upper radiator support on full size cars. A sample plate and description follows:

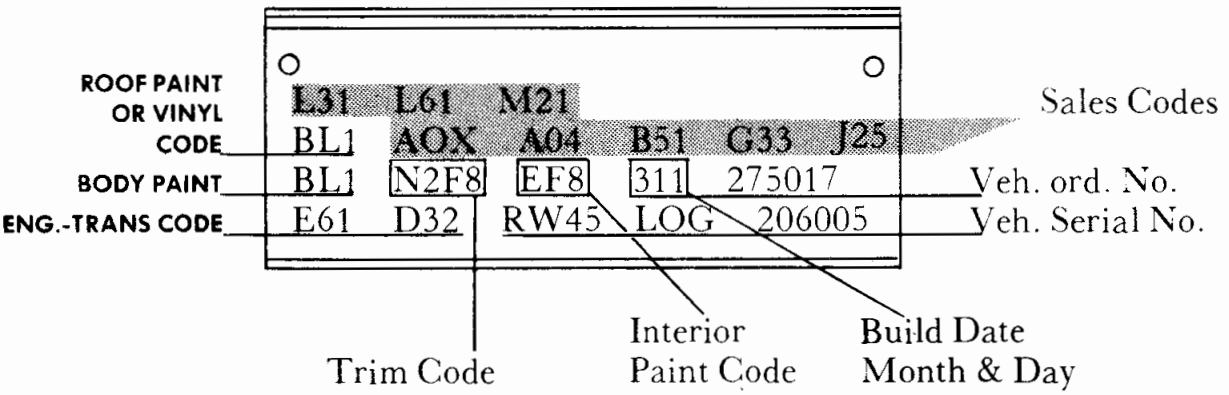

INTERIOR TRIM GRAPHICS

The Graphics Included in this section are typical.

The NUMBERS shown on Graphics indicate the distribution and type of material. Refer to Roll stock information Section for the particular carline for number identification.

TYPE OF TRIM MATERIAL AND SEAT (TRIM CODE)

	BENCH	BENCH SP. BACK W/CAR	BUCKET	50/50	SPEC. DESIGN
CLOTH & VINYL	1	3	5	7	9
ALL VINYL	2	4	6	8	H
CLOTH & LEATHER	A	B	C	D	E
ALL LEATHER	M	P	R	L	T

EXAMPLE

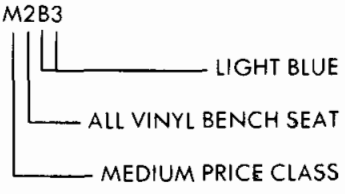

COLOR SUFFIXES

A-GRAY OR GUNMETAL
B-BLUE
C-
D-
E-
F-
G-GREEN
H-
J-
K-
L-PARCHMENT
M-
N-
O-
P-
Q-
R-
S-
T-CHESTNUT
U-
V-
W-WHITE
X-BLACK
XW-BLACK & WHITE
Y-GOLD
Z-BRIGHT

PART NO. SUFFIXES BELOW SERVE AS SUFFIXES TO BASIC PART NO. AND INDICATE COLOR OR CODE

B6-MEDIUM BLUE

B1
B2 LT. BLUE
B3

B4
B5 MED. BLUE
B6

B7
B8 DK. BLUE
B9

SIGNIFICANT PART NO'S.

C506 K2G

BASIC PART NO. - SERIES - COLOR SUFFIX

C506 KAG

BASIC PART NO. SERIES - COLOR CODE
(CLO. & LEA. TRIM - BLUE)

C506 K1G

BASIC PART NO. - SERIES - COLOR CODE
(CLO. & VINYL TR. - BLUE)

1974 TRIM DATA

COLOR CHART "K" SERIES TRIM CODES

	V	L	B	J	R	W	P	D	C	Y
B6 - MED. BLUE	X	X	X	X	X	X	X	X	X	X
EW - RED, BLK., WH.					X					
G6 - GREEN	X	X	X	X	X	X	X	X	X	X
KW - COPPER, BLK., WH.									X	
L3 - PARCHMENT	X	X			X	X	X	X	X	X
T7 - CHESTNUT					X	X	X	X	X	
VW - ORANGE, BLK, WH.	X	X								
X9 - BLACK	X	X	X	X	X	X	X	X	X	X
XW - BLACK & WHITE	X	X	X	X	X	X		X	X	X
Y3 - GOLD	X	X			X	X	X	X	X	X
YW - GOLD & WHITE	X	X								
YW - GOLD, BLK., WH.					X	X			X	

NOTE: The following complete assemblies and codes must be ordered by description to be specified by the parts depot Specifier:

CODE	DESCRIPTION
23-108-4	**FRONT SEAT CUSHION**
23-108-12	**FRONT SEAT BACK**
23-108-15	**FRONT SEAT BACK SPRING & COVER**
23-109-3	**REAR SEAT BACK**
23-109-35	**REAR SEAT CUSHION**

TRIM ALPHABETICAL INDEX

DESCRIPTION	CODE
Arm & Bracket, Visor	23-103-10
Arm Rest, Front Door	23-76-3
Arm Rest, Frt Door Pad & Plate	23-76-11
Arm Rest, Frt Seat Back Center	23-76-18
Arm Rest, Rear Door Pad & Plate	23-76-63
Arm Rest, Rear Quarter	23-76-66
Arm Rest, Rear Seat Back Center	23-76-40
Base, Arm Rest	23-76-9
Bow, Roof	23-86-10
Button, Seat Cushion & Back	23-78-2
Cap, Rear Window Headlining Mldg Center	23-86-36
Carpet, Console Side & Rear	23-71-1
Carpet, Door Trim Panel-Lwr.	23-92-6
Carpet, Floor (1 Piece Frt. & Rear	23-79-1
Carpet, Front Floor	23-79-3
Carpet, Rear Floor	23-79-33
Carpet, Second & Third Seat Back	23-109-5
Co-ordinator, Outboard Ctr. Pillar Color	23-93-37
Cover, Center Pillar Trim	23-99-4
Cover, Coat Hook Outer	23-82-30
Cover, Cowl Side Trim Pnl. to W/Shld. Side Garnish Mldg. Flg.	23-91-7
Cover, Door Lock Pillar Pinch Weld	23-113-3
Cover, Front Seat Back	23-108-16
Cover, Front Seat Back Center Arm Rest	23-76-34
Cover, Front Seat Back Center Arm Rest, Rear Trim Panel	23-76-37
Cover, Front Seat Back Hinge	23-108-84
Cover, Front Seat Center Hinge Post	23-108-85
Cover, Front Seat Cushion	23-108-5
Cover, Gas Filler Tube (Carpet)	23-96-11
Cover, Lock Pillar Trim	23-99-6
Cover, Rear Seat Back	23-109-4
Cover, Rear Seat Back Center Arm Rest	23-76-45
Cover, Rear Seat Cushion	23-109-36
Cover, Roof Outside	23-86-2
Cover, Sliding Panel Quarter Sun Roof	23-86-42
Cover, Spare Tire	23-79-64
Cover, Tailgate Opening Pillar	23-99-41
Cup, Door Arm Rest Pull	23-76-62
Flap, Front Seat Back Center Arm Rest	23-76-19
Flap, Rear Seat Back Center Arm Rest	23-76-53
Grille, Wheelhouse Radio Speaker	23-96-31
Handle, Door Pull	23-81-3
Head Rest, Front Seat	23-108-19
Headlining & Listings	23-86-3
Hook, Coat	23-82-30
Lid, Console	23-71-3
Lid & Latch, Wheelhouse Cover Storage Compartment	23-96-26
Lock Bar, Front Seat Center Arm Rest	23-76-28
Pad, Instrument Panel Trim	23-84-3
Pad, Vinyl Roof	23-86-1
Panel, "C" Pillar Upr. Cover Applique	23-86-4
Panel, Cowl Trim	23-91-6
Panel, Door Trim	23-92-5
Panel, Front Seat Back	23-108-32
Panel, Front Seat Back Center Arm Rest Rear	23-76-22
Panel, Luggage Compartment Lining	23-96-8
Panel, Quarter Trim	23-101-3
Panel, Shelf Trim	23-102-3
Panel, Visor Trim	23-103-3
Pillow Assy, Upper Quarter Trim	23-86-4
Plate, Rear Seat Back Finish	23-109-13
Plug, Sun Roof Access Hole	23-86-43
Protector, Folding Rear Seat Back Pnl. Trim	23-79-36
Retainer, Roof Headlining	23-86-19
Retainer, Roof Side Rail Roof Bow	23-86-11
Shield, Front Seat	23-108-98
Silencer, Luggage Compartment	23-91-6
Strap, Center Pillar Assist	23-77-3
Top, Roof Vinyl	23-86-2
Weathercord, Door	23-113-2

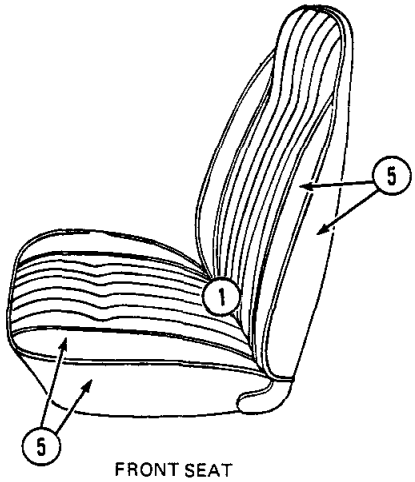

FRONT SEAT

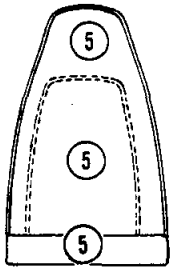

FRONT SEAT BACK

V–L 29

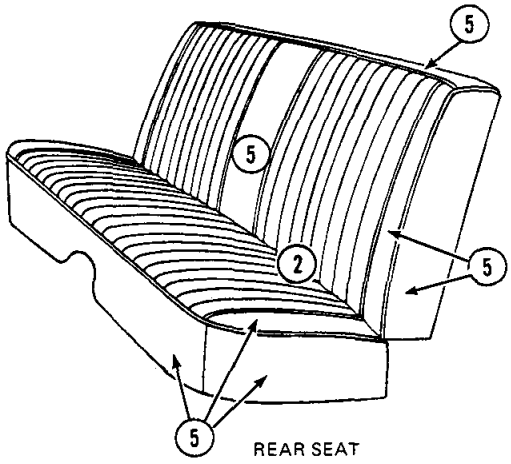

REAR SEAT

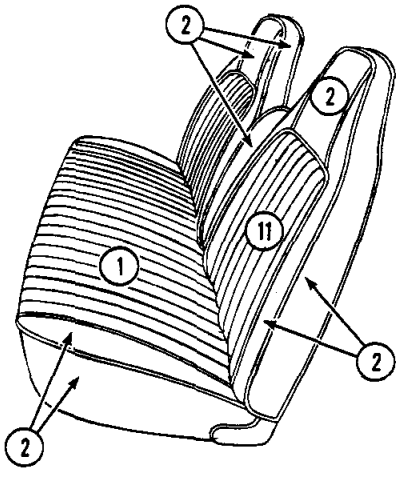

FRONT SEAT

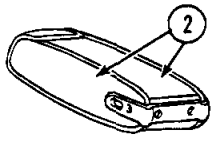

COVER CTR ARM REST FINISH

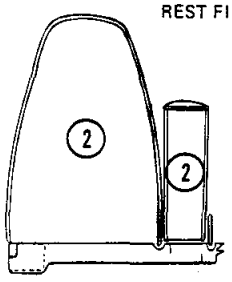

FRONT SEAT BACK

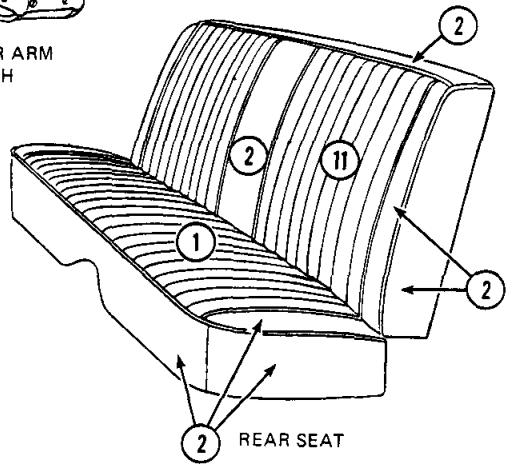

REAR SEAT

V–23

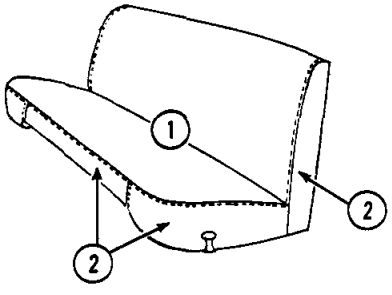

FRONT SEAT

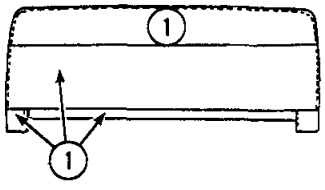

FRONT SEAT BACK

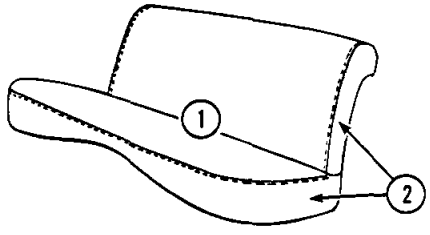

REAR SEAT

LT 41

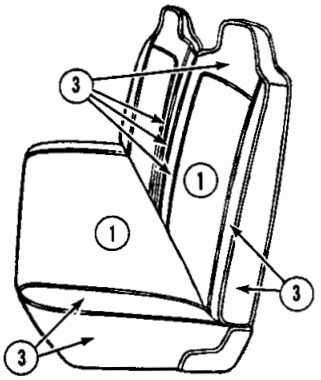

23–29 FRONT SEAT

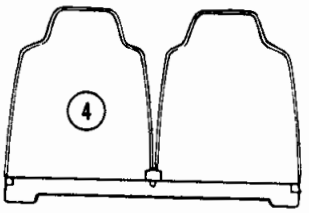

23–29 FRONT SEAT BACK

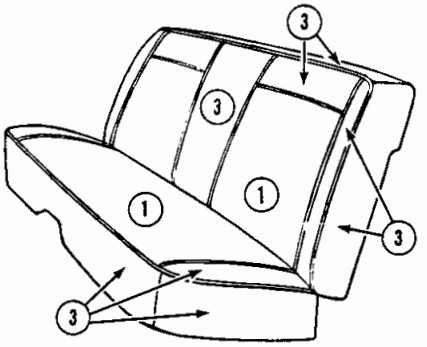

23–29–41 REAR SEAT

V AND L 23—29

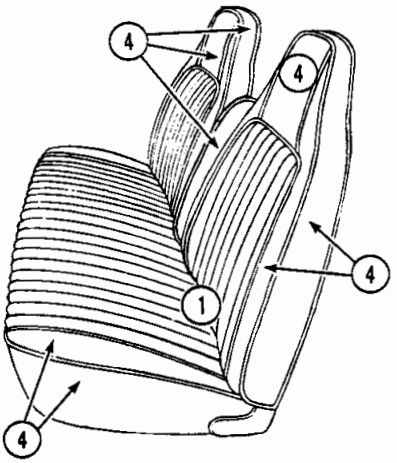

FRONT SEAT

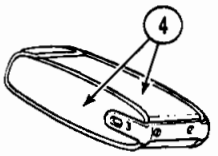

COVER CTR ARM REST FINISH

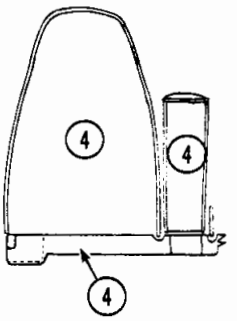

FRONT SEAT BACK (23-29-41)

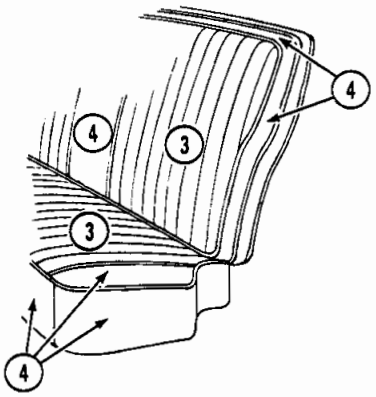

FOLD DOWN SEAT BACK (MOD 29 ONLY)

V-L 29—41

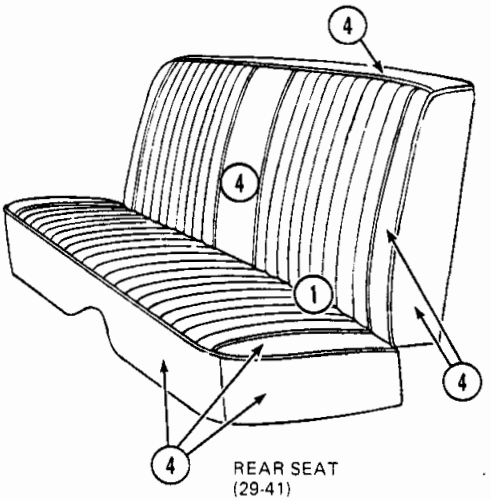

REAR SEAT (29-41)

Printed in U.S.A.
November, 1974

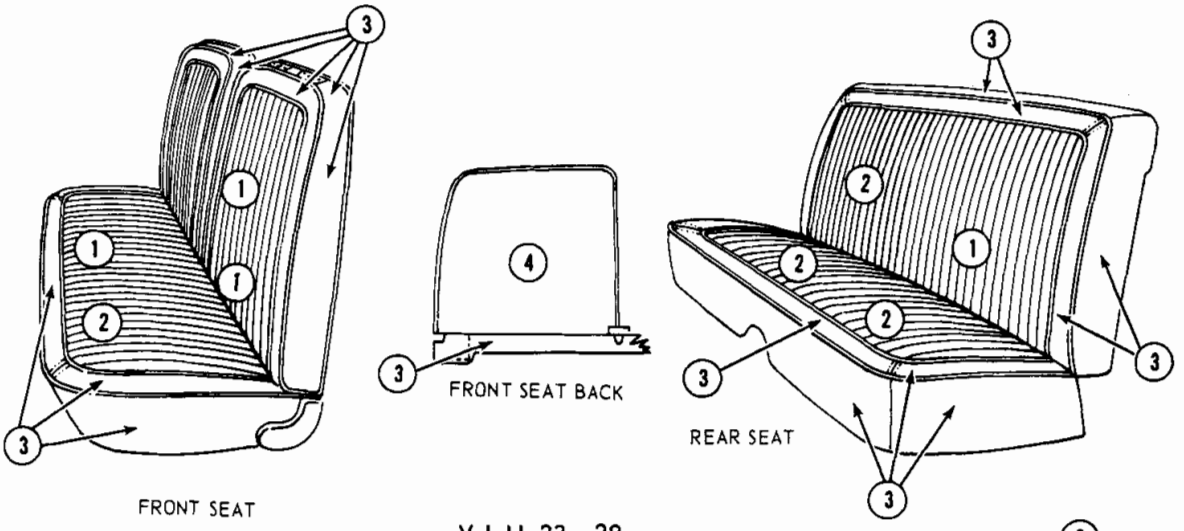

V-L-LL-23—29

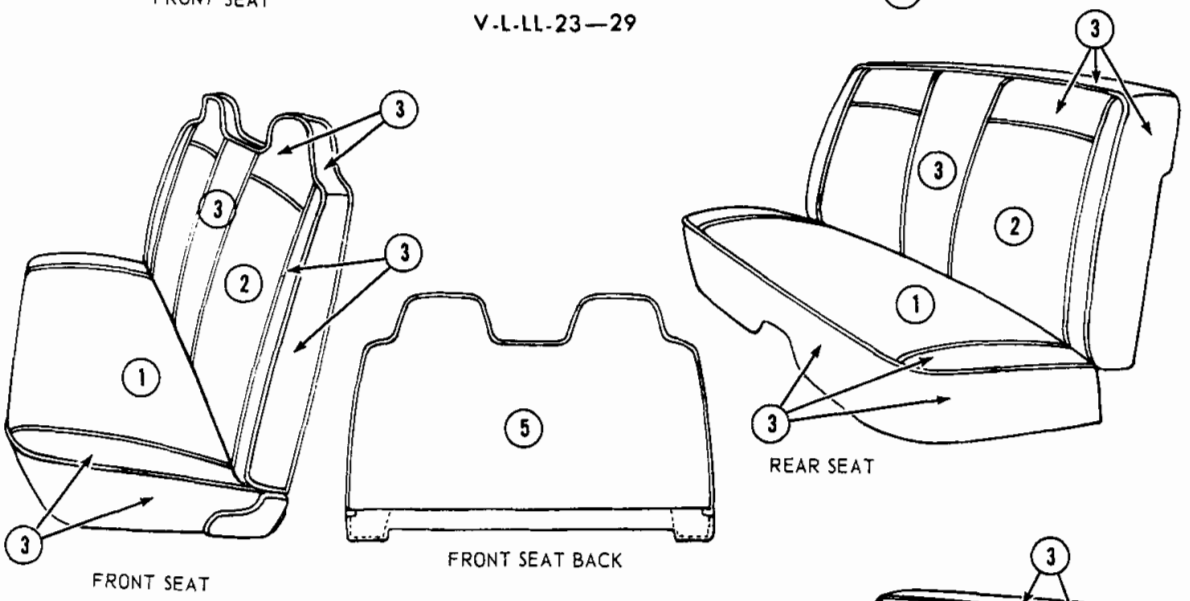

VL and LL 41

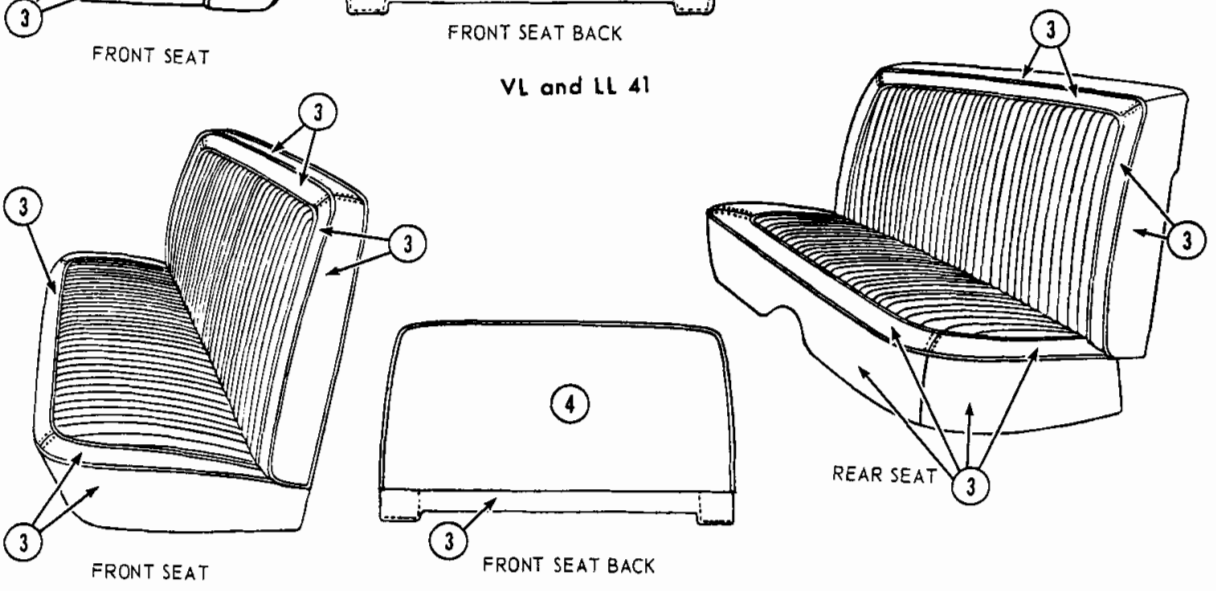

VL AND LH 41

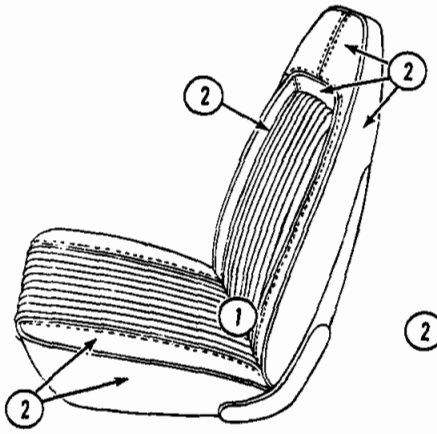

FRONT SEAT

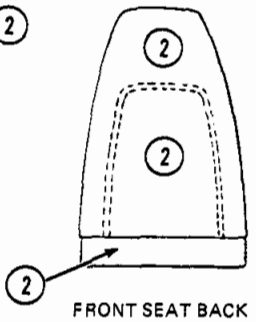

FRONT SEAT BACK

B AND J—23

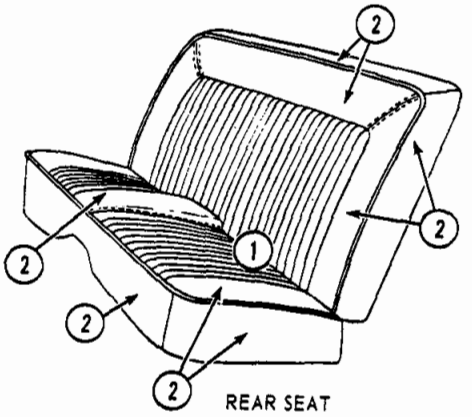

REAR SEAT

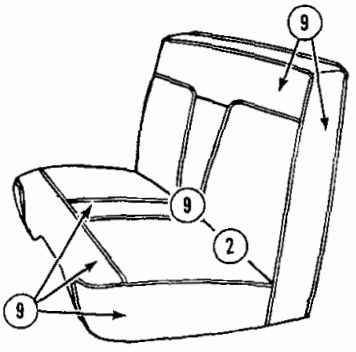

41–45 FRONT SEAT

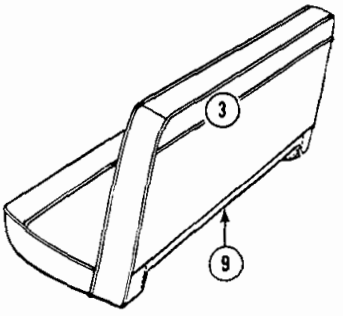

41–45–FRONT SEAT BACK

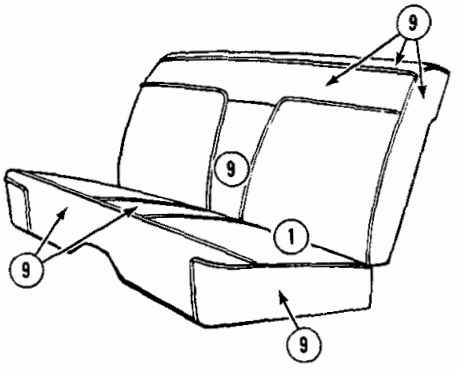

41–45 REAR SEAT

R-41—45

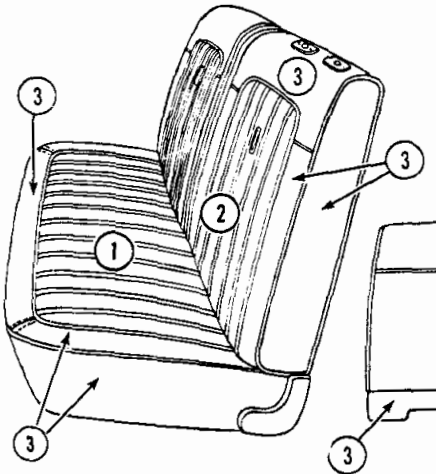

FRONT SEAT

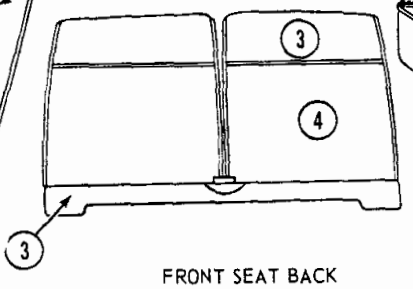

FRONT SEAT BACK

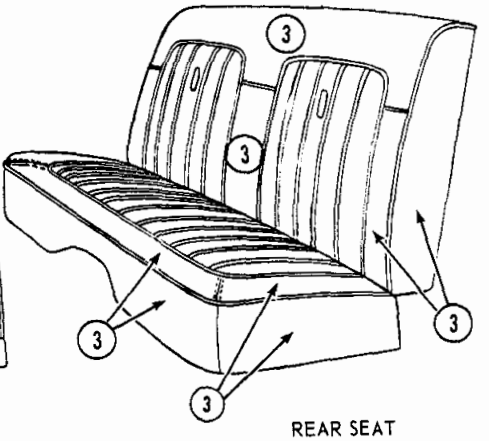

REAR SEAT

RM-RH-WH 21—23

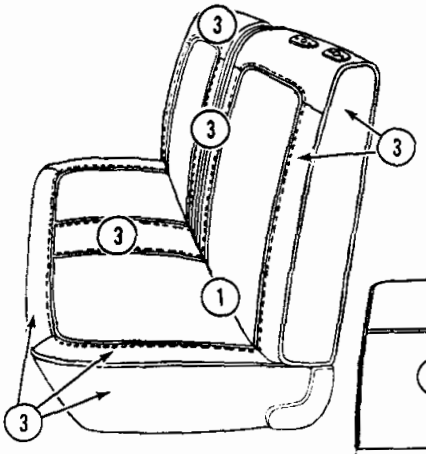

FRONT SEAT

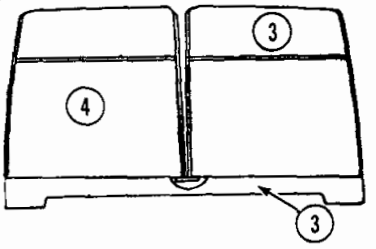

FRONT SEAT BACK

RL-RM-WL—21

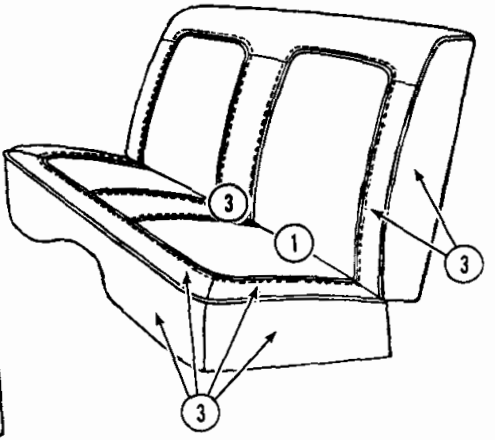

REAR SEAT

Printed in U.S.A.
November, 1974

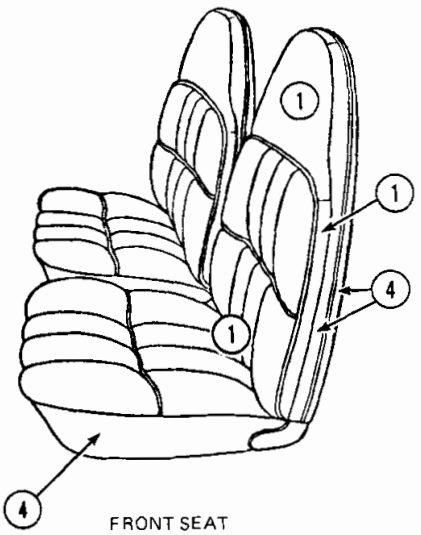

FRONT SEAT

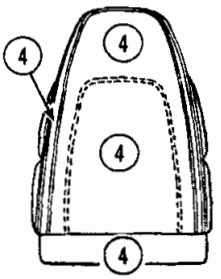

FRONT SEAT BACK



COVER CTR ARM REST FINISH

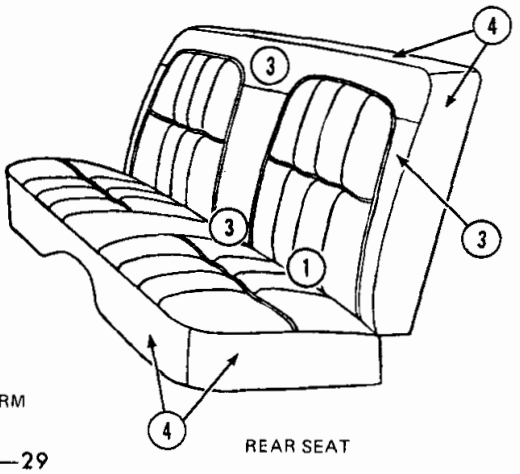

REAR SEAT

RM–RP–WH–W–P 21—23—29

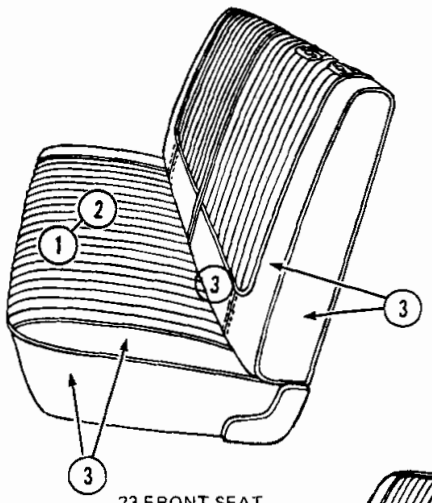

23-FRONT SEAT

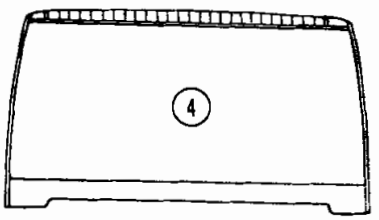

41 FRONT SEAT BACK

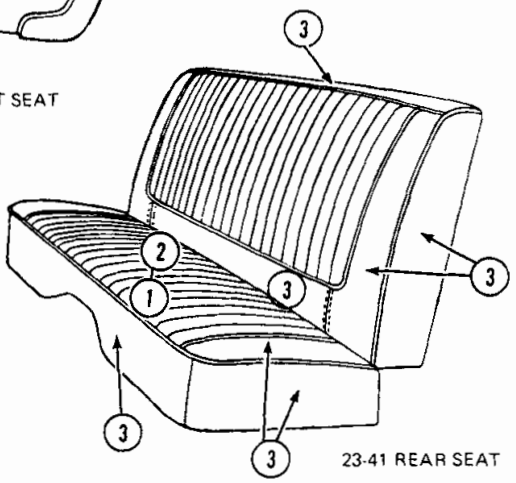

23-41 REAR SEAT

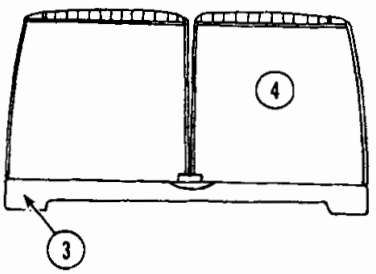

23-FRONT SEAT BACK

R–H 23—41

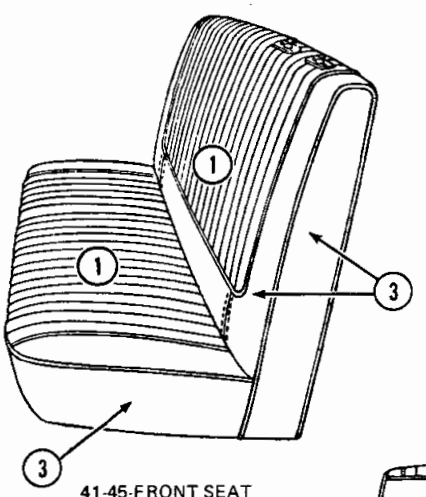

41-45-FRONT SEAT

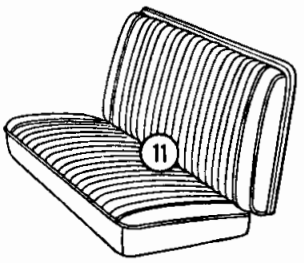

46-3RD SEAT
CALLOUTS SAME AS
2ND SEAT

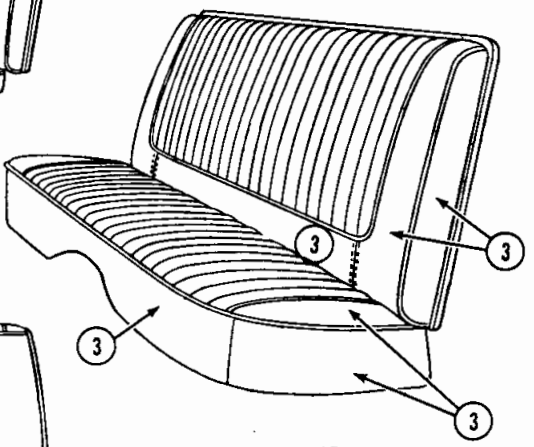

41-REAR SEAT
45-46 2ND SEAT

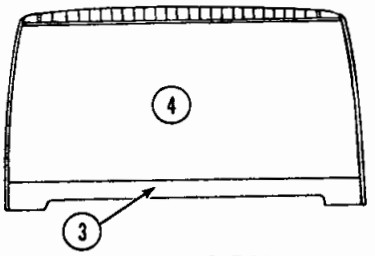

41-45-46 FRONT SEAT BACK

RH-41—45—46

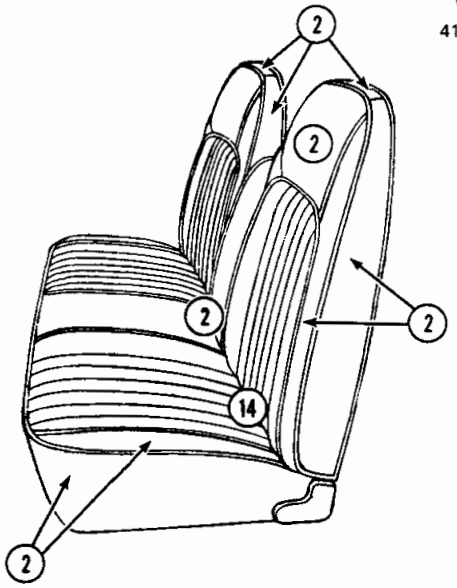

29-41-45-46 FRONT SEAT

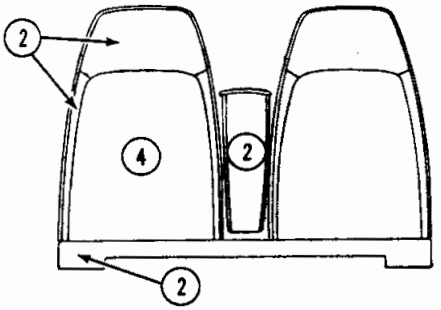

29-41-45-46 FRONT SEAT BACK

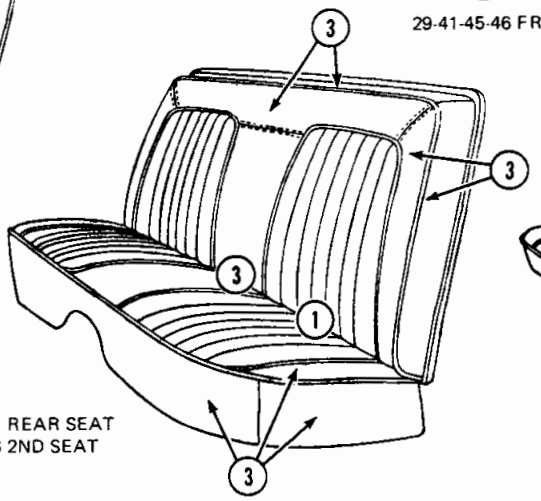

29-41 REAR SEAT
45-46 2ND SEAT

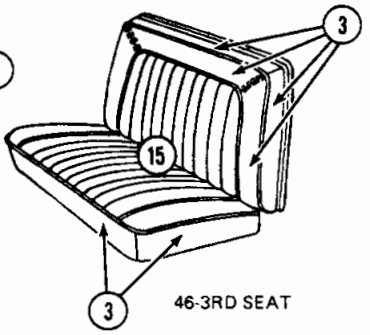

46-3RD SEAT

RP-WH-WP 29—41—45—46

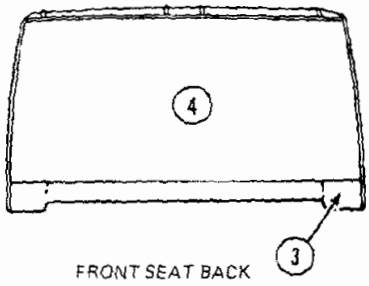

FRONT SEAT BACK

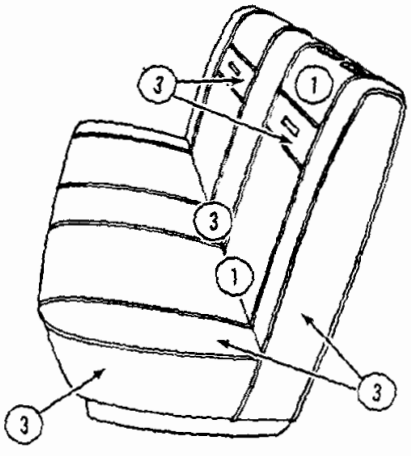

FRONT SEAT

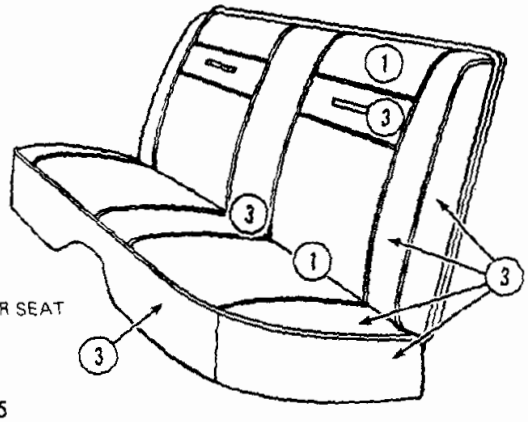

REAR SEAT

W-41—45

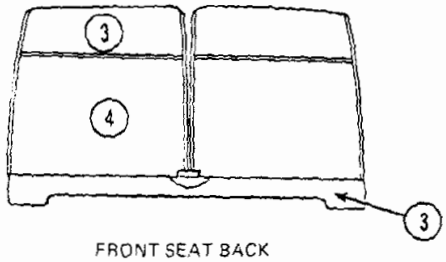

FRONT SEAT BACK

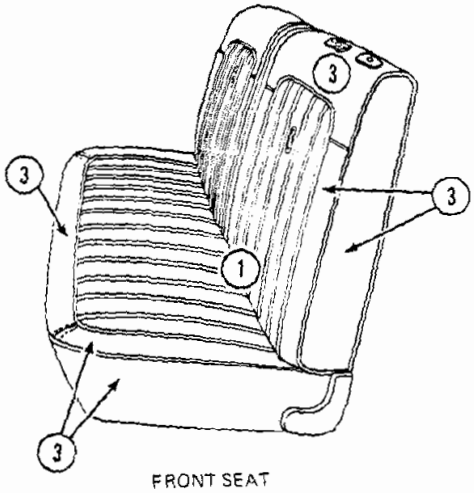

FRONT SEAT

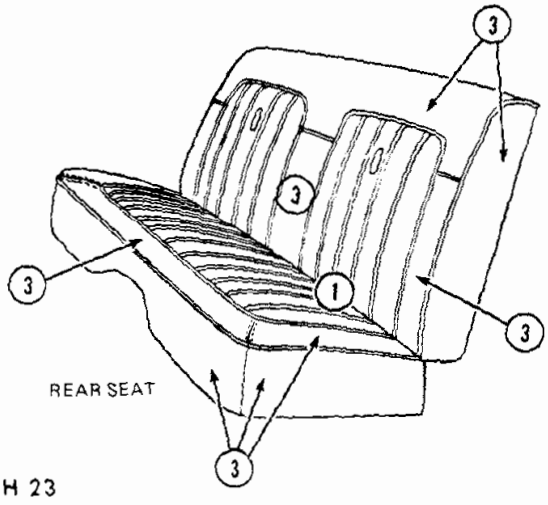

REAR SEAT

WH 23

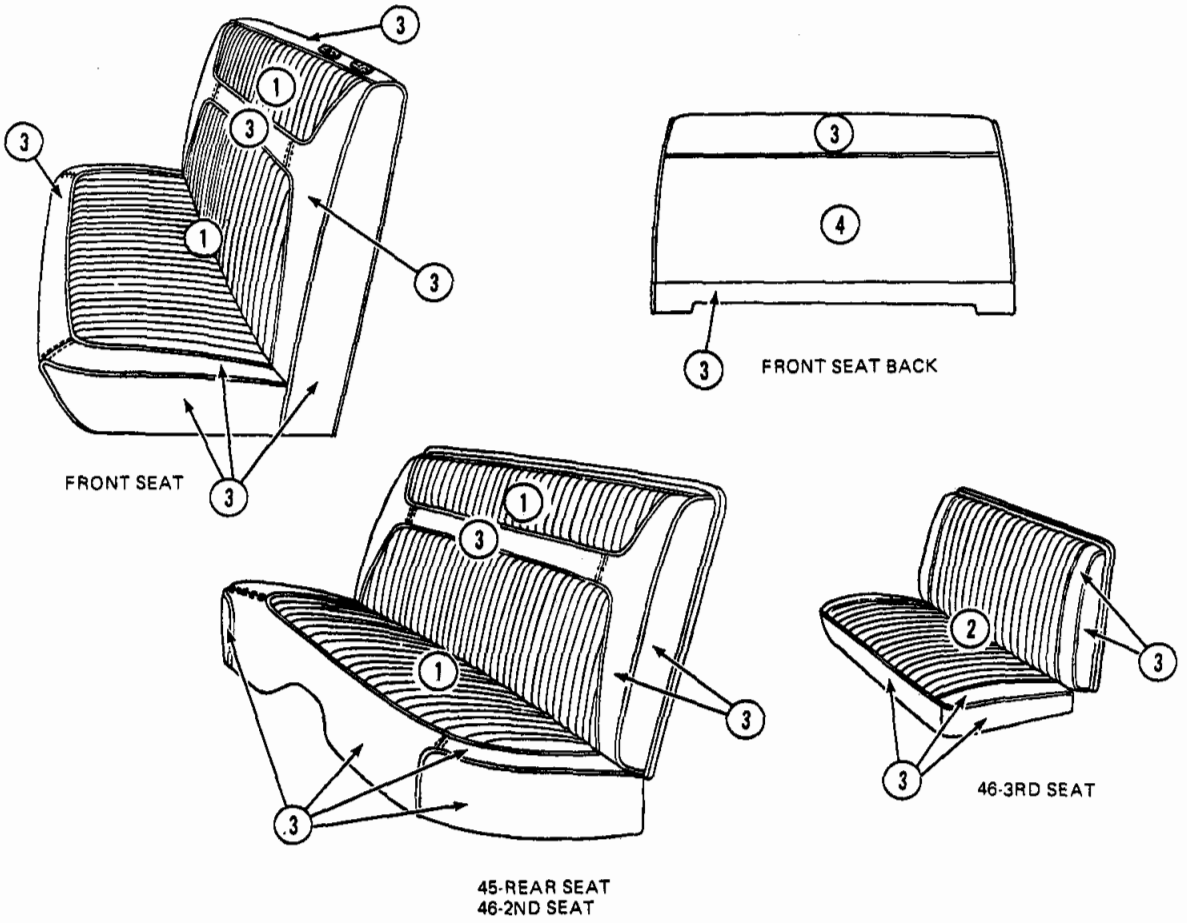
FRONT SEAT
FRONT SEAT BACK
46-3RD SEAT
45-REAR SEAT
46-2ND SEAT

WH 45—46

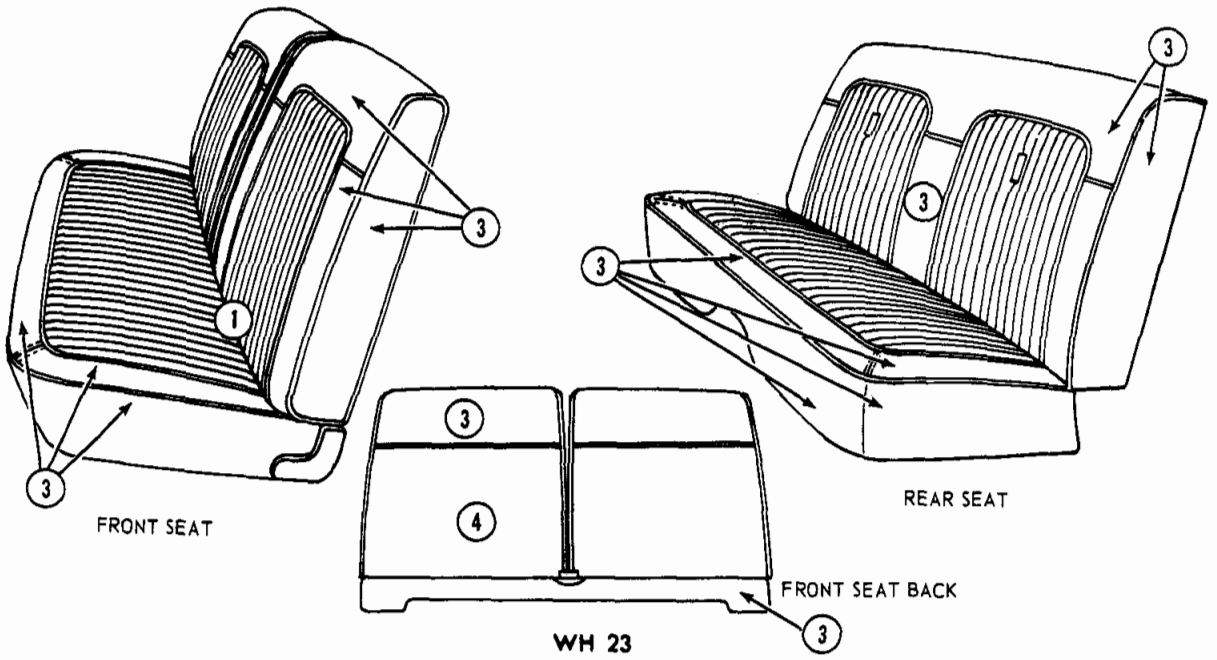
FRONT SEAT
REAR SEAT
FRONT SEAT BACK

WH 23

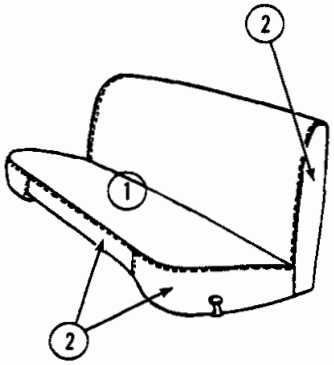

FRONT SEAT

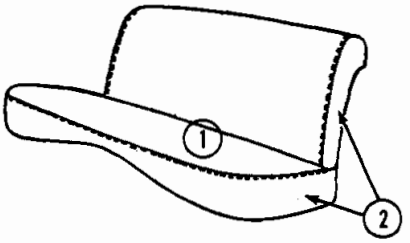

REAR SEAT

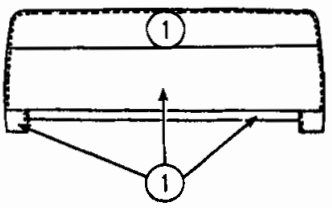

FRONT SEAT BACK

RK AND RT-WK AND WT 41

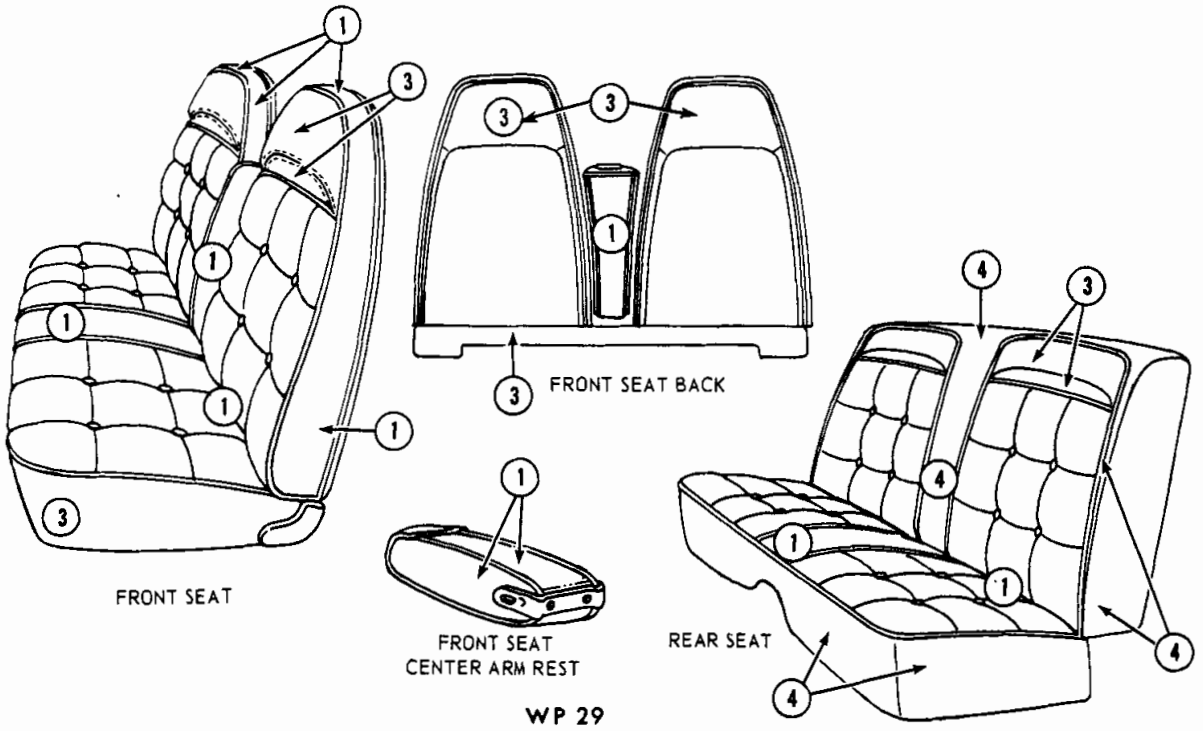

WP 29

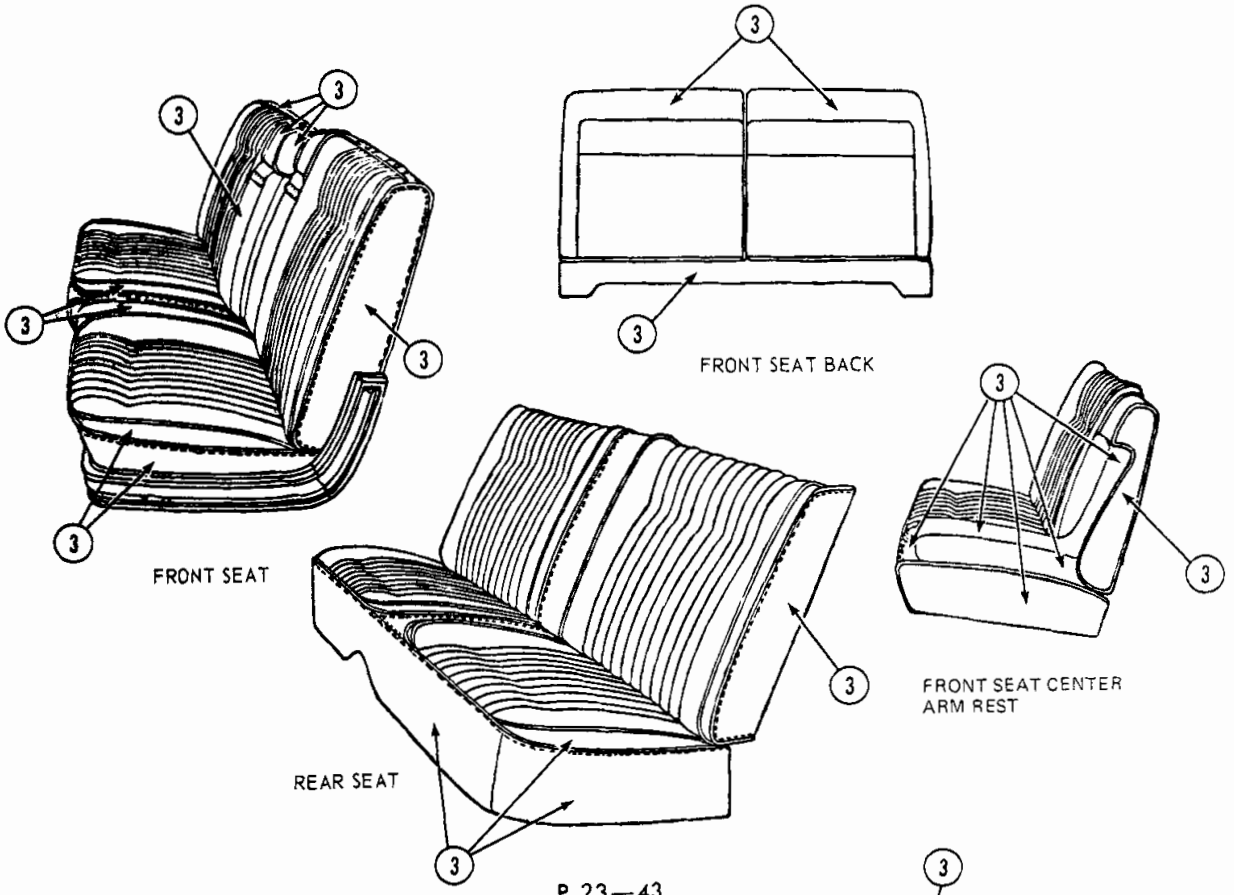
FRONT SEAT BACK
FRONT SEAT
FRONT SEAT CENTER ARM REST
REAR SEAT

P 23—43

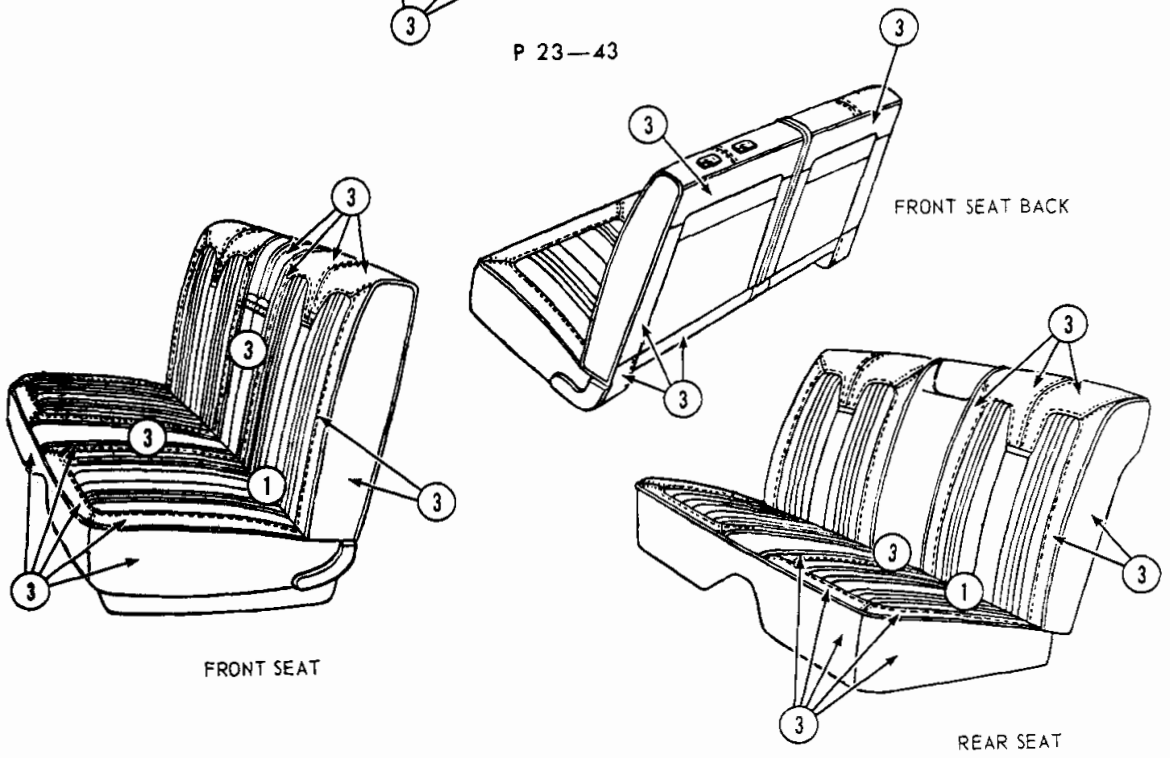
FRONT SEAT BACK
FRONT SEAT
REAR SEAT

P-41—43

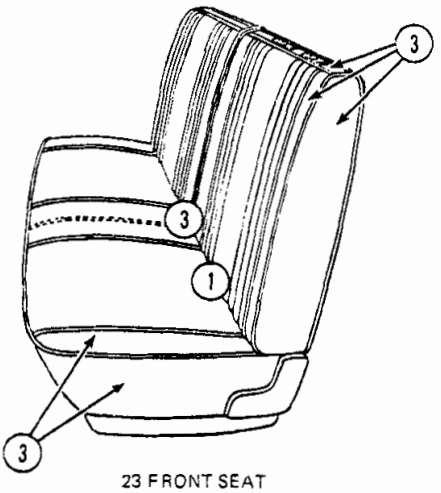

23 FRONT SEAT

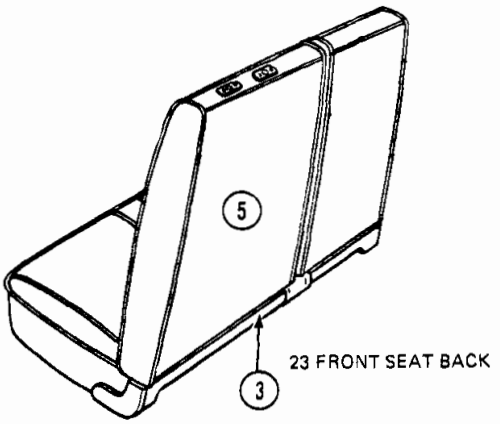

23 FRONT SEAT BACK

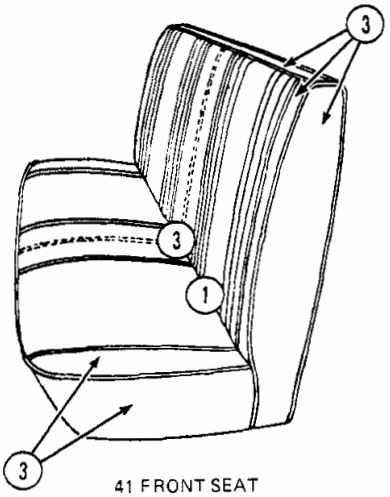

41 FRONT SEAT

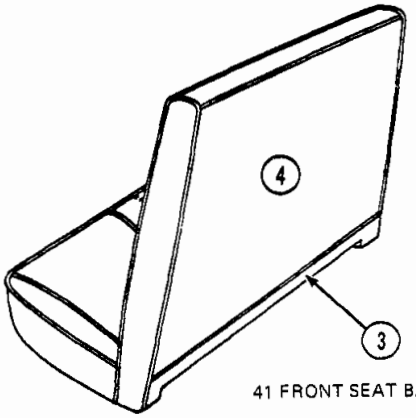

41 FRONT SEAT BACK

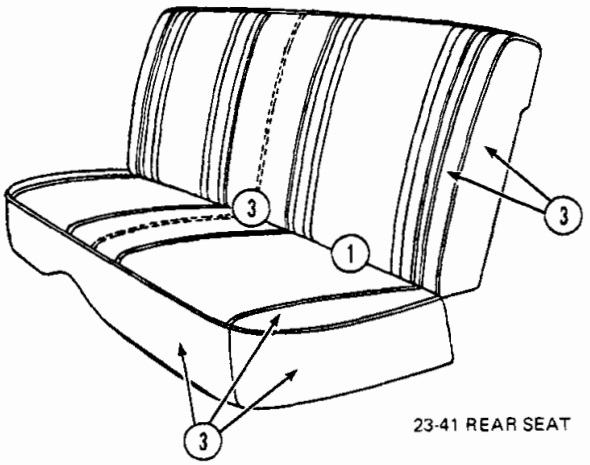

23-41 REAR SEAT

P—23—41

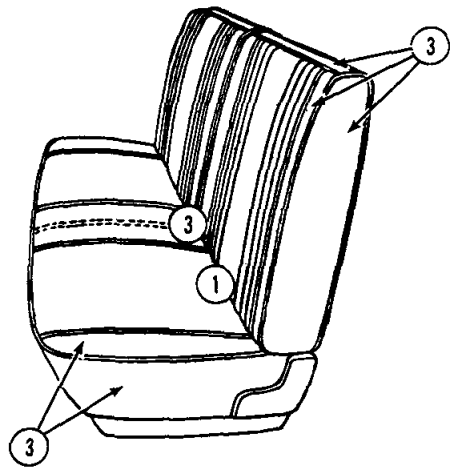

23-FRONT SEAT

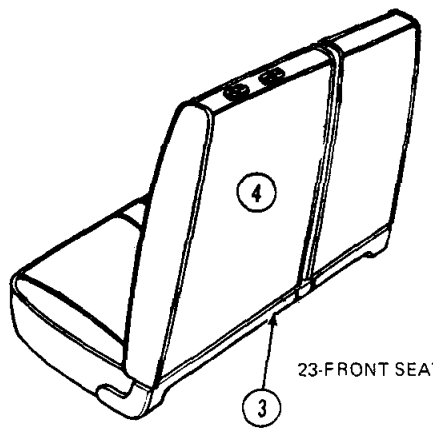

23-FRONT SEAT BACK

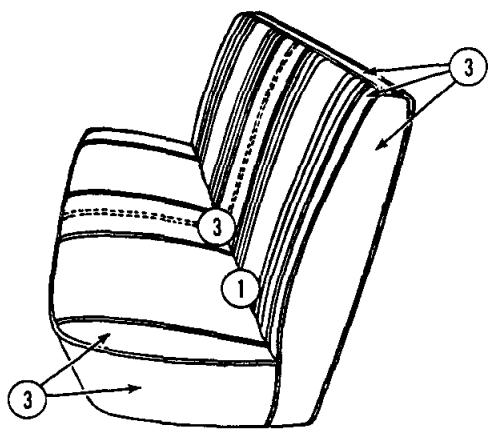

41-43 FRONT SEAT

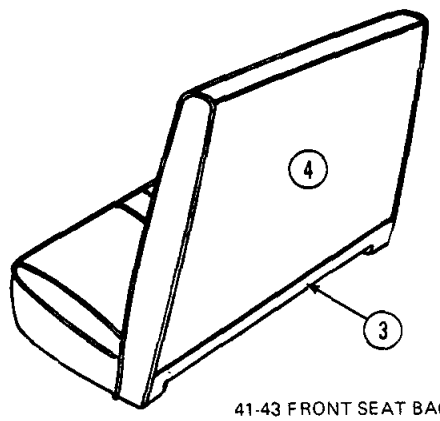

41-43 FRONT SEAT BACK

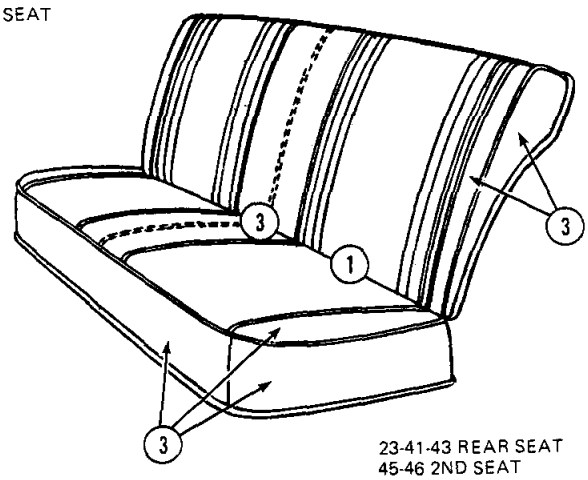

23-41-43 REAR SEAT
45-46 2ND SEAT

P-23—41—45

Printed in U.S.A.
November, 1974

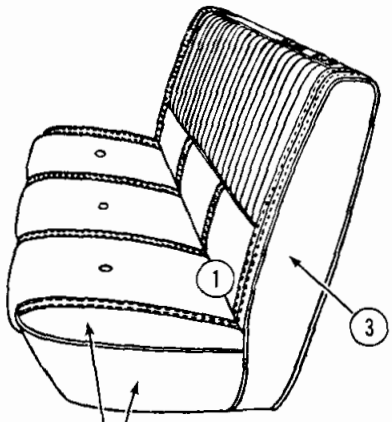

41-43 FRONT SEAT

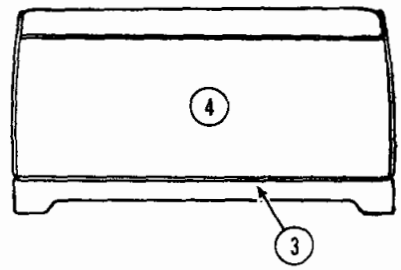

41-43 FRONT SEAT BACK

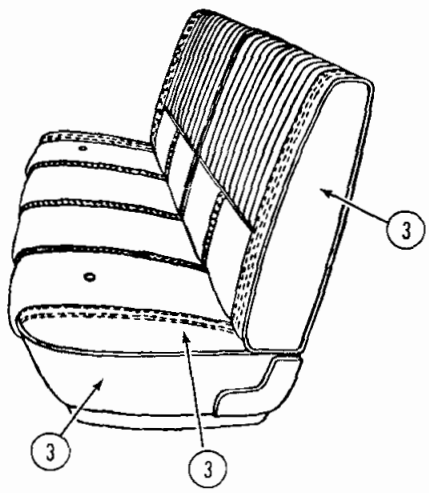

23- FRONT SEAT

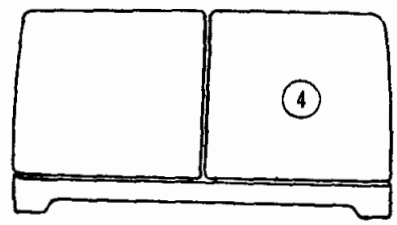

23-FRONT SEAT BACK

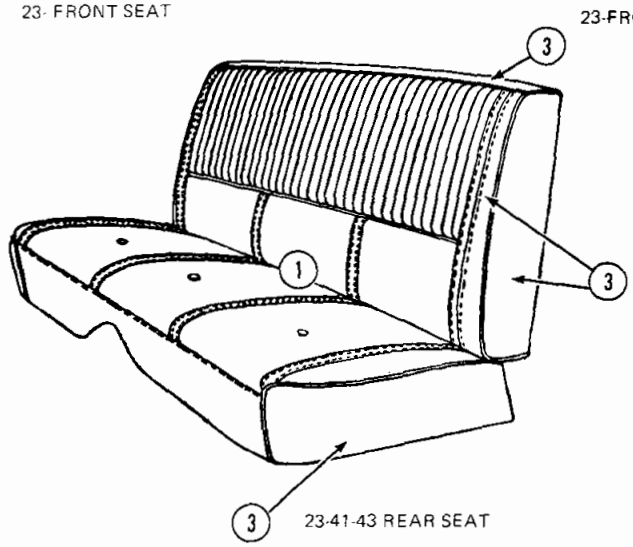

23-41-43 REAR SEAT

P-23—41—43

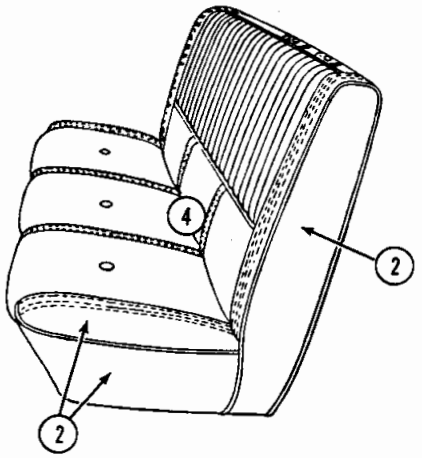

FRONT SEAT 41-43-45-46

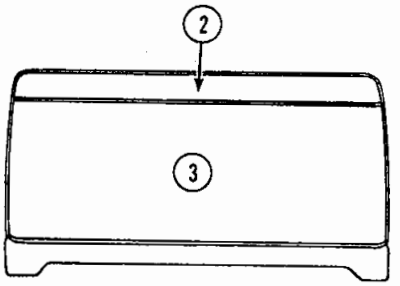

FRONT SEAT BACK 41-43-45-46

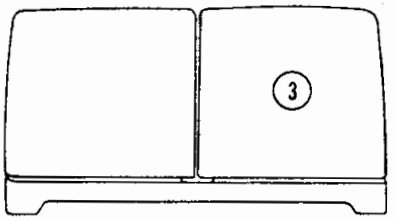

23 FRONT SEAT BACK

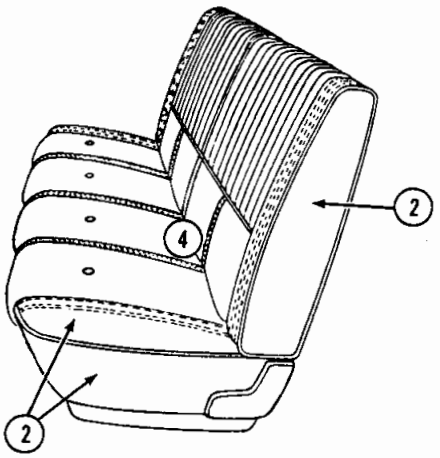

23 FRONT SEAT

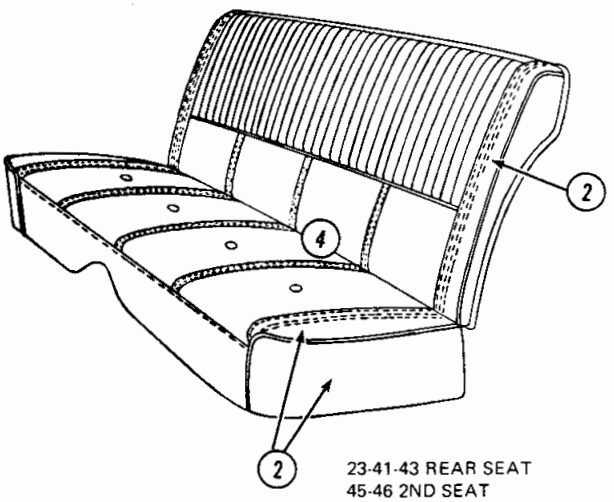

23-41-43 REAR SEAT
45-46 2ND SEAT

P-23—41—43—45—46

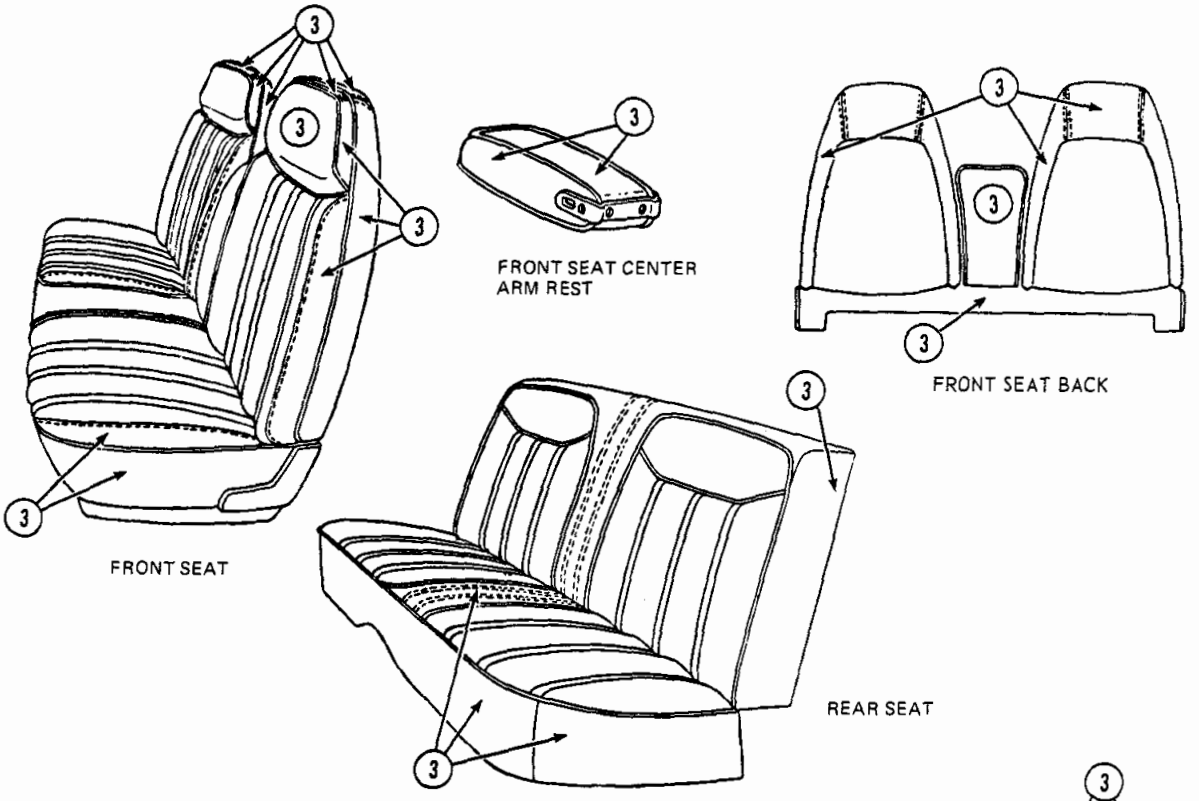

P 23—43

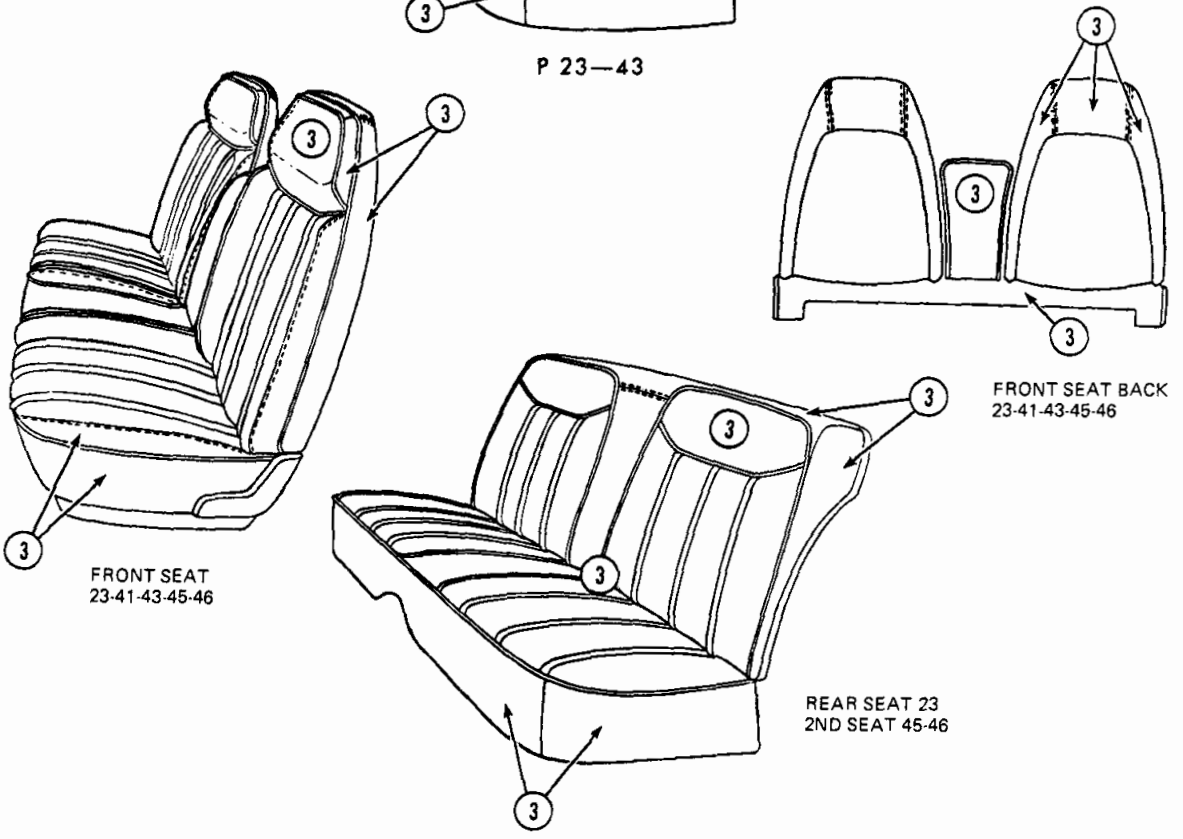

P—23—41—43—45—46

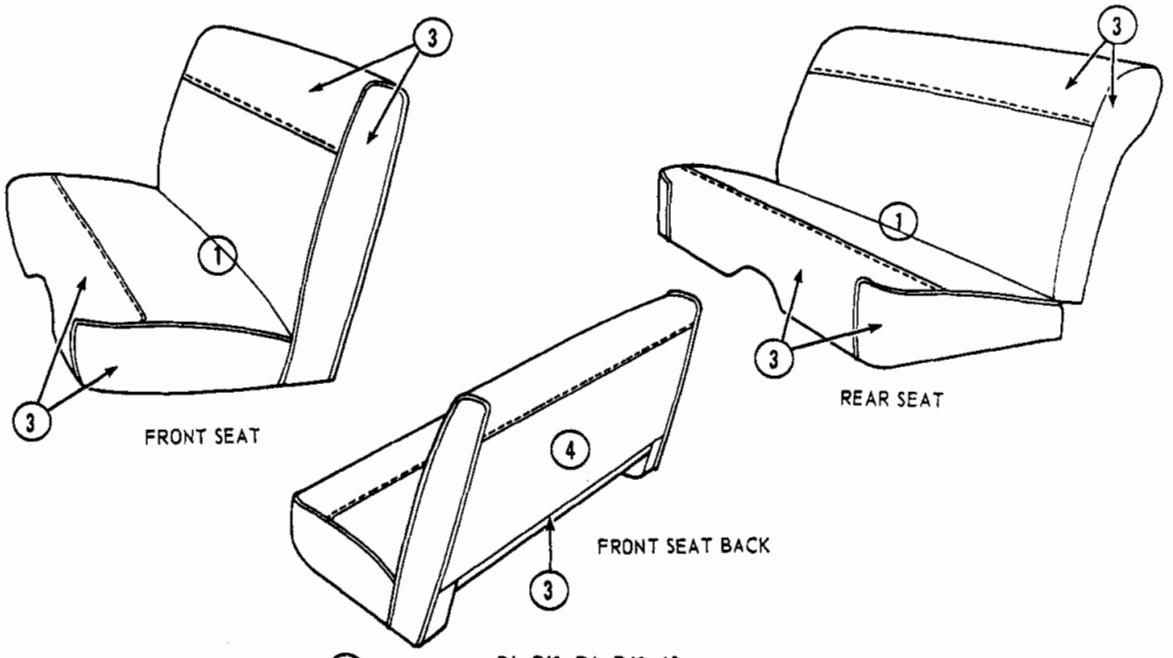

PL-PK-DL-DK 41

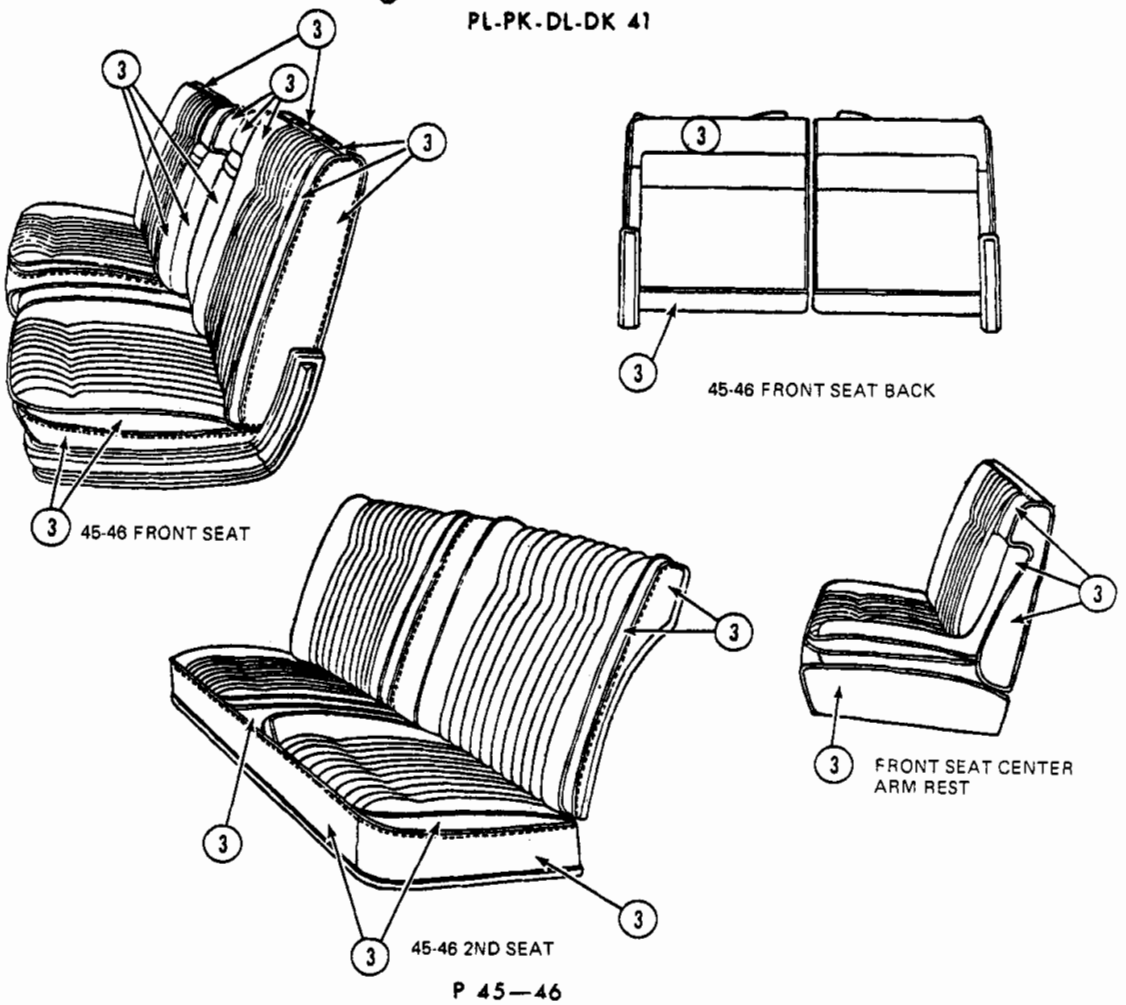

P 45—46

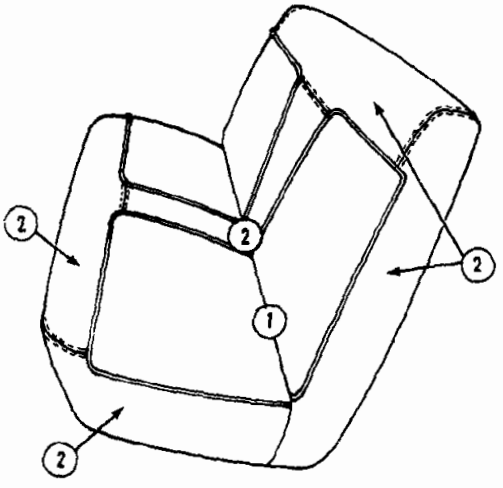

41–FRONT SEAT

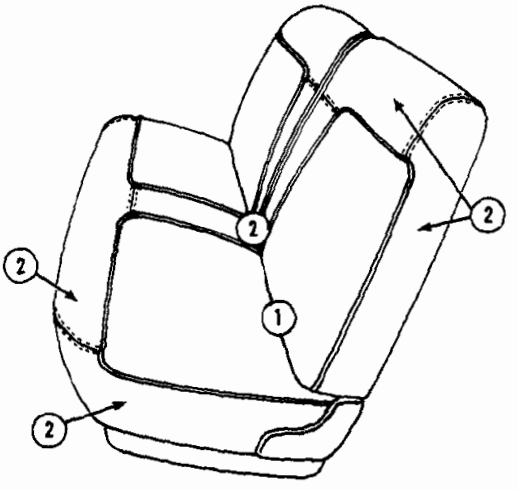

21–23 FRONT SEAT

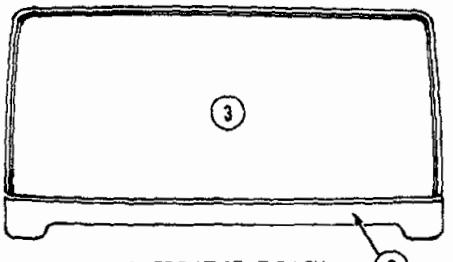

41–FRONT SEAT BACK

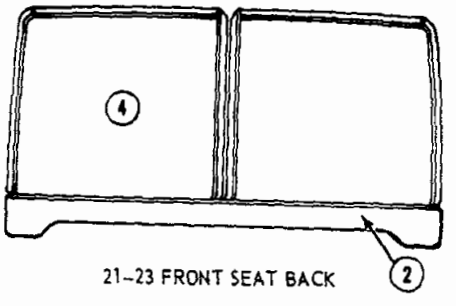

21–23 FRONT SEAT BACK

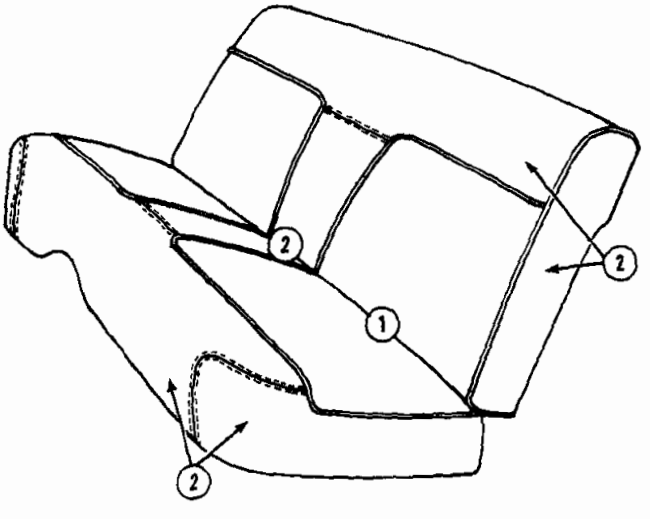

21–23–41 REAR SEAT

PL–PK–PM–DL–DK –23—41—45

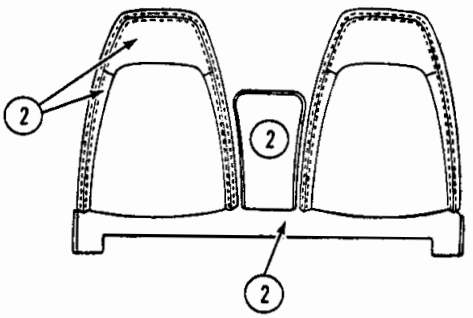

23-41-43-45-46 FRONT SEAT BACK

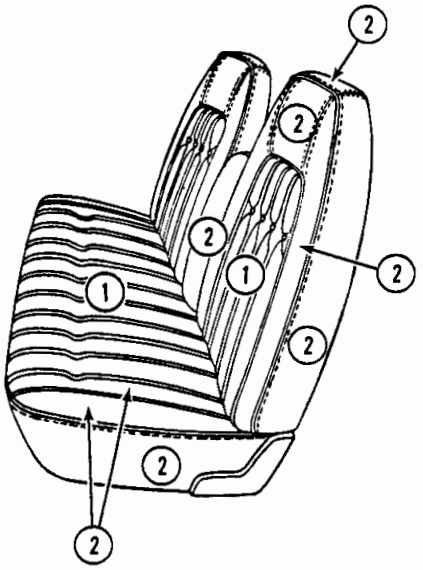

23-41-43-45-46 FRONT SEAT

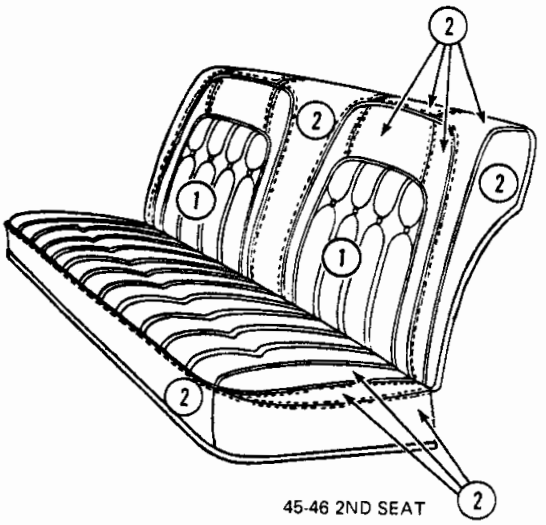

45-46 2ND SEAT

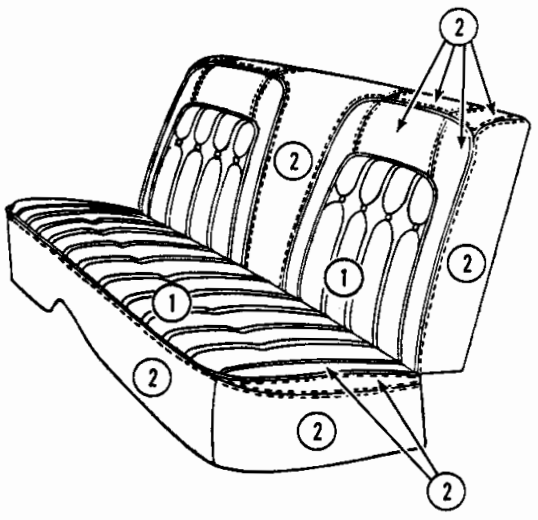

23-41-43 REAR SEAT

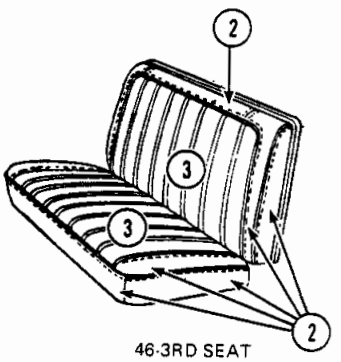

46-3RD SEAT

DH 23—41—43—45—46

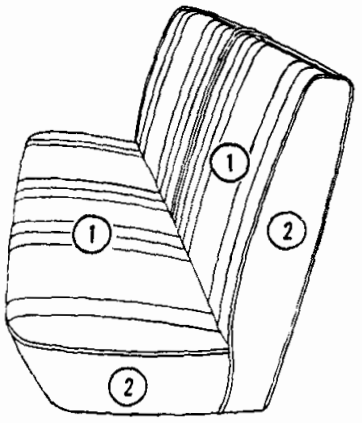

23 FRONT SEAT

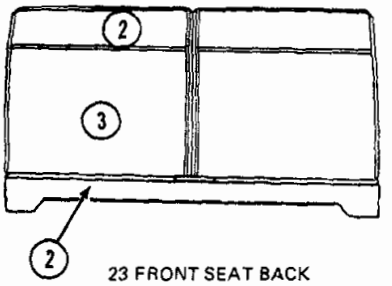

23 FRONT SEAT BACK

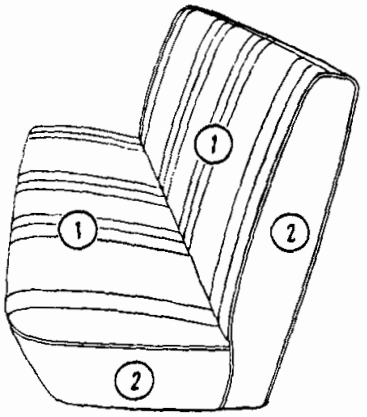

41 FRONT SEAT

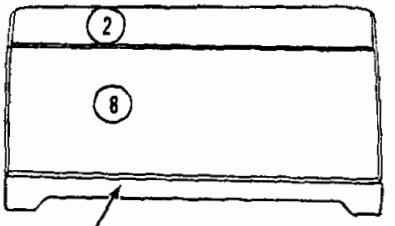

41 FRONT SEAT BACK

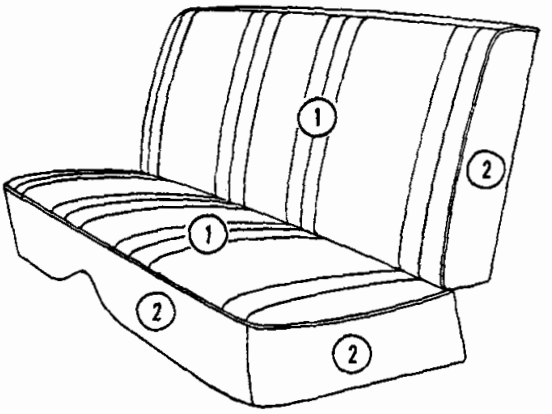

23-41 REAR SEAT

DM 23—41

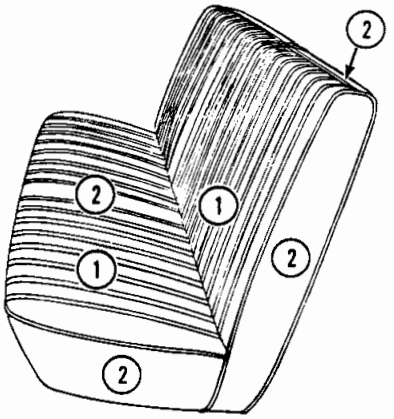

FRONT SEAT 23

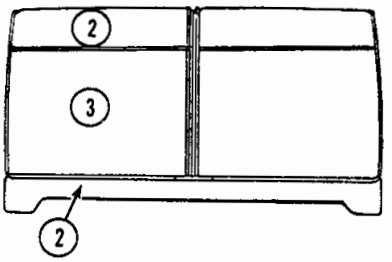

FRONT SEAT BACK 23

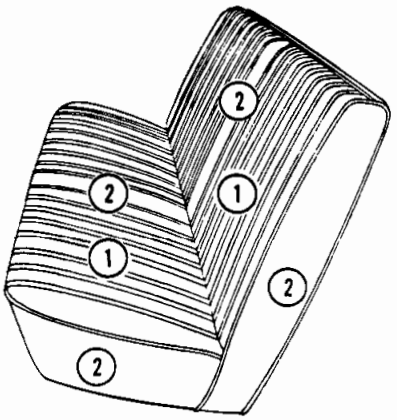

FRONT SEAT 41-45

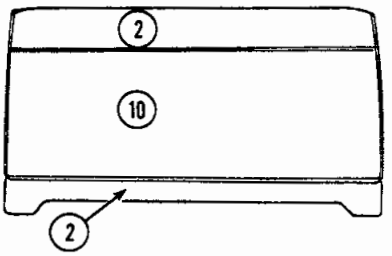

FRONT SEAT BACK 41-45

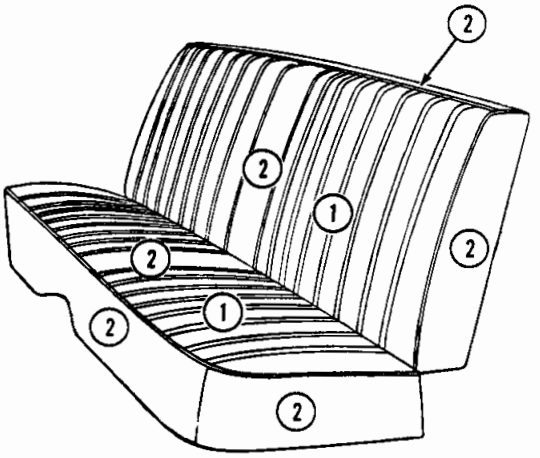

REAR SEAT 23-41-45

DM 23—41—45

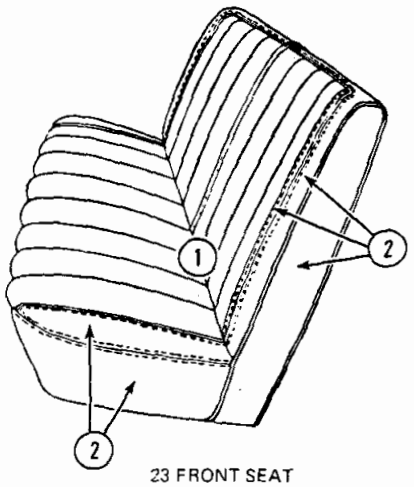

23 FRONT SEAT

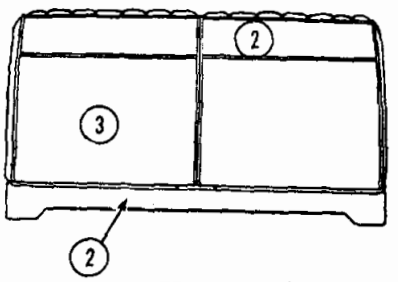

23 FRONT SEAT BACK

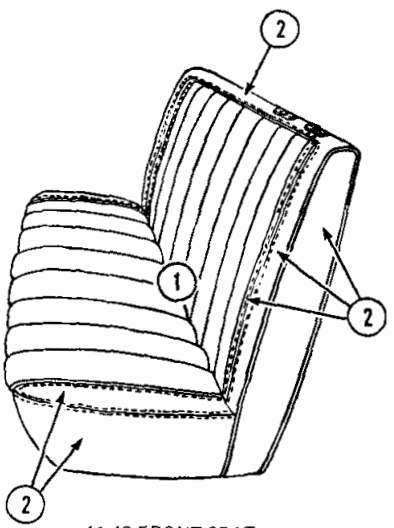

41-43 FRONT SEAT

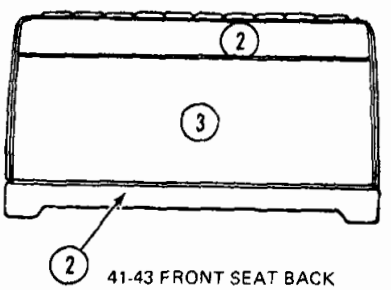

41-43 FRONT SEAT BACK

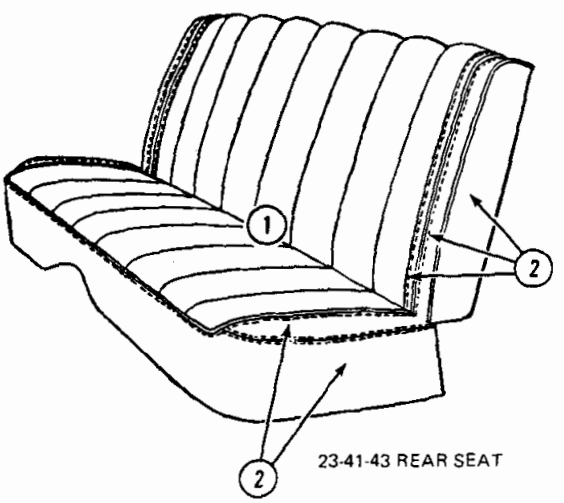

23-41-43 REAR SEAT

DH 23—41—43

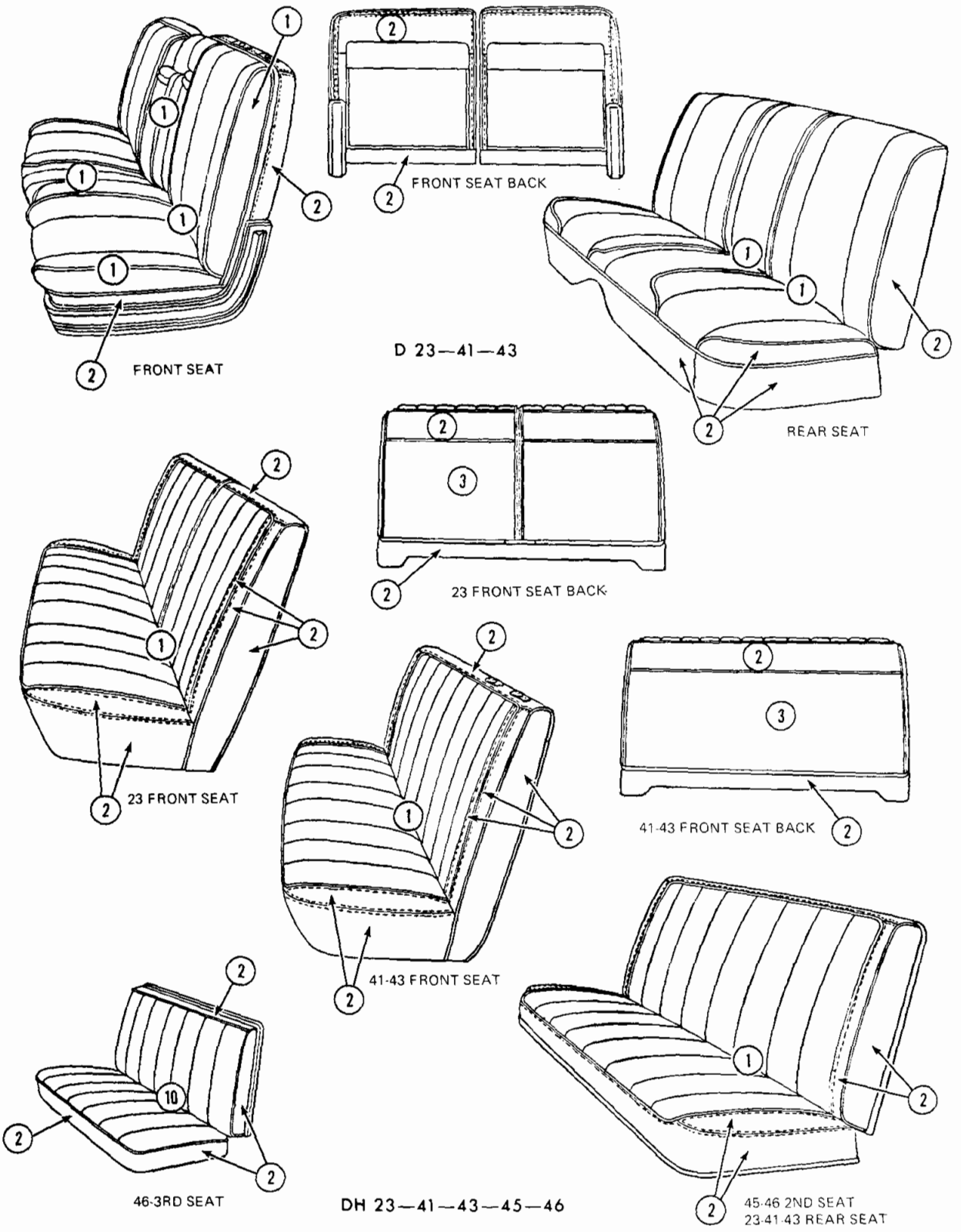
FRONT SEAT BACK
FRONT SEAT
D 23—41—43
REAR SEAT
23 FRONT SEAT BACK
23 FRONT SEAT
41-43 FRONT SEAT BACK
41-43 FRONT SEAT
46-3RD SEAT
DH 23—41—43—45—46
45-46 2ND SEAT
23-41-43 REAR SEAT

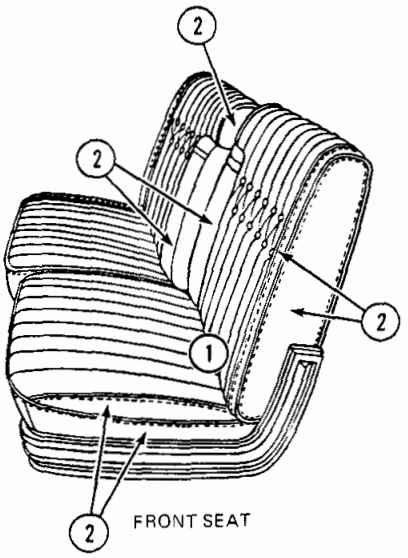

FRONT SEAT

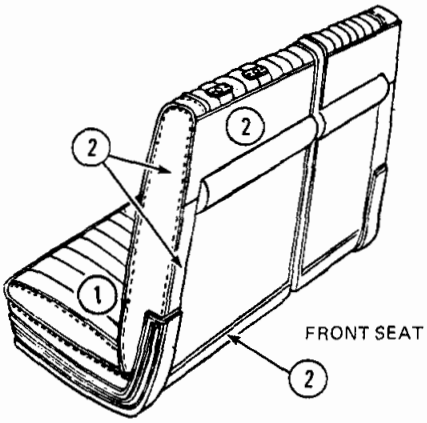

FRONT SEAT BACK

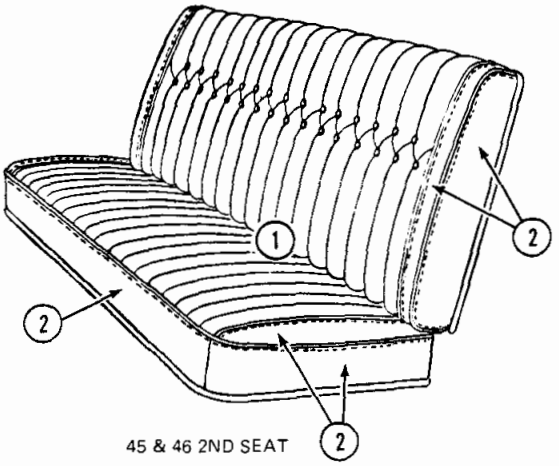

45 & 46 2ND SEAT

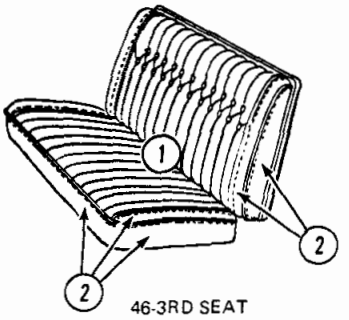

46-3RD SEAT

DP 45—46

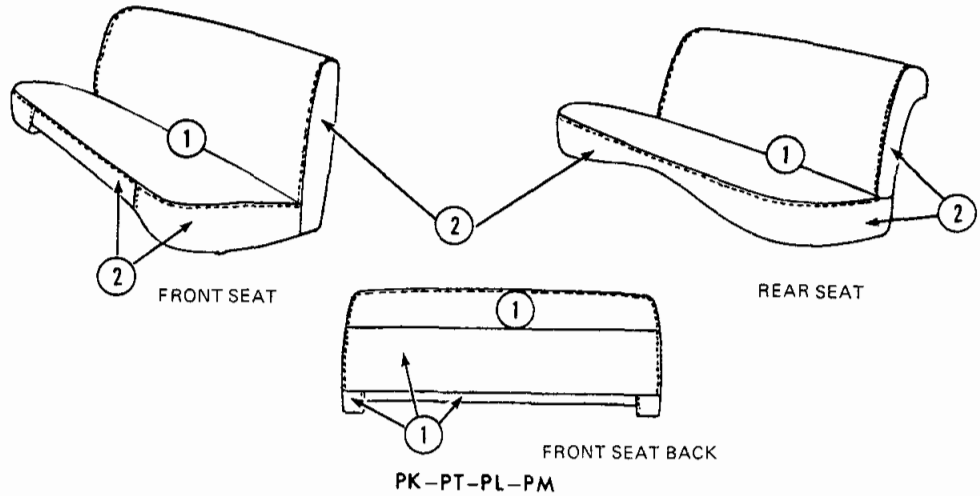

PK–PT–PL–PM
DK–DT–DL–DM

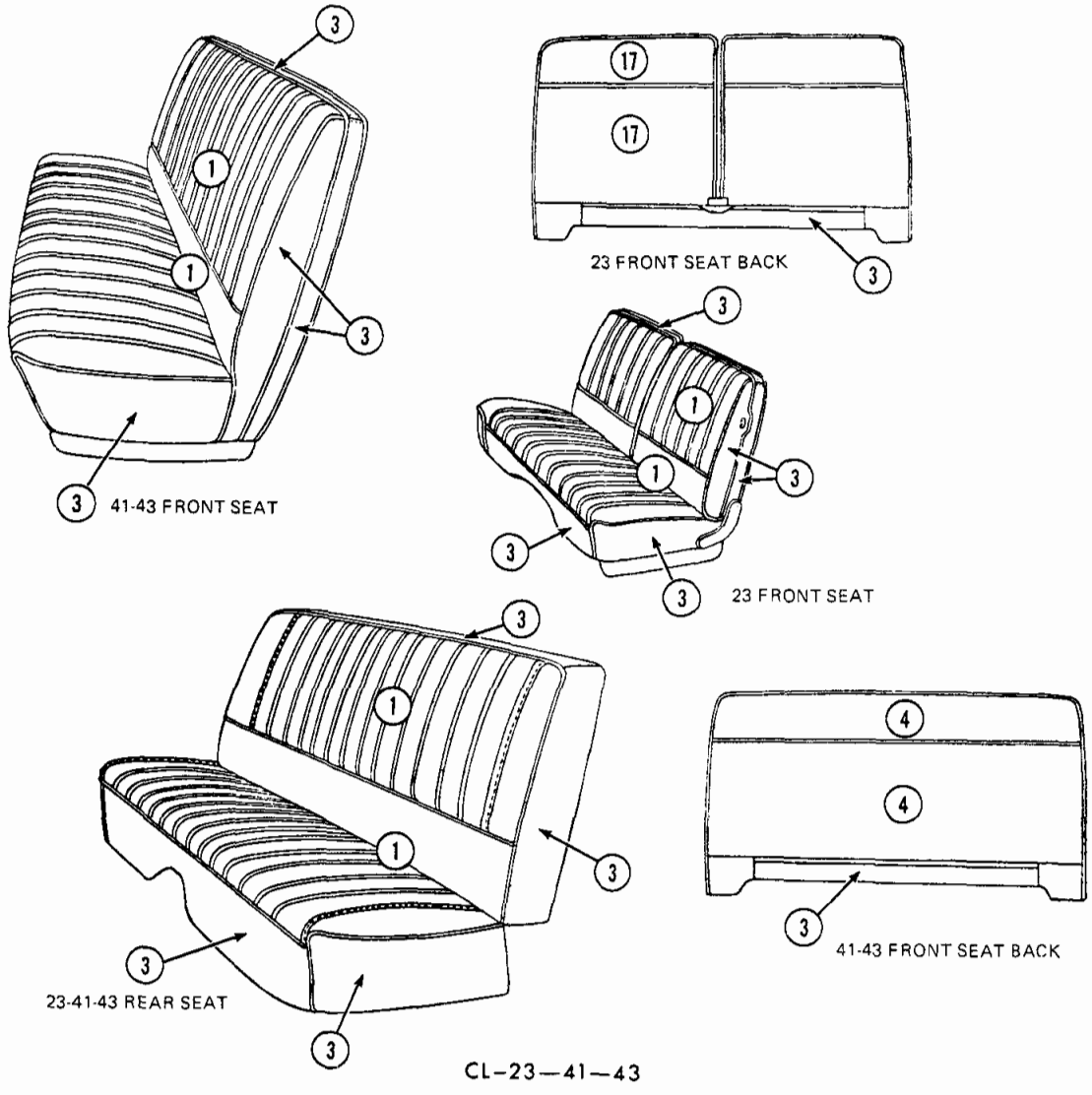

CL–23–41–43

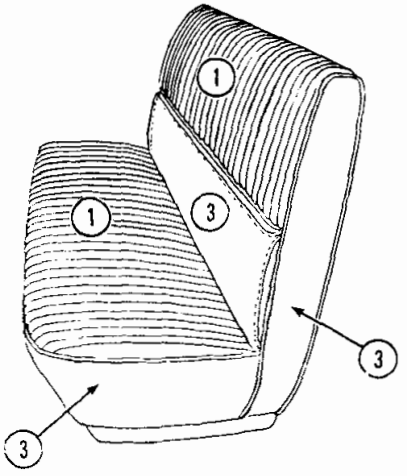

41-43 FRONT SEAT

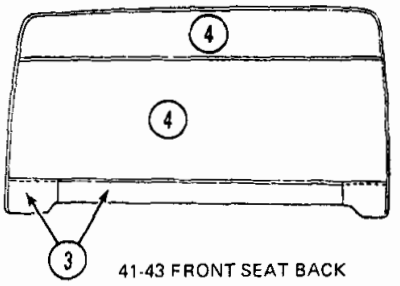

41-43 FRONT SEAT BACK

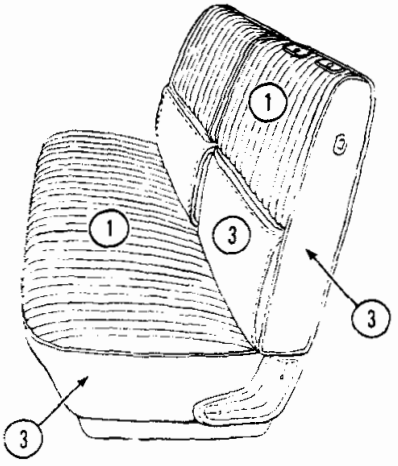

23 FRONT SEAT

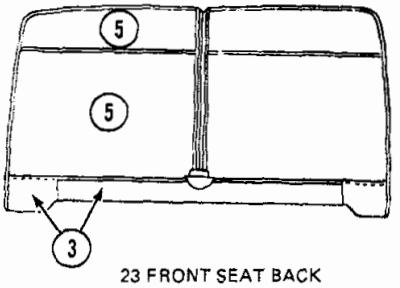

23 FRONT SEAT BACK

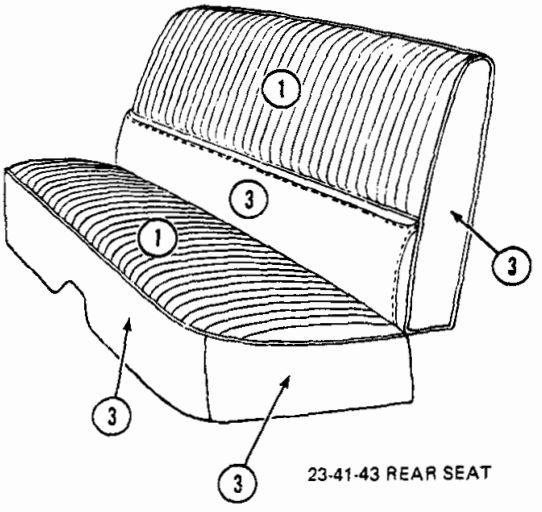

23-41-43 REAR SEAT

CL 23—41—43

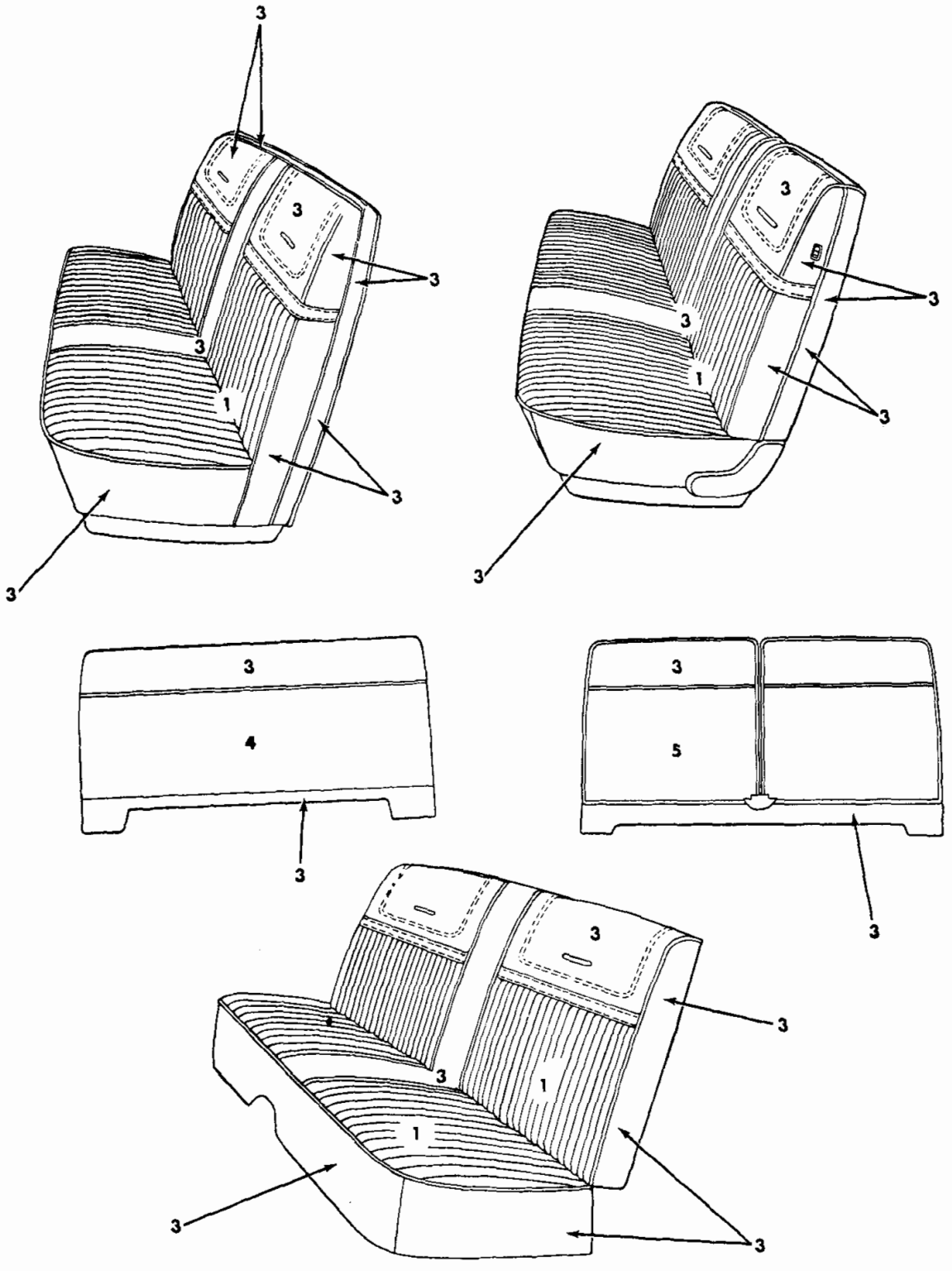

CL 23-41-43

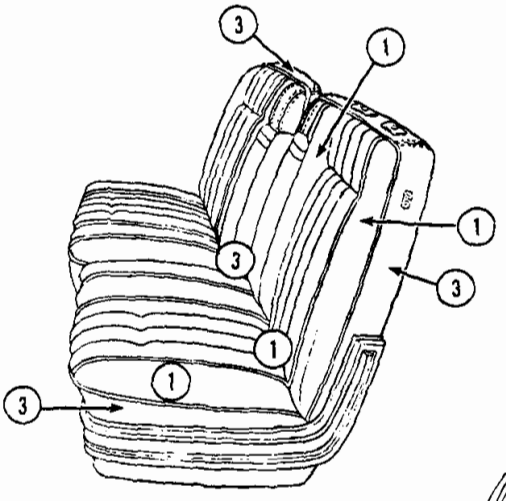

FRONT SEAT 23-41-43-45-46

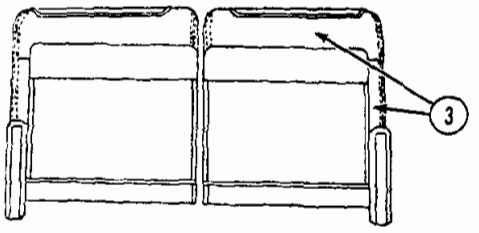

FRONT SEAT BACK 23-41-43-45-46

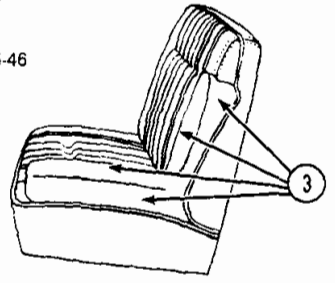

FRONT SEAT CENTER ARM REST

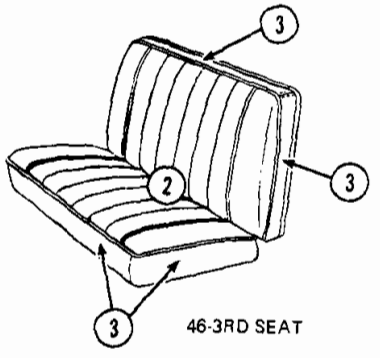

46-3RD SEAT

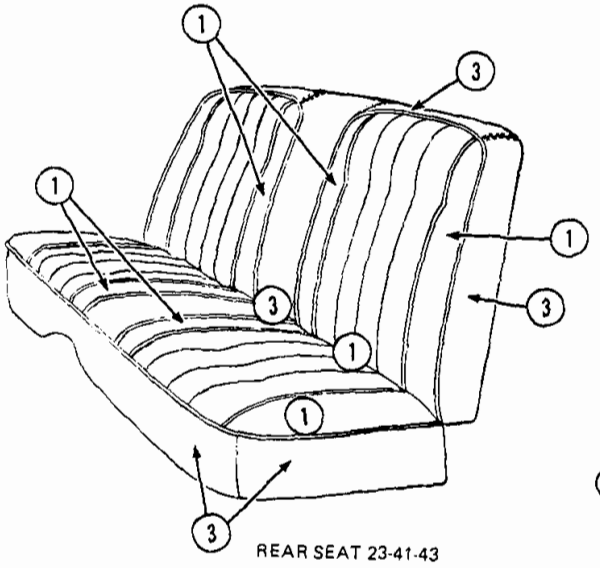

REAR SEAT 23-41-43

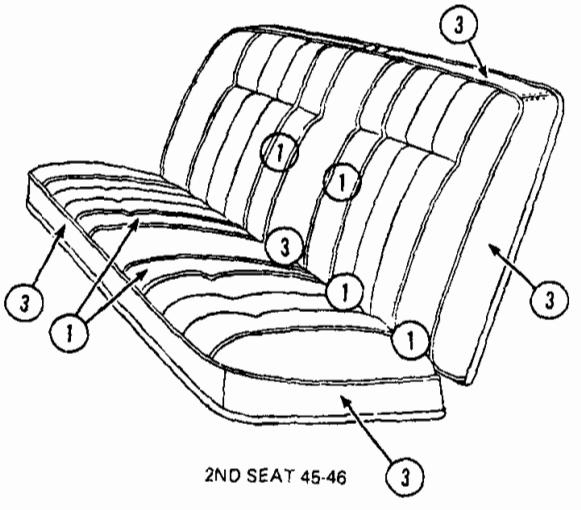

2ND SEAT 45-46

C–23—41—43—45—46

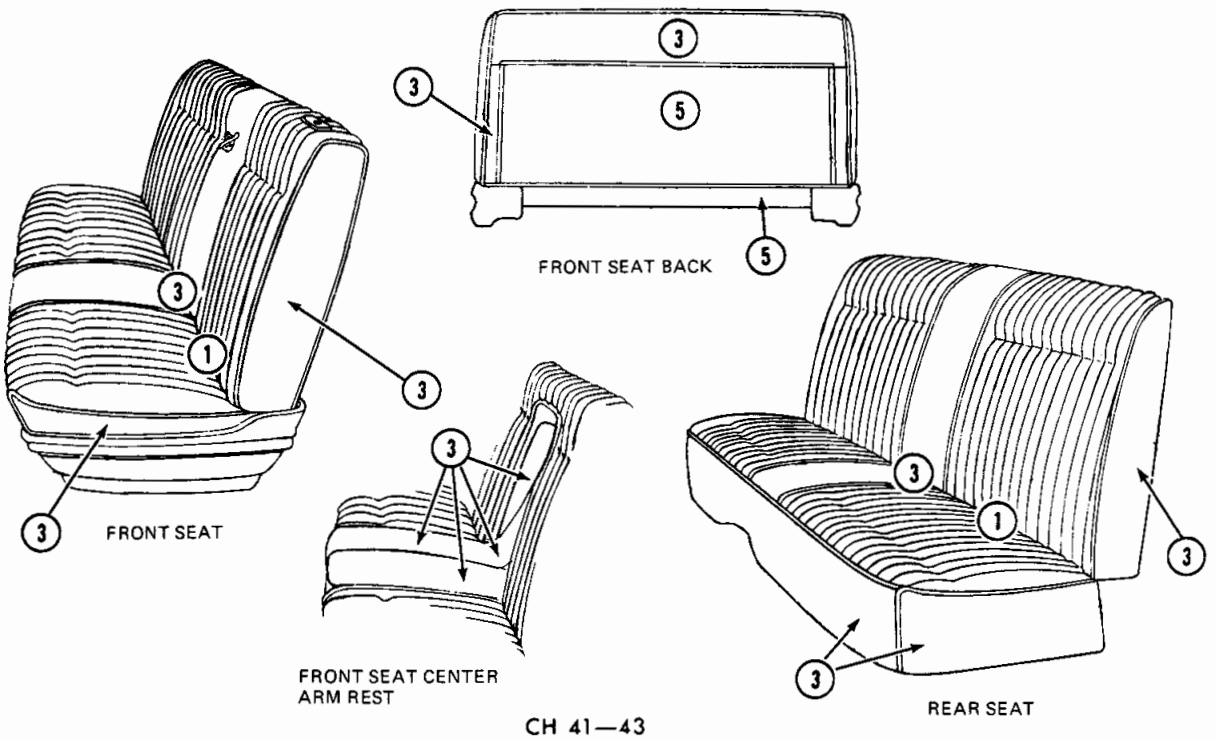

CH 41—43

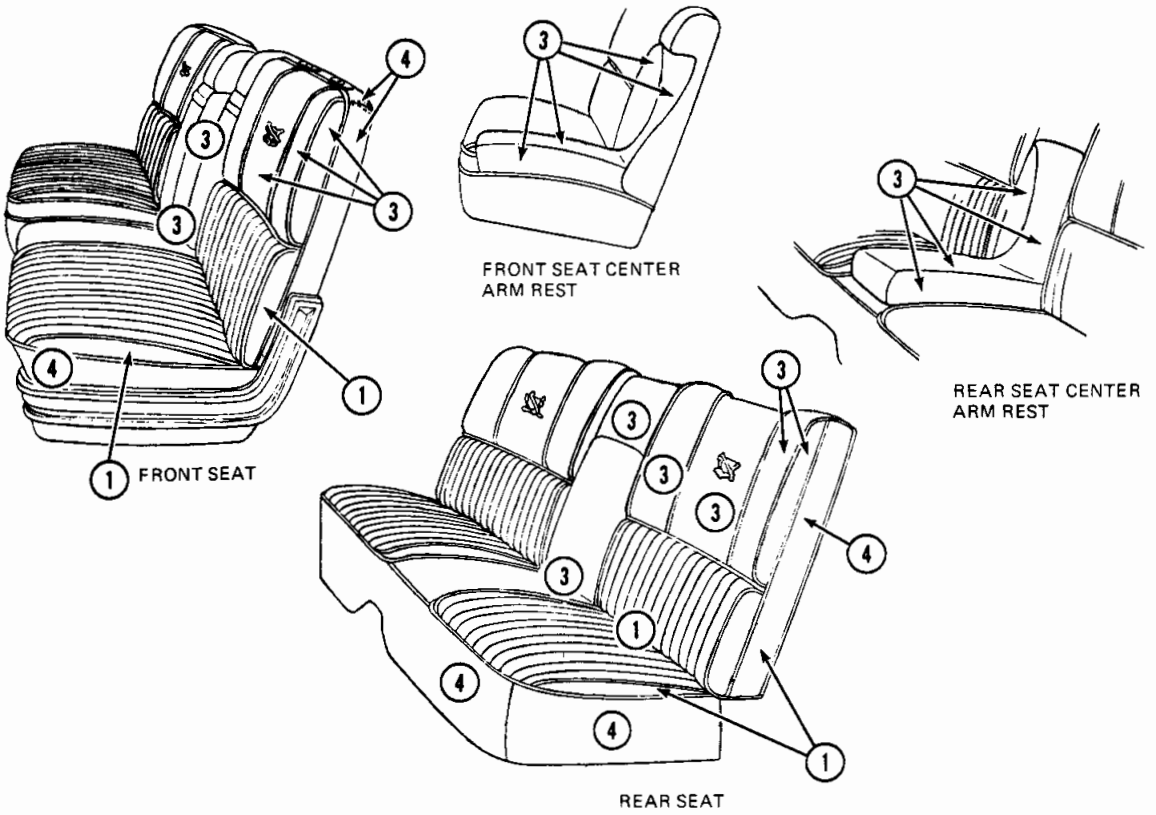

CS 23—41—43

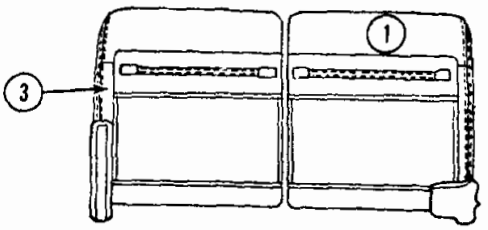

FRONT SEAT BACK

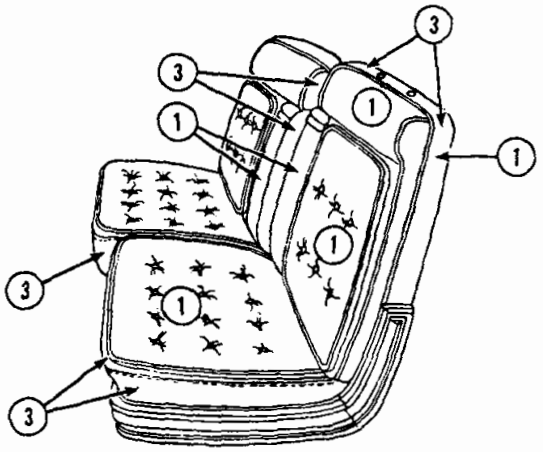

FRONT SEAT

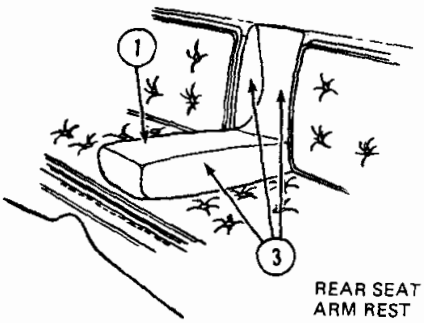

REAR SEAT CENTER ARM REST

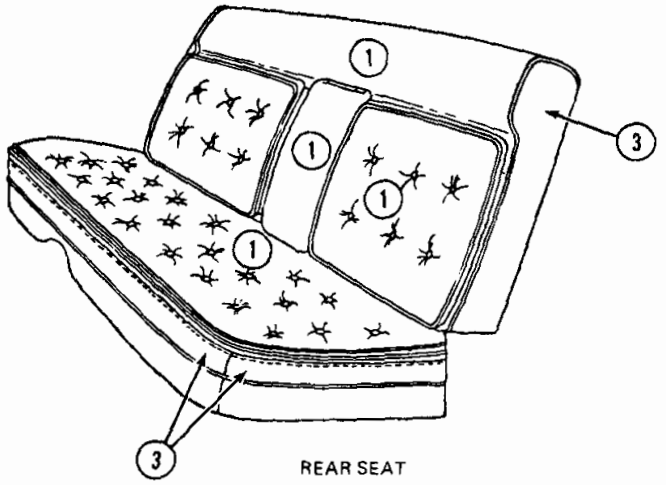

REAR SEAT

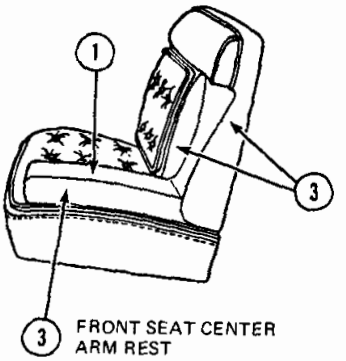

FRONT SEAT CENTER ARM REST

YM 23—43—LEATHER

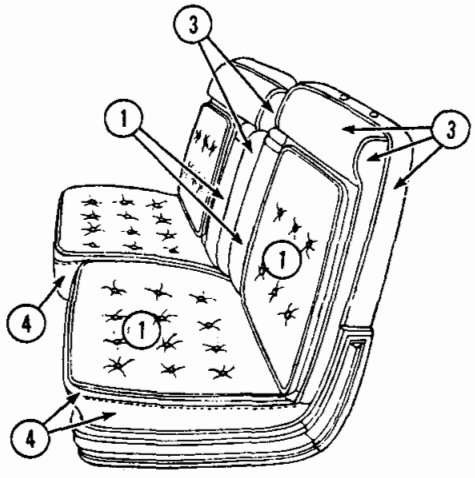

FRONT SEAT

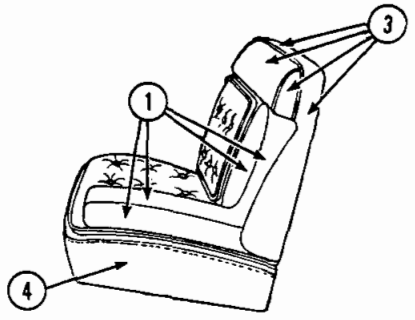

FRONT SEAT CENTER ARM REST

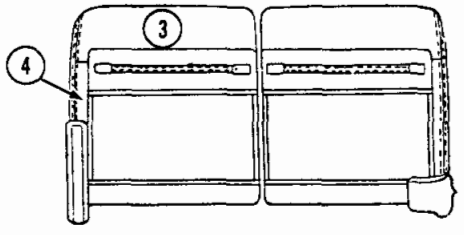

FRONT SEAT BACK

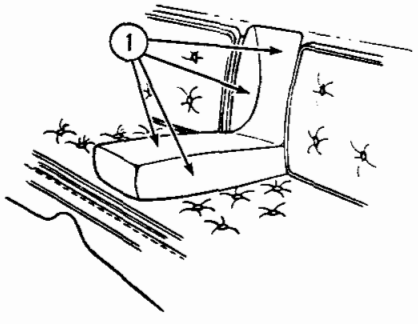

REAR SEAT CENTER ARM REST

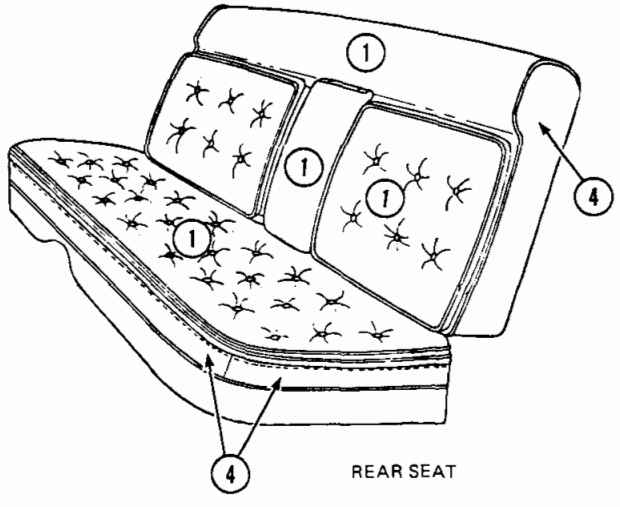

REAR SEAT

YM 23—43
CLOTH & LEATHER

NOTES

ROLLED STOCK INFORMATION

NOTES: VINYL AND CLOTH

Requirements must be ordered in inch quantities.
i.e. 20 Inches = 20 Running Inches of Material

HIDE OR LEATHER

Requirements must be ordered by quantity 1.
Indicating size of piece required.
i.e. 1 (part number) -24 x 12 Inches

NOTES

VALIANT

2 DOOR HT-2 DOOR FASTBACK

REF.	TYPE OF MATERIAL	INCHES WIDE	PART NUMBERS AND COLORS						
			BLUE A1B	GREEN A1G	BLACK A1X				
	CLOTH	63"	R000 KB6	R000 KG6	R000 KX9				
3	VINYL	54"	R400 KB6	R400 KG6	R400 KX9				
4	VINYL	56"	R402 KB6	R402 KG6	R402 KX9				

4 DOOR SEDAN

REF.	TYPE OF MATERIAL	INCHES WIDE	PART NUMBERS AND COLORS						
			BLUE A2B	GREEN A2G	BLACK A2X				
1	VINYL	50"	R406 KB7	R406 KG6	R406 JX9				
2	VINYL	45"	R407 KB7	R407 KG6	R407 JX9				
3	VINYL	54"	R400 KB6	R400 KG6	R400 KX9				
5	VINYL	56"	R402 KB6	R402 KG6	R402 KX9				

2 DOOR FASTBACK, 4 DOOR SEDAN

REF.	TYPE OF MATERIAL	INCHES WIDE	PART NUMBERS AND COLORS						
			BLUE C4B	GREEN C4G	PARCHMENT C4L	BLACK C4X			
1	NOT SERVICED SEE PART TYPE CODE 23-108-5, 23-108-16, 23-109-4, 23-109-36								
4	VINYL	54"	R400 KB6	R400 KG6	R400 KL3	R400 KX9			

2 DOOR FASTBACK

REF.	TYPE OF MATERIAL	INCHES WIDE	PART NUMBERS AND COLORS						
			PARCHMENT C6L	BLACK C6X	BLACK & WHITE C6XW				
1	NOT SERVICED SEE PART TYPE CODE 23-108-5, 23-108-16								
2	NOT SERVICED SEE PART TYPE CODE 23-109-4, 23-109-36 (W/O FOLD DOWN SEAT)								
3	NOT SERVICED SEE PART TYPE CODE 23-109-4, 23-109-36 (W/FOLD DOWN SEAT)								
5	VINYL	54"	R400 KL3	R400 KX9	R400 KW1				

2 DOOR TH-2 DOOR FASTBACK

REF.	TYPE OF MATERIAL	INCHES WIDE	PART NUMBERS AND COLORS						
			BLUE D2B	GREEN D2G	PARCHMENT D2L	BLACK D2X	GOLD D2Y		
1	NOT SERVICED SEE PART TYPE CODE 23-108-5, 23-108-16, 23-109-4, 23-109-36								
2	NOT SERVICED SEE PART TYPE CODE 23-109-36								
3	VINYL	54"	R400 KB6	R400 KG6	R400 KL3	R400 KX9	R400 KY3		
4	VINYL	54"	R403 KB6	R403 KG6	R403 KL3	R403 KX9	R403 KY3		

2 DOOR HT

REF.	TYPE OF MATERIAL	INCHES WIDE	PART NUMBERS AND COLORS						
			BLUE E2B	GREEN E2G	PARCHMENT E2L	BLACK E2X	GOLD E2Y		
1	NOT SERVICED SEE PART TYPE CODE 23-108-5, 23-108-16, 23-109-4, 23-109-36								
3	VINYL	54"	R400 KB6	R400 KG6	R400 KL3	R400 KX9	R400 KY3		

Printed in U.S.A.
November, 1974

VALIANT Cont'd.

4 DOOR SEDAN

REF.	TYPE OF MATERIAL	INCHES WIDE	PART NUMBERS AND COLORS						
			BLUE L1B	GREEN L1G	PARCHMENT L1L	GOLD L1Y			
1	NOT SERVICED SEE PART TYPE CODE 23-108-5, 23-108-16, 23-109-4, 23-109-36								
3	VINYL	54"	R400 KB6	R400 KG6	R400 KL3	R400 KY3			

2 DOOR HT

REF.	TYPE OF MATERIAL	INCHES WIDE	PART NUMBERS AND COLORS						
			BLUE F3B	GREEN F3G	PARCHMENT F3L	BLACK F3X			
1	NOT SERVICED SEE PART TYPE CODE 23-108-5, 23-108-16, 23-109-4, 23-109-36								
2	VINYL	54"	R400 KB6	R400 KG6	R400 KL3	R400 KX9			

2 DOOR HT, 4 DOOR SEDAN

REF.	TYPE OF MATERIAL	INCHES WIDE	PART NUMBERS AND COLORS						
			PARCHMENT H1LL						
1	NOT SERVICED SEE PART CODE 23-108-5, 23-108-16, 23-109-4, 23-109-36								
3	VINYL	54"	R400 KL3						

2 DOOR HT, 4 DOOR SEDAN

REF.	TYPE OF MATERIAL	INCHES WIDE	PART NUMBERS AND COLORS						
			PARCHMENT H5LL	GREEN H5GG					
1	NOT SERVICED SEE PART CODE 23-108-5, 23-108-16, 23-109-4, 23-109-36								
3	VINYL	54"	R400 KL3	R400 KG6					

2 DOOR FASTBACK

REF.	TYPE OF MATERIAL	INCHES WIDE	PART NUMBERS AND COLORS						
			GOLD & WHITE M2YW						
1	NOT SERVICED SEE PART TYPE CODE 23-108-5, 23-108-16, 23-109-4, 23-109-36								
3	VINYL	54"	R400 KW1						

NOTES

Printed in U.S.A.
November, 1974

DART

2 DOOR HT, 2 DOOR FASTBACK

REF.	TYPE OF MATERIAL	INCHES WIDE	PART NUMBERS AND COLORS						
			BLUE A1B	GREEN A1G	BLACK A1X				
1	CLOTH	63"	R000 KB6	R000 KG6	R000 KX9				
3	VINYL	54"	R400 KB6	R400 KG6	R400 KX9				
4	VINYL	56"	R402 KB6	R402 KG6	R402 KX9				

4 DOOR SEDAN

REF.	TYPE OF MATERIAL	INCHES WIDE	PART NUMBERS AND COLORS						
			BLUE A2B	GREEN A2G	BLACK A2X				
1	VINYL	50"	R406 KB7	R406 KG6	R406 KX9				
2	VINYL	45"	R407 KB7	R407 KG6	R407 KX9				
3	VINYL	54"	R400 KB6	R400 KG6	R400 KX9				
5	VINYL	56"	R402 KB6	R400 KG6	R400 KX9				

2 DOOR HT, 2 DOOR FASTBACK

REF.	TYPE OF MATERIAL	INCHES WIDE	PART NUMBERS AND COLORS						
			BLUE D2B	GREEN D2G	PARCHMENT D2L	BLACK D2X	GOLD D2Y		
1	NOT SERVICED SEE PART TYPE CODE 23-108-5, 23-108-16, 23-109-4, 23-109-36 (W/FOLD DOWN SEAT)								
2	NOT SERVICED SEE PART TYPE CODE 23-109-4, 23-109-36 (W/O FOLD DOWN SEAT)								
3	VINYL	54"	R400 KB6	R400 KG6	R400 KL3	R400 KX9	R400 KY3		
4	VINYL	54"	R403 KB6	R403 KG6	R403 KL3	R403 KX9	R403 KY3		

2 DOOR HT

REF.	TYPE OF MATERIAL	INCHES WIDE	PART NUMBERS AND COLORS						
			BLUE F3B	GREEN F3G	PARCHMENT F3L	BLACK F3X			
1	NOT SERVICED SEE PART TYPE CODE 23-108-5, 23-109-36								
11	NOT SERVICED SEE PART TYPE CODE 23-108-16, 23-109-4								
2	VINYL	54"	R400 KB6	R400 KG6	R400 KL3	R400 KX9			

2 DOOR FASTBACK, 4 DOOR SEDAN

REF.	TYPE OF MATERIAL	INCHES WIDE	PART NUMBERS AND COLORS						
			BLUE F4B	GREEN F4G	PARCHMENT F4L	BLACK F4X			
1	NOT SERVICED SEE PART TYPE CODE 23-108-5, 23-108-16								
3	NOT SERVICED SEE PART TYPE CODE 23-109-4, 23-109-36 (W/FOLD DOWN SEAT)								
4	VINYL	54"	R400 KB6	R400 KG6	R400 KL3	R400 KX9			

2 DOOR FASTBACK

REF.	TYPE OF MATERIAL	INCHES WIDE	PART NUMBERS AND COLORS						
			PARCHMENT F6L	BLACK F6X	BLACK & WHITE F6XW				
1	NOT SERVICED SEE PART TYPE CODE 23-108-5, 23-108-16								
2	NOT SERVICED SEE PART TYPE CODE 23-109-4, 23-109-36 (W/O FOLD DOWN SEAT)								
3	NOT SERVICED SEE PART TYPE CODE 23-109-4, 23-109-36 (W/FOLD DOWN SEAT)								
5	VINYL	54"	R400 KL3	R400 KX9	R400 KW1				

Printed in U.S.A.
November, 1974

DART Cont'd.

4 DOOR SEDAN

REF.	TYPE OF MATERIAL	INCHES WIDE	PART NUMBERS AND COLORS						
			BLUE L1B	GREEN L1G	PARCHMENT L1L	GOLD L1Y			
1	NOT SERVICED SEE PART TYPE CODE 23-108-5, 23-108-16, 23-109-4, 23-109-36 (W/O FOLD DOWN SEAT)								
3	NOT SERVICED SEE PART TYPE CODE 23-109-4, 23-109-36 (W/FOLD DOWN SEAT)								
4	VINYL	54"	R400 KB6	R400 KG6	R400 KL3	R400 KY3			

2 DOOR HT

REF.	TYPE OF MATERIAL	INCHES WIDE	PART NUMBERS AND COLORS						
			BLUE E2B	GREEN E2G	PARCHMENT E2L	BLACK E2X	GOLD E2Y		
1	NOT SERVICED SEE PART TYPE CODE 23-108-5, 23-108-16								
2	NOT SERVICED SEE PART TYPE CODE 23-109-4, 23-109-36								
3	VINYL	54"	R400 KB6	R400 KG6	R400 KL3	R400 KX9	R400 KY3		
4	VINYL	54"	R403 KB6	R403 KG6	R403 KL3	R403 KX9	R403 KY3		

2 DOOR HT, 4 DOOR SEDAN

REF.	TYPE OF MATERIAL	INCHES WIDE	PART NUMBERS AND COLORS						
			PARCHMENT H1LL						
1	NOT SERVICED SEE PART TYPE CODE 23-108-5, 23-108-16, 23-109-4, 23-109-36								
3	VINYL	54"	R400 KL3						

2 DOOR HT, 4 DOOR SEDAN

REF.	TYPE OF MATERIAL	INCHES WIDE	PART NUMBERS AND COLORS						
			PARCHMENT H5LL	GREEN H5GG					
1	NOT SERVICED SEE PART TYPE CODE 23-108-5, 23-108-16, 23-109-4, 23-109-36								
3	VINYL	54"	R400 KL3	R400 KG6					

2 DOOR FASTBACK

REF.	TYPE OF MATERIAL	INCHES WIDE	PART NUMBERS AND COLORS						
			ORANGE-BLACK- WHITE J6VW						
1	NOT SERVICED SEE PART TYPE CODE 23-108-5, 23-108-16, 23-109-4, 23-109-36								
3	VINYL	54"	R400 KW1						

2 DOOR FASTBACK

REF.	TYPE OF MATERIAL	INCHES WIDE	PART NUMBERS AND COLORS						
			GOLD & WHITE M2YW						
1	NOT SERVICED SEE PART TYPE CODE 23-108-5, 23-108-16, 23-109-4, 23-109-36								
3	VINYL	54"	R400 KW1						

Printed in U.S.A.
November, 1974

BARRACUDA

2 DOOR HT

REF.	TYPE OF MATERIAL	INCHES WIDE	PART NUMBERS AND COLORS						
			BLUE A6B	GREEN A6G	BLACK A6X	BLACK & WHITE A6XW			
1	NOT SERVICED SEE PART TYPE CODE 23-108-5, 23-108-16, 23-109-4, 23-109-36								
2	VINYL	54"	R400 KB6	R400 KG6	R400 KX9	R400 KW1			

NOTES

Printed in U.S.A.
November, 1974

CHALLENGER

2 DOOR HT

REF.	TYPE OF MATERIAL	INCHES WIDE	PART NUMBERS AND COLORS						
			BLUE A6B	GREEN A6G	BLACK A6X	BLACK & WHITE A6XW			
1	NOT SERVICED SEE PART TYPE CODE 23-108-5, 23-108-16, 23-109-4, 23-109-36								
2	VINYL	54"	R400 KB6	R400 KG6	R400 KX9	R400 KW1			

NOTES

Printed in U.S.A.
November, 1974

SATELLITE

4 DOOR SEDAN, 4 DOOR-6 PASS STATION WAGON

REF.	TYPE OF MATERIAL	INCHES WIDE	PART NUMBERS AND COLORS						
			BLUE A2B	GREEN A2G	CHESTNUT A2T				
1	VINYL	51"	R426 KBB	R426 KGG	R426 KTT				
2	VINYL	44"	R424 KBB	R424 KGG	R424 KTT				
3	VINYL	54"	R403 KB6	R403 KG6	R403 KT7				
9	VINYL	54"	R400 KB6	R400 KG6	R400 KT7				

2 DOOR SEDAN

REF.	TYPE OF MATERIAL	INCHES WIDE	PART NUMBERS AND COLORS						
			BLUE B2B	GREEN B2G	BLACK B2X				
1	VINYL	44"	R424 KBB	R424 KGG	R424 KXA				
3	VINYL	54"	R400 KB6	R400 KG6	R400 KX9				
4	VINYL	56"	R402 KB6	R402 KG6	R402 KX9				

2 DOOR SEDAN, 2 DOOR HT

REF.	TYPE OF MATERIAL	INCHES WIDE	PART NUMBERS AND COLORS						
			BLUE C2B	GREEN C2G	PARCHMENT C2L	BLACK C2X	GOLD C2Y		
1	NOT SERVICED SEE PART TYPE CODE 23-108-5, 23-109-36								
2	NOT SERVICED SEE PART TYPE CODE 23-108-16, 23-109-4								
3	VINYL	54"	R400 KB6	R400 KG6	R400 KL3	R400 KX9	R400 KY3		
4	VINYL	56"	R402 KB6	R402 KG6	R402 KL3	R402 KX9	R402 KY3		

2 DOOR SEDAN, 4 DOOR SEDAN, 2 DOOR HT

REF.	TYPE OF MATERIAL	INCHES WIDE	PART NUMBERS AND COLORS						
			BLUE F1B	GREEN F1G	CHESTNUT F1T	BLACK F1X	RED, BLACK, WHITE F1EW	GOLD F1Y	
1	NOT SERVICED SEE PART TYPE CODE 23-108-5, 23-108-16, 23-109-4, 23-109-36								
3	VINYL	54"	R400 KB6	R400 KG6	R400 KT7	R400 KX9	R400 KW1	R400 KY3	
4	VINYL	54"	R403 KB6	R403 KG6	R403 KT7	R403 KX9	R403 KW1	R403 KY3	

4 DOOR SEDAN, 4 DOOR STATION WAGON

REF.	TYPE OF MATERIAL	INCHES WIDE	PART NUMBERS AND COLORS						
			BLUE F2B	GREEN F2G	PARCHMENT F2L	CHESTNUT F2T	BLACK F2X	GOLD F2Y	
1	NOT SERVICED SEE PART TYPE CODE 23-108-5, 23-108-16, 23-109-4, 23-109-36								
3	VINYL	54"	R400 KB6	R400 KG6	R400 KL3	R400 KT7	R400 KX9	R400 KY3	
4	VINYL	54"	R403 KB6	R403 KG6	R403 KL3	R403 KT7	R403 KX9	R403 KY3	

2 DOOR SEDAN

REF.	TYPE OF MATERIAL	INCHES WIDE	PART NUMBERS AND COLORS						
			BLUE D6B	GREEN D6G	BLACK D6X	BLACK & WHITE D6XW	GOLD D6Y		
1	NOT SERVICED SEE PART TYPE CODE 23-109-4, 23-109-36								
14	NOT SERVICED SEE PART TYPE CODE 23-108-5, 23-108-16								
3	VINYL	54"	R400 KB6	R400 KG6	R400 KX9	R400 KW1	R400 KY3		

2 DOOR HT

REF.	TYPE OF MATERIAL	INCHES WIDE	PART NUMBERS AND COLORS						
			BLUE H6B	GREEN H6G	BLACK H6X	BLACK & WHITE H6XW	GOLD H6Y		
1	NOT SERVICED SEE PART TYPE CODE 23-109-4, 23-109-36								
14	NOT SERVICED SEE PART TYPE CODE 23-108-5, 23-108-16								
3	VINYL	54"	R400 KB6	R400 KG6	R400 KX9	R400 KW1	R400 KY3		

Printed in U.S.A.
November, 1974

SATELLITE Cont'd.

2 DOOR HT

REF.	TYPE OF MATERIAL	INCHES WIDE	PART NUMBERS AND COLORS BLUE V3B	GREEN V3G	BLACK V3X	GOLD V3Y
1	NOT SERVICED SEE PART TYPE CODE 23-108-5, 23-108-16, 23-109-4, 23-109-36					
3	VINYL	54"	R400 KB6	R400 KG6	R400 KX9	R400 KY3
4	VINYL	54"	R400 KB6	R400 KG6	R400 KX9	R400 KY3

4 DOOR STATION WAGON

REF.	TYPE OF MATERIAL	INCHES WIDE	PART NUMBERS AND COLORS BLUE M4B	GREEN M4G	PARCHMENT M4L	CHESTNUT M4T
1	NOT SERVICED SEE PART TYPE CODE 23-109-4, 23-109-36					
14	NOT SERVICED SEE PART TYPE CODE 23-108-5, 23-108-16					
2	VINYL	54"	R400 KB6	R400 KG6	R400 KL3	R400 KT7
3	VINYL	54"	R400 KB6	R400 KG6	R400 KL3	R400 KT7

2 DOOR SEDAN

REF.	TYPE OF MATERIAL	INCHES WIDE	PART NUMBERS AND COLORS RED-BLACK WHITE W5EW
1	NOT SERVICED SEE PART TYPE CODE 23-108-5, 23-108-16, 23-109-4, 23-109-36		
3	VINYL	54"	R400 KW1
4	VINYL	54"	R400 KW1

2 DOOR HT

REF.	TYPE OF MATERIAL	INCHES WIDE	PART NUMBERS AND COLORS RED, BLACK WHITE E5EW
1	NOT SERVICED SEE PART TYPE CODE 23-108-5, 23-108-16, 23-109-4, 23-109-36		
3	VINYL	54"	R400 KW1
4	VINYL	54"	R400 KW1

2 DOOR SEDAN, 2 DOOR HT

REF.	TYPE OF MATERIAL	INCHES WIDE	PART NUMBERS AND COLORS GOLD & BLACK & WHITE V1YW
1	NOT SERVICED SEE PART TYPE CODE 23-108-5, 23-108-16, 23-109-4, 23-109-36		
1	VINYL	54"	R400 KW1

4 DOOR SEDAN

REF.	TYPE OF MATERIAL	INCHES WIDE	PART NUMBERS AND COLORS CHESTNUT K2T	BLACK K2X
1	VINYL	50"	R418 KT7	R418 KX9
2	VINYL	54"	R400 KT7	R400 KX9

4 DOOR SEDAN

REF.	TYPE OF MATERIAL	INCHES WIDE	PART NUMBERS AND COLORS CHESTNUT T2T	BLACK T2X
1	VINYL	50"	R418 KT7	R418 KX9
2	VINYL	54"	R400 KT7	R400 KX9

Printed in U.S.A.
November, 1974

CORONET

4 DOOR SEDAN, 4 DOOR STATION WAGON

REF.	TYPE OF MATERIAL	INCHES WIDE	PART NUMBERS AND COLORS						
			BLUE P2B	GREEN P2G	CHESTNUT P2T				
1	VINYL	44"	R424 KBB	R424 KGG	R424 KTT				
3	VINYL	54"	R400 KB6	R400 KG6	R400 KT7				
4	VINYL	54"	R403 KB6	R403 KG6	R403 KT7				

4 DOOR SEDAN

REF.	TYPE OF MATERIAL	INCHES WIDE	PART NUMBERS AND COLORS						
			BLUE Q1B	GREEN Q1G	CHESTNUT Q1T	BLACK Q1X	GOLD Q1Y		
1	NOT SERVICED SEE PART TYPE CODE 23-108-5, 23-108-16, 23-109-4, 23-109-36								
3	VINYL	54"	R400 KB6	R400 KG6	R400 KT7	R400 KX9	R400 KY3		
4	VINYL	56"	R402 KB6	R402 KG6	R402 KT7	R402 KX9	R402 KY3		

4 DOOR STATION WAGON

REF.	TYPE OF MATERIAL	INCHES WIDE	PART NUMBERS AND COLORS						
			BLUE Q2B	GREEN Q2G	PARCHMENT Q2L	CHESTNUT Q2T			
1	NOT SERVICED SEE PART TYPE CODE 23-108-5, 23-108-16, 23-109-4, 23-109-36								
3	VINYL	54"	R400 KB6	R400 KG6	R400 KL3	R400 KT7			
4	VINYL	56"	R402 KB6	R402 KG6	R402 KL3	R402 KT7			

4 DOOR SEDAN

REF.	TYPE OF MATERIAL	INCHES WIDE	PART NUMBERS AND COLORS						
			BLUE R4B	GREEN R4G	PARCHMENT R4L	CHESTNUT R4T	BLACK R4X	GOLD R4Y	
1	NOT SERVICED SEE PART TYPE CODE 23-109-4, 23-109-36								
14	NOT SERVICED SEE PART TYPE CODE 23-108-5, 23-108-16								
2	VINYL	54"	R400 KB6	R400 KG6	R400 KL3	R400 KT7	R400 KX9	R400 KY3	
3	VINYL	54"	R400 KB6	R400 KG6	R400 KL3	R400 KT7	R400 KX9	R400 KY3	

4 DOOR STATION WAGON

REF.	TYPE OF MATERIAL	INCHES WIDE	PART NUMBERS AND COLORS						
			BLUE M4B	GREEN M4G	PARCHMENT M4L	CHESTNUT M4T			
1	NOT SERVICED SEE PART TYPE CODE 23-109-4, 23-109-36								
14	NOT SERVICED SEE PART TYPE CODE 23-108-5, 23-108-16								
2	VINYL	54"	R400 KB6	R400 KG6	R400 KL3	R400 KT7			
3	VINYL	54"	R400 KB6	R400 KG6	R400 KL3	R400 KT7			

4 DOOR SEDAN

REF.	TYPE OF MATERIAL	INCHES WIDE	PART NUMBERS AND COLORS						
			CHESTNUT K2T	BLACK K2X					
1	VINYL	50"	R418 KT7	R418 KX9					
2	VINYL	54"	R400 KT7	R400 KX9					

Printed in U.S.A.
November, 1974

CORONET Cont'd.

4 DOOR SEDAN

REF.	TYPE OF MATERIAL	INCHES WIDE	PART NUMBERS AND COLORS						
			CHESTNUT T2T	BLACK T2X					
1	VINYL	50"	R418 KT7	R418 KX9					
2	VINYL	54"	R400 KT7	R400 KX9					

4 DOOR SEDAN

REF.	TYPE OF MATERIAL	INCHES WIDE	PART NUMBERS AND COLORS						
			BLACK G2X						
1	VINYL	50"	R418 KX9						
2	VINYL	54"	R400 KX9						

NOTES

Printed in U.S.A.
November, 1974

CHARGER

2 DOOR SEDAN

REF.	TYPE OF MATERIAL	INCHES WIDE	PART NUMBERS AND COLORS						
			BLUE B2B	GREEN B2G	BLACK B2X				
1	VINYL	44"	R424 KBB	R424 KGG	R424 KXA				
3	VINYL	54"	R400 KB6	R400 KG6	R400 KX9				
4	VINYL	56"	R402 KB6	R402 KG6	R402 KX9				

2 DOOR HT

REF.	TYPE OF MATERIAL	INCHES WIDE	PART NUMBERS AND COLORS						
			BLUE S1B	GREEN S1G	BLACK S1X	GOLD S1Y			
1	NOT SERVICED SEE PART TYPE CODE 23-108-5, 23-108-16, 23-109-4, 23-109-36								
3	VINYL	54"	R400 KB6	R400 KG6	R400 KX9	R400 KY3			
4	VINYL	56"	R402 KB6	R402 KG6	R402 KX9	R402 KY3			

2 DOOR HT

REF.	TYPE OF MATERIAL	INCHES WIDE	PART NUMBERS AND COLORS						
			BLUE S2B	GREEN S2G	PARCHMENT S2L	BLACK S2X	GOLD S2Y		
1	NOT SERVICED SEE PART TYPE CODE 23-108-5, 23-108-16, 23-109-4, 23-109-36								
3	VINYL	54"	R400 KB6	R400 KG6	R400 KL3	R400 KX9	R400 KY3		
4	VINYL	56"	R402 KB6	R402 KG6	R402 KL3	R402 KX9	R402 KY3		

2 DOOR HT

REF.	TYPE OF MATERIAL	INCHES WIDE	PART NUMBERS AND COLORS						
			BLUE D6B	GREEN D6G	BLACK D6X	BLACK & WHITE D6XW	GOLD D6Y		
1	NOT SERVICED SEE PART TYPE CODE 23-109-4, 23-109-36								
14	NOT SERVICED SEE PART TYPE CODE 23-108-5, 23-108-16								
2	VINYL	54"	R400 KB6	R400 KG6	R400 KX9	R400 KW1	R400 KY3		
3	VINYL	54"	R400 KB6	R400 KG6	R400 KX9	R400 KW1	R400 KY3		

2 DOOR FASTBACK

REF.	TYPE OF MATERIAL	INCHES WIDE	PART NUMBERS AND COLORS						
			BLUE H6B	GREEN H6G	BLACK H6X	BLACK & WHITE H6XW	GOLD H6Y		
1	NOT SERVICED SEE PART TYPE CODE 23-109-4, 23-109-36								
14	NOT SERVICED SEE PART TYPE CODE 23-108-5, 23-108-16								
2	VINYL	54"	R400 KB6	R400 KG6	R400 KX9	R400 KW1	R400 KY3		
3	VINYL	54"	R400 KB6	R400 KG6	R400 KX9	R400 KW1	R400 KY3		

2 DOOR FASTBACK

REF.	TYPE OF MATERIAL	INCHES WIDE	PART NUMBERS AND COLORS						
			BLUE V3B	GREEN V3G	BLACK V3X	GOLD V3Y			
1	NOT SERVICED SEE PART TYPE CODE 23-108-5, 23-108-16, 23-109-4, 23-109-36								
3	VINYL	54"	R400 KB6	R400 KG6	R400 KX9	R400 KY3			
4	VINYL	54"	R400 KB6	R400 KG6	R400 KX9	R400 KY3			

Printed in U.S.A.
November, 1974

CHARGER Cont'd.

2 DOOR FASTBACK

REF.	TYPE OF MATERIAL	INCHES WIDE	PART NUMBERS AND COLORS						
			BLUE M4B	GREEN M4G	PARCHMENT M4L	BLACK M4X	GOLD M4Y		
1	NOT SERVICED SEE PART TYPE CODE 23-109-4, 23-109-36								
14	NOT SERVICED SEE PART TYPE CODE 23-108-5, 23-108-16								
2	VINYL	54"	R400 KB6	R400 KG6	R400 KL3	R400 KX9	R400 KY3		
3	VINYL	54"	R400 KB6	R400 KG6	R400 KL3	R400 KX9	R400 KY3		

2 DOOR HT

REF.	TYPE OF MATERIAL	INCHES WIDE	PART NUMBERS AND COLORS						
			GOLD-BLACK-WHITE N1YW						
1	NOT SERVICED SEE PART TYPE CODE 23-108-5, 23-108-16, 23-109-4, 23-109-36								
3	VINYL	54"	R400 KW1						
4	VINYL	56"	R402 KW1						

2 DOOR HT, 2 DOOR FASTBACK

REF.	TYPE OF MATERIAL	INCHES WIDE	PART NUMBERS AND COLORS						
			GOLD-BLACK-WHITE E5YW						
1	NOT SERVICED SEE PART TYPE CODE 23-108-5, 23-108-16, 23-109-4, 23-109-36								
3	VINYL	54"	R400 KW1						
4	VINYL	54"	R400 KW1						

2 DOOR SEDAN, 2 DOOR HT.

REF.	TYPE OF MATERIAL	INCHES WIDE	PART NUMBERS AND COLORS						
			PARCHMENT W1LL						
1	NOT SERVICED SEE PART TYPE CODE 23-108-5, 23-108-16, 23-109-4, 23-109-36								
3	VINYL	54"	R400 KL3						

NOTES

Printed in U.S.A.
November, 1974

PLYMOUTH

4 DOOR SEDAN

REF.	TYPE OF MATERIAL	INCHES WIDE	PART NUMBERS AND COLORS						
			GREEN A1G	BLACK A1X	GOLD A1Y				
1	CLOTH	68"	R003 KG6	R003 JX9	R003 KY3				
2	VINYL	54"	R400 KG6	R400 KX9	R400 KY3				
3	VINYL	56"	R402 KG6	R402 KX9	R402 KY3				
4	VINYL	54"	R403 KG6	R403 KX9	R403 KY3				

4 DOOR SEDAN, 4 DOOR STATION WAGON

REF.	TYPE OF MATERIAL	INCHES WIDE	PART NUMBERS AND COLORS						
			GREEN A2G	CHESTNUT A2T	BLACK A2X	GOLD A2Y			
1	VINYL	55"	R412 KG6	R412 KT8	R412 KX9	R412 KY4			
2	VINYL	54"	R400 KG6	R400 KT7	R400 KX9	R400 KY3			
3	VINYL	56"	R402 KG6	R402 KT7	R402 KX9	R402 KY3			
4	VINYL	54"	R403 KG6	R403 KT7	R403 KX9	R403 KY3			

4 DOOR SEDAN

REF.	TYPE OF MATERIAL	INCHES WIDE	PART NUMBERS AND COLORS						
			GOLD K1Y						
1	CLOTH	69"	R001 KY3						
3	VINYL	54"	R400 KY3						
4	VINYL	56"	R402 KY3						

4 DOOR SEDAN

REF.	TYPE OF MATERIAL	INCHES WIDE	PART NUMBERS AND COLORS						
			BLACK K2X	GOLD K2Y					
1	VINYL	50"	R418 KX9	R418 KY3					
2	VINYL	54"	R400 KX9	R400 KY3					

2 DOOR HT, 4 DOOR SEDAN

REF.	TYPE OF MATERIAL	INCHES WIDE	PART NUMBERS AND COLORS						
			GREEN B1G	BLACK B1X	GOLD B1Y				
1	NOT SERVICED SEE PART TYPE CODE 23-108-5, 23-108-16, 23-109-4, 23-109-36								
3	VINYL	54"	R400 KG6	R400 KX9	R400 KY3				
4	VINYL	56"	R402 KG6	R402 KX9	R402 KY3				
5	VINYL	54"	R403 KG6	R403 KX9	R403 KY3				

Printed in U.S.A.
November, 1974

PLYMOUTH Cont'd.

2 DOOR HT, 4 DOOR SEDAN, 4 DOOR STATION WAGON

REF.	TYPE OF MATERIAL	INCHES WIDE	PART NUMBERS AND COLORS						
			GREEN B2G	CHESTNUT B2T	BLACK B2X	GOLD B2Y			
1	NOT SERVICED SEE PART TYPE CODE 23-108-5, 23-108-16, 23-109-4, 23-109-36								
3	VINYL	56"	R402 KG6	R402 KT7	R402 KX9	R402 KY3			
4	VINYL	54"	R403 KG6	R403 KT7	R403 KX9	R403 KY3			

2 DOOR HT, 4 DOOR SEDAN, 4 DOOR HT

REF.	TYPE OF MATERIAL	INCHES WIDE	PART NUMBERS AND COLORS						
			BLUE C1B	GREEN C1G	PARCHMENT C1L	BLACK C1X	GOLD C1Y		
1	NOT SERVICED SEE PART TYPE CODE 23-108-5, 23-108-16, 23-109-4, 23-109-36								
3	VINYL	54"	R400 KB6	R400 KG6	R400 KL3	R400 KX9	R400 KY3		
4	VINYL	56"	R402 KB6	R402 KG6	R402 KL3	R402 KX9	R402 KY3		

2 DOOR HT, 4 DOOR SEDAN, 4 DOOR HT, 4 DOOR STATION WAGON

REF.	TYPE OF MATERIAL	INCHES WIDE	PART NUMBERS AND COLORS						
			BLUE C2B	GREEN C2G	PARCHMENT C2L	CHESTNUT C2T	BLACK C2X	GOLD C2Y	
4	NOT SERVICED SEE PART TYPE CODE 23-108-5, 23-108-16, 23-109-4, 23-109-36								
2	VINYL	54"	R400 KB6	R400 KG6	R400 KL3	R400 KT7	R400 KX9	R400 KY3	
3	VINYL	56"	R402 KB6	R402 KG6	R402 KL3	R402 KT7	R402 KX9	R402 KY3	

2 DOOR HT, 4 DOOR SEDAN, 4 DOOR HT, 4 DOOR STATION WAGON

REF.	TYPE OF MATERIAL	INCHES WIDE	PART NUMBERS AND COLORS						
			BLUE D4B	GREEN D4G	PARCHMENT D4L	CHESTNUT D4T	BLACK D4X	GOLD D4Y	
1	NOT SERVICED SEE PART TYPE CODE 23-108-5, 23-108-16, 23-109-4, 23-109-36								
3	VINYL	54"	R400 KB6	R400 KG6	R400 KL3	R400 KT7	R400 KX9	R400 KY3	

4 DOOR SEDAN, 4 DOOR HT

REF.	TYPE OF MATERIAL	INCHES WIDE	PART NUMBERS AND COLORS						
			PARCHMENT H8L						
1	NOT SERVICED SEE PART TYPE CODE 23-108-5, 23-108-16, 23-109-4, 23-109-36								
3	VINYL	54"	R400 KL3						

4 DOOR STATION WAGON

REF.	TYPE OF MATERIAL	INCHES WIDE	PART NUMBERS AND COLORS						
			PARCHMENT G8L						
1	NOT SERVICED SEE PART TYPE CODE 23-108-5, 23-108-16, 23-109-4, 23-109-36								
3	VINYL	54"	R400 KL3						

2 DOOR HT, 4 DOOR HT

REF.	TYPE OF MATERIAL	INCHES WIDE	PART NUMBERS AND COLORS						
			BLUE E3B	GREEN E3G	PARCHMENT E3L	BLACK E3X	GOLD E3Y		
1	NOT SERVICED SEE PART TYPE CODE 23-108-5, 23-108-16, 23-109-4, 23-109-36								
3	VINYL	54"	R400 KB6	R400 KG6	R400 KL3	R400 KX9	R400 KY3		

Printed in U.S.A.
November, 1974

PLYMOUTH Cont'd.

2 DOOR HT, 4 DOOR HT, 4 DOOR STATION WAGON

REF.	TYPE OF MATERIAL	INCHES WIDE	PART NUMBERS AND COLORS						
			BLUE E4B	GREEN E4G	PARCHMENT E4L	CHESTNUT E4T	BLACK E4X	GOLD E4Y	
1	NOT SERVICED SEE PART TYPE CODE 23-108-5, 23-108-16, 23-109-4, 23-109-36								
3	VINYL	54"	R400 KB6	R400 KG6	R400 KL3	R400 KT7	R400 KX9	R400 KY3	

2 DOOR HT, 4 DOOR HT

REF.	TYPE OF MATERIAL	INCHES WIDE	PART NUMBERS AND COLORS						
			BLUE G7B	GREEN G7G	PARCHMENT G7L	BLACK G7X	GOLD G7Y		
1	NOT SERVICED SEE PART TYPE CODE 23-108-5, 23-108-16, 23-109-4, 23-109-36								
3	VINYL	54"	R400 KB6	R400 KG6	R400 KL3	R400 KX9	R400 KY3		

2 DOOR HT, 4 DOOR HT

REF.	TYPE OF MATERIAL	INCHES WIDE	PART NUMBERS AND COLORS						
			PARCHMENT J3LL						
1	NOT SERVICED SEE PART TYPE CODE 23-108-5, 23-108-16, 23-109-4, 23-109-36								
3	VINYL	54"	R400 KL3						

NOTES

Printed in U.S.A.
November, 1974

DODGE

2 DOOR HT, 4 DOOR SEDAN

REF.	TYPE OF MATERIAL	INCHES WIDE	PART NUMBERS AND COLORS						
			GREEN A1G	BLACK A1X	GOLD A1Y				
1	CLOTH	68"	R003 KG6	R003 JX9	R003 KY3				
2	VINYL	54"	R400 KG6	R400 KX9	R400 KY3				
3	VINYL	56"	R402 KG6	R402 KX9	R402 KY3				
4	VINYL	54"	R403 KG6	R403 KX9	R403 KY3				

2 DOOR HT, 4 DOOR SEDAN

REF.	TYPE OF MATERIAL	INCHES WIDE	PART NUMBERS AND COLORS						
			GREEN A2G	BLACK A2X	GOLD A2Y				
1	VINYL	55"	R412 KG6	R412 KX9	R412 KY4				
2	VINYL	54"	R400 KG6	R400 KX9	R400 KY3				
3	VINYL	56"	R402 KG6	R402 KX9	R402 KY3				
4	VINYL	54"	R403 KG6	R403 KX9	R403 KY3				

2 DOOR HT, 4 DOOR SEDAN

REF.	TYPE OF MATERIAL	INCHES WIDE	PART NUMBERS AND COLORS						
			GREEN P1G	PARCHMENT P1L	BLACK P1X	GOLD P1Y			
1	NOT SERVICED SEE PART TYPE CODE 23-108-5, 23-108-16, 23-109-4, 23-109-16								
2	VINYL	54"	R400 KG6	R400 KL3	R400 KX9	R400 KY3			
3	VINYL	56"	R402 KG6	R402 KL3	R402 KX9	R402 KY3			
8	VINYL	54"	R403 KG6	R403 KL3	R403 KX9	R403 KY3			

2 DOOR HT, 4 DOOR SEDAN, 4 DOOR STATION WAGON

REF.	TYPE OF MATERIAL	INCHES WIDE	PART NUMBERS AND COLORS						
			GREEN R2G	PARCHMENT R2L	CHESTNUT R2T	BLACK R2X	GOLD R2Y		
1	NOT SERVICED SEE PART TYPE CODE 23-108-5, 23-108-16, 23-109-4, 23-109-36								
2	VINYL	54"	R400 KG6	R400 KL3	R400 KT7	R400 KX9	R400 KY3		
3	VINYL	56"	R402 KG6	R402 KL3	R402 KT7	R402 KX9	R402 KY3		
10	VINYL	54"	R403 KG6	R403 KL3	R403 KT7	R403 KX9	R403 KY3		

2 DOOR HT, 4 DOOR SEDAN, 4 DOOR HT

REF.	TYPE OF MATERIAL	INCHES WIDE	PART NUMBERS AND COLORS						
			BLUE M1B	GREEN M1G	PARCHMENT M1L	BLACK M1X	GOLD M1Y		
1	NOT SERVICED SEE PART TYPE CODE 23-108-5, 23-108-16, 23-109-4, 23-109-36								
2	VINYL	54"	R400 KB6	R400 KG6	R400 KL3	R400 KX9	R400 KY3		
3	VINYL	56"	R402 KB6	R402 KG6	R402 KL3	R402 KX9	R402 KY3		

2 DOOR HT, 4 DOOR SEDAN, 4 DOOR HT, 4 DOOR STATION WAGON

REF.	TYPE OF MATERIAL	INCHES WIDE	PART NUMBERS AND COLORS						
			BLUE V2B	GREEN V2G	PARCHMENT V2L	CHESTNUT V2T	BLACK V2X	GOLD V2Y	
1	NOT SERVICED SEE PART TYPE CODE 23-108-5, 23-108-16, 23-109-4, 23-109-36								
2	VINYL	54"	R400 KB6	R400 KG6	R400 KL3	R400 KT7	R400 KX9	R400 KY3	
3	VINYL	56"	R402 KB6	R402 KG6	R402 KL3	R402 KT7	R402 KX9	R402 KY3	

Printed in U.S.A.
November, 1974

DODGE Cont'd.

2 DOOR HT, 4 DOOR SEDAN, 4 DOOR HT, 4 DOOR STATION WAGON

REF.	TYPE OF MATERIAL	INCHES WIDE	PART NUMBERS AND COLORS						
			BLUE F4B	GREEN F4G	PARCHMENT F4L	CHESTNUT F4T	BLACK F4X	GOLD F4Y	
1	NOT SERVICED SEE PART TYPE CODE 23-108-5, 23-108-16, 23-109-4, 23-109-36								
2	VINYL	54"	R400 KB6	R400 KG6	R400 KL3	R400 KL7	R400 KX9	R400 KY3	

2 DOOR HT, 4 DOOR HT

REF.	TYPE OF MATERIAL	INCHES WIDE	PART NUMBERS AND COLORS						
			BLACK & WHITE N3XW						
1	NOT SERVICED SEE PART TYPE CODE 23-108-5, 23-108-16, 23-109-4, 23-109-36								
2	VINYL	54"	R400 KW1						

2 DOOR HT, 4 DOOR SEDAN, 4 DOOR HT

REF.	TYPE OF MATERIAL	INCHES WIDE	PART NUMBERS AND COLORS						
			BLUE W7B	GREEN W7G	PARCHMENT W7L	BLACK W7X	GOLD W7Y		
1	NOT SERVICED SEE PART TYPE CODE 23-108-5, 23-108-16, 23-109-4, 23-109-36								
2	VINYL	54"	R400 KB6	R400 KG6	R400 KL3	R400 KX9	R400 KY3		

4 DOOR STATION WAGON

REF.	TYPE OF MATERIAL	INCHES WIDE	PART NUMBERS AND COLORS						
			BLUE S8B	GREEN S8G	PARCHMENT S8L	CHESTNUT S8T	BLACK S8X	GOLD S8Y	
1	NOT SERVICED SEE PART TYPE CODE 23-108-5, 23-108-16, 23-109-4, 23-109-36								
2	VINYL	54"	R400 KB6	R400 KG6	R400 KL3	R400 KT7	R400 KX9	R400 KY3	

4 DOOR SEDAN

REF.	TYPE OF MATERIAL	INCHES WIDE	PART NUMBERS AND COLORS						
			GOLD K1Y						
1	CLOTH	69"	R001 KY3						
3	VINYL	54"	R400 KY3						

4 DOOR SEDAN

REF.	TYPE OF MATERIAL	INCHES WIDE	PART NUMBERS AND COLORS						
			BLACK K2X	GOLD K2Y					
1	VINYL	50"	R418 KX9	R418 KY3					
2	VINYL	54"	R400 KX9	R400 KY3					

Printed in U.S.A.
November, 1974

CHRYSLER

2 DOOR HT, 4 DOOR SEDAN, 4 DOOR HT

REF.	TYPE OF MATERIAL	INCHES WIDE	PART NUMBERS AND COLORS						
			BLUE A1B	GREEN A1G	PARCHMENT A1L	BLACK A1X	GOLD A1Y		
1	NOT SERVICED SEE PART TYPE CODE 23-108-5, 23-108-16, 23-109-4, 23-109-36								
3	VINYL	54"	R400 KB6	R400 KG6	R400 KL3	R400 KX9	R400 KY3		
4	VINYL	56"	R402 KB6	R402 KG6	R402 KL3	R402 KX9	R402 KY3		
17	VINYL	54"	R403 KB6	R403 KG6	R403 KL3	R403 KX9	R403 KY3		

2 DOOR HT, 4 DOOR SEDAN, 4 DOOR HT

REF.	TYPE OF MATERIAL	INCHES WIDE	PART NUMBERS AND COLORS						
			BLUE B2B	GREEN B2G	PARCHMENT B2L	BLACK B2X	BLACK & WHITE B2XW	GOLD B2Y	
1	NOT SERVICED SEE PART TYPE CODE 23-108-5, 23-108-16, 23-109-4, 23-108-36								
3	VINYL	54"	R400 KB6	R400 KG6	R400 KL3	R400 KX9	R400 KW1	R400 KY3	
4	VINYL	56"	R402 KB6	R402 KG6	R402 KL3	R402 KX9	R402 KW1	R402 KY3	
5	VINYL	54"	R403 KB6	R403 KG6	R403 KL3	R403 KX9	R403 KW1	R403 KY3	

2 DOOR HT, 4 DOOR SEDAN, 4 DOOR HT

REF.	TYPE OF MATERIAL	INCHES WIDE	PART NUMBERS AND COLORS						
			COPPER-BLACK-WHITE C1KW						
1	NOT SERVICED SEE PART TYPE CODE 23-108-5, 23-108-16, 23-109-4, 23-109-36								
3	VINYL	54"	R400 KW1						
4	VINYL	56"	R402 KW1						
5	VINYL	48"	R404 KW1						

2 DOOR HT, 4 DOOR SEDAN, 4 DOOR HT, 4 DOOR STATION WAGON

REF.	TYPE OF MATERIAL	INCHES WIDE	PART NUMBERS AND COLORS						
			BLUE D7B	GREEN D7G	PARCHMENT D7L	BLACK D7X	GOLD D7Y		
1	NOT SERVICED SEE PART TYPE CODE 23-108-5, 23-108-16, 23-109-4, 23-109-36								
3	VINYL	54"	R400 KB6	R400 KG6	R400 KL3	R400 KX9	R400 KY3		

2 DOOR HT, 4 DOOR SEDAN, 4 DOOR HT, 4 DOOR STATION WAGON

REF.	TYPE OF MATERIAL	INCHES WIDE	PART NUMBERS AND COLORS						
			BLUE D8B	GREEN D8G	PARCHMENT D8L	BLACK D8X	BLACK & WHITE D8XW	GOLD D8Y	CHESTNUT D8T
1	NOT SERVICED SEE PART TYPE CODE 23-108-5, 23-108-16, 23-109-4, 23-109-36								
3	VINYL	54"	R400 KB6	R400 KG6	R400 KL3	R400 KX9	R400 KW1	R400 KY3	R400 KT7

4 DOOR SEDAN, 4 DOOR HT

REF.	TYPE OF MATERIAL	INCHES WIDE	PART NUMBERS AND COLORS						
			BLUE E9B	GREEN E9G	PARCHMENT E9L	BLACK E9X	GOLD E9Y		
1	NOT SERVICED SEE PART TYPE CODE 23-108-5, 23-108-16, 23-109-4, 23-109-36								
3	VINYL	54"	R400 KB6	R400 KG6	R400 KL3	R400 KX9	R400 KY3		

Printed in U.S.A.
November, 1974

CHRYSLER Cont'd.

4 DOOR SEDAN, 4 DOOR HT

REF.	TYPE OF MATERIAL	INCHES WIDE	PART NUMBERS AND COLORS						
			BLUE EHB	GREEN EHG	PARCHMENT EHL	BLACK EHX	BLACK & WHITE EHXW	GOLD EHY	
1	NOT SERVICED SEE PART TYPE CODE 23-108-5, 23-108-16, 23-109-4, 23-109-36								
3	VINYL	54"	R400 KB6	R400 KG6	R400 KL3	R400 KX9	R400 KW1	R400 KY3	

2 DOOR HT, 4 DOOR SEDAN, 4 DOOR HT

REF.	TYPE OF MATERIAL	INCHES WIDE	PART NUMBERS AND COLORS						
			BLUE H7B	GREEN H7G	PARCHMENT H7L	BLACK H7X	GOLD H7Y		
1	NOT SERVICED SEE PART TYPE CODE 23-108-5, 23-108-16, 23-109-4, 23-109-36								
3	CLOTH	68"	R016 KB7	R016 KG7	R016 KL2	R016 KX9	R016 KY4		
4	VINYL	54"	R400 KB6	R400 KG6	R400 KL3	R400 KX9	R400 KY3		

2 DOOR HT, 4 DOOR SEDAN, 4 DOOR HT

REF.	TYPE OF MATERIAL	INCHES WIDE	PART NUMBERS AND COLORS						
			BLUE H8B	GREEN H8G	PARCHMENT H8L	BLACK H8X	BLACK & WHITE H8XW	GOLD H8Y	
1	NOT SERVICED SEE PART TYPE CODE 23-108-5, 23-109-36								
2	NOT SERVICED SEE PART TYPE CODE 23-108-16, 23-109-4								
3	VINYL	54"	R400 KB6	R400 KG6	R400 KL3	R400 KX9	R400 KW1	R400 KY3	

NOTES

Printed in U.S.A.
November, 1974

IMPERIAL

2 DOOR HT, 4 DOOR HT

REF.	TYPE OF MATERIAL	INCHES WIDE	PART NUMBERS AND COLORS						
			BLUE PDB	GREEN PDG	PARCHMENT PDL	CHESTNUT PDT	BLACK PDX	GOLD PDY	
1	NOT SERVICED SEE PART TYPE CODE 23-108-5, 23-108-16, 23-109-4, 23-109-36								
4	VINYL	54"	R400 KB6	R400 KG6	R400 KL3	R400 KT7	R400 KX9	R400 KY3	

2 DOOR HT, 4 DOOR HT

REF.	TYPE OF MATERIAL	INCHES WIDE	PART NUMBERS AND COLORS						
			BLUE PLB	GREEN PLG	PARCHMENT PLL	CHESTNUT PLT	BLACK PLX	BLACK & WHITE PLXW	GOLD PLY
1	NOT SERVICED SEE PART TYPE CODE 23-108-5, 23-108-16, 23-109-4, 23-109-36								
3	VINYL	54"	R400 KB6	R400 KG6	R400 KL3	R400 KT7	R400 KX9	R400 KW1	R400 KY3

NOTES

Printed in U.S.A.
November, 1974

CODE	PART NAME	MODEL CODES	SEE BOTTOM NOTE 21	23		29	41	43	45	46	PART NUMBER
23-71-1	**CARPET, Console Floor Tunnel Sides**										
	All Codes	V,L	—	—	—	1	—	—	—	—	F315 KL5
		L	—	—	—	1	—	—	—	—	F315 KV3
		V,L	—	—	—	1	—	—	—	—	F315 KX9
23-71-3	LID, Console Storage Compartment										
	Outer										
	All Codes	B,J,R,W	1	1	—	1	—	—	—	—	F313 KB7
		B,J,R,W	1	1	—	1	—	—	—	—	F313 KG7
		B,J,R,W	1	1	—	1	—	—	—	—	F313 JX9
		R,W	1	1	—	1	—	—	—	—	F313 KY7
23-71-8	CLIP, Floor Tunnel Console Foundation										
	Export.	V,L	—	—	—	1	—	—	—	—	2788 700
23-76-3	**ARM REST, Front Door**										
	All Codes	V,L	—	2	—	2	—	—	—	—	D416 KB7
		V,L	—	2	—	2	—	—	—	—	D416 KG7
		V,L	—	2	—	2	—	—	—	—	D416 KL2
		V,L	—	2	—	2	—	—	—	—	D416 JX9
		V,L	—	2	—	2	—	—	—	—	D416 JW1
		V,L	—	2	—	2	—	—	—	—	D416 KY4
23-76-9	BASE, Front and Rear Door										
	All Codes	V,L	—	—	—	—	2	—	—	—	D500-1 KB7
		V,L	—	—	—	—	2	—	—	—	D500-1 KG6
		V,L	—	—	—	—	2	—	—	—	D500-1 KL2
		V,L	—	—	—	—	2	—	—	—	D500-1 JX9
		V,L	—	—	—	—	2	—	—	—	D500-1 KY4
		V,L	—	—	—	—	2	—	—	—	D500-1 KZ1
	Short, Front Door and Rear Door										
	A2B	R	—	—	—	—	2	—	2	—	D503 KB7
	A2G	R	—	—	—	—	2	—	2	—	D503 KG6
	A2T	R	—	—	—	—	2	—	2	—	D503 KT8
	F1 - All Codes	R	—	—	—	—	2	—	—	—	D503 JZ1
	F2 - All Codes	R	—	—	—	—	2	—	2	2	D503 JZ1
	K2T, T2T	R,W	—	—	—	—	2	—	—	—	D503 KT8
	K2X, T2X, G2X	R,W	—	—	—	—	2	—	—	—	D503 JX9
	M4 - All Codes	R,W	—	—	—	—	—	—	2	2	D503 JZ1
	P2B	W	—	—	—	—	2	—	2	—	D503 KB7
	P2G	W	—	—	—	—	2	—	2	—	D503 KG6
	P2T	W	—	—	—	—	2	—	2	—	D503 KT8
	Q1 - All Codes	W	—	—	—	—	2	—	—	—	D503 JZ1
	Q2 - All Codes	W	—	—	—	—	—	—	2	2	D503 JZ1
	R4 - All Codes	W	—	—	—	—	2	—	—	—	D503 JZ1
	P2 - All Codes	W	—	—	—	—	2	—	2	—	D503 JZ1
	Quarter, Arm Rest										
	All Codes	V,L	—	2	—	2	—	—	—	—	D502 JX9
23-76-11	PAD and PLATE, Front Arm Rest										
	w/o Ash Rec.										
	All Codes	V,L	—	—	—	—	2	—	—	—	D417 KB7
		V,L	—	—	—	—	2	—	—	—	D417 KG6
		V,L	—	—	—	—	2	—	—	—	D417 KL2
		V,L	—	—	—	—	2	—	—	—	D417 JX9
		V,L	—	—	—	—	2	—	—	—	D417 KY4
	All Codes	B	—	1	—	—	—	—	—	—	D412-3 KB7
		B	—	1	—	—	—	—	—	—	D412-3 KG7
		B	—	1	—	—	—	—	—	—	D412-3 JW1
		B	—	1	—	—	—	—	—	—	D412-3 JX9
	All Codes	J	—	1	—	—	—	—	—	—	D414-5 KB7
		J	—	1	—	—	—	—	—	—	D414-5 KG7
		J	—	1	—	—	—	—	—	—	D414-5 JW1
		J	—	1	—	—	—	—	—	—	D414-5 JX9

TYPE LETTERS Indicates J - Challenger, B - Barracuda, V - Valiant, L - Dart, R - Satellite, W - Coronet, P - Plymouth, D - Dodge, C - Chrysler, Y - Imperial

NUMERALS INDICATE: 21 - 2 DR. SED., 23 - 2 DR. H.T., 29 - FAST BACK, 41 - 4 DR. SED., 43 - 4 DR. H.T., 45 - 6 PASS. STA. WGN., 46 - 9 PASS. STA. WGN.

AR Indicates use as required.
# Indicates parts not listed in any previous parts book
Numerals in parentheses ( ) refer to notes.
★ Indicates change or addition.

Printed in U.S.A.
November, 1974

Right and left part numbers are on same line, first number is right, second number is left.

CODE	PART NAME	MODEL CODES	SEE BOTTOM NOTE 21	23		29	41	43	45	46	PART NUMBER
23-76-11	PAD and PLATE Cont'd.										
	All Codes	R,W	1	1	—	1	—	—	—	—	D410-1 KB7
		R,W	1	1	—	1	—	—	—	—	D410-1 KG7
		R,W	1	1	—	1	—	—	—	—	D410-1 KL2
		R,W	1	1	—	1	—	—	—	—	D410-1 JW1
		R,W	1	1	—	1	—	—	—	—	D410-1 JX9
		R,W	1	1	—	1	—	—	—	—	D410-1 KY4
	A2B	R	—	—	—	—	—	—	2	—	D424 KB7
	A2G	R	—	—	—	—	—	—	2	—	D424 KG6
	A2T	R	—	—	—	—	—	—	2	—	D424 KT8
	F1B	R	—	—	—	—	2	—	—	—	D424 KB7
	F1G	R	—	—	—	—	2	—	—	—	D424 KG6
	F1T	R	—	—	—	—	2	—	—	—	D424 KT8
	F1X	R	—	—	—	—	2	—	—	—	D424 JX9
	F1Y	R	—	—	—	—	2	—	—	—	D424 KY4
	F2B	R	—	—	—	—	2	—	2	2	D424 KB7
	F2G	R	—	—	—	—	2	—	2	2	D424 KG6
	F2L	R	—	—	—	—	2	—	2	2	D424 KL2
	F2T	R	—	—	—	—	2	—	2	2	D424 KT8
	F2X	R	—	—	—	—	2	—	2	2	D424 JX9
	F2Y	R	—	—	—	—	2	—	2	2	D424 KY4
	K2T, T2T	R,W	—	—	—	—	2	—	—	—	D424 KT8
	T2X, K2X, G2X	R,W	—	—	—	—	2	—	—	—	D424 JX9
	M4B	R,W	—	—	—	—	—	—	2	2	D424 KB7
	M4G	R,W	—	—	—	—	—	—	2	2	D424 KG6
	M4L	R,W	—	—	—	—	—	—	2	2	D424 KL2
	M4T	R,W	—	—	—	—	—	—	2	2	D424 KT8
	P2B	W	—	—	—	—	2	—	2	—	D424 KB7
	P2G	W	—	—	—	—	2	—	2	—	D424 KG6
	P2T	W	—	—	—	—	2	—	2	—	D424 KT8
	Q1B	W	—	—	—	—	2	—	—	—	D424 KB7
	Q1G	W	—	—	—	—	2	—	—	—	D424 KG6
	Q1T	W	—	—	—	—	2	—	—	—	D424 KT8
	Q1X	W	—	—	—	—	2	—	—	—	D424 JX9
	Q1Y	W	—	—	—	—	2	—	—	—	D424 KY4
	Q2B	W	—	—	—	—	—	—	2	2	D424 KB7
	Q2G	W	—	—	—	—	—	—	2	2	D424 KG6
	Q2L	W	—	—	—	—	—	—	2	2	D424 KL2
	Q2T	W	—	—	—	—	—	—	2	2	D424 KT8
	R4B	W	—	—	—	—	2	—	—	—	D424 KB7
	R4G	W	—	—	—	—	2	—	—	—	D424 KG6
	R4L	W	—	—	—	—	2	—	—	—	D424 KL2
	R4T	W	—	—	—	—	2	—	—	—	D424 KT8
	R4X	W	—	—	—	—	2	—	—	—	D424 JX9
	R4Y	W	—	—	—	—	2	—	—	—	D424 KY4
	All Codes (Short)	P,D	—	2	—	—	—	—	—	—	D400 KB7
		P,D	—	2	—	—	—	—	—	—	D400 KG7
		P,D	—	2	—	—	—	—	—	—	D400 KL2
		P,D	—	2	—	—	—	—	—	—	D400 KX9
		D	—	2	—	—	—	—	—	—	D400 KW1
		P,D	—	2	—	—	—	—	—	—	D400 KY4
	All Codes (Long)	P,D	—	—	—	—	1	1	1	1	D404-5 KB7
		P,D	—	—	—	—	1	1	1	1	D404-5 KG7
		P,D	—	—	—	—	1	1	1	1	D404-5 KL2
		P,D	—	—	—	—	1	1	1	1	D404-5 KT8
		P,D	—	—	—	—	1	1	1	1	D404-5 KX9
		D	—	—	—	—	1	1	1	1	D404-5 KW1
		P,D	—	—	—	—	1	1	1	1	D404-5 KY4
	All Codes	C	—	—	—	—	—	—	1	1	D404-5 KB7
		C	—	—	—	—	—	—	1	1	D404-5 KG7

TYPE LETTERS Indicates J - Challenger, B - Barracuda, V - Valiant, L - Dart, R - Satellite, W - Coronet, P - Plymouth, D - Dodge, C - Chrysler, Y - Imperial

NUMERALS INDICATE: 21 - 2 DR. SED., 23 - 2 DR. H.T., 29 - FAST BACK, 41 - 4 DR. SED., 43 - 4 DR. H.T., 45 - 6 PASS. STA. WGN., 46 - 9 PASS. STA. WGN.

AR Indicates use as required.
# Indicates parts not listed in any previous parts book
Numerals in parentheses ( ) refer to notes.
★ Indicates change or addition.

Printed in U.S.A.
November, 1974

Right and left part numbers are on same line, first number is right, second number is left.

CODE	PART NAME	MODEL CODES	SEE BOTTOM NOTE 21	23	29	41	43	45	46	PART NUMBER
23-76-11	PAD and PLATE Cont'd.									
		C	—	—	—	—	—	1	1	D404-5 KL2
		C	—	—	—	—	—	1	1	D404-5 KT8
		C	—	—	—	—	—	1	1	D404-5 KX9
		C	—	—	—	—	—	1	1	D404-5 KY4
	A1B, B2B, D7B, D8B, E9B, EHB	C	—	2	—	2	2	—	—	D402 KB7
	A1G, B2G, D7G, D8G, E9G, EHG	C	—	2	—	2	2	—	—	D402 KG7
	A1L, B2L, D7L, D8L, E9L, EHL	C	—	2	—	2	2	—	—	D402 KL2
	A1X, B2X, D7X, D8X, E9X, EHX	C	—	2	—	2	2	—	—	D402 KX9
	B2XW, D8XW, EHXW	C	—	2	—	2	2	—	—	D402 KW1
	A1Y, B2Y, D7Y, D8Y, E9Y, EHY	C	—	2	—	2	2	—	—	D402 KY4
23-76-17	HINGE ASSY. Frt. Seat Back Center									
	Arm Rear, 50-50 Seats Canada	P,D,C,Y	—	—	—	2	2	2	2	2767 871
23-76-18	ARM REST, Front Back Center									
	C4B, F3B, F4B	V,L	—	1	—	1	1	—	—	A629 KB6
	C4G, F3G, F4G	V,L	—	1	—	1	1	—	—	A629 KG6
	C4L, F3L, F4L	V,L	—	1	—	1	1	—	—	A629 KL3
	C4X, F3X, F4X	V,L	—	1	—	1	1	—	—	A629 KX9
	H5LL	V,L	—	1	—	—	1	—	—	A656 KL3
	H5GG	V,L	—	1	—	—	1	—	—	A656 KG6
	M4B, R4B	R,W	—	—	—	1	1	—	1	B653 KB6
	M4G, R4G	R,W	—	—	—	1	1	—	1	B653 KG6
	M4L, R4L	R,W	—	—	—	1	1	—	1	B653 KL3
	M4T	R,W	—	—	—	—	1	—	1	1 B653 KT7
	M4X, R4X	W	—	—	—	1	1	—	—	— B653 KX9
	M4Y, R4Y	W	—	—	—	1	1	—	—	— B653 KY3
	V3B Sample of Material Reqd.	R,W	1	1	—	1	—	—	—	— B685 KB7
	V3G Sample of Material Reqd.	R,W	1	1	—	1	—	—	—	— B685 KG7
	V3X Sample of Material Reqd.	R,W	1	1	—	1	—	—	—	— B685 KX9
	V3Y Sample of Material Reqd.	R,W	1	1	—	1	—	—	—	— B685 KY4
	D6B, H6B	R,W	1	1	—	1	—	—	—	— B835 KB6
	D6G, H6G	R,W	1	1	—	1	—	—	—	— B835 KG6
	D6X, H6X	R,W	1	1	—	1	—	—	—	— B835 KX9
	E5EW, D6XW, H6XW, W5EW, E5YW	R,W	1	1	—	1	—	—	—	— B835 KW1
	D6Y, H6Y	R,W	1	1	—	1	—	—	—	— B835 KY3
	D4B, E3B, E4B, F4B	P,D	—	1	—	—	1	1	1	1 C731 KB6
	D4G, E3G, E4G, F4G	P,D	—	1	—	—	1	1	1	1 C731 KG6
	D4L, E3L, E4L, F4L, J3LL	P,D	—	1	—	—	1	1	1	1 C731 KL3
	D4X, E3X, E4X, F4X	P,D	—	1	—	—	1	1	1	1 C731 KX9
	D4T, E4T, F4T	P,D	—	1	—	—	1	1	1	1 C731 KT7
	D4Y, E3Y, E4Y, F4Y	P,D	—	1	—	—	1	1	1	1 C731 KY3
	N3XW	D	—	1	—	—	—	1	—	— C731 KW1
	W7B Sample of Material Reqd.	D	—	2	—	—	2	2	—	— G862 K7B
	W7G Sample of Material Reqd.	D	—	2	—	—	2	2	—	— G862 K7G
	W7L Sample of Material Reqd.	D	—	2	—	—	2	2	—	— G862 K7L
	W7X Sample of Material Reqd.	D	—	2	—	—	2	2	—	— G862 K7X
	W7Y Sample of Material Reqd.	D	—	2	—	—	2	2	—	— G862 K7Y
	G7B, S8B, H8B, D7B, D8B	P,D,C	—	2	—	—	2	2	2	2 G700 KB6
	G7G, S8G, H8G, D7G, D8G	P,D,C	—	2	—	—	2	2	2	2 G700 KG6
	G7L, G8L, H8L, S8L, H8L, D7L, D8L	P,D,C	—	2	—	—	2	2	2	2 G700 KL3
	S8T, D8T	D,C	—	—	—	—	—	—	2	2 G700 KT7
	H8XW, D8XW, H8YW	C	—	2	—	—	2	2	—	— G700 KW1
	G7X, S8X, H8X, D7X, D8X	P,D,C	—	2	—	—	2	2	2	2 G700 KX9
	G7Y, S8Y, H8Y, D7Y, D8Y	P,D,C	—	2	—	—	2	2	2	2 G700 KY3
	E9B	C	—	—	—	—	1	1	—	— G702 KB7
	E9G	C	—	—	—	—	1	1	—	— G702 KG7
	E9L	C	—	—	—	—	1	1	—	— G702 KL2
	E9X	C	—	—	—	—	1	1	—	— G702 KX9
	E9Y	C	—	—	—	—	1	1	—	— G702 KY4

TYPE LETTERS Indicates: J - Challenger; B - Barracuda; V - Valiant; L - Dart; R - Satellite; W - Coronet; P - Plymouth; D - Dodge; C - Chrysler; Y - Imperial

NUMERALS INDICATE: 21 - 2 DR. SED.; 23 - 2 DR. H.T.; 29 - FAST BACK; 41 - 4 DR. SED.; 43 - 4 DR. H.T.; 45 - 6 PASS. STA. WGN.; 46 - 9 PASS. STA. WGN.

AR Indicates use as required.
# Indicates parts not listed in any previous parts book
Numerals in parentheses ( ) refer to notes.
★ Indicates change or addition.

Printed in U.S.A.
November, 1974

Right and left part numbers are on same line, first number is right, second number is left.

CODE	PART NAME	MODEL CODES	SEE BOTTOM NOTE 21	23	29	41	43	45	46	PART NUMBER
23-76-18	ARM REST Cont'd.									
	EHB	C	—	—	—	1	1	—	—	G703 KB6
	EHG	C	—	—	—	1	1	—	—	G703 KG7
	EHL	C	—	—	—	1	1	—	—	G703 KL3
	EHXW	C	—	—	—	1	1	—	—	G703 KW1
	EHX	C	—	—	—	1	1	—	—	G703 KX9
	EHY	C	—	—	—	1	1	—	—	G703 KY3
	H7B	C	—	2	—	2	2	—	—	G701 KB7
	H7G	C	—	2	—	2	2	—	—	G701 KG7
	H7L	C	—	2	—	2	2	—	—	G701 KL2
	H7X	C	—	2	—	2	2	—	—	G701 KX9
	H7Y	C	—	2	—	2	2	—	—	G701 KY4
	PDB (Up To Build Date 1-15-74)	Y	—	2	—	—	2	—	—	G822 KDB
	PDB (After Build Date 1-15-74)	Y	—	2	—	—	2	—	—	G822 KDD
	PDG (Up To Build Date 1-15-74)	Y	—	2	—	—	2	—	—	G822 KDG
	PDG (After Build Date 1-15-74)	Y	—	2	—	—	2	—	—	G822 KDF
	PDL (Up To Build Date 1-15-74)	Y	—	2	—	—	2	—	—	G822 KDL
	PDL (After Build Date 1-15-74)	Y	—	2	—	—	2	—	—	G822 KDP
	PDT	Y	—	2	—	—	2	—	—	G822 KDT
	PDX	Y	—	2	—	—	2	—	—	G822 KDX
	PDY	Y	—	2	—	—	2	—	—	G822 KDY
	PLB	Y	—	2	—	—	2	—	—	G823 KLB
	PLG	Y	—	2	—	—	2	—	—	G823 KLG
	PLL	Y	—	2	—	—	2	—	—	G823 KLL
	PLT	Y	—	2	—	—	2	—	—	G823 KLT
	PLXW	Y	—	2	—	—	2	—	—	G823 KLW
	PLX	Y	—	2	—	—	2	—	—	G823 KLX
	PLY	Y	—	2	—	—	2	—	—	G823 KLY
23-76-19	FLAP, Front Back Center Arm Rest									
	W7B Sample of Material Reqd.	D	—	2	—	2	2	—	—	C681 KB7
	W7G Sample of Material Reqd.	D	—	2	—	2	2	—	—	C681 KG7
	W7L Sample of Material Reqd.	D	—	2	—	2	2	—	—	C681 KL2
	W7X Sample of Material Reqd.	D	—	2	—	2	2	—	—	C681 KX9
	W7Y Sample of Material Reqd.	D	—	2	—	2	2	—	—	C681 KY4
	G7B, S8B, D7B, D8B, H8B, PLB	P,D,C,Y	—	2	—	2	2	2	2	C495 KB6
	G7G, S8G, D7G, D8G, H8G, PLG	P,D,C,Y	—	2	—	2	2	2	2	C495 KG6
	G7L, S8L, G8L, H8L, D7L, D8L, PLL	P,D,C,Y	—	2	—	2	2	2	2	C495 KL3
	S8T, D8T, PLT	D,C,Y	—	2	—	2	2	2	2	C495 KT7
	D8XW, H8XW, PLXW, H8YW	C,Y	—	2	—	2	2	2	2	C495 KW1
	G7Y, S8Y, D7Y, D8Y, H8Y, PLY	P,D,C,Y	—	2	—	2	2	2	2	C495 KY3
	G7X, S8X, D7X, D8X, H8X, PLX	P,D,C,Y	—	2	—	2	2	2	2	C495 KX9
	E9B	C	—	1	—	1	1	—	—	G484 KB7
	E9G	C	—	1	—	1	1	—	—	G484 KG7
	E9L	C	—	1	—	1	1	—	—	G484 KL2
	E9X	C	—	1	—	1	1	—	—	G484 KX9
	E9Y	C	—	1	—	1	1	—	—	G484 KY4
	EHB	C	—	—	—	1	1	—	—	G486 KB6
	EHG	C	—	—	—	1	1	—	—	G486 KG6
	EHL	C	—	—	—	1	1	—	—	G486 KL3
	EHXW	C	—	—	—	1	1	—	—	G486 KW1
	EHX	C	—	—	—	1	1	—	—	G486 KX9
	EHY	C	—	—	—	1	1	—	—	G486 KY3
	H7B	C	—	2	—	2	2	—	—	G482 KB7
	H7G	C	—	2	—	2	2	—	—	G482 KG7
	H7L	C	—	2	—	2	2	—	—	G482 KL2
	H7X	C	—	2	—	2	2	—	—	G482 KX9
	H7Y	C	—	2	—	2	2	—	—	G482 KY4
	PDB (Up To Build Date 1-15-74)	Y	—	2	—	—	2	—	—	G629 KB7
	PDB (After Build Date 1-15-74)	Y	—	2	—	—	2	—	—	G629 KBB

TYPE LETTERS Indicates J - Challenger, B - Barracuda, V - Valiant, L - Dart, R - Satellite, W - Coronet, P - Plymouth, D - Dodge, C - Chrysler, Y - Imperial

NUMERALS INDICATE: 21 - 2 DR. SED., 23 - 2 DR. H.T., 29 - FAST BACK, 41 - 4 DR. SED., 43 - 4 DR. H.T., 45 - 6 PASS. STA. WGN., 46 - 9 PASS. STA. WGN.

AR Indicates use as required.
# Indicates parts not listed in any previous parts book
Numerals in parentheses ( ) refer to notes.
★ Indicates change or addition.

Printed in U.S.A.
November, 1974

Right and left part numbers are on same line, first number is right, second number is left.

CODE	PART NAME	MODEL CODES	SEE BOTTOM NOTE 21	23	29	41	43	45	46	PART NUMBER
23-76-19	FLAP Cont'd.									
	PDG (Up To Build Date 1-15-74)	Y	—	2	—	—	2	—	—	G629 KG7
	PDG (After Build Date 1-15-74)	Y	—	2	—	—	2	—	—	G629 KGG
	PDL (Up To Build Date 1-15-74)	Y	—	2	—	—	2	—	—	G629 KL2
	PDL (After Build Date 1-15-74)	Y	—	2	—	—	2	—	—	G629 KLL
	PDT	Y	—	2	—	—	2	—	—	G629 KT8
	PDX	Y	—	2	—	—	2	—	—	G629 KX9
	PDY	Y	—	2	—	—	2	—	—	G629 KY4
23-76-25	WASHER, Front Seat Center Arm Rest									
	Hinge Assy. to Support Assy.	P,D,C,Y	—	4	—	4	4	4	4	2609 158
	Rear Seat Center Arm Rest Outer Link to Support	C,Y	—	2	—	2	2	—	—	2609 158
23-76-28	LOCK BAR, Front Seat Back Center Arm Rest									
	Bucket Seat	V,L	—	1	1	—	—	—	—	2608 812
	Bucket Seat	R,W	1	1	1	1	—	1	1	2942 698
	Bench Seat	V,L,R,W	1	1	1	1	—	1	1	3520 187
	Bench Seat	P,D	—	1	—	1	1	1	1	2270 102
23-76-30	HANDLE, Rear Seat Back Center Arm Rest Pull Down	Y	—	—	—	—	1	—	—	2608 714
23-76-34	COVER, Front Back Center Arm Rest									
	C4B, F3B, F4B	V,L	—	1	1	1	—	—	—	A317 KB6
	C4G, F3G, F4G	V,L	—	1	1	1	—	—	—	A317 KG6
	C4L, F3L, F4L	V,L	—	1	1	1	—	—	—	A317 KL3
	C4X, F3X, F4X	V,L	—	1	1	1	—	—	—	A317 KX9
	H5LL	V,L	—	1	—	1	—	—	—	A359 KL3
	H5GG	V,L	—	1	—	1	—	—	—	A359 KG6
	M4B, R4B	R,W	—	—	1	1	—	1	1	B344 KB6
	M4G, R4G	R,W	—	—	1	1	—	1	1	B344 KG6
	M4L, R4L	R,W	—	—	1	1	—	1	1	B344 KL3
	M4T, R4T	R,W	—	—	1	1	—	1	1	B344 KT7
	M4X, R4X	W	—	—	1	1	—	—	—	B344 KX9
	M4Y, R4Y	W	—	—	1	1	—	—	—	B344 KY3
	D6B, H6B	R,W	1	1	—	1	—	—	—	B373 KB6
	D6G, H6G	R,W	1	1	—	1	—	—	—	B373 KG6
	E5EW, D6XW, H6XW, W5EW, E5YW	R,W	1	1	—	1	—	—	—	B373 KW1
	D6X, H6X	R,W	1	1	—	1	—	—	—	B373 KX9
	D6Y, H6Y	R,W	1	1	—	1	—	—	—	B373 KY3
	V3B Sample of Material Reqd.	R,W	1	1	—	1	—	—	—	B346 KB7
	V3G Sample of Material Reqd.	R,W	1	1	—	1	—	—	—	B346 KG7
	V3X Sample of Material Reqd.	R,W	1	1	—	1	—	—	—	B346 KX9
	V3Y Sample of Material Reqd.	R,W	1	1	—	1	—	—	—	B346 KY4
	D4B, E3B, E4B, F4B	P,D	—	1	—	—	1	1	1	1	C443 KB6
	D4G, E3G, E4G, F4G	P,D	—	1	—	—	1	1	1	1	C443 KG6
	D4L, E3L, E4L, F4L	P,D	—	1	—	—	1	1	1	1	C443 KL3
	D4X, E3X, E4X, F4X	P,D	—	1	—	—	1	1	1	1	C443 KX9
	D4T, E4T, F4T	P,D	—	—	—	—	—	—	1	1	C443 KT7
	D4Y, E3Y, E4Y, F4Y	P,D	—	1	—	—	1	1	1	1	C443 KY3
	N3XW	D	—	1	—	—	—	1	—	—	C443 KW1
	W7B Sample of Material Reqd.	D	—	2	—	—	2	2	—	—	C680 KB7
	W7G Sample of Material Reqd.	D	—	2	—	—	2	2	—	—	C680 KG7
	W7L Sample of Material Reqd.	D	—	2	—	—	2	2	—	—	C680 KL2
	W7X Sample of Material Reqd.	D	—	2	—	—	2	2	—	—	C680 KX9
	W7Y Sample of Material Reqd.	D	—	2	—	—	2	2	—	—	C680 KY4
	G7B, S8B, D7B, D8B, H8B	P,D,C	—	2	—	—	2	2	2	2	G480 KB6
	G7G, S8G, D7G, D8G, H8G	P,D,C	—	2	—	—	2	2	2	2	G480 KG6
	G7L, G8L, H8L, S8L, D7L, D8L	P,D,C	—	2	—	—	2	2	2	2	G480 KL3
	S8T, D8T	D,C	—	—	—	—	2	2	2	2	G480 KT7
	G7X, S8X, D7X, D8X, H8X	P,D,C	—	2	—	—	—	2	2	2	G480 KX9
	D8XW, H8XW, H8YW	C	—	2	—	—	2	2	2	2	G480 KW1

TYPE LETTERS Indicates: J - Challenger, B - Barracuda, V - Valiant, L - Dart, R - Satellite, W - Coronet, P - Plymouth, D - Dodge, C - Chrysler, Y - Imperial

NUMERALS INDICATE: 21 - 2 DR. SED., 23 - 2 DR. H.T., 29 - FAST BACK, 41 - 4 DR. SED., 43 - 4 DR. H.T., 45 - 6 PASS. STA. WGN., 46 - 9 PASS. STA. WGN.

AR Indicates use as required.
# Indicates parts not listed in any previous parts book
Numerals in parentheses ( ) refer to notes.
★ Indicates change or addition.

Printed in U.S.A.
November, 1974

Right and left part numbers are on same line, first number is right, second number is left.

CODE	PART NAME	MODEL CODES	SEE BOTTOM NOTE 21	23	29	41	43	45	46	PART NUMBER
23-76-34	COVER Cont'd.									
	G7Y, S8Y, D7Y, D8Y, H8Y	P,D,C	—	2	—	2	2	2	2	G480 KY3
	E9B	C	—	—	—	1	1	—	—	G483 KB7
	E9G	C	—	—	—	1	1	—	—	G483 KG7
	E9L	C	—	—	—	1	1	—	—	G483 KL2
	E9X	C	—	—	—	1	1	—	—	G483 KX9
	E9Y	C	—	—	—	1	1	—	—	G483 KY4
	EHB	C	—	—	—	1	1	—	—	G485 KB6
	EHG	C	—	—	—	1	1	—	—	G485 KG6
	EHL	C	—	—	—	1	1	—	—	G485 KL3
	EHXW	C	—	—	—	1	1	—	—	G485 KW1
	EHX	C	—	—	—	1	1	—	—	G485 KX9
	EHY	C	—	—	—	1	1	—	—	G485 KY3
	H7B	C	—	2	—	2	2	—	—	G481 KB7
	H7G	C	—	2	—	2	2	—	—	G481 KG7
	H7L	C	—	2	—	2	2	—	—	G481 KL2
	H7X	C	—	2	—	2	2	—	—	G481 KX9
	H7Y	C	—	2	—	2	2	—	—	G481 KY4
	PDB (Up To Build Date 1-15-74)	Y	—	2	—	—	2	—	—	G628 KB7
	PDB (After Build Date 1-15-74)	Y	—	2	—	—	2	—	—	G628 KBB
	PDG (Up To Build Date 1-15-74)	Y	—	2	—	—	2	—	—	G628 KG7
	PDG (After Build Date 1-15-74)	Y	—	2	—	—	2	—	—	G628 KGG
	PDL (Up To Build Date 1-15-74)	Y	—	2	—	—	2	—	—	G628 KL2
	PDL (After Build Date 1-15-74)	Y	—	2	—	—	2	—	—	G628 KLL
	PDT	Y	—	2	—	—	2	—	—	G628 KT8
	PDX	Y	—	2	—	—	2	—	—	G628 KX9
	PDY	Y	—	2	—	—	2	—	—	G628 KY4
	PLB	Y	—	2	—	—	2	—	—	G632 KB6
	PLG	Y	—	2	—	—	2	—	—	G632 KG6
	PLL	Y	—	2	—	—	2	—	—	G632 KL3
	PLT	Y	—	2	—	—	2	—	—	G632 KT7
	PLXW	Y	—	2	—	—	2	—	—	G632 KW1
	PLX	Y	—	2	—	—	2	—	—	G632 KX9
	PLY	Y	—	2	—	—	2	—	—	G632 KY3
23-76-35	COVER, Front Seat Center, Arm Rest Finish									
	Bench	V,L	—	1	—	1	1	—	—	S530 JX9
	Bench Seat	R,W	1	1	—	1	1	—	1	1	S531 JX9
	Bench Seat	P,D	—	1	—	—	1	1	1	1	S529 JX9
	Bucket Seat	R,W	1	1	—	1	—	—	—	—	S532 JX9
23-76-40	ARM REST, Rear Back Center									
	H7B	C	—	1	—	—	1	1	—	—	G704 KB7
	H7G	C	—	1	—	—	1	1	—	—	G704 KG7
	H7L	C	—	1	—	—	1	1	—	—	G704 KL2
	H7X	C	—	1	—	—	1	1	—	—	G704 KX9
	H7Y	C	—	1	—	—	1	1	—	—	G704 KY4
	H8B	C	—	1	—	—	1	1	—	—	G705 KB6
	H8G	C	—	1	—	—	1	1	—	—	G705 KG6
	H8L	C	—	1	—	—	1	1	—	—	G705 KL3
	H8XW, H8YW	C	—	1	—	—	1	1	—	—	G705 KW1
	H8X	C	—	1	—	—	1	1	—	—	G705 KX9
	H8Y	C	—	1	—	—	1	1	—	—	G705 KY3
	PDB (Up To Build Date 1-15-74)	Y	—	1	—	—	—	1	—	—	G808 KDB
	PDB (After Build Date 1-15-74)	Y	—	1	—	—	—	1	—	—	G808 KDD
	PDG (Up To Build Date 1-15-74)	Y	—	1	—	—	—	1	—	—	G808 KDG
	PDG (After Build Date 1-15-74)	Y	—	1	—	—	—	1	—	—	G808 KDF
	PDL (Up To Build Date 1-15-74)	Y	—	1	—	—	—	1	—	—	G808 KDL
	PDL (After Build Date 1-15-74)	Y	—	1	—	—	—	1	—	—	G808 KDP
	PDT	Y	—	1	—	—	—	1	—	—	G808 KDT
	PDX	Y	—	1	—	—	—	1	—	—	G808 KDX

TYPE LETTERS Indicates J - Challenger, B - Barracuda, V - Valiant, L - Dart, R - Satellite, W - Coronet, P - Plymouth, D - Dodge, C - Chrysler, Y - Imperial

NUMERALS INDICATE: 21 - 2 DR. SED., 23 - 2 DR. H.T., 29 - FAST BACK, 41 - 4 DR. SED., 43 - 4 DR. H.T., 45 - 6 PASS. STA. WGN., 46 - 9 PASS. STA. WGN.

AR Indicates use as required.
# Indicates parts not listed in any previous parts book
Numerals in parentheses ( ) refer to notes.
★ Indicates change or addition.

Printed in U.S.A.
November, 1974

Right and left part numbers are on same line, first number is right, second number is left.

CODE	PART NAME	MODEL CODES	SEE BOTTOM NOTE 21	23	29	41	43	45	46	PART NUMBER
23-76-40	ARM REST Cont'd.									
	PDY	Y	—	1	—	—	1	—	—	G808 KDY
	PLB	Y	—	1	—	—	1	—	—	G809 KLB
	PLG	Y	—	1	—	—	1	—	—	G809 KLG
	PLL	Y	—	1	—	—	1	—	—	G809 KLL
	PLT	Y	—	1	—	—	1	—	—	G809 KLT
	PLXW	Y	—	1	—	—	1	—	—	G809 KLW
	PLX	Y	—	1	—	—	1	—	—	G809 KLX
	PLY	Y	—	1	—	—	1	—	—	G809 KLY
23-76-45	COVER, Rear Back Center Arm Rest									
	H7B	C	—	1	—	1	1	—	—	G487 KB7
	H7G	C	—	1	—	1	1	—	—	G487 KG7
	H7L	C	—	1	—	1	1	—	—	G487 KL2
	H7X	C	—	1	—	1	1	—	—	G487 KX9
	H7Y	C	—	1	—	1	1	—	—	G487 KY4
	H8B	C	—	1	—	1	1	—	—	G489 KB6
	H8G	C	—	1	—	1	1	—	—	G489 KG6
	H8L	C	—	1	—	1	1	—	—	G489 KL3
	H8XW, H8YW	C	—	1	—	1	1	—	—	G489 KW1
	H8X	C	—	1	—	1	1	—	—	G489 KX9
	H8Y	C	—	1	—	1	1	—	—	G489 KY3
	PDB (Up To Build Date 1-15-74)	Y	—	1	—	1	1	—	—	G630 KB7
	PDB (After Build Date 1-15-74)	Y	—	1	—	—	1	—	—	G630 KBB
	PDG (Up To Build Date 1-15-74)	Y	—	1	—	1	1	—	—	G630 KG7
	PDG (After Build Date 1-15-74)	Y	—	1	—	—	1	—	—	G630 KGG
	PDL (Up To Build Date 1-15-74)	Y	—	1	—	1	1	—	—	G630 KL2
	PDL (After Build Date 1-15-74)	Y	—	1	—	—	1	—	—	G630 KLL
	PDT	Y	—	1	—	1	1	—	—	G630 KT8
	PDX	Y	—	1	—	1	1	—	—	G630 KX9
	PDY	Y	—	1	—	1	1	—	—	G630 KY4
	PLB	Y	—	1	—	1	1	—	—	G634 KB6
	PLG	Y	—	1	—	1	1	—	—	G634 KG6
	PLL	Y	—	1	—	1	1	—	—	G634 KL3
	PLT	Y	—	1	—	1	1	—	—	G634 KT7
	PLXW	Y	—	1	—	1	1	—	—	G634 KW1
	PLX	Y	—	1	—	1	1	—	—	G634 KX9
	PLY	Y	—	1	—	1	1	—	—	G634 KY3
23-76-53	FLAP, Rear Back Center Arm Rest									
	H7B	C	—	1	—	1	1	—	—	G488 KB7
	H7G	C	—	1	—	1	1	—	—	G488 KG7
	H7L	C	—	1	—	1	1	—	—	G488 KL2
	H7X	C	—	1	—	1	1	—	—	G488 KX9
	H7Y	C	—	1	—	1	1	—	—	G488 KY4
	H8B, PLB	C,Y	—	1	—	1	1	—	—	G490 KB6
	H8G, PLG	C,Y	—	1	—	1	1	—	—	G490 KG6
	H8L, PLL	C,Y	—	1	—	1	1	—	—	G490 KL3
	PLT	Y	—	1	—	—	1	—	—	G490 KT7
	H8XW, PLXW, H8YW	C,Y	—	1	—	1	1	—	—	G490 KW1
	H8X, PLX	C,Y	—	1	—	1	1	—	—	G490 KX9
	H8Y, PLY	C,Y	—	1	—	1	1	—	—	G490 KY3
	PDB (Up To Build Date 1-15-74)	Y	—	1	—	—	1	—	—	G631 KB7
	PDG (After Build Date 1-15-74)	Y	—	1	—	—	1	—	—	G631 KBB
	PDG (Up To Build Date 1-15-74)	Y	—	1	—	—	1	—	—	G631 KG7
	PDG (After Build Date 1-15-74)	Y	—	1	—	—	1	—	—	G631 KGG
	PDL (Up To Build Date 1-15-74)	Y	—	1	—	—	1	—	—	G631 KL2
	PDL (After Build Date 1-15-74)	Y	—	1	—	—	1	—	—	G631 KLL
	PDT	Y	—	1	—	—	1	—	—	G631 KT8
	PDX	Y	—	1	—	—	1	—	—	G631 KX9
	PDY	Y	—	1	—	—	1	—	—	G631 KY4

TYPE LETTERS Indicates: J - Challenger, B - Barracuda, V - Valiant, L - Dart, R - Satellite, W - Coronet, P - Plymouth, D - Dodge, C - Chrysler, Y - Imperial

NUMERALS INDICATE: 21 - 2 DR. SED., 23 - 2 DR. H.T., 29 - FAST BACK, 41 - 4 DR. SED., 43 - 4 DR. H.T., 45 - 6 PASS. STA. WGN., 46 - 9 PASS. STA. WGN.

AR Indicates use as required.
# Indicates parts not listed in any previous parts book
Numerals in parentheses ( ) refer to notes.
★ Indicates change or addition.

Printed in U.S.A.
November, 1974

Right and left part numbers are on same line, first number is right, second number is left.

CODE	PART NAME	MODEL CODES	SEE BOTTOM NOTE 21	23		29	41	43	45	46	PART NUMBER
23-76-62	CUP, Door Arm Rest Pull		—	—	—	—	—	—	—	—	
	All Codes	B	—	1	—	—	—	—	—	—	D728-9 KB7
		B	—	1	—	—	—	—	—	—	D728-9 KG7
		B	—	1	—	—	—	—	—	—	D728-9 JW1
		B	—	1	—	—	—	—	—	—	D728-9 JX9
		J	—	1	—	—	—	—	—	—	D730-1 KB7
		J	—	1	—	—	—	—	—	—	D730-1 KG7
		J	—	1	—	—	—	—	—	—	D730-1 JW1
		J	—	1	—	—	—	—	—	—	D730-1 JX9
23-76-63	PAD and PLATE, Rear Door Arm Rest										
	w/o Ash Rec.										
	All Codes	V,L	—	—	—	—	2	—	—	—	D417 KB7
		V,L	—	—	—	—	2	—	—	—	D417 KG6
		V,L	—	—	—	—	2	—	—	—	D417 KL2
		V,L	—	—	—	—	2	—	—	—	D417 JX9
		V,L	—	—	—	—	2	—	—	—	D417 KY4
	w/Ash Rec.										
	All Codes	V,L	—	—	—	—	1	—	—	—	D420-1 KB7
		V,L	—	—	—	—	1	—	—	—	D420-1 KG6
		V,L	—	—	—	—	1	—	—	—	D420-1 KL2
		V,L	—	—	—	—	1	—	—	—	D420-1 JX9
		V,L	—	—	—	—	1	—	—	—	D420-1 KY4
	A2B	R	—	—	—	—	—	—	1	—	D422-3 KB7
	A2G	R	—	—	—	—	—	—	1	—	D422-3 KG6
	A2T	R	—	—	—	—	—	—	1	—	D422-3 KT8
	F1B	R	—	—	—	—	1	—	—	—	D422-3 KB7
	F1G	R	—	—	—	—	1	—	—	—	D422-3 KG6
	F1T	R	—	—	—	—	1	—	—	—	D422-3 KT8
	F1X	R	—	—	—	—	1	—	—	—	D422-3 JX9
	F1Y	R	—	—	—	—	1	—	—	—	D422-3 KY4
	F2B	R	—	—	—	—	1	—	1	1	D422-3 KB7
	F2G	R	—	—	—	—	1	—	1	1	D422-3 KG6
	F2L	R	—	—	—	—	1	—	1	1	D422-3 KL2
	F2T	R	—	—	—	—	1	—	1	1	D422-3 KT8
	F2X	R	—	—	—	—	1	—	1	1	D422-3 JX9
	F2Y	R	—	—	—	—	1	—	1	1	D422-3 KY4
	K2T, T2T	R,W	—	—	—	—	1	—	—	—	D422-3 KT8
	K2X, T2X, G2X	R,W	—	—	—	—	1	—	—	—	D422-3 JX9
	M4B	R,W	—	—	—	—	—	—	1	1	D422-3 KB7
	M4G	R,W	—	—	—	—	—	—	1	1	D422-3 KG6
	M4L	R,W	—	—	—	—	—	—	1	1	D422-3 KL2
	M4T	R,W	—	—	—	—	—	—	1	1	D422-3 KT8
	P2B	W	—	—	—	—	1	—	1	—	D422-3 KB7
	P2G	W	—	—	—	—	1	—	1	—	D422-3 KG6
	P2T	W	—	—	—	—	1	—	1	—	D422-3 KT8
	Q1B	W	—	—	—	—	1	—	—	—	D422-3 KB7
	Q1G	W	—	—	—	—	1	—	—	—	D422-3 KG6
	Q1T	W	—	—	—	—	1	—	—	—	D422-3 KT8
	Q1X	W	—	—	—	—	1	—	—	—	D422-3 JX9
	Q1Y	W	—	—	—	—	1	—	—	—	D422-3 KY4
	Q2B	W	—	—	—	—	—	—	1	1	D422-3 KB7
	Q2G	W	—	—	—	—	—	—	1	1	D422-3 KG6
	Q2L	W	—	—	—	—	—	—	1	1	D422-3 KL2
	Q2T	W	—	—	—	—	—	—	1	1	D422-3 KT8
	R4B	W	—	—	—	—	1	—	—	—	D422-3 KB7
	R4G	W	—	—	—	—	1	—	—	—	D422-3 KG6
	R4L	W	—	—	—	—	1	—	—	—	D422-3 KL2
	R4T	W	—	—	—	—	1	—	—	—	D422-3 KT8
	R4X	W	—	—	—	—	1	—	—	—	D422-3 JX9

TYPE LETTERS Indicates J - Challenger, V - Valiant, R - Satellite, P - Plymouth, C - Chrysler; B - Barracuda, L - Dart, W - Coronet, D - Dodge, Y - Imperial

NUMERALS INDICATE: 21 - 2 DR. SED., 23 - 2 DR. H.T., 29 - FAST BACK, 41 - 4 DR. SED., 43 - 4 DR. H.T., 45 - 6 PASS. STA. WGN., 46 - 9 PASS. STA. WGN.

AR Indicates use as required.
# Indicates parts not listed in any previous parts book
Numerals in parentheses ( ) refer to notes.
★ Indicates change or addition.

Printed in U.S.A.
November, 1974

Right and left part numbers are on same line, first number is right, second number is left.

CODE	PART NAME	MODEL CODES	SEE BOTTOM NOTE 21	23	29	41	43	45	46	PART NUMBER
23-76-63	PAD and PLATE Cont'd.									
	R4Y	W	—	—	—	1	—	—	—	D422-3 KY4
	All Codes	P,D	—	—	—	1	1	1	1	D406-7 KB7
		P,D	—	—	—	1	1	1	1	D406-7 KG7
		P,D	—	—	—	1	1	1	1	D406-7 KL2
		P,D	—	—	—	1	1	1	1	D406-7 KT8
		P,D	—	—	—	1	1	1	1	D406-7 KX9
		P,D	—	—	—	1	1	1	1	D406-7 KY4
		D	—	—	—	1	1	1	1	D406-7 KW1
		C	—	—	—	—	—	1	1	D406-7 KB7
		C	—	—	—	—	—	1	1	D406-7 KG7
		C	—	—	—	—	—	1	1	D406-7 KL2
		C	—	—	—	—	—	1	1	D406-7 KT8
		C	—	—	—	—	—	1	1	D406-7 KX9
		C	—	—	—	—	—	1	1	D406-7 KY4
	A1B, B2B, D7B, D8B, E9B, EHB	C	—	—	—	1	1	—	—	D408-9 KB7
	A1G, B2G, D7G, D8G, E9G, EHG	C	—	—	—	1	1	—	—	D408-9 KG7
	A1L, B2L, D7L, D8L, E9L, EHL	C	—	—	—	1	1	—	—	D408-9 KL2
	B2XW, D8XW, EHXW	C	—	—	—	1	1	—	—	D408-9 KW1
	A1X, B2X, D7X, D8X, E9X, EHX	C	—	—	—	1	1	—	—	D408-9 KX9
	A1Y, B2Y, D7Y, D8Y, E9Y, EHY	C	—	—	—	1	1	—	—	D408-9 KY4
23-76-76	PAD and PLATE, Quarter Arm Rest w/Ash Rec.									
	All Codes	V,L	—	1	—	1	—	—	—	— D418-9 KB7
		V,L	—	1	—	1	—	—	—	— D418-9 KG7
		V,L	—	1	—	1	—	—	—	— D418-9 KL2
		V,L	—	1	—	1	—	—	—	— D418-9 JX9
		V,L	—	1	—	1	—	—	—	— D418-9 JW1
		V,L	—	1	—	1	—	—	—	— D418-9 KY4
	All Codes	P,D	—	1	—	—	—	—	—	D426-7 KB7
		P,D	—	1	—	—	—	—	—	D426-7 KG7
		P,D	—	1	—	—	—	—	—	D426-7 KL2
		P,D	—	1	—	—	—	—	—	D426-7 KX9
		D	—	1	—	—	—	—	—	D426-7 KW1
		P,D	—	1	—	—	—	—	—	D426-7 KY4
	A1B, B2B, D7B, D8B	C	—	1	—	—	—	—	—	D408-9 KB7
	A1G, B2G, D7G, D8G	C	—	1	—	—	—	—	—	D408-9 KG7
	A1L, B2L, D7L, D8L	C	—	1	—	—	—	—	—	D408-9 KL2
	B2XW, D8XW	C	—	1	—	—	—	—	—	D408-9 KW1
	A1X, B2X, D7X, D8X	C	—	1	—	—	—	—	—	D408-9 KX9
	A1Y, B2Y, D7Y, D8Y	C	—	1	—	—	—	—	—	D408-9 KY4
23-77-3	**STRAP, Center Pillar Assist**									
	Taxi	W	—	—	—	2	—	—	—	F300 KX9
	All Codes	Y	—	—	—	—	2	—	—	H505 KB6
		Y	—	—	—	—	2	—	—	H505 KG6
		Y	—	—	—	—	2	—	—	H505 KL3
		Y	—	—	—	—	2	—	—	H505 KT7
		Y	—	—	—	—	2	—	—	H505 KW1
		Y	—	—	—	—	2	—	—	H505 KX9
		Y	—	—	—	—	2	—	—	H505 KY3
23-77-5	SPACER, Center Pillar Assist Strap	W	—	—	—	2	—	—	—	2789 230
23-77-7	BRACKET, Quarter Upper Inner to Assist Strap Mounting	Y	—	—	—	—	1	—	—	3762 050-1
23-77-9	BRACKET and PIVOT MECHANISM Assy, Strap Mounting	Y	—	—	—	—	1	—	—	2879 240-1
23-78-2	**BUTTON, Front Cushion and Front Back, Rear**									
	Cushion and Rear Back									
	V3B	R,W	—	8	—	8	—	—	—	— G901 KB7

TYPE LETTERS Indicates: J - Challenger, B - Barracuda, V - Valiant, L - Dart, R - Satellite, W - Coronet, P - Plymouth, D - Dodge, C - Chrysler, Y - Imperial

NUMERALS INDICATE: 21 - 2 DR. SED., 23 - 2 DR. H.T., 29 - FAST BACK, 41 - 4 DR. SED., 43 - 4 DR. H.T., 45 - 6 PASS. STA. WGN., 46 - 9 PASS. STA. WGN.

AR Indicates use as required.
# Indicates parts not listed in any previous parts book
Numerals in parentheses ( ) refer to notes.
★ Indicates change or addition.

Printed in U.S.A.
November, 1974

Right and left part numbers are on same line, first number is right, second number is left.

CODE	PART NAME	MODEL CODES	SEE BOTTOM NOTE 21	23		29	41	43	45	46	PART NUMBER
23-78-2	BUTTON Cont'd.										
	V3G	R,W	—	8	—	8	—	—	—	—	G901 KG7
	V3X	R,W	—	8	—	8	—	—	—	—	G901 JX9
	V3Y	R,W	—	8	—	8	—	—	—	—	G901 KY4
	Front Cushion and Front Back										
	H6B, D6B	R,W	12	12	—	12	—	—	—	—	G900 KB6
	H6G, D6G	R,W	12	12	—	12	—	—	—	—	G900 KG6
	H6XW, D6XW, E5EW, W5EW, E5YW	R,W	12	12	—	12	—	—	—	—	G900 KW1
	H6X, D6X	R,W	12	12	—	12	—	—	—	—	G900 KX9
	H6Y, D6Y	R,W	12	12	—	12	—	—	—	—	G900 KY3
	Front Cushion, Rear Cushion 2nd Cushion										
	C1B, C2B	P	—	AR	—	—	AR	AR	AR	AR	G903 KB6
	C1G, C2G	P	—	AR	—	—	AR	AR	AR	AR	G903 KG6
	C1L, C2L	P	—	AR	—	—	AR	AR	AR	AR	G903 KL3
	C2T	P	—	—	—	—	—	—	AR	AR	G903 KT7
	C1X, C2X	P	—	AR	—	—	AR	AR	AR	AR	G903 KX9
	C1Y, C2Y	P	—	AR	—	—	AR	AR	AR	AR	G903 KY3
	3rd Cushion										
	C2B	P	—	—	—	—	—	—	—	AR	G902 KB6
	C2G	P	—	—	—	—	—	—	—	AR	G902 KG6
	C2L	P	—	—	—	—	—	—	—	AR	G902 KL3
	C2T	P	—	—	—	—	—	—	—	AR	G902 KT7
	C2X	P	—	—	—	—	—	—	—	AR	G902 KX9
	C2Y	P	—	—	—	—	—	—	—	AR	G902 KY3
	Front Back, 2nd Back, 3rd Back										
	S8B	D	—	—	—	—	—	—	AR	AR	G900 KB6
	S8G	D	—	—	—	—	—	—	AR	AR	G900 KG6
	S8X	D	—	—	—	—	—	—	AR	AR	G900 KX9
	S8Y	D	—	—	—	—	—	—	AR	AR	G900 KY3
	Rear Cushion and Rear Back										
	H6B, D6B	R,W	AR	AR	—	AR	—	—	—	—	G904 KB6
	H6G, D6G	R,W	AR	AR	—	AR	—	—	—	—	G904 KG6
	H6XW, D6XW, E5EW, W5EW, E5YW	R,W	AR	AR	—	AR	—	—	—	—	G904 KW1
	H6X, D6X	R,W	AR	AR	—	AR	—	—	—	—	G904 KX9
	H6Y, D6Y	R,W	AR	AR	—	AR	—	—	—	—	G904 KY3
	Rear Back, 2nd Back										
	F4B	D	—	AR	—	—	AR	AR	AR	AR	G904 KB6
	F4G	D	—	AR	—	—	AR	AR	AR	AR	G904 KG6
	F4L	D	—	AR	—	—	AR	AR	AR	AR	G904 KL3
	F4T	D	—	—	—	—	—	—	AR	AR	G904 KT7
	F4X	D	—	AR	—	—	AR	AR	AR	AR	G904 KX9
	F4Y	D	—	AR	—	—	AR	AR	AR	AR	G904 KY3
	Front Back, 2nd Back, 3rd Back										
	S8L	D	—	—	—	—	—	—	AR	AR	G900 KL3
	S8T	D	—	—	—	—	—	—	AR	AR	G900 KT7
	Front Back										
	PLB	Y	—	AR	—	—	—	AR	—	—	G904 KB6
	PLG	Y	—	AR	—	—	—	AR	—	—	G904 KG6
	PLL	Y	—	AR	—	—	—	AR	—	—	G904 KL3
	PLT	Y	—	AR	—	—	—	AR	—	—	G904 KT7
	PLXW	Y	—	AR	—	—	—	AR	—	—	G904 KW1
	PLX	Y	—	AR	—	—	—	AR	—	—	G904 KX9
	PLY	Y	—	AR	—	—	—	AR	—	—	G904 KY3
	Front Cushion										
	PDB (Up To Build Date 1-15-74)	Y	—	AR	—	—	—	AR	—	—	G907 KB7
	PDB (After Build Date 1-15-74)	Y	—	AR	—	—	—	AR	—	—	G907 KBB
	PDG (Up To Build Date 1-15-74)	Y	—	AR	—	—	—	AR	—	—	G907 KG7
	PDG (After Build Date 1-15-74)	Y	—	AR	—	—	—	AR	—	—	G907 KGG
	PDL (Up To Build Date 1-15-74)	Y	—	AR	—	—	—	AR	—	—	G907 KL2

TYPE LETTERS Indicates J - Challenger, B - Barracuda, V - Valiant, L - Dart, R - Satellite, W - Coronet, P - Plymouth, D - Dodge, C - Chrysler, Y - Imperial

NUMERALS INDICATE: 21 - 2 DR. SED., 23 - 2 DR. H.T., 29 - FAST BACK, 41 - 4 DR. SED., 43 - 4 DR. H.T., 45 - 6 PASS. STA. WGN., 46 - 9 PASS. STA. WGN.

AR Indicates use as required.
# Indicates parts not listed in any previous parts book
Numerals in parentheses ( ) refer to notes.
★ Indicates change or addition.

Printed in U.S.A.
November, 1974

Right and left part numbers are on same line, first number is right, second number is left.

CODE	PART NAME	MODEL CODES	SEE BOTTOM NOTE 21	23	29	41	43	45	46	PART NUMBER
23-78-2	BUTTON Cont'd.									
	PDL (After Build Date 1-15-74)	Y	—	AR	—	—	AR	—	—	G907 KLL
	PDT	Y	—	AR	—	—	AR	—	—	G907 KT8
	PDX	Y	—	AR	—	—	AR	—	—	G907 KX9
	PDY	Y	—	AR	—	—	AR	—	—	G907 KY4
	Front Back									
	PDB (Up To Build Date 1-15-74)	Y	—	AR	—	—	AR	—	—	G906 KB7
	PDB (After Build Date 1-15-74)	Y	—	AR	—	—	AR	—	—	G906 KBB
	PDG (Up To Build Date 1-15-74)	Y	—	AR	—	—	AR	—	—	G906 KG7
	PDG (After Build Date 1-15-74)	Y	—	AR	—	—	AR	—	—	G906 KGG
	PDL (Up To Build Date 1-15-74)	Y	—	AR	—	—	AR	—	—	G906 KL2
	PDL (After Build Date 1-15-74)	Y	—	AR	—	—	AR	—	—	G906 KLL
	PDT	Y	—	AR	—	—	AR	—	—	G906 KT8
	PDX	Y	—	AR	—	—	AR	—	—	G906 KX9
	PDY	Y	—	AR	—	—	AR	—	—	G906 KY4
	Rear Cushion and Rear Back									
	PDB (Up To Build Date 1-15-74)	Y	—	AR	—	—	AR	—	—	G908 KB7
	PDB (After Build Date 1-15-74)	Y	—	AR	—	—	AR	—	—	G908 KBB
	PDG (Up To Build Date 1-15-74)	Y	—	AR	—	—	AR	—	—	G908 KG7
	PDG (After Build Date 1-15-74)	Y	—	AR	—	—	AR	—	—	G908 KGG
	PDL (Up To Build Date 1-15-74)	Y	—	AR	—	—	AR	—	—	G908 KL2
	PDL (After Build Date 1-15-74)	Y	—	AR	—	—	AR	—	—	G908 KLL
	PDT	Y	—	AR	—	—	AR	—	—	G908 KT8
	PDX	Y	—	AR	—	—	AR	—	—	G908 KX9
	PDY	Y	—	AR	—	—	AR	—	—	G908 KY4
	Front Cushion									
	PLB	Y	—	AR	—	—	AR	—	—	G910 KB6
	PLG	Y	—	AR	—	—	AR	—	—	G910 KB6
	PLL	Y	—	AR	—	—	AR	—	—	G910 KL3
	PLT	Y	—	AR	—	—	AR	—	—	G910 KT7
	PLXW	Y	—	AR	—	—	AR	—	—	G910 KW1
	PLX	Y	—	AR	—	—	AR	—	—	G910 KX9
	PLY	Y	—	AR	—	—	AR	—	—	G910 KY3
	Rear Cushion and Rear Back									
	PLB	Y	—	AR	—	—	AR	—	—	G911 KB6
	PLG	Y	—	AR	—	—	AR	—	—	G911 KG6
	PLL	Y	—	AR	—	—	AR	—	—	G911 KL3
	PLT	Y	—	AR	—	—	AR	—	—	G911 KT7
	PLXW	Y	—	AR	—	—	AR	—	—	G911 KW1
	PLX	Y	—	AR	—	—	AR	—	—	G911 KX9
	PLY	Y	—	AR	—	—	AR	—	—	G911 KY3
	Front Back									
	F4B	D	—	AR	—	AR	AR	AR	AR	G912 KB6
	F4G	D	—	AR	—	AR	AR	AR	AR	G912 KG6
	F4L	D	—	AR	—	AR	AR	AR	AR	G912 KL3
	F4T	D	—	AR	—	AR	AR	AR	AR	G912 KT7
	F4X	D	—	AR	—	AR	AR	AR	AR	G912 KX9
	F4Y	D	—	AR	—	AR	AR	AR	AR	G912 KY3
23-78-3	RETAINER, Front Seat Cushion and Back, Rear Seat Cushion, Rear and 2nd and 3rd Seat Back	R,W,D	AR	AR	—	AR	—	—	AR	AR	2577 194
	Front Cushion & Front Back	R	—	AR	—	—	—	—	—	—	3758 940
		W	—	—	—	AR	—	—	—	—	3758 940
		P,D,Y	—	AR	—	—	AR	AR	AR	AR	3758 940
	3rd Seat Cushion	P	—	—	—	—	—	—	—	AR	3758 939
23-78-4	WASHER, Front Seat Cushion and Rear Cushion Button Stud	R,W,P,Y	—	AR	—	AR	AR	AR	AR	AR	2981 998

TYPE LETTERS Indicates: J - Challenger; B - Barracuda; V - Valiant; L - Dart; R - Satellite; W - Coronet; P - Plymouth; D - Dodge; C - Chrysler; Y - Imperial

NUMERALS INDICATE: 21 - 2 DR. SED.; 23 - 2 DR. H.T.; 29 - FAST BACK; 41 - 4 DR. SED.; 43 - 4 DR. H.T.; 45 - 6 PASS. STA. WGN.; 46 - 9 PASS. STA. WGN.

AR Indicates use as required.
# Indicates parts not listed in any previous parts book
Numerals in parentheses ( ) refer to notes.
★ Indicates change or addition.

Printed in U.S.A.
November, 1974

Right and left part numbers are on same line, first number is right, second number is left.

CODE	PART NAME	MODEL CODES	SEE BOTTOM NOTE 21	23	29	41	43	45	46	PART NUMBER
23-79-1	**CARPET, Floor (1 Piece Front & Rear)**									
	Bench Seat w/Column Shift									
	All Codes	V,L	—	1	—	—	—	—	—	M506 KB7
		V,L	—	1	—	—	—	—	—	M506 KG7
		V,L	—	1	—	—	—	—	—	M506 KL5
		V,L	—	1	—	—	—	—	—	M506 KX9
		V,L	—	1	—	—	—	—	—	M506 KY7
	Trim Code Hill, H5LL	V,L	—	1	—	—	—	—	—	M506 KLL
	w/Bucket Seat, w/Center Arm Rest, w/Auto. Trans.									
	H5GG	V,L	—	1	—	—	—	—	—	M536 KGG
	(All Codes Up to Build Date 4-6-74)	V,L	—	—	—	1	—	—	—	M507 KB7
	(Up to Build Date 4-6-74)	V,L	—	—	—	1	—	—	—	M507 KG7
	(Up to Build Date 4-6-74)	V,L	—	—	—	1	—	—	—	M507 KL5
	(Up to Build Date 4-6-74)	V,L	—	—	—	1	—	—	—	M507 KX9
	(Up to Build Date 4-6-74)	V,L	—	—	—	1	—	—	—	M507 KY7
	All Codes (After Build Date 4-6-74)	V,L	—	—	—	1	—	—	—	M538 KB7
	(After Build Date 4-6-74)	V,L	—	—	—	1	—	—	—	M538 KG7
	(After Build Date 4-6-74)	V,L	—	—	—	1	—	—	—	M538 KL5
	(After Build Date 4-6-74)	V,L	—	—	—	1	—	—	—	M538 KX9
	(After Build Date 4-6-74)	V,L	—	—	—	1	—	—	—	M538 KY7
	All Codes	V,L	—	—	—	1	—	—	—	M509 KB7
		V,L	—	—	—	1	—	—	—	M509 KG7
	(Except Trim Code H1LL, H5LL)	V,L	—	—	—	1	—	—	—	M509 KL5
		V,L	—	—	—	1	—	—	—	M509 KX9
		V,L	—	—	—	1	—	—	—	M509 KY7
	Trim Code H1LL, H5LL	V,L	—	—	—	1	—	—	—	M509 KLL
	w/Bucket Seat, w/Center Arm Rest, w/Auto. Trans.									
	H5GG	V,L	—	—	—	1	—	—	—	M537 KGG
	Bucket Seat, w/Center Cushion, w/Auto Trans.									
	H5LL	V,L	—	1	—	—	—	—	—	M536 KLL
	Bucket Seat w/Column Shift w/o Console									
	All Codes (Up to Build Date 4-6-74)	V,L	—	1	—	1	1	—	—	M510 KL5
	(Up to Build Date 4-6-74)	V,L	—	1	—	1	1	—	—	M510 KX9
	All Codes (After Build Date 4-6-74)	V,L	—	1	—	1	1	—	—	M538 KL5
	(After Build Date 4-6-74)	V,L	—	1	—	1	1	—	—	M538 KX9
	Bucket Seat w/Console, w/Auto Trans.									
	All Codes	V,L	—	1	—	1	1	—	—	M511 KL5
		V,L	—	1	—	1	1	—	—	M511 KX9
	J6VW	L	—	1	—	1	1	—	—	M511 KV3
	Bench Seat w/3 or 4 Speed Trans.									
	on Floor All Codes	V,L	—	1	—	—	—	—	—	M512 KX9
	All Codes	V,L	—	—	—	1	—	—	—	M513 KX9
	All Codes	V,L	—	—	—	—	1	—	—	M515 KX9
	Bucket Seat w/3 or 4 Speed Trans. on Floor									
	All Codes	V,L	—	1	—	1	1	—	—	M516 KX9
	Bucket Seat w/Center Arm Rest w/Auto Trans.									
	H5LL	V,L	—	1	—	—	—	—	—	M536 KLL
	H5LL	V,L	—	—	—	—	1	—	—	M537 KLL
	Bucket Seat w/o Console w/Auto Trans.									
	All Codes	B	—	1	—	—	—	—	—	M528 KB7
		B	—	1	—	—	—	—	—	M528 KG7
		B	—	1	—	—	—	—	—	M528 KX9

TYPE LETTERS Indicates: J - Challenger; B - Barracuda; V - Valiant; L - Dart; R - Satellite; W - Coronet; P - Plymouth; D - Dodge; C - Chrysler; Y - Imperial

NUMERALS INDICATE: 21 - 2 DR. SED.; 23 - 2 DR. H.T.; 29 - FAST BACK; 41 - 4 DR. SED.; 43 - 4 DR. H.T.; 45 - 6 PASS. STA. WGN.; 46 - 9 PASS. STA. WGN.

AR Indicates use as required.
# Indicates parts not listed in any previous parts book
Numerals in parentheses ( ) refer to notes.
★ Indicates change or addition.

Printed in U.S.A.
November, 1974

Right and left part numbers are on same line, first number is right, second number is left.

CODE	PART NAME		MODEL CODES	SEE BOTTOM NOTE 21	23	29	41	43	45	46	PART NUMBER
23-79-1	CARPET Cont'd.										
	w/o Console w/3 or 4 Speed Trans. on Floor										
	All Codes		B	—	1	—	—	—	—	—	M529 KB7
			B	—	1	—	—	—	—	—	M529 KG7
			B	—	1	—	—	—	—	—	M529 KX9
	w/Console w/Auto Trans.										
	All Codes		B	—	1	—	—	—	—	—	M532 KB7
			B	—	1	—	—	—	—	—	M532 KG7
			B	—	1	—	—	—	—	—	M532 KX9
	w/Console w/3 or 4 Speed Trans. on Floor		B	—	1	—	—	—	—	—	M533 KB7
			B	—	1	—	—	—	—	—	M533 KG7
			B	—	1	—	—	—	—	—	M533 KX9
	Bucket Seat w/o Console w/Auto Trans.										
	All Codes		J	—	1	—	—	—	—	—	M530 KB7
			J	—	1	—	—	—	—	—	M530 KG7
			J	—	1	—	—	—	—	—	M530 KX9
	w/o Console w/3 or 4 Speed on Floor, All Codes		J	—	1	—	—	—	—	—	M531 KB7
			J	—	1	—	—	—	—	—	M531 KG7
			J	—	1	—	—	—	—	—	M531 KX9
	w/Console w/Auto Trans. All Codes		J	—	1	—	—	—	—	—	M534 KB7
			J	—	1	—	—	—	—	—	M534 KG7
			J	—	1	—	—	—	—	—	M534 KX9
	w/Console w/3 or 4 Speed Trans. on Floor All Codes		J	—	1	—	—	—	—	—	M535 KB7
			J	—	1	—	—	—	—	—	M535 KG7
			J	—	1	—	—	—	—	—	M535 KX9
	Bench Seat w/Column Shift										
	All Codes (Up to Build Date 4-6-74)	Loop Pile	R,W	1	1	—	1	—	—	—	M517 KB7
	(Up to Build Date 4-6-74)	Shag	R	1	1	—	—	—	—	—	M517 KH6
	(Up to Build Date 4-6-74)	Loop Pile	R,W	1	1	—	1	—	—	—	M517 KG7
	(Up to Build Date 4-6-74)	Loop Pile	R,W	1	1	—	1	—	—	—	M517 KL5
	(Up to Build Date 4-6-74)	Shag	W	1	1	—	1	—	—	—	M517 KL7
	(Up to Build Date 4-6-74) Code W1LL Shag		W	1	1	—	1	—	—	—	M517 KLL
	(Up to Build Date 4-6-74) V1YW, M2Y (Up to Build Date 4-6-74)	Loop Pile	R,W	1	1	—	1	—	—	—	M517 KX9
		Shag	R,W	1	1	—	1	—	—	—	M517 KXX
	(Up to Build Date 4-6-74) All Codes	Loop Pile	R,W	1	1	—	1	—	—	—	M517 KY7
	(After Build Date 4-6-74)	Loop	R,W	1	1	—	1	—	—	—	M539 KB7
	(After Build Date 4-6-74)	Loop	R,W	1	1	—	1	—	—	—	M539 KG7
	(After Build Date 4-6-74)	Shag	R,W	1	1	—	1	—	—	—	M539 KH6
	(AFter Build Date 4-6-74)	Loop	R,W	1	1	—	1	—	—	—	M539 KL5
	(After Build Date 4-6-74)	Shag	R,W	1	1	—	1	—	—	—	M539 KL7
	(After Build Date 4-6-74) Code W1LL	Shag	R,W	1	1	—	1	—	—	—	M539 KLL
	(After Build Date 4-6-74)	Loop	R,W	1	1	—	1	—	—	—	M539 KX9
	(After Build Date 4-6-74) V1YW, M2YW	Code Shag	R,W	1	1	—	1	—	—	—	M539 KXX
	(After Build Date 4-6-74)	Loop	R,W	1	1	—	1	—	—	—	M539 KY7
	Bucket Seat w/Console w/ 3 or 4 Speed Trans. on Floor All Codes		R,W	1	1	—	1	—	—	—	M523 KB7

TYPE LETTERS Indicates: J - Challenger; V - Valiant; R - Satellite; P - Plymouth; C - Chrysler; B - Barracuda; L - Dart; W - Coronet; D - Dodge; Y - Imperial

NUMERALS INDICATE: 21 - 2 DR. SED.; 23 - 2 DR. H.T.; 29 - FAST BACK; 41 - 4 DR. SED.; 43 - 4 DR. H.T.; 45 - 6 PASS. STA. WGN.; 46 - 9 PASS. STA. WGN.

AR Indicates use as required.
# Indicates parts not listed in any previous parts book
Numerals in parentheses ( ) refer to notes.
★ Indicates change or addition.

Printed in U.S.A.
November, 1974

Right and left part numbers are on same line, first number is right, second number is left.

CODE	PART NAME	MODEL CODES	SEE BOTTOM NOTE 21	23		29	41	43	45	46	PART NUMBER
23-79-1	CARPET Cont'd.										
		R,W	1	1	—	1	—	—	—	—	M523 KG7
	Shag	R	1	1	—	—	—	—	—	—	M523 KH6
	Shag	R,W	1	1	—	1	—	—	—	—	M523 KL7
		R,W	1	1	—	1	—	—	—	—	M523 KX9
		R,W	1	1	—	1	—	—	—	—	M523 KY7
	Bucket Seat w/Column Shift w/Center Cushion and Fold Down Arm Rest										
	All Codes	R,W	1	1	—	1	—	—	—	—	M521 KB7
		R,W	1	1	—	1	—	—	—	—	M521 KG7
	Shag	R	1	1	—	—	—	—	—	—	M521 KH6
	Shag	R,W	1	1	—	1	—	—	—	—	M521 KL7
		R,W	1	1	—	1	—	—	—	—	M521 KX9
		R,W	1	1	—	1	—	—	—	—	M521 KY7
	Bucket Seat w/Console w/Auto Trans.										
	All Codes	R,W	1	1	—	1	—	—	—	—	M522 KB7
		R,W	1	1	—	1	—	—	—	—	M522 KG7
	Shag	R	1	1	—	—	—	—	—	—	M522 KH6
	Shag	R,W	1	1	—	1	—	—	—	—	M522 KL7
		R,W	1	1	—	1	—	—	—	—	M522 KX9
		R,W	1	1	—	1	—	—	—	—	M522 KY7
	Bench Seat w/3 or 4 Speed Trans. on Floor										
	All Codes	R,W	1	1	—	1	—	—	—	—	M524 KX9
	Bucket Seat w/Center Cushion and Fold Down Back Rest										
	All Codes	R,W	1	1	—	1	—	—	—	—	M527 KX9
	Bucket Seat w/Column Shift w/o Fold Down Center Arm Rest										
	All Codes	R,W	1	1	—	1	—	—	—	—	M520 KB7
		R,W	1	1	—	1	—	—	—	—	M520 KG7
		R,W	1	1	—	1	—	—	—	—	M520 KX9
		R,W	1	1	—	1	—	—	—	—	M520 KY7
	Bench Seat w/Column Shift										
	All Codes	R,W	—	—	—	—	1	—	—	—	M518 KB7
		R,W	—	—	—	—	1	—	—	—	M518 KG7
		R,W	—	—	—	—	1	—	—	—	M518 KL5
		R,W	—	—	—	—	1	—	—	—	M518 KT8
		R,W	—	—	—	—	1	—	—	—	M518 KX9
		R,W	—	—	—	—	1	—	—	—	M518 KY7
	Bench Seat w/Column Shift										
	All Codes	R,W	—	—	—	—	—	—	1	1	M519 KB7
		R,W	—	—	—	—	—	—	1	1	M519 KG7
		R,W	—	—	—	—	—	—	1	1	M519 KL5
		R,W	—	—	—	—	—	—	1	1	M519 KT8
	Bucket Seat w/3 or 4 Speed Trans. on Floor										
	All Codes	R,W	1	1	—	1	—	—	—	—	M526 KX9
23-79-3	CARPET, Front Floor Bench or 50/50 Split Seat										
	All Codes	P,D,C	—	1	—	—	1	1	1	1	M500 KB7
		P,D,C	—	1	—	—	1	1	1	1	M500 KG7
		P,D,C	—	1	—	—	1	1	1	1	M500 KL5
		P,D,C	—	1	—	—	1	1	1	1	M500 KT8
		P,D,C	—	1	—	—	1	1	1	1	M500 KX9
		P,D,C	—	1	—	—	1	1	1	1	M500 KY7

TYPE LETTERS Indicates: J - Challenger; B - Barracuda; V - Valiant; L - Dart; R - Satellite; W - Coronet; P - Plymouth; D - Dodge; C - Chrysler; Y - Imperial

NUMERALS INDICATE: 21 - 2 DR. SED.; 23 - 2 DR. H.T.; 29 - FAST BACK; 41 - 4 DR. SED.; 43 - 4 DR. H.T.; 45 - 6 PASS. STA. WGN.; 46 - 9 PASS. STA. WGN.

AR Indicates use as required.
# Indicates parts not listed in any previous parts book
Numerals in parentheses ( ) refer to notes.
★ Indicates change or addition.

Printed in U.S.A.
November, 1974

Right and left part numbers are on same line, first number is right, second number is left.

CODE	PART NAME	MODEL CODES	SEE BOTTOM NOTE 21	23	29	41	43	45	46	PART NUMBER
23-79-3	CARPET Cont'd.									
	J3LL	P,D	—	1	—	—	1	—	—	M500 KT9
	C1KW	C	—	1	—	1	1	1	1	M500 KK2
	Bench or 50/50 Split Seat									
	All Codes (Up to Build Date 9-1-73)	Y	—	1	—	—	1	—	—	M501 KB7
	(Up to Build Date 9-1-73)	Y	—	1	—	—	1	—	—	M501 KG7
	(Up to Build Date 9-1-73)	Y	—	1	—	—	1	—	—	M501 KL5
		Y	—	1	—	—	1	—	—	M540 KT8
	(Up to Build Date 9-1-73)	Y	—	1	—	—	1	—	—	M501 KX9
	(Up to Build Date 9-1-73)	Y	—	1	—	—	1	—	—	M501 KY7
	All Codes (After Build Date 9-1-73)	Y	—	1	—	—	1	—	—	M540 KB7
	(After Build Date 9-1-73)	Y	—	1	—	—	1	—	—	M540 KG7
	(After Build Date 9-1-73)	Y	—	1	—	—	1	—	—	M540 KL5
	(After Build Date 9-1-73)	Y	—	1	—	—	1	—	—	M540 KX9
	(After Build Date 9-1-73)	Y	—	1	—	—	1	—	—	M540 KY7
23-79-33	CARPET, Rear Floor									
	All Codes	P,D	—	1	—	—	—	—	—	M700 KB7
		P,D	—	1	—	—	—	—	—	M700 KG7
	(Except Code J3LL)	P,D	—	1	—	—	—	—	—	M700 KL5
	J3LL	P	—	1	—	—	—	—	—	M700 KT9
		P,D	—	1	—	—	—	—	—	M700 KX9
		P,D	—	1	—	—	—	—	—	M700 KY7
	All Codes	P,D	—	—	—	1	—	—	—	M701 KB7
		P,D	—	—	—	1	—	—	—	M701 KG7
		P,D	—	—	—	1	—	—	—	M701 KL5
		P,D	—	—	—	1	—	—	—	M701 KX9
		P,D	—	—	—	1	—	—	—	M701 KY7
	All Codes	P,D	—	—	—	—	1	—	—	M702 KB7
		P,D	—	—	—	—	1	—	—	M702 KG7
	(Except Code J3LL)	P,D	—	—	—	—	1	—	—	M702 KL5
	J3LL	P	—	—	—	—	1	—	—	M702 KT9
		P,D	—	—	—	—	1	—	—	M702 KX9
		P,D	—	—	—	—	1	—	—	M702 KY7
	All Codes	P,D,C	—	—	—	—	—	1	1	M704 KB7
		P,D,C	—	—	—	—	—	1	1	M704 KG7
		P,D,C	—	—	—	—	—	1	1	M704 KL5
		P,D,C	—	—	—	—	—	1	1	M704 KT8
		P,D,C	—	—	—	—	—	1	1	M704 KX9
		P,D,C	—	—	—	—	—	1	1	M704 KY7
	All Codes	C	—	1	—	—	—	—	—	M703 KB7
		C	—	1	—	—	—	—	—	M703 KG7
	C1KW	C	—	1	—	—	—	—	—	M703 KK2
		C	—	1	—	—	—	—	—	M703 KL5
	(Except Code C1KW)	C	—	1	—	—	—	—	—	M703 KX9
		C	—	1	—	—	—	—	—	M703 KY7
	All Codes	C	—	—	—	1	—	—	—	M704 KB7
		C	—	—	—	1	—	—	—	M704 KG7
	C1KW	C	—	—	—	1	—	1	1	M704 KK2
		C	—	—	—	1	—	—	—	M704 KL5
		C	—	—	—	1	—	—	—	M704 KT8
	(Except Code C1KW)	C	—	—	—	1	—	—	—	M704 KX9
		C	—	—	—	1	—	—	—	M704 KY7
	All Codes	C	—	—	—	—	1	—	—	M705 KB7
		C	—	—	—	—	1	—	—	M705 KG7
	C1KW	C	—	—	—	—	1	—	—	M705 KK2
		C	—	—	—	—	1	—	—	M705 KL5
	(Except Code C1KW)	C	—	—	—	—	1	—	—	M705 KX9
		C	—	—	—	—	1	—	—	M705 KY7
	All Codes	Y	—	1	—	—	—	—	—	M712 KB7

TYPE LETTERS Indicates: J - Challenger; B - Barracuda; V - Valiant; L - Dart; R - Satellite; W - Coronet; P - Plymouth; D - Dodge; C - Chrysler; Y - Imperial

NUMERALS INDICATE: 21 - 2 DR. SED.; 23 - 2 DR. H.T.; 29 - FAST BACK; 41 - 4 DR. SED.; 43 - 4 DR. H.T.; 45 - 6 PASS. STA. WGN.; 46 - 9 PASS. STA. WGN.

AR Indicates use as required.
# Indicates parts not listed in any previous parts book
Numerals in parentheses ( ) refer to notes.
★ Indicates change or addition.

Printed in U.S.A.
November, 1974

Right and left part numbers are on same line, first number is right, second number is left.

CODE	PART NAME	MODEL CODES	SEE BOTTOM NOTE 21	23	29	41	43	45	46	PART NUMBER
23-79-33	CARPET Cont'd.									
		Y	—	1	—	—	—	—	—	M712 KG7
		Y	—	1	—	—	—	—	—	M712 KL5
		Y	—	1	—	—	—	—	—	M712 KT8
		Y	—	1	—	—	—	—	—	M712 KX9
		Y	—	1	—	—	—	—	—	M712 KY7
	All Codes	Y	—	—	—	—	1	—	—	M713 KB7
		Y	—	—	—	—	1	—	—	M713 KG7
		Y	—	—	—	—	1	—	—	M713 KL5
		Y	—	—	—	—	1	—	—	M713 KT8
		Y	—	—	—	—	1	—	—	M713 KX9
		Y	—	—	—	—	1	—	—	M713 KY7
	Security Panel									
	All Codes	V,L	—	—	1	—	—	—	—	W801 KB7
		V,L	—	—	1	—	—	—	—	W801 KG7
		V,L	—	—	1	—	—	—	—	W801 KL5
		V,L	—	—	1	—	—	—	—	W801 KX9
		V,L	—	—	1	—	—	—	—	W801 KY7
	J6VW	L	—	—	1	—	—	—	—	W811 KVW
	Rear Floor Pan Cover Panel									
	All Codes	V,L	—	—	1	—	—	—	—	W800 KB7
		V,L	—	—	1	—	—	—	—	W800 KG7
		V,L	—	—	1	—	—	—	—	W800 KL5
		V,L	—	—	1	—	—	—	—	W800 KX9
		V,L	—	—	1	—	—	—	—	W800 KY7
	J6VW	L	—	—	1	—	—	—	—	W810 KVW
	Folding Rear Back									
	All Codes	V,L	—	—	1	—	—	—	—	W802 KB7
		V,L	—	—	1	—	—	—	—	W802 KG7
		V,L	—	—	1	—	—	—	—	W802 KL5
		V,L	—	—	1	—	—	—	—	W802 KX9
		V,L	—	—	1	—	—	—	—	W802 KY7
	J6VW	L	—	—	1	—	—	—	—	W812 KVW
	Wheel House Cover (Up to Build Date 11-23-73)	V,L	—	—	1	—	—	—	—	3762 518-9
	(After Build Date 11-23-73)	V,L	—	—	1	—	—	—	—	3762 526-7
	Luggage Compt. Floor									
	Black	V,L	—	1	—	1	—	—	—	3762 437
	All Codes	V,L	—	—	1	—	—	—	—	W803 KX9
	Black	Y	—	1	—	—	1	—	—	3762 829
	Black	D,C	—	1	—	1	1	—	—	3589 287
	Luggage Compt. Side Liner									
	Rt.	Y	—	1	—	—	1	—	—	3762 410
	Lt.	Y	—	1	—	—	1	—	—	3762 411
	Luggage Compt. w/House Cover									
	Rt.	Y	—	1	—	—	1	—	—	3762 258
	Lt.	Y	—	1	—	—	1	—	—	3762 259
	Rear Floor Well									
	All Codes	R,W	—	—	—	—	—	—	1	W606 KB7
		R,W	—	—	—	—	—	—	1	W606 KG7
		R,W	—	—	—	—	—	—	1	W606 KL5
		R,W	—	—	—	—	—	—	1	W606 KT8
	All Codes	C	—	—	—	—	—	1	—	W608 KX9
	All Codes	P,D,C	—	—	—	—	—	—	1	W607 KB7
		P,D,C	—	—	—	—	—	—	1	W607 KG7
		P,D,C	—	—	—	—	—	—	1	W607 KL5
		P,D,C	—	—	—	—	—	—	1	W607 KT8
		P,D,C	—	—	—	—	—	—	1	W607 KX9
		P,D,C	—	—	—	—	—	—	1	W607 KY7

TYPE LETTERS Indicates J - Challenger, B - Barracuda, V - Valiant, L - Dart, R - Satellite, W - Coronet, P - Plymouth, D - Dodge, C - Chrysler, Y - Imperial

NUMERALS INDICATE: 21 - 2 DR. SED., 23 - 2 DR. H.T., 29 - FAST BACK, 41 - 4 DR. SED., 43 - 4 DR. H.T., 45 - 6 PASS. STA. WGN., 46 - 9 PASS. STA. WGN.

AR Indicates use as required.
# Indicates parts not listed in any previous parts book
Numerals in parentheses ( ) refer to notes.
★ Indicates change or addition.

Printed in U.S.A.
November, 1974

Right and left part numbers are on same line, first number is right, second number is left.

CODE	PART NAME	MODEL CODES	SEE BOTTOM NOTE 21	23	29	41	43	45	46	PART NUMBER
23-79-33	CARPET Cont'd.									
	Insert Center Floor Pan Cover Panel									
	All Codes (9 1/4" x 43 1/2")	R,W	—	—	—	—	—	1	1	W604 KB7
		R,W	—	—	—	—	—	1	1	W604 KG7
		R,W	—	—	—	—	—	1	1	W604 KL5
		R,W	—	—	—	—	—	1	1	W604 KT8
	Insert Rear Floor Pan Cover Panel									
	All Codes (37 1/2" x 43 1/2")	R,W	—	—	—	—	—	1	—	W601 KB7
		R,W	—	—	—	—	—	1	—	W601 KG7
		R,W	—	—	—	—	—	1	—	W601 KL5
		R,W	—	—	—	—	—	1	—	W601 KT8
	Insert, Center and Rear Floor Pan Cover Panel									
	All Codes (13 3/4" x 44 1/2")	P,D	—	—	—	—	—	1	1	W613 KB7
		P,D	—	—	—	—	—	1	1	W613 KG7
		P,D	—	—	—	—	—	1	1	W613 KL5
		P,D	—	—	—	—	—	1	1	W613 KT8
		P,D	—	—	—	—	—	1	1	W613 KX9
		P,D	—	—	—	—	—	1	1	W613 KY7
	(13 3/4" x 44 1/2")	C	—	—	—	—	—	1	1	W621 KB7
		C	—	—	—	—	—	1	1	W621 KG7
		C	—	—	—	—	—	1	1	W621 KL5
		C	—	—	—	—	—	1	1	W621 KT8
		C	—	—	—	—	—	1	1	W621 KX9
		C	—	—	—	—	—	1	1	W621 KY7
	Insert, Floor Pan Cover Rear Panel									
	All Codes (20" x 42 1/2")	P,D	—	—	—	—	—	1	—	W615 KB7
		P,D	—	—	—	—	—	1	—	W615 KG7
		P,D	—	—	—	—	—	1	—	W615 KL5
		P,D	—	—	—	—	—	1	—	W615 KT8
		P,D	—	—	—	—	—	1	—	W615 KX9
		P,D	—	—	—	—	—	1	—	W615 KY7
	(20" x 42 1/2")	C	—	—	—	—	—	1	—	W623 KB7
		C	—	—	—	—	—	1	—	W623 KG7
		C	—	—	—	—	—	1	—	W623 KL5
		C	—	—	—	—	—	1	—	W623 KT8
		C	—	—	—	—	—	1	—	W623 KX9
		C	—	—	—	—	—	1	—	W623 KY7
23-79-34	RETAINER, Rear Floor Carpet Ext. Att. Rt.	B,J	—	1	—	—	—	—	—	3509 190
23-79-36	PROTECTOR, Folding Rear Seat Back Panel Trim									
	All Codes	V,L	—	—	—	1	—	—	—	S535 KB7
		V,L	—	—	—	1	—	—	—	S535 KG6
		V,L	—	—	—	1	—	—	—	S535 KL2
		V,L	—	—	—	1	—	—	—	S535 JW1
		V,L	—	—	—	1	—	—	—	S535 JX9
		V,L	—	—	—	1	—	—	—	S535 KY4
23-79-37	BUTTON, Luggage Compt. Floor Carpet	V,L	—	—	—	3	—	—	—	3551 751
23-79-64	COVER and LATCH, Assy. Spare Tire									
	All Codes	R,W	—	—	—	—	—	1	1	W212 KB7
		R,W	—	—	—	—	—	1	1	W212 KG7
		R,W	—	—	—	—	—	1	1	W212 KL2
		R,W	—	—	—	—	—	1	1	W212 KT8
	LATCH, Spare Tire Cover	R,W	—	—	—	—	—	1	1	W213 KB7
		R,W	—	—	—	—	—	1	1	W213 KG7
		R,W	—	—	—	—	—	1	1	W213 KL2

TYPE LETTERS Indicates: J - Challenger, B - Barracuda, V - Valiant, L - Dart, R - Satellite, W - Coronet, P - Plymouth, D - Dodge, C - Chrysler, Y - Imperial

NUMERALS INDICATE: 21 - 2 DR. SED., 23 - 2 DR. H.T., 29 - FAST BACK, 41 - 4 DR. SED., 43 - 4 DR. H.T., 45 - 6 PASS. STA. WGN., 46 - 9 PASS. STA. WGN.

AR Indicates use as required.
# Indicates parts not listed in any previous parts book
Numerals in parentheses ( ) refer to notes.
★ Indicates change or addition.

Printed in U.S.A.
November, 1974

Right and left part numbers are on same line, first number is right, second number is left.

CODE	PART NAME	MODEL CODES	SEE BOTTOM NOTE 21	23	29	41	43	45	46	PART NUMBER
23-79-64	COVER and LATCH Cont'd.									
		R,W	—	—	—	—	—	—	1	1	W213 KT8
	All Codes	P,D,C	—	—	—	—	—	—	1	1	W222 KB7
		P,D,C	—	—	—	—	—	—	1	1	W222 KG7
		P,D,C	—	—	—	—	—	—	1	1	W222 KL2
		P,D,C	—	—	—	—	—	—	1	1	W222 KT8
		P,D,C	—	—	—	—	—	—	1	1	W222 KX9
		P,D,C	—	—	—	—	—	—	1	1	W222 KY4
	Knob, Spare Tire Cover									
	Frt.	P,D,C	—	—	—	—	—	—	1	1	W230 KX9
	Rr.	P,D,C	—	—	—	—	—	—	1	1	W231 KX9
	COVER, Spare Tire (Black)	D,C	—	1	—	—	1	1	—	—	3762 452
		Y	—	1	—	—	—	1	—	—	3762 453
23-79-65	BRACKET, Spare Tire Cover Front Latching	P,D,C	—	—	—	—	—	—	1	1	3589 333
23-79-78	BUMPER, Quarter Inside Center Panel Spare Tire Cover Latch	R,W	—	—	—	—	—	—	1	1	882 875
23-79-80	BRACKET, Spare Tire Cover Latching Rear									
	(Up to Build Date 1-16-74)	P,D,C	—	—	—	—	—	—	1	1	3589 329
	(After Build Date 1-16-74)	P,D,C	—	—	—	—	—	—	1	1	3762 772
23-79-81	PAWL, Spare Tire Cover Latch									
	Front	P,D,C	—	—	—	—	—	—	1	1	3589 335
	Rear	P,D,C	—	—	—	—	—	—	1	1	3589 332
23-81-3	**HANDLE, Rear Door Pull**									
	Taxi	R,W,P,D	—	—	—	—	2	—	—	—	3510 914
	Front Door Pull									
	H1LL, H5LL (Up to Build Date 7-4-74)	V,L	—	2	—	—	2	—	—	—	D727 KL2
	H6B, V3B (Up to Build Date 7-4-74)	W	—	—	—	2	—	—	—	—	D727 KB7
	H6G, V3G, H5GG, H1GG (Up to Build Date 7-4-74)	V,L,W	—	2	—	2	2	—	—	—	D727 KG6
	H6XW, E5YW, V1YW (Up to Build Date 7-4-74)	R,W	2	2	—	2	—	—	—	—	D727 JW1
	H6X, V3X (Up to Build Date 7-4-74)	W	—	—	—	2	—	—	—	—	D727 JX9
	H6Y, V3Y (Up to Build Date 7-4-74)	W	—	—	—	2	—	—	—	—	D727 KY4
	H6B, V3B (After Build Date 7-4-74)	W	—	—	—	2	—	—	—	—	D779 KB7
	H6G, V3G (After Build Date 7-4-74)	W	—	—	—	2	—	—	—	—	D779 KG6
	E5YW, H6XW, V1YW, (After Build Date 7-4-74)	R,W	2	2	—	2	—	—	—	—	D779 JW1
	H6X, V3X (After Build Date 7-4-74)	W	—	—	—	2	—	—	—	—	D779 JX9
	H6Y, V3Y (After Build Date 7-4-74)	W	—	—	—	2	—	—	—	—	D779 KY4
	H1LL, H5LL	V,L	—	2	—	—	2	—	—	—	D779 KL2
	Front and Rear Door Pull									
	E3B, E4B, G7B, W7B, S8B	P,D	—	2	—	—	4	4	4	4	D725 KB7
	E3G, E4G, G7G, W7G, S8G	P,D	—	2	—	—	4	4	4	4	D725 KG6
	E3L, E4L, G7L, G8L, W7L, S8L, J3LL	P,D	—	2	—	—	4	4	4	4	D725 KL2
	E4T, S8T	P,D	—	—	—	—	—	—	4	4	D725 KT8
	E3X, E4X, G7X, W7X, S8X, G2X	W,P,D	—	2	—	—	4	4	4	4	D725 KX9
	E3Y, E4Y, G7Y, W7Y, S8Y	P,D	—	2	—	—	4	4	4	4	D725 KY4
	E9B, EHB, H7B, H8B, PDB, PLB	C,Y	—	2	—	—	4	4	—	—	D726 KB7
	E9G, EHG, H7G, H8G, PDG, PLG	C,Y	—	2	—	—	4	4	—	—	D726 KG6
	E9L, EHL, H7L, H8L, PDL, PLL	C,Y	—	2	—	—	4	4	—	—	D726 KL2
	PDT, PLT	Y	—	2	—	—	—	4	—	—	D726 KT8
	EHXW, H8XW, PLXW, H8YW	C,Y	—	2	—	—	4	4	—	—	D726 KW1
	E9X, EHX, H7X, H8X, PDX, PLX	C,Y	—	2	—	—	4	4	—	—	D726 KX9
	E9Y, EHY, H7Y, H8Y, PDY, PLY	C,Y	—	2	—	—	4	4	—	—	D726 KY4
	RIVET NUT, 10-24 Thread, Pull Handle Att.	V,L	—	4	—	—	4	—	—	—	6026 292
23-82-3	**HANDLE, Front Seat Back Pull**									
	PDB, PLB	Y	—	2	—	—	—	2	—	—	D726 KB7
	PDG, PLG	Y	—	2	—	—	—	2	—	—	D726 KG6

TYPE LETTERS Indicates: J - Challenger; B - Barracuda; V - Valiant; L - Dart; R - Satellite; W - Coronet; P - Plymouth; D - Dodge; C - Chrysler; Y - Imperial

NUMERALS INDICATE: 21 - 2 DR. SED.; 23 - 2 DR. H.T.; 29 - FAST BACK; 41 - 4 DR. SED.; 43 - 4 DR. H.T.; 45 - 6 PASS. STA. WGN.; 46 - 9 PASS. STA. WGN.

AR Indicates use as required.
# Indicates parts not listed in any previous parts book
Numerals in parentheses ( ) refer to notes.
★ Indicates change or addition.

Printed in U.S.A.
November, 1974

Right and left part numbers are on same line, first number is right, second number is left.

CODE	PART NAME	MODEL CODES	SEE BOTTOM NOTE 21	23	29	41	43	45	46	PART NUMBER
23-82-3	HANDLE Cont'd.									
	PDL, PLL	Y	—	2	—	—	2	—	—	D726 KL2
	PDT, PLT	Y	—	2	—	—	2	—	—	D726 KT8
	PLXW	Y	—	2	—	—	2	—	—	D726 KW1
	PDX, PLX	Y	—	2	—	—	2	—	—	D726 KX9
	PDY, PLY	Y	—	2	—	—	2	—	—	D726 KY4
23-82-5	CAP, Front Seat Back Robe Strap	Y	—	4	—	—	4	—	—	3762 010
23-82-6	BASE ASSY., Front Seat Back Robe Strap	Y	—	4	—	—	4	—	—	3762 011 3762588
23-82-30	HOOK, Coat	V,L,B,J,R W,P,D,C,Y,	2	2	—	2	2	2	2	2	3685 992
23-82-39	BRACKET, Coat Hook Support	R,W	2	2	—	2	—	—	—	3551 780
23-84-3	**PAD ASSY., Instrument Panel Trim**									
	All Codes	V,L	—	1	—	1	1	—	—	— P402 KB7
		V,L	—	1	—	1	1	—	—	— P402 KG6
		V,L	—	1	—	1	1	—	—	— P402 KL5
		V,L	—	1	—	1	1	—	—	— P402 KX9
		V,L	—	1	—	1	1	—	—	— P402 KY7
	w/o Air Conditioning									
	All Codes	B,J	—	1	—	—	—	—	—	— P400 KB7
		B,J	—	1	—	—	—	—	—	— P400 KG6
		B,J	—	1	—	—	—	—	—	— P400 KX9
	w/Air Conditioning									
	All Codes	B,J	—	1	—	—	—	—	—	— P401 KB7
		B,J	—	1	—	—	—	—	—	— P401 KG6
		B,J	—	1	—	—	—	—	—	— P401 KX9
	All Codes	R,W	1	1	—	1	1	—	1	1 P403 KB7
		R,W	1	1	—	1	1	—	1	1 P403 KG6
		R,W	1	1	—	1	1	—	1	1 P403 KL5
		R,W	1	1	—	1	1	—	1	1 P403 KT8
		R,W	1	1	—	1	1	—	1	1 P403 KX9
		R,W	1	1	—	1	1	—	1	1 P403 KY7
	All Codes	P,D	—	1	—	—	1	1	1	1 P404 KB7
		P,D	—	1	—	—	1	1	1	1 P404 KG6
		P,D	—	1	—	—	1	1	1	1 P404 KL5
		P,D	—	1	—	—	1	1	1	1 P404 KT8
		P,D	—	1	—	—	1	1	1	1 P404 KX9
		P,D	—	1	—	—	1	1	1	1 P404 KY7
	All Codes	C	—	1	—	—	1	1	1	1 P405 KB7
		C	—	1	—	—	1	1	1	1 P405 KG6
		C	—	1	—	—	1	1	1	1 P405 KL5
		C	—	1	—	—	1	1	1	1 P405 KT8
		C	—	1	—	—	1	1	1	1 P405 KX9
		C	—	1	—	—	1	1	1	1 P405 KY7
	All Codes	Y	—	1	—	—	—	1	—	— P406 KB7
		Y	—	1	—	—	—	1	—	— P406 KG6
		Y	—	1	—	—	—	1	—	— P406 KL5
		Y	—	1	—	—	—	1	—	— P406 KT8
		Y	—	1	—	—	—	1	—	— P406 KX9
		Y	—	1	—	—	—	1	—	— P406 KY7
	Panel, Instrument Panel Trim									
	Center									
	All Codes	B,J	—	1	—	—	—	—	—	— P603 KB7
		B,J	—	1	—	—	—	—	—	— P603 KG6
		B,J	—	1	—	—	—	—	—	— P603 JX9
	Lower Lt.									
	All Codes	B,J	—	1	—	—	—	—	—	— P602 KB7
		B,J	—	1	—	—	—	—	—	— P602 KG6
		B,J	—	1	—	—	—	—	—	— P602 JX9

TYPE LETTERS Indicates: J - Challenger, B - Barracuda, V - Valiant, L - Dart, R - Satellite, W - Coronet, P - Plymouth, D - Dodge, C - Chrysler, Y - Imperial

NUMERALS INDICATE: 21 - 2 DR. SED., 23 - 2 DR. H.T., 29 - FAST BACK, 41 - 4 DR. SED., 43 - 4 DR. H.T., 45 - 6 PASS. STA. WGN., 46 - 9 PASS. STA. WGN.

AR Indicates use as required.
# Indicates parts not listed in any previous parts book
Numerals in parentheses ( ) refer to notes.
★ Indicates change or addition.

Printed in U.S.A.
November, 1974

Right and left part numbers are on same line, first number is right, second number is left.

CODE	PART NAME		MODEL CODES	SEE BOTTOM NOTE 21	23		29	41	43	45	46	PART NUMBER
23-84-11	CLIP, Instrument Panel Upper Cover											
	Front		P,D,C,Y	—	3	—	—	3	3	3	3	3590 389
	Rear		P,D,C,Y	—	2	—	—	2	2	2	2	3590 454
23-86-1	**PAD, Vinyl Roof Back, Up to Build**											
	Up to Build Date 5-1-74	Rt.	Y	—	1	—	—	—	1	—	—	3762 456
	Up to Build Date 5-1-74	Lt.	Y	—	1	—	—	—	1	—	—	3762 457
	After Build Date	Rt.	Y	—	1	—	—	—	1	—	—	3762 642
	After Build Date	Lt	Y	—	1	—	—	—	—	—	—	3762 643
	w/Landau Roof (St Regis)		C	—	1	—	—	—	—	—	—	3879 958
23-86-2	COVER, Roof Outside											
	Full Roof											
	V1G		V,L	—	1	—	—	—	—	—	—	E802 KG9
	V1L		V,L	—	1	—	—	—	—	—	—	E802 KL2
	V1W		V,L	—	1	—	—	—	—	—	—	E802 JW1
	V1X		V,L	—	1	—	—	—	—	—	—	E802 JX9
	V1Y		V,L	—	1	—	—	—	—	—	—	E802 KY4
	V1P		V,L	—	1	—	—	—	—	—	—	E814 KL2
	V1G		V,L	—	—	—	1	—	—	—	—	E805 KG9
	V1L		V,L	—	—	—	1	—	—	—	—	E805 KL2
	V1W		V,L	—	—	—	1	—	—	—	—	E805 JW1
	V1X		V,L	—	—	—	1	—	—	—	—	E805 JX9
	V1Y		V,L	—	—	—	1	—	—	—	—	E805 KY4
	Canopy											
	V4L		L	—	—	—	1	—	—	—	—	E801 KL2
	V4W		V,L	—	—	—	1	—	—	—	—	E801 JW1
	V4X		V,L	—	—	—	1	—	—	—	—	E801 JX9
	V4Y		V	—	—	—	1	—	—	—	—	E801 JYY
	Full Roof											
	V1G		V,L	—	—	—	—	1	—	—	—	E804 KG9
	V1W		V,L	—	—	—	—	1	—	—	—	E804 JW1
	V1X		V,L	—	—	—	—	1	—	—	—	E804 JX9
	V1Y		V,L	—	—	—	—	1	—	—	—	E804 KY4
	V1P		V,L	—	—	—	—	1	—	—	—	E813 KL2
	Full Roof											
	V1G		B,J	—	1	—	—	—	—	—	—	E811 KG9
	V1W		B,J	—	1	—	—	—	—	—	—	E811 JW1
	V1X		B,J	—	1	—	—	—	—	—	—	E811 JX9
	V1Y		B,J	—	1	—	—	—	—	—	—	E811 KY4
	Full Roof w/Quarter Opera Window											
	V1G		W	—	1	—	—	—	—	—	—	E815 KG9
	V1L		W	—	1	—	—	—	—	—	—	E815 KL2
	V1W		W	—	1	—	—	—	—	—	—	E815 KW1
	V1X		W	—	1	—	—	—	—	—	—	E815 KX9
	V1Y		W	—	1	—	—	—	—	—	—	E815 KY4
	Halo											
	V1G		R,W	1	1	—	—	—	—	—	—	E810 KG9
	V1L		R,W	1	1	—	—	—	—	—	—	E810 KL2
	V1W		R,W	1	1	—	—	—	—	—	—	E810 JW1
	V1X		R,W	1	1	—	—	—	—	—	—	E810 JX9
	V1Y		R,W	1	1	—	—	—	—	—	—	E810 KY4
	Full Roof											
	V1G		R,W	—	—	—	—	1	—	—	—	E800 KG9
	V1L		R,W	—	—	—	—	1	—	—	—	E800 KL2
	V1W		R,W	—	—	—	—	1	—	—	—	E800 JW1
	V1X		R,W	—	—	—	—	1	—	—	—	E800 JX9
	V1Y		R,W	—	—	—	—	1	—	—	—	E800 KY4
	Canopy											
	V4G		R,W	1	1	—	—	—	—	—	—	E809 KG9
	V4L		R,W	1	1	—	—	—	—	—	—	E809 KL2

TYPE LETTERS Indicates J - Challenger V - Valiant R - Satellite P - Plymouth C - Chrysler
B - Barracuda L - Dart W - Coronet D - Dodge Y - Imperial

NUMERALS INDICATE: 21 - 2 DR. SED. 41 - 4 DR. SED. 45 - 6 PASS. STA. WGN.
23 - 2 DR. H.T. 29 - FAST BACK 43 - 4 DR. H.T. 46 - 9 PASS. STA. WGN.

AR Indicates use as required. Numerals in parentheses ( ) refer to notes. Printed in U.S.A.
# Indicates parts not listed in any previous parts book ★ Indicates change or addition. November, 1974

Right and left part numbers are on same line, first number is right, second number is left.

CODE	PART NAME	MODEL CODES	SEE BOTTOM NOTE 21	23	29	41	43	45	46	PART NUMBER
23-86-2	COVER Cont'd.									
	V4W	R,W	1	1	—	—	—	—	—	E809 JW1
	V4X	R,W	1	1	—	—	—	—	—	E809 JX9
	V4Y	R,W	1	1	—	—	—	—	—	E809 KY4
	Formal									
	V1G	W	—	—	—	1	—	—	—	E808 KG9
	V1L	W	—	—	—	1	—	—	—	E808 KL2
	V1W	W	—	—	—	1	—	—	—	E808 JW1
	V1X	W	—	—	—	1	—	—	—	E808 JX9
	V1Y	W	—	—	—	1	—	—	—	E808 KY4
	Sun Roof Outside Panel									
	V1G	V,L,R,W	1	1	—	1	—	—	—	E806 KG9
	V1L, V4L	V,L,R,W	1	1	—	1	—	—	—	E806 KL2
	V1W	V,L,R,W	1	1	—	1	—	—	—	E806 JW1
	V1X	V,L,R,W	1	1	—	1	—	—	—	E806 JX9
	V1Y	V,L,R,W	1	1	—	1	—	—	—	E806 KY4
	V4Y	V	—	—	—	1	—	—	—	E806 JYY
	Formal Sun Roof Outside Panel									
	V1G	W	—	—	—	1	—	—	—	E807 KG9
	V1L, V1P	V,L,W	—	—	—	1	—	—	—	E807 KL2
	V1W	W	—	—	—	1	—	—	—	E807 JW1
	V1X	W	—	—	—	1	—	—	—	E807 JX9
	V1Y	W	—	—	—	1	—	—	—	E807 KY4
	Full Roof, w/o Opera Window									
	V1B	P,D	—	1	—	—	—	—	—	E827 KB7
	V1G	P,D	—	1	—	—	—	—	—	E827 KG9
	V1L	P,D	—	1	—	—	—	—	—	E827 KL2
	V1W	P,D	—	1	—	—	—	—	—	E827 KW1
	V1X	P,D	—	1	—	—	—	—	—	E827 KX9
	V1Y	P,D	—	1	—	—	—	—	—	E827 KY4
	Full Roof, w/Opera Window									
	V1B	P,D	—	1	—	—	—	—	—	E816 KB7
	V1G	P,D	—	1	—	—	—	—	—	E816 KG9
	V1L	P,D	—	1	—	—	—	—	—	E816 KL2
	V1W	P,D	—	1	—	—	—	—	—	E816 KW1
	V1X	P,D	—	1	—	—	—	—	—	E816 KX9
	V1Y	P,D	—	1	—	—	—	—	—	E816 KY4
	V1B	P,D	—	—	—	1	—	—	—	E812 KB7
	V1G	P,D	—	—	—	1	—	—	—	E812 KG9
	V1L	P,D	—	—	—	1	—	—	—	E812 KL2
	V1W	P,D	—	—	—	1	—	—	—	E812 KW1
	V1X	P,D	—	—	—	1	—	—	—	E812 KX9
	V1Y	P,D	—	—	—	1	—	—	—	E812 KY4
	V1B	P,D	—	—	—	—	1	—	—	E826 KB7
	V1G	P,D	—	—	—	—	1	—	—	E826 KG9
	V1L	P,D	—	—	—	—	1	—	—	E826 KL2
	V1W	P,D	—	—	—	—	1	—	—	E826 KW1
	V1X	P,D	—	—	—	—	1	—	—	E826 KX9
	V1Y	P,D	—	—	—	—	1	—	—	E826 KY4
	V1B	C	—	—	—	1	—	—	—	E828 KB7
	V1X	C	—	—	—	1	—	—	—	E828 KX9
	V1G	C	—	—	—	1	—	—	—	E828 KG9
	V1L	C	—	—	—	1	—	—	—	E828 KL2
	V1W	C	—	—	—	1	—	—	—	E828 KW1
	V1Y	C	—	—	—	1	—	—	—	E828 KY4
	V1B	C	—	1	—	—	1	—	—	E825 KB7
	V1G	C	—	1	—	—	1	—	—	E825 KG9
	V1L	C	—	1	—	—	1	—	—	E825 KL2
	V1W	C	—	1	—	—	1	—	—	E825 KW1

TYPE LETTERS Indicates: J - Challenger; B - Barracuda; V - Valiant; L - Dart; R - Satellite; W - Coronet; P - Plymouth; D - Dodge; C - Chrysler; Y - Imperial

NUMERALS INDICATE: 21 - 2 DR. SED.; 23 - 2 DR. H.T.; 29 - FAST BACK; 41 - 4 DR. SED.; 43 - 4 DR. H.T.; 45 - 6 PASS. STA. WGN.; 46 - 9 PASS. STA. WGN.

AR Indicates use as required.
# Indicates parts not listed in any previous parts book
Numerals in parentheses ( ) refer to notes.
★ Indicates change or addition.

Printed in U.S.A.
November, 1974

Right and left part numbers are on same line, first number is right, second number is left.

CODE	PART NAME	MODEL CODES	SEE BOTTOM NOTE 21	23	29	41	43	45	46	PART NUMBER
23-86-2	COVER Cont'd.									
	V1X	C	—	1	—	—	—	1	—	—	E825 KX9
	V1Y	C	—	1	—	—	—	1	—	—	E825 KY4
	V1L	Y	—	1	—	—	—	1	—	—	E829 KL2
	V1T	Y	—	1	—	—	—	1	—	—	E829 KT7
	V1W	Y	—	1	—	—	—	1	—	—	E829 KW1
	V1X	Y	—	1	—	—	—	1	—	—	E829 KX9
	V1Y	Y	—	1	—	—	—	1	—	—	E829 KY4
	V1B	Y	—	1	—	—	—	1	—	—	E829 KB7
	V1G	Y	—	1	—	—	—	1	—	—	E829 KG9
	"B" Pillar Outside									
	V1X	V,L	—	—	—	—	1	—	—	—	E830-1 KX9
	V1P	V,L	—	—	—	—	1	—	—	—	E832-3 KL2
	V1W	V,L	—	—	—	—	1	—	—	—	E830-1 KW1
	V1G	V,L	—	—	—	—	1	—	—	—	E830-1 KG9
	Landau Roof (St. Regis) White	C	—	1	—	—	—	—	—	—	3879 952
23-86-3	HEADLINING and LISTING									
	(Panel) w/o Sun Roof									
	All Codes	V,L	—	1	—	—	—	—	—	—	H702 KB7
	(Except Code H1GG, H5GG)	V,L	—	1	—	—	—	—	—	—	H702 KG7
	(Except Code Hill, H5LL	V,L	—	1	—	—	—	—	—	—	H702 KL2
		V,L	—	1	—	—	—	—	—	—	H702 KX9
		V,L	—	1	—	—	—	—	—	—	H702 KY4
	Code H1LL, H5LL	V,L	—	1	—	—	—	—	—	—	H721 KL2
	Code H1GG, H5GG	V,L	—	—	—	—	1	—	—	—	H721 KG7
	All Codes	V,L	—	—	—	1	—	—	—	—	H701 KB7
		V,L	—	—	—	1	—	—	—	—	H701 KG7
		V,L	—	—	—	1	—	—	—	—	H701 KL2
		V,L	—	—	—	1	—	—	—	—	H701 KX9
		V,L	—	—	—	1	—	—	—	—	H701 KY4
	M2YW, C6XW, F6XW, J6VW	V,L	—	—	—	1	—	—	—	—	H701 KW1
	(Panel) w/Sun Roof									
	All Codes (After Build Date 2-4-74)	V,L	—	1	—	—	—	—	—	—	H704 KW1
	(After Build Date 2-4-74)	V,L	—	—	—	1	—	—	—	—	H703 KW1
	(Up to Build Date 2-4-74)	V,L	—	1	—	—	—	—	—	—	H704 KL2
	(Up to Build Date 2-4-74)	V,L	—	—	—	1	—	—	—	—	H703 KL2
	All Codes-Sample of Material Reqd.	V,L	—	—	—	—	1	—	—	—	H751 KL2
	Sample of Material Reqd.	V,L	—	—	—	—	1	—	—	—	H751 KB7
	Sample of Material Reqd.	V,L	—	—	—	—	1	—	—	—	H751 KG7
	Sample of Material Reqd.	V,L	—	—	—	—	1	—	—	—	H751 JX9
	Sample of Material Reqd.	V,L	—	—	—	—	1	—	—	—	H751 KY4
	All Codes	B	—	1	—	—	—	—	—	—	H754 KB7
		B	—	1	—	—	—	—	—	—	H754 KG7
		B	—	1	—	—	—	—	—	—	H754 JW1
		B	—	1	—	—	—	—	—	—	H754 JX9
	All Codes	J	—	1	—	—	—	—	—	—	H755 KB7
		J	—	1	—	—	—	—	—	—	H755 KG7
		J	—	1	—	—	—	—	—	—	H755 JW1
		J	—	1	—	—	—	—	—	—	H755 JX9
	w/o Sun Roof									
	All Codes-Sample of Material Reqd.	R,W	1	1	—	1	—	—	—	—	H752 KB7
	Sample of Material Reqd.	R,W	1	1	—	1	—	—	—	—	H752 KG7
	Sample of Material Reqd.	R,W	1	1	—	1	—	—	—	—	H752 JX9
	Sample of Material Reqd.	R,W	1	1	—	1	—	—	—	—	H752 JW1
	Sample of Material Reqd.	R,W	1	1	—	1	—	—	—	—	H752 KL2
	Sample of Material Reqd.	R,W	1	1	—	1	—	—	—	—	H752 KY4
	w/Sun Roof									
	All Codes-Sample of Material Reqd.	R,W	1	1	—	1	—	—	—	—	H753 KB7
	Sample of Material Reqd.	R,W	1	1	—	1	—	—	—	—	H753 KG7

TYPE LETTERS Indicates J - Challenger, B - Barracuda, V - Valiant, L - Dart, R - Satellite, W - Coronet, P - Plymouth, D - Dodge, C - Chrysler, Y - Imperial

NUMERALS INDICATE: 21 - 2 DR. SED., 23 - 2 DR. H.T., 29 - FAST BACK, 41 - 4 DR. SED., 43 - 4 DR. H.T., 45 - 6 PASS. STA. WGN., 46 - 9 PASS. STA. WGN.

AR Indicates use as required.
# Indicates parts not listed in any previous parts book
Numerals in parentheses ( ) refer to notes.
★ Indicates change or addition.

Printed in U.S.A.
November, 1974

Right and left part numbers are on same line, first number is right, second number is left.

CODE	PART NAME	MODEL CODES	SEE BOTTOM NOTE 21	23	29	41	43	45	46	PART NUMBER
23-86-3	HEADLINING and LISTING Cont'd.									
	Sample of Material Reqd.	R,W	1	1	—	1	—	—	—	H753 JW1
	Sample of Material Reqd.	R,W	1	1	—	1	—	—	—	H753 JX9
	Sample of Material Reqd.	R,W	1	1	—	1	—	—	—	H753 KY4
	Sample of Material Reqd.	R,W	1	1	—	1	—	—	—	H753 KL2
	All Codes (Up to Build Date 4-29-74)	R,W	—	—	—	1	—	—	—	H750 KB7
	(Up to Build Date 4-29-74)	R,W	—	—	—	1	—	—	—	H750 KG7
	(Up to Build Date 4-29-74)	R,W	—	—	—	1	—	—	—	H750 KT8
	(Up to Build Date 4-29-74)	R,W	—	—	—	1	—	—	—	H750 JX9
	(Up to Build Date 4-29-74)	R,W	—	—	—	1	—	—	—	H750 KL2
	(Up to Build Date 4-29-74)	R,W	—	—	—	1	—	—	—	H750 KY4
	All Codes									
	(After Build Date 4-29-74)									
	Sample of Material Reqd.	R,W	—	—	—	1	—	—	—	H761 KB7
	(After Build Date 4-29-74)									
	Sample of Material Reqd.	R,W	—	—	—	1	—	—	—	H761 KG7
	(After Build Date 4-29-74)									
	Sample of Material Reqd.	R,W	—	—	—	1	—	—	—	H761 KT8
	(After Build Date 4-29-74)									
	Sample of Material Reqd.	R,W	—	—	—	1	—	—	—	H761 KL2
	(After Build Date 4-29-74)									
	Sample of Material Reqd.	R,W	—	—	—	1	—	—	—	H716 KX9
	(After Build Date 4-29-74)									
	Sample of Material Reqd.	R,W	—	—	—	1	—	—	—	H761 KY4
	Roof Inside Finish Panel									
	1	R,W	—	—	—	—	—	1	1	H900 KW2
	2	R,W	—	—	—	—	—	1	1	H903 KW2
	3	R,W	—	—	—	—	—	1	1	H904 JW2
	w/o Lamp Hole 4	R,W	—	—	—	—	—	1	1	H902 JW2
	All Codes-Sample of Material Reqd.	P,D	—	1	—	—	—	—	—	H759 KB7
	Sample of Material Reqd.	P,D	—	1	—	—	—	—	—	H759 KG7
	Sample of Material Reqd.	P,D	—	1	—	—	—	—	—	H759 KL2
	Sample of Material Reqd.	P,D	—	1	—	—	—	—	—	H759 KX9
	Sample of Material Reqd.	P,D	—	1	—	—	—	—	—	H759 KY4
	w/Zipper									
	A1G, A2G Sample of Material Reqd.	P,D	—	—	—	1	—	—	—	H760 KG7
	A1X, A2X, K2X Sample of Material Reqd.	P,D	—	—	—	1	—	—	—	H760 KX9
	A1Y, A2Y, K1Y, K2Y Sample of Material Reqd.	P,D	—	—	—	1	—	—	—	H760 KY4
	All Codes Sample of Material Reqd.	P,D,C	—	—	—	—	—	1	1	H758 KB7
	Sample of Material Reqd.	P,D,C	—	—	—	—	—	1	1	H758 KG7
	Sample of Material Reqd.	P,D,C	—	—	—	—	—	1	1	H758 KL2
	Sample of Material Reqd.	P,D,C	—	—	—	—	—	1	1	H758 KT8
	Sample of Material Reqd.	P,D,C	—	—	—	—	—	1	1	H758 KW1
	Sample of Material Reqd.	P,D,C	—	—	—	—	—	1	1	H758 KY4
	C1B, D4B, F4B, W7B, Sample of Material Reqd.									
	A1G, A2G, B1G, B2G, C1G, D4G, C2G, P1G, R2G, M1G, F4G, V2G, W7G Sample of Material Reqd.	P,D	—	—	—	1	—	—	—	H756 KG7
	C1L, D4L, H8L, C2L, P1L, R2L, M1L, F4L, V2L, W7L Sample of Material Reqd.	P,D	—	—	—	1	—	—	—	H756 KL2
	A1X, A2X, K2X, B1X, B2X, C1X, D4X, P1X, R2X, M1X, F4X, W7X, Sample of Material Reqd.	P,D	—	—	—	1	—	—	—	H756 KX9

TYPE LETTERS Indicates J - Challenger, B - Barracuda, V - Valiant, L - Dart, R - Satellite, W - Coronet, P - Plymouth, D - Dodge, C - Chrysler, Y - Imperial

NUMERALS INDICATE: 21 - 2 DR. SED., 23 - 2 DR. H.T., 29 - FAST BACK, 41 - 4 DR. SED., 43 - 4 DR. H.T., 45 - 6 PASS. STA. WGN., 46 - 9 PASS. STA. WGN.

AR Indicates use as required.
# Indicates parts not listed in any previous parts book
Numerals in parentheses ( ) refer to notes.
★ Indicates change or addition.

Printed in U.S.A.
November, 1974

Right and left part numbers are on same line, first number is right, second number is left.

CODE	PART NAME	MODEL CODES	SEE BOTTOM NOTE 21	23	29	41	43	45	46	PART NUMBER
23-86-3	HEADLINING and LISTING Cont'd.									
	A1Y, A2Y, K1Y, K2Y, B1Y, B2Y, C1Y, D4Y, C2Y, P1Y, R2Y, M1Y, F4Y, V2Y, W7Y, Sample of Material Reqd.	P,D	—	—	—	1	—	—	—	H756 KY4
	All Codes Sample of Material Reqd.	C	—	—	—	1	—	—	—	H756 KB7
	Sample of Material Reqd.	C	—	—	—	1	—	—	—	H756 KG7
	Sample of Material Reqd.	C	—	—	—	1	—	—	—	H756 KL2
	Sample of Material Reqd.	C	—	—	—	1	—	—	—	H756 KW1
	Sample of Material Reqd.	C	—	—	—	1	—	—	—	H756 KX9
	Sample of Material Reqd.	C	—	—	—	1	—	—	—	H756 KY4
	Roof Sliding Panel									
	All Codes (Up to Build Date 2-4-74)	V,L	—	1	—	—	—	—	—	H603 KL2
	(Up to Build Date 2-4-74)	V,L	—	—	1	—	—	—	—	H604 KL2
	(After Build Date 2-4-74)	V,L	—	1	—	—	—	—	—	H603 KW1
	(After Build Date 2-4-74)	V,L	—	—	1	—	—	—	—	H604 KW1
	All Codes	R,W	1	1	1	—	—	—	—	H600 KB7
		R,W	1	1	1	—	—	—	—	H600 KG7
		R,W	1	1	1	—	—	—	—	H600 KL2
		R,W	1	1	1	—	—	—	—	H600 JW1
		R,W	1	1	1	—	—	—	—	H600 JX9
		R,W	1	1	1	—	—	—	—	H600 KY4
	Fastener, Headlining Sliding Panel	V,L,R,W	8	8	7	—	—	—	—	6003 423
	Moulded Roof									
	All Codes	P,D	—	—	—	—	1	—	—	H700 KB7
		P,D	—	—	—	—	1	—	—	H700 KG7
		P,D	—	—	—	—	1	—	—	H700 KL2
		P,D	—	—	—	—	1	—	—	H700 KX9
		P,D	—	—	—	—	1	—	—	H700 KY4
	All Codes Sample of Material Reqd.	C,Y	—	1	—	—	1	—	—	H757 KB7
	Sample of Material Reqd.	C,Y	—	1	—	—	1	—	—	H757 KG7
	Sample of Material Reqd.	C,Y	—	1	—	—	1	—	—	H757 KL2
	Sample of Material Reqd.	Y	—	1	—	—	1	—	—	H757 KT8
	Sample of Material Reqd.	C,Y	—	1	—	—	1	—	—	H757 KW1
	Sample of Material Reqd.	C,Y	—	1	—	—	1	—	—	H757 KX9
	Sample of Material Reqd.	C,Y	—	1	—	—	1	—	—	H757 KY4
	Rear Window Opening Trim									
	All Codes	Y	—	1	—	—	1	—	—	H334 KB7
		Y	—	1	—	—	1	—	—	H334 KG7
		Y	—	1	—	—	1	—	—	H334KL2
		Y	—	1	—	—	1	—	—	H334 KT8
		Y	—	1	—	—	1	—	—	H334 KX9
		Y	—	1	—	—	1	—	—	H334 KW1
		Y	—	1	—	—	1	—	—	H334 KY4
	Panel Assy., Quarter Upper Trim									
	All Codes	V,L	—	1	—	—	—	—	—	H316-7 KB7
	(Except Code H5GG)	V,L	—	1	—	—	—	—	—	H316-7 KG7
	(Except Code Hill, H5LL)	V,L	—	1	—	—	—	—	—	H316-7 KL2
		V,L	—	1	—	—	—	—	—	H316-7 JX9
		V,L	—	1	—	—	—	—	—	H316-7 KY4
	Code H1LL, H5LL	V,L	—	1	—	—	—	—	—	H384-5KL2
	Code H5GG	V,L	—	1	—	—	—	—	—	H384-5 KG7
	All Codes (w/Garnish Mldg.)	V,L	—	—	1	—	—	—	—	H310-1 KB7
		V,L	—	—	1	—	—	—	—	H310-1 KG6
		V,L	—	—	1	—	—	—	—	H310-1 KL2
		V,L	—	—	1	—	—	—	—	H310-1 JX9
	Code M2YW, C6XW, F6XW, J6VW	V,L	—	—	1	—	—	—	—	H310-1 KW1
		V,L	—	—	1	—	—	—	—	H310-1 KY4
	All Codes	V,L	—	—	—	1	—	—	—	H318-9 KB7

TYPE LETTERS Indicates: J - Challenger; B - Barracuda; V - Valiant; L - Dart; R - Satellite; W - Coronet; P - Plymouth; D - Dodge; C - Chrysler; Y - Imperial

NUMERALS INDICATE: 21 - 2 DR. SED.; 23 - 2 DR. H.T.; 29 - FAST BACK; 41 - 4 DR. SED.; 43 - 4 DR. H.T.; 45 - 6 PASS. STA. WGN.; 46 - 9 PASS. STA. WGN.

AR Indicates use as required.
# Indicates parts not listed in any previous parts book
Numerals in parentheses ( ) refer to notes.
★ Indicates change or addition.

Printed in U.S.A.
November, 1974

Right and left part numbers are on same line, first number is right, second number is left.

CODE	PART NAME	MODEL CODES	SEE BOTTOM NOTE 21	23	29	41	43	45	46	PART NUMBER
23-86-3	HEADLINING and LISTING Cont'd.									
		V,L	—	—	—	1	—	—	—	H318-9 KG7
		V,L	—	—	—	1	—	—	—	H318-9 KL2
		V,L	—	—	—	1	—	—	—	H318-9 KY4
		V,L	—	—	—	1	—	—	—	H318-9 JX9
	All Codes	B	—	1	—	—	—	—	—	H314-5 KB7
		B	—	1	—	—	—	—	—	H314-5 KG7
		B	—	1	—	—	—	—	—	H314-5 JW1
		B	—	1	—	—	—	—	—	H314-5 JX9
	All Codes	R	1	1	—	—	—	—	—	H302-3 KB7
		R	1	1	—	—	—	—	—	H302-3 KG6
		R	1	1	—	—	—	—	—	H302-3 KL2
		R	1	1	—	—	—	—	—	H302-3 JX9
		R	1	1	—	—	—	—	—	H302-3 JW1
		R	1	1	—	—	—	—	—	H302-3 KY4
	All Codes (w/o Qtr. Opera Window) (w/o Louvers)	W	1	1	—	—	—	—	—	H306-7 KB7
	(w/o Qtr. Opera Window) (w/o Louvers)	W	1	1	—	—	—	—	—	H306-7 KG6
	(w/o Qtr. Opera Window) (w/o Louvers)	W	1	1	—	—	—	—	—	H306-7 KL2
	(w/o Qtr. Opera Window) (w/o Louvers)	W	1	1	—	—	—	—	—	H306-7 JX9
	(w/o Qtr. Opera Window) (w/o Louvers)	W	1	1	—	—	—	—	—	H306-7 JW1
	(w/o Qtr. Opera Window) (w/o Louvers)	W	1	1	—	—	—	—	—	H306-7 KY4
	All Codes w/Qtr. Opera Window or w/o Opera w/Louvers Rear	W	—	1	—	1	—	—	—	H312-3 KB7
		W	—	1	—	1	—	—	—	H312-3 KG7
		W	—	1	—	1	—	—	—	H312-3 JW1
		W	—	1	—	1	—	—	—	H312-3 JX9
		W	—	1	—	1	—	—	—	H312-3 KL2
		W	—	1	—	1	—	—	—	H312-3 KY4
	Front, w/Louvers, w/o Qtr. Opera Window									
	All Codes	W	—	1	—	1	—	—	—	H308-9 KB7
		W	—	1	—	1	—	—	—	H308-9 KG6
		W	—	1	—	1	—	—	—	H308-9 KL2
		W	—	1	—	1	—	—	—	H308-9 JW1
		W	—	1	—	1	—	—	—	H308-9 JX9
		W	—	1	—	1	—	—	—	H308-9 KY4
	FRONT, w/o Louvers, w/Qtr. Opera Window									
	All Codes	W	—	1	—	—	—	—	—	H372-3 KB7
		W	—	1	—	—	—	—	—	H372-3 KG6
		W	—	1	—	—	—	—	—	H372-3 KL2
		W	—	1	—	—	—	—	—	H372-3 KW1
		W	—	1	—	—	—	—	—	H372-3 KX9
		W	—	1	—	—	—	—	—	H372-3 KY4
	All Codes	R,W	—	—	—	1	—	—	—	H386-7 KB7
		R,W	—	—	—	1	—	—	—	H386-7 KG7
		R,W	—	—	—	1	—	—	—	H386-7 KL2
		R,W	—	—	—	1	—	—	—	H386-7 KT8
		R,W	—	—	—	1	—	—	—	H386-7 KX9
		R,W	—	—	—	1	—	—	—	H386-7 KY4
	Panel, Upper Quarter Trim									
	All Codes	P,D	—	1	—	—	—	—	—	H348-9 KB7

TYPE LETTERS Indicates: J - Challenger, B - Barracuda, V - Valiant, L - Dart, R - Satellite, W - Coronet, P - Plymouth, D - Dodge, C - Chrysler, Y - Imperial

NUMERALS INDICATE: 21 - 2 DR. SED., 23 - 2 DR. H.T., 29 - FAST BACK, 41 - 4 DR. SED., 43 - 4 DR. H.T., 45 - 6 PASS. STA. WGN., 46 - 9 PASS. STA. WGN.

AR Indicates use as required.
# Indicates parts not listed in any previous parts book
Numerals in parentheses ( ) refer to notes.
★ Indicates change or addition.

Printed in U.S.A.
November, 1974

Right and left part numbers are on same line, first number is right, second number is left.

CODE	PART NAME	MODEL CODES	SEE BOTTOM NOTE 21	23	29	41	43	45	46	PART NUMBER
23-86-3	HEADLINING and LISTING Cont'd.									
		P,D	—	1	—	—	—	—	—	H348-9 KG7
		P,D	—	1	—	—	—	—	—	H348-9 KL2
		P,D	—	1	—	—	—	—	—	H348-9 KX9
		P,D	—	1	—	—	—	—	—	H348-9 KY4
	All Codes (Up to Build Date 1-15-74)	C	—	1	—	—	—	—	—	H332-3 KB7
	(Up to Build Date 1-15-74)	C	—	1	—	—	—	—	—	H332-3 KG7
	(Up to Build Date 1-15-74)	C	—	1	—	—	—	—	—	H332-3 KL2
	(Up to Build Date 1-15-74)	C	—	1	—	—	—	—	—	H332-3 KW1
	(Up to Build Date 1-15-74)	C	—	1	—	—	—	—	—	H332-3 KX9
	(Up to Build Date 1-15-74)	C	—	1	—	—	—	—	—	H332-3 KY4
	All Codes (After Build Date 1-15-74)	C	—	1	—	—	—	—	—	H358-9 KB7
	(After Build Date 1-15-74)	C	—	1	—	—	—	—	—	H358-9 KG7
	(After Build Date 1-15-74)	C	—	1	—	—	—	—	—	H358-9 KL2
	(After Build Date 1-15-74)	C	—	1	—	—	—	—	—	H358-9 KW1
	(After Build Date 1-15-74)	C	—	1	—	—	—	—	—	H358-9 KX9
	(After Build Date 1-15-74)	C	—	1	—	—	—	—	—	H358-9 KY4
	All Codes	P,D	—	—	—	1	—	—	—	H350-1 KB7
		P,D	—	—	—	1	—	—	—	H350-1 KG7
		P,D	—	—	—	1	—	—	—	H350-1 KL2
		P,D	—	—	—	1	—	—	—	H350-1 KX9
		P,D	—	—	—	1	—	—	—	H350-1 KY4
	All Codes									
		P,D	—	—	—	—	1	—	—	H346-7 KB7
		P,D	—	—	—	—	1	—	—	H346-7 KG7
		P,D	—	—	—	—	1	—	—	H346-7 KL2
		P,D	—	—	—	—	1	—	—	H346-7 KX9
		P,D	—	—	—	—	1	—	—	H346-7 KY4
	All Codes	C	—	—	—	1	—	—	—	H352-3 KB7
		C	—	—	—	1	—	—	—	H352-3 KG7
		C	—	—	—	1	—	—	—	H352-3 KL2
		C	—	—	—	1	—	—	—	H352-3 KW1
		C	—	—	—	1	—	—	—	H352-3 KX9
		C	—	—	—	1	—	—	—	H352-3 KY4
	All Codes (Up to Build Date 1-15-74)	C	—	—	—	—	1	—	—	H328-9 KB7
	(Up to Build Date 1-15-74)	C	—	—	—	—	1	—	—	H328-9 KG7
	(Up to Build Date 1-15-74)	C	—	—	—	—	1	—	—	H328-9 KL2
	(Up to Build Date 1-15-74)	C	—	—	—	—	1	—	—	H328-9 KW1
	(Up to Build Date 1-15-74)	C	—	—	—	—	1	—	—	H328-9 KX9
	(Up to Build Date 1-15-74)	C	—	—	—	—	1	—	—	H328-9 KY4
	All Codes (After Build Date 1-15-74)	C	—	—	—	—	1	—	—	H354-5 KB7
	(After Build Date 1-15-74)	C	—	—	—	—	1	—	—	H354-5 KG7
	(After Build Date 1-15-74)	C	—	—	—	—	1	—	—	H354-5 KL2
	(After Build Date 1-15-74)	C	—	—	—	—	1	—	—	H354-5 KW1
	(After Build Date 1-15-74)	C	—	—	—	—	1	—	—	H354-5 KX9
	(After Build Date 1-15-74)	C	—	—	—	—	1	—	—	H354-5 KY4
	All Codes (Up to Build Date 1-15-74)	Y	—	1	—	—	—	—	—	H340-1 KB7
	(Up to Build Date 1-15-74)	Y	—	1	—	—	—	—	—	H340-1 KG7
	(Up to Build Date 1-15-74)	Y	—	1	—	—	—	—	—	H340-1 KL2
	(Up to Build Date 1-15-74)	Y	—	1	—	—	—	—	—	H340-1 KT8
	(Up to Build Date 1-15-74)	Y	—	1	—	—	—	—	—	H340-1 KW1
	(Up to Build Date 1-15-74)	Y	—	1	—	—	—	—	—	H340-1 KX9
	(Up to Build Date 1-15-74)	Y	—	1	—	—	—	—	—	H340-1 KY4
	All Codes (From Build Date 1-15-74 to 6-7-74)	Y	—	1	—	—	—	—	—	H364-5 KB7
	(From Build Date 1-15-74 to 6-7-74)	Y	—	1	—	—	—	—	—	H364-5 KG7
	(From Build Date 1-15-74 to 6-7-74)	Y	—	1	—	—	—	—	—	H364-5 KL2
	(From Build Date 1-15-74 to 6-7-74)	Y	—	1	—	—	—	—	—	H364-5 KT8
	(From Build Date 1-15-74 to 6-7-74)	Y	—	1	—	—	—	—	—	H364-5 KW1

TYPE LETTERS Indicates: J - Challenger, B - Barracuda, V - Valiant, L - Dart, R - Satellite, W - Coronet, P - Plymouth, D - Dodge, C - Chrysler, Y - Imperial

NUMERALS INDICATE: 21 - 2 DR. SED., 23 - 2 DR. H.T., 29 - FAST BACK, 41 - 4 DR. SED., 43 - 4 DR. H.T., 45 - 6 PASS. STA. WGN., 46 - 9 PASS. STA. WGN.

AR Indicates use as required.
# Indicates parts not listed in any previous parts book
Numerals in parentheses ( ) refer to notes.
★ Indicates change or addition.

Printed in U.S.A.
November, 1974

Right and left part numbers are on same line, first number is right, second number is left.

CODE	PART NAME	MODEL CODES	SEE BOTTOM NOTE 21	23	29	41	43	45	46	PART NUMBER
23-86-3	HEADLINING and LISTING Cont'd.									
	(From Build Date 1-15-74 to 6-7-74)	Y	—	1	—	—	—	—	—	H364-5 KX9
	(From Build Date 1-15-74 to 6-7-74)	Y	—	1	—	—	—	—	—	H364-5 KY4
	All Codes									
	(After Build Date 6-7-74)	Y	—	1	—	—	—	—	—	H376-7 KB7
	(After Build Date 6-7-74)	Y	—	1	—	—	—	—	—	H376-7 KG7
	(After Build Date 6-7-74)	Y	—	1	—	—	—	—	—	H376-7 KL2
	(After Build Date 6-7-74)	Y	—	1	—	—	—	—	—	H376-7 KT8
	(After Build Date 6-7-74)	Y	—	1	—	—	—	—	—	H376-7 KW1
	(After Build Date 6-7-74)	Y	—	1	—	—	—	—	—	H376-7 KX9
	(After Build Date 6-7-74)	Y	—	1	—	—	—	—	—	H376-7 KY4
	All Codes	Y	—	—	—	—	1	—	—	H378-9 KB7
		Y	—	—	—	—	1	—	—	H378-9 KG7
		Y	—	—	—	—	1	—	—	H378-9 KL2
		Y	—	—	—	—	1	—	—	H378-9 KT8
		Y	—	—	—	—	1	—	—	H378-9 KW1
		Y	—	—	—	—	1	—	—	H378-9 KX9
		Y	—	—	—	—	1	—	—	H378-9 KY4
23-86-4	PANEL ASSY., "C" Pillar Upper Cover									
	Applique									
	All Codes Up to Build Date 5-21-74	Y	—	1	—	—	—	—	—	H344-5 KB6
	Up to Build Date 5-21-74	Y	—	1	—	—	—	—	—	H344-5 KG6
	Up to Build Date 5-21-74	Y	—	1	—	—	—	—	—	H344-5 KL3
	Up to Build Date 5-21-74	Y	—	1	—	—	—	—	—	H344-5 KT7
	Up to Build Date 5-21-74	Y	—	1	—	—	—	—	—	H344-5 KW1
	Up to Build Date 5-21-74	Y	—	1	—	—	—	—	—	H344-5 KX9
	Up to Build Date 5-21-74	Y	—	1	—	—	—	—	—	H344-5 KY3
	All Codes									
	After Build Date 5-21-74	Y	—	1	—	—	—	—	—	H380-1 KB6
	After Build Date 5-21-74	Y	—	1	—	—	—	—	—	H380-1 KG6
	After Build Date 5-21-74	Y	—	1	—	—	—	—	—	H380-1 KL3
	After Build Date 5-21-74	Y	—	1	—	—	—	—	—	H380-1 KT7
	After Build Date 5-21-74	Y	—	1	—	—	—	—	—	H380-1 KW1
	After Build Date 5-21-74	Y	—	1	—	—	—	—	—	H380-1 KX9
	After Build Date 5-21-74	Y	—	1	—	—	—	—	—	H380-1 KY3
	All Codes Up to Build Date 5-21-74	Y	—	—	—	—	1	—	—	H338-9 KB6
	Up to Build Date 5-21-74	Y	—	—	—	—	1	—	—	H338-9 KG6
	Up to Build Date 5-21-74	Y	—	—	—	—	1	—	—	H338-9 KL3
	Up to Build Date 5-21-74	Y	—	—	—	—	1	—	—	H338-9 KT7
	Up to Build Date 5-21-74	Y	—	—	—	—	1	—	—	H338-9 KW1
	Up to Build Date 5-21-74	Y	—	—	—	—	1	—	—	H338-9 KX9
	Up to Build Date 5-21-74	Y	—	—	—	—	1	—	—	H338-9 KY3
	All Codes									
	After Build Date 5-21-74	Y	—	—	—	—	1	—	—	H382-3 KB6
	After Build Date 5-21-74	Y	—	—	—	—	1	—	—	H382-3 KG6
	After Build Date 5-21-74	Y	—	—	—	—	1	—	—	H382-3 KL3
	After Build Date 5-21-74	Y	—	—	—	—	1	—	—	H382-3 KT7
	After Build Date 5-21-74	Y	—	—	—	—	1	—	—	H382-3 KW1
	After Build Date 5-21-74	Y	—	—	—	—	1	—	—	H382-3 KX9
	After Build Date 5-21-74	Y	—	—	—	—	1	—	—	H382-3 KY3
23-86-5	SILENCER, Rear Upper Quarter									
	Trim Panel w/Fold Down Rear Seat	V,L	—	—	1	—	—	—	—	3762 306-7
		P,D,C	—	—	—	—	—	1	1	3762 248-9
	Trim Panel	P,D	—	1	—	—	—	—	—	3762 330-1
23-86-10	BOW, Roof	V,L	—	2	—	—	2	—	—	2604 056
		B,J,P,D,C,Y	—	2	—	—	2	2	—	3674 549
		R,W	1	1	—	1	—	—	—	3445 812
		R,W	—	—	—	—	1	—	—	3445 814
		R,W	—	—	—	—	—	3	3	— 3440 102

TYPE LETTERS Indicates J - Challenger, B - Barracuda, V - Valiant, L - Dart, R - Satellite, W - Coronet, P - Plymouth, D - Dodge, C - Chrysler, Y - Imperial

NUMERALS INDICATE: 21 - 2 DR. SED., 23 - 2 DR. H.T., 29 - FAST BACK, 41 - 4 DR. SED., 43 - 4 DR. H.T., 45 - 6 PASS. STA. WGN., 46 - 9 PASS. STA. WGN.

AR Indicates use as required.
# Indicates parts not listed in any previous parts book
Numerals in parentheses ( ) refer to notes.
★ Indicates change or addition.

Printed in U.S.A.
November, 1974

Right and left part numbers are on same line, first number is right, second number is left.

CODE	PART NAME	MODEL CODES	SEE BOTTOM NOTE 21	23	29	41	43	45	46	PART NUMBER
23-86-10	BOW Cont'd.									
	1	P,D,C	—	—	—	—	—	1	1	3720 605
	2	P,D,C	—	—	—	—	—	1	1	3720 705
	3-4	P,D,C	—	—	—	—	—	2	2	3674 552
		V,L	—	—	—	1	—	—	—	2965 652
23-86-11	RETAINER, Roof Side Rail Roof									
	Bow 1	V,L	—	4	—	—	2	—	—	— 2605 112
	Roof Bow	B,J	—	2	—	—	—	—	—	— 3767 265
		P,D,C	—	2	—	—	2	—	8	8 3445 855
		R,W,P,D,C	—	2	—	—	2	3	—	— 3445 108
		Y	—	2	—	—	—	2	—	— 3445 108
		R,W	—	—	—	—	—	—	8	8 2605 112
23-86-19	RETAINER, Rear Window H/Lining									
	Side	V,L	—	—	—	—	1	—	—	— 2782 724-5
	Upper	V,L	—	—	—	—	1	—	—	— 2782 726
	H/Lining to Lower Quarter Panel	B	—	1	—	—	—	—	—	— 3415 276-7
	Soft H/Lining to Quarter Panel									
	Upper	B	—	1	—	—	—	—	—	— 3509 626-7
	H/Lining to Lower Quarter Panel	J	—	1	—	—	—	—	—	— 3415 356-7
	Roof Headlining Side Front	R,W	—	—	—	—	—	—	1	1 3500 716-7
	Roof Headlining Side Rear	R,W	—	—	—	—	—	—	1	1 3674 304-5
	RETAINER, Rr. Upper Qtr. Trim Panel	W	—	—	—	2	—	—	—	— 6003 471
	RETAINER, Upper Qtr. Frt. Trim Panel	W	—	—	—	2	—	—	—	— 6003 419
23-86-20	BRACKET, "C" Pillar Upper Quarter Trim Panel Att.	P,D	—	2	—	—	—	—	—	— 3762 560
		P,D	—	—	—	—	2	—	—	— 3762 561
		P,D	—	—	—	—	—	2	—	— 3762 562
		C	—	2	—	—	2	2	—	— 3762 563
23-86-24	RETAINER, roof I/S Finish Panel Moulding Sect. 1 & 2 & 3	R,W	—	—	—	—	—	—	3	3 3416 267
23-86-35	MOULDING, Roof I/S Finish									
	1	R,W	—	—	—	—	—	—	1	1 H003 JW1
	3	R,W	—	—	—	—	—	—	1	1 H004 JW1
	Rear Window Hldg. Trim									
	All Codes	V,L	—	—	—	—	1	—	—	— H002 JX9
23-86-36	CAP, Roof I/S Finish Mldg.	R,W	—	—	—	—	—	—	6	6 2876 949
23-86-38	WELT, Roof Sliding Panel Headlining Opening									
	All Codes	V,L	—	—	—	1	—	—	—	— H601 KL2
	All Codes	R,W	1	1	—	—	—	—	—	— H602 KB7
		R,W	1	1	—	—	—	—	—	— H602 KG7
		V,L,R,W	1	1	—	—	—	—	—	— H602 KL2
		R,W	1	1	—	—	—	—	—	— H602 JW1
		R,W	1	1	—	—	—	—	—	— H602 JX9
		R,W	1	1	—	—	—	—	—	— H602 KY4
23-86-40	BRACKET, Rear Window Opening Trim Panel									
	Cover Retainer Side	Y	—	2	—	—	—	2	—	— 3589 974
	Rear Window Opening Trim Panel Cover	Y	—	6	—	—	—	6	—	— 3589 904
23-91-6	**PANEL, Cowl Side Trim**									
	All Codes	V,L	1	1	—	1	1	—	—	— F200-1 JX9
	All Codes	B,J	—	1	—	—	—	—	—	— F202-3 JX9
	All Codes	R,W	1	1	—	1	1	—	1	1 F208-9 KB7
		R,W	1	1	—	1	1	—	1	1 F208-9 KG7
		R,W	1	1	—	1	1	—	1	1 F208-9 KL2
		R,W	1	1	—	1	1	—	1	1 F208-9 KT8
		R,W	1	1	—	1	1	—	1	1 F208-9 JX9

TYPE LETTERS Indicates: J - Challenger, B - Barracuda, V - Valiant, L - Dart, R - Satellite, W - Coronet, P - Plymouth, D - Dodge, C - Chrysler, Y - Imperial

NUMERALS INDICATE: 21 - 2 DR. SED., 23 - 2 DR. H.T., 29 - FAST BACK, 41 - 4 DR. SED., 43 - 4 DR. H.T., 45 - 6 PASS. STA. WGN., 46 - 9 PASS. STA. WGN.

AR Indicates use as required.
# Indicates parts not listed in any previous parts book
Numerals in parentheses ( ) refer to notes.
★ Indicates change or addition.

Printed in U.S.A.
November, 1974

Right and left part numbers are on same line, first number is right, second number is left.

CODE	PART NAME	MODEL CODES	SEE BOTTOM NOTE 21	23		29	41	43	45	46	PART NUMBER
23-91-6	PANEL Cont'd.										
		R,W	1	1	—	1	1	—	1	1	F208-9 JW1
		R,W	1	1	—	1	1	—	1	1	F208-9 KY4
	All Codes	P,D,C	—	1	—	—	1	1	1	1	F204-5 KB7
		P,D,C	—	1	—	—	1	1	1	1	F204-5 KG7
		P,D,C	—	1	—	—	1	1	1	1	F204-5 KL2
		P,D,C	—	1	—	—	1	1	1	1	F204-5 KT8
		P,D,C	—	1	—	—	1	1	1	1	F204-5 KX9
		C	—	1	—	—	1	1	1	1	F204-5 KW1
		P,D,C	—	1	—	—	1	1	1	1	F204-5 KY4
	All Codes	Y	—	1	—	—	—	1	—	—	F210-1 KB7
		Y	—	1	—	—	—	1	—	—	F210-1 KG7
		Y	—	1	—	—	—	1	—	—	F210-1 KL2
		Y	—	1	—	—	—	1	—	—	F210-1 KT8
		Y	—	1	—	—	—	1	—	—	F210-1 KX9
		Y	—	1	—	—	—	1	—	—	F210-1 KY4
23-91-7	COVER, Cowl Side Trim Panel to W/Shield										
	Side Garnish Mldg. Flg.										
	All Codes	P,D,C,Y	—	1	—	—	1	1	1	1	F342-3 KB7
		P,D,C,Y	—	1	—	—	1	1	1	1	F342-3 KG7
		P,D,C,Y	—	1	—	—	1	1	1	1	F342-3 KL2
		P,D,C,Y	—	1	—	—	1	1	1	1	F342-3 KT8
		P,D,C,Y	—	1	—	—	1	1	1	1	F342-3 KX9
		C	—	1	—	—	1	1	1	1	F342-3 KW1
		P,D,C,Y	—	1	—	—	1	1	1	1	F342-3 KY4
23-92-5	**PANEL, Door Trim**										
	w/o Wood Grain										
	A1B, D2B, C4B	V,L	—	1	—	1	—	—	—	—	J104-5 KB6
	A1G, D2G, C4G	V,L	—	1	—	1	—	—	—	—	J104-5 KG6
	D2L, C4L, C6L	V,L	—	1	—	1	—	—	—	—	J104-5 KL3
	C6XW	V	—	—	—	1	—	—	—	—	J104-5 KW1
	A1X, D2X, C4X, C6X	V,L	—	1	—	1	—	—	—	—	J104-5 KX9
	D2Y	V,L	—	1	—	1	—	—	—	—	J104-5 KY3
	w/Wood Grain										
	H1LL, H5LL	V,L	—	1	—	—	—	—	—	—	J112-3 KLU
	H5GG	V,L	—	1	—	—	—	—	—	—	J112-3 KGU
	w/Wood Grain										
	A1B, D2B, C4B	V	—	—	—	1	—	—	—	—	J106-7 KB6
	A1G, D2G, C4G	V	—	—	—	1	—	—	—	—	J106-7 KG6
	D2L, C4L, C6L	V	—	—	—	1	—	—	—	—	J106-7 KL3
	C6XW	V	—	—	—	1	—	—	—	—	J106-7 KW1
	A1X, D2X, C4X, C6X	V	—	—	—	1	—	—	—	—	J106-7 KX9
	D2Y	V	—	—	—	1	—	—	—	—	J106-7 KY3
	w/wood Grain										
	E2B, F3B	V	—	1	—	—	—	—	—	—	J108-9 KB6
	E2G, F3G	V	—	1	—	—	—	—	—	—	J108-9 KG6
	E2L, F3L	V	—	1	—	—	—	—	—	—	J108-9 KL3
	E2X, F3X	V	—	1	—	—	—	—	—	—	J108-9 KX9
	E2Y	V	—	1	—	—	—	—	—	—	J108-9 KY3
	A1B, D2B, F3B, F4B	L	—	1	—	1	—	—	—	—	J108-9 KB6
	A1G, D2G, F3G, F4G	L	—	1	—	1	—	—	—	—	J108-9 KG6
	D2L, F3L, F4L, F6L	L	—	1	—	1	—	—	—	—	J108-9 KL3
	F6XW	L	—	—	—	1	—	—	—	—	J108-9 KW1
	A1X, D2X, F3X, F4X, F6X	L	—	1	—	1	—	—	—	—	J108-9 KX9
	D2Y	L	—	1	—	1	—	—	—	—	J108-9 KY3
	M2YW	V,L	—	—	—	1	—	—	—	—	J118-9 KYY
	J6VW	L	—	—	—	1	—	—	—	—	J118-9 KVW
	w/o Wood Grain										
	A2B, L1B, C4B Frt.	V,L	—	—	—	—	1	—	—	—	J100-1 KB6

TYPE LETTERS Indicates: J - Challenger, B - Barracuda, V - Valiant, L - Dart, R - Satellite, W - Coronet, P - Plymouth, D - Dodge, C - Chrysler, Y - Imperial

NUMERALS INDICATE: 21 - 2 DR. SED., 23 - 2 DR. H.T., 29 - FAST BACK, 41 - 4 DR. SED., 43 - 4 DR. H.T., 45 - 6 PASS. STA. WGN., 46 - 9 PASS. STA. WGN.

AR Indicates use as required.
# Indicates parts not listed in any previous parts book
Numerals in parentheses ( ) refer to notes.
★ Indicates change or addition.

Printed in U.S.A.
November, 1974

Right and left part numbers are on same line, first number is right, second number is left.

CODE	PART NAME		MODEL CODES	SEE BOTTOM NOTE 21	23	29	41	43	45	46	PART NUMBER
23-92-5	PANEL Cont'd.										
		Rr.	V,L	—	—	—	—	1	—	—	—	J500-1 KB6
	A2G, C4G, L1G	Frt.	V,L	—	—	—	—	1	—	—	—	J100-1 KG6
		Rr.	V,L	—	—	—	—	1	—	—	—	J500-1 KG6
	C4L, L1L	Frt.	V	—	—	—	—	1	—	—	—	J100-1 KL3
		Rr.	V	—	—	—	—	1	—	—	—	J500-1 KL3
	A2X, C4X	Frt.	V,L	—	—	—	—	1	—	—	—	J100-1 KX9
		Rr.	V,L	—	—	—	—	1	—	—	—	J500-1 KX9
	L1Y	Frt.	V	—	—	—	—	1	—	—	—	J100-1 KY3
		Rr.	V	—	—	—	—	1	—	—	—	J500-1 KY3
	w/Wood Grain										
	A2B, C4B, F4B, L1B	Frt.	V,L	—	—	—	—	1	—	—	—	J110-1 KB6
		Rr.	V,L	—	—	—	—	1	—	—	—	J504-5 KB6
	A2G, C4G, F4G, L1G	Frt.	V,L	—	—	—	—	1	—	—	—	J110-1 KG6
		Rr.	V,L	—	—	—	—	1	—	—	—	J504-5 KG6
	C4L, F4L, L1L	Frt.	V,L	—	—	—	—	1	—	—	—	J110-1 KL3
		Rr.	V,L	—	—	—	—	1	—	—	—	J504-5 KL3
	F4X, A2X, C4X	Frt.	V,L	—	—	—	—	1	—	—	—	J110-1 KX9
		Rr.	V,L	—	—	—	—	1	—	—	—	J504-5 KX9
	L1Y	Frt.	V,L	—	—	—	—	1	—	—	—	J110-1 KY3
		Rr.	V,L	—	—	—	—	1	—	—	—	J504-5 KY3
	H1LL, H5LL	Frt.	V,L	—	—	—	—	1	—	—	—	J114-5 KLU
		Rr.	V,L	—	—	—	—	1	—	—	—	J506-7 KLU
	H5GG	Frt.	V,L	—	—	—	—	1	—	—	—	J114-5 KGU
		Rr.	V,L	—	—	—	—	1	—	—	—	J506-7 KGU
	All Codes		B	—	1	—	—	—	—	—	—	J004-5 KB7
			B	—	1	—	—	—	—	—	—	J004-5 KG7
			B	—	1	—	—	—	—	—	—	J004-5 JX9
			B	—	1	—	—	—	—	—	—	J004-5 JW1
	All CODES		J	—	1	—	—	—	—	—	—	J008-9 KB7
			J	—	1	—	—	—	—	—	—	J008-9 KG7
			J	—	1	—	—	—	—	—	—	J008-9 JX9
			J	—	1	—	—	—	—	—	—	J008-9 JW1
	Upper										
	B2B		R	1	—	—	—	—	—	—	—	K004-5 KB7
	B2G		R	1	—	—	—	—	—	—	—	K004-5 KG6
	B2X		R	1	—	—	—	—	—	—	—	K004-5 JX9
	C2B, D6B, F1B Up to Build Date 3-15-74		R	1	1	—	—	—	—	—	—	K022-3 KBU
	C2G, D6G, F1G Up to Build Date 3-15-74		R	1	1	—	—	—	—	—	—	K022-3 KGU
	C2L Up to Build Date 3-15-74		R	1	1	—	—	—	—	—	—	K022-3 KLU
	D6XW, F1EW, W5EW Up to Build Date 3-15-74		R	1	1	—	—	—	—	—	—	K022-3 KWU
	C2X, D6X, F1X Up to Build Date 3-15-74		R	1	1	—	—	—	—	—	—	K022-3 KXU
	C2Y, D6Y, F1Y Up to Build Date 3-15-74		R	1	1	—	—	—	—	—	—	K022-3 KYU
	C2B, D6B, F1B After Build Date 3-15-74		R	1	1	—	—	—	—	—	—	K064-5 KBU
	C2G, D6G, F1G After Build Date 3-15-74		R	1	1	—	—	—	—	—	—	K064-5 KGU
	C2L After Build Date 3-15-74		R	1	1	—	—	—	—	—	—	K064-5 KLU
	C2X, D6X, F1X After Build Date 3-15-74		R	1	1	—	—	—	—	—	—	K064-5 KXU
	D6XW, F1EW, W5EW After Build Date 3-15-74		R	1	1	—	—	—	—	—	—	K064-5 KWU
	C2Y, D6Y, F1Y After Build Date 3-15-74		R	1	1	—	—	—	—	—	—	K064-5 KYU
	V1YW		R	1	1	—	—	—	—	—	—	K046-7 KYW
	H6B, V3B		R	—	1	—	—	—	—	—	—	K020-1 KB6

TYPE LETTERS Indicates J - Challenger, B - Barracuda, V - Valiant, L - Dart, R - Satellite, W - Coronet, P - Plymouth, D - Dodge, C - Chrysler, Y - Imperial

NUMERALS INDICATE: 21 - 2 DR. SED., 23 - 2 DR. H.T., 29 - FAST BACK, 41 - 4 DR. SED., 43 - 4 DR. H.T., 45 - 6 PASS. STA. WGN., 46 - 9 PASS. STA. WGN.

AR Indicates use as required.
# Indicates parts not listed in any previous parts book
Numerals in parentheses ( ) refer to notes.
★ Indicates change or addition.

Printed in U.S.A.
November, 1974

Right and left part numbers are on same line, first number is right, second number is left.

CODE	PART NAME		MODEL CODES	SEE BOTTOM NOTE 21	23	29	41	43	45	46	PART NUMBER
23-92-5	PANEL Cont'd.										
	H6G, V3G		R	—	1	—	—	—	—	—	K020-1 KG6
	H6XW, E5EW		R	—	1	—	—	—	—	—	K020-1 KW1
	H6X, V3X		R	—	1	—	—	—	—	—	K020-1 KX9
	H6Y, V3Y		R	—	1	—	—	—	—	—	K020-1 KY3
	Lower w/o Arm Rest										
	All Codes		R,W	1	1	—	1	—	—	—	K012-3 KB7
			R,W	1	1	—	1	—	—	—	K012-3 KG7
			R,W	1	1	—	1	—	—	—	K012-3 KL2
			R,W	1	1	—	1	—	—	—	K012-3 KY4
			R,W	1	1	—	1	—	—	—	K012-3 JOW
			R,W	1	1	—	1	—	—	—	K012-3 JOX
	Full Panel										
	F1B, F2B (Up to Build Date 10/10/73)	Frt.	R	—	—	—	1	—	1	1	K006-7 KB6
	(After Build Date 10/10/73)	Frt.	R	—	—	—	1	—	1	1	K026-7 KB6
		Rr.	R	—	—	—	1	—	1	1	K404-5 KB6
	F1G, F2G (Up to Build Date 10/10/73)	Frt.	R	—	—	—	1	—	1	1	K006-7 KG6
	(After Build Date 10/10/73)	Frt.	R	—	—	—	1	—	1	1	K026-7 KG6
		Rr.	R	—	—	—	1	—	1	1	K404-5 KG6
	F2L (Up to Build Date 10/10/73)	Frt.	R	—	—	—	1	—	1	1	K006-7 KL3
	(After Build Date 10/10/73)	Frt.	R	—	—	—	1	—	1	1	K026-7 KL3
		Rr.	R	—	—	—	1	—	1	1	K404-5 KL3
	F1T, F2T (Up to Build Date 10/10/73)	Frt.	R	—	—	—	1	—	1	1	K006-7 KT7
	(After Build Date 10/10/73)	Frt.	R	—	—	—	1	—	1	1	K026-7 KT7
		Rr.	R	—	—	—	1	—	1	1	K404-5 KT7
	F1X, F2X (Up to Build Date 10/10/73)	Frt.	R	—	—	—	1	—	—	—	K006-7 KX9
	(After Build Date 10/10/73)	Frt.	R	—	—	—	1	—	—	—	K026-7 KX9
		Rr.	R	—	—	—	1	—	—	—	K404-5 KX9
	F1Y, F2Y (Up to Build Date 10/10/73)	Frt.	R	—	—	—	1	—	—	—	K006-7 KY3
	(After Build Date 10/10/73)	Frt.	R	—	—	—	1	—	—	—	K026-7 KY3
		Rr.	R	—	—	—	1	—	—	—	K404-5 KY3
	A2B, P2B (Up to Build Date 10/10/73)	Frt.	R,W	—	—	—	1	—	1	—	K002-3 KB6
	(After Build Date 10/10/73)	Frt.	R,W	—	—	—	1	—	1	—	K024-5 KB6
		Rr.	R,W	—	—	—	1	—	1	—	K402-3 KB6
	A2G, P2G (Up to Build Date 10/10/73)	Frt.	R,W	—	—	—	1	—	1	—	K002-3 KG6
	(After Build Date 10/10/73)	Frt.	R,W	—	—	—	1	—	1	—	K024-5 KG6
		Rr.	R,W	—	—	—	1	—	1	—	K402-3 KG6
	K2T, T2T, A2T, P2T (Up to Build Date 10/10/73)	Frt.	R,W	—	—	—	1	—	1	—	K002-3 KT7
	(After Build Date 10/10/73)	Frt.	R,W	—	—	—	1	—	1	—	K026-7 KT7
		Rr.	R,W	—	—	—	1	—	1	—	K402-3 KT7
	K2X, T2X, G2X (Up to Build Date 10/10/73)	Frt.	R,W	—	—	—	1	—	—	—	K002-3 KX9
	(After Build Date 10/10/73)	Frt.	R,W	—	—	—	1	—	—	—	K024-5 KX9
		Rr.	R,W	—	—	—	1	—	—	—	K402-3 KX9
	M4B (Up to Build Date 10/10/73)	Frt.	R,W	—	—	—	—	—	1	1	K008-9 KBU
	(After Build Date 10/10/73)	Frt.	R,W	—	—	—	—	—	1	1	K028-9 KBU
		Rr.	R,W	—	—	—	—	—	1	1	K406-7 KBU
	M4G (Up to Build Date 10/10/73)	Frt.	R,W	—	—	—	—	—	1	1	K008-9 KGU
	(After Build Date 10/10/73)	Frt.	R,W	—	—	—	—	—	1	1	K028-9 KGU
		Rr.	R,W	—	—	—	—	—	1	1	K406-7 KGU

TYPE LETTERS Indicates: J - Challenger, B - Barracuda, V - Valiant, L - Dart, R - Satellite, W - Coronet, P - Plymouth, D - Dodge, C - Chrysler, Y - Imperial

NUMERALS INDICATE: 21 - 2 DR. SED., 23 - 2 DR. H.T., 29 - FAST BACK, 41 - 4 DR. SED., 43 - 4 DR. H.T., 45 - 6 PASS. STA. WGN., 46 - 9 PASS. STA. WGN.

AR Indicates use as required.
# Indicates parts not listed in any previous parts book
Numerals in parentheses ( ) refer to notes.
★ Indicates change or addition.

Printed in U.S.A.
November, 1974

Right and left part numbers are on same line, first number is right, second number is left.

CODE	PART NAME		MODEL CODES	SEE BOTTOM NOTE 21	23	29	41	43	45	46	PART NUMBER
23-92-5	PANEL Cont'd.										
	M4L (Up to Build Date 10/10/73)	Frt.	R,W	—	—	—	—	—	1	1	K008-9 KLU
	(After Build Date 10/10/73)	Frt.	R,W	—	—	—	—	—	1	1	K028-9 KLU
		Rr.	R,W	—	—	—	—	—	1	1	K406-7 KLU
	M4T (Up to Build Date 10/10/73)	Frt.	R,W	—	—	—	—	—	1	1	K008-9 KTU
	(After Build Date 10/10/73)	Frt.	R,W	—	—	—	—	—	1	1	K028-9 KTU
		Rr.	R,W	—	—	—	—	—	1	1	K406-7 KTU
	Upper										
	B2B		W	1	—	—	—	—	—	—	K016-7 KB6
	B2G		W	1	—	—	—	—	—	—	K016-7 KG6
	B2X		W	1	—	—	—	—	—	—	K016-7 KX9
	D6B, M4B, S1B, S2B		W	—	1	—	1	—	—	—	K014-5 KBU
	D6G, M4G, S1G, S2G		W	—	1	—	1	—	—	—	K014-5 KGU
	M4L, S2L, W1LL		W	1	1	—	1	—	—	—	K014-5 KLU
	D6XW, N1YW		W	—	1	—	1	—	—	—	K014-5 KWU
	D6X, M4X, S1X, S2X		W	—	1	—	1	—	—	—	K014-5 KXU
	D6Y, M4Y, S1Y, S2Y		W	—	1	—	1	—	—	—	K014-5 KYU
	H6B, V3B		W	—	—	—	1	—	—	—	K018-9 KBU
	H6G, V3G		W	—	—	—	1	—	—	—	K018-9 KGU
	E5YW, H6XW		W	—	1	—	1	—	—	—	K018-9 KWU
	H6X, V3X		W	—	—	—	1	—	—	—	K018-9 KXU
	H6Y, V3Y		W	—	—	—	1	—	—	—	K018-9 KYU
	Full Panel										
	Q1B, Q2B, R4B (Up to Build Date 10/10/73)	Frt.	W	—	—	—	1	—	1	1	K000-1 KB6
	(After Build Date 10/10/73)	Frt.	W	—	—	—	1	—	1	1	K030-1 KB6
		Rr.	W	—	—	—	1	—	1	1	K400-1 KB6
	Q1G, Q2G, R4G (Up to Build Date 10/10/73)	Frt.	W	—	—	—	1	—	1	1	K000-1 KG6
	(After Build Date 10/10/73)	Frt.	W	—	—	—	1	—	1	1	K030-1 KG6
		Rr.	W	—	—	—	1	—	1	1	K400-1 KG6
	Q2L, R4L (Up to Build Date 10/10/73)	Frt.	W	—	—	—	1	—	1	1	K000-1 KL3
	(After Build Date 10/10/73)	Frt.	W	—	—	—	1	—	1	1	K030-1 KL3
		Rr.	W	—	—	—	1	—	1	1	K400-1 KL3
	Q1T, Q2T, R4T (Up to Build Date 10/10/73)	Frt.	W	—	—	—	1	—	1	1	K000-1 KT7
	(After Build Date 10/10/73)	Frt.	W	—	—	—	1	—	1	1	K030-1 KT7
		Rr.	W	—	—	—	1	—	1	1	K400-1 KT7
	Q1X, R4X (Up to Build Date 10/10/73)	Frt.	W	—	—	—	1	—	—	—	K000-1 KX9
	(After Build Date 10/10/73)	Frt.	W	—	—	—	1	—	—	—	K030-1 KX9
		Rr.	W	—	—	—	1	—	—	—	K400-1 KX9
	Q1Y, R4Y (Up to Build Date 10/10/73)	Frt.	W	—	—	—	1	—	—	—	K000-1 KY3
	(After Build Date 10/10/73)	Frt.	W	—	—	—	1	—	—	—	K030-1 KY3
		Rr.	W	—	—	—	1	—	—	—	K400-1 KY3
	Upper										
	B1G, B2G		P	—	1	—	—	—	—	—	L036-7 KG6
	B1X, B2X		P	—	1	—	—	—	—	—	L036-7 KX9
	B1Y, B2Y		P	—	1	—	—	—	—	—	L036-7 KY3
	C1B, D4B		P	—	1	—	—	—	—	—	L040-1 KB6
	C1G, C2G, D4G		P	—	1	—	—	—	—	—	L040-1 KG6
	C1L, C2L, D4L		P	—	1	—	—	—	—	—	L040-1 KL3
	C1X, D4X		P	—	1	—	—	—	—	—	L040-1 KX9
	C1Y, C2Y, D4Y		P	—	1	—	—	—	—	—	L040-1 KY3
	E3B, E4B, G7B		P	—	1	—	—	—	—	—	L046-7 KB6
	E3G, E4G, G7G		P	—	1	—	—	—	—	—	L046-7 KG6
	E3L, E4L, G7L, J3LL		P	—	1	—	—	—	—	—	L046-7 KL3

TYPE LETTERS Indicates: J - Challenger, B - Barracuda, V - Valiant, L - Dart, R - Satellite, W - Coronet, P - Plymouth, D - Dodge, C - Chrysler, Y - Imperial

NUMERALS INDICATE: 21 - 2 DR. SED., 23 - 2 DR. H.T., 29 - FAST BACK, 41 - 4 DR. SED., 43 - 4 DR. H.T., 45 - 6 PASS. STA. WGN., 46 - 9 PASS. STA. WGN.

AR Indicates use as required.
# Indicates parts not listed in any previous parts book
Numerals in parentheses ( ) refer to notes.
★ Indicates change or addition.

Printed in U.S.A.
November, 1974

Right and left part numbers are on same line, first number is right, second number is left.

CODE	PART NAME		MODEL CODES	SEE BOTTOM NOTE 21	23	29	41	43	45	46	PART NUMBER
23-92-5	PANEL Cont'd.										
	E3X, E4X, G7X		P	—	1	—	—	—	—	—	L046-7 KX9
	E3Y, E4Y, G7Y		P	—	1	—	—	—	—	—	L046-7 KY3
	C1B, D4B, C2B	Frt.	P	—	—	—	—	1	—	—	L042-3 KB6
		Rr.	P	—	—	—	—	1	—	—	L426-7 KB6
	C1G, C2G, D4G	Frt.	P	—	—	—	—	1	—	—	L042-3 KG6
		Rr.	P	—	—	—	—	1	—	—	L426-7 KG6
	C1L, C2L, D4L, H8L	Frt.	P	—	—	—	—	1	—	—	L042-3 KL3
		Rr.	P	—	—	—	—	1	—	—	L426-7 KL3
	C1X, D4X	Frt.	P	—	—	—	—	1	—	—	L042-3 KX9
		Rr.	P	—	—	—	—	1	—	—	L426-7 KX9
	C1Y, C2Y, D4Y	Frt.	P	—	—	—	—	1	—	—	L042-3 KY3
		Rr.	P	—	—	—	—	1	—	—	L426-7 KY3
	B1G, B2G	Frt.	P	—	—	—	—	1	—	1	L038-9 KG6
		Rr.	P	—	—	—	—	1	—	1	L424-5 KG6
	B2T	Frt.	P	—	—	—	—	—	—	1	L038-9 KT7
		Rr.	P	—	—	—	—	—	—	1	L424-5 KT7
	B1X, B2X	Frt.	P	—	—	—	—	1	—	1	L038-9 KX9
		Rr.	P	—	—	—	—	1	—	1	L424-5 KX9
	B1Y, B2Y	Frt.	P	—	—	—	—	1	—	—	L038-9 KY3
		Rr.	P	—	—	—	—	1	—	—	L424-5 KY3
	C1B, D4B	Frt.	P	—	—	—	—	—	1	—	L044-5 KB6
		Rr.	P	—	—	—	—	—	1	—	L428-9 KB6
	C1G, C2G, D4G	Frt.	P	—	—	—	—	—	1	—	L044-5 KG6
		Rr.	P	—	—	—	—	—	1	—	L428-9 KG6
	C1L, C2L, D4L, H8L	Frt.	P	—	—	—	—	—	1	—	L044-5 KL3
		Rr.	P	—	—	—	—	—	1	—	L428-9 KL3
	C1X, D4X	Frt.	P	—	—	—	—	—	—	—	L044-5 KX9
		Rr.	P	—	—	—	—	—	1	—	L428-9 KX9
	C1Y, C2Y, D4Y	Frt.	P	—	—	—	—	—	1	—	L044-5 KY3
		Rr.	P	—	—	—	—	—	1	—	L428-9 KY3
	E3B, E4B, G7B	Frt.	P	—	—	—	—	—	1	—	L048-9 KB6
		Rr.	P	—	—	—	—	—	1	—	L430-1 KB6
	E3G, E4G, G7G	Frt.	P	—	—	—	—	—	1	—	L048-9 KG6
		Rr.	P	—	—	—	—	—	1	—	L430-1 KG6
	E3L, E4L, G7L, J3LL	Frt.	P	—	—	—	—	—	1	—	L048-9 KL3
		Rr.	P	—	—	—	—	—	1	—	L430-1 KL3
	E3X, E4X, G7X	Frt.	P	—	—	—	—	—	1	—	L048-9 KX9
		Rr.	P	—	—	—	—	—	1	—	L430-1 KX9
	E3Y, E4Y, G7Y	Frt.	P	—	—	—	—	—	1	—	L048-9 KY3
		Rr.	P	—	—	—	—	—	1	—	L430-1 KY3
	C2B, D4B	Frt.	P	—	—	—	—	—	1	1	L068-9 KB6
		Rr.	P	—	—	—	—	—	1	1	L426-7 KB6
	C2G, D4G	Frt.	P	—	—	—	—	—	1	1	L068-9 KG6
		Rr.	P	—	—	—	—	—	1	1	L426-7 KG6
	C2L, D4L	Frt.	P	—	—	—	—	—	1	1	L068-9 KL3
		Rr.	P	—	—	—	—	—	1	1	L426-7 KL3
	C2T, D4T	Frt.	P	—	—	—	—	—	1	1	L068-9 KT7
		Rr.	P	—	—	—	—	—	1	1	L426-7 KT7
	C2X, D4X	Frt.	P	—	—	—	—	—	1	1	L068-9 KX9
		Rr.	P	—	—	—	—	—	1	1	L426-7 KX9
	C2Y, D4Y	Frt.	P	—	—	—	—	—	1	1	L068-9 KY3
		Rr.	P	—	—	—	—	—	1	1	L426-7 KY3
	A2G	Frt.	P	—	—	—	—	—	1	—	L034-5 KG6
		Rr.	P	—	—	—	—	—	1	—	L422-3 KG6
	A2T	Frt.	P	—	—	—	—	—	1	—	L034-5 KT7
		Rr.	P	—	—	—	—	—	1	—	L422-3 KT7
	A2X	Frt.	P	—	—	—	—	—	1	—	L034-5 KX9
		Rr.	P	—	—	—	—	—	1	—	L422-3 KX9

TYPE LETTERS Indicates: J - Challenger, B - Barracuda, V - Valiant, L - Dart, R - Satellite, W - Coronet, P - Plymouth, D - Dodge, C - Chrysler, Y - Imperial

NUMERALS INDICATE: 21 - 2 DR. SED., 23 - 2 DR. H.T., 29 - FAST BACK, 41 - 4 DR. SED., 43 - 4 DR. H.T., 45 - 6 PASS. STA. WGN., 46 - 9 PASS. STA. WGN.

AR Indicates use as required.
# Indicates parts not listed in any previous parts book
Numerals in parentheses ( ) refer to notes.
★ Indicates change or addition.

Printed in U.S.A.
November, 1974

Right and left part numbers are on same line, first number is right, second number is left.

CODE	PART NAME		MODEL CODES	SEE BOTTOM NOTE 21	23	29	41	43	45	46	PART NUMBER
23-92-5	PANEL Cont'd.										
	E4B	Frt.	P	—	—	—	—	—	1	1	L050-1 KB6
		Rr.	P	—	—	—	—	—	1	1	L432-3 KB6
	E4G	Frt.	P	—	—	—	—	—	1	1	L050-1 KG6
		Rr.	P	—	—	—	—	—	1	1	L432-3 KG6
	E4L, G8L	Frt.	P	—	—	—	—	—	1	1	L050-1 KL3
		Rr.	P	—	—	—	—	—	1	1	L432-3 KL3
	E4T	Frt.	P	—	—	—	—	—	1	1	L050-1 KT7
		Rr.	P	—	—	—	—	—	1	1	L432-3 KT7
	E4X	Frt.	P	—	—	—	—	—	1	1	L050-1 KX9
		Rr.	P	—	—	—	—	—	1	1	L432-3 KX9
	E4Y	Frt.	P	—	—	—	—	—	1	1	L050-1 KY3
		Rr.	P	—	—	—	—	—	1	1	L432-3 KY3
	A1G, A2G	Frt.	P,D	—	—	—	1	—	—	—	L034-5 KG6
		Rr.	P,D	—	—	—	1	—	—	—	L422-3 KG6
	A1X, A2X, K2X	Frt.	P,D	—	—	—	1	—	—	—	L034-5 KX9
		Rr.	P,D	—	—	—	1	—	—	—	L422-3 KX9
	A1Y, A2Y, K1Y, K2Y	Frt.	P,D	—	—	—	1	—	—	—	L034-5 KY3
		Rr.	P,D	—	—	—	1	—	—	—	L422-3 KY3
	Lower										
	All Codes		P	—	1	—	—	—	—	—	L000-1 KB7
			P	—	1	—	—	—	—	—	L000-1 KG7
			P	—	1	—	—	—	—	—	L000-1 KL2
			P	—	1	—	—	—	—	—	L000-1 KW1
			P	—	1	—	—	—	—	—	L000-1 KX9
			P	—	1	—	—	—	—	—	L000-1 KY4
	w/Stowage Compt. on Left Trim Panel										
	All Codes	Rt.	D	—	1	—	—	—	—	—	L000 KB7
		Lt.	D	—	1	—	—	—	—	—	L059 KB7
		Rt.	D	—	1	—	—	—	—	—	L000 KG7
		Lt.	D	—	1	—	—	—	—	—	L059 KG7
		Rt.	D	—	1	—	—	—	—	—	L000 KL2
		Lt.	D	—	1	—	—	—	—	—	L059 KL2
		Rt.	D	—	1	—	—	—	—	—	L000 KX9
		Lt.	D	—	1	—	—	—	—	—	L059 KX9
		Rt.	D	—	1	—	—	—	—	—	L000 KW1
		Lt.	D	—	1	—	—	—	—	—	L059 KW1
		Rt.	D	—	1	—	—	—	—	—	L000 KY4
		Lt.	D	—	1	—	—	—	—	—	L059 KY4
	All Codes	Frt.	P	—	—	—	1	1	1	1	L004-5 KB7
		Rr.	P	—	—	—	1	1	1	1	L400-1 KB7
		Frt.	P	—	—	—	1	1	1	1	L004-5 KG7
		Rr.	P	—	—	—	1	1	1	1	L400-1 KG7
		Frt.	P	—	—	—	1	1	1	1	L004-5 KL2
		Rr.	P	—	—	—	1	1	1	1	L400-1 KL2
		Frt.	P	—	—	—	1	1	1	1	L004-5 KT8
		Rr.	P	—	—	—	1	1	1	1	L400-1 KT8
		Frt.	P	—	—	—	1	1	1	1	L004-5 KX9
		Rr.	P	—	—	—	1	1	1	1	L400-1 KX9
		Frt.	P	—	—	—	1	1	1	1	L004-5 KY4
		Rr.	P	—	—	—	1	1	1	1	L400-1 KY4
	w/Stowage Compt. on Left Front Trim Panel										
	All Codes	Rt. Frt.	D	—	—	—	1	1	1	1	L004 KB7
		Lt. Frt.	D	—	—	—	1	1	1	1	L061 KB7
		Rr.	D	—	—	—	1	1	1	1	L400-1 KB7
		Rt. Frt.	D	—	—	—	1	1	1	1	L004 KG7
		Lt. Frt.	D	—	—	—	1	1	1	1	L061 KG7
		Rr.	D	—	—	—	1	1	1	1	L400-1 KG7

TYPE LETTERS Indicates: J - Challenger, B - Barracuda, V - Valiant, L - Dart, R - Satellite, W - Coronet, P - Plymouth, D - Dodge, C - Chrysler, Y - Imperial

NUMERALS INDICATE: 21 - 2 DR. SED., 23 - 2 DR. H.T., 29 - FAST BACK, 41 - 4 DR. SED., 43 - 4 DR. H.T., 45 - 6 PASS. STA. WGN., 46 - 9 PASS. STA. WGN.

AR Indicates use as required.
# Indicates parts not listed in any previous parts book
Numerals in parentheses ( ) refer to notes.
★ Indicates change or addition.

Printed in U.S.A.
November, 1974

Right and left part numbers are on same line, first number is right, second number is left.

CODE	PART NAME		MODEL CODES	SEE BOTTOM NOTE 21	23		29	41	43	45	46	PART NUMBER
23-92-5	PANEL Cont'd.											
		Rt. Frt.	D	—	—	—	—	1	1	1	1	L004 KL2
		Lt. Frt.	D	—	—	—	—	1	1	1	1	L061 KL2
		Rr.	D	—	—	—	—	1	1	1	1	L400-1 KL2
		Rt. Frt.	D	—	—	—	—	1	1	1	1	L004 KT8
		Lt. Frt.	D	—	—	—	—	1	1	1	1	L061 KT8
		Rr.	D	—	—	—	—	1	1	1	1	L400-1 KT8
		Rt. Frt.	D	—	—	—	—	1	1	1	1	L004 KX9
		Lt. Frt.	D	—	—	—	—	1	1	1	1	L061 KX9
		Rr.	D	—	—	—	—	1	1	1	1	L400-1 KX9
		Rt. Frt.	D	—	—	—	—	1	1	1	1	L004 KW1
		Lt. Frt.	D	—	—	—	—	1	1	1	1	L061 KW1
		Rr.	D	—	—	—	—	1	1	1	1	L400-1 KW1
		Rt. Frt.	D	—	—	—	—	1	1	1	1	L004 KY4
		Lt. Frt.	D	—	—	—	—	1	1	1	1	L061 KY4
		Rr.	D	—	—	—	—	1	1	1	1	L400-1 KY4
	All Codes	Frt.	C	—	—	—	—	—	—	1	1	L004-5 KB7
		Rr.	C	—	—	—	—	—	—	1	1	L400-1 KB7
		Frt.	C	—	—	—	—	—	—	1	1	L004-5 KG7
		Rr.	C	—	—	—	—	—	—	1	1	L400-1 KG7
		Frt.	C	—	—	—	—	—	—	1	1	L004-5 KL2
		Rr.	C	—	—	—	—	—	—	1	1	L400-1 KL2
		Frt.	C	—	—	—	—	—	—	1	1	L004-5 KT8
		Rr.	C	—	—	—	—	—	—	1	1	L400-1 KT8
		Frt.	C	—	—	—	—	—	—	1	1	L004-5 KX9
		Rr.	C	—	—	—	—	—	—	1	1	L400-1 KX9
		Frt.	C	—	—	—	—	—	—	1	1	L004-5 KY4
		Rr.	C	—	—	—	—	—	—	1	1	L400-1 KY4
	w/o Arm Rest, w/o Carpet											
	A1B, B2B, D7B, D8B		C	—	1	—	—	—	—	—	—	L002-3 KB7
	A1G, B2G, D7G, D8G		C	—	1	—	—	—	—	—	—	L002-3 KG7
	A1L, B2L, D7L, D8L		C	—	1	—	—	—	—	—	—	L002-3 KL2
	B2XW, D8XW		C	—	1	—	—	—	—	—	—	L002-3 KW1
	A1X, B2X, D7X, D8X		C	—	1	—	—	—	—	—	—	L002-3 KX9
	A1Y, B2Y, D7Y, D8Y		C	—	1	—	—	—	—	—	—	L002-3 KY4
	A1B, B2B, D7B, D8B, E9B, EHB,	Frt.	C	—	—	—	—	1	1	—	—	L006-7 KB7
		Rr.	C	—	—	—	—	1	1	—	—	L402-3 KB7
	A1G, B2G, D7G, D8G, E9G, EHG,											
		Frt.	C	—	—	—	—	1	1	—	—	L006-7 KG7
		Rr.	C	—	—	—	—	1	1	—	—	L402-3 KG7
	A1L, B2L, D7L, D8L, E9L, EHL,											
		Frt.	C	—	—	—	—	1	1	—	—	L006-7 KL2
		Rr.	C	—	—	—	—	1	1	—	—	L402-3 KL2
	B2XW, D8XW, EHXW,	Frt.	C	—	—	—	—	1	1	—	—	L006-7 KW1
		Rr.	C	—	—	—	—	1	1	—	—	L402-3 KW1
	A1X, B2X, D7X, D8X, E9X, EHX,											
		Frt.	C	—	—	—	—	1	1	—	—	L006-7 KX9
		Rr.	C	—	—	—	—	1	1	—	—	L402-3 KX9
	A1Y, B2Y, D7Y, D8Y, E9Y, EHY,											
		Frt.	C	—	—	—	—	1	1	—	—	L006-7 KY4
		Rr.	C	—	—	—	—	1	1	—	—	L402-3 KY4
	w/Arm Rest, w/Carpet											
	H7B, H8B		C	—	1	—	—	—	—	—	—	D734-5KB6
	H7G, H8G		C	—	1	—	—	—	—	—	—	D734-5 KG6
	H7L, H8L		C	—	1	—	—	—	—	—	—	D734-5 KL3
	H8XW		C	—	1	—	—	—	—	—	—	D734-5 KW1
	H7X, H8X		C	—	1	—	—	—	—	—	—	D734-5 KX9
	H8YW		C	—	1	—	—	—	—	—	—	D734-5 KYW
	H7Y, H8Y		C	—	1	—	—	—	—	—	—	D734-5 KY3

TYPE LETTERS Indicates J - Challenger, B - Barracuda, V - Valiant, L - Dart, R - Satellite, W - Coronet, P - Plymouth, D - Dodge, C - Chrysler, Y - Imperial

NUMERALS INDICATE: 21 - 2 DR. SED., 23 - 2 DR. H.T., 29 - FAST BACK, 41 - 4 DR. SED., 43 - 4 DR. H.T., 45 - 6 PASS. STA. WGN., 46 - 9 PASS. STA. WGN.

AR Indicates use as required.
# Indicates parts not listed in any previous parts book
Numerals in parentheses ( ) refer to notes.
★ Indicates change or addition.

Printed in U.S.A.
November, 1974

Right and left part numbers are on same line, first number is right, second number is left.

CODE	PART NAME		MODEL CODES	SEE BOTTOM NOTE 21	23	29	41	43	45	46	PART NUMBER
23-92-5	PANEL Cont'd.										
	PDB, PLB		Y	—	1	—	—	—	—	—	D736-7 KB6
	PDG, PLG		Y	—	1	—	—	—	—	—	D736-7 KG6
	PDL, PLL		Y	—	1	—	—	—	—	—	D736-7 KL3
	PLXW		Y	—	1	—	—	—	—	—	D736-7 KW1
	PDX, PLX		Y	—	1	—	—	—	—	—	D736-7 KX9
	PDY, PLY		Y	—	1	—	—	—	—	—	D736-7 KY3
	PDT, PLT		Y	—	1	—	—	—	—	—	D736-7 KT7
	H7B, H8B	Frt.	C	—	—	—	1	1	—	—	D738-9 KB6
		Rr.	C	—	—	—	1	1	—	—	D742-3 KB6
	H7G, H8G	Frt.	C	—	—	—	1	1	—	—	D738-9 KG6
		Rr.	C	—	—	—	1	1	—	—	D742-3 KG6
	H8XW	Frt.	C	—	—	—	1	1	—	—	D738-9 KW1
		Rr.	C	—	—	—	1	1	—	—	D742-3 KW1
	H7X, H8X	Frt.	C	—	—	—	1	1	—	—	D738-9 KX9
		Rr.	C	—	—	—	1	1	—	—	D742-3 KX9
	H7L, H8L	Frt.	C	—	—	—	1	1	—	—	D738-9 KL3
		Rr.	C	—	—	—	1	1	—	—	D742-3 KL3
	H7Y, H8Y	Frt.	C	—	—	—	1	1	—	—	D738-9 KY3
		Rr.	C	—	—	—	1	1	—	—	D742-3 KY3
	PDB, PLB	Frt.	Y	—	—	—	—	1	—	—	D740-1 KB6
		Rr.	Y	—	—	—	—	1	—	—	D744-5 KB6
	PDG, PLG	Frt.	Y	—	—	—	—	1	—	—	D740-1 KG6
		Rr.	Y	—	—	—	—	1	—	—	D744-5 KG6
	PDL, PLL	Frt.	Y	—	—	—	—	1	—	—	D740-1 KL3
		Rr.	Y	—	—	—	—	1	—	—	D744-5 KL3
	PLXW	Frt.	Y	—	—	—	—	1	—	—	D740-1 KW1
		Rr.	Y	—	—	—	—	1	—	—	D744-5 KW1
	PDX, PLX	Frt.	Y	—	—	—	—	1	—	—	D740-1 KX9
		Rr.	Y	—	—	—	—	1	—	—	D744-5 KX9
	PDY, PLY	Frt.	Y	—	—	—	—	1	—	—	D740-1 KY3
		Rr.	Y	—	—	—	—	1	—	—	D744-5 KY3
	PDT, PLT	Frt.	Y	—	—	—	—	1	—	—	D740-1 KT7
		Rr.	Y	—	—	—	—	1	—	—	D744-5 KT7
	Upper										
	A1G, A2G		D	—	1	—	—	—	—	—	L052-3 KG6
	A1X, A2X		D	—	1	—	—	—	—	—	L052-3 KX9
	A1Y, A2Y		D	—	1	—	—	—	—	—	L052-3 KY3
	F4B, M1B		D	—	1	—	—	—	—	—	L100-1 KB6
	F4G, M1G, V2G		D	—	1	—	—	—	—	—	L100-1 KG6
	F4L, M1L, V2L		D	—	1	—	—	—	—	—	L100-1 KL3
	N3XW		D	—	1	—	—	—	—	—	L100-1 KW1
	F4X, M1X		D	—	1	—	—	—	—	—	L100-1 KX9
	F4Y, M1Y, V2Y		D	—	1	—	—	—	—	—	L100-1 KY3
	P1G, R2G		D	—	1	—	—	—	—	—	L070-1 KG6
	P1L, R2L		D	—	1	—	—	—	—	—	L070-1 KL3
	P1X, R2X		D	—	1	—	—	—	—	—	L070-1 KX9
	P1Y, R2Y		D	—	1	—	—	—	—	—	L070-1 KY3
	W7B		D	—	1	—	—	—	—	—	L080-1 KB6
	W7G		D	—	1	—	—	—	—	—	L080-1 KG6
	W7L		D	—	1	—	—	—	—	—	L080-1 KL3
	W7X		D	—	1	—	—	—	—	—	L080-1 KX9
	W7Y		D	—	1	—	—	—	—	—	L080-1 KY3
	P1G, R2G	Frt.	D	—	—	—	1	—	1	—	L072-3 KG6
		Rr.	D	—	—	—	1	—	1	—	L434-5 KG6
	P1L, R2L	Frt.	D	—	—	—	1	—	1	—	L072-3 KL3
		Rr.	D	—	—	—	1	—	1	—	L434-5 KL3
	R2T	Frt.	D	—	—	—	—	—	1	—	L072-3 KT7
		Rr.	D	—	—	—	—	—	1	—	L434-5 KT7
	P1X, R2X	Frt.	D	—	—	—	1	—	1	—	L072-3 KX9

TYPE LETTERS Indicates J - Challenger, B - Barracuda, V - Valiant, L - Dart, R - Satellite, W - Coronet, P - Plymouth, D - Dodge, C - Chrysler, Y - Imperial

NUMERALS INDICATE: 21 - 2 DR. SED., 23 - 2 DR. H.T., 29 - FAST BACK, 41 - 4 DR. SED., 43 - 4 DR. H.T., 45 - 6 PASS. STA. WGN., 46 - 9 PASS. STA. WGN.

AR Indicates use as required.
# Indicates parts not listed in any previous parts book
Numerals in parentheses ( ) refer to notes.
★ Indicates change or addition.

Printed in U.S.A.
November, 1974

Right and left part numbers are on same line, first number is right, second number is left.

CODE	PART NAME		MODEL CODES	SEE BOTTOM NOTE 21	23		29	41	43	45	46	PART NUMBER
23-92-5	PANEL Cont'd.											
		Rr.	D	—	—	—	—	1	—	1	—	L434-5 KX9
	P1Y, R2Y	Frt.	D	—	—	—	—	1	—	—	—	L072-3 KY3
		Rr.	D	—	—	—	—	1	—	—	—	L434-5 KY3
	F4B, M1B, V2B	Frt.	D	—	—	—	—	1	—	1	1	L102-3 KB6
		Rr.	D	—	—	—	—	1	—	1	1	L436-7 KB6
	F4G, M1G, V2G	Frt.	D	—	—	—	—	1	—	1	1	L102-3 KG6
		Rr.	D	—	—	—	—	1	—	1	1	L436-7 KG6
	F4L, M1L, V2L	Frt.	D	—	—	—	—	1	—	1	1	L102-3 KL3
		Rr.	D	—	—	—	—	1	—	1	1	L436-7 KL3
	F4T, V2T	Frt.	D	—	—	—	—	1	—	1	1	L102-3 KT7
		Rr.	D	—	—	—	—	1	—	1	1	L436-7 KT7
	F4X, M1X, V2X	Frt.	D	—	—	—	—	1	—	1	1	L102-3 KX9
		Rr.	D	—	—	—	—	1	—	1	1	L436-7 KX9
	F4Y, M1Y, V2Y	Frt.	D	—	—	—	—	1	—	1	1	L102-3 KY3
		Rr.	D	—	—	—	—	1	—	1	1	L436-7 KY3
	S8B, W7B	Frt.	D	—	—	—	—	1	—	1	1	L082-3 KB6
		Rr.	D	—	—	—	—	1	—	1	1	L440-1 KB6
	S8G, W7G	Frt.	D	—	—	—	—	1	—	1	1	L082-3 KG6
		Rr.	D	—	—	—	—	1	—	1	1	L440-1 KG6
	S8L, W7L	Frt.	D	—	—	—	—	1	—	1	1	L082-3 KL3
		Rr.	D	—	—	—	—	1	—	1	1	L440-1 KL3
	S8T	Frt.	D	—	—	—	—	—	—	1	1	L082-3 KT7
		Rr.	D	—	—	—	—	—	—	1	1	L440-1 KT7
	S8X, W7X	Frt.	D	—	—	—	—	1	—	1	1	L082-3 KX9
		Rr.	D	—	—	—	—	1	—	1	1	L440-1 KX9
	S8Y, W7Y	Frt.	D	—	—	—	—	1	—	1	1	L082-3 KY3
		Rr.	D	—	—	—	—	1	—	1	1	L440-1 KY3
	F4B, M1B	Frt.	D	—	—	—	—	—	1	—	—	L104-5 KB6
		Rr.	D	—	—	—	—	—	1	—	—	L438-9 KB6
	F4G, M1G, V2G	Frt.	D	—	—	—	—	—	1	—	—	L104-5 KG6
		Rr.	D	—	—	—	—	—	1	—	—	L438-9 KG6
	F4L, M1L, V2L	Frt.	D	—	—	—	—	—	1	—	—	L104-5 KL3
		Rr.	D	—	—	—	—	—	1	—	—	L438-9 KL3
	F4X, M1X	Frt.	D	—	—	—	—	—	1	—	—	L104-5 KX9
		Rr.	D	—	—	—	—	—	1	—	—	L438-9 KX9
	M1Y, F4Y, V2Y	Frt.	D	—	—	—	—	—	1	—	—	L104-5 KY3
		Rr.	D	—	—	—	—	—	1	—	—	L438-9 KY3
	N3XW	Frt.	D	—	—	—	—	—	1	—	—	L104-5 KW1
		Rr.	D	—	—	—	—	—	1	—	—	L438-9 KW1
	W7B	Frt.	D	—	—	—	—	—	1	—	—	L084-5 KB6
		Rr.	D	—	—	—	—	—	1	—	—	L442-3 KB6
	W7G	Frt.	D	—	—	—	—	—	1	—	—	L084-5 KG6
		Rr.	D	—	—	—	—	—	1	—	—	L442-3 KG6
	W7L	Frt.	D	—	—	—	—	—	1	—	—	L084-5 KL3
		Rr.	D	—	—	—	—	—	1	—	—	L442-3 KL3
	W7X	Frt.	D	—	—	—	—	—	1	—	—	L084-5 KX9
		Rr.	D	—	—	—	—	—	1	—	—	L442-3 KX9
	W7Y	Frt.	D	—	—	—	—	—	1	—	—	L084-5 KY3
		Rr.	D	—	—	—	—	—	1	—	—	L442-3 KY3
	Upper											
	A1B, B2B		C	—	1	—	—	—	—	—	—	L016-7 KB6
	A1G, B2G		C	—	1	—	—	—	—	—	—	L016-7 KG6
	A1L, B2L		C	—	1	—	—	—	—	—	—	L016-7 KL3
	B2XW, C1KW		C	—	1	—	—	—	—	—	—	L016-7 KW1
	A1X, B2X		C	—	1	—	—	—	—	—	—	L016-7 KX9
	A1Y, B2Y		C	—	1	—	—	—	—	—	—	L016-7 KY3
	D7B, D8B		C	—	1	—	—	—	—	—	—	L020-1 KB6
	D7G, D8G		C	—	1	—	—	—	—	—	—	L020-1 KG6

TYPE LETTERS Indicates: J - Challenger, B - Barracuda, V - Valiant, L - Dart, R - Satellite, W - Coronet, P - Plymouth, D - Dodge, C - Chrysler, Y - Imperial

NUMERALS INDICATE: 21 - 2 DR. SED., 23 - 2 DR. H.T., 29 - FAST BACK, 41 - 4 DR. SED., 43 - 4 DR. H.T., 45 - 6 PASS. STA. WGN., 46 - 9 PASS. STA. WGN.

AR Indicates use as required.
# Indicates parts not listed in any previous parts book
Numerals in parentheses ( ) refer to notes.
★ Indicates change or addition.

Printed in U.S.A.
November, 1974

Right and left part numbers are on same line, first number is right, second number is left.

CODE	PART NAME		MODEL CODES	SEE BOTTOM NOTE 21	23	29	41	43	45	46	PART NUMBER
23-92-5	PANEL Cont'd.										
	D7L, D8L		C	—	1	—	—	—	—	—	L020-1 KL3
	D8XW		C	—	1	—	—	—	—	—	L020-1 KW1
	D7X, D8X		C	—	1	—	—	—	—	—	L020-1 KX9
	D7Y, D8Y		C	—	1	—	—	—	—	—	L020-1 KY3
	H7B, H8B		C	—	1	—	—	—	—	—	L086-7 KB6
	H7G, H8G		C	—	1	—	—	—	—	—	L086-7 KG6
	H7L, H8L		C	—	1	—	—	—	—	—	L086-7 KL3
	H8XW, H8YW		C	—	1	—	—	—	—	—	L086-7 KW1
	H7X, H8X		C	—	1	—	—	—	—	—	L086-7 KX9
	H7Y, H8Y		C	—	1	—	—	—	—	—	L086-7 KY3
	A1B, B2B	Frt.	C	—	—	—	1	—	—	—	L018-9 KB6
		Rr.	C	—	—	—	1	—	—	—	L408-9 KB6
	A1G, B2G	Frt.	C	—	—	—	1	—	—	—	L018-9 KG6
		Rr.	C	—	—	—	1	—	—	—	L408-9 KG6
	A1L, B2L	Frt.	C	—	—	—	1	—	—	—	L018-9 KL3
		Rr.	C	—	—	—	1	—	—	—	L408-9 KL3
	B2XW, C1KW	Frt.	C	—	—	—	1	—	—	—	L018-9 KW1
		Rr.	C	—	—	—	1	—	—	—	L408-9 KW1
	A1X, B2X	Frt.	C	—	—	—	1	—	—	—	L018-9 KX9
		Rr.	C	—	—	—	1	—	—	—	L408-9 KX9
	A1Y, B2Y	Frt.	C	—	—	—	1	—	—	—	L018-9 KY3
		Rr.	C	—	—	—	1	—	—	—	L408-9 KY3
	D7B, D8B	Frt.	C	—	—	—	1	—	—	—	L022-3 KB6
		Rr.	C	—	—	—	1	—	—	—	L410-1 KB6
	D7G, D8G	Frt.	C	—	—	—	1	—	—	—	L022-3 KG6
		Rr.	C	—	—	—	1	—	—	—	L410-1 KG6
	D7L, D8L	Frt.	C	—	—	—	1	—	—	—	L022-3 KL3
		Rr.	C	—	—	—	1	—	—	—	L410-1 KL3
	D8XW	Frt.	C	—	—	—	1	—	—	—	L022-3 KW1
		Rr.	C	—	—	—	1	—	—	—	L410-1 KW1
	D7X, D8X	Frt.	C	—	—	—	1	—	—	—	L022-3 KX9
		Rr.	C	—	—	—	1	—	—	—	L410-1 KX9
	D7Y, D8Y	Frt.	C	—	—	—	1	—	—	—	L022-3 KY3
		Rr.	C	—	—	—	1	—	—	—	L410-1 KY3
	E9B, EHB	Frt.	C	—	—	—	1	—	—	—	L026-7 KB6
		Rr.	C	—	—	—	1	—	—	—	L414-5 KB6
	E9G, EHG	Frt.	C	—	—	—	1	—	—	—	L026-7 KG6
		Rr.	C	—	—	—	1	—	—	—	L414-5 KG6
	E9L, EHL	Frt.	C	—	—	—	1	—	—	—	L026-7 KL3
		Rr.	C	—	—	—	1	—	—	—	L414-5 KL3
	EHXW	Frt.	C	—	—	—	1	—	—	—	L026-7 KW1
		Rr.	C	—	—	—	1	—	—	—	L414-5 KW1
	E9X, EHX	Frt.	C	—	—	—	1	—	—	—	L026-7 KX9
		Rr.	C	—	—	—	1	—	—	—	L414-5 KX9
	E9Y, EHY	Frt.	C	—	—	—	1	—	—	—	L026-7 KY3
		Rr.	C	—	—	—	1	—	—	—	L414-5 KY3
	H7B, H8B	Frt.	C	—	—	—	1	—	—	—	L088-9 KB6
		Rr.	C	—	—	—	1	—	—	—	L444-5 KB6
	H7G, H8G	Frt.	C	—	—	—	1	—	—	—	L088-9 KG6
		Rr.	C	—	—	—	1	—	—	—	L444-5 KG6
	H7L, H8L	Frt.	C	—	—	—	1	—	—	—	L088-9 KL3
		Rr.	C	—	—	—	1	—	—	—	L444-5 KL3
	H8XW	Frt.	C	—	—	—	1	—	—	—	L088-9 KW1
		Rr.		—	—	—	1	—	—	—	L444-5 KW1
	HX9, H8X	Frt.	C	—	—	—	1	—	—	—	L088-9 KX9
		Rr.	C	—	—	—	1	—	—	—	L444-5 KX9
	H7Y, H8Y	Frt.	C	—	—	—	1	—	—	—	L088-9 KY3
		Rr.	C	—	—	—	1	—	—	—	L444-5 KY3

TYPE LETTERS Indicates: J - Challenger, B - Barracuda, V - Valiant, L - Dart, R - Satellite, W - Coronet, P - Plymouth, D - Dodge, C - Chrysler, Y - Imperial

NUMERALS INDICATE: 21 - 2 DR. SED., 23 - 2 DR. H.T., 29 - FAST BACK, 41 - 4 DR. SED., 43 - 4 DR. H.T., 45 - 6 PASS. STA. WGN., 46 - 9 PASS. STA. WGN.

AR Indicates use as required.
# Indicates parts not listed in any previous parts book
Numerals in parentheses ( ) refer to notes.
★ Indicates change or addition.

Printed in U.S.A.
November, 1974

Right and left part numbers are on same line, first number is right, second number is left.

CODE	PART NAME		MODEL CODES	SEE BOTTOM NOTE 21	23	29	41	43	45	46	PART NUMBER
23-92-5	PANEL Cont'd.										
	A1B, B2B	Frt.	C	—	—	—	—	1	—	—	L028-9 KB6
		Rr.	C	—	—	—	—	1	—	—	L416-7 KB6
	A1G, B2G	Frt.	C	—	—	—	—	1	—	—	L028-9 KG6
		Rr.	C	—	—	—	—	1	—	—	L416-7 KG6
	A1L, B2L	Frt.	C	—	—	—	—	1	—	—	L028-9 KL3
		Rr.	C	—	—	—	—	1	—	—	L416-7 KL3
	B2XW, C1KW	Frt.	C	—	—	—	—	1	—	—	L028-9 KW1
		Rr.	C	—	—	—	—	1	—	—	L416-7 KW1
	A1X, B2X	Frt.	C	—	—	—	—	1	—	—	L028-9 KX9
		Rr.	C	—	—	—	—	1	—	—	L416-7 KX9
	A1Y, B2Y	Frt.	C	—	—	—	—	1	—	—	L028-9 KY3
		Rr.	C	—	—	—	—	1	—	—	L416-7 KY3
	D7B, D8B	Frt.	C	—	—	—	—	1	—	—	L030-1 KB6
		Rr.	C	—	—	—	—	1	—	—	L418-9 KB6
	D7G, D8G	Frt.	C	—	—	—	—	1	—	—	L030-1 KG6
		Rr.	C	—	—	—	—	1	—	—	L418-9 KG6
	D7L, D8L	Frt.	C	—	—	—	—	1	—	—	L030-1 KL3
		Rr.	C	—	—	—	—	1	—	—	L418-9 KL3
	D8XW	Frt.	C	—	—	—	—	1	—	—	L030-1 KW1
		Rr.	C	—	—	—	—	1	—	—	L418-9 KW1
	D7X, D8X	Frt.	C	—	—	—	—	1	—	—	L030-1 KX9
		Rr.	C	—	—	—	—	1	—	—	L418-9 KX9
	D7Y, D8Y	Frt.	C	—	—	—	—	1	—	—	L030-1 KY3
		Rr.	C	—	—	—	—	1	—	—	L418-9 KY3
	E9B, EHB	Frt.	C	—	—	—	—	1	—	—	L032-3 KB6
		Rr.	C	—	—	—	—	1	—	—	L420-1 KB6
	E9G, EHG	Frt.	C	—	—	—	—	1	—	—	L032-3 KG6
		Rr.	C	—	—	—	—	1	—	—	L420-1 KG6
	E9L, EHL	Frt.	C	—	—	—	—	1	—	—	L032-3 KL3
		Rr.	C	—	—	—	—	1	—	—	L420-1 KL3
	EHXW	Frt.	C	—	—	—	—	1	—	—	L032-3 KW1
		Rr.	C	—	—	—	—	1	—	—	L420-1 KW1
	E9X, EHX	Frt.	C	—	—	—	—	1	—	—	L032-3 KX9
		Rr.	C	—	—	—	—	1	—	—	L420-1 KX9
	E9Y, EHY	Frt.	C	—	—	—	—	1	—	—	L032-3 KY3
		Rr.	C	—	—	—	—	1	—	—	L420-1 KY3
	H7B, H8B	Frt.	C	—	—	—	—	1	—	—	L090-1 KB6
		Rr.	C	—	—	—	—	1	—	—	L446-7 KB6
	H7G, H8G	Frt.	C	—	—	—	—	1	—	—	L090-1 KG6
		Rr.	C	—	—	—	—	1	—	—	L446-7 KG6
	H7L, H8L	Frt.	C	—	—	—	—	1	—	—	L090-1 KL3
		Rr.	C	—	—	—	—	1	—	—	L446-7 KL3
	H8XW	Frt.	C	—	—	—	—	1	—	—	L090-1 KW1
		Rr.	C	—	—	—	—	1	—	—	L446-7 KW1
	H7X, H8X	Frt.	C	—	—	—	—	1	—	—	L090-1 KX9
		Rr.	C	—	—	—	—	1	—	—	L446-7 KX9
	H7Y, H8Y	Frt.	C	—	—	—	—	1	—	—	L090-1 KY3
		Rr.	C	—	—	—	—	1	—	—	L446-7 KY3
	D8B	Frt.	C	—	—	—	—	—	1	1	L024-5 KB6
		Rr.	C	—	—	—	—	—	1	1	L412-3 KB6
	D7G, D8G	Frt.	C	—	—	—	—	—	1	1	L024-5 KG6
		Rr.	C	—	—	—	—	—	1	1	L412-3 KG6
	D7L, D8L	Frt.	C	—	—	—	—	—	1	1	L024-5 KL3
		Rr.	C	—	—	—	—	—	1	1	L412-3 KL3
	D8T	Frt.	C	—	—	—	—	—	1	1	L024-5 KT7
		Rr.	C	—	—	—	—	—	1	1	L412-3 KT7
	D8X	Frt.	C	—	—	—	—	—	1	1	L024-5 KX9
		Rr.	C	—	—	—	—	—	1	1	L412-3 KX9

TYPE LETTERS Indicates: J - Challenger; B - Barracuda; V - Valiant; L - Dart; R - Satellite; W - Coronet; P - Plymouth; D - Dodge; C - Chrysler; Y - Imperial

NUMERALS INDICATE: 21 - 2 DR. SED.; 23 - 2 DR. H.T.; 29 - FAST BACK; 41 - 4 DR. SED.; 43 - 4 DR. H.T.; 45 - 6 PASS. STA. WGN.; 46 - 9 PASS. STA. WGN.

AR Indicates use as required.
# Indicates parts not listed in any previous parts book
Numerals in parentheses ( ) refer to notes.
★ Indicates change or addition.

Printed in U.S.A.
November, 1974

Right and left part numbers are on same line, first number is right, second number is left.

CODE	PART NAME		MODEL CODES	SEE BOTTOM NOTE 21	23		29	41	43	45	46	PART NUMBER
23-92-5	PANEL Cont'd.											
	D8Y	Frt.	C	—	—	—	—	—	—	1	1	L024-5 KY3
		Rr.	C	—	—	—	—	—	—	1	1	L412-3 KY3
	All Codes		Y	—	1	—	—	—	—	—	—	L092-3 KB6
			Y	—	1	—	—	—	—	—	—	L092-3 KG6
			Y	—	1	—	—	—	—	—	—	L092-3 KL3
			Y	—	1	—	—	—	—	—	—	L092-3 KT7
			Y	—	1	—	—	—	—	—	—	L092-3 KW1
			Y	—	1	—	—	—	—	—	—	L092-3 KX9
			Y	—	1	—	—	—	—	—	—	L092-3 KY3
	All Codes	Frt.	Y	—	—	—	—	—	1	—	—	L094-5 KB6
		Rr.	Y	—	—	—	—	—	1	—	—	L448-9 KB6
		Frt.	Y	—	—	—	—	—	1	—	—	L094-5 KG6
		Rr.	Y	—	—	—	—	—	1	—	—	L448-9 KG6
		Frt.	Y	—	—	—	—	—	1	—	—	L094-5 KL3
		Rr.	Y	—	—	—	—	—	1	—	—	L448-9 KL3
		Frt.	Y	—	—	—	—	—	1	—	—	L094-5 KT7
		Rr.	Y	—	—	—	—	—	1	—	—	L448-9 KT7
		Frt.	Y	—	—	—	—	—	1	—	—	L094-5 KW1
		Rr.	Y	—	—	—	—	—	1	—	—	L448-9 KW1
		Frt.	Y	—	—	—	—	—	1	—	—	L094-5 KX9
		Rr.	Y	—	—	—	—	—	1	—	—	L448-9 KX9
		Frt.	Y	—	—	—	—	—	1	—	—	L094-5 KY3
		Rr.	Y	—	—	—	—	—	1	—	—	L448-9 KY3
23-92-7	STRAP, Lower Door Trim Panel Storage Compt. Lt.											
	All Codes		D	—	1	—	—	1	1	1	1	L065 KB6
			D	—	1	—	—	1	1	1	1	L065 KL3
			D	—	1	—	—	1	1	1	1	L065 KG6
			D	—	1	—	—	1	1	1	1	L065 KT7
			D	—	1	—	—	1	1	1	1	L065 KW1
			D	—	1	—	—	1	1	1	1	L065 KX9
			D	—	1	—	—	1	1	1	1	L065 KY3
	DOOR, Lt. Front Lower Storage Compartment											
	All Codes		D	—	1	—	—	1	1	1	1	L062 KX9
	Fastener, Storage Compt. Door		D	—	3	—	—	3	3	3	3	6027 479
23-92-8	CLIP, Door Belt Retaining		B,J	—	2	—	—	—	—	—	—	3509 041
	Frt. & Rear Door Trim Panel Upper		V,L,R,W, P,D,C	—	AR	—	AR	AR	AR	AR	AR	1623 945
	FASTENER, Door Trim Panel	Canada	B,J,R,W	AR	AR	—	AR	—	—	—	—	6003 323
		Canada	V,L,P,D,C,Y	—	AR	—	AR	AR	AR	AR	AR	6000 121
		Wire Type Canada	All	—	AR	—	AR	AR	AR	—	—	6003 471
23-96-1	**SILENCER, Luggage Compartment**											
	Floor Front		V,L	—	—	—	1	—	—	—	—	3762 447
	Floor Lt.		V,L	—	—	—	1	—	—	—	—	3762 301
	Luggage Compt. Front Liner		P,D	—	1	—	—	—	—	—	—	3589 277
			P,D	—	—	—	—	1	1	—	—	3762 228
			C,Y	—	1	—	—	1	1	—	—	3762 228
			R,W	—	—	—	—	1	—	—	—	3762 499
	End		R,W	1	1	—	1	—	—	—	—	3550 181
23-96-3	PANEL, Luggage Compartment Front Lining		V,L	—	1	—	—	1	—	—	—	2787 855
	w/o Fold Down Rear Seat		V,L	—	—	—	1	—	—	—	—	2879 897
			B,J	—	1	—	—	—	—	—	—	2879 896
			R,W	1	1	—	1	1	—	—	—	3416 391
	Panel Assy., Rear Compartment Security		V,L	—	—	—	1	—	—	—	—	3616 813

TYPE LETTERS Indicates J - Challenger, B - Barracuda, V - Valiant, L - Dart, R - Satellite, W - Coronet, P - Plymouth, D - Dodge, C - Chrysler, Y - Imperial

NUMERALS INDICATE: 21 - 2 DR. SED., 23 - 2 DR. H.T., 29 - FAST BACK, 41 - 4 DR. SED., 43 - 4 DR. H.T., 45 - 6 PASS. STA. WGN., 46 - 9 PASS. STA. WGN.

AR Indicates use as required.
# Indicates parts not listed in any previous parts book
Numerals in parentheses ( ) refer to notes.
★ Indicates change or addition.

Printed in U.S.A.
November, 1974

Right and left part numbers are on same line, first number is right, second number is left.

CODE	PART NAME	MODEL CODES	SEE BOTTOM NOTE 21	23	29	41	43	45	46	PART NUMBER
23-96-8	PANEL, Luggage Compartment Side									
	Lining	V,L	—	1	—	—	—	—	—	3762 432-3
	Lining	V,L	—	—	—	1	—	—	—	3551 778-9
	Cover, w/House Trim Panel									
	All Codes	V,L	—	—	—	1	—	—	—	W804-5 KB7
		V,L	—	—	—	1	—	—	—	W804-5 KG6
		V,L	—	—	—	1	—	—	—	W804-5 KL2
		V,L	—	—	—	1	—	—	—	W804-5 JW1
		V,L	—	—	—	1	—	—	—	W804-5 JX9
		V,L	—	—	—	1	—	—	—	W804-5 KY4
		V,L	—	—	—	—	1	—	—	3762 434-5
	Cover, w/House and Quarter Lower Trim									
	All Codes	R,W	—	—	—	—	—	1	1	W208-9 KB7
		R,W	—	—	—	—	—	1	1	W208-9 KG6
		R,W	—	—	—	—	—	1	1	W208-9 KL2
		R,W	—	—	—	—	—	1	1	W208-9 KT8
	Cover, w/House Trim Front									
	All Codes	P,D	—	—	—	—	—	1	1	W226-7 KB7
		P,D	—	—	—	—	—	1	1	W226-7 KG7
		P,D	—	—	—	—	—	1	1	W226-7 KL2
		P,D	—	—	—	—	—	1	1	W226-7 KT8
		P,D	—	—	—	—	—	1	1	W226-7 KX9
		P,D	—	—	—	—	—	1	1	W226-7 KY4
	All Codes	C	—	—	—	—	—	1	1	W216-7 KB7
		C	—	—	—	—	—	1	1	W216-7 KG7
		C	—	—	—	—	—	1	1	216-7 KL2
		C	—	—	—	—	—	1	1	W216-7 KT8
		C	—	—	—	—	—	1	1	W216-7 KX9
		C	—	—	—	—	—	1	1	W216-7 KY4
	Cover, w/House Trim Rear Lt.									
	All Codes	P,D,C	—	—	—	—	—	1	1	W221 KB7
		P,D,C	—	—	—	—	—	1	1	W221 KG7
		P,D,C	—	—	—	—	—	1	1	W221 KL2
		P,D,C	—	—	—	—	—	1	1	W221 KT8
		P,D,C	—	—	—	—	—	1	1	W221 KX9
		P,D,C	—	—	—	—	—	1	1	W221 KY4
	Cover, Luggage Compartment w/House	C	—	1	—	—	1	1	—	—	3762 269
	Luggage Compartment Side Liner (Black) (Model CH, CS)	C	—	2	—	—	2	2	—	—	3762 260
23-96-10	COVER, Luggage Compartment Deck Opening									
	Lower	V,L	—	1	—	—	—	—	—	3762 386
	Lower	V,L	—	—	—	1	—	—	—	3551 712
	Lower	P,D	—	1	—	—	1	1	—	—	3762 786-7
	(CH, CS) Up to Build Date 3-7-74	C,Y	—	1	—	—	1	1	—	—	3589 847
	After Build Date 3-7-74	C,Y	—	1	—	—	1	1	—	—	3762 780-1
23-96-11	COVER, Gas Filler Tube (Carpet)	V,L	—	1	—	—	—	—	—	—	3762 492
23-96-26	LID ASSY., Wheelhouse Cover Storage Compartment Front									
	All Codes	C	—	—	—	—	—	1	1	W214-5 KB7
		C	—	—	—	—	—	1	1	W214-5 KG7
		C	—	—	—	—	—	1	1	W214-5 KL2
		C	—	—	—	—	—	1	1	W214-5 KT8
		C	—	—	—	—	—	1	1	W214-5 KX9
		C	—	—	—	—	—	1	1	W214-5 KY4
	FASTENER, Lid To W/House Cover Canada	C	—	—	—	—	—	14	14	6027 479
23-96-27	BAG, Bumper Jack, w/Fold Down Rear Seat	V,L	—	—	—	1	—	—	—	—	W806 KX9

TYPE LETTERS Indicates: J - Challenger, B - Barracuda, V - Valiant, L - Dart, R - Satellite, W - Coronet, P - Plymouth, D - Dodge, C - Chrysler, Y - Imperial

NUMERALS INDICATE: 21 - 2 DR. SED., 23 - 2 DR. H.T., 29 - FAST BACK, 41 - 4 DR. SED., 43 - 4 DR. H.T., 45 - 6 PASS. STA. WGN., 46 - 9 PASS. STA. WGN.

AR Indicates use as required.
# Indicates parts not listed in any previous parts book
Numerals in parentheses ( ) refer to notes.
★ Indicates change or addition.

Printed in U.S.A.
November, 1974

Right and left part numbers are on same line, first number is right, second number is left.

CODE	PART NAME	MODEL CODES	SEE BOTTOM NOTE 21	23	29	41	43	45	46	PART NUMBER
23-99-4	**COVER, Center Pillar Trim**									
	All Codes	R,W	—	—	—	1	—	1	1	F302-3 KX9
	All Codes	P,D,C,Y	—	—	—	—	1	—	—	F334-5 KB7
		P,D,C,Y	—	—	—	—	1	—	—	F334-5 KG7
		P,D,C,Y	—	—	—	—	1	—	—	F334-5 KL2
		Y	—	—	—	—	1	—	—	F334-5 KT8
		P,D,C,Y	—	—	—	—	1	—	—	F334-5 KX9
		C,Y	—	—	—	—	1	—	—	F334-5 KW1
		P,D,C,Y	—	—	—	—	1	—	—	F334-5 KY4
	All Codes (Up to Build Date 10-4-73)	P,D,C	—	—	—	1	—	1	1	F322-3 KX9
	(After Build Date 10-4-73)	P,D,C	—	—	—	1	—	1	1	F376-7 KX9
23-99-5	COVER, Lock Pillar Flange									
	All Codes	C,Y	—	1	—	—	—	—	—	F014-5 KB7
		C,Y	—	1	—	—	—	—	—	F014-5 KG7
		C,Y	—	1	—	—	—	—	—	F014-5 KL2
		Y	—	1	—	—	—	—	—	F014-5 KT8
		C,Y	—	1	—	—	—	—	—	F014-5 KX9
		C,Y	—	1	—	—	—	—	—	F014-5 KW1
		C,Y	—	1	—	—	—	—	—	F014-5 KY4
23-99-6	COVER, Body Lock Pillar Upper Trim									
	All Codes	R,W	—	—	—	—	—	1	1	W204-5 KB7
		R,W	—	—	—	—	—	1	1	W204-5 KG6
		R,W	—	—	—	—	—	1	1	W204-5 KL2
		R,W	—	—	—	—	—	1	1	W204-5 KT8
23-99-37	CO-ORDINATOR, Outboard Center Pillar Color									
	All Codes	P,D,C,Y	—	—	—	—	1	—	—	F370-1 KB7
		P,D,C,Y	—	—	—	—	1	—	—	F370-1 KG7
		P,D,C,Y	—	—	—	—	1	—	—	F370-1 KL2
		P,D,C,Y	—	—	—	—	1	—	—	F370-1 KT8
		P,D,C,Y	—	—	—	—	1	—	—	F370-1 KW1
		P,D,C,Y	—	—	—	—	1	—	—	F370-1 KX9
		P,D,C,Y	—	—	—	—	1	—	—	F370-1 KY4
23-99-41	COVER, Tailgate Opening Pillar									
	All Codes	R,W	—	—	—	—	—	1	1	W202-3 KB7
		R,W	—	—	—	—	—	1	1	W202-3 KG6
		R,W	—	—	—	—	—	1	1	W202-3 KL2
		R,W	—	—	—	—	—	1	1	W202-3 KT8
	All Codes	P,D,C	—	—	—	—	—	1	1	W210-1 KB7
		P,D,C	—	—	—	—	—	1	1	W210-1 KG7
		P,D,C	—	—	—	—	—	1	1	W210-1 KL2
		P,D,C	—	—	—	—	—	1	1	W210-1 KT8
		P,D,C	—	—	—	—	—	1	1	W210-1 KX9
		P,D,C	—	—	—	—	—	1	1	W210-1 KY4
23-101-3	**PANEL, Quarter Trim**									
	A1B, D2B	V,L	—	1	—	—	—	—	—	J802-3 KB6
	A1G, D2G	V,L	—	1	—	—	—	—	—	J802-3 KG6
	D2L	V,L	—	1	—	—	—	—	—	J802-3 KL3
	A1X, D2X	V,L	—	1	—	—	—	—	—	J802-3 KX9
	D2Y	V,L	—	1	—	—	—	—	—	J802-3 KY3
	E2B, F3B	V,L	—	1	—	—	—	—	—	J808-9 KB6
	E2G, F3G	V,L	—	1	—	—	—	—	—	J808-9 KG6
	E2L, F3L	V,L	—	1	—	—	—	—	—	J808-9 KL3
	E2X, F3X	V,L	—	1	—	—	—	—	—	J808-9 KX9
	E2Y	V,L	—	1	—	—	—	—	—	J808-9 KY3
	w/Wood Grain									
	H1LL, H5LL	V,L	—	1	—	—	—	—	—	J810-1 KLU
	w/o Wood Grain									
	A1B, D2B, C4B	V,L	—	—	1	—	—	—	—	J804-5 KB6

TYPE LETTERS Indicates: J - Challenger, B - Barracuda, V - Valiant, L - Dart, R - Satellite, W - Coronet, P - Plymouth, D - Dodge, C - Chrysler, Y - Imperial

NUMERALS INDICATE: 21 - 2 DR. SED., 23 - 2 DR. H.T., 29 - FAST BACK, 41 - 4 DR. SED., 43 - 4 DR. H.T., 45 - 6 PASS. STA. WGN., 46 - 9 PASS. STA. WGN.

AR Indicates use as required.
# Indicates parts not listed in any previous parts book
Numerals in parentheses ( ) refer to notes.
★ Indicates change or addition.

Printed in U.S.A.
November, 1974

Right and left part numbers are on same line, first number is right, second number is left.

CODE	PART NAME	MODEL CODES	SEE BOTTOM NOTE 21	23		29	41	43	45	46	PART NUMBER
23-101-3	PANEL Cont'd.										
	A1G, D2G, C4G	V,L	—	—	—	1	—	—	—	—	J804-5 KG6
	D2L, C4L, C6L	V,L	—	—	—	1	—	—	—	—	J804-5 KL3
	C6XW	V	—	—	—	1	—	—	—	—	J804-5 KW1
	A1X, D2X, C4X, C6X	V,L	—	—	—	1	—	—	—	—	J804-5 KX9
	D2Y	V,L	—	—	—	1	—	—	—	—	J804-5 KY3
	M2YW	V,L	—	—	—	1	—	—	—	—	J826-7 KYY
	J6VW	L	—	—	—	1	—	—	—	—	J826-7 KVW
	H5GG	V,L	—	1	—	—	—	—	—	—	J810-1 KGU
	w/Wood Grain										
	A1B, D2B, F4B	L	—	—	—	1	—	—	—	—	J806-7 KB6
	A1G, D2G, F4G	L	—	—	—	1	—	—	—	—	J806-7 KG6
	D2L, F6L, F4L	L	—	—	—	1	—	—	—	—	J806-7 KL3
	F6XW	L	—	—	—	1	—	—	—	—	J806-7 KW1
	A1X, D2X, F6X, F4X	L	—	—	—	1	—	—	—	—	J806-7 KX9
	D2Y	L	—	—	—	1	—	—	—	—	J806-7 KY3
	All Codes	B	—	1	—	—	—	—	—	—	J704-5 KB7
		B	—	1	—	—	—	—	—	—	J704-5 KG7
		B	—	1	—	—	—	—	—	—	J704-5 KX9
		B	—	1	—	—	—	—	—	—	J704-5 KW1
	All Codes	J	—	1	—	—	—	—	—	—	J706-7 KB7
		J	—	1	—	—	—	—	—	—	J706-7 KG7
		J	—	1	—	—	—	—	—	—	J706-7 KX9
		J	—	1	—	—	—	—	—	—	J706-7 KW1
	Upper										
	B2B	R	1	—	—	—	—	—	—	—	K700-1 KB7
	B2G	R	1	—	—	—	—	—	—	—	K700-1 KG6
	B2X	R	1	—	—	—	—	—	—	—	K700-1 JX9
	C2B, D6B, F1B Up to Build Date										
	3-15-74	R	1	1	—	—	—	—	—	—	K716-7 KBU
	C2G, D6G, F1G Up to Build Date										
	3-15-74	R	1	1	—	—	—	—	—	—	K716-7 KGU
	C2L Up to Build Date 3-15-74	R	1	1	—	—	—	—	—	—	K716-7 KLU
	D6XW, F1EW, W5EW Up to Build										
	Date 3-15-74	R	1	1	—	—	—	—	—	—	K716-7 KWU
	C2X, D6X, F1X Up to Build Date										
	3-15-74	R	1	1	—	—	—	—	—	—	K716-7 KXU
	C2Y, D6Y, F1Y Up to Build Date										
	3-15-74	R	1	1	—	—	—	—	—	—	K716-7 KYU
	C2B, D6B, F1B After Build Date 3-15-74	R	1	1	—	—	—	—	—	—	K740-1 KBU
	C2G, D6G, F1G After Build Date										
	3-15-74	R	1	1	—	—	—	—	—	—	K740-1 KGU
	C2L After Build Date 3-15-74	R	1	1	—	—	—	—	—	—	K740-1 KLU
	D6XW, F1EW, W5EW After Build										
	Date 3-15-74	R	1	1	—	—	—	—	—	—	K740-1 KWU
	C2X, D6X, F1X, After Build Date										
	3-15-74	R	1	1	—	—	—	—	—	—	K740-1 KXU
	C2Y, D6Y, F1Y After Build Date 3-15-74	R	1	1	—	—	—	—	—	—	K740-1 KYU
	V1YW	R	1	1	—	—	—	—	—	—	K728-9 KYW
	H6B, V3B	R	—	1	—	—	—	—	—	—	K714-5 KB6
	H6G, V3G	R	—	1	—	—	—	—	—	—	K714-5 KG6
	H6XW, E5EW	R	—	1	—	—	—	—	—	—	K714-5 KW1
	H6X, V3X	R	—	1	—	—	—	—	—	—	K714-5 KX9
	H6Y, V3Y	R	—	1	—	—	—	—	—	—	K714-5 KY3
	B2B	W	1	—	—	—	—	—	—	—	K704-5 KB6
	B2G	W	1	—	—	—	—	—	—	—	K704-5 KG6
	B2X	W	1	—	—	—	—	—	—	—	K704-5 KX9
	D6B, S1B, S2B (w/o Opera Window)	W	—	1	—	—	—	—	—	—	K706-7 KBU

TYPE LETTERS Indicates: J - Challenger, B - Barracuda, V - Valiant, L - Dart, R - Satellite, W - Coronet, P - Plymouth, D - Dodge, C - Chrysler, Y - Imperial

NUMERALS INDICATE: 21 - 2 DR. SED., 23 - 2 DR. H.T., 29 - FAST BACK, 41 - 4 DR. SED., 43 - 4 DR. H.T., 45 - 6 PASS. STA. WGN., 46 - 9 PASS. STA. WGN.

AR Indicates use as required.
# Indicates parts not listed in any previous parts book
Numerals in parentheses ( ) refer to notes.
★ Indicates change or addition.

Printed in U.S.A.
November, 1974

Right and left part numbers are on same line, first number is right, second number is left.

CODE	PART NAME	MODEL CODES	SEE BOTTOM NOTE 21	23	29	41	43	45	46	PART NUMBER
23-101-3	PANEL Cont'd.									
	D6G, S1G, S2G (w/o Opera Window)	W	—	1	—	—	—	—	—	K706-7 KGU
	S2L, W1LL (w/o Opera Window)	W	—	1	—	—	—	—	—	K706-7 KLU
	D6XW, N1YW	W	—	1	—	—	—	—	—	K706-7 KWU
	D6X, S1X, S2X (w/o Opera Window)	W	—	1	—	—	—	—	—	K706-7 KXU
	D6Y, S1Y, S2Y (w/o Opera Window)	W	—	1	—	—	—	—	—	K706-7 KYU
	E5YW	W	—	1	—	—	—	—	—	K710-1 KWU
	H6B, V3B	W	—	—	1	—	—	—	—	K710-1 KBU
	H6G, V3G	W	—	—	1	—	—	—	—	K710-1 KGU
	H6X, V3X	W	—	—	1	—	—	—	—	K710-1 KXU
	E5YW, H6XW	W	—	—	1	—	—	—	—	K710-1 KWU
	H6Y, V3Y	W	—	—	1	—	—	—	—	K710-1 KYU
	M4B, S2B (w/Opera Window)	W	—	1	—	1	—	—	—	K708-9 KBU
	M4G, S2G (w/Opera Window)	W	—	1	—	1	—	—	—	K708-9 KGU
	M4L, S2L, W1LL (w/Opera Window)	W	—	1	—	1	—	—	—	K708-9 KLU
	D6XW, N1YW	W	—	1	—	—	—	—	—	K708-9 KWU
	M4X, S2X (w/Opera Window)	W	—	1	—	1	—	—	—	K708-9 KXU
	M4Y, S2Y (w/Opera Window)	W	—	1	—	1	—	—	—	K708-9 KYU
	B1G, B2G	P	—	1	—	—	—	—	—	L712-3 KG6
	B1X, B2X	P	—	1	—	—	—	—	—	L712-3 KX9
	B1Y, B2Y	P	—	1	—	—	—	—	—	L712-3 KY3
	C1B, D4B	P	—	1	—	—	—	—	—	L714-5 KB6
	C1G, C2G, D4G	P	—	1	—	—	—	—	—	L714-5 KG6
	C1L, C2L, D4L	P	—	1	—	—	—	—	—	L714-5 KL3
	C1X, D4X	P	—	1	—	—	—	—	—	L714-5 KX9
	C1Y, C2Y, D4Y	P	—	1	—	—	—	—	—	L714-5 KY3
	E3B, E4B, G7B	P	—	1	—	—	—	—	—	L716-7 KB6
	E3G, E4G, G7G	P	—	1	—	—	—	—	—	L716-7 KG6
	E3L, E4L, G7L, J3LL	P	—	1	—	—	—	—	—	L716-7 KL3
	E3X, E4X, G7X	P	—	1	—	—	—	—	—	L716-7 KX9
	E3Y, E4Y, G7Y	P	—	1	—	—	—	—	—	L716-7 KY3
	A1G, A2G	D	—	1	—	—	—	—	—	L718-9 KG6
	A1X, A2X	D	—	1	—	—	—	—	—	L718-9 KX9
	A1Y, A2Y	D	—	1	—	—	—	—	—	L718-9 KY3
	F4B, M1B	D	—	1	—	—	—	—	—	L722-3 KB6
	F4G, M1G, V2G	D	—	1	—	—	—	—	—	L722-3 KG6
	F4L, M1L, V2L	D	—	1	—	—	—	—	—	L722-3 KL3
	F4X, M1X	D	—	1	—	—	—	—	—	L722-3 KX9
	N3XW	D	—	1	—	—	—	—	—	L722-3 KW1
	F4Y, M1Y, V2Y	D	—	1	—	—	—	—	—	L722-3 KY3
	P1G, R2G	D	—	1	—	—	—	—	—	L720-1 KG6
	P1L, R2L	D	—	1	—	—	—	—	—	L720-1 KL3
	P1X, R2X	D	—	1	—	—	—	—	—	L720-1 KX9
	P1Y, R2Y	D	—	1	—	—	—	—	—	L720-1 KY3
	W7B	D	—	1	—	—	—	—	—	L724-5 KB6
	W7G	D	—	1	—	—	—	—	—	L724-5 KG6
	W7L	D	—	1	—	—	—	—	—	L724-5 KL3
	W7X	D	—	1	—	—	—	—	—	L724-5 KX9
	W7Y	D	—	1	—	—	—	—	—	L724-5 KY3
	A1B, B2B	C	—	1	—	—	—	—	—	L708-9 KB6
	A1G, B2G	C	—	1	—	—	—	—	—	L708-9 KG6
	A1L, B2L	C	—	1	—	—	—	—	—	L708-9 KL3
	B2XW, C1KW	C	—	1	—	—	—	—	—	L708-9 KW1
	A1X, B2X	C	—	1	—	—	—	—	—	L708-9 KX9
	A1Y, B2Y	C	—	1	—	—	—	—	—	L708-9 KY3
	D7B, D8B	C	—	1	—	—	—	—	—	L710-1 KB6
	D7G, D8G	C	—	1	—	—	—	—	—	L710-1 KG6
	D7L, D8L	C	—	1	—	—	—	—	—	L710-1 KL3
	D8XW	C	—	1	—	—	—	—	—	L710-1 KW1

TYPE LETTERS Indicates: J - Challenger; B - Barracuda; V - Valiant; L - Dart; R - Satellite; W - Coronet; P - Plymouth; D - Dodge; C - Chrysler; Y - Imperial

NUMERALS INDICATE: 21 - 2 DR. SED.; 23 - 2 DR. H.T.; 29 - FAST BACK; 41 - 4 DR. SED.; 43 - 4 DR. H.T.; 45 - 6 PASS. STA. WGN.; 46 - 9 PASS. STA. WGN.

AR Indicates use as required.
# Indicates parts not listed in any previous parts book
Numerals in parentheses ( ) refer to notes.
★ Indicates change or addition.

Printed in U.S.A.
November, 1974

Right and left part numbers are on same line, first number is right, second number is left.

CODE	PART NAME	MODEL CODES	SEE BOTTOM NOTE 21	23	29	41	43	45	46	PART NUMBER
23-101-3	PANEL Cont'd.									
	D7X, D8X	C	—	1	—	—	—	—	—	L710-1 KX9
	D7Y, D8Y	C	—	1	—	—	—	—	—	L710-1 KY3
	H7B, H8B	C	—	1	—	—	—	—	—	L726-7 KB6
	H7G, H8G	C	—	1	—	—	—	—	—	L726-7 KG6
	H7L, H8L	C	—	1	—	—	—	—	—	L726-7 KL3
	H8XW, H8YW	C	—	1	—	—	—	—	—	L726-7 KW1
	H7X, H8X	C	—	1	—	—	—	—	—	L726-7 KX9
	H7Y, H8Y	C	—	1	—	—	—	—	—	L726-7 KY3
	All Codes	Y	—	1	—	—	—	—	—	L728-9 KB6
		Y	—	1	—	—	—	—	—	L728-9 KG6
		Y	—	1	—	—	—	—	—	L728-9 KL3
		Y	—	1	—	—	—	—	—	L728-9 KT7
		Y	—	1	—	—	—	—	—	L728-9 KW1
		Y	—	1	—	—	—	—	—	L728-9 KX9
		Y	—	1	—	—	—	—	—	L728-9 KY3
	Trim Panel Quarter Window									
	(St. Regis) White	C	—	1	—	—	—	—	—	3879 964-5
	Lower, w/Arm Rest									
	All Codes, w/Seat Belt	R,W	1	1	—	1	—	—	—	K702-3 KB7
		R,W	1	1	—	1	—	—	—	K702-3 KG7
		R,W	1	1	—	1	—	—	—	K702-3 KL2
		R,W	1	1	—	1	—	—	—	K702-3 KOW
		R,W	1	1	—	1	—	—	—	K702-3 KOX
		R,W	1	1	—	1	—	—	—	K702-3 KY4
	All Codes, w/o Seat Belt	W	1	1	—	1	—	—	—	K718-9 KB7
		W	1	1	—	1	—	—	—	K718-9 KG7
		W	1	1	—	1	—	—	—	K718-9 KL2
		W	1	1	—	1	—	—	—	K718-9 KY4
		W	1	1	—	1	—	—	—	K718-9 JOW
		W	1	1	—	1	—	—	—	K718-9 JOX
	w/o Arm Rest, w/o Opera Window									
	All Codes	P,D	—	1	—	—	—	—	—	L700-1 KB7
		P,D	—	1	—	—	—	—	—	L700-1 KG7
		P,D	—	1	—	—	—	—	—	L700-1 KL2
		P,D	—	1	—	—	—	—	—	L700-1 KX9
		D	—	1	—	—	—	—	—	L700-1 KW1
		P,D	—	1	—	—	—	—	—	L700-1 KY4
	A1B, B2B, D7B, D8B	C	—	1	—	—	—	—	—	L702-3 KB7
	A1G, B2G, D7G, D8G	C	—	1	—	—	—	—	—	L702-3 KG7
	A1L, B2L, D7L, D8L	C	—	1	—	—	—	—	—	L702-3 KL2
	B2XW, D8XW, C1KW	C	—	1	—	—	—	—	—	L702-3 KW1
	A1X, B2X, D7X, D8X	C	—	1	—	—	—	—	—	L702-3 KX9
	A1Y, B2Y, D7Y, D8Y	C	—	1	—	—	—	—	—	L702-3 KY4
	H7B, H8B, PDB, PLB	C,Y	—	1	—	—	—	—	—	L730-1 KB6
	H7G, H8G, PDG, PLG	C,Y	—	1	—	—	—	—	—	L730-1 KG6
	H7L, H8L, PDL, PLL	C,Y	—	1	—	—	—	—	—	L730-1 KL3
	PDT, PLT	Y	—	1	—	—	—	—	—	L730-1 KT7
	H8XW, PLXW, H8YW	C,Y	—	1	—	—	—	—	—	L730-1 KW1
	H7X, H8X, PDX, PLX	C,Y	—	1	—	—	—	—	—	L730-1 KX9
	H7Y, H8Y, PDY, PLY	C,Y	—	1	—	—	—	—	—	L730-1 KY3
	Cover, Lower Quarter Front Trim									
	All Codes	V,L	—	—	—	1	—	—	—	F328-9 JX9
	G2X	W	—	—	—	1	—	—	—	F326-7 JX9
	A2B, F1B, F2B, P2B, Q1B, R4B	R,W	—	—	—	1	—	—	—	F304-5 KB7
	A2G, F1G, F2G, P2G, Q1G, R4G	R,W	—	—	—	1	—	—	—	F304-5 KG6
	F2L, R4L	R,W	—	—	—	1	—	—	—	F304-5 KL2

TYPE LETTERS Indicates: J - Challenger; B - Barracuda; V - Valiant; L - Dart; R - Satellite; W - Coronet; P - Plymouth; D - Dodge; C - Chrysler; Y - Imperial

NUMERALS INDICATE: 21 - 2 DR. SED.; 23 - 2 DR. H.T.; 29 - FAST BACK; 41 - 4 DR. SED.; 43 - 4 DR. H.T.; 45 - 6 PASS. STA. WGN.; 46 - 9 PASS. STA. WGN.

AR Indicates use as required.
# Indicates parts not listed in any previous parts book
Numerals in parentheses ( ) refer to notes.
★ Indicates change or addition.

Printed in U.S.A.
November, 1974

Right and left part numbers are on same line, first number is right, second number is left.

CODE	PART NAME	MODEL CODES	SEE BOTTOM NOTE 21	23	29	41	43	45	46	PART NUMBER
23-101-3	PANEL Cont'd.									
	A2T, K2T, T2T, F1T, F2T, P2T, Q1T, R4T	R,W	—	—	—	1	—	—	—	F304-5 KT8
	K2X, T2X, F1X, F2X, Q1X, R4X	R,W	—	—	—	1	—	—	—	F304-5 JX9
	F1Y, F2Y, Q1Y, R4Y	R,W	—	—	—	1	—	—	—	F304-5 KY4
	All Codes	P,D	—	—	—	1	1	—	—	F324-5 KX9
	All Codes	C	—	—	—	1	—	—	—	F332-3 KB7
		C	—	—	—	1	—	—	—	F332-3 KG7
		C	—	—	—	1	—	—	—	F332-3 KL2
		C	—	—	—	1	—	—	—	F332-3 KX9
		C	—	—	—	1	—	—	—	F332-3 KW1
		C	—	—	—	1	—	—	—	F332-3 KY4
	All Codes	C,Y	—	—	—	—	1	—	—	F330-1 KX9
23-101-28	PATCH, Quarter Rear Inner at Shelf Ext. Trim									
	All Codes	V,L	—	—	2	—	—	—	—	H138 KB6
		V,L	—	—	2	—	—	—	—	H138 KG6
		V,L	—	—	2	—	—	—	—	H138 KL3
		V,L	—	—	2	—	—	—	—	H138 KX9
		V,L	—	—	2	—	—	—	—	H138 KY3
23-101-32	SPACER, Quarter Trim Support	P,D,C,Y	—	2	—	—	—	—	—	3762 145
23-101-33	BRACKET, Quarter Trim to Floor	B,J	—	2	—	—	—	—	—	3415 967
	Bracket, Quarter Trim Panel Support	J	—	2	—	—	—	—	—	3509 075
	Support, Quarter Inside Panel Trim Front	R,W	1	1	—	1	—	—	—	3756 136-7
23-101-34	SUPPORT, Quarter I/Side Panel Trim Rear	R	2	2	—	—	—	—	—	3616 154
23-101-37	SILENCER, Lower Quarter Trim Panel Lock Pillar	Y	—	—	—	—	2	—	—	3762 511
	Lower Quarter Trim Lock Pillar Retractor Opening	Y	—	—	—	—	1	—	—	3762 524-5
23-102-3	**PANEL, Shelf Trim**									
	Export Only	V,L	—	1	—	—	—	—	—	H108 KX9
	All Codes	V,L	—	1	—	—	—	—	—	H109 KX9
	All Codes w/o Fold Down Rear Seat	V,L	—	—	1	—	—	—	—	H106 KX9
		V,L	—	—	—	1	—	—	—	H111 KX9
	w/Fold Down Rear Seat	V,L	—	—	1	—	—	—	—	H104 KX9
	All Codes	B	—	1	—	—	—	—	—	H115 KX9
		J	—	1	—	—	—	—	—	H117 KX9
		R,W	1	1	—	1	—	—	—	H123 KX9
		R,W	—	—	—	1	—	—	—	H119 KX9
	All Codes	P,D	—	1	—	—	—	—	—	H132 kx9
		P,D	—	—	—	1	—	—	—	H126 KX9
		P,D	—	—	—	—	1	—	—	H102 KX9
		C	—	1	—	—	1	—	—	H100 KX9
		C	—	—	—	1	—	—	—	H130 KX9
	All Codes	Y	—	1	—	—	1	—	—	H134 KB7
		Y	—	1	—	—	1	—	—	H134 KG7
		Y	—	1	—	—	1	—	—	H134 KL5
		Y	—	1	—	—	1	—	—	H134 KY7
23-102-5	EXTENSION, Shelf Trim Panel Frt.									
	G2X	W	—	—	—	1	—	—	—	H135 KX9
23-103-3	**PANEL, Visor Trim**									
	All Codes	V,L	—	2	—	2	—	—	—	H502 KB6
		V,L	—	2	—	2	—	—	—	H502 KG6
		V,L	—	2	—	2	—	—	—	H502 KL3
		V,L	—	2	—	2	—	—	—	H502 KX9

TYPE LETTERS Indicates: J - Challenger, B - Barracuda, V - Valiant, L - Dart, R - Satellite, W - Coronet, P - Plymouth, D - Dodge, C - Chrysler, Y - Imperial

NUMERALS INDICATE: 21 - 2 DR. SED., 23 - 2 DR. H.T., 29 - FAST BACK, 41 - 4 DR. SED., 43 - 4 DR. H.T., 45 - 6 PASS. STA. WGN., 46 - 9 PASS. STA. WGN.

AR Indicates use as required.
# Indicates parts not listed in any previous parts book
Numerals in parentheses ( ) refer to notes.
★ Indicates change or addition.

Printed in U.S.A.
November, 1974

Right and left part numbers are on same line, first number is right, second number is left.

CODE	PART NAME	MODEL CODES	SEE BOTTOM NOTE 21	23	29	41	43	45	46	PART NUMBER
23-103-3	PANEL Cont'd.									
		V,L	—	2	—	—	—	—	—	H502 KW1
		V,L	—	2	—	—	2	—	—	— H502 KY3
	All Codes	V,L	—	—	—	2	—	—	—	— H503 KB6
		V,L	—	—	—	2	—	—	—	— H503 KG6
		V,L	—	—	—	2	—	—	—	— H503 KL3
		V,L	—	—	—	2	—	—	—	— H503 KX9
		V,L	—	—	—	2	—	—	—	— H503 KY3
		V,L	—	—	—	2	—	—	—	— H503 KW1
	All Codes	B,J	—	2	—	—	—	—	—	— H501 KB6
		B,J	—	2	—	—	—	—	—	— H501 KG6
		B,J	—	2	—	—	—	—	—	— H501 KW1
		B,J	—	2	—	—	—	—	—	— H501 KX9
	All Codes	R,W	2	2	—	2	2	—	—	— H504 KB6
		R,W	2	2	—	2	2	—	—	— H504 KG6
		R,W	2	2	—	2	2	—	—	— H504 KL3
		R,W	2	2	—	2	2	—	—	— H504 KT7
		R,W	2	2	—	2	2	—	—	— H504 KX9
		R,W	2	2	—	2	2	—	2	2 H504 KW1
		R,W	2	2	—	2	2	—	—	— H504 KY3
	All Codes	P,D,C,Y	—	2	—	—	2	2	2	2 H508 KB6
		P,D,C,Y	—	2	—	—	2	2	2	2 H508 KG6
		P,D,C,Y	—	2	—	—	2	2	2	2 H508 KL3
		Y	—	2	—	—	—	2	—	— H508 KT7
		P,D,C,Y	—	2	—	—	2	2	2	2 H508 KX9
		P,D,C,Y	—	2	—	—	2	2	2	2 H508 KY3
		C,Y	—	2	—	—	2	2	2	2 H508 KW1
		C	—	—	—	—	2	—	—	— H508 KW1
23-103-10	ARM and BRACKET, Visor	V,L	—	1	—	—	1	—	—	— 3586 994-5
		V,L	—	—	—	1	—	—	—	— 3586 992-3
		B,J	—	2	—	—	—	—	—	— 3670 112
		R,W	2	2	—	2	2	—	2	2 3586 983
		P,D,C,Y	—	2	—	—	2	2	2	2 3695 902
23-103-16	BRACKET, Visor Support									
	All Codes	P,D,C,Y	—	1	—	—	1	1	—	— H510 KB7
		P,D,C,Y	—	1	—	—	1	1	—	— H510 KG7
		P,D,C,Y	—	1	—	—	1	1	—	— H510 KL2
		P,D,C,Y	—	1	—	—	1	1	—	— H510 KT8
		P,D,C,Y	—	1	—	—	1	1	—	— H510 KX9
		C,Y	—	1	—	—	1	1	—	— H510 KW1
		P,D,C,Y	—	1	—	—	1	1	—	— H510 KY4
23-103-48	SUPPORT, Visor Inner	R,W,P,D,C,Y	2	2	—	2	2	2	2	2 3548 913
23-103-49	TIP, Visor Inner Support	R,W,P,D,C,Y	2	2	—	2	2	2	2	2 2789 037
23-108-4	**CUSHION, Front**									
	For Complete Assembly, Order by Description, Vehicle Serial Number and Trim Code.									
23-108-5	COVER, Front Cushion									
	F3B	V,L	—	1	—	—	—	—	—	— A347 K3B
	F3G Sample of Material Reqd.	V,L	—	1	—	—	—	—	—	— A347 K3G
	F3L Sample of Material Reqd.	V,L	—	1	—	—	—	—	—	— A347 K3L
	F3X	V,L	—	1	—	—	—	—	—	— A347 K3X
	H1LL	V,L	—	1	—	—	—	—	—	— A364 K1L
	A1B Sample of Material Reqd.	V,L	—	1	—	1	—	—	—	— A335 K1B
	A1G Sample of Material Reqd.	V,L	—	1	—	1	—	—	—	— A335 K1G
	A1X Sample of Material Reqd.	V,L	—	1	—	1	—	—	—	— A335 K1X
	D2B, E2B Sample of Material Reqd.	V,L	—	1	—	1	—	—	—	— A308 K2B
	D2G, E2G	V,L	—	1	—	1	—	—	—	— A308 K2G
	D2L, E2L Sample of Material Reqd.	V,L	—	1	—	1	—	—	—	— A308 K2L
	D2X, E2X	V,L	—	1	—	1	—	—	—	— A308 K2X
	D2Y, E2Y Sample of Material Reqd.	V,L	—	1	—	1	—	—	—	— A308 K2Y

TYPE LETTERS Indicates: J - Challenger, B - Barracuda, V - Valiant, L - Dart, R - Satellite, W - Coronet, P - Plymouth, D - Dodge, C - Chrysler, Y - Imperial

NUMERALS INDICATE: 21 - 2 DR. SED., 23 - 2 DR. H.T., 29 - FAST BACK, 41 - 4 DR. SED., 43 - 4 DR. H.T., 45 - 6 PASS. STA. WGN., 46 - 9 PASS. STA. WGN.

AR Indicates use as required.
# Indicates parts not listed in any previous parts book
Numerals in parentheses ( ) refer to notes.
★ Indicates change or addition.

Printed in U.S.A.
November, 1974

Right and left part numbers are on same line, first number is right, second number is left.

CODE	PART NAME	MODEL CODES	SEE BOTTOM NOTE 21	23		29	41	43	45	46	PART NUMBER
23-108-5	COVER Cont'd.										
	C6L, F6L	V,L	—	—	—	2	—	—	—	—	A327 K6L
	C6X, F6X	V,L	—	—	—	2	—	—	—	—	A327 K6X
	C6XW, F6XW	V,L	—	—	—	2	—	—	—	—	A327 K6W
	J6VW	L	—	—	—	2	—	—	—	—	A360 K6V
	M2YW	V,L	—	—	—	1	—	—	—	—	A369 K2Y
	C4B, F4B	V,L	—	—	—	1	1	—	—	—	A316 K4B
	C4G, F4G Sample of Material Reqd.	V,L	—	—	—	1	1	—	—	—	A316 K4G
	C4L, F4L	V,L	—	—	—	1	1	—	—	—	A316 K4L
	H5LL	V,L	—	2	—	2	2	—	—	—	A352 K5L
	H5GG	V,L	—	2	—	—	2	—	—	—	A352 K5G
	C4X, F4X	V,L	—	—	—	1	1	—	—	—	A316 K4X
	A2B Sample of Material Reqd.	V,L	—	—	—	—	1	—	—	—	A300 K2B
	A2G Sample of Material Reqd.	V,L	—	—	—	—	1	—	—	—	A300 K2G
	A2X Sample of Material Reqd.	V,L	—	—	—	—	1	—	—	—	A300 K2X
	H1LL	V,L	—	—	—	—	1	—	—	—	A365 K1L
	L1B Sample of Material Reqd.	V,L	—	—	—	—	1	—	—	—	A329 K1B
	L1G Sample of Material Reqd.	V,L	—	—	—	—	1	—	—	—	A329 K1G
	L1L	V,L	—	—	—	—	1	—	—	—	A329 K1L
	L1Y	V,L	—	—	—	—	1	—	—	—	A329 K1Y
	All Codes	B,J	—	2	—	—	—	—	—	—	A450 K6B
		B,J	—	2	—	—	—	—	—	—	A450 K6G
	Sample of Material Reqd.	B,J	—	2	—	—	—	—	—	—	A450 K6X
	Sample of Material Reqd.	B,J	—	2	—	—	—	—	—	—	A450 K6W
	C2B	R	1	1	—	—	—	—	—	—	B302 K2B
	C2G	R	1	1	—	—	—	—	—	—	B302 K2G
	C2L	R	1	1	—	—	—	—	—	—	B302 K2L
	C2X	R	1	1	—	—	—	—	—	—	B302 K2X
	C2Y	R	1	1	—	—	—	—	—	—	B302 K2Y
	D6B, H6B	R,W	2	2	—	2	—	—	—	—	B318 K6B
	D6G, H6G	R,W	2	2	—	2	—	—	—	—	B318 K6G
	D6XW, H6XW	R,W	2	2	—	2	—	—	—	—	B318 K6W
	D6X, H6X	R,W	2	2	—	2	—	—	—	—	B318 K6X
	D6Y, H6Y	R,W	2	2	—	2	—	—	—	—	B318 K6Y
	E5EW, W5EW	R	2	2	—	—	—	—	—	—	B319 K5E
	F1B	R	1	1	—	—	—	—	—	—	B309 K1B
	F1G	R	1	1	—	—	—	—	—	—	B309 K1G
	F1EW	R	1	1	—	—	—	—	—	—	B309 K1W
	F1X	R	1	1	—	—	—	—	—	—	B309 K1X
	F1Y	R	1	1	—	—	—	—	—	—	B309 K1Y
	V1YW Sample of Material Reqd.	R	1	1	—	—	—	—	—	—	B326 K1W
	A2B	R	—	—	—	—	1	—	1	—	B300 K2B
	A2G	R	—	—	—	—	1	—	1	—	B300 K2G
	A2T	R	—	—	—	—	1	—	1	—	B300 K2T
	F1B	R	—	—	—	—	1	—	—	—	B310 K1B
	F1G	R	—	—	—	—	1	—	—	—	B310 K1G
	F1T	R	—	—	—	—	1	—	—	—	B310 K1T
	F1X	R	—	—	—	—	1	—	—	—	B310 K1X
	F1Y	R	—	—	—	—	1	—	—	—	B310 K1Y
	F2B	R	—	—	—	—	1	—	1	1	B311 K2B
	F2G	R	—	—	—	—	1	—	1	1	B311 K2G
	F2L	R	—	—	—	—	1	—	1	1	B311 K2L
	F2T	R	—	—	—	—	1	—	1	1	B311 K2T
	F2X	R	—	—	—	—	1	—	1	1	B311 K2X
	F2Y	R	—	—	—	—	1	—	1	1	B311 K2Y
	B2B	R,W	1	—	—	—	—	—	—	—	B301 K2B
	B2G	R,W	1	—	—	—	—	—	—	—	B301 K2G
	B2X	R,W	1	—	—	—	—	—	—	—	B301 K2X
	V3B Sample of Material Reqd.	R,W	—	1	—	1	—	—	—	—	B308 K3B

TYPE LETTERS Indicates: J - Challenger; B - Barracuda; V - Valiant; L - Dart; R - Satellite; W - Coronet; P - Plymouth; D - Dodge; C - Chrysler; Y - Imperial

NUMERALS INDICATE: 21 - 2 DR. SED.; 23 - 2 DR. H.T.; 29 - FAST BACK; 41 - 4 DR. SED.; 43 - 4 DR. H.T.; 45 - 6 PASS. STA. WGN.; 46 - 9 PASS. STA. WGN.

AR Indicates use as required.
# Indicates parts not listed in any previous parts book
Numerals in parentheses ( ) refer to notes.
★ Indicates change or addition.

Printed in U.S.A.
November, 1974

Right and left part numbers are on same line, first number is right, second number is left.

CODE	PART NAME	MODEL CODES	SEE BOTTOM NOTE 21	23	29	41	43	45	46	PART NUMBER
23-108-5	COVER Cont'd.									
	V3G Sample of Material Reqd.	R,W	—	1	—	1	—	—	—	B308 K3G
	V3X Sample of Material Reqd.	R,W	—	1	—	1	—	—	—	B308 K3X
	V3Y Sample of Material Reqd.	R,W	—	1	—	1	—	—	—	B308 K3Y
	M4B, R4B	R,W	—	—	—	1	1	—	1	1 B304 K4B
	M4G, R4G	R,W	—	—	—	1	1	—	1	1 B304 K4G
	M4L, R4L	R,W	—	—	—	1	1	—	1	1 B304 K4L
	M4T, R4T	R,W	—	—	—	—	1	—	1	1 B304 K4T
	M4X, R4X	W	—	—	—	1	1	—	—	— B304 K4X
	M4Y, R4Y	W	—	—	—	1	1	—	—	— B304 K4Y
	K2T, T2T	R,W	—	—	—	—	1	—	—	— B313 K2T
	K2X, T2X, G2X	R,W	—	—	—	—	1	—	—	— B313 K2X
	E5YW	W	—	2	—	2	—	—	—	— B319 K5Y
	N1YW	W	—	1	—	—	—	—	—	— B317 K1W
	S1B	W	—	1	—	—	—	—	—	— B307 K1B
	S1G	W	—	1	—	—	—	—	—	— B307 K1G
	S1X	W	—	1	—	—	—	—	—	— B307 K1X
	S1Y	W	—	1	—	—	—	—	—	— B307 K1Y
	S2B Sample of Material Reqd.	W	—	1	—	—	—	—	—	— B303 K2B
	S2G Sample of Material Reqd.	W	—	1	—	—	—	—	—	— B303 K2G
	S2L Sample of Material Reqd.	W	—	1	—	—	—	—	—	— B303 K2L
	S2X Sample of Material Reqd.	W	—	1	—	—	—	—	—	— B303 K2X
	S2Y	W	—	1	—	—	—	—	—	— B303 K2Y
	W1LL	W	1	1	—	—	—	—	—	— B321 K1L
	Q1B	W	—	—	—	—	1	—	—	— B305 K1B
	Q1G Sample of Material Reqd.	W	—	—	—	—	1	—	—	— B305 K1G
	Q1T	W	—	—	—	—	1	—	—	— B305 K1T
	Q1X	W	—	—	—	—	1	—	—	— B305 K1X
	Q1Y Sample of Material Reqd.	W	—	—	—	—	1	—	—	— B305 K1Y
	Q2B	W	—	—	—	—	—	—	1	1 B306 K2B
	Q2G	W	—	—	—	—	—	—	1	1 B306 K2G
	Q2L	W	—	—	—	—	—	—	1	1 B306 K2L
	Q2T	W	—	—	—	—	—	—	1	1 B306 K2T
	P2B	W	—	—	—	—	1	—	1	— B312 K2B
	P2G	W	—	—	—	—	1	—	1	— B312 K2G
	P2T	W	—	—	—	—	1	—	1	— B312 K2T
	B1G	P	—	1	—	—	—	—	—	— C402 K1G
	B1X	P	—	1	—	—	—	—	—	— C402 K1X
	B1Y	P	—	1	—	—	—	—	—	— C402 K1Y
	B2G	P	—	1	—	—	—	—	—	— C409 K2G
	B2X	P	—	1	—	—	—	—	—	— C409 K2X
	B2Y	P	—	1	—	—	—	—	—	— C409 K2Y
	C1B	P	—	1	—	—	—	—	—	— C422 K1B
	C1G	P	—	1	—	—	—	—	—	— C422 K1G
	C1L	P	—	1	—	—	—	—	—	— C422 K1L
	C1X	P	—	1	—	—	—	—	—	— C422 K1X
	C1Y	P	—	1	—	—	—	—	—	— C422 K1Y
	C2G	P	—	1	—	—	—	—	—	— C429 K2G
	C2L	P	—	1	—	—	—	—	—	— C429 K2L
	C2Y	P	—	1	—	—	—	—	—	— C429 K2Y
	G7B	P	—	1	—	—	—	—	—	— C462-3 K7B
	G7G	P	—	1	—	—	—	—	—	— C462-3 K7G
	G7L	P	—	1	—	—	—	—	—	— C462-3 K7L
	G7X	P	—	1	—	—	—	—	—	— C462-3 K7X
	G7Y	P	—	1	—	—	—	—	—	— C462-3 K7Y
	D4B, E4B	P	—	1	—	—	1	1	1	1 C449 K4B
	D4G, E4G	P	—	1	—	—	1	1	1	1 C449 K4G
	D4L, E4L	P	—	1	—	—	1	1	1	1 C449 K4L
	D4X, E4X	P	—	1	—	—	1	1	1	1 C449 K4X

TYPE LETTERS Indicates J - Challenger, B - Barracuda, V - Valiant, L - Dart, R - Satellite, W - Coronet, P - Plymouth, D - Dodge, C - Chrysler, Y - Imperial

NUMERALS INDICATE: 21 - 2 DR. SED., 23 - 2 DR. H.T., 29 - FAST BACK, 41 - 4 DR. SED., 43 - 4 DR. H.T., 45 - 6 PASS. STA. WGN., 46 - 9 PASS. STA. WGN.

AR Indicates use as required.
# Indicates parts not listed in any previous parts book
Numerals in parentheses ( ) refer to notes.
★ Indicates change or addition.

Printed in U.S.A.
November, 1974

Right and left part numbers are on same line, first number is right, second number is left.

CODE	PART NAME	MODEL CODES	SEE BOTTOM NOTE 21	23	29	41	43	45	46	PART NUMBER
23-108-5	COVER Cont'd.									
	D4T, E4T	P	—	—	—	1	1	1	1	C449 K4T
	D4Y, E4Y	P	—	1	—	1	1	1	1	C449 K4Y
	J3LL	P	—	1	—	1	1	—	—	C511 K3L
	B1G	P	—	—	—	1	—	—	—	C405 K1G
	B1X	P	—	—	—	1	—	—	—	C405 K1X
	B1Y	P	—	—	—	1	—	—	—	C405 K1Y
	C1B	P	—	—	—	1	1	—	—	C425 K1B
	C1G	P	—	—	—	1	1	—	—	C425 K1G
	C1L	P	—	—	—	1	1	—	—	C425 K1L
	C1X	P	—	—	—	1	1	—	—	C425 K1X
	C1Y	P	—	—	—	1	1	—	—	C425 K1Y
	E3B	P	—	1	—	—	1	—	—	C444 K3B
	E3G	P	—	1	—	—	1	—	—	C444 K3G
	E3L	P	—	1	—	—	1	—	—	C444 K3L
	E3X	P	—	1	—	—	1	—	—	C444 K3X
	E3Y	P	—	1	—	—	1	—	—	C444 K3Y
	H8L	P	—	—	—	1	1	—	—	C480-1 K8L
	C2B	P	—	—	—	1	1	1	1	C434 K2B
	C2G	P	—	—	—	1	1	1	1	C434 K2G
	C2L	P	—	—	—	1	1	1	1	C434 K2L
	C2T	P	—	—	—	1	1	1	1	C434 K2T
	C2X	P	—	—	—	1	1	1	1	C434 K2X
	C2Y	P	—	—	—	1	1	1	1	C434 K2Y
	B2G	P	—	—	—	1	—	1	—	C414 K2G
	B2T	P	—	—	—	—	—	1	—	C414 K2T
	B2X	P	—	—	—	1	—	1	—	C414 K2X
	B2Y	P	—	—	—	1	—	—	—	C414 K2Y
	G7B	P	—	—	—	—	1	—	—	C460-1 K7B
	G7G	P	—	—	—	—	1	—	—	C460-1 K7G
	G7L	P	—	—	—	—	1	—	—	C460-1 K7L
	G7X	P	—	—	—	—	1	—	—	C460-1 K7X
	G7Y	P	—	—	—	—	1	—	—	C460-1 K7Y
	G8L	P	—	—	—	—	—	1	1	C472-3 K8L
	A1G	P,D	—	—	—	1	—	—	—	C491 K1G
	A1X	P,D	—	—	—	1	—	—	—	C491 K1X
	A1Y	P,D	—	—	—	1	—	—	—	C491 K1Y
	A2G	P,D	—	—	—	1	—	1	—	C502 K2G
	A2T	P,D	—	—	—	—	—	1	—	C502 K2T
	A2X	P,D	—	—	—	1	—	1	—	C502 K2X
	A2Y	P,D	—	—	—	1	—	—	—	C502 K2Y
	K1Y	P,D	—	—	—	1	—	—	—	C638 K1Y
	K2Y	P,D	—	—	—	1	—	—	—	C634 K2X
	K2Y	P,D	—	—	—	1	—	—	—	C634 K2Y
	A1G	D	—	1	—	—	—	—	—	C488 K1G
	A1X	D	—	1	—	—	—	—	—	C488 K1X
	A1Y	D	—	1	—	—	—	—	—	C488 K1Y
	A2G	D	—	1	—	—	—	—	—	C497 K2G
	A2X	D	—	1	—	—	—	—	—	C497 K2X
	A2Y	D	—	1	—	—	—	—	—	C497 K2Y
	M1B	D	—	1	—	—	—	—	—	C624 K1B
	M1G	D	—	1	—	—	—	—	—	C624 K1G
	M1L	D	—	1	—	—	—	—	—	C624 K1L
	M1X	D	—	1	—	—	—	—	—	C624 K1X
	M1Y	D	—	1	—	—	—	—	—	C624 K1Y
	P1G	D	—	1	—	—	—	—	—	C601 K1G
	P1L	D	—	1	—	—	—	—	—	C601 K1L
	P1X	D	—	1	—	—	—	—	—	C601 K1X

TYPE LETTERS Indicates J - Challenger, B - Barracuda, V - Valiant, L - Dart, R - Satellite, W - Coronet, P - Plymouth, D - Dodge, C - Chrysler, Y - Imperial

NUMERALS INDICATE: 21 - 2 DR. SED., 23 - 2 DR. H.T., 29 - FAST BACK, 41 - 4 DR. SED., 43 - 4 DR. H.T., 45 - 6 PASS. STA. WGN., 46 - 9 PASS. STA. WGN.

AR Indicates use as required.
# Indicates parts not listed in any previous parts book
Numerals in parentheses ( ) refer to notes.
★ Indicates change or addition.

Printed in U.S.A.
November, 1974

Right and left part numbers are on same line, first number is right, second number is left.

CODE	PART NAME	MODEL CODES	SEE BOTTOM NOTE 21	23	29	41	43	45	46	PART NUMBER
23-108-5	COVER Cont'd.									
	P1Y	D	—	1	—	—	—	—	—	C601 K1Y
	R2G	D	—	1	—	—	—	—	—	C612 K2G
	R2L	D	—	1	—	—	—	—	—	C612 K2L
	R2X	D	—	1	—	—	—	—	—	C612 K2X
	R2Y	D	—	1	—	—	—	—	—	C612 K2Y
	V2G Sample of Material Reqd.	D	—	1	—	—	—	—	—	C650 K2G
	V2L	D	—	1	—	—	—	—	—	C650 K2L
	V2Y Sample of Material Reqd.	D	—	1	—	—	—	—	—	C650 K2Y
	W7B Sample of Material Reqd.	D	—	1	—	—	—	—	—	C668-9 K7B
	W7G Sample of Material Reqd.	D	—	1	—	—	—	—	—	C668-9 K7G
	W7L Sample of Material Reqd.	D	—	1	—	—	—	—	—	C668-9 K7L
	W7X Sample of Material Reqd.	D	—	1	—	—	—	—	—	C668-9 K7X
	W7Y Sample of Material Reqd.	D	—	1	—	—	—	—	—	C668-9 K7Y
	P1G	D	—	—	—	1	—	—	—	C600 K1G
	P1L	D	—	—	—	1	—	—	—	C600 K1L
	P1X	D	—	—	—	1	—	—	—	C600 K1X
	P1Y	D	—	—	—	1	—	—	—	C600 K1Y
	M1B	D	—	—	—	1	1	—	—	C625 K1B
	M1G	D	—	—	—	1	1	—	—	C625 K1G
	M1L	D	—	—	—	1	1	—	—	C625 K1L
	M1X	D	—	—	—	1	1	—	—	C625 K1X
	M1Y	D	—	—	—	1	1	—	—	C625 K1Y
	R2G	D	—	—	—	1	—	1	—	C613 K2G
	R2L	D	—	—	—	1	—	1	—	C613 K2L
	R2T	D	—	—	—	—	—	1	—	C613 K2T
	R2X	D	—	—	—	1	—	1	—	C613 K2X
	R2Y	D	—	—	—	1	—	1	—	C613 K2Y
	N3XW	D	—	1	—	—	1	—	—	C682 K3N
	F4B	D	—	1	—	1	1	1	1	C633 K4B
	F4G	D	—	1	—	1	1	1	1	C633 K4G
	F4L	D	—	1	—	1	1	1	1	C633 K4L
	F4T	D	—	1	—	1	1	1	1	C633 K4T
	F4X	D	—	1	—	1	1	1	1	C633 K4X
	F4Y	D	—	1	—	1	1	1	1	C633 K4Y
	V2B	D	—	—	—	1	1	1	1	C651 K2B
	V2G Sample of Material Reqd.	D	—	—	—	1	1	1	1	C651 K2G
	V2L	D	—	—	—	1	1	1	1	C651 K2L
	V2T	D	—	—	—	1	1	1	1	C651 K2T
	V2X	D	—	—	—	1	1	1	1	C651 K2X
	V2Y Sample of Material Reqd.	D	—	—	—	1	1	1	1	C651 K2Y
	W7B Sample of Material Reqd.	D	—	—	—	1	1	—	—	C670-1 K7B
	W7G Sample of Material Reqd.	D	—	—	—	1	1	—	—	C670-1 K7G
	W7L Sample of Material Reqd.	D	—	—	—	1	1	—	—	C670-1 K7L
	W7X Sample of Material Reqd.	D	—	—	—	1	1	—	—	C670-1 K7X
	W7Y Sample of Material Reqd.	D	—	—	—	1	1	—	—	C670-1 K7Y
	S8B	D	—	—	—	—	—	1	1	C642-3 K8B
	S8G	D	—	—	—	—	—	1	1	C642-3 K8G
	S8L	D	—	—	—	—	—	1	1	C642-3 K8L
	S8T	D	—	—	—	—	—	1	1	C642-3 K8T
	S8X	D	—	—	—	—	—	1	1	C642-3 K8X
	S8Y	D	—	—	—	—	—	1	1	C642-3 K8Y
	A1B	C	—	1	—	—	—	—	—	G400 K1B
	A1G	C	—	1	—	—	—	—	—	G400 K1G
	A1L	C	—	1	—	—	—	—	—	G400 K1L
	A1X	C	—	1	—	—	—	—	—	G400 K1X
	A1Y	C	—	1	—	—	—	—	—	G400 K1Y
	B2B	C	—	1	—	—	—	—	—	G409 K2B
	B2G	C	—	1	—	—	—	—	—	G409 K2G

TYPE LETTERS Indicates: J - Challenger, B - Barracuda, V - Valiant, L - Dart, R - Satellite, W - Coronet, P - Plymouth, D - Dodge, C - Chrysler, Y - Imperial

NUMERALS INDICATE: 21 - 2 DR. SED., 23 - 2 DR. H.T., 29 - FAST BACK, 41 - 4 DR. SED., 43 - 4 DR. H.T., 45 - 6 PASS. STA. WGN., 46 - 9 PASS. STA. WGN.

AR Indicates use as required.
# Indicates parts not listed in any previous parts book
Numerals in parentheses ( ) refer to notes.
★ Indicates change or addition.

Printed in U.S.A.
November, 1974

Right and left part numbers are on same line, first number is right, second number is left.

CODE	PART NAME	MODEL CODES	SEE BOTTOM NOTE 21	23	29	41	43	45	46	PART NUMBER
23-108-5	COVER Cont'd.									
	B2L Sample of Material Reqd.	C	—	1	—	—	—	—	—	G409 K2L
	B2XW Sample of Material Reqd.	C	—	1	—	—	—	—	—	G409 K2W
	B2X	C	—	1	—	—	—	—	—	G409 K2X
	B2Y	C	—	1	—	—	—	—	—	G409 K2Y
	D7B	C	—	1	—	—	—	—	—	G450-1 K7B
	D7G	C	—	1	—	—	—	—	—	G450-1 K7G
	D7L	C	—	1	—	—	—	—	—	G450-1 K7L
	D7X	C	—	1	—	—	—	—	—	G450-1 K7X
	D7Y	C	—	1	—	—	—	—	—	G450-1 K7Y
	H7B Sample of Material Reqd.	C	—	1	—	—	—	—	—	G418-9 K7B
	H7G	C	—	1	—	—	—	—	—	G418-9 K7G
	H7L	C	—	1	—	—	—	—	—	G418-9 K7L
	H7X	C	—	1	—	—	—	—	—	G418-9 K7X
	H7Y	C	—	1	—	—	—	—	—	G418-9 K7Y
	D8B	C	—	1	—	—	—	—	—	G466-7 K8B
	D8G	C	—	1	—	—	—	—	—	G466-7 K8G
	D8L	C	—	1	—	—	—	—	—	G466-7 K8L
	D8XW	C	—	1	—	—	—	—	—	G466-7 K8W
	D8X	C	—	1	—	—	—	—	—	G466-7 K8X
	D8Y	C	—	1	—	—	—	—	—	G466-7 K8Y
	H8B	C	—	1	—	—	—	—	—	G430-1 K8B
	H8G	C	—	1	—	—	—	—	—	G430-1 K8G
	H8L	C	—	1	—	—	—	—	—	G430-1 K8L
	H8XW	C	—	1	—	—	—	—	—	G430-1 K8W
	H8YW	C	—	1	—	—	—	—	—	G430-1 K8N
	H8X	C	—	1	—	—	—	—	—	G430-1 K8X
	H8Y	C	—	1	—	—	—	—	—	G430-1 K8Y
	C1KW	C	—	1	—	—	—	—	—	G491 K1K
	A1B	C	—	—	—	1	1	—	—	G401 K1B
	A1G	C	—	—	—	1	1	—	—	G401 K1G
	A1L	C	—	—	—	1	1	—	—	G401 K1L
	A1X	C	—	—	—	1	1	—	—	G401 K1X
	A1Y	C	—	—	—	1	1	—	—	G401 K1Y
	B2B	C	—	—	—	1	1	—	—	G410 K2B
	B2G	C	—	—	—	1	1	—	—	G410 K2G
	B2L Sample of Material Reqd.	C	—	—	—	1	1	—	—	G410 K2L
	B2XW Sample of Material Reqd.	C	—	—	—	1	1	—	—	G410 K2W
	B2X	C	—	—	—	1	1	—	—	G410 K2X
	B2Y	C	—	—	—	1	1	—	—	G410 K2Y
	C1KW		—	—	—	1	1	—	—	G492 K1K
	E9B	C	—	—	—	1	1	—	—	G442 K9B
	E9G	C	—	—	—	1	1	—	—	G442 K9G
	E9L	C	—	—	—	1	1	—	—	G442 K9L
	E9X	C	—	—	—	1	1	—	—	G442 K9X
	E9Y	C	—	—	—	1	1	—	—	G442 K9Y
	EHB	C	—	—	—	1	1	—	—	G446 KHB
	EHG	C	—	—	—	1	1	—	—	G446 KHG
	EHL	C	—	—	—	1	1	—	—	G446 KHL
	EHXW	C	—	—	—	1	1	—	—	G446 KHW
	EHX	C	—	—	—	1	1	—	—	G446 KHX
	EHY	C	—	—	—	1	1	—	—	G446 KHY
	H7B Sample of Material Reqd.	C	—	—	—	1	1	—	—	G420-1 K7B
	H7G	C	—	—	—	1	1	—	—	G420-1 K7G
	H7L	C	—	—	—	1	1	—	—	G420-1 K7L
	H7X	C	—	—	—	1	1	—	—	G420-1 K7X
	H7Y	C	—	—	—	1	1	—	—	G420-1 K7Y
	H8B	C	—	—	—	1	1	—	—	G432-3 K8B
	H8G	C	—	—	—	1	1	—	—	G432-3 K8G

TYPE LETTERS Indicates J - Challenger, B - Barracuda, V - Valiant, L - Dart, R - Satellite, W - Coronet, P - Plymouth, D - Dodge, C - Chrysler, Y - Imperial

NUMERALS INDICATE: 21 - 2 DR. SED., 23 - 2 DR. H.T., 29 - FAST BACK, 41 - 4 DR. SED., 43 - 4 DR. H.T., 45 - 6 PASS. STA. WGN., 46 - 9 PASS. STA. WGN.

AR Indicates use as required.
# Indicates parts not listed in any previous parts book
Numerals in parentheses ( ) refer to notes.
★ Indicates change or addition.

Printed in U.S.A.
November, 1974

Right and left part numbers are on same line, first number is right, second number is left.

CODE	PART NAME	MODEL CODES	SEE BOTTOM NOTE 21	23	29	41	43	45	46	PART NUMBER
23-108-5	COVER Cont'd.									
	H8L	C	—	—	—	1	1	—	—	G432-3 K8L
	H8XW	C	—	—	—	1	1	—	—	G432-3 K8W
	H8X	C	—	—	—	1	1	—	—	G432-3 K8X
	H8Y	C	—	—	—	1	1	—	—	G432-3 K8Y
	D7B	C	—	—	—	1	1	1	1	G452-3 K7B
	D7G	C	—	—	—	1	1	1	1	G452-3 K7G
	D7L	C	—	—	—	1	1	1	1	G452-3 K7L
	D7X	C	—	—	—	1	1	1	1	G452-3 K7X
	D7Y	C	—	—	—	1	1	1	1	G452-3 K7Y
	D8B	C	—	—	—	1	1	1	1	G468-9 K8B
	D8G	C	—	—	—	1	1	1	1	G468-9 K8G
	D8L	C	—	—	—	1	1	1	1	G468-9 K8L
	D8T	C	—	—	—	1	1	1	1	G468-9 K8T
	D8XW	C	—	—	—	1	1	1	1	G468-9 K8W
	D8X	C	—	—	—	1	1	1	1	G468-9 K8X
	D8Y	C	—	—	—	1	1	1	1	G468-9 K8Y
	PDB (Up to Build Date 1-15-74)	Y	—	1	—	—	—	—	—	G600-1 KDB
	PDB (After Build Date 1-15-74)	Y	—	1	—	—	—	—	—	G600-1 KDD
	PDG (Up to Build Date 1-15-74)	Y	—	1	—	—	—	—	—	G600-1 KDG
	PDG (After Build Date 1-15-74)	Y	—	1	—	—	—	—	—	G600-1 KDF
	PDL (Up to Build Date 1-15-74)	Y	—	1	—	—	—	—	—	G600-1 KDL
	PDL (After Build Date 1-15-74)	Y	—	1	—	—	—	—	—	G600-1 KDP
	PDT	Y	—	1	—	—	—	—	—	G600-1 KDT
	PDX	Y	—	1	—	—	—	—	—	G600-1 KDX
	PDY	Y	—	1	—	—	—	—	—	G600-1 KDY
	PLB	Y	—	1	—	—	—	—	—	G602-3 KLB
	PLG	Y	—	1	—	—	—	—	—	G602-3 KLG
	PLL	Y	—	1	—	—	—	—	—	G602-3 KLL
	PLT	Y	—	1	—	—	—	—	—	G602-3 KLT
	PLXW	Y	—	1	—	—	—	—	—	G602-3 KLW
	PLX	Y	—	1	—	—	—	—	—	G602-3 KLX
	PLY	Y	—	1	—	—	—	—	—	G602-3 KLY
	PDB (Up to Build Date 1-15-74)	Y	—	—	—	—	1	—	—	G604-5 KDB
	PDB (After Build Date 1-15-74)	Y	—	—	—	—	1	—	—	G604-5 KDD
	PDG (Up to Build Date 1-15-74)	Y	—	—	—	—	1	—	—	G604-5 KDG
	PDG (After Build Date 1-15-74)	Y	—	—	—	—	1	—	—	G604-5 KDF
	PDL (Up to Build Date 1-15-74)	Y	—	—	—	—	1	—	—	G604-5 KDL
	PDL (After Build Date 1-15-74)	Y	—	—	—	—	1	—	—	G604-5 KDP
	PDT	Y	—	—	—	—	1	—	—	G604-5 KDT
	PDX	Y	—	—	—	—	1	—	—	G604-5 KDX
	PDY	Y	—	—	—	—	1	—	—	G604-5 KDY
	PLB	Y	—	—	—	—	1	—	—	G606-7 KLB
	PLG	Y	—	—	—	—	1	—	—	G606-7 KLG
	PLL	Y	—	—	—	—	1	—	—	G606-7 KLL
	PLT	Y	—	—	—	—	1	—	—	G606-7 KLT
	PLXW	Y	—	—	—	—	1	—	—	G606-7 KLW
	PLX	Y	—	—	—	—	1	—	—	G606-7 KLX
	PLY	Y	—	—	—	—	1	—	—	G606-7 KLY
	Front Center Cushion									
	H5LL	V,L	—	1	—	1	—	—	—	A358 KL3
	H5GG	V,L	—	1	—	1	—	—	—	A358 KG6
	All Codes	R,W	1	1	—	1	—	—	—	B320 KB6
		R,W	1	1	—	1	—	—	—	B320 KG6
		R,W	1	1	—	1	—	—	—	B320 KW1
		R,W	1	1	—	1	—	—	—	B320 KX9
		R,W	1	1	—	1	—	—	—	B320 KY3
	TAXI ONLY									
	Black Bench Seat U.S.	V,L	—	—	—	1	—	—	—	3740 772

TYPE LETTERS Indicates J - Challenger, B - Barracuda, V - Valiant, L - Dart, R - Satellite, W - Coronet, P - Plymouth, D - Dodge, C - Chrysler, Y - Imperial

NUMERALS INDICATE: 21 - 2 DR. SED., 23 - 2 DR. H.T., 29 - FAST BACK, 41 - 4 DR. SED., 43 - 4 DR. H.T., 45 - 6 PASS. STA. WGN., 46 - 9 PASS. STA. WGN.

AR Indicates use as required.
# Indicates parts not listed in any previous parts book
Numerals in parentheses ( ) refer to notes.
★ Indicates change or addition.

Printed in U.S.A.
November, 1974

Right and left part numbers are on same line, first number is right, second number is left.

CODE	PART NAME	MODEL CODES	SEE BOTTOM NOTE 21	23	29	41	43	45	46	PART NUMBER
23-108-5	COVER Cont'd.									
	POLICE CAR ONLY									
	Black Bucket Seat U.S. & CANADA	R,W	—	—	—	2	—	—	—	3740 732
	Chestnut Bucket Seat U.S. & CANADA	R!W,	—	—	—	2	—	—	—	3740 730
	Black 50/50 Split U.S. & CANADA Rt.	P,D	—	—	—	1	—	—	—	3740 864
	Black 50/50 Split U.S. & CANADA Lt.	P!D	—	—	—	1	—	—	—	3740 863
	Gold 50/50 Split U.S. & CANADA Rt.	P,D	—	—	—	1	—	—	—	3740 860
	Gold 50/50 Split U.S. & CANADA Lt.	P,D	—	—	—	1	—	—	—	3740 859
23-108-12	BACK, Front Seat									
	For Complete Assembly, Order by Description, Vehicle Serial Number and Trim Code.									
23-108-15	SPRING and COVER, Front Seat Back									
	For Complete Assembly, Order by Description, Vehicle Serial Number and Trim Code.									
23-108-16	COVER, Front Back									
	F3B	V,L	—	1	—	—	—	—	—	A348-9 K3B
	F3G Sample of Material Reqd.	V,L	—	1	—	—	—	—	—	A348-9 K3G
	F3L Sample of Material Reqd.	V,L	—	1	—	—	—	—	—	A348-9 K3L
	F3X	V,L	—	1	—	—	—	—	—	A348-9 K3X
	H1LL	V,L	—	1	—	—	—	—	—	A366-7 K1L
	A1B Sample of Material Reqd.	V,L	—	1	—	1	—	—	—	A336-7 K1B
	A1G Sample of Material Reqd.	V,L	—	1	—	1	—	—	—	A336-7 K1G
	A1X Sample of Material Reqd.	V,L	—	1	—	1	—	—	—	A336-7 K1X
	D2B, E2B Sample of Material Reqd.	V,L	—	1	—	1	—	—	—	A306-7 K2B
	D2G, E2G	V,L	—	1	—	1	—	—	—	A306-7 K2G
	D2L, E2L Sample of Material Reqd.	V,L	—	1	—	1	—	—	—	A306-7 K2L
	D2X, E2X	V,L	—	1	—	1	—	—	—	A306-7 K2X
	D2Y, E2Y	V,L	—	1	—	1	—	—	—	A306-7 K2Y
	C4B, F4B	V,L	—	—	—	1	1	—	—	A314-5 K4B
	C4G, F4G Sample of Material Reqd.	V,L	—	—	—	1	1	—	—	A314-5 K4G
	C4L, F4L	V,L	—	—	—	1	1	—	—	A314-5 K4L
	C4X, F4X	V,L	—	—	—	1	1	—	—	A314-5 K4X
	C6L, F6L	V,L	—	—	—	2	—	—	—	A328 K6L
	C6X, F6X	V,L	—	—	—	2	—	—	—	A328 K6X
	C6XW, F6XW	V,L	—	—	—	2	—	—	—	A328 K6W
	H5LL	V,L	—	2	—	—	2	—	—	A353 K5L
	H5GG	V,L	—	2	—	—	2	—	—	A353 K5G
	J6VW	L	—	—	—	2	—	—	—	A361 K6V
	M2YW	V,L	—	—	—	1	—	—	—	A370-1 K2Y
	A2B Sample of Material Reqd.	V,L	—	—	—	—	1	—	—	A301 K2B
	A2G Sample of Material Reqd.	V,L	—	—	—	—	1	—	—	A301 K2G
	A2X Sample of Material Reqd.	V,L	—	—	—	—	1	—	—	A301 K2X
	H1LL	V,L	—	—	—	—	1	—	—	A368 K1L
	L1B Sample of Material Reqd.	V,L	—	—	—	—	1	—	—	A330 K1B
	L1G Sample of Material Reqd.	V,L	—	—	—	—	1	—	—	A330 K1G
	L1L	V,L	—	—	—	—	1	—	—	A330 K1L
	L1Y	V,L	—	—	—	—	1	—	—	A330 K1Y
	T2X	L	—	—	—	—	1	—	—	A344 K2X
	All Codes	B,J	—	2	—	—	—	—	—	A451 K6B
		B,J	—	2	—	—	—	—	—	A451 K6G
	Sample of Material Reqd.	B,J	—	2	—	—	—	—	—	A451 K6X
	Sample of Material Reqd.	B,J	—	2	—	—	—	—	—	A451 K6W
	C2B	R	1	1	—	—	—	—	—	B360-1 K2B
	C2G	R	1	1	—	—	—	—	—	B360-1 K2G
	C2L	R	1	1	—	—	—	—	—	B360-1 K2L
	C2X	R	1	1	—	—	—	—	—	B360-1 K2X
	C2Y	R	1	1	—	—	—	—	—	B360-1 K2Y
	F1B	R	1	1	—	—	—	—	—	B348-9 K1B
	F1G	R	1	1	—	—	—	—	—	B348-9 K1G
	F1EW	R	1	1	—	—	—	—	—	B348-9 K1W
	F1X	R	1	1	—	—	—	—	—	B348-9 K1X

TYPE LETTERS Indicates: J - Challenger, B - Barracuda, V - Valiant, L - Dart, R - Satellite, W - Coronet, P - Plymouth, D - Dodge, C - Chrysler, Y - Imperial

NUMERALS INDICATE: 21 - 2 DR. SED., 23 - 2 DR. H.T., 29 - FAST BACK, 41 - 4 DR. SED., 43 - 4 DR. H.T., 45 - 6 PASS. STA. WGN., 46 - 9 PASS. STA. WGN.

AR Indicates use as required.
# Indicates parts not listed in any previous parts book
Numerals in parentheses ( ) refer to notes.
★ Indicates change or addition.

Printed in U.S.A.
November, 1974

Right and left part numbers are on same line, first number is right, second number is left.

CODE	PART NAME	MODEL CODES	SEE BOTTOM NOTE 21	23	29	41	43	45	46	PART NUMBER
23-108-16	COVER Cont'd.									
	F1Y	R	1	1	—	—	—	—	—	B348-9 K1Y
	E5EW, W5EW	R	2	2	—	—	—	—	—	B371 K5E
	V1YW Sample of Material Reqd.	R	1	1	—	—	—	—	—	B328-9 K1W
	F1B	R	—	—	—	1	—	—	—	B353 K1B
	F1G	R	—	—	—	1	—	—	—	B353 K1G
	F1T	R	—	—	—	1	—	—	—	B353 K1T
	F1X	R	—	—	—	1	—	—	—	B353 K1X
	F1Y	R	—	—	—	1	—	—	—	B353 K1Y
	A2B	R	—	—	—	1	—	1	—	B357 K2B
	A2G	R	—	—	—	1	—	1	—	B357 K2G
	A2T	R	—	—	—	1	—	1	—	B357 K2T
	F2B	R	—	—	—	1	—	1	1	B356 K2B
	F2G	R	—	—	—	1	—	1	1	B356 K2G
	F2L	R	—	—	—	1	—	1	1	B356 K2L
	F2T	R	—	—	—	1	—	1	1	B356 K2T
	F2X	R	—	—	—	1	—	1	1	B356 K2X
	F2Y	R	—	—	—	1	—	1	1	B356 K2Y
	B2B	R,W	1	—	—	—	—	—	—	B354-5 K2B
	B2G	R,W	1	—	—	—	—	—	—	B354-5 K2G
	B2X	R,W	1	—	—	—	—	—	—	B354-5 K2X
	D6B, H6B	R,W	2	2	—	2	—	—	—	B370 K6B
	D6G, H6G	R,W	2	2	—	2	—	—	—	B370 K6G
	D6XW, H6XW	R,W	2	2	—	2	—	—	—	B370 K6W
	D6X, H6X	R,W	2	2	—	2	—	—	—	B370 K6X
	D6Y, H6Y	R,W	2	2	—	2	—	—	—	B370 K6Y
	N1YW	W	—	1	—	—	—	—	—	B368-9 K1W
	E5YW	W	—	2	—	2	—	—	—	B371 K5Y
	S1B	W	—	1	—	—	—	—	—	B350-1 K1B
	S1G	W	—	1	—	—	—	—	—	B350-1 K1G
	S1X	W	—	1	—	—	—	—	—	B350-1 K1X
	S1Y	W	—	1	—	—	—	—	—	B350-1 K1Y
	S2B Sample of Material Reqd.	W	—	1	—	—	—	—	—	B362-3 K2B
	S2G Sample of Material Reqd.	W	—	1	—	—	—	—	—	B362-3 K2G
	S2L Sample of Material Reqd.	W	—	1	—	—	—	—	—	B362-3 K2L
	S2X Sample of Material Reqd.	W	—	1	—	—	—	—	—	B362-3 K2X
	S2Y	W	—	1	—	—	—	—	—	B362-3 K2Y
	W1LL	W	1	1	—	—	—	—	—	B322-3 K1L
	K2T, T2T	R,W	—	—	—	1	—	—	—	B359 K2T
	K2X, T2X, G2X	R,W	—	—	—	1	—	—	—	B359 K2X
	M4B, R4B	R,W	—	—	—	2	2	—	2	2 B343 K4B
	M4G, R4G	R,W	—	—	—	2	2	—	2	2 B343 K4G
	M4L, R4L	R,W	—	—	—	2	2	—	2	2 B343 K4L
	M4T, R4T	R,W	—	—	—	—	2	—	2	2 B343 K4T
	M4X, R4X	W	—	—	—	2	2	—	—	— B343 K4X
	M4Y, R4Y	W	—	—	—	2	2	—	—	— B343 K4Y
	V3B Sample of Material Reqd.	R,W	—	2	—	2	—	—	—	B345 K3B
	V3G Sample of Material Reqd.	R,W	—	2	—	2	—	—	—	B345 K3G
	V3X Sample of Material Reqd.	R,W	—	2	—	2	—	—	—	B345 K3X
	V3Y Sample of Material Reqd.	R,W	—	2	—	2	—	—	—	B345 K3Y
	Q1B	W	—	—	—	—	1	—	—	— B358 K1B
	Q1G Sample of Material Reqd.	W	—	—	—	—	1	—	—	— B358 K1G
	Q1T	W	—	—	—	—	1	—	—	— B358 K1T
	Q1X	W	—	—	—	—	1	—	—	— B358 K1X
	Q1Y Sample of Material Reqd.	W	—	—	—	—	1	—	—	— B358 K1Y
	P2B	W	—	—	—	—	1	—	1	— B347 K2B
	P2G	W	—	—	—	—	1	—	1	— B347 K2G
	P2T	W	—	—	—	—	1	—	1	— B347 K2T
	Q2B	W	—	—	—	—	—	—	1	1 B364 K2B

TYPE LETTERS Indicates: J - Challenger, B - Barracuda, V - Valiant, L - Dart, R - Satellite, W - Coronet, P - Plymouth, D - Dodge, C - Chrysler, Y - Imperial

NUMERALS INDICATE: 21 - 2 DR. SED., 23 - 2 DR. H.T., 29 - FAST BACK, 41 - 4 DR. SED., 43 - 4 DR. H.T., 45 - 6 PASS. STA. WGN., 46 - 9 PASS. STA. WGN.

AR Indicates use as required.
# Indicates parts not listed in any previous parts book
Numerals in parentheses ( ) refer to notes.
★ Indicates change or addition.

Printed in U.S.A.
November, 1974

Right and left part numbers are on same line, first number is right, second number is left.

CODE	PART NAME	MODEL CODES	SEE BOTTOM NOTE 21	23	29	41	43	45	46	PART NUMBER
23-108-16	COVER Cont'd.									
	Q2G	W	—	—	—	—	—	1	1	B364 K2G
	Q2L	W	—	—	—	—	—	1	1	B364 K2L
	Q2T	W	—	—	—	—	—	1	1	B364 K2T
	B1G	P	—	1	—	—	—	—	—	C400-1 K1G
	B1X	P	—	1	—	—	—	—	—	C400-1 K1X
	B1Y	P	—	1	—	—	—	—	—	C400-1 K1Y
	B2G	P	—	1	—	—	—	—	—	C410-1 K2G
	B2X	P	—	1	—	—	—	—	—	C410-1 K2X
	B2Y	P	—	1	—	—	—	—	—	C410-1 K2Y
	C1B	P	—	1	—	—	—	—	—	C420-1 K1B
	C1G	P	—	1	—	—	—	—	—	C420-1 K1G
	C1L	P	—	1	—	—	—	—	—	C420-1 K1L
	C1X	P	—	1	—	—	—	—	—	C420-1 K1X
	C1Y	P	—	1	—	—	—	—	—	C420-1 K1Y
	C2G	P	—	1	—	—	—	—	—	C430-1 K2G
	C2L	P	—	1	—	—	—	—	—	C430-1 K2L
	C2Y	P	—	1	—	—	—	—	—	C430-1 K2Y
	G7B	P	—	1	—	—	—	—	—	C464-5 K7B
	G7G	P	—	1	—	—	—	—	—	C464-5 K7G
	G7L	P	—	1	—	—	—	—	—	C464-5 K7L
	G7X	P	—	1	—	—	—	—	—	C464-5 K7X
	G7Y	P	—	1	—	—	—	—	—	C464-5 K7Y
	E3B	P	—	2	—	—	2	—	—	C442 K3B
	E3G	P	—	2	—	—	2	—	—	C442 K3G
	E3L	P	—	2	—	—	2	—	—	C442 K3L
	E3X	P	—	2	—	—	2	—	—	C442 K3X
	E3Y	P	—	2	—	—	2	—	—	C442 K3Y
	J3LL	P	—	2	—	2	2	—	—	C512 K3L
	B1G	P	—	—	—	1	—	—	—	C406 K1G
	B1X	P	—	—	—	1	—	—	—	C406 K1X
	B1Y	P	—	—	—	1	—	—	—	C406 K1Y
	H8L	P	—	—	—	1	1	—	—	C482-3 K8L
	C1B	P	—	—	—	1	1	—	—	C426 K1B
	C1G	P	—	—	—	1	1	—	—	C426 K1G
	C1L	P	—	—	—	1	1	—	—	C426 K1L
	C1X	P	—	—	—	1	1	—	—	C426 K1X
	C1Y	P	—	—	—	1	1	—	—	C426 K1Y
	B2G	P	—	—	—	1	—	1	—	C415 K2G
	B2T	P	—	—	—	—	—	1	—	C415 K2T
	B2X	P	—	—	—	1	—	1	—	C415 K2X
	B2Y	P	—	—	—	1	—	—	—	C415 K2Y
	G7B	P	—	—	—	—	1	—	—	C466-7 K7B
	G7G	P	—	—	—	—	1	—	—	C466-7 K7G
	G7L	P	—	—	—	—	1	—	—	C466-7 K7L
	G7X	P	—	—	—	—	1	—	—	C466-7 K7X
	G7Y	P	—	—	—	—	1	—	—	C466-7 K7Y
	C2B	P	—	—	—	1	1	1	1	C435 K2B
	C2G	P	—	—	—	1	1	1	1	C435 K2G
	C2L	P	—	—	—	1	1	1	1	C435 K2L
	C2T	P	—	—	—	1	1	1	1	C435 K2T
	C2X	P	—	—	—	1	1	1	1	C435 K2X
	C2Y	P	—	—	—	1	1	1	1	C435 K2Y
	D4B, E4B	P	—	2	—	2	2	2	2	C450 K4B
	D4G, E4G	P	—	2	—	2	2	2	2	C450 K4G
	D4L, E4L	P	—	2	—	2	2	2	2	C450 K4L
	D4T, E4T	P	—	—	—	2	2	2	2	C450 K4T
	D4X, E4X	P	—	2	—	2	2	2	2	C450 K4X
	D4Y, E4Y	P	—	2	—	2	2	2	2	C450 K4Y

TYPE LETTERS Indicates: J - Challenger, B - Barracuda, V - Valiant, L - Dart, R - Satellite, W - Coronet, P - Plymouth, D - Dodge, C - Chrysler, Y - Imperial

NUMERALS INDICATE: 21 - 2 DR. SED., 23 - 2 DR. H.T., 29 - FAST BACK, 41 - 4 DR. SED., 43 - 4 DR. H.T., 45 - 6 PASS. STA. WGN., 46 - 9 PASS. STA. WGN.

AR Indicates use as required.
# Indicates parts not listed in any previous parts book
Numerals in parentheses ( ) refer to notes.
★ Indicates change or addition.

Printed in U.S.A.
November, 1974

Right and left part numbers are on same line, first number is right, second number is left.

CODE	PART NAME	MODEL CODES	SEE BOTTOM NOTE 21	23	29	41	43	45	46	PART NUMBER
23-108-16	COVER Cont'd.									
	G8L	P	—	—	—	—	—	1	1	C474-5 K8L
	A1G	P,D	—	—	—	1	1	—	—	C492 K1G
	A1X	P,D	—	—	—	1	1	—	—	C492 K1X
	A1Y	P,D	—	—	—	1	1	—	—	C492 K1Y
	K2X	P,D	—	—	—	1	—	—	—	C635 K2X
	K2Y	P,D	—	—	—	1	—	—	—	C635 K2Y
	A2G	P,D	—	—	—	1	—	1	—	C503 K2G
	A2T	P	—	—	—	—	—	1	—	C503 K2T
	A2X	P,D	—	—	—	1	—	1	—	C503 K2X
	A2Y	P,D	—	—	—	1	—	—	—	C503 K2Y
	K1Y	P,D	—	—	—	1	—	—	—	C639 K1Y
	A1G	D	—	1	—	—	—	—	—	C486-7 K1G
	A1X	D	—	1	—	—	—	—	—	C486-7 K1X
	A1Y	D	—	1	—	—	—	—	—	C486-7 K1Y
	A2G	D	—	1	—	—	—	—	—	C498-9 K2G
	A2X	D	—	1	—	—	—	—	—	C498-9 K2X
	A2Y	D	—	1	—	—	—	—	—	C498-9 K2Y
	M1B	D	—	1	—	—	—	—	—	C626-7 K1B
	M1G	D	—	1	—	—	—	—	—	C626-7 K1G
	M1L	D	—	1	—	—	—	—	—	C626-7 K1L
	M1X	D	—	1	—	—	—	—	—	C626-7 K1X
	M1Y	D	—	1	—	—	—	—	—	C626-7 K1Y
	P1G	D	—	1	—	—	—	—	—	C606-7 K1G
	P1L	D	—	1	—	—	—	—	—	C606-7 K1L
	P1X	D	—	1	—	—	—	—	—	C606-7 K1X
	P1Y	D	—	1	—	—	—	—	—	C606-7 K1Y
	R2G	D	—	1	—	—	—	—	—	C610-1 K2G
	R2L	D	—	1	—	—	—	—	—	C610-1 K2L
	R2X	D	—	1	—	—	—	—	—	C610-1 K2X
	R2Y	D	—	1	—	—	—	—	—	C610-1 K2Y
	V2G Sample of Material Reqd.	D	—	1	—	—	—	—	—	C652-3 K2G
	V2L	D	—	1	—	—	—	—	—	C652-3 K2L
	V2Y Sample of Material Reqd.	D	—	1	—	—	—	—	—	C652-3 K2Y
	W7B Sample of Material Reqd.	D	—	1	—	—	—	—	—	C672-3 K7B
	W7G Sample of Material Reqd.	D	—	1	—	—	—	—	—	C672-3 K7G
	W7L Sample of Material Reqd.	D	—	1	—	—	—	—	—	C672-3 K7L
	W7X Sample of Material Reqd.	D	—	1	—	—	—	—	—	C672-3 K7X
	W7Y Sample of Material Reqd.	D	—	1	—	—	—	—	—	C672-3 K7Y
	F4B	D	—	2	—	2	2	2	2	C664 K4B
	F4G	D	—	2	—	2	2	2	2	C664 K4G
	F4L	D	—	2	—	2	2	2	2	C664 K4L
	F4T	D	—	2	—	2	2	2	2	C664 K4T
	F4X	D	—	2	—	2	2	2	2	C664 K4X
	F4Y	D	—	2	—	2	2	2	2	C664 K4Y
	N3XW	D	—	2	—	—	2	—	—	C683 K3N
	P1G	D	—	—	—	1	—	—	—	C608 K1G
	P1L	D	—	—	—	1	—	—	—	C608 K1L
	P1X	D	—	—	—	1	—	—	—	C608 K1X
	P1Y	D	—	—	—	1	—	—	—	C608 K1Y
	M1B	D	—	—	—	1	1	—	—	C628 K1B
	M1G	D	—	—	—	1	1	—	—	C628 K1G
	M1L	D	—	—	—	1	1	—	—	C628 K1L
	M1X	D	—	—	—	1	1	—	—	C628 K1X
	M1Y	D	—	—	—	1	1	—	—	C628 K1Y
	W7B Sample of Material Reqd.	D	—	—	—	1	1	—	—	C674-5 K7B
	W7G Sample of Material Reqd.	D	—	—	—	1	1	—	—	C674-5 K7G
	W7L Sample of Material Reqd.	D	—	—	—	1	1	—	—	C674-5 K7L
	W7X Sample of Material Reqd.	D	—	—	—	1	1	—	—	C674-5 K7X

TYPE LETTERS Indicates J - Challenger, B - Barracuda, V - Valiant, L - Dart, R - Satellite, W - Coronet, P - Plymouth, D - Dodge, C - Chrysler, Y - Imperial

NUMERALS INDICATE: 21 - 2 DR. SED., 23 - 2 DR. H.T., 29 - FAST BACK, 41 - 4 DR. SED., 43 - 4 DR. H.T., 45 - 6 PASS. STA. WGN., 46 - 9 PASS. STA. WGN.

AR Indicates use as required.
# Indicates parts not listed in any previous parts book
Numerals in parentheses ( ) refer to notes.
★ Indicates change or addition.

Printed in U.S.A.
November, 1974

Right and left part numbers are on same line, first number is right, second number is left.

CODE	PART NAME	MODEL CODES	SEE BOTTOM NOTE 21	23		29	41	43	45	46	PART NUMBER
23-108-16	COVER Cont'd.										
	W7Y Sample of Material Reqd.	D	—	—	—	—	1	1	—	—	C674-5 K7Y
	R2G	D	—	—	—	—	1	—	1	—	C609 K2G
	R2L	D	—	—	—	—	1	—	1	—	C609 K2L
	R2T	D	—	—	—	—	—	—	1	—	C609 K2T
	R2X	D	—	—	—	—	1	—	1	—	C609 K2X
	R2Y	D	—	—	—	—	1	—	1	—	C609 K2Y
	V2B	D	—	—	—	—	1	1	1	1	C654 K2B
	V2G	D	—	—	—	—	1	1	1	1	C654 K2G
	V2L	D	—	—	—	—	1	1	1	1	C654 K2L
	V2T	D	—	—	—	—	1	1	1	1	C654 K2T
	V2X	D	—	—	—	—	1	1	1	1	C654 K2X
	V2Y	D	—	—	—	—	1	1	1	1	C654 K2Y
	S8B	D	—	—	—	—	—	—	1	1	C644-5 K8B
	S8G	D	—	—	—	—	—	—	1	1	C644-5 K8G
	S8L	D	—	—	—	—	—	—	1	1	C644-5 K8L
	S8T	D	—	—	—	—	—	—	1	1	C644-5 K8T
	S8X	D	—	—	—	—	—	—	1	1	C644-5 K8X
	S8Y	D	—	—	—	—	—	—	1	1	C644-5 K8Y
	A1B	C	—	1	—	—	—	—	—	—	G402-3 K1B
	A1G	C	—	1	—	—	—	—	—	—	G402-3 K1G
	A1L	C	—	1	—	—	—	—	—	—	G402-3 K1L
	A1X	C	—	1	—	—	—	—	—	—	G402-3 K1X
	A1Y	C	—	1	—	—	—	—	—	—	G402-3 K1Y
	B2B	C	—	1	—	—	—	—	—	—	G412-3 K2B
	B2G	C	—	1	—	—	—	—	—	—	G412-3 K2G
	B2L Sample of Material Reqd.	C	—	1	—	—	—	—	—	—	G412-3 K2L
	B2XW Sample of Material Reqd.	C	—	1	—	—	—	—	—	—	G412-3 K2W
	B2X	C	—	1	—	—	—	—	—	—	G412-3 K2X
	B2Y	C	—	1	—	—	—	—	—	—	G412-3 K2Y
	C1KW	C	—	1	—	—	—	—	—	—	G494-5 K1K
	D7B	C	—	1	—	—	—	—	—	—	G454-5 K7B
	D7G	C	—	1	—	—	—	—	—	—	G454-5 K7G
	D7L	C	—	1	—	—	—	—	—	—	G454-5 K7L
	D7X	C	—	1	—	—	—	—	—	—	G454-5 K7X
	D7Y	C	—	1	—	—	—	—	—	—	G454-5 K7Y
	D8B	C	—	1	—	—	—	—	—	—	G470-1 K8B
	D8G	C	—	1	—	—	—	—	—	—	G470-1 K8G
	D8L	C	—	1	—	—	—	—	—	—	G470-1 K8L
	D8XW	C	—	1	—	—	—	—	—	—	G470-1 K8W
	D8X	C	—	1	—	—	—	—	—	—	G470-1 K8X
	D8Y	C	—	1	—	—	—	—	—	—	G470-1 K8Y
	H7B Sample of Material Reqd.	C	—	1	—	—	—	—	—	—	G422-3 K7B
	H7G	C	—	1	—	—	—	—	—	—	G422-3 K7G
	H7L	C	—	1	—	—	—	—	—	—	G422-3 K7L
	H7X	C	—	1	—	—	—	—	—	—	G422-3 K7X
	H7Y	C	—	1	—	—	—	—	—	—	G422-3 K7Y
	H8B	C	—	1	—	—	—	—	—	—	G434-5 K8B
	H8G	C	—	1	—	—	—	—	—	—	G434-5 K8G
	H8L	C	—	1	—	—	—	—	—	—	G434-5 K8L
	H8XW, H8YW	C	—	1	—	—	—	—	—	—	G434-5 K8W
	H8X	C	—	1	—	—	—	—	—	—	G434-5 K8X
	H8Y	C	—	1	—	—	—	—	—	—	G434-5 K8Y
	A1B	C	—	—	—	—	1	1	—	—	G404 K1B
	A1G	C	—	—	—	—	1	1	—	—	G404 K1G
	A1L	C	—	—	—	—	1	1	—	—	G404 K1L
	A1X	C	—	—	—	—	1	1	—	—	G404 K1X
	A1Y	C	—	—	—	—	1	1	—	—	G404 K1Y
	B2B	C	—	—	—	—	1	1	—	—	G411 K2B
	B2G	C	—	—	—	—	1	1	—	—	G411 K2G

TYPE LETTERS Indicates: J - Challenger, B - Barracuda, V - Valiant, L - Dart, R - Satellite, W - Coronet, P - Plymouth, D - Dodge, C - Chrysler, Y - Imperial

NUMERALS INDICATE: 21 - 2 DR. SED., 23 - 2 DR. H.T., 29 - FAST BACK, 41 - 4 DR. SED., 43 - 4 DR. H.T., 45 - 6 PASS. STA. WGN., 46 - 9 PASS. STA. WGN.

AR Indicates use as required.
# Indicates parts not listed in any previous parts book
Numerals in parentheses ( ) refer to notes.
★ Indicates change or addition.

Printed in U.S.A.
November, 1974

Right and left part numbers are on same line, first number is right, second number is left.

CODE	PART NAME	MODEL CODES	SEE BOTTOM NOTE 21	23	29	41	43	45	46	PART NUMBER
23-108-16	COVER Cont'd.									
	B2L Sample of Material Reqd.	C	—	—	—	1	1	—	—	G411 K2L
	B2XW Sample of Material Reqd.	C	—	—	—	1	1	—	—	G411 K2W
	B2X	C	—	—	—	1	1	—	—	G411 K2X
	B2Y	C	—	—	—	1	1	—	—	G411 K2Y
	C1KW	C	—	—	—	1	1	—	—	G493 K1K
	E9B	C	—	—	—	1	1	—	—	G443 K9B
	E9G	C	—	—	—	1	1	—	—	G443 K9G
	E9L	C	—	—	—	1	1	—	—	G443 K9L
	E9X	C	—	—	—	1	1	—	—	G443 K9X
	E9Y	C	—	—	—	1	1	—	—	G443 K9Y
	EHB	C	—	—	—	1	1	—	—	G447 KHB
	EHG	C	—	—	—	1	1	—	—	G447 KHG
	EHL	C	—	—	—	1	1	—	—	G447 KHL
	EHXW	C	—	—	—	1	1	—	—	G447 KHW
	EHX	C	—	—	—	1	1	—	—	G447 KHX
	EHY	C	—	—	—	1	1	—	—	G447 KHY
	H7B Sample of Material Reqd.	C	—	—	—	1	1	—	—	G424-5 K7B
	H7G	C	—	—	—	1	1	—	—	G424-5 K7G
	H7L	C	—	—	—	1	1	—	—	G424-5 K7L
	H7X	C	—	—	—	1	1	—	—	G424-5 K7X
	H7Y	C	—	—	—	1	1	—	—	G424-5 K7Y
	H8B	C	—	—	—	1	1	—	—	G436-7 K8B
	H8G	C	—	—	—	1	1	—	—	G436-7 K8G
	H8L	C	—	—	—	1	1	—	—	G436-7 K8L
	H8XW	C	—	—	—	1	1	—	—	G436-7 K8W
	H8X	C	—	—	—	1	1	—	—	G436-7 K8X
	H8Y	C	—	—	—	1	1	—	—	G436-7 K8Y
	D7B	C	—	—	—	1	1	1	1	G456-7 K7B
	D7G	C	—	—	—	1	1	1	1	G456-7 K7G
	D7L	C	—	—	—	1	1	1	1	G456-7 K7L
	D7X	C	—	—	—	1	1	1	1	G456-7 K7X
	D7Y	C	—	—	—	1	1	1	1	G456-7 K7Y
	D8B	C	—	—	—	1	1	1	1	G472-3 K8B
	D8G	C	—	—	—	1	1	1	1	G472-3 K8G
	D8L	C	—	—	—	1	1	1	1	G472-3 K8L
	D8T	C	—	—	—	—	—	1	1	G472-3 K8T
	D8XW	C	—	—	—	1	1	1	1	G472-3 K8W
	D8X	C	—	—	—	1	1	1	1	G472-3 K8X
	D8Y	C	—	—	—	1	1	1	1	G472-3 K8Y
	PDB (Up to Build Date 1-15-74)	Y	—	1	—	—	—	—	—	G608-9 KDB
	PDB (After Build Date 1-15-74)	Y	—	1	—	—	—	—	—	G608-9 KDD
	PDG (Up to Build Date 1-15-74)	Y	—	1	—	—	—	—	—	G608-9 KDG
	PDG (After Build Date 1-15-74)	Y	—	1	—	—	—	—	—	G608-9 KDF
	PDL (Up to Build Date 1-15-74)	Y	—	1	—	—	—	—	—	G608-9 KDL
	PDL (After Build Date 1-15-74)	Y	—	1	—	—	—	—	—	G608-9 KDP
	PDT	Y	—	1	—	—	—	—	—	G608-9 KDT
	PDX	Y	—	1	—	—	—	—	—	G608-9 KDX
	PDY	Y	—	1	—	—	—	—	—	G608-9 KDY
	PLB	Y	—	1	—	—	—	—	—	G610-1 KLB
	PLG	Y	—	1	—	—	—	—	—	G610-1 KLG
	PLL	Y	—	1	—	—	—	—	—	G610-1 KLL
	PLT	Y	—	1	—	—	—	—	—	G610-1 KLT
	PLXW	Y	—	1	—	—	—	—	—	G610-1 KLW
	PLX	Y	—	1	—	—	—	—	—	G610-1 KLX
	PLY	Y	—	1	—	—	—	—	—	G610-1 KLY
	PDB (Up to Build Date 1-15-74)	Y	—	—	—	—	1	—	—	G612-3 KDB
	PDB (After Build Date 1-15-74)	Y	—	—	—	—	1	—	—	G612-3 KDD
	PDG (Up to Build Date 1-15-74)	Y	—	—	—	—	1	—	—	G612-3 KDG

TYPE LETTERS Indicates: J - Challenger; B - Barracuda; V - Valiant; L - Dart; R - Satellite; W - Coronet; P - Plymouth; D - Dodge; C - Chrysler; Y - Imperial

NUMERALS INDICATE: 21 - 2 DR. SED.; 23 - 2 DR. H.T.; 29 - FAST BACK; 41 - 4 DR. SED.; 43 - 4 DR. H.T.; 45 - 6 PASS. STA. WGN.; 46 - 9 PASS. STA. WGN.

AR Indicates use as required.
# Indicates parts not listed in any previous parts book
Numerals in parentheses ( ) refer to notes.
★ Indicates change or addition.

Printed in U.S.A.
November, 1974

Right and left part numbers are on same line, first number is right, second number is left.

CODE	PART NAME	MODEL CODES	SEE BOTTOM NOTE 21	23	29	41	43	45	46	PART NUMBER
23-108-16	COVER Cont'd.									
	PDG (After Build Date 1-15-74)	Y	—	—	—	—	1	—	—	G612-3 KDF
	PDL (Up to Build Date 1-15-74)	Y	—	—	—	—	1	—	—	G612-3 KDL
	PDL (After Build Date 1-15-74)	Y	—	—	—	—	1	—	—	G612-3 KDP
	PDT	Y	—	—	—	—	1	—	—	G612-3 KDT
	PDX	Y	—	—	—	—	1	—	—	G612-3 KDX
	PDY	Y	—	—	—	—	1	—	—	G612-3 KDY
	PLB	Y	—	—	—	—	1	—	—	G614-5 KLB
	PLG	Y	—	—	—	—	1	—	—	G614-5 KLG
	PLL	Y	—	—	—	—	1	—	—	G614-5 KLL
	PLT	Y	—	—	—	—	1	—	—	G614-5 KLT
	PLXW	Y	—	—	—	—	1	—	—	G614-5 KLW
	PLX	Y	—	—	—	—	1	—	—	G614-5 KLX
	PLY	Y	—	—	—	—	1	—	—	G614-5 KLY
	TAXI ONLY									
	Black Bench Seat U.S.	V,L	—	—	—	1	—	—	—	3740 773
	POLICE CARS ONLY									
	Black Bucket Seat U.S. & CANADA	R,W	—	—	—	2	—	—	—	3740 733
	Chestnut Bucket Seat U.S. & CANADA	R,W	—	—	—	2	—	—	—	3740 731
	Black 50/50 Split U.S. & CANADA Rt.	P,D	—	—	—	1	—	—	—	3740 866
	Black 50/50 Split U.S. & CANADA Lt.	P,D	—	—	—	1	—	—	—	3740 865
	Gold 50/50 Split U.S. & CANADA Rt.	P,D	—	—	—	1	—	—	—	3740 862
	Gold 50/50 Split U.S. & CANADA Lt.	P,D	—	—	—	1	—	—	—	3740 861
23-108-17	COVER, Back of Back Lower Carpet									
	H5LL	V,L	—	2	—	2	—	—	—	G989 KL5
	H5GG	V,L	—	2	—	2	—	—	—	G989 KG7
23-108-18	CORD, Back of Front Seat Back-Pocket Elastic									
	Code H1	V,L	—	2	—	—	—	—	—	3765 732
	Code H1	V,L	—	—	—	2	—	—	—	3765 463
	Code H5	V,L	—	2	—	2	—	—	—	3765 430
23-108-19	HEADREST, Front Seat w/Bench									
	All Codes	R,W	2	2	—	2	—	2	—	S505 KB7
		R,W	2	2	—	2	—	2	—	S505 KG6
		R,W	2	2	—	2	—	2	—	S505 KL2
		R,W	2	2	—	2	—	2	—	S505 KT8
		R,W	2	2	—	2	—	2	—	S505 KY4
		R,W	2	2	—	2	—	2	—	S505 JW1
		R,W	2	2	—	2	—	2	—	S505 JX9
	E2B, D2B, L1B	V,L	—	2	—	2	2	—	—	S506 KB7
	E2G, D2G, L1G	V,L	—	2	—	2	2	—	—	S506 KG6
	E2Y, D2Y, L1Y	V,L	—	2	—	2	2	—	—	S506 KY4
	E2L, D2L, L1L, H1LL	V,L	—	2	—	2	2	—	—	S506 KL2
	E2X, D2X	V,L	—	2	—	2	2	—	—	S506 JX9
	M2YW	V,L	—	—	—	2	—	—	—	S506 JW1
	All Codes	P,D,C,Y	—	2	—	—	2	2	2	2 S506 KB7
		P,D,C,Y	—	2	—	—	2	2	2	2 S506 KG6
		P,D,C,Y	—	2	—	—	2	2	2	2 S506 KY4
		P,D,C,Y	—	2	—	—	2	2	2	2 S506 KL2
		P,D,C,Y	—	2	—	—	2	2	2	2 S506 KT8
		P,D,C,Y	—	2	—	—	2	2	2	2 S506 JX9
		C,Y	—	2	—	—	2	2	2	2 S506 JW1
23-108-22	SLEEVE, Front Seat Headrest Post									
	All Codes	R,W	4	4	—	—	4	—	4	4 S502 KB7
		R,W	4	4	—	—	4	—	4	4 S502 KG6
		R,W	4	4	—	—	4	—	4	4 S502 KY4
		R,W	4	4	—	—	4	—	4	4 S502 KL2
		R,W	4	4	—	—	4	—	4	4 S502 KT8
		R,W	4	4	—	—	4	—	4	4 S502 JW1
		R,W	4	4	—	—	4	—	4	4 S502 JX9

TYPE LETTERS Indicates J - Challenger, B - Barracuda, V - Valiant, L - Dart, R - Satellite, W - Coronet, P - Plymouth, D - Dodge, C - Chrysler, Y - Imperial

NUMERALS INDICATE: 21 - 2 DR. SED., 23 - 2 DR. H.T., 29 - FAST BACK, 41 - 4 DR. SED., 43 - 4 DR. H.T., 45 - 6 PASS. STA. WGN., 46 - 9 PASS. STA. WGN.

AR Indicates use as required.
# Indicates parts not listed in any previous parts book
Numerals in parentheses ( ) refer to notes.
★ Indicates change or addition.

Printed in U.S.A.
November, 1974

Right and left part numbers are on same line, first number is right, second number is left.

CODE	PART NAME	MODEL CODES	SEE BOTTOM NOTE 21	23	29	41	43	45	46	PART NUMBER
23-108-22	SLEEVE Cont'd.									
	E2B, D2B, L1B	V,L	—	4	—	4	4	—	—	— S503 KB7
	E2G, D2G, L1G	V,L	—	4	—	4	4	—	—	— S503 KG6
	E2Y, D2Y, L1Y	V,L	—	4	—	4	4	—	—	— S503 KY4
	E2X, D2X, L1X	V,L	—	4	—	4	4	—	—	— S503 JX9
	E2L, D2L, L1L, H1LL	V,L	—	4	—	4	4	—	—	— S503 KL2
	M2YW	V,L	—	—	—	4	—	—	—	— S503 JW1
	All Codes	P,D,C,Y	—	4	—	—	4	4	4	4 S503 KB7
		P,D,C,Y	—	4	—	—	4	4	4	4 S503 KG6
		P,D,C,Y	—	4	—	—	4	4	4	4 S503 KY4
		P,D,C,Y	—	4	—	—	4	4	4	4 S503 KL2
		P,D,C,Y	—	4	—	—	4	4	4	4 S503 KT8
		P,D,C,Y	—	4	—	—	4	4	4	4 S503 JX9
		C,Y	—	4	—	—	4	4	4	4 S503 JW1
23-108-29	CATCH, Front Seat Headrest Post	R,W	4	4	—	—	4	—	4	— 3520 943
		V,L,P,D,C,Y	—	4	—	4	4	4	4	4 3594 151
23-108-30	SUPPORT, Front Seat Back Outer Side Trim	P,D,C,Y	—	1	—	—	1	1	—	— 2888 064-5
23-108-31	SPACER, Front Seat Headrest									
	T2T	R,W	—	—	—	—	4	—	—	— S504 KT8
	T2X, G2X	R,W	—	—	—	—	4	—	—	— S504 JX9
	Guide	D,C,Y	—	4	—	—	4	4	4	4 3594 496
23-108-32	PANEL, Back of Front Seat Back									
	G7B, S8B, W7B, D7B, D8B	P,D,C	—	1	—	—	1	1	1	1 S544-5 KB6
	G7G, S8G, W7G, D7G, D8G	P,D,C	—	1	—	—	1	1	1	1 S544-5 KG6
	G7L, G8L, S8L, W7L, D7L, D8L	P,D,C	—	1	—	—	1	1	1	1 S544-5 KL3
	S8T, D8T	D,C	—	—	—	—	—	—	1	1 S544-5 KT7
	G7X, S8X, W7X, D7X, D8X	P,D,C	—	1	—	—	1	1	1	1 S544-5 KX9
	G7Y, S8Y, W7Y, D7Y, D8Y	P,D,C	—	1	—	—	1	1	1	1 S544-5 KY3
	H8L	P	—	—	—	—	1	1	—	— S544-5 KL3
	H7B, H8B	C	—	—	—	—	1	1	—	— S544-5 KB6
	H7G, H8G	C	—	—	—	—	1	1	—	— S544-5 KG6
	H7L, H8L	C	—	—	—	—	1	1	—	— S544-5 KL3
	H7X, H8X	C	—	—	—	—	1	1	—	— S544-5 KX9
	H7Y, H8Y	C	—	—	—	—	1	1	—	— S544-5 KY3
	D8XW	C	—	—	—	—	1	1	—	— S544-5 KW1
	H7B, H8B	C	—	1	—	—	—	—	—	— S546-7 KB6
	H7G, H8G	C	—	1	—	—	—	—	—	— S546-7 KG6
	H7L, H8L	C	—	1	—	—	—	—	—	— S546-7 KL3
	H8XW	C	—	1	—	—	—	—	—	— S546-7 KW1
	H8YW	C	—	1	—	—	—	—	—	— S546-7 KYW
	H7X, H8X	C	—	1	—	—	—	—	—	— S546-7 KX9
	H7Y, H8Y	C	—	1	—	—	—	—	—	— S546-7 KY3
	E9B, EHB	C	—	—	—	—	1	1	—	— S552 KB7
	E9G, EHG	C	—	—	—	—	1	1	—	— S552 KG7
	E9L, EHL	C	—	—	—	—	1	1	—	— S552 KL5
	E9X, EHX, EHXW	C	—	—	—	—	1	1	—	— S552 KX9
	E9Y, EHY	C	—	—	—	—	1	1	—	— S552 KY7
	All Codes	Y	—	1	—	—	—	—	—	— S548-9 KB6
		Y	—	1	—	—	—	—	—	— S548-9 KG6
		Y	—	1	—	—	—	—	—	— S548-9 KL3
		Y	—	1	—	—	—	—	—	— S548-9 KT7
		Y	—	1	—	—	—	—	—	— S548-9 KW1
		Y	—	1	—	—	—	—	—	— S548-9 KX9
		Y	—	1	—	—	—	—	—	— S548-9 KY3
	All Codes	Y	—	—	—	—	—	1	—	— S550-1 KB6
		Y	—	—	—	—	—	1	—	— S550-1 KG6
		Y	—	—	—	—	—	1	—	— S550-1 KL3
		Y	—	—	—	—	—	1	—	— S550-1 KT7
		Y	—	—	—	—	—	1	—	— S550-1 KW1

TYPE LETTERS Indicates: J - Challenger, B - Barracuda, V - Valiant, L - Dart, R - Satellite, W - Coronet, P - Plymouth, D - Dodge, C - Chrysler, Y - Imperial

NUMERALS INDICATE: 21 - 2 DR. SED., 23 - 2 DR. H.T., 29 - FAST BACK, 41 - 4 DR. SED., 43 - 4 DR. H.T., 45 - 6 PASS. STA. WGN., 46 - 9 PASS. STA. WGN.

AR Indicates use as required.
# Indicates parts not listed in any previous parts book
Numerals in parentheses ( ) refer to notes.
★ Indicates change or addition.

Printed in U.S.A.
November, 1974

Right and left part numbers are on same line, first number is right, second number is left.

CODE	PART NAME	MODEL CODES	SEE BOTTOM NOTE 21	23	29	41	43	45	46	PART NUMBER
23-108-32	PANEL Cont'd.									
		Y	—	—	—	—	1	—	—	S550-1 KX9
		Y	—	—	—	—	1	—	—	S550-1 KY3
23-108-34	COVER, Front Seat Headrest									
	Finish	V,L,R,W, P,D,C,Y	—	2	—	2	2	2	2	3447 864
23-108-46	STIFFENER, Front Seat Back Bottom									
	Hinge Facing	P,D	—	2	—	—	—	—	—	3758 793
	Front Seat Back Pillow Upper Bottom	Y	—	2	—	—	2	—	—	3758 971
23-108-50	SPACER, Back of Front Seat Back									
	Trim Panel	Y	—	2	—	—	2	—	—	3765 283
23-108-66	COVER Center Cushion Arm Rest									
	Stanchion	R,W	2	2	2	—	—	—	—	S534 JX9
23-108-71	BRACKET, Front Seat Center Cushion									
	Mtg. Front	V,L	—	—	—	1	—	—	—	3756 792
	Rear	V,L	—	—	—	1	—	—	—	3756 793
	Front	R,W	—	1	—	—	—	—	—	3506 316
	Rear	R,W	—	1	—	—	—	—	—	3506 318
	Front Seat Cushion Shield									
	Att. Front w/50/50 Split Seat	P,D,C,Y	—	1	—	—	—	—	—	3689 732-3
		P,D,C,Y	—	—	—	1	1	1	1	2609 238-9
	Front Seat Side Shield to Cushion									
	Front Att. Bench Seat	P,D,C	—	—	—	2	2	2	2	2888 742
23-108-84	COVER, Front Seat Back									
	Hinge Arm w/Bench Seat									
	All Codes (Except Code D2-E2, M2)	V,L	—	1	—	—	—	—	—	S512-3 KB7
		V,L	—	1	—	—	—	—	—	S512-3 KG6
		V,L	—	1	—	—	—	—	—	S512-3 KL2
		V,L	—	1	—	—	—	—	—	S512-3 JX9
	All Codes	V,L	—	—	—	1	—	—	—	S510-1 KB7
		V,L	—	—	—	1	—	—	—	S510-1 KG6
		V,L	—	—	—	1	—	—	—	S510-1 KL2
		V,L	—	—	—	1	—	—	—	S510-1 JX9
	w/Bucket Seats									
	All Codes	B,J	—	2	—	—	—	—	—	S508-9 KB7
		B,J	—	2	—	—	—	—	—	S508-9 KG6
		V,L	—	2	—	2	1	—	—	S508-9 KL2
		V,L,B, J	—	2	—	—	—	—	—	S508-9 JX9
		V,L,B, J	2	2	—	2	—	—	—	S508-9 JW1
		R,W	2	2	—	2	—	—	—	S508-9 KY4
	All Trim Codes D2 and E2 and M2	V,L	—	1	—	1	—	—	—	S516-7 JX9
	Bench Seat w/o Center Arm Rest									
	All Codes	R,W	1	1	—	1	—	—	—	S520-1 JX9
	Bench Seat w/Center Arm Rest									
	All Codes	R,W	1	1	—	1	1	—	1	1 S518-9 JX9
	Bench Seat									
	All Codes	P,D,C	—	1	—	—	1	1	1	1 S522-3 JX9
	50/50 Split Rt. Only									
	G7B, S8B, W7B	P,D	—	—	—	—	1	1	1	1 C510 KB6
	G7G, S8G, W7G	P,D	—	—	—	—	1	1	1	1 C510 KG6
	G7L, G8L, H8L, S8L, W7L	P,D	—	—	—	—	1	1	1	1 C510 KL3
	S8T	D	—	—	—	—	—	—	1	1 C510 KT7
	G7X, S8X, W7X	P,D	—	—	—	—	1	1	1	1 C510 KX9
	G7Y, S8Y, W7Y	P,D	—	—	—	—	1	1	1	1 C510 KY3

TYPE LETTERS Indicates: J - Challenger; B - Barracuda; V - Valiant; L - Dart; R - Satellite; W - Coronet; P - Plymouth; D - Dodge; C - Chrysler; Y - Imperial

NUMERALS INDICATE: 21 - 2 DR. SED.; 23 - 2 DR. H.T.; 29 - FAST BACK; 41 - 4 DR. SED.; 43 - 4 DR. H.T.; 45 - 6 PASS. STA. WGN.; 46 - 9 PASS. STA. WGN.

AR Indicates use as required.
# Indicates parts not listed in any previous parts book
Numerals in parentheses ( ) refer to notes.
★ Indicates change or addition.

Printed in U.S.A.
November, 1974

Right and left part numbers are on same line, first number is right, second number is left.

CODE	PART NAME		MODEL CODES	SEE BOTTOM NOTE 21	23		29	41	43	45	46	PART NUMBER
23-108-84	COVER Cont'd.											
	Nut, Hinge Arm Cover Retaining		V,L,J, B,R,W, P,D,C	2	2	—	2	2	2	2	2	6029 501
23-108-85	COVER, Front Seat Center Hinge Post											
	A1B		V,L	—	1	—	1	—	—	—	—	S514 KB7
	A1G		V,L	—	1	—	1	—	—	—	—	S514 KG6
	A1X		V,L	—	1	—	1	—	—	—	—	S514 JX9
	Code E2, D2, H1, M2		V,L	—	1	—	1	—	—	—	—	S526 JX9
23-108-98	SHIELD, Front Seat Cushion w/Bench Seat											
	Manual or Electric	Rt.	P,D,C,Y	—	—	—	—	1	1	1	1	2858 628
	Electric	Lt.	P,D,C	—	—	—	—	1	1	1	1	2942 127
	Manual	Lt.	P,D,C	—	—	—	—	1	1	1	1	2858 629
	Electric	Rt.	P,D,C	—	1	—	—	—	—	—	—	2858 632
	Electric	Lt.	P,D,C	—	1	—	—	—	—	—	—	2942 131
	w/50/50 Split Seat											
	Manual	Rt.	P,D,C,Y	—	1	—	—	—	—	—	—	3765 100
	Manual	Lt.	P,D,C,Y	—	1	—	—	—	—	—	—	3765 101
	Electric	Rt.	C,Y	—	1	—	—	—	—	—	—	3765 094
	Electric	Lt.	P,D,C,Y	—	1	—	—	—	—	—	—	3765 095
	Manual	Rt.	P,D,C,Y	—	—	—	—	1	1	1	1	2767 570
	Manual	Lt.	P,D,C,Y	—	—	—	—	1	1	1	1	2767 919
	Electric	Rt.	P,D,C,Y	—	—	—	—	1	1	1	1	2942 136
	Electric	Lt.	P,D,C,Y	—	—	—	—	1	1	1	1	2942 137
	Shield Front Seat Back w/Bench *Seat, w/Center Arm Rest, w/Split*											
	All Codes		R,W,P,D	—	2	—	2	2	2	2	2	S540 KB7
			R,W,P,D	—	2	—	2	2	2	2	2	S540 KG6
			R,W,P,D	—	2	—	2	2	2	2	2	S540 KL2
			R,W,P,D	—	2	—	2	2	2	2	2	S540 KT8
			W,P,D	—	2	—	2	2	2	2	2	S540 JX9
			D	—	2	—	—	2	2	2	2	S540 JW1
			W,P,D	—	2	—	2	2	2	2	2	S540 KY4
	w/50/50 Split Seat	Rt.	P,D,C,Y	—	—	—	—	1	1	1	1	2888 456
		Lt.	P,D,C,Y	—	—	—	—	1	1	1	1	2888 457
	Shield, Front Seat Back w/Bucket Seat											
	All Codes		R,W	1	1	—	1	—	—	—	—	S556-7 KB7
			R,W	1	1	—	1	—	—	—	—	S556-7 KG6
			R,W	1	1	—	1	—	—	—	—	S556-7 JW1
			R,W	1	1	—	1	—	—	—	—	S556-7 JX9
			R,W	1	1	—	1	—	—	—	—	S556-7 KY4

23-109-3 BACK, Rear Seat

For Complete Assembly, Order by Description, Vehicle Serial Number and Trim Code.

23-109-4	COVER, Rear Seat Back											
	A1B *Sample of Material Reqd.*		V,L	—	1	—	—	—	—	—	—	A340 K1B
	A1G Sample of Material Reqd.		V,L	—	1	—	—	—	—	—	—	A340 K1G
	A1X Sample of Material Reqd.		V,L	—	1	—	—	—	—	—	—	A340 K1X
	F3B		V,L	—	1	—	—	—	—	—	—	A351 K3B
	F3G Sample of Material Reqd.		V,L	—	1	—	—	—	—	—	—	A351 K3G
	F3L Sample of Material Reqd.		V,L	—	1	—	—	—	—	—	—	A351 K3L
	F3X		V,L	—	1	—	—	—	—	—	—	A351 K3X
	E2B, D2B		V,L	—	1	—	1	—	—	—	—	A311 K2B
	E2G, D2G		V,L	—	1	—	1	—	—	—	—	A311 K2G
	E2L, D2L Sample of Material Reqd.		V,L	—	1	—	1	—	—	—	—	A311 K2L
	E2X, D2X		V,L	—	1	—	1	—	—	—	—	A311 K2X
	E2Y, D2Y Sample of Material Reqd.		V,L	—	1	—	1	—	—	—	—	A311 K2Y

TYPE LETTERS Indicates: J - Challenger, B - *Barracuda*, V - Valiant, L - *Dart*, R - Satellite, W - Coronet, P - Plymouth, D - Dodge, C - Chrysler, Y - Imperial

NUMERALS INDICATE: 21 - 2 DR. SED., 23 - 2 DR. H.T., 29 - FAST BACK, 41 - 4 DR. SED., 43 - 4 DR. H.T., 45 - 6 PASS. STA. WGN., 46 - 9 PASS. STA. WGN.

AR Indicates use as required.
# Indicates parts not listed in any previous parts book
Numerals in parentheses ( ) refer to notes.
★ Indicates change or addition.

Printed in U.S.A.
November, 1974

Right and left part numbers are on same line, first number is right, second number is left.

CODE	PART NAME	MODEL CODES	SEE BOTTOM NOTE 21	23		29	41	43	45	46	PART NUMBER
23-109-4	COVER Cont'd.										
	w/o Fold Down Rear Seat										
	A1B Sample of Material Reqd.	V,L	—	—	—	1	—	—	—	—	A341 K1B
	A1G Sample of Material Reqd.	V,L	—	—	—	1	—	—	—	—	A341 K1G
	A1X Sample of Material Reqd.	V,L	—	—	—	1	—	—	—	—	A341 K1X
	w/Fold Down Rear Seat										
	A1B Sample of Material Reqd.	V,L	—	—	—	1	—	—	—	—	A342 K1B
	A1G Sample of Material Reqd.	V,L	—	—	—	1	—	—	—	—	A342 K1G
	A1X Sample of Material Reqd.	V,L	—	—	—	1	—	—	—	—	A342 K1X
	w/o Fold Down Rear Seat										
	C4B, F4B	V,L	—	—	—	1	—	—	—	—	A323 K4B
	C4G, F4G Sample of Material Reqd.	V,L	—	—	—	1	—	—	—	—	A323 K4G
	C4L, C6L, F4L, F6L	V,L	—	—	—	1	—	—	—	—	A323 K4L
	C4X, C6X, F4X, F6X	V,L	—	—	—	1	—	—	—	—	A323 K4X
	C6XW, F6XW	V,L	—	—	—	1	—	—	—	—	A323 K4W
	w/Fold Down Rear Seat										
	C4B, F4B	V,L	—	—	—	1	—	—	—	—	A324 K4B
	C4G, F4G Sample of Material Reqd.	V,L	—	—	—	1	—	—	—	—	A324 K4G
	C4L, C6L, F4L, F6L	V,L	—	—	—	1	—	—	—	—	A324 K4L
	C4X, C6X, F4X, F6X	V,L	—	—	—	1	—	—	—	—	A324 K4X
	C6XW, F6XW	V,L	—	—	—	1	—	—	—	—	A324 K4W
	w/o Fold Down Rear Seat										
	D2B	V,L	—	—	—	1	—	—	—	—	A312 K2B
	D2G	V,L	—	—	—	1	—	—	—	—	A312 K2G
	D2L	V,L	—	—	—	1	—	—	—	—	A312 K2L
	D2X	V,L	—	—	—	1	—	—	—	—	A312 K2X
	D2Y	V,L	—	—	—	1	—	—	—	—	A312 K2Y
	M2YW	V,L	—	—	—	1	—	—	—	—	A373 K2Y
	w/Fold Down Rear Seat										
	D2B	V,L	—	—	—	1	—	—	—	—	A313 K2B
	D2G	V,L	—	—	—	1	—	—	—	—	A313 K2G
	D2L	V,L	—	—	—	1	—	—	—	—	A313 K2L
	D2X	V,L	—	—	—	1	—	—	—	—	A313 K2X
	D2Y	V,L	—	—	—	1	—	—	—	—	A313 K2Y
	M2YW	V,L	—	—	—	1	—	—	—	—	A374 K2Y
	J6VW	L	—	—	—	1	—	—	—	—	A363 K6V
	H1LL, H5LL	V,L	—	1	—	—	—	—	—	—	A356 K5L
	H5GG	V,L	—	1	—	—	—	—	—	—	A356 K5G
	A2B Sample of Material Reqd.	V,L	—	—	—	—	1	—	—	—	A305 K2B
	A2G Sample of Material Reqd.	V,L	—	—	—	—	1	—	—	—	A305 K2G
	A2X Sample of Material Reqd.	V,L	—	—	—	—	1	—	—	—	A305 K2X
	C4B, F4B	V,L	—	—	—	—	1	—	—	—	A326 K4B
	C4G, F4G Sample of Material Reqd.	V,L	—	—	—	—	1	—	—	—	A326 K4G
	C4L, F4L	V,L	—	—	—	—	1	—	—	—	A326 K4L
	C4X, F4X	V,L	—	—	—	—	1	—	—	—	A326 K4X
	L1B Sample of Material Reqd.	V,L	—	—	—	—	1	—	—	—	A334 K1B
	L1G Sample of Material Reqd.	V,L	—	—	—	—	1	—	—	—	A334 K1G
	L1L	V,L	—	—	—	—	1	—	—	—	A334 K1L
	L1Y	V,L	—	—	—	—	1	—	—	—	A334 K1Y
	H1LL, H5LL	V,L	—	—	—	—	1	—	—	—	A357 K5L
	H5GG	V,L	—	—	—	—	1	—	—	—	A357 K5G
	All Codes	B,J	—	1	—	—	—	—	—	—	A453 K6B
		B,J	—	1	—	—	—	—	—	—	A453 K6G
	Sample of Material Reqd.	B,J	—	1	—	—	—	—	—	—	A453 K6X
	Sample of Material Reqd.	B,J	—	1	—	—	—	—	—	—	A453 K6W
	F1B	R	1	1	—	—	—	—	—	—	B439 K1B
	F1G	R	1	1	—	—	—	—	—	—	B439 K1G
	F1EW	R	1	1	—	—	—	—	—	—	B439 K1W
	F1X	R	1	1	—	—	—	—	—	—	B439 K1X
	F1Y	R	1	1	—	—	—	—	—	—	B439 K1Y

TYPE LETTERS Indicates J - Challenger, B - Barracuda, V - Valiant, L - Dart, R - Satellite, W - Coronet, P - Plymouth, D - Dodge, C - Chrysler, Y - Imperial

NUMERALS INDICATE: 21 - 2 DR. SED., 23 - 2 DR. H.T., 29 - FAST BACK, 41 - 4 DR. SED., 43 - 4 DR. H.T., 45 - 6 PASS. STA. WGN., 46 - 9 PASS. STA. WGN.

AR Indicates use as required.
# Indicates parts not listed in any previous parts book
Numerals in parentheses ( ) refer to notes.
★ Indicates change or addition.

Printed in U.S.A.
November, 1974

Right and left part numbers are on same line, first number is right, second number is left.

CODE	PART NAME	MODEL CODES	SEE BOTTOM NOTE 21	23	29	41	43	45	46	PART NUMBER
23-109-4	COVER Cont'd.									
	C2B	R	1	1	—	—	—	—	—	B432 K2B
	C2G	R	1	1	—	—	—	—	—	B432 K2G
	C2L	R	1	1	—	—	—	—	—	B432 K2L
	C2X	R	1	1	—	—	—	—	—	B432 K2X
	C2Y	R	1	1	—	—	—	—	—	B432 K2Y
	V1YW Sample of Material Reqd.	R	1	1	—	—	—	—	—	B330 K1W
	A2B	R	—	—	—	1	—	—	—	B430 K2B
	A2G	R	—	—	—	1	—	—	—	B430 K2G
	A2T	R	—	—	—	1	—	—	—	B430 K2T
	F1B	R	—	—	—	1	—	—	—	B441 K1B
	F1G	R	—	—	—	1	—	—	—	B441 K1G
	F1T	R	—	—	—	1	—	—	—	B441 K1T
	F1X	R	—	—	—	1	—	—	—	B441 K1X
	F1Y	R	—	—	—	1	—	—	—	B441 K1Y
	F2B	R	—	—	—	1	—	—	—	B442 K2B
	F2G	R	—	—	—	1	—	—	—	B442 K2G
	F2L	R	—	—	—	1	—	—	—	B442 K2L
	F2T	R	—	—	—	1	—	—	—	B442 K2T
	F2X	R	—	—	—	1	—	—	—	B442 K2X
	F2Y	R	—	—	—	1	—	—	—	B442 K2Y
	2nd Back									
	A2B	R	—	—	—	—	—	1	—	B516 K2B
	A2G	R	—	—	—	—	—	1	—	B516 K2G
	A2T	R	—	—	—	—	—	1	—	B516 K2T
	F2B	R	—	—	—	—	—	1	1	B518 K2B
	F2G	R	—	—	—	—	—	1	1	B518 K2G
	F2L	R	—	—	—	—	—	1	1	B518 K2L
	F2T	R	—	—	—	—	—	1	1	B518 K2T
	3rd Back									
	F2B	R	—	—	—	—	—	—	1	B561 K2B
	F2G	R	—	—	—	—	—	—	1	B561 K2G
	F2L	R	—	—	—	—	—	—	1	B561 K2L
	F2T	R	—	—	—	—	—	—	1	B561 K2T
	B2B	R,W	1	—	—	—	—	—	—	B431 K2B
	B2G	R,W	1	—	—	—	—	—	—	B431 K2G
	B2X	R,W	1	—	—	—	—	—	—	B431 K2X
	D6B, H6B	R,W	1	1	—	1	—	—	—	B447 K6B
	D6G, H6G	R,W	1	1	—	1	—	—	—	B447 K6G
	D6XW, H6XW	R,W	1	1	—	1	—	—	—	B447 K6W
	D6X, H6X	R,W	1	1	—	1	—	—	—	B447 K6X
	D6Y, H6Y	R,W	1	1	—	1	—	—	—	B447 K6Y
	K2T, T2T	R,W	—	—	—	—	1	—	—	B444 K2T
	K2X, T2X, G2X	R,W	—	—	—	—	1	—	—	B444 K2X
	2nd Back									
	M4B	R,W	—	—	—	—	—	—	1	1 B517 K4B
	M4G	R,W	—	—	—	—	—	—	1	1 B517 K4G
	M4L	R,W	—	—	—	—	—	—	1	1 B517 K4L
	M4T	R,W	—	—	—	—	—	—	1	1 B517 K4T
	3rd Back									
	M4B	R,W	—	—	—	—	—	—	—	1 B559 K4B
	M4G	R,W	—	—	—	—	—	—	—	1 B559 K4G
	M4L	R,W	—	—	—	—	—	—	—	1 B559 K4L
	M4T	R,W	—	—	—	—	—	—	—	1 B559 K4T
	E5EW, W5EW	R	1	1	—	—	—	—	—	B448 K5E
	E5YW	W	—	1	—	1	—	—	—	B448 K5Y
	N1YW	W	—	1	—	—	—	—	—	B446 K1W
	S1B	W	—	1	—	—	—	—	—	B438 K1B
	S1G	W	—	1	—	—	—	—	—	B438 K1G

TYPE LETTERS Indicates: J - Challenger, B - Barracuda, V - Valiant, L - Dart, R - Satellite, W - Coronet, P - Plymouth, D - Dodge, C - Chrysler, Y - Imperial

NUMERALS INDICATE: 21 - 2 DR. SED., 23 - 2 DR. H.T., 29 - FAST BACK, 41 - 4 DR. SED., 43 - 4 DR. H.T., 45 - 6 PASS. STA. WGN., 46 - 9 PASS. STA. WGN.

AR Indicates use as required.
# Indicates parts not listed in any previous parts book
Numerals in parentheses ( ) refer to notes.
★ Indicates change or addition.

Printed in U.S.A.
November, 1974

Right and left part numbers are on same line, first number is right, second number is left.

CODE	PART NAME	MODEL CODES	SEE BOTTOM NOTE 21	23		29	41	43	45	46	PART NUMBER
23-109-4	COVER Cont'd.										
	S1X	W	—	1	—	—	—	—	—	—	B438 K1X
	S1Y	W	—	1	—	—	—	—	—	—	B438 K1Y
	S2B Sample of Material Reqd.	W	—	1	—	—	—	—	—	—	B434 K2B
	S2G Sample of Material Reqd.	W	—	1	—	—	—	—	—	—	B434 K2G
	S2L Sample of Material Reqd.	W	—	1	—	—	—	—	—	—	B434 K2L
	S2X Sample of Material Reqd.	W	—	1	—	—	—	—	—	—	B434 K2X
	S2Y	W	—	1	—	—	—	—	—	—	B434 K2Y
	W1LL	W	1	1	—	—	—	—	—	—	B325 K1L
	M4B	W	—	—	—	1	—	—	—	—	B435 K4B
	M4G	W	—	—	—	1	—	—	—	—	B435 K4G
	M4L	W	—	—	—	1	—	—	—	—	B435 K4L
	M4X	W	—	—	—	1	—	—	—	—	B435 K4X
	M4Y	W	—	—	—	1	—	—	—	—	B435 K4Y
	V3B Sample of Material Reqd.	R,W	—	1	—	1	—	—	—	—	B440 K3B
	V3G Sample of Material Reqd.	R,W	—	1	—	1	—	—	—	—	B440 K3G
	V3X Sample of Material Reqd.	R,W	—	1	—	1	—	—	—	—	B440 K3X
	V3Y Sample of Material Reqd.	R,W	—	1	—	1	—	—	—	—	B440 K3Y
	P2B	W	—	—	—	—	1	—	—	—	B443 K2B
	P2G	W	—	—	—	—	1	—	—	—	B443 K2G
	P2T	W	—	—	—	—	1	—	—	—	B443 K2T
	Q1B	W	—	—	—	—	1	—	—	—	B436 K1B
	Q1G Sample of Material Reqd.	W	—	—	—	—	1	—	—	—	B436 K1G
	Q1T	W	—	—	—	—	1	—	—	—	B436 K1T
	Q1X	W	—	—	—	—	1	—	—	—	B436 K1X
	Q1Y Sample of Material Reqd.	W	—	—	—	—	1	—	—	—	B436 K1Y
	R4B	W	—	—	—	—	1	—	—	—	B433 K4B
	R4G	W	—	—	—	—	1	—	—	—	B433 K4G
	R4L	W	—	—	—	—	1	—	—	—	B433 K4L
	R4T	W	—	—	—	—	1	—	—	—	B433 K4T
	R4X	W	—	—	—	—	1	—	—	—	B433 K4X
	R4Y	W	—	—	—	—	1	—	—	—	B433 K4Y
	2nd Back										
	P2B	W	—	—	—	—	—	—	1	—	B519 K2B
	P2G	W	—	—	—	—	—	—	1	—	B519 K2G
	P2T	W	—	—	—	—	—	—	1	—	B519 K2T
	2nd Back										
	Q2B	W	—	—	—	—	—	—	1	1	B437 K2B
	Q2G	W	—	—	—	—	—	—	1	1	B437 K2G
	Q2L	W	—	—	—	—	—	—	1	1	B437 K2L
	Q2T	W	—	—	—	—	—	—	1	1	B437 K2T
	3rd Back										
	Q2B	W	—	—	—	—	—	—	—	1	B561 K2B
	Q2G	W	—	—	—	—	—	—	—	1	B561 K2G
	Q2L	W	—	—	—	—	—	—	—	1	B561 K2L
	Q2T	W	—	—	—	—	—	—	—	1	B561 K2T
	B1G	P	—	1	—	—	—	—	—	—	C404 K1G
	B1X	P	—	1	—	—	—	—	—	—	C404 K1X
	B1Y	P	—	1	—	—	—	—	—	—	C404 K1Y
	B2G	P	—	1	—	—	—	—	—	—	C413 K2G
	B2X	P	—	1	—	—	—	—	—	—	C413 K2X
	B2Y	P	—	1	—	—	—	—	—	—	C413 K2Y
	C1B	P	—	1	—	—	—	—	—	—	C424 K1B
	C1G	P	—	1	—	—	—	—	—	—	C424 K1G
	C1L	P	—	1	—	—	—	—	—	—	C424 K1L
	C1X	P	—	1	—	—	—	—	—	—	C424 K1X
	C1Y	P	—	1	—	—	—	—	—	—	C424 K1Y
	C2G	P	—	1	—	—	—	—	—	—	C433 K2G
	C2L	P	—	1	—	—	—	—	—	—	C433 K2L
	C2Y	P	—	1	—	—	—	—	—	—	C433 K2Y

TYPE LETTERS Indicates J - Challenger, B - Barracuda, V - Valiant, L - Dart, R - Satellite, W - Coronet, P - Plymouth, D - Dodge, C - Chrysler, Y - Imperial

NUMERALS INDICATE: 21 - 2 DR. SED., 23 - 2 DR. H.T., 29 - FAST BACK, 41 - 4 DR. SED., 43 - 4 DR. H.T., 45 - 6 PASS. STA. WGN., 46 - 9 PASS. STA. WGN.

AR Indicates use as required.
# Indicates parts not listed in any previous parts book
Numerals in parentheses ( ) refer to notes.
★ Indicates change or addition.

Printed in U.S.A.
November, 1974

Right and left part numbers are on same line, first number is right, second number is left.

CODE	PART NAME	MODEL CODES	SEE BOTTOM NOTE 21	23	29	41	43	45	46	PART NUMBER
23-109-4	COVER Cont'd.									
	E3B	P	—	1	—	—	—	—	—	C446 K3B
	E3G	P	—	1	—	—	—	—	—	C446 K3G
	E3L	P	—	1	—	—	—	—	—	C446 K3L
	E3X	P	—	1	—	—	—	—	—	C446 K3X
	E3Y	P	—	1	—	—	—	—	—	C446 K3Y
	D4B, E4B	P	—	1	—	—	—	—	—	C453 K4B
	D4G, E4G	P	—	1	—	—	—	—	—	C453 K4G
	D4L, E4L	P	—	1	—	—	—	—	—	C453 K4L
	D4X, E4X	P	—	1	—	—	—	—	—	C453 K4X
	D4Y, E4Y	P	—	1	—	—	—	—	—	C453 K4Y
	G7B	P	—	1	—	—	—	—	—	C469 K7B
	G7G	P	—	1	—	—	—	—	—	C469 K7G
	G7L	P	—	1	—	—	—	—	—	C469 K7L
	G7X	P	—	1	—	—	—	—	—	C469 K7X
	G7Y	P	—	1	—	—	—	—	—	C469 K7Y
	J3LL	P	—	1	—	—	—	—	—	C516 K3L
	B1G	P	—	—	—	1	—	—	—	C408 K1G
	B1X	P	—	—	—	1	—	—	—	C408 K1X
	B1Y	P	—	—	—	1	—	—	—	C408 K1Y
	B2G	P	—	—	—	1	—	—	—	C417 K2G
	B2X	P	—	—	—	1	—	—	—	C417 K2X
	B2Y	P	—	—	—	1	—	—	—	C417 K2Y
	C1B	P	—	—	—	1	1	—	—	C428 K1B
	C1G	P	—	—	—	1	1	—	—	C428 K1G
	C1L	P	—	—	—	1	1	—	—	C428 K11
	C1X	P	—	—	—	1	1	—	—	C428 K1X
	C1Y	P	—	—	—	1	1	—	—	C428 K1Y
	C2G	P	—	—	—	1	1	—	—	C437 K2G
	C2L	P	—	—	—	1	1	—	—	C437 K2L
	C2Y	P	—	—	—	1	1	—	—	C437 K2Y
	D4B, E4B	P	—	—	—	1	1	—	—	C455 K4B
	D4G, E4G	P	—	—	—	1	1	—	—	C455 K4G
	D4L, E4L	P	—	—	—	1	1	—	—	C455 K4L
	D4X, E4X	P	—	—	—	1	1	—	—	C455 K4X
	D4Y, E4Y	P	—	—	—	1	1	—	—	C455 K4Y
	H8L	P	—	—	—	1	1	—	—	C485 K8L
	J3LL	P	—	—	—	1	1	—	—	C517 K3L
	E3B	P	—	—	—	—	1	—	—	C448 K3B
	E3G	P	—	—	—	—	1	—	—	C448 K3G
	E3L	P	—	—	—	—	1	—	—	C448 K3L
	E3X	P	—	—	—	—	1	—	—	C448 K3X
	E3Y	P	—	—	—	—	1	—	—	C448 K3Y
	G7B	P	—	—	—	—	1	—	—	C471 K7B
	G7G	P	—	—	—	—	1	—	—	C471 K7G
	G7L	P	—	—	—	—	1	—	—	C471 K7L
	G7X	P	—	—	—	—	1	—	—	C471 K7X
	G7Y	P	—	—	—	—	1	—	—	C471 K7Y
	2nd Back									
	A2G	P	—	—	—	—	—	1	—	C507 K2G
	A2T	P	—	—	—	—	—	1	—	C507 K2T
	A2X	P	—	—	—	—	—	1	—	C507 K2X
	2nd Back									
	B2G	P	—	—	—	—	—	1	—	C419 K2G
	B2T	P	—	—	—	—	—	1	—	C419 K2T
	B2X	P	—	—	—	—	—	1	—	C419 K2X
	2nd Back									
	C2B	P	—	—	—	—	—	1	1	C439 K2B
	C2G	P	—	—	—	—	—	1	1	C439 K2G
	C2L	P	—	—	—	—	—	1	1	C439 K2L
	C2T	P	—	—	—	—	—	1	1	C439 K2T

TYPE LETTERS Indicates: J - Challenger, B - Barracuda, V - Valiant, L - Dart, R - Satellite, W - Coronet, P - Plymouth, D - Dodge, C - Chrysler, Y - Imperial

NUMERALS INDICATE: 21 - 2 DR. SED., 23 - 2 DR. H.T., 29 - FAST BACK, 41 - 4 DR. SED., 43 - 4 DR. H.T., 45 - 6 PASS. STA. WGN., 46 - 9 PASS. STA. WGN.

AR Indicates use as required.
# Indicates parts not listed in any previous parts book
Numerals in parentheses ( ) refer to notes.
★ Indicates change or addition.

Printed in U.S.A.
November, 1974

Right and left part numbers are on same line, first number is right, second number is left.

CODE	PART NAME	MODEL CODES	SEE BOTTOM NOTE 21	23		29	41	43	45	46	PART NUMBER
23-109-4	COVER Cont'd.										
	C2X	P	—	—	—	—	—	—	1	1	C439 K2X
	C2Y	P	—	—	—	—	—	—	1	1	C439 K2Y
	3rd Back										
	C2B	P	—	—	—	—	—	—	—	1	C441 K2B
	C2G	P	—	—	—	—	—	—	—	1	C441 K2G
	C2L	P	—	—	—	—	—	—	—	1	C441 K2L
	C2T	P	—	—	—	—	—	—	—	1	C441 K2T
	C2X	P	—	—	—	—	—	—	—	1	C441 K2X
	C2Y	P	—	—	—	—	—	—	—	1	C441 K2Y
	2nd Back										
	D4B, E4B	P	—	—	—	—	—	—	1	1	C457 K4B
	D4G, E4G	P	—	—	—	—	—	—	1	1	C457 K4G
	D4L, E4L	P	—	—	—	—	—	—	1	1	C457 K4L
	D4T, E4T	P	—	—	—	—	—	—	1	1	C457 K4T
	D4X, E4X	P	—	—	—	—	—	—	1	1	C457 K4X
	D4Y, E4Y	P	—	—	—	—	—	—	1	1	C457 K4Y
	3rd Back										
	D4B, E4B	P	—	—	—	—	—	—	—	1	C459 K4B
	D4G, E4G	P	—	—	—	—	—	—	—	1	C459 K4G
	D4L, E4L	P	—	—	—	—	—	—	—	1	C459 K4L
	D4T, E4T	P	—	—	—	—	—	—	—	1	C459 K4T
	D4X, E4X	P	—	—	—	—	—	—	—	1	C459 K4X
	D4Y, E4Y	P	—	—	—	—	—	—	—	1	C459 K4Y
	2nd Back										
	G8L	P	—	—	—	—	—	—	1	1	C477 K8L
	3rd Back										
	G8L	P	—	—	—	—	—	—	—	1	C479 K8L
	A1G	P,D	—	—	—	—	1	—	—	—	C494 K1G
	A1X	P,D	—	—	—	—	1	—	—	—	C494 K1X
	A1Y	P,D	—	—	—	—	1	—	—	—	C494 K1Y
	A2G	P,D	—	—	—	—	1	—	—	—	C505 K2G
	A2X	P,D	—	—	—	—	1	—	—	—	C505 K2X
	A2Y	P,D	—	—	—	—	1	—	—	—	C505 K2Y
	K1Y	P,D	—	—	—	—	1	—	—	—	C641 K1Y
	K2X	P,D	—	—	—	—	1	—	—	—	C637 K2X
	K2Y	P,D	—	—	—	—	1	—	—	—	C637 K2Y
	A1G	D	—	1	—	—	—	—	—	—	C490 K1G
	A1X	D	—	1	—	—	—	—	—	—	C490 K1X
	A1Y	D	—	1	—	—	—	—	—	—	C490 K1Y
	A2G	D	—	1	—	—	—	—	—	—	C501 K2G
	A2X	D	—	1	—	—	—	—	—	—	C501 K2X
	A2Y	D	—	1	—	—	—	—	—	—	C501 K2Y
	F4B	D	—	1	—	—	—	—	—	—	C620 K4B
	F4G	D	—	1	—	—	—	—	—	—	C620 K4G
	F4L	D	—	1	—	—	—	—	—	—	C620 K4L
	F4X	D	—	1	—	—	—	—	—	—	C620 K4X
	F4Y	D	—	1	—	—	—	—	—	—	C620 K4Y
	M1B	D	—	1	—	—	—	—	—	—	C631 K1B
	M1G	D	—	1	—	—	—	—	—	—	C631 K1G
	M1L	D	—	1	—	—	—	—	—	—	C631 K1L
	M1X	D	—	1	—	—	—	—	—	—	C631 K1X
	M1Y	D	—	1	—	—	—	—	—	—	C631 K1Y
	P1G	D	—	1	—	—	—	—	—	—	C604 K1G
	P1L	D	—	1	—	—	—	—	—	—	C604 K1L
	P1X	D	—	1	—	—	—	—	—	—	C604 K1X
	P1Y	D	—	1	—	—	—	—	—	—	C604 K1Y
	R2G	D	—	1	—	—	—	—	—	—	C616 K2G
	R2L	D	—	1	—	—	—	—	—	—	C616 K2L

TYPE LETTERS Indicates J - Challenger, B - Barracuda, V - Valiant, L - Dart, R - Satellite, W - Coronet, P - Plymouth, D - Dodge, C - Chrysler, Y - Imperial

NUMERALS INDICATE: 21 - 2 DR. SED., 23 - 2 DR. H.T., 29 - FAST BACK, 41 - 4 DR. SED., 43 - 4 DR. H.T., 45 - 6 PASS. STA. WGN., 46 - 9 PASS. STA. WGN.

AR Indicates use as required.
# Indicates parts not listed in any previous parts book
Numerals in parentheses ( ) refer to notes.
★ Indicates change or addition.

Printed in U.S.A.
November, 1974

Right and left part numbers are on same line, first number is right, second number is left.

CODE	PART NAME	MODEL CODES	SEE BOTTOM NOTE 21	23	29	41	43	45	46	PART NUMBER
23-109-4	COVER Cont'd.									
	R2X	D	—	1	—	—	—	—	—	C616 K2X
	R2Y	D	—	1	—	—	—	—	—	C616 K2Y
	V2G Sample of Material Reqd.	D	—	1	—	—	—	—	—	C657 K2G
	V2L	D	—	1	—	—	—	—	—	C657 K2L
	V2Y Sample of Material Reqd.	D	—	1	—	—	—	—	—	C657 K2Y
	W7B Sample of Material Reqd.	D	—	1	—	—	—	—	—	C678 K7B
	W7G Sample of Material Reqd.	D	—	1	—	—	—	—	—	C678 K7G
	W7L Sample of Material Reqd.	D	—	1	—	—	—	—	—	C678 K7L
	W7X Sample of Material Reqd.	D	—	1	—	—	—	—	—	C678 K7X
	W7Y Sample of Material Reqd.	D	—	1	—	—	—	—	—	C678 K7Y
	N3XW	D	—	1	—	—	—	—	—	C686 K3N
	P1G	D	—	—	—	1	—	—	—	C605 K1G
	P1L	D	—	—	—	1	—	—	—	C605 K1L
	P1X	D	—	—	—	1	—	—	—	C605 K1X
	P1Y	D	—	—	—	1	—	—	—	C605 K1Y
	R2G	D	—	—	—	1	—	—	—	C617 K2G
	R2L	D	—	—	—	1	—	—	—	C617 K2L
	R2X	D	—	—	—	1	—	—	—	C617 K2X
	R2Y	D	—	—	—	1	—	—	—	C617 K2Y
	F4B	D	—	—	—	1	1	—	—	C621 K4B
	F4G	D	—	—	—	1	1	—	—	C621 K4G
	F4L	D	—	—	—	1	1	—	—	C621 K4L
	F4X	D	—	—	—	1	1	—	—	C621 K4X
	F4Y	D	—	—	—	1	1	—	—	C621 K4Y
	M1B	D	—	—	—	1	1	—	—	C632 K1B
	M1G	D	—	—	—	1	1	—	—	C632 K1G
	M1L	D	—	—	—	1	1	—	—	C632 K1L
	M1X	D	—	—	—	1	1	—	—	C632 K1X
	M1Y	D	—	—	—	1	1	—	—	C632 K1Y
	V2G Sample of Material Reqd.	D	—	—	—	1	1	—	—	C658 K2G
	V2L	D	—	—	—	1	1	—	—	C658 K2L
	V2Y Sample of Material Reqd.	D	—	—	—	1	1	—	—	C658 K2Y
	W7B Sample of Material Reqd.	D	—	—	—	1	1	—	—	C679 K7B
	W7G Sample of Material Reqd.	D	—	—	—	1	1	—	—	C679 K7G
	W7L Sample of Material Reqd.	D	—	—	—	1	1	—	—	C679 K7L
	W7X Sample of Material Reqd.	D	—	—	—	1	1	—	—	C679 K7X
	W7Y Sample of Material Reqd.	D	—	—	—	1	1	—	—	C679 K7Y
	N3XW	D	—	—	—	—	1	—	—	C687 K3N
	2nd Back									
	R2G	D	—	—	—	—	—	1	—	C667 K2G
	R2L	D	—	—	—	—	—	1	—	C667 K2L
	R2T	D	—	—	—	—	—	1	—	C667 K2T
	R2X	D	—	—	—	—	—	1	—	C667 K2X
	2nd Back									
	F4B	D	—	—	—	—	—	1	1	C665 K4B
	F4G	D	—	—	—	—	—	1	1	C665 K4G
	F4L	D	—	—	—	—	—	1	1	C665 K4L
	F4T	D	—	—	—	—	—	1	1	C665 K4T
	F4X	D	—	—	—	—	—	1	1	C665 K4X
	F4Y	D	—	—	—	—	—	1	1	C665 K4Y
	3rd Back									
	F4B	D	—	—	—	—	—	—	1	C623 K4B
	F4G	D	—	—	—	—	—	—	1	C623 K4G
	F4L	D	—	—	—	—	—	—	1	C623 K4L
	F4T	D	—	—	—	—	—	—	1	C623 K4T
	F4X	D	—	—	—	—	—	—	1	C623 K4X
	F4Y	D	—	—	—	—	—	—	1	C623 K4Y

TYPE LETTERS Indicates J - Challenger, B - Barracuda, V - Valiant, L - Dart, R - Satellite, W - Coronet, P - Plymouth, D - Dodge, C - Chrysler, Y - Imperial

NUMERALS INDICATE: 21 - 2 DR. SED., 23 - 2 DR. H.T., 29 - FAST BACK, 41 - 4 DR. SED., 43 - 4 DR. H.T., 45 - 6 PASS. STA. WGN., 46 - 9 PASS. STA. WGN.

AR Indicates use as required.
# Indicates parts not listed in any previous parts book
Numerals in parentheses ( ) refer to notes.
★ Indicates change or addition.

Printed in U.S.A.
November, 1974

Right and left part numbers are on same line, first number is right, second number is left.

CODE	PART NAME	MODEL CODES	SEE BOTTOM NOTE 21	23	29	41	43	45	46	PART NUMBER
23-109-4	COVER Cont'd.									
	2nd Back									
	S8B	D	—	—	—	—	—	1	1	C647 K8B
	S8G	D	—	—	—	—	—	1	1	C647 K8G
	S8L	D	—	—	—	—	—	1	1	C647 K8L
	S8T	D	—	—	—	—	—	1	1	C647 K8T
	S8X	D	—	—	—	—	—	1	1	C647 K8X
	S8Y	D	—	—	—	—	—	1	1	C647 K8Y
	3rd Back									
	S8B	D	—	—	—	—	—	—	1	C649 K8B
	S8G	D	—	—	—	—	—	—	1	C649 K8G
	S8L	D	—	—	—	—	—	—	1	C649 K8L
	S8T	D	—	—	—	—	—	—	1	C649 K8T
	S8X	D	—	—	—	—	—	—	1	C649 K8X
	S8Y	D	—	—	—	—	—	—	1	C649 K8Y
	2nd Back									
	V2B	D	—	—	—	—	—	1	1	C660 K2B
	V2G Sample of Material Reqd.	D	—	—	—	—	—	1	1	C660 K2G
	V2L	D	—	—	—	—	—	1	1	C660 K2L
	V2T	D	—	—	—	—	—	1	1	C660 K2T
	V2X	D	—	—	—	—	—	1	1	C660 K2X
	V2Y Sample of Material Reqd.	D	—	—	—	—	—	1	1	C660 K2Y
	3rd Back									
	V2B	D	—	—	—	—	—	—	1	C662 K2B
	V2G Sample of Material Reqd.	D	—	—	—	—	—	—	1	C662 K2G
	V2L	D	—	—	—	—	—	—	1	C662 K2L
	V2T	D	—	—	—	—	—	—	1	C662 K2T
	V2X	D	—	—	—	—	—	—	1	C662 K2X
	V2Y Sample of Material Reqd.	D	—	—	—	—	—	—	1	C662 K2Y
	A1B	C	—	1	—	—	—	—	—	G407 K1B
	A1G	C	—	1	—	—	—	—	—	G407 K1G
	A1L	C	—	1	—	—	—	—	—	G407 K1L
	A1X	C	—	1	—	—	—	—	—	G407 K1X
	A1Y	C	—	1	—	—	—	—	—	G407 K1Y
	B2B	C	—	1	—	—	—	—	—	G416 K2B
	B2G	C	—	1	—	—	—	—	—	G416 K2G
	B2L Sample of Material Reqd.	C	—	1	—	—	—	—	—	G416 K2L
	B2XW Sample of Material Reqd.	C	—	1	—	—	—	—	—	G416 K2W
	B2X	C	—	1	—	—	—	—	—	G416 K2X
	B2Y	C	—	1	—	—	—	—	—	G416 K2Y
	D7B	C	—	1	—	—	—	—	—	G461 K7B
	D7G	C	—	1	—	—	—	—	—	G461 K7G
	D7L	C	—	1	—	—	—	—	—	G461 K7L
	D7X	C	—	1	—	—	—	—	—	G461 K7X
	D7Y	C	—	1	—	—	—	—	—	G461 K7Y
	D8B	C	—	1	—	—	—	—	—	G477 K8B
	D8G	C	—	1	—	—	—	—	—	G477 K8G
	D8L	C	—	1	—	—	—	—	—	G477 K8L
	D8XW	C	—	1	—	—	—	—	—	G477 K8W
	D8X	C	—	1	—	—	—	—	—	G477 K8X
	D8Y	C	—	1	—	—	—	—	—	G477 K8Y
	C1KW	C	—	1	—	—	—	—	—	G498 K1K
	H7B Sample of Material Reqd.	C	—	1	—	—	—	—	—	G428 K7B
	H7G	C	—	1	—	—	—	—	—	G428 K7G
	H7L	C	—	1	—	—	—	—	—	G428 K7L
	H7X	C	—	1	—	—	—	—	—	G428 K7X
	H7Y	C	—	1	—	—	—	—	—	G428 K7Y
	H8B	C	—	1	—	—	—	—	—	G440 K8B
	H8G	C	—	1	—	—	—	—	—	G440 K8G

TYPE LETTERS Indicates J - Challenger V - Valiant R - Satellite P - Plymouth C - Chrysler
B - Barracuda L - Dart W - Coronet D - Dodge Y - Imperial

NUMERALS INDICATE: 21 - 2 DR. SED. 41 - 4 DR. SED. 45 - 6 PASS. STA. WGN.
23 - 2 DR. H.T. 29 - FAST BACK 43 - 4 DR. H.T. 46 - 9 PASS. STA. WGN.

AR Indicates use as required.
# Indicates parts not listed in any previous parts book
Numerals in parentheses ( ) refer to notes.
★ Indicates change or addition.

Printed in U.S.A.
November, 1974

Right and left part numbers are on same line, first number is right, second number is left.

CODE	PART NAME	MODEL CODES	SEE BOTTOM NOTE 21	23	29	41	43	45	46	PART NUMBER
23-109-4	COVER Cont'd.									
	H8L	C	—	1	—	—	—	—	—	— G440 K8L
	H8XW, H8YW	C	—	1	—	—	—	—	—	— G440 K8W
	H8X	C	—	1	—	—	—	—	—	— G440 K8X
	H8Y	C	—	1	—	—	—	—	—	— G440 K8Y
	A1B	C	—	—	—	—	1	1	—	— G408 K1B
	A1G	C	—	—	—	—	1	1	—	— G408 K1G
	A1L	C	—	—	—	—	1	1	—	— G408 K1L
	A1X	C	—	—	—	—	1	1	—	— G408 K1X
	A1Y	C	—	—	—	—	1	1	—	— G408 K1Y
	B2B	C	—	—	—	—	1	1	—	— G417 K2B
	B2G	C	—	—	—	—	1	1	—	— G417 K2G
	B2L Sample of Material Reqd.	C	—	—	—	—	1	1	—	— G417 K2L
	B2XW Sample of Material Reqd.	C	—	—	—	—	1	1	—	— G417 K2W
	B2X	C	—	—	—	—	1	1	—	— G417 K2X
	B2Y	C	—	—	—	—	1	1	—	— G417 K2Y
	D7B	C	—	—	—	—	1	1	—	— G462 K7B
	D7G	C	—	—	—	—	1	1	—	— G462 K7G
	D7L	C	—	—	—	—	1	1	—	— G462 K7L
	D7X	C	—	—	—	—	1	1	—	— G462 K7X
	D7Y	C	—	—	—	—	1	1	—	— G462 K7Y
	D8B	C	—	—	—	—	1	1	—	— G478 K8B
	D8G	C	—	—	—	—	1	1	—	— G478 K8G
	D8L	C	—	—	—	—	1	1	—	— G478 K8L
	D8XW	C	—	—	—	—	1	1	—	— G478 K8W
	D8X	C	—	—	—	—	1	1	—	— G478 K8X
	D8Y	C	—	—	—	—	1	1	—	— G478 K8Y
	E9B	C	—	—	—	—	1	1	—	— G445 K9B
	E9G	C	—	—	—	—	1	1	—	— G445 K9G
	E9L	C	—	—	—	—	1	1	—	— G445 K9L
	E9X	C	—	—	—	—	1	1	—	— G445 K9X
	E9Y	C	—	—	—	—	1	1	—	— G445 K9Y
	EHB	C	—	—	—	—	1	1	—	— G449 KHB
	EHG	C	—	—	—	—	1	1	—	— G449 KHG
	EHL	C	—	—	—	—	1	1	—	— G449 KHL
	EHXW	C	—	—	—	—	1	1	—	— G449 KHW
	EHX	C	—	—	—	—	1	1	—	— G449 KHX
	EHY	C	—	—	—	—	1	1	—	— G449 KHY
	C1KW	C	—	—	—	—	1	1	—	— G499 K1K
	H7B Sample of Material Reqd.	C	—	—	—	—	1	1	—	— G429 K7B
	H7G	C	—	—	—	—	1	1	—	— G429 K7G
	H7L	C	—	—	—	—	1	1	—	— G429 K7L
	H7X	C	—	—	—	—	1	1	—	— G429 K7X
	H7Y	C	—	—	—	—	1	1	—	— G429 K7Y
	H8B	C	—	—	—	—	1	1	—	— G441 K8B
	H8G	C	—	—	—	—	1	1	—	— G441 K8G
	H8L	C	—	—	—	—	1	1	—	— G441 K8L
	H8XW	C	—	—	—	—	1	1	—	— G441 K8W
	H8X	C	—	—	—	—	1	1	—	— G441 K8X
	H8Y	C	—	—	—	—	1	1	—	— G441 K8Y
	2nd Back									
	D7G	C	—	—	—	—	—	—	1	1 G463 K7G
	D7L	C	—	—	—	—	—	—	1	1 G463 K7L
	2nd Back									
	D8B	C	—	—	—	—	—	—	1	1 G479 K8B
	D8G	C	—	—	—	—	—	—	1	1 G479 K8G
	D8L	C	—	—	—	—	—	—	1	1 G479 K8L
	D8T	C	—	—	—	—	—	—	1	1 G479 K8T
	D8X	C	—	—	—	—	—	—	1	1 G479 K8X

TYPE LETTERS Indicates J - Challenger, B - Barracuda, V - Valiant, L - Dart, R - Satellite, W - Coronet, P - Plymouth, D - Dodge, C - Chrysler, Y - Imperial

NUMERALS INDICATE: 21 - 2 DR. SED., 23 - 2 DR. H.T., 29 - FAST BACK, 41 - 4 DR. SED., 43 - 4 DR. H.T., 45 - 6 PASS. STA. WGN., 46 - 9 PASS. STA. WGN.

AR Indicates use as required.
# Indicates parts not listed in any previous parts book
Numerals in parentheses ( ) refer to notes.
★ Indicates change or addition.

Printed in U.S.A.
November, 1974

Right and left part numbers are on same line, first number is right, second number is left.

CODE	PART NAME	MODEL CODES	SEE BOTTOM NOTE 21	23	29	41	43	45	46	PART NUMBER
23-109-4	COVER Cont'd.									
	D8Y	C	—	—	—	—	—	—	1	1	G479 K8Y
	3rd Back									
	D8B	C	—	—	—	—	—	—	—	1	G465 K7B
	D8G, D7G	C	—	—	—	—	—	—	—	1	G465 K7G
	D8L, D7L	C	—	—	—	—	—	—	—	1	G465 K7L
	D8T	C	—	—	—	—	—	—	—	1	G465 K7T
	D8X	C	—	—	—	—	—	—	—	1	G465 K7X
	D8Y	C	—	—	—	—	—	—	—	1	G465 K7Y
	PDB (Up to Build Date 1-15-74)	Y	—	1	—	—	—	—	—	—	G620 KDB
	PDB (After Build Date 1-15-74)	Y	—	1	—	—	—	—	—	—	G620 KDD
	PDG (Up to Build Date 1-15-74)	Y	—	1	—	—	—	—	—	—	G620 KDG
	PDG (After Build Date 1-15-74)	Y	—	1	—	—	—	—	—	—	G620 KDF
	PDL (Up to Build Date 1-15-74)	Y	—	1	—	—	—	—	—	—	G620 KDL
	PDL (After Build Date 1-15-74)	Y	—	1	—	—	—	—	—	—	G620 KDP
	PDT	Y	—	1	—	—	—	—	—	—	G620 KDT
	PDX	Y	—	1	—	—	—	—	—	—	G620 KDX
	PDY	Y	—	1	—	—	—	—	—	—	G620 KDY
	PLB	Y	—	1	—	—	—	—	—	—	G621 KLB
	PLG	Y	—	1	—	—	—	—	—	—	G621 KLG
	PLL	Y	—	1	—	—	—	—	—	—	G621 KLL
	PLT	Y	—	1	—	—	—	—	—	—	G621 KLT
	PLXW	Y	—	1	—	—	—	—	—	—	G621 KLW
	PLX	Y	—	1	—	—	—	—	—	—	G621 KLX
	PLY	Y	—	1	—	—	—	—	—	—	G621 KLY
	PDB (Up to Build Date 1-15-74)	Y	—	—	—	—	—	1	—	—	G622 KDB
	PDB (After Build Date 1-15-74)	Y	—	—	—	—	—	1	—	—	G622 KDD
	PDG (Up to Build Date 1-15-74)	Y	—	—	—	—	—	1	—	—	G622 KDG
	PDG (After Build Date 1-15-74)	Y	—	—	—	—	—	1	—	—	G622 KDF
	PDL (Up to Build Date 1-15-74)	Y	—	—	—	—	—	1	—	—	G622 KDL
	PDL (After Build Date 1-15-74)	Y	—	—	—	—	—	1	—	—	G622 KDP
	PDT	Y	—	—	—	—	—	1	—	—	G622 KDT
	PDX	Y	—	—	—	—	—	1	—	—	G622 KDX
	PDY	Y	—	—	—	—	—	1	—	—	G622 KDY
	PLB	Y	—	—	—	—	—	1	—	—	G623 KLB
	PLG	Y	—	—	—	—	—	1	—	—	G623 KLG
	PLL	Y	—	—	—	—	—	1	—	—	G623 KLL
	PLT	Y	—	—	—	—	—	1	—	—	G623 KLT
	PLXW	Y	—	—	—	—	—	1	—	—	G623 KLW
	PLX	Y	—	—	—	—	—	1	—	—	G623 KLX
	PLY	Y	—	—	—	—	—	1	—	—	G623 KLY
	TAXI ONLY									
	Black U.S.	V,L	—	—	—	1	—	—	—		3740 775
	Special Trim									
	C2X U.S. & Canada	P	—	—	—	1	—	—	—		3740 880
23-109-5	INSERT, 2nd Seat Back Panel Carpet									
	All Codes 21 1/4" x 40 1/2"	R,W	—	—	—	—	—	1	1		W600 KB7
		R,W	—	—	—	—	—	1	1		W600 KG7
		R,W	—	—	—	—	—	1	1		W600 KL5
		R,W	—	—	—	—	—	1	1		W600 KT8
	2nd Seat Back Cover Panel Carpet									
	All Codes 10 1/2" x 42"	R,W	—	—	—	—	—	1	1		W605 KB7
		R,W	—	—	—	—	—	1	1		W605 KG7
		R,W	—	—	—	—	—	1	1		W605 KL5
		R,W	—	—	—	—	—	1	1		W605 KT8
	INSERT, 3rd Seat Back Panel Carpet									
	All Codes 21 1/2" x 42"	R,W	—	—	—	—	—	—	1		W602 KB7
		R,W	—	—	—	—	—	—	1		W602 KG7
		R,W	—	—	—	—	—	—	1		W602 KL5

TYPE LETTERS Indicates: J - Challenger, B - Barracuda, V - Valiant, L - Dart, R - Satellite, W - Coronet, P - Plymouth, D - Dodge, C - Chrysler, Y - Imperial

NUMERALS INDICATE: 21 - 2 DR. SED., 23 - 2 DR. H.T., 29 - FAST BACK, 41 - 4 DR. SED., 43 - 4 DR. H.T., 45 - 6 PASS. STA. WGN., 46 - 9 PASS. STA. WGN.

AR Indicates use as required.
# Indicates parts not listed in any previous parts book
Numerals in parentheses ( ) refer to notes.
★ Indicates change or addition.

Printed in U.S.A.
November, 1974

Right and left part numbers are on same line, first number is right, second number is left.

CODE	PART NAME	MODEL CODES	SEE BOTTOM NOTE 21	23	29	41	43	45	46	PART NUMBER
23-109-5	INSERT Cont'd.									
		R,W	—	—	—	—	—	—	1	W602 KT8
	3rd Seat Back Support Panel Carpet									
	All Codes 13 1/2" x 42"	R,W	—	—	—	—	—	—	1	W603 KB7
		R,W	—	—	—	—	—	—	1	W603 KG7
		R,W	—	—	—	—	—	—	1	W603 KL5
		R,W	—	—	—	—	—	—	1	W603 KT8
	Insert, 2nd Seat Back Panel Carpet									
	All Codes 18" x 44 1/2"	P,D	—	—	—	—	—	1	1	W611 KB7
		P,D	—	—	—	—	—	1	1	W611 KG7
		P,D	—	—	—	—	—	1	1	W611 KL5
		P,D	—	—	—	—	—	1	1	W611 KT8
		P,D	—	—	—	—	—	1	1	W611 KX9
		P,D	—	—	—	—	—	1	1	W611 KY7
	2nd Seat Support Panel Carpet									
	All Codes 12 1/2" x 44 1/2"	P,D	—	—	—	—	—	1	1	W612 KB7
		P,D	—	—	—	—	—	1	1	W612 KG7
		P,D	—	—	—	—	—	1	1	W612 KL5
		P,D	—	—	—	—	—	1	1	W612 KT8
		P,D	—	—	—	—	—	1	1	W612 KX9
		P,D	—	—	—	—	—	1	1	W612 KY7
	Insert, 2nd Seat Back Panel Carpet & Mldg.									
	All Codes 17 1/2" x 44 1/2"	C	—	—	—	—	—	1	1	W619 KB7
		C	—	—	—	—	—	1	1	W619 KG7
		C	—	—	—	—	—	1	1	W619 KL5
		C	—	—	—	—	—	1	1	W619 KT8
		C	—	—	—	—	—	1	1	W619 KX9
		C	—	—	—	—	—	1	1	W619 KY7
	2nd Seat Support Panel Carpet & Mldg.									
	All Codes 12 1/2" x 44 1/2"	C	—	—	—	—	—	1	1	W620 KB7
		C	—	—	—	—	—	1	1	W620 KG7
		C	—	—	—	—	—	1	1	W620 KL5
		C	—	—	—	—	—	1	1	W620 KT8
		C	—	—	—	—	—	1	1	W620 KX9
		C	—	—	—	—	—	1	1	W620 KY7
	Insert, Rear Floor Pan Cover Panel Front Carpet									
	All Codes 17 3/4" x 40 1/2"	P,D	—	—	—	—	—	1	—	W614 KB7
		P,D	—	—	—	—	—	1	—	W614 KG7
		P,D	—	—	—	—	—	1	—	W614 KL5
		P,D	—	—	—	—	—	1	—	W614 KT8
		P,D	—	—	—	—	—	1	—	W614 KX9
		P,D	—	—	—	—	—	1	—	W614 KY7
	Insert, 3rd Seat Support Panel Carpet									
	All Codes 17 3/4" x 40 1/2"	P,D	—	—	—	—	—	—	1	W614 KB7
		P,D	—	—	—	—	—	—	1	W614 KG7
		P,D	—	—	—	—	—	—	1	W614 KL5
		P,D	—	—	—	—	—	—	1	W614 KT8
		P,D	—	—	—	—	—	—	1	W614 KX9
		P,D	—	—	—	—	—	—	1	W614 KY7
	Insert, Rear Floor Pan Cover Panel Front Carpet & Mldg.									
	All Codes 17 3/4" x 40 1/2"	C	—	—	—	—	—	1	—	W622 KB7
		C	—	—	—	—	—	1	—	W622 KG7
		C	—	—	—	—	—	1	—	W622 KL5
		C	—	—	—	—	—	1	—	W622 KT8

TYPE LETTERS Indicates: J - Challenger; B - Barracuda; V - Valiant; L - Dart; R - Satellite; W - Coronet; P - Plymouth; D - Dodge; C - Chrysler; Y - Imperial

NUMERALS INDICATE: 21 - 2 DR. SED.; 23 - 2 DR. H.T.; 29 - FAST BACK; 41 - 4 DR. SED.; 43 - 4 DR. H.T.; 45 - 6 PASS. STA. WGN.; 46 - 9 PASS. STA. WGN.

AR Indicates use as required.
# Indicates parts not listed in any previous parts book
Numerals in parentheses ( ) refer to notes.
★ Indicates change or addition.

Printed in U.S.A.
November, 1974

Right and left part numbers are on same line, first number is right, second number is left.

CODE	PART NAME	MODEL CODES	SEE BOTTOM NOTE 21	23	29	41	43	45	46	PART NUMBER
23-109-5	INSERT Cont'd.									
		C	—	—	—	—	—	—	1	— W622 KX9
		C	—	—	—	—	—	—	1	— W622 KY7
	Insert, 3rd Seat Support Panel Carpet & Mldg.									
	All Codes 17 3/4" x 40 1/2"	C	—	—	—	—	—	—	—	1 W622 KB7
		C	—	—	—	—	—	—	—	1 W622 KG7
		C	—	—	—	—	—	—	—	1 W622KL5
		C	—	—	—	—	—	—	—	1 W622 KT8
		C	—	—	—	—	—	—	—	1 W622 KX9
		C	—	—	—	—	—	—	—	1 W622 KY7
	Insert, 3rd Seat Back Panel Carpet									
	All Codes 20" x 40 1/2"	P,D	—	—	—	—	—	—	—	1 W616 KB7
		P,D	—	—	—	—	—	—	—	1 W616 KG7
		P,D	—	—	—	—	—	—	—	1 W616 KL5
		P,D	—	—	—	—	—	—	—	1 W616 KT8
		P,D	—	—	—	—	—	—	—	1 W616 KX9
		P,D	—	—	—	—	—	—	—	1 W616 KY7
	Insert, 3rd Seat Back Panel Carpet & Mldg.									
	All Codes 20" x 40 1/2"	C	—	—	—	—	—	—	—	1 W624 KB7
		C	—	—	—	—	—	—	—	1 W624 KG7
		C	—	—	—	—	—	—	—	1 W624 KL5
		C	—	—	—	—	—	—	—	1 W624 KT8
		C	—	—	—	—	—	—	—	1 W624 KX9
		C	—	—	—	—	—	—	—	1 W624 KY7
23-109-8	COVER, Folding Seat Pivot Bracket									
	All Codes	V,L	—	—	—	1	—	—	—	— W808-9 KB7
		V,L	—	—	—	1	—	—	—	— W808-9 KG6
		V,L	—	—	—	1	—	—	—	— W808-9 KL2
		V,L	—	—	—	1	—	—	—	— W808-9 JW1
		V,L	—	—	—	1	—	—	—	— W808-9 JX9
		V,L	—	—	—	1	—	—	—	— W808-9 KY4
23-109-35	CUSHION, Rear									
	For Complete Assembly, Order by Description, Vehicle Serial Number and Trim Code.									
23-109-36	COVER, Rear Cushion									
	A1B Sample of Material Reqd.	V,L	—	1	—	—	—	—	—	— A338 K1B
	A1G Sample of Material Reqd.	V,L	—	1	—	—	—	—	—	— A338 K1G
	A1X Sample of Material Reqd.	V,L	—	1	—	—	—	—	—	— A338 K1X
	D2B Sample of Material Reqd.	V,L	—	1	—	—	—	—	—	— A309 K2B
	D2G	V,L	—	1	—	—	—	—	—	— A309 K2G
	D2L Sample of Material Reqd.	V,L	—	1	—	—	—	—	—	— A309 K2L
	D2X	V,L	—	1	—	—	—	—	—	— A309 K2X
	D2Y Sample of Material Reqd.	V,L	—	1	—	—	—	—	—	— A309 K2Y
	F3B	V,L	—	1	—	—	—	—	—	— A350 K3B
	F3G Sample of Material Reqd.	V,L	—	1	—	—	—	—	—	— A350 K3G
	F3L Sample of Material Reqd.	V,L	—	1	—	—	—	—	—	— A350 K3L
	F3X	V,L	—	1	—	—	—	—	—	— A350 K3X
	H1LL, H5LL	V,L	—	1	—	—	—	—	—	— A354 K5L
	H5GG	V,L	—	1	—	—	—	—	—	— A354 K5G
	E2B Sample of Material Reqd.	V,L	—	1	—	1	—	—	—	— A309 K2B
	E2G	V,L	—	1	—	1	—	—	—	— A309 K2G
	E2L Sample of Material Reqd.	V,L	—	1	—	1	—	—	—	— A309 K2L
	E2X	V,L	—	1	—	1	—	—	—	— A309 K2X
	E2Y Sample of Material Reqd.	V,L	—	1	—	1	—	—	—	— A309 K2Y
	A1B Sample of Material Reqd.	V,L	—	—	—	1	—	—	—	— A339 K1B
	A1G Sample of Material Reqd.	V,L	—	—	—	1	—	—	—	— A339 K1G
	A1X Sample of Material Reqd.	V,L	—	—	—	1	—	—	—	— A339 K1X
	D2B Sample of Material Reqd.	V,L	—	—	—	1	—	—	—	— A310 K2B

TYPE LETTERS Indicates: J - Challenger, B - Barracuda, V - Valiant, L - Dart, R - Satellite, W - Coronet, P - Plymouth, D - Dodge, C - Chrysler, Y - Imperial

NUMERALS INDICATE: 21 - 2 DR. SED., 23 - 2 DR. H.T., 29 - FAST BACK, 41 - 4 DR. SED., 43 - 4 DR. H.T., 45 - 6 PASS. STA. WGN., 46 - 9 PASS. STA. WGN.

AR Indicates use as required.
# Indicates parts not listed in any previous parts book
Numerals in parentheses ( ) refer to notes.
★ Indicates change or addition.

Printed in U.S.A.
November, 1974

Right and left part numbers are on same line, first number is right, second number is left.

CODE	PART NAME	MODEL CODES	SEE BOTTOM NOTE 21	23		29	41	43	45	46	PART NUMBER
23-109-36	COVER Cont'd.										
	D2G	V,L	—	—	—	1	—	—	—	—	A310 K2G
	D2L Sample of Material Reqd.	V,L	—	—	—	1	—	—	—	—	A310 K2L
	D2X	V,L	—	—	—	1	—	—	—	—	A310 K2X
	D2Y Sample of Material Reqd.	V,L	—	—	—	1	—	—	—	—	A310 K2Y
	C4B, F4B	V,L	—	—	—	1	—	—	—	—	A319 K4B
	C4G, F4G Sample of Material Reqd.	V,L	—	—	—	1	—	—	—	—	A319 K4G
	C4L, C6L, F4L, F6L	V,L	—	—	—	1	—	—	—	—	A319 K4L
	C4X, C6X, F4X, F6X	V,L	—	—	—	1	—	—	—	—	A319 K4X
	C6XW, F6XW	V,L	—	—	—	1	—	—	—	—	A319 K4W
	J6VW	L	—	—	—	1	—	—	—	—	A362 K6V
	M2YW	V,L	—	—	—	1	—	—	—	—	A372 K2Y
	A2B Sample of Material Reqd.	V,L	—	—	—	—	1	—	—	—	A303 K2B
	A2G Sample of Material Reqd.	V,L	—	—	—	—	1	—	—	—	A303 K2G
	A2X Sample of Material Reqd.	V,L	—	—	—	—	1	—	—	—	A303 K2X
	C4B, F4B	V,L	—	—	—	—	1	—	—	—	A321 K4B
	C4G, F4G Sample of Material Reqd.	V,L	—	—	—	—	1	—	—	—	A321 K4G
	C4L, F4L	V,L	—	—	—	—	1	—	—	—	A321 K4L
	C4X, F4X	V,L	—	—	—	—	1	—	—	—	A321 K4X
	H1LL, H5LL	V,L	—	—	—	—	1	—	—	—	A355 K5L
	H5GG	V,L	—	—	—	—	1	—	—	—	A355 K5G
	L1B Sample of Material Reqd.	V,L	—	—	—	—	1	—	—	—	A332 K1B
	L1G Sample of Material Reqd.	V,L	—	—	—	—	1	—	—	—	A332 K1G
	L1L Sample of Material Reqd.	V,L	—	—	—	—	1	—	—	—	A332 K1L
	L1Y Sample of Material Reqd.	V,L	—	—	—	—	1	—	—	—	A332 K1Y
	All Codes	B,J	—	1	—	—	—	—	—	—	A452 K6B
		B,J	—	1	—	—	—	—	—	—	A452 K6G
	Sample of Material Reqd.	B,J	—	1	—	—	—	—	—	—	A452 K6X
	Sample of Material Reqd.	B,J	—	1	—	—	—	—	—	—	A452 K6W
	C2B	R	1	1	—	—	—	—	—	—	B389 K2B
	C2G	R	1	1	—	—	—	—	—	—	B389 K2G
	C2L	R	1	1	—	—	—	—	—	—	B389 K2L
	C2X	R	1	1	—	—	—	—	—	—	B389 K2X
	C2Y	R	1	1	—	—	—	—	—	—	B389 K2Y
	V1YW Sample of Material Reqd.	R	1	1	—	—	—	—	—	—	B327 K1W
	F1B	R	1	1	—	—	—	—	—	—	B396 K1B
	F1G	R	1	1	—	—	—	—	—	—	B396 K1G
	F1EW	R	1	1	—	—	—	—	—	—	B396 K1W
	F1X	R	1	1	—	—	—	—	—	—	B396 K1X
	F1Y	R	1	1	—	—	—	—	—	—	B396 K1Y
	E5EW, W5EW	R	1	1	—	—	—	—	—	—	B405 K5E
	A2B	R	—	—	—	—	1	—	—	—	B387 K2B
	A2G	R	—	—	—	—	1	—	—	—	B387 K2G
	A2T	R	—	—	—	—	1	—	—	—	B387 K2T
	F1B	R	—	—	—	—	1	—	—	—	B397 K1B
	F1G	R	—	—	—	—	1	—	—	—	B397 K1G
	F1T	R	—	—	—	—	1	—	—	—	B397 K1T
	F1X	R	—	—	—	—	1	—	—	—	B397 K1X
	F1Y	R	—	—	—	—	1	—	—	—	B397 K1Y
	F2B	R	—	—	—	—	1	—	—	—	B398 K2B
	F2G	R	—	—	—	—	1	—	—	—	B398 K2G
	F2L	R	—	—	—	—	1	—	—	—	B398 K2L
	F2T	R	—	—	—	—	1	—	—	—	B398 K2T
	F2X	R	—	—	—	—	1	—	—	—	B398 K2X
	F2Y	R	—	—	—	—	1	—	—	—	B398 K2Y
	B2B	R,W	1	—	—	—	—	—	—	—	B388 K2B
	B2G	R,W	1	—	—	—	—	—	—	—	B388 K2G
	B2X	R,W	1	—	—	—	—	—	—	—	B388 K2X
	D6B, H6B	R,W	1	1	—	1	—	—	—	—	B404 K6B
	D6G, H6G	R,W	1	1	—	1	—	—	—	—	B404 K6G

TYPE LETTERS Indicates: J - Challenger, B - Barracuda, V - Valiant, L - Dart, R - Satellite, W - Coronet, P - Plymouth, D - Dodge, C - Chrysler, Y - Imperial

NUMERALS INDICATE: 21 - 2 DR. SED., 23 - 2 DR. H.T., 29 - FAST BACK, 41 - 4 DR. SED., 43 - 4 DR. H.T., 45 - 6 PASS. STA. WGN., 46 - 9 PASS. STA. WGN.

AR Indicates use as required.
# Indicates parts not listed in any previous parts book
Numerals in parentheses ( ) refer to notes.
★ Indicates change or addition.
Printed in U.S.A.
November, 1974

Right and left part numbers are on same line, first number is right, second number is left.

CODE	PART NAME	MODEL CODES	SEE BOTTOM NOTE 21	23		29	41	43	45	46	PART NUMBER
23-109-36	COVER Cont'd.										
	D6XW, H6XW	R,W	1	1	—	1	—	—	—	—	B404 K6W
	D6X, H6X	R,W	1	1	—	1	—	—	—	—	B404 K6X
	D6Y, H6Y	R,W	1	1	—	1	—	—	—	—	B404 K6Y
	K2T, T2T	R,W	—	—	—	—	1	—	—	—	B401 K2T
	K2X, T2X, G2X	R,W	—	—	—	—	1	—	—	—	B401 K2X
	2nd Cushion										
	M4B	R,W	—	—	—	—	—	—	1	1	B474 K4B
	M4G	R,W	—	—	—	—	—	—	1	1	B474 K4G
	M4L	R,W	—	—	—	—	—	—	1	1	B474 K4L
	M4T	R,W	—	—	—	—	—	—	1	1	B474 K4T
	3rd Cushion										
	M4B	R,W	—	—	—	—	—	—	—	1	B560 K4B
	M4G	R,W	—	—	—	—	—	—	—	1	B560 K4G
	M4L	R,W	—	—	—	—	—	—	—	1	B560 K4L
	M4T	R,W	—	—	—	—	—	—	—	1	B560 K4T
	2nd Cushion										
	A2B	R	—	—	—	—	—	—	1	—	B473 K2B
	A2G	R	—	—	—	—	—	—	1	—	B473 K2G
	A2T	R	—	—	—	—	—	—	1	—	B473 K2T
	2nd Cushion										
	F2B	R	—	—	—	—	—	—	1	1	B475 K2B
	F2G	R	—	—	—	—	—	—	1	1	B475 K2G
	F2L	R	—	—	—	—	—	—	1	1	B475 K2L
	F2T	R	—	—	—	—	—	—	1	1	B475 K2T
	3rd Cushion										
	F2B	R	—	—	—	—	—	—	—	1	B562 K2B
	F2G	R	—	—	—	—	—	—	—	1	B562 K2G
	F2L	R	—	—	—	—	—	—	—	1	B562 K2L
	F2T	R	—	—	—	—	—	—	—	1	B562 K2T
	E5YW	W	—	1	—	1	—	—	—	—	B405 K5Y
	N1YW	W	—	1	—	—	—	—	—	—	B403 K1W
	S1B	W	—	1	—	—	—	—	—	—	B395 K1B
	S1G	W	—	1	—	—	—	—	—	—	B395 K1G
	S1X	W	—	1	—	—	—	—	—	—	B395 K1X
	S1Y	W	—	1	—	—	—	—	—	—	B395 K1Y
	S2B Sample of Material Reqd.	W	—	1	—	—	—	—	—	—	B390 K2B
	S2G Sample of Material Reqd.	W	—	1	—	—	—	—	—	—	B390 K2G
	S2L Sample of Material Reqd.	W	—	1	—	—	—	—	—	—	B390 K2L
	S2X	W	—	1	—	—	—	—	—	—	B390 K2X
	S2Y Sample of Material Reqd.	W	—	1	—	—	—	—	—	—	B390 K2Y
	W1LL	W	1	1	—	—	—	—	—	—	B324 K1L
	M4B	W	—	—	—	1	—	—	—	—	B392 K4B
	M4G	W	—	—	—	1	—	—	—	—	B392 K4G
	M4L	W	—	—	—	1	—	—	—	—	B392 K4L
	M4X	W	—	—	—	1	—	—	—	—	B392 K4X
	M4Y	W	—	—	—	1	—	—	—	—	B392 K4Y
	V3B Sample of Material Reqd.	R,W	—	1	—	1	—	—	—	—	B399 K3B
	V3G Sample of Material Reqd.	R,W	—	1	—	1	—	—	—	—	B399 K3G
	V3X Sample of Material Reqd.	R,W	—	1	—	1	—	—	—	—	B399 K3X
	V3Y Sample of Material Reqd.	R,W	—	1	—	1	—	—	—	—	B399 K3Y
	P2B	W	—	—	—	—	1	—	—	—	B400 K2B
	P2G	W	—	—	—	—	1	—	—	—	B400 K2G
	P2T	W	—	—	—	—	1	—	—	—	B400 K2T
	Q1B	W	—	—	—	—	1	—	—	—	B393 K1B
	Q1G Sample of Material Reqd.	W	—	—	—	—	1	—	—	—	B393 K1G
	Q1T	W	—	—	—	—	1	—	—	—	B393 K1T
	Q1T	W	—	—	—	—	1	—	—	—	B393 K1X
	Q1Y Sample of Material Reqd.	W	—	—	—	—	1	—	—	—	B393 K1Y

TYPE LETTERS Indicates J - Challenger, B - Barracuda, V - Valiant, L - Dart, R - Satellite, W - Coronet, P - Plymouth, D - Dodge, C - Chrysler, Y - Imperial

NUMERALS INDICATE: 21 - 2 DR. SED., 23 - 2 DR. H.T., 29 - FAST BACK, 41 - 4 DR. SED., 43 - 4 DR. H.T., 45 - 6 PASS. STA. WGN., 46 - 9 PASS. STA. WGN.

AR Indicates use as required.
# Indicates parts not listed in any previous parts book
Numerals in parentheses ( ) refer to notes.
★ Indicates change or addition.

Printed in U.S.A.
November, 1974

Right and left part numbers are on same line, first number is right, second number is left.

CODE	PART NAME	MODEL CODES	SEE BOTTOM NOTE 21	23	29	41	43	45	46	PART NUMBER
23-109-36	COVER Cont'd.									
	R4B	W	—	—	—	1	—	—	—	B391 K4B
	R4G	W	—	—	—	1	—	—	—	B391 K4G
	R4L	W	—	—	—	1	—	—	—	B391 K4L
	R4T	W	—	—	—	1	—	—	—	B391 K4T
	R4X	W	—	—	—	1	—	—	—	B391 K4X
	R4Y	W	—	—	—	1	—	—	—	B391 K4Y
	2nd Cushion									
	P2B	W	—	—	—	—	—	1	—	B476 K2B
	P2G	W	—	—	—	—	—	1	—	B476 K2G
	P2T	W	—	—	—	—	—	1	—	B476 K2T
	2nd Cushion									
	Q2B	W	—	—	—	—	—	1	1	B394 K2B
	Q2G	W	—	—	—	—	—	1	1	B394 K2G
	Q2L	W	—	—	—	—	—	1	1	B394 K2L
	Q2T	W	—	—	—	—	—	1	1	B394 K2T
	3rd Cushion									
	Q2B	W	—	—	—	—	—	—	1	B562 K2B
	Q2G	W	—	—	—	—	—	—	1	B562 K2G
	Q2L	W	—	—	—	—	—	—	1	B562 K2L
	Q2T	W	—	—	—	—	—	—	1	B562 K2T
	B1G	P	—	1	—	—	—	—	—	C403 K1G
	B1X	P	—	1	—	—	—	—	—	C403 K1X
	B1Y	P	—	1	—	—	—	—	—	C403 K1Y
	B2G	P	—	1	—	—	—	—	—	C412 K2G
	B2X	P	—	1	—	—	—	—	—	C412 K2X
	B2Y	P	—	1	—	—	—	—	—	C412 K2Y
	C1B	P	—	1	—	—	—	—	—	C423 K1B
	C1G	P	—	1	—	—	—	—	—	C423 K1G
	C1L	P	—	1	—	—	—	—	—	C423 K1L
	C1X	P	—	1	—	—	—	—	—	C423 K1X
	C1Y	P	—	1	—	—	—	—	—	C423 K1Y
	C2G	P	—	1	—	—	—	—	—	C432 K2G
	C2L	P	—	1	—	—	—	—	—	C432 K2L
	C2Y	P	—	1	—	—	—	—	—	C432 K2Y
	D4B, E4B	P	—	1	—	—	—	—	—	C452 K4B
	D4G, E4G	P	—	1	—	—	—	—	—	C452 K4G
	D4L, E4L	P	—	1	—	—	—	—	—	C452 K4L
	D4X, E4X	P	—	1	—	—	—	—	—	C452 K4X
	D4Y, E4Y	P	—	1	—	—	—	—	—	C452 K4Y
	E3B	P	—	1	—	—	—	—	—	C445 K3B
	E3G	P	—	1	—	—	—	—	—	C445 K3G
	E3L	P	—	1	—	—	—	—	—	C445 K3L
	E3X	P	—	1	—	—	—	—	—	C445 K3X
	E3Y	P	—	1	—	—	—	—	—	C445 K3Y
	G7B	P	—	1	—	—	—	—	—	C468 K7B
	G7G	P	—	1	—	—	—	—	—	C468 K7G
	G7L	P	—	1	—	—	—	—	—	C468 K7L
	G7X	P	—	1	—	—	—	—	—	C468 K7X
	G7Y	P	—	1	—	—	—	—	—	C468 K7Y
	J3LL	P	—	1	—	—	—	—	—	C514 K3L
	B1G	P	—	—	—	1	—	—	—	C407 K1G
	B1X	P	—	—	—	1	—	—	—	C407 K1X
	B1Y	P	—	—	—	1	—	—	—	C407 K1Y
	B2G	P	—	—	—	1	—	—	—	C416 K2G
	B2X	P	—	—	—	1	—	—	—	C416 K2X
	B2Y	P	—	—	—	1	—	—	—	C416 K2Y
	C1B	P	—	—	—	1	1	—	—	C427 K1B
	C1G	P	—	—	—	1	1	—	—	C427 K1G

TYPE LETTERS Indicates J - Challenger, B - Barracuda, V - Valiant, L - Dart, R - Satellite, W - Coronet, P - Plymouth, D - Dodge, C - Chrysler, Y - Imperial

NUMERALS INDICATE: 21 - 2 DR. SED., 23 - 2 DR. H.T., 29 - FAST BACK, 41 - 4 DR. SED., 43 - 4 DR. H.T., 45 - 6 PASS. STA. WGN., 46 - 9 PASS. STA. WGN.

AR Indicates use as required.
# Indicates parts not listed in any previous parts book
Numerals in parentheses ( ) refer to notes.
★ Indicates change or addition.

Printed in U.S.A.
November, 1974

Right and left part numbers are on same line, first number is right, second number is left.

CODE	PART NAME	MODEL CODES	SEE BOTTOM NOTE 21	23	29	41	43	45	46	PART NUMBER
23-109-36	COVER Cont'd.									
	C1L	P	—	—	—	1	1	—	—	C427 K1L
	C1X	P	—	—	—	1	1	—	—	C427 K1X
	C1Y	P	—	—	—	1	1	—	—	C427 K1Y
	C2G	P	—	—	—	1	1	—	—	C436 K2G
	C2L	P	—	—	—	1	1	—	—	C436 K2L
	C2Y	P	—	—	—	1	1	—	—	C436 K2Y
	D4B, E4B	P	—	—	—	1	1	—	—	C454 K4B
	D4G, E4G	P	—	—	—	1	1	—	—	C454 K4G
	D4L, E4L	P	—	—	—	1	1	—	—	C454 K4L
	D4X, E4X	P	—	—	—	1	1	—	—	C454 K4X
	D4Y, E4Y	P	—	—	—	1	1	—	—	C454 K4Y
	H8L	P	—	—	—	1	1	—	—	C484 K8L
	J3LL	P	—	—	—	1	1	—	—	C515 K3L
	E3B	P	—	—	—	—	1	—	—	C447 K3B
	E3G	P	—	—	—	—	1	—	—	C447 K3G
	E3L	P	—	—	—	—	1	—	—	C447 K3L
	E3X	P	—	—	—	—	1	—	—	C447 K3X
	E3Y	P	—	—	—	—	1	—	—	C447 K3Y
	G7B	P	—	—	—	—	1	—	—	C470 K7B
	G7G	P	—	—	—	—	1	—	—	C470 K7G
	G7L	P	—	—	—	—	1	—	—	C470 K7L
	G7X	P	—	—	—	—	1	—	—	C470 K7X
	G7Y	P	—	—	—	—	1	—	—	C470 K7Y
	2nd Cushion									
	A2G	P	—	—	—	—	—	1	—	C506 K2G
	A2T	P	—	—	—	—	—	1	—	C506 K2T
	A2X	P	—	—	—	—	—	1	—	C506 K2X
	2nd Cushion									
	B2X	P	—	—	—	—	—	1	—	C418 K2X
	B2G	P	—	—	—	—	—	1	—	C418 K2G
	B2T	P	—	—	—	—	—	1	—	C418 K2T
	2nd Cushion									
	D4B, E4B	P	—	—	—	—	—	1	1	C456 K4B
	D4G, E4G	P	—	—	—	—	—	1	1	C456 K4G
	D4L, E4L	P	—	—	—	—	—	1	1	C456 K4L
	D4T, E4T	P	—	—	—	—	—	1	1	C456 K4T
	D4X, E4X	P	—	—	—	—	—	1	1	C456 K4X
	D4Y, E4Y	P	—	—	—	—	—	1	1	C456 K4Y
	3rd Cushion									
	D4B, E4B	P	—	—	—	—	—	—	1	C458 K4B
	D4G, E4G	P	—	—	—	—	—	—	1	C458 K4G
	D4L, E4L	P	—	—	—	—	—	—	1	C458 K4L
	D4T, E4T	P	—	—	—	—	—	—	1	C458 K4T
	D4X, E4X	P	—	—	—	—	—	—	1	C458 K4X
	D4Y, E4Y	P	—	—	—	—	—	—	1	C458 K4Y
	2nd Cushion									
	C2B	P	—	—	—	—	—	1	1	C438 K2B
	C2G	P	—	—	—	—	—	1	1	C438 K2G
	C2L	P	—	—	—	—	—	1	1	C438 K2L
	C2T	P	—	—	—	—	—	1	1	C438 K2T
	C2X	P	—	—	—	—	—	1	1	C438 K2X
	C2Y	P	—	—	—	—	—	1	1	C438 K2Y
	3rd Cushion									
	C2B	P	—	—	—	—	—	—	1	C440 K2B
	C2G	P	—	—	—	—	—	—	1	C440 K2G
	C2L	P	—	—	—	—	—	—	1	C440 K2L
	C2T	P	—	—	—	—	—	—	1	C440 K2T
	C2X	P	—	—	—	—	—	—	1	C440 K2X

TYPE LETTERS Indicates J - Challenger, B - Barracuda, V - Valiant, L - Dart, R - Satellite, W - Coronet, P - Plymouth, D - Dodge, C - Chrysler, Y - Imperial

NUMERALS INDICATE: 21 - 2 DR. SED., 23 - 2 DR. H.T., 29 - FAST BACK, 41 - 4 DR. SED., 43 - 4 DR. H.T., 45 - 6 PASS. STA. WGN., 46 - 9 PASS. STA. WGN.

AR Indicates use as required.
# Indicates parts not listed in any previous parts book
Numerals in parentheses ( ) refer to notes.
★ Indicates change or addition.

Printed in U.S.A.
November, 1974

Right and left part numbers are on same line, first number is right, second number is left.

CODE	PART NAME	MODEL CODES	SEE BOTTOM NOTE 21	23		29	41	43	45	46	PART NUMBER
23-109-36	COVER Cont'd.										
	C2Y	P	—	—	—	—	—	—	—	1	C440 K2Y
	2nd Cushion										
	G8L	P	—	—	—	—	—	—	1	1	C476 K8L
	3rd Cushion										
	G8L	P	—	—	—	—	—	—	—	1	C478 K8L
	A1G	P,D	—	—	—	—	1	—	—	—	C493 K1G
	A1X	P,D	—	—	—	—	1	—	—	—	C493 K1X
	A1Y	P,D	—	—	—	—	1	—	—	—	C493 K1Y
	A2G	P,D	—	—	—	—	1	—	—	—	C504 K2G
	A2X	P,D	—	—	—	—	1	—	—	—	C504 K2X
	A2Y	P,D	—	—	—	—	1	—	—	—	C504 K2Y
	K1Y	P,D	—	—	—	—	1	—	—	—	C640 K1Y
	K2X	P,D	—	—	—	—	1	—	—	—	C636 K2X
	K2Y	P,D	—	—	—	—	1	—	—	—	C636 K2Y
	A1G	D	—	1	—	—	—	—	—	—	C489 K1G
	A1X	D	—	1	—	—	—	—	—	—	C489 K1X
	A1Y	D	—	1	—	—	—	—	—	—	C489 K1Y
	A2G	D	—	1	—	—	—	—	—	—	C500 K2G
	A2X	D	—	1	—	—	—	—	—	—	C500 K2X
	A2Y	D	—	1	—	—	—	—	—	—	C500 K2Y
	F4B	D	—	1	—	—	—	—	—	—	C619 K4B
	F4G	D	—	1	—	—	—	—	—	—	C619 K4G
	F4L	D	—	1	—	—	—	—	—	—	C619 K4L
	F4X	D	—	1	—	—	—	—	—	—	C619 K4X
	F4Y	D	—	1	—	—	—	—	—	—	C619 K4Y
	M1B	D	—	1	—	—	—	—	—	—	C629 K1B
	M1G	D	—	1	—	—	—	—	—	—	C629 K1G
	M1L	D	—	1	—	—	—	—	—	—	C629 K1L
	M1X	D	—	1	—	—	—	—	—	—	C629 K1X
	M1Y	D	—	1	—	—	—	—	—	—	C629 K1Y
	N3XW	D	—	1	—	—	—	—	—	—	C684 K3N
	P1G	D	—	1	—	—	—	—	—	—	C602 K1G
	P1L	D	—	1	—	—	—	—	—	—	C602 K1L
	P1X	D	—	1	—	—	—	—	—	—	C602 K1X
	P1Y	D	—	1	—	—	—	—	—	—	C602 K1Y
	R2G	D	—	1	—	—	—	—	—	—	C614 K2G
	R2L	D	—	1	—	—	—	—	—	—	C614 K2L
	R2X	D	—	1	—	—	—	—	—	—	C614 K2X
	R2Y	D	—	1	—	—	—	—	—	—	C614 K2Y
	V2G Sample of Material Reqd.	D	—	1	—	—	—	—	—	—	C655 K2G
	V2L	D	—	1	—	—	—	—	—	—	C655 K2L
	V2Y Sample of Material Reqd.	D	—	1	—	—	—	—	—	—	C655 K2Y
	W7B Sample of Material Reqd.	D	—	1	—	—	—	—	—	—	C676 K7B
	W7G Sample of Material Reqd.	D	—	1	—	—	—	—	—	—	C676 K7G
	W7L Sample of Material Reqd.	D	—	1	—	—	—	—	—	—	C676 K7L
	W7X Sample of Material Reqd.	D	—	1	—	—	—	—	—	—	C676 K7X
	W7Y Sample of Material Reqd.	D	—	1	—	—	—	—	—	—	C676 K7Y
	P1G	D	—	—	—	—	1	—	—	—	C603 K1G
	P1L	D	—	—	—	—	1	—	—	—	C603 K1L
	P1X	D	—	—	—	—	1	—	—	—	C603 K1X
	P1Y	D	—	—	—	—	1	—	—	—	C603 K1Y
	R2G	D	—	—	—	—	1	—	—	—	C615 K2G
	R2L	D	—	—	—	—	1	—	—	—	C615 K2L
	R2X	D	—	—	—	—	1	—	—	—	C615 K2X
	R2Y	D	—	—	—	—	1	—	—	—	C615 K2Y
	F4B	D	—	—	—	—	1	1	—	—	C618 K4B
	F4G	D	—	—	—	—	1	1	—	—	C618 K4G
	F4L	D	—	—	—	—	1	1	—	—	C618 K4L

TYPE LETTERS Indicates J - Challenger, B - Barracuda, V - Valiant, L - Dart, R - Satellite, W - Coronet, P - Plymouth, D - Dodge, C - Chrysler, Y - Imperial

NUMERALS INDICATE: 21 - 2 DR. SED., 23 - 2 DR. H.T., 29 - FAST BACK, 41 - 4 DR. SED., 43 - 4 DR. H.T., 45 - 6 PASS. STA. WGN., 46 - 9 PASS. STA. WGN.

AR Indicates use as required.
# Indicates parts not listed in any previous parts book
Numerals in parentheses ( ) refer to notes.
★ Indicates change or addition.

Printed in U.S.A.
November, 1974

Right and left part numbers are on same line, first number is right, second number is left.

CODE	PART NAME	MODEL CODES	SEE BOTTOM NOTE 21	23	29	41	43	45	46	PART NUMBER
23-109-36	COVER Cont'd.									
	F4X	D	—	—	—	1	1	—	—	C618 K4X
	F4Y	D	—	—	—	1	1	—	—	C618 K4Y
	M1B	D	—	—	—	1	1	—	—	C630 K1B
	M1G	D	—	—	—	1	1	—	—	C630 K1G
	M1L	D	—	—	—	1	1	—	—	C630 K1L
	M1X	D	—	—	—	1	1	—	—	C630 K1X
	M1Y	D	—	—	—	1	1	—	—	C630 K1Y
	V2G Sample of Material Reqd.	D	—	—	—	1	1	—	—	C656 K2G
	V2L	D	—	—	—	1	1	—	—	C656 K2L
	V2Y Sample of Material Reqd.	D	—	—	—	1	1	—	—	C656 K2Y
	W7B Sample of Material Reqd.	D	—	—	—	1	1	—	—	C677 K7B
	W7G Sample of Material Reqd.	D	—	—	—	1	1	—	—	C677 K7G
	W7L Sample of Material Reqd.	D	—	—	—	1	1	—	—	C677 K7L
	W7X Sample of Material Reqd.	D	—	—	—	1	1	—	—	C677 K7X
	W7Y Sample of Material Reqd.	D	—	—	—	1	1	—	—	C677 K7Y
	N3XW	D	—	—	—	—	1	—	—	C685 K3N
	2nd Cushion									
	F4B	D	—	—	—	—	—	1	1	C663 K4B
	F4G	D	—	—	—	—	—	1	1	C663 K4G
	F4L	D	—	—	—	—	—	1	1	C663 K4L
	F4T	D	—	—	—	—	—	1	1	C663 K4T
	F4X	D	—	—	—	—	—	1	1	C663 K4X
	F4Y	D	—	—	—	—	—	1	1	C663 K4Y
	3rd Cushion									
	F4B	D	—	—	—	—	—	—	1	C622 K4B
	F4G	D	—	—	—	—	—	—	1	C622 K4G
	F4L	D	—	—	—	—	—	—	1	C622 K4L
	F4T	D	—	—	—	—	—	—	1	C622 K4T
	F4X	D	—	—	—	—	—	—	1	C622 K4X
	F4Y	D	—	—	—	—	—	—	1	C622 K4Y
	2nd Cushion									
	R2G	D	—	—	—	—	—	1	—	C666 K2G
	R2L	D	—	—	—	—	—	1	—	C666 K2L
	R2T	D	—	—	—	—	—	1	—	C666 K2T
	R2X	D	—	—	—	—	—	1	—	C666 K2X
	2nd Cushion									
	S8B	D	—	—	—	—	—	1	1	C646 K8B
	S8G	D	—	—	—	—	—	1	1	C646 K8G
	S8L	D	—	—	—	—	—	1	1	C646 K8L
	S8T	D	—	—	—	—	—	1	1	C646 K8T
	S8X	D	—	—	—	—	—	1	1	C646 K8X
	S8Y	D	—	—	—	—	—	1	1	C646 K8Y
	3rd Cushion									
	S8B	D	—	—	—	—	—	—	1	C648 K8B
	S8G	D	—	—	—	—	—	—	1	C648 K8G
	S8L	D	—	—	—	—	—	—	1	C648 K8L
	S8T	D	—	—	—	—	—	—	1	C648 K8T
	S8X	D	—	—	—	—	—	—	1	C648 K8X
	S8Y	D	—	—	—	—	—	—	1	C648 K8Y
	2nd Cushion									
	V2B	D	—	—	—	—	—	1	1	C659 K2B
	V2G Sample of Material Reqd.	D	—	—	—	—	—	1	1	C659 K2G
	V2L	D	—	—	—	—	—	1	1	C659 K2L
	V2T	D	—	—	—	—	—	1	1	C659 K2T
	V2X	D	—	—	—	—	—	1	1	C659 K2X
	V2Y Sample of Material Reqd.	D	—	—	—	—	—	1	1	C659 K2Y
	3rd Cushion									
	V2B	D	—	—	—	—	—	—	1	C661 K2B

TYPE LETTERS Indicates J - Challenger V - Valiant R - Satellite P - Plymouth C - Chrysler
B - Barracuda L - Dart W - Coronet D - Dodge Y - Imperial

NUMERALS INDICATE: 21 - 2 DR. SED. 41 - 4 DR. SED. 45 - 6 PASS. STA. WGN.
23 - 2 DR. H.T. 29 - FAST BACK 43 - 4 DR. H.T. 46 - 9 PASS. STA. WGN.

AR Indicates use as required.
# Indicates parts not listed in any previous parts book
Numerals in parentheses ( ) refer to notes.
★ Indicates change or addition.

Printed in U.S.A.
November, 1974

Right and left part numbers are on same line, first number is right, second number is left.

CODE	PART NAME	MODEL CODES	SEE BOTTOM NOTE 21	23		29	41	43	45	46	PART NUMBER
23-109-36	COVER Cont'd.										
	V2G Sample of Material Reqd.	D	—	—	—	—	—	—	—	1	C661 K2G
	V2L	D	—	—	—	—	—	—	—	1	C661 K2L
	V2T	D	—	—	—	—	—	—	—	1	C661 K2T
	V2X	D	—	—	—	—	—	—	—	1	C661 K2X
	V2Y Sample of Material Reqd.	D	—	—	—	—	—	—	—	1	C661 K2Y
	A1B	C	—	1	—	—	—	—	—	—	G405 K1B
	A1G	C	—	1	—	—	—	—	—	—	G405 K1G
	A1L	C	—	1	—	—	—	—	—	—	G405 K1L
	A1X	C	—	1	—	—	—	—	—	—	G405 K1X
	A1Y	C	—	1	—	—	—	—	—	—	G405 K1Y
	B2B	C	—	1	—	—	—	—	—	—	G414 K2B
	B2G	C	—	1	—	—	—	—	—	—	G414 K2G
	B2L Sample of Material Reqd.	C	—	1	—	—	—	—	—	—	G414 K2L
	B2XW Sample of Material Reqd.	C	—	1	—	—	—	—	—	—	G414 K2W
	B2X	C	—	1	—	—	—	—	—	—	G414 K2X
	B2Y	C	—	1	—	—	—	—	—	—	G414 K2Y
	D7B	C	—	1	—	—	—	—	—	—	G458 K7B
	D7G	C	—	1	—	—	—	—	—	—	G458 K7G
	D7L	C	—	1	—	—	—	—	—	—	G458 K7L
	D7X	C	—	1	—	—	—	—	—	—	G458 K7X
	D7Y	C	—	1	—	—	—	—	—	—	G458 K7Y
	D8B	C	—	1	—	—	—	—	—	—	G474 K8B
	D8G	C	—	1	—	—	—	—	—	—	G474 K8G
	D8L	C	—	1	—	—	—	—	—	—	G474 K8L
	D8XW	C	—	1	—	—	—	—	—	—	G474 K8W
	D8X	C	—	1	—	—	—	—	—	—	G474 K8X
	D8Y	C	—	1	—	—	—	—	—	—	G474 K8Y
	C1KW	C	—	1	—	—	—	—	—	—	G496 K1K
	H7B Sample of Material Reqd.	C	—	1	—	—	—	—	—	—	G426 K7B
	H7G	C	—	1	—	—	—	—	—	—	G426 K7G
	H7L	C	—	1	—	—	—	—	—	—	G426 K7L
	H7X	C	—	1	—	—	—	—	—	—	G426 K7X
	H7Y	C	—	1	—	—	—	—	—	—	G426 K7Y
	H8B	C	—	1	—	—	—	—	—	—	G438 K8B
	H8G	C	—	1	—	—	—	—	—	—	G438 K8G
	H8L	C	—	1	—	—	—	—	—	—	G438 K8L
	H8XW, H8YW	C	—	1	—	—	—	—	—	—	G438 K8W
	H8X	C	—	1	—	—	—	—	—	—	G438 K8X
	H8Y	C	—	1	—	—	—	—	—	—	G438 K8Y
	A1B	C	—	—	—	—	1	1	—	—	G406 K1B
	A1G	C	—	—	—	—	1	1	—	—	G406 K1G
	A1L	C	—	—	—	—	1	1	—	—	G406 K1L
	A1X	C	—	—	—	—	1	1	—	—	G406 K1X
	A1Y	C	—	—	—	—	1	1	—	—	G406 K1Y
	B2B	C	—	—	—	—	1	1	—	—	G415 K2B
	B2G	C	—	—	—	—	1	1	—	—	G415 K2G
	B2L Sample of Material Reqd.	C	—	—	—	—	1	1	—	—	G415 K2L
	B2XW Sample of Material Reqd.	C	—	—	—	—	1	1	—	—	G415 K2W
	B2X	C	—	—	—	—	1	1	—	—	G415 K2X
	B2Y	C	—	—	—	—	1	1	—	—	G415 K2Y
	D7B	C	—	—	—	—	1	1	—	—	G459 K7B
	D7G	C	—	—	—	—	1	1	—	—	G459 K7G
	D7L	C	—	—	—	—	1	1	—	—	G459 K7L
	D7X	C	—	—	—	—	1	1	—	—	G459 K7X
	D7Y	C	—	—	—	—	1	1	—	—	G459 K7Y
	D8B	C	—	—	—	—	1	1	—	—	G475 K8B
	D8G	C	—	—	—	—	1	1	—	—	G475 K8G
	D8L	C	—	—	—	—	1	1	—	—	G475 K8L

TYPE LETTERS Indicates J - Challenger, B - Barracuda, V - Valiant, L - Dart, R - Satellite, W - Coronet, P - Plymouth, D - Dodge, C - Chrysler, Y - Imperial

NUMERALS INDICATE: 21 - 2 DR. SED., 23 - 2 DR. H.T., 29 - FAST BACK, 41 - 4 DR. SED., 43 - 4 DR. H.T., 45 - 6 PASS. STA. WGN., 46 - 9 PASS. STA. WGN.

AR Indicates use as required.
# Indicates parts not listed in any previous parts book
Numerals in parentheses ( ) refer to notes.
★ Indicates change or addition.

Printed in U.S.A.
November, 1974

Right and left part numbers are on same line, first number is right, second number is left.

CODE	PART NAME	MODEL CODES	SEE BOTTOM NOTE 21	23		29	41	43	45	46	PART NUMBER
23-109-36	COVER Cont'd.										
	D8XW	C	—	—	—	—	1	1	—	—	G475 K8W
	D8X	C	—	—	—	—	1	1	—	—	G475 K8X
	D8Y	C	—	—	—	—	1	1	—	—	G475 K8Y
	E9B	C	—	—	—	—	1	1	—	—	G444 K9B
	E9G	C	—	—	—	—	1	1	—	—	G444 K9G
	E9L	C	—	—	—	—	1	1	—	—	G444 K9L
	E9X	C	—	—	—	—	1	1	—	—	G444 K9X
	E9Y	C	—	—	—	—	1	1	—	—	G444 K9Y
	EHB	C	—	—	—	—	1	1	—	—	G448 KHB
	EHG	C	—	—	—	—	1	1	—	—	G448 KHG
	EHL	C	—	—	—	—	1	1	—	—	G448 KHL
	EHXW	C	—	—	—	—	1	1	—	—	G448 KHW
	EHX	C	—	—	—	—	1	1	—	—	G448 KHX
	EHY	C	—	—	—	—	1	1	—	—	G448 KHY
	C1KW	C	—	—	—	—	1	1	—	—	G497 K1K
	H7B Sample of Material Reqd.	C	—	—	—	—	1	1	—	—	G427 K7B
	H7G	C	—	—	—	—	1	1	—	—	G427 K7G
	H7L	C	—	—	—	—	1	1	—	—	G427 K7L
	H7X	C	—	—	—	—	1	1	—	—	G427 K7X
	H7Y	C	—	—	—	—	1	1	—	—	G427 K7Y
	H8B	C	—	—	—	—	1	1	—	—	G439 K8B
	H8G	C	—	—	—	—	1	1	—	—	G439 K8G
	H8L	C	—	—	—	—	1	1	—	—	G439 K8L
	H8XW	C	—	—	—	—	1	1	—	—	G439 K8W
	H8X	C	—	—	—	—	1	1	—	—	G439 K8X
	H8Y	C	—	—	—	—	1	1	—	—	G439 K8Y
	2nd Cushion										
	D7G	C	—	—	—	—	—	—	1	1	G460 K7G
	D7L	C	—	—	—	—	—	—	1	1	G460 K7L
	3rd Cushion										
	D7G	C	—	—	—	—	—	—	—	1	G464 K7G
	D7L	C	—	—	—	—	—	—	—	1	G464 K7L
	2nd Cushion										
	D8B	C	—	—	—	—	—	—	1	1	G476 K8B
	D8G	C	—	—	—	—	—	—	1	1	G476 K8G
	D8L	C	—	—	—	—	—	—	1	1	G476 K8L
	D8T	C	—	—	—	—	—	—	1	1	G476 K8T
	D8X	C	—	—	—	—	—	—	1	1	G476 K8X
	D8Y	C	—	—	—	—	—	—	1	1	G476 K8Y
	3rd Cushion										
	D8B	C	—	—	—	—	—	—	—	1	G464 K7B
	D8G	C	—	—	—	—	—	—	—	1	G464 K7G
	D8L	C	—	—	—	—	—	—	—	1	G464 K7L
	D8T	C	—	—	—	—	—	—	—	1	G464 K7T
	D8X	C	—	—	—	—	—	—	—	1	G464 K7X
	D8Y	C	—	—	—	—	—	—	—	1	G464 K7Y
	PDB (Up to Build Date 1-15-74)	Y	—	1	—	—	—	—	—	—	G616 KDB
	PDB (After Build Date 1-15-74)	Y	—	1	—	—	—	—	—	—	G616 KDD
	PDG (Up to Build Date 1-15-74)	Y	—	1	—	—	—	—	—	—	G616 KDG
	PDG (After Build Date 1-15-74)	Y	—	1	—	—	—	—	—	—	G616 KDF
	PDL (Up to Build Date 1-15-74)	Y	—	1	—	—	—	—	—	—	G616 KDL
	PDL (After Build Date 1-15-74)	Y	—	1	—	—	—	—	—	—	G616 KDP
	PDT	Y	—	1	—	—	—	—	—	—	G616 KDT
	PDX	Y	—	1	—	—	—	—	—	—	G616 KDX
	PDY	Y	—	1	—	—	—	—	—	—	G616 KDY
	PLB	Y	—	1	—	—	—	—	—	—	G617 KLB
	PLG	Y	—	1	—	—	—	—	—	—	G617 KLG
	PLL	Y	—	1	—	—	—	—	—	—	G617 KLL
	PLT	Y	—	1	—	—	—	—	—	—	G617 KLT

TYPE LETTERS Indicates J - Challenger, B - Barracuda, V - Valiant, L - Dart, R - Satellite, W - Coronet, P - Plymouth, D - Dodge, C - Chrysler, Y - Imperial

NUMERALS INDICATE: 21 - 2 DR. SED., 23 - 2 DR. H.T., 29 - FAST BACK, 41 - 4 DR. SED., 43 - 4 DR. H.T., 45 - 6 PASS. STA. WGN., 46 - 9 PASS. STA. WGN.

AR Indicates use as required.
# Indicates parts not listed in any previous parts book
Numerals in parentheses ( ) refer to notes.
★ Indicates change or addition.

Printed in U.S.A.
November, 1974

Right and left part numbers are on same line, first number is right, second number is left.

CODE	PART NAME	MODEL CODES	SEE BOTTOM NOTE 21	23	29	41	43	45	46	PART NUMBER
23-109-36	COVER Cont'd.									
	PLXW	Y	—	1	—	—	—	—	—	G617 KLW
	PLX	Y	—	1	—	—	—	—	—	G617 KLX
	PLY	Y	—	1	—	—	—	—	—	G617 KLY
	PDB (Up to Build Date 1-15-74)	Y	—	—	—	—	1	—	—	G618 KDB
	PDB (After Build Date 1-15-74)	Y	—	—	—	—	1	—	—	G618 KDD
	PDG (Up to Build Date 1-15-74)	Y	—	—	—	—	1	—	—	G618 KDG
	PDG (After Build Date 1-15-74)	Y	—	—	—	—	1	—	—	G618 KDF
	PDL (Up to Build Date 1-15-74)	Y	—	—	—	—	1	—	—	G618 KDL
	PDL (After Build Date 1-15-74)	Y	—	—	—	—	1	—	—	G618 KDP
	PDT	Y	—	—	—	—	1	—	—	G618 KDT
	PDX	Y	—	—	—	—	1	—	—	G618 KDX
	PDY	Y	—	—	—	—	1	—	—	G618 KDY
	PLB	Y	—	—	—	—	1	—	—	G619 KLB
	PLG	Y	—	—	—	—	1	—	—	G619 KLG
	PLL	Y	—	—	—	—	1	—	—	G619 KLL
	PLT	Y	—	—	—	—	1	—	—	G619 KLT
	PLXW	Y	—	—	—	—	1	—	—	G619 KLW
	PLX	Y	—	—	—	—	1	—	—	G619 KLX
	PLY	Y	—	—	—	—	1	—	—	G619 KLY
	TAXI ONLY									
	Black U.S.	V,L	—	—	—	1	—	—	—	3740 774
	SPECIAL TRIM									
	C2X9 U.S. & Canada	P	—	—	—	1	—	—	—	3740 879
23-109-38	RETAINER, Rear and 2nd and 3rd Seat Cushion	V,L,B,J,R, W,P,D,C,Y	2	2	—	2	2	2	2	3446 302
23-113-2	**Weather/Cord (Service by Inch)**									
	All Codes	V,L	—	AR	—	AR	AR	—	—	— F013 KB7
		V,L	—	AR	—	AR	AR	—	—	— F013 KG7
		V,L	—	AR	—	AR	AR	—	—	— F013 KL2
		V,L	—	AR	—	AR	AR	—	—	— F013 KW1
		V,L	—	AR	—	AR	AR	—	—	— F013 KX9
		V,L	—	AR	—	AR	AR	—	—	— F013 KY4
23-113-3	PINCHWELD, Front Door									
	All Codes	R,W	—	—	—	—	1	—	1	1 F000-1 KB7
		R,W	—	—	—	—	1	—	1	1 F000-1 KG7
		R,W	—	—	—	—	1	—	1	1 F000-1 KL2
		R,W	—	—	—	—	1	—	1	1 F000-1 KT8
		R,W	—	—	—	—	1	—	1	1 F000-1 KX9
		R,W	—	—	—	—	1	—	1	1 F000-1 KY4
	Rear Door									
	All Codes	R,W	—	—	—	—	1	—	—	— F002-3 KB7
		R,W	—	—	—	—	1	—	—	— F002-3 KG7
		R,W	—	—	—	—	1	—	—	— F002-3 KL2
		R,W	—	—	—	—	1	—	—	— F002-3 KT8
		R,W	—	—	—	—	1	—	—	— F002-3 KX9
		R,W	—	—	—	—	1	—	—	— F002-3 KY4
	Rear Door									
	All Codes	R,W	—	—	—	—	—	—	1	1 F004-5 KB7
		R,W	—	—	—	—	—	—	1	1 F004-5 KG7
		R,W	—	—	—	—	—	—	1	1 F004-5 KL2
		R,W	—	—	—	—	—	—	1	1 F004-5 KT8
	Cover, Pinchweld Door Lock Pilar									
	All Codes	R,W	2	2	—	2	—	—	—	— F006 KB7
		R,W	2	2	—	2	—	—	—	— F006 KG7
		R,W	2	2	—	2	—	—	—	— F006 KL2
		R,W	2	2	—	2	—	—	—	— F006 KX9
		R,W	2	2	—	2	—	—	—	— F006 KW1

TYPE LETTERS Indicates: J - Challenger, B - Barracuda, V - Valiant, L - Dart, R - Satellite, W - Coronet, P - Plymouth, D - Dodge, C - Chrysler, Y - Imperial

NUMERALS INDICATE: 21 - 2 DR. SED., 23 - 2 DR. H.T., 29 - FAST BACK, 41 - 4 DR. SED., 43 - 4 DR. H.T., 45 - 6 PASS. STA. WGN., 46 - 9 PASS. STA. WGN.

AR Indicates use as required.
# Indicates parts not listed in any previous parts book
Numerals in parentheses ( ) refer to notes.
★ Indicates change or addition.

Printed in U.S.A.
November, 1974

Right and left part numbers are on same line, first number is right, second number is left.

CODE	PART NAME	MODEL CODES	SEE BOTTOM NOTE 21	23		29	41	43	45	46	PART NUMBER
23-113-3	PINCHWELD Cont'd.										
		R,W	2	2	—	2	—	—	—	—	F006 KY4
23-115-5	**WASHER, Front Seat Center Arm Rest**		—	—	—	—	—	—	—	—	
	Hinge Assy. to Support Assy.		—	—	—	—	—	—	—	—	
	w/50/50 Split Bench Seat	P,D,C,Y	—	—	—	—	4	4	4	4	2609 158
23-115-6	PIN, Front Seat Back to Cushion-Inner		—	—	—	—	—	—	—	—	
	Pivot w/50/50 Split Bench	P,D,C,Y	—	—	—	—	1	1	1	1	2767 865
23-115-10	SCREW, Front Seat Center Arm Rest to		—	—	—	—	—	—	—	—	
	Stanchion w/Bench Seat	P,D	—	2	—	—	2	2	2	2	2092 212
	Bench Seat	V,L	—	2	—	2	2	—	—	—	6030 082
	Bucket Seat	R,W	2	2	—	2	—	—	—	—	6028 521
	50/50 Split Seat	P,D,C,Y	—	4	—	—	4	4	4	4	6026 584

NOTES

TYPE LETTERS Indicates	J - Challenger B - Barracuda	V - Valiant L - Dart	R - Satellite W - Coronet	P - Plymouth D - Dodge	C - Chrysler Y - Imperial
NUMERALS INDICATE:	21 - 2 DR. SED. 23 - 2 DR. H.T.	29 - FAST BACK	41 - 4 DR. SED. 43 - 4 DR. H.T.		45 - 6 PASS. STA. WGN. 46 - 9 PASS. STA. WGN.

AR Indicates use as required.
# Indicates parts not listed in any previous parts book
Numerals in parentheses ( ) refer to notes.
★ Indicates change or addition.
Printed in U.S.A.
November, 1974

Right and left part numbers are on same line, first number is right, second number is left.

GROUP 24 - AIR CONDITIONING

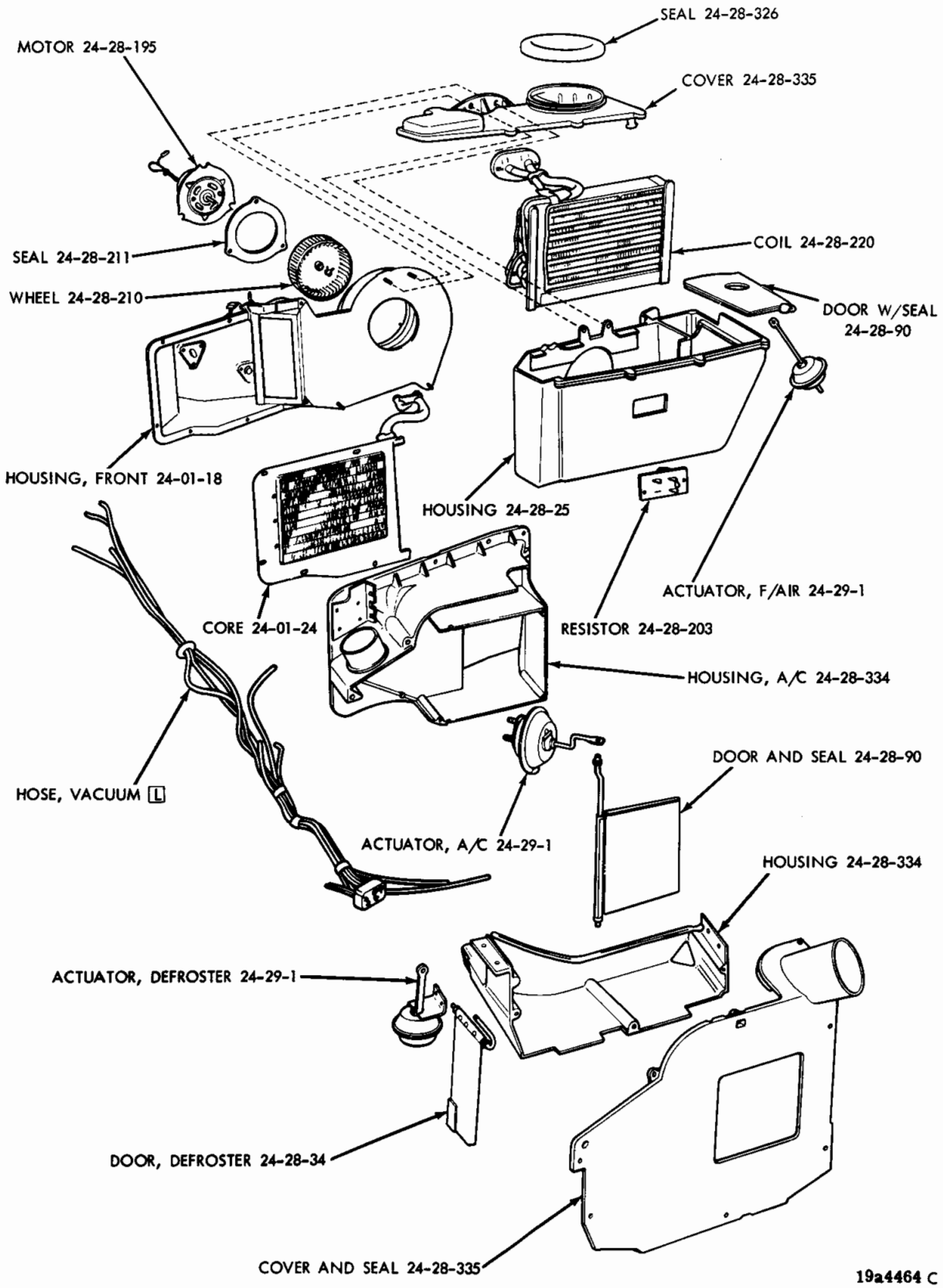

AIR CONDITIONING SYSTEM - V, L

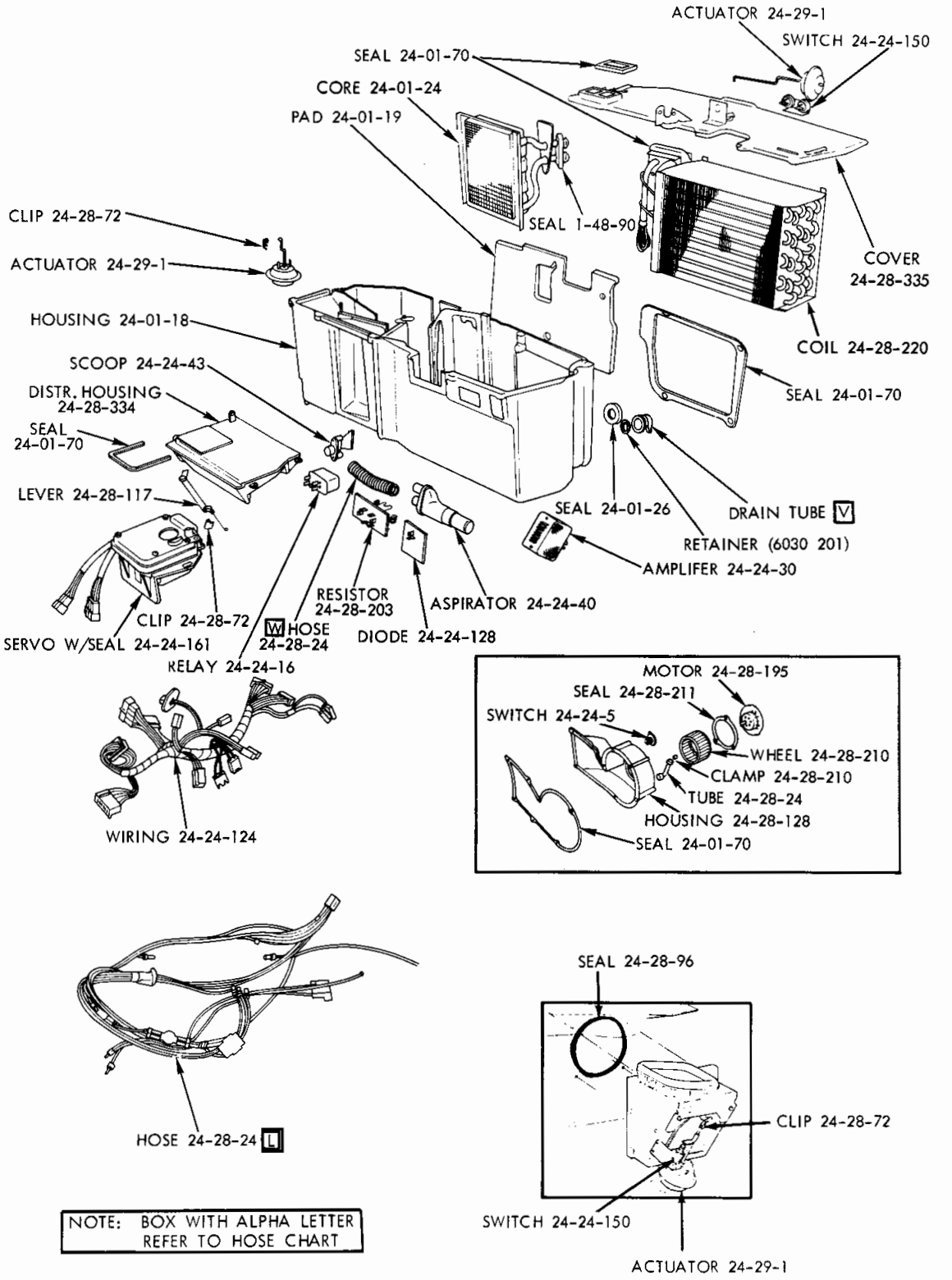

AIR CONDITIONING WITH ATC - P, D, C, Y

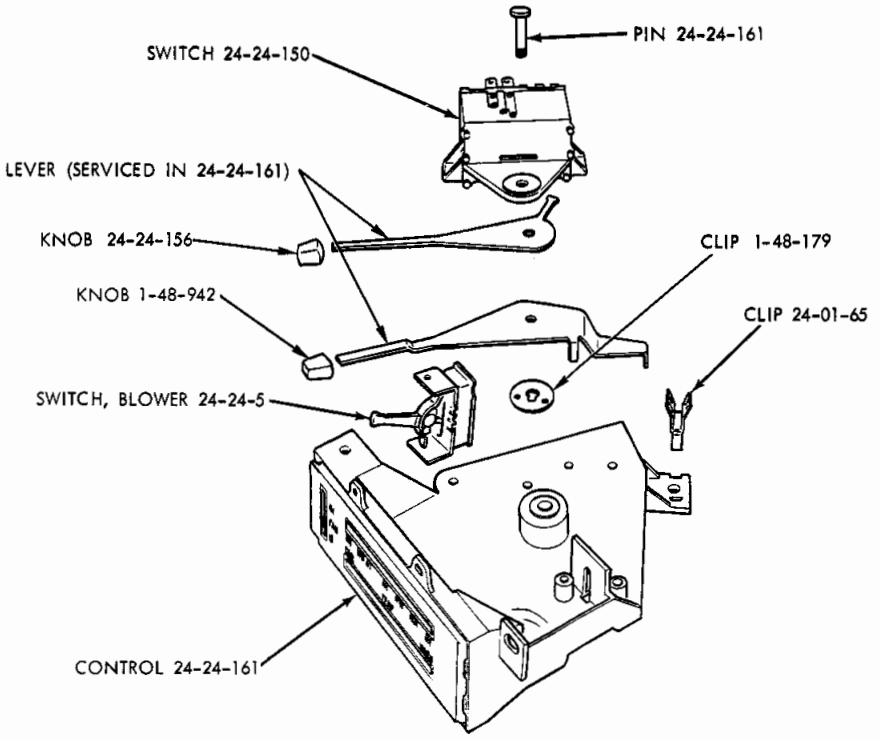

HEATER AND AIR CONDITIONING CONTROLS - V, L, R, W

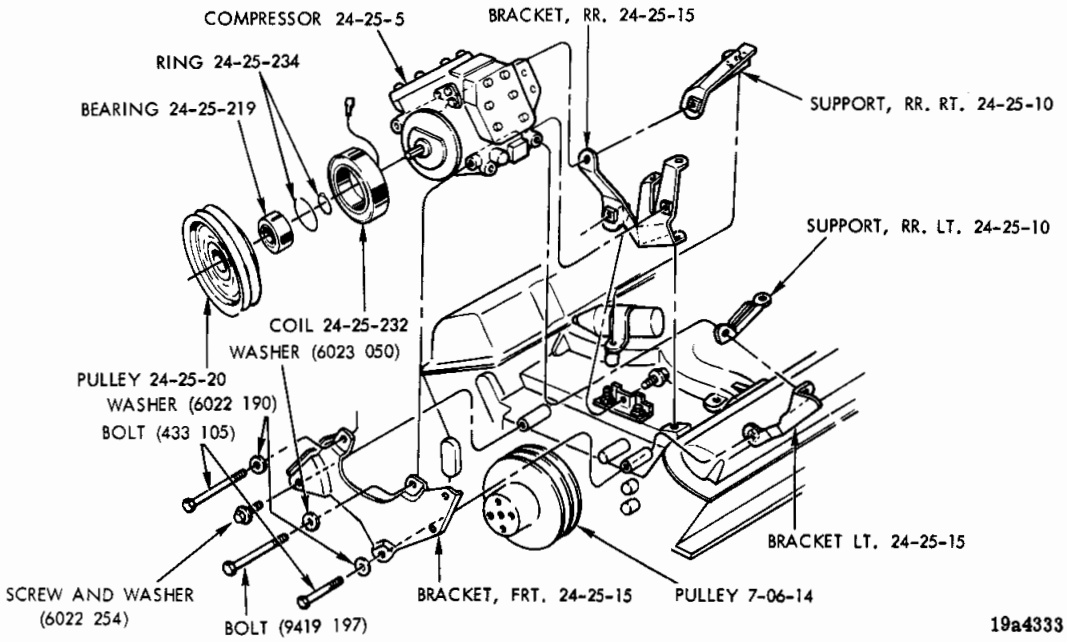

AIR CONDITIONING COMPRESSOR AND MOUNTING BRACKETS

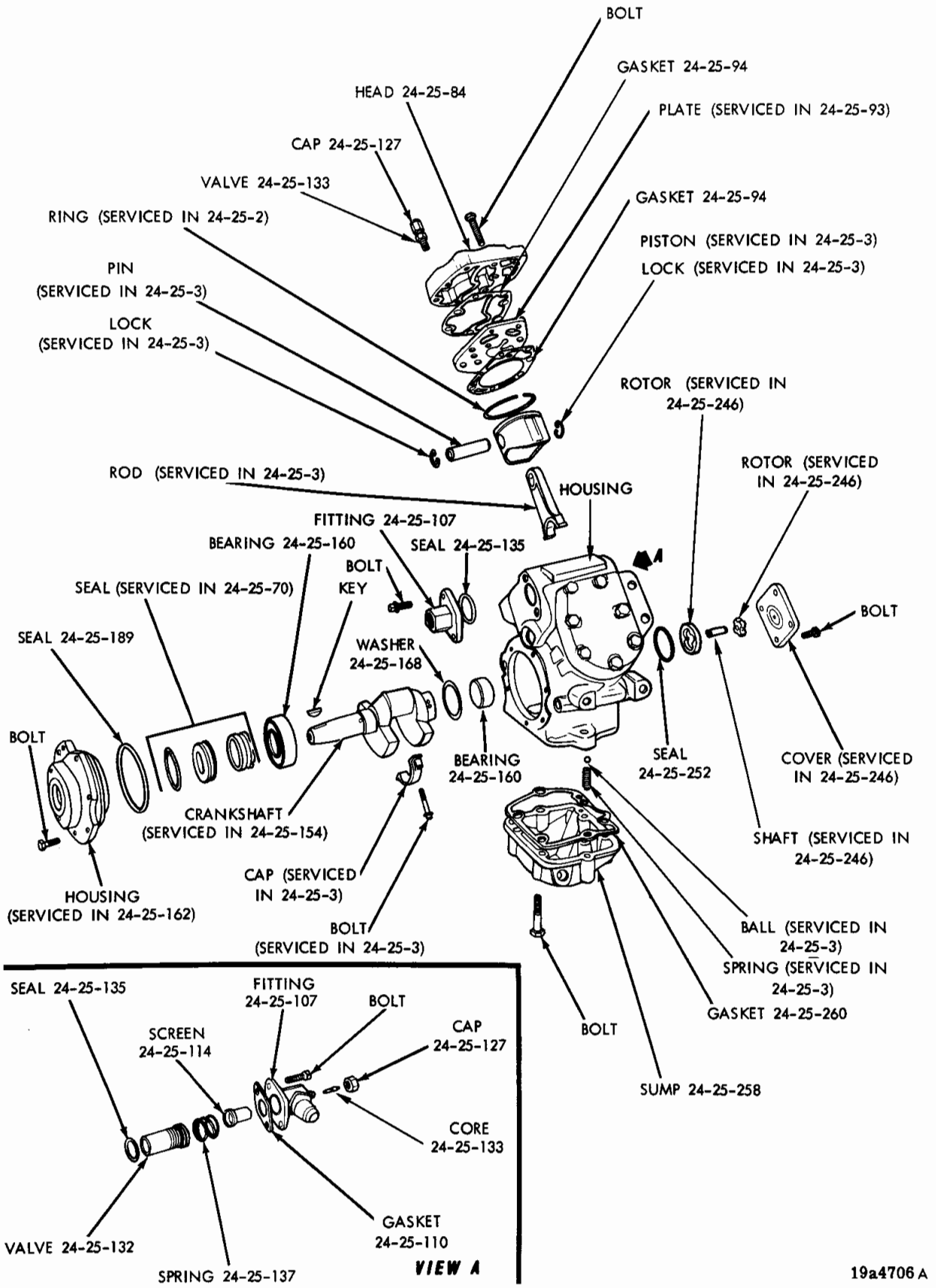

AIR CONDITIONING COMPRESSOR

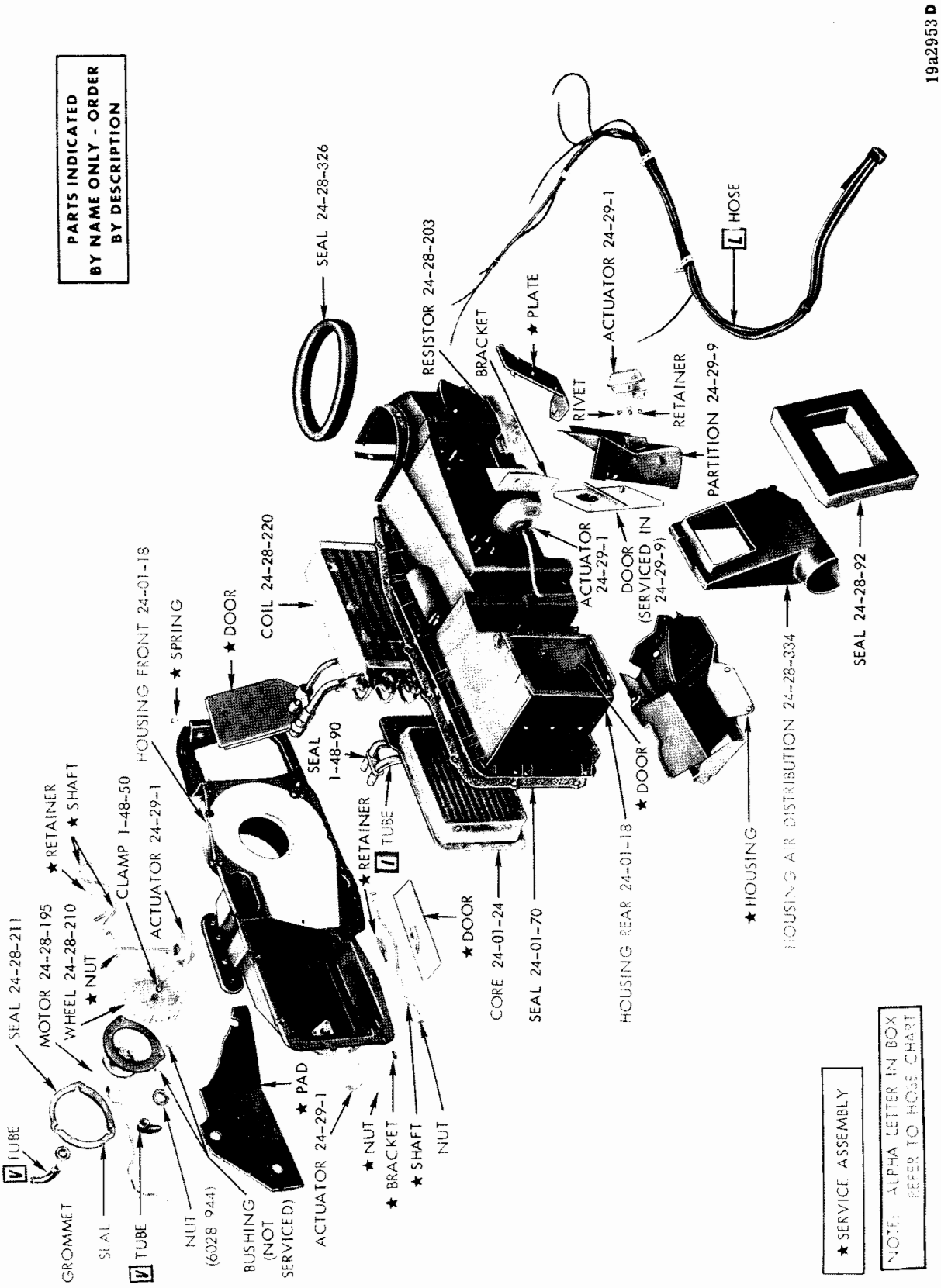

AIR CONDITIONING EVAPORATOR - B, J, R, W

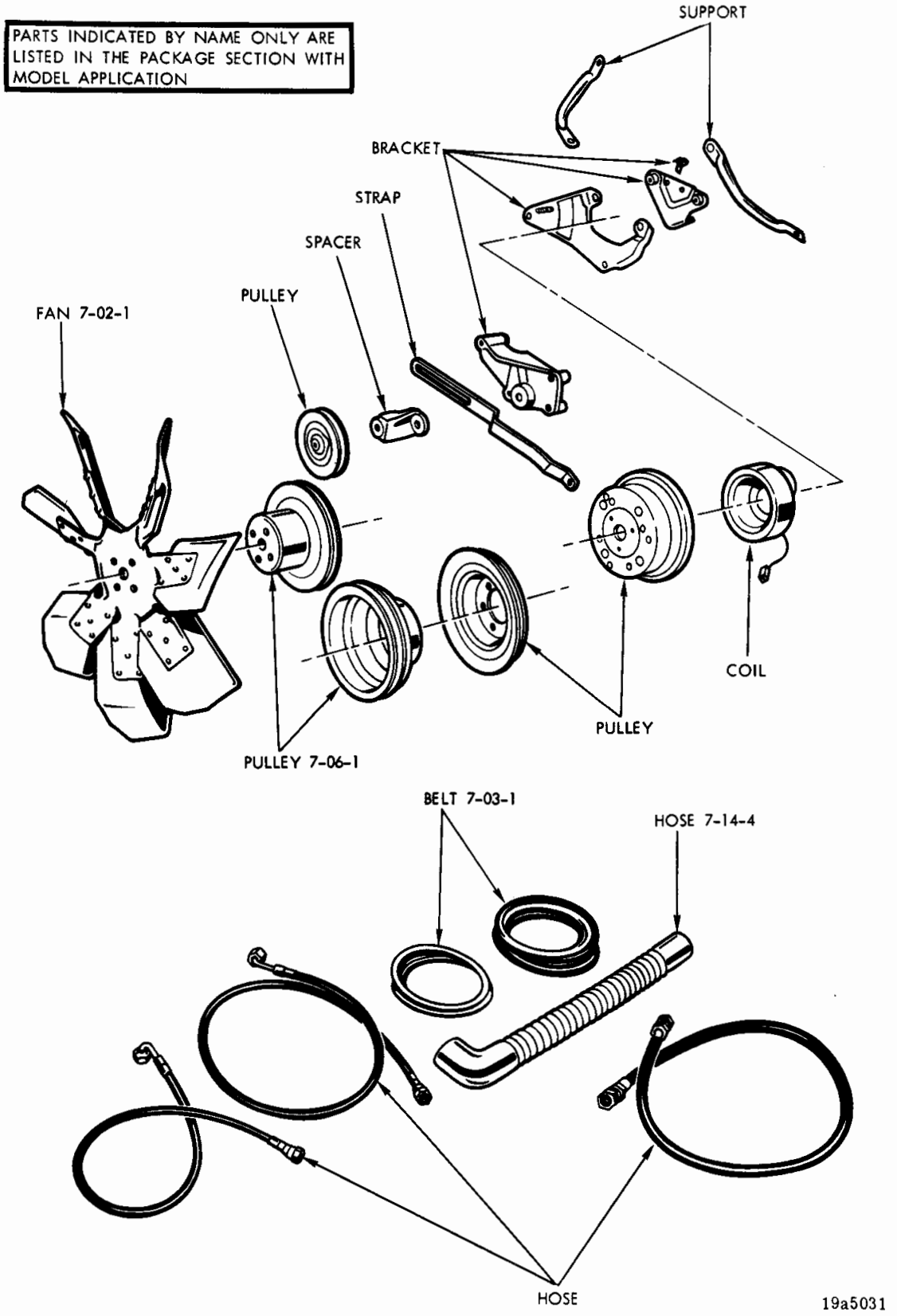

AIR CONDITIONING ADAPTER PACKAGE - TYPICAL OF CUSTOM AND STANDARD

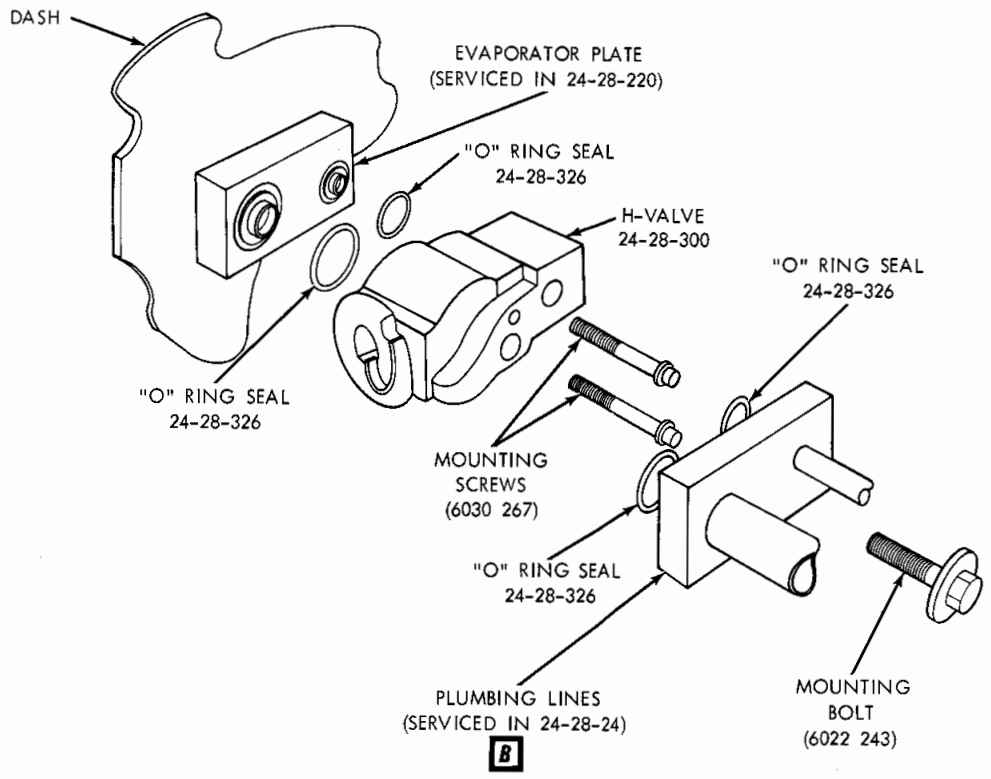

"H" TYPE EXPANSION VALVE

NOTES

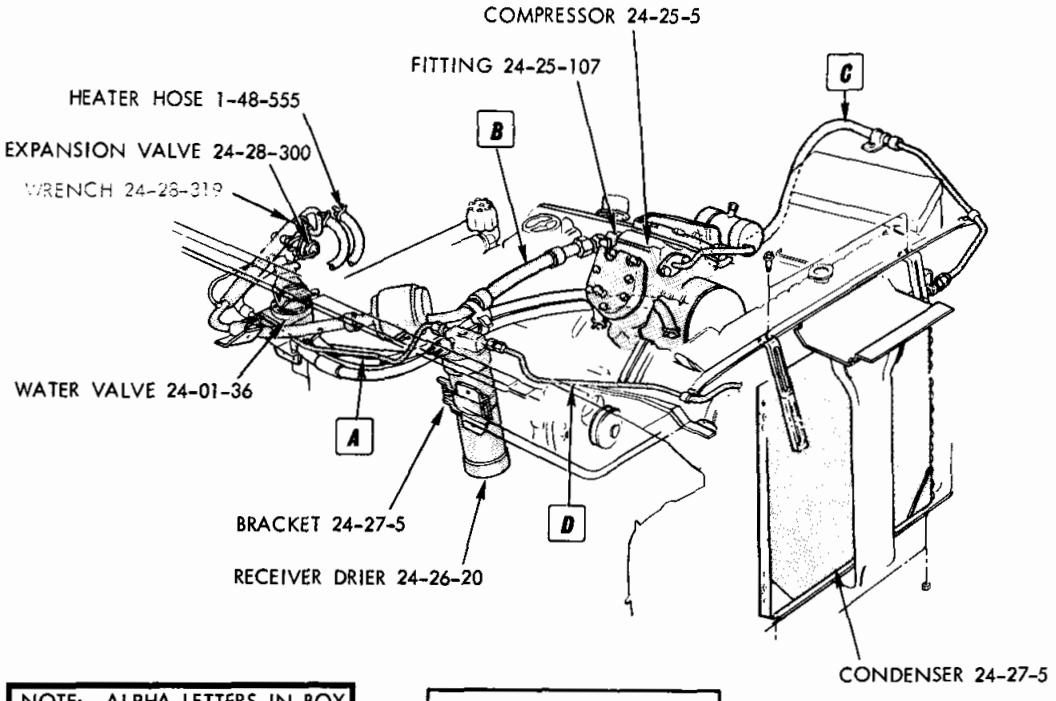

NOTE: ALPHA LETTERS IN BOX REFER TO HOSE CHART

PARTS INDICATED BY NAME ONLY - ORDER BY DESCRIPTION

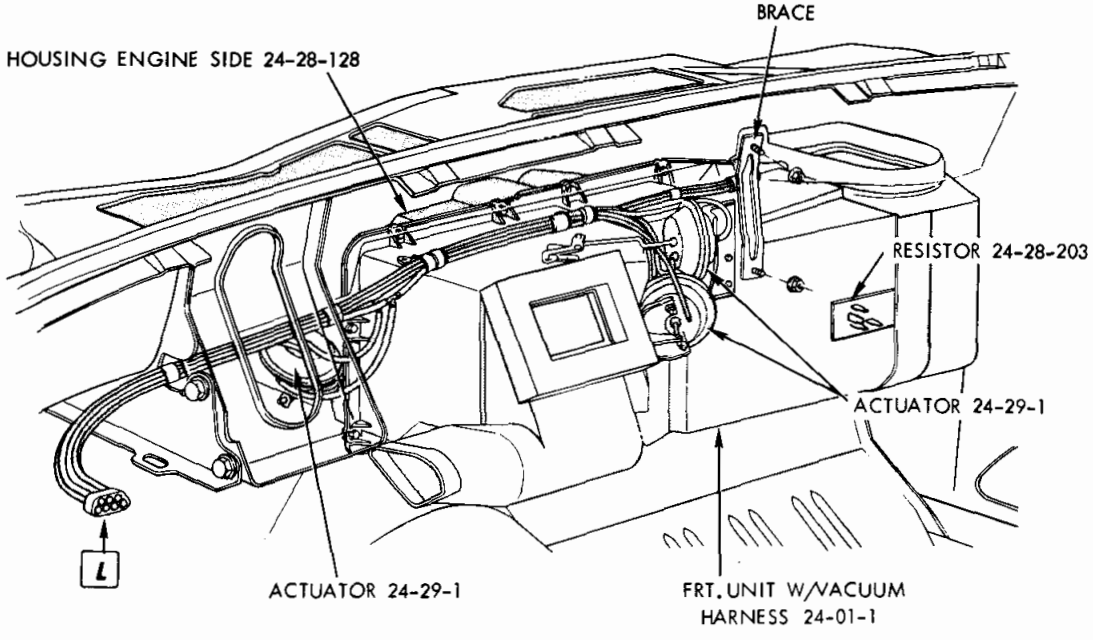

19a3903 B

NOTES

A	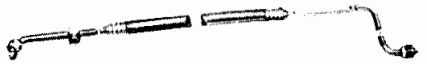	M	
B		N	
B	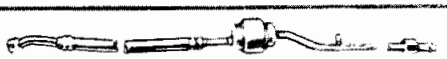	O	
C		P	
D	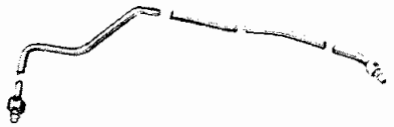	Q	
E		R	
F		S	
G		T	
H		U	
I		V	
J		W	
K		X	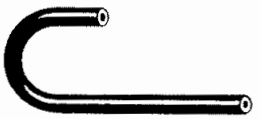
L	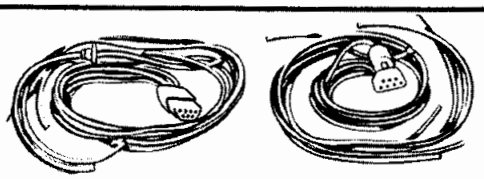		

19a13929 D

AIR CONDITIONING HOSE CHART

AIR CONDITIONING HOSE CHART

TYPE	LOCATION	MODEL	QUALIFICATIONS	PART NUMBER
A	Line, Liquid	V, L		3502 618
	Line, Liquid	B, J		3502 110
	Line, Liquid	R, W		3502 546
B	Line, Suction	V, L	225 Eng.	3502 530
	Line, Suction	V, L	360, 318 Eng.	3503 493
	Line, Suction	B, J		3502 113
	Line, Suction	R, W	225 Eng.	3502 090
	Line, Suction	R, W	318, 360 Eng.	3502 755
	Line, Suction	R, W	400, 440 Eng., Chry. Altr.	3502 718
	Line, Suction	R, W	400, 440 Eng., L/N Altr.	3502 629
	Line, Suction and Liquid	P, D	318, 360 Eng.	3503 251
	Line, Suction and Liquid	P, D	400, 440 Eng., L/N Altr.	3503 521
	Line, Suction and Liquid	P, D, C, Y	400, 440 Eng., Chry. Altr.	3503 236
C	Line, Discharge	V, L	318, 360 Eng.	3502 588
	Line, Discharge	V, L	225 Eng.	3502 589
	Line, Discharge	B, J		3502 382
	Line, Discharge	R, W	225 Eng.	3503 541
	Line, Discharge	R, W	318, 360 Eng.	3503 542
	Line, Discharge	R, W	Chry. Altr., 400, 440 Eng.	3503 495
	Line, Discharge	R, W	L/N Altr., 400, 440 Eng.	3503 543
	Line, Discharge	P, D	318, 360 Eng.	3503 252
	Line, Discharge	P, D	400, 440 Eng.	3503 522
	Line, Discharge	P, D, C, Y	400, 440 Eng.	3503 494
D	Tube, Liquid (Cond. to Drier)	B, J		3502 233
J	Tube, Defroster, Rt.	V, L		3502 544
	Tube, Defroster, Lt.	V, L		3502 545
K	Tube, Repair Adapter, w/Nut	All		Code 24-28-18
L	Hose, Vacuum, Harness Assy.	V, L		3502 465
	Hose and Connector, Vacuum	B, J		2884 720
	Hose, Vacuum Eng. to Vac. Resvr.	V, L		3441 897
	Hose and Connector, Vacuum	R, W		3502 625
	Hose and Connector, Vacuum	P, D, C		3503 134
	Hose and Connector, Vacuum, w/A. T. C.	P, D, C, Y		3503 200
	Hose, 5/8 Dia. Serviced Rolls	As Req.		1315 466
	Hose, Vacuum, 25 ft. Roll .225/.255 O.D. x .097/.112	All		3502 742
	Hose, Vacuum, 50 ft. Roll .225/.255 O.D. x .097/.112	All		3780 508
	Hose, Vacuum, 50 ft. Roll .24 O.D. x .117/.121 I.D.	All		3744 934
	Hose, Vacuum, 50 ft. Roll .50 O.D. x .234/.240 I.D.	All		3744 935
	Hose, Vacuum, 50 ft. Roll .36 O.D. x .170/.176 I.D.	All		3744 936
	Hose, Vacuum, 50 ft. Roll .120/.130 O.D. x .073/.081 I.D.	All		3780 794

CONTINUED ON NEXT PAGE

AIR CONDITIONING HOSE CHART - Continued

TYPE	LOCATION	MODEL	QUALIFICATIONS	PART NUMBER
M	Vacuum Hose Extension	R, W		3502 622
	Vacuum Hose Extension	P, D, C, Y		3503 434
O	Hose, Vacuum Repair Kit, 5 Connectors	As Req.		2275 215
V	Tube, w/Grommet, Drain	V, L		3502 571
	Tube, Drain	P, D, C, Y		3503 133
	Tube, A/C Aspirator to Unit/ATC	P, D, C, Y		3503 734
	Hose, Blower Motor Cooling	V, L		2936 925
	Hose, Blower Motor Cooling	B, J, R, W		2936 925
	Hose, Drain	B, J, R, W		2936 926
	Hose, Blower Motor Cooling	P, D, C, Y		3503 040
W	Hose, In Car Sensor to Aspirator	P, D, C, Y		2936 050
X	Hose, Control Vacuum	R, W		3431 436
	Hose, Control Vacuum Ext.	V, L		3502 537

GROUP 24 - AIR CONDITIONING

ACTUATOR 24-29
COMPLETE UNIT, HOUSING AND VALVE 24-01
COMPRESSOR. 24-25
CONDENSOR 24-27
CONTROLS 24-24
EVAPORATOR. 24-28
RECEIVER DRIER 24-26

Printed in U.S.A.
November, 1974

CODE	PART NAME	ENG. TYPE OR CU. IN	V	B J	L	R	W	P	D	C (L M)	C (P)	C (H S)	Y	PART NUMBER
	NOTE: Service parts for Field Installed Units are listed in the Parts Package Section of this catalog.													
24-01-1	**BASIC PACKAGE, Field Installed**													
	In Dash		—	—	—	—	—	1	1	1	1	1	—	3837 329
	In Dash		—	—	—	1	1	—	—	—	—	—	—	3879 310
	Slim-Line, Under Dash		1	—	1	—	—	—	—	—	—	—	—	3879 309
	Universal, Under Dash		1	1	1	1	1	—	—	—	—	—	—	3879 311
	ADAPTER PACKAGE, Field Installed													
	w/198, 225 Engines		1	—	1	1	1	—	—	—	—	—	—	3879 316
	w/318, 360 Engines		—	1	—	1	1	1	1	1	1	1	—	3879 317
	w/400, 440 Engines		—	—	—	1	1	1	1	1	1	1	1	3879 333
	w/440 Engine, State of Calif. Only		—	—	—	—	—	1	1	1	1	1	1	3837 333
	FACTORY Installed													
	UNIT, A/C and Htr. Htr.													
	W/Vac/Harness,		—	1	—	—	—	—	—	—	—	—	—	3502 186
	w/Vac/Harness		—	—	—	1	1	—	—	—	—	—	—	3502 624
24-01-18	HOUSINGS, A/Cond. and Htr.													
	FRONT													
	Front, Partial		1	—	1	—	—	—	—	—	—	—	—	3502 470
	Less Core and Coil		—	1	—	1	1	—	—	—	—	—	—	3502 245
	REAR, Complete		—	1	—	1	1	—	—	—	—	—	—	3441 989
	Less Core and Coil		—	1	—	1	1	—	—	—	—	—	—	3502 211
	Housing w/Stud													
	Pass. Side w/A.T.C.		—	—	—	—	—	1	1	1	1	1	1	3503 202
	Housing, w/Front Heater		—	—	—	—	—	1	1	1	1	1	—	3503 056
24-01-19	PAD UNIT TO DASH INSUL.		—	—	—	—	—	1	1	1	1	1	1	3503 054
24-01-24	CORE, A/Cond. and Htr.		1	—	1	—	—	—	—	—	—	—	—	3780 551
			—	1	—	1	1	—	—	—	—	—	—	3441 180
			—	—	—	—	—	1	1	1	1	1	1	3780 733
	NOTE: For further information see P.T.C. 1-48-88.													
24-01-26	SEAL, Core Tube to Dash		1	—	1	—	—	—	—	—	—	—	—	3502 462
	SEAL, Drain to Dash		—	—	—	—	—	1	1	1	1	1	1	3503 055
24-01-36	VALVE, Water		1	—	1	—	—	—	—	—	—	—	—	3579 173
	Complete		—	—	—	1	1	—	—	—	—	—	—	3502 721
	w/o Bracket		—	1	—	1	1	—	—	—	—	—	—	3502 346
			—	—	—	—	—	1	1	1	1	1	—	3780 701
	w/ATC Up To 5-15-74		—	—	—	—	—	1	1	1	1	1	1	3503 778
	w/A.T.C. After 5-15-74		—	—	—	—	—	1	1	1	1	1	1	3503 784
	Vacuum Check, Four Port A.T.C.		—	—	—	—	—	—	—	2	2	2	2	2820 880
	Check Valve Vac. Hose A.T.C.		—	—	—	—	—	—	—	2	2	2	2	2820 880
	Two Port Check		—	1	—	—	—	1	1	1	1	1	—	3441 609
	Control Vac. Hose Check		—	—	—	1	1	—	—	—	—	—	—	3441 609
	Bracket, Water Valve		—	1	—	—	—	—	—	—	—	—	—	3441 883
			—	—	—	1	1	—	—	—	—	—	—	3502 630
24-01-45	POTENTIOMETER, See P.T.C. 24-24-19													
24-01-46	RESERVOIR, w/A.T.C.		—	—	—	—	—	1	1	1	1	1	1	3420 851
	A/Cond. Vacuum		1	—	1	—	—	—	—	—	—	—	—	2837 314
24-01-65	CABLE, Temp. Control													
	w/Grommet		—	1	—	—	—	—	—	—	—	—	—	3431 459
			1	—	1	1	1	1	1	1	1	1	—	3502 565
	CLIP, Temp. Control Cable Adjusting		—	1	—	1	1	1	1	1	1	1	—	6028 590
	Water Valve Control Cable Mtg.		—	1	—	1	1	—	—	—	—	—	—	6003 464
	Temp. Control Cable Mtg. At Control		1	—	1	1	—	—	—	—	—	—	—	6029 654
	Temp. Control Cable Mtg. At Unit		1	—	1	—	—	—	—	—	—	—	—	6003 464
	Control Cable Mtg.		1	—	1	1	1	1	1	1	1	1	—	6003 464
	Temp. Control Cable Ret.		—	1	—	1	1	—	—	—	—	—	—	3431 457
	Temp. Control Lever Ret.		1	—	1	1	1	1	1	1	1	1	—	2820 453
	Valve Control Cable Mtg.		—	1	—	1	1	—	—	—	—	—	—	2884 656
	NOTE: For Further Information See P.T.C. 1-48-941													
24-01-70	SEALS													
	Rr. Hsg. to Dist. Hsg.		—	1	—	1	1	—	—	—	—	—	—	2936 502
	Rr. Hsg. to Frt. Hsg. At Coil		—	1	—	1	1	—	—	—	—	—	—	2936 957

CARLINES: J - Challenger; B - Barracuda; V - Valiant; L - Dart; R - Satellite; W - Coronet - Charger; P - Plymouth; D - Dodge; C - Chrysler; Y - Imperial

AR Indicates use as required.

\# Indicates parts not listed in any previous parts book.

Numerals in parentheses ( ) refer to notes.

★ Indicates change or addition.

Printed in U.S.A.
November, 1974

CODE	PART NAME	ENG. TYPE OR CU. IN	V	B J	L	R	W	P	D	C (L M)	C (P)	C (H S)	Y	PART NUMBER
24-01-70	SEALS Cont'd.													
	Dist. Hsg. to Unit		—	—	—	—	—	1	1	1	1	1	1	3503 129
	Hsg. to Dash		—	—	—	—	—	1	1	1	1	1	1	3503 051
	Eng. Side Hsg. to Dash Up To 12-10-73		—	—	—	—	—	1	1	1	1	1	1	3503 032
	Engine Side Hsg. To Dash Upper After 12-10-73		—	—	—	—	—	1	1	1	1	1	1	3503 595
	Engine Side Hsg. To Dash Lower After 12-10-73		—	—	—	—	—	1	1	1	1	1	1	3503 596
	SEAL PACKAGE, A/C or A.T.C. Engine Side Hsg.		—	—	—	—	—	1	1	1	1	1	1	3879 524
	Evap. Coil Tubes to Dash		—	—	—	—	—	1	1	1	1	1	1	3503 052
	Cover Defr. Outlet to Duct		—	—	—	—	—	1	1	1	1	1	1	3503 120
24-01-87	NIPPLES													
	Hose to Pump		—	—	—	1	1	1	1	1	1	1	1	2936 757
	Hose Eng.		—	1	—	1	1	—	—	—	—	—	—	3502 123
			1	—	1	—	—	1	1	1	1	1	—	2936 298
24-01-225	SEAL, Evap. Coil, Side		—	AR	—	AR	AR	—	—	—	—	—	—	3441 499
	Top		—	1	—	1	1	—	—	—	—	—	—	3441 500
	Evap. Coil to Hsg.		1	—	1	—	—	—	—	—	—	—	—	3441 499
24-24-5	**SWITCHES**													
	Blower Control		—	1	—	—	—	—	—	—	—	—	—	3502 678
			1	—	1	1	1	—	—	—	—	—	—	3502 685
			—	—	—	—	—	1	1	1	1	1	1	3780 737
	Control Vac.		1	—	1	—	—	—	—	—	—	—	—	3431 285
	A/C Shut Off		—	—	—	—	—	1	1	1	1	1	—	3488 820
	Low Pressure Cut Off (Replacement Pkg.)		1	1	1	1	1	1	1	1	1	1	1	3879 432 (3502678)
	High Pressure Cut Out		—	—	—	1	1	1	1	1	1	1	—	3503 544
	Ambient, w/A.T.C. Only		—	—	—	—	—	1	1	1	1	1	1	2936 365
	Cold Eng. Lockout w/Gasket A.T.C. Only		—	—	—	—	—	1	1	1	1	1	1	3503 475
24-24-7	HOLDER, Fuse													
	Holder, Fuse A/C Cont. Jumper		—	—	—	—	—	—	—	1	1	1	1	2257 679
24-24-16	RELAY and Bracket													
	A/Cond. Blower		—	—	—	—	—	1	1	1	1	1	1	3780 596
	A/Cond. Vent Control w/A.T.C.		—	—	—	—	—	1	1	1	1	1	1	3780 305
24-24-19	RHEOSTAT, 2 Wire w/A.T.C.		—	—	—	—	—	1	1	1	1	1	1	3503 333
24-24-30	AMPLIFIER A.T.C. Only		—	—	—	—	—	—	—	1	1	1	1	3441 553
	NOTE: For Further Information See P.T.C. 1-48-4													
24-24-40	ASPIRATOR, w/A.T.C.		—	—	—	—	—	1	1	1	1	1	1	2837 336
24-24-43	SCOOP AIR		—	—	—	—	—	1	1	1	1	1	1	3503 206
24-24-44	SENSOR Ambient w/A.T.C.		—	—	—	—	—	1	1	1	1	1	1	3441 935
24-24-53	ADAPTOR, In Car Sensor w/A.T.C.		—	—	—	—	—	1	1	1	1	1	1	3503 225
	NOTE: For Further Information See P.T.C. 1-48-374													
24-24-67	RESISTOR, Blower Mtr.													
			1	—	1	—	—	—	—	—	—	—	—	3502 736
	w/o A.T.C.		—	—	—	—	—	1	1	1	1	1	—	3503 482
	w/A.T.C.		—	—	—	—	—	1	1	1	1	1	1	3503 473
	NOTE: For Further Information See P.T.C. 1-48-832													
24-24-124	WIRING, A/Cond. & Htr.													
	Inst. Pnl.		1	—	1	—	—	—	—	—	—	—	—	3764 742
	Inst. Pnl.		—	1	—	—	—	—	—	—	—	—	—	3764 129
	Inst. Pnl.		—	—	—	1	1	—	—	—	—	—	—	3764 753
	Inst. Pnl. w/A.T.C.		—	—	—	—	—	1	1	—	—	—	—	3764 893
	Inst. Pnl. w/o Sentinel		—	—	—	—	—	—	—	1	1	1	—	3764 236
	w/Sentinel		—	—	—	—	—	—	—	1	1	1	—	3764 237
	Engine Compt.		—	—	—	1	1	—	—	—	—	—	—	3764 858
	Control w/A.T.C.		—	—	—	—	—	1	1	1	1	1	1	3764 740
24-24-128	DIODE w/A.T.C.		—	—	—	—	—	1	1	1	1	1	1	3503 216
	Seal, D10DE		—	—	—	—	—	1	1	1	1	1	1	3503 713

CODE	PART NAME	ENG. TYPE OR CU. IN	V	B J	L	R	W	P	D	C (L M)	C (P)	C (H S)	Y	PART NUMBER
24-24-140	BEZEL													
	Bezel, Rt. Air Outlet		—	—	—	—	—	1	1	1	1	1	—	3503 179
	Bezel, Control A/Cond. A/C Shut Off Switch		—	—	—	—	—	1	1	1	1	1	—	3488 819
	NOTE: For Further Information See P.T.C. 1-48-70													
24-24-150	SWITCHES													
	Push Button		—	1	—	—	—	—	—	—	—	—	—	3431 020
	Push Button, 6 Position		—	—	3746 083			1	1	1	1	1	—	3780 735
	Push Button, 6 Position w/A.T.C.		—	—	—	—	—	1	1	1	1	1	1	3780 732
	Control Vacuum		1	—	1	—	—	—	—	—	—	—	—	3744 966
	Control Vacuum 6 Position		1	—	1	1	1	—	—	—	—	—	—	3502 414
	Vacuum Recirculating, A.T.C. Transfer		—	—	—	—	—	—	—	1	1	1	1	2936 754
	Brkt. Sw. Mtg. Clutch Master		—	—	—	—	—	1	1	1	1	1	1	3503 286
	Clutch, Compressor Yellow		—	—	—	—	—	1	1	1	1	1	1	2837 386
	Master, Green		—	—	—	—	—	1	1	1	1	1	1	2837 382
	Push Nut		—	—	—	—	—	2	2	2	2	2	2	6022 149
	NOTE: For Further Information See P.T.C. 1-48-770													
24-24-156	KNOBS													
	A/C Control		—	1	—	—	—	—	—	—	—	—	—	3431 330
			1	—	1	1		—	—	—	—	—	—	2884 413
	Heater Temp. Control		—	—	—	—		—	—	1	1	1	1	3502 450
	A/C Temp. Control		—	—	—	—	—	1	1	1	1	1	—	3503 315
	NOTE: For Further Information See P.T.C. 1-48-942													
24-24-159	REGULATOR, Control Vacuum (Also in 1-48-374)											1		
24-24-161	CONTROL, A/COND. AND HTR. COMP.		1	—	1	—	—	—	—	—	—	—	—	3502 776
	w/out Rallye Inst. Panel		—	1	—	—	—	—	—	—	—	—	—	3502 445
	w/Rallye Inst. Panel		—	1	—	—	—	—	—	—	—	—	—	3502 444
			—	—	—	1	1	—	—	—	—	—	—	3502 775
			—	—	—	—	—	1	1	1	1	1	—	3503 305
	w/A.T.C.		—	—	—	—	—	1	1	1	1	1	1	3503 306
	Pin Control Lever Pivot		1	—	1	1	1	—	—	—	—	—	—	3502 365
	Servo and Seal		—	—	—	—	—	1	1	1	1	1	1	3503 524
	NOTE: For Further Information See P.T.C. 1-48-4													
24-24-164	EXTENSION and COVER													
	Off		—	1	—	—	—	—	—	—	—	—	—	2884 711
	Max. A/C		—	1	—	—	—	—	—	—	—	—	—	2884 712
	A/Cond.		—	1	—	—	—	—	—	—	—	—	—	2884 713
	Heat		—	1	—	—	—	—	—	—	—	—	—	2884 714
	Defrost		—	1	—	—	—	—	—	—	—	—	—	2884 715
	NOTE: For Further Information See P.T.C. 1-48-12													
24-24-167	LAMP, A/Cond. and Heater Control													
	Contact A/C and Htr. Control Lamp		1	—	1	1	1	1	1	1	1	1	1	2256 966
	Socket, Complete Control Lamp		—	—	—	—	—	1	1	1	1	1	1	3502 266
	Socket, Control Lamp		1	—	1	1	1	1	1	1	1	1	1	1753 632
	NOTE: For Further Information See P.T.C. 1-48-10													
	NOTE: The part number stamped on Compressor Identification Plate is a production number and may be used to identify component parts requirement for that compressor (Example: Code 24-25-5)													
24-25-2	**PISTON RING PACKAGE, Compressor**		AR	AR	AR	AR	AR	AR	AR	AR	AR	AR	AR	2275 207
24-25-3	PISTON and CONNECTING ROD PACKAGE													
	V2 Compressor		AR	AR	AR	AR	AR	AR	AR	AR	AR	AR	AR	2932 972
	RV2 Compressor		AR	AR	AR	AR	AR	AR	AR	AR	AR	AR	AR	2541 330
24-25-4	GASKET KIT, A/Cond. Compressor For Field Installed Compressor 3744 584		1	—	1	1	1	1	1	1	1	1	—	# 3879 511
24-25-5	COMPRESSOR'S V2, Replaces Production Part No's. 3502 608, 3502 610, 3502 716, Per Note		1	1	1	1	1	—	—	—	—	—	—	3609 284

CARLINES J - Challenger, B - Barracuda, V - Valiant, L - Dart, R - Satellite, W - Coronet - Charger, P - Plymouth, D - Dodge, C - Chrysler, Y - Imperial

AR Indicates use as required.

# Indicates parts not listed in any previous parts book.

Numerals in parentheses ( ) refer to notes.

★ Indicates change or addition.

Printed in U.S.A.
November, 1974

CODE	PART NAME	ENG. TYPE OR CU. IN	V	B J	L	R	W	P	D	C (L M)	C (P)	C (H S)	Y	PART NUMBER
24-25-5	COMPRESSOR'S Cont'd.													
	RV2, Replaces Production Part No's 3502 611, 3502 612, 3641 238, 3502 717 3503 240, 3703 601, Per Note		—	—	—	1	1	1	1	1	1	1	1	3609 285
24-25-8	LUBRICANT, Compressor, 1 Quart		AR	AR	AR	AR	AR	AR	AR	AR	AR	AR	AR	1450 769
24-25-10	SUPPORTS, Compressor													
	Rt.	318	1	1	1	1	1	1	1	—	—	—	—	3751 243
	Rt.	360	1	1	1	1	1	1	1	—	—	—	—	3751 243
	To Intake Manf.	225	1	—	1	1	1	—	—	—	—	—	—	3614 981
	Rr. Rt.	400	—	—	—	1	1	1	1	1	1	1	—	3698 954
	Lt.	400	—	—	—	1	1	1	1	1	1	1	—	3698 940
	Rr. Rt.	440	—	—	—	1	1	1	1	1	1	1	1	3698 956
	Lt.	440	—	—	—	1	1	1	1	1	1	1	1	3698 941
	Compr. Rt. Hd. to Cyl. Hd.	225	1	—	1	1	1	—	—	—	—	—	—	3671 203
	Engine Mtg.	225	1	—	1	1	1	—	—	—	—	—	—	3698 667
24-25-15	Brackets													
	Compr. Mtg. Frt.	225	1	—	1	1	1	—	—	—	—	—	—	3830 003
	Altr. Mtg. Frt. w/318, 360 Eng.		1	1	1	1	1	1	1	—	—	—	—	3698 992
	Altr. Mtg. Frt. w/318, 360 Eng. Fleet		—	—	—	1	1	1	1	—	—	—	—	3830 155
	Compr. and Altr. Rear Mtg. w/318, 360 Eng.		1	1	1	1	1	1	1	—	—	—	—	3751 929
	Compr. Mtg. Rr.	400	—	—	—	1	1	1	1	1	1	1	—	3698 948
	Compr. Mtg. Rr.	440	—	—	—	1	1	1	1	1	1	1	1	3698 950
	Compr. Support Side Lt.	318	1	1	1	1	1	1	1	—	—	—	—	3418 261
	Lt.	360	—	—	—	—	—	1	1	—	—	—	—	3418 261
	Comp. Mtg. Frt. w/o Emissions 4 Hole	400	—	—	—	1	1	1	1	1	1	—	—	3751 165
	w/o Emissions 4 Hole	440	—	—	—	1	1	1	1	1	1	1	—	3751 165
	w/400, 440 Eng. 5 Hole		—	—	—	1	1	1	1	1	1	1	1	3769 443
	w/Emissions 4 Hole	400	—	—	—	—	—	1	1	1	1	1	1	3698 664
	w/Emissions 4 Hole	440	—	—	—	—	—	1	1	1	1	1	1	3698 664
	w/400, 440 Eng. 5 Hole		—	—	—	—	—	1	1	1	1	1	1	3769 687
	Compr. Rr. Eng. w/400, 440		—	—	—	1	1	1	1	1	1	1	1	3698 993
	Compr. Lt. to w/Pump Hsg.													
	w/400, 440 Eng. w/Calif. Emission Pkg. Up To 2-22-74		—	—	—	—	—	1	1	1	1	1	1	3698 952
	w/440 Eng. w/Calif. Emission Pkg. After 2-22-74		—	—	—	—	—	1	1	1	1	1	1	3769 370
24-25-20	PULLEY and HUBS													
	Single Groove, Warner 6 5/8" O.D.		1	—	1	1	1	—	—	—	—	—	—	3503 498
	Double Groove, Warner 5 3/8" O.D.													
	Up to Aug. 1973		1	1	1	1	1	1	1	1	1	1	1	2837 163
	After Aug. 1973		1	1	1	1	1	1	1	1	1	1	1	3502 812
24-25-25	PULLEY, Compressor Drive,	225	1	—	1	1	1	—	—	—	—	—	—	3685 687
24-25-31	SHIELD, Idler Pulley Bearing Up To 3-1-74	225	1	—	1	1	1	—	—	—	—	—	—	2658 758
	After 3-1-74	225	1	—	1	1	1	—	—	—	—	—	—	3769 685
24-25-35	PULLEY, Compressor Idler Complete Up To 2-1-74	225	1	—	1	1	1	—	—	—	—	—	—	2953 165
	After 2-1-74	225	1	—	1	1	1	—	—	—	—	—	—	3830 197
24-25-38	PLATE, Compressor Specification		1	—	1	—	—	—	—	—	—	—	—	2485 920
24-25-44	IDLER													
	Roller w/Brg.		—	—	—	1	1	1	1	1	1	1	1	3769 684
	NOTE: See P.T.C. 24-25-15 Comp. Mtg. Frt. Brkt. For Roller Mtg.													
24-25-45	BRACKET, Compressor Idler Pulley Up To 2-1-74	225	1	—	1	1	1	—	—	—	—	—	—	3698 575
	w/Weld Nut After 2-1-74	225	1	—	1	1	1	—	—	—	—	—	—	3830 230
	w/o Weld Nut After 2-1-74	225	1	—	1	1	1	—	—	—	—	—	—	3830 231
24-25-49	SHIELD, Idler Roller w/400, 440 Eng.		—	—	—	2	2	2	2	2	2	2	2	3769 685

CARLINES J - Challenger, B - Barracuda, V - Valiant, L - Dart, R - Satellite, W - Coronet - Charger, P - Plymouth, D - Dodge, C - Chrysler, Y - Imperial

AR Indicates use as required.

Numerals in parentheses ( ) refer to notes.

Printed in U.S.A.

# Indicates parts not listed in any previous parts book.

★ Indicates change or addition.

November, 1974

CODE	PART NAME		ENG. TYPE OR CU. IN	V	B J	L	R	W	P	D	C (L M)	C (P)	C (H S)	Y	PART NUMBER
24-25-70	CRANKSHAFT GAS SEAL PACKAGE			AR	AR	AR	AR	AR	AR	AR	AR	AR	AR	AR	1426 501
	SHAFT SEAL KIT, A/Cond. Compressor For Field Installed Compressor														
	3744 584			1	—	1	1	1	1	1	1	1	1	—	# 3879 510
24-25-78	NUT, Liq. Line Mtg. Male Rec.														
	Drier to Exp. Valve			1	1	1	1	1	1	1	1	1	1	1	3441 740
24-25-84	HEAD, Compressor Cylinder	Rt.		1	1	1	1	1	1	1	1	1	1	1	2000 083
		Lt.		1	1	1	1	1	1	1	1	1	1	1	3604 299
24-25-93	VALVE PLATE PACKAGE	Rt.		1	1	1	1	1	1	1	1	1	1	1	2275 204
	Valve Plate, A/Cond. Compressor For Field Installed Compressor														
	3744 584			1	—	1	1	1	1	1	1	1	1	—	# 3879 512
		Lt.		1	1	1	1	1	1	1	1	1	1	1	2275 205
24-25-94	GASKET, Cylinder Head			1	1	1	1	1	1	1	1	1	1	1	3664 519
	Valve Plate			1	1	1	1	1	1	1	1	1	1	1	3664 550
24-25-107	FITTINGS														
	Suction Port For Compressors														
	3502 611, 3502 612, 3502 717			1	1	1	1	1	1	1	1	1	1	1	3484 440
	3502 610, 3502 609, 3502 716			1	1	1	1	1	1	1	1	1	1	1	3484 438
	3502 608			1	1	1	1	1	1	1	1	1	1	1	3555 190
	3641 238			1	1	1	1	1	1	1	1	1	1	1	3557 794
	3503 240			1	1	1	1	1	1	1	1	1	1	1	3664 541
24-25-110	GASKET, Suction Fitting			1	1	1	1	1	1	1	1	1	1	1	1997 446
24-25-114	FILTER, Comp. Suction			—	1	—	1	1	1	1	1	1	1	1	3484 412
24-25-127	CAP, 1/4", Flare Fitting Seal			AR	AR	AR	AR	AR	AR	AR	AR	AR	AR	AR	1989 202
	Comp. Check Valve			2	2	2	2	2	2	2	2	2	2	2	3704 531
24-25-132	VALVES														
	Pressure Regulator for Compressors														
	3502 609, 3502 611, 3602 612, 3641 238, 3502 715, 3502 717, 3703 601, 3503 240														
	3502 716, 3502 618, 3502 610			1	1	1	1	1	1	1	1	1	1	1	3555 995
	Evap. Temp. Regulator for Compressors														
	3502 612			1	1	1	1	1	1	1	1	1	1	1	2837 402
	REPLACEMENT PACKAGE, Comp.														
	Evap. Temp. Reg. Valve			1	1	1	1	1	1	1	1	1	1	1	3879 347
24-25-133	CORE, Gauge Fitting Valve			AR	AR	AR	AR	AR	AR	AR	AR	AR	AR	AR	1992 947
	Discharge Line Check Valve			1	1	1	1	1	1	1	1	1	1	1	1992 947
24-25-135	SEALS														
	Pressure Regulator Valve			1	1	1	1	1	1	1	1	1	1	1	1994 410
	Discharge Fitting			1	1	1	1	1	1	1	1	1	1	1	~~2008 388~~
24-25-137	SPRING, Pressure Regulator Valve Spacer			1	1	1	1	1	1	1	1	1	1	1	1994 408
24-25-154	CRANKSHAFT PACKAGE														
	V2 Compressor			AR	AR	AR	AR	AR	AR	AR	AR	AR	AR	AR	2815 762
	RV2 Compressor			AR	AR	AR	AR	AR	AR	AR	AR	AR	AR	AR	2815 755
24-25-156	SCREW'S, Compressor Drive Clutch Pulley Mtg. (Pitts Type)			1	1	1	1	1	1	1	1	1	1	1	1819 843
24-25-157	WASHER, Compressor Clutch Pulley Mtg.			1	1	1	1	1	1	1	1	1	1	1	2097 102
24-25-160	BEARING, Crankshaft Ball														
	RV2, V2, Compressor			1	1	1	1	1	1	1	1	1	1	1	2019 681
	Bearing Rear Main Sleeve V2, RV2			1	1	1	1	1	1	1	1	1	1	1	1984 152
24-25-162	CRANKSHAFT BEARING HOUSING PACKAGE														
	V2, RV2, Compressor, w/Bearing			AR	AR	AR	AR	AR	AR	AR	AR	AR	AR	AR	3420 916
24-25-168	WASHER, Crankshaft Thrust			1	1	1	1	1	1	1	1	1	1	1	1747 982
24-25-189	SEAL, Bearing Housing			1	1	1	1	1	1	1	1	1	1	1	1982 542
24-25-219	BEARING, Compressor Clutch			1	1	1	1	1	1	1	1	1	1	1	1769 318
24-25-231	INSULATOR, Comp. Clutch Field Coil Lead			1	1	1	1	1	1	1	1	1	1	1	3764 856
24-25-232	COIL, Compressor Clutch Field			1	1	1	1	1	1	1	1	1	1	1	3502 746

CARLINES: J - Challenger, B - Barracuda, V - Valiant, L - Dart, R - Satellite, W - Coronet - Charger, P - Plymouth, D - Dodge, C - Chrysler, Y - Imperial

AR Indicates use as required.

Numerals in parentheses ( ) refer to notes.

Printed in U.S.A.

# Indicates parts not listed in any previous parts book.

★ Indicates change or addition.

November, 1974

CODE	PART NAME	ENG. TYPE OR CU. IN	V	B J	L	R	W	P	D	C (L M)	C (P)	C (H S)	Y	PART NUMBER
24-25-234	RINGS, Compressor Clutch													
	External	3/4" I.D.	1	1	1	1	1	1	1	1	1	1	1	2097 101
		1 1/8" I.D.	1	1	1	1	1	1	1	1	1	1	1	2485 587
	Internal	2 1/2" I.D.	1	1	1	1	1	1	1	1	1	1	1	2097 103
24-25-246	OIL PUMP PACKAGE		1	1	1	1	1	1	1	1	1	1	1	2021 191
24-25-252	SEAL, Oil Pump Cover Oil		1	1	1	1	1	1	1	1	1	1	1	1747 988
24-25-258	SUMP, Compressor Oil		1	1	1	1	1	1	1	1	1	1	1	3609 280
24-25-260	GASKET, Oil Sump		1	1	1	1	1	1	1	1	1	1	1	1982 545
24-26-20	**DRIER, Receiver, Less Switch**													
	w/Pipe Plugs		1	1	1	1	1	1	1	1	1	1	1	3502 015
24-26-24	STRUT, Rec. Drier Mtg.		—	—	—	1	1	—	—	—	—	—	—	3502 741
24-26-32	STRAP, Rec. Drier Mtg. to Brkt.		1	—	1	—	—	—	—	—	—	—	—	3502 567
24-26-35	BRACKET, Receiver Drier Mtg.		1	1	1	1	1	—	—	—	—	—	—	2219 155
			—	—	—	1	1	—	—	—	—	—	—	3502 550
			—	—	—	—	—	1	1	1	1	1	—	3502 737
			—	—	—	—	—	1	1	1	1	1	1	3503 244
24-26-100	SEE HOSE CHART ITEM B and C FOR SUCTION and DISCHARGE LINE INFORMATION.													
24-27-5	**CONDENSER**		1	—	1	—	—	—	—	—	—	—	—	3503 546
			—	1	—	—	—	—	—	—	—	—	—	3441 934
			—	—	—	1	1	—	—	—	—	—	—	3502 548
			—	—	—	—	—	1	1	1	1	1	1	3503 243
24-27-7	SPACER, Condenser Mtg.		—	—	—	—	—	AR	AR	AR	AR	AR	AR	3503 761
24-28-16	**STRAP**													
	High Pressure Cut Out Sw. Wiring		—	—	—	1	1	1	1	1	1	1	—	2945 704
	A/C Tubes Wrg.		—	—	—	1	1	—	—	—	—	—	—	2945 704
24-28-18	ADAPTER, Tube w/Nut Kit													
	3/8" Dia. Tube, Alum.		1	1	1	1	1	1	1	1	1	1	1	3502 655
24-28-19	GROMMETS													
	W/Hose		—	—	—	1	1	—	—	—	—	—	—	3502 620
			—	1	—	—	—	—	—	—	—	—	—	3431 470
24-28-22	SCREWS													
	Rr. Hsg. Mtg. to Frt. Hsg.		—	AR	AR	AR	AR	AR	AR	AR	AR	AR	AR	3441 172
24-28-24	For HOSES Refer to Hose Chart Illustrated Section of Group 24.													
	Repair Kit, Htr. Control Vacuum Hose		—	—	—	—	—	AR	AR	AR	AR	AR	AR	2275 215
24-28-25	HOUSING													
	Housing Evap. Coil, Less Coil Less Guide		1	—	1	—	—	—	—	—	—	—	—	3503 261
	NOTE: For Further Information See P.T.C. 1-48-559													
24-28-34	DOOR,													
	Defroster		1	—	1	—	—	—	—	—	—	—	—	3502 515
24-28-39	RESTRICTOR, Vacuum Hose		1	1	1	1	1	1	1	1	1	1	—	2884 074
24-28-49	NUT													
	A/C Shutoff Switch Mtg.		—	—	—	—	—	1	1	1	1	1	—	3488 754
24-28-72	CLIPS													
	Floor Air Hsg. Lt. Spotcooler Duct Retaining		—	1	—	—	—	—	—	—	—	—	—	2521 729
	A/C Br. Vac. Actr. Shaft Mtg.		—	1	—	1	1	—	—	—	—	—	—	6008 144
	Mode Dr. Vac. Actr. Shaft Retng.		—	—	—	—	—	1	1	1	1	1	1	6008 144
	Htr. Defr. Dr. Vac. Actr. Shaft Retng.		—	—	—	—	—	1	1	1	1	1	1	6008 144
	Recirc. Vac. Actr. Shaft Mtg.		—	—	—	—	—	1	1	1	1	1	1	6008 144
	w/A.T.C. Link Ret. Blend Air Dr. to Servo		—	—	—	—	—	1	1	1	1	1	1	6028 590
	Center Outlet and Rt. Spotcooler to Ctr. Rt., Outlet Duct to Outlet Mtg.		—	—	—	2	2	—	—	—	—	—	—	2837 285
	Spotcoller Duct to Bezel Mtg. Lt.		—	1	—	—	—	—	—	—	—	—	—	2837 285
	Center Outlet and Rt. Spot Cooler to Duct		—	1	—	—	—	—	—	—	—	—	—	2837 285

CARLINES J - Challenger, B - Barracuda, V - Valiant, L - Dart, R - Satellite, W - Coronet - Charger, P - Plymouth, D - Dodge, C - Chrysler, Y - Imperial

AR Indicates use as required.

Numerals in parentheses ( ) refer to notes.

# Indicates parts not listed in any previous parts book.

★ Indicates change or addition.

Printed in U.S.A.
November, 1974

CODE	PART NAME	ENG. TYPE OR CU. IN	V	B J	L	R	W	P	D	C (L M)	C (P)	C (H S)	Y	PART NUMBER
24-28-72	CLIPS Cont'd.													
	Center Outlet Duct Mtg.		—	—	—	—	—	2	2	2	2	2	2	2837 285
	Rear Hsg. to Frt. Hsg. Mtg.		—	AR	—	AR	AR	—	—	—	—	—	—	6029 769
	Spring, Frt. Hsg. to Rr. Hsg. Mtg.		—	AR	—	AR	AR	AR	AR	AR	AR	AR	AR	6029 769
24-28-73	DUCTS													
	A/C and Htr. Air Outlet/Partial		1	—	1	—	—	—	—	—	—	—	—	3503 229
	Center Air Outlet and Rt. S/Cooler		—	1	—	—	—	—	—	—	—	—	—	2936 842
	Spot Cooler	Lt.	—	1	—	—	—	—	—	—	—	—	—	2936 839
	A/Cond., Htr. Ctr. and Rt. Air Outlet		—	—	—	1	1	—	—	—	—	—	—	3441 388
	Lt. Air Outlet		—	—	—	1	1	—	—	—	—	—	—	3441 698
	A/Cond. and Htr. Defr.		—	—	—	1	1	—	—	—	—	—	—	3441 358
	Spotcooler	Lt.	—	—	—	—	—	1	1	1	1	1	1	3503 534
	For Rt. Side See Part Type Code 23-33-135 Plate, Inst. Panel Trim Pad Ret. A/Cond. Duct													
	Lap Cooler		—	—	—	—	—	1	1	1	1	1	1	3503 153
	Ctr. Air Dist.		—	—	—	—	—	1	1	1	1	1	1	3503 135
	NOTE: For Further Information See P.T.C. 1-48-141, Flex Tubes See 24-28-24, Also 23-33-135													
24-28-78	AIR OUTLET, LOUVER, SPOTCOOLER and HOUSING													
	Louver and Housing,													
		Rt.	1	—	1	—	—	—	—	—	—	—	—	3503 232
		Lt.	1	—	1	—	—	—	—	—	—	—	—	3503 232
		Ctr.	1	—	1	—	—	—	—	—	—	—	—	3503 232
	Spotcooler w/Bezel, w/o Rallye Inst. Pnl.	Lt.	—	1	—	—	—	—	—	—	—	—	—	2936 824
	Spotcooler w/Bezel, w/Rallye Inst. Pnl.	Lt.	—	1	—	—	—	—	—	—	—	—	—	2936 823
	Louver, Spotcooler	Lt.	—	1	—	—	—	—	—	—	—	—	—	2936 832
		Ctr.	—	2	—	—	—	—	—	—	—	—	—	3441 786
		Rt.	—	1	—	—	—	—	—	—	—	—	—	3441 786
	Air Outlet	Blue Ctr.	—	1	—	—	—	—	—	—	—	—	—	P503 KB7
		Green Ctr.	—	1	—	—	—	—	—	—	—	—	—	P503 KG6
		Black Ctr.	—	1	—	—	—	—	—	—	—	—	—	P503 JX9
	Spotcooler	Lt.	—	—	—	1	1	—	—	—	—	—	—	3441 362
	Air Outlet, Black Ctr. and Rt.		—	—	—	1	1	—	—	—	—	—	—	3502 005
	Air Outlet, Wood Grain Ctr. and Rt.		—	—	—	1	1	—	—	—	—	—	—	3502 007
	Spotcooler	Blue Rt.	—	1	—	—	—	—	—	—	—	—	—	P502 KB7
		Green Rt.	—	1	—	—	—	—	—	—	—	—	—	P502 KG6
		Black Rt.	—	1	—	—	—	—	—	—	—	—	—	P502 JX9
	Air Outlet	Ctr. Up To 8-7-74	—	—	—	—	—	1	1	1	1	1	—	3503 165
	Air Outlet	Ctr. After 8-7-74	—	—	—	—	—	1	1	1	1	1	—	3502 899
	w/A.T.C.	Ctr. Up To 8-7-74	—	—	—	—	—	—	—	—	—	—	1	3503 253
	w/A.T.C.	Ctr. After 8-7-74	—	—	—	—	—	—	—	—	—	—	1	3502 900
		Rt.	—	—	—	—	—	1	1	1	1	1	—	3503 178
	w/A.T.C.	Rt. Up To 8-7-74	—	—	—	—	—	—	—	—	—	—	1	3503 256
	w/A.T.C.	Rt. After 8-7-74	—	—	—	—	—	—	—	—	—	—	1	3502 906
		Lt.	—	—	—	—	—	1	1	1	1	1	1	3503 180
24-28-84	ADAPTER													
	Lt. S/Cooler Duct to Inst. Cluster		—	—	—	—	—	1	1	—	—	—	—	3503 147
			—	—	—	—	—	—	—	1	1	1	1	3503 150
24-28-90	DOOR and SEAL													
	Air Cond.		1	—	1	—	—	—	—	—	—	—	—	3744 278
	Fresh Air		1	—	1	—	—	—	—	—	—	—	—	3502 488
	NOTE: For Further Information See P.T.C. 1-48-365													
24-28-92	SEAL													
	Air Distr. Hsg. To Frt. Hsg.		1	—	1	—	—	—	—	—	—	—	—	3502 501
	Unit Mtg. at Tube Outlets		—	1	—	1	1	—	—	—	—	—	—	2936 933
	Distr. Hsg. to Duct		—	1	—	—	—	—	—	—	—	—	—	2936 503
	Air Outlet Distr. Hsg. to Distr. Duct		1	—	1	—	—	—	—	—	—	—	—	3503 445

CARLINES J - Challenger, B - Barracuda, V - Valiant, L - Dart, R - Satellite, W - Coronet - Charger, P - Plymouth, D - Dodge, C - Chrysler, Y - Imperial

AR Indicates use as required.

Numerals in parentheses ( ) refer to notes.

# Indicates parts not listed in any previous parts book.

★ Indicates change or addition.

Printed in U.S.A. November, 1974

CODE	PART NAME	ENG. TYPE OR CU. IN	V	B J	L	R	W	P	D	C (L M)	C (P)	C (H S)	Y	PART NUMBER
24-28-96	SEAL													
	Recir. Hsg. to Dash		—	—	—	—	—	1	1	1	1	1	1	3503 013
	Unit Assy. Mtg. at Plenum		—	1	—	—	—	—	—	—	—	—	—	2607 312
	NOTE: For Further Information See P.T.C. 1-48-942													
24-28-113	HOUSING, Air Recirculating		—	—	—	—	—	1	1	1	1	1	—	3503 010
	w/A.T.C.		—	—	—	—	1	1	—	1	1	1	1	3503 195
24-28-117	LEVER													
	Blend Air Dr. Control A.T.C.		—	—	—	—	—	1	1	1	1	1	1	3503 219
24-28-128	HOUSING, Engine Side Partial													
			—	—	—	—	—	1	1	1	1	1	—	3503 526
	w/A.T.C.		—	—	—	—	—	1	1	1	1	1	1	3503 527
24-28-138	L/PLATE A/C and Htr./Htr. Vent Door													
	NOTE: For Further Information See P.T.C. 1-48-125													
24-28-195	MOTOR, Blower		1	1	1	1	1	—	—	—	—	—	—	3837 343
			—	—	—	—	—	1	1	1	1	1	1	3744 953
	NOTE: For Further Information See P.T.C. 1-48-599													
24-28-203	RESISTOR, Blower Motor		—	1	—	1	1	—	—	—	—	—	—	3502 570
	w/o A.T.C.		—	—	—	—	—	1	1	1	1	1	—	3503 482
	w/A.T.C.		—	—	—	—	—	1	1	1	1	1	1	3503 473
24-28-207	PLATE, Blower Motor Mtg.		—	1	—	1	1	—	—	—	—	—	—	3502 596
24-28-210	WHEEL, Blower Motor		1	1	1	1	1	—	—	—	—	—	—	2932 832
			—	—	—	—	—	1	1	1	1	1	1	3503 037
	Clamp, Blower Wheel Mtg.		1	1	1	1	1	1	1	1	1	1	1	2837 680
	NOTE: For Further Information See P.T.C. 1-48-46													
24-28-211	SEAL													
	Blower Motor Mtg. to Unit		1	1	1	1	1	—	—	—	—	—	—	2936 507
	Unit Assy. Mtg. at Blower Mtg.		1	1	1	1	1	—	—	—	—	—	—	2936 930
	Blower Mtor to Hsg.		—	—	—	—	—	1	1	1	1	1	1	3503 036
	Blower Motor Resistor		—	—	—	—	—	1	1	1	1	1	1	3503 712
24-28-220	COIL, Evaporator		1	—	1	—	—	—	—	—	—	—	—	3503 263
			—	1	—	1	1	—	—	—	—	—	—	3441 872
	Coil and Seal		—	—	—	—	—	1	1	1	1	1	1	3503 061
24-28-225	SEAL, Evap. Coil													
	Side		—	—	—	—	—	1	1	1	1	1	1	3503 062
24-28-300	VALVE, Expansion Up To 9-27-73		1	1	1	1	1	—	—	—	—	—	—	2932 843
	VALVE AND SEAL, After 9-27-73		—	1	—	1	1	—	—	—	—	—	—	3502 808
	From 9-27-73 To 2-15-74		1	—	1	—	—	—	—	—	—	—	—	3502 808
	After 2-15-74		1	—	1	—	—	—	—	—	—	—	—	3703 651
	H Type		—	—	—	—	—	1	1	1	1	1	1	3503 189
24-28-302	ELBOW, Exp. Valve to Dash		1	—	1	—	—	—	—	—	—	—	—	3502 524
24-28-318	CONNECTOR and TEES													
	Tee, Vacuum Hose Rr.		—	—	—	—	—	—	—	1	1	1	1	1886 109
	Tee, Vac. Hose		—	AR	—	AR	AR	—	—	AR	AR	AR	AR	3441 425
	Connector Control Vacuum Hose		—	—	—	1	1	—	—	—	—	—	—	3431 297
	Tee Vac. Hose		1	—	1	—	—	—	—	—	—	—	—	3441 734
	Tube		2	2	2	2	2	2	2	2	2	2	2	3441 743
24-28-319	WRENCH, Unit Suct Fitting		1	—	1	—	—	—	—	—	—	—	—	3502 460
			—	1	—	1	1	—	—	—	—	—	—	3441 446
	NOTE: For Further Information See P.T.C. 1-48-280													
24-28-326	SEAL, Hose and Tube "O"													
	Ring 3/8" O.D.		AR	AR	AR	AR	AR	AR	AR	AR	AR	AR	AR	2219 383
	1/4" O.D.		AR	AR	AR	AR	AR	AR	AR	AR	AR	AR	AR	2277 190
	1/2" O.D.		AR	AR	AR	AR	AR	AR	AR	AR	AR	AR	AR	2219 384
	3/4" O.D.		AR	AR	AR	AR	AR	AR	AR	AR	AR	AR	AR	2521 172
	Rec. Drier, Cut Off Switch		1	1	1	1	1	1	1	1	1	1	1	3441 105
	Seal Discharge Line to Compressor		1	1	1	1	1	—	—	—	—	—	—	3441 513
	Seal Discharge Line to Mtg. Flange		—	—	—	—	—	1	1	1	1	1	1	3441 513
	Mtg. At Plenum		1	—	1	—	—	—	—	—	—	—	—	3502 469
			—	1	—	1	1	—	—	—	—	—	—	2607 312
	Evap. Coil Liq. Plate "O" Ring		—	—	—	—	—	2	2	2	2	2	2	3503 530
	Evap. Coil Suct. Plate "O" Ring		—	—	—	—	—	2	2	2	2	2	2	3503 529

CARLINES J - Challenger, B - Barracuda, V - Valiant, L - Dart, R - Satellite, W - Coronet - Charger, P - Plymouth, D - Dodge, C - Chrysler, Y - Imperial

AR Indicates use as required.

Numerals in parentheses ( ) refer to notes.

# Indicates parts not listed in any previous parts book.

★ Indicates change or addition.

Printed in U.S.A.
November, 1974

CODE	PART NAME	ENG. TYPE OR CU. IN	V	B J	L	R	W	P	D	C (L M)	C (P)	C (H S)	Y	PART NUMBER
24-28-334	HOUSINGS													
	A/Cond. Distribution		—	1	—	—	—	—	—	—	—	—	—	2936 599
	A/Cond. Distribution w/Seal		1	—	1	—	—	—	—	—	—	—	—	3502 614
	A/Cond. Distribution		1	—	1	—	—	—	—	—	—	—	—	3502 499
	w/Seal		—	—	—	1	1	—	—	—	—	—	—	3441 382
			—	—	—	—	—	1	1	1	1	1	1	3503 130
24-28-335	COVER and SEAL, Air Distr. Hsg.		1	—	1	—	—	—	—	—	—	—	—	3502 507
	Cover and Seal A/C Hsg.		—	—	—	—	—	1	1	1	1	1	—	3503 115
	w/A.T.C.		—	—	—	—	—	1	1	1	1	1	1	3503 208
	Cover, Evap. Coil Hsg.		1	—	1	—	—	—	—	—	—	—	—	3502 496
24-28-342	BRACE													
	Unit Mtg. Plenum		1	—	1	—	—	—	—	—	—	—	—	3502 461
24-28-380	BRACKET, Ctr. and Rt. S/Cooler Duct Mtg.		—	1	—	—	—	—	—	—	—	—	—	2936 844
	NOTE: For Further Information See P.T.C. 1-48-356													
24-28-405	CONNECTORS													
	Vacuum Hose		AR	AR	AR	—	—	AR	AR	AR	AR	AR	—	2837 876
	Trailer Tow Ext. Vacuum Hose		—	—	—	—	1	1	1	1	1	—	—	2837 876
24-29-1	**ACTUATORS, Vacuum**													
	Defroster Door		1	—	1	—	—	—	—	—	—	—	—	3502 518
	A/Cond. Door		1	—	1	—	—	—	—	—	—	—	—	3502 512
	F/Air Door		1	—	1	—	—	—	—	—	—	—	—	3502 520
	A/Cond. Door		—	1	—	1	1	—	—	—	—	—	—	2936 962
	Defroster Door		—	1	—	1	1	—	—	—	—	—	—	3441 323
	F/Air Door		—	1	—	1	1	—	—	—	—	—	—	3502 183
	By Passenger Door		—	1	—	1	1	—	—	—	—	—	—	3441 324
	Htr. Defr. Door		—	—	—	—	—	1	1	1	1	1	1	3503 121
	A/Cond. Door		—	—	—	—	—	1	1	1	1	1	1	3503 123
	A/Cond. Door		—	—	—	—	—	1	1	1	1	1	1	3441 208
	A/Cond. Recir.		—	—	—	—	—	1	1	1	1	1	—	3503 028
	Recirculating w/A.T.C.		—	—	—	—	—	1	1	1	1	1	1	3503 191
24-29-9	PARTITION, A/Cond. and Htr. Defroster		—	1	—	1	1	—	—	—	—	—	—	2936 690

NOTES

CARLINES J - Challenger, B - Barracuda, V - Valiant, L - Dart, R - Satellite, W - Coronet - Charger, P - Plymouth, D - Dodge, C - Chrysler, Y - Imperial

AR Indicates use as required.

Numerals in parentheses ( ) refer to notes.

Printed in U.S.A.

# Indicates parts not listed in any previous parts book.

★ Indicates change or addition.

November, 1974

GROUP 25—EMISSION CONTROLS

PARTS INDICATED BY NAME ONLY - ORDER BY DESCRIPTION

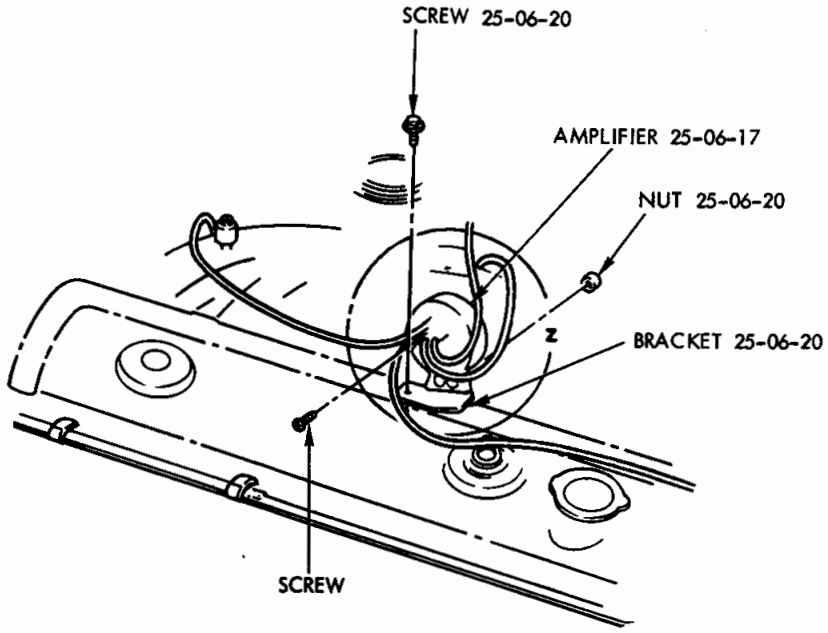

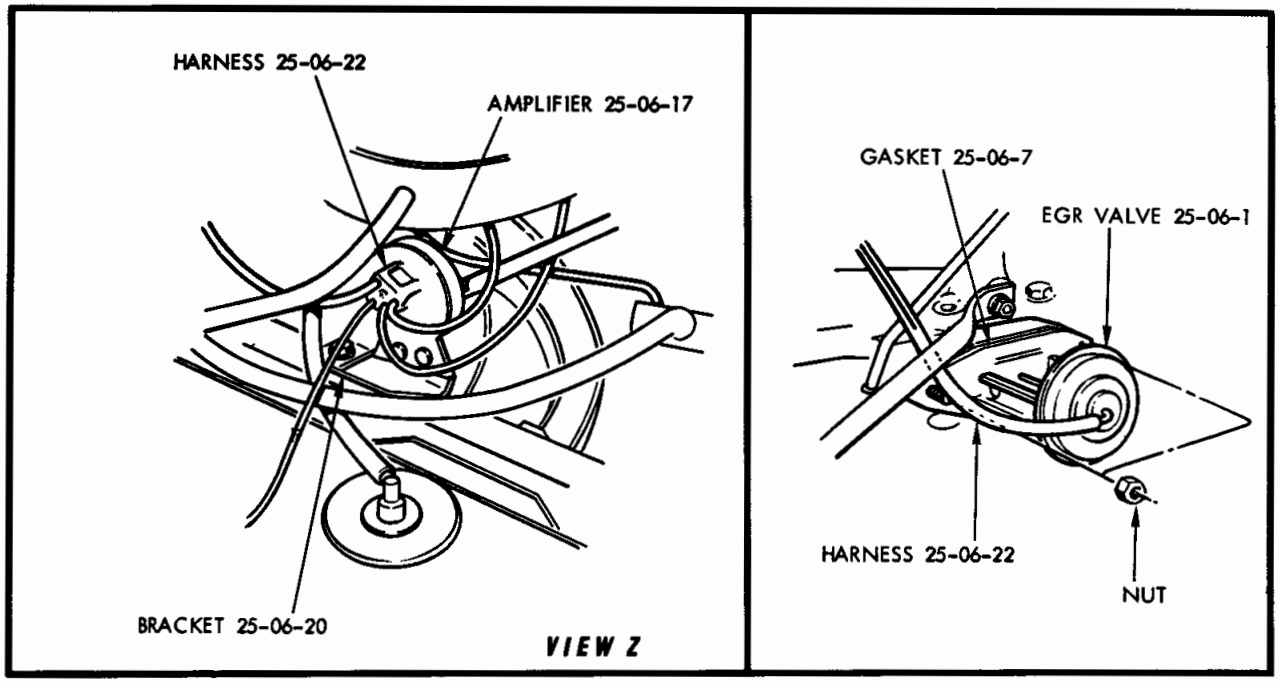

19a4238 A

EXHAUST GAS RECIRCULATION SYSTEM - 6 CYLINDER

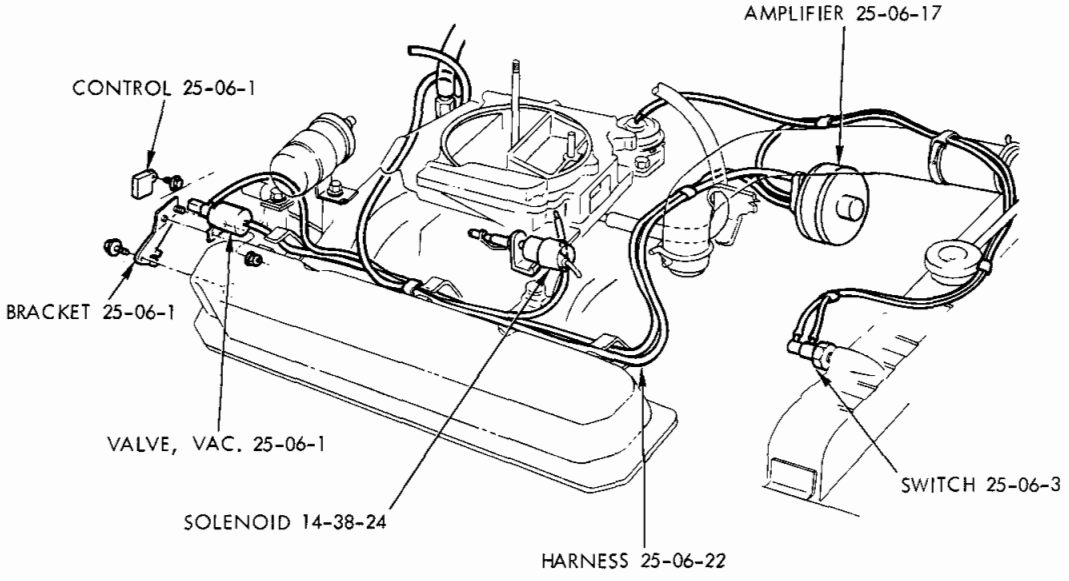

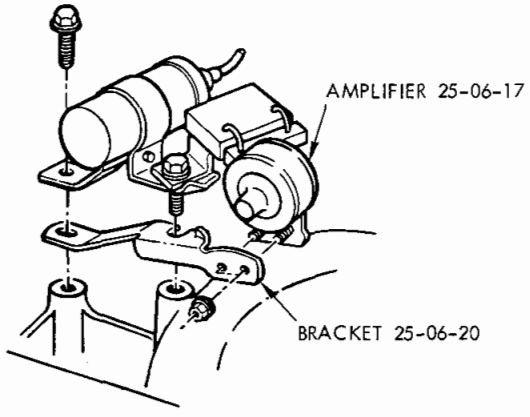

WITH 318 & 360 ENGINES

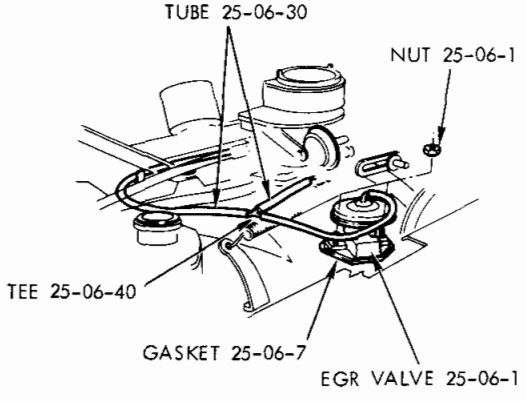

19a4862

EXHAUST GAS RECIRCULATION SYSTEM - 8 CYLINDER

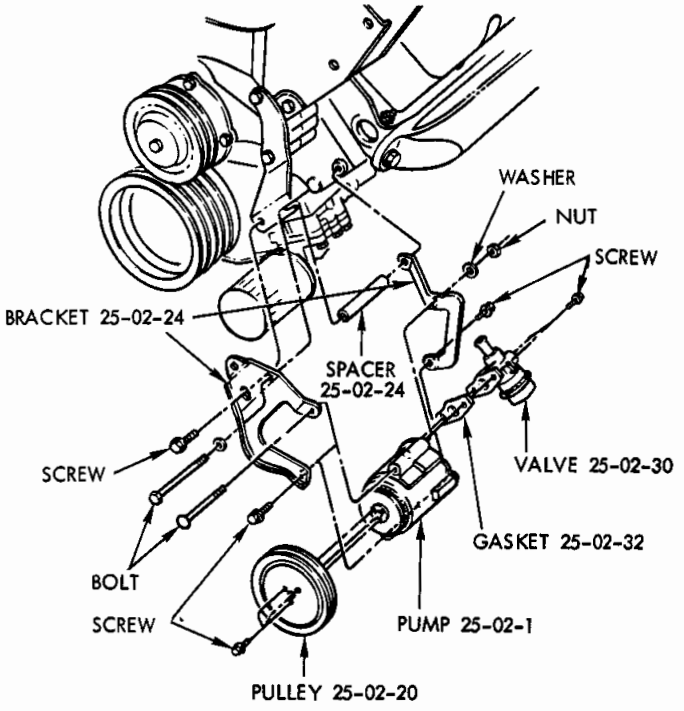

AIR PUMP 8 CYLINDER

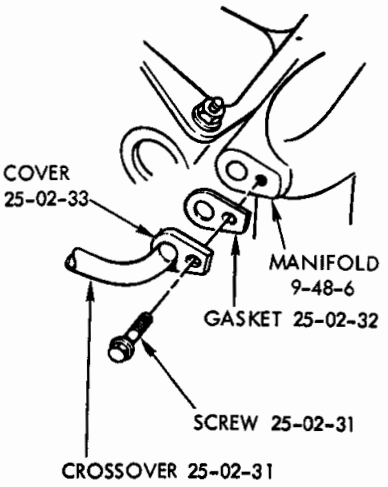

PARTS INDICATED BY NAME ONLY - ORDER BY DESCRIPTION

19a4243 D

AIR PUMP - 8 CYLINDER WITH A/C

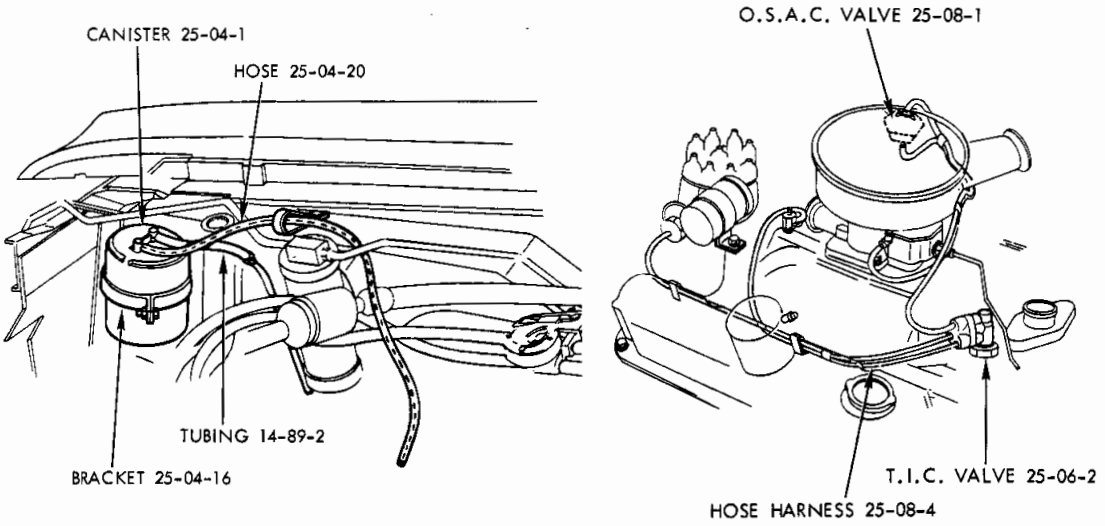

19a4766

ORIFICE SPARK ADVANCE CONTROL VALVE (OSAC), THERMOSTATIC IGNITION CONTROL T.I.C. (BY-PASS) VALVE, VAPOR CANISTER AND HOSE ROUTING (WITH AIR CONDITIONING) - B,J WITH 318 ENGINE SHOWN

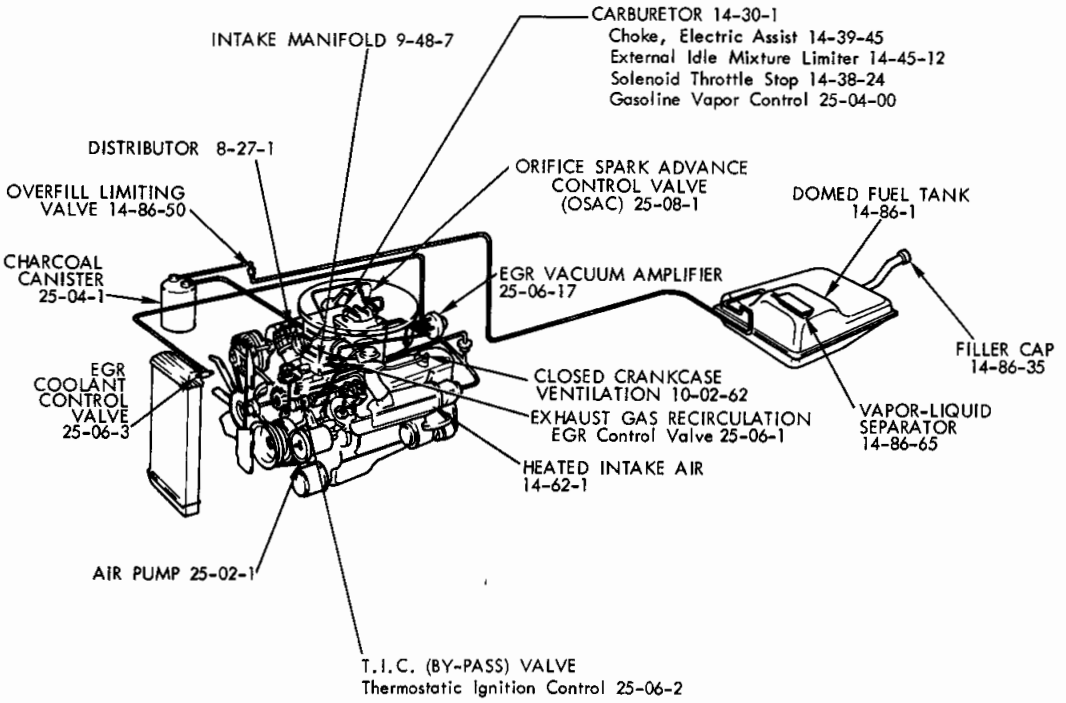

TYPICAL CLEANER AIR SYSTEM (P, D, C, Y SHOWN)

NOTES

GROUP 25 - EMISSION SYSTEMS

CANISTER, FUEL VAPOR 25-04
EXHAUST GAS RECIRCULATION SYSTEM (E.G.R.) 25-06
ORFICE SPARK ADVANCE CONTROL (O.S.A.C.) 25-08
PUMP, AIR INJECTION 25-02

Printed in U.S.A.
November, 1974

CODE	PART NAME	ENG. TYPE OR CU. IN	V	B J	L	R	W	P	D	C (L M)	C (P)	C (H S)	Y	PART NUMBER
	NOTE: This major group (text and illustrations) has been established to describe existing emission systems and to compile all new systems. The illustrations reflecting previous systems may be used to locate parts which make up these systems. The illustrations on new systems will locate peculiar parts coded within this new group.													
25-02-1	**PUMP, Air Injection**		—	—	—	—	—	1	1	1	1	1	1	3614 985
25-02-20	PULLEY, Air Pump		—	—	—	—	—	1	1	1	1	1	1	3698 944
25-02-24	BRACKET, Pump Mtg. w/440 Eng. Frt. Up To 12-3-73		—	—	—	—	—	1	1	1	1	1	1	3698 950
	After 12-3-73		—	—	—	—	—	1	1	1	1	1	1	3830 627
	Rr. Up To 12-3-73		—	—	—	—	—	1	1	1	1	1	1	3751 612
	After 12-3-73		—	—	—	—	—	1	1	1	1	1	1	3830 625
	BRACKET, A/Pump Mtg. Brkt. Frt. Supt., w/440 Eng.		—	—	—	—	—	1	1	1	1	1	1	3698 652
	P/Strg. Pump & Air Pump Eng. Front, w/318 Eng.		1	1	1	1	1	—	—	—	—	—	—	3698 687
	Rear, w/318, 360 Eng.		1	1	1	1	1	1	1	—	—	—	—	2951 852
	CONED WA., Air Pump Mtg. Brkt. Frt.	8	—	—	—	—	—	1	1	1	1	1	1	6022 190
	BOLT	8	—	—	—	—	—	1	1	1	1	1	1	215 514
	SPACER, Pump Mtg. Brkt. w/440 Eng.	8	—	—	—	—	—	1	1	1	1	1	1	6030 051
	SPACER, Air Pump Rr. Supt. to Pump w/400-4 Bbl. & 440 Eng.		—	—	—	—	—	1	1	1	1	1	1	6026 715
25-02-25	SUPPORT, Air Pump Rr. w/400-4 Bbl., 440 Eng. Up To 2-15-74		—	—	—	—	—	1	1	1	1	1	—	3830 626
	Support, Air Pump Rr. w/440 Eng. After 2-15-74		—	—	—	—	—	1	1	1	1	1	1	3830 495
25-02-30	VALVE, Diverter, w/440 Eng. Up To 12-3-73		—	—	—	—	—	1	1	1	1	1	1	3698 919
	After 12-3-73		—	—	—	—	—	1	1	1	1	1	1	3830 624
	CONNECTOR, Diverter Valve, w/440 Eng.		—	—	—	—	—	1	1	1	1	1	1	3830 396
25-02-31	CROSS-OVER, Air Inject. & Exh. Check Valve w/440 Eng.		—	—	—	—	—	1	1	1	1	1	1	3698 906
	w/400-4 Bbl. Eng.	8	—	—	—	—	—	1	1	1	1	1	—	3830 376
25-02-32	GASKET, Diverter Valve Conn. to A/Pump	8	—	—	—	—	—	1	1	1	1	1	1	3671 084
	Air Inj. Cross Over Clamp	8	—	—	—	—	—	2	2	2	2	2	2	3671 142
25-02-42	HOSE, Signal, w/Conn. 3/16" I.D. x 25 Ft. Roll		AR	AR	AR	AR	AR	AR	AR	AR	AR	AR	AR	2448 621
	.145/.165 I.D. x 50 Ft. Roll		AR	AR	AR	AR	AR	AR	AR	AR	AR	AR	AR	3780 507
	5/32" I.D. x 50 Ft. Roll		AR	AR	AR	AR	AR	AR	AR	AR	AR	AR	AR	3837 037
	Diverter Valve To Tube w/440 Eng. (Formed)		—	—	—	—	—	1	1	1	1	1	1	3698 910
	3/4" I.D. x 25 Ft. Roll		—	—	—	—	—	AR	AR	AR	AR	AR	AR	3744 913
	Tube to Check Valve 3/4" I.D. x 25 Ft. Roll		—	—	—	—	—	AR	AR	AR	AR	AR	AR	3744 913
25-02-43	TEE, Signal Hose		1	1	1	1	1	1	1	1	1	1	—	2857 908
	Vac		1	1	1	1	1	1	1	1	1	1	—	2857 908
25-02-50	TUBE, Diverter Valve To Check Valve, w/440 Eng. Up To 12-12-73		—	—	—	—	—	1	1	1	1	1	1	3698 909
	After 12-12-73		—	—	—	—	—	1	1	1	1	1	1	3830 387
	SCREW, Cross-over Clamp	8	—	—	—	—	—	1	1	1	1	1	1	6029 747
	Air Inj. w/400-4 Bbl. & 440 Eng.		—	—	—	—	—	8	8	8	8	8	8	3751 219
25-04-1	**CANISTER, Fuel Vapor (Charcoal)**		1	1	1	1	1	1	1	1	1	1	1	3577 595
25-04-4	FILTER, Canister		1	1	1	1	1	1	1	1	1	1	1	3577 586
25-04-5	CAP, Vapor Canister Bowl Vent Nipple		1	1	1	1	1	1	1	1	1	1	1	3733 285
25-04-16	BRACKET, Canister Mtg.		—	—	—	1	1	—	—	—	—	—	—	3577 594
			1	—	1	—	—	—	—	—	—	—	—	3769 052
			—	1	—	—	—	—	—	—	—	—	—	3671 704
			—	—	—	—	—	1	1	1	1	1	1	3577 596
	SCREW, Brkt. Mtg.		3	3	3	3	3	3	3	3	3	3	3	152 706

CARLINES J - Challenger, B - Barracuda, V - Valiant, L - Dart, R - Satellite, W - Coronet - Charger, P - Plymouth, D - Dodge, C - Chrysler, Y - Imperial

AR Indicates use as required.

Numerals in parentheses ( ) refer to notes.

Printed in U.S.A.

# Indicates parts not listed in any previous parts book.

★ Indicates change or addition.

November, 1974

CODE	PART NAME	ENG. TYPE OR CU. IN	V	B J	L	R	W	P	D	C (L M)	C (P)	C (H S)	Y	PART NUMBER
25-04-20	HOSE, 1/4" I.D. Sold by The Inch		AR	AR	AR	AR	AR	AR	AR	AR	AR	AR	AR	3780 797
	5/32" I.D. 50 Ft. Roll		AR	AR	AR	AR	AR	AR	AR	AR	AR	AR	AR	3780 507
	5/8" I.D. 50 Ft. Roll		AR	AR	AR	AR	AR	AR	AR	AR	AR	AR	AR	3671 792
	.097/.112 I.D. 50 Ft. Roll		AR	AR	AR	AR	AR	AR	AR	AR	AR	AR	AR	3780 508
25-04-21	CLAMP, Hose (Gear Type) 7/16" to 1" Opng.		AR	AR	AR	AR	AR	AR	AR	AR	AR	AR	AR	2448 761
25-06-1	**VALVE, Exhaust Gas Recirculating (EGR) w/Man. Trans. w/Calif. Emission Pkg.**	6	1	—	1	—	—	—	—	—	—	—	—	3769 659
	w/Man. Trans.	6	1	—	1	1	1	—	—	—	—	—	—	3830 101
	w/Auto Trans.	6	1	—	1	1	1	—	—	—	3837C30			~~3769 658~~
	w/Auto Trans. w/Calif. Emission Pkg.	6	1	—	1	—	—	—	—	—	—	—	—	3769 660
	w/318 Eng. w/3 or 4 Sp. Trans. w/Calif. Emission Pkg.		1	—	1	—	—	—	—	—	—	—	—	3769 662
	w/318 Eng. w/3 or 4 Sp. Trans. Exc. R-M		1	1	1	1	1	—	—	—	—	—	—	3830 102
	w/318 Eng. w/Auto. Trans. R-M w/Man. Trans.		1	1	1	1	1	—	—	—	—	—	—	3769 191
	w/318 Eng. w/Auto. Trans.;													
	w/Calif. Emission Pkg.		1	1	1	1	1	—	—	—	—	—	—	3830 103
	w/360-4 Bbl. Eng. w/Auto. Trans. w/Calif. Emission Pkg.		1	1	1	1	1	—	—	—	—	—	—	3769 662
	w/360-4 Bbl. Eng. w/Man. Trans.		1	—	1	1	1	—	—	—	—	—	—	3769 664
	w/360-4 Bbl. Eng. w/Man. Trans. w/Calif. Emission Pkg.		1	—	1	1	1	—	—	—	—	—	—	3769 661
	w/360-4 Bbl. Eng. w/Auto. Trans.		1	1	1	1	1	—	—	—	—	—	—	3769 665
	w/360 Eng. Std.		—	—	—	1	1	1	1	—	—	—	—	3769 663
	w/400-2 Bbl. Eng.		—	—	—	—	—	1	1	1	1	1	—	3769 809
	w/440 Eng. w/Calif. Emission Pkg.		—	—	—	1	1	1	1	1	1	1	—	3830 120
	w/400-4 Bbl. Eng.		—	—	—	1	1	1	1	1	1	1	—	3769 670
	w/400-4 Bbl. Eng. w/4/Sp. Man. Trans.		—	—	—	1	1	—	—	—	—	—	—	3830 104
	w/400-4 Bbl. Eng. R, W w/Auto. Trans.		—	—	—	1	1	1	1	—	—	—	—	3830 105
	w/440 Eng. w/Calif. Emission Pkg.		—	—	—	1	1	1	1	1	1	1	1	3769 667
	w/440 Eng. w/o Calif. Emission Pkg.		—	—	—	1	1	1	1	1	1	1	1	3698 886
	VALVE, EGR Time Delay Vac. Sol. w/Calif. Emission Pkg.		1	1	1	1	1	1	1	1	1	1	1	3755 450
	BRKT. EGR Time Delay Sol. Mtg. w/Calif. Emission Pkg. Up to 6-1-74	6	1	—	1	—	—	—	—	—	—	—	—	3512 669
	After 6-1-74	6	1	—	1	—	—	—	—	—	—	—	—	3751 506
	w/318, 360-4 Bbl. Eng. Up to 4-15-74		1	1	1	1	1	1	1	1	1	1	—	3751 513
	w/318, 360-4 Bbl. Eng. After 4-15-74		1	1	1	1	1	1	1	1	1	1	—	3870 083
	w/440 Hi. Perf. Eng.		—	—	—	1	1	1	1	1	1	1	1	3830 462
	STUD, Valve to Intake Manif. w/318 & 360 Eng.		2	2	2	2	2	2	2	—	—	—	—	6029 997
	Exc. 318 & 360 Eng.		2	2	2	2	2	2	2	2	2	2	2	6029 996
	NUT, Valve To Intake Manifold		2	2	2	2	2	2	2	2	2	2	2	120 368
	CONTROL, EGR Time Delay w/225, 318 Eng. w/Man. Trans. w/Calif. Emission Pkg.		1	—	1	—	—	—	—	—	—	—	—	3755 800
	w/360, 440 Std. Eng. w/Calif. Emission Pkg.		1	1	1	1	1	1	1	1	1	1	1	3755 800
	w/225, 318 Eng. w/Auto. Trans. w/Calif. Emission Pkg.		1	—	1	—	—	—	—	—	—	—	—	3874 010
	w/318, 440 H/Perf. Eng. w/Calif. Emission Pkg.		—	1	—	1	1	1	1	1	1	1	—	3874 010
	w/198, 225 Eng. w/Auto. Trans. w/o Calif. Emission Pkg. After 4-1-74		1	—	1	—	—	—	—	—	—	—	—	3755 860
	WIRING, Timed EGR Control (Dash) w/198, 225 Eng. w/Auto. Trans. w/o Calif. Emission Pkg. After 4-1-74		1	—	1	—	—	—	—	—	—	—	—	3764 362

CARLINES: J - Challenger, B - Barracuda, V - Valiant, L - Dart, R - Satellite, W - Coronet - Charger, P - Plymouth, D - Dodge, C - Chrysler, Y - Imperial

AR Indicates use as required.

\# Indicates parts not listed in any previous parts book.

Numerals in parentheses ( ) refer to notes.

★ Indicates change or addition.

Printed in U.S.A.
November, 1974

CODE	PART NAME	ENG. TYPE OR CU. IN	V	B J	L	R	W	P	D	C (L M)	C (P)	C (H S)	Y	PART NUMBER
25-06-2	VALVE, Thermo. Ign. Dist. Vac. Ctrl.	8	—	—	—	1	1	1	1	1	1	1	1	3780 126
	VALVE PKG.	8	—	—	—	1	1	1	1	—	—	—	—	3780 110
		8	—	—	—	—	—	—	—	—	—	1	1	3744 820
	VALVE ADAPTER (w/A/Cond.)	8	—	—	—	—	—	—	—	—	—	1	1	3751 777
25-06-3	SWITCH, Coolant Controlled EGR Vac.		1	1	1	1	1	1	1	1	1	1	1	# 3837 622
25-06-7	GASKET, E.G.R. Val. Flg.	6	1	—	1	1	1	—	—	—	—	—	—	3671 425
	w/318, 360 Eng.		1	1	1	1	1	1	1	—	—	—	—	3751 714
	w/400, 440-4 Bbl. Eng.		—	—	—	1	1	1	1	1	1	1	1	3698 887
	w/400-2 Bbl. Eng.		—	—	—	—	—	1	1	1	1	1	—	3751 715
25-06-10	RESERVOIR, EGR Vac. w/360-4 Eng. Sta. Wgn.		—	—	—	—	—	1	1	—	—	—	—	3837 612
25-06-12	PLATE, E.G.R. Val. Flg. Cvr.	6	—	—	1	—	1	—	—	—	—	—	—	3671 447
	w/400-4 Bbl. Eng.		—	—	—	—	1	—	—	—	—	—	—	3698 880
	w/318 Eng.		—	—	1	—	1	—	—	—	—	—	—	3671 448
25-06-17	AMPLIFIER - Vac. Exc. P & D Sta. Wgn. w/360-4 Eng.	6&8	1	1	1	1	1	1	1	1	1	1	1	3671 424
	Sta. Wgn. w/360-4 Eng.		—	—	—	—	—	1	1	—	—	—	—	3751 345
	w/Auto. Trans. w/Calif. Emission Pkg.	6	1	—	1	—	—	—	—	—	—	—	—	3769 219
	Nut & Wa. Vac. Amplif. Mtg. Brkt.	6&8	2	2	2	2	2	2	2	2	2	2	2	6025 004
25-06-20	BRACKET, Vac. Amplif. Mtg.	6	1	—	1	1	1	—	—	—	—	—	—	3671 412
	w/360-2 Bbl. Eng.		—	—	—	1	1	1	1	—	—	—	—	3830 139
	w/318, 360-4 Bbl. Eng. w/Calif. Emission Pkg.		1	1	1	1	1	1	1	1	—	—	—	3769 251
	w/400-4 Bbl. Eng.		—	—	—	1	1	1	1	1	1	1	1	3671 414
	w/400, 440 Eng. w/Calif. Emission Pkg.		—	—	—	1	1	1	1	1	1	1	1	3671 414
	SCREW, Vac. Amplif. Tube	6	1	—	1	1	1	—	—	—	—	—	—	6022 250
25-06-22	HARNESS, Vac. Amplif. Tube	6	1	—	1	1	1	—	—	—	—	—	—	3830 452
	w/Calif. Emission Pkg.	6	1	—	1	—	—	—	—	—	—	—	—	3830 465
	w/318 Eng. w/Calif. Emission Pkg. Up To 12-12-73		1	1	1	1	1	—	—	—	—	—	—	3830 466
	w/318 Eng. w/Calif. Emission Pkg. After 12-12-73		1	1	1	1	1	—	—	—	—	—	—	3830 976
	w/360-2 Bbl. Eng.		—	—	—	—	—	1	1	—	—	—	—	3830 453
	w/360-2 Bbl. Eng.		—	—	—	1	1	—	—	—	—	—	—	3830 488
	w/360-4 Bbl. Eng.		—	—	—	—	—	1	1	—	—	—	—	3830 467
	w/360-4 Bbl. Eng. w/Calif. Emission		1	1	1	1	1	—	—	—	—	—	—	3830 468
	w/400-4 Bbl. 440 Eng.		—	—	—	—	—	1	1	1	1	1	1	3830 456
	w/400-4 Bbl. 440 Eng. w/Calif. Emission Pkg.		—	—	—	—	—	1	1	1	1	1	1	3830 470
	w/400-4 Bbl. Eng.		—	—	—	1	1	—	—	—	—	—	—	3830 455
	w/440 Eng. w/Calif. Emission Pkg.		—	—	—	1	1	—	—	—	—	—	—	3830 469
	w/400-2 Bbl. Eng.		—	—	—	—	—	1	1	1	1	1	—	3830 454
	SCREW, Harness to Amplifier		1	1	1	1	1	1	1	1	1	1	1	6029 208
25-06-40	CONNECTOR, E.G.R. Time Delay Vac. Sol. Valve w/225 Eng. w/Auto. Trans. Plastic Up To 12-18-74		1	—	1	—	—	—	—	—	—	—	—	3441 743
	After 12-18-74		1	—	1	—	—	—	—	—	—	—	—	3870 264
	w/318, 360 Eng. w/Calif. Emission Pkg. Plastic Up To 12-18-74		1	—	1	—	—	—	—	—	—	—	—	3441 743
	After 12-18-74		1	—	1	—	—	—	—	—	—	—	—	3870 264
	w/Calif. Emission Pkg. Plastic Up To 12-18-74		—	1	—	1	1	1	1	1	1	1	1	3441 743
	After 12-18-74		—	1	—	1	1	1	1	1	1	1	1	3870 264
	TEE, Nox. Vac. Delay Valve Hose													
	w/225 Eng.		1	—	1	—	—	—	—	—	—	—	—	3671 410
	w/318 Eng. w/Auto. Trans.		1	1	1	1	1	—	—	—	—	—	—	3671 410
25-06-45	COVER, Vac. Cont. Valve		—	—	1	—	1	—	1	—	—	—	—	3656 649
25-08-1	**VALVE, Orifice Spark Adv. Ctrl. (OSAC)**													
	w/198, Eng. w/3 Speed Manual Trans.		1	—	1	—	—	—	—	—	—	—	—	3755 600

CARLINES J - Challenger, B - Barracuda, V - Valiant, L - Dart, R - Satellite, W - Coronet - Charger, P - Plymouth, D - Dodge, C - Chrysler, Y - Imperial

AR Indicates use as required.

Numerals in parentheses ( ) refer to notes.

Printed in U.S.A.

# Indicates parts not listed in any previous parts book.

★ Indicates change or addition.

November, 1974

CODE	PART NAME	ENG. TYPE OR CU. IN	V	B J	L	R	W	P	D	C (L M)	C (P)	C (H S)	Y	PART NUMBER
25-08-1	VALVE Cont'd.													
	w/225, 440 Eng. w/Calif. Emission Pkg.		1	—	1	—	—	1	1	1	1	1	1	3755 600
	w/360-4 Bbl. 400-2 Bbl., 400-4 Bbl.		—	—	—	—	—	1	1	1	1	1	—	3755 600
	w/Calif. Emission Pkg. w/318 Eng.		1	1	1	1	1	—	—	—	—	—	—	# 3755 766
	w/360-4, 400-4 Bbl. & 440 Eng.		1	1	1	1	1	1	1	1	1	1	—	3755 727
	w/Out Calif. Emission Pkg. w/6 Cyl. Eng.		1	—	1	1	1	—	—	—	—	—	—	3755 582
	w/318 Eng.		1	1	1	1	1	—	—	—	—	—	—	3755 762
	w/360-2 Bbl. Eng.		—	—	—	1	—	1	1	—	—	—	—	3755 582
	w/360-2 Bbl. Eng.		—	—	—	1	1	—	—	—	—	—	—	3755 711
	w/360-4 Bbl. Eng.		1	1	1	1	1	—	—	—	—	—	—	# 3755 711
	w/440 Eng.		—	—	—	—	—	1	1	1	1	1	1	3755 582
	SCREW, OSAC Valve		2	2	2	2	2	2	2	2	2	2	2	6029 513
25-08-4	HARNESS, O.S.A.C. w/318 Eng. w/T.I.C. Valve Up to 1-10-74		—	—	—	1	1	—	—	—	—	—	—	3755 717
	NOx. T.I.C. Valve Hose w/318 Eng. After 1-10-74		—	—	—	1	1	—	—	—	—	—	—	3874 013
	w/Calif. Emission Pkg.		—	—	—	1	1	—	—	—	—	—	—	3755 454
	w/T.I.C. Valve, w/o Calif. Emission Pkg.		—	—	—	1	1	—	—	—	—	—	—	3755 321
	w/360-2 Bbl. Eng. w/T.I.C. Valve		—	—	—	1	1	1	1	—	—	—	—	3755 718
	w/360-4 Bbl. Eng. w/T.I.C. Valve		—	—	—	1	1	1	1	—	—	—	—	3755 719
	w/400-2 Bbl. Eng. w/T.I.C. Valve		—	—	—	—	—	1	1	1	—	—	—	3755 721
	w/400-4 Bbl. (Hi Perf.) & 440 Eng. w/T.I.C. Valve		—	—	—	1	1	1	1	—	—	—	—	3755 724
	w/400-4 Bbl. 440 Eng. w/T.I.C. Valve		—	—	—	1	1	1	1	1	1	1	—	3755 723
	w/440 Eng. w/T.I.C. Valve		—	—	—	—	—	—	—	1	1	1	1	3755 722
25-08-8	COVER, NOx. Vac. Delay Valve		—	—	—	—	1	—	1	—	—	—	—	3656 646

NOTES

CARLINES J - Challenger, B - Barracuda, V - Valiant, L - Dart, R - Satellite, W - Coronet - Charger, P - Plymouth, D - Dodge, C - Chrysler, Y - Imperial

AR Indicates use as required.

Numerals in parentheses ( ) refer to notes.

Printed in U.S.A.

# Indicates parts not listed in any previous parts book.

★ Indicates change or addition.

November, 1974

NOTES

ALPHABETICAL INDEX

PART NAME	CODE
A	
ABSORBER, Front Seat Shock	23-45-83
ABSORBER, Shock	17-23-3
ACCELERATOR PEDAL	14-01-1
ACTUATOR, Air Cond. Vacuum	24-29-1
ACTUATOR, Bucket Seat Back Reclining Adj.	23-47-425
ACTUATOR, Heater Door Vacuum	1-48-258
ACTUATOR, Hood Fresh Air Door	15-03-92
ACTUATOR, Starter	8-52-87
ACTUATOR, Switch	19-46-59
ACTUATOR, T/Gate Window Washer	23-67-263
ADAPTER, A/Cond. Air Inlet	24-28-84
ADAPTER, A/Cond. Sensor	24-24-53
ADAPTER, Bumper Guard	13-68-20
ADAPTER, Defogger Blower	1-47-22
ADAPTER, Disc Brake	5-05-43
ADAPTER, Headlamp Seat	8-34-28
ADAPTER, Manual Antenna	1-88-6
ADAPTER, Oil Filter	10-26-5
ADAPTER, Power Strg. Pressure Hose	19-58-15
ADAPTER, Power Strg. Return Hose	19-57-19
ADAPTER, Rr. Htr. Inlet	1-48-5
ADAPTER, Rr. Window Defogger	1-47-2
ADAPTER, Speedometer Drive Pinion	21-85-9
ADAPTER, Two Speed Axle Speedo	21-86-0
ADJUSTER, Diff. Bearing	3-11-13
ADJUSTER, Drive Shaft Brg.	3-33-5
ADJUSTER, Manual Seat	23-47-6
ADJUSTER, Reclining Seat Back	23-45-194
ADJUSTER, T/Gate & Dr. Upr. Latch	23-54-22
AIR CLEANER, Booster Brake Breather	5-113-0
AIR CLEANER, Carb.	14-29-2
AIR CLEANER, Crankcase Vent Inlet	10-01-21
AIR CONDITIONING PACKAGE	24-01-1
AIR DEFLECTOR, Cowl Hinge Pillar	23-36-134
AIR OUTLET, Air Cond.	24-28-78
AIR PUMP	25-02-1
ALTERNATOR	8-28-3
AMMETER	8-37-1
AMPLIFIER, Auto. Headlamp Sentinel	8-53-301
AMPLIFIER, Vac.	25-06-17
ANTENNA, Radio	1-88-1
ANTI-RATTLER, Wdo. Glass Stop	23-64-17
ANTISPIN PARTS, Rear Axle	3-09-0
APPLIQUE, Bumper	13-64-19
APPLIQUE, Wheel Cover	22-01-43
ARM, Door Check	23-10-1
ARM, Frt. Suspension Lower Control	2-10-0
ARM, Frt. Suspension Upper Control	2-08-5
ARM, Glove Box Door Hinge Check	23-06-13
ARM, Heater Control	1-48-940
ARM REST	23-76-0
ARM, Strg. Gear Idler	19-27-31
ARM, Steering Idler	19-27-2
ARM, Strg. Knuckle	2-05-4
ARM, W/Shield Wiper	23-67-5
ARMATURE, Starter	8-52-120
ARMATURE PKG., Wiper Mtr.	23-67-106
ASH RECEIVER	23-02-18
ASPIRATOR, Air Cond.	24-24-40
ASSISTOR, Clutch	6-41-0
ASSISTOR REPAIR PKG., Clutch	6-41-1
AUXILIARY TRANSMISSION	21-88-0
BACK, 2nd & 3rd Seat Back	23-48-188
BACKPLATE, Htr. Distribution Duct	1-48-156
BAFFLE, C/SHAFT OIL SCRAPPER	10-24-30
BAFFLE, Hood Air Intake Scoop,	15-03-52
BAFFLE, Trans. Case Ext. Vent	21-04-17
BAFFLE, Trans. Shaft	21-129-11
BALL JOINT PACKAGE, Lwr. Cont. Arm	2-10-55
BALL JOINT PACKAGE, Upr. Cont. Arm	2-08-57
BALL STUD, Carb. Lever	14-13-1
BAND, Parking Brake	4-03-0
BAND, Trans. Kickdown	21-136-5
BAND, Trans. Reverse	21-136-30
BAR and BASE PACKAGE, Bumper Jack	13-72-4
BAR, Deck Lid Hinge Torsion	23-19-177
BAR, Door Lwr. Hinge Torsion	23-15-30
BAR, Front Bumper Face	13-64-3
BAR, Front Stabilizer	17-29-5
BAR, Headlamp Door	8-34-45
BAR, Qtr. Pnl. Belt Side	23-51-41
BAR, Rear Bumper Face	13-66-3
BAR, T/Gate Hinge Torsion	23-54-140
BAR, Torsion	2-14-3
BASE, Arm Rest	
BASE, Bucket Front Seat Back	23-45-185
BASE, Oil Filter	10-26-12
BASE, Rr. Seat Back Speaker Grille	1-87-20
BASE and SLEEVE, Body Hold Down	23-05-6
BASE, T/Gate Glass Stabilizer Slide	23-54-18
BATTERY HEAT SHIELD	13-35-1
BATTERY HOLD-DOWN STRAP	13-34-3
BATTERY HOLD-DOWN STUD	13-36-5
BATTERY SUPPORT TRAY	13-33-61
BEAM, Tandem Equalizing	17-37-0
BEARING, Air Cond. Compr. Clutch	24-25-219
BEARING, Alternator Drive End Shield	8-29-154
BEARING, Alternator Rectifier	8-29-133
BEARING & SMALL PARTS PKG., Trans.	21-01-8
BEARING & THRUST WASHER, Distributor	8-27-133
BEARING, Aux. Trans. M/Drv. Gear	21-95-9
BEARING, Camshaft	9-16-6
BEARING, Clutch Pedal	6-38-3
BEARING, Clutch Release	6-19-0
BEARING, Clutch Shaft Pivot	6-52-11
BEARING, Connecting Rod	9-32-2
BEARING, Crankshaft	9-09-2
BEARING, Front Axle Diff.	21-11-45
BEARING, Front Axle Drive Pinion	21-11-88
BEARING, Front Axle Strg. Knuckle	2-13-15
BEARING, Front Door Vent Wing	23-64-95
BEARING, Front Wheel	22-06-0
BEARING, Pwr. Strg. Control Val. Stud	19-63-250
BEARING, Propellor Shaft Center	16-16-0
BEARING, Rear Axle Diff. Spiral Pinion	3-13-0
BEARING, Rear Axle Drive Pinion	3-22-0
BEARING, Rear Axle Shaft	3-33-1
BEARING, Rear Wheel	22-07-0
BEARING, Starter Pinion Housing	8-52-80
BEARING, Strg. Column G/Shift Tube	19-46-6

PART NAME	CODE
BEARING, Strg. Column Shaft	19-14-4
BEARING, Strg. Gear Shaft	19-19-19
BEARING, Strg. Gear Thrust	19-15-1
BEARING, Strg. Gear Worm	19-15-60
BEARING, Tailgate Hinge	23-54-142
BEARING, Transfer Case	21-102-7
BEARING, Trans. Aux. Co/Shaft	21-18-52
BEARING, Trans. Aux. M/Shaft	21-18-2
BEARING, Trans. Co/Shaft	21-25-2
BEARING, Trans. Main	21-09-5
BEARING, Trans. M/Shaft Frt. Spindle	21-16-9
BEARING, Trans. M/Shaft Rear	21-19-2
BEARING, Trans. Output Shaft	21-05-2
BEARING, Water Pump	7-45-11
BEARING, Winch Drive Shaft	21-97-6
BELLCRANK, Frt. Dr. Glass to Frt. Track	23-64-21
BELL CRANK, Throttle Cont.	14-14-1
BELT, Fan and Related Drives	7-03-1
BEZEL, Accelerator Pedal	14-01-6
BEZEL and Lens, Dome Lamp	8-05-8
BEZEL and SPACER, Seat Belt	23-49-17
BEZEL, Back up Lamp	8-56-36
BEZEL, Brake Pedal Pad	5-28-9
BEZEL, Cigar Lighter	8-20-16
BEZEL, Clock and A/Cond.	8-37-20
BEZEL, Clutch Pedal Pad	6-39-9
BEZEL, Console Ash Rec.	23-02-107
BEZEL, Courtesy Lamp	8-11-16
BEZEL, Defogger Inlet	1-47-6
BEZEL, Defogger Switch	1-47-9
BEZEL, Filler Tube Cap	14-86-23
BEZEL, Floor Console End Cap	23-38-43
BEZEL, Folding Top Pocket Panel	23-02-107
BEZEL, Frt. Seat Latch Release Button	23-45-66
BEZEL, Glove Box Door	23-06-55
BEZEL, Headlamp	8-34-40
BEZEL, Heater Control	1-48-70
BEZEL, Hood Air Grabber Switch	15-03-85
BEZEL, Hood Turn Signal Indicator	8-50-171
BEZELS, Instrument Cluster	8-37-90
BEZEL, *Instr. Pnl. G/Shift Control*	23-33-217
BEZEL, Map and Courtesy Lamp Switch	8-42-29
BEZEL, Parking and Turn Signal Lamp	8-50-315
BEZEL, Parking Brake Pedal Pad	4-25-23
BEZEL, Qtr. Pnl. Fuel Filler Opng. Vinyl Protector	23-34-272
BEZEL, Radio	1-87-22
BEZEL, Rear Ash Receiver	23-02-68
BEZEL, Rear Speaker Control	1-87-292
BEZEL, Rear View Mirror	23-21-28
BEZEL, Remote Deck Lid Latch Release	23-19-100
BEZEL, Rr. Heated Glass Switch	8-37-64
BEZEL, Road Lamp	8-14-9
BEZEL, Side Marker Lamp	8-14-9
BEZEL, Stop, Turn Signal Lamps	8-55-158
BEZEL, Switch	8-05-20
BEZEL, T/Gate Latch Remote Control	23-54-221
BEZEL, T/Gate Window Washer	23-67-243
BEZEL, Trans. Gearshift Selector Lever Lens	21-30-15
BEZEL, Vacuum Deck Lid Latch Release	23-19-100
BEZEL, V/Wing Inside On Glass	23-64-236
BEZEL, Wiper Switch Mtg.	23-67-195
BEZELS, *Air Conditioner*	24-24-140
BEZELS, Switch	8-53-294
BLADE, Snow Plow	1-93-0
BLADE, W/Shield Wiper	23-67-25
BLEEDER, Wheel Cylinder	5-67-1
BLOCK, Alternator Mtg.	8-28-35
BLOCK, Ammeter Wiring Terminal	8-21-1
BLOCK, Drive Shaft Thrust	3-32-8
BLOCK, w/Pistons and Rings	9-02-5
BLOWER, A/Cond. and Heater	24-28-165
BOARD, Printed Circuit	8-19-15
BODY, A/Cleaner	14-29-19
BODY and CABLE, Manual Antenna	1-88-12
BODY, Oil Pump	10-07-10
BODY, Strg. Column Shaft Coupling	19-15-23
BODY, Trans. Valve	21-139-4
BOLT & SWIVEL PKG., Anchor Adjusting	2-14-1
BOLT or SCREW, Frt. Axle Drive Gear	2-11-71
BOLT or SCREW, Rear Axle Drv. Gear Pinion	3-20-1
BOLT, Battery Cable Clamp	8-01-11
BOLT, Brake M/Cyl. Mtg.	5-39-11
BOLT, Brake M/Cyl. Push Rod	5-47-4
BOLT, Bucket Seat Back to Cushion Mtg.	23-45-31
BOLT, Bumper to Support	13-64-5
BOLT, Chain Case Cover	9-23-10
BOLT, Cylinder Head	9-03-10
BOLT, Connecting Rod Cap	9-31-5
BOLT, Drive Pinion Carrier	3-19-15
BOLT, Exhaust Manif. Heat Control Valve	9-58-13
BOLT, Frame to Body	23-05-1
BOLT, Frt. Axle Control Arm Cam	2-08-50
BOLT, Frt. Suspension Crossmember	23-32-18
BOLT, Frt. Wheel Brk. Support	5-13-9
BOLT, Jack Bar Retainer	13-72-6
BOLT, Rear Axle Hsg. to Diff. Carrier	3-03-26
BOLT, Rear Spring Center	17-14-10
BOLT, Rear Spring Pivot Bushing	17-17-4
BOLT, Spring Hanger	13-54-11
BOLT, Strg. Link Idler Arm Brkt.	19-27-45
BOLT, w/Pump Body Idler Pulley Adj.	7-04-6
BOOSTER, Brake	5-100-0
BOOSTER BRAKE TUBE	5-107-15
BOOT, Brake Booster Push Rod	5-100-26
BOOT, Brake Pedal Linkage to Firewall	5-100-26
BOOT, Clutch Pedal Rod	6-50-10
BOOT, Elect. Door Lock Switch	23-18-126
BOOT, Frt. Whl. Disc Brake Retg.	5-05-26
BOOT, Gearshift Control	19-48-44
BOOT, Gearshift Floor	21-30-413
BOOT, Master Cyl.	5-40-1
BOOT, Shifting Fork	8-52-88
BOOT, T/Gate Latch Remote Control	23-54-222
BOOT, Trans. G/Shift Lever	21-30-109
BOOT, Wheel Brake Cylinder	5-69-1
BOOT, X-Press Super Lite	8-14-18
BOW, Folding Top	23-58-75
BOW, Roof Panel	23-86-10
BOX, Glove	23-06-4
BRACE, Battery Tray Support	13-33-68
BRACE, Bumper Jack	13-66-21
BRACE, Exhaust Pipe	11-08-5
BRACE, Fender	12-07-1
BRACE, Frt. Crossmember	23-32-31
BRACE, Frt. Door	23-11-9
BRACE, Frt. Floor Pan	23-32-6
BRACE, *F/Tank Protector*	14-88-42
BRACE, Hood Lock Plate Yoke	15-11-7
BRACE, Instrument Panel Lower Reinforcement	23-33-10
BRACE, Power Antenna Mtg.	1-88-126

PART NAME	CODE
BRACE, Qtr. Deck Drain Trough	23-59-41
BRACE, Qtr. Inside Panel	23-64-281
BRACE, Qtr. Inside Pnl. to Flr.	23-34-248
BRACE, Qtr. Panel Belt Bar	23-51-48
BRACE, Radiator Grille	7-16-22
BRACE, Shelf Panel to Deck	23-34-328
BRACE, Tailgate Opening	23-34-17
BRACE, Wheel House to Deck Lid	23-19-76
BRACE, Whl. Slip Brake Control	5-06-3
BRACKET & SHAFT, Rear View Mirror	23-21-14
BRACKET & STRAP, Vapor Canister (Charcoal)	25-04-16
BRACKET & SUPPORT, Frt. Door Window	23-39-19
BRACKET w/ACTUATOR, T/Gate Wdo. Washer	23-67-267
BRACKET, w/Channel Qtr. Wdo. Glass Lift	23-09-9
BRACKET w/ROLLER, Quarter Window	23-64-269
BRACKET w/STUD, Deck Lid Hinge	23-19-181
BRACKET, Accelerator Shaft	14-11-20
BRACKET, Air Cond. Actuator	24-29-3
BRACKET, Air Cond. Compressor	24-25-15
BRACKET, Air Cond. Evaporator Mtg.	24-28-8
BRACKET, Air Cond. Hose	24-28-29
BRACKET, Air Cond. Idler Pulley	24-25-45
BRACKET, Air Cond. Receiver Drier Mtg.	24-26-35
BRACKET, Air Pump Mtg.	25-02-24
BRACKET, Alt. & Coil Mtg.	8-28-36
BRACKET, Auto. Headlamp Sentinel	8-53-303
BRACKET, Auto. Speed Control Cable	14-02-18
BRACKET, Body Hold Down	23-05-31
BRACKET, Body Pillar	23-36-33
BRACKET, Brake Booster Mtg.	5-101-1
BRACKET, Brake Hose	5-57-2
BRACKET, Brake Pedal	5-31-15
BRACKET, Bumper	13-64-72
BRACKET, Bumper Alignment	13-66-136
BRACKET, Bumper Filler	13-64-32
BRACKET, Bumper Impact	13-66-44
BRACKET, Cab Hold Down	13-39-0
BRACKET, Center Floor Pan Carrier	17-19-4
BRACKET, Clutch Hyd. Slave Cylinder	6-40-59
BRACKET, Clutch Pedal	6-46-1
BRACKET, Cowl Side	23-34-82
BRACKET, Deck Opening, Lower	23-34-191
BRACKET, Dome Lamp	8-05-28
BRACKET, Door Pull Handle	23-14-15
BRACKET, Elect. Door Lock Sw. Mtg.	23-18-124
BRACKET, Elect. V/Wing Reg.	23-64-76
BRACKET, Engine Frt. Support Insulator	9-64-24
BRACKET, Fan Belt Idler Pulley	7-04-5
BRACKET, Fast Idle Cable Mtg.	14-24-6
BRACKET, Fender Mtg.	18-06-3
BRACKET, Floor Console	23-38-27
BRACKET, Frame Engine Rear Support	9-69-6
BRACKET, Frt. Dr. Glass Stabilizer Guide	23-64-200
BRACKET, Frt. Seat Elect. Adj. Mtr. & Tube	23-47-439
BRACKET, Frt. Seat Lap Belt	23-49-7
BRACKET, Frt. Spring	13-53-0
BRACKET, Frt. Wheel Stop	2-08-63
BRACKET, Fuel Tank Filler Tube	14-86-43
BRACKET, Fuel Tank Vapor Separator	14-86-71
BRACKET, Gear Shift Torque Shaft	19-48-46
BRACKET and GUIDE, Frt. Door Glass Lift	23-09-52
BRACKET, Hand Brk. Cable Support	4-83-2
BRACKET, Headlamp Door Motor	8-34-291
BRACKET, Headlamp Scanner	8-53-286
BRACKET, H/Lamp Switch	8-53-279
BRACKET, Htr. Hose Support	1-48-559
BRACKET, Hood Lock Vertical	15-11-50
BRACKET w/KEEPER, Spare Tire Cover Mtg.	23-04-245
BRACKET, License	8-47-8
BRACKET, License Lamp Switch Mtg.	8-58-79
BRACKET, Logic Cont. Whl. Slip System	5-06-6
BRACKET, Muffler & Exhaust Support	11-08-5
BRACKET, Parking Brake	4-06-0
BRACKET, Parking Brake Indicator Lamp	8-31-11
BRACKET, Pedal Return Spring	14-06-10
BRACKET, Prop Shaft Center Bearing	16-16-46
BRACKET, Qtr. Pnl. Wheelhouse to Rr. Dr. Lock Pillar Brace	23-36-58
BRACKET, Qtr. Wdo. Rr. Attaching	23-63-133
BRACKET, Qtr. Wdo. Track	23-64-300
BRACKET, Quarter Window Regulator	23-39-48
BRACKET, Rad. Core Coolant R/Tank	7-52-11
BRACKET, Radiator Core Fan Shroud	7-08-13
BRACKET, Radiator Grille	7-16-25
BRACKET, Radiator Yoke Crossmember	7-26-37
BRACKET, Rear Bumper Guard	13-68-12
BRACKET, Rear Floor Pan Bumper	23-32-52
BRACKET, Rear Seat Radio Speaker Grille	1-87-25
BRACKET, Rear Spring	13-54-0
BRACKET, Roof Bow, No. 1	23-58-84
BRACKET, Roof Drain Trough to Qtr. Wdo. Frame	23-59-65
BRACKET, Roof Luggage Rack Rail	23-40-170
BRACKET, Seat Adjuster Switch	23-47-456
BRACKET, Seat Back Stop	23-47-345
BRACKET, Second Seat Back Bumper	23-48-111
BRACKET, Second Seat Back Hinge	23-48-99
BRACKET, Shock Absorber	17-24-0
BRACKET, Side Marker Lamp Mtg.	8-14-2
BRACKET, Spare Tire Cover Mtg.	23-04-245
BRACKET, Steering Column	19-14-37
BRACKET, Steering Column Support	19-31-1
BRACKET, Steering Gear	19-12-1
BRACKET, Steering Pump	19-54-115
BRACKET, Third Seat Back Release	23-48-24
BRACKET, Tilt Cab Rear Support	23-1-35
BRACKET, Trans. Mtg. Crossmember	13-10-12
BRACKET, Trans. Oil Cooler Tube	9-46-33
BRACKET, Vac. Amplifier	25-06-20
BRACKET, Valve Rocker Shaft	9-43-10
BRACKET, Voltage Regulator Mtg.	8-28-78
BRACKET, Wheelhouse	23-34-13
BRACKET, Whl. Slip Brake Control	5-06-2
BRACKET, Windshield Side Frame	23-66-77
BRAKE FLEXIBLE HOSE	5-62-1
BRAKE FLUID	5-01-2
BRAKE PEDAL AND BUSHING	5-27-0
BRAKE PEDAL BRACKET	5-31-15
BRAKE PEDAL PAD	5-28-8
BRAKE PEDAL SHAFT	5-29-1
BRAKE, Power	5-100-1
BRAKE SHOE GUIDE SPRING	5-26-1
BRAKE TUBE	5-55-1
BRAKE TUBE BRACKET	5-57-2
BRAKE TUBE CLIP	5-56-2
BRAKE TUBE TEE or CONNECTOR	5-58-1
BRAKE SHOE and LINING	5-03-3
BRUSH and HOLDER PKG., Wiper Mtr.	23-67-16
BRUSH PACKAGE, Alternator	8-29-17
BRUSH PACKAGE, Starter	8-52-135
BULBS	8-44-1

PART NAME	CODE
BUMPER GUARDS	13-68-6
BUMPER JACK	13-72-1
BUMPER, Ash Receiver	23-02-38
BUMPER, Control Arm, Lower	2-10-10
BUMPER, Control Arm, Upper	2-08-48
BUMPER, Deck Lid Inside Pnl.	23-19-63
BUMPER, Door	23-8-12
BUMPER, Dr. Glass Stop	23-64-4
BUMPER, Door Latch Remote Control Handle Lever	23-18-48
BUMPER, Eng. Frt. Support Insulator Restrictor	9-67-20
BUMPER, Fender Hood Side	15-09-4
BUMPER, Flr. Pan	23-32-51
BUMPER, Flr. Tunnel Console Lid	23-38-29
BUMPER, Frt. or Rr. Door Glass	23-64-266
BUMPER, Frt. Seat Back to Cushion	23-45-30
BUMPER, Front	13-64-3
BUMPER, Glove Box Door	23-06-14
BUMPER or PLUG, Frt. Dr. V/Wing	23-64-71
BUMPER, Park Brake Pedal Stop	4-25-9
BMPR., Qtr. Outside Pnl. Jack	23-34-275
BMPR., Qtr. Pnl. Gas Filler Dr.	23-34-270
BUMPER, Rear	13-66-3
BUMPER, Rear Spring	17-19-3
BUMPER, Seat	23-48-93
BUMPER, Security Panel Latch	23-19-206
BUMPER, T/Gate Glass Stop	23-54-103
BUMPER, T/Gate Latch	23-54-205
BUMPER, T/Gate Wdo. Outside Handle	23-54-84
BUMPER, T/Gate Wdo. Washer Blade Stop	23-67-29
BUSHING or BEARING, Crankshaft Trans. Pilot	9-07-12
BUSHING, Accelerator Pedal	14-01-30
BUSHING, Brake Pedal	5-27-2
BUSHING, Body Center Flr. Pan Damper	23-32-121
BUSHING, Clutch Pedal	6-38-3
BUSHING, Connecting Rod	9-31-10
BUSHING, Control Arm - Lower	2-10-59
BUSHING, Control Arm - Upper	2-08-7
BUSHING, Door Glass Lift Channel	23-09-53
BUSHING, Door Hinge	23-15-38
BUSHING, Drive Link	23-67-132
BUSHING, Gearshift Control Selector	21-30-38
BUSHING, Gearshift Rod	19-48-6
BUSHING, Intake Valve	9-43-2
BUSHING, Shock Absorber Mounting	17-23-52
BUSHING, Spring Shackle Pivot	17-16-8
BUSHING, Strg. Column Gearshift	19-46-14
BUSHING, Steering Knuckle	2-03-4
BUSHING, T/Gate Hinge	23-54-20
BUSHING, T/Gate Window Washer	23-67-265
BUSHING, Tilt Cab Pivot	23-1-3
BUSHING, Trans. Frt. Clutch	21-133-10
BUSHING, Trans. Input Shaft	21-129-6
BUSHING, Wiper Link	23-67-132
BUTTON, Brake Auto. Adj.	5-20-17
BUTTON, Gearshift, Control Selector	21-30-10
BUTTON, Heater Control Push	1-48-12
BUTTON, Horn	8-33-41
BUTTON, License Plate	8-47-126
BUTTON, Parking Brake Lever	4-14-0
BUTTON, Seat Cushion & Back	23-78-2
BUTTON, Steering Wheel Horn	8-33-17
BUZZER, Headlamp Warning	8-34-8
BUZZER, Ign. Key Warning	8-35-66
BUZZER, Low Air Pressure	5-128-0
BUZZER, Low Vacuum Warning	5-103-36
BUZZER, Seat Belt System	8-37-69

C

PART NAME	CODE
"C" WASHER - Brake Shoe Anchor	5-19-7
CABLE, A/C Temp. Control	24-01-65
CABLE, Battery Ground	8-01-4
CABLE, Battery Positive	8-01-17
CABLE, Brake Auto. Adj.	5-20-10
CABLE, Clock Reset	8-37-458
CABLE, Electric Seat Adjuster	23-47-432
CABLE, Fuel Tank Gauge	14-72-33
CABLE, Glove Box Door	23-06-46
CABLE, Heater Control	1-48-941
CABLE, Hood Duct Air Control	14-03-74
CABLE, Horn Contact	8-33-100
CABLE, Horn Ground	8-33-114
CABLE, Ignition Coil Secondary	8-36-49
CABLE, Parking Brake	4-23-1
CABLE, Power Antenna Lead	1-88-162
CABLE, P.T.O. Control	21-08-280
CABLE, Seat Back Latch Release	23-45-204
CABLE SET, Ignition	8-36-1
CABLE, Spark Plug	8-36-83
CABLE, Speed Control	14-02-34
CABLE, Speedometer	21-84-1
CABLE, Tachometer Drive	8-37-508
CABLE, Transmission G/Shift	21-30-365
CABLE, Winch	21-97-17
CABLE, Wire	8-16-3
CAGE, Rear Axle Diff. Spiral Pinion	3-14-0
CAGE, Rear Axle Drive Pinion Brg.	3-23-0
CAM, Control Arm	2-08-59
CAM, Hydraulic Brake Adjusting	5-22-1
CAM, Seat Auto. Forward w/Switch Operating	23-47-455
CAM, Turn Signal Switch Cancelling	8-50-126
CAM, w/Shield Wiper	23-67-2
CAMSHAFT	9-15-1
CAMSHAFT, Air Brake	5-97-1
CAMSHAFT BEARING	9-16-6
CAMSHAFT SPROCKET	9-17-5
CAN, Strg. Col. Energy Absorbine	19-14-59
CANISTER, Vapor (Charcoal)	25-04-1
CAP, Brake Vacuum Hose	5-105-14
CAP, Crankshaft Bearing	9-10-5
CAP, Distributor	8-27-71
CAP, Frt. Wheel Grease	22-08-57
CAP, Fuel Tank Filler	14-86-35
CAP and INSERT, Dr. Pull Handle End	23-14-32
CAP, Oil Filler	10-01-54
CAP, Oil Pressure Rel. Valve	10-22-40
CAP, Rad. Core Coolant R/Tank	7-52-9
CAP, Radiator Filler # 16	7-12-1
CAP, Rocker Outer Pnl.	23-51-43
CAP, Roof Luggage Rack Side	23-40-177
CAP, Side Marker Lamp Mtg.	8-14-30
CAP, Strg. Pump Reservoir	19-54-182
CAP, Vapor Canister Purge Nipple	25-04-10
CAP, Wheel Cover Dome	22-01-48
CAP, Wheel Hub	22-08-5
CAP, W/Shield Washer Reservoir	23-67-241
CAP NUT, Antenna Mtg.	1-88-120
CAPACITOR, Alternator	8-29-129
CARBURETOR	14-30-1
CARBURETOR AIR CLEANER	14-29-2
CARBURETOR AIR HEATER	14-62-1
CARBURETOR INTERCONNECTING ROD	14-15-3

PART NAME	CODE
CARPET, Console Side & Rr.	23-71-1
CARPET, Front	23-70-3
CARPET, Rear	23-79-33
CARPET, Second & Third Seat Back	23-109-5
CARRIER, Rear Axle Differential	3-03-3
CARRIER, Rear Axle Drive Pinion	3-19-7
CARRIER, Trans. Planet Pinion	21-134-5
CARTRIDGE, Oil Filter	10-26-8
CARTRIDGE, Stereo Tape	1-87-55
CASE, Auxiliary Transmission	21-88-5
CASE, Axle Diff. Gear Support	3-05-1
CASE, Inter Axle Diff.	3-29-53
CASE, Rear Axle Diff.	3-04-6
CASE, Trans.	21-03-1
CATCH, Glove Box Door Lock	23-06-15
CATCH, Hood Safety	15-11-34
CHAIN CASE COVER	9-23-5
CHAIN, Tailgate	23-54-8
CHAIN, Timing	9-20-1
CHAMBER, Air Brake Service	5-98-26
CHAMBER, Air Brake Spring	5-121-0
CHANNEL, Door Glass	23-09-52
CHANNEL, Qtr. Tailgate Glass Run	23-09-67
CHASSIS AND BODY WIRING	8-15-2
CHECK ARM, Door Hinge	23-10-1
CHECK ARM, Glove Box Door	23-06-13
CHOKE, Carburetor	14-39-0
CHUCK, Strg. Gear	19-01-8
CIGAR LIGHTER	8-20-1
CIRCUIT BREAKER, Rr. Comp't. Cigar Lighter	8-20-3
CIRCUIT BREAKER, Wiring	8-17-30
CLAMP, Air Cleaner	14-29-15
CLAMP, Air Cond.	24-28-17
CLAMP, Distributor	8-27-26
CLAMP-W/PUMP By Pass Hose	7-48-19
CLAMP, Hand Brake Brake Cable	4-23-28
CLAMP, Hose	25-02-44
CLAMP, Exhaust Pipe	11-08-24
CLAMP, Fuel Line Hose	14-86-49
CLAMP, Gearshift Control Rod	19-48-12
CLAMP, Htr, Blower Motor Wheel	1-48-50
CLAMP, Instrument Panel Strg. Column	19-14-35
CLAMP, Intake Manifold Exhaust Pipe,	11-05-30
CLAMP, Intern and Rear Seat Mounting	23-48-123
CLAMP, Master Cyl. Cover	5-39-26
CLAMP, Muffler	11-02-1
CLAMP, Power Brake Hose	5-111-19
CLAMP, Radiator Hose	7-14-13
CLAMP, Speedometer Drive Pinion	21-85-61
CLAMP, Tail Pipe Rr. Support	11-09-4
CLAMP, T/Gate Hinge Torsion	23-54-144
CLAMP, V/Wing Upper Pivot	23-64-237
CLEANER, Crankcase Vent Inlet Air	10-01-21
CLIP, B/Crank to Carb. Rod	14-11-3
CLIP, Brake Tube	5-56-2
CLIP, Carburetor Air Scoop Door	15-03-82
CLIP, Front Spring	17-05-1
CLIP, Rear Spring	17-15-1
CLIP, Strg. Column Support Bracket	19-31-3
CLIP, Throttle Linkage Rod	14-13-3
CLIP, Top Lift Motor Pump	23-58-557
CLIP, T/Gate Glass W/Strip	23-63-183
CLIP, T/Gate Window Washer	23-67-30
CLUTCH, Trans. Aux. M/Shaft	21-18-13
CLUTCH, Transfer Case Sliding	21-112-0
CLUTCH, Trans. Synchronizer	21-14-6
CLUTCH, Two Speed Axle	3-48-0
CLOCK	8-37-14
CLOSURE, Bumper Front	13-64-26
CLUTCH COVER AND PRESSURE PLATE	6-14-1
CLUTCH DISC	6-13-1
CLUTCH HOUSING	6-09-1
CLUTCH HOUSING PAN	6-10-2
CLUTCH PEDAL	6-38-1
CLUTCH PEDAL BRACKET	6-46-1
CLUTCH PEDAL PAD	6-39-2
CLUTCH PEDAL ROD	6-50-1
CLUTCH PEDAL SHAFT	6-43-1
CLUTCH PRESSURE SPRING	6-16-1
CLUTCH RELEASE BEARING	6-19-2
CLUTCH RELEASE BEARING RETURN SPRING	6-20-14
CLUTCH RELEASE FORK RETURN SPRING	6-27-5
CLUTCH RELEASE FORK	6-22-1
CLUTCH RELEASE LEVER	6-17-3
CLUTCH RELEASE OVER-CENTER SPRING	6-35-0
CLUTCH RELEASE ROD	6-24-1
CLUTCH, Starter	8-52-41
CLUTCH TORQUE SHAFT	6-52-1
COIL, Air Cond. Compr. Clutch Field	24-25-232
COIL, Air Cond. Evaporator	24-28-220
COIL, Ignition	8-35-4
COLLAR, Distributor Shaft	8-27-137
COLLAR, Manual Antenna Mtg.	1-88-170
COMPRESSOR, Air Brake	5-114-0
COMPRESSOR, Air Cond.	24-25-5
CONDENSER, Air Cond.	24-27-5
CONDENSER, Distributor	8-27-190
CONE and ROLLER, Frt. Wheel Bearing	22-06-1
CONE, Differential	3-11-1
CONE, Rear Axle Drv. Pinion Brg.	3-22-24
CONNECTING ROD	9-31-4
CONNECTING ROD BEARING PACKAGES	9-32-2
CONNECTOR, Bucket Frt. Seat Back Reclining Adj. to Actuator	23-47-439
CONNECTOR, Heater Control Vac. Hose	1-48-280
CONNECTOR, Intake Maifold Vacuum	9-48-8
CONNECTOR, Park Brk. Air Line	4-25-0
CONNECTOR, Power Brk. Hose Vane	5-110-18
CONNECTOR, Radiator Outlet	7-14-42
CONNECTOR, Trans. Oil Cooler	9-46-44
CONNECTOR, Water Pump to Oil Cooler	7-48-8
CONNECTOR, W/Shield Washer	23-67-262
CONNECTOR, Wiring	8-16-1
CONSOLE, Floor Tunnel	23-38-1
CONTACT, Starter Solenoid	8-52-341
CONTACT and SPRING PACKAGE, Starter Sol. Sw.	8-52-342
CONTACT and SPRING PACKAGE, Distributor	8-27-85
CONTACT SET, Distributor	8-27-158
CONTACT, Socket	8-11-18
CONTACT, Trunk Lamp Socket	8-13-6
CONTACT, Dome Lamp Socket	8-05-31
CONTACT, Fender Side Marker Lamp	8-14-4
CONTACT, Gearshift Selector Lamp	21-30-33
CONTACT, Horn Ring and Feed Cable	8-33-118
CONTACT, Inst. Cluster Lamp Socket	8-41-39
CONTROL, Air Brk. Tractor & Trailer	5-127-0
CONTROL, A/Cond. and Htr.	24-24-39
CONTROL, Door Key Cyl. Locking	23-18-25
CONTROL, Heater Fresh Air Door	1-48-374
CONTROL, Heater	1-48-4
CONTROL, Hood Carburetor Air	15-03-63

PART NAME	CODE
CONTROL, Rear Speaker Fader	1-87-58
CONTROL, Skid	5-06-7
CONTROL, Snow Plow	1-93-0
CONTROL, T/Gate and Door Latch	23-54-218
CONTROL, Transfer Case	21-101-0
CONTROL, Trans. G/Shift Remote	21-42-0
CONTROL UNIT, NOx	8-22-6
CONTROL, Vacuum	8-27-308
CONTROLS, Air Cond.	24-24-0
CONVERTER, Torque	9-46-4
COOLER, Radiator Core Oil	9-46-31
COOLER, Strg. Pump Oil	19-54-196
COOLER, Torque Converter	9-46-31
COOLER, Trans. Oil	9-46-31
CORD, Eng. Jacket Heater	9-02-62
CORE, Air Cond. & Heater	24-01-24
CORE, Engine Oil Cooler	10-34-23
CORE, Heater	1-48-88
CORE, Radiator	7-11-3
CORE, Socket	8-05-32
CORE, Starter Solenoid Moving	8-52-375
COUNTERSHAFT, Aux. Trans.	21-94-1
COUNTERSHAFT GEAR	21-15-2
COUNTERSHAFT, Trans.	21-24-2
COUNTERSHAFT, Trans. Aux.	21-18-56
COUNTERWEIGHT, Heat Control	9-58-12
COUPLING, Electric Wdo. Regulator	23-54-152
COUPLING, Strg. Column Shaft	19-15-23
COVER, Actuator Rod	19-46-62
COVER, Air Intake and Filter	5-113-21
COVER, Air Cleaner	14-29-7
COVER, A/Conditioning Spot Cooler Hole	23-33-16
COVER, A/Cond. and Heater Vent	24-24-184
COVER, Auto. Headlamp Scanner	8-53-285
COVER, Brake Tubing 25 Ft. Roll	5-53-4
COVER, Chain Case	9-23-5
COVER, Clutch	6-14-1
COVER, Console Trans. Control Lever	21-30-408
COVER, Ctr. Pillar Trim	23-99-4
COVER, Cylinder Block Starter Opening	9-02-37
COVER, Cylinder Head	9-03-28
COVER, Dash Panel Heater Motor	23-34-116
COVER, Dr. Lock Pillar Pinch Weld	23-113-3
COVER, Exh. Manifold Air Inj.	25-02-33
COVER, Exhaust Manifold Heat Tube	9-48-125
COVER, Fndr. Shield Pnl. Upr. Cont. Arm	12-04-22
COVER, Front Axle Diff.	2-11-26
COVER, Front Door Outside Panel	23-34-135
COVER, Front Seat Adjuster	23-47-8
COVER, Frt. Seat Lap Belt Tunnel Anchor Bolt	23-49-15
COVER, Frt. Seat Back Latch Release Cable	23-45-205
COVER, Frt. Seat Back Ctr. Arm Rest	23-76-34
COVER, Frt. Seat Back Hinge	23-108-84
COVER, Fuse Block Base	8-15-13
COVER, Gearshift Boot	21-30-414
COVER, Gearshift Indicator Hole	21-30-19
COVER, Heater Cont. Opng.	23-33-65
COVER & HINGE, 2nd Seat Back	23-48-68
COVER, Hood Air Intake Scoop,	14-03-65
COVER, Inst. Panel Map Light Opening	23-33-216
COVER, Instrument Panel Clock Hole	23-33-20
COVER, Instrument Panel Steering	23-33-132
COVER, Lock Pillar Trim	23-99-6
COVER, Master Cyl. Reservoir	5-39-20
COVER, Radio and Heater Opening	23-33-12
COVER, Radio Opening	1-87-22
COVER, Rear Axle Diff. Carrier	3-03-29
COVER, Rr. Flr. Pan Cover Pnl. Latch Opng.	23-34-10
COVER, Rr. Seat Back	23-109-4
COVER, Rr. Seat Back Ctr. Arm Rest	23-76-45
COVER, Rr. Seat Cushion	23-109-36
COVER, Roof Drain Trough Mldg. Joint	23-59-57
COVER, Roof Outside	23-86-2
COVER, Seat Belt	23-49-3
COVER, Sliding Pnl. Qtr. Sun Roof	23-86-42
COVER, Spare Tire	23-04-229
COVER, Spare Tire	23-79-64
COVER, Spare Wheel	22-20-91
COVER, Spotcooler Hole	24-24-151
COVER, Starter Gear Hsg.	8-52-101
COVER, Strg. Column Jacket	19-14-28
COVER, Strg. Column Shaft Coupling	19-15-17
COVER, Strg. Gear Housing	19-04-1
COVER, Strg. Gear Shaft	19-19-24
COVER, Strg. Wheel Hub,	19-30-7
COVER, T/Gate Inside Pnl.	23-54-150
COVER, Tailgate Opening Pillar	23-99-41
COVER, Tie Rod Dust	2-07-28
COVER, Trans. Case	21-29-0
COVER, Trans. P.T.O. Opening	21-08-1
COVER, Trans. Output Shaft	21-04-8
COVER, Underbody Engine Housing	23-04-45
COVER, Underbody Trans.	23-04-103
COVER, Vac. Control Valve	25-06-45
COVER, Whl. Brake Adj. Screw Hole	5-13-35
COVER, Wiper Parking Mechanism	23-67-201
COWL, Body Front	23-12-1
CRANK, Wiper Drive	23-67-76
CRANKSHAFT	9-07-5
CRANKSHAFT, A/Cond. Compressor	24-25-154
CRANKSHAFT BEARING CAP	9-10-5
CRANKSHAFT BEARING PACKAGE	9-09-2
CRANKSHAFT REAR BEARING OIL SEAL	9-11-1
CRANKSHAFT SPROCKET	9-08-5
CRANKSHAFT VIBRATION DAMPER	9-13-5
CROSS BAR, Radiator Grille	7-33-1
CROSSMEMBER, Aux. Trans.	21-88-59
CROSSMEMBER, Cab Support	13-09-1
CROSSMEMBER, Engine Rear Support	13-10-1
CROSSMEMBER, Frt. Flr. Pan Seat Track	23-47-33
CROSSMEMBER, Frt. Frame	13-11-5
CROSSMEMBER, Front Spring	13-10-1
CROSSMEMBER, Frt. Suspension	23-32-17
CROSSMEMBER, Fuel Tank Support	13-15-1
CROSSMEMBER, Intermediate	13-16-0
CROSSMEMBER, Radiator Yoke Side Pnl.	7-26-32
CROSSMEMBER, Rear	13-18-0
CROSSMEMBER, Rear Anchor	13-11-5
CROSSMEMBER, Rear Shock	13-22-0
CROSSMEMBER, Rear Spring	13-23-0
CROSSMEMBER, Roof Luggage Rack	23-40-155
CROSSMEMBER, Trans. Mounting	13-10-1
CROSSMEMBER, Transfer Case	13-27-0
CROSSMEMBER, Trunnion	13-12-2
CROSSOVER, Air Inj.	25-02-31
CROSSOVER, Exhaust	11-05-1
CROSSOVER, Mtg. Plate and Cover	1-87-19
CUP, Brake Cyl. Piston	5-71-1

PART NAME	CODE
CUP, Clutch Hydraulic M/Cyl.	6-40-12
CUP, Clutch Hydraulic Slave Cyl.	6-40-53
CUP, Differential	3-11-2
CUP, Dr. Arm Rest Pull	23-76-62
CUP, Drive Pinion Brg.	3-22-25
CUP, Frt. Wheel Bearing	22-06-2
CUP, Rear Wheel Brg.	22-07-2
CUP, Strg. Gear Worm Thrust Bearing	19-15-63
CURTAIN, Sleeper Compartment	23-88-0
CUSHION, Bumper Guard	13-68-18
CUSHION, Step-Pad, Sta. Wgn.	13-66-148
CYLINDER and KEY PACKAGE, Dr. and Ign.	23-17-2
CYLINDER & KEY PKG., Console	23-17-38
CYLINDER & KEY PKG., Deck	23-17-4
CYLINDER & KEY PKG., Floor	23-17-72
CYLINDER and KEY PACKAGE, Glove Box Lock	23-06-28
CYLINDER & KEY PKG., Ignition, Truck	8-35-115
CYLINDER, Auto. Trans. Retarder Master	21-145-20
CYLINDER BLOCK	9-02-5
CYLINDER, Booster Brk. Slave	5-100-230
CYLINDER, Brake Booster	5-100-0
CYLINDER, Clutch Hyd. Master	6-40-0
CYLINDER, Clutch Hyd. Slave	6-40-46
CYLINDER, Frt. Wheel Brake Complete	5-64-1
CYLINDER HEAD	9-03-4
CYLINDER, Inter Axle Shift	3-29-194
CYLINDER, Master	5-39-3
CYLINDER PACKAGE, Tandem Brake	5-39-3
CYLINDER, Park Brk. Lever	4-25-22
CYLINDER, Power Strg.	19-63-86
CYLINDER REPAIR KIT, Brake	5-39-1
CYLINDER REPAIR PKG. - Clutch M/Cyl.	6-40-3
CYLINDER REPAIR PKG. - Clutch Slave	6-40-44
CYLINDER REPAIR PACKAGE, Wheel	5-63-1
CYLINDER, Snow Plow	1-93-0
CYLINDER, Tilt Cab Tilting	23-1-22
CYLINDER, Top Lift	23-58-200
CYLINDER, Trans. Aux. Shift	21-18-69

D

PART NAME	CODE
DAMPER, A/Cond. and Htr. Defroster	24-28-383
DAMPER, Vibration	9-13-5
DASHPOT, Carburetor	14-50-25
DECAL, Auto. H/Lamp Dimmer and Sentinel Control	8-53-275
DECAL, Deck Lid	23-19-6
DECAL, Door	23-11-21
DECAL, Fndr. Side	12-15-21
DECAL, Rad. Grille	7-17-23
DECAL, Strg. Column Lock Control Housing, w/Floor Shift	19-46-31
DECK LID	23-19-8
DECK LID LUGGAGE RACK PACKAGE	1-74-1
DEFLECTOR, Frt. Whl. Brake Grease	5-13-23
DEFLECTOR, Qtr. Inside Pnl. Water	23-34-20
DEFLECTOR, REAR, STONE	13-66-106
DEFOGGER, Rear Window	1-47-1
DEFLECTOR, Roof Rr. Air	23-36-134
DIAL, Trans. Column Gearshift	21-30-21
DIAPHRAGM, Air Brake Chamber	5-98-21
DIAPHRAGM, A/Cleaner Snorkel	14-29-34
DIAPHRAGM, Brake Booster Cylinder	5-100-4
DIAPHRAGM, Carburetor Choke	14-39-7
DIFFERENTIAL CASE	3-04-6
DIFFERENTIAL CLUTCH PARTS	3-09-0
DIFFERENTIAL, Partial	3-03-2
DIFFERENTIAL PINION	3-07-1
DIFFERENTIAL PINION SHAFT	3-08-1
DIFFERENTIAL SIDE GEAR	3-06-5
DIFFERENTIAL, w/Carrier and Tubes	3-03-1
DISC, Clutch	6-13-1
DISC, Differential Clutch	3-09-1
DISC, Parking Brake	4-01-0
DISC, Trans. Frt. Clutch	21-133-36
DISTRIBUTOR, Assembly	8-27-1
DIVISIONAL CHANNEL, Frt. Dr. V/Wing	23-63-127
DOME LAMP AND SWITCH	8-05-2
DOME, Wheel	22-01-51
DOOR, Cowl Ventilator	23-61-29
DOOR, Glove Box	23-06-10
DOOR, Headlamp	8-34-40
DOOR, Htr. Shut Off	1-48-365
DOOR HINGE	23-15-0
DOOR LOCKS AND REMOTE CONTROLS	23-18-0
DOOR, Quarter Panel Fuel Filler	23-34-253
DOOR REGULATORS AND REMOTE CONTROL HANDLES	23-14-0
DOOR, Tilt Cab Radiator Access	23-34-201
DOORS	23-11-0
DOWEL, Cylinder Block	9-02-7
DOWEL, Rear Axle Drive Shaft Stud	3-36-8
DRAG LINK, Steering	2-02-6
DRAIN COCK, RADIATOR	7-13-2
DRAIN TROUGH	23-59-0
DRIER, Air Cond. Receiver	24-26-20
DRIVE, Fan Fluid	7-07-1
DRIVE GEAR AND PINION SET, Rr. Axle	3-19-1
DRIVE GEAR BOLT OR SCREW	3-20-1
DRIVE SHAFT, Rr. Axle	3-32-1
DRIVE UNIT, Frt. Seat Elect. Adj.	23-47-344
DRUM, Front Brake	22-04-1
DRUM, Parking Brake	4-01-0
DRUM, Rear Brake	22-04-2
DRUM, Trans. Reverse	21-136-65
DUCT and DOOR, Fresh Air Vent	1-48-707
DUCT, Heater Defroster	1-48-141
DUCT, Hood Cold Air Intake	15-03-76
DUCT, Rr. Window Defogger	1-47-3
DUCTS, Air Cond. Air Distribution	24-28-73
DUST SEAL, Strg. Gear Shaft	19-19-38

E

PART NAME	CODE
ECCENTRIC, Camshaft	9-15-2
ELBOW, Air Cond. Exp. Valve to Dash	24-28-302
ELBOW, Filler Tube	14-86-69
ELBOW, Water Pump By-Pass	7-48-8
ELBOW, Water Outlet	9-05-5
ELECTRIC, Sun Roof	23-34-308
ELEMENT, Cigar Lighter	8-20-9
ELEMENT, Trans. Aux. Air Filter	21-18-133
ELEMENT, Water Filter	7-53-1
EMISSION CONTROLS	25-0-0
END PACKAGE, Tie Rod	2-07-1
ENGINE FRONT SUPPORT INSULATOR	9-67-4
ENGINE FRONT SUPPORT	9-64-0
ENGINE LESS ACCESSORIES	9-01-19
ENGINE REAR SUPPORT INSULATOR	9-71-5
ENGINE, Short Assembly	9-01-24
ESCUTCHEON, 2nd Seat Back Latch Push Rod	23-48-21

PART NAME	CODE
ESCUTCHEON, Door Latch Locking Control Knob	23-18-49
ESCUTCHEON, Frt. Seat Back Release Handle	23-45-66
EVAPORATOR, Parts - Air Cond.	24-28-0
EXHAUST PIPE	11-05-1
EXHAUST PIPE FLANGE GASKET AND STUD	11-06-8
EXHAUST PIPE SUPPORT CLAMP	11-08-24
EXTENSION, Body Side Sill	23-51-16
EXTENSION, Body Side Sill Door Scuff	23-20-24
EXTENSION, Center Floor Pan	23-32-25
EXTENSION, Console to Floor	23-38-2
EXTENSION, Deck Opening Lower	23-34-176
EXTENSION, Exhaust Pipe	11-05-4
EXTENSION, Fender Front	12-01-105
EXTENSION, Frame	13-42-0
EXTENSION, Frt. Side Rail to Side	23-32-116
EXTENSION, Headlamp Door	8-34-48
EXTENSION, Heater Vacuum Control	1-48-7
EXTENSION, Lower Panel End	7-16-68
EXTENSION, Pillar	23-36-20
EXTENSION, Quarter Inside	23-34-236
EXTENSION, Quarter End	23-34-242
EXTENSION, Rear Floor Pan Side	23-32-49
EXTENSION, Rear Wdo. Opening	23-64-68
EXTENSION, Roof Side Rail	23-40-92
EXTENSION, Shelf Panel Rear	23-34-330
EXTENSION, Strg. Wheel Hub,	19-30-8
EXTENSION, Tail Pipe	11-09-37
EXTENSION, Trans.	21-04-1
EXTENSION, Valve Stem	22-01-46
EXTENSION, Wheelhouse Inner Seat	23-49-22

F

FAN, Air Pump Filter	25-02-5
FAN AND ALTERNATOR IDLER PULLEY	7-04-1
FAN AND RELATED DRIVE BELTS	7-03-1
FAN ASSEMBLY	7-02-1
FAN DRIVE PULLEY	7-06-1
FAN FLUID DRIVE UNIT OR THERMAL DRIVE UNIT	7-07-0
FAN PULLEY HUB	7-05-1
FASTENER, Frame W/Shield Opng.	23-66-71
FASTENER, Front Door Glass	23-64-272
FENDER BRACE	12-07-1
FENDER BRACKET	12-06-3
FENDER, Front	12-01-5
FENDER, Rear	12-18-5
FENDER SHIELD	12-04-4
FIELD COIL, Starter	8-52-214
FILLER, Body Front Pillar Lower	23-36-3
FILLER, Body Pillar	23-36-29
FILLER, Deck Opng. Lwr. Pnl.	23-34-190
FILLER, Fndr. Bumper	12-02-6
FILLER, Fndr. Extension	12-02-6
FILLER, Frt. Floor Pan	23-32-29
FILLER, Qtr. O/Side Panel Rear	23-64-213
FILLER, Quarter Panel Taillamp	23-34-280
FILLER, Rad. Grille Bumper	7-16-15
FILLER, Rear Bumper Guard, B	13-68-15
FILLER, Rear Wdo. Opening Lower	23-64-84
FILLER, Rr. Floor Pan Tailgate Opening	23-34-19
FILLER, Shelf Panel Extension	23-34-326
FILLER, Tail Lamp	8-55-154
FILTER, Carb. Air	14-29-6
FILTER, Engine Water	7-53-2
FILTER, Fuel	14-67-1
FILTER, Fuel Tank	14-86-85
FILTER, Power Brake Air Cleaner	5-113-17
FILTER, Oil	10-26-6
FILTER, Trans. Aux. Air	21-18-65
FILTER, Transmission Oil	21-117-1
FILTER, Trans. Splitter Air	21-06-37
FILTER, Vapor Canister (Charcoal)	25-04-4
FILTER, W/Shield Washer	23-67-242
FINGER, Gearshift Control Selector	21-30-55
FINISH PLATE, Floor Console	23-38-5
FINISH PLATE, Glove Box	23-06-17
FINISH PLATE, Instrument Panel	23-33-135
FINISH PLATE, Qtr. Trim Panel	23-26-46
FINISH PLATE, Rear Seat Back	23-26-75
FITTING'S, Air Cond. Compressor	24-25-107
FITTING, Strg. Pump Discharge	19-54-225
FLANGE, Exhaust Extension Pipe	11-05-12
FLANGE, Frt. Axle Drive	2-12-65
FLANGE, Frt. Axle Strg. Knuckle	2-13-3
FLANGE, Strg. Column Shaft Coupling,	19-15-43
FLANGE, Strg. Wheel Locking,	19-30-19
FLAP, Frt. and Rr. Seat Back Ctr. Arm Rest	23-76-0
FLASHER, Turn Signal	8-50-186
FLOOR BOARDS	23-04-0
FLUID, Brake	5-01-2
FLYWHEEL	9-45-1
FNDR. SEAL or COVER	12-04-24
FOLDING TOP	23-58-3
FORK, Aux. Trans. G/Shift	21-90-2
FORK, Clutch	6-22-1
FORK, Inter Axle Shift	3-29-101
FORK, Starter Shifting	8-52-49
FORK, Transfer Case Shift	21-109-0
FORK, Trans. Aux. Shift	21-18-18
FORK, Trans. G/Shift	21-39-3
FORK, Trans. Splitter Shift	21-06-24
FORK, Two Speed Axle Clutch	3-51-2
FORK, Two Speed Axle Shift	3-46-0
FRAME	13-01-1
FRAME and CHANNEL, Vent Wing	23-64-48
FRAME and FIELD, Starter	8-52-235
FRAME, Qtr. Wdo.	23-64-280
FRAME, Qtr. Wdo. Glass Lwr.	23-09-9
FRAME, Tailgate Glass Lwr. w/Channel	23-09-64
FRAME, Ventilation	1-48-719
FRAME, Windshield	23-66-65
FRONT SEAT HARDWARE	23-45-0
FRONT SEAT ADJUSTER	23-47-0
FUEL FILTER	14-67-1
FUEL GAUGE	8-37-275
FUEL PUMP	14-73-1
FUEL TANK	14-86-1
FUEL TANK GAUGE	14-72-1
FUSE BLOCK	8-15-3
FUSE HOLDER, Rr. Heated Glass	8-37-60
FUSE HOLDER, Spotlamp	1-108-49
FUSES	8-17-2

G

GARNISH MOULDINGS	23-22-0
GASKET & SEAL, Transmission	21-01-3
GASKET SET, Engine	9-01-5
GASKET SET, Engine Valve Grind	9-39-1
GASKET SET, Intake Manif.	9-50-1
GASKET SET, Oil Pan	10-24-1

PART NAME	CODE
GASKET, Air Cleaner Cover	14-29-4
GASKET, Air Cleaner to Carb.	14-29-5
GASKET, Air Cond. Compr. Cyl. Head	24-25-94
GASKET, Anti-Rattle Grille to Bezel	23-33-45
GASKET, Air Inj. Tube Clamp	25-02-32
GASKET, Air Inj. X Over Clamp	25-02-32
GASKET, Auto. Trans. Drain Plug	21-119-12
GASKET, Auto. Trans. Frt. Pump Hsg.	21-118-54
GASKET, Auto. Trans. Oil Pan	21-119-5
GASKET, Axle Hsg. Brake Support	5-13-7
GASKET, Brake M/Cyl.	5-39-18
GASKET, Brake M/Cyl. Reservoir Cover	5-39-24
GASKET, Brake Support	5-13-7
GASKET, Brake Whl. Cyl. Hose	5-62-7
GASKET, Carburetor Flange	14-30-2
GASKET, Carrier	3-03-25
GASKET, Chain Case Cover	9-23-17
GASKET, Cylinder Head	9-03-5
GASKET, Cylinder Head Cover	9-03-29
GASKET, Dash Pnl. Heater Mtr. Opng. Cover	23-34-119
GASKET, Deck Lid Lock Cyl.	23-17-9
GASKET, Distributor Mtg.	8-27-4
GASKET, Door Glass Lift Channel	23-09-54
GASKET, Door Glass Lift Brkt.	23-09-54
GASKET, Diverter Valve Flange	25-02-32
GASKET, Drive Pinion Brg. Retainer	3-33-10
GASKET, E.G.R.	25-06-7
GASKET, Exhaust Manifold	9-50-5
GASKET, Exh. Manif. Heat Tube	9-50-18
GASKET, Exh. Pipe Flange	11-06-8
GASKET, Fender Side Marker Lamp	8-14-13
GASKET, Frt. Dr. Glass Stabilizer Guide	23-64-199
GASKET, Fuel Pump	14-74-1
GASKET, Gearshift Lever	21-34-53
GASKET, Intake & Exhaust Manif.	9-50-0
GASKET, Oil Filter Body	10-26-18
GASKET, Oil Filter Cover	10-26-27
GASKET, Oil Pan	10-24-8
GASKET, Oil Pan Drain Plug	10-24-38
GASKET, Oil Pump	10-07-0
GASKET, Outside Mirror	23-21-18
GASKET, Qtr. Wdo. Glass	23-64-187
GASKET, Qtr. Wheel Opng. Pnl.	23-34-213
GASKET, Rear Axle Carrier Cover	3-03-30
GASKET, Rear Axle Carr. Cvr. Filler Plug	3-03-36
GASKET, Rear Axle Drive Shaft Flange	3-36-1
GASKET, Rear Axle Frt. Brg. Oil Seal	3-22-78
GASKET, Strg. Gear Shaft Cover	19-19-28
GASKET, Strg. Gear Valve Plug	19-57-16
GASKET, Tail, Stop & T/Signal Lamp	8-55-8
GASKET, T/Gate Outside Hndl.	23-54-92
GASKET, Trans. Case Cover	21-29-25
GASKET, Water Outlet Elbow	9-05-6
GASKETS, Water Pump	7-44-0
GATE, Trans. Column G/Shift Lever	21-30-11
GAUGE, Fuel	8-37-275
GAUGE, Fuel Tank Sending Unit	14-72-1
GAUGE, Oil Pressure	8-37-316
GAUGE, Temperature	8-37-136
GAUGE, Vacuum	8-37-127
GEAR & PIN, Distributor Shaft	8-27-352
GEAR & PINION, Front Axle	2-11-58
GEAR & PINION, Rear Axle	3-19-1
GEAR & PINION, Speedometer	21-85-0
GEAR & SEAL PKG., Elect. Wdo. Reg. Mechanism	23-41-34
GEAR and SNAP RING PACKAGE, Pinion Shaft	8-52-96
GEAR & SEAL PKG., Windshield Wiper	23-67-10
GEAR & SHAFT, Transfer Case Idler	21-104-0
GEAR, Aux. Trans. Co/Shaft Drive	21-94-20
GEAR, Aux. Trans. Co/Shaft O/Drive	21-94-23
GEAR, Aux. Trans. Co/Shaft Second Spd.	21-94-2
GEAR, Aux. Trans. Co/Shaft Third Spd.	21-94-9
GEAR, Aux. Trans. M/Drive	21-95-8
GEAR, Aux. Trans. M/Shaft First Spd.	21-92-60
GEAR, Aux. Trans. M/Shaft O/Drive	21-92-6
GEAR, Aux. Trans. M/Shaft Second Spd.	21-92-70
GEAR, Aux. Trans. M/Shaft U/Drive	21-92-49
GEAR, Flywheel Ring	9-45-2
GEAR, Front Axle Diff Side	2-11-39
GEAR, Inter Axle Diff. Drive	3-29-13
GEAR, Inter Axle Diff. Driven	3-29-41
GEAR, Inter Axle Diff. Idler	3-29-29
GEAR, Inter Axle Diff. Side	3-29-82
GEAR, Oil Pump Drive	10-10-1
GEAR, P.T.O. Drive	21-08-76
GEAR, P.T.O. Idler	21-08-86
GEAR, P.T.O. Reverse	21-08-77
GEAR, Rear Axle Diff. Drive	3-19-16
GEAR, Rear Axle Diff. Side	3-06-5
GEAR, Transfer Case	21-102-0
GEAR, Trans. Annulus	21-134-38
GEAR, Trans. Aux. Co/Shaft Drive	21-18-57
GEAR, Trans. Aux. M/Shaft Reduction	21-18-7
GEAR, Trans. Co/Shaft Drive	21-15-3
GEAR, Trans. Co/Shaft First Spd.	21-15-11
GEAR, Trans. Co/Shaft Fourth Spd.	21-15-23
GEAR, Trans. Co/Shaft O/Drive	21-54-43
GEAR, Trans. Co/Shaft P.T.O. Drive	21-15-26
GEAR, Trans. Co/Shaft Range	21-15-6
GEAR, Trans. Co/Shaft Second Spd.	21-15-15
GEAR, Trans. Co/Shaft Third Spd.	21-15-22
GEAR, Trans. High and Low Range Co/Shaft	21-06-46
GEAR, Trans. M/Drive	21-09-2
GEAR, Trans. M/Shaft Drive	21-10-11
GEAR, Trans. M/Shaft First Spd.	21-10-6
GEAR, Trans. M/Shaft Fourth Spd.	21-10-43
GEAR, Trans. M/Shaft Low Speed	21-10-3
GEAR, Trans. M/Shaft Output	21-10-75
GEAR, Trans. M/Shaft O/Drive	21-54-29
GEAR, Trans. M/Shaft Reverse Speed	21-10-72
GEAR, Trans. M/Shaft Second Speed	21-10-16
GEAR, Trans. M/Shaft Sliding, First & Rev.	21-10-4
GEAR, Trans. M/Shaft Third Speed	21-10-31
GEAR, Trans. Output Shaft Coupling	21-10-70
GEAR, Trans. Reverse Idler	21-11-1
GEAR, Trans. Sun	21-133-40
GEAR, Trans. Synchronizer Clutch	21-14-5
GEAR, Two Speed Axle Clutch	3-50-1
GLASS, Body Cargo Area	23-64-310
GLASS, Qtr. Window	23-64-311
GLASS, Rear Window	23-64-314
GLASS, Vent Wing	23-64-306
GLASS, Windshield	23-66-135
GLASS, Door Window	23-64-308
GLASS CHANNELS	23-09-0
GLASS, T/Gate Window	23-64-10
GLOVE BOX	23-06-4
GLOVE COMPARTMENT LAMP	8-38-23
GOVERNOR	14-68-0
GOVERNOR REPAIR PACKAGE, Trans.	21-138-2

PART NAME	CODE
GRILLE	7-16-11
GRILLE, Defogger Outlet	1-47-4
GRILLE, Defroster Outlet	1-48-158
GRILLE, Radio Speaker	23-33-42
GRILLE, Rear Seat Heater	1-87-21
GRILLE, Whl. House Radio Spkr.	23-96-31
GROMMET, Door Locking Knob	23-18-54
GROMMET, Elect. Wdo. Lift & Dr. Locks Wiring	23-41-95
GROMMET, Frt. Floor Carpet Radio	1-87-7
GROMMET & SPACER PKG.	23-67-20
GROMMET, Strg. Col. Gear Shift	19-46-13
GROMMET, V/Wing Pivot Brkt.	23-64-278
GROMMET, w/Washer Hose Dash	23-67-255
GROUND LEAD, Distributor	8-27-207
GUARD, Alternator	7-08-5
GUARD, Bumper	13-68-6
GUARD, Prop Shaft	16-15-6
GUIDE, Auto. Adj. Cable	5-20-11
GUIDE, Floor Console Ash Receiver	23-02-115
GUIDE, Manual Seat Adjuster	23-47-67
GUIDE, Outside Remote Control Mirror Cable	23-21-58
GUIDE, Trans. Kickdown Servo	21-137-13
GUIDE, Valve	9-39-10
GUSSET, Center Flr. Pan Rr. Support Frt. Hanger Brkt.	23-32-92
GUSSET, Dash Pnl. to Strut	23-34-130
GUSSET, Deck Opng. Lwr. Pnl.	23-34-257
GUSSET, Frame	13-46-0
GUSSET, Side Sill Pnl.	23-51-19

H

PART NAME	CODE
HANDLE, A/Cond. or Htr. Vent Dr.	1-48-401
HANDLE, Ash Receiver	23-02-42
HANDLE, Door Latch Remote Control	23-14-27
HANDLE, Door Outside	23-14-10
HANDLE, Dr. Pull	23-81-3
HANDLE, Door Window Reg.	23-14-18
HANDLE, Floor Pan Cvr. Release	23-32-80
HANDLE, Glove Box Door	23-06-25
HANDLE, Grab	23-77-0
HANDLE, Hood Latch Release	15-11-5
HANDLE, Htr. Vent Dr.	1-48-401
HANDLE PACKAGE, Door Vent Wing	23-14-53
HANDLE, Park Brake Lever	4-08-2
HANDLE, Qtr. Pnl. Outside T/Gate Pillar Upr. Assist	23-36-123
HANDLE, Qtr. Window Glass	23-14-70
HANDLE, Qtr. Window Regulator	23-14-79
HANDLE, Reclining Front Seat Back	23-45-52
HANDLE, Tailgate Lock	23-54-180
HANDLE, Tailgate Wdo. Regulator	23-54-73
HANDLE, 3rd Seat Back Release	23-48-20
HANGER, Rr. Spring Front	13-54-4
HANGER, Rr. Spring Rear	13-54-15
HARNESS, O.S.A.C.	25-08-4
HARNESS, Thermal Ignition Control Valve	25-08-4
HARNESS, Vac. Amplifier Tube	25-06-22
HARNESS, Vapor Canister Hose	25-04-23
HEADLAMP	8-34-1
HEAD REST, Frt. Seat	23-108-19
HEAD, Starter Commutator End	8-52-176
HEAD, A/Cond. Compressor	24-25-84
HEAD, Cylinder	9-03-4
HEAD, Power Strg. Gear Housing	19-02-55
HEAD END SPLITTER & RANGE PARTS, Trans.	21-06-0
HEADER, Roof Rear	23-34-293
HEADLINING	23-86-22
HEAT CONTROL VALVE, Manifold	9-58-1
HEAT SHIELD, Exhaust Pipe	11-05-5
HEAT SHIELD, Muffler	11-01-16
HEAT SHIELD, Spark Plug	8-36-124
HEATER	1-48-1
HEATER, Carburetor	14-62-1
HEATER AND COMPONENTS	1-48-0
HEATER, Engine Jacket	9-02-50
HELPER SPRING, Front Seat Cushion	23-52-1
HIGH BEAM INDICATOR LAMP	8-39-0
HINGE, 3rd Seat Back Frame	23-48-121
HINGE, Deck Lid	23-19-84
HINGE, Door Lwr.	23-15-3
HINGE, Door Upr.	23-15-1
HINGE, Floor Console Compartment	23-38-14
HINGE, Front Fender	12-01-18
HINGE, Glove Box Door	23-06-21
HINGE, Hood	15-19-2
HINGE, Hood Cold Air Intake Door,	15-03-86
HINGE, Rear Floor Pan Cvr. Pnl.	23-32-65
HINGE, Side and Cargo Door Window	23-64-126
HINGE, Stake Rack	23-68-3
HINGE, T/Gate	23-54-4
HOLDER, Air Cond. Fuse	24-24-7
HOLDER, Alternator Brush	8-29-42
HOLDER, Starter Brush	8-52-150
HOOD BUMPER	15-09-4
HOOD LATCH	15-11-3
HOOD LATCH STRIKER	15-13-2
HOOD PANEL	15-03-3
HOOK, Coat Hanger	23-82-30
HOOK, Manual Seat Guide Wire Tension	23-47-28
HOOK, Stake Rack	23-68-2
HOOK, Ventilation Frame Mtg.	1-48-720
HORN	8-32-2
HORN CONTROLS	8-33-0
HOSE PACKAGE, Pump Pressure	19-58-7
HOSE, Air Brake	5-116-0
HOSE, Air Brake Compressor	5-120-0
HOSE, Air Cleaner	10-01-62
HOSE, Air Conditioning	24-28-24
HOSE, Air Pump Diverter Valve	25-02-42
HOSE, Brake	5-62-1
HOSE, Carburetor Vapor Hose	14-73-11
HOSE and CONNECTOR, Htr. Control	1-48-7
HOSE, Fuel Filter	14-67-2
HOSE, Front Wheel Brake	5-62-1
HOSE, Heater Connector	1-48-7
HOSE, Htr. Core	1-48-555
HOSE, Power Brake Vacuum	5-111-17
HOSE, P/Strg. Pump Return	19-58-14
HOSE, Radiator Inlet	7-14-4
HOSE, Radiator Outlet	7-14-5
HOSE, Signal	25-02-42
HOSE, Vapor Canister	25-04-20
HOSE, Water Pump By-Pass	7-14-9
HOSE, W/Shield Washer Connector	23-67-260
HOUSING, Air Brake Chamber	5-98-11
HOUSING, Air Cond.	24-28-334
HOUSING, Air Cond. Evaporator	24-28-113
HOUSING, Air Cond. and Heater	24-01-18
HOUSING, Ash Receiver	23-02-19

PART NAME	CODE
HOUSING, Clutch	6-09-1
HOUSING, Complete Ventilation	23-61-120
HOUSING, Console Ash Rec.	23-02-110
HOUSING, Courtesy Lamp	8-11-15
HOUSING, Defogger Blower	1-48-17
HOUSING, Disc Brakes	5-05-1
HOUSING, Distributor	8-27-96
HOUSING, Front Axle	2-11-22
HOUSING, Front Fender 5	12-01-
HOUSING, Gearshift Selector Lever	21-30-403
HOUSING, Headlamp	8-34-362
HOUSING, Heater	1-48-125
HOUSING, Heater Fresh Air Intake	1-48-383
HOUSING, Inter Axle Diff.	3-29-68
HOUSING, P.T.O.	21-08-11
HOUSING, Pwr. Strg. Cont. Val. Actuator	19-63-314
HOUSING, Qtr. Pnl. Fuel Filler Tube	23-04-241
HOUSING, Rr. Axle	3-02-1
HOUSING, Speed and Inst.	8-37-178
HOUSING, Starter Pinion	8-52-76
HOUSING, Strg. Col. Lock	19-14-120
HOUSING, Strg. Column Shaft Bearing,	19-14-21
HOUSING, Steering Gear	19-02-4
HOUSING, Strg. Column Gearshift	19-46-8
HOUSING, Trans. Aux. Case	21-18-45
HOUSING, Trans. Oil Pump	21-118-40
HOUSING, Turn Signal Indicator Lamp	8-50-64
HOUSING, Underbody Engine Cover	23-04-42
HOUSING, Water Pump	7-43-01
HOUSING PKG., Wiper Mtr.	23-67-112
HUB, Air Intake	5-113-20
HUB And DRUM FRONT	22-03-1
HUB And Drum Rear	22-03-2
HUB, Disc Brake	5-05-3
HUB, Fan Pulley	7-05-1
HUB, Frt. Wheel Locking	2-12-17
HUB, Wheel	22-05-4
HUB with LEVER, Power Brake	5-100-189

I

I-BEAM, Front Axle	2-01-2
IDLER ARM, Steering Link	19-27-31
IGNITION COIL	8-35-4
IMPELLER, Water Pump	7-45-31
INDICATOR, Hi Beam	8-39-0
INDICATOR, Low Oil Pressure	8-37-75
INDICATOR, Oil Level	10-03-4
INDICATOR, Trans. Oil Level	21-119-19
INJECTOR, Fuel	14-99-0
INSERT, Wheel Cyl. Tube	5-66-6
INSTRUMENT PANEL	23-33-0
INSTRUMENT PANEL INSTRUMENTS	8-37-0
INSTRUMENT PANEL WIRING	8-19-3
INSULATION	23-31-0
INSULATOR, Aux. Trans.	21-88-61
INSULATOR, Body Hold Down	23-05-10
INSULATOR, Clutch Rod	6-24-8
INSULATOR, Engine Front Support	9-67-4
INSULATOR, Engine Rear	9-71-5
INSULATOR INSERT, Body Hold Down	23-05-25
INSULATOR, Muffler and Tail Pipe	11-10-3
INSULATOR, Muffler Support	11-02-16
INSULATOR, Prop Shaft Ctr. Brg.	16-17-18
INSULATOR, Radiator Support Bolt	7-29-11
INSULATOR, Radiator Core Upr. Mtg.	7-11-31
INSULATOR, Rr. Heated Glass Wiring	8-37-65
INSULATOR, Strg. Col. Shaft	19-14-38
INSULATOR, Trunk Lamp Socket	8-13-5
INSULATOR, Wiper Switch Wiring	23-67-169
INSULATOR, Wiring	8-16-6
INTER AXLE PARTS, Front Rear Axle	3-29-0

J

JACK BAR and BASE	13-72-4
JACKET, Strg. Column	19-14-1
JET, Carburetor	14-35-1
JET, Intake Manif. Flr.	9-48-173
JOINT, Universal Cross	16-03-1
JUNCTION BLOCK, Brake Tube	5-06-12

K

KEEPER, Spare Tire Cover Latch	23-04-246
KEY BLANK, Door Ign.	23-17-1
KEY, Pump Drive Shaft	19-54-157
KING PIN, Strg. Knuckle	2-04-1
KIT, Carburetor Gasket	14-30-7
KIT, Carburetor Repair	14-30-4
KIT, Carburetor Zip	14-30-4
KIT, Cemented in Rr. Wdo.	23-64-1
KIT, Cemented in W/Shield Glass	23-66-75
KNOB and WIRE, Choke	14-63-1
KNOBS, Air Cond. Control	24-24-156
KNOB, Clock Reset	8-37-454
KNOB, Dr. Latch Locking Cont.	23-18-27
KNOB, Front Seat Back Release	23-45-39
KNOB, 2nd Seat Back Lock Push Rod	23-48-51
KNOB, Hazard Warning	8-50-95
KNOB, Latch Remote Cont. Handle	23-54-214
KNOB, Rr. Heated Glass Switch	8-37-68
KNOB, Trans. Gearshift Selector	21-30-6
KNOB, Headlamp Switch	8-53-296
KNOB, Heater Control	1-48-942
KNOBS, Inst. Panel	8-53-296
KNOB, Cigar Lighter	8-20-8
KNOB, Manual Seat Adjuster	23-47-55
KNOB, Parking Brk. Lever	4-25-3
KNOB, Radio Control	1-87-180
KNOB, Rr. Window Defogger Sw.	1-47-8
KNOB, Wiper Switch	23-67-194
KNUCKLE, Steering	2-03-3

L

LABEL, T/Gate Dr. Direction	23-64-11
LABEL, T/Gate Dr. Hinge Release Direction	23-54-70
LAMP, Ash Receiver	8-19-83
LAMP, Back-up	8-56-1
LAMP, Cargo and Dome	8-05-0
LAMP, Clearance and I.D.	8-48-0
LAMP, Console	21-30-15
LAMP, Cornering	8-50-292
LAMP, Courtesy	8-11-2
LAMP, Fender T/Signal Indicator	8-50-175
LAMP, Glove Box	8-38-23
LAMP, Head	8-34-1
LAMP, Heater Control	1-48-10

PART NAME	CODE
LAMP, Hood T/Signal Indicator	8-50-175
LAMP, Ignition and Starter Switch	8-40-5
LAMP, License	8-57-10
LAMP, Map and Courtesy	8-42-1
LAMP, Parking and T/Signal	8-50-303
LAMP, Side Marker	8-14-1
LAMP, Super Light	8-39-9
LAMP, Switch Title	8-37-15
LAMP, Tail, Stop and T/Signal	8-55-7
LAMP, Tailgate Tail	8-55-1
LAMP, Trunk	8-13-1
LAMP, Underhood	8-10-1
LATCH, Console	23-38-15
LATCH, Deck Lid	23-19-105
LATCH, Door	23-18-5
LATCH, Glove Box	23-06-15
LATCH, Hood	15-11-3
LATCH w/LEVER, Frt. Seat Back Release	23-45-57
LATCH, 3rd Seat Back	23-48-70
LATCH PACKAGE, Qtr. Wdo. Glass	23-64-181
LATCH, Security Panel	23-19-204
LATCH, Tailgate	23-54-1
LATCH, Tilt Cab Safety Release	23-1-49
LEAD, Distributor	8-27-205
LEAF, Front Spring	17-02-0
LEAF, Rear Spring	17-12-4
LENS, Back Up Lamp	8-56-8
LENS, Clearance and I.D.	8-48-5
LENS, Courtesy Lamp	8-11-12
LENS, Dome Lamp	8-05-23
LENS, Double Face T/Signal	8-50-71
LENS, Gearshift Selector Lever	21-30-21
LENS, Glove Comp't. Lamp	8-38-3
LENS, Map and Courtesy Lamp	8-42-5
LENS and MASK, Inst. Cluster	8-37-162
LENS, Side Marker	8-14-6
LENS, Tail, Stop and Turn Sig.	8-55-194
LENS, Turning and Parking Lamp	8-50-334
LEVELER, Hood	17-23-2
LEVER, Air Brake Camshaft	5-97-16
LEVER, Auto. Brake Adjuster	5-20-9
LEVER, Aux. Trans. G/Shift Hand	21-91-1
LEVER, Aux. Trans. G/Shift Stub	21-89-1
LEVER, Clutch Pedal Shaft	6-43-11
LEVER, Clutch Release	6-17-3
LEVER, Clutch Shaft Assistor	6-41-78
LEVER, Door Elect. Lock	23-18-101
LEVER, Fast Idle Adjusting	14-24-17
LEVER, Gearshift Operating	21-42-11
LEVER, Hood Fresh Air Intake	15-03-91
LEVER, Park Brk. Operating (Wheel)	4-26-1
LEVER, Parking Brake Hand	4-08-1
LEVER, Park Brk. Actuating (Foot)	4-25-1
LEVER, Strg. Col. Gear Shift	19-46-16
LEVER, Strg. Column Gearshift	19-46-29
LEVER, Strg. Gear Valve	19-57-63
LEVER, Throttle Control	14-17-0
LEVER, Transmission Gearshift	21-30-2
LEVER, Trans. Kickdown Band	21-136-20
LEVER, Trans. Throttle Control	21-142-12
LEVER, Turn Signal	8-50-129
LEVER, Two Spd. Axle Shift Fork	3-31-135
LICENSE FRAME ATTACHING PARTS PACKAGE	8-47-2
LID & CONSOLE	23-71-3
LID, Deck	23-19-8
LID, Floor Console Ash Receiver	23-02-111
LID, Floor Console Compartment	23-38-3
LID & LATCH, Whl. House Cover Storage Compt.	23-96-26
LIGHT, Brake Sentinel	8-37-71
LIGHTER, Cigar	8-20-1
LIMIT RESISTOR, Wiper Mtr.	23-67-107
LIMITER, Instrument Voltage	8-37-2
LINER, Dash	23-31-33
LINING PACKAGE	5-03-1
LINING and SHOE, Brake	5-03-3
LINK, Accelerator Rod	14-11-18
LINK, Deck Lid Lock Cyl. to Latch	23-19-111
LINK, Door Elect. Latch Solenoid	23-18-107
LINK, Door Latch Remote Control	23-18-11
LINK, Door Lock	23-18-20
LINK, Hood Latch Release	15-11-20
LINK, Trans. Reverse Band	21-136-44
LINK, Strg. Link	19-27-50
LINK, Wiper Drive	23-67-79
LOCK CLIP, W/Shield Wiper Arm	23-67-80
LOCK CYLINDER AND KEYS	23-17-2
LOCK, Diff. Adjuster	3-11-14
LOCK, Door	23-18-5
LOCK, Front Fender	12-03-1
LOCK, Rr. Door Child Guard	1-72-5
LOCK, Valve	9-39-17
LOGIC CONTROLLER, Whl. Slip Cont. System	5-06-7
LOOP, Frt. Seat Lap Belt	23-49-7
LOUVER, Air Cond.	24-28-78
LUGGAGE COMPARTMENT, Tilt Cab	23-19-0

M

PART NAME	CODE
MAINSHAFT, Aux. Trans.	21-92-5
MAINSHAFT, Trans.	21-16-3
MAINSHAFT, Trans. Aux.	21-18-1
MANIFOLD, Air Brk. Control	5-118-0
MANIFOLD, Exhaust	9-48-6
MANIFOLD GASKET	9-50-1
MANIFOLD HEAT CONTROL VALVE THERMOSTAT	9-58-5
MANIFOLD, Intake	9-48-7
MANUAL, Sun Roof	23-34-309
MAP AND COURTESY LAMP	8-42-1
MAST, Antenna	1-88-159
MASTER CYLINDER	5-39-3
MASTER CYLINDER KIT	5-39-1
MAT, Front Floor	23-20-8
MAT, Luggage Compartment Floor	23-20-29
MAT, Rear Floor	23-20-41
MECHANISM, Electric Wdo. Regulator	23-54-165
MECHANISM, Gearshift (Trans.)	21-30-407
MEDALLION, Deck Lid Lock Cyl.	23-17-19
MEDALLION, Rr. Seat Back Radio	1-87-23
MEDALLION, Seat Back	23-26-76
MICROPHONE	1-87-54
MIRROR, Outside	23-21-3
MIRROR, Inside Rear View	23-21-8
MODULATOR, Skid Control	5-06-1
MOTOR, A/Cond. Blower	24-28-195
MOTOR, Defogger Blower	1-47-13
MOTOR, Folding Top	23-58-357
MOTOR, Htr. Blower	1-48-599
MOTOR, Inter Axle Shift	3-29-138
MOTOR, Power Antenna	1-88-117

PART NAME	CODE
MOTOR, Rotating Headlamp	8-34-280
MOTOR, Seat Adjuster	23-47-430
MOTOR, Sun Roof	23-34-308
MOTOR, T/Gate Wdo.	23-54-160
MOTOR, Two Speed Axle Shift	3-31-91
MOTOR, Vent Wing	23-64-75
MOTOR, Window Lift	23-41-106
MOTOR, W/S Wiper	23-67-98
MLDG., Body Side Sill	23-23-2
MOULDING, Cargo Area Windows	23-23-53
MOULDING, Console Side Carpet	23-26-87
MOULDING, Deck Lid (1)	23-23-30
MOULDING, Door Edge	1-135-1
MOULDING, Door Garnish	23-22-7
MOULDING, Door Trim Panel	23-26-23
MOULDING, Front Door	23-23-32
MOULDING, Front Fender	12-15-2
MLDG., Frt. Pillar	23-23-14
MOULDING, Frt. Seat Cushion Side	23-26-45
MOULDING, Headlamp Bezel	8-34-42
MOULDING, Headlining	23-86-35
MOULDING, Hood	15-25-0
MOULDING, Instrument Panel	23-33-86
MOULDING, Grille	7-16-36
MOULDING, Outside Finish	23-23-0
MOULDING, Radiator Air Shield	7-26-14
MOULDING PACKAGE, Rear Wdo. Outside	23-23-52
MOULDING, Rear Door	23-23-33
MOULDING, Rear Wdo. Garnish	23-22-86
MOULDING, Rr. Wdo. Headlining Trim	23-86-35
MOULDING, Roof Side Rail Garnish	23-26-41
MLDG., Roof Pnl. Finish	23-23-42
MLDG., Roof Side Drain Trough	23-59-61
MOULDING, Shelf Trim Pnl.	23-26-43
MOULDING, Side and Rear	23-23-39
MOULDING, Spare Tire Cover	23-04-205
MOULDING, Tailgate Inside Trim.	23-26-19
MOULDING, Tilt Cab Inside Finish	23-26-91
MOULDING, Windshield Garnish	23-22-145
MOULDING, Windshield	23-23-65
MUFFLER	11-01-1
MUFFLER, A/Cond., Compressor	24-26-100
MUFFLER SUPPORT	11-02-4

N

NAME PLATE, A/Cleaner	14-29-8
NAME PLATE, Cowl	23-12-5
NAME PLATE, Defogger Switch	1-47-15
NAME PLATE, Door	23-11-21
NAME PLATE, Dr. Outside	23-11-21
NAME PLATE, Door Inside Trim Pnl.	23-26-80
NAME PLATE, Front Fender	12-15-21
NAME PLATE, Glove Box Door	23-06-53
NAME PLATE, Grille	7-16-61
NAME PLATE, Hood	15-06-0
NAME PLATE, Instrument Panel	23-33-96
NAME PLATE, Side Panel	23-34-65
NAME PLATE, T/Gate O/Side Panel	23-54-11
NEEDLE & SEAT, Carburetor	14-30-8
NIPPLE, Eng. to Htr. Hose	1-48-572
NOZZLE, W/Shield Washer	23-67-246
NUT, Auto. Adj. Pivot Screw	5-20-15
NUT, Battery Cable Clamp Bolt	8-01-12
NUT, Brake Pedal Sleeve Lock Screw	5-27-12
NUT, Clutch Fork Adjusting	6-24-3
NUT, Connecting Rod Brg. Cap	9-31-7
NUT, Deck Lid Cyl. Retaining	23-17-16
NUT, Outside Remote Control Mirror Control	23-21-74
NUT, Rear Axle Brake Tube	5-54-4
NUT, Strg. Col. Shaft Strg. Wheel	19-30-18
NUT, Strg. Link Gear Arm	19-27-8
NUT, Switch Mtg.	8-53-271
NUT, Wheel Stud	22-05-24
NUT, Wiper Switch	23-67-161

O

O RING, Brake Valve to Indicator	5-58-12
"O" RING, Pump Pressure Hose Pump Fitting	19-58-18
"O" RING, Pump Pressure Plate	19-54-126
"O" RING, Strg. Gear Pressure Control	19-56-90
"O" RING, Strg. Gear Ferrule	19-56-22
"O" RING, Strg. Gear Valve Hsg.	19-57-13
"O" RING, T/Gate Filler Hose Retaining	23-67-261
O-RING, Water Outlet Pipe	9-05-28
OIL COOLER, Engine	10-34-3
OIL DISTRIBUTOR, Rear Axle	3-03-49
OIL FILTER PARTS	10-26-0
OIL LEVEL INDICATOR	10-03-4
OIL PAN	10-24-4
OIL PRESSURE LIGHT	8-37-75
OIL PRESSURE RELIEF VALVE PARTS	10-22-0
OIL PUMP	10-07-6
OIL PUMP DRIVE GEAR	10-10-1
OIL PUMP DRIVE SHAFT	10-09-1
OIL PUMP ROTOR	10-14-18
OIL SEAL, Chain Case Cover	9-23-18
OIL SEAL, Crankshaft Bearing	9-11-1
OIL SEAL, Drive Pinion Brg.	3-22-45
OIL SEAL, Drive Shaft	3-35-14
OIL SEAL, P/Strg. Pump Rotor	19-54-151
OIL SLINGER, CRANKSHAFT	9-07-17
OIL STRAINER	10-23-7
OILER, Distributor	8-27-100
ORNAMENT, Grille	7-17-1
ORNAMENT, Hood	15-03-18
ORNAMENT, Strg. Wheel	19-30-26
ORNAMENT, Strg. Wheel Horn	8-33-6
OUTLET, A/Cond. Air	24-28-78
OUTSIDE FINISH MOULDINGS	23-23-0
OVERLAY, Door	23-11-10
OVERLAY, Fender Side	12-15-32
OVERLAY, Quarter Outside Panel	23-34-329
OVERLAY, T/Gate Outside	23-54-2

P

PAD, Accelerator Pedal	14-01-2
PAD, Brake Pedal	5-28-8
PAD, Clutch Pedal	6-39-2
PAD, Instrument Panel	23-84-0
PAD, Parking Brake Pedal	4-25-6
PAD, Radiator Core Lwr. Mtg.	7-11-60
PAD, Strg. Wheel	19-30-44
PAD, Strg. Wheel Horn	8-33-13
PAD, Tailgate Step	23-34-38
PADS, LINERS, INSULATORS, SEALS, ANTI-SQUEAK	23-31-0
PAN, Clutch Hsg.	6-10-2
PAN, Frt. Flr.	23-32-22
PAN, Oil	10-24-4

PART NAME	CODE
PAN, Rr. Flr.	23-32-48
PAN, Trans. Oil	21-119-3
PANEL, Body Metal	23-34-55
PANEL, Bumper Texture	13-66-151
PANEL, Cargo Area Side	23-34-39
PANEL, Center Pillar Upr. Finish	23-23-16
PANEL, Cowl Plenum	23-34-80
PANEL, Cowl Side Inner	23-34-89
PANEL, Cowl Top and Dash	23-34-80
PANEL, Cowl Trim	23-91-6
PANEL, Ctr. Floor Pan	23-32-46
PANEL, Dash	23-34-110
PANEL, Deck Opening Upper	23-34-166
PANEL, Deck Opening Lower	23-34-167
PNL., Deck Opng. Lwr. Finish	23-23-28
PANEL, Door Outside Repair	23-34-120
PANEL, Dr. Trim	23-92-5
PANEL, Express Body - Inner	23-34-43
PNL., Folding Rr. Seat Back	23-48-188
PANEL, Front Fender	12-01-7
PANEL, Frt. Seat Back	23-108-32
PANEL, Frt. Floor	23-32-13
PANEL, Header, Side and Rear	23-34-293
PANEL, Header, Windshield	23-34-354
PANEL, Hood	15-03-3
PANEL, Instrument	23-33-109
PANEL, Inst. Cluster Lamp	8-41-41
PANEL, License Plate Mtg.	8-47-68
PANEL, Luggage Compt. Lining	23-96-8
PANEL, Qtr. Outside Panel Finish	23-23-85
PANEL, Quarter Inside	23-34-234
PANEL, Quarter Outside Repair	23-34-235
PANEL, Qtr. Trim	23-101-3
PANEL, Quarter Wheel Opening	23-34-212
PANEL, Quarter Wheelhouse	23-34-29
PANEL, Radiator Grille	7-16-63
PANEL, Radiator Yoke	7-26-30
PANEL, Rear Corner	23-34-78
PANEL, Rear Floor Pan	23-32-56
PANEL, Rocker Dr. Sill	23-51-5
PANEL, Rr. Dr. Glass Track	23-64-268
PANEL, Roof	23-34-301
PANEL, 2nd Seat Back	23-48-65
PANEL, Shelf Trim	23-102-3
PANEL, Side Lock Pillar	23-34-288
PANEL, Side or Sill to U/Body	23-23-48
PANEL, Side Wheelhouse	23-34-27
PANEL, Tailgate Outside Finish	23-23-77
PANEL, Underbody Floor	23-32-24
PANEL, Underbody Stepwell	23-34-58
PANEL, Visor Trim	23-103-3
PANS, PLUGS AND BODY BUMPERS	23-32-0
PARK SWITCH PKG., Wiper Mtr.	23-67-164
PARKING BRAKE CABLE	4-23-1
PARKING BRAKE LEVER	4-08-1
PARKING BRAKE SIGNAL LAMP	8-31-10
PAWL, Parking Brake	4-13-0
PEDAL, Accelerator	14-01-1
PEDAL, Auto. Trans. Retarder	21-145-1
PEDAL, Brake	5-27-1
PEDAL, Clutch	6-38-1
PENTASTAR, Front Fender	12-15-21
PHOTOCELL, Auto. Headlamp Sentinel	8-53-304
PILLARS, Body	23-36-0
PILLAR, Body Center	23-36-5
PILLAR, Body Lock	23-36-53
PILLAR, Cowl Hinge	23-36-14
PILLAR, Quarter Panel Tailgate	23-36-118
PILLOW ASSY., Upr. Qtr. Trim	23-86-4
PIN, Brake Hold Down Spring	5-26-4
PIN, Cable	14-25-12
PIN, Clutch Rel. Over Center Spring	6-35-15
PIN, Clutch Spring Anchor	6-35-15
PIN, Differential Lock	3-08-2
PIN, Frt. Dr. Glass Frt. Edge Slide	23-64-286
PIN, Gearshift Selector Lever	21-30-22
PIN, License Plate Mtg.	8-47-76
PIN, Link Clevis	14-02-86
PIN, Parking Lever	4-08-35
PIN, Parking Brake Lever Hinge	4-08-35
PIN, Piston	9-36-5
PIN, Pwr. Brake Link	5-100-194
PIN, Pump Cam and Plate Dowel	19-54-178
PIN, Qtr. Wheel Opng. Pnl. Locating	23-34-216
PIN, Reclining Seat Release Cable	23-45-184
PIN, Starter Shifting Fork Pivot	8-52-50
PIN, Strg. Col. Shaft Lower	19-15-24
PIN, T/Gate Glass	23-54-126
PIN, T/Gate Hinge	23-54-17
PIN, T/Gate Window Washer Arm	23-67-254
PIN, Trans. Interlock	21-34-42
PIN, Trans. Interlock, Low & Rev.	21-42-28
PIN, Trans. Manual Valve	21-139-34
PINION, Front Axle Diff.	2-11-41
PINION, Inter Axle Diff.	3-29-88
PINION, Rear Axle Diff.	3-07-1
PINION, Rear Axle Diff. Spiral Idler	3-12-0
PINION, Speedometer	21-85-5
PINION, Trans. Frt. Planetary	21-134-8
PINION, Trans. Main Drive	21-09-2
PINION, Two Speed Axle Idler	3-30-1
PINTLE HOOK	13-62-0
PIPE, Air Intake	14-29-16
PIPE, Exhaust	11-05-4
PIPE, Exhaust Extension	11-05-4
PIPE, Flexible Exhaust	11-05-0
PIPE, Oil Filler	10-01-9
PISTON, Air Brk. Adjusting	5-98-42
PISTON, Air Brk. Chamber	5-98-36
PISTON, Booster Brk. Slave Cyl.	5-100-33
PISTON, Disc Brake	5-05-10
PISTON, Hyd. Brk. Master Cyl.	5-44-3
PISTON, Hyd. Brk. Wheel Cyl.	5-70-1
PISTON PIN	9-36-5
PISTON RING PKG., Air Cond. Compr.	24-25-2
PISTON RING SET, Engine	9-35-1
PISTON, Trans. Accumulator	21-137-200
PISTON, Trans. Air Cyl.	21-06-10
PISTON, Trans. Aux. Slave Valve	21-18-144
PISTON, Trans. Aux. Shift Cyl.	21-18-160
PISTON, Trans. Front Clutch	21-133-15
PISTON, Trans. Kickdown Servo	21-137-5
PISTON, with Pin	9-34-5
PIVOT, Clutch Fork	6-22-15
PIVOT, (Shoulder Bolt) Frt. Seat Back Outer Hinge	23-45-31
PIVOT, Tailgate Check Arm	23-54-113
PIVOT, Windshield Wiper	23-67-86
PIVOT PKG., Vent Wing, Upper	23-64-240

PART NAME	CODE
PLATE, Air Pump Adj.	25-02-29
PLATE, Body Side Sill to Qtr. Inside Pnl. Tie	23-34-229
PLATE and BRUSH PACKAGE, Starter	8-52-137
PLATE, Brake Shoe Guide	5-25-9
PLATE, Camshaft Sprocket Thrust	9-15-6
PLATE, Clutch, Front Pressure	6-15-1
PLATE, Console Rr. Opng.	23-38-48
PLATE, Convertible Top, Pump Cover	23-58-430
PLATE, Cowl Side Outer to Inner Pnl. Frt.	23-34-84
PLATE, Defogger Blower Mtg.	1-47-14
PLATE, Defogger Switch Mounting	1-47-23
PLATE, Differential Clutch	3-09-2
PLATE, Dist. Breaker	8-27-138
PLATE, Door Opening Scuff	23-20-14
PLATE, E.G.R. Valve Flange	25-06-12
PLATE, Engine Front	9-64-34
PLATE, Frt. Dr. V/Wing	23-64-42
PLATE, Frt. Whl. Disc Brake Retg.	5-05-30
PLATE, Frt. Seat Cushion Bmpr.	23-45-29
PLATE, Filter Support	14-29-28
PLATE, Gearshift Torque Shaft Mounting	19-48-48
PLATE, Side Sill Ctr. Pillar Scuff	23-20-65
PLATE, Stereo Speaker and Grille Mtg.	1-87-30
PLATE, Strg. Col. Shaft Lock	19-14-82
PLATE, Strg. Col. Shaft Brg. Ret.	19-14-23
PLATE, Strg. Wheel and Horn Ring Mounting	19-30-23
PLATE, Switch Mtg.	23-67-171
PLATE, T/Gate Dr. Hinge	23-54-136
PLATE, Trans. Frt. Clutch	21-133-39
PLATE, Hand Brake Support	4-09-1
PLATE, Hood Lock	15-11-12
PLATE, Htr. Blower Motor Mtg.	1-48-611
PLATE, Htr. Control Mtg.	1-48-945
PLATE, Hood Support	15-11-58
PLATE, Heater Defroster Door Mtg.	1-48-35
PLATE, I/Pnl. Radio Speaker Mtg.	1-87-30
PLATE, Radio Cover	23-33-12
PLATE, Rear Spring Clip	17-11-7
PLATE, Strg. Knuckle Stop	2-08-73
PLATE, Strg. Pump End	19-54-152
PLATE, Strg. Pump Pressure	19-54-154
PLATE, Strg. Pump Thrust,	19-54-156
PLATE, Trans. Rr. Annulus Gear	21-134-45
PLATE, Spring Seat Angle,	17-11-5
PLATE, Trans. Sun Gear Driving	21-133-47
PLATE, Tachometer Mtg.	8-37-505
PLATE, Torque Converter	9-46-8
PLATE, Trans. Transfer	21-139-147
PLATE, Trans. Valve Body	21-139-140
PLATE, Vehicle Identification.	23-12-23
PLUG, Ball Joint Lower	2-10-64
PLUG, Body Hold Down Insolator to Shim	23-05-27
PLUG, Body Lock Pillar Gauge Hole	23-36-18
PLUG, Brake Shoe Adjuster Contact	5-20-24
PLUG, Button Dash	23-67-247
PLUG, Camshaft Rear	9-16-17
PLUG, Core Hole Cylinder Block	9-02-16
PLUG, Cylinder BLOCK WATER JACKET DRAIN	9-02-16
PLUG, Cylinder Head	9-03-18
PLUG, Dash Pnl. Heater Hose	23-32-98
PLUG, Deck Lid Inner Pnl. Drain Hole	23-19-21
PLUG, Deck Opening Lower	23-34-178
PLUG, Diff. Carrier Filler	3-03-35
PLUG, Exhaust Manifold	9-59-10
PLUG, Floor Carpet Seat Belt	23-49-23
PLUG, Floor Pan	23-32-15
PLUG, Fuel Tank Drain	14-86-13
PLUG, Glove Box Switch Opng.	23-33-149
PLUG, Intake Manifold	9-48-9
PLUG, Oil Drain.	10-24-37
PLUG, Pump Flow Cont. Valve	19-54-219
PLUG, Quarter Inside Panel	23-34-237
PLUG, Quarter Inside Wheel Well	23-34-40
PLUG, Rocker Panel Outer	23-51-45
PLUG, Seat Belt Retractor Trim	23-49-8
PLUG, Spark	8-36-114
PLUG, Strg. Gear Housing Oil Filler	19-02-17
PLUG, Strg. Link Gear Arm Stud	19-27-51
PLUG, Sun Roof Access Hole	23-86-43
PLUG, T/Gate Panel	23-54-118
PLUG, Tie Rod Eng. Cover.	2-07-17
PLUG, Trailer Receptacle Connector	8-53-353
PLUG, Transmission Case	21-03-15
PLUG, Trans. Park Sprag	4-10-32
PLUG, Transmission Drain.	21-119-11
PLUG, Trans. Vent Shield	21-118-58
PLUG, Upper Ball Joint	2-08-72
PLUG, Valve Rocker Shaft.	9-43-19
PLUG, w/Pump Hsg. Htr. Hole	7-43-18
PLUNGER, Air Brk. Adjusting	5-98-15
PLUNGER, Carburetor Pump	14-41-3
PLUNGER, Oil Pressure Relief Valve	10-22-11
PLUNGER, Trans. Rev. Latch	21-41-0
POINT SET, Distributor	8-27-158
POINTER, Trans. Column Gearshift Dial	21-30-23
POLLUTION CONTROLS.	25-00-00
POSITIONER, Disc Brakes	5-05-46
POTENTIOMETER, Air Cond.	24-01-45
POWER BRAKE PACKAGE	5-100-1
POWER BRAKE POWER UNIT.	5-100-2
POWER BRAKE VACUUM HOSE	5-111-17
POWER STEERING GEAR VALVES	19-57-3
POWER STEERING HOSE	19-58-7
POWER STEERING OIL PUMP	19-54-2
POWER TAKE OFF, Trans.	21-08-5
PROP, Hood.	15-21-0
PROP SHAFT, Front	16-02-2
PROP SHAFT, Interm	16-02-3
PROP SHAFT, Rear	16-02-4
PROP SHAFT, Single	16-02-1
PROPELLER SHAFT	16-02-1
PROPELLER SHAFT YOKE or FLANGE	16-20-1
PROTECTOR, Carpet & Mat	1-63-1
PULLEY, Air Cond. Compressor Drive	24-25-20
PULLEY, Air Cond. Compressor Idler	24-25-35
PULLEY, Air Pump	25-02-20
PULLEY, Alternator	8-28-297
PULLEY, Fan Drive	7-06-1
PULLEY, Fan.	7-06-14
PULLEY, Idler,	7-04-1
PULLEY, Steering Pump	19-54-8(
PUMP, Air Injection	25-02-1
PUMP, Carburetor Accelerator.	14-41-(
PUMP, Fuel	14-73-1
PUMP, Oil	10-07-6
PUMP, Pwr. Strg. Oil.	19-54-2
PUMP, Snow Plow Hydraulic	1-93-0
PUMP, Tilt Cab Tilting	23-1-20

PART NAME	CODE
PUMP, w/S Washer	23-67-252
PUMP, Water	7-42-1
PUSH BUTTON, Slider Htr. Control	1-48-12
PUSH NUT, 3rd Seat Back Release Rod	23-48-122
PUSH ROD, Brake Booster	5-100-20
PUSH ROD, T/Gate & Dr.	23-54-223

Q

QUICK START, Engine	14-91-0

R

RACE, Inner	19-14-22
RACE, Strg. Gear Thrust Bearing, Inner	19-15-63
RACE, Trans. "O" Running Clutch	21-136-232
RACK, Luggage	1-74-1
RACKS & GATES, Stake Body	23-68-0
RACK, Switch Actuator	19-46-58
RADIATOR CORE	7-11-3
RADIATOR CORE FAN SHROUD	7-08-2
RADIATOR CROSS BAR	7-33-1
RADIATOR FILLER CAP	7-12-1
RADIATOR GRILLE	7-16-11
RADIATOR YOKE	7-26-2
RADIO and CONTROLS	1-87-1
RADIO ANTENNA	1-88-1
RAIL, Aux. Trans. G/Shift	21-90-1
RAIL, Body Side	23-32-105
RAIL, Roof Luggage Rack	23-40-150
RAIL, Roof Side	23-40-85
RAIL, Trans. Aux. Shift	21-18-19
RAIL, Transfer Case Shift	21-108-0
RAIL, Trans. G/Shift	21-34-8
RAIL, Trans. Splitter Shift	21-06-23
RAIL, Underbody Longitudinal	23-32-105
REAR AXLE COMPLETE, Less Brakes	3-01-8
REAR AXLE DIFFERENTIAL AND CARRIER	3-03-1
REAR AXLE HOUSING	3-02-1
REAR BRAKE DRUM	22-04-2
REAR BUMPER FACE BAR	13-66-3
REAR SPRING	17-11-3
REAR SPRING BUMPER	17-19-3
REAR SPRING CENTER BOLT	17-14-10
REAR SPRING CLIP	17-15-1
REAR SPRING LEAF	17-12-4
REAR SPRING SHACKLE	17-16-1
REAR SPRING SILENT BLOCK	17-17-3
REAR WINDOW DEFOGGER	1-47-1
RECEIVER, Ash	23-02-18
RECEIVER DRIER, A Cond.	24-26-20
RECEIVER, Floor Console Ash	23-02-105
RECEIVER, Qtr. Arm Rest Ash	23-02-62
RECEIVER, Rear Ash	23-02-78
RECTIFIER, Alternator Positive	8-29-131
REFILL, W/Shield Wiper	23-67-25
REFLECTOR, Side Marker Lamp	8-14-19
REFLECTOR, Side Marker	8-48-12
REGULATOR, Air Cond. Control Vacuum	24-24-159
REGULATOR, Air Cond. Evap. Coil Sensing	24-28-13
REGULATOR, Alternator Voltage	8-28-74
REGULATOR, Door Window	23-39-5
REGULATOR, Electric Window	23-41-4
REGULATOR, Front Door Vent	23-39-29
REGULATOR, Inst. Voltage	8-37-2
REGULATOR, Quarter Window	23-39-34
REGULATOR, T/Gate Window	23-54-72
REGULATOR, Trans. Splitter Air	21-06-40
REINFORCEMENT, Body Lock Pillar	23-36-66
REINFORCEMENT, Console Compt. Lid Opng. Stop Brkt.	23-38-45
REINFORCEMENT, Frame Side	13-03-3
REINFORCEMENT, Frt. Axle Control Arm	2-10-69
REINFORCEMENT, Frt. Seat Adj.	23-47-7
REINFORCEMENT, Frt. Side Rail	23-32-115
REINFORCEMENT, Intake Manif. Gskt.	9-48-27
REINFORCEMENT, Qtr. Inside Pnl	23-34-249
REINFORCEMENT, Roof Rail	23-40-86
REINFORCEMENT, Side & Rear Corner	23-34-57
REINFORCEMENT, Side Sill Pnl	23-51-6
REINFORCEMENT, Tail Lamp	8-55-23
RELAY, Air Cond. Vacuum Time Delay	24-24-16
RELAY, Auto. Headlamp Dimmer	8-53-283
RELAY, Auto. Trans. Retarder Light	21-145-45
RELAY, Concealed Headlamp	8-34-282
RELAY, Elect. Door Lock	23-18-106
RELAY, Electric Window	23-41-27
RELAY, Headlamp Delay	8-53-283
RELAY, Horn	8-33-164
RELAY, Ignition Lamp Thermal Time Delay	8-40-10
RELAY, Low Fuel	8-37-70
RELAY, Starter	8-52-328
RELAY, T/Gate Wdo.	23-54-159
REMOTE Control, Door Latch	23-18-13
REPAIR PKG., Auto. Trans. M/Cyl.	21-145-20
REPAIR PKG., Carburetor	14-30-4
REPAIR PKG., Strg. Gear	19-01-3
REPAIR PACKAGE, Trans. Governor	21-138-2
RESERVOIR, Air Brake	5-119-0
RESERVOIR, Head Lamp Washer	8-34-323
RESERVOIR, Snow Plow Hyd. Remote	1-93-0
RESERVOIR, Strg. Pump Oil	19-54-180
RESERVOIR, W/Shield Washer	23-67-240
RESET, Clock	8-37-452
RESISTOR, A/Cond. Blower Motor	24-24-67
RESISTOR, Htr. Blower Motor	1-48-832
RESISTOR, Ignition Coil	8-35-22
RESONATOR	11-01-1
RESTRICTOR, Engine Support	9-67-19
RETAINER, Door Trim Panel	23-92-28
RETAINER, Door Weatherstrip	23-63-55
RETAINER, Drive Shaft Brg.	3-33-8
RETAINER, Parking Brk. Lever	4-08-36
RETAINER, Trans. Aux. Co/Shaft	21-18-55
RETAINER, Trans. Aux. M/Shaft	21-18-3
RETAINER, Trans. Co/Shaft Frt. Brg.	21-26-3
RETAINER, Trans. Co/Shaft Rear Brg.	21-27-2
RETAINER, Trans. M/Drive Gear Brg.	21-09-29
RETAINER, Transmission M/Shaft Rear Bearing	21-23-2
RETAINER, Trim Panel	23-101-26
RETARDER, Auto. Trans.	21-145-0
RIM and WEB, Disc Brakes	5-03-6
RIM, Wheel	22-11-0
RING, Clutch Adjusting	6-17-27
RING, Clutch Pivot Snap	6-52-12
RING, F/Tank Filler Cap Ornament	14-86-38
RING, Horn	8-33-13
RING, Horn, Partial	8-33-4
RING, Ignition Switch Sector Retaining	19-46-64
RING, Pinion Shaft Ret.	8-52-100
RING, Master Cyl. Push Rod Retainer	5-47-10

PART NAME	CODE
RING, Piston Pin Retaining	9-36-7
RING, Pump Drive Shaft Retng.	19-54-28
RING, Pump End Plate Retng.	19-54-153
RING, Rr. Whl. Slip Brk. Cont. Drive	5-06-8
RING, Sealed Beam Retaining	8-34-180
RING SET, Piston	9-35-1
RING, Shift Tube Retainer	19-46-50
RING, Starter Clutch Actuator Ret.	8-52-61
RING, Steering Gear Piston	19-56-6
RING, 3rd Seat Back Release Latch	23-48-17
RING, Transmission Frt. and Rr. Planet	21-134-12
RING, Transmission Servos Accumulator	21-137-202
RING, Trans. Gearshift Lever	21-30-7
RING, Transmission Governor Support	21-138-38
RING, Transmission Input Shaft	12-129-7
RING, Transmission Kickdown Servo	21-137-8
RING, Wheel Trim	22-01-41
RINGS, Air Cond. Compr. Clutch	24-25-234
RISER, Front Seat	23-45-120
ROCKER, Valve	9-43-1
ROD, Accelerator Pedal	14-07-0
ROD, Air Cond. Water Valve Control	24-01-38
ROD, Brake Cyl. Piston	5-12-1
ROD, Brake Pedal to Booster Linkage	5-100-20
ROD, Clutch Assistor Push	6-41-11
ROD, Clutch Hyd. M/Cyl. Push	6-40-21
ROD, Clutch Hyd. Slave Cyl. Push	6-40-47
ROD, Clutch Pedal	6-50-1
ROD, Clutch Release	6-24-1
ROD, Clutch Torque Shaft	6-52-27
ROD, Connecting	9-31-4
ROD, Door Elect. Lock	23-18-125
ROD, Door Lock	23-18-26
ROD, Eng. B/Crank	4-11-9
ROD, Fuel Pump Push	14-77-17
ROD, Gearshift Control	19-48-1
ROD, Gearshift Control, Upper	21-30-418
ROD, Gearshift First and Reverse	21-30-418
ROD, Hood Prop	15-21-0
ROD, Htr. to Plenum Mtg.	1-48-375
ROD, Inter Axle Shift	3-29-113
ROD, Master Cyl. Push	5-47-2
ROD, Parking Brake Lever Release	4-25-14
ROD, Rr. Flr. Pan Cover Prop	23-32-88
ROD, Spare Wheel Anchor	22-20-87
ROD or STUD, Frt. Dr. V/Wing	23-64-40
ROD, Telescopic Locking	19-14-81
ROD, Trans. Park Sprag	4-10-35
ROD, Trans. Kickdown Servo	21-137-11
ROD, Two Speed Axle Shift	3-31-64
ROD, Valve Push	9-42-1
ROD, Wheel Cyl. Push	5-12-1
ROLLER and BUSHING, Universal Joint	16-10-1
ROLLER, Accelerator Shaft	14-11-39
ROLLER, Clutch	6-14-4
ROLLER, Door Lwr. Hge. Check Arm	23-15-6
ROLLER, Door Window Regulator	23-39-45
ROLLER, Electric Window Regulator	23-41-250
ROLLER, Manual Wdo. Regulator	23-54-98
ROLLER, Transmission Pilot Bearing	21-17-2
ROLLER, Transmission Countershaft Bearing	21-25-2
ROLLER, Trans. "O" Running Clutch	21-136-235
ROLLER, Trans. Reverse Idler Gear Brg.	21-11-2
ROLLER, Trans. Planet Pinion Carrier	21-134-11
ROLLER, Torque Converter	9-46-228
ROOF, Luggage Rack Package	1-74-1
ROTATING GROUND PACKAGE, Pump	19-54-54
ROTOCAP, Valve	9-39-13
ROTOR, Alternator	8-29-97
ROTOR, Ignition Distributor	8-27-300
ROTOR PACKAGE, Transmission Oil Pump	21-118-6
ROTOR PACKAGE, Folding Top Motor Pump	23-58-381
ROTOR, Oil Pump	10-14-18
RUN, Frt. Door Glass	23-42-16
RUN, Frt. Door V/Wing Divisional	23-42-13
RUN, Quarter Window Glass	23-42-38
RUN, Rear Door Glass	23-42-23
RUN, Tailgate Glass Lower	23-42-46
RUNNING BOARD	12-26-2

S

PART NAME	CODE
SADDLE, Tandem Suspension	17-37-36
SAFETY CATCH, Tilt Cab Lock	23-1-33
SAFETY LINK, Wiring	8-15-7
SAFETY, Seat Belt	23-49-1
SCANNER	8-53-284
SCOOP, Carburetor Air	15-03-64
SCREENS, Air Cond. Evaporator Coil	24-28-10
SCREEN, Air Cond. Compr. Suction	24-25-114
SCREEN, Cowl Top Windshield Wiper Opng.	23-61-117
SCREW, Brake Adjusting	5-20-1
SCREW, Brake Bleeder	5-67-1
SCREW, Brake Cyl. Mounting	5-64-2
SCREW, Crakshift Brg. Cap	9-10-9
SCREW, Disc Brake Hsg.	5-05-2
SCREW, Master Cyl. Push Rod	5-100-62
SCREW, w/Pump Body	7-43-5
SEAL & BOOT PKG., Disc Brakes	5-05-9
SEAL & GASKET PKG., Power Strg.	19-01-4
SEAL & GASKET PKG., Transmission	21-01-3
SEAL & PLATE, Power Brake Booster	5-100-206
SEAL & SPACER PKG., W/Shield Wiper Motor	23-67-104
SEAL KIT, Power Strg. Pump	19-54-55
SEAL PKG., Power Strg. Gear Valve	19-57-1
SEAL PKG., Strg. Gear Shaft Cover	19-19-1
SEAL, Air Cond. Compr. Brg. Hsg.	24-25-189
SEAL, Air Cond. Compr. Oil Pump Cover	24-25-252
SEAL, Air Cond. Evaporator	24-28-92
SEAL, Air Cond. Evaporator Coil	24-28-225
SEAL, Air Cond. Hose & Tube	24-28-326
SEAL, Air Cond. Temp. Control Valve	24-01-39
SEAL, Auto. Trans. Clutch Piston	21-113-17
SEAL, Auto. Trans. Manual Valve	21-139-16
SEAL, Auto. Trans. Oil Filler Tube	21-119-25
SEAL, Auto. Trans. Oil Pump Hsg.	21-118-45
SEAL, Auto. Trans. Reverse Servo	21-137-50
SEAL, Auto. Trans. Throttle Lever	21-139-47
SEAL, Aux. Trans. M/Drive Gear	21-95-18
SEAL, Aux. Trans. M/Shaft	21-92-33
SEAL, Brk. Tube Metering Valve	5-107-36
SEAL, Bumper to Hood	13-64-33
SEAL, Carb. Air Scoop (Hood)	15-03-67
SEAL, Clutch Hsg. Pan Dust	6-10-10
SEAL, Clutch Pedal Brg.	6-43-13
SEAL, Clutch Release Fork	6-22-4
SEAL, Clutch Shaft	6-52-17
SEAL, Cowl Top to Hood Panel	23-61-42

PART NAME	CODE
SEAL, Dash Panel to Fender	23-31-146
SEAL, Disc Brk. Splash Shield	5-05-17
SEAL, Distributor Hsg.	8-27-44
SEAT, Door Latch Remote Control	23-18-37
SEAL, Fender Wheelhouse Panel	12-01-26
SEAL, Frt. Fender Hd/Lp Splash Shield	12-04-23
SEAL, Frt. Suspension Lower Ball Joint	2-10-66
SEAL, Frt. Suspension Upper Ball Joint	2-08-61
SEAL, Fuel Tank Sending Unit	14-72-9
SEAL, Heater Core Tube	1-48-90
SEAL, Heater to Dash	1-48-126
SEAL, Heater to Plenum	1-48-362
SEAL, Hood to Cowl	15-03-5
SEAL, Inter Axle Differential	3-29-75
SEAL, Oil Filter Base Screw	10-26-20
SEAL, Oil Pump	10-07-2
SEAL, Oil Pump Body	10-07-12
SEAL, Power Strg. Control Valve	19-63-149
SEAL, Power Strg. Control Valve Spool	19-63-259
SEAL, Power Strg. Cylinder Piston	19-63-110
SEAL, Power Strg. Pump Drive Shaft	19-54-29
SEAL, Power Strg. Pump Frt. Plt. to Hsg.	19-54-258
SEAL, Power Strg. Pump Oil Reserve Mtg.	19-54-181
SEAL, Rear Axle Drive Pinion	3-22-45
SEAL, Rear Axle Drive Shaft	3-35-14
SEAL, Rear Wheel Brg. Oil	22-07-14
SEAL, Rear Wheel Brk. Cyl. to Support	5-64-7
SEAL, Spark Plug Tube	8-36-137
SEAL, Starter Solenoid	8-52-389
SEAL, Starter to Engine or Trans.	8-52-39
SEAL, Strg. Column G/Shift Hsg.	19-46-26
SEAL, Strg. Column Jacket	19-14-68
SEAL, Strg. Column Shaft	19-15-28
SEAL, Strg. Gear Reaction	19-01-52
SEAL, Strg. Gear Shaft Adj. Scr.	19-19-35
SEAL, Strg. Gear Worm Sleeve	19-19-70
SEAL, Strg. Link Idler Arm	19-27-40
SEAL, Tailgate Inside Panel	23-54-53
SEAL, Tail Lamp	8-55-24
SEAL, Torque Converter Impeller	9-46-130
SEAL, Trans. Aux. Valve	21-18-94
SEAL, Trans. G/Shift Oil	21-42-31
SEAL, Trans. M/Drive Gear Brg. Retainer	21-09-30
SEAL, Trans. M/Shaft Rear Brg.	21-22-2
SEAL, Trans. Output Brg. Yoke	21-05-12
SEAL, Trans. Pinion	21-09-30
SEAL, Trans. Speedo Pinion Adapter	21-85-22
SEAL, U/Joint Cross Roller Dust	16-8-6
SEAL, Vent Wing W/Strip Retainer	23-64-74
SEAL, Ventilator Door	23-61-110
SEAL, Water Pump	7-46-1
SEAL, Wheel Brk. Support	5-13-22
SEAL, Wheel Hub Dust	22-06-18
SEAL, W/Shield Upper Frame	23-66-69
SEALED BEAM, Headlamp	8-34-175
SEALS, Air Conditioning	24-01-70
SEALS, Air Cond. Compressor	24-25-135
SEAT, Exhaust Valve	9-39-9
SEAT, Front (Truck)	23-108-2
SEAT, Rear & Interm., (Truck)	23-109-1
SEAT BACK, Front (Truck)	23-108-12
SEAT BACK, Rear (Truck)	23-109-3
SEAT BELTS	23-49-1
SEAT CUSHION, Front	23-108-4
SEAT CUSHION, Rear	23-109-35
SEAT, Headlamp Sealed Beam	8-34-176
SEAT, Pump Flow Cont. Relief Valve	19-54-243
SEAT SPRING,	23-52-1
SEAT TRIM MATERIAL (Truck)	23-114-0
SECTOR, Parking Brake	4-12-0
SECTOR, Switch Actuator	19-46-61
SECURITY ALARM SYSTEM	8-62-0
SENDING UNIT, Oil Pressure Gauge	8-53-327
SENDING UNIT, Temperature Gauge	8-37-155
SENSOR, A/Cleaner Temp.	14-29-53
SENSOR, A/Cond.	24-24-44
SENSOR, Skid Control	5-06-9
SEPARATOR, Fuel Pump Vapor	14-73-2
SEPARATOR, Fuel Tank Vapor	14-86-65
SEPARATOR, Spark Plug Cable	8-36-14
SERVO, Speed Control	14-02-15
SHACKLE and Bushing, Spring	17-16-1
SHACKLE, Front Spring	17-06-0
SHACKLE, Rear Spring	17-16-1
SHAFT, Accelerator	14-11-1
SHAFT, Air Cond. Shut-Off Door	24-28-100
SHAFT, Auto. Trans. Gov. Valve	21-138-26
SHAFT, Auto. Trans. Input	21-129-5
SHAFT, Auto. Trans. Kickdown Band	21-136-23
SHAFT, Auto. Trans. Planet Pinion	21-134-9
SHAFT, Auto. Trans. Reaction	21-129-10
SHAFT, Auto. Trans. Retarder Pedal	21-145-35
SHAFT, Auto. Trans. Rev. Band Lever	21-136-49
SHAFT, Brake Pedal	5-29-1
SHAFT, Carburetor Throttle	14-38-12
SHAFT, Clutch Pedal	6-43-1
SHAFT, Clutch Torque	6-52-1
SHAFT, Defroster Door	24-28-399
SHAFT, Distributor	8-27-250
SHAFT, Front Axle Drive	2-12-5
SHAFT, Front Door V/Wing Lwr.	23-64-93
SHAFT, Front Suspension Cont. Arm	2-10-61
SHAFT, G/Shift Operating Lever	21-30-421
SHAFT, G/Shift Torque	19-48-45
SHAFT, Htr. Dr.	1-48-356
SHAFT, Oil Pump Drive	10-09-1
SHAFT, Pinion	8-52-89
SHAFT, Pwr. Strg. Pump Rotor	19-54-263
SHAFT, P.T.O. Drive	21-08-16
SHAFT, Propeller	16-02-1
SHAFT, Radio Channel Selector Ejector	1-87-51
SHAFT, R/Axle Diff. Pinion	3-08-1
SHAFT, R/Axle Drive	3-32-1
SHAFT, R/Axle Thru	3-19-27
SHAFT, Speedo Drive	21-84-4
SHAFT, Strg. Column	19-15-4
SHAFT, Strg. Gear	19-19-4
SHAFT, Sway Bar	17-29-5
SHAFT, Transfer Case Driven Gear	21-103-0
SHAFT, Trans. Input Drive	21-09-4
SHAFT, Trans. Output	21-05-1
SHAFT, Trans. Output	21-16-3
SHAFT, Trans. Parking Sprag	4-10-8
SHAFT, Trans. Rev. Idler Gear	21-12-1
SHAFT, Two Spd. Axle Clutch	3-49-0
SHAFT, Valve Locker	9-43-9
SHAFT, Winch Drive	21-97-5
SHAFT & RETAINING RING, P/Strg. Pump	19-54-25
SHAFT & ROTOR, Oil Pump	10-07-3

PART NAME	CODE
SHAFT w/WORM, Strg. Gear	19-15-3
SHELL, Cigar Lighter	8-20-10
SHELL, Frt. Door	23-11-1
SHELL, Rear Door	23-11-3
SHIELD, Air Cond. Idler Pulley Bearing	24-25-31
SHIELD, Air Pump Idler Pulley	25-02-22
SHIELD, Altr. Drive End	8-29-153
SHIELD, Alternator Rectifier End	8-29-132
SHIELD, Battery Heat	13-35-1
SHIELD, Dash Panel to Fender	23-34-121
SHIELD, Deck Opng. Lwr. Pnl. Lock Linkage	23-19-113
SHIELD, Disc Brake Splash	5-05-16
SHIELD, Fan Belt Idler Pulley Brg.	7-04-17
SHIELD, Fender	12-04-4
SHIELD, Front Bumper Air	13-64-28
SHIELD, Frt. Pump Hsg.	21-118-57
SHIELD, Frt. Seat	23-108-98
SHIELD, Frt. Suspension Crossmember	23-32-110
SHIELD, Headlamp	8-34-60
SHIELD, Htr. Hose	1-48-573
SHIELD, Inst. Panel Lwr.	23-33-119
SHIELD, Intake Manifold	9-4856
SHIELD, Intake Valve Stem Oil	9-39-14
SHIELD, Metering Valve Disc Brake	5-05-47
SHIELD, Metering Valve Power Brake	5-107-37
SHIELD, Oil Pump Body Splash	10-07-14
SHIELD, Qtr. Wdo. Opening	23-64-288
SHIELD, Quarter Panel Rear Stone	23-34-240
SHIELD, Radiator Air	7-26-15
SHIELD, Shock Dust	17-26-4
SHIELD, Strg. Column Shaft Coupling	19-15-111
SHIELD, Vapor Separator Tube	14-86-61
SHIFT CONTROL, Two Speed Axle	3-31-0
SHIM, Drive Pinion Bearing	3-22-28
SHIM, Folding Rr. Seat Back Hinge	23-48-105
SHIM, Trans. Synchronizer	21-14-21
SHOCK ABSORBER	17-23-3
SHOE & LINING, Parking Brk.	4-03-0
SHOE & LINING PACKAGE, Wheel Brakes	5-03-3
SHOE w/LINING, Brake	5-03-5
SHOE, Strg. Column Shaft Coupling	19-15-44
SHORT ENGINE	9-01-24
SHROUD, Cassette Player Upper	1-87-48
SHROUD, Radiator	7-08-2
SHUTTER, Radiator	7-38-0
SIDE MARKER LAMP	8-14-1
SIDE RAIL, Frame	13-03-2
SILENCER, Dash Panel Plenum Area	23-31-137
SILENCER, Frame W/Shield Opng.	23-66-71
SILENCER, Hood	15-03-60
SILENCER, Roof Panel	23-31-205
SILENCER, Valve Body	5-100-197
SKID CONTROL	5-06-0
SLACK ADJUSTER, Air Brake	5-97-28
SLAVE UNIT, Frt. Seat Elect. Adj.	23-47-344
SLEEVE, A/Cond. and Heater Hose	24-01-31
SLEEVE, Brake Pedal	5-27-2
SLEEVE, Clutch Control	6-19-2
SLEEVE, Control Arm	2-08-11
SLEEVE, Defogger Blower Motor Term.	1-47-24
SLEEVE, Diverter Valve to Check Valve Hose	25-02-45
SLEEVE, Htr. Hose	1-48-557
SLEEVE, Metering Valve	5-107-35
SLEEVE, Power Brake Lever Hub	5-100-198
SLEEVE, Power Strg. Pump Pressure Hose	19-58-9
SLEEVE, Power Strg. Pump Return Hose	19-58-9
SLEEVE, Strg. Column Shaft Lock Plate	19-14-123
SLEEVE, Strg. Gear Worm	19-19-72
SLEEVE, Strut Bushing	2-10-65
SLEEVE, Sway Bar Shaft Insulator Link	17-29-19
SLEEVE, Trans. Gearshift Rail Interlock	21-34-45
SLEEVE, Trans. Regulator Valve	21-139-64
SLEEVE, Trans. Synchronizer	21-14-6
SLEEVE, Wiring Terminal	8-16-5
SLIDE, Deck Lid Hge. Torsion Bar	23-19-178
SLIDE, Qtr. Wdo. Track Regulator	23-64-282
SLIDE, T/Gate Electric Wdo.	23-54-88
SLIDER, A/Cond. and Heater Control	24-24-177
SLIDER, Push Button Htr. Control	1-48-33
SLINGER, Crankshaft Oil	9-07-17
SLINGER, Frt. Brg.	3-22-40
SLINGER, Trans. Brg. Oil	21-09-19
SNAP RING, Inner, Trans.	21-19-15
SNAP RING, Output Shaft	21-05-19
SNAP RING, Park Sprag Plug	4-10-33
SNAP RING, Pump Rear Plug	19-54-130
SNAP RING, Shuttle Valve	21-139-98
SNAP RING, Starter Pinion Shaft Gear Ret.	8-52-67
SNAP RING, Strg. Gear Cylinder Head	19-01-62
SNAP RING, Strg. Gear Shaft Seal	19-19-5
SNAP RING, Trans. Drive Brg., Outer	21-09-23
SNAP RING, Trans. Frt. Clutch	21-133-43
SNAP RING, Trans. Governor	21-138-19
SNAP RING, Trans. Governor Body	21-138-7
SNAP RING, Trans. Governor Valve	21-138-29
SNAP RING, Trans. Kickdown	21-137-19
SNAP RING, Trans. M/Shaft Roller	21-17-7
SNAP RING, Trans. Output Brg., Outer	21-05-8
SNAP RING, Trans. Pinion Carrier	21-134-40
SNAP RING, Trans. Rr. Clutch	21-133-25
SNAP RING, Trans. Reverse Servo	21-137-59
SNAP RING, Trans. Synchronizer	21-14-20
SNOW PLOW	1-93-0
SOCKET	8-12-3
SOCKET, Brake Auto. Adjusting	5-20-17
SOCKET, Brake Warning Ind. Lamp	8-31-16
SOCKET, Dome Lamp	8-05-12
SOCKET, High Beam Indicator Lamp	8-39-15
SOCKET, Inst. Lamp	8-41-36
SOCKET, Low Oil Pressure Ind. Lamp	8-37-88
SOCKET, Map and Courtesy Lamp	8-42-10
SOCKET, Overhead Console Door Ajar	8-12-13
SOCKET, Side Marker Lamp	8-14-3
SOCKET, Tail, Stop and Turn Signal Lamp	8-55-57
SOCKET, Turn Signal Ind. Lamp	8-50-156
SOLENOID, Carburetor Idle	14-38-24
SOLENOID, Door Elect. Latch	23-18-115
SOLENOID, Hood Fresh Air Intake	15-03-54
SOLENOID, Idle Throttle	8-27-97
SOLENOID, Starter	8-52-345
SOLENOID, T/Gate & Door	23-54-179
SPACER, Auto. Headlamp Sentinel Photocell	8-53-308
SPACER, Body Hold Down	23-05-36
SPACER, Bumperette, .054 Thk.	13-66-141
SPACER, Deck Opening Upper Panel	23-34-193
SPACER, Dist. Cam	8-27-259
SPACER, Door Latch Striker	23-08-54
SPACER, Door Manual Wdo. Reg. Handle	23-14-24

PART NAME	CODE
SPACER, Diff. Adjusting	3-11-3
SPACER, Drive Pinion Brg.	3-22-26
SPACER, Fan	7-02-16
SPACER, Fan Belt Idler Pulley	7-04-10
SPACER, Frt. Brg. Adj.	3-22-26
SPACER, Frt. Dr. Glass	23-64-272
SPACER, Frt. Seat Latch Striker	23-45-51
SPACER, Front Seat Manual Adjuster	23-47-15
SPACER, Gearshift control Selector	21-30-393
SPACER, Gearshift Torque Shaft	19-48-51
SPACER, Pump Mounting Bracket	19-54-116
SPACER, Radiator Core Upr. Mtg.	7-11-35
SPACER, Radiator Grille	7-16-19
SPACER, Roof Luggage Rack	23-40-157
SPACER, Rr. Seat Lap Belt to Floor	23-49-11
SPACER, Spring Center Bolt	17-11-31
SPACER, Strg. Column Gearshift	19-46-12
SPACER, Strg. Gear Thrust Bearing	19-15-77
SPACER, Thrust Block	3-32-9
SPACER, T/Gate and Door	23-54-27
SPACER, Trans. Rr. Clutch	21-133-62
SPACER, Valve Rocker	9-43-5
SPACER, Valve Spring	9-39-21
SPACER, W/Shield Glass	23-66-75
SPARE WHEEL CARRIER, Body Inside	22-20-0
SPARE WHEEL CARRIER, Body Outside	22-48-0
SPARE WHEEL CARRIER, Underslung	22-12-0
SPARK Plug	8-36-114
SPEAKER, Instrument Panel Radio	1-87-2
SPEEDOMETER	8-37-372
SPEEDOMETER CABLE	21-84-1
SPIDER, Inter Axle Diff.	3-29-95
SPIDER, Rear Axle Diff.	3-10-1
SPOILER, Deck Lid	23-19-24
SPOT COOLER, Air Cond.	24-28-78
SPRAG, Trans. Park Lock	4-10-10
SPRING, Accelerator Rod	14-06-1
SPRING, Air Brk. Adjusting Wedge	5-98-9
SPRING, Auxiliary	17-11-33
SPRING, Brk. Auto. Adjusting Lever	5-20-20
SPRING, Brk. Cylinder Piston	5-71-2
SPRING, Brk. Drum Damper	22-04-11
SPRING, Brk. Pedal Return	5-34-0
SPRING, Brk. Shoe Hold Down	5-26-1
SPRING, Brk. Shoe Return	5-03-23
SPRING, Clutch Pivot	6-22-19
SPRING, Clutch Pressure	6-16-1
SPRING, Clutch Rel. Brg. Retainer	6-20-14
SPRING, Clutch Rel. Fork	6-27-5
SPRING, Clutch Rel. O/Center	6-35-1
SPRING, Clutch Shaft to Fork	6-52-5
SPRING, Disc Brk. Shoe	5-05-8
SPRING, Door Latch Remote Control Link	23-18-21
SPRING, Front	17-01-3
SPRING, Glove Box Dr. Hinge	23-06-22
SPRING, H/Lamp Scanner Mtg.	8-53-287
SPRING, Headlamp Sealed Beam	8-34-177
SPRING, Hood Fresh Air Intake	15-03-90
SPRING, Hood Hinge	15-19-8
SPRING, Hood Release Pop-up	15-11-16
SPRING, Hyd. Brk. Adjusting Cam	5-22-2
SPRING, Hyd. Brk. Shoe Wedge	5-20-4
SPRING, Jack Stowage	13-72-7
SPRING, License Plate Mtg. Panel	8-47-67
SPRING, Manual Seat Adjuster	23-47-75
SPRING, Master Cyl. Piston	5-44-6
SPRING, Oil Pressure Valve	10-22-15
SPRING PACKAGE, Brush	8-52-140
SPRING, Parking Brk. Lever	4-19-1
SPRING, Parking Brk. Pedal Return	4-25-7
SPRING, Parking Brk. Wheel	4-26-18
SPRING, Pump Flow Control Valve	19-54-32
SPRING, Pump Pressure Plate	19-54-150
SPRING, Qtr. Wdo. Reg. Assist.	23-39-44
SPRING, Rear	17-11-3
SPRING, Rear Door Latch Remote Actuator	23-18-24
SPRING, Rear Seat Helper	23-52-1
SPRING, Strg. Col. Lock Cont.	19-46-10
SPRING, Strg. Col. Shaft Coupling Body	19-15-35
SPRING, Strg. Gear Pressure Control	19-56-83
SPRING, Strg. Gear Valve Lever	19-57-64
SPRING STOP, Inst. Pnl. Ash Rec.	23-02-29
SPRING, Tilt Cab Lock	23-1-17
SPRING, Torque Converter	9-46-229
SPRING, Trans. Accumulator	21-137-205
SPRING, Trans. Frt. Clutch Piston	21-133-20
SPRING, Trans. Gov. Weight	21-138-15
SPRING, Trans. Kickdown Servo	21-137-22
SPRING, Trans. O/Running Clutch	21-136-236
SPRING, Trans. Parking Sprag	4-10-11
SPRING, Trans. Regulator Valve	21-139-68
SPRING, Trans. Reverse Lever	21-34-47
SPRING, Trans. Synchronizer	21-14-15
SPRING, Valve	9-39-15
SPRING, Valve Rocker Shaft	9-43-14
SPROCKET, Crankshaft	9-08-5
SPROCKET or GEAR, Camshaft	9-17-5
STABILIZER and CHANNEL, Door Glass	23-09-52
STAND PIPE, Oil Filter	10-26-46
STARTER	8-52-4
STATOR, Alternator	8-29-98
STEERING COLUMN GEARSHIFT TUBE	19-46-3
STEERING COLUMN JACKET	19-14-1
STEERING COLUMN SHAFT AND COUPLING	19-15-4
STEERING GEAR ASSEMBLY	19-01-0
STEERING GEAR HOUSING	19-02-4
STEERING GEAR SHAFT	19-19-4
STEERING KNUCKLE	2-03-3
STEERING KNUCKLE ARM	2-05-4
STEERING KNUCKLE TIE ROD END	2-07-1
STEERING LINK GEAR ARM AND IDLER ARM	19-27-0
STEERING WHEEL	19-30-0
STEM, Valve	22-01-46
STEP, Tilt Cab	23-51-30
STEP-PAD	13-66-147
STOP, Brake Pedal	5-30-8
STOP, Clu. Pedal	6-38-23
STOP, Exh. Manif. Heat Cont.	9-62-1
STOP, Master Cyl. Primary Piston	5-44-8
STOP, Strg. Knuckle Arm	2-05-7
STRAINER, Oil	10-23-7
STRAINER, Trans.	21-117-1
STRAP, Air Pump Adjusting	25-02-26
STRAP, Alternator Adj.	8-28-15
STRAP, Battery Hold Down	13-34-3
STRAP, Ctr. Pillar Assist.	23-77-3
STRAP, Fuel Tank	14-88-21
STRAP, Strg. Col. Shaft Coupling	19-15-51
STRIKER, Bucket Front Seat Back	23-45-76
STRIKER, Deck Lid Latch	23-19-70

PART NAME	CODE
STRIKER, Door Latch	23-08-60
STRIKER, Floor Console Lid Latch	23-38-46
STRIKER, Front Fender	12-03-2
STRIKER, Hood	15-13-2
STRIKER, Second Seat Back Latch	23-48-19
STRIKER, Security Pnl. Latch	23-19-200
STRIKER, Tailgate Latch	23-54-6
STRUT, Bumper Front	13-64-150
STRUT, Clutch Hsg.	6-09-11
STRUT, Control Arm	2-10-58
STRUT, Dash Pnl. Strg. Col. Support to Brake Pedal Brkt.	23-34-88
STRUT, Fndr. Flange Reinf. Dash	12-04-25
STRUT, Parking Brk. Whl.	4-26-17
STRUT, Trans. Kickdown Band	21-136-15
STRUT, Trans. Reverse Band	21-136-41
STUD, Battery Hold down	13-36-5
STUD, Carburetor Lever	14-11-40
STUD, Intake and Exhaust Manifold	9-48-12
STUD, Pump Mtg.	19-54-5
STUD, Starter Mtg.	8-52-5
STUD, Wheel	22-05-14
SUMP, Air Cond. Compressor Oil.	24-25-258
SUPPORT, A/Cond. Compressor	24-25-10
SUPPORT, Air Pump to Eng. Mtg.	25-02-25
SUPPORT, Alternator Adj. Strap	8-28-32
SUPPORT, Bumper Guard	13-68-43
SUPPORT, Deck Lid Hge.	23-19-82
SUPPORT, Deck Opng. Upr. Panel to Rr. Wdo. Glass	23-64-315
SUPPORT, Elect. V/Wing Mtr.	23-64-77
SUPPORT, Engine Rear	9-69-25
SUPPORT, Exhaust Pipe	11-08-4
SUPPORT, Fuel Tank	14-88-2
SUPPORT, Gearshift Control Selector	21-30-416
SUPPORT, Hood Lock Vertical	15-11-46
SUPPORT, Idler Pulley Bracket	7-04-9
SUPPORT, Muffler	11-02-4
SUPPORT, Parking Brk. Air Reservoir	4-30-0
SUPPORT, Parking Brk. Trans.	4-29-0
SUPPORT, Power Brake to Dash Panel	5-101-5
SUPPORT, Radiator	7-29-1
SUPPORT, Radiator Grille	7-16-27
SUPPORT, Radiator Side	7-11-82
SUPPORT, Running Board	13-48-0
SUPPORT, Security Panel Latch	23-19-207
SUPPORT, Shock Absorber	17-24-0
SUPPORT, Spare Wheel Mounting	23-34-53
SUPPORT, Stake Socket	23-34-79
SUPPORT, Strg. Column Gearshift	19-46-55
SUPPORT, Tail Pipe	11-10-3
SUPPORT, Tilt Cab Rear	23-1-14
SUPPORT, Trans. Governor	21-138-10
SUPPORT, Trans. Output Shaft	21-05-25
SUPPORT, Wheel Brake	5-13-1
SUPPORT, Wheelhouse to Qtr. Pnl.	23-34-22
SWAY BAR, Rear	17-30-1
SWAY BAR SHAFT, FRONT	17-29-0
SWITCH, Air Cond. Blower	24-24-5
SWITCH, Air Cond. Temperature	24-24-150
SWITCH, Air Grabber Vacuum	15-03-84
SWITCH, Arm Rest Courtesy	8-11-6
SWITCH, Auto. Headlamp Dimmer	8-53-270
SWITCH, Auto. Trans. Retarder	21-145-12
SWITCH, Back-up Lamp	8-56-2
SWITCH, Brk. System Indicator Lamp	8-31-10
SWITCH, Brk. Tube Tie Warning	5-58-9
SWITCH, Clutch Starter, w/Man. Trans.	8-52-42
SWITCH, Convertible Top	23-58-532
SWITCH, Courtesy Lamp Door	8-12-2
SWITCH, Deck Lid Release	23-19-94
SWITCH, Defogger	1-47-7
SWITCH, Dome Lamp	8-05-14
SWITCH, Door Ajar Warning	8-12-2
SWITCH, Door Window	23-41-170
SWITCH, Elect. Frt. Dr. Lock	23-18-103
SWITCH, Elec. F/Pump Oil Press.	14-73-10
SWITCH, Emergency Warning	8-50-82
SWITCH, Foot Dimmer	8-53-150
SWITCH, Front Door Lock	23-18-102
SWITCH, Fuel Tank Selector	14-86-6
SWITCH, Headlamp, Instr. Lamp & Dome	8-53-270
SWITCH, Headlamp Washer	8-34-281
SWITCH, Heater Control	1-48-770
SWITCH, Horn	8-33-90
SWITCH, Ignition & Starter	8-35-59
SWITCH, Instr. Pnl. Dimmer	8-53-150
SWITCH, Inter Axle Diff.	3-29-126
SWITCH, Low Air	5-128-0
SWITCH, Map & Courtesy Lamp	8-42-25
SWITCH, NOx Speed (Trans.)	8-22-8
SWITCH, NOx Thermal	8-22-4
SWITCH, Oil Pressure	8-53-327
SWITCH, Parking & T/Signal	8-50-82
SWITCH, Parking Brk. Ind. Lamp	8-31-10
SWITCH PLATE & LATCH PKG., Wiper Mtr.	23-67-164
SWITCH, Radio Foot Selector	1-87-5
SWITCH, Rr. Heated Glass	8-37-63
SWITCH, Road Lamp	8-14-23
SWITCH, Seat Adjuster	23-47-446
SWITCH, Starter Solenoid	8-52-330
SWITCH, Stop Lamp	8-58-60
SWITCH, Stop Lamp Actuator	8-58-66
SWITCH, Tail Gate Window Lift	23-54-167
SWITCH, Temperature Gauge	8-37-155
SWITCH, Trans. Neutral Start	21-113-24
SWITCH, Trunk Lamp	8-13-2
SWITCH, Turn Signal	8-50-82
SWITCH, Two Speed Axle Shift	3-31-105
SWITCH, Vacuum Deck Lid Latch	23-19-84
SWITCH, W/Shield Wiper & Washer	23-67-160
SWITCHES, Electrical	8-53-0
SWIVEL, Acc. Pedal Lever	14-01-38
SWIVEL, Anchor Adjusting	2-14-1
SWIVEL, Gearshift Control Rod	21-30-428
SWIVEL, Gearshift Rod	19-48-16
SWIVEL, T/Gate & Door Link	23-54-216
SYNCHRONIZER, Trans.	21-14-1

T

TACHOMETER	8-37-504
TAIL PIPE	11-09-3
TAIL PIPE SUPPORT	11-10-3
TAILGATE	23-54-3
T/GATE WIPER & WASHER	23-67-0
TANK, Booster Brake Vacuum	5-102-0
TANK, Fuel	14-86-1
TANK, Rad. Core Coolant Reserve	7-52-2
TANK, Vacuum Deck Lid Latch Reservoir	23-19-79
TAPE, Fender	12-15-33
TAPE, Hood	15-03-69
TAPE, Outside Body	23-23-12

PART NAME	CODE
TAPPED PLATE, Body Lock Pillar Lock Striker	23-08-75
TAPPED PLATE, Ctr. Pillar Frt. Door Lock Striker	23-08-75
TAPPET, Valve	9-41-4
TEE, Brake Tube	5-58-1
TEE, E.G.R. Valve Harness	25-06-40
TEE, Hose Harness	25-04-25
TEE, Signal Hose	25-02-43
TEE, Whl. Slip Cont. Vac. Hose	5-06-10
TEMPERATURE GAUGE	8-37-136
TERMINAL and INSULATOR, Electric Window	23-41-176
TERMINAL BLOCK	8-21-0
TERMINAL, Wiper Switch Wiring	23-67-166
TERMINAL, Wiring	8-16-4
TEXTURE, Grille	7-17-13
THERMOSTAT	7-41-4
THERMOSTAT, Exhaust Manifold Heat Control	9-58-5
THROTTLE CONTROL CABLE	14-25-11
THROTTLE, Hand Control	14-24-1
THRUST WASHER, Starter Armature	8-52-121
TIE PLATE, Side Sill to Center Pillar	23-51-12
TIE ROD END	2-07-1
TILT CAB PIVOT	23-1-2
TIMING CHAIN	9-20-1
TOP, Folding	23-58-3
TOP, Roof Vinyl	23-86-2
TORQUE ARRESTOR, Front Spring	17-10-5
TORQUE CONVERTER	9-46-4
TORQUE CONV. REACTION SHAFT	21-129-0
TORQUE ROD, Tandem	17-18-0
TORSION BAR	2-14-3
TORSION BAR PARTS, Frt. Suspension	2-14-0
TOW HOOK and SHACKLE	13-61-0
TOWER, Trans. G/Shift	21-29-8
TRACK, Frt. Dr. Glass	23-64-254
TRACK, Qtr. Wdo. Roller	23-64-299
TRANSFER CASE	21-100-0
Transmission	21-02-1
TRANSMISSION BANDS	21-136-0
TRANSMISSION CASE	21-03-1
TRANSMISSION CASE EXTENSION	21-04-1
TRANSMISSION CLUTCH	21-133-0
TRANSMISSION CLUTCH GEAR	21-14-0
TRANSMISSION COUNTERSHAFT BEARING	21-25-0
TRANSMISSION COUNTERSHAFT	21-24-2
TRANSMISSION GEARSHIFT RAIL	21-34-0
TRANSMISSION GEARSHIFT CONTROLS	21-30-0
TRANSMISSION GOVERNOR	21-138-0
TRANSMISSION INPUT SHAFT	21-129-0
TRANSMISSION MAIN DRIVE GEARS	21-10-0
TRANSMISSION MAIN DRIVE PINION	21-09-2
TRANSMISSION OIL FILTER	21-117-0
TRANSMISSION OIL PAN	21-119-3
TRANSMISSION OIL PUMP	21-118-0
TRANSMISSION OUTPUT SHAFT	21-05-1
TRANSMISSION SERVOS	21-137-0
TRANSMISSION SETS OR PACKAGES	21-01-0
TRAY, Ash	23-02-18
TRAY, Battery	13-33-61
TRIM FINISH MOULDINGS	23-26-0
TRIM, Pass. Car-Ref. to Trim Catalog	
TRIM PANEL, Door	23-92-5
TRIM PANEL EXTENSION, Cargo Door	23-92-13
TRIM PANEL, Pillar	23-99-0
TRIM PANEL, Rear	23-89-10
TRIM PANEL, Rear Corner	23-101-3
TROUGH, Qtr. Deck Drain	23-59-35
TROUGH, Roof Side Drain	23-59-56
TROUGH, Strg. Column Wiring	19-14-49
TRUNK LAMP	8-13-1
TUBE, Air Brake	5-116-0
TUBE, Air Injection	25-02-50
TUBE, Air Intake	14-29-24
TUBE, Brake Hose	5-55-1
TUBE, Carb. to Dist. Vac. Control	8-27-320
TUBE, Defroster	1-48-287
TUBE, Electric Seat Adjuster	23-47-431
TUBE, Exhaust Manifold Heat	9-48-126
TUBE, Flexible Blower to Duct	1-47-12
TUBE, Fuel Tank Filler	14-86-40
TUBE, Heater Blower Motor Vent	1-48-606
TUBE, Heater Defroster	1-48-151
TUBE, Hood Fresh Air Intake Door	15-03-93
TUBE, Oil Indicator	10--03-7
TUBE, Power Brake	5-107-15
TUBE, Spark Plug	8-36-136
TUBE, Strg. Column Gearshift	19-46-3
TUBE, Tie Rod	2-07-2
TUBE, Tandem Torque	17-37-9
TUBE, Vac. Amplifier	25-06-30
TUBE, Vacuum Deck Lid Release	23-19-97
TUBING, Brake	5-53-3
TUBING, Fuel Tank 25 Ft. Roll	14-89-2
TUBING, Rr. Heated Glass	8-37-61
TUBING, Underbody Rear Heater	1-48-55
U	
UNDERSLUNG, Spare Wheel Carrier	22-12-0
UNIVERSAL JOINT	16-03-1
UNIVERSAL JOINT CROSS ROLLER and BUSHING	16-10-1
UNIVERSAL JOINT SLIP SPLINE YOKE	16-14-1
UNIVERSAL JOINT, Frt. Axle Drv. Shaft	2-12-44
UNIVERSAL JOINT, Strg. Column	19-15-100
V	
VALVE, Air Brk. Hand Control	5-127-5
VALVE, Air Brk. Quick Release	5-122-0
VALVE, Air Cond. Compressor	24-25-132
VALVE, Air Cond. Expansion	24-28-300
VALVE, Air Cond. Water	24-01-36
VALVE, Air Pump Check	25-02-30
VALVE, Air Pump Diverter	25-02-30
VALVE, Auto. Trans. Kickdown	21-139-78
VALVE, Auto. Trans. Shuttle	21-139-95
VALVE, Auto. Trans. Throttle	21-139-30
VALVE, Auto. Trans. Torq. Conv.	21-139-117
VALVE, Booster Brk. Check	5-105-0
VALVE, Booster Brk. Cyl. Vacuum	5-103-0
VALVE, Booster Brk. Intake	5-100-303
VALVE, Booster Brk. Slave Cyl.	5-100-84
VALVE, Booster Brk. Vacuum	5-100-159
VALVE, Brk. Master Cyl.	5-43-0
VALVE, Brk. Metering	5-107-34
VALVE, Brk. Proportioning	5-05-34
VALVE, Crankcase Vent	10-02-62
VALVE, Distributor Vacuum	8-27-335
VALVE, Exhaust	9-39-6
VALVE, Exhaust Gas Recirculating (F.G.R.)	25-06-1
VALVE, Fuel Tank Selector	14-86-16
VALVE, Heater Water	1-48-854

PART NAME	CODE
VALVE, Intake	9-39-5
VALVE, Inter Axle Shift	3-29-145
VALVE, Manifold Heat Control	9-58-1
VALVE, NOx Vacuum	8-22-5
VALVE, Parking Brk. Lever	4-25-20
VALVE, Power Brk.	5-105-1
VALVE, Power Strg.	19-57-3
VALVE, Power Strg. Control	19-63-140
VALVE, Pump Flow Control Pressure Relief	19-54-31
VALVE, Snow Plow	1-93-0
VALVE, Trans. Aux. Regulator	21-18-87
VALVE, Trans. Aux. Shift	21-18-74
VALVE, Trans. Range Pre-Selection	21-06-74
VALVE, Trans. Splitter Control	21-06-44
VALVE, Two Speed Axle Shift	3-31-40
VALVE, Water	24-01-36
VALVE, Windshield Wiper Control	23-67-215
VALVE PACKAGE, Auto. Trans. Regulator	21-139-67
VALVE PUSH ROD	9-42-1
VALVE ROCKER	9-43-1
VALVE TAPPET	9-41-4
VENT, Fresh Air Side Cowl	1-48-383
VENT, Trans.	21-02-6
VENTILATOR, Air Intake	23-61-0
VISOR, Arm & Bracket	23-103-103

W

PART NAME	CODE
WASHER, Drive Pinion Brg.	3-22-27
WASHER, Windshield	23-67-0
WATER PUMP	7-42-1
WATER PUMP ELBOW OR NIPPLE	7-48-22
WATER PUMP IMPELLER	7-45-31
WEATHER CORD, Door	23-113-2
WEATHERSTRIP, Deck Lid Opening	23-63-172
WEATHERSTRIP, Frt. Door	23-63-33
WEATHERSTRIP, Header	23-58-569
WEATHERSTRIP, Quarter Inner Wdo. Belt	23-63-20
WEATHERSTRIP, Quarter Outer Wdo. Belt	23-63-21
WEATHERSTRIP, Qtr. Wdo. Glass	23-63-104
WEATHERSTRIP, Rear Door Rear	23-63-97
WEATHERSTRIP, Rear Door Wdo.	23-63-94
WEATHERSTRIP, Rear Wdo. Glass	23-63-112
WEATHERSTRIP, Rr. Dr. Outer Wdo. Belt	23-63-15
WEATHERSTRIP, Side Rail Frt.	23-58-572
WEATHERSTRIP, T/Gate Glass	23-63-181
WEATHERSTRIP, T/Gate Opening	23-63-171
WEATHERSTRIP, Vent Window	23-63-126
WEATHERSTRIP, W/Shield Glass	23-66-235
WEDGE, Air Brake Adjusting	5-98-1
WEDGE, Cargo Door	23-08-12
WEDGE, Fndr. Hood	12-02-7
WEDGE, Frt. Dr. Glass Stop	23-64-14
WEDGE, Hyd. Brk. Shoe	5-03-18
WEIGHT, Body Center Flr. Pan Damper	23-32-120
WEIGHT, Trans. Governor	21-138-13
WEIGHT, Wheel Balance	22-09-1
WHEEL BRAKE SUPPORT	5-13-1
WHEEL CYLINDER BOOT	5-69-1
WHEEL CYLINDER PISTON CUP	5-71-1
WHEEL CYLINDER PISTON	5-70-1
WHEEL CYLINDER PISTON PUSH ROD	5-12-1
WHEEL CYLINDER REPAIR PACKAGE	5-63-1
WHEEL DRIVING STUD	22-05-14
WHEEL HUB CAPS	22-08-5
WHEEL, A/Cond. Blower	24-28-210
WHEEL, Defogger Blower	1-47-16
WHEEL, Htr. Blower Motor	1-48-46
WHEEL, Strg.	19-30-4
WHEELS, Disc or Spoke	22-01-5
WINCH PARTS	21-97-0
WINDOW GLASS RUN	23-42-0
WINDOW LIFT (ELECTRIC)	23-41-0
WINDOW LIFT (MANUAL)	23-39-0
WINDSHIELD	23-66-135
WINDSHIELD VISOR	23-103-0
WINDSHIELD WIPER AND WASHER	23-67-0
WIRE, Manual Seat Adj.	23-47-66
WIRE, Master Cyl. Cover Bail	5-39-29
WIRING, A/Cond.	24-24-124
WIRING, Accessory Lamps	8-15-53
WIRING, Batt. to Starter Motor	8-01-17
WIRING, Body	8-15-4
WIRING, Brake System Warning Lamp	8-15-17
WIRING, Clearance and I.D.	8-48-27
WIRING, Defogger Motor	1-47-10
WIRING, Elect. Door Lock	23-18-105
WIRING, Electric Window Lift	23-41-55
WIRING, Front Crossover	8-15-15
WIRING, Headlamp Delay Relay	8-15-15
WIRING, Htr. Control	1-48-516
WIRING, Inst. Panel	8-19-3
WIRING, NOx Emission Control	8-22-3
WIRING, Road Lamp	8-15-60
WIRING, Rr. Compt. Spkr.	1-87-404
WIRING, Rr. Lamp	8-15-52
WIRING, Seat Adjuster Feed	23-47-420
WIRING, Speed Control	14-02-69
WIRING, Spring Brk. Stop Lamp	8-15-17
WIRING, Switch Power Wdos.	23-58-189
WIRING, Tachometer	8-37-545
WIRING, Transistor Regulator	8-15-35
WIRING, T/Gate Wdo. Lift	23-54-178
WIRING, W/Shield Wiper Motor	23-67-41
WORM, w/Ball Nut, Strg. Gear	19-15-21
WORM, W/Piston, Strg. Gear	19-15-38
WORM, Strg. Gear Piston	19-56-11
WRENCH or HANDLE	13-72-2

Y

PART NAME	CODE
YOKE, Prop Shaft	16-20-1
YOKE, Radiator	7-26-2
YOKE, Radiator Support Mtg.	7-29-34
YOKE, Slip Spline	16-14-1
YOKE, Strg. Column Slip	19-15-154
YOKE, Winch Drive Shaft	21-97-128

Z

PART NAME	CODE
ZIP KIT, Carburetor	14-30-4

NOTES

1974 PASSENGER CAR PARTS CATALOG

PART NUMBER	CODE
114	8-17-2
158	8-44-1
161	8-44-1
168	8-44-1
198	8-62-12
	9-35-1
211-2	8-44-1
225	8-62-12
318	9-09-2
	9-71-5
360	9-09-2
	9-71-5
363	8-44-1
400	9-09-2
	9-71-5
440	9-09-2
	9-71-5
562	8-44-1
712	8-17-2
A94-1	21-139-154
DNS	8-00-0
50 082	9-05-6
53 298	9-07-12
104 918	21-139-4
	21-139-145
104 919	21-34-47
105 479	7-14-13
106 650	8-17-2
106 652	8-17-2
106 653	8-17-2
106 751	9-15-1
117 142	8-17-2
118 479	21-03-1
118 749	9-46-44
	21-03-1
120 114	8-17-2
120 151	8-17-2
120 368	25-06-1
120 369	21-136-52
120 375	13-36-5
	14-25-5
120 376	17-30-3
	17-30-5
	21-04-19
	23-64-12
	23-64-40
	23-64-254
121 224	21-30-79
121 753	23-17-72
124 930	14-24-1
124 934	21-136-17
125 735	19-46-8
126 049	8-17-2
127 934	8-44-1
131 282	8-44-1
132 930	8-35-52
137 396	5-54-4
137 398	21-03-1
137 948	14-29-26
138 498	14-24-1
140 908	21-30-23
141 131	19-54-263
141 195	9-02-7
	9-17-5
141 215	9-02-7
142 026	23-54-118
142 450	8-44-1
142 452	8-44-1
142 453	8-44-1
142 456	8-44-1
142 630	8-17-2
142 745	14-29-15
142 864	8-17-2
145 067	21-129-11
145 511	8-17-2
147 483	21-133-7
	21-133-15
	21-133-22
147 488	21-129-5
	21-129-10
	21-139-24
147 500	21-34-47
	21-139-68
147 682	8-17-2
147 683	8-17-2
147 684	8-17-2
147 685	8-17-2
147 686	8-17-2
148 086	8-17-2
148 511	8-17-2
149 559	8-17-2
150 866	8-17-2
151 577	8-44-1
151 578	8-44-1
152 096	19-54-243
152 229	3-08-2
152 233	21-30-2
152 240	8-44-1
152 244	8-44-1
152 285	8-34-175
152 287	8-34-175
152 291	8-34-175
152 338	8-34-175
152 370	17-17-5
152 371	17-23-57
152 449	9-46-33
	23-54-179
152 568	9-48-7
152 600	8-34-175
152 706	25-04-16
166 412	21-04-8
179 117	23-54-102
180 016	22-01-51
180 020	9-03-28
180 075	21-03-1
180 077	21-04-27
	21-85-61
180 078	19-14-23
180 079	15-19-2
	21-30-416
180 120	14-06-10
180 121	19-54-2
180 122	15-19-2
	21-03-23
180 124	21-30-407
	21-30-416
180 129	21-04-1
180 190	17-23-56
181 082	21-30-429
181 090	21-04-19
181 091	21-04-19
181 130	21-30-407
181 137	9-17-9
181 141	21-04-1
181 150	21-30-407
191 674	9-15-6
192 356	9-45-1
193 065	8-44-1
215 514	25-02-24
271 502	23-54-143
271 506	21-136-52
272 776	14-02-88
272 919	23-54-4
273 669	15-11-38
273 987	8-44-1
274 004	8-44-1
274 020	8-44-1
274 461	14-86-85
307 555	6-14-10
308 247	3-11-14
314 926	6-14-10
355 176	21-133-17
381 875	9-39-17
426 094	21-30-6
432 416	14-86-57
433 116	8-28-3
433 119	8-28-3
433 179	17-17-4
444 028	1-48-572
444 625	7-11-4
	21-03-1
444 688	19-54-2
445 160	19-30-26
445 635	8-17-2
451 322	8-19-18
453 285	15-11-89
455 106	4-08-35
455 107	8-17-2
455 313	3-08-2
455 919	4-25-3
	6-52-11
456 792	23-54-21
600 194	22-06-14
601 108	21-17-7
601 864	3-11-13
611 898	8-16-8
618 621	10-22-40
618 622	10-22-41
629 792	23-18-109
	23-54-217
631 217	6-24-3
	19-48-0
631 809	21-19-15
631 810	21-19-15
631 877	21-09-25
632 258	21-30-2
	21-30-426
640 280	21-19-15
640 331	21-19-15
658 998	6-19-3
665 151	8-16-10
666 927	21-11-2
670 776	21-136-235
729 152	23-06-14
792 372-3	23-34-234
857 999	16-08-6
858 006	16-10-2
862 173	21-17-7
870 469	7-14-13
870 821	8-16-4
883 031	5-111-17
	10-02-53
903 895	8-16-4
905 206	19-48-45
	21-30-79
930 304	8-16-5
1057 794	10-03-13
1115 927	3-03-26
1119 423	5-56-2
1122 532	9-02-7
1139 153	21-34-44
1188 502	8-16-5
1242 974	14-11-48
1264 933	8-16-5
1302 807	8-56-46
	21-34-46
1315 466	1-48-555
	7-14-9
1316 815	21-119-25
1316 849	21-42-31
1316 863	23-41-286
	23-54-206
1316 864	19-58-18
1319 554	17-23-53
1319 555	17-23-53
1319 902	17-23-52
1324 268	9-43-19
1324 470	9-36-7
1326 091	9-10-2
1326 836	8-27-4
1327 319	9-20-1
1392 371	3-03-35
1400 269	17-16-8
1407 347	6-24-3
1408 867	9-10-19
1409 594	9-58-14
1426 501	24-25-70
1450 769	24-25-8
1485 510	17-15-28
1486 205	19-56-22
1530 398	17-15-30
1536 267	21-42-31
1536 268	19-56-90
1551 030	14-25-15
1553 304	19-46-13
1553 305	19-46-14
1556 082	21-138-26
1556 385	19-02-15
	21-136-50
	21-136-55
	21-136-50
	21-136-55
1556 693	4-19-1
1557 581	10-26-65
1558 352	17-29-21
1558 897	9-59-13
1559 489	21-136-229
1595 160	1-48-555
1603 364	11-02-1
1603 365	11-02-1
1614 666	9-39-17
1615 349	22-09-1
1615 350	22-09-1
1615 351	22-09-1
1615 352	22-09-1
1615 353	22-09-1
1615 354	22-09-1
1618 670	9-15-6
1618 695	9-10-19
1618 732	9-15-10
1619 702	22-06-2
1619 703	22-06-1
1622 535	8-01-11
1622 536	8-01-12
1626 749	4-10-40
	23-54-79
1632 522	9-16-6
1632 523	9-16-6
1632 524	9-16-6
1632 525	9-16-6
1632 526	9-16-6
1633 763	21-15-33
1633 928	3-08-1
1633 960	3-06-6
1634 619	2-07-2
1635 232	4-08-16
1635 282	21-24-2
1635 293	21-12-2
	21-24-22
1635 588	17-23-52
1635 666	17-15-1
1636 461	21-138-13
1636 464	21-138-19
1636 465	21-138-19
1636 470	21-137-8
1637 657	9-08-5
1638 461	21-138-29
1639 171	2-14-15
1639 597	9-59-15
1641 511	1-108-28
1642 029	23-67-80
1651 493	23-38-29
1670 356	19-19-36
1670 694	14-86-85
1671 405	2-10-68
1671 446	2-14-15
1671 610	14-88-27
1672 287	21-137-8
1672 358	21-136-55
1673 324	22-06-10
1673 367	3-03-25
1673 974	19-02-17
1676 197	21-14-6
1686 198	7-13-2
1688 207	8-35-41
1697 607	23-39-45
	23-41-250
1704 562	8-16-4
1704 875	8-05-12
1707 384	23-02-38
	23-14-153
1730 019	6-43-13
1730 095	14-72-47
1731 525	9-07-8
1732 198	4-08-35
1733 562	19-02-69
1733 588	19-14-13
1733 593	19-01-52
1733 602	19-14-18
1733 612	19-57-13
1733 625	19-14-19
1733 627	19-19-32
1733 724	19-57-16
1733 790	19-01-53
1733 791	19-01-51
1736 347	9-02-7
1736 348	9-02-7
1736 353	9-02-7
1736 521	21-133-46
1737 694	9-31-5
1737 695	9-31-7
1737 705	7-44-3
1737 742	10-22-15
1737 756	9-43-5
1737 761	7-44-4
1738 681	19-54-130
1739 243	14-73-11
1739 534	9-39-15
1739 547	14-29-6
1739 604	10-09-5
1739 605	9-03-10
1739 606	9-03-10
1739 619	10-26-5
1739 909	16-10-2
1739 912	16-08-7
1739 913	16-10-1
1747 982	24-25-168
1747 988	24-25-252
1752 488	8-16-3
1752 489	8-16-3
1752 490	8-16-3
1752 491	8-16-3
1752 492	8-16-3
1753 632	1-48-10
	8-31-16
	24-24-167
1769 318	24-25-219
1774 076	12-01-28
1774 621	23-31-205
1801 121	21-30-407

PART NUMBER	CODE
1818 698	9-32-2
1818 699	9-32-2
1818 700	9-32-2
1818 701	9-32-2
1818 702	9-32-2
1818 703	9-32-2
1818 892	23-67-25
1819 843	24-25-156
1820 551	3-22-25
1820 552	3-22-24
1821 170	14-29-5
1821 414	9-07-8
1821 722	9-16-17
1821 771	9-16-6
1821 772	9-16-6
1821 773	9-16-6
1821 774	9-16-6
1821 775	9-16-6
1822 149	19-01-52
1822 150	19-01-51
1822 151	19-01-52
1822 156	19-15-63
1822 157	19-15-65
1822 158	19-15-60
1822 320	19-19-72
1822 321	19-01-62
1822 324	19-19-70
1822 380	19-57-63
1822 390	19-15-69
1822 406	19-19-71
1822 442	19-56-83
1823 091	19-01-52
1823 150	19-02-15
1823 151	19-57-64
1823 161	19-01-60
1825 449	2-08-71
1825 956	7-02-16
1826 286	14-29-33
1828 388	5-40-1
1828 824	16-10-3
1829 929	17-15-24
1838 508	8-27-76
1838 516	8-27-300
1838 911	8-16-6
1838 939	8-41-37
1839 301	23-02-38
1841 499	8-36-14
1842 003	8-16-8
1842 009	8-16-4
1842 012	8-16-4
1842 267	8-21-1
1843 008	11-02-1
1843 009	11-02-1
1843 010	11-02-1
1843 251	5-53-3
1843 252	5-53-3
1843 253	5-53-3
	14-89-2
1843 254	5-53-3
1843 257	5-53-4
1843 258	5-53-4
1843 444	8-16-1
1851 493	14-29-6
1851 658	10-26-6
1851 665	9-48-27
1851 959	7-02-16
1851 961	7-02-16
1852 910	9-10-5
1853 745	21-34-47
1854 275	21-139-95
1855 238	9-43-3
1855 328	5-05-58
	10-07-12
1855 561	9-07-22
1856 292	19-15-63
1856 346-7	17-11-7
1857 748	19-27-40
1857 774-5	2-14-3
1857 778-9	2-14-3
1857 840	2-08-11
1857 856-7	2-08-5
1858 024	2-10-76
1858 955	9-48-8
1859 127	7-43-18
	9-03-18
	9-48-9
1859 144	9-39-21
1859 332	9-48-27
1859 444	19-54-126
1859 445	19-58-18
1867 661	23-19-70
1878 303	23-32-15
1878 752	23-36-18
1879 609	8-16-1
1879 617	9-32-2
1879 618	9-32-2
1879 619	9-32-2
1879 620	9-32-2
1879 621	9-32-2
1879 622	9-32-2
1879 627	9-09-2
1879 628	9-09-2
1879 629	9-09-2
1879 630	9-09-2
1879 747	9-41-1
1881 794	9-32-2
1881 795	9-32-2
1881 796	9-32-2
1881 797	9-32-2
1881 938	8-53-150
1886 101	1-48-145
	24-28-19
1886 109	24-28-318
1886 110	1-48-280
1887 222	8-20-3
1904 950	7-14-31
1909 918	23-39-15
1920 101	21-09-31
1922 183	8-34-128
	23-48-17
	23-54-20
	23-54-31
1937 770	3-11-2
1937 771	3-11-1
1940 725	17-16-8
1941 648	9-45-2
1941 667	9-46-43
1941 831	21-129-7
	21-137-202
1942 021	21-118-45
1942 054	21-133-17
1942 063	21-133-25
1942 064	21-133-25
1942 065	21-133-25
1942 080	21-133-47
1942 081	21-133-48
	21-134-30
1942 095	21-136-231
1942 109	21-138-38
1942 123	21-137-8
1942 130	21-137-19
	21-137-59
1942 132	21-136-23
1942 133	21-136-30
1942 137	21-136-47
1942 141	21-136-52
1942 150	21-137-56
1942 187	9-46-229
	21-136-236
1942 213	21-139-64
1942 218	21-139-63
1942 231	21-139-108
1942 245	21-139-63
1942 389	21-129-13
1942 390	21-129-24
1942 399	21-133-22
1942 400	21-133-43
1942 403	21-133-38
1942 414	21-133-20
1942 421	21-133-25
1942 423	21-133-25
1942 434	21-133-40
1942 438	21-133-42
1942 439	21-133-46
1942 444	21-134-40
1942 477	21-136-17
1942 478	21-137-5
1942 482	21-137-11
1942 485	21-137-13
1942 486	21-137-19
1942 487	21-136-30
1942 543	21-136-52
1943 547	8-47-126
	13-66-153
	23-06-14
1944 092	5-110-18
1944 154	5-110-18
1944 361	17-14-10
1944 865	9-31-5
1945 197	14-13-5
1945 473	9-11-7
1946 377	6-38-3
1946 639	11-05-12
1946 648	11-06-3
1947 225	10-10-1
1947 521	7-44-3
1947 523	7-44-4
1947 554	9-23-17
1947 557	9-11-7
1947 594	9-43-1
1947 612	8-27-26
1947 613	8-27-26
1947 614	9-43-9
1947 616	9-43-11
1947 617	9-43-11
1947 623	9-39-5
1947 624	9-39-6
1947 643	7-48-22
1947 671	9-05-6
1947 687	9-03-10
1947 708	8-36-137
1947 762	9-50-2
1947 797	14-29-5
1947 953	6-10-3
	10-24-23
1948 334	17-15-1
1948 335	17-15-1
1948 396	17-12-12
1948 757	14-72-9
1949 345	21-29-3
1949 346	21-29-25
1949 350	21-42-31
1949 351	21-39-3
1949 355	21-34-45
1949 356	21-34-42
1949 361	21-04-2
1949 424	9-46-21
1949 701	21-03-28
1949 765	9-46-21
1949 767	21-03-6
1949 834	21-17-2
1954 083	23-64-4
1960 061	23-32-88
1960 127	8-47-76
1960 131	8-47-67
1961 318	23-54-128
1982 542	24-25-189
1982 545	24-25-260
1984 152	24-25-160
1989 202	24-25-127
1992 947	24-25-133
1994 408	24-25-137
1994 410	24-25-135
1997 446	24-25-110
2000 083	24-25-84
2008 388	24-25-135
2019 681	24-25-160
2021 191	24-25-246
2070 117	16-20-1
2070 122	3-03-36
2070 158	22-05-14
2070 316	3-22-24
2070 317	3-22-25
2070 318	3-22-24
2070 319	3-22-25
2070 933	3-33-10
	5-13-7
2071 094	4-23-36
2071 173	2-14-13
2071 204	2-08-7
2071 470	2-10-74
2071 604	17-29-20
	17-30-5
2071 611	17-29-21
	17-30-4
2071 640	2-10-19
2071 714	17-23-56
2071 764	13-54-15
2071 766-7	17-11-7
2072 035	19-15-33
2072 060	19-15-60
2072 437	2-07-2
2072 614	5-13-35
2072 637	5-71-2
2072 643	4-26-26
2072 644	4-26-27
2072 646	4-26-18
2072 651	5-20-1
2072 656	5-70-1
2072 678	5-66-6
2072 725	5-20-17
2072 730	5-20-15
2072 901	6-22-19
2073 632	6-43-7
2073 634	5-27-2
2073 687	6-20-14
2073 794	11-10-3
2074 089	13-36-5
2074 960	5-47-10
2075 006	5-100-194
2076 405	1-48-254
2081 004-5	23-32-93
2083 111	23-32-15
2084 005	9-09-2
2084 006	9-09-2
2084 007	9-09-2
2084 008	9-09-2
2084 215	19-15-39
2084 354	10-07-3
2084 355	10-07-2
2084 384	9-34-5
2084 385	9-34-5
2084 386	9-34-5
2084 387	9-34-5
2084 388	9-34-5
2084 389	9-34-5
2084 390	9-34-5
2084 403	9-10-5
2084 404	9-10-5
2084 405	9-10-5
2084 415	10-07-3
2084 421	8-16-1
2084 424	8-16-1
2084 467	14-67-1
2084 653	8-27-352
2084 666	8-52-140
2084 810	9-09-2
2084 811	9-09-2
2084 812	9-09-2
2084 813	9-09-2
2084 833	9-09-2
2084 834	9-09-2
2084 835	9-09-2
2084 836	9-09-2
2086 597	8-05-28
2094 618	8-47-126
2094 869	23-40-171
2094 984	23-32-15
2095 012	8-29-155
2095 038	8-29-42
2095 076	8-52-176
2095 114	8-52-102
2095 116	8-52-101
2095 117	8-52-67
2095 118	8-52-89
2095 130	8-52-61
2095 133	8-52-50
2095 630	8-27-4
2095 740	8-27-4
2095 766	8-36-96
2095 768	8-36-96
2095 875	8-52-5
2096 374	21-30-28
2096 623	23-67-260
2096 857	8-13-3
2096 989	1-47-12
2097 003	8-37-88
	8-39-15
	8-41-36
	8-50-156
2097 055	23-67-260
2097 101	24-25-234
2097 102	24-25-157
2097 103	24-25-234
2098 360	8-36-114
2098 381	8-36-114
2098 980	8-36-92
2098 981	8-36-117
2120 017	10-26-52
2120 130	7-02-16
2120 514	9-42-1
2120 694	9-43-5
2121 196	9-45-2
2121 223	9-48-14
2121 245	8-36-136
2121 404	10-07-11
2121 524	9-05-5
2121 531	10-14-18
2121 535	10-09-5
2121 571	14-13-3
2121 573	10-24-23
2121 578	9-39-5
2121 579	9-39-5
2121 580	9-39-5
2121 581	9-39-6
2121 582	9-39-6
2121 583	9-39-6
2121 686	9-39-14
2121 725	9-16-6
2121 726	9-16-6

PART NUMBER	CODE
2121 727	9-16-6
2123 341	5-56-2
	14-90-1
2124 255	21-137-202
2124 256	21-139-117
2124 257	21-139-118
2124 499	21-09-33
2124 502	21-25-2
2124 506	21-25-6
2124 518	21-09-23
2124 573	21-133-20
2124 579	21-136-20
2124 666	21-136-20
2124 715	21-02-6
2124 734	21-139-68
2124 736	21-139-74
2124 737	21-139-76
2124 824	21-133-43
2124 826	21-133-38
2124 835	21-133-17
2124 846	21-118-54
2124 848	21-136-15
2124 850	21-137-5
2124 851	21-137-8
2124 853	21-137-11
2124 856	21-137-13
2124 857	21-136-49
2124 872	21-133-25
2125 024	21-138-21
2125 067	21-136-20
2125 069	21-137-22
2125 109	21-137-205
2125 890	10-24-37
2127 049	19-19-5
2127 097	19-15-63
2127 108	19-19-28
2127 146	19-15-58
2127 154	19-19-35
2127 486	19-54-181
2128 425	7-43-8
2128 912	9-08-5
2129 012	9-23-17
2129 013	7-44-3
2129 146	9-62-2
2129 885	6-10-2
2161 308	8-05-6
2161 316	8-05-32
2189 093	23-32-15
2197 678	1-48-950
	4-08-36
	8-50-305
	14-29-46
	23-04-205
2197 945	8-16-4
2197 947	8-16-4
2201 467	4-23-28
2201 554	17-23-52
2202 666	7-06-14
2204 185	2-08-63
2204 274	6-24-14
	14-11-13
	19-48-12
2204 547	21-139-108
2204 622	21-133-65
2204 623	21-133-65
2204 647	21-134-11
2204 649	21-134-12
2204 702	21-03-28
2204 709	21-118-45
2204 719	9-46-8
2204 728	21-03-7
2204 768	9-46-8
2204 792	21-136-5
2204 820	21-136-44
2204 823	21-136-41
2204 952	21-136-20
2204 993	21-118-57
2205 034	21-139-135
2205 203	21-133-36
2205 299	21-119-5
2205 510	9-16-6
2205 512	9-16-6
2205 514	9-16-6
2205 516	9-16-6
2205 518	7-06-1
2205 569	9-20-1
2205 958	9-39-14
2205 959	9-39-14
2206 095	10-07-7
2206 103	9-39-5
2206 104	9-39-5
2206 105	9-39-5
2206 106	9-39-5
2206 315	9-10-5
2206 316	9-10-5
2206 376	14-29-6
2206 450	8-28-14
2206 923	17-23-52
	23-05-14
2206 925	17-23-53
2207 322	2-10-60
2207 933	5-56-2
	14-90-1
2208 538	14-86-35
2208 893	5-62-20
2209 213	8-37-381
2209 214	8-37-387
2209 215	8-37-386
2209 216	8-37-2
2216 279	23-14-153
2216 544	23-09-53
	23-64-17
	23-64-272
2216 546	23-09-61
2216 552	21-84-8
2216 673	23-64-273
2217 351	23-09-54
2217 508	15-03-5
	23-63-16
	23-63-183
2218 301	23-09-27
2218 683	23-06-14
2219 155	24-26-35
2219 383	24-28-326
2219 384	24-28-326
2228 701	2-09-3
2230 985	8-16-1
2231 105	8-19-7
2231 119	8-16-10
2233 028	8-16-10
2238 053	8-37-5
2239 683	6-14-1
2240 264	8-16-1
2240 368	9-09-2
2240 369	9-09-2
2240 370	9-09-2
2240 371	9-09-2
2240 372	9-09-2
2240 373	9-09-2
2240 374	9-09-2
2240 375	9-09-2
2240 376	9-09-2
2240 377	9-09-2
2240 378	9-09-2
2240 379	9-09-2
2240 536	8-16-1
2240 647	10-24-1
2240 685	21-139-67
2243 216	23-32-79
2243 327	23-19-99
2244 149	23-19-70
2251 676	23-48-22
2251 678	23-48-19
2251 868	23-04-205
2252 184	23-32-51
	23-48-93
2254 270	23-15-13
2254 575	23-48-43
2254 668	23-04-205
2254 675	23-32-65
2254 810	23-32-79
2256 966	1-48-10
	8-05-31
	8-12-17
	8-31-18
	8-37-93
	8-41-39
	8-55-300
	21-30-33
	24-24-167
2257 443	8-16-4
2257 444	8-16-4
	14-72-33
2257 636	1-108-49
2257 679	24-24-7
2257 682	8-17-23
2257 804	8-37-459
2258 102	8-16-6
2258 118	8-16-4
2258 284	8-17-2
2258 413	8-37-2
2258 590	8-16-4
2258 591	8-16-4
2258 651	8-16-6
2258 704	8-50-126
2258 754	8-16-6
2258 862	14-72-5
2258 912	23-67-262
2259 118	4-23-4
2260 046	5-39-11
2260 223	4-25-10
2260 300-1	2-08-63
2260 548	5-26-4
2260 671	5-20-15
2260 788	5-25-9
2260 789	5-03-23
2260 791	5-26-1
2260 792	5-26-2
2260 793	5-20-11
2260 835	5-03-23
2260 838	5-71-1
2260 839	5-71-2
2260 843	5-70-1
2264 115	14-29-28
2264 597	9-45-1
2264 706	14-25-12
2264 794	9-23-17
2265 068	5-20-17
2265 201	5-20-1
2265 269	4-23-24
2265 656	19-14-4
2265 938	6-52-11
2265 942	6-52-17
2266 743	19-15-24
2266 777	6-35-9
2266 783	6-50-10
2266 784	6-35-1
2266 820	6-38-23
2267 044	5-03-23
2267 045	5-25-9
2267 129	19-19-35
2267 152	19-19-24
2267 156	19-19-70
2267 178	19-19-7
2267 192	19-15-59
2267 350	19-19-38
2267 454	19-15-21
2267 491	19-02-55
2267 679	19-58-9
2268 420	14-13-1
2268 921	10-07-8
2269 127	2-08-61
2269 215	2-10-66
2269 250	2-14-13
2269 622-3	2-14-3
2269 624-5	2-14-3
2269 638	19-27-3
2269 643	19-27-50
2269 659	19-27-2
2269 709	17-30-6
2275 204	24-25-93
2275 205	24-25-93
2275 207	24-25-2
2275 215	1-48-15
	24-28-24
2275 220	8-16-3
2275 381	9-09-2
2275 382	9-09-2
2275 383	9-09-2
2275 384	9-09-2
2275 385	9-09-2
2275 386	9-09-2
2275 387	9-09-2
2275 388	9-09-2
2275 389	9-09-2
2275 390	9-09-2
2275 391	9-09-2
2275 392	9-09-2
2275 393	9-09-2
2275 394	9-09-2
2275 413	9-32-2
2275 414	9-32-2
2275 440	9-35-1
2275 441	9-35-1
2275 468	2-14-1
2275 469	2-14-1
2275 556	8-52-87
2275 557	8-52-96
2275 558	8-52-98
2276 749	8-62-2
2276 804	15-09-4
2277 190	24-28-326
2277 515	1-48-358
2277 516	1-48-355
2277 517	1-48-401
2277 557	1-48-94
2277 597	1-48-46
2277 648	1-48-90
2277 669	1-48-362
2277 767	4-25-32
2277 770	1-48-707
2277 834	1-48-608
2279 961	19-19-40
2279 985	19-57-1
2290 069	8-16-4
2290 188	8-20-8
2290 207	8-16-4
2290 654	8-37-454
2291 258	8-16-6
2291 259	8-16-4
2291 588	8-16-4
2291 663	8-16-6
2291 781	8-38-23
2291 838	8-16-4
2291 852	8-31-10
2292 474	1-87-7
2292 503	23-02-82
2292 994	8-05-6
2292 995	8-05-23
2298 534	2-08-57
2298 546	9-34-5
2298 769	8-16-3
2298 770	8-16-3
2298 882	1-47-19
	1-48-783
	8-16-1
2299 042	14-30-8
2400 185	21-05-8
2400 284	21-133-65
2400 320	21-05-8
2400 389	21-136-17
2400 580	21-134-45
2400 662	21-133-42
2400 667	21-134-8
2400 843	21-05-35
2400 885	9-46-8
2401 166	5-100-32
2401 740	6-24-10
2401 759	4-23-28
2401 768	4-23-15
2401 841	22-01-46
2401 894	5-100-206
2401 910	6-52-12
2402 045	9-39-16
2402 103	10-26-5
2402 136	10-09-5
2402 210	14-25-5
2402 473	10-22-15
2402 677	14-29-6
2402 903	7-48-22
2402 905	9-16-17
2403 245	17-17-3
2403 247	13-54-11
2403 462	17-11-31
2404 119	3-02-20
2404 164	5-13-9
2404 168	5-13-10
2404 194	3-06-5
2404 195	3-07-1
2404 196	3-06-6
2404 197	3-07-2
2404 198	3-08-1
2404 274	21-30-429
2404 442	3-32-1
2404 859	6-24-10
2405 049	12-04-24
2405 077	6-19-2
2405 085	6-50-6
2405 086	6-50-6
2405 105	5-29-1
2405 466	5-110-18
2405 720	5-26-4
2406 039	7-06-14
2406 356	9-02-16
2406 387	9-02-16
	9-03-18
2406 575	9-02-16
2406 580	10-22-11
2406 657	9-31-4
2406 677	10-22-15
2406 766	9-31-4
2406 770	9-31-4
2408 143	21-113-29
2409 408	21-30-428
2409 680	6-22-15
2409 823	4-26-17
2409 824	22-05-24
2409 826	22-05-24
2419 361	23-04-229
2421 305	9-32-2

PART NUMBER	CODE
2421 306	9-32-2
2421 307	9-32-2
2421 308	9-32-2
2421 309	9-32-2
2421 310	9-32-2
2421 356	9-32-2
2421 357	9-32-2
2421 358	9-32-2
2421 359	9-32-2
2421 360	9-32-2
2421 361	9-32-2
2421 455	8-16-3
2423 535	23-64-272
2423 737	8-14-30
2424 864	23-32-15
2426 179	8-12-2
2426 312	8-34-180
2426 458	8-37-155
2426 764	8-37-68
2427 119	1-87-17
2427 191	8-16-6
2427 192	8-16-6
2427 529	8-16-4
2427 533	8-41-35
2427 603	1-87-2
2427 725	8-16-4
2427 736	8-16-4
2427 848	8-16-4
2428 071	23-54-77
2428 125	15-11-38
2428 178	23-54-221
2428 388	23-47-75
2444 442	8-52-328
2444 478	8-28-5
2444 507	8-27-71
2444 658	8-52-41
2445 845	8-34-177
2448 099	2-08-59
2448 294	21-84-4
2448 295	21-84-4
2448 336	6-13-1
2448 621	25-02-42
2448 735	9-35-1
2448 761	7-14-13
	14-86-49
	19-58-14
	25-04-21
2448 762	7-14-13
	7-48-19
2448 763	7-14-13
2448 764	7-14-13
	14-86-49
2448 770	7-14-13
2448 822	8-16-1
2449 525	8-34-180
2458 412	5-01-2
2458 413	5-01-2
2458 414	5-01-2
2460 824	11-01-1
2461 515	6-35-1
2461 707	5-31-12
2461 765	6-52-10
2461 766	6-52-10
2462 585	2-10-58
2462 740	2-10-59
2462 741	2-10-59
2463 037	9-17-5
2463 041	9-16-17
2463 042	9-03-18
2463 173	6-10-10
2463 258	9-03-10
2463 259	9-03-10
2463 260	9-03-10
2463 282	9-43-11
2463 283	9-43-11
2463 322	9-43-11
2463 323	9-43-11
2463 385	9-08-5
2463 541	10-22-11
2463 582	9-10-5
2464 012	21-24-2
2464 013	21-25-4
2464 018	21-10-3
2464 023	21-12-1
2464 037	21-29-25
2464 051	21-39-3
2464 052	21-34-51
2464 053	21-34-53
2464 059	21-04-2
2464 069	21-10-16
2464 073	21-11-1
2464 178	21-134-9
2464 323	21-119-3
2464 324	21-119-5
2464 413	21-119-3
2464 439	21-136-44
2464 446	21-136-236
2464 462	21-137-50
2464 463	21-137-56
2464 464	21-137-59
2464 481	21-137-50
2464 551	21-03-7
2464 552	21-03-28
2464 651	21-133-15
2464 658	21-15-2
	21-24-2
2464 659	21-10-31
2464 724	21-14-21
2464 743	21-25-6
2464 744	21-25-2
2464 839	21-14-19
2464 888	21-136-235
2465 091	10-26-12
2465 203	9-62-1
2465 335	9-39-5
2465 336	9-39-5
2465 337	9-39-5
2465 338	9-39-5
2465 339	9-39-6
2465 340	9-39-6
2465 341	9-39-6
2465 342	9-39-6
2465 391	11-06-8
2465 483	14-11-31
2465 486	14-25-17
2465 517	5-56-2
2465 560	14-65-4
2465 561	14-65-4
2465 850	9-43-9
2466 224	21-05-2
2466 281	21-133-39
2466 283	21-133-31
2466 295	21-42-11
2466 302	21-119-19
2466 318	21-25-6
2466 319	21-25-2
2466 320	21-25-3
2466 324	21-118-47
2466 537	21-134-5
2466 539	21-134-5
2466 548	21-139-47
2466 615	21-139-24
2466 673	21-119-19
2466 756	21-134-11
	21-139-34
2466 757	21-134-12
2466 758	21-134-10
2466 759	21-134-8
2466 796	21-118-47
2466 803	21-133-39
2466 806	21-133-31
2466 811	21-133-25
2466 842	21-139-16
2466 881	21-05-25
2466 882	21-05-25
2466 892	4-10-8
2466 894	4-10-35
2466 906	4-10-35
2466 909	4-10-11
2466 954	21-04-2
2466 957	21-04-8
2467 095	5-13-7
2467 096	3-33-8
2467 103	3-33-2
2467 166	3-33-6
2467 268	3-32-8
2467 513	4-25-23
2467 514	4-25-6
2467 567	4-25-9
2467 571	15-11-30
2467 575	5-113-17
2467 576	5-100-212
2467 578	5-113-20
2467 693	23-32-18
2467 770	5-27-2
	6-38-3
2467 771	5-27-2
2467 932	19-48-46
2467 935	19-48-16
	21-30-428
2467 937	4-25-26
2467 982	2-08-63
2468 197	6-09-11
2468 307	9-58-12
2468 645	10-07-14
2468 737	14-25-5
2468 818	14-30-2
2468 849	10-23-7
2469 501	9-41-4
2469 502	9-41-4
2469 503	9-41-4
2469 504	9-41-4
2480 230	23-19-178
2480 231	23-19-178
2480 904	15-03-5
	23-63-16
2480 957	23-32-15
2481 381	14-88-36
2483 098	23-49-9
2484 307	23-19-63
2484 575	23-32-15
2485 135	1-48-94
2485 282	1-48-714
2485 429	1-47-25
	1-48-608
2485 587	24-25-234
2485 738	1-47-3
2485 920	24-25-38
2485 982	1-47-3
2486 468	23-15-38
	23-54-20
2486 697	15-13-2
2486 966	23-47-66
2486 968	23-47-66
2486 982	23-39-45
2486 994	23-47-67
2491 448	23-15-13
2495 234	8-16-1
2495 235	8-16-1
2495 236	8-16-1
2495 237	8-16-1
2495 239	8-16-1
2495 517	8-16-1
2495 531	8-35-4
2495 541	8-16-1
2496 279	8-31-16
	8-37-88
	8-39-15
	8-41-36
	8-50-156
2496 532	8-16-4
2496 541	8-16-4
2497 346	8-16-10
2497 408	1-87-180
2497 481	1-48-783
2497 500	23-67-241
2497 596	23-67-200
2497 701	8-16-6
2508 004	21-25-2
2520 490	23-39-2
2520 534	23-39-2
2520 556	23-41-7
2520 621	23-17-74
2520 645	23-19-204
2520 650	23-19-200
2520 658	23-64-269
2520 659	23-64-269
2520 914-5	23-41-270
2521 172	24-28-326
2521 336	1-48-179
2521 409	1-47-18
	1-48-832
2521 729	1-48-141
	24-28-72
2530 377	6-14-1
2530 538	19-15-17
2530 566	19-14-38
2530 570	19-14-4
2530 700	14-90-1
2530 848	19-15-28
2530 992	13-33-68
2532 149	9-43-9
2532 490	9-17-5
2532 491	9-08-5
2532 752	10-26-8
2532 753	10-26-18
2532 754	10-26-27
2533 740	19-15-23
2533 822	4-26-18
2534 111	14-86-85
2534 117	14-89-57
2534 227	5-100-198
2534 240	6-24-1
2534 431	11-01-1
2534 441	11-01-1
2534 515	21-30-22
2534 663	5-64-7
2534 814	13-36-5
2534 926	4-23-28
2534 964	4-08-13
2535 027	2-10-10
2535 188	17-30-3
2535 204	2-08-48
2535 459	19-27-40
2535 460	19-27-40
2535 463	2-10-65
2535 886	19-27-31
2535 890-1	2-14-3
2535 892-3	2-14-3
2535 990	17-29-11
2535 991	17-29-19
2535 992	17-29-17
2536 016	14-29-4
2536 186	10-26-6
2536 626	14-29-5
2536 774	9-48-126
2536 847	14-24-4
2537 153	19-19-35
2537 178	19-01-50
2537 228	19-57-19
2537 229	19-57-20
2537 247	19-01-50
2537 503	19-54-178
2537 534	19-58-9
2537 689	19-54-151
2537 694	19-54-126
2537 699	19-58-14
2537 741	19-01-8
2537 776	19-19-4
2537 796	19-15-60
2537 815	19-54-225
2537 818	19-54-157
2537 819	19-54-178
2537 820	19-54-152
2537 821	19-54-154
2537 822	19-54-156
2537 823	19-54-153
2537 827	19-54-151
2537 828	19-54-181
2537 829	19-54-151
2537 830	19-54-151
2537 831	19-54-181
2537 833	19-54-32
2537 834	19-54-150
2537 835	19-54-5
2537 837	19-54-54
2537 838	19-54-55
2537 840	19-54-54
2537 858	19-54-126
2537 863	19-54-243
2537 865	19-54-219
2537 866	19-54-130
2537 869	19-54-126
2537 891	19-58-33
2537 892	19-58-14
2537 899	19-54-29
2537 926	19-54-32
2537 958	19-54-150
2537 959	19-54-219
2537 992	1-48-557
2537 995	19-54-54
2538 013	21-42-28
2538 014	21-42-29
2538 034	4-10-33
2538 042	4-10-32
2538 062	21-139-46
2538 064	21-142-18
2538 185	21-134-38
2538 207	21-15-33
2538 407	21-129-5
2538 472	21-136-52
2538 510	21-133-17
2538 515	21-133-48
2538 522	21-134-5
2538 523	21-134-5
2538 571	21-85-23
2538 574	21-134-36
2538 575	21-42-23
2538 576	21-42-23
2538 588	21-85-22
2538 608	21-85-9
2538 617	21-133-25
2538 634	21-138-10
2538 669	21-05-35
2538 670	21-05-35
2538 671	21-05-35
2538 695	21-133-17
2538 696	21-134-45
2538 785	21-04-17
2539 404	17-26-4

PART NUMBER	CODE
2539 512	17-12-6
2541 330	24-25-3
2570 243	23-42-13
2571 768	23-59-57
2574 185	4-23-2
2575 059	8-57-10
2578 045	7-14-13
2579 904	12-07-1
2580 038	1-87-404
2580 061	8-16-4
2580 064	8-16-16
2580 065	8-16-16
2580 267	8-16-16
2580 611	8-13-2
2580 690	1-87-2
2580 929	23-67-80
2582 134	15-03-5
2582 136	15-03-60
2583 002-3	23-15-3
2583 064-5	23-39-5
2583 142	23-48-201
2583 144	23-48-19
2583 377	23-17-28
	23-17-52
2583 391	23-18-48
2583 429	15-11-30
	23-48-44
	23-54-20
	23-54-227
2583 468	23-15-30
2583 559	23-39-2
2583 568	23-15-30
2583 614	23-54-142
2583 824	23-39-44
2583 860	23-17-27
	23-17-51
2584 841	8-16-1
2584 842	8-16-1
2584 843	8-16-1
2584 953	8-16-1
2584 954	8-16-1
2584 971	8-39-15
2584 972	8-13-4
	8-56-27
	8-57-89
2585 030	8-16-1
2585 698	11-02-1
2585 702	14-43-5
2585 787	14-35-1
2586 764	8-53-304
2588 202	23-64-297
2588 330	23-59-57
2588 662	23-48-99
2588 818	23-48-21
2588 899	23-32-93
2589 046	23-26-80
2589 587	23-02-62
	23-02-78
	23-02-105
2589 598	23-38-27
2589 615	23-02-111
2600 702	14-86-57
	14-89-57
2603 606-7	23-32-27
2603 608-9	23-32-27
2603 628-9	23-51-5
2603 640-1	23-34-234
2603 642-3	23-19-82
2603 644-5	23-34-27
2603 652-3	23-34-22
2603 665	23-34-166
2603 675	23-64-66
2603 690	23-64-314
2603 691	23-64-314
2604 006	23-64-314
2604 007	23-64-314
2604 073	23-34-166
2604 166-7	23-32-25
2604 224-5	23-34-234
2604 260-1	23-36-53
2604 286-7	23-34-246
2604 298-9	23-59-35
2604 850-1	23-36-66
2604 888-9	23-64-84
2604 900-1	23-51-6
2604 902-3	23-32-112
2604 996	23-34-330
2607 002	23-61-120
2607 141	1-47-14
2607 312	24-28-96
	24-28-326
2607 754	1-47-3
2607 776	1-47-3
2607 807	1-48-707
2609 262	23-45-184
2631 315	8-19-87
2631 317	8-16-6
2631 318	8-16-6
2631 319	8-16-6
2631 340	8-16-8
2642 475	8-36-114
2642 670	8-35-41
2642 913	8-36-114
2642 919	8-36-115
2642 986	8-27-71
2642 988	8-27-259
2643 702	6-22-1
2643 731	5-100-26
2643 824	14-88-27
2643 910	21-30-38
2643 913	21-30-355
2643 956	14-86-42
2643 974	5-54-4
2656 087	23-02-115
2656 088	23-38-45
2656 089	21-30-408
2656 090	23-38-48
2656 391	23-02-110
2657 042	23-40-82
2657 284	23-02-105
2657 877	23-02-68
2658 204	9-39-15
2658 238	14-62-1
2658 256	14-29-19
2658 349	9-48-6
2658 379	7-03-1
2658 471	9-39-15
2658 625	9-48-8
2658 685	10-24-8
2658 758	24-25-31
2658 878	9-36-5
2658 879	9-36-5
2658 880	9-36-5
2658 955	6-09-1
2660 020	19-48-46
2660 164	19-48-0
2660 315	22-01-46
2660 374	21-30-57
2660 393	21-30-414
2660 422	21-30-413
2660 776	5-100-62
2661 118	23-18-104
2661 572	23-18-126
2661 746	23-18-103
2661 835	8-53-150
2663 054-5	23-34-117
2663 141	23-66-135
2663 142	23-66-135
2663 149	23-66-135
2663 150	23-66-135
2663 354	23-34-120
2663 479	23-42-16
2663 502-3	23-64-308
2663 558-9	23-63-127
2663 572-3	23-09-56
2663 610-1	23-64-308
2663 734-5	23-64-308
2663 742	23-64-242
2663 754-5	23-64-240
2663 762-3	23-34-120
2663 782-3	23-64-308
2663 784-5	23-64-308
2663 790	23-42-23
2664 040	23-63-16
2664 256	23-09-52
	23-09-58
2664 268	23-32-51
	23-48-93
2664 330	23-32-15
	23-34-123
2664 408	23-63-97
2664 532-3	23-36-3
2664 625	23-34-10
2664 681	23-32-51
2664 696	23-48-121
2664 975	23-31-33
2740 004	8-44-1
2740 020	8-44-1
2765 025	23-48-21
2765 393	23-48-93
2765 434	23-47-66
2765 743	15-13-2
2765 790-1	23-15-1
2765 792-3	23-39-5
2768 024	5-03-23
2768 052	19-48-53
2768 055	19-48-45
2768 056	19-48-0
2768 057	19-48-46
2768 061	21-30-393
2768 486	23-32-115
2768 487	23-32-115
2768 492	23-32-31
2768 643	8-47-2
2769 208	23-66-65
2769 490	23-64-66
2770 048	23-67-104
2770 859	8-16-6
2771 134	8-41-36
2771 222	8-19-15
2771 277	23-02-19
2771 725	23-02-18
2771 857	8-58-79
2771 917	8-16-4
2771 967	23-67-25
2771 976	23-67-242
2780 832	14-26-6
2780 835	14-26-11
2780 999	10-23-7
2781 019	5-67-1
2781 105	5-27-6
2781 108	6-24-1
2781 147	6-50-1
2781 372	11-09-5
	11-10-17
2781 407	21-30-413
2781 417	21-30-418
2781 419	21-30-416
2781 420	19-48-50
2781 429	19-48-46
2781 581	4-26-17
2781 675	19-14-22
2781 676	19-14-91
2781 679	19-14-85
2781 685	19-14-81
2781 904	16-10-3
2781 923	16-10-2
2781 932	16-14-1
2781 944	16-10-1
2781 947	16-08-6
2782 066-7	23-64-84
2782 080-1	23-22-86
2782 160-1	23-34-22
2782 162-3	23-64-213
2782 164-5	23-64-213
2782 680	23-39-48
2782 746	23-34-328
2782 805	17-11-40
2782 827	23-34-275
2782 844-5	23-51-43
2782 878	23-64-17
2783 355	23-34-237
2784 440	23-32-29
2784 470	17-19-4
2784 577	23-63-112
2784 714	15-09-4
	23-19-63
2784 715	23-64-4
2785 148	23-34-80
2785 695	15-03-5
2788 032	23-02-62
	23-02-78
2788 080	23-20-14
2788 084-5	23-20-14
2788 088	23-20-65
2788 252-3	23-20-14
2788 320	23-40-82
2788 701	23-02-68
2789 135	23-26-58
2800 437	3-33-8
2800 484	3-22-24
2800 485	3-22-25
2800 738	19-15-44
2800 848	6-22-15
2800 942	19-48-46
2801 018	21-134-5
2801 054	21-129-7
2801 060	21-134-30
2801 061	21-134-5
2801 157	4-10-10
2801 167	21-133-36
2801 171	21-134-5
2801 180	21-134-5
2801 198	21-139-60
2801 241	21-137-53
2801 243	21-133-20
2801 259	21-139-9
2801 271	21-137-35
2801 272	21-137-47
2801 273	21-137-41
2801 274	21-137-53
2801 281	21-137-35
2801 311	21-133-40
2801 315	21-134-10
2801 348	21-129-23
2801 356	21-133-48
2801 363	21-134-9
2801 398	21-04-2
2801 426	21-136-233
2801 626	21-133-31
2801 692	21-09-30
2801 724	21-04-11
2801 726	21-04-11
2801 727	21-133-10
2801 728	21-129-23
2801 745	9-46-8
2801 762	9-46-4
2801 764	9-46-4
2801 815	21-136-47
2801 818	21-136-30
2801 828	21-142-18
2801 844	21-133-20
2801 853	9-46-44
2801 872	21-137-41
2801 890	21-09-5
	21-19-2
2801 893	21-09-33
2801 911	21-119-15
2801 938	21-42-11
2801 949	21-133-22
2801 961	21-133-39
2801 969	21-133-39
2801 992	21-133-36
2802 104-5	23-18-25
2802 116	23-18-24
2802 211	23-64-282
2802 218	15-13-2
2802 303	23-21-18
2802 834	23-21-3
2802 836	15-11-38
2802 869	23-21-3
2802 951	23-48-105
2802 973	23-18-37
2802 974	15-11-16
2802 991	15-19-8
2806 018	9-03-18
2806 211	9-13-5
2806 270	10-07-6
	10-07-10
2806 273	10-22-40
2806 408	14-11-48
2806 449	14-26-6
2806 463	14-06-1
2806 469	14-11-9
2806 499	14-06-1
2806 671	10-26-26
2806 745	10-26-30
2806 816	9-48-7
2806 945	9-17-5
2806 982	9-48-44
2807 425	23-64-1
	23-66-75
2807 610-1	23-23-52
2807 612-3	23-23-52
2807 614-5	23-23-52
2807 616-7	23-23-52
2808 394	2-08-57
2808 399	17-15-25
2808 507	10-07-6
2808 550	9-35-1
2808 551	9-35-1
2808 552	9-35-1
2808 579	2-10-61
2808 580	2-10-61
2808 679	7-42-1
2808 682	7-42-4
2808 868	8-32-2
2808 869	8-32-2
2808 914	23-41-34
2809 009	8-16-6
2809 011	23-67-240
2809 013	23-67-252
2809 016	8-16-1
2809 017	8-16-1
2809 018	8-16-1
2809 019	8-16-1
2809 033	8-58-60
2809 034	8-16-1
2809 035	8-16-1
2809 036	8-16-1

PART NUMBER	CODE
2809 037	8-16-1
2809 038	8-16-1
2809 039	8-16-1
2809 041	1-48-941
2809 087	8-53-270
2809 286	14-39-45
2809 305	14-35-1
2809 940-1	23-14-53
2811 139	23-34-270
2811 158-9	23-09-51
2811 523	23-64-74
2811 825	23-54-118
2811 852	23-64-272
2811 861	23-32-51
2811 953	23-64-71
2811 998	23-64-71
2815 755	24-25-154
2815 762	24-25-154
2820 135	8-53-296
2820 186	1-87-180
2820 409	8-53-308
2820 453	1-48-179
	24-01-65
2820 455	1-47-7
2820 756	21-30-15
2820 880	24-01-36
2822 012	8-37-7
2822 023	8-31-10
2822 097	23-06-10
2822 126	8-33-90
2822 187	8-33-121
2822 196	8-55-57
2822 261	23-67-107
2822 291	23-67-79
2822 292	23-67-79
2822 322	8-58-60
2822 329	1-87-5
2822 565	8-16-4
2822 583	8-38-3
2822 599	8-31-11
2822 623	8-15-17
2823 328	14-86-35
2823 456	11-10-3
2823 521	4-25-3
2823 549	4-08-2
2823 557	5-28-9
2823 558	5-28-8
2823 559	6-22-19
2823 603	5-101-5
2823 842	22-01-51
2823 845	22-01-49
2823 888	14-86-35
2823 913	11-08-24
	11-09-4
2823 916	11-05-1
2823 929	11-10-3
2825 417	10-01-62
2826 JX9	1-87-22
2834 928	17-15-1
2835 707	17-29-6
2835 857	19-27-31
2835 862	17-29-5
2835 877	19-27-50
2835 895	19-27-40
2835 896	2-07-28
	19-27-40
2836 252	8-26-1
2836 772	12-15-21
2837 163	24-25-20
2837 168-9	1-48-151
2837 207	19-58-33
2837 219	1-47-6
2837 220	1-47-4
2837 285	24-28-72
2837 314	24-01-46
2837 336	24-24-40
2837 382	24-24-150
2837 386	24-24-150
2837 402	24-25-132
2837 680	1-48-50
	24-28-210
2837 876	1-48-280
	24-28-405
2838 976-7	23-48-99
2838 999	23-32-17
2839 184	23-38-27
2839 186	23-38-27
2839 402-3	23-34-330
2839 442	23-63-16
2839 568-9	23-63-21
2839 646	23-63-112
2840 300-1	23-64-281
2840 312-3	23-64-299
2841 154	22-20-29
2842 153	23-49-9
	23-51-6
2842 323	23-34-301
2842 326	23-34-301
2842 569	23-66-75
2842 789	23-19-206
2842 869	23-19-63
	23-48-93
2842 961	22-20-96
2843 071	14-29-5
2843 088	14-29-7
2843 182	9-03-5
2843 197	10-26-26
2843 208	10-22-11
2843 221	7-03-1
2843 586	9-46-4
2843 610	9-17-5
2843 661	9-15-2
2843 892	6-10-2
2852 044	5-05-37
2852 175	16-03-1
2852 323	16-14-1
2852 728	3-11-2
2852 729	3-11-1
2852 731	3-22-24
2852 732	3-22-25
2852 882	3-02-1
2852 883	3-32-14
2852 908	3-06-5
2852 909	3-07-1
2852 911	3-06-6
2852 912	3-07-2
2852 913	3-08-1
2852 917	3-11-14
2852 921	3-03-29
2852 948	3-35-14
2856 029	11-06-8
2856 391	11-10-20
2856 393	11-10-42
2857 741	8-33-114
2857 754	8-16-6
2857 761	8-16-6
2857 908	14-29-43
	25-02-43
2858 151	23-45-47
2858 422	23-45-192
2859 409	23-32-17
2859 581	13-11-5
2860 004-5	23-63-33
2860 006-7	23-63-33
2860 010	23-64-40
2860 024-5	23-63-15
2860 036	23-64-44
2860 324	23-09-63
2860 332	23-34-123
2860 403	23-34-120
2860 542	23-54-6
2860 544	23-36-54
	23-54-6
2861 408	23-66-235
2861 594	23-63-16
	23-63-183
2861 634-5	23-64-306
2861 636-7	23-64-306
2861 656	23-48-99
2861 704	23-64-17
2861 730	23-32-15
2861 744	23-64-286
2861 864	23-48-188
2862 052-3	23-18-48
2862 113	23-54-141
2862 122	23-54-20
2862 127	23-54-20
2862 133	23-54-20
2862 167	23-14-18
	23-14-79
2862 224-5	23-39-34
2862 309	23-18-49
2862 330	23-39-45
2862 441	23-49-9
2862 478-9	23-48-203
2862 585	23-54-217
2862 612	23-48-20
2862 614	23-48-24
2862 758	23-54-217
2862 774-5	23-18-26
2862 989	15-11-38
2863 055	14-01-8
2863 213	7-02-1
2863 214	7-02-1
2863 224	7-02-1
2863 349	14-29-6
2863 402	9-45-1
2863 439	9-39-15
2863 477	9-02-50
2863 486	9-48-8
2863 521	9-39-6
2863 533	9-39-6
2863 534	9-39-6
2863 535	9-39-6
2863 584	10-09-7
2863 854	9-10-5
2863 902	9-10-5
2864 016	8-42-1
2864 243	8-42-25
2864 300	1-87-58
2864 315	8-38-23
2864 325	8-38-23
2864 434	23-67-160
2864 440	1-47-7
2864 485	8-50-82
2864 491	8-42-1
2871 372	11-08-19
2875 028	8-27-244
2875 551	8-52-76
2875 558	8-52-389
2875 604	8-36-14
2875 605	8-36-14
2875 719	8-36-14
2875 923	8-27-121
2877 233	23-38-5
2877 234	23-38-5
2879 600	23-20-14
2879 652	23-02-68
	23-02-107
2879 742	23-40-82
2879 805	23-38-46
2879 950-1	23-63-14
2879 954	23-63-20
2879 955	23-63-20
2879 971	23-40-82
2880 259	19-14-92
2880 262	19-14-85
2880 266	19-15-4
2880 284	21-30-43
2880 361	19-14-75
2880 367	19-14-108
2880 481	14-86-55
2880 499	5-107-36
2880 525	5-20-20
2880 529	5-03-6
2880 555	5-20-20
2880 568-9	5-13-1
2880 584	5-03-6
2880 585	5-03-6
2880 593	5-20-20
2880 632	5-03-6
2881 041	3-22-45
2881 098	3-03-3
2881 193	3-11-2
2881 194	3-11-1
2881 314	3-33-10
2881 342	3-03-2
2881 343	3-03-2
2881 423	3-04-6
2881 511	5-39-20
2881 512	5-39-24
2881 519	5-44-11
2881 600	5-64-1
2881 604	5-69-1
2881 618	5-69-1
2881 619	5-67-1
2881 660-1	4-26-1
2881 675	5-25-9
2881 676	5-03-23
2881 686-7	5-20-1
2881 984	5-58-12
2883 083	5-111-17
2883 357	19-46-12
2883 402	21-30-6
2883 461	5-27-2
2883 462	6-38-3
2883 463	5-27-6
2883 464	6-35-3
2883 467	6-35-15
2883 468	6-35-1
2883 479	6-38-7
2883 482	5-27-2
2883 541	19-46-12
2883 575	16-14-1
2883 696	16-02-1
2883 737	16-02-9
2883 758	16-02-1
2883 908	11-08-5
2883 912	11-01-1
2883 919	11-08-24
2883 929	5-56-2
	14-90-1
2883 977	19-27-33
2884 074	24-28-39
2884 122	24-24-164
2884 123	24-24-164
2884 124	24-24-164
2884 413	1-48-942
	24-24-156
2884 438	1-87-2
2884 500	1-48-11
2884 501	1-48-770
2884 513	1-48-4
2884 514	1-48-4
2884 515	1-48-26
2884 570	1-48-940
2884 656	1-48-950
	24-01-65
2884 684	1-87-30
2884 687	23-33-42
2884 691	23-33-42
2884 704	1-48-4
2884 711	24-24-164
2884 712	24-24-164
2884 713	24-24-164
2884 714	24-24-164
2884 715	24-24-164
2884 722	1-48-4
2884 730	1-48-941
2884 731	1-48-941
2884 764	1-87-180
2884 773	1-87-22
2884 775	1-87-180
2884 776	1-87-180
2884 778	1-87-2
2884 784	23-33-135
2884 817	1-87-22
2884 853	1-87-1
2884 863	1-87-19
2884 877	23-33-135
2884 880	1-87-22
2888 659	23-45-57
2888 738-9	23-45-55
2888 762	23-45-39
2889 044	23-67-169
2889 053	8-31-10
2889 084	8-12-2
2889 427	8-16-6
2889 428	8-16-6
2889 432	23-67-169
2889 434	8-16-4
2889 435	8-16-4
2889 452	23-06-21
2889 467	23-67-166
2889 542	8-16-6
2889 543	8-16-6
2889 565	8-40-10
2889 588	8-37-170
2889 597	8-16-6
2889 650	8-16-6
2889 785	21-84-1
2889 809	23-67-255
2889 843	23-34-123
	23-67-247
2889 847	23-67-25
2889 857	23-67-25
2889 859	23-67-25
2889 904	1-48-783
2889 934	1-88-159
2889 935	1-88-107
2889 961	23-67-25
2889 962	23-67-25
2891 156	19-54-180
2891 166	19-54-28
2891 168	19-54-25
2891 241	19-54-196
2891 264	19-54-130
2891 284	19-54-182
2891 289	19-54-263
2891 371	19-58-7
2891 374	19-58-7
2891 402	19-58-7
2891 425	19-54-180
2891 428	19-54-196
2891 429	19-58-7
2891 434	19-54-182
2891 459	19-54-31
2891 460	19-54-31
2891 462	19-54-2
2891 463	19-54-2

PART NUMBER	CODE
2891 471	19-54-2
2891 472	19-54-2
2891 491	19-54-180
2891 493	19-58-7
2891 494	19-58-7
2891 495	19-58-7
2891 496	19-58-7
2891 504	19-58-7
2891 513	19-54-180
2891 515	19-58-7
2892 163	21-03-6
2892 263	6-22-15
2892 349	21-139-30
2892 350	21-139-33
2892 351	21-139-78
2892 352	21-139-78
2892 399	21-85-61
2892 408	21-119-15
2892 511	6-09-1
2892 551	21-133-36
2892 553	21-118-58
2892 655	21-05-1
2892 656	21-134-38
2892 679	21-118-57
2892 681	21-119-15
2892 793	21-09-5
2892 807	21-10-16
2892 808	21-15-2
2892 810	21-25-4
2892 812	21-10-4
2892 813	21-11-1
2892 846	21-139-68
2892 909	21-16-3
2892 911	6-10-10
2892 912	21-03-6
2892 913	21-03-6
2892 914	8-52-39
2892 915	8-52-39
2892 926	21-139-95
2892 927	21-139-95
2892 942	21-16-3
2892 943	21-139-63
2892 944	21-139-135
2892 947	21-139-71
2892 961	21-04-1
2892 967	21-42-23
2892 990	21-139-105
2892 994	21-85-9
2893 939	23-08-75
2893 958	23-15-13
2894 318	23-34-116
2894 582-3	23-32-49
2894 599	23-64-12
2894 902	23-36-18
2894 903	14-87-2
2894 954	23-61-117
2894 972	23-34-80
2894 982	23-66-77
2895 169	23-34-89
2895 183	23-54-70
	23-64-11
2895 203	23-48-121
2895 204	23-48-121
2895 223	23-34-91
2895 258	23-31-33
2895 259	23-31-33
2895 260	23-31-33
2895 262	23-32-80
2895 416-7	23-64-254
2895 478-9	23-63-33
2895 554-5	23-34-121
2895 560	23-31-33
2895 561	23-31-33
2895 563	23-31-33
2895 564	23-31-33
2895 565	23-23-65
2895 577	23-66-75
2895 592	23-66-135
2895 593	23-66-135
2895 664-5	23-63-33
2895 803	23-22-145
2895 862	23-66-135
2895 863	23-66-135
2898 560-1	8-34-1
2898 562-3	8-34-1
2898 568-9	8-34-176
2898 588	15-09-4
2898 762	8-47-126
2898 909	15-03-8
	23-31-146
	23-63-111
2899 035	6-10-2
2899 061	9-31-4
2899 097	9-03-18
2899 206	9-15-1
2899 250	9-03-29
2899 275	9-03-29
2899 335	14-25-11
2899 336	14-25-11
2899 342	14-01-2
2899 351	14-11-29
2899 354	14-07-15
2899 360	14-11-3
2899 361	14-11-3
2899 370	21-142-12
2899 374	14-02-18
2899 376	14-02-18
2899 556	9-17-5
2899 561	9-42-1
2899 567	9-42-1
2899 582	9-07-5
2899 594	9-42-1
2899 595	9-42-1
2899 951	9-58-5
2900 266	15-09-4
2908 473	6-13-1
2925 201	5-05-10
2925 279	17-24-28
2925 298	13-10-1
2925 321	12-04-4
2925 340-1	12-07-1
2925 377	19-46-55
2925 491	19-14-38
2925 492	19-15-35
2925 494	19-31-1
2925 495	19-31-3
2925 524	19-14-85
2925 557	8-33-5
2925 558	19-30-19
2925 598	6-24-1
2925 639	11-08-24
2925 647	11-05-4
2925 648	11-05-4
2925 705	5-56-2
2925 797	11-01-1
2926 050	8-16-4
2926 051	8-16-6
2926 117	23-41-170
2926 118	23-41-170
2926 121	23-41-184
2926 122	23-41-184
2926 168	23-67-104
2926 171	8-16-6
2926 172	8-16-6
2926 174	8-16-4
2926 202	23-47-446
2926 204	8-16-6
2926 247	8-15-32
2926 254	8-16-6
2926 255	8-16-6
	23-67-169
2926 256	8-16-6
2926 257	8-16-6
2926 258	8-16-6
2926 270	8-58-60
2926 275	8-58-60
2926 304	23-41-170
2926 324	8-00-0
2926 370	8-55-57
2926 374	8-16-6
2926 422	23-47-456
2926 502	8-15-2
2926 593	23-47-446
2926 594	8-16-4
2926 607	8-16-4
2926 617	8-16-4
2926 651	8-16-8
2926 673	1-88-12
2926 722	8-16-4
2926 862	23-47-425
2926 934	23-67-98
2926 942	23-67-86
2926 945	23-67-76
2926 948-9	23-67-5
2926 962-3	23-67-246
2927 271	21-84-1
2927 281	23-06-46
2927 369	23-12-23
2927 437	23-06-21
2927 446	23-02-0
2927 525	23-33-109
2927 540	23-06-10
2927 592	8-41-41
2927 670	21-84-1
2927 691	23-33-135
2927 738	23-33-96
2927 883	23-06-15
2927 920	21-84-1
2927 961	23-06-13
2930 916	8-57-10
2931 031	8-47-69
2931 687	3-22-26
2931 799	3-20-1
2931 818	3-22-28
2931 862	3-22-45
2931 864	3-32-1
2931 875	3-35-14
2931 960	3-22-28
2931 961	3-22-28
2931 962	3-22-28
2931 963	3-22-28
2931 964	3-22-28
2931 965	3-22-28
2931 966	3-22-28
2931 967	3-22-28
2931 968	3-22-28
2931 969	3-22-28
2931 970	3-22-28
2931 971	3-22-28
2931 972	3-22-28
2931 973	3-22-28
2931 974	3-22-28
2931 975	3-22-28
2931 976	3-22-28
2931 977	3-22-28
2931 978	3-22-28
2932 230	23-63-33
2932 436-7	23-64-240
2932 445	23-23-65
2932 446-7	23-23-65
2932 448-9	23-23-65
2932 450-1	23-23-65
2932 452-3	23-23-65
2932 708	23-67-20
2932 727	8-20-10
2932 798	14-73-1
2932 814	8-52-342
2932 820	21-113-24
2932 832	24-28-210
2932 834	23-34-308
	23-41-27
	23-54-159
2932 843	24-28-300
2932 868	23-67-252
2932 873	8-53-150
2932 877	8-50-186
2932 972	24-25-3
2932 973	23-41-34
2932 988	8-27-137
2933 042	14-30-8
2933 204-5	23-14-53
2933 249	5-01-2
2933 250	5-01-2
2933 251	5-01-2
2933 252	5-01-2
2934 816-7	23-32-116
2934 840	14-88-32
2935 214-5	23-14-27
2935 231	23-14-24
2935 232	23-14-24
2935 375	15-11-16
2935 569	23-54-144
2935 571	23-54-142
2935 603	23-54-221
2935 803	23-17-2
2935 916	23-17-72
2935 920	23-54-217
2936 298	1-48-572
	24-01-87
2936 346	1-47-22
2936 347	1-47-14
2936 365	24-24-5
2936 388	1-48-555
2936 502	24-01-70
2936 503	24-28-92
2936 507	24-28-211
2936 599	24-28-334
2936 604	1-48-90
2936 605	1-48-362
2936 610	1-48-156
2936 612	1-48-707
2936 622	1-48-125
2936 641	1-48-141
2936 642	1-48-707
2936 690	24-29-9
2936 706	1-48-559
2936 754	24-24-150
2936 757	1-48-572
	24-01-87
2936 809	1-48-719
2936 812	1-48-720
2936 823	24-28-78
2936 824	24-28-78
2936 832	24-28-78
2936 839	24-28-73
2936 842	24-28-73
2936 844	24-28-380
2936 868	1-48-90
2936 930	24-28-211
2936 933	24-28-92
2936 957	24-01-70
2936 962	24-29-1
2942 556	23-47-28
2942 688-9	23-45-55
2942 690-1	23-45-76
2942 849	23-45-51
2944 019	5-100-34
2944 020	5-100-26
2944 127	5-105-14
2944 196	5-47-2
2944 222	5-44-6
2944 225	5-39-20
2944 227	5-39-24
2944 381	5-39-29
2944 424	22-01-41
2944 499	5-100-20
2944 580-1	5-20-20
2944 586	5-20-17
2944 678-9	5-03-6
2944 684-5	5-03-6
2944 688-9	5-03-6
2944 690-1	5-03-6
2944 692-3	5-20-15
2944 704	5-05-17
2944 844	5-20-4
2945 108	23-54-217
2945 109	23-54-217
2945 442	23-48-22
2945 460	23-48-90
2945 511	23-14-24
2945 512	23-14-24
2945 544	23-47-15
2945 603	23-21-19
2945 679	23-47-433
2945 704	8-15-32
	23-47-436
	23-54-217
	23-54-216
	24-28-16
2945 786	23-47-432
2945 795	23-47-432
2945 796	23-47-432
2945 797	23-47-432
2945 798	23-47-432
2945 798-9	23-47-432
2945 801	23-47-432
2945 845	15-11-34
2945 921	23-47-431
2945 922	23-47-431
2945 923	23-47-431
2945 924	23-47-431
2945 925	23-47-431
2945 926	23-47-431
2945 927	23-47-431
2945 940	23-47-430
2946 051	10-01-54
2946 079	10-01-23
2946 107	9-62-1
2946 637	14-06-1
2946 640	14-11-3
2946 653	14-11-1
2946 659	14-11-48
2947 005	8-35-95
2947 065	8-53-284
2947 066	8-53-287
2947 109	8-40-5
2947 163	1-48-374
2947 164	8-53-294
2947 167	23-33-12
2947 169	1-47-15
2947 170	8-42-3
2947 219	8-20-1
2947 282	8-58-79
2947 286	8-13-1
2947 305	8-53-270
2947 359	1-87-180
2947 380	8-53-296
	23-67-194
2947 411	1-47-7
2947 444	1-87-58

PART NUMBER	CODE
2947 484	1-87-22
2947 486	8-35-59
2947 488	8-35-59
2947 517	8-13-1
2947 672	1-87-58
2947 673	1-87-22
2947 719	8-35-59
2947 723	1-87-58
2947 763	8-53-270
2947 798	8-58-60
2947 802	8-50-82
2947 803	8-50-82
2947 844	8-12-2
2947 866	8-53-285
2947 874	8-33-121
2947 896	8-50-191
2947 924	8-38-23
2947 936	21-30-28
2947 951	8-50-129
2947 953	8-50-129
2948 412	2-10-60
2948 568	17-29-5
2948 572-3	2-10-6
2948 616-7	2-10-55
2948 657	2-10-65
2948 716	2-10-10
2948 801	19-19-19
2948 812	19-02-4
2948 852	19-15-38
2948 857	19-19-7
2948 859	19-19-35
2948 971	19-19-19
2948 989	19-19-24
2948 994	19-02-4
2949 228	12-02-7
2949 336-7	15-03-18
2949 584	15-11-46
2949 608	15-03-5
2949 617	15-09-4
2949 658	15-09-4
2949 735	7-16-61
2950 051	21-30-418
2950 052	21-30-418
2950 053	21-30-418
2950 121	4-08-1
2950 122	4-08-3
2950 148	19-14-49
2950 156	9-33-6
2950 171	19-14-10
2950 205	21-30-416
2950 210	21-30-353
2950 212	21-30-418
2950 213	21-30-6
2950 238	6-52-1
2950 251	6-52-1
2950 265	5-31-15
2950 269	5-27-1
2950 298	19-48-1
2950 467	21-30-100
2950 471	21-30-26
2950 472	21-30-21
2950 473	21-30-23
2950 475	19-46-8
2950 480	21-30-11
2950 486	19-46-3
2950 487	19-15-4
2950 491	19-15-28
2950 492	19-31-1
2950 549	19-14-4
2950 570	19-14-27
2950 601	19-14-23
2950 652	21-30-403
2950 680	6-46-10
2950 686	5-31-11
2950 696	6-50-1
2950 713	21-30-6
2950 715	21-30-10
2950 716	21-30-13
2950 797	8-33-4
2950 812	19-14-59
2950 839	19-14-82
2950 840	19-14-48
	19-27-51
2950 843	19-14-1
2950 844	19-46-29
2950 852	21-30-418
2950 853	21-30-418
2950 883	5-31-12
2950 901	6-52-1
2950 913	6-52-1
2950 914	6-52-1
2950 920	19-48-46
2950 921	6-35-1
2950 923	6-35-1
2950 942	21-30-416
2950 946	21-30-421
2950 947	21-42-23
2950 948	21-42-23
2950 950	21-30-2
2950 956	19-14-37
2950 980	19-14-82
2950 989	19-14-23
2951 014	1-48-573
2951 018	8-28-15
2951 128	19-54-86
2951 157	19-54-86
2951 202	7-03-1
2951 262	9-31-4
2951 267	9-03-29
2951 285	9-50-5
2951 296	8-28-35
2951 304	7-03-1
2951 347	8-36-124
2951 371	14-29-26
2951 393	14-29-15
2951 394	14-29-15
2951 456	14-25-11
2951 640	8-28-36
2951 671	9-23-5
2951 693	9-02-5
2951 694	9-02-5
2951 746	8-28-36
2951 747	19-54-115
2951 757	14-29-7
2951 789	14-29-7
2951 790	14-29-4
2951 794	14-29-24
	14-89-57
2951 834	8-28-36
2951 836	7-06-14
2951 838	7-46-1
2951 852	19-54-115
	25-02-24
2951 868	8-28-36
2951 898	7-03-1
2951 901	19-54-86
2951 906	9-31-4
2951 920	7-03-1
2951 979	9-07-5
2951 984	7-03-1
2953 165	24-25-35
2959 852	22-05-14
2962 003	23-32-31
2962 030-1	2-08-70
2962 032-3	13-64-4
2962 066-7	23-32-115
2962 076	23-32-17
2962 163	11-10-20
2963 017	23-32-29
2963 030-1	23-32-92
2963 038	23-32-48
2963 042-3	23-51-5
2963 044-5	23-51-5
2963 052	23-32-27
2963 054	23-32-27
2963 058-9	23-32-115
2963 078-9	23-32-93
2963 086-7	23-51-5
2963 088-9	23-51-5
2963 098	23-39-48
2963 148-9	23-34-234
2963 154-5	23-34-234
2963 156-7	23-34-234
2963 158-9	23-34-27
2963 160-1	23-34-27
2963 162-3	23-34-27
2963 166-7	23-36-53
2963 174-5	23-34-246
2963 180-1	23-63-33
2963 185	23-64-12
2963 220-1	23-59-35
2963 222-3	23-59-35
2963 228-9	23-63-21
2963 262	23-34-166
2963 263	23-34-166
2963 272	23-64-314
2963 273	23-64-314
2963 274	23-64-314
2963 275	23-64-314
2963 296	23-34-301
2963 297	23-34-301
2963 322-3	23-59-56
2963 324-5	23-59-56
2963 360-1	23-19-177
2963 374	23-19-99
2963 394	23-32-13
2963 409	19-46-34
2963 411	19-46-26
2963 422-3	23-19-82
2963 426-7	23-59-56
2963 666-7	23-34-234
2963 668-9	23-36-53
2963 672-3	23-32-17
2963 702-3	23-34-22
2963 706-7	23-34-246
2963 712-3	23-34-22
2963 754-5	23-32-111
2963 940-1	23-51-16
2964 547	23-61-42
	23-63-16
	23-63-37
	23-63-55
	23-63-136
2964 584-5	23-22-86
2964 590	23-34-193
2964 592	23-64-315
2964 648	23-36-66
2964 706-7	23-05-31
2965 020	22-20-87
2965 425	23-32-48
2965 502	15-06-3
2965 504-5	23-19-82
2965 584-5	23-64-213
2965 588-9	23-64-280
2965 620-1	23-36-53
2965 630-1	23-34-22
2965 638-9	23-63-100
2965 640-1	23-63-100
2965 653	23-64-66
2965 656	23-64-66
2965 657	23-64-314
2965 658	23-64-314
2965 661	23-34-301
2965 668-9	23-40-85
2965 678-9	23-19-177
2965 691	23-19-74
2965 900	23-64-12
2981 970	23-26-76
2981 971	23-26-84
2981 978	23-26-76
2981 979	23-26-84
2981 980	23-26-76
2981 981	23-26-84
2983 010	23-64-277
	23-67-82
2983 014	23-67-200
2983 015	23-67-201
2983 016	23-67-104
2983 017	23-67-80
2983 029	23-67-79
2983 031	23-67-82
2983 034	23-67-82
2983 067	23-67-240
2983 076	23-67-252
2983 077	23-67-262
2983 078	23-67-246
2983 162	1-88-6
2983 164	1-88-6
2983 167	8-11-29
	8-50-354
	8-55-63
2983 168	8-11-29
	8-50-354
2983 169	8-50-354
	8-55-63
2983 216	8-19-88
2983 217	8-16-6
2983 237	8-16-4
	8-16-6
2983 239	8-16-4
	8-16-6
2983 242	1-88-170
2983 246	1-87-404
2983 279	8-56-34
2983 306	1-88-12
2983 312	1-87-404
2983 335	8-16-6
2983 401	8-16-6
2983 402	8-16-6
2983 403	8-16-6
2983 404	8-16-6
2983 405	8-16-6
2983 406	8-16-6
2983 407	8-16-6
2983 408	8-16-6
2983 409	8-16-4
2983 410	8-16-4
2983 411	8-16-4
2983 412	8-16-4
2983 415	8-17-30
2983 508	8-16-4
2983 514	8-16-6
2983 580	8-37-88
2983 581	8-37-88
2983 583	1-87-404
2983 634	8-15-32
2983 649	8-01-17
2983 679	8-57-79
2983 686	8-15-53
2983 727	8-15-35
2983 754	8-16-4
2983 778	8-01-4
2983 875	1-88-120
2983 882	8-16-4
2983 884	8-16-6
2984 034	23-06-21
2984 038	23-06-13
2984 051	8-33-118
2984 084	8-37-142
2984 110	8-37-162
2984 111	8-37-178
2984 119	8-37-275
2984 120	8-37-136
2984 121	8-37-1
2984 126	8-41-41
2984 139	8-37-452
2984 140	23-33-20
2984 178	8-37-275
2984 179	8-37-1
2984 180	8-37-136
2984 181	8-37-316
2984 185	8-37-504
2984 187	8-41-41
2984 207	8-31-8
2984 219	8-37-454
2984 262	23-02-19
2984 283	23-06-15
2984 345	23-02-18
2984 456	23-06-4
2984 457	23-06-4
2984 463	8-35-59
2984 545	23-06-22
2984 548	23-02-38
2984 552	23-02-29
2984 633	8-37-386
2984 695	8-50-64
2984 696	8-50-64
2984 757	19-31-1
2984 819	23-06-4
2984 859	23-02-42
2984 866	8-37-178
2984 951	8-37-14
2984 964	8-37-372
2984 965	8-37-372
2985 029	23-33-42
2985 170	8-37-504
2985 185	8-37-160
2985 198	8-37-141
2985 211	8-37-275
2985 214	8-37-275
2985 217	8-37-136
2985 219	8-37-1
2985 221	8-37-1
2985 223	8-37-136
2985 226	8-37-14
2985 234	8-37-160
2985 239	8-37-112
2985 267	23-06-15
2985 393	8-37-275
2985 396	8-37-1
2985 415	8-19-15
2985 416	8-37-14
2985 423	23-33-20
2985 446	8-37-372
2985 447	8-37-372
2985 448	8-37-372
2985 571	23-33-65
2985 707	8-37-2
2985 732	23-33-10
2985 747	23-06-4
2985 767	23-33-96
2985 768	23-33-96
2985 775	23-33-96
2985 776	23-33-96
2985 793	23-33-135
2985 809	23-33-96
2985 816	23-02-38
2985 833	8-37-178
2985 834	8-37-178
2985 902	23-02-38

PART NUMBER	CODE
2985 909	23-33-96
2985 943	8-37-454
2985 947	8-37-14
2985 949	8-37-454
2985 953	8-37-162
2985 982	23-06-17
2985 985	23-33-135
2985 986	23-33-135
2996 101	16-02-1
2996 109	16-02-1
2996 113	16-02-1
2996 117	16-02-1
2996 121	16-02-1
2996 134	16-02-1
2996 137	16-02-1
2996 142	16-02-1
2996 157	16-02-1
2996 175	16-02-1
2996 201	16-02-1
2996 207	16-02-1
2996 211	16-02-1
2996 232	16-02-1
2996 236	16-02-1
2996 251	16-02-1
2996 255	16-02-1
2996 257	16-02-1
2996 261	16-02-1
2996 268	16-02-1
2996 301	21-30-416
2996 305	21-30-43
2996 316	21-30-416
2996 347	16-02-1
2996 415	21-30-414
2996 432	21-30-418
2996 464	21-30-21
2996 466	21-30-6
2996 467	21-30-6
2996 476	21-30-406
2996 477	21-30-393
2996 482	21-30-418
2996 483	21-30-418
2996 786	21-30-100
2996 798	19-46-8
2996 799	19-46-55
2996 811	19-14-21
2996 858	19-14-121
2996 860	19-14-48
2996 863	19-30-7
2996 872	8-16-4
2996 884	19-30-21
2996 888	19-30-26
2996 889	19-30-26
2996 890	19-30-26
2996 892	8-33-118
2996 897	8-33-119
2998 034-5	15-03-18
2998 036-7	15-03-47
2998 042	15-06-3
2998 046-7	12-04-4
2998 180-1	15-03-83
2998 182-3	15-03-18
2998 212-3	15-03-79
2998 430	7-16-14
2998 544	7-26-15
2998 799	8-34-58
2998 881	15-03-52
2998 888	8-34-45
2998 890	8-34-50
2998 993	9-46-31
2998 994	9-46-31
2998 995	9-46-31
2998 996	9-46-31
2998 997	9-46-31
2998 998	9-46-31
2998 999	9-46-31
2999 001	23-21-74
2999 030	23-49-9
2999 033	23-49-19
2999 041	23-17-1
2999 115	23-21-19
2999 149	15-11-34
2999 368-9	23-15-1
2999 370-1	23-15-3
2999 374-5	23-18-20
2999 380-1	23-39-34
2999 382-3	23-39-34
2999 384-5	23-18-13
2999 464	23-06-28
2999 644	23-14-18
	23-14-79
2999 722	23-47-439
2999 806	23-06-15
2999 811	23-47-432
2999 813	23-14-147
2999 870	23-14-24
2999 950	23-18-27
2999 986	23-19-112
2999 991	23-47-15
2999 995	23-47-26
3004 105	8-53-327
3004 190	8-20-9
3004 644	9-41-4
3004 646	9-41-4
3004 647	9-41-4
3004 648	9-41-4
3004 649	9-41-4
3004 650	9-41-4
3004 664	9-58-1
3004 718	9-43-1
3004 719	9-43-1
3004 794	2-07-1
3004 795	2-07-1
3004 796	2-07-1
3004 797	2-07-1
3004 800	19-54-2
3004 804	19-27-45
3004 805	19-27-45
3004 822	17-16-1
3004 837	19-58-7
3004 862	5-03-3
3004 864	5-05-45
3004 878	16-20-1
3004 944	9-09-2
3004 945	9-09-2
3004 946	9-09-2
3004 947	9-09-2
3004 948	9-09-2
3004 949	9-09-2
3004 959	17-23-3
3004 995	19-19-1
3400 594	17-23-3
3400 836-7	17-11-7
3400 870	17-12-4
3400 882	17-12-4
3400 886	17-12-4
3400 959	17-23-3
3400 968	13-54-15
3402 045	17-30-2
3402 049	17-30-1
3402 345	17-11-3
3402 379	17-11-10
3402 411	17-23-3
3402 415	17-23-3
3402 417	17-23-3
3402 524	2-14-1
3402 540	2-10-66
3402 552	2-08-7
3402 553	2-09-8
3402 568	17-29-20
3402 575	2-14-13
3402 581	2-07-2
3402 583	19-27-31
3402 628-9	2-03-3
3402 640-1	2-03-3
3402 644-5	2-09-6
3402 647	19-27-2
3402 650	2-09-3
3402 660-1	2-14-3
3402 664-5	2-14-3
3402 691	2-14-11
3402 699	2-10-72
3402 702-3	2-08-5
3402 709	2-10-58
3402 714	17-29-11
3402 729	19-27-2
3402 735	19-27-50
3402 739	2-03-3
3402 764	2-10-58
3402 766	2-10-76
3402 776	2-10-10
3402 778-9	2-08-5
3402 783	2-08-7
3402 787	2-09-8
3402 797	19-27-50
3402 799	2-09-3
3402 805	2-07-2
3402 846	19-27-31
3402 847	2-10-76
3402 850-1	2-05-4
3402 863	2-10-58
3402 890	17-29-15
3402 891	17-29-5
3402 894	17-29-11
3402 897	17-29-10
3402 898	17-29-20
3402 904	17-29-18
3402 905	17-29-16
3402 934-5	2-10-6
3402 950	2-10-66
3402 962-3	2-14-3
3402 964-5	2-14-3
3402 978-9	2-05-4
3403 010	8-50-308
3403 830	8-57-10
3404 043	11-06-14
3404 074-5	14-86-43
3404 182	14-86-55
3404 191	14-86-67
3404 262	11-05-1
3404 266	11-01-1
3404 269	11-05-1
3404 298	11-09-4
3404 404	13-34-3
3404 419	12-04-4
3404 435	12-04-4
3404 478	14-86-40
3404 524	14-86-42
3404 534	14-86-40
3404 558	11-01-1
3404 591-2	11-09-37
3404 593-4	11-09-37
3404 595	11-01-16
3404 595-6	11-01-16
3404 598	11-08-5
3404 625	5-56-2
3404 646	14-73-11
	14-89-57
3404 679	14-88-21
3404 681	14-88-21
3404 700	14-86-67
3404 920	11-09-3
3404 943	11-10-42
3404 972	14-88-21
3404 973	14-88-21
3404 975	5-57-2
3410 005	21-04-1
3410 007	21-23-2
3410 008	21-04-2
3410 009	21-09-2
3410 010	21-16-3
3410 011	21-10-16
3410 012	21-10-3
3410 013	21-10-72
3410 018	21-11-1
3410 020	21-15-2
3410 026	21-24-2
3410 030	21-29-25
3410 038	21-39-3
3410 043	21-16-3
3410 048	21-09-5
	21-19-2
3410 053	21-42-23
3410 063	21-42-23
3410 066	21-09-2
3410 067	21-10-16
3410 068	21-10-3
3410 069	21-10-72
3410 072	21-11-1
3410 073	21-15-2
3410 093	21-42-23
3410 102	21-136-49
3410 141	21-39-3
3410 160	6-13-1
3410 162	21-15-33
3410 168	21-42-11
3410 193	21-03-1
3410 194	21-03-1
3410 204	21-34-47
3410 207	21-42-23
3410 210	21-12-1
3410 226	21-133-17
3410 247	21-09-29
3410 312	21-139-64
3410 332	21-137-13
3410 333	21-137-5
3410 362	21-42-23
3410 368	21-42-23
3410 372	21-137-8
3410 374	21-137-8
3410 378	21-139-135
3410 380	21-139-154
3410 394	21-04-1
3410 395	21-09-29
3410 410	21-10-31
3410 411	21-10-16
3410 412	21-15-2
3410 413	21-09-19
3410 428	21-14-15
3410 437	21-137-6
3410 440	21-137-5
3410 441	21-137-13
3410 442	21-137-5
3410 444	21-137-22
3410 445	21-137-5
3410 465	21-05-2
3410 484	21-139-12
3410 490	21-42-23
3410 517	21-139-108
3410 518	21-137-22
3410 535	21-119-15
3410 540	21-133-47
3410 542	21-42-11
3410 543	21-42-11
3410 560	21-139-11
3410 561	21-39-3
3410 564	21-139-19
3410 570	21-133-43
3410 571	21-133-43
3410 572	21-133-65
3410 700	9-69-12
3410 759	21-02-1
	21-42-34
3410 808	21-14-19
3410 810	21-133-7
3410 881	21-139-105
3410 889	21-139-135
3410 898	21-133-20
3410 908	21-137-200
3410 912	21-139-105
3410 916	9-45-1
3410 918	9-46-4
3410 993	6-14-2
3412 816	14-24-1
3415 131	23-38-14
3415 350	23-26-80
3415 640	23-20-29
3415 648	23-20-29
3415 685	23-38-3
3415 686	23-38-14
3415 687	23-38-46
3415 840	23-40-82
3415 844	23-38-1
3416 002	23-20-14
3416 004-5	23-20-14
3416 006-7	23-20-14
3416 027	23-40-82
3416 028	23-40-82
3416 312-3	23-26-47
3416 343	23-20-41
3416 344-5	23-04-205
3416 360	23-63-14
3416 362	23-63-14
3416 654	23-34-38
3416 839	23-02-62
	23-02-145
3416 846	23-02-68
3416 956	23-63-16
3416 997	23-04-246
3417 036	23-64-66
3417 049	23-64-66
3417 078-9	23-19-84
3417 174	23-39-49
3417 250	23-39-24
3417 445	23-39-24
3417 608-9	23-36-66
3417 627	23-64-269
3417 768-9	23-19-84
3417 996	15-03-3
3417 997	15-03-3
3418 261	24-25-15
3418 348	19-54-115
3418 424	9-43-1
3418 425	9-43-1
3418 574	14-02-87
3418 807	14-11-55
3418 810	14-26-6
3418 828	14-11-9
3418 829	14-26-6
3418 836	14-25-11
3418 899	14-11-40
3418 900	14-11-40
3418 933	10-03-7
3418 952	7-03-1
3419 209	23-18-27
	23-54-214
3419 498	1-74-1
3419 802-3	23-23-52
3419 804-5	23-23-52
3419 806	23-23-52
3419 808-9	23-23-52

PART NUMBER	CODE
3419 810-1	23-23-52
3419 818-9	23-23-65
3419 855	23-23-65
3419 988-9	23-23-52
3419 990-1	23-23-52
3420 009	9-09-2
3420 010	9-09-2
3420 011	9-09-2
3420 012	9-09-2
3420 013	9-09-2
3420 014	9-09-2
3420 021	5-58-1
3420 023	21-136-232
3420 027	9-50-1
3420 053	9-20-1
3420 087	21-118-57
	21-129-11
3420 090	3-33-1
3420 091	3-33-1
3420 094	3-33-1
3420 100	21-136-232
3420 118	17-16-1
3420 154	2-07-1
3420 155	2-07-1
3420 332	14-35-1
3420 552-3	8-50-334
3420 554-5	8-50-334
3420 614	1-48-46
3420 750	8-36-114
3420 751	8-36-114
3420 752	8-36-114
3420 758	8-36-114
3420 816	23-67-5
3420 832-3	23-67-86
3420 839	8-57-54
3420 844	14-72-1
3420 851	24-01-46
3420 865	8-53-150
3420 884	8-34-8
3420 893	8-29-17
3420 916	24-25-162
3420 939	14-02-1
3420 943	1-47-2
3420 953	5-03-3
3420 973	5-105-1
3420 974	5-105-1
3431 020	24-24-150
3431 023	1-48-770
3431 043	1-48-70
3431 058	23-67-252
3431 069	1-48-7
	24-28-24
3431 087	1-48-942
3431 092	23-67-260
3431 094	23-67-79
3431 175	23-33-65
3431 285	1-48-770
	24-24-5
3431 297	24-28-318
3431 330	24-24-156
3431 438	8-34-280
3431 457	24-01-65
3431 459	24-01-65
3431 465	23-67-25
3431 466	23-67-25
3431 470	24-28-19
3431 509	23-67-112
3431 510	23-67-106
3431 514	23-67-79
3431 518	23-67-76
3431 553	23-67-76
3431 587	23-67-240
3431 589	23-67-260
3431 590	23-67-240
3431 598	23-67-260
3431 599	23-67-252
3431 635	23-67-76
3431 646	23-67-79
3431 647	23-67-79
3431 663	23-67-79
3431 672	23-67-241
3431 680	23-67-86
3431 680-1	23-67-86
3431 682	23-67-86
3431 684	23-67-79
3431 685	23-67-79
3431 687	23-67-76
3431 688	23-67-79
3431 691	23-67-240
3431 696	23-67-80
3431 703	23-67-267
3431 713	23-67-112
3431 724	23-67-241
3431 727	23-67-5
3431 730	23-67-98
3431 732	23-67-112
3431 735	23-67-10
3431 741	23-67-76
3431 752	23-67-76
3431 754	23-67-79
3431 757	23-67-76
3431 759	23-67-79
3431 761	23-67-206
3431 762	23-67-79
3431 780	23-67-98
3431 781	23-67-25
3431 783	23-67-25
3431 788-9	23-67-5
3431 790	23-67-98
3431 855	23-67-246
3431 858	23-67-246
3431 864	23-67-5
3431 865	23-67-246
3431 866	23-67-260
3431 867	23-67-5
3431 868	23-67-246
3431 869	23-67-260
3431 870-1	23-67-248
3431 905	23-67-98
3431 906	23-67-98
3431 919	23-67-240
3431 926	23-67-262
3431 939	23-67-262
3431 950	23-67-5
3431 954-5	23-67-246
3431 965	23-67-240
3431 968	23-67-240
3431 969	23-67-252
3431 975	23-67-242
3432 320	3-22-28
3432 321	3-22-28
3432 322	3-22-28
3432 323	3-22-28
3432 324	3-22-28
3432 325	3-22-28
3432 326	3-22-28
3432 327	3-22-28
3432 328	3-22-28
3432 329	3-22-28
3432 330	3-22-28
3432 331	3-22-28
3432 332	3-22-28
3432 333	3-22-28
3432 334	3-22-28
3432 335	3-22-28
3432 336	3-22-28
3432 337	3-22-28
3432 338	3-22-28
3432 435	3-04-6
3432 485	16-20-1
3432 487	16-20-1
3432 495	16-20-1
3432 598	3-03-2
3432 691	3-35-14
3432 695	3-03-8
3432 698	22-05-14
3432 780	3-32-1
3432 786	3-32-1
3432 830	3-32-1
3438 150	8-28-74
3438 159	8-29-42
3438 413	8-36-114
3438 630	8-28-74
3438 709	8-16-4
3438 721	8-29-135
3438 727	8-29-135
3438 729	8-16-6
3438 754	8-29-98
3438 768	8-29-98
3439 098	23-54-31
3439 101	23-54-88
3439 115	23-64-199
3439 154	4-09-1
3439 163	23-64-4
3439 311	23-64-276
3439 317	23-64-14
3439 404-5	23-66-77
3439 416-7	23-66-65
3439 428-9	23-34-117
3439 431	23-34-116
3439 432	23-23-65
3439 433	23-31-33
3439 435	23-31-137
3439 452-3	23-63-55
3439 472	23-66-135
3439 473	23-66-135
3439 480	23-66-135
3439 481	23-66-135
3439 488	23-22-145
3439 489	23-22-145
3439 508	23-15-13
3439 526-7	23-34-234
3439 528	23-34-27
3439 530	23-34-27
3439 534-5	23-34-27
3439 536-7	23-36-53
3439 538-9	23-36-53
3439 546-7	23-36-53
3439 550-1	23-36-53
3439 570	23-34-5
3439 709	23-15-13
3439 734-5	23-63-33
3439 736-7	23-63-33
3439 900-1	23-64-308
3439 902-3	23-64-308
3440 000-1	23-34-120
3440 004-5	23-34-120
3440 038	23-42-23
3440 042-3	23-63-33
3440 044-5	23-63-33
3440 070-1	23-64-308
3440 072-3	23-64-308
3440 074-5	23-64-308
3440 076-7	23-64-308
3440 088	23-34-301
3440 092-3	23-40-85
3440 094-5	23-40-85
3440 098-9	23-40-85
3440 100-1	23-40-85
3440 126	23-42-32
3440 129	23-34-5
3440 134	22-20-87
3440 148-9	23-36-118
3440 180	23-36-66
3440 204-5	23-64-311
3440 206-7	23-64-311
3440 220-1	23-22-53
3440 246-7	23-09-67
3440 251	23-54-143
3440 266	23-54-150
3440 270	23-54-103
3440 514-5	23-34-242
3440 525	23-31-137
3440 530	23-31-137
3440 531	23-31-137
3440 558-9	23-63-14
3440 560-1	23-31-137
3440 566	23-32-48
3440 623	23-64-17
3440 790	23-34-110
3440 791	23-66-239
3440 798	23-64-266
3440 824	23-32-24
3440 830	23-64-4
3440 834-5	23-34-191
3440 865	15-03-5
	23-61-42
3440 866	23-34-5
3440 884	23-36-125
3440 885	23-36-125
3440 894	23-32-48
3440 897	23-34-234
3440 901	23-34-229
3440 902	23-04-241
3440 903	23-04-241
3440 909	23-04-249
3440 931	23-34-16
3440 987	23-34-253
3440 988	23-34-253
3441 036	1-48-559
3441 058	1-48-559
3441 105	24-28-326
3441 172	24-28-22
3441 180	24-01-24
3441 182	1-48-141
3441 208	24-29-1
3441 323	24-29-1
3441 324	24-29-1
3441 358	24-28-73
3441 362	24-28-78
3441 382	24-28-334
3441 388	24-28-73
3441 425	1-48-7
	24-28-318
3441 426	1-47-2
3441 446	24-28-319
3441 481	1-48-606
3441 482	1-48-608
3441 499	24-01-225
3441 500	24-01-225
3441 513	24-28-326
3441 553	24-24-30
3441 584	1-48-90
3441 585	1-48-90
3441 609	1-48-7
	24-01-36
3441 630	1-48-362
3441 631	1-48-365
3441 635	1-48-356
3441 636	1-48-357
3441 637	1-48-258
3441 639	1-48-707
3441 698	24-28-73
3441 734	24-28-318
3441 740	24-25-78
3441 743	24-28-318
	25-06-40
3441 786	24-28-78
3441 822	1-48-832
3441 872	24-28-220
3441 883	24-01-36
3441 934	24-27-5
3441 935	24-24-44
3441 989	24-01-18
3441 993	1-48-942
3442 118	15-03-5
3442 206	12-02-5
3442 310-1	7-16-25
3442 320	15-11-58
3442 358	8-34-28
3442 364	12-02-5
3442 995	15-03-60
3443 120-1	8-34-176
3443 124-5	8-34-176
3443 174-5	8-34-1
3443 176-7	8-34-1
3443 205	15-25-2
3443 220	7-16-14
3443 230	15-03-60
3443 306-7	7-26-30
3443 310-1	7-26-30
3443 365	15-06-16
3443 367	15-06-16
3443 369	15-06-16
3443 371	15-06-16
3443 373	15-06-16
3443 516	15-06-3
3443 548	7-14-13
3443 645	15-09-4
3443 877	7-26-37
3443 894	15-09-4
3444 056-7	23-22-86
3444 060	23-22-86
3444 064-5	23-22-86
3444 072-3	23-22-86
3444 086-7	23-51-43
3444 119	23-32-17
3444 206-7	23-64-68
3444 208-9	23-34-27
3444 210	23-59-35
3444 222-3	23-63-21
3444 275	23-38-27
3444 277	23-38-27
3444 611	17-19-20
3444 616-7	23-36-66
3444 688-9	23-19-82
3444 718-9	23-64-12
3444 786-7	23-23-65
3444 796-7	23-23-65
3444 809	23-32-15
3444 927	7-16-61
3445 001	23-32-24
3445 018-9	23-32-93
3445 022	23-32-17
3445 034-5	23-32-112
3445 040-1	23-32-93
3445 052-3	23-34-234
3445 058-9	23-34-27
3445 060-1	23-36-53
3445 074	23-19-82
3445 075	23-19-82
3445 078-9	23-40-96
3445 086	23-34-166
3445 101	23-34-301
3445 107	23-64-66
3445 126	23-64-314
3445 127	23-64-314
3445 134-5	23-19-177
3445 149	23-64-282
3445 164	23-64-293

PART NUMBER	CODE
3445 232-3	23-36-29
3445 312-3	23-32-17
3445 428-9	23-51-43
3445 430	23-51-19
3445 432-3	23-51-19
3445 483	13-66-105
3445 501	23-64-4
3445 524-5	23-32-49
3445 528-9	23-34-242
3445 618-9	23-36-53
3445 630-1	23-64-281
3445 684-5	23-59-35
3445 688-9	23-59-35
3445 776	23-34-166
3445 777	23-34-166
3445 778	23-34-166
3445 782	23-34-328
3445 827	23-64-314
3445 828	23-64-314
3445 833	23-34-301
3445 838	23-26-41
3445 838-9	23-26-41
3445 842-3	23-40-85
3445 854	23-40-86
3445 882-3	23-19-177
3446 048	23-34-179
3446 198-9	23-40-85
3446 242-3	23-32-115
3446 360-1	23-34-229
3446 362-3	23-34-229
3446 384	23-34-229
3446 386-7	23-64-300
3446 416-7	23-51-16
3446 418	23-51-19
3446 527	23-63-175
3446 530	23-63-175
3446 594-5	23-22-86
3446 646	23-63-114
3446 882-3	23-19-82
3446 959	21-30-416
3447 740	23-45-29
3447 872	23-45-66
3447 974-5	23-45-55
3447 978	23-45-204
3447 979	23-47-439
3447 991	23-45-194
3447 992	23-45-194
3454 170-1	23-14-27
3454 172-3	23-18-13
3454 220	23-54-217
3454 237	23-39-2
3454 304-5	23-14-147
3454 327	23-17-1
3454 334	23-14-147
3454 335	23-14-147
3454 363	23-54-88
3454 386-7	23-47-6
3454 394-5	23-14-10
3454 450-1	23-18-11
3454 474	23-54-6
3454 480	23-54-6
3454 484	23-08-60
3454 485	23-08-60
3454 492	23-54-6
3454 504-5	23-15-1
3454 506-7	23-15-3
3454 510	23-15-1
3454 555	23-47-15
3454 572	23-14-147
3454 578-9	23-49-9
3454 584-5	23-49-9
3454 813	23-10-18
	23-15-14
3454 842-3	23-14-27
3454 987	23-17-38
3455 132	5-01-2
3455 133	5-01-2
3461 001	5-100-26
3461 005	5-100-26
3461 008	5-100-197
3461 010	5-100-20
3461 012	22-01-41
3461 041	22-01-51
3461 042	22-01-48
3461 046	5-39-20
3461 047	5-39-24
3461 079	22-01-46
3461 176	5-39-3
3461 201	5-39-29
3461 202	5-39-29
3461 205	5-40-4
3461 212	5-31-12
	5-39-18
3461 262	5-100-189
3461 268	5-113-21
3461 270	5-100-2
3461 279	5-101-1
3461 280	5-101-1
3461 281	5-100-194
3461 282	5-100-194
3461 290	5-100-199
3461 291	5-113-17
3461 304	5-110-18
3461 311	5-110-18
3461 323	5-110-18
3461 324	5-110-18
3461 410	22-01-42
3461 436	5-100-20
3461 458	22-01-43
3461 660	5-20-20
3461 662	5-20-10
3461 663	5-20-10
3461 664	5-20-10
3461 665	5-20-9
3461 698-9	4-26-3
3461 733	5-62-1
3461 734	5-62-1
3461 736	5-62-1
3461 737	5-62-1
3461 738	5-62-1
3461 741	5-62-1
3461 894	5-05-8
3462 049	10-03-4
3462 094	10-01-21
3462 149	7-02-1
3462 151	7-14-5
3462 152	7-14-4
3462 155	7-14-5
3462 156	7-14-4
3462 163	7-14-4
3462 166	7-14-4
3462 167	7-14-5
3462 170	7-14-5
3462 171	7-14-4
3462 176	7-14-4
3462 177	7-14-4
3462 185	7-02-1
3462 186	7-02-1
3462 188	7-14-5
3462 189	7-14-5
3462 190	7-02-1
3462 192	7-14-4
3462 194	7-14-5
3462 195	7-14-4
3462 196	7-14-4
3462 197	7-14-5
3462 367	14-02-34
3462 371	14-02-34
3462 418	19-54-116
3462 514	9-59-13
3462 601	9-01-24
3462 605	9-01-24
3462 607	9-01-24
3462 688	7-14-9
3462 725	14-25-5
3462 741	14-26-6
3462 766	14-26-6
3462 770	14-26-6
3462 779	14-30-1
3462 860	19-54-115
3462 871	9-02-17
3462 911	7-03-1
3462 974	7-03-1
3464 215	8-47-76
3464 216-7	8-47-67
3464 244	8-47-68
3464 976	13-72-2
3464 978	13-72-2
3466 005	23-05-25
3466 007	23-05-25
3466 008	23-05-25
3466 014	23-05-10
3466 018	23-05-10
3466 020	23-05-10
3466 023	23-05-27
3466 024	23-05-36
3466 025	23-05-36
3466 029	23-05-36
3466 061	11-10-42
3466 102-3	11-09-3
3466 113	11-09-37
3466 123	11-09-37
3466 151	14-86-42
3466 155	5-107-34
3466 158	14-86-42
3466 191	11-10-3
3466 199	11-02-13
3466 230	11-05-12
3466 234	11-02-4
3466 235	11-02-14
3466 267	11-05-1
3466 270	11-05-1
3466 273	11-05-1
3466 276	11-05-1
3466 307	14-86-42
3466 384	5-56-2
3466 385	14-86-43
3466 386	5-56-2
3466 396	5-57-2
3466 397	5-57-2
3466 403	14-73-11
	14-89-57
3466 418	14-73-11
	14-86-57
	14-89-57
3466 431	14-88-21
3466 462	23-32-17
3466 470	6-52-10
3466 471	23-32-17
3466 584	23-05-10
3466 587	23-05-10
3466 588	23-05-25
3466 613	11-08-24
	11-09-4
3466 649	11-09-4
3466 652	11-09-4
3466 701	23-32-122
3466 711	23-32-121
3466 721	23-32-120
3466 723	23-32-122
3466 782	5-107-36
3466 798	5-62-1
3466 957	11-01-1
3466 958	11-01-1
3466 965	11-01-1
3466 966	11-01-1
3466 984	11-10-3
3466 987	11-09-4
3467 018	21-30-13
3467 019	21-30-13
3467 022	5-29-1
3467 023	5-29-1
3467 024	6-43-1
3467 055	21-30-10
3467 059	21-30-61
3467 078	21-30-416
3467 082	6-38-1
3467 116	21-30-416
3467 151	16-02-1
3467 155	16-02-1
3467 176	21-30-24
3467 178	19-14-123
3467 181	8-33-90
3467 186	19-30-10
3467 203	6-46-1
3467 235	6-24-1
3467 245	21-30-38
3467 367	8-35-67
3467 376	19-14-93
3467 378	19-14-102
3467 381	19-14-48
3467 382	19-14-92
3467 383	19-46-58
3467 384	19-46-64
3467 385	8-50-84
3467 386	19-46-61
3467 388	19-14-84
3467 389	19-14-84
3467 390	19-14-85
3467 391	19-14-85
3467 392	19-14-85
3467 394	19-46-55
3467 396	19-14-22
3467 402	8-50-84
3467 415	19-46-50
3467 418	19-14-11
3467 419	19-14-118
3467 423	19-14-89
3467 424	19-14-89
3467 431	8-50-84
3467 432	19-14-108
3467 485	19-30-26
3467 486	19-30-26
3467 500	19-30-23
3467 530	5-28-8
	6-39-2
3467 535	6-35-15
3467 562	16-02-1
3467 574	16-02-1
3467 608	19-48-45
3467 609	21-30-418
3467 610	21-30-418
3467 611	21-30-418
3467 627	21-30-407
3467 641	21-30-2
3467 647	21-30-414
3467 648	21-30-355
3467 665	19-48-16
	21-30-428
3467 667	19-48-16
3467 668	21-30-416
3467 675	21-30-2
3467 678	21-30-2
3467 683	21-30-6
3467 685	21-30-416
3467 687	21-30-2
3467 689	21-42-23
3467 699	21-30-416
3467 700	21-30-416
3467 717	21-30-416
3467 721	21-30-79
3467 727	21-30-418
3467 732	21-30-2
3467 733	21-30-2
3467 735	19-48-46
3467 736	21-30-2
3467 740	21-30-2
3467 743	21-30-407
3467 744	21-30-407
3467 745	21-30-406
3467 746	21-30-406
3467 755	21-30-413
3467 758	21-30-413
3467 764	21-30-413
3467 766	21-30-413
3467 770	21-30-413
3467 774	19-48-45
3467 776	19-48-46
3467 777	19-48-1
3467 778	19-48-1
3467 784	19-48-1
3467 785	19-48-1
3467 786	19-48-45
3467 790	19-48-16
3467 791	19-48-49
3467 792	21-30-418
3467 793	21-30-407
3467 794	21-30-407
3467 800	19-48-50
3467 814	8-50-84
3467 815	19-14-21
3467 817	19-15-4
3467 822	19-14-80
3467 823	19-14-92
3467 836	19-30-21
3467 903	4-23-37
3467 905	4-23-1
3467 906	4-23-1
3467 918	4-23-37
3467 939	4-23-3
3467 944	4-23-1
3467 945	4-23-1
3467 951	5-31-15
3467 952	5-31-15
3478 600	8-50-338
3481 210	14-45-25
3481 635	14-41-3
3481 644	14-45-12
3481 771	23-23-65
3481 772-3	23-23-65
3482 144	23-66-65
3482 145	23-66-65
3482 256	14-88-32
3482 284	23-54-3
3482 297	23-54-3
3482 434	23-48-68
3482 435	23-48-188
3482 528	23-36-53
3482 546	23-64-66
3482 547	23-34-293
3482 687	23-19-8
3482 802	23-19-8
3482 960-1	23-34-120
3482 962-3	23-34-120
3484 412	24-25-114
3484 438	24-25-107
3484 440	24-25-107
3488 040	8-53-312
3488 055	23-67-161
3488 118	8-53-296

PART NUMBER	CODE
3488 120	8-53-296
3488 122	8-53-271
3488 169	8-40-5
3488 197	8-05-28
3488 209	1-87-25
3488 211	1-87-2
3488 265	23-67-194
3488 267	8-53-296
3488 270	8-56-2
3488 297	23-67-160
3488 322	1-87-22
3488 323	1-87-180
3488 325	1-87-58
3488 379	8-53-294
3488 381	8-53-294
3488 384	8-53-289
3488 392	8-53-294
3488 423	1-87-2
3488 424	1-87-2
3488 431	8-35-59
3488 436	8-13-1
3488 449	8-31-10
3488 479	8-40-5
3488 490	8-58-79
3488 492	8-05-28
3488 497	8-37-75
3488 516	23-54-167
3488 520	1-47-7
3488 524	23-54-170
3488 526	1-47-9
3488 528	23-54-170
3488 535	21-30-15
3488 555	21-30-21
3488 556	21-30-21
3488 574	8-05-14
3488 575	8-05-20
3488 609	8-53-327
3488 617	8-53-327
3488 619	23-67-194
3488 621	8-53-296
3488 646	8-32-2
3488 654	8-37-75
3488 663	21-30-28
3488 673	8-37-75
3488 691	8-53-312
3488 693	23-67-161
3488 694	8-42-2
3488 754	24-28-49
3488 783	8-53-289
3488 784	8-53-289
3488 787	8-13-1
3488 805	8-50-82
3488 815	1-47-15
3488 816	8-42-29
3488 819	24-24-140
3488 820	24-24-5
3488 827	23-19-94
3488 837	8-37-75
3488 839	23-67-160
3488 840	23-67-194
3488 842	8-05-8
3488 844	8-05-28
3488 845	8-05-10
3488 849	8-05-6
3488 868	8-62-4
3488 878	8-62-4
3488 886	8-62-4
3488 887	8-00-0
	8-62-4
3488 888	8-62-4
3488 889	8-00-0
	8-62-8
3488 892	8-62-4
3488 901	8-37-63
3488 903	8-37-64
3488 919	23-41-170
3488 920	23-41-184
3488 923	8-19-83
3488 924	1-48-10
3488 925	8-19-83
3488 926	8-19-83
3488 927	8-37-15
3488 930	8-37-15
3488 934	8-05-2
3488 937	8-05-28
3488 940	8-05-28
3488 943	23-54-167
3488 954	8-05-8
3488 958	8-05-23
3488 962	8-11-12
3488 964	8-12-2
3488 971	8-05-2
3488 974	8-05-20
3488 987	8-05-28
3488 988	8-42-2
3491 296	17-15-1
3499 028-9	23-32-93
3499 042	23-34-17
3499 122-3	23-34-257
3499 124-5	23-34-257
3499 182	23-26-80
3499 214-5	23-34-248
3499 252	23-64-4
3499 270	23-11-29
3499 272-3	23-64-254
3499 274-5	23-64-254
3499 282	23-39-24
3499 380	23-34-5
3499 388-9	23-48-109
3499 396-7	23-48-99
3499 400-1	23-48-99
3499 454	23-34-234
3499 455	23-34-15
3499 457	23-34-15
3499 546-7	23-63-55
3499 600-1	23-40-96
3499 626	14-87-2
3499 754	23-40-157
3499 785	23-64-4
3499 817	23-22-78
3499 820-1	23-36-125
3499 822-3	23-36-58
3499 855	23-48-90
3499 866-7	23-22-86
3499 868-9	23-22-86
3499 877	23-32-48
3499 878	22-20-96
3499 905	23-34-17
3499 906	23-40-86
3499 913	23-54-118
3499 928-9	23-34-245
3499 936-7	23-32-107
3499 951	23-34-88
3499 957	23-31-33
	23-31-137
3499 970-1	23-34-245
3499 986	23-34-346
3500 272-3	23-64-311
3500 274-5	23-64-311
3500 280-1	23-64-311
3500 282-3	23-64-311
3500 286-7	23-63-104
3500 288-9	23-32-107
3500 310-1	23-63-55
3500 312-3	23-63-55
3500 324	23-34-17
3500 360	23-34-346
3500 366	23-32-106
3500 390	23-32-51
3500 392	23-32-51
3500 402	23-04-249
3500 477	8-55-23
3500 481	23-63-112
3500 525	23-34-117
3500 574-5	23-40-92
3500 582-3	23-40-92
3500 590-1	23-40-85
3500 592-3	23-40-85
3500 602-3	12-06-3
3500 661	23-34-255
3500 675	23-34-88
3500 676	23-34-88
3500 758-9	23-61-117
3500 760-1	23-61-117
3500 799	23-34-88
3500 806-7	23-34-257
3500 816-7	23-66-77
3500 818	23-32-51
3500 883	23-64-1
	23-66-75
3500 938	23-34-16
3500 950-1	23-64-213
3500 964	23-34-234
3500 975	23-66-75
3500 976	23-66-75
3500 986	23-63-100
3500 994	23-34-234
3500 995	23-34-234
3500 HX9	23-38-1
3501 020	1-87-2
3501 132	1-87-1
3501 154	1-88-12
3501 269	1-87-61
3501 273	1-87-180
3501 274	1-87-36
3501 277	1-87-2
3501 280	1-87-2
3501 281	1-87-2
3501 282	1-87-2
3501 287	1-88-120
3501 293	1-88-6
3501 294	1-88-12
3501 300	1-87-180
3501 301	1-87-180
3501 304-5	1-87-25
3501 307	1-88-159
3501 308	1-88-160
3501 309	1-88-165
3501 310	1-88-160
3501 311	1-88-117
3501 312	1-88-126
3501 314	1-88-162
3501 317	1-87-181
3501 320	1-87-34
3501 321	1-88-123
3501 328	1-87-1
3501 331	1-88-6
3501 332	1-87-55
3501 334	1-88-1
3501 335	1-88-1
3501 336	1-88-1
3501 337	1-87-1
3501 338	1-87-1
3501 339	1-87-1
3501 340	1-87-1
3501 341	1-87-1
3501 349	1-87-2
3501 357	1-88-126
3501 358	1-87-2
3501 359	1-87-2
3501 362	1-87-73
3501 363	1-87-2
3501 371	8-37-145
3501 374	8-37-145
3501 442	23-33-135
3501 444	23-33-135
3501 501	1-87-1
3501 503	1-87-1
3501 582	1-87-1
3501 583	1-87-1
3501 584	1-87-1
3501 598	8-35-25
3501 602	23-33-135
3501 604	23-33-135
3501 606	23-33-135
3501 609	1-48-70
	23-33-135
3501 611	23-33-135
3501 613	1-87-2
3501 626	1-87-1
3501 627	1-87-1
3502 005	23-33-135
	24-28-78
3502 007	23-33-135
	24-28-78
3502 009	1-48-141
	23-33-135
3502 010	1-48-141
	23-33-135
3502 015	24-26-20
3502 051	1-48-141
3502 069	1-47-17
3502 080	1-48-90
3502 082	1-48-362
3502 097	1-47-1
3502 098	1-47-1
3502 099	1-47-1
3502 123	24-01-87
3502 183	24-29-1
3502 186	24-01-1
3502 211	24-01-18
3502 237	1-47-6
3502 240	1-47-6
	1-47-4
3502 243	1-47-4
3502 245	24-01-18
3502 253	1-48-375
3502 266	1-48-10
	24-24-167
3502 286	1-48-1
3502 287	1-48-707
3502 293	1-48-156
3502 297	1-48-365
3502 299	1-48-356
3502 303	1-48-1
3502 305	1-48-125
3502 308	1-48-365
3502 314	1-48-365
3502 316	1-48-356
3502 318	1-48-156
3502 339	1-48-126
3502 340	1-48-1
3502 346	24-01-36
3502 348	1-48-365
3502 365	1-48-179
	24-24-161
3502 372	1-48-356
3502 379	1-48-35
3502 414	24-24-150
3502 444	24-24-161
3502 445	24-24-161
3502 450	24-24-156
3502 460	24-28-319
3502 461	24-28-342
3502 462	24-01-26
3502 469	24-28-326
3502 470	24-01-18
3502 488	24-28-90
3502 496	24-28-335
3502 499	24-28-334
3502 501	24-28-92
3502 507	24-28-335
3502 512	24-29-1
3502 515	24-28-34
3502 518	24-29-1
3502 520	24-29-1
3502 524	24-28-302
3502 536	1-48-7
3502 537	1-48-7
3502 548	24-27-5
3502 550	24-26-35
3502 563	1-48-941
3502 565	1-48-941
	24-01-65
3502 567	24-26-32
3502 570	24-28-203
3502 593	1-48-125
3502 596	24-28-207
3502 614	24-28-334
3502 620	24-28-19
3502 624	24-01-1
3502 630	24-01-36
3502 655	24-28-18
3502 677	1-48-151
3502 678	1-48-770
	24-24-5
3502 685	1-48-770
	24-24-5
3502 686	1-48-770
3502 695	1-48-559
	1-48-555
3502 710	1-48-707
3502 711	1-48-707
3502 721	24-01-36
3502 734	1-47-14
3502 736	24-24-67
3502 737	24-26-35
3502 741	24-26-24
3502 742	1-48-7
3502 746	24-25-232
3502 748	1-47-25
3502 775	24-24-161
3502 776	24-24-161
3502 777	1-48-4
3502 783	1-48-4
3502 808	24-28-300
3502 812	24-25-20
3502 820	1-47-1
3502 821	1-47-1
3502 899	24-28-78
3502 900	24-28-78
3502 906	24-28-78
3502 985	1-48-383
3503 010	24-28-113
3503 013	1-48-90
	24-28-96
3503 028	24-29-1
3503 032	1-48-126
	24-01-70
3503 036	1-48-126
	24-28-211
3503 037	1-48-46
	24-28-210
3503 040	1-48-606
3503 042	1-48-707
3503 051	24-01-70
3503 052	24-01-70
3503 053	1-48-90
3503 054	24-01-19
3503 055	24-01-26

PART NUMBER	CODE
3503 056	24-01-18
3503 061	24-28-220
3503 062	24-28-225
3503 115	24-28-335
3503 120	1-48-362
	24-01-70
3503 121	24-29-1
3503 123	24-29-1
3503 129	24-01-70
3503 130	24-28-334
3503 135	24-28-73
3503 147	24-28-84
3503 150	24-28-84
3503 153	24-28-73
3503 165	24-28-78
3503 178	24-28-78
3503 179	24-24-140
3503 180	24-28-78
3503 189	24-28-300
3503 191	24-29-1
3503 195	24-28-113
3503 202	24-01-18
3503 206	24-24-43
3503 208	24-28-335
3503 216	24-24-128
3503 219	24-28-117
3503 225	24-24-53
3503 229	24-28-73
3503 232	24-28-78
3503 243	24-27-5
3503 244	24-26-35
3503 253	24-28-78
3503 256	24-28-78
3503 261	24-28-25
3503 263	24-28-220
3503 286	24-24-150
3503 302	1-48-125
3503 304	1-48-4
3503 305	24-24-161
3503 306	24-24-161
3503 307	1-48-374
3503 315	1-48-942
	24-24-156
3503 327	1-48-770
3503 333	24-24-19
3503 335	1-47-3
3503 337	23-33-132
3503 340	1-48-125
3503 342	1-48-832
3503 343	1-48-125
3503 365	1-48-90
3503 366	1-48-156
3503 370	1-48-258
3503 372	1-48-707
3503 373-4	23-33-65
3503 378	1-48-35
3503 379	1-48-126
3503 381	1-48-7
3503 383	1-48-719
3503 392	1-48-707
3503 408	1-48-88
3503 436	23-34-119
3503 442	1-48-707
3503 443	1-48-608
3503 445	24-28-92
3503 447	1-48-854
3503 473	24-24-67
	24-28-203
3503 475	24-24-5
3503 477	23-34-116
3503 482	24-24-67
	24-28-203
3503 498	24-25-20
3503 524	24-24-161
3503 526	1-48-125
	24-28-128
3503 527	24-28-128
3503 529	24-28-326
3503 530	24-28-326
3503 534	24-28-73
3503 544	24-24-5
3503 546	24-27-5
3503 595	1-48-126
	24-01-70
3503 596	1-48-126
	24-01-70
3503 712	24-28-211
3503 713	24-24-128
3503 761	24-27-7
3503 778	24-01-36
3503 784	24-01-36
3504 078-9	23-64-281
3504 148-9	23-64-299
3504 166	23-34-179
3504 198	23-32-93
3504 200-1	23-23-65
3504 312-3	23-34-176
3504 318-9	23-34-242
3504 324-5	23-63-33
3504 582-3	23-32-17
3504 584-5	23-32-17
3504 640	23-32-17
3505 024-5	23-23-65
3505 064	23-64-282
3505 339	23-64-288
3505 470	23-34-179
3505 492	23-34-328
3505 494-5	23-34-229
3505 509	23-34-231
3505 728-9	23-64-276
3506 031	23-64-282
3506 065	14-88-36
3506 066	23-64-12
3506 210-1	23-19-82
3506 271	15-06-16
3506 272	15-06-16
3506 273	15-06-16
3506 274	15-06-16
3506 275	15-06-16
3506 276	15-06-16
3506 277	15-06-16
3506 278-9	23-19-82
3506 419	23-32-15
3506 486	23-64-17
3507 172	3-32-1
3507 259	5-13-9
3507 273	16-20-7
3507 448	3-03-1
3507 449	3-03-1
3507 457	3-19-1
3507 458	3-19-1
3507 572	3-03-8
3507 575	3-22-26
3507 588	3-06-5
3507 605	3-06-5
3507 606	3-07-1
3507 623	3-03-1
3507 625	3-03-1
3507 629	3-02-1
3507 633	3-04-6
3507 634	3-03-1
3507 639	3-06-6
3507 641	3-07-2
3507 678	3-22-26
3507 686	3-32-1
3507 690	3-03-29
3507 691	3-03-30
3507 702	3-02-1
3507 722	3-11-14
3507 723	3-11-13
3507 772	3-19-1
3507 876	3-11-13
3507 879	3-03-29
3507 883	3-32-1
3507 899	3-02-1
3507 906	3-03-1
3507 907	3-03-1
3507 940	3-03-1
3507 941	3-03-1
3508 038	23-38-15
3508 046	23-54-6
3508 059	23-54-1
3508 069	23-54-218
3508 084	23-54-1
3508 094	23-54-217
3508 098	23-54-216
3508 100	23-54-216
3508 103	23-54-187
3508 121	23-39-2
3508 206-7	23-41-106
3508 245	23-54-5
3508 320	15-11-34
3508 322	15-11-34
3508 326	15-11-34
3508 508	15-03-96
	15-11-89
3508 523	23-21-14
3508 536-7	23-18-37
3508 631	23-54-31
3508 660	23-54-140
3508 667	23-54-56
3508 671	23-54-189
3508 673	23-54-144
3508 675	23-54-92
3508 679	23-54-136
3508 718	23-18-20
3508 720	23-18-20
3508 778-9	23-18-26
3508 782-3	23-18-11
3508 798	23-54-222
3508 801	23-54-6
3508 810	23-54-214
3508 813	23-54-216
3508 886	23-06-15
3508 887	23-06-28
3508 916-7	23-14-27
3508 975	23-54-31
3509 056	23-14-82
3509 221	23-04-205
3509 253	23-26-80
3509 300-1	23-22-53
3509 765	23-20-29
3509 766	23-20-29
3509 860	23-14-15
3509 898	23-14-32
3509 922	23-04-245
3509 966	23-04-205
3509 973	23-04-245
3510 447	23-18-54
3510 465	23-14-15
3510 794	23-26-80
3510 863	23-26-80
3510 868	23-02-2
3512 025	7-03-1
3512 076	9-48-6
3512 095	9-39-6
3512 096	9-39-6
3512 097	9-39-6
3512 098	9-39-6
3512 498	8-28-15
3512 553	8-28-15
3512 589	9-15-1
3512 635	9-15-1
3512 639	9-15-1
3512 669	25-06-1
3512 724	8-36-4
3512 778	10-01-62
3512 907	9-15-1
3513 007	1-88-6
3513 034	1-88-6
3513 037	1-88-6
3513 084	8-00-0
3513 085	8-00-0
3513 091	8-00-0
3513 099	1-87-404
3513 150	8-16-6
3513 154	8-16-6
3513 155	8-16-6
3513 156	8-16-6
3513 162	8-56-34
3513 189	8-19-10
3513 206	8-00-0
3513 283	8-37-7
3513 345	8-16-6
3513 346	8-16-6
3513 347	8-16-6
3513 348	8-16-6
3513 350	8-16-6
3513 377	23-41-55
3513 477	8-16-6
3513 482	8-16-4
3513 500	23-41-55
3513 501	23-41-55
3513 507	8-16-6
3513 543	8-16-4
3513 544	8-16-4
3513 545	8-16-6
3513 550	8-16-6
3513 555	1-87-404
3513 572	8-15-53
3513 586	8-16-4
3513 595	23-54-178
3513 600	8-11-8
3513 613	8-16-4
3513 632	8-16-6
3513 633	23-41-55
3513 637	8-16-4
3513 655	8-15-17
3513 664	8-16-6
3513 665	8-16-6
3513 686	8-14-3
	8-57-79
3513 696	8-16-6
3513 738	8-00-0
3513 745	1-88-159
3513 750	8-35-65
3513 755	8-16-6
3513 756	8-16-4
3514 151	9-09-2
3514 152	9-09-2
3514 153	9-09-2
3514 154	9-09-2
3514 155	9-09-2
3514 156	9-09-2
3514 168	14-29-53
3514 181	7-41-4
3514 182	9-20-1
3514 187	9-50-1
3514 257	8-52-86
3514 272-3	8-50-334
3514 398	8-37-162
3514 427	8-53-270
3514 428	23-54-167
3514 431	8-52-42
3514 432	8-52-42
3514 447	14-72-1
3514 730	14-30-8
3514 796	14-35-6
3514 866	9-20-1
3514 995	19-15-1
3514 996	19-15-1
3515 017	21-42-11
3515 023	21-14-19
3515 047	21-139-101
3515 048	21-139-101
3515 057	21-42-23
3515 058	21-42-23
3515 062	21-139-68
3515 077	21-133-62
3515 079	21-137-205
3515 084	21-136-15
3515 085	21-138-15
3515 110	21-138-15
3515 111	21-137-22
3515 112	21-137-22
3515 114	21-137-205
3515 116	21-136-20
3515 132	21-139-105
3515 137	9-46-130
3515 138	9-46-130
3515 146	21-42-23
3515 147	21-42-23
3515 148	21-42-23
3515 172	21-42-23
3515 176	21-133-17
3515 202	21-139-101
3515 203	9-45-2
3515 251	21-139-68
3515 282	9-46-4
3515 300	6-22-4
3515 314	21-133-7
3515 315	21-133-10
3515 321	21-129-13
3515 344	21-34-47
3515 347	21-136-47
3515 350	21-29-3
3515 383	21-05-12
	21-22-2
3515 384	21-05-12
	21-22-2
3515 398	21-139-145
3515 402	21-42-23
3515 403	21-42-23
3515 404	21-42-23
3515 411	21-137-205
3515 412	21-137-22
3515 444	21-14-1
3515 446	21-14-1
3515 448	21-14-1
3515 449	21-14-1
3515 451	21-136-65
3515 468	21-14-15
3515 472	21-11-9
3515 478	21-138-13
3515 479	21-138-23
3515 482	21-138-13
3515 491	21-138-13
3515 492	21-42-11
3515 499	9-46-4
3515 501	21-134-36
3515 589	21-136-41
3515 690	6-14-1
3515 716	21-133-15
3515 730	21-42-23
3515 731	21-42-23
3515 737	6-22-1
3515 757	21-05-1
3515 759	21-29-3
3515 761	6-27-5
3515 762	6-27-5

PART NUMBER	CODE
3515 793	21-42-34
3515 920	21-03-6
3515 948	21-139-105
3515 995	21-139-73
3515 996	21-117-1
3520 276-7	23-45-52
	23-47-425
3520 280-1	23-45-204
3520 288-9	23-45-204
3520 790-1	23-45-52
3520 928-9	23-45-204
3520 958-9	23-45-204
3520 972-3	23-45-52
3541 GX9	23-38-1
3542 GX9	23-38-1
3548 018	23-54-20
3548 019	23-54-4
3548 025	23-54-21
3548 029	23-54-6
3548 243	23-54-100
3548 296	23-54-228
3548 306	23-54-187
3548 350-1	23-17-28
3548 364	23-41-106
3548 390	23-18-11
3548 609	23-48-21
3548 634	23-54-30
3548 637	23-41-7
3548 665	23-41-7
3548 674	23-32-80
	23-48-20
3548 675	23-48-67
3548 708	23-18-5
3548 709	23-18-5
3548 710	23-18-5
3548 711	23-18-5
3548 741	23-21-18
3548 746-7	23-41-106
3548 748-9	23-41-4
3548 750-1	23-41-4
3548 772-3	23-18-11
3548 776-7	23-18-26
3548 802-3	23-41-4
3548 805	15-11-5
	15-11-3
3548 851	23-49-9
3548 926	23-49-9
3548 955	23-17-2
3549 382	9-09-2
3549 383	9-09-2
3549 384	9-09-2
3549 385	9-09-2
3549 386	9-09-2
3549 387	9-09-2
3549 388	10-24-1
3549 392	9-11-1
3549 393	9-11-1
3549 394	9-11-1
3549 395	9-11-1
3549 588	9-35-1
3549 590	9-35-1
3549 947	5-58-1
3549 957	10-26-6
3549 975	9-39-5
3549 976	9-39-5
3549 977	9-39-5
3549 978	9-39-5
3549 989	9-41-4
3549 990	9-41-4
3549 991	9-41-4
3549 992	9-41-4
3550 051	28-06-39
3550 062	23-04-245
3550 074	23-38-5
3550 076	23-38-5
3550 156	23-49-7
3550 160	23-49-7
3551 124-5	23-63-33
3551 262	23-63-20
3551 270-1	23-63-14
3551 302-3	23-63-20
3551 306-7	23-63-20
3551 364-5	23-63-20
3551 366-7	23-63-14
3551 489	23-06-38
3551 736	23-32-7
3551 744-5	23-20-24
3555 190	24-25-107
3555 995	24-25-132
3557 794	24-25-107
3569 356	23-32-15
3569 560-1	23-32-112
3569 625	4-23-2
3570 244	14-86-42
3570 332	23-19-177
3570 345	4-23-2
3570 391	23-51-19
3570 392-3	23-51-5
3570 436	23-32-22
3570 862-3	23-19-82
3570 890	13-66-105
3573 216	7-16-11
3573 240-1	8-34-40
3573 242-3	8-34-40
3573 437	15-25-2
3573 484	7-16-36
3573 490	8-34-28
3573 493	8-34-28
3573 495	7-26-15
3573 505	7-16-61
3573 513	7-26-14
3573 589	7-16-11
3573 596	7-16-36
3573 598	7-26-15
3573 624	7-26-37
3573 634	7-16-25
3573 646-7	12-07-1
3573 784-5	8-34-1
3573 911	7-16-25
3574 059	15-06-3
3574 075	8-34-296
3574 085	8-34-178
3574 091	7-16-25
3574 097	7-16-25
3574 105	15-11-58
3574 132	8-34-40
3574 138	12-07-1
3574 152	7-52-9
3574 155	7-52-6
3574 200	8-34-52
3575 002	19-14-48
3575 005	21-30-2
3575 036	21-30-2
3575 038	21-30-2
3575 080	19-15-81
3575 082	19-14-68
	19-15-28
3575 101	5-28-8
3575 105	5-31-11
3575 119	6-35-1
3575 140	6-52-1
3575 157	6-52-10
3575 159	6-52-10
3575 160	5-31-11
3575 176	6-38-1
3575 177	6-38-1
3575 191	5-31-15
3575 193	5-31-15
3575 208	19-46-8
3575 215	21-30-2
3575 231	19-14-21
3575 236	19-14-24
3575 242	21-30-6
3575 246	8-50-82
3575 254	8-50-129
3575 256	19-46-10
3575 257	19-46-12
3575 258	19-46-31
3575 326	19-48-46
3575 327	19-48-46
3575 328	19-48-45
3575 331	19-48-1
3575 332	19-48-46
3575 333	19-48-49
3575 334	19-48-16
3575 336	19-48-1
3575 338	19-48-1
3575 339	19-48-45
3575 340	19-48-45
3575 342	19-48-1
3575 343	19-48-1
3575 344	19-48-1
3575 345	19-48-1
3575 346	19-48-1
3575 349	21-30-79
3575 354	19-48-9
3575 360	19-48-45
3575 361	19-48-1
3575 364	19-48-1
3575 378	19-48-1
3575 380	19-48-1
3575 384	19-48-45
3575 386	19-48-45
3575 388	21-30-79
3575 434	21-30-38
3575 561	19-14-98
3575 562	19-15-31
3575 564	19-30-43
3575 572	19-14-21
3575 584	4-23-1
3575 588	4-23-1
3575 591	4-23-37
3575 593	4-23-36
3575 604	4-23-36
3575 605	4-23-36
3575 606-7	4-23-1
3575 622	4-08-1
3575 624	4-23-1
3575 631	4-25-1
3575 649	4-25-36
3575 650	4-25-26
3575 715	19-14-120
3575 733	19-14-23
3575 884	19-14-10
3575 891	19-46-16
3575 948	19-14-102
3575 969	21-30-23
3575 982	19-14-118
3575 996	19-46-8
3577 169	9-46-33
3577 170	9-46-33
3577 172	9-46-33
3577 181	9-15-1
3577 516	14-24-1
3577 517	14-24-17
3577 518	14-24-6
3577 523	14-25-11
3577 525	14-25-11
3577 550	14-26-6
3577 553	14-26-6
3577 561	14-26-6
3577 576	14-25-11
3577 586	25-04-4
3577 594	25-04-16
3577 595	25-04-1
3577 596	25-04-16
3577 597	14-02-18
3577 759	14-29-7
3577 785	9-13-5
3577 786	7-04-9
3577 789	10-23-7
3577 791	10-03-7
3577 794	10-24-30
3577 808	14-29-38
3577 848	10-26-46
3577 870	14-74-1
3577 949	9-39-5
3577 950	9-39-5
3577 951	9-39-5
3578 136	16-02-1
3578 138	16-02-1
3578 146	16-02-1
3578 175	16-02-1
3578 301	16-02-1
3578 305	16-02-1
3578 313	16-02-1
3578 317	16-02-1
3578 322	16-02-1
3578 331	16-02-1
3578 690	16-02-1
3578 760	16-02-1
3579 044	9-35-1
3579 045	9-35-1
3579 046	9-35-1
3579 047	9-34-5
3579 048	9-34-5
3579 049	9-34-5
3579 050	9-34-5
3579 171	1-48-88
3579 172	1-48-599
3579 173	1-48-854
	24-01-36
3579 191	1-48-132
3579 193	8-52-354
3579 200	1-48-941
3579 204	8-00-0
3579 234	1-47-2
3579 255	5-05-9
3579 260	5-39-1
3579 268	5-03-1
3579 272	5-100-2
3579 295	5-03-3
3579 523	19-01-4
3579 526	19-02-4
3579 548	11-01-1
3579 549	19-56-6
3579 560-1	23-23-52
3579 562-3	23-23-52
3579 564-5	23-23-65
3579 576-7	23-23-52
3579 580-1	23-23-65
3579 588-9	23-23-52
3579 622	15-11-89
3579 670	15-11-89
3579 671	15-09-19
3579 672	23-36-134
3579 673	15-11-87
3580 058	22-01-5
3580 065	22-01-5
3580 067	22-01-5
3580 068	22-01-5
3580 093	5-39-3
3580 098	5-39-20
3580 112	5-39-3
3580 119	5-47-2
3580 133	5-110-18
3580 134	22-05-24
3580 135	5-100-189
3580 136	5-100-20
3580 146	5-39-3
3580 148	5-107-34
3580 159	5-107-34
3580 170	5-107-34
3580 171	5-107-34
3580 172	5-107-34
3580 183	5-39-24
3580 184	5-39-3
3580 190	5-44-8
3580 194	5-39-29
3580 201	5-110-18
3580 202	5-110-18
3580 209	5-39-3
3580 223	5-100-189
3580 224	5-100-20
3580 225	5-100-2
3580 228	5-110-18
3580 231	5-101-5
3580 252	5-100-2
3580 280	5-39-3
3580 283	5-39-20
3580 286	22-05-24
3580 289	5-39-29
3580 290	5-39-24
3580 296	5-44-8
3580 298	5-100-26
3580 299	5-100-206
3580 300	5-100-199
3580 303	5-100-2
3580 309	4-08-16
	4-23-28
3580 310	5-113-17
3580 311	5-113-17
3580 313	5-44-13
3580 314	5-44-9
3580 323	5-39-20
3580 335	5-111-17
3580 339	5-100-2
3580 348	5-107-34
3580 401	5-110-18
3580 549	22-04-2
3580 553	22-04-2
3580 723	22-06-18
3580 728	22-05-14
3580 750-1	4-26-17
3580 754-5	4-26-1
3580 778-9	5-05-43
3580 795	5-05-10
3580 796	5-05-11
3580 797	5-05-26
3580 819	5-05-10
3580 820	5-05-11
3580 823	5-05-49
3580 824	5-05-30
3580 826	5-05-16
3580 826-7	5-05-16
3580 827	5-05-16
3580 839	5-05-43
3580 852-3	5-05-1
3580 854-5	5-05-1
3580 888	22-06-1
3580 892	22-06-1
3580 894	22-08-57
3580 975	22-06-18
3580 986-7	5-57-2
3580 988	4-23-1
3581 055	23-64-266
3581 134	23-63-181
3581 168-9	23-63-171
3581 208-9	23-42-32
3581 280-1	23-63-15

PART NUMBER	CODE
3581 282-3	23-63-15
3581 286	23-64-271
3581 439	23-64-12
3581 478	23-42-16
3581 488	23-64-12
3581 579	23-64-4
3581 664	23-64-276
3581 680-1	23-09-51
3581 768-9	23-64-308
3581 770-1	23-64-308
3581 776	23-64-187
3581 798	23-09-54
3581 844	23-63-181
3581 864	23-54-126
3581 865	23-54-126
3581 877	23-42-23
3581 878-9	23-63-33
3581 888	23-64-28
3581 890-1	23-54-18
3581 894-5	23-63-33
3581 900	23-64-10
3581 901	23-64-10
3581 909	23-63-181
3581 914-5	23-64-254
3581 958-9	23-63-33
3582 011	23-64-12
3582 012	23-54-103
3582 015	23-39-45
3582 025	23-42-16
3582 042-3	23-64-197
3582 115	23-64-12
3582 132	23-64-272
3582 136-7	23-63-104
3582 148-9	23-63-37
3582 184	23-39-45
3582 315	23-64-293
3582 318-9	23-63-15
3582 356-7	23-63-33
3582 404	23-54-88
3582 534	23-64-272
3582 548	23-64-12
3582 552-3	23-64-308
3582 554-5	23-64-308
3582 556-7	23-64-308
3582 558-9	23-64-308
3582 563	23-09-52
3582 584	23-64-296
3582 600-1	23-15-1
3582 602-3	23-15-3
3582 640-1	23-34-120
3582 652-3	23-15-1
3582 654-5	23-15-3
3582 698	23-64-17
3582 742-3	23-63-33
3582 744-5	23-63-33
3582 772-3	23-63-104
3582 808-9	23-63-55
3582 844-5	23-09-9
3582 847	23-64-300
3582 852-3	23-64-299
3582 854-5	23-64-12
3582 860	23-64-272
3582 864	23-64-1
	23-66-75
3582 865	23-64-1
	23-66-75
3582 868	23-64-159
3582 882	23-42-16
3582 926-7	15-19-2
3582 936-7	15-19-2
3582 950-1	23-63-33
3582 972-3	15-19-2
3582 978-9	23-64-311
3582 980-1	23-64-311
3582 986-7	23-64-311
3582 988-9	23-64-311
3582 996	23-63-181
3582 998-9	23-63-181
3583 020	13-34-3
3583 110	13-01-1
3583 405	11-09-3
3583 414	11-09-3
3583 483	14-90-1
3583 547	14-86-35
3583 561	14-86-35
3583 573	14-86-40
3583 575	14-86-40
3583 607	5-107-34
3583 698	11-02-4
3583 702	11-02-4
3583 704	11-02-4
3583 745	11-01-1
3583 746	11-01-1
3583 753	11-01-1
3583 754	11-01-1
3583 758	11-05-1
3583 762	11-05-1
3583 767	11-08-19
3583 778-9	11-02-13
3583 798	11-09-3
3583 801	11-05-1
3583 829	11-01-1
3583 833	11-05-1
3583 835	11-05-1
3583 873	11-05-1
3583 909	11-05-1
3583 925	11-05-1
3583 927	11-05-1
3583 943	11-05-4
3583 949	11-05-4
3583 962	11-05-4
3583 964	11-05-4
3583 991	11-01-1
3583 992	11-01-1
3583 996	11-08-5
3583 998	11-08-5
3586 088	15-19-8
3586 092	15-19-8
3586 093	15-19-8
3586 160-1	23-18-11
3586 162-3	23-18-11
3586 166-7	23-18-11
3586 174	23-21-3
3586 176	23-21-3
3586 255	23-54-144
3586 257	23-54-143
3586 312-3	23-41-106
3586 314	15-11-79
3586 371	23-19-111
3586 393	23-54-72
3586 427	23-54-84
3586 614	15-13-2
3586 636	23-54-216
3586 638	23-54-223
3586 641	23-21-3
3586 642	23-21-3
3586 644	23-21-3
3586 645	23-21-3
3586 649	23-21-3
3586 650	23-21-3
3586 653	23-21-3
3586 662	23-54-216
3586 668-9	23-18-11
3586 707	23-54-179
3586 731	15-11-5
3586 858	23-54-73
3586 884	15-11-17
3586 916	23-54-92
3586 984	15-11-83
3587 240-1	23-34-242
3587 270	8-55-7
3587 272	8-55-195
3587 276	8-56-1
3587 278	8-56-7
3587 316-7	8-55-7
3587 380	8-50-338
3587 386-7	8-50-315
3587 394	8-14-1
3587 397	8-14-1
3587 436	8-14-1
3587 440	8-14-1
3587 456-7	8-55-195
3587 496-7	8-50-303
3588 024	23-67-169
3588 050	8-15-27
3588 056	8-15-27
3588 176	23-41-55
3588 177	23-54-178
3588 249	1-47-10
3588 280	8-15-27
3588 291	8-15-4
3588 297	8-15-27
3588 314	8-14-3
3588 320	8-15-27
3588 334	8-19-3
3588 345	8-16-19
3588 361	23-54-178
3588 362	8-00-0
3588 399	8-16-6
3588 421	8-15-46
3588 442	8-16-6
3588 456	8-00-0
3588 461	8-00-0
3588 462	8-00-0
3588 504	8-16-6
3588 514	8-16-6
3588 515	8-16-6
3588 516	8-16-6
3588 517	8-16-6
3588 518	8-16-6
3588 519	8-16-6
3588 520	8-16-6
3588 522	8-16-6
3588 523	8-16-6
3588 524	8-16-6
3588 525	8-16-6
3588 548	8-00-0
3588 589	8-00-0
3588 645	8-19-3
3588 650-1	8-55-57
3588 665	8-15-3
3588 667	8-15-53
3588 704	23-67-41
3588 724	8-01-28
3588 727	8-16-8
3588 742	8-16-8
3588 743	8-16-8
3588 746	8-50-156
3588 772	8-01-17
3588 773	8-01-17
3588 780	8-16-6
3588 781	8-16-6
3588 793	8-01-17
3588 819	8-16-4
3588 830	8-00-0
	8-01-17
3588 831	8-01-17
3588 834	8-15-27
3588 848	8-16-6
3588 849	8-01-17
3588 865	8-56-34
3588 866	8-55-57
3588 868	8-15-4
3588 882	8-37-65
3588 889	8-17-23
	8-37-60
3588 942	8-01-4
3588 944	8-01-4
3588 945	8-16-6
3588 946	8-16-6
3588 979	8-37-66
3588 981	23-41-55
3588 982	8-16-6
3588 997	8-37-58
3588 998	8-37-61
3589 212-3	23-63-14
3589 214-5	23-63-14
3589 216-7	23-63-14
3589 220-1	23-63-14
3589 222-3	23-63-14
3589 224-5	23-63-14
3589 226-7	23-63-14
3589 257	23-20-41
3589 284	23-20-29
3589 286	23-20-29
3589 352	23-22-53
3589 353	23-22-53
3589 360	23-20-14
3589 362	23-20-14
3589 368	23-20-14
3589 402-3	23-63-20
3589 418-9	23-63-20
3589 422-3	23-63-20
3589 669	23-32-7
3589 672	23-32-7
3589 673	23-32-7
3589 674	23-32-7
3589 675	23-32-7
3589 676	23-32-7
3589 680-1	23-32-7
3589 682	23-32-7
3589 854	23-02-149
3589 856	23-22-53
3589 872	23-26-80
3589 873	23-26-80
3589 874	23-26-80
3589 878-9	23-26-80
3589 884	23-26-80
3589 884-5	23-26-80
3589 893	23-26-80
3589 894	23-02-82
3589 898	23-02-62
	23-02-78
3589 942-3	23-26-80
3589 944-5	23-26-80
3589 952-3	23-26-80
3589 977	23-14-32
3590 126	23-33-96
3590 127	23-33-96
3590 183	23-06-15
3590 222	23-06-10
3590 280	23-06-10
3590 298	23-06-4
3590 309	23-33-109
3590 310	23-33-109
3590 328	23-33-96
3590 329	23-33-96
3590 330	23-33-96
3590 332	23-33-10
3590 342	23-33-10
3590 355	23-33-10
3590 358	23-33-109
3590 370	1-48-945
3590 371	23-33-135
3590 377	1-48-945
3590 379	23-33-135
3590 382	23-33-22
3590 386	23-33-22
3590 389	23-33-22
3590 391	23-33-86
3590 393	23-33-86
3590 395	23-33-86
3590 399	23-06-10
3590 404	23-06-15
3590 409	23-02-18
3590 413	23-02-19
3590 435	23-33-173
3590 436	23-33-112
3590 437	23-06-46
3590 442	23-33-86
3590 449	23-06-60
3590 454	23-33-22
3590 458	23-06-61
3590 460	23-33-109
3590 462	23-06-4
3590 465	23-33-109
3590 476	23-02-18
3590 482	23-02-19
3590 504	23-02-50
3590 505	23-02-50
3590 506	23-02-50
3590 507	23-02-50
3590 508	23-02-50
3590 527	23-33-7
3590 530	23-33-109
3590 545	19-14-10
3590 549	23-33-109
3590 551	23-06-14
3590 557	23-06-15
3590 561	23-06-10
3590 562	23-06-60
3590 597	23-06-17
3590 651	23-33-109
3590 655	23-06-4
3590 656	23-06-10
3590 664	23-06-21
3590 668	23-06-22
3590 707	23-02-18
3590 708	23-02-38
3590 778	23-02-58
3592 133	8-37-1
3592 155	8-37-454
3592 163	8-37-90
3592 194	8-37-275
3592 195	8-37-136
3592 196	8-37-1
3592 201	8-37-178
3592 266	8-37-90
3592 269	8-37-75
3592 344	8-41-25
3592 350	8-37-90
3592 351	8-37-90
3592 352	8-37-90
3592 353	8-37-90
3592 360	21-84-1
3592 367	21-84-1
3592 374	21-84-11
3592 408	21-84-1
3592 421	21-84-1
3592 422	21-84-1
3592 448	8-37-136
3592 449	8-37-275
3592 450	8-37-1
3592 455	8-37-178
3592 456	8-19-15
3592 457	8-19-15
3592 458	8-37-170
3592 459	8-37-162
3592 462	8-37-170
3592 464	8-37-90

PART NUMBER	CODE
3592 465	8-37-90
3592 474	21-30-23
3592 478	8-37-178
3592 482	8-37-90
3592 483	8-37-90
3592 484	8-37-90
3592 485	8-37-90
3592 486	8-37-90
3592 487	8-37-90
3592 498	8-37-191
3592 519	23-33-20
3592 522	8-37-372
3592 536	8-37-90
3592 542	8-37-90
3592 543	8-37-90
3592 552	8-37-90
3592 553	8-37-90
3592 554	8-37-90
3592 555	8-37-90
3592 556	8-37-90
3592 557	8-37-90
3592 558	8-37-90
3592 559	8-37-90
3592 575	8-37-178
3592 586	8-37-372
3592 599	8-37-275
3592 600	8-37-1
3592 604	8-19-15
3592 610	21-30-23
3592 615	8-37-178
3592 616	8-37-14
3592 624	23-33-20
3592 630	8-37-191
3592 631	8-37-180
3592 636	8-37-275
3592 637	8-37-1
3592 643	8-37-275
3592 644	8-37-136
3592 645	8-37-1
3592 647	8-37-162
3592 655	8-37-316
3592 662	8-37-90
3592 670	8-37-90
3592 685	8-37-90
3592 686	8-37-90
3592 698	8-37-14
3592 699	21-30-23
3592 700	21-30-23
3592 701	8-37-14
3592 702	8-37-14
3592 724	8-37-372
3592 725	8-37-372
3592 732	8-37-372
3592 737	8-37-7
3592 738	8-37-387
3592 739	8-37-386
3592 744	8-37-90
3592 749	8-37-178
3592 750	8-37-372
3592 758	8-37-372
3592 759	8-37-372
3592 760	8-37-372
3592 763	8-37-372
3592 764	8-37-372
3592 767	21-30-23
3592 768	21-30-23
3592 779	8-37-191
3592 783	8-37-192
3592 787	21-84-1
3592 788	8-05-9
3592 956	8-05-28
3592 959	8-37-90
3593 001	8-37-90
3593 018	8-37-90
3593 020	8-37-90
3593 021	8-37-90
3593 134	8-37-372
3593 135	8-37-372
3593 136	8-37-372
3594 091	23-45-30
3594 092	23-45-30
3594 211	23-45-66
3594 412	23-47-345
3594 448-9	23-45-55
3594 455	23-45-55
3594 536	23-45-39
3594 775	23-45-52
3594 847	23-49-19
3594 995	23-45-30
3595 194	13-66-153
3595 720	13-72-4
3595 721	13-72-1
3604 299	24-25-84
3609 280	24-25-258
3609 284	24-25-5
3609 285	24-25-5
3610 447	23-18-54
3611 230-1	23-11-3
3611 378	15-03-3
3611 393	23-32-17
3611 440-1	23-34-249
3611 444-5	23-34-234
3611 446-7	23-34-234
3611 448-9	23-40-85
3611 553	23-19-8
3611 581	15-11-58
3611 626	23-48-188
3611 627	23-48-188
3611 630	23-48-68
3611 633	23-34-234
3611 638	15-03-3
3613 151	7-16-61
3613 880	13-66-46
	15-06-3
3614 059	9-48-8
3614 063	9-48-8
3614 064	9-48-8
3614 178	14-30-1
3614 224	10-23-7
3614 227	10-24-4
3614 232	9-10-5
3614 233	9-10-5
3614 234	9-10-5
3614 264	10-24-4
3614 282	9-02-62
3614 292	9-48-44
3614 314	9-02-62
3614 349	14-62-1
3614 367	9-48-6
3614 369	9-13-5
3614 371	9-13-5
3614 374	9-13-5
3614 377	7-06-1
3614 378	7-06-1
3614 382	7-06-1
3614 396	9-48-6
3614 824	9-03-5
3614 911	14-29-78
3614 914	14-29-79
3614 915	14-29-80
3614 916	14-29-34
3614 935	14-29-26
3614 970	10-24-4
3614 981	24-25-10
3614 985	25-02-1
3614 991	8-36-124
3615 014-5	23-19-84
3615 018	23-59-41
3615 020	23-59-37
3615 061	23-34-179
3615 096	23-19-113
3615 108	17-24-28
3615 134	8-47-68
3615 158-9	23-32-115
3615 299	11-10-42
3615 302-3	23-59-35
3615 310-1	23-34-27
3615 312-3	23-34-27
3615 468-9	23-36-66
3615 579	23-36-66
3615 608-9	23-34-242
3615 614-5	23-64-281
3615 618-9	23-36-66
3615 624-5	23-59-35
3615 628-9	23-34-176
3615 640	23-34-179
3615 680	23-32-24
3615 682-3	23-34-27
3615 690-1	23-32-25
3615 692-3	23-32-25
3615 722	23-49-9
3615 743	23-49-9
3615 755	4-23-6
3615 773	13-72-6
3615 808-9	23-34-242
3615 816	23-32-17
3615 817	13-72-7
3615 822-3	23-51-5
3615 831	23-32-24
3615 832-3	23-36-12
3615 839	23-32-48
3615 854	23-32-27
3615 862	23-32-17
3615 863	23-32-17
3615 872	17-19-20
3615 884	23-32-27
3615 902-3	23-51-5
3615 904-5	23-34-235
3615 912-3	23-34-27
3615 914-5	23-36-53
3615 918-9	23-34-242
3615 922-3	23-32-49
3615 928-9	23-34-246
3615 940-1	23-59-35
3615 944	23-34-166
3615 945	23-34-167
3615 976-7	23-19-177
3615 983	23-32-22
3615 985	23-32-22
3615 986-7	23-34-20
3615 988	8-55-23
3615 990	8-55-23
3616 138-9	23-34-235
3616 141	23-34-167
3616 142-3	23-32-56
3616 180-1	23-51-5
3616 191	23-34-179
3616 206	23-34-167
3616 207	23-32-29
3616 210-1	23-51-19
3616 214-5	23-51-43
3616 218-9	23-34-229
3616 228-9	23-34-229
3616 238-9	23-34-242
3616 242-3	23-34-242
3616 246-7	23-34-242
3616 248-9	23-34-242
3616 260-1	23-34-235
3616 262-3	23-34-235
3616 264-5	23-34-235
3616 266-7	23-34-235
3616 268-9	23-34-235
3616 270-1	23-34-235
3616 272-3	23-34-235
3616 274-5	23-34-235
3616 276-7	23-34-234
3616 278-9	23-34-234
3616 280-1	23-34-27
3616 282-3	23-34-27
3616 284-5	23-36-53
3616 286-7	23-36-53
3616 290-1	23-36-53
3616 292-3	23-36-53
3616 296-7	23-36-53
3616 298-9	23-36-53
3616 304-5	23-34-246
3616 314-5	23-19-82
3616 318	23-59-37
3616 330-1	23-59-35
3616 346	23-34-166
3616 347	23-34-166
3616 348	23-34-166
3616 349	23-34-167
3616 350	23-34-167
3616 356-7	23-19-177
3616 378-9	23-51-5
3616 408	23-32-29
3616 431	13-66-106
3616 453	21-30-416
3616 494	23-34-190
3616 499	23-34-167
3616 502-3	23-63-136
3616 504-5	23-51-5
3616 528-9	23-32-49
3616 544-5	23-36-20
3616 546	13-66-106
3616 553	13-66-106
3616 558	23-32-40
3616 560-1	23-51-5
3616 580-1	23-34-235
3616 582-3	23-34-176
3616 598-9	23-19-82
3616 602-3	23-32-93
3616 604-5	23-32-112
3616 610-1	23-32-93
3616 612	23-34-179
3616 613	23-34-179
3616 615	23-34-179
3616 616	23-34-179
3616 621	14-86-71
3616 627	23-34-190
3616 640	23-34-179
3616 642	23-19-74
3616 668	23-34-166
3616 669	23-34-167
3616 670	23-32-24
3616 680-1	23-34-176
3616 690-1	23-34-176
3616 706-7	23-32-49
3616 708-9	23-34-176
3616 764-5	23-36-53
3616 770-1	23-34-242
3616 784	23-32-46
3616 787	23-19-198
3616 789	23-19-207
3616 796	23-19-207
3616 800	13-66-106
3616 803	13-66-106
3616 828-9	23-32-27
3616 830-1	23-32-25
3616 832-3	23-32-25
3616 901	13-66-106
3616 905	13-66-106
3616 910	23-49-9
3616 920	23-32-17
3616 926-7	23-32-17
3616 928-9	23-32-17
3616 940-1	23-32-49
3616 942-3	23-32-49
3616 944-5	23-34-235
3616 946-7	23-34-235
3616 948	23-34-257
3616 950	23-34-257
3616 952-3	23-59-35
3616 954-5	23-59-35
3616 956-7	23-34-176
3616 958-9	23-34-176
3616 962	23-34-179
3616 963	23-34-179
3616 974	23-34-190
3616 998-9	23-49-9
3618 063	9-48-8
3620 703	14-02-1
3620 733	8-52-375
3620 734	8-57-54
3620 751	8-41-36
3620 793	8-29-129
3620 794	8-29-137
3620 828	23-67-5
3620 839	8-00-0
3620 840	8-00-0
	8-17-30
3620 860	8-00-0
3620 861	8-00-0
	8-17-30
3620 863	23-49-2
3620 866	8-50-95
3620 873	8-55-194
3621 161	14-30-8
3621 163	14-35-3
	14-35-40
3621 209	14-39-7
3621 210	14-39-7
3621 230	9-09-2
3621 231	9-09-2
3621 232	9-09-2
3621 233	9-09-2
3621 234	9-09-2
3621 235	9-09-2
3621 245	14-30-7
3621 246	14-30-7
3621 356	9-34-5
3621 357	9-34-5
3621 358	9-34-5
3621 359	9-34-5
3621 365	14-41-3
3621 395	13-72-4
3621 396	13-72-4
3621 475	21-133-7
3621 476	21-133-7
3621 491	21-136-5
3621 604-5	8-56-8
3621 606-7	8-55-194
3621 615	14-72-1
3621 666	23-67-160
3621 667	23-67-160
3621 668	23-67-160
3621 670	23-67-160
3621 671	23-67-160
3621 672	23-67-160
3621 680-1	8-50-334
3621 755	23-14-10
3621 764-5	12-01-5
3621 768-9	12-01-5
3621 796	7-16-63
3621 798	23-64-200
3621 799	23-64-200
3621 814	1-47-13
3621 837	1-48-599
3621 877	8-50-334

PART NUMBER	CODE
3621 880-1	8-55-194
3621 894-5	8-55-194
3621 896-7	8-55-194
3621 898-9	23-67-86
3621 917	17-11-3
3621 918	17-11-3
3621 925	17-11-14
3621 939	3-19-1
3621 951	22-01-5
3621 952	22-01-5
3621 953	22-01-5
3621 954	22-01-5
3621 956	22-01-5
3621 957	22-01-5
3621 981	3-04-6
3621 985	5-03-3
3621 986	5-03-3
3621 998	3-04-6
3631 512	21-04-26
3633 324	5-100-26
3633 898	5-12-1
3635 030	23-67-106
3637 983	21-02-1
	21-113-24
3642 004	14-86-40
3642 007	14-86-40
3642 075	14-86-42
3642 095	14-86-40
3642 098	14-86-43
3642 105	14-86-65
3642 138	14-86-1
3642 139	14-86-1
3642 170	14-86-1
3642 179	14-86-1
3642 186	14-86-49
3642 194	14-86-40
3642 263	14-86-50
3642 269	14-86-50
3642 275	5-107-35
3642 276	4-23-37
3642 281	4-23-1
3642 282	4-23-1
3642 283	4-23-1
3642 284	4-23-1
3642 287	4-23-28
3642 301	12-01-26
3642 304	12-04-4
3642 333	12-04-4
3642 334	13-33-61
3642 340	12-04-22
3642 342	12-04-4
3642 356	11-10-3
3642 369	11-05-1
3642 376	11-01-1
3642 384	11-05-1
3642 390	11-01-1
3642 402	11-05-1
3642 404	11-05-1
3642 422	11-09-3
3642 432	11-05-1
3642 435	11-05-4
3642 443	11-05-4
3642 446	11-01-1
3642 450	11-08-24
3642 452	11-05-1
3642 456	11-05-4
3642 457	11-05-4
3642 466	11-05-1
3642 469	11-05-4
3642 471	11-05-4
3642 474	11-05-1
3642 477	11-05-1
3642 479	11-05-1
3642 480	11-05-1
3642 488	11-09-3
3642 489	11-01-1
3642 491	11-09-3
3642 494-5	11-09-3
3642 496	11-09-3
3642 497	11-05-4
3642 500	11-02-13
	11-10-42
3642 501	11-10-3
3642 506-7	11-09-3
3642 509	11-09-3
3642 510	11-10-3
3642 515	11-09-3
3642 516	11-09-3
3642 518	11-09-3
3642 519	11-10-3
3642 521	11-10-3
3642 523	11-10-3
3642 531	11-10-20
3642 533	11-10-42
3642 534	11-10-42
3642 534-5	11-10-42
3642 538	11-10-3
3642 539	11-10-42
3642 540	11-10-3
3642 540-1	11-10-3
3642 543	11-10-42
3642 545	11-10-3
3642 546	11-08-5
3642 547	11-08-5
3642 554	11-10-3
3642 554-5	11-10-3
3642 560	11-01-1
3642 561	11-01-1
3642 562	11-01-1
3642 573	11-10-3
3642 597	23-05-4
3642 702-3	2-08-63
3642 745	23-32-17
3642 749	23-32-17
3642 774	23-32-17
3642 776	23-32-17
3642 794	23-32-17
3642 810	9-67-4
3642 811	9-67-4
3642 813	9-67-4
3642 814	9-67-4
3642 815	9-67-4
3642 816-7	23-32-115
3642 818	9-67-4
3642 819	9-67-4
3642 821	9-67-4
3642 827	9-67-4
3642 829	9-67-4
3642 831	9-71-5
3642 833	23-05-4
3642 840	9-67-11
3642 841	9-67-11
3642 849	6-52-10
3642 850	9-67-4
3642 851	23-05-10
3642 852	23-05-25
3642 854	23-05-6
3642 876	9-67-11
3642 877	9-67-11
3642 878	23-05-36
3642 879	9-67-11
3642 918	23-32-122
3642 920	23-32-122
3642 921	23-32-121
3642 923	23-32-120
3642 926	23-32-17
3642 958	13-35-1
3642 963	12-04-4
3642 965	12-04-4
3642 966	12-04-4
3642 970	13-33-61
3642 972	12-04-4
3642 973	13-33-68
3642 974-5	23-32-110
3642 978	13-33-61
3642 981	13-33-62
3642 983	12-01-22
3642 985	12-01-22
3642 986	13-34-3
3642 993	12-01-26
3642 994	12-01-26
3642 995	12-01-26
3642 996	13-35-1
3642 998	13-35-4
3643 009	19-19-26
3643 013	19-02-4
3643 014	19-01-8
3643 016	19-01-8
3643 018	19-19-4
3643 021	19-57-3
3643 027	19-57-3
3643 030	19-01-8
3643 129	19-01-50
3643 169	19-01-50
3643 170	19-15-38
3643 173	19-01-60
3643 176	19-02-55
3643 184	19-19-35
3643 502	17-30-2
3643 506	17-30-4
3643 526-7	17-11-7
3643 558	17-14-10
3643 576	17-12-4
3643 579	17-14-10
3643 595	17-11-3
3643 818-9	17-30-2
3643 880	17-19-3
3643 884	17-19-3
3643 886	17-19-3
3643 891	17-23-52
3643 898	13-54-15
3643 969	17-19-3
3643 989	17-16-8
3643 990	17-17-3
3656 017	8-27-54
3656 199	8-35-22
3656 382	8-52-80
3656 383	8-52-80
3656 443	8-29-153
3656 444	8-29-154
3656 470	8-29-208
3656 495	8-36-1
3656 503	8-36-1
3656 504	8-36-1
3656 505	8-36-1
3656 511	8-36-1
3656 513	8-36-49
3656 514	8-36-49
3656 515	8-36-49
3656 540	8-52-241
3656 558	8-52-235
3656 571	8-28-5
3656 573	8-52-346
3656 575	8-52-4
	8-52-389
3656 646	25-08-8
3656 649	25-06-45
3656 655	8-36-1
3656 696	8-36-1
3656 697	8-36-1
3656 738	8-27-58
3656 763	8-27-1
	8-27-259
3656 764	8-27-1
	8-27-259
3656 765	8-27-250
3656 766	8-27-308
3656 858	14-38-24
3656 859	8-27-1
	8-27-259
3656 861	8-27-1
	8-27-259
3656 862	8-27-54
3656 863	8-27-96
3656 866	8-27-58
3664 519	24-25-94
3664 541	24-25-107
3664 550	24-25-94
3670 003	23-54-73
3670 005	23-54-79
3670 038	23-08-60
3670 055	23-17-4
3670 057	23-54-216
3670 061	23-54-187
3670 084	23-54-22
3670 110	15-11-75
3670 146	23-54-205
3670 226-7	23-47-6
3670 228	23-47-6
3670 230-1	23-47-6
3670 232-3	23-47-6
3670 234-5	23-47-6
3670 238	23-47-6
3670 239	23-47-6
3670 240	23-47-6
3670 241	23-47-6
3670 242-3	23-47-6
3670 248-9	23-47-6
3670 254	23-47-6
3670 255	23-47-6
3670 290-1	23-39-34
3670 320	15-11-5
3670 348	15-11-34
3670 393	23-17-4
3670 422	23-18-20
3670 461	15-11-5
3670 476	15-11-75
3670 478	15-11-74
3670 578-9	23-47-6
3670 628-9	23-18-26
3670 780	23-18-20
3670 860	15-11-5
3670 930	23-18-48
3670 962	15-11-3
3670 964	15-11-5
3670 971	23-21-18
3671 076	10-02-62
3671 084	25-02-32
3671 102	19-54-115
3671 142	25-02-32
3671 203	24-25-10
3671 259	7-03-1
3671 308	19-54-115
3671 314	10-26-27
3671 399	9-48-6
3671 410	25-06-40
3671 412	25-06-20
3671 414	25-06-20
3671 424	25-06-17
3671 425	25-06-7
3671 447	25-06-12
3671 448	25-06-12
3671 476	9-03-4
3671 515	7-03-1
3671 517	7-03-1
3671 524	7-03-1
3671 525	7-05-1
3671 540	10-03-4
3671 542	19-54-115
3671 602	10-26-5
3671 616	9-39-14
3671 649	9-20-9
3671 659	10-03-7
3671 660	10-03-7
3671 680	8-28-36
3671 682	7-03-1
3671 704	25-04-16
3671 718	14-01-1
3671 723	14-11-1
3671 792	25-04-20
3671 874	9-50-6
3671 893	14-62-1
3671 933	9-50-6
3671 989	8-36-124
3672 160-1	7-26-30
3672 166-7	8-34-40
3672 188-9	8-34-40
3672 198	7-26-32
3672 207	7-16-63
3672 209	7-16-11
3672 210-1	8-34-40
3672 212	7-16-36
3672 220	7-16-22
3672 226-7	7-16-22
3672 229	15-11-46
3672 231	7-26-15
3672 244	15-11-46
3672 248	7-26-30
3672 253	7-26-30
3672 258-9	15-03-18
3672 262	15-03-47
3672 271	12-02-5
3672 288-9	12-04-4
3672 292	8-34-28
3672 318-9	7-16-11
3672 322-3	7-16-11
3672 324-5	8-34-60
3672 330	7-16-25
3672 332	7-16-25
3672 348	15-11-46
3672 354	7-26-15
3672 388	12-07-1
3672 392-3	12-04-4
3672 438	7-16-36
3672 439	7-16-36
3672 452	7-16-36
3672 488	7-16-36
3672 489	15-11-12
	15-11-58
3672 494	7-16-36
3672 582	7-16-15
3672 584-5	7-16-14
3672 586	7-16-15
3672 605	15-03-64
3672 650-1	8-34-63
3672 656	7-17-23
3672 658-9	7-17-1
3672 664-5	12-02-6
3672 669	15-03-18
3672 672	7-17-5
	15-03-18
3672 673	7-16-11
3672 677	15-03-69
3672 682	15-03-69
3672 717	12-07-1
3672 720-1	12-04-25
3672 723	7-26-32
3672 734-5	7-16-68
3672 750-1	7-16-14
3672 780	7-17-5

PART NUMBER	CODE
.....	15-03-18
3672 792-3	7-16-15
3672 800	15-11-12
.....	15-11-58
3672 806	15-03-18
3672 824-5	15-03-79
3672 835	7-16-14
.....	8-55-33
3672 868	8-34-291
3672 875	8-34-296
3672 916	7-26-15
3672 921	7-26-9
3672 929	7-16-11
3672 933	7-26-15
3672 942	23-34-282
3672 970-1	12-07-1
3672 978	7-16-63
3673 819	7-08-2
3673 834	7-52-2
3673 891	7-12-1
3673 899	7-52-11
3674 004	23-34-234
3674 041	23-32-106
3674 122-3	23-48-99
3674 155	14-86-32
3674 168-9	23-66-65
3674 174-5	23-40-85
3674 192-3	23-40-85
3674 306-7	23-34-121
3674 310-1	23-40-85
3674 325	23-64-272
3674 343	23-32-56
3674 364	23-32-46
3674 366	23-32-46
3674 394-5	23-40-85
3674 416-7	23-66-65
3674 418-9	23-15-13
3674 432-3	23-34-80
3674 459	23-15-13
3674 460	23-15-13
3674 469	23-34-301
3674 480	23-64-314
3674 481	23-64-314
3674 482	23-32-56
3674 486-7	23-34-121
3674 488-9	23-34-121
3674 490-1	23-34-121
3674 492-3	23-34-121
3674 517	23-34-301
3674 518	23-34-301
3674 519	23-34-301
3674 520	23-34-301
3674 532-3	23-40-85
3674 536-7	23-40-85
3674 538-9	23-40-85
3674 542-3	23-40-85
3674 544-5	23-40-85
3674 546-7	23-40-85
3674 557	23-64-66
3674 559	23-64-66
3674 562	23-64-66
3674 590	23-64-314
3674 591	23-64-314
3674 592	23-64-314
3674 593	23-64-314
3674 594	23-64-314
3674 595	23-64-314
3674 600-1	23-26-41
3674 604	23-22-86
3674 605	23-22-86
3674 606-7	23-26-41
3674 608-9	23-26-41
3674 612	23-22-86
3674 616-7	23-26-41
3674 620	23-22-86
3674 621	23-22-86
3674 624-5	23-26-41
3674 628	23-22-86
3674 629	23-22-86
3674 632-3	23-34-121
3674 646	23-32-17
3674 647	23-34-16
3674 649	23-32-17
3674 652-3	23-32-48
3674 656-7	23-32-93
3674 670-1	23-34-89
3674 691	23-34-102
3674 694-5	23-61-117
3674 697	23-61-42
3674 698	23-66-75
3674 699	23-64-1
3674 716-7	23-34-235
3674 718-9	23-34-235
3674 720-1	23-34-234
3674 724-5	23-34-27
3674 726-7	23-34-27
3674 728-9	23-34-27
3674 730	23-34-5
3674 731	23-34-5
3674 732	23-34-5
3674 736-7	23-36-53
3674 742-3	23-36-118
3674 747	23-36-53
3674 748	23-36-118
3674 750-1	23-51-41
3674 752-3	23-51-41
3674 758	22-20-82
3674 766	23-34-280
3674 767	23-34-280
3674 769	23-34-280
3674 774	23-04-241
3674 775	23-04-241
3674 792	23-34-253
3674 793	23-34-253
3674 796-7	23-64-311
3674 798-9	23-64-311
3674 806	23-22-145
3674 816-7	23-34-234
3674 820-1	23-34-234
3674 834-5	23-34-236
3674 836-7	23-34-29
3674 838-9	23-34-29
3674 840-1	23-34-242
3674 868	23-26-41
3674 874-5	23-63-133
3674 878-9	23-64-311
3674 880-1	23-64-311
3674 882	23-63-33
3674 886-7	23-63-133
3674 894-5	23-40-85
3674 902-3	23-34-308
3674 907	23-34-308
3674 915	23-34-308
3674 916	23-34-308
3674 917	23-34-308
3674 918	23-34-308
3674 919	23-34-308
3674 920-1	23-34-308
3674 923	23-34-308
3674 926	23-34-308
3674 927	23-34-308
3674 931	23-34-308
3674 933	23-34-308
3674 942	23-34-308
3674 943	23-34-308
3674 944	23-34-308
3674 945	23-34-308
3674 948	23-34-308
3674 949	23-34-308
3674 950	23-34-308
3674 954	23-34-308
3674 955	23-34-308
3674 956	23-34-308
3674 957	23-34-308
3674 960-1	23-34-308
3674 962	23-34-308
3674 964	23-34-308
3674 965	23-34-308
3674 968	23-34-308
3674 978-9	23-34-308
3674 980-1	23-34-308
3674 984-5	23-34-308
3675 427	7-03-1
3677 379	23-67-16
3677 380	23-67-16
3679 052-3	8-55-7
3679 058	8-55-214
3679 060	8-55-158
3679 150-1	8-55-7
3679 158	8-55-214
3679 178-9	8-55-7
3679 180	8-55-158
3679 186	8-55-214
3679 188-9	8-55-195
3679 200	8-55-214
3679 208-9	8-55-7
3679 215	8-50-338
3679 225	8-50-338
3679 236-7	8-55-195
3679 238-9	8-56-7
3679 240	8-57-10
3679 246-7	8-55-195
3679 255	8-50-184
3679 307	8-57-10
3679 310-1	8-55-158
3679 314-5	8-55-158
3679 338-9	8-56-36
3679 343	8-50-312
3679 806	1-88-6
3679 812	1-88-6
3679 815	1-88-6
3679 818	1-88-6
3680 107	12-15-32
.....	23-11-10
.....	23-34-329
.....	23-54-2
3680 160	15-06-3
3680 550	15-25-2
3680 713	23-54-2
3680 714	12-15-32
.....	23-11-10
.....	23-34-329
3680 734	12-15-32
.....	23-11-10
.....	23-34-329
.....	23-54-2
3680 735	23-54-2
3680 937	15-25-2
3681 120	21-19-2
3681 139	21-136-47
3681 145	9-46-4
3681 174	21-42-23
3681 189	21-04-22
3681 190	21-04-26
3681 192	21-03-1
3681 227	21-139-50
3681 246	21-42-23
3681 252	21-139-101
3681 253	21-139-108
3681 254	21-119-15
3681 316	21-119-15
3681 317	21-14-5
3681 318	21-14-1
3681 319	21-139-71
3681 322	21-04-1
3681 330	21-09-2
3681 334	21-16-3
3681 463	21-04-19
3681 488	21-139-19
3681 513	21-04-26
3681 514	21-04-26
3681 558	21-03-1
3681 564	21-04-19
3681 601	21-03-11
3681 612	21-04-19
3681 614	21-04-23
3681 615	6-14-1
3681 630	6-13-1
3681 649	21-04-1
3681 655	21-04-1
3681 658	21-03-28
3681 684	21-42-11
3681 688	21-05-35
3681 689	21-133-7
3681 709	21-129-6
3681 817	21-02-1
.....	21-113-24
3681 818	21-02-1
.....	21-113-24
3681 834	21-02-1
.....	21-113-24
3681 836	21-02-1
.....	21-113-24
3681 841	21-02-1
.....	21-139-154
3681 842	21-02-1
.....	21-139-154
3681 843	21-02-1
.....	21-139-154
3681 844	21-02-1
.....	21-139-154
3681 861	21-02-1
.....	21-142-18
3681 862	21-02-1
.....	21-142-18
3681 863	21-02-1
.....	21-142-18
3681 864	21-02-1
.....	21-139-154
3681 865	21-02-1
.....	21-139-154
3681 866	21-02-1
.....	21-139-154
3681 867	21-02-1
.....	21-139-154
3681 889	21-09-2
3681 897	21-02-1
.....	21-42-34
3681 902	9-46-31
3681 903	9-46-33
3681 921	21-136-5
3681 934	21-134-8
3681 935	21-133-48
.....	21-134-45
3681 959	21-133-47
3681 964	21-133-40
3681 966	21-134-36
3681 968	21-134-40
3681 969	21-134-45
3681 976	21-133-7
3681 977	21-133-7
3681 988	21-134-5
3681 989	21-134-5
3681 994	21-133-7
3683 011	15-25-2
3683 801	9-39-5
3683 818	9-01-5
3683 819	9-35-1
3683 820	9-35-1
3683 821	9-35-1
3683 822	9-01-5
3683 823	7-14-13
.....	14-86-49
3683 824	7-14-13
3683 827	9-01-5
3683 828	9-01-5
3683 904	14-35-3
.....	14-35-40
3683 906	14-35-1
3683 949	9-58-1
3683 951	14-86-35
3683 958	3-02-1
3683 966	3-33-1
3683 970	22-01-5
3683 972-3	2-10-55
3683 974	22-06-2
.....	22-06-1
3683 975	22-06-1
.....	22-06-2
3684 122-3	23-11-1
3684 126-7	23-11-1
3684 130-1	23-34-120
3684 132-3	23-11-1
3684 140-1	23-34-120
3684 142-3	23-11-1
3684 236-7	23-11-1
3684 240-1	23-11-1
3684 244-5	23-11-1
3684 258	23-34-167
3684 266	15-03-3
3684 274	15-03-3
3684 336-7	23-11-3
3684 340-1	23-11-3
3684 344-5	23-11-3
3684 348-9	23-11-3
3684 405	23-32-17
3684 448-9	23-32-105
3684 485	23-19-8
3684 488	23-19-8
3684 491	23-19-8
3684 494	23-19-8
3684 497	23-19-8
3684 548-9	23-34-234
3684 652-3	23-34-80
3684 712	23-39-24
3684 713	23-39-24
3684 750-1	23-34-80
3684 752-3	23-34-80
3685 622	19-54-55
3685 652	10-07-6
3685 653	10-07-10
3685 661	14-45-12
3685 678	14-45-12
3685 683	9-35-1
3685 684	9-35-1
3685 685	9-35-1
3685 686	13-72-4
3685 687	24-25-25
3685 725	14-30-7
3685 726	14-30-4
3685 737	9-34-5
3685 738	9-34-5
3685 739	9-34-5
3685 740	9-34-5
3685 751	9-34-5
3685 752	9-34-5
3685 753	9-34-5
3685 776	14-50-25
3685 777	14-39-7
3685 799	14-73-1

PART NUMBER	CODE	PART NUMBER	CODE	PART NUMBER	CODE	PART NUMBER	CODE	PART NUMBER	CODE
3685 800	14-73-1	3691 156	7-16-11	3691 580	15-11-46	3692 926	7-11-3	3695 464	23-21-4
3685 809	14-35-1	3691 161	7-16-11	3691 583	7-26-9	3692 927	7-11-3	3695 466	23-21-4
3685 839	14-35-1	3691 168-9	8-34-40	3691 586-7	7-16-11	3692 932	7-11-3	3695 476	23-21-18
3685 841	14-35-1	3691 179	7-26-30	3691 588	7-26-15	3692 934	7-11-3	3695 477	23-21-18
3685 847	14-35-1	3691 180	7-26-30	3691 589	7-26-15	3692 935	7-11-3	3695 496	23-54-160
3685 951	15-11-89	3691 184-5	7-26-30	3691 592-3	12-02-6	3692 942	7-11-3	3695 501	23-54-72
3685 952	23-64-299	3691 204	7-16-11	3691 594-5	12-02-6	3692 944	7-11-3	3695 506	23-21-3
3685 964-5	12-01-5	3691 205	7-16-25	3691 596-7	12-02-6	3692 945	7-11-3	3695 507	23-21-3
3685 968-9	12-01-5	3691 207	7-17-13	3691 599	8-34-178	3692 946	7-11-3	3695 508	23-21-3
3686 002	13-64-3	3691 208	7-16-11	3691 604-5	12-02-6	3692 947	7-11-3	3695 509	23-21-3
3686 005	13-64-4	3691 209	8-34-40	3691 608	15-11-46	3692 953	7-11-3	3695 510	23-21-3
3686 008-9	13-64-4	3691 212-3	8-34-40	3691 609	7-26-15	3692 954	7-11-3	3695 511	23-21-3
3686 012-3	13-64-4	3691 214	8-34-40	3691 610	7-26-15	3692 962	7-11-3	3695 512	23-21-3
3686 017	13-68-6	3691 249	15-11-58	3691 616	7-16-15	3692 963	7-11-3	3695 513	23-21-3
3686 018	13-68-18	3691 252	12-04-25	3691 622	7-16-15	3692 968	7-11-3	3695 514	23-21-3
3686 026	13-64-3	3691 253	12-04-25	3691 624-5	7-26-38	3692 971	7-11-3	3695 517	23-21-3
3686 029	13-64-4	3691 277	7-16-11	3691 626-7	7-26-38	3692 972	7-11-3	3695 549	23-54-74
3686 032-3	13-64-4	3691 279	7-16-36	3691 634	7-26-38	3692 973	7-11-3	3695 555	23-17-2
3686 036-7	13-64-4	3691 282-3	8-34-40	3691 635	7-26-38	3692 976	7-11-3	3695 556	23-17-2
3686 042-3	13-68-6	3691 285	7-33-1	3691 638	7-16-11	3692 977	7-11-3	3695 557	23-17-2
3686 050	13-64-3	3691 290	7-16-22	3691 640	15-25-2	3692 978	7-11-3	3695 558	23-17-2
3686 055	13-64-4	3691 294	15-25-2	3691 641	7-16-36	3692 982	7-11-3	3695 562	15-11-17
3686 058-9	13-64-4	3691 300-1	12-01-105	3691 645	15-03-18	3692 983	7-11-3	3695 563	15-11-83
3686 062-3	13-64-4	3691 322	7-16-22	3691 646-7	8-34-40	3692 984	7-11-3	3695 564	15-11-83
3686 068-9	13-68-6	3691 352	7-16-63	3691 649	7-16-11	3692 985	7-11-3	3695 565	15-11-83
3686 072	13-64-47	3691 356	12-02-5	3691 650-1	8-34-40	3695 002-3	23-39-5	3695 604-5	23-39-5
3686 075	13-64-3	3691 357	7-16-63	3691 655	7-17-1	3695 009	23-39-2	3695 672-3	23-39-5
3686 079	13-64-4	3691 368	12-07-1	3691 660-1	7-26-15	3695 089	15-11-20	3695 674-5	23-39-5
3686 082-3	13-64-4	3691 371	15-03-5	3691 666	15-11-46	3695 100	15-11-74	3695 678	23-17-2
3686 086-7	13-64-4	3691 372	15-03-60	3691 667	15-06-3	3695 114-5	23-41-4	3695 679	23-17-2
3686 094-5	13-68-6	3691 375	7-16-63	3691 674-5	12-01-57	3695 128	23-21-8	3695 719	23-06-28
3686 100	13-64-3	3691 382	7-16-15	3691 686-7	7-16-22	3695 130	23-21-8	3695 732	15-11-38
3686 105	13-64-4	3691 402	15-03-60	3691 692	7-17-2	3695 132	23-21-8	3695 748	15-11-3
3686 114-5	13-68-6	3691 403	7-17-1	3691 694-5	7-26-15	3695 138-9	23-39-5	3695 749	15-13-2
3686 117	13-64-72	3691 412	15-25-2	3691 698	7-16-22	3695 140-1	23-39-5	3695 750	23-14-10
3686 120-1	13-68-6	3691 414	7-17-1	3691 700	12-07-1	3695 150-1	23-18-20	3695 759	23-06-15
3686 150	13-64-3	3691 416	15-25-2	3691 701	15-19-47	3695 160	23-47-55	3695 762-3	23-18-20
3686 155	13-64-4	3691 424	8-34-31	3691 716-7	12-04-25	3695 188	23-47-344	3695 770-1	23-18-20
3686 164-5	13-68-18	3691 426	8-34-40	3691 718-9	12-04-4	3695 189	23-47-344	3695 774-5	23-18-26
3686 167	13-64-72	3691 428	8-34-362	3691 726	7-16-14	3695 204-5	23-18-37	3695 778-9	23-18-26
3686 170	13-68-6	3691 429	8-34-29	3691 729	7-16-21	3695 208-9	23-18-13	3695 782-3	23-18-26
3686 174-5	13-64-72	3691 430-1	8-34-40	3691 733	7-17-23	3695 224-5	23-18-26	3695 796	23-18-11
3686 177	13-64-72	3691 435	8-34-291	3691 734	15-03-69	3695 270	15-11-20	3695 797	23-18-11
3686 183	13-68-6	3691 438-9	7-16-22	3691 741	7-17-23	3695 289	23-17-4	3695 804-5	23-18-107
3686 185	13-64-22	3691 444-5	8-34-40	3691 746-7	7-26-38	3695 312-3	23-39-34	3695 806	23-18-107
3686 195	13-64-4	3691 453	8-34-28	3691 748-9	12-01-58	3695 316-7	23-41-4	3695 808-9	23-18-115
3686 196-7	13-64-22	3691 455	7-16-36	3691 750-1	12-01-57	3695 318	23-54-1	3695 818-9	23-18-26
3686 366	8-47-8	3691 459	7-16-11	3691 753	7-16-36	3695 321	23-17-9	3695 820-1	23-18-26
3686 367	8-47-8	3691 466	7-16-14	3691 770-1	7-26-38	3695 322	23-54-1	3695 822-3	23-18-11
3686 370	8-47-8		12-15-8	3691 900	7-52-2	3695 323	23-54-1	3695 826	23-18-20
3686 374	8-47-8	3691 468	15-06-3	3691 903	7-52-12	3695 325	23-54-218	3695 828	23-18-20
3686 520-1	13-68-14	3691 470	15-06-3	3691 904	7-52-13	3695 327	23-54-218	3695 830	23-18-20
3686 566-7	13-68-6	3691 476	7-16-11	3691 905	7-08-2	3695 331	23-54-216	3695 832	23-18-20
3686 570-1	13-68-14	3691 488-9	12-04-25	3691 909	7-08-2	3695 333	23-54-216	3695 841	15-11-5
3686 590-1	13-68-6	3691 499	7-16-61	3691 916	7-08-2	3695 334	23-54-216	3695 846-7	23-47-6
3686 617	13-66-48	3691 500	7-16-61	3691 917	7-08-2	3695 335	23-54-187	3695 854	23-21-18
3686 618-9	13-66-48	3691 501	7-16-61	3691 918	7-08-2	3695 337	23-54-218	3695 856	23-21-4
3686 650	13-66-3	3691 502	7-16-61	3691 919	7-08-2	3695 338	23-54-223	3695 862	15-11-3
3686 653	8-47-8	3691 503	7-16-61	3691 920	7-08-2	3695 340	23-54-216	3695 868	23-21-18
3686 655	13-66-21	3691 504	7-16-61	3691 921	7-08-2	3695 341	23-54-73	3695 882	23-21-18
3686 658-9	13-66-16	3691 505	7-16-61	3691 923	7-52-2	3695 360	23-17-16	3695 884	23-21-4
3689 254-5	23-45-204	3691 514-5	8-34-176	3691 925	7-52-2	3695 402	15-11-20	3695 886	15-11-3
3689 330-1	23-45-57	3691 516-7	8-34-176	3691 964	7-52-9	3695 407	23-54-216	3695 888	15-11-3
3689 384	23-47-28	3691 520	7-16-11	3692 905	7-11-3	3695 415	23-19-105	3695 892	23-21-8
3689 418	23-45-57	3691 535	7-17-1	3692 908	7-11-3	3695 427	15-11-38	3696 090	23-64-17
3689 461	23-45-204	3691 536-7	7-16-36	3692 911	7-11-3	3695 429	23-21-14	3696 102-3	23-63-55
3689 545	23-45-57	3691 538	7-16-36	3692 912	7-11-3	3695 442	23-18-5	3696 122-3	23-63-55
3689 551	23-48-188	3691 541	7-17-1	3692 913	7-11-3	3695 447	23-18-5	3696 260-1	23-63-33
3689 562-3	23-48-99	3691 552	7-16-61	3692 914	7-11-3	3695 448	23-18-5	3696 266-7	23-63-33
3689 582	23-48-99	3691 553	7-16-61	3692 915	7-11-3	3695 453	23-18-5	3696 268-9	23-64-308
3689 638	23-45-31	3691 554	7-16-61	3692 916	7-11-3	3695 455	23-18-5	3696 270-1	23-64-308
3689 782-3	23-45-57	3691 555	7-16-61	3692 917	7-11-3	3695 456	23-18-5	3696 272-3	23-64-308
3691 105	8-34-40	3691 556	7-16-61	3692 923	7-11-3	3695 458-9	23-18-5	3696 274-5	23-64-308
3691 154-5	8-34-40	3691 576	7-16-15	3692 925	7-11-3	3695 460-1	23-18-5	3696 276-7	23-64-308

PART NUMBER	CODE
3696 278-9	23-64-308
3696 280-1	23-64-308
3696 282-3	23-64-308
3696 284	23-54-4
3696 332	23-15-13
3696 362-3	23-64-254
3696 366-7	23-64-254
3696 368-9	23-64-254
3696 384-5	23-64-254
3696 388-9	23-64-254
3696 392	23-64-269
3696 410-1	23-09-58
3696 426-7	23-34-120
3696 433	23-64-197
3696 440-1	23-42-16
3696 444-5	23-34-120
3696 446	23-10-18
3696 480	23-36-125
3696 481	23-54-4
3696 482	23-54-30
3696 483	23-54-4
3696 484	23-54-216
3696 485	23-54-143
3696 486	23-54-140
3696 488	23-54-141
3696 490	23-54-19
3696 491	23-64-17
3696 492-3	23-63-21
3696 510	23-64-10
3696 511	23-64-10
3696 512	23-54-103
3696 514-5	23-09-67
3696 523	23-54-150
3696 526-7	23-09-64
3696 530	23-64-300
3696 534-5	23-63-33
3696 538-9	23-15-30
3696 540-1	23-15-30
3696 560-1	23-64-311
3696 562-3	23-64-311
3696 565	23-64-21
3696 575	23-64-12
3696 587	23-64-19
3696 596-7	23-11-29
3696 622-3	23-64-311
3696 624-5	23-64-311
3696 626-7	23-63-136
3696 640-1	23-63-33
3696 693	23-09-53
3696 700-1	23-14-70
3696 722	23-64-269
3696 723	23-64-271
3696 724-5	23-64-269
3696 752	23-64-12
3696 754	23-09-64
3696 760	23-09-53
3696 770-1	15-19-2
3696 848-9	23-63-126
3696 850	23-34-309
3696 851	23-34-309
3696 859	23-34-309
3696 860	23-34-309
3696 862	23-34-309
3696 863	23-34-309
3696 864	23-34-309
3696 865	23-34-309
3696 879	23-34-309
3696 892	23-34-309
3696 893	23-34-309
3696 942-3	23-34-309
3696 955	23-34-309
3696 965	23-34-309
3696 966	23-34-309
3696 971	23-34-309
3696 973	23-34-309
3696 974	23-34-309
3696 975	23-34-309
3696 999	23-54-5
3698 267	9-07-5
3698 360	14-30-2
3698 435	9-48-7
3698 458	9-48-56
3698 463	9-46-33
3698 475	14-62-1
3698 498	8-36-4
3698 564	10-24-10
3698 565	9-05-5
3698 575	24-25-45
3698 584	9-48-7
3698 614	9-23-5
3698 615	9-03-4
3698 617	9-03-4
3698 639	9-03-18
3698 644	9-48-9
3698 652	7-04-9
	19-54-115
	25-02-24
3698 653	8-36-4
3698 659	9-03-5
3698 664	24-25-15
3698 667	24-25-10
3698 668	9-46-33
3698 687	25-02-24
3698 807	7-04-5
3698 810	19-54-115
3698 821	9-03-28
3698 826	19-54-86
3698 832	10-23-7
3698 836	14-30-2
3698 839	14-25-11
3698 846	19-54-115
3698 880	25-06-12
3698 886	25-06-1
3698 887	25-06-7
3698 902	19-54-115
3698 903	19-54-115
3698 905	7-03-1
3698 906	25-02-31
3698 907	7-06-14
3698 909	25-02-50
3698 910	25-02-42
3698 911	8-36-4
3698 917	7-06-14
3698 919	25-02-30
3698 940	24-25-10
3698 941	24-25-10
3698 944	25-02-20
3698 948	7-04-5
	24-25-15
3698 950	7-04-5
	24-25-15
	25-02-24
3698 952	24-25-15
3698 954	24-25-10
3698 956	24-25-10
3698 992	24-25-15
3698 993	24-25-15
3699 101	22-01-5
3699 558	22-05-14
3699 601	5-13-1
3699 602	5-13-1
3699 603	5-13-1
3699 607	5-13-1
3699 614	22-03-1
3699 618-9	5-55-1
3699 676	22-06-1
3699 678	22-06-18
3699 680	22-05-14
3699 699	5-05-7
3699 705	5-13-35
3699 717	5-26-4
3699 718	5-26-1
3699 719	5-26-1
3699 731	5-13-1
3699 733	5-05-16
3699 734-5	5-20-10
3699 737	5-20-9
3699 745	5-57-2
3699 746	5-57-2
3699 747	5-57-2
3699 754	5-67-1
3699 849	5-05-56
3699 850	5-05-55
3699 880	5-05-16
3699 881	5-05-16
3699 892-3	5-05-1
3699 899	5-57-2
3699 902	22-05-14
3699 932	22-05-14
3699 968	5-05-1
3699 968-9	5-05-1
3699 969	5-05-1
3699 992	5-05-43
3703 651	24-28-300
3704 531	24-25-127
3716 028	23-34-309
3720 002-3	23-34-235
3720 004-5	23-34-235
3720 007	23-34-27
3720 009	23-34-27
3720 012	23-34-242
3720 022-3	23-26-41
3720 040-1	23-66-65
3720 044	23-34-80
3720 056-7	23-34-234
3720 072-3	23-34-235
3720 074-5	23-34-27
3720 076-7	23-36-53
3720 085	23-34-16
3720 101	23-31-33
3720 102	23-31-33
3720 103	23-31-33
3720 104	23-31-33
3720 125	23-40-150
3720 126-7	23-40-170
3720 130-1	23-40-187
3720 133	23-40-155
3720 135	23-40-180
3720 137	23-40-187
3720 139	23-40-155
3720 147	23-32-48
3720 160-1	23-40-96
3720 162-3	23-40-96
3720 164-5	23-40-96
3720 166-7	23-40-96
3720 172-3	23-59-65
3720 174	23-34-301
3720 176-7	23-26-41
3720 182	23-64-1
3720 194-5	23-66-65
3720 198-9	23-66-65
3720 200	23-66-135
3720 201	23-66-135
3720 212-3	23-34-234
3720 218-9	23-34-280
3720 220	23-04-241
3720 221	23-34-253
3720 224-5	23-40-96
3720 226-7	23-34-242
3720 246-7	23-40-85
3720 258	23-64-314
3720 259	23-64-314
3720 260	23-22-86
3720 261	23-22-86
3720 272	23-34-17
3720 274	23-34-17
3720 285	23-34-119
3720 286	23-34-116
3720 294-5	23-26-41
3720 318-9	23-40-85
3720 352	23-49-7
3720 353	23-49-7
3720 360-1	23-64-280
3720 412-3	23-34-22
3720 416-7	23-34-242
3720 430-1	23-40-85
3720 450-1	23-40-92
3720 456-7	23-51-5
3720 458-9	23-34-234
3720 462-3	23-40-92
3720 470	23-34-16
3720 475	23-32-17
3720 480	23-34-16
3720 481	23-34-17
3720 482-3	23-32-93
3720 486	23-32-48
3720 487	23-32-48
3720 488	23-32-48
3720 494	23-34-301
3720 516-7	23-40-85
3720 519	23-34-309
3720 520	23-34-309
3720 522	23-34-309
3720 526-7	23-34-309
3720 530-1	23-34-234
3720 533	23-34-309
3720 535	23-34-309
3720 539	23-31-33
3720 541	23-34-5
3720 548-9	23-59-56
3720 552-3	23-26-41
3720 556-7	23-26-41
3720 560	23-34-29
3720 561	23-34-29
3720 562	23-34-29
3720 563	23-64-314
3720 565	23-64-314
3720 592	23-34-309
3720 593	23-34-309
3720 601	23-48-88
3720 604	23-34-38
3720 613	23-22-86
3720 614-5	23-36-118
3720 616-7	23-36-118
3720 618	23-34-5
3720 619	23-34-5
3720 621	23-36-54
3720 628-9	23-34-280
3720 630-1	23-34-16
3720 632-3	23-34-16
3720 634-5	23-34-16
3720 645	23-34-309
3720 656	23-34-5
3720 657	23-34-16
3720 658	23-34-17
3720 668-9	23-34-234
3720 670	23-34-5
3720 678-9	23-22-86
3720 691	23-34-225
3720 710	23-51-16
3720 712	23-36-29
3720 714	23-22-78
3720 717	23-36-54
3720 726	1-74-1
3720 732-3	23-40-170
3720 745	23-48-99
3720 746-7	23-34-229
3720 748	23-48-99
3720 756	23-36-29
3720 758	23-34-270
3720 785	23-36-134
3720 786	23-34-246
3720 788	23-32-79
3720 801	23-54-6
3720 804	23-34-19
3720 822-3	23-09-35
3720 824-5	23-34-236
3720 826-7	23-34-29
3720 828-9	23-34-20
3720 830	23-64-314
3720 840	23-34-268
3720 866-7	23-34-234
3720 870-1	23-64-84
3720 873	23-64-66
3720 920	23-40-86
3720 921	23-40-86
3720 975	23-34-301
3720 978	23-34-301
3720 980	23-34-301
3720 992-3	23-34-234
3722 001	17-23-53
	23-05-4
3722 006	17-23-52
	23-05-14
3722 059	17-12-4
3722 074-5	13-54-15
3722 214	17-23-3
3722 225	17-11-3
3722 226	17-11-3
3722 227	17-11-3
3722 228	17-11-3
3722 243	17-11-3
3722 244	17-11-3
3722 245	17-11-3
3722 276	13-64-44
3722 277	13-64-44
3722 293	17-11-3
3722 294	17-11-3
3722 340-1	13-64-44
3722 342-3	13-64-44
3722 344	13-66-51
3722 345	13-66-51
3722 348	13-66-51
3722 349	13-66-51
3722 350	13-66-51
3722 373	17-11-3
3722 374	17-11-3
3722 411	17-29-5
3722 420-1	2-08-5
3722 424-5	2-03-3
3722 435	19-27-2
3722 449	2-08-61
3722 460-1	2-08-5
3722 463	17-29-19
3722 464	17-29-44
3722 465	2-10-59
3722 466	2-10-59
3722 467	2-10-60
3722 468	2-10-65
3722 473	19-27-50
3722 481	17-29-5
3722 498	17-29-5
3722 565	2-08-7
3722 566	2-10-76
3722 568	2-08-7
3722 569	2-10-76
3722 636-7	2-10-6
3722 690-1	2-08-5
3722 711	17-11-5
3722 712	17-11-5

PART NUMBER	CODE
3722 713	17-11-5
3722 714	17-11-5
3722 728	13-64-42
	13-66-57
3722 731	17-23-3
3722 764-5	17-11-7
3722 815	17-11-3
3722 816	17-11-3
3722 817	17-11-3
3722 818	17-11-3
3722 823	17-11-3
3722 824	17-11-3
3722 825	17-11-3
3722 896	17-11-3
3722 901	17-15-11
3722 902	17-15-11
3722 903	17-15-11
3722 906	17-15-11
3722 907	17-15-11
3722 909	17-15-11
3722 915	17-19-3
3722 944-5	17-30-2
3722 971	17-23-3
3722 972	17-23-3
3722 974-5	13-54-15
3722 976-7	13-54-15
3722 979	17-12-4
3722 983	17-12-4
3722 985	17-12-4
3722 989	17-12-4
3722 994	17-19-3
3722 996	17-19-3
3723 014	3-03-2
3723 018	3-20-1
3723 020	3-22-28
3723 021	3-22-28
3723 022	3-22-28
3723 023	3-22-28
3723 024	3-22-28
3723 025	3-22-28
3723 026	3-22-28
3723 027	3-22-28
3723 028	3-22-28
3723 029	3-22-28
3723 030	3-22-28
3723 031	3-22-28
3723 032	3-22-28
3723 033	3-22-28
3723 034	3-22-28
3723 035	3-22-28
3723 036	3-22-28
3723 037	3-22-28
3723 038	3-22-28
3723 051	3-03-1
3723 052	3-03-1
3723 054	3-02-1
3723 055	3-03-1
3723 057	3-03-1
3723 059	3-03-1
3723 072	3-03-1
3723 098	3-03-1
3723 099	3-03-1
3723 100	3-32-1
3723 102	3-03-1
3723 103	3-03-1
3723 106	3-02-1
3723 109	3-03-1
3723 110	3-03-1
3723 148	3-11-2
3723 149	3-11-1
3723 151	5-13-9
3723 153	3-19-1
3723 238	3-02-20
3723 247	3-02-1
3723 251	16-20-1
3723 256	3-03-1
3723 262	3-03-1
3723 263	3-03-1
3723 272	3-03-1
3723 273	3-03-1
3723 274	3-03-1
3723 275	3-03-1
3723 296	3-02-1
3723 297	3-32-1
3723 299	3-03-1
3723 557	3-03-1
3723 559	3-03-1
3723 568	3-03-1
3723 570	3-03-1
3726 027	23-32-17
3726 073	14-86-40
3726 077	14-86-1
3726 085	14-86-1
3726 092	14-86-40
3726 094	14-86-40
3726 097	14-86-43
3726 098	14-86-40
3726 115	14-86-43
3726 118	14-89-60
3726 119	14-89-60
3726 122	14-86-40
3726 127	14-88-21
3726 131	14-88-21
3726 137	14-86-40
3726 140	14-86-40
3726 143	14-86-43
3726 144	14-86-43
3726 158-9	23-32-115
3726 198	9-64-24
3726 218	9-67-4
3726 220	9-67-4
3726 304	7-31-1
3726 319	13-03-10
3726 387	13-10-1
3726 400	13-11-5
3726 407	14-86-35
3726 425	14-86-1
3726 430	14-88-21
3726 476	14-86-35
3726 478	14-86-35
3726 480	14-86-35
3726 516	5-107-34
3726 517	5-107-34
3726 536	5-107-34
3726 539	5-107-34
3726 541	5-107-34
3726 542	5-57-2
3726 546	5-107-37
3726 551	13-33-61
3726 558	12-04-4
3726 560	12-04-4
3726 570	13-34-5
3726 572	12-04-25
3726 574	12-04-25
3726 576	12-04-25
3726 578	12-01-22
3726 580	12-01-22
3726 586-7	12-07-1
3726 588	12-07-1
3726 589	12-07-1
3726 590	12-01-22
3726 591	12-01-22
3726 592	12-01-22
3726 593	12-01-22
3726 594	12-01-21
3726 598	12-04-22
3726 599	12-04-22
3726 600	12-01-26
3726 609	11-05-1
3726 664	11-01-1
3726 668	11-01-1
3726 670	11-01-1
3726 705	11-05-1
3726 707	11-05-1
3726 710	11-05-1
3726 715	11-05-1
3726 717	11-05-1
3726 731	11-01-1
3726 732	11-01-1
3726 737	11-01-1
3726 739	11-01-1
3726 759	23-05-10
3726 760	23-05-10
3726 768	23-05-10
3726 777	23-32-17
3726 799	23-32-17
3726 807	23-32-17
3726 814	13-01-1
3726 815	13-01-1
3726 827	11-10-3
3726 829	11-09-4
3726 831	11-10-20
3726 832	11-10-42
3726 836-7	11-01-1
3726 838	11-01-1
3726 840	11-01-1
3726 846	11-05-1
3726 891	11-01-1
3726 899	11-01-1
3726 904	11-05-1
3726 906	11-05-1
3726 908	11-01-1
3726 912	11-01-1
3726 913	11-09-3
3726 924	11-01-1
3726 948-9	11-01-1
3726 952-3	11-01-1
3726 956-7	11-01-1
3726 972-3	11-01-1
3726 975	11-10-3
3726 978	11-01-1
3726 983	11-09-4
3726 984	11-01-1
3728 004-5	8-55-136
3728 010-1	8-55-158
3728 018-9	8-50-312
3728 032-3	8-55-195
3728 036-7	8-55-136
3728 050-1	8-50-312
3728 064-5	8-50-303
3728 086-7	8-55-158
3728 108-9	8-50-303
3728 118-9	8-55-7
3728 134-5	8-55-136
3728 148	8-55-14
3728 162-3	8-55-136
3728 180-1	8-55-158
3728 184-5	8-55-136
3728 188-9	8-55-136
3728 200-1	8-55-7
3728 207	8-50-338
3728 208-9	8-50-303
3728 214-5	8-55-7
3728 218-9	8-55-158
3728 224-5	8-55-136
3728 232-3	8-55-158
3728 274-5	8-56-43
3728 286-7	8-56-1
3728 304	8-56-23
3728 328	8-55-136
3728 340	8-55-136
3728 348-9	8-55-158
3728 350	13-66-50
3728 357	8-56-43
3728 363	8-50-312
3728 382-3	8-50-312
3728 394-5	8-55-136
3728 400-1	8-55-158
3728 406-7	8-55-158
3728 412	8-14-1
3728 424	8-50-308
3728 428-9	8-50-312
3728 438	8-56-43
3728 441	8-56-36
3728 464-5	8-56-43
3728 466-7	8-55-136
3728 472-3	8-55-136
3728 476	8-55-214
3728 478-9	8-55-195
3728 482	8-56-7
3728 484-5	8-55-195
3728 494-5	8-55-136
3728 498	8-56-23
3728 509	8-55-214
3728 516	8-50-315
3728 524	8-57-10
3728 526	8-57-30
3728 535	8-56-23
3728 544-5	8-50-315
3728 550-1	8-50-315
3728 552	8-14-9
3728 554	8-14-1
3728 570-1	8-50-311
3728 572-3	13-66-50
3728 578	8-57-10
3728 582-3	8-50-293
3728 598-9	8-50-312
3728 611	8-57-18
3728 613	8-50-314
3728 630-1	8-50-312
3728 634	8-56-40
3728 654-5	8-55-158
3728 674-5	8-55-136
3728 678-9	8-55-136
3729 157	23-49-11
3733 285	25-04-5
3738 423	8-00-0
3740 107	14-86-35
3740 797	23-67-5
3740 802	21-84-1
3740 804	21-84-1
3740 921	8-50-412
3740 938-9	23-18-25
3743 020	21-134-5
3743 022	21-134-5
3743 027	21-133-48
	21-134-45
3743 047	21-129-10
3743 049	21-05-1
3743 051	21-136-65
3743 052	21-137-22
3743 077	6-09-1
3743 090	21-133-15
3743 092	21-139-30
3743 117	21-03-1
3743 118	21-03-1
3743 119	21-03-1
3743 125	21-03-1
3743 128	21-03-1
3743 139	21-139-4
3743 140	21-139-4
3743 141	21-139-4
3743 142	21-139-4
3743 144	21-139-4
3743 146	21-139-4
3743 158	21-139-147
3743 159	21-139-147
3743 160	21-139-147
3743 161	21-139-140
3743 162	21-139-140
3743 163	21-139-140
3743 165	21-139-140
3743 184	21-134-38
3743 185	9-46-31
3743 186	21-129-10
3743 188	21-129-5
3743 189	21-129-5
3743 229	21-118-40
3743 237	21-133-17
3743 238	21-133-17
3743 245	21-04-19
3743 246	21-04-27
3743 254	21-142-18
3743 314	21-03-21
3743 338	21-136-15
3743 341	21-133-7
3743 351	21-04-26
3743 353	21-137-47
3743 382	21-133-7
3743 384	21-133-15
3743 400	6-14-1
3743 421	21-02-1
	21-139-154
3743 422	21-02-1
	21-139-154
3743 423	21-02-1
	21-139-154
3743 424	6-13-1
3743 439	21-42-23
3743 476	21-02-1
	21-139-154
3743 478	21-02-1
	21-139-154
3743 517	21-138-10
3743 518	21-138-10
3743 519	21-138-8
3743 520	21-138-21
3743 536	21-137-205
3743 555	21-134-36
3743 580	21-137-41
3743 621	21-133-20
3743 622	21-133-7
3743 624	21-133-15
3743 669	21-04-19
3743 687	21-137-47
3743 690	21-09-2
3743 794	21-42-23
3743 795	21-42-23
3743 798	21-137-41
3743 840	21-139-71
3743 891	21-142-18
3743 910	21-118-40
3744 116	23-17-4
3744 117	23-17-2
3744 119	23-17-4
3744 120	23-17-4
3744 252	8-50-334
3744 266	1-48-88
3744 278	24-28-90
3744 280	23-54-156
3744 415	17-11-3
3744 416	17-11-3
3744 418	17-11-3
3744 419	17-11-3
3744 420	17-11-3
3744 422	17-23-3
3744 423	5-39-1
3744 440	5-100-1
3744 441	5-100-1
3744 445	5-39-1

PART NUMBER	CODE
3744 447	5-39-1
3744 449	5-03-3
3744 452	3-19-1
3744 454	3-19-1
3744 455	3-19-1
3744 456	3-19-1
3744 464	17-23-3
3744 465	17-23-3
3744 467	5-39-1
3744 472	5-100-1
3744 477	5-05-41
3744 482	14-89-57
3744 487	3-19-1
3744 495	3-33-1
3744 549	14-39-7
3744 550	14-39-7
3744 670	15-25-2
3744 673	14-39-7
3744 734	23-09-53
	23-64-272
3744 735	23-39-45
	23-64-282
3744 750	8-50-156
3744 755	14-43-5
3744 756	14-35-1
3744 757	14-30-7
3744 766	14-43-5
3744 771	14-43-5
3744 805	14-73-1
3744 806	14-73-1
3744 809	14-35-3
3744 820	25-06-2
3744 826	9-48-14
3744 827	9-48-6
3744 831	9-50-1
3744 839	9-09-2
3744 840	9-09-2
3744 841	9-09-2
3744 842	9-09-2
3744 843	9-09-2
3744 844	9-09-2
3744 856-7	8-50-334
3744 860-1	8-55-194
3744 864-5	8-55-194
3744 889	8-29-99
3744 913	25-02-42
3744 933	14-02-88
3744 938-9	5-64-1
3744 953	1-48-599
	24-28-195
3744 956-7	8-55-194
3744 958-9	8-55-194
3744 960-1	8-55-194
3744 966	1-48-770
	24-24-150
3744 970	1-47-27
3744 973	8-36-1
3744 988	8-00-0
3746 001	8-37-15
3746 500	23-67-161
3746 505	23-54-167
3746 507	23-54-167
3746 510	1-47-9
3746 518	8-50-129
3746 524	8-37-155
3746 526	8-53-289
3746 527	8-53-274
3746 530	23-67-160
3746 531	23-67-160
3746 537	23-67-160
3746 538	23-67-160
3746 539	23-67-160
3746 543	23-54-167
3746 545	23-54-167
3746 546	23-54-170
3746 571	1-47-9
3746 576	8-53-296
3746 578	8-53-296
3746 579	8-53-296
3746 584	8-53-270
3746 586	8-53-270
3746 587	8-53-271
3746 589	8-53-279
3746 596	8-53-297
3746 597	8-53-297
3746 598	8-53-297
3746 601	23-47-446
3746 602	8-15-40
3746 603	8-53-296
3746 604	8-53-296
3746 606	8-20-8
3746 607	8-20-8
3746 617	8-37-15
3746 618	23-33-152
3746 629	8-20-16
3746 632	8-53-279
3746 633	23-19-100
3746 637	8-53-283
3746 640	8-53-301
3746 642	8-42-1
3746 643	8-42-1
3746 644	8-58-79
3746 650	1-47-9
3746 653	8-37-145
3746 658	8-37-64
3746 663	8-37-57
3746 664	8-33-90
3746 667	8-53-279
3746 670	8-37-63
3746 673	8-37-15
3746 676	8-62-10
3746 680	8-50-129
3746 682	15-13-2
3746 683	8-50-129
3746 687	23-41-170
3746 688	23-41-170
3746 689	23-41-170
3746 690	8-58-69
3746 691	8-37-70
3746 702	8-11-6
3746 703	8-33-90
3746 704	8-19-83
3746 715	8-37-57
3746 717	8-12-2
3746 722	8-62-1
3746 723	23-49-2
3746 724	23-49-2
3746 726	1-87-58
3746 727	8-62-7
3746 729	8-37-88
3746 736	8-12-2
	8-62-4
3746 737	1-87-58
3746 745	5-124-2
3746 748	5-124-3
3746 750	8-15-53
3746 758	8-01-30
3746 761	8-01-30
3746 768	5-124-4
3746 810	8-37-145
3746 812	8-62-10
3746 813	23-67-249
3746 815	8-53-286
3746 817	8-33-90
3746 818	8-33-91
3746 822	8-32-2
3746 824	8-32-2
3746 826	8-00-0
3746 829	8-37-15
3746 830	1-47-7
3746 841	23-49-2
3746 842	23-49-2
3746 843	23-49-2
3746 846	23-49-2
3746 851	23-67-160
3746 869	8-12-2
3746 872	8-00-0
3746 873	8-00-0
3746 881	8-00-0
3746 882	8-00-0
3746 901	23-49-2
3746 910	23-49-2
3746 915	8-32-2
3746 916	23-49-2
3746 921	21-30-21
3746 922	21-30-21
3746 981	23-49-2
3748 014	5-31-15
3748 020	5-31-11
3748 021	5-29-1
3748 023	5-31-12
3748 028	5-27-1
3748 031	5-27-1
3748 032	5-27-1
3748 033	5-27-1
3748 039	5-31-15
3748 041	5-31-15
3748 046	5-27-1
3748 047	5-28-9
3748 048	6-50-1
3748 052	6-38-1
3748 055	5-27-1
3748 056	6-38-1
3748 058	6-35-1
3748 076	5-34-1
3748 077	5-36-1
3748 078	6-24-1
3748 079	5-27-1
3748 085	5-34-1
3748 086	5-36-1
3748 105	19-31-1
3748 107	19-31-1
3748 109	19-31-1
3748 111	19-31-1
3748 114	19-30-24
3748 133	19-46-8
3748 153	19-14-30
3748 164	19-46-3
3748 175	19-46-3
3748 199	19-15-4
3748 206	19-14-1
3748 207	19-14-1
3748 208	19-14-1
3748 212	19-15-4
3748 213	19-15-4
3748 214	19-14-23
3748 215	19-14-23
3748 216	19-14-23
3748 229	19-14-10
3748 232	19-14-1
3748 233	19-14-1
3748 241	19-14-4
3748 242	19-14-85
3748 246	19-46-3
3748 247	19-46-3
3748 248	19-15-4
3748 249	19-15-4
3748 250	19-15-4
3748 252	19-15-4
3748 257	19-15-4
3748 258	19-15-4
3748 263	19-15-23
3748 267	19-15-23
3748 268	19-15-23
3748 269	19-15-4
3748 270	19-15-51
3748 271	19-15-43
3748 283	19-30-26
3748 284	19-30-26
3748 285	19-30-26
3748 299	21-30-2
3748 310	19-15-23
3748 311	19-46-3
3748 344	19-30-26
3748 347	19-30-26
3748 348	19-30-26
3748 349	19-15-111
3748 353	19-15-4
3748 361	19-46-59
3748 362	19-15-4
3748 376	19-14-1
3748 378	19-14-1
3748 380	19-14-23
3748 393	21-30-11
3748 398	19-14-120
3748 400	19-14-30
3748 407	4-25-7
3748 409	4-25-7
3748 412	4-25-7
3748 416	4-25-3
3748 417	4-25-14
3748 418	4-08-16
3748 419	23-33-231
3748 421	4-25-1
3748 425	4-25-7
3748 426	4-25-22
3748 429	4-25-20
3748 431	4-25-7
3748 432	4-25-1
3748 437	4-25-3
3748 442	4-25-26
3748 443	4-25-7
3748 456	21-30-2
3748 458	19-14-1
3748 459	19-14-1
3748 478	19-30-40
3748 479	19-30-40
3748 480	19-30-40
3748 481	19-30-40
3748 482	19-30-40
3748 489	19-14-16
3748 490	19-15-4
3748 491	19-15-4
3748 492	19-14-36
3748 493	19-14-1
3748 494	19-46-59
3748 495	19-15-4
3748 496	19-14-97
3748 497	21-30-11
3748 498	19-14-82
3748 499	19-14-75
3748 500	19-14-93
3748 501	19-15-77
3748 577	19-46-3
3748 584	19-46-8
3748 592	19-14-89
3748 599	19-15-51
3748 673	4-25-1
3748 674	4-25-1
3749 006	15-06-16
3749 007	15-06-16
3749 008	15-06-16
3749 009	15-06-16
3749 258	23-23-52
3749 259	23-23-52
3749 260-1	23-23-52
3749 262-3	23-23-52
3749 264	23-23-52
3749 266-7	23-23-52
3749 268-9	23-23-52
3749 270-1	23-23-52
3749 272-3	23-23-52
3749 274	23-23-52
3749 276-7	23-23-52
3749 278-9	23-23-52
3749 280	23-23-52
3749 407	23-23-52
3749 412-3	23-23-52
3749 414-5	23-23-52
3749 416	23-23-65
3749 418-9	23-23-65
3749 422-3	23-23-65
3749 424-5	23-23-65
3749 426-7	23-23-65
3749 428	23-23-65
3749 492	15-25-2
3749 512	15-25-2
3749 638	7-16-61
3749 639	7-16-61
3749 640	7-16-61
3749 641	7-16-61
3749 642	7-16-61
3749 643	7-16-61
3749 644	7-16-61
3749 645	7-16-61
3749 854-5	23-11-23
3749 976-7	23-23-52
3749 978-9	23-23-52
3749 980-1	23-23-52
3749 982-3	23-23-52
3749 986-7	23-23-52
3751 015	9-31-4
3751 067	9-48-6
3751 079	7-04-5
3751 082	8-36-4
3751 083	9-48-6
3751 126	7-06-14
3751 165	7-04-5
	24-25-15
3751 174	14-02-18
3751 219	25-02-50
3751 233	9-23-18
3751 235	9-23-18
3751 236	10-24-30
3751 243	24-25-10
3751 273	19-54-115
3751 275	19-54-115
3751 276	19-54-115
3751 277	19-54-115
3751 279	19-54-116
3751 286	14-30-2
3751 343	14-39-45
3751 344	14-14-12
3751 345	25-06-17
3751 382	7-03-1
3751 387	7-03-1
3751 393	9-48-6
3751 415	14-39-35
	14-39-45
3751 420	14-30-1
3751 421	14-30-1
3751 423	14-30-1
3751 424	14-30-1
3751 425	14-30-1
3751 426	14-30-1
3751 427	14-30-1
3751 428	14-30-1
3751 430	14-30-1
3751 431	14-30-1
3751 433	14-30-1

PART NUMBER	CODE
3751 434	14-30-1
3751 435	14-30-1
3751 436	14-30-1
3751 439	14-30-1
3751 440	14-30-1
3751 443	14-30-1
3751 444	14-30-1
3751 446	14-30-1
3751 447	14-30-1
3751 448	14-30-1
3751 449	14-30-1
3751 450	14-30-1
3751 451	14-30-1
3751 454	14-30-1
3751 474	14-30-1
3751 476	14-39-35
	14-39-45
3751 477	14-39-45
3751 478	14-39-35
	14-39-45
3751 479	14-39-45
3751 480	14-39-45
3751 481	14-39-45
3751 482	14-39-35
	14-39-45
3751 483	14-39-45
3751 484	14-39-35
	14-39-45
3751 485	14-39-45
3751 489	14-30-1
3751 490	14-30-1
3751 502	14-67-1
	14-73-2
3751 506	25-06-1
3751 509	14-02-18
3751 510	10-02-61
3751 513	25-06-1
3751 527	14-11-9
3751 528	14-11-9
3751 529	14-14-1
3751 531	14-14-20
3751 532	14-11-9
3751 533	14-11-9
3751 534	14-11-9
3751 535	14-14-1
3751 537	14-11-9
3751 538	14-06-10
3751 540	14-06-10
3751 543	14-25-11
3751 544	14-25-11
3751 545	14-06-1
3751 547	14-06-1
3751 549	14-06-1
3751 551	21-142-12
3751 552	14-11-13
3751 553	14-11-18
3751 554	14-11-9
3751 555	14-11-9
3751 556	14-11-9
3751 557	14-11-9
3751 564	14-14-1
3751 568	14-11-9
3751 569	14-11-9
3751 570	14-11-9
3751 571	14-06-10
3751 572	14-14-4
3751 573	14-06-1
3751 600	14-06-1
3751 602	9-07-5
3751 607	9-48-6
3751 612	25-02-24
3751 613	14-73-21
3751 635	9-50-3
3751 636	9-48-14
3751 637	9-48-45
3751 673	9-39-6
3751 674	9-39-6
3751 675	9-39-6
3751 676	9-39-6
3751 677	8-28-36
3751 678	8-28-36
3751 714	25-06-7
3751 715	25-06-7
3751 723	9-50-5
3751 729	9-48-7
3751 741	9-39-15
3751 777	25-06-2
3751 791	9-48-6
3751 794	9-48-6
3751 795	9-48-6
3751 808	9-13-5
3751 812	7-05-1
3751 818	9-02-17
3751 822	8-28-36
3751 823	8-28-36
3751 824	8-28-36
3751 831	9-07-5
3751 875	10-24-4
3751 881	9-07-5
3751 886	9-07-5
3751 889	9-07-5
3751 891	9-07-5
3751 899	9-07-5
3751 929	24-25-15
3751 934	10-24-4
3751 950	14-62-1
3751 951	10-03-7
3751 954	10-24-4
3751 956	10-03-4
3751 957	10-03-4
3751 992	10-03-4
3751 995	10-03-4
3752 001	15-03-3
3752 004	23-64-66
3752 012	15-03-3
3752 018	15-03-3
3752 027	23-19-8
3752 050-1	23-11-3
3752 052-3	23-34-120
3752 056-7	23-11-3
3752 062-3	23-11-3
3752 066-7	23-11-3
3752 068-9	23-34-120
3752 072-3	23-11-3
3752 078-9	23-11-3
3752 082-3	23-11-3
3752 088-9	23-11-3
3752 090-1	23-34-120
3752 094-5	23-11-3
3752 108	23-32-17
3752 150-1	23-32-105
3752 159	14-88-28
3752 170	15-03-3
3752 172	15-03-3
3752 174	15-03-3
3752 188	13-11-5
3752 250-1	23-11-1
3752 254-5	23-34-120
3752 256-7	23-11-1
3752 260-1	23-34-120
3752 262-3	23-11-1
3752 266-7	23-34-120
3752 268-9	23-11-1
3752 272-3	23-34-120
3752 274-5	23-11-1
3752 278-9	23-34-120
3752 280-1	23-11-1
3752 284-5	23-34-120
3752 286-7	23-11-1
3752 290-1	23-34-120
3752 292-3	23-11-1
3752 296-7	23-34-120
3752 298-9	23-11-1
3752 304-5	23-32-6
3752 324-5	23-32-93
3752 338-9	23-32-105
3752 346-7	23-11-1
3752 358-9	23-36-5
3752 364-5	23-36-5
3752 366	23-36-10
3752 375	23-64-66
3752 376	23-64-66
3752 384	23-19-8
3752 394	15-03-3
3752 400	23-54-3
3752 405	23-54-3
3752 420-1	23-40-85
3752 424	23-36-125
3752 428-9	23-34-120
3752 450	7-26-2
3752 460	23-34-293
3752 472	23-66-65
3752 491	23-36-53
3752 492	23-36-53
3752 497	23-36-125
3752 514-5	23-32-105
3752 522	7-33-1
3752 558	23-32-17
3752 562-3	23-32-105
3752 604-5	23-32-105
3752 606-7	23-32-105
3752 644-5	23-34-80
3752 646	15-03-3
3752 647	23-48-188
3752 648	23-32-56
3752 654	23-48-188
3752 658	23-48-65
3752 659	23-48-65
3752 660	23-32-56
3752 666-7	23-36-5
3752 670	23-19-8
3752 674-5	23-40-85
3752 690-1	23-34-80
3752 699	23-34-80
3752 700	7-26-2
3752 734-4	23-34-234
3752 738-9	23-36-5
3752 740	23-66-65
3752 741	23-66-65
3752 742	23-66-65
3752 743	15-03-3
3752 744-5	23-11-1
3752 748-9	23-19-84
3752 774	23-34-80
3752 807	15-11-46
3752 824-5	23-34-80
3752 834-5	23-34-80
3752 848	23-34-110
3752 856-7	23-32-105
3752 866-7	23-32-105
3752 888-9	23-32-105
3752 936-7	23-32-105
3752 943	23-34-80
3752 950-1	23-32-92
3752 958	23-34-80
3752 961	23-32-17
3752 970-1	23-34-234
3752 991	23-32-17
3752 994-5	23-40-85
3752 996-7	23-40-85
3752 998-9	23-40-85
3753 025	8-47-8
3753 027	8-47-8
3753 028	8-47-8
3753 100	13-64-3
3753 105	13-64-4
3753 115	13-68-6
3753 116	13-68-18
3753 122	13-64-47
3753 123	13-64-42
	13-66-57
3753 124	13-64-9
	13-66-45
3753 128-9	13-64-72
3753 150	13-64-3
3753 155	13-64-4
3753 162-3	13-68-6
3753 206	13-68-18
3753 256-7	13-64-4
3753 260-1	13-64-4
3753 264	13-68-18
3753 275	13-64-3
3753 279	13-64-4
3753 285	13-68-6
3753 332-3	13-64-4
3753 336-7	13-64-4
3753 339	13-68-18
3753 350	13-64-3
3753 355	13-64-4
3753 360-1	13-68-6
3753 362	13-68-18
3753 400	13-64-3
3753 405	13-64-4
3753 416-7	13-68-6
3753 455	13-64-4
3753 457	13-64-4
3753 460-1	13-68-6
3753 462	13-68-18
3753 464-5	13-68-6
3753 470	13-64-3
3753 500	13-64-3
3753 505	13-64-4
3753 516-7	13-68-6
3753 518	13-68-18
3753 521	13-64-22
3753 555	13-64-4
3753 568-9	13-64-26
3753 574-5	13-68-6
3753 576	13-68-18
3753 580	13-64-3
3753 582	13-68-6
3754 001	13-66-48
3754 002-3	13-66-48
3754 052	13-66-3
3754 057	13-66-21
3754 066	13-68-6
3754 071	8-47-8
3754 088	13-66-3
3754 092-3	13-66-16
3754 104	13-66-3
3754 107	13-66-21
3754 118-9	13-68-6
3754 142-3	13-66-16
3754 144	13-66-3
3754 152	13-66-3
3754 156-7	13-66-16
3754 162-3	13-68-18
3754 169	13-66-21
3754 174-5	13-64-72
	13-68-12
3754 177	13-66-21
3754 202	13-66-3
3754 205	13-66-21
3754 206-7	13-66-16
3754 212-3	13-68-18
3754 218-9	13-68-12
3754 252	13-66-3
3754 260-1	13-66-16
3754 262	13-68-6
3754 266	13-68-6
3754 268	13-68-18
3754 270-1	13-66-48
3754 273	13-66-21
3754 302	13-66-3
3754 305	13-66-21
3754 318	13-68-18
3754 320	13-68-6
3754 322	13-66-153
3754 326	8-47-68
3754 335	8-47-8
3754 336	13-68-6
3754 362	13-68-6
3754 366	13-68-6
3754 368	13-68-18
3754 372-3	13-68-12
3754 380-1	13-68-12
3754 402	13-66-3
3754 408	13-66-153
3754 416-7	13-68-6
3754 421	13-66-21
3754 427	8-47-8
3754 436	13-68-6
3754 452	13-66-3
3754 455	13-66-21
3754 478-9	13-68-6
3754 493	1-57-1
3754 502	13-66-3
3754 503	13-66-3
3754 507	13-66-21
3754 512-3	13-68-6
3754 518	13-68-6
3754 520	13-68-18
3754 532	13-66-48
	13-66-153
3754 536	13-66-153
3754 547	1-57-1
3754 552	13-66-3
3754 557	13-66-21
3754 566	13-68-6
3754 570	13-66-153
3754 576-7	13-66-48
3754 584	13-68-6
3754 595	1-57-1
3754 602	13-66-3
3754 603	13-66-3
3754 610	13-66-153
3754 612-3	13-66-153
3754 615	13-66-21
3754 618	13-68-6
3754 621	13-66-38
3754 649	1-57-1
3754 652	13-66-3
3754 657	13-66-21
3754 668	13-68-6
3754 670	13-68-18
3754 672	13-66-153
3754 674-5	13-66-153
3754 684-5	13-66-40
3754 702	13-66-3
3754 705	13-66-21
3754 730-1	13-66-48
3754 744	13-68-6
3754 752	13-66-3
3754 762	13-66-3
3754 768	13-68-6
3754 770	13-68-18
3754 772	13-66-147
3755 005	8-36-1
3755 034	8-27-250
3755 036	8-27-308

PART NUMBER	CODE
3755 037	8-27-1
	8-27-259
3755 038	8-27-1
	8-27-259
3755 039	8-27-250
3755 041	8-27-308
3755 042	8-27-1
	8-27-259
3755 043	8-27-1
	8-27-259
3755 044	8-27-1
	8-27-259
3755 045	8-27-1
	8-27-259
3755 048	8-27-308
3755 051	8-27-250
3755 053	8-27-1
	8-27-352
3755 054	8-27-1
	8-27-352
3755 055	8-27-308
3755 114	8-29-135
3755 115	8-29-135
3755 156	8-27-250
3755 159	8-27-250
3755 183	8-29-132
3755 184	8-29-133
3755 185	8-29-97
3755 191	8-28-3
	8-28-77
3755 192	8-28-77
3755 227	8-27-250
3755 261	8-52-76
3755 321	25-08-4
3755 356	8-29-97
3755 357	8-29-97
3755 362	8-29-132
3755 367	8-27-250
3755 403	8-28-77
3755 404	8-28-77
3755 406	8-28-77
3755 411	8-29-208
3755 413	8-29-208
3755 428	8-36-1
3755 432	8-36-1
3755 450	25-06-1
3755 454	25-08-4
3755 461	8-29-98
3755 467	8-27-1
	8-27-352
3755 468	8-27-1
	8-27-352
3755 469	8-27-250
3755 470	8-27-1
	8-27-352
3755 471	8-27-1
	8-27-352
3755 474	8-27-308
3755 475	8-27-1
	8-27-352
3755 476	8-27-1
	8-27-352
3755 486	8-27-1
	8-27-352
3755 487	8-27-1
	8-27-352
3755 488	8-27-250
3755 505	8-27-308
3755 508	8-27-1
	8-27-352
3755 509	8-27-1
	8-27-352
3755 511	8-27-308
3755 512	8-27-1
	8-27-352
3755 513	8-27-1
	8-27-352
3755 518	8-27-1
	8-27-352
3755 519	8-27-1
	8-27-352
3755 522	8-27-1
	8-27-352
3755 523	8-27-1
	8-27-352
3755 524	8-27-250
3755 582	25-08-1
3755 585	8-28-3
	8-29-208
3755 596	8-29-153
3755 600	25-08-1
3755 612	8-29-132
3755 627	8-29-135
3755 631	8-29-135
3755 681	8-27-1
	8-27-308
3755 682	8-27-1
	8-27-308
3755 683	8-27-250
3755 711	25-08-1
3755 717	25-08-4
3755 718	25-08-4
3755 719	25-08-4
3755 721	25-08-4
3755 722	25-08-4
3755 723	25-08-4
3755 724	25-08-4
3755 727	25-08-1
3755 737	8-29-156
3755 750	14-39-35
	14-39-45
3755 762	25-08-1
3755 766	25-08-1
3755 770	14-39-35
	14-39-45
3755 773	8-29-42
3755 784	8-29-97
3755 800	25-06-1
3755 821	8-27-1
	8-27-308
3755 822	8-27-1
	8-27-308
3755 823	8-27-250
3755 841	8-27-1
	8-27-308
3755 842	8-27-1
	8-27-308
3755 843	8-27-250
3755 850	8-28-74
3755 860	25-06-1
3755 900	8-52-4
	8-52-389
3755 951	8-29-154
3756 014-5	23-34-242
3756 016-7	23-34-235
3756 020-1	23-59-35
3756 029	23-32-48
3756 030-1	23-59-35
3756 034	23-34-167
3756 036	23-34-167
3756 038	23-34-179
3756 042-3	23-64-281
3756 046-7	23-36-66
3756 051	23-19-74
3756 052-3	23-64-281
3756 056-7	23-36-66
3756 060-1	23-51-5
3756 064-5	23-51-5
3756 068-9	23-51-5
3756 070	23-32-22
3756 073	23-32-22
3756 092-3	23-19-177
3756 100-1	23-32-49
3756 102-3	23-32-49
3756 104	23-04-241
3756 118-9	23-36-66
3756 124-5	23-34-280
3756 126-7	23-34-280
3756 140-1	23-64-213
3756 142-3	23-64-213
3756 144-5	23-19-82
3756 150-1	23-51-5
3756 154-5	23-34-235
3756 158-9	23-34-235
3756 160-1	23-32-49
3756 162-3	23-32-49
3756 166-7	23-34-176
3756 168	23-19-87
3756 184-5	23-59-37
3756 186-7	23-59-37
3756 197	23-34-167
3756 202-3	23-32-27
3756 205	23-34-231
3756 206	23-34-231
3756 208	23-34-231
3756 216	14-88-35
3756 230-1	23-34-179
3756 232-3	23-34-179
3756 234-5	23-34-179
3756 236-7	23-34-171
3756 242-3	23-34-246
3756 271	23-32-40
3756 272	23-04-241
3756 274-5	23-51-5
3756 276-7	23-51-5
3756 280-1	23-49-9
3756 292-3	23-34-176
	23-34-280
3756 296-7	23-34-171
3756 317	23-34-190
3756 319	23-34-190
3756 326-7	23-34-176
3756 330-1	23-34-176
3756 350-1	23-34-179
3756 352-3	23-34-179
3756 357	23-34-270
3756 358-9	23-34-229
3756 360-1	23-34-229
3756 362-3	23-32-17
3756 364	23-34-255
3756 366-7	23-51-19
3756 374-5	23-34-179
3756 379	23-34-255
3756 382	23-34-255
3756 383	23-34-280
3756 393	23-34-253
3756 395	23-34-253
3756 400-1	23-34-235
3756 402-3	23-34-235
3756 406	23-34-179
3756 407	23-34-179
3756 412	23-34-273
3756 413	23-34-273
3756 414	23-34-167
3756 415	23-34-167
3756 426-7	23-34-260
3756 431	23-34-253
3756 432-3	23-36-12
3756 434	8-47-68
3756 436	8-47-69
3756 444	23-34-273
3756 451	8-47-8
	23-34-179
3756 456-7	23-34-190
3756 466-7	23-34-249
3756 468-9	23-34-249
3756 482	4-23-2
3756 484-5	11-10-20
3756 494-5	23-34-190
3756 500-1	23-34-234
3756 502-3	23-34-234
3756 508-9	23-34-234
3756 512-3	23-34-229
3756 514-5	23-36-66
3756 524	23-32-24
3756 570-1	23-34-249
3756 572-3	23-51-5
3756 574	23-34-171
3756 588	23-49-9
3756 593	23-26-47
3756 596-7	23-51-5
3756 600-1	23-36-53
3756 602-3	23-36-53
3756 608-9	23-36-53
3756 624-5	23-32-93
3756 626-7	23-36-53
3756 628-9	23-36-53
3756 639	23-36-55
3756 640	17-19-20
3756 648-9	17-11-40
3756 659	23-34-257
3756 661	23-34-257
3756 664	23-34-179
3756 666-7	23-34-179
3756 668-9	23-34-249
3756 681	23-63-172
3756 694-5	23-34-280
3756 700-1	23-34-280
3756 714-5	23-34-249
3756 720-1	23-34-234
3756 722-3	23-34-234
3756 742	23-32-48
3756 756-7	23-34-235
3756 758-9	23-34-235
3756 760-1	23-51-5
3756 768-9	23-32-27
3756 772-3	23-34-191
3756 800-1	23-34-212
3756 808-9	23-51-5
3756 812-3	23-51-5
3756 829	23-63-172
3756 833	22-20-87
3756 836-7	23-48-99
3756 840	23-34-253
3756 844	23-63-172
3756 850-1	23-34-234
3756 852-3	23-34-234
3756 860-1	23-34-249
3756 868-9	23-34-27
3756 870-1	23-19-82
3756 874-5	23-19-82
3756 878	23-34-242
3756 878-9	23-34-242
3756 885	23-34-190
3756 894-5	23-34-280
3759 001	23-54-136
3759 021	23-34-309
3759 022	23-34-309
3759 030	23-34-309
3759 031	23-34-309
3759 037	23-34-309
3759 045	23-34-309
3759 048	23-34-309
3759 079	23-64-17
3759 080	23-64-17
3759 081	23-64-272
3759 089	23-11-29
3759 105	23-64-282
3759 140-1	23-63-104
3759 152	23-54-136
3759 153	23-34-309
3759 158	23-54-6
3759 183	23-42-16
3759 186	23-42-23
3759 187	23-54-103
3759 193	23-64-272
3759 194	23-63-181
3759 212-3	23-63-55
3759 222-3	23-64-71
3759 224-5	23-63-55
3759 230-1	23-63-55
3759 260-1	23-63-126
3759 272-3	23-64-308
3759 280-1	23-64-308
3759 290-1	23-09-51
3759 306-7	23-63-126
3759 330	23-64-242
3759 332-3	23-63-55
3759 352-3	23-64-308
3759 354-5	23-64-308
3759 363	23-39-24
3759 364-5	23-64-299
3759 370-1	23-64-308
3759 372-3	23-64-308
3759 374-5	23-64-308
3759 376-7	23-64-308
3759 379	23-54-20
3759 392	23-54-140
3759 393	23-54-31
3759 394	23-54-20
3759 395	23-54-30
3759 406-7	23-63-33
3759 420-1	23-63-33
3759 424-5	23-63-33
3759 428-9	23-63-33
3759 432-3	23-63-33
3759 434-5	23-63-33
3759 436-7	23-63-33
3759 438-9	23-63-33
3759 452-3	23-63-94
3759 454-5	23-63-21
3759 456-7	23-63-15
3759 458-9	23-63-15
3759 460-1	23-63-15
3759 464-5	23-63-15
3759 470-1	23-63-15
3759 472-3	23-63-15
3759 476-7	23-63-15
3759 478-9	23-63-15
3759 480-1	23-63-33
3759 496-7	23-63-33
3759 506-7	23-63-33
3759 516	23-64-276
3759 517	23-42-32
3759 520	23-63-181
3759 521	23-63-181
3759 524	23-63-181
3759 526-7	23-63-37
3759 531	23-39-45
3759 566	23-64-4
3759 568	23-64-282
3759 578	23-34-309
3759 588-9	15-19-13
3759 602-3	23-09-52
3759 606-7	23-09-52
3759 610	23-09-58
3759 611	23-39-19
3759 614	23-64-254
3759 615	23-09-52
3759 633	23-54-19

PART NUMBER	CODE
3759 634	15-19-50
3759 635	15-19-47
3759 636	15-19-47
3759 648	23-34-309
3759 649	23-34-309
3759 652-3	23-63-15
3759 655	23-34-309
3759 670	23-64-282
3759 671	23-64-17
3759 674-5	23-64-300
3759 678-9	23-63-15
3759 690-1	23-63-15
3759 696	23-64-17
3759 702-3	23-63-21
3759 736-7	23-63-21
3759 780	23-42-23
3759 781	23-42-23
3759 783	23-64-272
3759 784-5	23-15-13
3759 786-7	23-15-13
3759 792-3	23-34-309
3759 800	23-54-143
3759 801	23-64-12
3759 808-9	23-64-308
3759 810-1	23-64-308
3759 812-3	23-64-308
3759 814-5	23-64-281
	23-64-308
3759 822	23-64-4
3759 823	23-34-309
3759 833	23-64-12
3759 836	23-64-28
3759 838-9	23-11-29
3759 843	23-64-12
3759 844	23-64-4
3759 850	23-64-12
3759 854	23-64-12
3759 855	15-19-14
3759 858-9	23-63-15
3759 860	23-64-17
3759 866-7	23-09-51
3759 890	23-64-17
3759 896	23-64-272
3759 906	23-64-269
3759 908-9	23-64-300
3759 910	23-64-266
3759 911	23-64-12
3759 913	23-09-58
3759 914	23-64-282
3759 915	23-64-296
3759 924-5	23-64-254
3759 926-7	23-64-254
3759 936	23-64-4
3759 943	23-64-282
3759 944	23-63-55
3759 946-7	23-09-52
3759 954	23-64-4
3759 956-7	23-09-52
3759 962	23-64-4
3759 965	23-26-60
3759 966	23-26-60
3759 967	23-26-60
3759 980-1	23-64-12
3759 989	23-64-242
3759 992-3	23-09-52
3759 994-5	23-63-33
3759 996-7	23-63-33
3760 003	23-18-5
3760 006	23-18-5
3760 010-1	23-18-5
3760 020	23-39-44
3760 022	23-19-105
3760 024	23-19-105
3760 061	23-48-90
3760 110-1	23-18-26
3760 112-3	23-18-26
3760 114-5	23-18-26
3760 116-7	23-18-26
3760 118-9	23-18-26
3760 152	23-47-26
3760 197	23-54-216
3760 198	23-54-216
3760 199	23-54-187
3760 212	23-47-75
3760 247	23-41-106
3760 248-9	23-41-4
3760 276-7	23-41-4
3760 294	23-18-103
3760 302-3	23-17-28
3760 305	23-18-103
3760 310	23-18-125
3760 311	23-18-125
3760 334	15-11-5
3760 335	15-11-3
3760 338-9	23-39-5
3760 341	23-18-103
3760 351	23-17-2
3760 361	23-17-2
3760 371	23-17-2
3760 373	23-17-2
3760 376	23-17-2
3760 378	23-06-28
3760 390	23-47-6
3760 391	23-47-6
3760 401	23-21-66
3760 405	23-21-71
3760 433	15-11-5
3760 435	15-11-20
3760 456-7	23-14-27
3760 458-9	23-14-27
3760 482	23-54-118
3760 483	23-54-216
3760 485	23-54-218
3760 486	23-54-218
3760 489	23-54-216
3760 490	23-54-1
3760 491	23-54-1
3760 492	23-54-31
3760 493	23-54-216
3760 510	23-21-14
3760 528-9	23-41-106
3760 563	23-54-216
3760 575	15-11-5
3760 580-1	23-19-200
3760 582	23-48-202
3760 586-7	23-41-106
3760 600	23-17-11
3760 622	23-54-31
3760 623	15-11-38
3760 630	15-11-3
3760 645	15-11-17
3760 649	23-48-20
3760 650	23-32-80
	23-48-20
3760 658	23-32-58
	23-48-19
3760 667	23-49-9
3760 732	23-48-121
3760 732-3	23-48-121
3760 778-9	23-48-121
3760 782	23-21-4
3760 795	23-21-74
3760 833	23-48-201
3760 834	23-48-202
3760 855	23-18-56
3760 858-9	23-41-4
3760 860-1	23-39-5
3760 868-9	23-18-11
3760 870-1	23-18-25
3760 925	23-21-3
3760 926	23-21-3
3760 927	23-21-3
3760 928	23-21-3
3760 929	23-21-3
3760 930	23-21-3
3760 931	23-21-3
3760 934	23-21-3
3760 935	23-21-3
3760 936	23-21-3
3760 937	23-21-3
3760 938	23-21-3
3760 939	23-21-3
3760 941	23-21-3
3760 942	23-21-3
3760 996-7	23-18-125
3762 004	23-14-32
3762 010	23-14-32
3762 011	23-14-50
3762 036	23-14-15
3762 127	23-40-82
3762 128	23-40-82
3762 129	23-40-82
3762 130	23-40-82
3762 168-9	23-26-80
3762 205	23-31-146
	23-31-205
3762 234	23-32-7
3762 243	23-31-146
	23-31-205
3762 245	23-32-7
3762 246-7	23-32-7
3762 261	23-20-29
3762 263	23-20-29
3762 268	23-20-29
3762 291	23-32-7
3762 292-3	23-32-7
3762 294-5	23-32-7
3762 299	23-32-7
3762 300	23-32-7
3762 302	23-32-7
3762 304-5	23-32-7
3762 308-9	23-32-7
3762 314	23-32-7
3762 319	23-59-72
3762 380-1	23-32-7
3762 381	23-32-7
3762 382	23-32-7
3762 383	23-32-7
3762 388-9	23-63-14
3762 402	23-31-205
3762 409	23-20-29
3762 446	23-14-15
3762 451	23-49-8
3762 504-5	23-63-14
3762 508	23-32-7
3762 510	23-32-7
3762 512-3	23-32-7
3762 514	23-32-7
3762 530-1	23-32-7
3762 588	23-14-50
3762 599	23-32-7
3762 624	23-32-7
3762 625	23-32-7
3762 640	23-32-7
3762 654	23-38-3
3762 656	23-38-5
3762 714-5	23-49-7
3762 784	23-20-29
3762 788	23-20-29
3764 019	8-00-0
3764 023	23-67-41
3764 042	8-19-3
3764 047	8-00-0
	8-15-10
3764 072	8-00-0
3764 078	8-15-17
3764 095	8-15-55
3764 099	8-16-6
3764 112	8-00-0
3764 116	8-15-2
3764 118	8-15-2
3764 122	8-50-349
3764 123	8-50-349
3764 125	8-15-2
3764 126	8-56-34
3764 129	24-24-124
3764 134	8-15-2
3764 136	8-15-2
3764 137	8-15-2
3764 143	8-00-0
3764 158	8-00-0
3764 159	8-15-4
3764 161	14-38-25
3764 163	8-15-26
3764 164	8-15-9
	8-15-26
3764 166	8-01-17
3764 174	8-37-545
3764 182	8-15-53
3764 184	8-15-2
3764 185	8-15-2
3764 186	8-00-0
3764 187	8-00-0
	8-15-2
3764 188	8-15-2
3764 189	8-19-3
3764 190	8-15-9
3764 192	8-16-4
3764 198	8-17-30
3764 199	8-17-30
3764 200	8-19-3
3764 201	8-19-3
3764 202	8-19-3
3764 203	8-19-3
3764 204	8-00-0
3764 205	8-00-0
	8-15-2
3764 206	8-00-0
3764 207	8-00-0
	8-15-2
3764 208	8-19-3
3764 209	8-15-2
3764 210	8-15-2
3764 235	8-19-3
3764 236	8-19-3
	24-24-124
3764 237	8-19-3
	24-24-124
3764 238	8-19-3
3764 239	23-41-55
3764 240	23-54-178
3764 241	23-54-178
3764 243	8-62-12
3764 244	8-62-12
3764 245	23-54-178
3764 246	8-62-12
3764 248	8-62-12
3764 251	8-15-4
3764 252	23-41-55
3764 253	23-41-55
3764 254	23-41-55
3764 255	23-41-55
3764 257	23-41-55
3764 267	8-15-2
3764 268	8-15-2
3764 269	8-00-0
3764 270	8-15-26
3764 271	8-15-2
3764 272	8-15-2
3764 277	8-15-2
3764 278	8-01-17
3764 284	23-47-420
3764 285	23-47-420
3764 286	23-47-420
3764 287	23-47-420
3764 289	8-15-17
3764 294	8-00-0
3764 295	8-00-0
3764 296	8-00-0
3764 297	8-00-0
3764 298	8-01-4
3764 300	8-15-2
3764 301	8-15-9
	8-15-26
3764 302	8-15-2
3764 303	8-15-2
3764 304	8-00-0
3764 309	8-15-13
3764 313	8-00-0
3764 315	8-15-53
3764 317	8-15-53
3764 318	8-00-0
3764 319	8-15-4
3764 326	8-21-1
3764 328	8-00-0
3764 330	8-00-0
3764 331	8-00-0
	8-15-4
	23-54-178
3764 332	8-15-2
3764 334	8-15-4
3764 339	8-15-2
3764 341	23-41-55
3764 343	8-00-0
	8-50-410
3764 349	8-11-8
3764 351	8-00-0
3764 355	8-00-0
	8-15-2
3764 357	8-15-2
3764 358	8-15-2
3764 359	8-00-0
3764 362	25-06-1
3764 444	8-50-412
3764 504	8-56-34
3764 511	8-00-0
3764 513	8-15-4
3764 525	8-00-0
3764 529	8-15-4
3764 532	8-33-164
3764 534	8-15-4
3764 535	23-41-55
3764 537	23-41-55
3764 538	23-41-55
3764 540	8-15-53
3764 541	23-41-55
3764 542	23-41-55
3764 543	8-15-53
3764 550	8-15-17
3764 556	8-16-4
3764 557	8-16-6
3764 558	23-18-106
3764 561	8-50-349
	8-55-57
3764 563	8-56-34
3764 570	8-16-4
3764 572	8-16-6
3764 576	8-34-282
3764 577	23-47-425
3764 579	8-56-34

PART NUMBER	CODE
3764 581	8-00-0
3764 591	8-15-28
3764 595	8-15-13
3764 599	8-56-29
3764 620	8-00-0
3764 639	8-16-6
3764 640	8-16-6
3764 641	8-16-6
3764 643	8-33-164
3764 644	8-15-17
3764 646	8-56-29
3764 648	23-54-178
3764 649	23-54-178
3764 654	8-16-8
3764 658	8-15-38
3764 659	23-34-103
3764 666	14-02-69
3764 668	8-15-32
3764 670	1-48-516
3764 672	8-15-4
3764 673	8-37-184
3764 674	8-37-184
3764 678	8-15-3
3764 692	23-67-41
3764 693	8-00-0
3764 695	8-00-0
3764 703	1-87-404
3764 704	1-87-404
3764 705	8-15-17
3764 706	8-15-17
3764 707	8-15-17
3764 708	8-37-59
3764 710	8-15-17
3764 711	8-15-17
3764 712	8-15-17
3764 714	8-15-4
	8-19-3
3764 715	8-16-6
3764 718	23-34-117
3764 730	8-15-23
3764 734	8-15-53
3764 740	24-24-124
3764 742	24-24-124
3764 743	8-15-17
3764 746	8-55-57
3764 747	8-55-57
3764 751	8-00-0
3764 752	8-37-59
3764 753	24-24-124
3764 754	14-02-69
3764 755	8-15-9
3764 756	8-15-9
3764 766	8-00-0
3764 767	8-00-0
3764 768	8-00-0
3764 770	23-41-95
3764 771	14-72-35
3764 775	8-33-168
3764 784	8-37-69
3764 785	8-15-53
3764 791	8-15-17
3764 795	8-15-9
3764 799	8-37-7
3764 808	8-15-53
3764 811	8-15-4
3764 812	8-00-0
3764 817	8-00-0
3764 827	23-54-178
3764 829	23-41-55
3764 842	8-15-2
3764 843	8-15-2
3764 849	23-18-109
	23-41-176
3764 852	8-15-3
3764 856	8-16-6
	24-25-231
3764 857	8-16-6
3764 858	24-24-124
3764 862	8-00-0
3764 863	8-50-349
3764 864	8-50-349
3764 865	8-50-349
3764 876	8-15-9
3764 877	8-15-9
3764 878	23-54-178
3764 879	8-55-57
3764 885	23-41-55
3764 886	8-15-4
3764 887	8-00-0
	8-15-4
3764 888	8-15-4
3764 889	8-15-4
3764 890	8-15-4
3764 891	8-00-0
	8-15-17
3764 892	8-00-0
	8-15-17
3764 893	8-19-3
	24-24-124
3764 894	8-19-3
3764 898	8-15-40
3764 903	8-01-17
3764 904	8-16-8
3764 905	8-16-8
3764 906	8-00-0
3764 908	8-16-4
3764 911	8-15-53
3764 912	8-15-53
3764 913	8-15-53
3764 914	8-15-53
3764 915	8-15-17
3764 919	8-15-4
3764 920	8-15-4
3764 926	8-15-2
3764 927	8-15-26
3764 929	8-15-53
3764 930	8-16-10
3764 939	8-15-9
3764 940	8-15-9
3764 941	8-16-8
3764 942	8-15-22
3764 945	8-50-411
3764 954	8-15-4
3764 955	8-15-2
3764 967	8-33-114
3764 968	8-62-12
3764 969	8-15-4
3764 973	8-19-3
3764 981	8-15-4
3764 982	23-54-178
3764 983	23-54-178
3764 986	8-00-0
	8-15-2
3764 987	8-00-0
3764 991	8-19-3
3765 034-5	23-45-57
3765 038-9	23-45-52
3765 040-1	23-45-52
3765 044	23-45-34
3765 236-7	23-45-57
3765 325	23-48-99
3766 513	5-20-4
3766 515	5-05-57
3766 519	5-05-17
3766 521	5-57-2
3766 550	5-05-50
3766 551	5-05-51
3766 556	5-20-9
3766 601	5-62-1
3766 662	5-05-43
3766 663	5-05-43
3766 668	5-05-16
3766 669	5-05-16
3766 675	5-67-1
3766 678	5-71-2
3766 679	5-71-1
3766 687	5-71-1
3767 003	23-64-314
3767 005	23-64-314
3767 016	23-34-309
3767 017	23-34-309
3767 048	23-66-135
3767 049	23-66-135
3767 052	23-32-46
3767 061	23-36-125
3767 070-1	23-48-109
3767 080	23-34-17
3767 087	23-31-145
3767 088-9	23-34-212
3767 090-1	23-34-280
3767 092-3	23-34-282
3767 100	23-66-135
3767 101	23-66-135
3767 108-9	23-40-85
3767 114-5	23-59-56
3767 118-9	23-40-85
3767 122-3	23-59-56
3767 126-7	23-59-56
3767 130-1	23-59-56
3767 132-3	23-40-85
3767 134-5	23-40-85
3767 180-1	23-40-85
3767 186-7	23-40-85
3767 196	23-64-1
3767 197	23-64-272
3767 204-5	23-36-125
3767 206-7	23-36-125
3767 212	23-64-66
3767 213	23-64-66
3767 214	23-64-66
3767 215	23-64-66
3767 216	23-64-66
3767 225	23-31-137
3767 240	23-66-235
3767 246-7	23-66-65
3767 256-7	23-66-65
3767 262-3	23-66-77
3767 266-7	23-26-41
3767 277	23-66-235
3767 313	23-34-17
3767 315	23-34-17
3767 316-7	23-34-280
3767 324-5	23-26-41
3767 327	23-54-6
3767 328	23-34-82
3767 329	23-34-280
3767 331	23-34-280
3767 334-5	23-36-123
3767 336-7	23-36-138
3767 338	23-36-138
3767 344	23-48-90
3767 348-9	23-40-85
3767 358-9	23-34-280
3767 360-1	23-34-280
3767 368-9	23-34-280
3767 392-3	23-66-65
3767 394	23-34-245
3767 395	23-34-245
3767 396	23-32-51
3767 422	23-48-93
3767 423	23-31-33
3767 427	23-08-75
3767 443	8-37-67
3767 449	23-36-125
3767 452	23-36-125
3767 464	1-74-1
3767 465	23-40-155
3767 467	23-40-155
3767 468-9	23-40-157
3767 470-1	23-40-157
3767 474	23-40-150
3767 478-9	23-40-170
3767 480-1	23-40-170
3767 482	23-40-170
3767 484	23-40-155
3767 500	23-40-91
3767 503	23-40-91
3767 508-9	23-31-137
3767 520	23-36-125
3767 521	23-34-255
3767 544-5	23-34-20
3767 546-7	23-59-56
3767 548-9	23-59-56
3767 550-1	23-66-65
3767 552-3	23-34-20
3767 556	23-34-309
3767 560-1	23-34-309
3767 563	23-63-111
3767 564-5	23-40-85
3767 575	23-34-272
3767 576	23-34-272
3767 596	23-34-80
3767 597	23-34-80
3767 599	23-34-80
3767 600-1	23-59-56
3767 602-3	23-59-56
3767 604-5	23-59-56
3767 606-7	23-59-56
3767 608-9	23-59-56
3767 610-1	23-59-56
3767 612	23-59-57
3767 620	23-34-5
3767 621	23-49-11
3767 623	23-31-33
3767 637	23-36-53
3767 642-3	23-66-65
3767 648	13-72-10
3767 688-9	23-34-82
	23-34-231
3767 699	23-48-93
3767 706	23-34-19
3767 716-7	23-63-111
3767 732-3	23-34-234
3767 734-5	23-34-234
3767 740-1	23-49-11
3767 767	23-66-76
3767 768-9	23-34-130
3767 772-3	23-51-5
3767 774-5	23-34-235
3767 776-7	23-34-235
3767 788	23-34-17
3767 796-7	23-63-111
3767 798	23-48-99
3767 812-3	23-64-280
3767 816-7	23-64-311
3767 818-9	23-64-311
3767 820	23-64-1
3767 870-1	23-64-300
3767 872-3	23-64-280
3769 004	14-29-19
3769 008	14-29-19
3769 012	14-29-19
3769 016	14-29-19
3769 020	14-29-19
3769 024	14-29-19
3769 035	14-29-19
3769 052	25-04-16
3769 053	14-01-1
3769 054	14-01-6
3769 057	14-11-1
3769 064	14-11-1
3769 123	14-25-11
3769 126	14-62-1
3769 127	7-04-5
3769 130	7-06-14
3769 132	7-06-14
3769 134	7-06-1
3769 135	7-06-1
3769 141	7-06-1
3769 145	7-06-14
3769 148	7-06-1
3769 166	10-24-4
3769 169	9-03-28
3769 191	25-06-1
3769 192	7-43-1
3769 198	14-06-1
3769 216	7-14-4
3769 219	25-06-17
3769 251	25-06-20
3769 252	14-30-2
3769 261	14-02-85
3769 294	14-02-15
3769 295	14-02-18
3769 343	9-10-5
3769 345	9-10-5
3769 370	24-25-15
3769 401	9-01-24
3769 402	9-01-24
3769 404	9-01-24
3769 405	9-01-24
3769 406	9-48-6
3769 443	24-25-15
3769 446	9-01-24
3769 447	9-01-24
3769 614	7-07-1
3769 616	7-07-1
3769 617	7-07-1
3769 618	7-07-1
3769 623	7-07-1
3769 658	25-06-1
3769 659	25-06-1
3769 660	25-06-1
3769 661	25-06-1
3769 662	25-06-1
3769 663	25-06-1
3769 664	25-06-1
3769 665	25-06-1
3769 667	25-06-1
3769 670	25-06-1
3769 672	9-03-28
3769 684	24-25-44
3769 685	7-04-17
	24-25-31
	24-25-49
3769 687	24-25-15
3769 802	14-24-1
3769 803	14-24-6
3769 804	14-24-17
3769 805	14-90-1
3769 806	14-06-1
3769 807	14-06-1
3769 809	25-06-1
3769 810	14-06-10
3769 816	14-11-9
3769 901	8-28-32
3769 910	9-03-4
3769 932	9-50-6
3769 933	9-50-6
3769 935	10-24-38
3769 936	8-28-36

PART NUMBER	CODE
3769 941	14-06-10
3769 954	9-03-4
3769 956	7-04-5
3769 960	9-23-5
3769 978	7-03-1
3769 983	7-06-14
3769 984	7-06-1
3769 985	19-54-86
3769 986	19-54-86
3769 987	19-54-86
3769 990	9-48-7
3769 991	9-48-7
3769 993	9-48-7
3780 001	9-35-1
3780 002	9-35-1
3780 003	9-35-1
3780 004	9-35-1
3780 005	9-35-1
3780 006	9-35-1
3780 016	9-35-1
3780 017	9-35-1
3780 018	9-35-1
3780 028	9-35-1
3780 029	9-35-1
3780 030	9-35-1
3780 071	9-34-5
3780 072	9-34-5
3780 073	9-34-5
3780 074	9-34-5
3780 075	9-09-2
3780 076	9-09-2
3780 077	9-09-2
3780 078	9-09-2
3780 079	9-09-2
3780 080	9-09-2
3780 081	9-09-2
3780 082	9-09-2
3780 083	9-09-2
3780 084	9-09-2
3780 085	9-09-2
3780 086	9-09-2
3780 087	9-09-2
3780 088	9-09-2
3780 089	9-09-2
3780 090	9-09-2
3780 091	9-09-2
3780 092	9-09-2
3780 094	9-09-2
3780 095	9-09-2
3780 096	9-09-2
3780 097	9-09-2
3780 098	9-09-2
3780 099	9-09-2
3780 100	9-09-2
3780 101	9-09-2
3780 102	9-09-2
3780 103	9-09-2
3780 104	9-09-2
3780 105	9-09-2
3780 108	7-42-1
3780 109	7-42-1
3780 110	25-06-2
3780 111	14-41-3
3780 112	7-41-4
3780 117	9-35-1
3780 118	9-35-1
3780 119	9-35-1
3780 123	9-35-1
3780 124	9-35-1
3780 125	9-35-1
3780 126	25-06-2
3780 127	7-42-1
3780 153	14-39-7
3780 154	14-39-7
3780 155	14-40-1
3780 166	9-03-28
3780 167	9-03-28
3780 168	9-03-28
3780 187	9-01-5
3780 188	9-01-5
3780 200	10-24-1
3780 201	21-01-3
3780 202	21-01-3
3780 204	21-01-3
3780 205	21-01-3
3780 206	21-01-3
3780 208	21-01-3
3780 221	21-136-228
3780 224	21-133-7
3780 230	21-04-1
3780 234	21-02-1
	21-42-34
3780 235	21-02-1
	21-42-34
3780 238	21-118-6
3780 239	21-118-6
3780 240	21-138-2
3780 241	21-138-2
3780 242	21-138-2
3780 244	21-138-2
3780 245	21-138-2
3780 250	16-03-1
3780 256	21-05-1
3780 280	21-133-7
3780 302-3	8-56-8
3780 305	8-00-0
	24-24-16
3780 306-7	8-55-194
3780 336-7	8-55-7
3780 338-9	8-55-7
3780 370-1	12-01-5
3780 372-3	12-01-5
3780 374-5	12-01-5
3780 376-7	12-01-5
3780 378-9	12-01-5
3780 380-1	12-01-5
3780 382-3	12-01-5
3780 384-5	12-01-5
3780 386-7	12-01-5
3780 414-5	23-64-240
3780 416-7	23-64-240
3780 418-9	23-64-240
3780 420-1	23-64-240
3780 422-3	23-14-53
3780 424	14-72-1
3780 425	14-72-1
3780 458	8-37-69
3780 472	23-49-2
3780 473	23-49-2
3780 503	19-27-31
3780 504	17-23-3
3780 505	17-23-3
3780 507	8-50-413
	25-02-42
	25-04-20
3780 508	25-04-20
3780 513	17-16-1
3780 514	17-16-1
3780 515	17-16-1
3780 516	17-16-1
3780 519	17-11-3
3780 520	17-11-3
3780 522	17-11-3
3780 523	17-11-3
3780 524	5-63-1
3780 525	5-64-1
3780 526	22-04-2
3780 527	5-05-3
3780 528	5-05-3
3780 529	3-19-1
3780 530	3-19-1
3780 531	22-06-2
	22-06-1
3780 532	2-14-1
3780 533	5-05-9
	5-05-26
3780 536	17-23-3
3780 537	22-04-2
3780 547	17-23-3
3780 549	5-03-3
3780 550	5-39-1
3780 551	24-01-24
3780 554-5	8-50-334
3780 556-7	8-55-194
3780 558-9	8-56-8
3780 560-1	8-56-8
3780 562-3	8-50-334
3780 564-5	8-50-334
3780 566	14-72-1
3780 567	14-72-1
3780 574-5	23-67-86
3780 588	8-28-3
3780 589	8-28-3
3780 593	8-52-121
3780 594	8-20-10
3780 595	8-20-10
3780 596	8-00-0
	24-24-16
3780 662	7-14-4
3780 670	14-86-35
3780 672	14-39-7
3780 673	14-39-7
3780 674	14-35-6
3780 675	14-35-6
3780 676	14-35-1
3780 677	14-50-25
3780 681	14-30-4
3780 701	1-48-854
	24-01-36
3780 702	8-55-194
3780 703	8-56-8
3780 704-5	8-55-194
3780 706-7	8-55-194
3780 709	8-55-194
3780 710-1	8-50-334
3780 712-3	8-50-334
3780 716-7	8-55-194
3780 718	8-56-8
3780 719	8-50-334
3780 720-1	8-56-8
3780 732	24-24-150
3780 733	24-01-24
3780 735	24-24-150
3780 737	1-48-770
	24-24-5
3780 738	23-17-4
3780 740	23-17-4
3780 743	8-36-1
3780 744	8-36-1
3780 746	1-48-88
3780 747	8-27-96
3780 748	8-27-96
3780 751	5-03-3
3780 752	5-03-3
3780 754	5-03-3
3780 755	5-03-3
3780 769	17-11-3
3780 770	17-11-3
3780 771	17-11-3
3780 772	17-11-3
3780 774	17-11-3
3780 775	17-11-3
3780 776	17-11-3
3780 777	17-11-3
3780 780	17-11-3
3780 782	17-11-3
3780 783	17-11-3
3780 787	5-70-1
3780 791	5-71-1
3780 797	14-89-57
	25-04-20
3780 798	23-67-260
3780 800	17-11-3
3780 829	1-47-16
3780 845	19-54-258
3780 930	7-16-36
3780 949	23-23-15
3780 963	23-23-15
3780 975	23-23-15
3780 993	7-16-36
3781 012	7-16-36
3781 424-5	8-34-176
3781 521	15-11-46
3781 830	7-12-1
3788 002-3	23-64-254
3788 004	23-64-17
3788 006-7	23-42-32
3788 014	23-11-29
3788 018-9	23-11-23
3788 022-3	23-15-3
3788 028-9	23-15-30
3788 033	23-64-204
3788 035	23-64-198
3788 050	23-64-272
3788 051	23-64-17
3788 052-3	23-11-29
3788 058-9	23-09-9
3788 072-3	23-63-127
3788 074-5	23-63-127
3788 078	23-64-293
3788 079	23-64-295
3788 080	23-64-295
3788 090	23-11-27
3788 098	15-19-3
3788 099	15-19-52
3788 100	23-63-55
	23-63-136
3788 101	23-64-4
3788 102	23-64-12
3788 106	23-64-4
3788 112-3	23-09-9
3788 114	23-08-12
3788 118-9	23-64-12
3788 132-3	23-64-269
3788 134	23-39-19
3788 180-1	23-63-55
3788 182-3	23-63-55
3788 184-5	23-63-55
3788 194	23-64-12
3788 196-7	23-39-19
3788 198	15-19-50
3788 208-9	23-63-15
3788 210-1	23-63-15
3788 212	23-54-216
3788 213	23-54-140
3788 215	23-64-272
3788 216-7	23-63-15
3788 218-9	23-63-15
3788 222-3	23-09-52
3788 226-7	23-63-15
3788 228-9	23-63-15
3788 233	23-64-272
3788 236-7	15-19-46
3788 238-9	23-64-306
3788 240-1	23-64-306
3788 254-5	23-63-55
3788 256-7	23-63-55
3788 258-9	23-63-55
3788 261	23-42-16
3788 262-3	23-63-33
3788 264	23-14-54
3788 270	23-64-269
3788 272	23-64-197
3788 273	23-64-197
3788 274	23-64-4
3788 279	23-64-293
3788 282-3	23-09-52
3788 287	23-15-1
3788 291	23-15-3
3788 292	23-15-3
3788 302-3	23-15-30
3788 304-5	23-64-300
3788 306	23-64-300
3788 308-9	23-64-300
3788 310-1	23-09-52
3788 320-1	23-64-311
3788 322-3	23-64-311
3788 324-5	23-64-311
3788 326-7	23-64-311
3788 328-9	23-09-52
3788 362	23-64-4
3788 372-3	23-11-29
3788 376	23-64-198
3788 377	23-64-204
3788 386-7	23-09-67
3788 390-1	23-64-254
3788 395	23-11-29
3788 396-7	23-11-29
3788 400	23-64-198
3788 402-3	23-42-32
3788 404-5	15-19-13
3788 432	23-34-308
3788 433	23-34-308
3788 434	23-34-308
3788 435	23-34-308
3788 436	23-34-308
3788 458-9	23-09-51
3788 468-9	23-09-51
3788 472	23-64-269
3788 476	23-64-12
3788 477	23-64-242
3788 483	23-34-308
3788 490	23-64-242
3788 493	23-63-181
3788 494-5	23-09-52
3788 496	23-63-175
3788 498-9	23-11-29
3788 510	23-15-3
3788 513	23-15-3
3788 518	23-15-1
3788 521	23-15-1
3788 524	23-63-55
3788 526-7	23-63-127
3788 528-9	23-63-127
3788 530	23-39-19
3788 536-7	23-63-15
3788 538-9	23-63-15
3788 540-1	23-63-15
3788 542-3	23-63-15
3788 553	23-14-54
3788 594-5	23-09-52
3788 596-7	23-64-308
3788 602-3	23-64-71
3789 082-3	23-15-1
3789 084-5	23-15-3
3792 158	23-32-48
3792 557	23-32-22
3793 152-3	23-49-11
3793 260	23-64-314
3793 290	23-66-75

PART NUMBER	CODE
3793 334-5	23-34-234
3793 342	23-22-86
3793 344	23-22-86
3793 346	23-22-86
3793 348	23-22-86
3793 350	23-22-86
3795 222	23-64-12
3796 045	23-47-345
3796 056	23-17-9
	23-19-123
3796 071	23-18-109
3796 130-1	23-14-10
3796 132-3	23-14-10
3796 134-5	23-18-13
3796 136-7	23-18-13
3796 138-9	23-18-13
3796 140-1	23-18-25
3796 142-3	23-18-25
3796 192-3	23-18-25
3796 194-5	23-18-25
3796 196-7	23-18-13
3796 198-9	23-18-13
3796 200-1	23-18-25
3796 203	23-18-11
3796 204	23-18-11
3796 208-9	23-18-11
3796 212-3	23-18-11
3796 216-7	23-18-11
3796 218-9	23-18-25
3796 220-1	23-18-26
3796 224-5	23-18-26
3796 228-9	23-18-26
3796 231	23-18-107
3796 234	23-18-103
3796 236	23-18-103
3796 287	23-54-179
3796 341	23-41-53
3796 362-3	23-49-17
3796 364-5	23-49-7
3796 418	23-49-26
3796 459	15-11-83
3796 471	15-11-16
3796 472-3	23-39-5
3796 474-5	23-39-5
3796 501	15-11-34
3796 502	15-11-34
3796 505	23-54-216
3796 510	23-39-2
3796 511	23-41-7
3796 512	23-39-2
3796 513	23-39-2
3796 514	23-41-7
3796 560	23-54-216
3796 562	23-54-218
3796 598	15-11-3
3796 675	23-54-160
3796 716	23-49-11
3796 790-1	23-39-5
3796 793	23-39-5
3796 794-5	23-41-4
3796 800-1	23-18-26
3796 802-3	23-18-26
3796 804-5	23-18-26
3796 806-7	23-18-20
3796 808-9	23-18-20
3796 810-1	23-18-13
3796 818	8-62-11
3796 820-1	23-18-11
3796 871	23-21-3
3796 872	23-21-3
3796 906	23-21-10
3796 911	23-49-11
3796 912	23-21-14
3796 913	23-49-11
3796 926	23-54-1
3796 927	23-54-218
3796 931	23-54-218
3796 935	15-11-83
3796 936	23-54-31
3796 949	23-47-15
3810 066	23-40-157
3810 112	23-40-155
3810 123	23-34-329
3810 128-9	23-40-170
3810 141	23-34-329
3810 142-3	23-34-329
3810 154-5	12-15-32
3810 158	23-40-170
3810 182	23-40-155
3810 183	23-23-65
3810 188	12-15-8
	23-23-15
3810 189	23-23-15
3810 190	23-23-15
3810 191	12-15-8
3810 192	23-23-15
3810 193	23-23-15
3810 194	23-23-15
3810 195	23-23-15
3810 196	23-23-15
3810 197	23-23-15
3810 201	12-15-32
	23-11-10
	23-34-329
	23-54-2
3810 258-9	23-11-23
3810 260-1	23-23-65
3810 288	23-54-2
3810 289	23-23-69
3810 320-1	23-11-23
3810 358-9	12-01-30
3810 360-1	12-01-30
3810 364-5	23-63-33
3815 072	17-12-4
3815 074	17-12-4
3815 078	13-54-4
3815 104	17-23-3
3815 108	17-12-4
3815 116	17-12-4
3815 118	17-12-4
3815 145	17-11-3
3815 146	17-11-3
3815 166	17-11-3
3815 167	17-11-3
3815 168	17-11-3
3815 176-7	13-64-44
3815 178-9	13-64-44
3815 192	17-11-3
3815 193	17-11-3
3815 194	17-11-3
3815 195	17-11-3
3815 210	17-17-3
3815 211	13-54-4
3815 213	13-54-4
3815 215	17-17-3
3815 216	13-54-4
3815 218	13-54-4
3815 222	13-54-4
3815 224	13-54-4
3815 226	17-15-11
3815 227	17-15-11
3815 324	17-11-3
3815 325	17-11-3
3815 326	17-11-3
3815 334	17-11-3
3815 335	17-11-3
3815 336	17-11-3
3815 352	17-11-3
3815 353	17-11-3
3815 354	17-11-3
3815 356	17-11-3
3815 376	17-23-3
3815 383	17-11-3
3815 384	17-11-3
3815 385	17-11-3
3815 402-3	2-08-5
3815 406-7	2-10-6
3815 471	2-10-58
3815 472	2-10-60
3815 473	2-09-3
3815 551	17-29-5
3815 554	17-29-11
3815 596-7	2-03-3
3815 756-7	2-10-6
3817 001	12-04-4
3817 049	12-04-4
3817 106	23-05-10
3817 108	23-05-25
3817 117	9-67-4
3817 122	9-67-4
3817 123	9-67-4
3817 124	9-67-4
3817 125	9-67-4
3817 135	23-32-17
3817 137	23-32-17
3817 139	23-32-17
3818 102	11-08-5
3818 104	11-01-1
3818 112	11-05-1
3818 114	11-05-1
3818 115	11-06-8
3818 116	11-05-1
3818 119	11-05-4
3818 121	11-05-4
3818 184	11-10-3
3818 186	11-01-1
3818 206	11-01-1
3818 224	11-01-1
3818 228	11-01-1
3820 223	7-04-1
3830 003	24-25-15
3830 004	14-23-1
3830 019	9-48-7
3830 026	10-03-4
3830 027	10-03-4
3830 036	14-29-19
3830 101	25-06-1
3830 102	25-06-1
3830 103	25-06-1
3830 104	25-06-1
3830 105	25-06-1
3830 108	9-23-18
3830 120	25-06-1
3830 139	25-06-20
3830 145	10-01-62
3830 155	24-25-15
3830 162	7-04-1
3830 190	7-03-1
3830 196	7-04-1
3830 197	24-25-35
3830 212	7-04-5
3830 219	7-04-1
3830 223	7-04-1
3830 225	7-04-5
3830 226	7-04-5
3830 228	7-04-1
3830 230	24-25-45
3830 231	24-25-45
3830 309	7-04-5
3830 311	7-04-9
3830 312	7-04-9
3830 366	14-14-12
3830 372	10-02-53
3830 376	25-02-31
3830 387	25-02-50
3830 396	25-02-30
3830 402	14-30-1
3830 406	14-30-1
3830 410	14-30-1
3830 414	14-30-1
3830 415	14-30-1
3830 452	25-06-22
3830 453	25-06-22
3830 454	25-06-22
3830 455	25-06-22
3830 456	25-06-22
3830 462	25-06-1
3830 465	25-06-22
3830 466	25-06-22
3830 467	25-06-22
3830 468	25-06-22
3830 469	25-06-22
3830 470	25-06-22
3830 488	25-06-22
3830 495	25-02-25
3830 601	9-16-6
3830 602	9-16-6
3830 603	9-16-6
3830 604	9-16-6
3830 618	14-06-1
3830 624	25-02-30
3830 625	25-02-24
3830 626	25-02-25
3830 627	25-02-24
3830 651	9-48-44
3830 664	14-06-1
3830 665	14-06-1
3830 666	14-06-1
3830 853	14-30-1
3830 854	14-30-1
3830 856	14-30-1
3830 857	14-30-1
3830 864	14-30-1
3830 976	25-06-22
3833 096-7	23-34-80
3833 328-9	23-11-1
3833 330-1	23-34-120
3833 332-3	23-11-1
3833 334-5	23-34-120
3833 376-7	23-11-3
3833 380-1	23-11-3
3833 430	23-34-80
3837 001	17-11-3
3837 002	17-11-3
3837 003	17-11-3
3837 004	17-11-3
3837 018	17-11-3
3837 020	17-11-3
3837 022	17-11-3
3837 024	17-11-3
3837 025	17-11-3
3837 036	23-67-260
3837 037	25-02-42
3837 042	5-111-17
3837 045	17-11-3
3837 048	17-11-3
3837 049	17-11-3
3837 057	17-11-3
3837 060	17-11-3
3837 062	17-11-3
3837 064	17-11-3
3837 067	17-11-3
3837 068	17-11-3
3837 069	17-11-3
3837 070	17-11-3
3837 072	17-11-3
3837 077	5-100-2
3837 082	2-10-61
3837 083	2-10-61
3837 086	17-11-3
3837 087	2-10-55
3837 088	2-10-55
3837 089	17-11-3
3837 090	17-11-3
3837 092-3	2-10-55
3837 117	23-67-20
3837 118	23-67-10
3837 155	8-00-0
	8-17-30
3837 159	8-50-334
3837 160	5-124-5
3837 161	8-50-186
3837 162	8-50-186
3837 168	1-47-2
3837 169	1-47-2
3837 170	1-47-2
3837 178	8-33-164
3837 190	1-87-1
3837 324	14-02-1
3837 325	8-52-120
3837 328	8-52-137
3837 329	24-01-1
3837 333	24-01-1
3837 337	8-52-345
3837 340	8-52-121
3837 343	24-28-195
3837 351	8-00-0
	8-62-4
3837 352	8-37-372
3837 353	8-37-372
3837 354	8-37-372
3837 355	14-72-1
3837 441	15-25-2
3837 442	15-25-2
3837 464	14-30-4
3837 465	14-30-4
3837 467	14-30-4
3837 468	14-30-4
3837 471	14-30-4
3837 472	14-30-4
3837 474	14-30-4
3837 479	14-30-4
3837 480	14-30-4
3837 481	14-30-4
3837 489	14-30-4
3837 491	14-30-7
3837 497	14-43-5
3837 498	14-43-5
3837 499	14-35-1
3837 500	14-41-3
3837 502	14-43-5
3837 506	14-30-4
3837 509	14-30-4
3837 510	14-30-4
3837 511	14-30-7
3837 514	14-35-1
3837 521	14-30-4
3837 579	3-19-1
3837 601	9-48-6
3837 612	25-06-10
3837 620	9-48-6
3837 621	9-48-6
3837 622	25-06-3
3837 633	9-09-2
3837 634	9-09-2
3837 635	9-09-2
3837 636	9-09-2
3837 637	9-09-2
3837 638	9-09-2
3837 648	10-07-3

PART NUMBER	CODE
.....	10-09-1
3837 651	1-57-2
3837 657	1-57-3
3837 658	1-57-3
3837 659	1-57-3
3837 660	1-57-3
3837 661	1-57-3
3837 966-7	23-21-3
3837 968	23-21-3
3837 970-1	23-14-53
3837 975	14-02-1
3837 980	12-02-6
3837 981	12-02-6
3838 001	3-19-1
3838 013	5-39-1
3838 020	22-06-1
3838 044	5-03-3
3838 045	22-06-1
3838 074	8-29-133
3838 076	8-29-137
3838 078	8-29-129
3838 079	8-29-17
3838 080	8-29-99
3838 081	8-29-209
3838 094	8-00-0
3838 096	8-00-0
3838 097	8-52-137
3843 178	8-00-0
3843 179	8-00-0
3843 181	8-00-0
3843 182	8-00-0
3843 270	8-00-0
3843 286	8-00-0
3843 385	8-00-0
3845 007	17-30-1
3845 019	17-30-1
3851 193	17-11-3
3861 013	15-11-34
3861 021	23-47-430
3861 023	23-47-430
3861 041	23-47-66
3861 100-1	23-48-203
3861 102	23-48-70
3861 106-7	23-41-106
3861 155	23-49-27
3861 184-5	23-18-11
3861 232	23-54-1
3861 234	23-54-1
3861 248-9	23-18-20
3861 250-1	23-18-20
3861 488	23-54-218
3861 489	23-54-218
3861 490	23-54-218
3861 491	23-54-218
3861 496	23-14-18
.....	23-14-79
3861 551	23-49-11
3861 581	23-21-8
3870 060	7-14-13
3870 062	7-14-13
3870 063	7-14-13
3870 083	25-06-1
3870 103	7-14-5
3870 264	25-06-40
3870 561	14-06-1
3870 562	14-06-1
3874 010	25-06-1
3874 013	25-08-4
3874 020	8-35-5
3874 165	8-28-77
3878 320	21-119-15
3878 343	21-129-10
3878 538	21-142-18
3879 005	23-49-2
3879 121	14-43-5
3879 130	14-30-4
3879 139	14-30-7
3879 140	14-41-3
3879 141	14-39-7
3879 164	14-30-4
3879 165	14-30-7
3879 169	14-30-4
3879 172	14-43-5
3879 173	14-39-7
3879 211	5-03-3
3879 221	5-03-3
3879 239	17-30-8
3879 243	17-29-6
3879 301	8-00-0
3879 309	24-01-1
3879 310	24-01-1
3879 311	24-01-1
3879 316	24-01-1
3879 317	24-01-1
3879 325	23-67-2
3879 333	24-01-1
3879 347	24-25-132
3879 349	8-53-283
3879 368-9	23-14-53
3879 370-1	23-64-240
3879 387	7-16-14
3879 394	7-26-44
3879 401	8-29-98
3879 432	24-24-5
3879 510	24-25-70
3879 511	24-25-4
3879 512	24-25-93
3879 524	24-01-70
3879 634	23-49-1
3879 635	23-49-1
3879 636	23-49-1
3879 637	23-49-1
3879 638	23-49-1
3879 639	23-49-1
3879 640	23-49-1
3879 641	23-49-1
3879 642	23-49-1
3879 643	23-49-1
3879 644	23-49-1
3879 645	23-49-1
3879 646	23-49-1
3879 647	23-49-1
3879 648	23-49-1
3879 649	23-49-1
3879 650	23-49-1
3879 651	23-49-1
3879 652	23-49-1
3879 653	23-49-1
3879 654	23-49-1
3879 655	23-49-1
3879 656	23-49-1
3879 657	23-49-1
3879 658	23-49-1
3879 659	23-49-1
3879 660	23-49-1
3879 661	23-49-1
3879 662	23-49-1
3879 663	23-49-1
3879 664	23-49-1
3879 665	23-49-1
3879 666	23-49-1
3879 667	23-49-1
3879 668	23-49-1
3879 766	14-30-7
3879 768	14-30-4
3879 781	14-41-3
3879 783	14-30-2
3879 786	14-30-2
3879 791	14-30-4
3879 801	14-30-7
3879 954	23-26-80
3879 955	23-26-80
3879 956	23-63-33
3879 957	23-64-300
3879 966-7	23-26-80
3879 968-9	23-64-280
3882 011	23-21-66
3905 035	2-10-59
3905 036	2-10-59
3906 407	11-05-1
3906 453	11-05-1
4006 500	14-29-19
4062 EX9	19-30-4
4220 568	9-08-5
6000 176	23-14-15
6000 379	23-64-242
6000 594	23-19-178
6001 084	23-23-52
6002 178	23-26-41
6002 186	23-22-53
6002 263	23-23-65
6002 369	23-22-53
6002 615	23-23-52
.....	23-23-65
6002 685	23-22-53
6002 688	23-23-52
.....	23-23-65
6002 716	15-25-2
6002 782	7-16-14
6002 893	23-23-52
.....	23-23-65
6002 940	23-26-41
6003 007	23-26-41
6003 182	23-22-53
6003 227	23-26-41
6003 257	23-63-55
.....	23-63-136
6003 304	23-23-52
.....	23-23-65
6003 309	7-16-14
6003 351	15-03-60
6003 409	23-23-52
.....	23-23-65
6003 414	23-22-86
6003 421	1-48-141
6003 440	23-26-41
6003 441	23-26-41
6003 457	23-23-52
6003 464	1-48-950
.....	24-01-65
6003 475	23-22-78
6003 500	23-23-65
6003 514	15-25-2
6006 043	23-15-9
6008 060	23-67-161
6008 109	23-31-33
6008 144	24-28-72
6015 143	1-48-950
6015 288	15-11-3
6015 636	8-01-7
6015 818	8-15-32
6015 829	5-107-34
6015 833	5-58-1
6016 005	23-64-272
6022 006	8-52-100
6022 149	24-24-150
6022 161	21-42-11
6022 181	8-35-4
6022 185	9-48-7
.....	23-48-109
6022 190	19-54-2
.....	19-54-115
.....	25-02-24
6022 191	23-48-109
6022 250	9-23-5
.....	25-06-20
6022 271	3-03-29
.....	3-03-26
.....	3-11-14
6022 274	23-64-242
6022 816	21-05-19
6022 817	21-138-7
6022 834	8-28-74
6022 859	21-129-5
6022 891	23-15-9
6023 018	17-15-6
6023 019	17-15-6
6023 045	19-14-10
6023 046	19-14-21
.....	19-46-8
6023 050	9-67-4
6023 053	9-15-10
.....	9-17-5
6023 054	15-11-89
6023 088	8-40-5
6023 092	10-24-30
.....	21-03-1
.....	21-03-6
.....	21-03-1
.....	23-54-218
6023 143	21-03-23
6023 168	9-46-33
6023 187	6-09-1
.....	21-03-23
6023 215	8-31-11
6023 285	14-11-40
.....	14-25-13
6023 353	9-67-4
.....	9-71-5
6023 355	21-119-3
6023 397	14-88-27
6023 514	21-04-1
6023 523	14-29-33
6023 546	23-09-58
6023 548	14-73-1
6023 576	23-15-9
6023 654	21-30-2
.....	21-30-416
6023 878	21-42-23
.....	23-45-31
.....	23-54-216
6023 899	8-52-5
6023 943	21-118-40
6024 069	21-30-407
6024 125	21-19-15
6024 128	22-04-14
6024 130	21-17-7
6024 131	21-14-1
.....	21-14-20
6024 246	9-23-5
6024 311	21-05-19
6024 312	21-05-19
6024 333	19-14-4
6024 336	21-137-5
6024 380	9-48-6
6024 403	15-11-89
6024 421	23-23-65
6024 440	23-45-31
6024 457	21-29-3
6024 554	21-30-416
6024 654	15-11-87
6024 666	21-134-9
6024 862	21-03-23
6024 863	21-03-23
6024 864	21-03-23
6024 888	23-54-56
6024 972	23-48-109
6025 002	19-30-4
6025 004	25-06-17
6025 020	9-48-7
6025 050	14-11-40
6025 063	19-19-24
.....	19-54-2
6025 160	15-11-5
6025 196	23-17-72
6025 198	23-17-72
6025 211	23-22-145
6025 243	19-30-7
6025 269	23-23-65
6025 346	14-86-71
.....	15-19-14
6025 413	23-67-98
6025 570	21-05-8
6025 724	23-48-109
6025 752	21-85-9
6025 754	21-09-23
.....	21-19-15
6025 755	21-09-23
.....	21-19-15
6025 756	21-09-23
.....	21-19-15
6025 757	21-09-23
.....	21-19-15
6025 804	9-71-5
.....	17-30-2
6025 857	21-42-23
.....	21-139-49
.....	21-139-98
.....	23-54-216
6025 867	14-02-34
.....	14-11-3
6025 892	23-15-9
6025 919	23-54-214
6025 926	10-24-23
6026 067	23-54-6
6026 132	21-30-6
6026 147	1-48-141
6026 239	21-30-2
.....	21-34-47
.....	21-42-25
6026 240	13-35-1
6026 255	21-30-2
6026 273	9-48-7
6026 275	19-14-23
6026 278	21-134-36
.....	21-134-40
6026 289	21-05-19
6026 290	21-05-19
6026 291	21-05-19
6026 336	23-17-72
6026 361	23-08-54
6026 390	21-117-1
6026 430	5-05-56
6026 436	5-52-4
6026 450	1-48-707
.....	1-48-950
6026 530	23-64-299
6026 647	22-04-14
6026 648	3-32-1
6026 697	23-54-217
6026 715	25-02-24
6026 764	21-30-416
6026 776	14-13-1
6026 789	9-71-5
6026 839	23-19-94
6026 873	19-54-196
.....	19-58-14
6026 874	21-29-3
6026 884	21-04-8
6026 887	5-52-4

PART NUMBER	CODE
6026 888	5-52-4
6026 889	23-15-9
	23-54-4
6026 904	19-14-37
	19-31-1
6026 919	8-35-52
6026 935	15-03-79
6026 958	23-67-80
6026 972	23-54-20
6026 976	23-54-4
6026 984	23-54-56
6027 150	21-04-1
6027 153	21-137-47
6027 155	14-25-5
	14-25-13
6027 175	8-19-18
6027 224	19-02-4
6027 225	21-09-23
6027 246	21-14-20
6027 252	21-03-23
6027 264	9-10-19
6027 271	21-138-7
6027 281	23-22-145
6027 299	21-19-15
6027 310	23-49-1
6027 311	23-49-1
6027 312	23-49-1
6027 330	23-45-31
6027 370	21-30-11
6027 381	2-10-58
6027 391	21-139-74
	21-139-147
6027 394	15-19-2
6027 402	19-31-1
6027 403	8-33-114
	19-31-1
6027 404	19-31-1
6027 455	1-48-141
6027 458	19-31-1
6027 467	21-30-418
6027 476	23-54-4
6027 499	8-35-5
6027 513	9-02-50
6027 518	4-23-6
6027 520	5-100-192
6027 538	23-64-299
6027 541	23-64-254
6027 559	5-20-18
6027 565	14-24-17
6027 740	22-20-87
6027 749	23-21-74
6027 838	23-54-21
6027 880	7-43-5
	21-30-407
	21-30-416
6027 947	19-31-1
6027 976	21-30-24
	21-30-23
6027 983	19-48-23
	21-30-418
	21-30-428
	21-42-23
6027 992	23-64-12
6027 996	6-50-1
6028 021	19-58-21
6028 034	21-42-23
6028 040	5-31-12
6028 041	16-20-3
6028 044	23-49-1
6028 045	3-08-2
6028 087	19-01-8
6028 088	19-27-8
6028 114	19-48-46
6028 166	7-43-5
6028 172	15-03-64
6028 193	19-01-8
6028 237	9-71-5
6028 258	21-19-15
6028 261	21-42-23
6028 262	9-71-5
6028 281	8-35-59
6028 283	8-50-129
6028 303	23-64-282
6028 304	23-64-282
6028 307	23-61-117
6028 323	5-05-2
6028 349	23-64-277
6028 355	9-48-6
6028 356	9-48-6
6028 358	23-64-299
6028 359	23-64-299
6028 417	23-54-88
6028 418	23-54-88
6028 424	23-05-36
6028 431	23-05-36
6028 465	17-23-57
6028 466	17-23-57
6028 499	19-14-82
6028 505	8-01-23
6028 546	23-54-6
6028 581	9-23-5
	10-24-23
6028 588	23-64-254
6028 590	1-48-950
	24-01-65
	24-28-72
6028 606	21-30-2
6028 630	21-34-42
	21-42-23
6028 647	23-05-1
6028 654	8-34-280
6028 668	9-02-16
	9-02-17
6028 674	23-23-52
6028 684	15-03-79
	15-03-83
6028 737	19-54-2
6028 748	5-13-9
6028 750	19-15-23
6028 762	19-01-8
6028 811	8-01-23
6028 820	23-64-282
6028 863	21-137-19
6028 864	21-137-5
6028 872	23-49-1
6028 878	21-42-23
6028 886	23-36-134
6028 911	8-01-23
6028 915	3-02-1
	3-03-31
6028 921	5-64-2
6028 934	23-34-212
6028 961	5-111-19
6028 983	19-19-9
6028 987	14-29-33
6028 998	23-05-1
6029 009	14-11-3
6029 018	23-15-9
6029 041	23-15-9
6029 060	6-14-10
6029 071	6-14-10
6029 093	23-54-4
6029 094	21-30-6
6029 130	8-40-5
6029 134	21-30-23
6029 135	23-63-181
	23-64-272
6029 149	1-48-707
6029 159	5-55-1
6029 170	5-44-8
6029 171	23-49-1
6029 185	23-49-1
6029 190	22-01-43
6029 208	25-06-22
6029 223	23-45-31
6029 230	23-61-117
6029 262	1-48-141
6029 271	21-139-68
	21-139-60
	21-139-68
	21-139-60
	21-139-135
6029 281	23-39-45
6029 291	5-100-189
6029 295	5-100-189
6029 306	17-30-2
6029 337	23-54-143
6029 354	5-13-9
6029 380	8-28-38
6029 381	8-28-14
6029 392	19-14-59
	19-30-10
6029 396	23-63-16
6029 411	9-08-5
6029 417	23-54-4
6029 437	9-48-7
6029 501	23-45-31
6029 507	8-28-14
	8-28-38
6029 513	8-28-74
	8-35-5
	8-52-328
	25-08-1
6029 516	5-44-9
6029 529	23-45-31
6029 550	19-54-2
6029 562	16-02-5
6029 568	8-53-150
6029 579	23-45-31
6029 584	7-04-10
6029 589	8-28-38
6029 591	8-28-38
6029 592	8-28-38
6029 619	9-03-28
6029 621	8-35-52
6029 626	21-30-23
6029 629	14-02-85
6029 645	1-48-707
6029 646	23-08-54
6029 654	1-48-950
	24-01-65
6029 663	5-44-8
6029 675	21-05-8
6029 692	22-06-5
6029 696	7-04-6
	7-43-5
6029 697	8-28-14
6029 713	9-23-5
6029 715	22-20-87
6029 747	25-02-50
6029 754	21-30-433
6029 757	9-48-7
6029 769	24-28-72
6029 770	9-67-4
6029 775	2-03-3
6029 776	2-03-3
6029 782	21-30-407
6029 783	21-30-407
6029 792	23-18-109
6029 835	23-49-1
6029 848	5-13-9
6029 857	19-58-21
6029 883	21-139-60
	21-139-135
6029 889	1-48-950
6029 898	23-49-1
6029 926	21-139-68
	21-139-71
	21-139-135
	21-139-140
	21-139-154
6029 927	21-139-135
6029 929	5-13-10
6029 930	5-05-2
6029 932	19-14-21
6029 935	23-32-15
6029 936	23-34-123
6029 940	23-32-15
6029 945	19-30-18
6029 951	19-15-23
6029 963	15-11-46
6029 964	19-27-8
6029 971	9-67-4
6029 974	23-54-216
6029 988	15-19-2
6029 989	15-19-2
6029 990	23-05-1
6029 996	25-06-1
6029 997	25-06-1
6030 003	9-48-7
6030 012	8-01-23
6030 015	8-37-70
6030 033	23-48-188
6030 034	23-49-1
6030 035	9-46-4
6030 038	23-48-202
6030 051	19-54-2
	25-02-24
6030 064	9-48-6
	9-48-44
6030 084	5-62-1
6030 099	2-07-17
	2-08-72
	2-10-64
	19-27-51
6030 101	23-49-1
6030 104	21-139-74
6030 112	23-49-1
6030 122	19-14-120
6030 163	23-39-5
	23-39-34
6030 174	23-54-4
6030 191	21-09-23
6030 192	21-09-23
6030 193	21-09-23
6030 194	21-09-23
6030 198	19-14-82
6030 203	9-67-4
6030 209	9-48-7
	9-48-12
6030 210	9-48-44
6030 243	23-05-1
6030 264	8-34-40
6030 289	19-15-23
6030 293	5-05-17
6030 303	23-54-218
6030 310	9-48-6
	9-48-44
6030 319	9-67-4
6030 333	21-05-19
6030 345	5-27-12
6030 352	23-67-76
6030 354	19-15-23
6030 355	19-15-23
6030 356	23-21-19
6030 357	23-49-1
6030 373	6-38-14
6030 374	23-63-127
6030 396	7-04-10
6030 404	21-05-19
6030 409	9-48-6
6030 415	21-136-52
6030 424	21-134-36
	21-134-40
6030 433	23-40-155
6030 435	19-54-86
6030 441	7-26-16
6030 443	19-01-8
6030 451	23-49-1
6030 452	23-49-1
6030 453	23-49-1
6030 454	23-49-1
6030 455	23-49-1
6030 456	23-49-1
6030 458	23-49-1
6030 473	5-13-10
6030 475	9-67-4
6030 477	8-34-40
6030 478	9-67-4
6030 479	14-02-85
6030 495	5-05-2
6030 503	8-62-1
6030 506	23-49-1
6030 508	15-19-52
6030 540	23-48-109
6030 547	8-29-208
6030 549	9-67-4
6030 552	23-05-1
6030 581	23-45-31
6030 585	2-09-3
6030 602	19-15-23
6030 603	19-15-23
6030 604	19-15-23
6030 607	14-11-40
6030 670	23-49-1
6030 671	23-34-309
6030 672	23-34-309
6030 730	14-29-33
6030 737	3-03-26
6030 747	23-54-216
6030 771	23-63-16
9408 948	19-57-3
9409 667	9-50-6
9411 010	2-03-3
9411 859	7-43-5
9411 943	15-06-3
9412 281	21-30-2
	21-30-22
	21-30-100
9413 483	14-14-1
9414 469	9-48-7
	23-15-9
9414 521	8-27-54
9414 598	14-24-6
9414 752	23-22-53
	23-22-145
9414 753	23-22-53
	23-22-86
	23-22-145
9415 537	21-30-414
9415 921	8-31-11
9415 969	8-44-1
9416 049	23-02-2
9416 208	23-54-221
9416 927	8-44-1
9417 050	9-48-7
9417 098	9-71-5
	19-48-45
	21-30-79
9417 471	9-17-9

PART NUMBER	CODE
9417 504	4-10-32
9417 561	8-44-1
9417 599	8-27-96
9417 668	8-28-3
9417 749	19-14-10
	19-46-3
9417 863	8-44-1
9417 866	8-44-1
9417 867	8-44-1
9417 928	8-28-3
9418 004	9-11-7
9418 005	9-11-7
9418 208	6-09-1
9418 246	23-61-117
9419 854	8-19-18
9420 294	15-25-2
9420 373	21-30-2
	21-30-416
9420 813	9-46-33
	15-11-5
	21-84-1
9420 947	14-01-23
9421 202	19-46-29
9421 360	9-48-6
9421 776	23-06-55
9421 897	7-43-5
9422 790	8-28-3
9423 295	8-44-1
9423 434	23-22-53
9423 789	8-28-3
9425 132	19-27-8
	19-27-31
9425 542	8-44-1
9426 925	15-25-2
9427 943	8-44-1
9428 368	23-64-12
9428 486	8-28-3
9431 651	21-30-407
9431 808	8-44-1
9431 953	23-34-231
9432 699	19-14-49
9433 063	23-23-65
9433 331	8-50-95
9436 290	9-67-4
D716-7 JX9	23-22-53
D732 JX9	23-41-182
D733 JX9	23-41-182
D748-9 KB7	23-49-3
D748-9 KG7	23-49-3
D748-9 KL2	23-49-3
D748-9 KW1	23-49-3
D748-9 KX9	23-49-3
D748-9 KY4	23-49-3
D750-1 KB7	23-49-3
D750-1 KG7	23-49-3
D750-1 KL2	23-49-3
D750-1 KT8	23-49-3
D750-1 KW1	23-49-3
D750-1 KX9	23-49-3
D750-1 KY4	23-49-3
D752-3 JW1	23-18-37
D752-3 JX9	23-18-37
D752-3 KB7	23-18-37
D752-3 KG6	23-18-37
D752-3 KL2	23-18-37
D752-3 KY4	23-18-37
D754-5 JX9	23-22-7
D764-5 KB6	23-22-53
D764-5 KG6	23-22-53
D764-5 KL3	23-22-53
D764-5 KW1	23-22-53
D764-5 KX9	23-22-53
D764-5 KY3	23-22-53
E160 JW1	15-03-69
E160 JX2	15-03-69
E161 JW1	15-03-69
E161 JX2	15-03-69
E162 JR2	15-03-69
E162 JW1	15-03-69
E162 JX9	15-03-69
E163 KW1	15-03-69
E163 KX2	15-03-69
E500-1 KB7	23-23-52
E500-1 KG9	23-23-52
E500-1 KL2	23-23-52
E500-1 KT8	23-23-52
E500-1 KW1	23-23-52
E500-1 KX9	23-23-52
E500-1 KY4	23-23-52
E502-3 KB7	23-23-52
E502-3 KG9	23-23-52
E502-3 KL2	23-23-52
E502-3 KT8	23-23-52
E502-3 KW1	23-23-52
E502-3 KX9	23-23-52
E502-3 KY4	23-23-52
E504 KB7	23-23-52
E504 KG9	23-23-52
E504 KL2	23-23-52
E504 KT8	23-23-52
E504 KW1	23-23-52
E504 KX9	23-23-52
E504 KY4	23-23-52
E604-5 KG9	23-64-280
E604-5 KL2	23-64-280
E604-5 KW1	23-64-280
E604-5 KX9	23-64-280
E604-5 KY4	23-64-280
E720-1 KA5	23-34-176
E720-1 KB1	23-34-176
E720-1 KB5	23-34-176
E720-1 KE5	23-34-176
E720-1 KG2	23-34-176
E720-1 KG8	23-34-176
E720-1 KJ6	23-34-176
E720-1 KL4	23-34-176
E720-1 KL8	23-34-176
E720-1 KT5	23-34-176
E720-1 KW1	23-34-176
E720-1 KX9	23-34-176
E720-1 KY4	23-34-176
E720-1 KY5	23-34-176
E720-1 KY6	23-34-176
E720-1 KY9	23-34-176
E722-3 KA5	23-34-176
E722-3 KB1	23-34-176
E722-3 KB5	23-34-176
E722-3 KE5	23-34-176
E722-3 KG2	23-34-176
E722-3 KG8	23-34-176
E722-3 KJ6	23-34-176
E722-3 KL4	23-34-176
E722-3 KL8	23-34-176
E722-3 KT5	23-34-176
E722-3 KW1	23-34-176
E722-3 KX9	23-34-176
E722-3 KY4	23-34-176
E722-3 KY5	23-34-176
E722-3 KY6	23-34-176
E722-3 KY9	23-34-176
E724-5 KA5	12-02-6
E724-5 KB1	12-02-6
E724-5 KB5	12-02-6
E724-5 KE5	12-02-6
E724-5 KG2	12-02-6
E724-5 KG8	12-02-6
E724-5 KJ6	12-02-6
E724-5 KL4	12-02-6
E724-5 KL8	12-02-6
E724-5 KT5	12-02-6
E724-5 KW1	12-02-6
E724-5 KX9	12-02-6
E724-5 KY4	12-02-6
E724-5 KY5	12-02-6
E724-5 KY6	12-02-6
E724-5 KY9	12-02-6
E726-7 KA5	12-02-6
E726-7 KB1	12-02-6
E726-7 KB5	12-02-6
E726-7 KE5	12-02-6
E726-7 KG2	12-02-6
E726-7 KG8	12-02-6
E726-7 KJ6	12-02-6
E726-7 KL4	12-02-6
E726-7 KL8	12-02-6
E726-7 KT5	12-02-6
E726-7 KW1	12-02-6
E726-7 KX9	12-02-6
E726-7 KY4	12-02-6
E726-7 KY5	12-02-6
E726-7 KY6	12-02-6
E726-7 KY9	12-02-6
F220-1 JX9	23-22-145
F222-3 JX9	23-22-145
F224-5 JX9	23-22-145
F226-7 JX9	23-22-145
F228-9 JX9	23-22-145
F230-1 JX9	23-22-145
F232-3 KT8	23-22-145
F234-5 KX9	23-22-145
F236-7 KX9	23-22-145
F238-9 KX9	23-22-145
F240-1 KX9	23-22-145
F336-7 KB7	23-49-3
F336-7 KG7	23-49-3
F336-7 KL2	23-49-3
F336-7 KT8	23-49-3
F336-7 KW1	23-49-3
F336-7 KX9	23-49-3
F336-7 KY4	23-49-3
F338-9 KB7	23-49-3
F338-9 KG7	23-49-3
F338-9 KL2	23-49-3
F338-9 KT8	23-49-3
F338-9 KX9	23-49-3
F338-9 KY4	23-49-3
F340-1 KB7	23-49-3
F340-1 KG7	23-49-3
F340-1 KL2	23-49-3
F340-1 KT8	23-49-3
F340-1 KW1	23-49-3
F340-1 KX9	23-49-3
F340-1 KY4	23-49-3
F344-5 KB7	23-49-3
F344-5 KG7	23-49-3
F344-5 KL2	23-49-3
F344-5 KX9	23-49-3
F344-5 KY4	23-49-3
F400-1 KB7	23-49-1
F400-1 KG7	23-49-1
F400-1 KL2	23-49-1
F400-1 KT8	23-49-1
F400-1 KX9	23-49-1
F400-1 KY4	23-49-1
F402-3 KB7	23-49-1
F402-3 KG7	23-49-1
F402-3 KL2	23-49-1
F402-3 KT8	23-49-1
F402-3 KX9	23-49-1
F402-3 KY4	23-49-1
F404-5 KB7	23-49-1
F404-5 KG7	23-49-1
F404-5 KL2	23-49-1
F404-5 KX9	23-49-1
F406-7 KB7	23-49-1
F406-7 KG7	23-49-1
F406-7 KL2	23-49-1
F406-7 KT8	23-49-1
F406-7 KX9	23-49-1
F406-7 KY4	23-49-1
F408 KB7	23-49-1
F408 KG7	23-49-1
F408 KL2	23-49-1
F408 KX9	23-49-1
F408 KY4	23-49-1
F410 KB7	23-49-1
F410 KG7	23-49-1
F410 KL2	23-49-1
F410 KX9	23-49-1
F412 KB7	23-49-1
F412 KG7	23-49-1
F412 KX9	23-49-1
F412 KY4	23-49-1
F413 KB7	23-49-1
F413 KG7	23-49-1
F413 KX9	23-49-1
F414 KX9	23-49-1
F414-5 KX9	23-49-1
F415 KX9	23-49-1
F416 KX9	23-49-1
F417 KX9	23-49-1
F434-5 KB7	23-49-1
F434-5 KG7	23-49-1
F434-5 KL2	23-49-1
F434-5 KT8	23-49-1
F434-5 KX9	23-49-1
F434-5 KY4	23-49-1
F436-7 KB7	23-49-1
F436-7 KG7	23-49-1
F436-7 KL2	23-49-1
F436-7 KT8	23-49-1
F436-7 KX9	23-49-1
F436-7 KY4	23-49-1
F438-9 KX9	23-49-1
F440-1 KX9	23-49-1
F442 KL2	23-49-1
F442 KX9	23-49-1
F450-1 KB7	23-49-1
F450-1 KG7	23-49-1
F450-1 KL2	23-49-1
F450-1 KT8	23-49-1
F450-1 KX9	23-49-1
F450-1 KXW	23-49-1
F450-1 KY4	23-49-1
F452-3 KB7	23-49-1
F452-3 KG7	23-49-1
F452-3 KL2	23-49-1
F452-3 KT8	23-49-1
F452-3 KX9	23-49-1
F452-3 KXN	23-49-1
F452-3 KXW	23-49-1
F452-3 KY4	23-49-1
F454-5 KB7	23-49-1
F454-5 KG7	23-49-1
F454-5 KL2	23-49-1
F454-5 KT8	23-49-1
F454-5 KX9	23-49-1
F454-5 KY4	23-49-1
F456-7 KB7	23-49-1
F456-7 KG7	23-49-1
F456-7 KL2	23-49-1
F456-7 KX9	23-49-1
F456-7 KXW	23-49-1
F456-7 KY4	23-49-1
F458-9 KB7	23-49-1
F458-9 KG7	23-49-1
F458-9 KL2	23-49-1
F458-9 KX9	23-49-1
F458-9 KXW	23-49-1
F458-9 KY4	23-49-1
F460-1 KB7	23-49-1
F460-1 KG7	23-49-1
F460-1 KL2	23-49-1
F460-1 KX9	23-49-1
F460-1 KY4	23-49-1
F462-3 KB7	23-49-1
F462-3 KG7	23-49-1
F462-3 KX9	23-49-1
F462-3 KXW	23-49-1
F464-5 KB7	23-49-1
F464-5 KG7	23-49-1
F464-5 KL2	23-49-1
F464-5 KT8	23-49-1
F464-5 KX9	23-49-1
F464-5 KY4	23-49-1
F468-9 KB7	23-49-1
F468-9 KBX	23-49-1
F468-9 KG7	23-49-1
F468-9 KGX	23-49-1
F468-9 KL2	23-49-1
F468-9 KLX	23-49-1
F468-9 KT8	23-49-1
F468-9 KTX	23-49-1
F468-9 KX9	23-49-1
F468-9 KY4	23-49-1
F468-9 KYX	23-49-1
F470-1 KB7	23-49-1
F470-1 KG7	23-49-1
F470-1 KL2	23-49-1
F470-1 KT8	23-49-1
F470-1 KX9	23-49-1
F470-1 KXN	23-49-1
F470-1 KXW	23-49-1
F470-1 KY4	23-49-1
F472-3 KX9	23-49-1
F474-5 KX9	23-49-1
F476-7 KL2	23-49-1
F476-7 KX9	23-49-1
F478-9 KL2	23-49-1
F478-9 KX9	23-49-1
F480-1 KX9	23-49-1
F482-3 KB7	23-49-1
F482-3 KBX	23-49-1
F482-3 KG7	23-49-1
F482-3 KGX	23-49-1
F482-3 KL2	23-49-1
F482-3 KLX	23-49-1
F482-3 KT8	23-49-1
F482-3 KX9	23-49-1
F482-3 KXW	23-49-1
F482-3 KY4	23-49-1
F482-3 KYX	23-49-1
F500 JX9	23-49-1
F500 KBX	23-49-1
F500 KGX	23-49-1
F501 JX9	23-49-1
F501 KBX	23-49-1
F501 KGX	23-49-1
F501 KLX	23-49-1
F501 KTX	23-49-1
F501 KYX	23-49-1
F502 JX9	23-49-1
F502 KBX	23-49-1
F502 KGX	23-49-1
F502 KLX	23-49-1
F502 KYX	23-49-1
F503 JX9	23-49-1
F503 KBX	23-49-1
F503 KGX	23-49-1
F503 KLX	23-49-1

PART NUMBER	CODE
F503 KYX	23-49-1
F504 JX9	23-49-1
F504 KBX	23-49-1
F504 KGX	23-49-1
F504 KLX	23-49-1
F504 KYX	23-49-1
F505 KBX	23-49-1
F505 KGX	23-49-1
F505 KLX	23-49-1
F505 KTX	23-49-1
F505 KX9	23-49-1
F505 KYX	23-49-1
F506 KBX	23-49-1
F506 KGX	23-49-1
F506 KLX	23-49-1
F506 KTX	23-49-1
F506 KX9	23-49-1
F506 KYX	23-49-1
F507 KBX	23-49-1
F507 KGX	23-49-1
F507 KLX	23-49-1
F507 KTX	23-49-1
F507 KX9	23-49-1
F507 KYX	23-49-1
F508 FGX	23-49-1
F508 KBX	23-49-1
F508 KLX	23-49-1
F508 KX9	23-49-1
F508 KYX	23-49-1
F509 KB7	23-49-1
F509 KG7	23-49-1
F509 KL2	23-49-1
F509 KT8	23-49-1
F509 KX9	23-49-1
F509 KY4	23-49-1
F510 JX9	23-49-1
F510 KB7	23-49-1
F510 KG7	23-49-1
F510 KL2	23-49-1
F510 KT8	23-49-1
F510 KY4	23-49-1
F511 JX9	23-49-1
F511 KB7	23-49-1
F511 KG7	23-49-1
F511 KL2	23-49-1
F511 KT8	23-49-1
F511 KY4	23-49-1
F512 JX9	23-49-1
F512 KB7	23-49-1
F512 KG7	23-49-1
F512 KL2	23-49-1
F512 KT8	23-49-1
F512 KY4	23-49-1
F518 KBX	23-49-1
F518 KGX	23-49-1
F518 KX9	23-49-1
F519 KBX	23-49-1
F519 KGX	23-49-1
F519 KLX	23-49-1
F519 KTX	23-49-1
F519 KX9	23-49-1
F519 KYX	23-49-1
F520 KBX	23-49-1
F520 KGX	23-49-1
F520 KL2	23-49-1
F520 KLX	23-49-1
F520 KX9	23-49-1
F520 KYX	23-49-1
F521 KBX	23-49-1
F521 KGX	23-49-1
F521 KLX	23-49-1
F521 KX9	23-49-1
F521 KYX	23-49-1
F522 KBX	23-49-1
F522 KGX	23-49-1
F522 KL2	23-49-1
F522 KLX	23-49-1
F522 KX9	23-49-1
F522 KYX	23-49-1
F523 KBX	23-49-1
F523 KGX	23-49-1
F523 KLX	23-49-1
F523 KTX	23-49-1
F523 KX9	23-49-1
F523 KYX	23-49-1
F603 KL2	23-49-1
F603 KX9	23-49-1
F800-1 KB7	23-49-17
F800-1 KG7	23-49-17
F800-1 KL2	23-49-17
F800-1 KT8	23-49-17
F800-1 KX9	23-49-17
F800-1 KY4	23-49-17
F802 KB7	23-49-3
F802 KG7	23-49-3
F802 KL2	23-49-3
F802 KT8	23-49-3
F802 KW1	23-49-3
F802 KX9	23-49-3
F802 KY4	23-49-3
F803 JX9	23-49-1
F804 JX9	23-49-1
F805 JX9	23-49-1
F806 JX9	23-49-1
F807 JX9	23-49-1
F808 JX9	23-49-1
F811 KB7	23-49-17
F811 KG7	23-49-17
F811 KL2	23-49-17
F811 KT8	23-49-17
F811 KW1	23-49-17
F811 KX9	23-49-17
F811 KY4	23-49-17
F812-3 KB7	23-49-17
F812-3 KG7	23-49-17
F812-3 KW1	23-49-17
F812-3 KX9	23-49-17
F814 JX9	23-49-15
H136-7 JL5	23-26-43
H136-7 JX9	23-26-43
H136-7 JY7	23-26-43
H136-7 KB7	23-26-43
H136-7 KG6	23-26-43
H511 KB7	23-49-17
H511 KG7	23-49-17
H511 KL2	23-49-17
H511 KX9	23-49-17
H511 KY4	23-49-17
H601 KL2	23-34-309
H602 JW1	23-34-309
H602 KL2	23-34-309
M000 KBX	23-20-8
M000 KGX	23-20-8
M000 KTX	23-20-8
M001 JX9	23-20-8
M002 JX8	23-20-8
M003 KBX	23-20-8
M003 KGX	23-20-8
M004 JX9	23-20-8
M006-7 JL5	1-63-1
M006-7 JX9	1-63-1
M006-7 JY7	1-63-1
M006-7 KB7	1-63-1
M006-7 KG7	1-63-1
M006-7 KT8	1-63-1
M008 JLX	23-20-8
M008 JYX	23-20-8
M008 KBX	23-20-8
M008 KGX	23-20-8
M009 JX9	23-20-8
M010 JX9	23-20-8
M011 KGX	23-20-8
M011 KTX	23-20-8
M011 KX9	23-20-8
M011 KYX	23-20-8
M012 KX8	23-20-8
M020-1 KB7	1-63-1
M020-1 KG7	1-63-1
M020-1 KL5	1-63-1
M020-1 KT8	1-63-1
M020-1 KX9	1-63-1
M020-1 KY7	1-63-1
M022 KBX	23-20-8
M022 KGX	23-20-8
M022 KTX	23-20-8
M023 KX9	23-20-8
M024 KX8	23-20-8
M025 KBX	23-20-8
M025 KGX	23-20-8
M026 KX9	23-20-8
M300 KBX	23-20-41
M300 KGX	23-20-41
M300 KTX	23-20-41
M301 KBX	23-20-41
M301 KGX	23-20-41
M301 KTX	23-20-41
M302 KBX	23-20-41
M302 KGX	23-20-41
M305 JX9	23-20-41
M306 JX8	23-20-41
M307 JX8	23-20-41
M308 JL5	1-63-1
M308 JX9	1-63-1
M308 JY7	1-63-1
M308 KB7	1-63-1
M308 KG7	1-63-1
M308 KT8	1-63-1
M309 JLX	23-20-41
M309 JYX	23-20-41
M309 KBX	23-20-41
M309 KGX	23-20-41
M311 KBX	23-20-41
M311 KGX	23-20-41
M312 JLX	23-20-41
M312 JYX	23-20-41
M312 KBX	23-20-41
M312 KGX	23-20-41
M313 JX9	23-20-41
M315 JX9	23-20-41
M316 JX9	23-20-41
M317 KGX	23-20-41
M317 KYX	23-20-41
M318 KGX	23-20-41
M318 KTX	23-20-41
M319 KX8	23-20-41
M320 KX8	23-20-41
M321 JX8	23-20-41
M322-3 KB7	1-63-1
M322-3 KG7	1-63-1
M322-3 KL5	1-63-1
M322-3 KT8	1-63-1
M322-3 KX9	1-63-1
M322-3 KY7	1-63-1
M324-5 KB7	1-63-1
M324-5 KG7	1-63-1
M324-5 KL5	1-63-1
M324-5 KT8	1-63-1
M324-5 KX9	1-63-1
M324-5 KY7	1-63-1
P000 JL5	19-30-4
P000 JX9	19-30-4
P000 JY7	19-30-4
P000 KB7	19-30-4
P000 KG7	19-30-4
P001 KB7	19-30-4
P001 KG7	19-30-4
P001 KL5	19-30-4
P001 KT8	19-30-4
P001 KX9	19-30-4
P001 KY7	19-30-4
P002 KB7	19-30-4
P002 KG7	19-30-4
P002 KL5	19-30-4
P002 KT8	19-30-4
P002 KX9	19-30-4
P002 KY7	19-30-4
P003 KB7	19-30-4
P003 KG7	19-30-4
P003 KL5	19-30-4
P003 KT8	19-30-4
P003 KX9	19-30-4
P003 KY3	19-30-4
P003 KY7	19-30-4
P004 JX9	19-30-4
P005 JX9	19-30-4
P006 JX9	19-30-4
P100 JL5	19-30-43
P100 JX9	19-30-43
P100 JY7	19-30-43
P100 KB7	19-30-43
P100 KG7	19-30-43
P101 KX9	19-30-44
P102 KX9	19-30-44
P105 KB7	19-30-20
P105 KG7	19-30-20
P105 KL5	19-30-20
P105 KT8	19-30-20
P105 KX9	19-30-20
P105 KY7	19-30-20
P116 KB7	19-30-43
P116 KG7	19-30-43
P116 KL5	19-30-43
P116 KT8	19-30-43
P116 KX9	19-30-43
P116 KY7	19-30-43
P122 KB7	19-30-43
P122 KG7	19-30-43
P122 KL5	19-30-43
P122 KT5	19-30-43
P122 KT8	19-30-43
P122 KX9	19-30-43
P122 KY7	19-30-43
P500-1 JL5	1-48-158
P500-1 JX9	1-48-158
P500-1 JY7	1-48-158
P500-1 KB7	1-48-158
P500-1 KG6	1-48-158
P502 JX9	24-28-78
P502 KB7	24-28-78
P502 KG6	24-28-78
P503 JX9	24-28-78
P503 KB7	24-28-78
P503 KG6	24-28-78
P504 KB7	23-33-65
P504 KG6	23-33-65
P504 KL5	23-33-65
P504 KY7	23-33-65
P504 KY9	23-33-65
P601 JL5	23-06-55
P601 JX9	23-06-55
P601 JY7	23-06-55
P601 KB7	23-06-55
P601 KG6	23-06-55
P604 JX9	23-33-42
P604 KB7	23-33-42
P604 KG6	23-33-42
P607 KB7	23-02-18
P607 KG6	23-02-18
P607 KL5	23-02-18
P607 KT8	23-02-18
P607 KX9	23-02-18
P607 KY7	23-02-18
P608 KB7	23-33-132
P608 KG6	23-33-132
P608 KL5	23-33-132
P608 KX9	23-33-132
P608 KY7	23-33-132
P609 JX9	8-40-21
P610 KB7	19-14-49
P610 KG6	19-14-49
P610 KL5	19-14-49
P610 KT8	19-14-49
P610 KX9	19-14-49
P610 KY7	19-14-49
P611 JX9	19-14-49
S500 JX9	23-45-39
S501 JX9	23-45-66
	23-48-72
S501 KB7	23-48-72
S501 KG6	23-48-72
S501 KL2	23-48-72
S501 KT8	23-48-72
S501 KY4	23-48-72
S527 JX9	23-47-8
S528 JX9	23-47-8
S536-7 KB7	23-48-73
S536-7 KG7	23-48-73
S536-7 KL2	23-48-73
S536-7 KT8	23-48-73
S536-7 KX9	23-48-73
S536-7 KY4	23-48-73
S538 KB7	23-48-72
S538 KG7	23-48-72
S538 KL2	23-48-72
S538 KT8	23-48-72
S538 KX9	23-48-72
S538 KY4	23-48-72
S539 KB7	23-48-71
S539 KG6	23-48-71
S539 KL2	23-48-71
S539 KT8	23-48-71
S539 KX9	23-48-71
S539 KY4	23-48-71
S554-5 KB7	23-48-91
S554-5 KG7	23-48-91
S554-5 KL2	23-48-91
S554-5 KT8	23-48-91
S554-5 KX9	23-48-91
S554-5 KY4	23-48-91
W228-9 KB7	23-49-3
W228-9 KG7	23-49-3
W228-9 KL2	23-49-3
W228-9 KT8	23-49-3
W228-9 KX9	23-49-3
W228-9 KY4	23-49-3
W232-3 KX9	1-87-22
W406 KB7	23-48-51
W406 KG6	23-48-51
W406 KL2	23-48-51
W406 KT8	23-48-51
W407 KX9	23-32-80

NOTES

NOTES