1970-71

PASSENGER CAR

APPLICATION SECTION

January 1972

LOOSE-LEAF PARTS CATALOG

PARTS DIVISION CHRYSLER MOTORS CORPORATION

Supersedes
81-690-0955

81-690-1000

This publication contains parts information for "F" Series (1970) and "G" Series (1971) Vehicles.

In the event replacement parts are required which are not listed, they may be ordered by description or Part Type Code, giving the model and vehicle serial number, and Trim Code (when applicable) of the vehicle.

The use of this Parts Catalog and the arrangement of information herein is explained in the General Information Section.

INDEX TO INFORMATION PAGES

- ABBREVIATIONS.....INF - 10
- ALPHABETICAL INDEX.....INF - 3
- AUTOMATIC TRANSMISSION IDENTIFICATION.....INF - 8
- CODE PLATE INTERPRETATION.....INF - 6
- BUILD DATE MO. AND YR. .....INF - 6
- CAR LINE INFORMATION.....INF - 6
- COLOR CODE INFORMATION.....INF - 2
- ENGINE IDENTIFICATION.....INF - 8
- ENGINE IDENTIFICATION NUMBERS.....INF - 9
- HOW TO LOCATE PARTS.....INF - 2
- ILLUSTRATIONS.....INF - 3
- MODEL CHART.....INF - 7
- NUMERICAL INDEX.....INF - 3
- PAGE NUMBERING.....INF - 3
- PARTS CATALOG REVISION SERVICE.....INF - 4
- PARTS PACKAGES.....INF - 3
- PART TYPE CODE SYSTEM.....INF - 2
- PRODUCT BULLETINS.....INF - 4
- PRICE CLASS INFORMATION.....INF - 6
- SPECIFYING INFORMATION.....INF - 4
- STANDARD PARTS.....INF - 3
- SYMBOLS USED IN THIS CATALOG.....INF - 4
- TRANSMISSION IDENTIFICATION.....INF - 8
- TRIM CODE AND BODY PAINT CODES.....INF - 6
- VEHICLE IDENTIFICATION.....INF - 5

PAGES	
INF-1	GENERAL INFORMATION
PK-1	PARTS PACKAGES
PT-1	POLICE - TAXI
1-1	GROUP 1 ACCESSORIES
2-1	GROUP 2 FRONT SUSPENSION
3-1	GROUP 3 AXLE - REAR
4-1	GROUP 4 BRAKE - PARKING
5-1	GROUP 5 BRAKE - SERVICE
6-1	GROUP 6 CLUTCH
7-1	GROUP 7 COOLING
8-1	GROUP 8 ELECTRICAL
9-1	GROUP 9 ENGINE - 6 CYLINDER
9-1	GROUP 9 ENGINE - 8 CYLINDER
10-1	GROUP 10 ENGINE OILING
11-1	GROUP 11 EXHAUST
12-1	GROUP 12 FENDERS & SHEET METAL
13-1	GROUP 13 FRAME
14-1	GROUP 14 FUEL
15-1	GROUP 15 HOOD
16-1	GROUP 16 PROP. SHAFT & UNIV. JT.
17-1	GROUP 17 SPRINGS
18-1	GROUP 18 STANDARD PARTS
19-1	GROUP 19 STEERING - STANDARD
19-1	GROUP 19 STEERING - POWER
21-1	GROUP 21 TRANSMISSION - MANUAL
21-1	GROUP 21 TRANSMISSION - AUTO.
22-1	GROUP 22 WHEELS
23-1	GROUP 23 BODY
17-1	GROUP 23 INTERIOR TRIM
24-1	GROUP 24 AIR CONDITIONING
AL-1	ALPHABETICAL INDEX
NU-1	NUMERICAL INDEX

HOW TO LOCATE PARTS

This Parts Catalog is divided into Groups (Part Type Codes) with a tab index to separate the Major Groups.

Page INF - 1 lists the various Group names and numbers. To locate a part by number, refer to the Numerical Index which indicates the Part Type Code in which the number is located. To locate a part by name, refer to the Alphabetical Index which will indicate the Part Type Code a part number for specific nomenclature is listed.

In cases where only the location of the part on the vehicle is known, refer to the Illustrations for that group in which the part is located. The illustration will identify the part and provide Part Type Code information from which the part listing may be located. Parts are listed in Part Type Code sequence within the group, and reference to the proper group will determine the part number.

PART TYPE CODE SYSTEM

To simplify the listing and location of individual parts, a system of Part Codes is used in this Parts Catalog.

To illustrate, a Type of Part will be indicated as:

2-03-3 KNUCKLE, w/BUSHING

This code is broken down as follows:

2- Indicates the Major Group: "Group 2 -- Front Suspension"
-03- Indicates the Sub-Group: "03 -- Steering Knuckle"
-3 Indicates the Code for the specific name of the part: "Knuckle, w/ BUSHING"

Part Type Code 2-03-3 will always appear as "KNUCKLE, w/BUSHING."

COLOR CODED OR MIXED PART NUMBERS

Appearing throughout this catalog are part numbers containing both letters and numbers. For example: 6700FX9. These are good serviceable part numbers. The combination of letters and numbers merely indicates the parts are keyed to the interior color of the vehicles on which they are used.

INTERIOR TRIM

Refer to the trim section of the catalog for information relative to this section.

PAGE NUMBERING

Two-part page numbers are used throughout this catalog. The first part of the page designation indicates the major group or section. The second part indicates the actual page number in the group. For example:

1-1 indicates Group 1, Accessories, Page 1
2-1 indicates Group 2, Front Suspension, Page 1

In the maintenance of the Loose Leaf Parts Catalog Revision Service, it may become necessary to add information beyond the capacity of the page. In this event, an "A" page will be used. For example: If it becomes necessary, because of change, to add several part numbers to page 2-1 and space does not permit the addition, you will be given Page 2-1A. Page 2-1A should be filed immediately following page 2-1.

ILLUSTRATIONS

Refer to illustration index or also special illustration index in Group 8 and Group 23 for page reference for specific illustrations.

ALPHABETICAL INDEX

To locate a part by name, refer to the Alphabetical Index. This index indicates the Part Type Code in which various parts may be located.

NUMERICAL INDEX

Reference to any part by part number is provided in the Numerical Index. This index indicates the Part Type Code in which the number is listed.

PARTS PACKAGES

Service Parts Packages, containing all parts needed for a specific service operation, are listed in their respective groups with related parts. The listing will show adaptability and model application. The PARTS PACKAGE Section of the catalog contains a secondary listing of most major packages and respective contents of each. The listing sequence is numerical within Part Type Code.

STANDARD PARTS

Standard Parts such as bolts, nuts, etc., are listed under the major parts which they attach and are not coded. Standard Parts listed as Major Parts, such as fuses, bulbs, and bearings in the 100,000-499,999 part number series are assigned a Part Type Code and coded within the group in which they are listed.

A comprehensive listing and description of the most commonly used Standard Parts will be found under Group 18.

SPECIFYING INFORMATION

The following information is included in this Parts Catalog:

1. Part Type Code
2. Part Name
3. Part Number
4. Model Applications
5. Quantity used per vehicle
6. Effective points of series running changes by vehicle serial number, engine number and body number where applicable.
7. Description and dimensions necessary for proper identification of parts where necessary.
8. Parts not previously listed in the Parts Catalog are designated by a (#) symbol preceding the part number.
9. No. of Cyl. column
6 indicates 6 cylinder models
8 indicates 8 cylinder models
Blank indicates dual usage
10. Parts designated as "CANADA" are applicable to Canadian vehicles only. They are not available in U.S.A.
11. 70 or 71 in the description field indicates the year applicable for the part. BLANK INDICATES DUAL USAGE.

SYMBOLS USED IN THIS PARTS CATALOG

The following symbols are used in the Parts Catalog and revisions thereto:

* - An asterisk preceding a part number indicates a change or addition.

- Preceding a part number indicates parts which have been added and not previously published.

AR - In the "Model Code" column means "use as required".

PRODUCT BULLETINS

PRODUCT BULLETINS are issued when important changes are made in production or when corrections are to be made in the Parts Catalog between regular revisions.

Use of the PRODUCT BULLETIN assures each catalog subscriber up to date information. All catalogs should be noted and changed accordingly to remain current between revisions.

PARTS CATALOG REVISION SERVICE

Subscribers to the Passenger Car Parts Catalog Revision Service will be periodically provided with revision copy incorporating latest information. Revision may be provided by Group or complete book copy.

Proper interfiling of the revision copy will insure the subscriber a complete up-to-date Parts Catalog.

Accompanying each mailing of a set of revision copy is a covering letter which outlines the contents of the particular revision. It is recommended that the letter be read carefully to avoid elimination of copy which is still current.

VEHICLE IDENTIFICATION PLATE

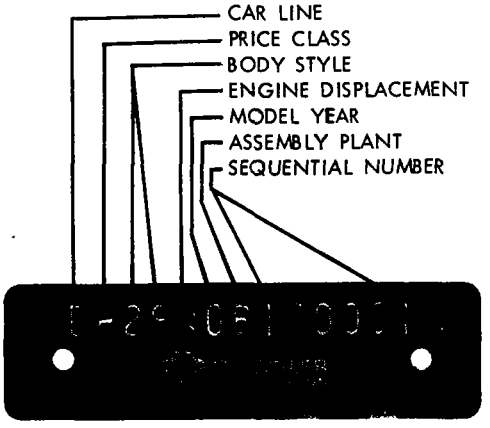

All assembly plants use a uniform method for assigning vehicle serial numbers. This number consists of 13 digits and is shown on the Vehicle Identification Plate which is located on the instrument panel - visible thru the windshield. (Always specify the vehicle serial number when ordering parts by description). A listing and description or serial numbers follows:

VEHICLE IDENTIFICATION PLATE INTERPRETATION

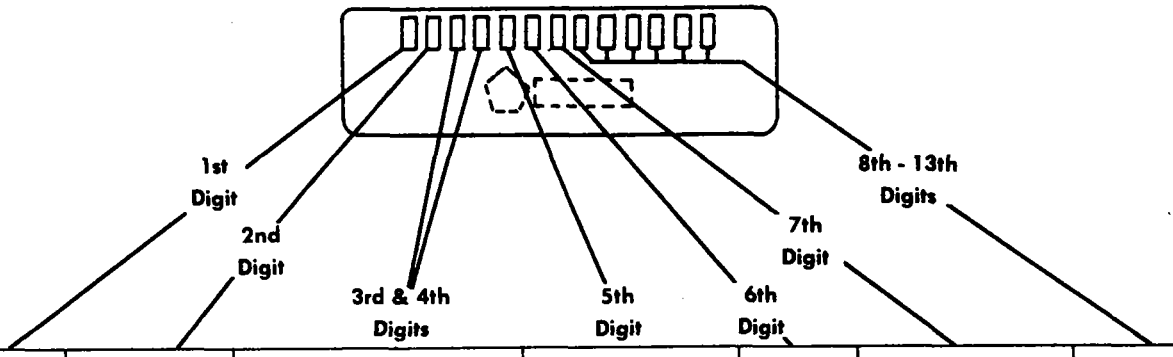

CAR LINE	PRICE CLASS	BODY TYPE	ENG. DISPLACE.	MODEL YEAR	ASSEMBLY PLANT	SEQUENCE NUMBER
V - Valiant	E - Economy	21 - 2 Dr. Sed.	B - 198 Cu. In.	0 - 1970	A - Lynch Rd.	100001
L - Dart	H - High	23 - 2 Dr. H/Top	C - 225 Cu. In.	1 - 1971	B - Hamtramck	100001
B - Baracuda	K - Police	27 - Conv. Cpe.	E - Spl. 6 Cyl.		C - Jefferson	100001
J - Challenger	L - Low	29 - 2 Dr. Sports H/Top	G - 318 Cu. In.		D - Belvedere	100001
R - Belvedere Satellite	M - Medium	41 - 4 Dr. Sed.	H - 340 Cu. In.		E - Los Angeles	100001
W - Coronet Charger	P - Premium	43 - 4 Dr. H/Top	J - 340 Cu. In. 6 Bbl.		F - Newark	100001
P - Fury	S - Special	45 - 6 Pass. Wagon	K - 360 Cu. In.		G - St. Louis	100001
D - Dodge	T - Taxi	46 - 9 Pass. Wagon	L - 383 Cu. In.		R - Windsor	100001
C - Chrysler	X - Fast Top		N - 383 Hi. Perf.			
X - Charger			R - 426 Cu. In.			
Y - Imperial			T - 440 Cu. In.			
			U - 440 Hi. Perf.			
			V - 440-6 Bbl. 8 Cyl.			
			Z - Spl. 8 Cyl.			

-SAMPLE BODY CODE PLATE 1970-

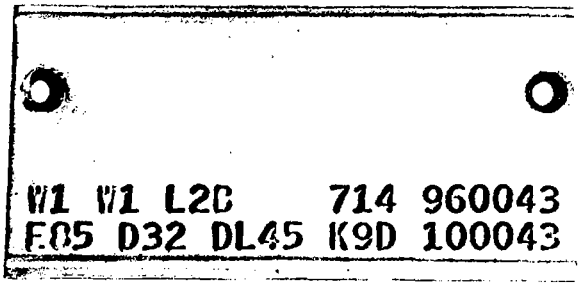

-SAMPLE BODY CODE PLATE 1971-

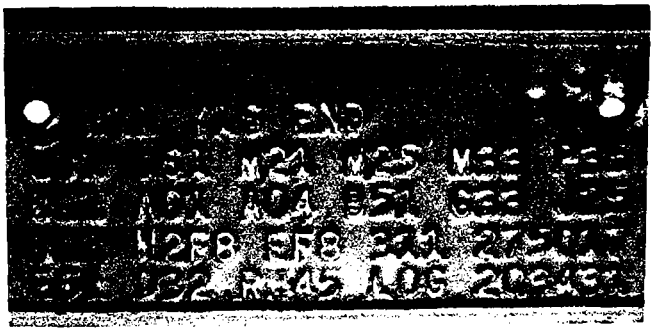

CODE PLATE INTERPRETATION

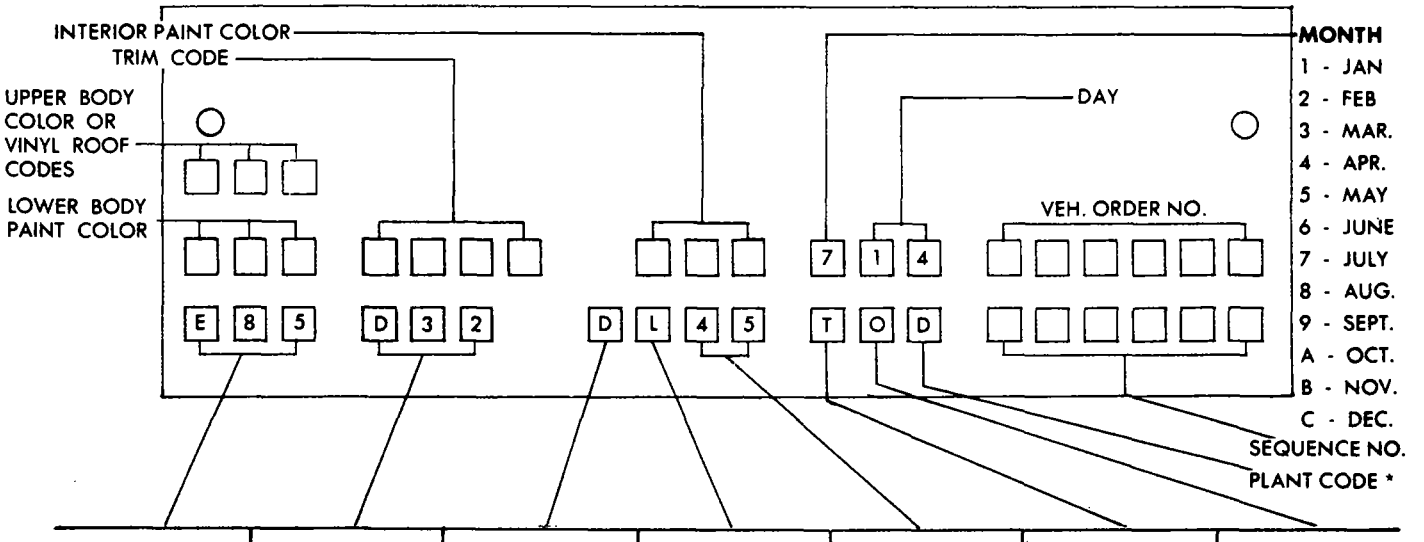

ENG. CODES	TRANS CODES	CAR LINE	PRICE CLASS	BODY TYPE	ENG. CODE	MODEL YEAR
E-22-198	D11-A903	O-ALL	E-ECONOMY	21-2 DR. SED.	B-198 CU. IN.	0-1970
E-24-225	D12-A230 C/S	V-VALIANT	H-HIGH	41-4 DR. SED.	C-225 CU. IN.	1-1971
E-25-225	D13-A230 F/S	L-DART	K-POLICE	23-2 DR. H/TOP	E-SPL. 6 CYL.	
E-31-273	D21-A833	B-BARRACUDA	L-LOW	27-CV. CP.	G-318 CU. IN.	
E-44-318	D31-A904	J-CHALLENGER	M-MEDIUM	29-2 DR. SPORTS H/TOP	H-340 CU. IN.	
E-55-340	D32-A727	R-BELVEDERE SATELLITE	P-PREMIUM	45-6 P. WGN.	J-340 CU. IN. 4 BBL.	
E-57-360	D36-A727 H.D.	W-CORONET CHARGER	S-SPECIAL	46-9 P. WGN.	K-360 CU. IN.	
E-61-383	D49 SPECIAL ORDER	P-PLYMOUTH	T-TAXI	43-4 DR. H/TOP	L-383 CU. IN.	
E-63-383		D-DODGE			N-383 HI PERF.	
E-65-383		C-CHRYSLER			R-426 CU. IN.	
E-74-426		X-CHARGER			T-440 CU. IN.	
E-85-440		Y-IMPERIAL			U-440 HI. PERF.	
E-86-440					V-440 6 BBL.	
E-87-440					Z-SPL. 8 CYL.	

* ASSEMBLY PLANT, A - LYNCH ROAD, B - HAMTRAMCK, C - JEFFERSON, D - BELVEDERE, E - LOS ANGELES, F - NEWARK, G - ST. LOUIS, R - WINDSOR

1970 MODEL CHART

CAR LINE WHEELBASE		SALES NAME	PRICE CLASS
PLYMOUTH 108" W.B.	V	Valiant	L
		Duster	
		Duster 340	S
DODGE 111" W.B.	L	Dart	L
		Swinger	
		Swinger 340	M
		Dart Custom	H
PLYMOUTH 108" W.B.	B	Barracuda	H
		Gran Coupe	P
		'Cuda	S
DODGE 110" W.B.	J	Challenger	H
		Challenger R/T	S
PLYMOUTH 115.8" W.B. Station Wagons 116.5 Wheelbase	R	Police	K
		Taxi	T
		Belvedere	L
		Roadrunner	M
		Satelite	H
		Sport Satellite	P
		GTX	S
DODGE 116.5" W.B.	W	Police	K
		Taxi	T
		Coronet Deluxe	L
		Super Bee	M
		Coronet 440	H
		Coronet 500	P
		Charger 500	
		Coronet R/T	S
		Ctarger R/T	
PLYMOUTH 119.5" W.B. Station Wagons 121.5 Wheelbase	P	Police	K
		Taxi	T
		Fury I	E
		Fury II	L
		Suburban	
		Fury III	M
		Custom Suburban	
		Sport Fury	H
		Sport Suburban	
DODGE 121.5" W.B.	D	Police	K
		Taxi	T
		Polara	L
		Polara Custom	M
		Monaco	H
		Monaco 500	P
CHRYSLER 123.5" W.B. Station Wagons 121.5 Wheelbase	C	Newport	E
		Newport Custom	L
		300	M
		New Yorker	H
		Town & Country	P
IMPERIAL 126.5" W.B.	Y	Crown	L
		Le Baron	M

For Illustrations of Models Refer to Illustration Section of Body - Group 23

1971 MODEL CHART

MAKE Wheelbase		SALES NAME	PRICE CLASS
PLYMOUTH 108" W.B Custom - 111" W.B.	V	Valiant	L
		Duster	
		Valiant Scamp	H
		Duster 340	S
DODGE 111" W.B. Demon 108" W.B.	L	Swinger Special	L
		Dart	
		Demon	
		Demon 340	M
		Dart Custom	H
		Swinger	
PLYMOUTH 108" W.B.	B	Barracuda	H
		Grand Coupe	P
		'Cuda	S
DODGE 110" W.B.	J	Challenger	H
		Challenger R/T	S
PLYMOUTH 2-Dr. Models 115" W.B. 4-Dr. Models 117.5" W.B.	R	Police	K
		Taxi	T
		Satellite	L
		Road Runner	M
		Satellite Sebring	H
		Satellite Custom	
		Satellite Sebring Plus	P
		Satellite Brougham	
		Satellite Regent	
		GTX	S
DODGE 2-Dr. Models 115" W.B. 4-Dr. Models 117.5" W.B.	W	Police	K
		Taxi	T
		Coronet	L
		Charger Super Bee	M
		Charger	H
		Coronet Custom	
		Charger 500	P
		Coronet Brougham	
		Coronet Crestwood	
		Charger SE	
		Charger R/T	S
PLYMOUTH 119.5" W.B. Station Wagons 121.5 Wheelbase	P	Police	K
		Taxi	T
		Fury I	E
		Fury II	L
		Suburban	
		Fury III	M
		Custom Suburban	
		Sport Fury	H
		Sport Suburban	
		Sport Fury GT	P
DODGE 121.5" W.B.	D	Police	K
		Taxi	T
		Polara Special	S
		Polara	E
		Polara Custom	L
		Polara Brougham	M
		Monaco	H
CHRYSLER 123.5" W.B. Station Wagons 121.5 Wheelbase	C	Newport	E
		Newport Custom	L
		300	S
		New Yorker	H
		Town & Country	P
IMPERIAL 126.5" W.B.	Y	Le Baron	M

ENGINE IDENTIFICATION NUMBERS

The following are examples of identification numbers of all 1970 engines and transmissions:

ENGINE IDENTIFICATION

PLANT CODE	CUBIC INCH DISPL.	DATE CODE	SERIAL NUMBER
2 letters	3 digits	4 digits	4 digits
PM - Mound Rd.	198 - 225 - 318	Based on the calendar	A sequential number
PT - Trenton	340 - 360 - 383	on Page INF-8	beginning with 0001
	426 - 440		for each day's production.

Example serial number for an engine: PM31821870001

CYL.	CID	IDENTIFICATION NO. BOSS LOCATION
6	198	Right side, front of block, near coil
6	225	mounting bracket.
8	273	Left side, front of block,
8	318	below cylinder
8	340	head.
8	360	Left side, rear of block,
8	383	near oil pan
8	426	flange.
8	440	

MANUAL TRANSMISSION IDENTIFICATION

PLANT CODE	COMPONENT CODE	DATE CODE	SERIAL NUMBER
2 letters	3 digits	4 digits	4 digits
PP - New Process	903 - 903 trans.	Based on the calendar	A sequential number
Gear Division	230 - 230 trans.	on Page INF-8	beginning with 0001
PK - Kokomo	833 - 833 trans.		for each day's production.

Example serial number for a manual transmission: PP90321870001

Location: Below centerline on Front Portion of Right Side.

AUTOMATIC TRANSMISSION IDENTIFICATION

PLANT CODE	PART NO.	DATE CODE	SERIAL NUMBER
2 letters	7 digits	4 digits	4 digits
PK - Kokomo	2995 834	Based on the calendar	A sequential number
		on Page INF-8	beginning with 0001
			for each day's production.

Example serial number for an automatic transmission: PK299583421870001

Location: On Oil Pan Side Rail - Left Side.

ENGINE IDENTIFICATION NUMBERS

1969 DAY NUMBER

DATE	SEPT.	OCT.	NOV.	DEC.
1	2957	2987	3018	3048
2	2958	2988	3019	3049
3	2959	2989	3020	3050
4	2960	2990	3021	3051
5	2961	2991	3022	3052
6	2962	2992	3023	3053
7	2963	2993	3024	3054
8	2964	2994	3025	3055
9	2965	2995	3026	3056
10	2966	2996	3027	3057
11	2967	2997	3028	3058
12	2968	2998	3029	3059
13	2969	2999	3030	3060
14	2970	3000	3031	3061
15	2971	3001	3032	3062
16	2972	3002	3033	3063
17	2973	3003	3034	3064
18	2974	3004	3035	3065
19	2975	3005	3036	3066
20	2976	3006	3037	3067
21	2977	3007	3038	3068
22	2978	3008	3039	3069
23	2979	3009	3040	3070
24	2980	3010	3041	3071
25	2981	3011	3042	3072
26	2982	3012	3043	3073
27	2983	3013	3044	3074
28	2984	3014	3045	3075
29	2985	3015	3046	3076
30	2986	3016	3047	3077
31		3017		3078

1970 DAY NUMBER

DATE	JAN.	FEB.	MAR.	APR.	MAY	JUNE	JULY	AUG.	SEPT.	OCT.	NOV.	DEC.
1	3079	3110	3138	3169	3199	3230	3260	3291	3322	3352	3383	3413
2	3080	3111	3139	3170	3200	3231	3261	3292	3323	3353	3384	3414
3	3081	3112	3140	3171	3201	3232	3262	3293	3324	3354	3385	3415
4	3082	3113	3141	3172	3202	3233	3263	3294	3325	3355	3386	3416
5	3083	3114	3142	3173	3203	3234	3264	3295	3326	3356	3387	3417
6	3084	3115	3143	3174	3204	3235	3265	3296	3327	3357	3388	3418
7	3085	3116	3144	3175	3205	3236	3266	3297	3328	3358	3389	3419
8	3086	3117	3145	3176	3206	3237	3267	3298	3329	3359	3390	3420
9	3087	3118	3146	3177	3207	3238	3268	3299	3330	3360	3391	3421
10	3088	3119	3147	3178	3208	3239	3269	3300	3331	3336	3392	3422
11	3089	3120	3148	3179	3209	3240	3270	3301	3332	3362	3393	3423
12	3090	3121	3149	3180	3210	3241	3271	3302	3333	3363	3394	3424
13	3091	3122	3150	3181	3211	3242	3272	3303	3334	3364	3395	3425
14	3092	3123	3151	3182	3212	3243	3273	3304	3335	3365	3396	3426
15	3093	3124	3152	3183	3213	3244	3274	3305	3336	3366	3397	3427
16	3094	2125	3153	3184	3214	3245	3275	3306	3337	3367	3398	3428
17	3095	2126	3154	3185	3215	3246	3276	3307	3338	3368	3399	3429
18	3096	3127	3155	3186	3216	3247	3277	3308	3339	3369	3400	3430
19	3097	3128	3156	3187	3217	3248	3278	3309	3340	3370	3401	3431
20	3098	3129	3157	3188	3218	3249	3279	3310	3341	3371	3402	3432
21	3099	3130	3158	3189	3219	3250	3280	3311	3342	3372	3403	3433
22	3100	3131	3159	3190	3220	3251	3281	3312	3343	3373	3404	3434
23	3101	3132	3160	3191	3221	3252	3282	3313	3344	3374	3405	3435
24	3102	3133	3161	3192	3222	3253	3283	3314	3345	3375	3406	3436
25	3103	3134	3162	3193	3223	3254	3284	3315	3346	3376	3407	3437
26	3104	3135	3163	3194	3224	3255	3285	3316	3347	3377	3408	3438
27	3105	3136	3164	3195	3225	3256	3286	3317	3348	3378	3409	3439
28	3106	3137	3165	3196	3226	3257	3287	3318	3349	3379	3410	3440
29	3107		3166	3197	3227	3258	3288	3319	3350	3380	3411	3441
30	3108		3167	3198	3228	3259	3289	3320	3351	3381	3412	3442
	3109		3168		3229		3290	3321		3382		3443

1971 DAY NUMBER

DATE	JAN.	FEB.	MAR.	APR.	MAY	JUNE	JULY	AUG.
1	3444	3475	3503	3534	3564	3595	3625	3656
2	3445	3476	3504	3535	3565	3596	3626	3657
3	3446	3477	3505	3536	3566	3597	3627	3658
4	3447	3478	3506	3537	3567	3598	3628	3659
5	3448	3479	3507	3538	3568	3599	3629	3660
6	3449	3480	3508	3539	3569	3600	3630	3661
7	3450	3481	3509	3540	3570	3601	3631	3662
8	3451	3482	3510	3541	3571	3602	3632	3663
9	3452	3483	3511	3542	3572	3603	3633	3664
10	3453	3484	3512	3543	3573	3604	3634	3665
11	3454	3485	3513	3544	3574	3605	3635	3666
12	3455	3486	3514	3545	3575	3606	3636	3667
13	3456	3487	3515	3546	3576	3607	3636	3668
14	3457	3488	3516	3547	3577	3608	3638	3669
15	3458	3489	3517	3548	3578	3609	3639	3670
16	3459	3490	3518	3549	3579	3610	3640	3671
17	3460	3491	3519	3550	3580	3611	3641	3672
18	3461	3492	3520	3551	3581	3612	3642	3673
19	3462	3493	3521	3552	3582	3613	3643	3674
20	3463	3494	3522	3553	3583	3614	3644	3675

DATE	JAN.	FEB.	MAR.	APR.	MAY	JUNE	JULY	AUG.
21	3464	3495	3523	3554	3584	3615	3645	3676
22	3465	3496	3524	3555	3585	3616	3646	3677
23	3466	3497	3525	3556	3586	3617	3647	3678
24	3467	3498	3526	3557	3587	3618	3648	3679
25	3468	3499	3527	3558	3588	3619	3649	3680
26	3469	3500	3528	3559	3589	3620	3650	3681
27	3470	3501	3529	3560	3590	3621	3651	3682
28	3471	3502	3530	3561	3591	3622	3652	3683
29	3472		3531	3562	3592	3623	3653	3684
30	3473		3532	3563	3593	3624	3654	3685
31	3474		3533		3594		3655	3686

IMPORTANT:

Parts Division replacement engines are supplied with blank engine number bosses only. Dealers are governed by state law on the application of engine numbers. In states where license fees are based on displacement or taxable horsepower, it will be necessary to change vehicle registration if the new replacement engine differs from the one it replaces.

ABBREVIATIONS

ABBREVIATIONS AS USED THROUGHOUT CATALOG ARE INTERPRETED AS FOLLOWS:

ABS ..... ABSORBER
ACC ..... ACCESSORY
ACCEL ..... ACCELERATOR
A/CLNR ..... AIR CLEANER
A/COMP ..... AIR COMPRESSOR
A/COND ..... AIR CONDITIONING
ACTG ..... ACTUATING
ACTR ..... ACTUATOR
ADAPT ..... ADAPTOR-ADAPTATION
ADJ ..... ADJUSTING-ADJUSTOR-ADJUSTABLE-ADJUSTMENT
A/INL ..... AIR INLET
ALTR ..... ALTERNATOR
ALUM ..... ALUMINUM
AMP ..... AMPERE
AMPL ..... AMPLIFIER
AMTR ..... AMMETER
ANCH ..... ANCHOR
& ..... AND
A/OUT ..... AIR OUTLET
APPROX ..... APPROXIMATE, APPROXIMATELY
AR ..... AS REQUIRED
A/RATLR ..... ANTI RATTLER
A/REST ..... ARM REST
ARM ..... ARMATURE
A/SQK ..... ANTI SQUEAK
ASSY ..... ASSEMBLY
A/SUSP ..... AIR SUSPENSION
ATC ..... AUTOMATIC TEMPERATURE CONTROL
ATT ..... ATTACHING
A/TRANS ..... AUTOMATIC TRANSMISSION
AUTO ..... AUTOMATIC
AUX ..... AUXILIARY
BAL ..... BALANCE
BATT ..... BATTERY
BBL ..... BARREL
B/BRK ..... BOOSTER BRAKE
B/CRK ..... BELL CRANK
B.E. ..... BLACK ENAMEL
B/JNT ..... BALL JOINT
BLK ..... BLOCK
BLT ..... BUILT
BLWR ..... BLOWER
BMPR ..... BUMPER
BOLT & RET ..... BOLT & RETAINER
BOLT & WA ..... BOLT & WASHER
BR ..... BRASS
BRD ..... BOARD
BRG ..... BEARING
BRK ..... BRAKE
BRKT ..... BRACKET
BRKR ..... BREAKER
BRT ..... BRIGHT
BRZ ..... BRONZE
BSTR ..... BOOSTER
B/STUD ..... BALL STUD
BTM ..... BOTTOM
BTN ..... BUTTON
B/UP ..... BACK UP
BUSH ..... BUSHING
CAD ..... CADMIUM
CAN ..... CANADA-CANADIAN
CAP ..... CAPACITY
C.A.S. ..... CLEANER AIR SYSTEM
CARB ..... CARBURETOR
C/BAR ..... CROSS BAR
CBL ..... CABLE
C/BRD ..... CIRCUIT BOARD
C/BRKR ..... CIRCUIT BREAKER
CCW ..... COUNTERCLOCKWISE
C/E ..... COMMUTATOR END
CHAM ..... CHAMFERED
CHMBR ..... CHAMBER
CHR ..... CHROMIUM
C. I. ..... CUBIC INCH
C/IRON ..... CAST IRON
C/CASE ..... CRANKCASE
CK/SHFT ..... CRANKSHAFT
CL ..... CLEANER
CL/NUT ..... CLINCH NUT
C/LP ..... COURTESY LAMP
CLSR ..... CLOSURE
C/LTR ..... CIGAR OR CIGARETTE LIGHTER
C/MBR ..... CROSSMEMBER
COE ..... CAB OVER ENGINE
COL ..... COLUMN
COMB ..... COMBINATION
COMBN ..... COMBUSTION
COMP ..... COMPLETE, COMPONENT
COMPN ..... COMPRESSION
COMPR ..... COMPRESSOR
COMPT ..... COMPARTMENT
COMTR ..... COMMUTATOR
COND ..... CONDENSER
CONDT ..... CONDUIT
CONDTG ..... CONDITIONING
CONN ..... CONNECTING-CONNECTION-CONNECTOR
CONT ..... CONTINUED-CONTROL
CONT'D ..... CONTINUED
CONV ..... CONVERTER
COP ..... COPPER
CO/SHFT ..... COUNTERSHAFT
CO/WT ..... COUNTERWEIGHT
CP ..... CANDLEPOWER
C/PILLAR ..... CENTER PILLAR
CPLG ..... COUPLING
C/SHFT ..... CROSS SHAFT
CSTG ..... CASTING
CTR ..... CENTER
CU ..... CUBIC
CUSH ..... CUSHION
CUST ..... CUSTOM
CV ..... CONVERTIBLE
C/VAL ..... CONTROL VALVE
CVR ..... COVER
C/WT ..... COUNTERWEIGHT
CYL ..... CYLINDER
DBL ..... DOUBLE
D/CVR ..... DUST COVER
D/E ..... DRIVE END
DECAL ..... DECALCOMANIA
DEFL ..... DEFLECTOR
DEFR ..... DEFROSTER
DEG (o) ..... DEGREE
D/EXH ..... DUAL EXHAUST
DIA ..... DIAMETER
DIAG ..... DIAGONAL
DIAPH ..... DIAPHRAGM
DIFF ..... DIFFERENTIAL
DIM ..... DIMENSION
DIR ..... DIRECT-DIRECTIONAL
DIR CL ..... DIRECT CLUTCH
DIST ..... DISTRIBUTOR-DISTRIBUTING
DIV ..... DIVISION-DIVISIONAL
D/LINK ..... DRAG LINK
D/LP ..... DOME LAMP
DMPR ..... DAMPER
DOM ..... DOMESTIC
D/PINION ..... DRIVE PINION
DR ..... DOOR

ABBREVIATIONS (Cont'd.)

D/R SHAFT ..... DOUBLE ROCKER SHAFT
DRV ..... DRIVE
DRVN ..... DRIVEN
D/SEAL ..... DUST SEAL
D/SHLD ..... DUST SHIELD
D/SW ..... DIMMER SWITCH
ECC ..... ECDENTRIC
E.C.S. ..... EMISSION CONTROL SYSTEM
ELECT ..... ELECTRIC
ELIM ..... ELIMINATOR
ENG ..... ENGINE
EQ ..... EQUIPMENT
ESC ..... ESCUTCHEON
ETC ..... ET CETERA
EVAP ..... EVAPORATION-EVAPORATOR
EX ..... EXTRA
EXH ..... EXHAUST
EXP ..... EXPORT
EXPN ..... EXPANSION
EXT ..... EXTENSION
EXTL ..... EXTERNAL
EXTR ..... EXTRUDED
F ..... FAHRENHEIT
FACT ..... FACTORY
F/AIR ..... FRESH AIR
FAST ..... FASTENING-FASTENER
F/AXLE ..... FRONT AXLE
F/BRD ..... FLOOR BOARD
F/CPLG ..... FLUID COUPLING
F/DR ..... FRONT DOOR
F/FILT ..... FUEL FILTER
F/FLR ..... FRONT FLOOR
F/GA ..... FUEL GAGE
F/IDLE ..... FAST IDLE
FIL HD ..... FILLISTER HEAD
FIN ..... FINISH
F/INJ ..... FUEL INJECTION
FLD ..... FIELD
FLEX ..... FLEXIBLE
FLG ..... FLANGE
FL. HD ..... FLAT HEAD
FLR ..... FLOOR
F/MLDG ..... FINISH MOULDING
FNDR ..... FENDER
F/PAN ..... FLOOR PAN
F/PUMP ..... FUEL PUMP
FREQ ..... FREQUENCY
FRT ..... FRONT
FT ..... FOOT-FEET
F/TANK ..... FUEL TANK
FTG ..... FITTING
F/TOP ..... FOLDING TOP
GA ..... GAUGE-GAGE
GALV ..... GALVANIZED
GARN ..... GARNISH
G/BOX ..... GLOVE BOX
GEN ..... GENERATOR
GLA ..... GLASS
G/MLDG ..... GARNISH MOULDING
GND ..... GROUND
GOV ..... GOVERNOR
GR ..... GEAR
G/REG ..... GENERATOR REGULATOR
GRL ..... GRILLE
GRMT ..... GROMMET
G/SHIFT ..... GEARSHIFT
GSKT ..... GASKET
GVW ..... GROSS VEHICLE WEIGHT
H/BRK ..... HAND BRAKE
H/C ..... HIGH COMPRESSION
HD ..... HEAD
H/D ..... HEAVY DUTY
HDL ..... HANDLE
H/LIN ..... HEAD LINING
HDLS ..... HEADLESS
HDR ..... HEADER
HEMI ..... HEMISPHERICAL
HEX ..... HEXAGON
HGE ..... HINGE
H/LP ..... HEADLAMP
H/PERF ..... HIGH PERFORMANCE
H/REST ..... HEAD REST
HSG ..... HOUSING
H/SINK ..... HEAT SINK
H/SHLD ..... HEAT SHIELD
HTR ..... HEATER
HVY ..... HEAVY
HYD ..... HYDRAULIC
I/ARM ..... IDLER ARM
I.D. ..... INSIDE DIAMETER
IDENT ..... IDENTIFICATION
IGN ..... IGNITION
IN ..... INCH
INCL ..... INCLUSIVE-INCLUDES
IND ..... INDUSTRIAL
INDIC ..... INDICATOR
INL ..... INLET
INR ..... INNER
INS ..... INSULATING-INSULATION-INSULATOR
INST ..... INSTRUMENT-INSTRUCTION
INT ..... INTAKE
INTR ..... INTERMITTENTLY-INTERMEDIATE
INTL ..... INTERNAL
INTLK ..... INTERLOCK
I/PNL ..... INSTRUMENT PANEL
I/PULLEY ..... IDLER PULLEY
I/S ..... INSIDE
J/BLK ..... JUNCTION BLOCK
JNT ..... JOINT
K/DN ..... KICKDOWN
KILO ..... KILOMETER
KNU ..... KNUCKLE
LBS ..... POUNDS
L/C ..... LOW COMPRESSION
LCF ..... LOW CAB FORWARD
L/COMPT ..... LUGGAGE COMPARTMENT
LEA ..... LEATHER
LGH ..... LENGTH
LHD ..... LEFT HAND DRIVE
L.H. THD ..... LEFT HAND THREAD
LIC ..... LICENSE
LIN ..... LINING-LINER
LK ..... LOCK
LKG ..... LOCKING
LK/NUT ..... LOCK NUT
LK/WA ..... LOCK WASHER
LOC ..... LOCATING
LP ..... LAMP
L.S.H. ..... LOW SECTION HEIGHT
LT ..... LEFT
LTR ..... LIGHTER
LUB ..... LUBRICANT-LUBRICATING
LUGG ..... LUGGAGE
LVR ..... LEVER
LWR ..... LOWER
M/ADJ ..... MANUAL ADJUSTING
MAN ..... MANUAL
MANF ..... MANIFOLD

ABBREVIATIONS (Cont'd.)

MAX ..... MAXIMUM
MAX. PERF ..... MAXIMUM PERFORMANCE
M/BRK ..... MANUAL BRAKE
MBR ..... MEMBER
M/CYL ..... MASTER CYLINDER
MECH ..... MECHANISM
MED ..... MEDIUM
MEDAL ..... MEDALLION
MIL ..... MILITARY
MIN ..... MINIMUM
MLDG ..... MOULDING
MOD ..... MODEL
M/MTRG ..... MAIN METERING
M.P.H. ..... MILES PER HOUR
MT ..... MOUNT
MTG ..... MOUNTING
MTR ..... MOTOR
M/TRANS ..... MANUAL TRANSMISSION
MTRG ..... METERING
NEG ..... NEGATIVE
NEUT ..... NEUTRAL
NI ..... NICKEL
NO. OR # ..... NUMBER
NOM ..... NOMINAL
NOx ..... NITROGEN OXIDE EMISSION CONTROL
N/PLT ..... NAME PLATE
NUT & WA ..... NUT AND WASHER
O/CTR ..... OVER CENTER
O.D. ..... OUTSIDE DIAMETER
O/DRV ..... OVER DRIVE
O/GA ..... OIL GAUGE
OPER ..... OPERATING
OPNG ..... OPENING
OPP ..... OPPOSITE
OPT ..... OPTIONAL
O/PUMP ..... OIL PUMP
ORN ..... ORNAMENT
O/RUNN ..... OVERRUNNING
O/S ..... OUTSIDE
O/SIZE ..... OVERSIZE
OTR ..... OUTER
OUTL ..... OUTLET
OV ..... OVAL
O/W ..... OPTIONAL WITH
O/WRAP ..... OVERWRAP
OZ ..... OUNCE
P ..... PITCH
PACK ..... PACKING
PARK ..... PARKING
PART ..... PARTIAL, PARTITION
PASS ..... PASSENGER
P/BRK ..... POWER BRAKE
P/BTN ..... PUSH BUTTON
PC/BRD ..... PRINTED CIRCUIT BOARD
P.C.V. ..... POSITIVE CRANKCASE VENT
PED ..... PEDAL
PERF ..... PERFORMANCE
PIST ..... PISTON
PIV ..... PIVOT
PKG ..... PACKAGE
PL ..... PLAIN
P/LAMP ..... PARKING LAMP
PLR ..... PILLAR
PLT ..... PLATE-PLATED
PLUNG ..... PLUNGER
PL/WA ..... PLAIN WASHER
P/MTR ..... POTENTIOMETER
PNL ..... PANEL
PNTD ..... PAINTED
POS ..... POSITIVE
POLY ..... POLYESTER
P/PNL ..... POCKET PANEL
PRESS ..... PRESSURE
PRI ..... PRIMARY
PROD ..... PRODUCTION
P/ROD ..... PUSH ROD
PROP ..... PROPELLER
PRPG ..... PROPORTIONING
PSF ..... POUNDS PER SQUARE FOOT
PSI ..... POUNDS PER SQUARE INCH
P/STRG ..... POWER STEERING
PT ..... POINT
PTO ..... POWER TAKE-OFF
PWR ..... POWER
Q/PNL ..... QUARTER PANEL
QTR ..... QUARTER
Q/WDO ..... QUARTER WINDOW
R ..... RADIUS
R/A ..... REAR AXLE
R/AXLE ..... REAR AXLE
RAD ..... RADIATOR
R/CONT ..... REMOTE CONTROL
RC/SHFT ..... ROCKER SHAFT
RD ..... ROUND
R/DR ..... REAR DOOR
REC ..... RECIEVER
RECIR ..... RECIRCULATING
RECT ..... RECTANGULAR
RECTR ..... RECTIFIER
RED ..... REDUCTION
REFL ..... REFLECTOR
REG ..... REGULATOR
REINF ..... REINFORCEMENT
REL ..... RELEASE
REM ..... REMOTE
REQ ..... REQUIRED
RES ..... RESISTOR
RET ..... RETAINER
RETG ..... RETAINING
REV ..... REVERSE
REVERB ..... REVERBERATOR
R/FLR ..... REAR FLOOR
RHD ..... RIGHT HAND DRIVE
RHEO ..... RHEOSTAT
R. H. THD ..... RIGHT HAND THREAD
R/L ..... RIGHT AND LEFT
RPM ..... REVOLUTIONS PER MINUTE
R/QTR ..... REAR QUARTER
RR ..... REAR
RSVR ..... RESERVOIR
RT ..... RIGHT
R/WDO ..... REAR WINDOW
S/ABS ..... SHOCK ABSORBER
S/COMPT ..... SIDE COMPARTMENT
S/DEFL ..... STONE DEFLECTOR
SECT ..... SECTION
SER ..... SERIAL-SERVICE
S/EXH ..... SINGLE EXHAUST
S-FIN ..... SEMI-FINISHED
S/GR ..... STEERING GEAR
SHFT ..... SHIFT
SHLD ..... SHIELD
SIG ..... SIGNAL
S/KNU ..... STEERING KNUCKLE
SLD ..... SLIDE
SLDG ..... SLIDING
S/LP ..... STOP LAMP
SLTD ..... SLOTTED
SLV ..... SLEEVE

ABBREVIATIONS (Cont'd.)

S/MBR ..... SIDE MEMBER
SOC ..... SOCKET
SOL ..... SOLENOID
SPD ..... SPEED
SPEEDO ..... SPEEDOMETER
SPKR ..... SPEAKER
SPL ..... SPECIAL
SPL. EQUIP ..... SPECIAL EQUIPMENT
SPRG ..... SPRING
S/PNL ..... SIDE PANEL
SP/SHLD ..... SPLASH SHIELD
SQ ..... SQUARE
S/R SHAFT ..... SINGLE ROCKER SHAFT
S/RAIL ..... SIDE RAIL
S/RING ..... SNAP RING
S/SHLD ..... SIDE SHIELD
S/SILL ..... SIDE SILL
S/SPD ..... SINGLE SPEED
STA ..... STATION-STATIONARY
STAB ..... STABILIZER
STD ..... STANDARD
STGHT ..... STRAIGHT
STL ..... STEEL
STRG ..... STEERING
STRKR ..... STRIKER
STRNR ..... STRAINER
STRTR ..... STARTER
SUCT ..... SUCTION
SUPT ..... SUPPORT
SUSP ..... SUSPENSION
SW ..... SWITCH
SYNCH ..... SYNCHRONIZER
T ..... TEETH
TAP ..... TAPPING
T/BKL ..... TURN BUCKLE
T/BLK ..... TERMINAL BLOCK
T/COMP ..... TRIMMED COMPLETE
T/CONT ..... THROTTLE CONTROL
T/CONV ..... TORQUE CONVERTER
TEMP ..... TEMPERATURE
TERM ..... TERMINAL
T/GA ..... TEMPERATURE GAUGE
T/GATE ..... TAILGATE
THD ..... THREAD
THK ..... THICK
THERMO ..... THERMOSTAT
3RD ..... THIRD
THR ..... THRUST
THROT ..... THROTTLE
T/LP ..... TAIL LAMP
TORQ ..... TORQUE
TORS ..... TORSION
TPI ..... THREADS PER INCH
T/PIPE ..... TAIL PIPE
T/PLT ..... TAPPING PLATE
T/PNL ..... TRIM PANEL
TPR ..... TAPER
TRANS ..... TRANSMISSION
TRANSF ..... TRANSFER
TRIMD ..... TRIMMED
TRUN ..... TRUNNION
T/SIG ..... TURN SIGNAL
TST ..... TAIL STOP & TURNING
T/STRIP ..... TACKING STRIP
TUB ..... TUBULAR
U/BODY ..... UNDERBODY
U/DRV ..... UNDERDRIVE
U/JNT ..... UNIVERSAL JOINT
UNIV ..... UNIVERSAL
UPR ..... UPPER
U/S ..... UNDERSIZE
U/SEAT ..... UNDERSEAT
U/W ..... USED WITH
V ..... VOLT
VAC ..... VACUUM
VAL ..... VALUE
V/DMPR ..... VIBRATION DAMPER
VENT ..... VENTILATOR-VENTILATING
VERT ..... VERTICAL
VOL. CONT ..... VOLUME CONTROL
V/REG ..... VOLTAGE REGULATOR
V/SPD ..... VARIABLE SPEED
V/WING ..... VENT WING
W ..... WATT
W/ ..... WITH
WA ..... WASHER
WAG ..... WAGON
W.B. ..... WHEELBASE
W/BRG ..... WHEEL BEARING
W/CORD ..... WEATHERCORD
WDO ..... WINDOW
WHL ..... WHEEL
W/HSE ..... WHEELHOUSE
W/LIFT ..... WINDOW LIFT
W/O ..... WITHOUT
W/PUMP ..... WATER PUMP
W/REG ..... WINDOW REGULATOR
W/SHLD ..... WINDSHIELD
W/STRIP ..... WEATHERSTRIP
WT ..... WEIGHT
W/WASHER ..... WINDSHIELD WASHER
W/WPR ..... WINDSHIELD WIPER
X/MBR ..... CROSS MEMBER

NOTES

ILLUSTRATION INDEX

	PAGE NO. 1970	1971
A		
Accelerator Pedal and Shaft		
Plymouth, Dodge, Chrysler and Imperial	14-31	14-31
Air Conditioning Adapter Package Typical of Model "E" and "F".	24-13	24-13
Air Conditioning Compressor	24-10	24-10
Air Conditioning Evaporator		
Roof Unit - Station Wagon	24-8	24-8
Trunk Unit	24-9	24-9
Air Conditioning Evaporator and Heater		
Valiant and Dart	24-2	24-2
Barracuda and Challenger	24-3	24-3
Belvedere, Coronet & Charger	24-4	----
Satellite and Coronet	----	24-3
Plymouth, Dodge, Chrysler and Imperial (w/ATC)	24-6	24-6
Air Conditioning Plumbing	24-11	24-11
Air Conditioning (Mopar Kit) System	24-12	24-12
Air Conditioning Hose Chart	24-14 thru 24-18	24-14 thru 24-18
Air Conditioning System		
Valiant and Dart	24-1	24-1
Plymouth, Dodge, Chrysler and Imperial (w/ATC)	24-6	24-6
*Alternator		
Automatic Transmission		
A904 and A727	21-2 thru 21-6	21-2 thru 21-6
Automatic Transmission Controls		
With Console	21-9	21-9
Automatic Transmission Oil Cooler System	21-1	21-1
B		
*Back-Up Lamp		
Belt Chart	7-18	7-18
Body in White		
Valiant and Dart	23-100	23-100
Barracuda and Challenger	23-102	23-102
Belvedere and Coronet	23-104	23-104
Imperial (Typical of Plymouth, Dodge and Chrysler)	23-105	23-105
Brake		
Front Wheel	5-1	5-1
Rear Wheel	5-1	5-1
Brake and Clutch Pedal Linkage		
Valiant and Dart	5-11	5-11
Belvedere, Coronet, Barracuda and Challenger	5-11	5-11
Brake Lines	5-12	5-12
Brake Pedal and Bracket (w/Booster)		
Valiant and Dart	5-8	5-8
C		
Caliper Disc Brake		
All except Valiant and Dart	5-3	5-3
Valiant and Dart	5-4	5-4

	PAGE NO. 1970	1971
C - Continued		
Carburetor Air Heater		
6 Cylinder	14-29	14-29
8 Cylinder	14-29	14-29
Carburetor and Components		
1 Barrel - Carter (BBS)	14-4	14-4
2 Barrel - Holley (2300)	14-8	14-8
2 Barrel - Carter (BBD)	14-6	14-6
4 Barrel - Carter (AFB)	14-10	14-10
4 Barrel - Carter (AVS)	14-12	14-12
4 Barrel - Holley (4000)	14-18	14-18
4 Barrel - Carter (Thermo Quad)	14-14	14-14
Tri-Carburetor - Holley (2300C)	14-16	14-16
Carburetor, Choke Assy. & Fuel Lines (340 Engine)		
V, L, B, J, R, W	----	14-21
Carburetor Fresh Air Package		
Belvedere and GTX	14-30	14-30
'Cuda	14-31	14-31
Carburetor Fresh Air Unit		
Belvedere and Coronet	14-28	14-28
Chrome Wheel	22-7	22-7
Closed Crankcase Vent System	10-6	10-6
Clutch - 6 and 8 Cylinder	6-1	6-1
Clutch and Brake Pedal Linkage		
Valiant and Dart	6-3	6-3
Belvedere, Coronet, Barracuda And Challenger	6-4	6-4
Clutch Pedal and Bracket		
Plymouth, Dodge & Chrysler	6-2	6-2
Column Gearshift Controls		
3 Speed Manual Transmission		
All exc. Imperial A-230	21-6	----
Compressor Clutch	24-10	24-10
Console		
Belvedere, Coronet, Charger, Plymouth, Dodge & Chrysler	23-60	23-60
Cooling System		
6 Cylinder	7-1	7-1
8 Cylinder	7-2	7-2
*Cornering Lamp		
*Cornering and Side Marker Lamp		
Cylinder		
Front Wheel	5-2	5-2
Rear Wheel	5-2	5-2
D		
Damper - Center Floor Pan	23-61	23-61
Deck Lid Hinges and Locks		
Valiant (Typical of Dart)	23-55	23-55
Barracuda and Challenger	23-55	23-55
Charger	23-56	23-56
Plymouth (Typical of Dodge)	23-56	23-56
Chrysler (Typical of Imperial)	23-57	23-57
Deck Lid Spoiler	23-58	23-58
Disc Brake and Caliper		
Plymouth, Dodge, Chrysler and Imperial	5-5	5-5
Disc Brake System	5-3	5-3
*Distributor		

* See Group 8 Index Illustration Page 8A and 8B in front of Group 8 Illustration Section

ILLUSTRATION INDEX - CONTINUED

	PAGE NO. 1970	1971
D - Continued		
Door Locks, Window Regulators and Runs		
Plymouth, Dodge & Chrysler . .	23-42	23-42
Door and Quarter Window Regulators and Runs		
Valiant and Dart	23-16 thru 23-40	23-16 thru 23-40
Belvedere and Coronet	23-26 thru 23-38	23-26 thru 23-38
Door and Quarter Window Regulators and Weatherstrips		
Barracuda and Challenger	23-18 thru 23-20	23-18 thru 23-20
Door Vent Wing and Glass		
Valiant and Dart	23-12	23-12
Dual Exhaust		
Barracuda and Challenger	11-5	11-5
Valiant and Dart (340 Engine) . .	11-7	11-7
383 and 440 Engine	11-8	11-8
426 Engine	11-9	11-9
E		
Electrical Controls - Front & Rear		
Imperial	23-54	23-54
Electric Seat Adjuster		
Bench Type	23-66	23-66
Bucket and Split Bench	23-67	23-67
Electric Window Lift and Door Lock System		
Imperial (Typical of Plymouth, Dodge and Chrysler)	23-53	23-53
Engine Mountings		
6 Cylinder		
Valiant and Dart	9-5	9-5
Belvedere, Coronet & Charger	9-6	9-6
Barracuda and Challenger . . .	9-6	9-6
Plymouth and Dodge	9-7	9-7
8 Cylinder		
Valiant and Dart	9-17	9-17
Belvedere, Coronet & Charger	9-17	9-17
383, 426 and 440 Engines . . .	9-18	9-18
Engine Oiling		
6 Cylinder	10-1	10-1
8 Cylinder	10-2	10-2
Exhaust Manifold and Heat Control		
6 Cylinder Engines	9-5	9-5
For 318 and 360 Engine	9-18	9-18
For 340 Engine	9-19	9-19
For 383 and 440 Engine	9-19	9-19
For 426 Engine	9-20	9-20
Exhaust System - 6 Cylinder		
Valiant and Dart	11-1	11-1
Exterior View - 1970-1971 Cars		
Valiant, Barracuda, Belvedere, Satellite, Plymouth, Challenger, Dart, Coronet, Charger, Dodge, Chrysler and Imperial		
Use Index in front of Group 23 . .	23A and 23B	23A and 23B

	PAGE NO. 1970	1971
E - Continued		
Exterior View - Coded	23-122 thru 23-133	23-122 thru 23-133
External Parts		
6 Cylinder		
198 and 225 Engine	9-2	9-2
8 Cylinder		
318 and 340 Engine	9-2 thru 9-5	9-2 thru 9-5
383 and 440 Engine	9-8 thru 9-11	9-8 thru 9-11
426 Engine	9-12 thru 9-15	9-12 thru 9-15
F		
Fender		
Valiant (Typical of Dart)	12-1	12-1
Barracuda and Challenger	12-1	12-1
Belvedere	12-2	12-2
Plymouth	12-2	12-2
Coronet	12-3	12-3
Dodge	12-3	12-3
Chrysler	12-4	12-4
Imperial	12-4	12-4
Superbird	12-5	------
Charger (Typical of Satellite and Coronet)	------	12-6
*Fender Side Marker Lamp		
*Fender Turn Signal Indicator Lamp .		
Fixed Quarter Window		
Satellite and Charger 2 Dr. H.T. .	------	23-37
Floor Console		
Valiant and Dart	23-59	23-59
Barracuda and Challenger	23-59	23-59
Folding Top		
Belvedere and Coronet.	23-1	23-1
Barracuda and Challenger	23-2	23-2
Plymouth, Dodge & Chrysler . . .	23-4	23-4
Folding Top Motor	23-6	23-6
Frame		
Plymouth, Dodge and Chrysler . .	13-1	13-1
Imperial	13-1	13-1
Fresh Air Door and Controls		
Satellite, Belvedere & Coronet . .	1-10	1-10
Barracuda and Challenger	1-11	1-11
Plymouth, Dodge, Chrysler and Imperial	1-11	1-11
Front and Rear Inside Door Parts .	------	23-108 and 23-109
Front Bumper		
Valiant	13-2	13-2
Barracuda	13-3	13-3
Belvedere	13-4	------
Satellite 4 Door & Station Wagon.	------	13-5
Satellite 2 Door Hardtop.	------	13-6
Coronet 4 Door & Station Wagon .	------	13-7
Coronet 2 Door	------	13-8

* See Group 8 Index Illustration Page 8A and 8B in front of Group 8 Illustration Section.

Printed in U.S.A.

ILLUSTRATION INDEX - CONTINUED

	PAGE NO. 1970	1971
F - Continued		
Front Bumper - Continued		
Plymouth	13-11	13-11
Dart	13-12	13-12
Coronet except Station Wagon	13-13	13-13
Charger	13-14	13-8
Challenger	13-15	13-15
Dodge	13-16	13-16
Chrysler	13-17	13-17
Imperial	13-19	13-19
Front Door Vent Wing and Glass		
Belvedere and Coronet	23-13	23-13
Plymouth, Dodge, Chrysler and Imperial	23-14	23-14
Front Door Inside Panel		
Satellite and Coronet 2 Door Hardtop Fastback	------	23-106
Front Door Window Regulators and Runs		
Satellite & Coronet 4 Door Sedan and Station Wagon	------	23-30
Front Door Window Regulators and Weatherstrips		
Plymouth, Dodge & Chrysler 4 Door Sedan	------	23-44
*Front Fender Side Marker Lamp		
Front Floor Pan		
Plymouth, Dodge, Chrysler and Imperial	23-97	23-97
Front Suspension		
Except Imperial	2-1	2-1
Imperial	2-2	2-2
Fuel System		
Valiant and Dart	14-1	14-1
Belvedere and Coronet	14-2	14-2
Plymouth, Dodge, Chrysler and Imperial	14-3	14-3
G		
Grille		
Valiant and Duster	7-5	7-5
Barracuda	7-5	7-4
Challenger	7-6	7-7
Belvedere or Satellite 2 Dr. H. T.	7-6	7-7
Satellite 4 Dr. Sedan & Sta. Wgn.	------	7-8
Plymouth	7-9	7-8
Dart	7-9	7-9
Charger	7-10	7-10
Coronet	7-10	7-11
Coronet 4 Dr. Sedan & Sta. Wgn.	------	7-15
Dodge	7-13	7-12
Chrysler	7-13	7-12
Imperial	7-14	7-15
H		
*Headlamp		
*Headlamp Sentinel Dimmer System		
Heater		
Belvedere and Coronet	1-2	1-3
Barracuda and Challenger	1-4	1-4
Plymouth, Dodge and Chrysler	1-6	1-6

	PAGE NO. 1970	1971
H - Continued		
Heater and Fresh Air Duct		
Valiant and Dart	1-1	1-1
Hood		
Valiant	15-1	15-1
Belvedere	15-1	15-5
Coronet	15-2	15-5
Dart	15-2	15-2
Charger	15-3	15-5
Dodge	15-3	15-3
Chrysler	15-4	15-4
Imperial	15-4	15-4
*Hood Panel Turn Signal Indicator Lamp		
Horn and Turn Signal Controls		
Barracuda and Challenger	8-54 and 19-17	8-54 and 19-17
Plymouth, Dodge, Chrysler and Imperial	8-55 and 19-18	8-55 and 19-18
Hydraulic Brake System		
All	5-7	5-7
I		
*Instrument Cluster		
Instrument Panel		
Valiant and Dart	23-68	23-68
Satellite, Coronet & Charger	------	23-70
Plymouth	23-72	23-72
Charger and Charger R/T	23-74	23-74
Challenger (Typical of Barracuda)	23-76	23-76
Dodge	23-78	23-78
Chrysler	23-80	23-80
Imperial	23-82	23-82
Interior Floor Mats and Scuff Plates	23-99	23-99
Interior View - 1970-1971 Cars		
Front and Rear - Valiant, Barracuda, Belvedere, Satellite, Plymouth, Challenger, Dart, Coronet, Charger, Dodge, Chrysler and Imperial		
Use Index in front of Group 23	23A and 23B	23A and 23B
Internal Engine		
6 Cylinder	9-4	9-4
8 Cylinder		
318, 340 and 360 Engines	9-6	9-6
383 and 440 Engines	9-7	9-7
426 Engine	9-16	9-16
L		
Lamp - Bulbs Type Chart	8-80	8-80
*License Lamp		
M		
Manual 3 Speed Transmission		
6 Cylinder (A903)	21-1	21-1
All except Imperial A-230	21-2	21-2

* See Group 8 Index Illustration Page 8A and 8B in front of Group 8 Illustration Section.

ILLUSTRATION INDEX - CONTINUED

	PAGE NO. 1970	1971
M - Continued		
Manual 3 Speed Transmission Controls (w/o Console)		
All except Plymouth, Dodge, Chrysler and Imperial	21-5	21-5
Manual 4 Speed Transmission A-833	21-4	21-4
Manual 4 Speed Transmission Controls Hurst Type	21-7	21-7
Manual Seat Adjuster Bench Type	23-66	23-66
Master Cylinder		
With Drum Brakes	5-7	5-9
With Disc Brakes	5-8	5-9
Mirrors	23-54	23-54
N		
Nose Cone		
Superbird	7-16	------
Nox System	------	8-105
O		
Oil Filter		
Replaceable Cartridge Type	10-4	10-4
Sealed Can Type	10-5	10-5
Oil Pump and Filter		
6 Cylinder	10-3	10-3
383, 426 and 440 Engine	10-3	10-3
318 and 340 Engine	10-4	10-4
P		
Parking Brake System		
Valiant, Dart, Barracuda, Challenger, Satellite, Belvedere and Coronet	4-1	4-1
Plymouth, Dodge and Chrysler	4-1	4-1
Parking Brake (Vacuum Release) Imperial	4-2	4-2
*Parking and Turn Signal Lamp		
Plugs, Terminals, Insulators and Connectors	8-77 and 8-78	8-77 and 8-78
Power Antenna		
Chrysler and Imperial	1-12	1-12
Power Brake Unit		
Valiant and Dart	5-5	5-5
Satellite, Belvedere, Coronet, Barracuda, Challenger and Charger	5-6	5-6
Power Steering Gear Assembly	19-14	19-14
Power Steering Oil Pump		
w/Threaded Hole Pump Shaft	19-15	19-15
w/Key Slotted Shaft	19-16	19-16
Power Vent Window		
Chrysler and Imperial	------	23-52
Propeller Shaft		
Axle End	16-1	16-1
Imperial	16-2	16-2
Propeller Shaft Identification	16-2	16-2

	PAGE NO. 1970	1971
Q		
Quarter Inside Panel		
Satellite and Coronet 2 Door Hardtop & Fastback	------	23-107
*Quarter Panel Tail, Stop and Turn Signal Lamp		
Quarter Window Regulators and Weatherstrips		
Satellite and Coronet 2 Dr. H. T.	------	23-36
Quarter Window (Vent Type)		
Valiant Fastback and Dart	23-15	23-15
R		
Rear Axle Differential and Carrier		
7 1/4" Dia. Gear	3-2	3-2
8 1/4" Dia. Gear	3-3	3-3
9 3/4" Dia. Gear	3-4	3-4
8 3/4" Dia. Gear	3-6	3-6
8 3/4" Axle and Housing	3-7	3-7
Rear Bumper		
Valiant	13-2	13-2
Barracuda	13-1	13-3
Belvedere & Coronet Sta. Wgn.	13-9	------
Belvedere	13-4	------
Satellite 2 Door	------	13-6
Satellite 4 Door	------	13-5
Plymouth	13-11	13-12
Dart	------	13-13
Coronet	13-14	13-8
Coronet 4 Door	------	13-7
Charger	13-15	13-8
Satellite & Coronet Sta. Wgn.	------	13-9
Challenger	13-16	13-16
Dodge	13-17	13-17
Chrysler	13-18	13-18
Plymouth, Dodge and Chrysler Station Wagon	13-18	13-18
Imperial	13-19	13-19
Rear Floor Pan (Station Wagon)		
Belvedere and Coronet	23-98	23-98
Plymouth, Dodge and Chrysler	23-98	23-98
Rear Heater and Defroster		
Chrysler and Imperial	1-8	1-8
Rear Seat Heater and Plumbing		
Chrysler and Imperial	1-7	1-7
Repair Panels	23-121	23-121
Rear Door Window Regulators and Runs		
Satellite & Coronet 4 Dr. Sedan and Station Wagon	------	23-32
Rear Quarter Panel		
Valiant	23-110	23-110
Valiant Duster and Dart Demon	23-111	23-111
Barracuda and Challenger	23-111 and 23-112	23-111 and 23-112
Dart	23-112 and 23-113	23-112 and 23-113
Charger	23-113	23-113

* See Group 8 Index Illustration Page 8A and 8B in front of Group 8 Illustration Section.

ILLUSTRATION INDEX - CONTINUED

	PAGE NO. 1970	1971
R - Continued		
Rear Quarter Panel - Continued		
Belvedere and Coronet 2 and 4 Door Sedan	23-114	------
Satellite and Coronet 2 and 4 Door	------	23-115
Satellite and Coronet Sta. Wgn.	------	23-116
Spare Tire Carrier Satellite and Coronet Sta. Wgn.	------	23-116
Belvedere and Coronet 2 Door Hardtop & Station Wagon	23-117	------
Belvedere and Coronet Conv. Cpe.	23-118	------
Spare Tire Carrier Belvedere and Coronet Sta. Wgn.	23-118	------
Plymouth, Dodge and Chrysler Station Wagon	23-119	23-119
Spare Tire Panel Plymouth, Dodge and Chrysler Station Wagon	23-119	23-119
Chrysler Convertible Coupe	23-120	23-120
Imperial 2 Door Hardtop	23-120	23-120
Imperial 4 Door Hardtop	23-121	23-121
*Rear Quarter Panel Side Marker Reflector		
Rear Spring		
Valiant, Dart, Barracuda, Challenger, Belvedere and Coronet	17-1	17-1
Plymouth and Dodge	17-1	17-1
Chrysler	17-2	17-2
Imperial	17-2	17-2
Rear Underbody Plymouth, Dodge, Chrysler and Imperial	23-96	23-96
Rear Window Defogger		
Valiant and Dart	1-8	1-8
Barracuda and Challenger	1-7	1-9
Charger (Typical of Belvedere, Satellite and Coronet)	1-9	1-9
Plymouth, Dodge, Chrysler and Imperial	1-10	1-10
Rear Window Outside Louvre Barracuda and Challenger	23-58	23-58
Reclining Bucket Seat	23-62	23-62
*Road Lamp		
Roof Console Barracuda and Challenger	23-61	23-61
Roof Luggage Rack		
Belvedere and Coronet	23-6	------
Plymouth, Dodge and Chrysler	23-7	------
S		
Shift Controls w/Console and Automatic Transmission Barracuda and Challenger	21-6	21-6
Short Engine		
6 Cylinder	9-1	9-1
8 Cylinder	9-1	9-1
*Side Marker Lamp and Reflector (Front and Rear)		

	PAGE NO. 1970	1971
S - Continued		
Single Exhaust (8 Cylinder)		
Valiant and Dart	11-1	11-1
318 and 383 Engine	11-3	11-3
440 Engine	11-3	11-3
Barracuda and Challenger (6 & 8 Cylinder)	11-4	11-4
Spare Tire Cover or Panel R & W Station Wagon	----	23-67
Speed Control	14-32	14-32
*Speedometer and Instrument Cluster		
Standard Steering Gear Assembly	19-1	19-1
*Starter Assembly		
Station Wagon Rear Compartment Lock and Latch	23-99	23-99
Station Wagon Seats		
Belvedere and Coronet	23-63	23-63
Plymouth, Dodge and Chrysler (3 Seater)	23-64	23-64
Station Wagon 3rd Seat and Well Plymouth, Dodge and Chrysler	23-65	23-65
Steering Column		
Floor Shift Assy., Std. and Auto. Transmission	----	19-1
Valiant, Dart, Belvedere and Coronet	19-4	19-4
Barracuda and Challenger	19-6	19-6
Tilt - Plymouth and Dodge	19-8	19-8
With Tilt - Tilt-Telescopic, Plymouth, Dodge, Chrysler and Imperial	19-10	19-10
Tilt-Telescopic, Chrysler and Imperial	19-12	19-12
Steering Column Gearshift Controls With Automatic Transmission	19-2	19-2
Steering Wheel Chart	8-104 a and 19-19	8-104 and 19-19
Steering Wheel (Soft Rim) and Attaching Parts, w/ Floor Shift V, L, R, W Models	8-56	8-56
Steering Wheel, Horn and Turn Signal Controls (w/o Horn Rim Switch - w/Tilt-Telescopic Strg.) Chrysler and Imperial	8-60	8-60
Steering Wheel w/Rim HornSSwitch w/Tilt Steering Plymouth and Dodge	8-58	8-58
Steering Wheel w/Horn Rim w/Tilt-Telescopic Strg. Chrysler and Imperial	8-58	8-58
Steering Wheel w/3 Spoke Horn Buttons	----	8-57 and 19-16
"Sure'Grip" Rear Axle Differential	3-1	3-1
Sway Bar		
Rear Suspension, Barracuda & Challenger	17-3	17-
Front Suspension, Plymouth, Dodge and Chrysler	17-3	17-3

* See Group 8 Index Illustration Page 8A and 8B in front of Group 8 Illustration Section.

ILLUSTRATION INDEX - CONTINUED

	PAGE NO. 1970	1971
T		
Tailgate Controls (Two Way) Plymouth, Dodge and Chrysler	23-92	23-92
*Tailgate Tail, Stop and Turn Signal Lamp		
Tailgate (Two Way)		
Belvedere and Coronet	23-84	23-84
Satellite and Coronet	----	23-86
Plymouth, Dodge and Chrysler	23-90	23-90
Tailgate Window Washer & Wiper		
Belvedere and Coronet	23-93	23-93
Plymouth, Dodge & Chrysler	23-93	23-93
*Tail, Stop, Turn Signal and Back-Up Lamp		
*Tail, Stop and Turn Signal Lamp		
*Tail, Stop, Turn Signal and Side Marker Lamp		
Tee and Valves	5-13	5-13
Throttle Linkage		
440 Engine w/3-2 Bbl. Carb.	14-21	14-21
318 and 340 Engine	----	14-22
340 Engine, Man. & Auto. Trans.	14-23	14-23
6 Cylinder		
Valiant and Dart	14-24	14-24
Belvedere, Coronet & Charger	14-25	14-25
Plymouth	14-27	14-27
8 Cylinder		
Valiant and Dart	14-24	14-24
Belvedere, Coronet & Charger	14-25 and 14-26	14-25 and 14-26
Plymouth and Dodge	14-28	14-28
Tie Rods		
Valiant and Dart	2-3	2-3
Belvedere, Coronet, Barracuda and Challenger	2-3	2-3
Plymouth, Dodge, Chrysler and Imperial	2-4	2-4
Transmission Valve Body and Valves	21-10	21-10
*Turn Signal Indicator Lamp		
U		
Underbody		
Valiant and Dart	23-94	23-94
Belvedere and Coronet (Typical of Barracuda & Challenger)	23-95	23-95
V		
Vacuum Deck Lid Lock Plymouth, Dodge, Chrysler and Imperial	23-57	23-57
W		
Water Pump		
6 Cylinder	7-14	7-14
318 and 340 Engine	7-17	7-17
383, 426 and 440 Engine	7-17	7-17
Wheel		
Front	22-6	22-6
Rear	22-6	22-6
Window Regulators and Runs	23-46 thru 23-51	23-46 thru 23-51
Windshield Washer System		
Valiant and Dart (Foot Operated)	23-7	23-7
Belvedere and Coronet	23-8	23-8
Barracuda and Challenger (Foot Operated)	23-8	23-8
Satellite, Coronet & Charger	23-9	23-9
Plymouth, Dodge, Chrysler and Imperial	23-9	23-9
Windshield Wiper		
Valiant and Dart	23-10	23-10
Plymouth, Dodge, Chrysler and Imperial (Typical of Barracuda and Challenger)	23-11	23-11
Satellite, Coronet and Charger	23-9	23-9
Wheel Covers	22-1 thru 22-3	22-1 thru 22-3
Wheels	22-4 and 22-5	22-4 and 22-5
Wheel Slip Brake Control		
Hoses	------	5-13
Wiring	------	5-14
X		
*X-Press Superlite		

* See Group 8 Index Illustration Page 8A and 8B in front of Group 8 Illustration Section.

Printed in U.S.A.

CODE	PART NAME AND PART NUMBER	CODE	PART NAME AND PART NUMBER

PARTS PACKAGES

1-47-1 DEFOGGER PACKAGE,
REAR WINDOW . . . . . Part No. 2837 969
Consists of:
1 - 2096 773 Blower
1 - 2607 141 Plate
3 - 9419 320 Screw
3 - 138 479 Lockwasher
4 - 9414 711 Screw
4 - 6022 701 Lockwasher
1 - 2521 668 Outlet
1 - 2485 982 Duct
1 - 2197 891 Seal
1 - 9414 711 Screw
2 - 446 060 Nut and Washer
1 - 2096 471 Tube Flex
1 - 1887 366 Clamp
1 - 2837 219 Bezel
1 - 2837 220 Grille
4 - 9424 881 Screw
4 - 144 485 Nut
1 - 2820 455 Switch
1 - 2631 657 Name Plate, Switch
1 - 6008 055 Nut, Switch Mtg.
1 - 2899 062 Wiring, Switch
1 - 2889 561 Wiring
1 - 2291 863 Cable, Feed
1 - 106 653 Fuse

1-47-1 DEFOGGER PACKAGE,
REAR WINDOW . . . . . Part No. 2837 971
Consists of:
1 - 2096 773 Blower Comp.
1 - 2607 141 Plate
3 - 9419 320 Screw
3 - 138 479 Lockwasher
4 - 9414 711 Screw
4 - 6022 701 Lockwasher
1 - 2837 219 Bezel, Inlet
1 - 2837 220 Grille
4 - 9424 881 Screw
4 - 9419 662 Screw
4 - 144 485 Nut
1 - 2485 407 Dust
1 - 2197 891 Seal
1 - 9414 711 Screw
2 - 446 060 Nut and Washer
1 - 2485 053 Tube, Flex
1 - 1887 366 Clamp
1 - 2219 627 Grille and Gasket
1 - 2820 455 Switch
1 - 2820 200 Spacer
1 - 2580 774 Bezel
1 - 2771 705 Title Plate
1 - 2889 062 Switch Wiring
1 - 2889 561 Wiring
1 - 2291 863 Cable, Feed
1 - 106 653 Fuse
81-685-1235 Template, Bezel Mtg.

1-47-1 DEFOGGER PACKAGE,
REAR WINDOW . . . . . Part No. 2936 885
Consists of:
1 - 2607 754 Duct
2 - 446 060 Nut
1 - 2607 769 Plate
3 - 9419 320 Screw
3 - 138 479 Lockwasher
1 - 2096 773 Blower
4 - 9414 711 Screw
4 - 6022 701 Lockwasher
1 - 2277 456 Tube
1 - 2837 303 Bezel
1 - 2837 219 Bezel
1 - 2837 220 Grille
4 - 9419 662 Screw
1 - 2889 777 Wiring, Motor
1 - 2926 781 Wiring, Switch
1 - 2291 863 Cable
1 - 106 653 Fuse
1 - 2947 262 Switch
1 - 2947 246 Plate
4 - 9414 711 Screw
1 - 2947 247 Knob

1-47-1 DEFOGGER PACKAGE,
REAR WINDOW . . . . . Part No. 3441 320
Consists of:
1 - Blower Assy
4 - 6029 087 Screw, Blower Mtg.
1 - 1887 582 Plate Blower Mtg.
3 - Screw, Plate Mtg.
3 - Lockwasher, Plate Mtg.
1 - 2837 748 Duct Assy.
1 - 9414 711 Screw, Duct Mtg.
1 - Seal, Duct Mtg.
1 - Tube, Blower to Duct
1 - Clamp, Tube
1 - 2521 668 Bezel and Gasket Outlet
2 - Nut, Outlet Bezel and Duct Mtg.
1 - 2837 219 Bezel, Inlet
1 - 2837 220 Grille, Inlet
4 - 9419 662 Screw, Intlet Bezel Mtg.
1 - 2889 777 Wiring, Motor
1 - 2983 480 Wiring, Switch
1 - 106 653 Fuses Acc. Feed
1 - Term and Clip, Fuse Block
1 - 2947 262 Switch
1 - 2947 246 Plate Switch Mtg.
4 - 9414 711 Screw, Switch and Plate Mtg.
1 - 2947 556 Knob, Switch

Printed in U.S.A.
January 1972

CODE	PART NAME AND PART NUMBER

1-47-1 DEFOGGER PACKAGE,
(BASIC) ..... Part No. 3441 539
Consists of:
1 - Blower
2 - 2607 141 Plate, Blower Mtg.
3 - Screw Blower to Mtg. Plate Mtg.
3 - Lockwasher Blower to Mtg. Plate Mtg.
4 - 9414 711 Screw, Blower and Plate Mtg.
4 - 6022 701 Rockwasher Blower and Plate Mtg.
4 - Nut, Blower Mtg.
2 - Nut Outlet Duct and Bezel Mtg.
1 - Clamp, Flex Tube Mtg.
1 - Tube, Flex Tube 16"
1 - 2837 219 Bezel, Inlet
1 - 2837 220 Grille, Inlet
4 - 9424 881 Screw, Inlet Bezel Mtg.
1 - Wiring, Fuse Block to Acc. Feed
1 - 106 653 Fuse
1 - 2926 752 Wiring, Motor
1 - Duct Outlet
1 - 2521 668 Bezel and Gasket, Outlet
1 - 9414 711 Screw, Outlet Duct Mtg.
1 - Seal, Duct

1-47-1 DEFOGGER PACKAGE,
(BASIC) ..... Part No. 3441 540
Consists of:
1 - Blower
2 - 2607 141 Plate, Blower Mtg.
3 - Screw, Blower to Mtg. Plate Mtg.
3 - Lockwasher
4 - 9414 711 Screw, Blower and Plate Mtg.
4 - 6022 701 Lockwasher
4 - Nut, Blower Mtg.
2 - Nut, Outlet Duct and Bezel Mtg.
1 - Clamp, Flex Tube Mtg.
1 - Tube, Flex Tube 16"
1 - 2837 219 Bezel, Inlet
1 - 2837 220 Grille Inlet
4 - 9424 881 Screw Inlet Bezel Mtg.
1 - Wiring Fuse Block to Acc. Feed
1 - 106 653 Fuse
1 - 2926 752 Wiring, Motor
1 - 2607 754 Duct, Outlet
1 - 3441 005 Outlet

1-47-1 DEFOGGER PACKAGE
(BASIC) ..... Part No. 3441 903
Consists of:
1 - Blower Assy.
2 - 2607 141 Plate, Blower Mtg.
3 - 9414 596 Screw, Blower to Plate Mtg.
3 - Lockwasher
4 - 6029 087 Screw, Blower Mtg.
1 - 2837 219 Bezel-Inlet
1 - 2837 220 Grille, Inlet
4 - 9426 436 Screw Inlet Bezel Mtg.
4 - 9419 662 Screw Inlet Bezel Mtg.
4 - Nut, Blower Plate Mtg.
1 - 2485 738 Duct Assy.
1 - Seal, Duct
1 - 9414 711 Screw, Duct Mtg.
2 - Nut/Washer Duct and Grille Mtg.
1 - 2096 989 Tube, Flex.
1 - Clamp Flex. Tube Ret.
1 - 2219 627 Grille and Gasket
1 - 2822 529 Wiring Assy.

1-47-2 ADAPTER PACKAGE,
REAR WINDOW DEFOGGER ..... Part No. 3420 912
Consists of:
1 - 2947 411 Switch
1 - Switch Wiring
1 - 2947 666 Decal, Switch Nomenclature J
1 - Decal, Switch Nomenclature J
1 - Decal, Switch Nomenclature B
1 - Decal, Switch Nomenclature B
2 - 9416 049 Screw

1-47-2 ADAPTER PACKAGE,
REAR WINDOW DEFOGGER ..... Part No. 3420 943
Consists of:
1 - 2631 657 Name Plate, Switch
1 - 2820 455 Switch
1 - Nut
1 - 2889 062 Switch Wiring

1-47-2 ADAPTER PACKAGE,
REAR WINDOW DEFOGGER ..... Part No. 3420 944
Consists of:
1 - 2631 657 Name Plate, Switch
1 - 2820 455 Switch
1 - 2820 116 Nut
1 - 2983 140 Switch Wiring

1-47-2 ADAPTER PACKAGE,
REAR WINDOW DEFOGGER ..... Part No. 3420 945
Consists of:
1 - 2947 770 Bezel and J/Plate, Switch Mtg.
1 - 2864 440 Switch
1 - 2983 140 Switch Wiring
2 - Screw

1-47-2 ADAPTER PACKAGE,
REAR WINDOW DEFOGGER ..... Part No. 3420 946
Consists of:
1 - 2984 911 Bezel
1 - 2864 440 Switch
1 - 2983 140 Switch Wiring
2 - Screw

1-47-2 ADAPTER PACKAGE,
REAR WINDOW DEFOGGER ..... Part No. 3420 947
Consists of:
1 - 2984 740 Bezel
1 - 2947 258 Switch
1 - Screw

Printed in U.S.A.
January 1972

CODE	PART NAME AND PART NUMBER

1-47-2 ADAPTER PACKAGE, REAR WINDOW DEFOGGER w/DUAL SPEAKERS ..... Part No. 3441 426
Consists of:

1 -	2936 346	Adaptor, Blower and Speaker
3 -	6027 964	Screw, Adaptor Mtg.
1 -	2936 347	Plate, Blower Mtg.
2 -		Screw, Plate Mtg.
4 -		Screw, Blower Mtg.
1 -	2936 688	Bracket
2 -	6027 964	Screw, Bracket Mtg.

1-47-2 ADAPTER PACKAGE, REAR WINDOW DEFOGGER ..... Part No. 3579 234
Consists of:

1 -		Wiring, Rr. Wdo. Defogger Switch
1 -	3488 235	Lamp and Bracket
1 -	3488 520	Switch
1 -	3488 526	Bezel
4 -	6029 087	Screw

1-47-2 ADAPTER PACKAGE, REAR WINDOW DEFOGGER ..... Part No. 3579 235
Consists of:

1 -	2985 574	Bezel
1 -	3488 182	Switch
1 -		Switch Wiring
2 -	6024 654	Screw

1-47-2 ADAPTER PACKAGE, REAR WINDOW DEFOGGER ..... Part No. 3579 236
Consists of:

1 -	2985 544	Bezel
1 -	3488 022	Switch
2 -	6024 654	Screw

1-74-1 DECK LID LUGGAGE, RACK PACKAGE ..... Part No. 3419 382
Consists of:

1 -		Lugg. Rack
2 -	2842 897	Pad, Adapter
6 -	6013 054	Nut-Riveting 1/4-20
2 -	6028 285	Screw 1/4-20 x 3/4
6 -	1384 85	Washer, Int. Tooth Lock

1-74-1 DECK LID LUGGAGE RACK PACKAGE ..... Part No. 3419 498
Consists of:

1 -		Lugg. Rack
2 -	3445 415	Support, Inter Tube
2 -	3445 416	Support, Frt. Tube
2 -	3445 418	Pad, Frt. Tube Supp.
4 -		Screw 1/4-20 x 2.25
4 -	6028 290	Washer-Ret. Support (Special)
4 -	6028 289	Washer, Sealing
4 -	6028 288	Washer, Insulating
4 -		Rivnut 1/4-20
2 -		Nut and Washer 5/16-18-3/4 O.D.
4 -	1384 85	Washer Int. Tooth Lock

1-74-1 ROOF LUGGAGE RACK PACKAGE ..... Part No. 2932 073
Consists of:

2 -	2602 647	Rail, Roof Lugg. Rack Side
2 -		Cap, Roof Lugg. Rack Side Rail End Rt. & Lt.
4 -	9418 486	Screw, Lugg. Rail Att. (Att. to Brkt. Roof Lugg. Rack Frt. & Rr. Rail)
4 -	2528 454	Bracket, Roof Lugg. Rack Frt. & Rr. Rail
4 -	2528 465	Tapping Plate, Roof Lugg. Rack Rail Bracket
4 -	2528 464	Screw, Roof Lugg. Rack Rear Rail Brkt. Thumb
6 -	2860 759	SPACER, Roof Lugg. Rack Side Rail Lower
1 -	2602 651	Rail, Roof Lugg. Rack Rear
4 -	2602 652	C/Member, Roof Lugg. Rack
8 -	2842 991	T/Plate, Roof Lugg. Rack C/Member End
4 -	134 422	Screw, Roof Lugg. Rack Front Rail Bracket
6 -	9422 167	Screw, Roof Lugg. Rack Side Rail Att.
6 -	2094 869	Nut, Roof Lugg. Rack Side Rail Att.
8 -	6027 115	Screw, Roof Lugg. Rack C/Member End Att.
4 -	9423 197	Screw, Roof Lugg. Rack Side Rail to Cap - Upper
4 -	9427 850	Screw, Roof Lugg. Rack Side Rail to Cap - Lower
4 -	2602 656	Pad, Roof Lugg. Rack C/Member
2 -	2602 655	Pad, Roof Lugg. Rack Side Rail
1 -	2602 651	Sand & Plug, Roof Lugg. Rack Frt. Rail

1-74-1 ROOF LUGGAGE RACK PACKAGE ..... Part No. 2933 973
Consists of:

2 -	2894 882	Rail, Roof Lugg. Rack Side
4 -		Stanchion, Roof Lugg. Rack Side Rail
4 -	9418 486	Screw, Roof Lugg. Rack Frt. & Rr. Rail Frt. & Rr. Stanchion
4 -	2894 893	Tie Plate Roof Lugg. Rack Crossbar
2 -	2894 894	Plate Roof Lugg. Rackside Rail Tie Down
2 -	2894 899	Tapped Plate & Spacer Roof Lugg. Rack Side Rail Tie Down Plate
4 -	2894 899	Tapped Plate & Spacer Roof Lugg. Rack Side Rail Bar Tie Plate
4 -	6028 787	Screw, Roof Lugg. Rack Cross Bar Tie Plate Thumb Rear
4 -	186 810	Screw, Roof Lugg. Rack Cross Bar Tie Plate Front
4 -	6028 787	Screw, Roof Lugg. Rack Side Tie Down
2 -	2894 892	Rail, Sand & Plug Roof Lugg. Rack Frt. & Rr.
4 -	179 117	Set Screw, Roof Lugg. Rack Side Rail Stanchion to Side Rail
8 -	2094 869	Nut, Roof Lugg. Rack Stanchion to Roof Panel
4 -	2894 888	Pad, Roof Lugg. Rack Side Rail Stanchion
5 -	3439 314	Strip, Roof Lugg. Rack Skid
5 -	3439 315	Pad, Roof Lugg. Rack Skid Strip
15 -	3499 754	Spacer, Roof Lugg. Rack Skid Strip
15 -		Screw, Roof Lugg. Rack Skid Strip Att.
8 -	6027 941	Screw, Roof Lugg. Rack Side Rail Stanchion Att.

1-74-1 ROOF LUGGAGE RACK PACKAGE ..... Part No. 3440 127
Consists of:

1 -		Rail, Roof Lugg. Rack Side Rt./Lt.
5 -	3439 314	Strip, Roof Lugg. Rack Skid
5 -	3439 315	Pad, Roof Lugg. Rack Skid Strip
15 -	3499 754	Spacer, Roof Lugg. Rack Skid Strip
15 -		Screw, Roof Lugg. Rack Skid Strip Att.
2 -		Rail, Sand & Plug Lugg. Rack Frt. & Rr.
8 -		Screw, Roof Lugg. Rack Frt. & Rr. Rail
8 -	2094 869	Nut, Roof Lugg. Rack Side Rail to Roof Pnl.
8 -	6029 070	Screw, Roof Lugg. Rack Side to Roof Pnl.

CODE	PART NAME AND PART NUMBER

1-74-1 Cont'd.
- 1 - Pad, Roof Lugg. Rack Side Rail Stanchion Frt. Rt./Lt.
- 1 - Pad, Roof Lugg. Rack Side Rail Stanchion Rr. Rt./Lt.

1-74-1 ROOF LUGGAGE RACK PACKAGE . . . . . Part No. 3499 839
Consists of:
- 1 - Rail, Roof Lugg. Rack Side Rt./Lt.
- 5 - 3439 314 Strip, Roof Lugg. Rack Skid
- 5 - 3439 315 Pad, Roof Lugg. Rack Skid Strip
- 15 - 3499 754 Spacer, Roof Lugg. Rack Skid Strip
- 15 - Screw, Roof Lugg. Rack Skid Strip Att.
- 2 - 2894 892 Rail, Sand & Plug Lugg. Rack Frt. & Rr.
- 8 - Screw, Roof Lugg. Rack Frt. & Rr. Rail
- 8 - 2094 869 Nut, Roof Lugg. Rack Side Rail to Roof Panel
- 8 - 6029 070 Screw, Roof Lugg. Rack Side to Roof Panel
- 4 - 2894 888 Pad, Roof Lugg. Rack Side Rail Stanchion

1-87-2 FADER CONTROL PACKAGE, REAR COMPARTMENT . . . . . Part No. 2864 331
Consists of:
- 1 - Control, Fader
- 1 - 2426 942 Bezel, Fader Control Mtg.
- 1 - 2580 253 Screw, Knob and Set
- 1 - Wiring
- 1 - 2427 603 Speaker and Cover
- 4 - Screw, Speaker and Cover Mtg.
- 1 - Insulator
- 1 - 2991 876 Grille, Rr. Speaker
- 1 - Bezel, Speaker
- 4 - Nut, and Washer, Speaker Mtg.
- 1 - Nut, Speaker Fader Control Mtg.

1-87-2 FADER CONTROL PACKAGE, REAR COMPARTMENT . . . . . Part No. 2864 332
Consists of:
- 1 - Control, Fader
- 1 - 2580 774 Bezel, Control Mtg.
- 1 - 2631 689 Screw, Knob and Set
- 1 - Wiring, Speaker
- 1 - 2427 603 Speaker and Cover
- 4 - Screw, Speaker and Cover Mtg.
- 1 - Insulator
- 1 - 2291 876 Grille, Rr. Speaker
- 1 - Bezel, Rr. Speaker
- 4 - Nut and Washer Speaker, Mtg.

1-87-2 FADER CONTROL PACKAGE, REAR SPEAKER . . . . . Part No. 2947 220
Consists of:
- 1 - 2947 230 Rear Speaker Fader Control
- 1 - Nut, Rear Speaker Control Mtg.
- 1 - 2426 942 Bezel, Rear Speaker Control
- 1 - 2820 186 Knob and Set Screw
- 1 - 2427 603 Rear Speaker
- 4 - 9415 956 Screw, Rear Speaker Mtg.
- 1 - 2580 038 Wiring, Rr. Speaker Body
- 1 - 2298 882 Insulator, Radio Wiring
- 1 - 2291 876 Grille, Rr. Compt. Speaker
- 1 - 1819 014 Bezel, Rr. Compt. Speaker
- 4 - 120 614 Nut and Lockwasher, Rr. Compt. Speaker Mtg.

CODE	PART NAME AND PART NUMBER

1-87-2 FADER CONTROL PACKAGE, REAR SPEAKER . . . . . Part No. 2947 223
Consists of:
- 1 - 2947 231 Rear Speaker Fader Control
- 1 - 2580 361 Bezel, Rear Speaker Fader Control
- 1 - Nut, Rear Speaker Control Mtg.
- 1 - 2820 186 Knob and Set Screw
- 1 - 2427 603 Rear Speaker
- 4 - 9415 956 Screw, Rr. Speaker Mtg.
- 1 - 2580 038 Wiring, Rr. Speaker Body
- 1 - Insulator, Radio Lead
- 1 - 2991 876 Grille, Rr. Compt. Speaker
- 1 - 1819 014 Bezel, Rr. Compt. Speaker
- 4 - Nut and Lockwasher Rr. Compt. Speaker Mtg.

1-87-2 FADER CONTROL PACKAGE, REAR SPEAKER . . . . . Part No. 2947 234
Consists of:
- 1 - 2820 568 Control Rr. Speaker Fader
- 1 - 2580 361 Bezel, Rr. Speaker Control
- 1 - Nut, Rr. Speaker Control Mtg.
- 1 - 2820 186 Knob and Set Screw
- 1 - Speaker, Rr. Compt.
- 4 - 9415 956 Screw, Rr. Speaker Mtg.
- 1 - 2580 038 Wriing, Rr. Speaker Body
- 1 - Insulator, Radio Lead
- 1 - 2291 876 Grille, Rr. Compt. Speaker
- 1 - 2837 219 Bezel, Rr. Compt. Speaker
- 4 - 134 289 Screw, Rr. Compt. Speaker Mtg.
- 4 - 9417 714 Washer, Rr. Compt. Speaker Mtg.
- 4 - 116 000 Nut, Rr. Compt. Speaker Mtg.
- 4 - Screw, Rr. Speaker

1-87-2 SPEAKER AND CONTROL PACKAGE, REAR COMPARTMENT . . . . . Part No. 2947 881
Consists of:
- 1 - 2947 444 Control, Rr. Speaker Fader
- 1 - 2947 484 Bezel Rr. Speaker Fader Control
- 1 - Nut, Rr. Speaker Fader Control Mtg.
- 1 - 2947 359 Knob and Spring
- 1 - Insulator, Radio Wiring
- 1 - 2427 603 Speaker Rear Compt.
- 4 - 9415 956 Screw, Rr. Compt. Spkr. Mtg.
- 1 - 2291 876 Grille, Rr. Compt. Spkr.
- 1 - 1819 014 Bezel, Rr. Compt. Spkr.
- 4 - Nut, Rr. Compt. Spkr. Mtg.

1-87-2 SPEAKER AND CONTROL PACKAGE, REAR COMPARTMENT . . . . . Part No. 2947 882
Consists of:
- 1 - 2947 230 Control Rr. Speaker Fader
- 1 - Nut, Rr. Speaker Cont. Mtg.
- 1 - 2426 942 Bezel, Rr. Speaker Control
- 1 - 2820 186 Knob and Set Screw.
- 1 - 2580 038 Wiring Body
- 1 - Insulator, Radio Wiring
- 1 - 2067 FX9 Grille
- 1 - 2947 832 Speaker, w/House Cover
- 4 - 6023 214 Nut, Speaker to Grille Mtg.
- 1 - Bracket, Grille and Speaker Mtg.
- 2 - 6028 567 J-Nut, Grille Mtg.
- 7 - Screw, Grille Mtg.
- 5 - 115 998 Nut, Grille Mtg.

Printed in U.S.A.
January 1972

CODE	PART NAME AND PART NUMBER

1-87-2 CONTROL PACKAGE, REAR SPEAKER . . . . . Part No. 2947 883
Consists of:
1 - 2947 231 Control, Rr. Speaker Fader
1 - 2580 361 Bezel, Rr. Speaker Cont. Mtg.
1 - Nut, Rr. Speaker Cont. Mtg.
1 - 2820 186 Knob and Set Screw
1 - 2580 038 Wiring, Body
1 - Insulator, Radio Wiring
1 - 2067 FX9 Grille
1 - 2947 832 Speaker, w/House Cover
4 - 6023 214 Nut, Speaker to Grille Mtg.
1 - Bracket, Grille Mtg.
2 - 6028 567 J-Nut Grille Mtg.
7 - Screw, Grille Mtg.
5 - 120 622 Nut, Grille Mtg.
1 - 2068 FX9 Grille, w/House Cover
4 - Nut, Grille to Lid Mtg.

1-87-2 SPEAKER AND CONTROL PACKAGE, REAR COMPARTMENT . . . . . Part No. 2947 884
Consists of:
1 - 2947 723 Control, Rr. Speaker Fader
1 - 2947 673 Bezel, Rr. Speaker Fader Control
1 - 1887 603 Nut, Rr. Speaker Cont. Mtg.
1 - 2947 359 Knob and Spring
1 - Insulator, Radio Wiring
1 - 2427 603 Speaker, Rr. Compt.
4 - 9416 105 Screw, Rr. Compt. Speaker
1 - 2291 876 Grille, Rr. Compt. Speaker
1 - 1819 014 Bezel, Rr. Compt. Speaker
4 - Nut, Rr. Compt. Speaker

1-87-2 SPEAKER CONTROL PACKAGE RR. COMPT. . . . . Part No. 3488 423
Consists of:
1 - 3488 325 Control, Rr. Compt. Speaker
1 - 3488 322 Bezel, Rr. Speaker Control
1 - Nut, Rr. Speaker Control Mtg.
1 - 3488 323 Knob, Rr. Speaker Control
1 - 2580 038 Wiring, Rr. Speaker Control to Speaker
1 - Speaker, Rr. Shelf Panel
1 - Insulator, Radio Lead
1 - 2291 876 Grille, Rr. Compt. Speaker
1 - 1819 014 Bezel, Rr. Compt. Speaker
4 - 120 614 Nut & Lockwasher, Speaker Grille & Bezel Mtg.
1 - 3513 555 Wiring, Fader Switch

1-87-2 SPEAKER CONTROL PACKAGE RR. COMPT. . . . . Part No. 3488 424
Consists of:
1 - 3488 325 Control, Rr. Compt. Speaker
1 - 3488 322 Bezel, Rr. Speaker Control
1 - 6028 839 Nut, Rr. Speaker Control Mtg.
1 - 3488 323 Knob, Rr. Speaker Control
1 - Wiring, Control to Speaker
1 - 2298 882 Insulator, Radio Lead
1 - 3488 209 Bracket and Seal Rr. Speaker Mtg.
1 - 3488 211 Speaker, Rr. Compt.
4 - Nut and Lockwasher Speaker to Bracket Mtg.
4 - 9415 214 Screw, Speaker and Bracket to Front Support Mtg.
1 - 2826 GX9 Bezel and Grille, Rr. Speaker
4 - 9414 977 Nut, Bezel and Grille to Cover Mtg.
1 - Jumper Wire

1-87-2 SPEAKER AND CONTROL PACKAGE, REAR COMPARTMENT . . . . . Part No. 3488 434
Consists of:
1 - 2864 300 Control, Rear Speaker
1 - 6008 060 Nut, Rear Speaker Cont. Mtg.
1 - 2580 361 Bezel, Rear Speaker Control
1 - 2820 186 Knob, Rear Speaker Control
1 - 2580 038 Wiring, Rear Speaker
1 - 2298 882 Insulator, Radio Speaker Lead
1 - 2427 603 Speaker, Rear Compt.
1 - 2291 876 Grille, Rear Compt. Speaker
1 - 1819 014 Bezel, Rear Compt. Speaker
4 - 1206 14 Nut & Lk/Washer Rr. Compt. Speaker Mtg.

1-87-2 SPEAKER AND CONTROL PACKAGE REAR COMPT. . . . . Part No. 3501 182
Consists of:
1 - 2947 444 Rear Speaker Fader Control
1 - 2947 484 Bezel, Rear Speaker Fader Control
1 - 6008 060 Nut, Rear Speaker Fader Control Mtg.
1 - 2947 359 Knob & Spring
1 - 2298 882 Insulator, Radio Wiring
1 - 2427 603 Rear Compt. Speaker
4 - 9415 956 Screw, Rear Compt. Speaker Mtg.
1 - 2291 876 Grille, Rear Compt. Speaker
1 - 1819 014 Bezel, Rear Compt. Speaker
4 - 120 614 Nut, Rear Compt. Speaker Mtg.
1 - 2580 038 Wiring, Rear Speaker Control to Speaker

1-87-2 SPEAKER AND CONTROL PACKAGE, REAR COMPT. . . . . Part No. 3501 183
Consists of:
1 - 2947 723 Rear Speaker Fader Control
1 - 2947 673 Bezel, Rear Speaker Fader Control
1 - 1887 603 Nut, Rear Speaker Control Mtg.
1 - 2947 359 Knob & Spring
1 - 2298 882 Insulator, Radio Wiring
1 - 2427 603 Rear Compt. Speaker
4 - 9415 956 Screw, Rear Compt. Speaker
1 - 2291 876 Grille, Rear Compt. Speaker
1 - 1819 014 Bezel, Rear Compt. Speaker
4 - 120 614 Nut, Rear Compt. Speaker
1 - 2580 038 Wiring, Rear Speaker Control to Speaker

2-03-3 STEERING KNUCKLE PACKAGE, FRONT SUSPENSION . . . . . Part No. 3004 816
Consists of:
2 - 6026 705 Bolt
1 - Knuckle

2-05-4 ARM PACKAGE, FRONT SUSPENSION STEERING KNUCKLE BALL JOINT HOUSING, RHD., Rt. . . . . Part No. 2585 596
Lt. . . . . Part No. 2585 595
Consists of:
1 - Arm, Steering Knuckle Ball Joint Housing
1 - Nut, Steering Knuckle Ball Joint Stud
1 - Pin, Steering Knuckle Ball Joint Nut Cotter

CODE	PART NAME AND PART NUMBER

2-07-1 END PACKAGE, TIE ROD, STEERING LINKAGE . . . . . Part No. 3004 787
Consists of:
1 - Bolt, Tie Rod Tube Clamp
1 - Clamp, Tie Rod Tube
1 - End, Tie Rod, Inner
1 - 9425 132 Nut, Tie Rod End Stud
1 - Nut, Tie Rod Tube Clamp Bolt
1 - C/Pin, Tie Rod End Stud Nut
1 - 2535 457 Seal, Tie Rod End Dust

END PACKAGE, TIE ROD, STEERING LINKAGE . . . . . Part No. 3004 788
3004 789
3004 794
3004 795
3004 796
3004 797
Consists of:
1 - Bolt, Tie Rod Tube Clamp
1 - Clamp, Tie Rod Tube
1 - End, Tie Rod
1 - 9425 132 Nut, Tie Rod End Stud
1 - Nut, Tie Rod Tube Clamp Bolt
1 - C/Pin, Tie Rod End Stud Nut

END PACKAGE, TIE ROD, STEERING LINKAGE . . . . . Part No. 3004 792
3004 793
3420 154
3420 155
Consists of:
1 - 181 610 Bolt, Tie Rod Tube Clamp
1 - Clamp, Tie Rod Tube
1 - C/Pin, Tie Rod End Stud Nut
1 - End, Tie Rod
1 - 9425 132 Nut, Tie Rod End Stud

2-08-57 BALL JOINT PACKAGE, FRONT SUSPENSION UPPER . . . . . Part No. 2298 534
Consists of:
1 - Ball Joint
1 - Nut, Ball Joint Stud
1 - Pin, Ball Joint Stud Nut Cotter
1 - 1825 487 Seal, Ball Joint
1 - 1672 960 Washer, Ball Joint Stud Nut

BALL JOINT PACKAGE, FRONT SUSPENSION UPPER . . . . . Part No. 2808 394
Consists of:
1 - Ball Joint
1 - 128 027 Nut, Ball Joint Stud
1 - Pin, Ball Joint Stud Nut Cotter
1 - 1825 761 Seal, Ball Joint
1 - 1672 960 Washer, Ball Joint Stud Nut

BALL JOINT PACKAGE, FRONT SUSPENSION UPPER . . . . . Part No. 3514 974
Consists of:
1 - Ball Joint
1 - 6028 801 Nut, Ball Joint Stud
1 - Pin, Ball Joint Stud Nut Cotter
1 - 2462 848 Seal, Ball Joint

2-08-59 CAM and BUSHING PACKAGE, FRONT SUSPENSION UPPER CONTROL ARM . . . . . Part No. 2804 920
Consists of:
2 - 2071 204 Bushing, Arm
2 - Cam, Arm Slotted
2 - Cam, Arm
2 - 1825 449 Nut, Arm Bolt
2 - 120 384 Washer, Lock Arm Cam

CAM and BUSHING PACKAGE, FRONT SUSPENSION UPPER CONTROL ARM . . . . . Part No. 2808 445
Consists of:
2 - 2269 124 Bushing, Arm
2 - Bracket, Cam
2 - Cam, Bracket Slotted
2 - 1825 449 Nut, Bracket Bolt
2 - 120 384 Washer, Bracket Cam

2-10-6 ARM PACKAGE, LOWER CONTROL, RT . . . . . Part No. 2808 620
Consists of:
1 - Arm
1 - 2071 506 Bushing
1 - Nut
1 - Pin

2-10-7 ARM PACKAGE, LOWER CONTROL, LT . . . . . Part No. 2808 621
Consists of:
1 - Arm
1 - 2071 506 Bushing
1 - Nut
1 - Pin

2-10-55 ARM and BALL JOINT PACKAGE, FRONT SUSPENSION STEERING KNUCKLE HOUSING LOWER . . . . . Part No. 2275 466
2275 467
Consists of:
1 - Arm, Ball Joint Housing
1 - Nut, Ball Joint Stud
1 - C/Pin, Ball Joint Stud Nut

ARM and BALL JOINT PACKAGE, FRONT SUSPENSION STEERING KNUCKLE HOUSING, LOWER . . . . . Part No. 3004 817
3004 818
3004 819
3004 820
Consists of:
1 - Arm, Ball Joint Housing
1 - C/Pin, Ball Joint Stud Nut
1 - 128 027 Nut, Ball Joint Stud

CODE	PART NAME AND PART NUMBER

21-10-55 Cont'd.

ARM and BALL JOINT
PACKAGE, FRONT
SUSPENSION STEERING
KNUCKLE HOUSING
LOWER . . . . . Part No. 3420 156
3420 157
3420 160
3420 161
3420 162
3420 163

Consists of:
1 - Arm, Ball Joint Housing
1 - C/Pin, Ball Joint Nut
1 - 128 025 Nut, Ball Joint Stud

2-10-57 BUSHING and RETAINER
PACKAGE, FRONT
SUSPENSION LOWER
CONTROL ARM STRUT . . . . Part No. 2084 918
Consists of:
1 - 2071 443 Bushing, Strut
1 - 6024 657 Nut, Strut Bushing Retainer
2 - 2071 211 Retainer, Strut Bushing

BUSHING and RETAINER
PACKAGE, FRONT
SUSPENSION LOWER
CONTROL ARM STRUT . . . . Part No. 2808 665
Consists of:
1 - 2207 282 Bushing, Control Arm Strut Front
1 - 2207 296 Bushing, Control Arm Strut Rear
1 - 6025 523 Nut, Control Arm Strut Bearing
2 - 2207 322 Retainer, Control Arm Strut
1 - 2535 464 Sleeve, Control Arm Strut Bushing

BUSHING and RETAINER
PACKAGE, FRONT
SUSPENSION LOWER
CONTROL ARM STRUT . . . . Part No. 2808 664
Consists of:
1 - 2462 740 Bushing, Arm Strut Front
1 - 2462 741 Bushing, Arm Strut Rear
1 - 6025 523 Nut, Arm Strut Bushing
2 - 2207 322 Retainer, Arm Strut Bushing
1 - 2535 463 Sleeve, Arm Strut Bushing

2-10-61 SHAFT PACKAGE, FRONT
SUSPENSION LOWER
CONTROL ARM . . . . . Part No. 2808 579
2808 580

Consists of:
1 - 6024 484 Nut, Arm Shaft
1 - Shaft, Arm
1 - 2071 470 Washer, Arm Shaft

SHAFT PACKAGE, FRONT
SUSPENSION LOWER
CONTROL ARM . . . . . Part No. 2808 687
2808 686

Consists of:
1 - 6028 485 Nut, Arm Shaft
1 - Shaft, Arm
1 - Washer, Arm Shaft

CODE	PART NAME AND PART NUMBER

2-14-1 BOLT and SWIVEL
PACKAGE, FRONT
SUSPENSION TORSION
BAR or SPRING, FRONT
END ADJUSTING . . . . . Part No. 2275 468
2275 469

Consists of:
1 - Bolt
1 - Swivel

BOLT and SWIVEL
PACKAGE, FRONT
SUSPENSION TORSION
BAR or SPRING, REAR
END ANCHOR
ADJUSTING . . . . . Part No. 2525 086
2525 087
2808 417

Consists of:
1 - Bolt
1 - Swivel

3-09-3 REPAIR KIT, REAR
AXLE DIFFERENTIAL . . . . . Part No. 2852 523
Consists of:
4 - 1929 759 Plate
2 - 2238 893 Disc
2 - 2228 429 Plate
2 - 1929 758 Disc

3-19-1 GEAR and PINION,
PACKAGE, Differential . . . . . Part No. 3549 061
Consists of:
1 - Gear and Pinion Set (2.76 to 1)
1 - 3432 485 Flange (7260)
1 - 3432 487 Flange (7290)
1 - 2070 117 Washer, Flange
1 - 6028 041 Nut, Flange
1 - Tag, Identification
1 - Instruction Sheet

GEAR and PINION,
PACKAGE, Differential, 2.93 to 1 . . . Part No. 3621 927
3.23 to 1 . . . . . Part No. 3621 928
3.55 to 1 . . . . . Part No. 3621 929
3.91 to 1 . . . . . Part No. 3621 930
2.76 to 1 . . . . . Part No. 3621 939
Consists of:
1 - Gear Set
1 - 3507 575 Spacer
1 - 2070 117 Washer, Flange
1 - 6028 041 Nut, Flange
1 - Sheet, Instruction

3-33-1 BEARING PACKAGE,
DRIVE SHAFT . . . . . Part No. 2525 415
Consists of:
1 - Bearing
1 - Collar

BEARING PACKAGE,
DRIVE SHAFT . . . . . Part No. 2808 586
Consists of:
1 - Bearing
1 - Collar

CODE	PART NAME AND PART NUMBER

3-33-1 Cont'd.
BEARING PACKAGE,
DRIVE SHAFT . . . . . Part No. 2808 272
Consists of:
1 - Bearing
1 - Collar

3-33-1 REPAIR PACKAGE,
Drive Shaft Bearing. . . . . Part No. 3420 090
Consists of:
1 - Bearing
1 - Collar
1 - 2404 052 Seal
2 - 2467 095 Gasket
1 - Instruction Sheet

REPAIR PACKAGE,
Drive Shaft Bearing. . . . . Part No. 3420 091
Consists of:
1 - Bearing
1 - Collar
1 - 2852 948 Seal
1 - 2881 314 Gasket, Inner
1 - 2070 933 Gasket, Outer

REPAIR PACKAGE,
Drive Shaft Bearing, Rt. . . . . Part No. 3621 992
Consists of:
1 - Retainer and Adjuster, Rt.
1 - 2881 185 Seal
1 - 2404 216 Seal, Outer
1 - Cone
1 - Cup
1 - Collar
1 - 2070 933 Gasket
1 - 2881 314 Gasket

REPAIR PACKAGE,
Drive Shaft Bearing, Lt. . . . . Part No. 3621 993
Consists of:
1 - Retainer, Lt.
1 - 2881 185 Seal
1 - 2404 216 Seal, Outer
1 - Cone
1 - Cup
1 - Collar
1 - 2070 933 Gasket
1 - 2881 314 Gasket

3-35-14 SEAL and GASKETS,
PACKAGE, Drive Shaft Brg. . . . . Part No. 3621 967
Consists of:
1 - Seal
1 - 2070 933 Gasket
1 - Gasket

4-25-28 PARKING BRAKE,
RELEASE VALVE

SURGE TANK PACKAGE . . . . Part No. 2421 268
Consists of:
1 - Clamp
1 - Tank, Surge

CODE	PART NAME AND PART NUMBER

5-03-1 BRAKE SHOE
LINING PACKAGE . . . . . Part No. 2585 683
2585 685
3420 955
3420 957
3420 958
3420 959
3420 960
3420 963
3420 964
3579 268
3579 277

Consists of:
2 - Lining, Frt. Whl. Primary
2 - Lining, Frt. Whl. Secondary
2 - Lining, Rr. Whl. Primary
2 - Lining, Rr. Whl. Secondary

5-03-3 BRAKE SHOE and LINING PACKAGE
DISC BRAKES . . . . . Part No. 3579 254
3579 266

Consists of:
4 - Shoe and Lining
2 - 3461 770 Positioner, Frt. Whl. Disc Brk. Rt.
2 - 3461 771 Positioner, Frt. Whl. Disc Brk. Lt.

5-03-3 BRAKE SHOE and
LINING PACKAGE
DISC BRAKES . . . . . Part No. 3004 759
3004 828
3579 276

Consists of:
4 - Shoe and Linings

5-03-3 BRAKE SHOE and
LINING PACKAGE
FRT. WHEEL . . . . . Part No. 3004 851
3420 145
3420 146
3420 147
3420 148
3420 956
3579 269
3579 274

Consists of:
2 - Shoe and Lining, Primary
2 - Shoe and Lining, Secondary

5-03-3 BRAKE SHOE and
LINING PACKAGE
RR. WHEEL . . . . . Part No. 3004 858
3420 146
3420 148
3420 149
3420 150
3420 952
3420 953
3420 954
3579 270
3579 275
3579 294

Consists of:
2 - Shoe and Linings, Primary
2 - Shoe and Linings, Secondary

CODE	PART NAME AND PART NUMBER

5-05-9 SEAL and BOOT PACKAGE
FRT. WHEEL DISC . . . . . Part No. 2808 699
Consists of:
4 - Seal Piston
4 - Boot Piston

SEAL, BOOT and
BUSHING PACKAGE
FRT. WHEEL DISC . . . . . Part No. 3004 865
Consists of:
1 - Boot Piston
1 - Seal Piston
2 - Bushing
2 - Bushing
1 - Lubricant (1 oz.)
1 - 2944 722 Positioner Rt.
1 - 2944 723 Positioner Lt.

5-05-9 SEAL, Boot and Bushing Package
Frt. Wheel Disc . . . . . Part No. 3579 255
Consists of:
1 - Boot, Piston
1 - Seal, Piston
2 - Bushing, Locating Pin - Outer
2 - Bushing, Locating Pin - Inner
1 - Lubricant (1-oz.)

5-39-1 MASTER CYL.
REPAIR PKG. . . . . Part No. 3420 120
Consists of:
1 - Primary Piston
1 - Secondary Piston
1 - 2881 512 Gasket
1 - Spring
1 - Valve
2 - Seat
1 - 2881 519 Seal
1 - Screw

5-39-1 MASTER CYL.
REPAIR PACKAGE . . . . . Part No. 3420 962
Consists of:
1 - Primary Piston
1 - Secondary Piston
1 - 2823 994 Gasket
1 - Spring
2 - Valve
2 - Insert
1 - 6026 813 Screw and Washer
1 - 1828 388 Boot
1 - 2074 960 Lock Ring

5-39-1 MASTER CYL.
REPAIR PACKAGE . . . . . Part No. 2808 578
Consists of:
1 - 2823 994 Gasket
2 - Valve
2 - Spring
2 - Insert, Tube
1 - Secondary Piston
1 - 2074 960 Ring
1 - 1828 388 Boot
1 - Stop Screw
1 - Primary Piston

CODE	PART NAME AND PART NUMBER

5-39-1 MASTER CYLINDER
REPAIR PACKAGE . . . . . Part No. 3420 967
Consists of:
1 - Primary Piston
1 - Secondary Piston
1 - Spring Valve
1 - Valve
2 - Seat
1 - 2881 512 Gasket
1 - 2881 519 Seal
1 - Screw
1 - 2944 381 Wire, Cover Bail

5-39-1 MASTER CYLINDER
REPAIR PACKAGE . . . . . Part No. 3420 968
Consists of:
1 - Primary Piston
1 - Secondary Piston
1 - Spring Valve
1 - Seat
2 - 2944 466 Gasket
1 - 2881 519 Seal
1 - Screw
1 - 2944 467 Wire, Cover Bail

5-39-1 REPAIR PAKCAGE,
MASTER CYLINDER MAJOR . . . . . Part No. 3420 969
Consists of:
1 - Piston, Primary
1 - Piston, Secondary
1 - Spring, Valve
1 - Valve, Residual
2 - Seat, Tube
1 - 2944 466 Gasket, Cover
1 - 2944 467 Wire, Cover Coil
1 - 2265 635 Stop, Primary Piston
1 - 2200 341 Screw, Primary Piston

5-39-1 MASTER CYLINDER,
REPAIR PACKAGE . . . . . Part No. 3549 828
Consists of:
1 - 3549 828 Piston, Primary
1 - 3549 828 Piston, Secondary
1 - Spring, Residual Valve
2 - Seat, Tube
1 - 2074 960 Ring, Push Rod Retainer
1 - 1828 388 Boot, Cylinder
1 - 2881 512 Gasket, Cover
1 - 2881 519 Seal, Stop Screw
1 - Screw, Piston Stop

5-39-1 REPAIR PACKAGE,
MASTER CYLINDER MAJOR . . . . . Part No. 3579 257
Consists of:
1 - Piston, Secondary
1 - Piston, Primary
2 - Spring, Residual Valve Pri. & Sedy.
2 - Valve, Residual Pri. & Sedy.
2 - Insert, Tube Pri. & Sedy.
1 - 3461 047 Gasket, Cover

5-39-1 REPAIR PACKAGE, MASTER
CYLINDER MAJOR . . . . . Part No. 3579 258

CODE	PART NAME AND PART NUMBER

5-39-1 Cont'd.

Consists of:
- 1 - Piston, Secondary
- 1 - Piston, Primary
- 1 - Spring, Residual Valve Secondary
- 1 - Valve, Residual Secondary
- 2 - Insert, Tube Pri. & Sedy.
- 1 - 2944 227 Gasket, Cover

5-39-1 REPAIR PACKAGE, MASTER CYLINDER MAJOR . . . . . Part No. 3579 259

Consists of:
- 1 - Piston, Secondary
- 1 - Piston, Primary
- 2 - Spring, Residual Valve Pri. & Sedy.
- 2 - Valve, Residual Pri. & Sedy.
- 2 - Seat, Tube Pri. & Sedy.
- 1 - 3461 047 Gasket, Cover

5-39-1 REPAIR PACKAGE, MASTER CYLINDER MAJOR . . . . . Part No. 3579 260

Consists of:
- 1 - Piston, Secondary
- 1 - Piston, Primary
- 1 - Spring, Residual Valve Secondary
- 1 - Valve, Residual Secondary
- 2 - Seat, Tube Primary & Secondary
- 1 - 2944 227 Gasket, Cover

5-39-3 MASTER CYLINDER PACKAGE . . . . . Part No. 2808 577

Consists of:
- 1 - Master Cylinder
- 1 - 2749 960 Ring
- 1 - 1828 389 Stop
- 1 - 180 018 Screw
- 1 - 1828 388 Boot

5-39-3 MASTER CYLINDER PACKAGE . . . . . Part No. 3420 961

Consists of:
- 1 - Master Cylinder
- 1 - 1828 389 Stop
- 2 - 180 018 Screw
- 2 - 6022 181 Washer
- 1 - 1828 388 Boot
- 1 - 2074 960 Lock Ring

5-39-3 MASTER CYLINDER PACKAGE . . . . . Part No. 2808 600

Consists of:
- 1 - Master Cylinder
- 1 - 1828 388 Boot
- 1 - 1828 389 Stop
- 2 - 6022 201 Screw and Lock Washer
- 1 - 2074 960 Ring

5-63-1 WHEEL CYLINDER SERVICE PACKAGE RR. . . . . Part No. 2808 695

Consists of:
- 2 - 2265 574 Cup
- 2 - 2072 636 Cup
- 2 - 2881 604 Boot, Cylinder

CODE	PART NAME AND PART NUMBER

5-63-1 WHEEL CYLINDER REPAIR PACKAGE . . . . . Part No. 2808 697

Consists of:
- 2 - 2260 844 Cup, Piston
- 2 - 2881 618 Boot, Cylinder

5-63-1 WHEEL CYLINDER REPAIR PACKAGE . . . . . Part No. 3420 140

Consists of:
- 4 - Cup, Frt. Whl. Brake Cyl. Piston
- 4 - Boot, Frt. Whl. Brake Cylinder
- 2 - Spring, Cup

5-63-1 WHEEL CYLINDER SERVICE PACKAGE RR. . . . . Part No. 3420 999

Consists of:
- 2 - 2265 574 Cup, Piston
- 2 - 2881 604 Boot, Cylinder
- 1 - 2072 637 Spring, Cup

5-63-1 WHEEL CYLINDER SERVICE PACKAGE RR. . . . . Part No. 3421 000

Consists of:
- 2 - 2260 844 Cup, Piston
- 2 - 2881 618 Boot, Cylinder
- 1 - 1923 765 Spring, Cup

5-63-1 WHEEL CYLINDER REPAIR PACKAGE FRT. . . . . Part No. 3549 803

Consists of:
- 2 - 2260 838 Cup, Piston
- 2 - 2881 634 Boot, Cylinder
- 1 - 2260 839 Spring, Cup

5-63-1 WHEEL CYLINDER SERVICE PACKAGE RR. . . . . Part No. 3549 804

Consists of:
- 2 - 2534 923 Cup, Piston
- 2 - 2881 618 Boot, Cylinder
- 1 - 1923 765 Spring, Cup

5-63-1 FRONT WHEEL CYLINDER REPAIR PACKAGE . . . . . Part No. 3549 819

Consists of:
- 2 - 2265 573 Cup, Piston
- 2 - 2881 624 Boot, Cylinder
- 1 - 1923 765 Spring, Piston

6-17-3 CLUTCH LEVER PACKAGE . . . . . Part No. 2240 634

Consists of:
- 3 - Eyebolt
- 3 - Lever
- 3 - Nut
- 3 - Pin
- 3 - Spring
- 3 - Strut

CLUTCH LEVER PACKAGE . . . . . Part No. 2495 052

CODE	PART NAME AND PART NUMBER

6-17-1 Cont'd.
Consists of:
3 - Clip
3 - Lever
3 - Nut
3 - Pin
3 - Screw
3 - Washer

CLUTCH LEVER PACKAGE . . . . . Part No. 2525 473
Consists of:
3 - Clip
3 - Lever
3 - Nut
3 - Pin
3 - Screw
3 - Washer

CLUTCH LEVER PACKAGE . . . . . Part No. 2808 435
Consists of:
3 - Clip
3 - Lever
3 - Nut
3 - Pin
3 - Screw
3 - Washer

7-42-1 WATER PUMP PACKAGE . . . . . Part No. 2808 679
Consists of:
1 - 1947 523 Gasket, Intermediate
1 - Pump, Water

7-42-1 WATER PUMP PACKAGE . . . . . Part No. 2808 680
Consists of:
1 - 1737 705 Gasket, Body
1 - Pump, Water

7-42-1 WATER PUMP PACKAGE . . . . . Part No. 2808 681
Consists of:
1 - 1737 705 Gasket, Body
1 - Pump, Water

7-42-1 WATER PUMP PACKAGE . . . . . Part No. 3420 037
Consists of:
1 - 2129 013 Gasket Body
1 - Pump, Water

7-42-1 WATER PUMP PACKAGE . . . . . Part No. 3420 038
Consists of:
1 - 2129 013 Gasket Body
1 - Pump, Water

7-42-4 REPAIR PACKAGE, WATER PUMP . . . . . Part No. 2808 682
Consists of:
1 - 1947 521 Gasket Body
1 - 1947 523 Gasket, Intermediate
1 - 1947 671 Gasket Outlet Elbow
1 - 2532 493 Seal Body
1 - 2532 492 Seal
1 - Shaft w/Slinger
1 - Impellar

7-42-4 REPAIR PACKAGE, WATER PUMP . . . . . Part No. 2808 683
Consists of:
1 - 1737 705 Gasket, Body
1 - 2843 635 Impeller
1 - 2532 493 Seal, Body
1 - 2843 292 Seal
1 - Shaft, w/Bearing

7-42-4 REPAIR PACKAGE, WATER PUMP . . . . . Part No. 2808 684
Consists of:
1 - 1737 705 Gasket, Body
1 - 2843 923 Impeller
1 - 2532 493 Seal, Body
1 - 2843 292 Seal
1 - Shaft, w/Bearing

7-42-4 REPAIR PACKAGE, WATER PUMP . . . . . Part No. 3420 035
Consists of:
1 - 2951 838 Seal
1 - 2951 010 Seal Body
1 - 2129 013 Gasket, Body
1 - Impeller
1 - Shaft, w/Bearing

7-42-4 REPAIR PACKAGE, WATER PUMP . . . . . Part No. 3420 036
Consists of:
1 - 2951 838 Seal
1 - 2951 010 Seal, Body
1 - 2129 013 Gasket, Body
1 - Impeller
1 - Shaft, w/Bearing

8-14-1 LAMP, REFLECTOR and BEZEL PACKAGE, SIDE MARKER . . . . . Part No. 3420 646-7
Consists of:
1 - 3403 630-1 Bezel
2 - 6027 639 Cap Nut
2 - 6028 399 Cap Nut
1 - 3403 618 Lamp
1 - Reflector
1 - 3403 635 Retainer

LAMP, REFLECTOR and BEZEL PACKAGE, SIDE MARKER . . . . . Part No. 3420 714-5
Consists of:
1 - 3403 640-1 Bezel
2 - 6027 639 Cap Nut
2 - 6028 399 Cap Nut
1 - 3403 637 Lamp
1 - 3403 635 Retainer
1 - 3403 646 Reflector

Printed in U.S.A.
January 1972

CODE	PART NAME AND PART NUMBER

8-14-1 Cont'd.

LAMP and REFLECTOR PACKAGE, SIDE MARKER . . . . . Part No. 3420 788-9 = 3420 790

Consists of:
1 - 9417 863 Bulb
1 - Housing
2 - 6028 329 J-Nut
1 - Lens
2 - 9414 732 Screw
1 - Socket, Cable and Plate

LAMP and REFLECTOR PACKAGE, SIDE MARKER . . . . . Part No. 3420 823

Consists of:
2 - 6027 639 Cap Nut
1 - Housing
1 - Lens
1 - Retainer

LAMP and REFLECTOR PACKAGE, SIDE MARKER . . . . . Part No. 3420 828-9

Consists of:
2 - 6027 639 Cap Nut
1 - Housing
1 - 3403 737 Lens and Reflector
1 - 3403 828 Retainer

LAMP, REFLECTOR and BEZEL PACKAGE, SIDE MARKER . . . . . Part No. 3420 854-5

Consists of:
1 - 3403 766-7 Bezel
1 - 3403 770 Bracket
2 - 6028 399 Cap Nut
1 - 3403 637 Lamp
1 - 3403 646 Reflector
2 - Screw, Bezel Mtg.

8-14-6 LENS and GASKET PACKAGE, SIDE MARKER LAMP . . . . . Part No. 3420 730-1
3420 782-3
3420 792-3
3420 794-5
3420 796-7
3420 820-1
3420 830-1
3420 842-3
3420 852-3
3420 862-3
3420 866-7
3420 868-9
3420 926-7
3420 928-9
3420 932-3
3514 376-7
3620 700-1

Consists of:
1 - Gasket
1 - Lens

CODE	PART NAME AND PART NUMBER

8-15-27 CABLE PACKAGE, FUSIBLE LINK . . . . . Part No. 2983 798
3513 360

Consists of:
3 - Cable

8-27-77 SPRING and HINGE PACKAGE, CAP . . . . . Part No. 1879 606

Consists of:
1 - Spring and Hinge, Locating
1 - Spring and Hinge

8-27-85 CONTACT and SPRING PACKAGE, CAP PLUNGER . . . . . Part No. 2084 655

Consists of:
1 - Contact
1 - Spring

8-27-133 BEARING and THRUST WASHER PACKAGE, SHAFT . . . . . Part No. 2585 021

Consists of:
2 - Bearing
3 - Thrust Washer
1 - Pin, Collar
1 - Snap Ring, Cam
1 - Spacer, Cam

8-27-137 COLLAR and PIN PACKAGE, SHAFT . . . . . Part No. 2585 022

Consists of:
1 - Collar, Drive
1 - Pin, Collar
1 - Thrust Washer, Lwr.

COLLAR and PIN PACKAGE, SHAFT . . . . . Part No. 2932 988

Consists of:
1 - Collar
1 - Pin, Collar
1 - Thrust Washer

8-27-352 GEAR and PIN PACKAGE, SHAFT . . . . . Part No. 2084 653

Consists of:
1 - Gear
1 - Pin
1 - Thrust Washer

8-28-74 REGULATOR REPLACEMENT PACKAGE, VOLTAGE . . . . . Part No. 3620 747

Consists of:
1 - Insulator
1 - Plug
1 - 3438 150 Regulator
2 - Terminal

8-29-17 BRUSH and WASHER PACKAGE . . . . . Part No. 3420 893

Consists of:
2 - Brush
2 - Washer, Brush Mtg. Insulator

Printed in U.S.A.
January 1972

CODE	PART NAME AND PART NUMBER

8-29-99 RETAINER, WASHER and SLIP RING PACKAGE, ROTOR GREASE . . . . . Part No. 2586 512
Consists of:
1 - Slip Ring, Rotor
2 - Retainer
1 - Washer, Rotor Grease Ret.

8-29-129 CAPACITOR and INSULATOR PACKAGE . . . . . Part No. 2421 137
Consists of:
1 - Capacitor and Bolt
1 - Insulator, Heat Sink
1 - Insulator, Capacitor Bolt
2 - Lockwasher
2 - Nut, Hex
1 - Washer, Plain

8-32-2 HORN PACKAGE, UNIVERSAL,
LOW NOTE . . . . . Part No. 2808 868
HIGH NOTE . . . . . Part No. 2808 869
Consists of:
1 - Bracket, Long
1 - Bracket, Short
1 - Horn
3 - Lockwasher, Brkt. to Horn Mtg. Screw
3 - Screw, Brkt. to Horn Mtg.
1 - Screw and Washer, Brkt. to Car Mtg.

8-34-278 GEAR and GASKET PACKAGE, ROTATING HEADLAMP . . . . . Part No. 3420 910
3420 922
Consists of:
1 - Gasket
1 - Gear

8-37-90 BEZEL and LENS PACKAGE, SPEED and INST. CLUSTER, MILE . . . . . Part No. 2984 490
Consists of:
1 - Bezel
1 - Lens

BEZEL and LENS PACKAGE, SPEED and INST. CLUSTER, MILE . . . . . Part No. 2984 491
Consists of:
1 - Bezel
1 - Lens

8-37-178 HOUSING PACKAGE, INST. CLUSTER . . . . . Part No. 3420 741
Consists of:
1 - Housing
1 - Lens, Brake System Lamp
1 - Seal, Brake System Lamp

HOUSING PACKAGE, SPEED and INST. CLUSTER . . . . . Part No. 3420 838
Consists of:
1 - Dial, Gearshift Indicator
1 - Housing

HOUSING PACKAGE, SPEED and INST. CLUSTER . . . . . Part No. 3420 858
Consists of:
1 - Housing
1 - Lens, Door Ajar Warning Lamp
1 - Seal, Turn Signal and Door Ajar Warning Lamp

8-38-3 LAMP PACKAGE . . . . . Part No. 2864 325
2947 218
2947 285
#3488 496
Consists of:
1 - Lamp and Switch
1 - Lens
1 - 1522 44 Bulb

8-41-17 HOUSING and LENS PACKAGE, WARNING LAMP . . . . . Part No. 2932 818
Consists of:
1 - Housing
1 - Lens, Cold Warning Lamp
1 - Lens, Warning Lamp

8-50-184 COVER and WELT PACKAGE, FENDER TURN SIGNAL INDICATOR LAMP . . . . . Part No. 2932 844-5
Consists of:
1 - Cover
1 - Welt

8-50-334 LENS and GASKET PACKAGE, PARKING and TURN SIGNAL LAMP . . . . . Part No. 3420 552-3
3420 554-5
3420 584-5
3420 618-9
3420 624-5
3420 628-9
3420 630-1
3420 632-3
3420 636-7
3420 638-9
3420 640-1
3420 648-9
3420 702-3
3420 710-1
3420 742-3
#3514 272-3
3514 302-3
#3514 306
#3514 324-5
#3514 336-7
#3579 174-5
Consists of:
1 - Gasket
1 - Lens

CODE	PART NAME AND PART NUMBER

8-5-334 Cont'd.
LENS and GASKET
PACKAGE, CORNERING
LAMP . . . . . Part No. #3420 644-5
#3420 704-5
#3420 708-9
Consists of:
1 - Gasket
1 - Lens

8-50-349 SOCKET, CABLE,
PLATE and GASKET
PACKAGE, PARKING
and TURN SIGNAL
LAMP . . . . . Part No. #3420 712
Consists of:
1 - Gasket
1 - Socket

8-52-49 FORK and PIN
PACKAGE, SHIFTING . . . . . Part No. 2084 093
Consists of:
1 - Fork, Shifting
1 - Pin, Roll

8-52-82 STOP, SNAP RING
and STOP WASHER
PACKAGE, PINION . . . . . Part No. 2448 804
Consists of:
1 - Ring, Pinion Stop Snap
1 - Stop, Pinion
1 - Washer, Pinion Stop

8-52-86 LINK PACKAGE,
CLUTCH STARTER
SWITCH ACTUATOR . . . . . Part No. 3514 257
Consists of:
1 - Link, Retaining
1 - Link, Actuator
1 - 6028 260 Rivet, Blind Type

8-52-87 ACTUATOR and
RETAINING RING
PACKAGE, CLUTCH
SHIFTING . . . . . Part No. 2275 556
Consists of:
2 - Actuator, Clutch Shifting
1 - Ret. Ring, Clutch Actuator

8-52-96 GEAR and SNAP
RING PACKAGE,
PINION SHAFT . . . . . Part No. 2275 557
Consists of:
1 - Gear, Pinion Shaft
1 - Snap Ring, Pinion Shaft Gear Ret.
1 - Washer, Pinion Shaft Gear Friction

8-52-98 THRUST WASHER and
RETAINING RING
PACKAGE, PINION
SHAFT . . . . . Part No. 2275 558
Consists of:
1 - 6022 006 Ret. Ring, Pinion Shaft
2 - Washer, Pinion Shaft Thrust

CODE	PART NAME AND PART NUMBER

8-52-121 THRUST WASHER
PACKAGE, ARMATURE . . . . Part No. 2275 555
Consists of:
6 - Washer, Thrust

8-52-135 BRUSH PACKAGE . . . . . Part No. 2525 529
Consists of:
1 - Brush
1 - Brush, Field Shunt Coil
1 - Screw and Washer, Brush Att.

8-52-137 PLATE and BRUSH
PACKAGE, BRUSH
HOLDER . . . . . Part No. 2932 812
Consists of:
1 - Brush and Terminal, Negative
1 - Plate, Brush Holder

8-52-140 SPRING PACKAGE,
BRUSH . . . . . Part No. 2084 666
Consists of:
4 - Spring, Brush

8-52-180 THRUST WASHER
PACKAGE, COMMUTATOR
END . . . . . Part No. 2240 529
Consists of:
10 - Washer

8-52-214 FIELD SERIES
COIL PACKAGE . . . . . Part No. 2084 088
Consists of:
2 - Coil

FIELD SERIES
COIL PACKAGE . . . . . Part No. 2275 248
Consists of:
2 - Coil
4 - Insulator, Field Pole
1 - Rivet, Field Series Coil Ground

8-52-341 CONTACT and
COVER GASKET
PACKAGE, SOLENOID . . . . . Part No. 2084 091
Consists of:
1 - Contact, Solenoid
1 - Gasket, Cover
2 - Spring

8-52-342 CONTACT and
SPRING PACKAGE,
SOLENOID SWITCH . . . . . Part No. 2932 814
Consists of:
1 - Contact, Solenoid Switch
2 - Spring
1 - Seal, Solenoid

8-52-344 COVER and GASKET
PACKAGE, SOLENOID . . . . . Part No. 2084 090
Consists of:
1 - Cover
1 - Gasket, Cover

CODE	PART NAME AND PART NUMBER

8-52-345 SOLENOID PACKAGE . . . Part No. 2932 813
Consists of:
1 - Nut, Hex
1 - Seal, Solenoid
1 - Solenoid
3 - Washer

8-52-354 STUD PACKAGE,
TERMINAL RELAY . . . . . Part No. 2084 094
Consists of:
1 - Insulator, Relay Stud
1 - Nut, Hex
1 - Stud
2 - Washer

STUD PACKAGE,
TERMINAL RELAY . . . . . Part No. 2932 815
Consists of:
1 - Nut, Solenoid Ball Stud Sealing
2 - Stud
1 - Washer, Solenoid Relay Stud Insulator

8-55-1 LAMP PACKAGE,
TAILGATE TAIL STOP
and TURN SIGNAL . . . . . Part No. 2932 740-1
Consists of:
1 - 9418 903 Bulb
1 - Housing
1 - Lens and Bezel
4 - J-Nut
4 - Screw, Lens and Bezel to Hsg. Att.
4 - Screw, Hsg. to Panel Att.

LAMP PACKAGE,
TAILGATE TAIL, STOP
and TURN SIGNAL . . . . . Part No. 2932 750-1
Consists of:
1 - 142 450 Bulb, Tail Lamp
1 - 9417 867 Bulb, Tail, Stop and Turn Signal Lamp
1 - Housing
5 - 6023 111 J-Nut
1 - Lens and Bezel
6 - 6027 475 Screw
5 - 9414 743 Screw

LAMP PACKAGE,
QTR. PANEL TAIL,
STOP and TURN
SIGNAL . . . . . Part No. 3420 824-5
Consists of:
1 - 9414 723 Bulb
1 - Housing
1 - 6023 111 J-Nut
1 - Lens
2 - Screw, Bezel Att. (Inboard)
2 - Screw, Bezel Att. (Outboard)
3 - Screw, Hsg. Att.
1 - Screw, Hsg. Mtg. (Top)

LAMP PACKAGE,
TAILGATE TAIL,
STOP and TURN
SIGNAL . . . . . Part No. 3420 840-1
Consists of:
1 - 9417 867 Bulb
1 - Housing
4 - 6014 023 J-Nut
1 - Lens and Bezel
4 - Screw, Hsg. to Panel Att.
4 - Screw, Lens and Bezel to Hsg. Att.

8-55-194 LENS and GASKET
PACKAGE, TAIL, STOP
and TURN SIGNAL
LAMP . . . . . Part No. 2932 738-9
2932 742-3
2932 746-7
2932 752-3
2932 792-3
2932 824-5
3420 556-7
3420 586-7
3420 592-3
3420 596-7
3420 616-7
3420 620-1
3420 622-3
3420 626-7
3420 706-7
3420 716-7
3420 718-9
3420 720-1
3420 738-9
3420 784-5
3420 818-9
3420 836-7
3420 856-7
3420 860-1
3514 258-9
3514 260-1
#3514 268-9
#3514 270-1
#3514 316-7
#3514 318-9
#3514 322-3
#3514 340-1
#3514 352-3
#3514 356-7
#3514 358-9
#3514 362-3
#3514 364-5
#3514 366-7
#3514 368-9
#3514 370-1
#3514 374-5
#3514 392-3
#3514 410-1
#3514 420-1
#3579 154-5
#3579 230-1
#3579 246-7

Consists of:
1 - Gasket
1 - Lens

CODE	PART NAME AND PART NUMBER

8-55-194 Cont'd.
LENS, FILTER and GASKET PACKAGE, TAIL STOP and TURN SIGNAL LAMP . . . . . Part No. 3420 588-9
3420 590-1

Consists of:
1 - Filter
1 - Gasket
1 - Lens

8-56-1 LAMP PACKAGE, BACK-UP LAMP . . . . . Part No. 3514 254-5
Consists of:
1 - 9417 866 Bulb
1 - Housing
1 - Lens
2 - 9425 250 Screw, Lens Mtg.
2 - 9418 515 Screw, Hsg. Mtg.

8-56-8 LENS and GASKET PACKAGE, BACK-UP LAMP . . . . . Part No. 2932 954
2932 993
3420 581
3420 582-3
3420 594-5
3420 642
3420 728-9
#3514 320-1
#3514 354-5
#3579 728-9
#3620 734

Consists of:
1 - Gasket
1 - Lens

8-57-54 LENS and GASKET PACKAGE, LICENSE LAMP . . . . . Part No. 2585 174
3420 839

Consists of:
1 - Gasket
1 - Lens

9-01-5 GASKET SET, ENGINE . . . . Part No. 3004 839
Consists of:
1 - 1947 554 Gasket, Chain Case Cover
1 - 2843 182 Gasket, Cylinder Head
1 - 2121 244 Gasket, Cylinder Head Cover
1 - 2899 250 Gasket, Cylinder Head Cover
1 - 1947 671 Gasket, Cylinder Water Outlet Elbow
1 - 2465 391 Gasket, Exhaust Pipe Flange
1 - 2843 770 Gasket, Fuel Pump Flange
1 - 1947 762 Gasket, Intake and Exhaust Manifold
1 - 2843 279 Gasket, Intake to Exhaust Manifold
1 - 1947 793 Gasket, Oil Pan, Front
1 - 2205 801 Gasket, Oil Pan, Rear
1 - 1947 678 Gasket, Oil Pan, Left
1 - 1947 677 Gasket, Oil Pan, Right
1 - 618 622 Gasket, Oil Pressure Relief Valve Cap
1 - 2121 404 Gasket, Oil Pump Body
1 - 1947 521 Gasket, Water Pump Body
1 - 1947 523 Gasket, Water Pump Intermediate Plate
1 - 2899 531 Seal, Chain Case Cover Oil
2 - 1821 391 Seal, Crankshaft Bearing Oil
2 - 1947 558 Seal, Crankshaft Bearing Oil Seal Retainer
6 - 2205 959 Shield, Exhaust Valve Stem Oil
6 - 2205 801 Shield, Intake Valve Stem Oil

GASKET SET, ENGINE . . . Part No. 3420 241
Consists of:
1 - 2129 012 Gasket, Chain Case Cover
2 - 2806 984 Gasket, Cylinder Head
2 - 2463 290 Gasket, Cylinder Head Cover
1 - 50 082 Gasket, Cylinder Water Outlet
1 - 2951 285 Gasket, Exhaust Manifold, w/Heat Shield, Left
1 - 2843 770 Gasket, Fuel Pump Flange
1 - 1326 836 Gasket, Ignition Distributor
2 - Gasket, Intake Manifold
1 - Gasket, Intake Manifold, Front
1 - Gasket, Intake Manifold, Rear
2 - Gasket, Oil Pan
2 - Gasket, Oil Pan, End
1 - 2129 013 Gasket, Water Pump Body
1 - 6027 245 "O" Ring, Ignition Distributor Housing
1 - 2875 923 "O" Ring, Ignition Distributor Housing
1 - 2899 532 Oil Seal, Chain Case Cover
1 - Seal, Crankshaft Bearing No. 5 Oil, Left
1 - Seal, Crankshaft Bearing No. 5 Oil, Right
2 - Seal, Crankshaft Bearing Oil
1 - Sealer, Intake Manifold End Gasket
16 - 2205 958 Sheild, Valve Stem Oil

GASKET SET, ENGINE . . . . . Part No. 3004 615
Consists of:
2 - 1821 170 Gasket, Air Cleaner to Carburetor
2 - 2780 629 Gasket, Carburetor Flange
1 - 2264 794 Gasket, Chain Case Cover
2 - 2468 010 Gasket, Cylinder Head
2 - 2780 566 Gasket, Cylinder Head Cover
1 - 50 082 Gasket, Cylinder Water Outlet Elbow
2 - 2780 534 Gasket, Exhaust Manifold
1 - 2843 770 Gasket, Fuel Pump Flange
2 - 2780 614 Gasket, Heat Tube
2 Gasket, Intake Manifold
1 - 2780 614 Gasket, Intake Manifold Exhaust Pipe
2 - Gasket, Intake Manifold End
1 - 2780 680 Gasket, Intake Manifold Plug
1 - 1326 836 Gasket, Ignition Distributor
1 - 2658 685 Gasket, Oil Pan
1 - Gasket, Oil Pump Body
1 - 618 622 Gasket, Oil Pressure Relief Valve Cap
1 - 1737 705 Gasket, Water Pump Body
2 - 1737 761 Gasket, Water Pump Housing to Cylinder Block
1 - 2536 481 Seal, Case Cover Oil
2 - Seal, Crankshaft Bearing Oil
2 - Seal, Crankshaft Bearing Retainer
16 - Seal, Intake and Exhaust Valve Stem Oil
1 - 1855 328 Seal, Oil Pump Body
1 - 2268 921 Seal, Oil Pump Cover, Large
1 - Seal, Oil Pump Cover, Small
8 - 2899 547 Shield, Intake Valve Stem Oil
8 - 2899 548 Shield, Exhaust Valve Stem Oil

Printed in U.S.A.
January 1972

CODE	PART NAME AND PART NUMBER

9-01-5 GASKET SET, ENGINE.....Part No. 3420 029
Consists of:
2 - 2806 984 Gasket, Cylinder Head
2 - 2463 290 Gasket, Cylinder Head Cover
1 - 2129 012 Gasket, Chain Case Cover
1 - 50082 Gasket, Cylinder Water Outlet
2 - 1618 681 Gasket, Oil Pan
2 - Gasket, Oil Pan, End
1 - 2129 013 Gasket, Water Pump Body
1 - 2843 770 Gasket, Fuel Pump Body
1 - 1326 836 Gasket, Ignition Distributor
2 - Gasket, Intake Manifold
1 - Gasket, Intake Manifold, Front
1 - Gasket, Intake Manifold, Rear
16 - 2205 958 Shield, Valve Stem Oil
1 - Seal, Crankshaft Bearing #5 Cap Oil, Rt.
1 - Seal, Crankshaft Bearing #5 Cap Oil, Lt.
1 - 2899 532 Assy, Chain Case Cover Oil Seal
1 - Seal, Crankshaft Bearing Oil
1 - 6027 245 O-Ring, Ignition Dist. Housing
1 - 2875 923 O-Ring, Ignition Dist. Housing
1 - Sealer, Intake Manifold End Gasket

9-01-5 GASKET SET, ENGINE.....Part No. 3514 166
Consists of:
2 - 3512 260 Gasket, Cylinder Head
2 - 2658 646 Gasket, Cylinder Head Cover
1 - 1851 664 Gasket, Intake Manifold
1 - 618 622 Gasket, Oil Pressure Relief Valve Cap
1 - 2843 770 Gasket, Fuel Pump Flange
1 - 50 082 Gasket, Cylinder Water Outlet Elbow
1 - 1737 705 Gasket, Water Pump Body
2 - 1737 761 Gasket, Water Pump to Cylinder Block
1 - 2264 794 Gasket, Chain Case Cover
1 1326 836 Gasket, Ignition Distributor
2 - 2465 391 Gasket, Exhaust Pipe Flange
2 - 2856 029 Gasket, Exhaust Pipe Flange
2 - 2658 685 Gasket, Oil Pan
1 - 1855 327 Gasket, Oil Pump Body
1 - 1855 328 Seal, Oil Pump Body
16 - 2121 686 Shield, Valve Stem Oil
2 - Seal, Crankshaft Bearing Oil
2 - Seal, Crankshaft Bearing Retainer
1 - 2536 481 Assy., Chain Case Cover Oil Seal
1 - 6027 245 O-Ring, Ignition Distributor Housing

9-01-5 GASKET SET, ENGINE.....Part No. 3514 160
Consists of:
1 - 2129 012 Gasket, Chain Case Cover
2 - 2863 493 Gasket, Cylinder Head
2 - 2463 290 Gasket, Cylinder Head Cover
1 - 50 082 Gasket, Cylinder Water Outlet
1 - 2946 105 Gasket, Exhaust Manifold, Left, w/Heat Shield
2 - 2856 029 Gasket, Exhaust Pipe Flange
1 - 2843 770 Gasket, Fuel Pump Flange
2 - Gasket, Intake Manifold
1 - Gasket, Intake Manifold, Front
1 - Gasket, Intake Manifold, Rear
1 - 1326 836 Gasket, Ignition Distributor
2 - 1618 681 Gasket, Oil Pan
2 - 3462 386 Gasket, Oil Pan End
1 - 2129 013 Gasket, Water Pump Body
1 - 6027 245 "O" Ring, Ignition Distributor Housing
1 - 2875 923 "O" Ring, Ignition Distributor Housing
2 - Seal, Crankshaft Bearing Oil
1 - 2899 532 Seal, Chain Case Cover Oil
1 - Seal, Crankshaft Bearing No. 5 Cap Oil Rt.
1 - Seal, Crankshaft Bearing No. 5 Cap Oil Lt.
1 - Sealer, Intake Manifold End Gasket
16 - 2205 958 Shield, Valve Stem Oil

9-01-5 GASKET SET, ENGINE.....Part No. 3549 594
Consists of:
1 - 2129 012 Gasket, Chain Case Cover
2 - 2863 493 Gasket, Cylinder Head
2 - 2951 267 Gasket, Cylinder Head Cover
1 - 50 082 Gasket, Cylinder Water Outlet
2 - 2856 029 Gasket, Exhaust Pipe Flange
1 - 2843 770 Gasket, Fuel Pump Flange
2 - Gasket, Intake Manifold
1 - Gasket, Intake Manifold, Front
1 - Gasket, Intake Manifold, Rear
1 - 1326 836 Gasket, Ignition Distributor
2 - 1618 681 Gasket, Oil Pan
2 - 3462 386 Gasket, Oil Pan End
2 - 1828 142 Gasket, Oil Pan End
1 - 2129 013 Gasket, Water Pump Body
1 - 6027 245 "O" Ring Ignition Distributor Housing
1 - 2875 923 "O" Ring Ignition Distributor Housing
2 - Seal, Crankshaft Bearing Oil
1 - 2899 532 Seal, Chain Case Cover Oil
1 - Seal, Crankshaft Bearing No. 5 Cap Oil Rt.
1 - Seal, Crankshaft Bearing No. 5 Cap Oil Lt.
1 - Sealer, Intake Manifold End Gasket
16 - 2205 958 Shield, Valve Stem Oil

9-01-5 GASKET SET, ENGINE.....Part No. 3514 158
Consists of:
1 - 2129 012 Gasket, Chain Case Cover
2 - 2806 984 Gasket Cylinder Head
2 - 2463 290 Gasket, Cylinder Head Cover
1 - 50 082 Gasket, Cylinder Water Outlet
1 - 2951 285 Gasket, Exhaust Manifold, w/Heat Shield
1 - 2843 770 Gasket, Fuel Pump Flange
2 - Gasket, Intake Manifold
1 - Gasket, Intake Manifold, Front
1 - Gasket, Intake Manifold, Rear
1 - 1326 836 Gasket, Ignition Distributor
2 - 1618 681 Gasket, Oil Pan
2 - 3462 386 Gasket, Oil Pan, End
1 - 2129 013 Gasket, Water Pump Body
2 - Seal, Crankshaft Bearing Oil
1 - 2899 532 Seal, Chain Case Cover Oil
1 - Seal Crankshaft Bearing No. 5 Cap Oil Rt.
1 - Seal, Crankshaft Bearing No. 5 Cap Oil Lt.
1 - Sealer, Intake Manifold End Gasket
1 - 6027 245 "O" Ring, Ignition Distributor Housing
1 - 2875 923 "O" Ring, Ignition Distributor Housing
16 - 2205 958 Shield, Valve Stem Oil

9-01-5 GASKET SET, ENGINE.....Part No. 3514 159
Consists of:
1 - 2129 012 Gasket, Chain Case Cover
2 - 2806 984 Gasket, Cylinder Head
2 - 2463 290 Gasket, Cylinder Head Cover
1 - 3491 023 Gasket, Cylinder Head Cover Oil Fill Pipe
1 - 50 082 Gasket, Cylinder Water Outlet
1 - 2843 770 Gasket, Fuel Pump Flange

CODE	PART NAME AND PART NUMBER
9-01-5 Cont'd.	
2 -	Gasket, Intake Manifold
1 -	Gasket, Intake Manifold, Front
1 -	Gasket, Intake Manifold, Rear
1 - 1326 836	Gasket, Ignition Distributor
2 - 1618 681	Gasket, Oil Pan
2 -	Gasket, Oil Pan End
1 - 2129 013	Gasket, Water Pump Body
2 -	Seal, Crankshaft Bearing Oil
1 - 2899 532	Seal, Chain Case Cover Oil
1 -	Seal, Crankshaft Bearing No. 5 Cap Oil Rt.
1 -	Seal, Crankshaft Bearing No. 5 Cap Oil Lt.
1 -	Sealer, Intake Manifold End Gasket
1 - 6027 245	"O" Ring, Ignition Distributor Housing
1 - 2875 923	"O" Ring Ignition Distributor Housing
16 - 2205 958	Shield
9-01-5 GASKET SET, ENGINE . . . . . Part No. 3420 231	
Consists of:	
2 - 2863 225	Gasket, Cylinder Head
2 - 2658 646	Gasket, Cylinder Head Cover
1 - 2899 299	Gasket, Intake Manifold
1 - 2843 770	Gasket, Fuel Pump Flange
2 - 2658 685	Gasket, Oil Pan
1 - 50 082	Gasket, Cylinder Water Outlet Elbow
1 - 1737 705	Gasket, Water Pump Body
2 - 1737 761	Gasket, Water Pump to Cylinder Block
1 - 2264 794	Gasket, Chain Case Cover
1 - 1326 836	Gasket, Ignition Distributor
2 - 2465 391	Gasket, Exhaust Pipe Flange
2 - 2856 029	Gasket, Exhaust Pipe Flange
1 - 618 622	Gasket, Oil Pressure Relief Valve Cap
1 - 1855 327	Gasket, Oil Pump Body
1 - 1855 328	Seal, Oil Pump Body
16 - 2121 686	Shield, Valve Stem Oil
2 -	Seal, Crankshaft Bearing Oil
2 -	Seal, Crankshaft Bearing Retainer
1 - 2536 481	Assy., Chain Case Cover Oil Seal
1 - 6027 245	O-Ring, Ignition Dist. Housing
9-01-5 GASKET SET, ENGINE . . . . . Part No. 3549 592	
Consists of:	
2 - 2806 984	Gasket, Cylinder Head
2 - 2951 267	Gasket, Cylinder Head Cover
1 - 2129 012	Gasket, Chain Case Cover
1 - 50 082	Gasket, Cylinder Water Outlet
2 -	Gasket, Oil Pan
2 -	Gasket, Oil Pan, End
2 -	Gasket, Oil Pan, End
1 - 2129 013	Gasket, Water Pump Body
1 - 2843 770	Gasket, Fuel Pump Flange
1 - 1326 836	Gasket, Ignition Distributor
2 -	Gasket, Intake Manifold
1 -	Gasket, Intake Manifold, Front
1 -	Gasket, Intake Manifold, Rear
16 - 2205 958	Shield, Valve Stem Oil
1 -	Seal, Crankshaft Bearing No. 5 Cap Oil, Rt.
1 -	Seal, Crankshaft Bearing No. 5 Cap Oil, Lt.
2 -	Seal, Crankshaft Bearing Oil
1 - 2899 532	Assy., Chaincase Cover Oil Seal
1 - 6027 245	O-Ring, Ignition Distributor Housing
1 - 2875 923	O-Ring, Ignition Distributor Housing
1 -	Sealer, Intake Manifold End Gasket
1 - 3491 023	Gasket, Cylinder Head Cover Oil Filler Pipe

CODE	PART NAME AND PART NUMBER
9-01-5 GASKET SET, ENGINE . . . . . Part No. 3549 596	
Consists of:	
2 - 3512 520	Gasket, Cylinder Head
2 - 2951 267	Gasket, Cylinder Head Cover
1 - 2129 012	Gasket, Chain Case Cover
1 - 50 082	Gasket, Cylinder Water Outlet
2 -	Gasket, Oil Pan
1 -	Gasket, Oil Pan, Front
1 -	Gasket, Oil Pan, Rear
1 - 2129 013	Gasket, Water Pump Body
1 - 2843 770	Gasket, Fuel Pump Flange
1 - 1326 836	Gasket, Ignition, Distributor
2 -	Gasket, Intake Manifold
1 -	Gasket, Intake Manifold, Front
1 -	Gasket, Intake Manifold, Rear
16 - 2205 958	Shield, Valve Stem Oil
1 -	Seal, Crankshaft Bearing No. 5 Cap Oil, Rt.
2 -	Seal, Crankshaft Bearing No. 5 Cap Oil, Lt.
2 -	Seal, Crankshaft Bearing Oil
1 - 2899 532	Assy., Chain Case Cover Oil Seal
1 -	Sealer, Intake Manifold End Gasket
2 - 2856 029	Gasket, Exhaust Pipe Flange
9-10-2 OIL SEAL PACKAGE, CRANKSHAFT REAR BEARING NO. 5 CAP . . . . . Part No. 1326 091	
Consists of:	
2 -	Oil Seal Bearing
1 -	Oil Seal Bearing Cap, Right
1 -	Oil Seal Bearing Cap, Left
9-11-1 OIL SEAL PACKAGE, CRANKSHAFT REAR BEARING . . . . . Part No. 1326 093	
Consists of:	
2 -	Oil Seal, Bearing
1 -	Oil Seal, Bearing Cap, Right
1 -	Oil Seal, Bearing Cap, Left
OIL SEAL PACKAGE, CRANKSHAFT REAR BEARING . . . . . Part No. 2275 365	
Consists of:	
2 -	Oil Seal, Rear Bearing
2 -	Oil Seal, Rear Bearing Retainer
9-11-1 OIL SEAL PACKAGE, CRANKSHAFT REAR BEARING . . . . . Part No. 3549 392	
Consists of:	
2 -	Seal, Crankshaft Bearing Oil
1 -	Seal, Crankshaft Bearing Cap No. 5 Oil, Rt.
1 -	Seal, Crankshaft Bearing Cap No. 5 Oil, Lt.
9-39-1 PACKAGE, VALVE GRIND GASKET . . . . . Part No. 3420 242	
Consists of:	
2 - 2806 984	Gasket, Cylinder Head
2 - 2463 290	Gasket, Cylinder Head Cover
2 - 2536 514	Gasket, Intake Manifold
1 - 2806 095	Gasket, Intake Manifold Front
1 - 2806 096	Gasket, Intake Manifold, Rear
1 - 2951 285	Gasket, Left, w/Heat Shield, Exhaust Manifold

Printed in U.S.A.
January 1972

CODE	PART NAME AND PART NUMBER

9-39-1 Cont'd.
1 - 3462 388 Sealer, Intake Manifold End Gasket
16-2205 958 Shield, Valve Stem Oil

9-39-1 PACKAGE VALVE
GRIND GASKET, ... Part No. 3420 030
Consists of:
2 - 2806 984 Gasket, Cylinder Head
2 - 2463 290 Gasket, Cylinder Head Cover
1 - 3491 023 Gasket, Cylinder Head Cover Oil Fill Pipe
2 - 2536 514 Gasket, Intake Manifold
1 - 2806 095 Gasket, Intake Manifold Front
1 - 2806 096 Gasket, Intake Manifold Rear
1 - 3462 388 Sealer, Intake Manifold End Gasket
16 - 2205 958 Shield, Valve Stem Oil

9-39-1 PACKAGE, VALVE
GRIND GASKET . . . . . Part No. 3420 232
Consists of:
2 - 2863 225 Gasket Cylinder Head
2 - 2658 646 Gasket, Cylinder Head Cover
2 - 2465 391 Gasket, Exhaust Pipe Flange
2 - 2856 029 Gasket, Exhaust Pipe Flange
1 - 2899 299 Gasket, Intake Manifold
2 - 1737 761 Gasket, Water Pump to Cylinder Block
16-2121 686 Shield, Valve Stem Oil

9-39-1 PACKAGE, VALVE
GRIND GASKET . . . . . Part No. 3514 167
Consists of:
2 - 3512 260 Gasket, Cylinder Head
2 - 2658 646 Gasket, Cylinder Head Cover
2 - 2465 391 Gasket, Exhaust Pipe Flange
2 - 2856 029 Gasket, Exhaust Pipe Flange
1 - 1851 664 Gasket, Intake Manifold
2 - 1737 761 Gasket, Water Pump to Cylinder Block
16-2121 686 Shield, Valve Stem Oil

9-39-1 PACKAGE, VALVE
GRIND GASKET . . . . . Part No. 3004 726
Consists of:
2 - 2863 493 Gasket, Cylinder Head
2 - 2463 290 Gasket, Cylinder Head Cover
2 - Gasket, Intake Manifold
1 - Gasket, Intake Manifold, Frt.
1 - Gasket, Intake Manifold, Rear
1 - 2946 105 Assy., Exhaust Manifold Gasket Lt & Heat Shield
16 - 2205 958 Shield, Valve Stem Oil
2 - 2856 029 Gasket, Exhaust Pipe Flange
1 - Sealer, Intake Manifold End Gasket

9-39-1 PACKAGE, VALVE
GRIND GASKET . . . . . Part No. 3514 167
Consists of:
1 - 1851 664 Gasket, Intake Manifold
2 - 3512 260 Gasket, Cylinder Head
2 - 2658 646 Gasket, Cylinder Head Cover
2 - 1737 761 Gasket, Water Pump to Cyl. Block
2 - 2465 391 Gasket, Exhaust Pipe Flange
2 - 2856 029 Gasket, Exhaust Pipe Flange
16 - 2121 686 Shield, Valve Stem Oil

CODE	PART NAME AND PART NUMBER

9-39-1 PACKAGE, VALVE
GRIND GASKET . . . . . Part No. 3549 597
Consists of:
2 - 3512 520 Gasket, Cylinder Head
2 - Gasket, Cylinder Head Cover
2 - Gasket, Intake Manifold
1 - Gasket, Intake Manifold, Frt.
1 - Gasket, Intake Manifold, Rear
16 - 2205 958 Shield, Valve Stem Oil
1 - Sealer, Intake Manifold End Gasket
2 - 2856 029 Gasket, Exhaust Pipe Flange

9-39-1 PACKAGE, VALVE
GRIND GASKET . . . . . Part No. 3549 595
Consists of:
2 - 3863 493 Gasket, Cylinder Head
2 - Gasket, Cylinder Head Cover
2 - Gasket, Intake Manifold
1 - Gasket, Intake Manifold, Frt.
1 - Gasket, Intake Manifold, Rear
16 - 2205 958 Shield, Valve Stem Oil
2 - 2856 029 Gasket, Exhaust Pipe Flange
1 - Sealer, Intake Manifold End Gasket

9-39-1 PACKAGE, VALVE
GRIND GASKET . . . . . Part No. 3004 840
Consists of:
1 - 2843 182 Gasket, Cylinder Head
1 - 2121 244 Gasket, Cylinder Head Cover
1 - 2899 250 Gasket, Cylinder Head Cover
1 - 1947 761 Gasket, Cylinder Water Outlet Elbow
1 - 2465 391 Gasket, Exhaust Pipe Flange
1 - 1947 762 Gasket, Intake & Exhaust Manifold
1 - 2843 279 Gasket, Intake & Exhaust Manifold
6 - 2205 959 Shield, Exhaust Valve Stem Oil
6 - 2205 958 Shield, Intake Valve Stem Oil
6 - 2205 959 Shield, Exhaust Valve Stem Oil

9-39-1 PACKAGE, VALVE
GRIND GASKET . . . . . Part No. 3549 593
Consists of:
2 - 2806 984 Gasket, Cylinder Head
2 - Gasket, Cylinder Head Cover
2 - Gasket, Intake Manifold
1 - Gasket, Intake Manifold, Front
1 - Gasket, Intake Manifold, Rear
16 - 2205 958 Shield, Valve Stem Oil
1 - Sealer, Intake Manifold End Gasket
1 - 3491 023 Gasket, Cylinder Head Cover Oil Filler Pipe

9-39-1 PACKAGE, VALVE
GRIND GASKET . . . . . Part No. 3004 726
Consists of:
2 - 2863 493 Gasket, Cylinder Head
2 - 2463 290 Gasket, Cylinder Head Cover
2 - Gasket, Intake Manifold
1 - Gasket, Intake Manifold, Frt.
1 - Gasket, intake Manifold, Rear
1 - 2946 105 Assy., Exhaust Manifold Gasket Lt & Heat Shield
16 - 2205 958 Shield, Valve Stem Oil
2 - 2856 029 Gasket, Exhaust Pipe Flange
1 - Sealer, Intake Manifold End Gasket

CODE	PART NAME AND PART NUMBER

9-39-1 PACKAGE, VALVE
GRIND GASKET .....Part No. 3004 616
Consists of:
2 - 1821 170 Gasket, Air Cleaner to Carburetor
2 - 2468 010 Gasket, Cylinder Head
2 - 2780 566 Gasket, Cylinder Head Cover
2 - 2780 629 Gasket, Carburetor Flange
2 - 2780 534 Gasket, Exhaust Manifold
1 - 2780 614 Gasket, Intake Manifold Exhaust Pipe
2 - Gasket, Intake Manifold
2 - Gasket, Intake Manifold End
1 - 2780 680 Gasket, Intake Manifold Plug
2 - 2780 614 Gasket, Heat Tube
8 - 2899 548 Shield, Exhaust Valve Stem Oil
8 - 2899 547 Shield, Intake Valve Stem Oil

9-41-1 PACKAGE, TAPPET
CHAMBER SILENCER .....Part No. 1879 747
Consists of:
1 - Silencer, Front
1 - Silencer, Rear

9-50-1 PACKAGE, INTAKE
MANIFOLD GASKET .....Part No. 3420 027
Consists of:
2 - Gasket, Intake Manifold
1 - Gasket, Intake Manifold, Front
1 - Gasket, Intake Manifold, Rear
1 - Sealer, Intake Manifold End Gasket

9-50-1 PACKAGE, INTAKE
MANIFOLD GASKET .....Part No. 2808 689
Consists of:
2 - Gasket, Intake Manifold
1 - Gasket, Intake Manifold, Front
1 - Gasket, Intake Manifold, Rear
1 - Sealer, Intake Manifold End Gasket

9-50-1 PACKAGE, INTAKE
MANIFOLD GASKET .....Part No. 3514 187
Consists of:
2 - Gasket, Intake Manifold
1 - Gasket, Intake Manifold, Front
1 - Gasket, Intake Manifold, Rear
1 - Sealer, Intake Manifold End Gasket

9-50-1 PACKAGE, INTAKE
MANIFOLD GASKET .....Part No. 2808 306
Consists of:
2 - Gasket, Intake Manifold End
2 - Gasket, Intake Manifold

9-50-1 PACKAGE, INTAKE
MANIFOLD GASKET .....Part No. 3514 186
Consists of:
4 - Gasket, Intake Manifold
1 - Sealer, Intake Manifold End Gasket

9-50-1 GASKET SET,
MANIFOLD .....Part No. 3004 663
Consists of:
1 - Gasket, Intake and Exhaust Manifold
1 - 2843 279 Gasket, Intake to Exhaust

CODE	PART NAME AND PART NUMBER

9-58-1 HEAT CONTROL
VALVE PACKAGE,
MANIFOLD .....Part No. 3420 047
Consists of:
2 - Bushing
1 - Counterweight, Valve
1 - Plate
2 - Seal, Valve Shaft
1 - Shaft
1 - 3462 514 Spring, Valve Shaft Damper
1 - Stop, Valve
1 - Thermostat

9-58-1 PACKAGE, MANIFOLD
HEAT CONTROL VALVE .....Part No. 2808 393
Consists of:
1 - Shaft
1 - Plate
2 - Bushing (Option)
2 - Bushing (Option)
1 - 148 148 Retainer, Shaft
1 - 2843 685 Thermostat
2 - 2806 387 Spring, Valve
1 - 2780 615 Assy., Counterweight
1 - 9418 087 Bolt, Counterweight
1 - Nut, Counterweight Bolt
1 - 2806 151 Lock, Counterweight

9-58-1 PACKAGE, MANIFOLD
HEAT CONTROL VALVE .....Part No. 3420 046
Consists of:
1 - Shaft
1 - Plate
2 - Bushing
1 - Counterweight, Valve (Optional)
1 - Counterweight, Valve (Optional)
1 - Stop Valve
1 - Thermostat
2 - Seal, Valve Shaft
1 - 3462 514 Spring, Valve Shaft Damper

9-58-1 PACKAGE, MANIFOLD
HEAT CONTROL VALVE .....Part No. 3549 398
Consists of:
1 - Plate, Valve
1 - Shaft, Valve
1 - 2946 083 Stop, Valve
1 - Counterweight Valve (Optional)
1 - Counterweight Valve (Optional)
1 - Thermostat, Valve
1 - 2951 626 Spring, Valve Shaft Damper
2 - Bushing, Valve Shaft
2 - Seal, Valve Shaft

9-58-1 PACKAGE, MANIFOLD
HEAT CONTROL VALVE .....Part No. 3420 047
Consists of:
1 - Shaft
1 - Plate
2 - Bushing
1 - Counterweight, Valve (Optional)
1 - Counterweight, Valve (Optional)
1 - 2946 107 Stop Valve
1 - Thermostat
2 - Seal, Valve Shaft
1 - 2951 870 Spring, Valve Shaft Damper

Printed in U.S.A.
January 1972

CODE	PART NAME AND PART NUMBER

9-58-1 PACKAGE, MANIFOLD HEAT CONTROL VALVE.....Part No. 3004 709
Consists of:
1 - Shaft
1 - Plate
2 - Bushing
1 - Counterweight, Valve (Opt. 3418 410)
1 - Thermostat
1 - 2951 626 Spring, Valve Shaft Damper
1 - 2946 083 Stop, Valve
2 - Seal, Valve Shaft
1 - Counterweight, Valve (Opt. 3418 409)

9-58-1 PACKAGE, MANIFOLD HEAT CONTROL VALVE.....Part No. 3004 574
Consists of:
1 - Plate, Valve
1 - Shaft, Valve
1 - 2843 957 Plug, Valve Shaft Hole
1 - 2946 083 Stop, Valve
1 - Counterweight, Valve (Opt. 2951 007)
1 - Thermostat, Valve
1 - 2863 388 Spring, Valve Shaft Damper
1 - Bushing, Valve Shaft Outer (Optional)
1 - Bushing, Valve Shaft Outer (Optional)
1 - Bushing, Valve Shaft Inner
1 - Seal, Valve
1 - Counterweight, Valve (Optional 2863 393)

9-58-1 PACKAGE, MANIFOLD HEAT CONTROL VALVE.....Part No. 3420 045
Consists of:
1 - Shaft
1 - Plate
2 - Bushing
1 - Counterweight, Valve (Optional)
1 - Counterweight, Valve (Optional)
1 - 2946 083 Stop Valve
1 - Thermostat
2 - Seal, Valve Shaft
1 - 3462 514 Spring, Valve Shaft Damper

10-07-2 GASKET AND SEAL PACKAGE, OIL PUMP . . . . . Part No. 2084 355
Consists of:
3 - Gasket
1 - Seal

10-07-3 SHAFT and ROTOR PACKAGE, OIL PUMP DRIVE . . . . . Part No. 2084 354 2084 415
Consists of:
1 - Rotor, Outer
1 - Shaft, Drive

10-07-6 OIL PUMP PACKAGE . . . Part No. 2808 507
Consists of:
1 - 2121 404 Gasket
1 - Pump

OIL PUMP PACKAGE . . . . . Part No. 2808 509 2808 510
Consists of:
1 - Gasket
1 - Pump

10-24-1 GASKET PACKAGE, OIL PAN . . . . . Part No. 3514 157
Consists of:
2 - Gasket, Oil Pan Side
2 - Gasket, Oil Pan End

GASKET PACKAGE, OIL PAN . . . . . Part No. 2240 647
Consists of:
1 - Gasket, Oil Pan, Rt.
1 - Gasket, Oil Pan, Lt.
1 - Gasket, Oil Pan, Front
1 - Gasket, Oil Pan, Rear

10-24-1 GASKET PACKAGE, OIL PAN.....Part No. 3549 388
Consists of:
2 - Gasket, Oil Pan
1 - Gasket, Oil Pan, Front
1 - Gasket, Oil Pan, Rear

10-26-8 CARTRIDGE, OIL FILTER . . . . . Part No. 2532 752
Consists of:
1 - Cartridge
1 - 2532 753 Gasket, Filter Body
1 - 2532 754 Gasket, Filter Cover

13-68-5 GUARD PACKAGE, BUMPER, FRONT .....Part No. 2809 825
Consists of:
2 - 2533 342 Cushion
2 - 2768 588 Guard
4 - 180 122 Bolt
4 - 120 382 L/Washer
6 - 6023 271 Nut w/Washer
4 - 6025 269 P/Washer

13-68-5 GUARD PACKAGE, BUMPER, FRONT .....Part No. 3481 803
Consists of:
1 - 2962 291 Brace
2 - 180 124 Bolt
2 - 2962 290 Cushion
1 - 2962 288-9 Guard
6 - 6023 201 Nut w/Washer
2 - 118 615 Nut w/Washer
4 - 6025 375 Screw w/Washer
2 - 6025 269 P/Washer
2 - 120 382 L/Washer

GUARD PACKAGE, BUMPER, FRONT .....Part No. 3481 805
Consists of:
2 - 2962 342 Cushion
1 - 2962 416-7 Guard
6 - 6023 201 Nut w/Washer
2 - 180 122 Screw w/Washer

CODE	PART NAME AND PART NUMBER

13-68-5 GUARD PACKAGE,
BUMPER, FRONT .....Part No. 3481 807
Consists of:
2 - 2962 342 Cushion
1 - 2962 340-1 Guard
6 - 6023 201 Nut w/Washer
2 - 180 121 Screw w/Washer

GUARD PACKAGE,
BUMPER, FRONT .....Part No. 3481 811
Consists of:
2 - 2962 527 Cushion
2 - 2962 538 Guard
6 - 6023 201 Nut w/Washer
2 - 6022 233 Screw w/Washer
2 - 6022 248 Screw w/Washer

13-68-5 GUARD PACKAGE,
BUMPER, FRONT .....Part No. 3481 813
Consists of:
2 - 2962 527 Cushion
1 - 2962 608-9 Guard
4 - 6023 201 Nut w/Washer
2 - 120 376 Nut w/Washer
2 - 6022 233 Screw w/Washer

GUARD PACKAGE,
BUMPER, FRONT .....Part No. 3481 815
Consists of:
1 - 2962 672-3 Guard
8 - 6023 204 Nut w/Washer

13-68-5 GUARD PACKAGE,
BUMPER, FRONT .....Part No. 3481 817
Consists of:
2 - 2962 772 Cushion
1 - 2962 770-1 Guard
4 - 180 151 Bolt
6 - 6023 201 Nut w/Washer
4 - 131 100 L/Washer
4 - 120 395 P/Washer

13-68-5 GUARD PACKAGE,
BUMPER, FRONT .....Part No. 3420 326
Consists of:
1 - 2962 292 Brace
2 - 180 124 Bolt
2 - 3464 058 Cushion
1 - 3464 056-7 Guard
2 - 118 615 Nut
6 - 6023 201 Nut w/Washer
2 - 120 382 L/Washer
2 - 131 100 L/Washer
2 - 6025 269 P/Washer
4 - 6025 375 Screw w/Washer

GUARD PACKAGE,
BUMPER, FRONT .....Part No. 3620 327
Consists of:
1 - 3464 126 Guard
4 - 6028 880 Nut

CODE	PART NAME AND PART NUMBER

13-68-5 GUARD PACKAGE,
BUMPER, FRONT .....Part No. 3620 328
Consists of:
2 - 3464 162 Cushion
2 - 3464 161 Guard
4 - 180 078 Bolt
6 - 6028 800 Nut
4 - 120 387 P/Washer
4 - 120 214 L/Washer

GUARD PACKAGE,
BUMPER, FRONT .....Part No. 3620 331
Consists of:
1 - 3464 343 Brace
2 - 3464 352 Cushion
2 - 3464 351 Guard
2 - 120 387 P/Washer
2 - 120 214 L/Washer
4 - 131 100 L/Washer
2 - 120 376 Nut
4 - 118 615 Nut
6 - 6023 201 Nut w/Washer
4 - 6025 375 Screw

13-68-5 GUARD, BUMPER
PACKAGE, FRONT .....Part No. 3620 332
Consists of:
1 - 2962 292 Brace
2 - 3464 358 Cushion
2 - 3464 356 Guard
6 - 6023 201 Nut
4 - 118 615 Nut
2 - 120 376 Nut
4 - 6025 375 Screw
4 - 131 100 L/Washer
2 - 120 214 L/Washer

GUARD PACKAGE,
BUMPER, FRONT .....Part No. 3620 337
Consists of:
2 - 3464 710 Guard
10 - 6028 800 Nut

13-68-5 GUARD PACKAGE,
BUMPER, REAR .....Part No. 2809 832
Consists of:
2 - 2533 342 Cushion
2 - 2768 616 Guard
2 - 180 122 Bolt
2 - 120 382 L/Washer
6 - 6023 271 Nut w/Washer
2 - 6025 269 P/Washer

13-68-5 GUARD PACKAGE,
BUMPER, REAR .....Part No. 3481 804
Consists of:
2 - 2962 342 Cushion
1 - 2962 436-7 Guard
6 - 6023 201 Nut w/Washer
2 - 180 122 Screw w/Washer

CODE	PART NAME AND PART NUMBER

13-68-5 Cont'd.
GUARD PACKAGE,
BUMPER, REAR.....Part No. 3481 810
Consists of:
2 - 2962 481 Adapter
2 - 2931 150 Cushion
2 - 2962 483 Guard
2 - 579 719 Bolt
2 - 120 382 L/Washer
6 - 6023 204 Nut w/Washer

13-68-5 GUARD PACKAGE,
BUMPER, REAR.....Part No. 3481 812
Consists of:
2 - 2962 560 Cushion
1 - 2962 564-5 Guard
6 - 6023 201 Nut w/Washer
4 - 180 078 Screw w/Washer

GUARD PACKAGE,
BUMPER, REAR.....Part No. 3481 816
Consists of:
1 - 2962 708-9 Guard
6 - 6023 204 Nut w/Washer

13-68-5 GUARD PACKAGE,
BUMPER, REAR.....Part No. 3481 818
Consists of:
2 - 2962 772 Cushion
2 - 2962 819 Guard
4 - 180 124 Bolt
6 - 6023 201 Nut w/Washer
4 - 6025 269 P/Washer
4 - 120 382 L/Washer

GUARD PACKAGE,
BUMPER, REAR.....Part No. 3481 819
Consists of:
1 - 2962 902-3 Adapter
2 - 2962 898 Cushion
1 - 2962 896-7 Guard
2 - 180 132 Bolt
6 - 6023 201 Nut w/Washer
2 - 118 615 Nut
4 - 6025 269 P/Washer
4 - 120 382 L/Washer

13-68-5 GUARD PACKAGE,
BUMPER, REAR.....Part No. #3620 329
Consists of:
1 - 3464 218 Guard
11 - 6028 800 Nut

GUARD PACKAGE,
BUMPER, REAR.....Part No. #3620 330
Consists of:
1 - 3464 230-1 Guard
16 - 6023 201 Nut w/Washer

GUARD PACKAGE,
BUMPER, REAR.....Part No. #3620 333
1 - 3464 462-3 Brace
2 - 3464 440 Cushion
2 - 3464 438 Guard
4 - 180 124 Bolt
2 - 6025 269 P/Washer
4 - 120 382 L/Washer
6 - 6028 800 Nut
2 - 6025 213 U-Nut
4 - 152 277 U-Nut
4 - 180 079 Screw

13-68-5 GUARD PACKAGE,
BUMPER, REAR.....Part No. #3620 334
Consists of:
1 - 3464 462-3 Brace
2 - 3464 414 Cushion
2 - 3464 412 Guard
4 - 180 124 Bolt
4 - 120 382 L/Washer
6 - 6023 201 Nut w/Washer
2 - 6025 269 P/Washer
4 - 152 277 U-Nut
2 - 6025 513 U-Nut
4 - 180 079 Screw

GUARD PACKAGE,
BUMPER, REAR.....Part No. #3620 335
Consists of:
1 - 3464 564-5 Cushion
1 - 3454 562-3 Guard
4 - 181 113 Bolt
4 - 6025 269 P/Washer
4 - 120 382 L/Washer
6 - 6023 201 Nut w/Washer

13-68-5 GUARD PACKAGE,
BUMPER, REAR.....Part No. #3620 336
Consists of:
2 - 2962 772 Cushion
2 - 3464 919 Guard
2 - 3464 924 Bracket
2 - 180 124 Bolt
4 - 6025 269 P/Washer
4 - 120 382 L/Washer
2 - 118 615 Nut
6 - 6023 201 Nut w/Washer

GUARD PACKAGE,
BUMPER, REAR.....Part No. #3620 338
Consists of:
1 - 3464 694 Guard
12 - 6028 800 Nut

13-72-4 BAR and BASE
PACKAGE, BUMPER
JACK.....Part No. 2808 641
2932 519
3419 940
Consists of:
1 - Bar
1 - Base

17-15-25 CLIP and CLAMP PACKAGE,
REAR SPRING ALIGNMENT
INSULATOR.....Part No. 2808 399
Consists of:
1 - Clamp
1 - Clip
1 - 1829 929 Insulator

CODE	PART NAME AND PART NUMBER

17-16-1 SHACKLE and BUSHING PACKAGE, REAR SPRING . . Part No. 3004 822
Consists of:
4 - 1940 725 Bushing, Shackle
2 - 118 615 Nut, Shackle Pin
1 - Plate, Shackle
1 - Shackle w/Pin

SHACKLE and BUSHING PACKAGE, REAR SPRING . . Part No. 3514 980
Consists of:
4 - 2403 154 Bushing, Shackle
1 - Insert, Shackle Bushing
2 - 271 502 Nut, Shackle Bolt
1 - Plate, Shackle-Loose
1 - Shackle, w/Pin

SHACKLE and BUSHING PACKAGE, REAR SPRING . . . . . Part No. 3004 823
3420 118
Consists of:
4 - 1400 269 Bushing, Shackle
2 - 271 502 Nut, Shackle Pin
1 - Plate, Shackle
1 - Shackle w/Pin

SHACKLE and BUSHING PACKAGE, REAR SPRING . . . . . Part No. 3004 824
#3514 978
#3514 979
Consists of:
4 - 1400 269 Bushing, Shackle
1 - Insert, Shackle Bushing
2 - 271 502 Nut, Shackle Pin
1 - Plate, Shackle
1 - Shackle, w/Pin

17-23-3 ABSORBER and BUSHING PACKAGE, FRONT SHOCK . . . . . Part No. 2525 460
2525 461
2808 378
2808 379
3004 960
3004 961
3004 777
3004 778
Consists of:
1 - Absorber
1 - 2206 923 Bushing

ABSORBER and BUSHING PACKAGE, FRONT SHOCK . . . . . Part No. 3004 958
3004 959
Consists of:
1 - Absorber
1 - 2206 923 Bushing
1 - 2206 925 Washer

19-01-3 OVERHAUL PACKAGE, STEERING . . . . . Part No. 2525 481
Consists of:
2 - 2126 760 Bearing, Steering Gear Shaft
2 - 2072 060 Bearing, Steering Gear Worm Thrust
2 - 2127 097 Cup, Steering Gear Worm Thrust Bearing
1 - 2267 468 Gasket, Steering Gear Shaft Cover
1 - Seal, Steering Gear Shaft Oil
1 - 2267 156 Seal, Steering Gear Worm Shaft
1 - Shim, Steering Gear Shaft Adjusting Screw
1 - Shim, Steering Gear Shaft Adjusting Screw
1 - Shim, Steering Gear Shaft Adjusting Screw

OVERHAUL PACKAGE, STEERING . . . . . Part No. 2808 419
Consists of:
2 - 2072 060 Bearing, Strg. Worm Thrust
2 - 2267 128 Bushing, Strg. Gear Shaft
2 - 2127 097 Cup, Strg. Gear Worm Thrust Bearing
1 - 2127 108 Gasket, Strg. Gear Shaft Cover
1 - 2127 154 Seal, Strg. Gear Shaft Oil
1 - 2267 156 Seal, Strg. Gear Worm Shaft
1 - Washer, Strg. Gear Shaft Adjusting Screw
1 - Washer, Strg. Gear Shaft Adjusting Screw
1 - Washer, Strg. Gear Shaft Adjusting Screw

OVERHAUL PACKAGE, STEERING . . . . . Part No. 2808 420
Consists of:
3 - 2126 890 Bearing, Strg. Gear Shaft
2 - 2072 060 Bearing, Strg. Gear Worm Thrust
2 - 2127 097 Cup, Strg. Gear Worm Thrust Bearing
1 - 2127 108 Gasket, Strg. Gear Shaft Cover
1 - 2127 154 Seal, Strg. Gear Shaft Oil
1 - 2267 156 Seal, Strg. Gear Worm Shaft
1 - Washer, Strg. Gear Shaft Adjusting Screw
1 - Washer, Strg. Gear Shaft Adjusting Screw
1 - Washer, Strg. Gear Shaft Adjusting Screw

19-01-4 "O" RING and SEAL PACKAGE, POWER STEERING GEAR . . . . . Part No. 3004 996
Consists of:
1 - 1733 724 Gasket, Valve Housing Plug
1 - 1733 602 "O" Ring, Column Support
2 - 1733 562 "O" Ring, Cylinder Head
1 - 1486 205 "O" Ring, Cylinder Head Ferrule
1 - 1316 849 "O" Ring, Housing (up to jobs)
1 - 1823 150 "O" Ring, Housing (after jobs)
2 - 1556 385 "O" Ring, Housing Port
1 - 1536 268 "O" Ring, Pressure Control Valve
1 - 1822 149 "O" Ring, Reaction, Lower
1 - 2537 716 "O" Ring, Shaft Cover
1 - 1733 615 "O" Ring, Shaft Cover
1 - 1733 612 "O" Ring, Valve Housing
1 - 1822 151 Seal, Reaction, Upper

Printed in U.S.A.
January 1972

CODE	PART NAME AND PART NUMBER

19-01-4 Cont'd.

1 - 1822 203 Seal, Shaft Adjusting Screw
1 - Seal, Shaft Dust
1 - 2537 153 Seal, Shaft Oil
1 - 1822 324 Seal, Worm Shaft, Inner

"O" RING and SEAL
PACKAGE, POWER
STEERING GEAR . . . . . Part No. 3004 997
Consists of:
1 - 1733 724 Gasket, Valve Housing Plug
1 - 1733 602 "O" Ring, Column Support
2 - 1733 562 "O" Ring, Cylinder Head
1 - 1486 205 "O" Ring, Cylinder Head Ferrule
1 - 1316 849 "O" Ring, Housing (up to jobs)
1 - 1823 150 "O" Ring, Housing (after jobs)
2 - 1556 385 "O" Ring, Housing Port
1 - 1536 268 "O" Ring, Pressure Control Valve
1 - 1823 091 "O" Ring, Reaction, Lower
1 - 1733 615 "O" Ring, Shaft Cover
1 - 2537 716 "O" Ring, Shaft Cover
1 - 1733 612 "O" Ring, Valve Housing
1 - 1733 593 Seal, Reaction, Upper
1 - 1822 203 Seal, Shaft Adjusting Screw
1 - 2267 350 Seal, Shaft Dust
1 - 2537 153 Seal, Shaft Oil
1 - 1822 324 Seal, Worm Shaft, Inner

"O" RING and SEAL
PACKAGE, POWER
STEERING GEAR . . . . . Part No. 3004 998
Consists of:
1 - 1733 724 Gasket, Valve Housing Plug
1 - 1733 602 "O" Ring, Column Support
2 - 1733 562 "O" Ring, Cylinder Head
1 - 1486 205 "O" Ring, Cylinder Head Ferrule
1 - 1823 150 "O" Ring, Housing
2 - 1556 385 "O" Ring, Housing Port
1 - 1536 268 "O" Ring, Pressure Control Valve
1 - 1822 149 "O" Ring, Reaction, Lower
1 - 1733 615 "O" Ring, Shaft Cover
1 - 2537 716 "O" Ring, Shaft Cover
1 - 1733 612 "O" Ring, Valve Housing
1 - 1822 151 Seal, Reaction, Upper
1 - 1822 203 Seal, Shaft Adjusting Screw
1 - 2267 351 Seal, Shaft Dust
1 - 2537 154 Seal, Shaft Oil
1 - 1822 324 Seal, Worm Sleeve

19-19-1 SEAL PACKAGE, STEERING
GEAR SHAFT COVER . . . . . Part No. 3004 995
Consists of:
1 - 2537 716 "O" Ring, Cover
1 - 1822 203 Seal, Shaft Adjusting Screw

19-19-40 WASHER PACKAGE,
STEERING GEAR SHAFT
ADJUSTING SCREW . . . . . Part No. 2279 961
Consists of:
3 - Washer

19-27-2 ARM PACKAGE,
STEERING LINK GEAR . . . . Part No. 3004 807
Consists of:
1 - 2835 827 Arm, Strg. Link Gear
1 - 9425 132 Nut, Strg. Link Gear Arm

CODE	PART NAME AND PART NUMBER

ARM PACKAGE,
STEERING LINK GEAR . . . . Part No. 3004 810
Consists of:
1 - 2835 840 Arm, Strg. Link Gear
1 - 128 005 Nut, Strg. Link Gear Arm

ARM PACKAGE,
STEERING LINK GEAR . . . . . Part No. 3004 811
Consists of:
1 - 2835 835 Arm, Strg. Link Gear
1 - 9425 132 Nut, Strg. Link Gear Arm

ARM PACKAGE,
STEERING LINK GEAR . . . . Part No. 3004 812
Consists of:
1 - 2835 841 Arm, Strg. Link Gear
1 - 128 025 Nut, Strg. Link Gear Arm

ARM PACKAGE,
STEERING LINK GEAR . . . . Part No. 3004 813
Consists of:
1 - 2835 854 Arm Strg. Link Gear
1 - 9425 132 Nut, Strg. Link Gear Arm

19-27-45 BOLT PACKAGE,
STEERING LINK IDLER
ARM BRACKET END . . . . . Part No. 3004 804
Consists of:
1 - 6027 776 Bolt, Strg. Link Idler Arm Bracket End
1 - 128 025 Nut, Strg. Link Idler Arm Bracket Bolt

BOLT PACKAGE,
STEERING LINK IDLER
ARM BRACKET END . . . . . Part No. 3004 805
Consists of:
1 - 6027 777 Bolt, Strg. Link Idler Arm Bracket End
1 - 128 025 Nut, Strg. Link Idler Arm Bracket Bolt

19-48-7 SMALL PARTS PACKAGE,
GEARSHIFT CONTROL . . . . . Part No. 2808 426
Consists of:
2 - 2781 445 Bushing, Gearshift Control Rod Strg. Column Lever
1 - 2208 159 Bushing, Gearshift Control Torque Shaft Bracket
2 - 1137 669 Clip, Gearshift Control Rod Swivel
2 - 1137 669 Clip, Gearshift Control Rod
2 - 2781 444 Grommet, Gearshift Control Rod Strg. Column Lever
1 - 2208 158 Grommet, Gearshift Control Torque Shaft Bracket
1 - 1671 569 Retainer, Gearshift Control Torque Shaft
2 - 2208 172 Spacer, Gearshift Control Torque Shaft
1 - 631 217 Washer, Gearshift Control Rod
4 - 631 217 Washer, Gearshift Control Rod Swivel
2 - 6023 085 Washer, Gearshift Control Torque Shaft Plain
1 - 6023 086 Washer, Gearshift Control Torque Shaft Spring

SMALL PARTS PACKAGE,
GEARSHIFT CONTROL . . . . . Part No. 2808 425

CODE	PART NAME AND PART NUMBER

19-48-7 Cont'd.
Consists of:
2 - 2781 445 Bushing, Gearshift Control Rod Strg. Column Lever
2 - 1137 669 Clip, Gearshift Control Rod Swivel
2 - 1137 669 Clip, Gearshift Control Rod
2 - 2781 444 Grommet, Gearshift Control Rod Strg. Column Lever
2 - 631 217 Washer, Gearshift Control Rod Swivel
2 - 1618 918 Washer, Gearshift Control Rod Swivel
6 - 631 217 Washer, Gearshift Control Rod

SMALL PARTS PACKAGE, GEARSHIFT CONTROL . . . . . Part No. 2808 424
Consists of:
2 - 2781 445 Bushing, Gearshift Control Rod Strg. Column Lever
2 - 1137 669 Clip, Gearshift Control Rod Swivel
2 - 1137 669 Clip, Gearshift Control Rod
2 - 2781 444 Grommet, Gearshift Control Rod Strg. Column Lever
4 - 631 217 Washer, Gearshift Control Rod Swivel
8 - 631 217 Washer, Gearshift Control Rod

SMALL PARTS PACKAGE, GEARSHIFT CONTROL . . . . . Part No. 2808 427
Consists of:
1 - 2208 159 Bushing, Gearshift Control Torque Shaft Bracket
2 - 1137 669 Clip, Gearshift Control Rod Swivel
1 - 2208 158 Grommet, Gearshift Control Torque Shaft Bracket
1 - 1671 569 Retainer, Gearshift Control Torque Shaft
2 - 2208 172 Spacer, Gearshift Control Torque Shaft
1 - 1618 918 Washer, Gearshift Control Rod
2 - 631 217 Washer, Gearshift Control Rod
2 - 631 217 Washer, Gearshift Control Rod Swivel
1 - 1618 918 Washer, Gearshift Control Rod Swivel
2 - 6023 085 Washer, Gearshift Control Torque Shaft, Plain
1 - 6023 086 Washer, Gearshift Control Torque Shaft Spring

19-54-2 PUMP PACKAGE, POWER STEERING . . . . . Part No. 3004 799
Consists of:
1 - 2537 869 "O" Ring, Power Steering Pump Reservoir Flange
1 - 2891 129 Pump, Power Steering
1 - 2127 486 Seal, Power Steering Pump Oil Reservoir Mounting

PUMP PACKAGE, POWER STEERING . . . . . Part No. 3004 800
Consists of:
1 - 2537 869 "O" Ring, Power Steering Pump Reservoir Flange
1 - 2891 130 Pump, Power Steering
1 - 2127 486 Seal, Power Steering Pump Oil Reservoir Mounting

PUMP PACKAGE, POWER STEERING . . . . . Part No. 3004 801
Consists of:
1 - 2537 869 "O" Ring, Power Steering Pump Reservoir Flange
1 - 2891 131 Pump, Power Steering
1 - 2127 486 Seal, Power Steering Pump Oil Reservoir Mounting

19-54-54 PACKAGE, POWER STRG. PUMP ROTATING GROUP . . . . . Part No. 2537 995
Consists of:
1 - Cam
1 - 2537 951 Plate, Front
1 - 2537 627 Plate, Pressure
2 - 1738 681 Ring, Snap
12 - 2537 099 Roller
1 - Rotor

19-58-7 HOSE PACKAGE, POWER STRG. PUMP PRESSURE . . . . . Part No. 3004 833
Consists of:
1 - 2891 082 Hose, Pressure
1 - 1859 445 "O" Ring, Pressure Hose Pump Fitting
1 - 2891 133 Sleeve, Pressure Hose

HOSE PACKAGE, POWER STRG., PUMP PRESSURE . . . . . Part No. 3004 834
Consists of:
1 - 2891 084 Hose, Pressure
1 - 1859 445 "O" Ring, Pressure Hose Pump Fitting
1 - 2891 133 Sleeve, Pressure Hose

HOSE PACKAGE, POWER STRG. PUMP PRESSURE . . . . . Part No. 3004 835
Consists of:
1 - 2891 079 Hose, Pressure
1 - 1859 445 "O" Ring, Pressure Hose Pump Fitting

HOSE PACKAGE, POWER STRG. PUMP PRESSURE . . . . . Part No. 3420 193
Consists of:
1 - 2891 232 Hose, Pressure
1 - 1859 445 "O" Ring, Pressure Hose Pump Fitting

HOSE PACKAGE, POWER STRG. PUMP PRESSURE . . . . . Part No. 3420 194
Consists of:
1 - 2891 214 Hose, Pressure
1 - 1859 445 "O" Ring, Pressure Hose Pump Fitting

HOSE PACKAGE, POWER STRG. PUMP PRESSURE . . . . . Part No. 3004 836
Consists of:
1 - 2891 083 Hose, Pressure
1 - 1859 445 "O" Ring, Pressure Hose Pump Fitting

HOSE PACKAGE, PUMP STRG. PUMP PRESSURE . . . . . Part No. 3004 887
Consists of:
1 - Hose Pressure
1 - 1859 445 "O" Ring, Pressure Hose Pump Fitting

21-01-03 GASKET and SEAL PACKAGE, MANUAL TRANSMISSION . . . . . Part No. 3420 066

CODE	PART NAME AND PART NUMBER

21-01-3 Cont'd.

Consists of:
1 - 1949 346 Gasket, Case, Cover
1 - 2801 692 Seal, Drive Pinion
1 - 1949 361 Gasket, Extension
1 - 672 709 Gasket, Pinion Brg. Retainer
1 - 2400 163 Seal, Yoke
1 - 6025 752 "O" Ring, Speedometer Adapter
1 - 2538 588 Seal, Speedometer Adapter
1 - 2538 571 Ring, Speedometer Seal Retainer
2 - 1949 350 Seal, Gearshift Lever Shaft
1 - 2124 499 Gasket, Main Drive Gear Bearing Retainer

GASKET and SEAL PACKAGE, MANUAL TRANSMISSION . . . . . Part No. 3420 067

Consists of:
1 - 341 008 Gasket, Extension
1 - 2400 300 Seal, Yoke
1 - 2801 692 Seal, Drive Pinion
1 - 2124 499 Gasket, Drive Pinion Brg.
1 - 2801 893 Gasket, Drive Pinion Brg.
1 - 3410 030 Gasket, Gearshift Hsg.
2 - 1536 267 Seal, Gearshift Lever Shaft Oil
1 - 6025 752 "O" Ring, Speedometer Drive Pinion Adapter
1 - 2538 588 Seal, Speedometer Drive Pinion Adapter
1 - 2538 571 Ring, Speedometer Seal Retainer

GASKET and SEAL PACKAGE, MANUAL TRANSMISSION . . . . . Part No. 3420 068

Consists of:
1 - 3410 008 Gasket, Extension
1 - 2400 163 Seal, Yoke
1 - 2801 692 Seal, Drive Pinion
1 - 2124 499 Gasket, Drive Pinion Ret.
1 - 3410 030 Gasket, Gearshift Hsg.
2 - 1536 267 Seal, Gearshift Lever Shaft Oil
1 - 6025 752 Speedometer Drive Pinion Adapter
1 - 2538 588 Seal, Speedometer Drive Pinion Adapter
1 - 2538 571 Ring, Speedometer Seal Retainer

GASKET and SEAL PACKAGE, MANUAL TRANSMISSION . . Part No. 3420 069

Consists of:
1 - 2464 059 Gasket, Extension
1 - 2801 692 Seal, Drive Pinion Bearing
1 - 2124 499 Gasket, Drive Pinion Ret.
1 - 2801 893 Gasket, Drive Pinion Brg.
1 - 2464 037 Gasket, Gearshift Hsg.
1 - 2400 300 Seal, Yoke
1 - 6025 752 "O" Ring, Speedometer Drive Pinion Adapter
1 - 2538 588 Seal, Speedometer Drive Pinion Adapter
1 - 2538 571 Ring, Speedometer Seal Retainer
3 - 1536 267 Seal, Gearshift Lever Shaft Oil
1 - 2464 053 Gasket, Gearshift Lever Detent Spring, Retainer
1 - 1302 807 Gasket, Drive Reverse Lever Detent

GASKET and SEAL, PACKAGE, MANUAL TRANSMISSION . . . . . Part No. 3004 614

Consists of:
1 - 2464 059 Gasket, Extension
1 - 2400 300 Seal, Yoke

CODE	PART NAME AND PART NUMBER

1 - 6027 225 Snap Ring, Drive Pinion Bearing (Outer)
1 - 2801 733 Seal, Drive Pinion Bearing
1 - 2801 893 Gasket, Drive Pinion Bearing Retainer
1 - 2464 037 Gasket, Gearshift Hsg.
1 - 6025 752 "O" Ring, Speedometer Drive Pinion Adapter
1 - 2538 588 Seal, Speedometer Drive Pinion Adapter
1 - 2538 571 Ring, Speedometer Seal Retainer
3 - 1536 267 Seal, Gearshift Lever Shaft Oil
1 - 2464 053 Gasket, Gearshift Lever Detent Spring Retainer
1 - 1302 807 Gasket, Reverse Lever Detent

GASKET and SEAL PACKAGE, AUTOMATIC TRANSMISSION . . . . . Part No. 2808 414

Consists of:
1 - 1942 020 Seal, Torque Conv. Impeller Hub
1 - 1942 021 Seal, Frt. Oil Pump Hsg.
1 - 2124 820 Seal, Frt. Clutch Piston, Inner
1 - 2124 821 Seal, Frt. Clutch Piston, Outer
1 - 1942 054 Seal, Rr. Clutch Piston, Inner
1 - 2124 835 Seal, Rr. Clutch Piston, Outer
1 - 2464 481 Seal, Reverse Servo Piston, Rubber
1 - 2466 548 Seal, Throttle Valve Shaft
1 - 2538 588 Seal, Speedometer Drive Pinion
1 - 2466 842 Seal, Manual Valve Shaft
1 - 1672 358 Seal, Reverse Band Lever Shaft
1 - 2124 846 Gasket, Oil Pump Hsg.
1 - 2466 954 Gasket, Extension
1 - 2464 324 Gasket, Oil Pan
1 - 2400 863 Gasket, Oil Pan Drain Plug
2 - 1942 109 Ring, Governor Support Seal
2 - 2124 813 Ring, Torque Conv. Reaction Shaft Support Seal
2 - 2801 054 Ring, Input Shaft Seal
1 - 1942 123 Ring, Kickdown Servo Piston Seal, Large
1 - 1942 123 Ring, Kickdown Servo Guide Seal
1 - 1942 130 Kickdown Servo Guide Snap
1 - 2124 851 Ring, Kickdown Servo Piston
1 - 6027 153 Ring, Reverse Servo Plug
1 - 1941 831 Ring, Accumulator Piston Seal, Small
1 - 2124 255 Ring, Accumulator Piston Seal, Large
1 - 2538 571 Ring, Speedometer Drive Pinion Retainer Seal
1 - 6022 816 Snap Ring, Output Shaft
1 - 6024 311 Snap Ring, Output Shaft
1 - 6024 312 Snap Ring, Output Shaft
1 - 6025 752 "O" Ring, Speedometer Drive Pinion Retainer
1 - 2400 843 Washer, Output Shaft Thrust
1 - 2400 300 Seal, Yoke
1 - 2801 398 Gasket, Output Shaft Brg. Cover

GASKET and SEAL PACKAGE, AUTOMATIC TRANSMISSION . . . . . Part No. 3420 064

Consists of:
1 - 2124 705 Seal, Torque Conv. Impeller Hub
1 - 2204 709 Seal, Frt. Oil Pump Hsg.
2 - 1942 389 Seal, Torque Conv. Reaction Shaft Support
1 - 1942 390 Gasket, Torque Conv. Reaction Shaft Support
1 - 1942 396 Seal, Frt. Clutch Piston, Inner
1 - 1942 397 Seal, Frt. Clutch Piston, Outer
1 - 1941 831 Seal, Ring Input Shaft
1 - 2538 510 Seal, Rr. Clutch Piston, Inner

CODE	PART NAME AND PART NUMBER

21-01-3 Cont'd.

1 - 2538 695 Seal, Rr. Clutch Piston, Outer
2 - 1942 109 Ring, Governor Support Seal
1 - 2466 954 Gasket, Extension
1 - 2466 548 Seal, Throttle Lever Shaft
1 - 2205 299 Gasket, Oil Pan
1 - 2538 669 Washer, Output Shaft Thrust
1 - 2538 670 Washer, Output Shaft Thrust
1 - 2538 671 Washer, Output Shaft Thrust
1 - 6026 291 Snap Ring, Output Shaft
1 - 1672 287 Ring, Kickdown Servo Piston Seal, Small
1 - 1636 470 Ring, Kickdown Servo Guide
1 - 1636 470 Ring, Kickdown Servo Piston Seal, Large
1 - 1942 486 Ring, Kickdown Servo Snap
1 - 1941 831 Ring, Accumulator Piston Seal, Small
1 - 2124 255 Ring, Accumulator Piston
1 - 2464 462 Seal, Reverse Servo Piston
1 - 6027 153 Ring, Reverse Servo Plug
1 - 2464 464 Ring, Reverse Servo Piston Spring Retainer Snap
2 - 2204 369 Washer, Frt. Clutch Thrust
2 - 2538 515 Washer, Sun Gear Driving Shell Thrust
2 - 3410 540 Plate, Sun Gear Driving Shell Thrust
1 - 6026 289 Snap Ring, Output Shaft
1 - 6026 290 Snap Ring, Output Shaft
1 - 2801 398 Gasket, Output Shaft Brg. Cover
1 - 2400 163 Seal, Yoke
1 - 6025 752 "O" Ring, Speedometer Drive Pinion Adapter
1 - 2538 588 Seal, Speedometer Drive Pinion Adapter
1 - 2538 571 Ring, Speedometer Seal Retainer
1 - 2466 842 Seal, Manual Valve Shaft
1 - 1323 593 Ring, Clutch Retainer Seal
1 - 1556 385 Seal, Reverse Band Reaction
2 - 2801 356 Washer, Sun Gear Driving Shell Thrust

GASKET and SEAL PACKAGE, AUTOMATIC TRANSMISSION . . . . . Part No. 3420 020
Consists of:
1 - 1942 020 Seal, Torque Conv. Impeller Hub
1 - 1942 021 Seal, Frt. Oil Pump Hsg.
1 - 2124 820 Seal, Frt. Clutch Piston, Inner
1 - 2124 821 Seal, Frt. Clutch Piston, Outer
1 - 1942 054 Seal, Rr. Clutch Piston, Inner
1 - 2124 835 Seal, Rr. Clutch Piston, Outer
1 - 2464 481 Seal, Reverse Servo Piston, Rubber
1 - 2466 548 Seal, Throttle Valve Shaft
1 - 2538 588 Seal, Speedometer Drive Pinion
1 - 2466 842 Seal, Manual Valve Shaft
1 - 1672 358 Seal, Reverse Band Lever Shaft
1 - 2124 846 Gasket, Oil Pump Hsg.
1 - 2466 954 Gasket, Extension
1 - 2464 324 Gasket, Oil Pan
1 - 2268 513 Gasket, Oil Pan Drain Plug
2 - 1942 109 Ring, Governor Support Seal
2 - 2124 813 Ring, Torque Conv. Reaction Shaft Support Seal
2 - 2801 054 Ring, Input Shaft Seal
1 - 1942 123 Ring, Kickdown Servo Piston Seal, Large
1 - 1942 123 Ring, Kickdown Servo Guide Seal
1 - 1942 130 Ring, Kickdown Servo Guide Snap
1 - 2124 851 Ring, Kickdown Servo Piston Seal, Small
1 - 6027 153 Ring, Reverse Servo Plug

CODE	PART NAME AND PART NUMBER

1 - 1941 831 Ring, Accumulator Piston Seal, Small
1 - 2124 255 Ring, Accumulator Piston Seal, Large
1 - 2538 571 Ring, Speedometer Drive Pinion Retainer Seal
1 - 6022 816 Ring, Output Shaft Snap
1 - 6024 311 Ring, Output Shaft Snap
1 - 6024 312 Ring, Output Shaft Snap
1 - 6025 752 Ring, Speedometer Drive Pinion Retainer
1 - 2400 300 Seal, Yoke
1 - 2801 398 Gasket, Output Shaft Brg. Cover

GASKET and SEAL PACKAGE, AUTOMATIC TRANSMISSION . . . . . Part No. 3420 092
Consists of:
1 - 2466 842 Seal, Manual Valve Shaft
1 - 2124 705 Seal, Torque Conv. Impeller Hub
1 - 2204 709 Seal, Oil Pump Hsg.
1 - 1942 390 Gasket, Torque Conv. Reaction Shaft Support
1 - 1942 396 Seal, Frt. Clutch Piston, Inner
1 - 1942 397 Seal, Frt. Clutch Piston, Outer
1 - 2538 510 Seal, Rr. Clutch Piston, Inner
1 - 2538 695 Seal, Rr. Clutch Piston, Outer
2 - 1556 385 Seal, Reverse Band Lever Shaft
1 - 2464 462 Seal, Reverse Servo Piston
1 - 2400 163 Seal, Yoke
1 - 2466 954 Gasket, Extension
1 - 2801 398 Gasket, Output Shaft Brg. Cover
1 - 2466 548 Seal, Throttle Lever Shaft
1 - 2205 299 Gasket, Oil Pan
1 - 1316 815 Seal, Oil Filler Tube
1 - 6025 752 "O" Ring, Speedometer Drive Pinion Adapter
1 - 2538 588 Seal, Speedometer Drive Pinion Adapter
1 - 2538 571 Ring, Speedometer Seal Retainer
2 - 3410 572 Washer, Front Clutch Thrust
1 - 2538 696 Washer, Front Annulus Gear Support Thrust
2 - 3410 540 Plate, Sun Gear Drive Shell Thrust
2 - 2801 356 Washer, Sun Gear Drive Shell Thrust
2 - 2538 515 Washer, Sun Gear Drive Shell Thrust
1 - 2538 669 Washer, Output Shaft Thrust
1 - 2538 670 Washer, Output Shaft Thrust
1 - 2538 671 Washer, Output Shaft Thrust

GASKET and SEAL PACKAGE, AUTOMATIC TRANSMISSION . . . . . Part No. 3420 093
Consists of:
1 - 2466 842 Seal, Manual Valve Shaft
1 - 1942 020 Seal, Torque Conv. Impeller Hub
1 - 1942 021 Seal, Oil Pump Hsg.
1 - 2124 846 Gasket, Oil Pump Hsg.
1 - 3410 226 Seal, Frt. Clutch Piston, Inner
1 - 3410 225 Seal, Frt. Clutch Piston, Outer
1 - 1942 054 Seal, Rr. Clutch Piston, Inner
1 - 2124 835 Seal, Rr. Clutch Piston, Outer
1 - 6028 864 Seal, Kickdown Inner Piston
1 - 1672 358 Seal, Reverse Band Lever Shaft
1 - 2464 481 Seal, Reverse Servo Piston
1 - 2400 300 Seal, Yoke
1 - 2801 398 Gasket, Output Shaft Brg. Cover
1 - 2466 954 Gasket, Extension
1 - 2466 548 Seal, Throttle Lever Shaft

CODE	PART NAME AND PART NUMBER

21-01-3 *Cont'd.*

1 - 2464 324 Gasket, Oil Pan
1 - 2268 513 Gasket, Oil Pan Drain Hole
1 - 1316 815 Seal, Oil Filler Tube
1 - 6025 752 "O" Ring, Speedometer Drive Pinion Adapter
1 - 2538 588 Seal, Speedometer Drive Pinion Adapter
1 - 2538 571 Ring, Speedometer Seal Retainer
2 - 2204 622 Washer, Frt. Clutch Thrust, Frt.
1 - 2204 623 Washer, Frt. Clutch Thrust, Frt.
1 - 2400 284 Washer, Frt. Clutch Thrust, Frt.
3 - 1942 081 Washer, Frt. Planet Pinion Carrier Thrust
2 - 2801 060 Washer, Frt. Planet Pinion Carrier Thrust
1 - 1942 080 Plate, Sun Gear Drive Shell Thrust
1 - 2801 568 Washer, Output Shaft Thrust
1 - 2400 580 Plate, Rr. Annulus Gear Thrust

SEALS, GASKETS, THRUST
WASHERS and SNAP RINGS
PACKAGE, AUTOMATIC
TRANSMISSION, COMPLETE . . . . . Part No. 3621 459
Consists of:

1 - 2466 842 Seal, Manual Valve Shaft
1 - 2124 705 Seal, Torque Conv. Impeller Hub
1 - 2204 709 Seal, Oil Pump Hsg.
1 - 1942 390 Gasket, Torque Conv. Reaction Shaft Support
1 - 1942 396 Seal, Frt. Clutch Piston, Inner
2 - 1942 397 Seal, Frt. Clutch Piston, Outer
1 - 2538 510 Seal, Rr. Clutch Piston, Inner
1 - 2538 695 Seal, Rr. Clutch Piston, Outer
2 - 1556 385 Seal, Reverse Band Lever Shaft
1 - 2464 462 Seal, Reverse Servo Piston
1 - 2400 163 Seal, Yoke
1 - 2466 954 Gasket, Extension
1 - 2801 398 Gasket, Output Shaft Brg. Cover
1 - 2466 548 Seal, Throttle Lever Shaft
1 - 2205 299 Gasket, Oil Pan
1 - 1316 815 Seal, Oil Filler Tube
1 - 6025 752 "O" Ring, Speedometer Drive Pinion Adapter
1 - 2538 588 Seal, Speedometer Drive Pinion Adapter
1 - 2538 571 Ring, Speedometer Seal Retainer
2 - 3410 572 Washer, Frt. Clutch Thrust (After)
1 - 2538 696 Washer, Frt. Annulus Gear Support Thrust
2 - 3410 540 Plate, Sun Gear Drive Shell Thrust
2 - 2801 356 Washer, Sun Gear Drive Shell Thrust
2 - 2538 515 Washer, Sun Gear Drive Shell Thrust
1 - 2538 669 Washer, Output Shaft Thrust
1 - 2538 670 Washer, Output Shaft Thrust
1 - 2538 671 Washer, Output Shaft Thrust
1 - 2892 478 Plate, Rear Annulus Gear Thrust
1 - 2204 369 Washer, Front Clutch Thrust (Up To)
2 - 1942 389 Ring Seal, Torque Conv. Reaction Shaft Support
1 - 1942 400 Snap Ring, Frt. Clutch, Inner
1 - 3410 571 Snap Ring, Frt. Clutch, Outer (After)
1 - 1942 421 Snap Ring, Frt. Clutch, Outer (Up To)
1 - 1941 831 Ring Seal, Input Shaft (After)
1 - 1942 397 Ring Seal, Input Shaft (Up To)
1 - 6022 859 Snap Ring, Input Shaft
1 - 1323 593 Ring Seal, Rear Clutch Retainer
1 - 1942 421 Snap Ring, Rear Clutch Retainer
1 - 1942 423 Snap Ring, Rear Clutch Retainer
1 - 2538 617 Snap Ring, Rear Clutch Retainer
1 - 6026 289 Snap Ring, Output Shaft
1 - 6026 290 Snap Ring, Output Shaft
1 - 6026 291 Snap Ring, Output Shaft
1 - 6028 901 Snap Ring, Output Shaft Bearing
2 - 1942 444 Snap Ring, Front Annulus Gear
1 - 6026 278 Snap Ring, Front Annulus Gear Support
1 - 1942 486 Snap Ring, Kickdown Servo
1 - 6028 863 Snap Ring, Kickdown Servo
1 - 2464 464 Snap Ring, Reverse Servo Piston Spring Retainer
2 - 1942 439 Lock Ring, Sun Gear Drive Shell
1 - 1672 287 Ring Seal, Kickdown Servo Piston (Small) (After)
1 - 3410 374 Ring Seal, Kickdown Servo Piston (Small)
2 - 1636 470 Ring Seal, Kickdown Servo Piston (Large)
2 - 3410 372 Ring Seal, Kickdown Servo Piston (Large)
2 - 1942 109 Ring Seal, Governor Support
1 - 6027 271 Snap Ring, Governor Body
1 - 2400 185 Snap Ring, Output Shaft Bearing, Outer
1 - 1626 749 E-Ring, Parking Sprag Rod Swivel Retainer
1 - 2538 034 Snap Ring, Parking Sprag Reaction Plug
1 - 6025 857 Snap Ring, Throttle Valve Lever Shaft
1 - 1941 831 Ring Seal, Accumulator Piston (Small)
1 - 2124 255 Ring Seal, Accumulator Piston (Large)
1 - 1672 287 Ring Seal, Kickdown Servo Piston (Small) (Up To)
1 - 2125 187 Seal, Rear Clutch Piston, Inner (Up To)
1 - 3515 176 Seal, Front Clutch Piston, Inner (After)
1 - 3515 177 Seal, Front Clutch Piston, Outer (After)

SEALS, GASKETS, THRUST
WASHERS and SNAP RINGS
PACKAGE, AUTOMATIC
TRANSMISSION, COMPLETE . . . . . Part No. 3621 460
Consists of:

2 - 2124 813 Ring Seal, Trans. to Reaction Shaft Support (Up To)
2 - 3515 321 Ring Seal, Trans. to Reaction Shaft Support (After)
1 - 2466 842 Seal, Manual Valve Shaft
1 - 1942 020 Seal, Torque Conv. Impeller Hub
1 - 1942 021 Seal, Oil Pump Housing
1 - 2124 846 Gasket, Oil Pump Housing
1 - 3410 226 Seal, Front Clutch Piston, Inner
1 - 3410 225 Seal, Front Clutch Piston, Outer
1 - 1942 054 Seal, Rear Clutch Piston, Inner
1 - 2124 835 Seal, Rear Clutch Piston, Outer
1 - 6028 864 Seal, Kickdown Inner Piston
1 - 1672 358 Seal, Reverse Band Lever Shaft
1 - 2464 481 Seal, Reverse Servo Piston
1 - 2400 300 Seal, Yoke
1 - 2801 398 Gasket, Output Shaft Bearing Cover
1 - 2466 954 Gasket, Extension
1 - 2466 548 Seal, Throttle Lever Shaft
1 - 2464 324 Gasket, Oil Pan
1 - 2268 513 Gasket, Oil Pan Drain Hole
1 - 1316 815 Seal, Oil Filler Tube
1 - 6025 752 "O" Ring, Speedometer Drive Pinion Adapter
1 - 2538 588 Seal, Speedometer Drive Pinion Adapter
1 - 2538 571 Ring, Speedometer Seal Retainer
2 - 2204 622 Washer, Front Clutch Thrust, Front and Rear
1 - 2204 623 Washer, Front Clutch Thrust, Front
1 - 2400 284 Washer, Front Clutch Thrust, Front
3 - 1942 081 Washer, Front Planet Pinion Carrier Thrust

CODE	PART NAME AND PART NUMBER

21-01-3 Cont'd.

2 - 2801 060 Washer, Front Planet Pinion Carrier Thrust
1 - 1942 080 Plate, Sun Gear Drive Shell Thrust
1 - 2801 568 Washer, Output Shaft Thrust
1 - 2400 580 Plate, Rear Annulus Gear Thrust
1 - 2644 764 Seal, Speedometer Cable
1 - 2124 824 Snap Ring, Front Clutch, Inner
1 - 2466 369 Snap Ring, Front Clutch, Inner
1 - 3410 570 Snap Ring, Front Clutch
1 - 3515 212 Snap Ring, Front Clutch
1 - 3515 215 Snap Ring, Front Clutch
2 - 2801 054 Ring Seal, Input Shaft
1 - 2124 872 Snap Ring, Rear Clutch Piston Retainer
1 - 1942 063 Snap Ring, Rear Clutch Retainer
1 - 1942 064 Snap Ring, Rear Clutch Retainer
1 - 1942 065 Snap Ring, Rear Clutch Retainer
1 - 2466 811 Snap Ring, Rear Clutch Retainer
1 - 6022 816 Snap Ring, Output Shaft
1 - 6024 311 Snap Ring, Output Shaft
1 - 6024 312 Snap Ring, Output Shaft
2 - 6025 570 Snap Ring, Output Shaft Bearing
2 - 1736 521 Lock Ring, Sun Gear Drive Shell
1 - 6024 336 Snap Ring, Kickdown Inner Piston
1 - 2124 851 Ring Seal, Kickdown Servo Piston (Small)
2 - 1942 123 Ring Seal, Kickdown Servo Piston (Large)
2 - 1942 130 Snap Ring, Kickdown Servo Guide
2 - 1942 109 Ring Seal, Governor Support
1 - 6022 817 Snap Ring, Governor Body
1 - 2400 320 Snap Ring, Output Shaft Bearing, Outer
1 - 1626 749 "E" Ring, Parking Sprag Rod Swivel Retainer
1 - 2538 034 Snap Ring, Parking Sprag Reaction Plug
1 - 6025 857 Snap Ring, Throttle Valve Lower Shaft
1 - 1941 831 Ring Seal, Accumulator Piston (Small)
1 - 2124 255 Ring Seal, Accumulator Piston (Large)

21-84-4 SHAFT or CABLE PACKAGE, SPEEDOMETER . . . . . Part No. 2448 294
Consists of:
1 - Cable
1 - Tip
1 - Die

21-118-6 ROTOR PACKAGE, FRONT OIL PUMP AUTOMATIC TRANSMISSION . . . . . Part No. 2808 675 2808 685
Consists of:
1 - Rotor, Frt. Oil Pump, Inner
1 - Rotor, Frt. Oil Pump, Outer

21-129-1 REPAIR PACKAGE, Reaction Shaft and Frt. Clutch

21-133-1 REPAIR PACKAGE, AUTOMATIC TRANSMISSION Front Clutch Reaction Shaft . . . . . Part No. 3420 095
Consists of:
1 - 3515 314 Retainer, Frt. Clutch
1 - 3410 225 Seal, Frt. Clutch Piston - Outer
1 - 3410 226 Seal, Frt. Clutch Piston - Inner
1 - 3410 570 Snap Ring, Frt. Clutch - Outer
1 - 3410 814 Retainer, Rr. Clutch Piston
1 - 3410 899 Support, Reaction Shaft
2 - 3515 321 Seal, Reaction Shaft Support

REPAIR PACKAGE, AUTOMATIC TRANSMISSION FRONT CLUTCH REACTION SHAFT . . . . . Part No. 3420 096
Consists of:
1 - 3410 810 Retainer, Frt. Clutch
1 - 3410 225 Seal, Frt. Clutch Piston - Outer
1 - 3410 226 Seal, Frt. Clutch Piston - Inner
1 - 3410 570 Snap Ring, Frt. Clutch - Outer
1 - 3410 814 Retainer, Rr. Clutch Piston
1 - 3410 899 Support, Reaction Shaft
2 - 3515 321 Ring, Reaction Shaft Support Seal

REPAIR PACKAGE, AUTOMATIC TRANSMISSION FRONT CLUTCH REACTION SHAFT . . . . . Part No. 3420 097
Consists of:
1 - 3410 900 Retainer, Frt. Clutch
1 - 3410 225 Seal, Frt. Clutch Piston - Outer
1 - 3410 226 Seal, Frt. Clutch Piston - Inner
1 - 3515 212 Snap Ring, Frt. Clutch
1 - 3515 215 Snap Ring, Frt. Clutch
1 - 3410 814 Retainer, Rr. Clutch Piston
1 - 3410 899 Support, Reaction Shaft
2 - 3515 321 Ring, Reaction Shaft Support Seal

REPAIR PACKAGE, Automatic Transmission FRONT CLUTCH REACTION SHAFT . . . . . Part No. 3420 098
Consists of:
1 - 3515 467 Retainer, Frt. Clutch
1 - 3410 225 Seal, Frt. Clutch Piston - Outer
1 - 3410 226 Seal, Frt. Clutch Piston - Inner
1 - 3515 212 Snap Ring, Frt. Clutch - Outer
1 - 3410 814 Retainer, Rr. Clutch Piston
1 - 3410 899 Support, Reaction Shaft
2 - 3515 321 Ring, Reaction Shaft Support Seal

21-136-228 CAM and RETAINER PACKAGE, OVERRUNNING CLUTCH AUTOMATIC TRANSMISSION . . . . . Part No. 2808 637
Consists of:
1 - Cam
1 - Retainer
7 - 138 212 Screw
1 - Washer

21-138-2 REPAIR PACKAGE, GOVERNOR AUTOMATIC TRANSMISSION . . . . . Part No. 2275 498
Consists of:
1 - Body, Gov.
2 - 1942 109 Ring, Support Seal
1 - 1636 461 Weight, Gov., Outer
1 - 1636 462 Weight, Gov., Inner
1 - 1636 464 Snap Ring, Weight, Inner
1 - 1636 465 Snap Ring, Weight, Outer
1 - 2124 663 Valve, Gov.
1 - 1556 082 Shaft, Gov. Valve
2 - 1638 461 Snap Ring, Valve Shaft
1 - 6022 817 Snap Ring, Gov. Body
2 - 2125 024 Lock, Body Bolt
4 - Bolt, Body
1 - 1949 858 Spring, Gov.

CODE	PART NAME AND PART NUMBER

21-138-2 Cont'd.

REPAIR PACKAGE,
GOVERNOR AUTO-
MATIC TRANSMISSION . . . . . Part No. 2298 514
Consists of:
1 - Body, Gov.
2 - 1942 109 Ring, Support Seal
1 - 1636 461 Weight, Gov., Outer
1 - 1636 462 Weight, Gov., Inner
1 - 1636 464 Snap Ring, Weight, Inner
1 - 1636 465 Snap Ring, Weight, Outer
1 - 2124 663 Valve, Gov.
1 - 1556 082 Shaft, Valve
2 - 1638 461 Snap Ring, Valve Shaft
1 - 6022 817 Snap Ring, Gov. Body
2 - 2125 024 Lock, Body Bolt
4 - Bolt, Body
1 - 1949 859 Spring, Gov.

REPAIR PACKAGE,
GOVERNOR AUTO-
MATIC TRANSMISSION . . . . . Part No. 2585 589
Consists of:
1 - Body, Gov.
2 - 1942 109 Ring, Support Seal
1 - 1636 461 Weight, Gov., Outer
1 - 1636 462 Weight, Gov., Inner
1 - 1636 464 Snap Ring, Weight, Inner
1 - 1636 465 Snap Ring, Weight, Outer
1 - 2124 663 Valve, Gov.
1 - 1556 082 Shaft, Valve
2 - 1638 461 Snap Ring, Valve Shaft
1 - 6022 817 Snap Ring, Body
2 - 2125 024 Lock, Body Bolt
4 - 179 794 Bolt, Body
1 - 2124 662 Spring, Weight

REPAIR PACKAGE,
GOVERNOR AUTO-
MATIC TRANSMISSION . . . . . Part No. 3004 545
Consists of:
1 - Body, Gov.
2 - 1942 109 Ring, Support Seal
1 - 1636 461 Weight, Gov., Outer
1 - 1636 462 Weight, Gov., Inner
1 - 1636 464 Snap Ring, Weight, Inner
1 - 2892 248 Spring, Weight
1 - 2124 663 Valve, Gov.
1 - 1556 082 Shaft, Valve
2 - 1638 461 Snap Ring, Valve Shaft
1 - 6022 817 Snap Ring, Gov. Body
4 - Bolt, Body
2 - 2125 024 Lock, Body Bolt
1 - 1636 465 Snap Ring, Weight, Outer

REPAIR PACKAGE,
GOVERNOR AUTO-
MATIC TRANSMISSION . . . . . Part No. 3004 606
Consists of:
1 - Body, Gov.
2 - 1942 109 Ring, Support Seal
1 - 1636 461 Weight, Gov., Outer
1 - 1636 462 Weight, Gov., Inner
1 - 1636 464 Snap Ring, Weight, Inner
1 - 2124 662 Spring, Gov. Weight
1 - 2124 663 Valve, Gov.
1 - 1556 082 Shaft, Valve
3 - 1638 461 Snap Ring, Valve Shaft
1 - 6027 271 Snap Ring, Gov. Body
4 - Bolt, Body
2 - 2125 024 Lock, Body Bolt
1 - 1636 465 Snap Ring, Weight, Outer

REPAIR PACKAGE,
GOVERNOR AUTO-
MATIC TRANSMISSION . . . . . Part No. 3004 607
Consists of:
1 - Body, Gov.
2 - 1942 109 Ring, Support Seal
1 - 1636 461 Weight, Gov., Outer
1 - 1636 462 Weight, Gov., Inner
1 - 1636 464 Snap Ring, Weight, Inner
1 - 1636 465 Snap Ring, Weight, Outer
1 - 2124 663 Valve, Gov.
1 - 1556 082 Shaft, Valve
3 - 1638 461 Snap Ring, Valve Shaft
1 - 6027 271 Snap Ring, Gov. Body
2 - 2125 024 Lock, Body Bolt
4 - Bolt, Body
1 - 1949 858 Spring, Gov. Weight

REPAIR PACKAGE,
GOVERNOR AUTO-
MATIC TRANSMISSION . . . . . Part No. 2808 362
Consists of:
1 - Body, Gov.
2 - 1942 109 Ring, Support Seal
1 - 1823 726 Weight, Gov., Outer
1 - 2801 257 Weight, Gov., Inner
1 - 1636 464 Snap Ring, Weight, Inner
1 - 1636 465 Snap Ring, Weight, Outer
1 - 2124 663 Valve, Gov.
1 - 1556 082 Shaft, Valve
2 - 1638 461 Snap Ring, Valve Shaft
1 - 6022 817 Snap Ring, Body
2 - 2125 024 Lock, Body Bolt
4 - Bolt, Body
1 - 1949 859 Spring, Weight

REPAIR PACKAGE,
GOVERNOR AUTOMATIC
TRANSMISSION . . . . . Part No. 3621 450
Consists of:
1 - Body, Gov.
2 - 1942 109 Ring, Support Seal
2 - 2125 024 Lock, Body Bolt
4 - Bolt, Body
1 - 6022 817 Snap Ring, Body
1 - 3515 482 Weight, Gov. Inner
1 - 3515 491 Weight, Gov. Outer
1 - 3515 110 Spring, Gov. Weight
1 - 1636 464 Snap Ring, Weight, Inner
1 - 1636 465 Snap Ring, Weight, Outer
1 - 3515 479 Valve, Gov.
1 - 1556 082 Shaft, Valve
1 - 1638 461 Snap Ring, Valve Shaft

REPAIR PACKAGE,
GOVERNOR AUTOMATIC
TRANSMISSION . . . . . Part No. 3621 452
Consists of:
1 - Body, Gov.

CODE	PART NAME AND PART NUMBER

21-138-2 Cont'd.

2 - 1942 109 Ring, Support Seal
2 - 2125 024 Lock, Body Bolt
4 - Bolt, Body
1 - 6022 817 Snap Ring, Body
1 - 3515 478 Weight, Gov., Inner
1 - 1636 461 Weight, Gov., Outer
1 - 3515 110 Spring, Weight
1 - 1636 464 Snap Ring, Weight, Inner
1 - 1636 465 Snap Ring, Weight, Outer
1 - 3515 479 Valve, Gov.
1 - 1556 082 Shaft, Gov. Valve
1 - 1638 461 Snap Ring, Valve Shaft

REPAIR PACKAGE,
GOVERNOR AUTOMATIC
TRANSMISSION . . . . . Part No. 3621 451
Consists of:
1 - Body, Gov.
2 - 1942 109 Ring, Support Seal
2 - 2125 024 Lock, Body Bolt
4 - Bolt, Body
1 - 6022 817 Snap Ring, Body
1 - 3515 478 Weight, Gov., Inner
1 - 1636 461 Weight, Gov., Outer
1 - 3515 085 Spring, Weight
1 - 1636 464 Snap Ring, Weight, Inner
1 - 1636 465 Snap Ring, Weight, Outer
1 - 3515 479 Valve, Gov.
1 - 1556 082 Shaft, Valve
1 - 1638 461 Snap Ring, Valve Shaft

REPAIR PACKAGE,
GOVERNOR AUTOMATIC
TRANSMISSION . . . . . Part No. 3621 453
Consists of:
1 - Body
2 - 1942 109 Seal
2 - 2125 024 Lock
4 - 180 020 Bolt
1 - 6022 817 Snap Ring, Body
1 - 3515 126 Weight, Inner
1 - 3515 491 Weight, Outer
1 - 3515 110 Spring
1 - 1636 464 Snap Ring, Inner
1 - 1636 465 Snap Ring, Outer
1 - 3515 479 Valve
1 - 1556 082 Shaft
2 - 1638 461 Snap Ring, Shaft

REPAIR PACKAGE,
GOVERNOR AUTOMATIC
TRANSMISSION . . . . . Part No. 3621 454
Consists of:
1 - Body
2 - 1942 109 Seal
2 - 2125 024 Lock
4 - 180 020 Bolt
1 - 6027 271 Snap Ring, Body
1 - 1636 461 Weight, Outer
1 - 3515 478 Weight, Inner
1 - 3515 085 Spring
1 - 1636 464 Snap Ring, Inner
1 - 1636 465 Snap Ring, Outer
1 - 3515 479 Valve
1 - 1556 082 Shaft
2 - 1638 461 Snap Ring, Shaft

REPAIR PACKAGE,
GOVERNOR AUTOMATIC
TRANSMISSION . . . . . Part No. 3621 455
Consists of:
1 - Body
2 - 1942 109 Seal
2 - 2125 024 Lock
4 - 180 020 Bolt
1 - 6027 271
1 - 3515 491 Weight, Outer
1 - 3515 482 Weight, Inner
1 - 3515 110 Spring
1 - 1636 464 Snap Ring, Inner
1 - 1636 465 Snap Ring, Outer
1 - 3515 479 Valve
1 - 1556 082 Shaft
2 - 1638 461 Snap Ring, Shaft

21-139-67 VALVE PACKAGE,
REGULATOR AUTO-
MATIC TRANSMISSION . . . . . Part No. 2240 685
Consists of:
1 - Valve, Regulator
1 - 2124 734 Spring
1 - 2204 975 Retainer
1 - 2124 736 Screw
1 - 2124 737 Nut

23-19-24 SPOILER PACKAGE,
DECK LID MOUNTING . . . . . Part No. 3579 056
Consists of:
1 - 3506 470-1 Bracket, Mtg.
1 - 3506 488-9 Gasket
1 - 6026 687 Washer
4 - 135 629 Washer
4 - 124 838 Jam Nut
4 - 163 226 Screw
4 - 445 445 U/Nut

Part No. 3579 057
Consists of:
1 - 3506 472-3 Bracket, Mtg.
1 - 3506 490-1 Gasket
4 - 6026 687 Nut w/Seal
4 - 135 629 Washer
4 - 124 838 Jam Nut
8 - 163 226 Screw
4 - 445 445 U/Nut
4 - 6029 104 Nut

Part No. 3579 058
Consists of:
1 - 3506 482-3 Bracket, Mtg.
1 - 3506 488-9 Gasket
4 - 6026 687 Nut w/Seal
4 - 135 629 Washer, Ext. Lock
4 - 124 838 Jam Nut
4 - 163 226 Screw
4 - 6029 104 Nut

Part No. 3579 059
Consists of:
1 - 3506 480-1 Bracket, Mtg.
1 - 3506 488-9 Gasket

CODE	PART NAME AND PART NUMBER

23-19-24 Cont'd.

4 - 6026 687 Nut w/Seal
4 - 135 629 Washer
4 - 124 838 Jam Nut
8 - 163 226 Screw
8 - 445 445 U/Nut
4 - 6029 104 Nut

Part No. 3579 060

Consists of:
1 - 3506 474-5 Bracket, Mtg.
1 - 3506 488-9 Gasket
4 - 6026 687 Nut w/Seal
4 - 135 629 Washer, Ext. Lock
4 - 124 838 Jam Nut
6 - 163 226 Screw
6 - 445 445 U/Nut
4 - 6029 104 Nut

Part No. 3579 061

Consists of:
1 - 3506 478-9 Bracket, Mtg.
1 - 3506 488-9 Gasket
4 - 6026 687 Nut w/Seal
4 - 135 629 Washer
4 - 124 838 Jam Nut
6 - 163 226 Screw
6 - 445 445 U/Nut
4 - 6029 104 Nut

Part No. 3579 062

Consisrs of:
1 - 3506 476-7 Bracket, Mtg.
1 - 3506 490-1 Gasket
4 - 6026 687 Nut w/Seal
4 - 135 629 Washer
4 - 124 838 Jam Nut
4 - 163 226 Screw
6 - 445 445 U/Nut
4 - 6029 104 Nut

Part No. 3579 669

Consists of:
1 - 3506 488-9 Gasket
1 - 3506 490-1 Gasket
4 - 6026 687 Nut, w/Seal
4 - 135 629 Washer
4 - 445 445 U/Nut
4 - 6029 155 Sleeve Nut
4 - 124 934 Nut
4 - 163 226 Screw

Part No. 3579 668

Consists of:
1 - 3506 490-1 Gasket
4 - 6026 687 Nut w/Seal
4 - 135 629 Washer
4 - 445 445 U/Nut
4 - 6029 155 Sleeve Nut
4 - 124 934 Nut
8 - 163 226 Screw

23-41-34 GEAR and SEAL PACKAGE, ELECTRIC WINDOW REGULATOR MECHANISM ..... Part No. 2932 973

Consists of:
1 - Gear Pinion
1 - Seal
1 - "O" Ring
1 - Screw

23-41-106 MOTOR and MECHANISM PACKAGE, ELECTRIC WINDOW LIFT, RT ..... Part No. 3004 124

Consists of:
1 - 2862 832 Motor and Mechanism
2 - 1842 026 Terminal, Female
2 - 2097 173 Insulator, Female

MOTOR and MECHANISM PACKAGE, ELECTRIC WINDOW LIFT, LT ..... Part No. 3004 123

Consists of:
1 - 2862 833 Motor and Mechanism
2 - 1842 026 Terminal, Female
2 - 2097 173 Insulator, Female

MOTOR and MECHANISM PACKAGE, ELECTRIC WINDOW LIFT, RT ..... Part No. 3004 126

Consists of:
1 - 2862 830 Motor and Mechanism
2 - 1842 026 Terminal, Female
2 - 2097 173 Insulator, Female

MOTOR and MECHANISM PACKAGE, ELECTRIC WINDOW LIFT, LT ..... Part No. 3004 125

Consists of:
1 - 2862 831 Motor and Mechanism
2 - 1842 026 Terminal, Female
2 - 2097 173 Insulator, Female

23-41-176 TERMINAL and INSULATOR PACKAGE, WINDOW LIFT SWITCH (5 WAY) .....Part No. 2809 016

Consists of:
1 - 2770 607 Insulator, Window Lift Switch Wiring Terminal
5 - 2427 529 Terminal, Window Lift Switch Wiring

TERMINAL and INSULATOR PACKAGE, WINDOW LIFT SWITCH (7 WAY) ..... Part No. 2809 017

Consists of:
1 - 2771 564 Insulator, Window Lift Switch Wiring Terminal
7 - 2427 529 Terminal, Window Lift Switch Wiring

TERMINAL and INSULATOR PACKAGE, FRONT DOOR WINDOW LIFT SWITCH (10 WAY) RT ..... Part No. 2809 018

Consists of:
1 - 2771 571 Insulator, Front Door Window Lift Switch Terminal
10 - 2427 529 Terminal, Window Lift Switch Wiring

CODE	PART NAME AND PART NUMBER

23-41-176 Cont'd.
TERMINAL and INSULATOR PACKAGE, FRONT DOOR WINDOW LIFT SWITCH (10 WAY) LT ..... Part No. 2809 019
Consists of:
1 - 2771 567 Insulator, Front Door Window Lift Switch Terminal
10 - 2427 529 Terminal, Window Lift Switch Wiring

23-49-1 REAR SEAT SHOULDER BELT PACKAGE ..... Part No. 4776 GX9
Consists of:
1 - Belt
1 - Reinforcement
2 - Screw
2 - 6027 311 Bolt

REAR SEAT SHOULDER BELT PACKAGE ..... Part No. 4777 GX9
Consists of:
1 - Belt
1 - Reinforcement
2 - Screw
2 - 6027 311 Bolt

REAR SEAT SHOULDER BELT PACKAGE ..... Part No. 4778 GX9
Consists of:
1 - Belt
1 - 2999 102 Reinforcement
1 - 2999 033 Grommet
2 - Screw
1 - 6027 311 Bolt

REAR SEAT SHOULDER BELT PACKAGE ..... Part No. 4779 GX9
Consists of:
1 - Belt
1 - 2999 030 Reinforcement
1 - 2999 033 Grommet
2 - Screw
1 - 6027 311 Bolt
1 - 6027 312 Bolt
1 - 9417 098 Washer
1 - 6026 397 Washer
1 - 2999 053 Spacer

REAR SEAT SHOULDER BELT PACKAGE ..... Part No. 4780 GX9
Consists of:
1 - Belt
1 - 6027 311 Bolt

REAR SEAT SHOULDER BELT PACKAGE ..... Part No. 4781 GX9
Consists of:
1 - Belt
2 - 6027 311 Bolt

CODE	PART NAME AND PART NUMBER

REAR SEAT SHOULDER BELT PACKAGE ..... Part No. 4782 GX9
Consists of:
1 - Belt
1 - 3548 851 Reinforcement
2 - Screw
1 - 6027 310 Bolt

23-58-381 ROTOR PACKAGE, FOLDING TOP MOTOR PUMP ..... Part No. 2573 840
Consists of:
1 - Rotor, Inner
1 - Rotor, Outer

23-58-388 BOLT PACKAGE, FOLDING TOP LIFT PUMP RESERVOIR ..... Part No. 2573 839
Consists of:
1 - Bolt
1 - Washer
1 - "O" Ring

23-63-33 WEATHERSTRIP PACKAGE, FRONT DOOR ON FRONT EDGE OF GLASS ..... Part No. 2932 230
Consists of:
1 - Weatherstrip
4 - 2841 646 Slide
2 - 2861 744 Pin

23-63-100 WEATHERSTRIP PACKAGE, QUARTER WINDOW GLASS FRONT ..... Part No. 2932 230
Consists of:
1 - Weatherstrip
4 - 2841 646 Slide
2 - 2861 744 Pin

23-64-1 FIELD KIT, REAR WINDOW INSTALLATION ..... Part No. 2807 425

Consists of:
1 - Cartridge
1 - Primer
1 - Spacer Dam
2 - Spacer
2 - Spacer

23-64-181 LATCH PACKAGE, QUARTER WINDOW GLASS ..... Part No. 3419 945
Consists of:
1 - Latch
1 - 6000 379 Screw
1 - 1708 996 Grommet
1 - 1909 944 Washer

HANDLE PACKAGE, QUARTER WINDOW GLASS LATCH ..... Part No. 3620 490
Consists of:
1 - Handle
1 - Link
1 - 2841 446 Retainer
1 - 9417 273 Screw

CODE	PART NAME AND PART NUMBER

23-67-252 Cont'd.
- 1 - 6000 379 Screw
- 1 - 1909 944 Washer
- 1 - 1708 996 Grommet
- 1 - 273 752 Pin

23-64-240 PIVOT PACKAGE, V/WING UPPER . . . . . Part No. 2809 961
Consists of:
- 1 - Bracket
- 1 - 6000 374 Screw
- 1 - 1909 917 Grommet
- 1 - 6000 379 Screw
- 1 - 1708 996 Grommet
- 1 - 1708 998 Clamp
- 1 - 1909 944 Washer

PIVOT PACKAGE, V/WING UPPER . . . . . Part No. 2932 436 2932 437
Consists of:
- 2 - Bracket
- 2 - 1909 944 Washer
- 2 - 6000 374 Screw
- 2 - 1909 917 Grommet
- 2 - 6000 379 Screw
- 2 - 1708 996 Grommet
- 2 - 1708 998 Clamp

PIVOT PACKAGE, V/WING UPPER . . . . . Part No. 2807 956 2807 957
Consists of:
- 2 - Bracket
- 2 - 1708 998 Clamp
- 2 - 1909 917 Grommet
- 2 - 1909 944 Washer
- 2 - 60000 374 Screw

23-64-242 BRACKET PACKAGE, UPPER WING PIVOT . . . . . Part No. 3419 350 3419 351
Consists of:
- 1 - Bracket, Rt.
- 1 - Bracket, Lt.
- 2 - 1909 944 Washer
- 2 - 1708 998 Clamp
- 2 - 6000 374 Screw
- 2 - 1909 917 Grommet
- 2 - 1708 996 Grommet

23-66-75 FIELD KIT, WINDSHIELD INSTALLATION . . . . . Part No. 2807 425
Consists of:
- 1 - Cartridge
- 1 - Primer
- 1 - Spacer Dam
- 2 - Spacer
- 2 - Spacer

FIELD KIT, WINDSHIELD INSTALLATION . . . . . Part No. 3419 959
Consists of:
- 1 - Adhesive
- 1 - Sealant Primer

23-67-2 CAM RELEASE PACKAGE, WIPER PARKING . . . . . Part No. 2932 869
Consists of:
- 1 - Release, Wiper Parking Cam
- 1 - Cam, Wiper Parking
- 1 - Spring, Wiper Parking
- 1 - Spring Washer, Wiper Drive Link
- 1 - 2983 017 Retainer, Wiper Link

23-67-10 GEAR and SEAL PACKAGE, WIPER MOTOR . . . . . Part No. 3420 871
Consists of:
- 1 - Gear
- 1 - Seal, Switch Plate

GEAR and GASKET PACKAGE, WIPER MOTOR . . . . . Part No. 3620 735
Consists of:
- 1 - Gasket
- 1 - Gear
- 1 - Grease-Pack

INTERMEDIATE GEAR PACKAGE, W/SHIELD WIPER MOTOR . . . . . Part No. 3431 508
Consists of:
- 1 - Gear
- 1 - Lubricant
- 1 - Spring Washer
- 6 - Screw
- 6 - Nut w/Washer

OUTPUT GEAR PACKAGE, W/SHIELD WIPER MOTOR . . Part No. 3431 511
Consists of:
- 1 - Gear w/Shaft
- 1 - Lubricant
- 6 - Screw
- 6 - Nut w/Washer

23-67-20 GROMMET and SPACER PACKAGE, MOTOR MTG. . . . . Part No. 2932 708
Consists of:
- 3 - Grommet
- 3 - Spacer

GROMMET and SPACER PACKAGE, MOTOR MTG. . . . . Part No. 2421 482
Consist of:
- 3 - Grommet
- 3 - Spacer

23-67-104 SEAL and SPACER PACKAGE, MOTOR MTG. . . . . Part No. 2808 831
Consists of:
- 1 - Seal
- 3 - Spacer

CODE	PART NAME AND PART NUMBER

23-67-106 ARMATURE PACKAGE, W/SHIELD WIPER MOTOR . . . . . Part No. 3431 510
Consists of:
1 - Armature
1 - Spring Washer
2 - Washer

23-67-112 HOUSING PACKAGE, W/SHIELD WIPER MOTOR . . . . . Part No. 3431 509
Consists of:
1 - Housing
1 - Spring Washer
2 - Washer

23-67-164 SWITCH PLATE and LATCH PACKAGE, WIPER MOTOR . . . . . Part No. 3420 870
Consists of:
1 - Switch Plate
1 - Latch, Shaft and "O" Ring
1 - Seal, Switch Plate
1 - Grease - Pack

SWITCH PLATE, BUSHING and LATCH PACKAGE, WIPER MOTOR . . . . . Part No. 3620 736
Consists of:
1 - Bushing
1 - Gasket
1 - Latch
1 - Switch Plate
1 - Grease-Pack

SWITCH PLATE and LATCH PACKAGE, WIPER MOTOR . . . . . Part No. 3420 918
Consists of:
1 - Switch Plate
1 - Latch, Shaft and "O" Ring
1 - Seal, Switch Plate
1 - Grease - Pack

PARK SWITCH PACKAGE, W/SHIELD WIPER MOTOR (DEPRESSED) . . . . . Part No. 3431 506
Consists of:
1 - Gear & Brush Holder Hsg.
6 - Screw
6 - Nut w/Washer
1 - Lubricant
2 - Washer
1 - Spring Washer
1 - Spring Washer

PARK SWITCH PACKAGE, W/SHIELD WIPER MOTOR (NON-DEPRESSED) . . . . . Part No. 3431 507
Consists of:
1 - Gear & Brush Holder Hsg.
6 - Screw
6 - Nut w/Washer
1 - Lubricant
2 - Washer
1 - Spring Washer
1 - Spring Washer

CODE	PART NAME AND PART NUMBER

23-67-240 RESERVOIR and SEAL PACKAGE, W/SHIELD WASHER . . . . . Part No. 2809 011
Consists of:
1 - Reservoir
2 - Seal

RESERVOIR and SEAL PACKAGE, W/SHIELD WASHER . . . . . Part No. 2889 803
Consists of:
1 - Reservoir
1 - Seal

RESERVOIR and SEAL PACKAGE, W/SHIELD WASHER . . . . . Part No. 2932 830
Consists of:
1 - Reservoir
1 - Seal

RESERVOIR and SEAL PACKAGE, T/GATE WINDOW WASHER . . . . . Part No. 3004 120
Consists of:
1 - Reservoir
1 - Seal

RESERVOIR and SEAL PACKAGE, T/GATE WINDOW WASHER . . . . . Part No. 3420 873
Consists of:
1 - RESERVOIR
1 - Seal

23-67-246 NOZZLE and BRACKET PACKAGE, W/SHIELD WASHER . . . . . Part No. 3579 482
Consists of:
2 - 3431 213 Nozzle w/Bracket
2 - 9414 597 Screw

23-67-252 PUMP and SEAL PACKAGE, W/SHIELD WASHER . . . . . Part No. 2809 013
Consists of:
1 - Pump
2 - Seal

PUMP and SEAL PACKAGE, T/GATE WINDOW WASHER . . . . . Part No. 3004 121
Consists of:
1 - Pump
1 - Seal

FOOT PUMP and CHECK VALVE PACKAGE, W/SHIELD WASHER . . . . . Part No. 2932 868
Consists of:
1 - Pump and Spring
1 - Washer
1 - Check Valve

CODE	PART NAME AND PART NUMBER

24-01-1 BASIC PACKAGE,
MODEL "E" . . . . . Part No. # 2027 816
Consists of:
1 - 3450 598 Evaporator
1 - 3450 650 Valve, Expansion
1 - 3450 248 Circuit Breaker
1 - 3451 415 Wheel, Blower Motor C.W.
1 - 3451 416 Wheel, Blower Motor C.C.W.
2 - 2837 680 Clamp, Wheel
1 -3450 250 Motor, Blower
1 -3450 591 Grille, Evaporator
1 - 3450 235 Thermostat
1 - 3450 571 Switch, Blower Motor
2 - 3450 588 Knob
1 - 3450 602 Panel, Control
2 - 3450 579 Louver
4 - 3450 589 Retainer, Louver
1 - 3450 247 Coil, Evap.
1 - 3484 253 Compressor
1 - 2968 331 Receiver Drier
1 - 2607 440 Bracket, Drier Mtg.
1 - 2014 009 Grommet, Discharge Hose

BASIC PACKAGE
MODEL "F" . . . . . Part No. 2027 820
Consists of:
1 - 3450 628 Evaporator
1 - 3451 410 Valve, Expansion
1 - 3450 596 Switch, Blower Motor
1 - 3451 404 Thermostat
1 - 3450 613 Knob, Mtr. Switch
1 - 3450 614 Knob, Thermostat
2 - 2837 680 Clamp
1 - 3450 248 Breaker, Circuit
1 - 3451 416 Wheel, Blower Mtr. Rt. C.C.W.
1 - 3451 415 Wheel, Blower Mtr. Lt. C.W.
6 - 117 957 Insulator, Motor Mtg.
2 - 1991 576 Housing, Blower
1 - 2870 270 Motor, Blower
1 - 2968 273 Coil, Evaporator
1 - 3484 253 Compressor
1 - 2968 331 Drier, Receiver
1 - 2607 440 Bracket
1 - 2014 009 Grommet, Discharge Hose
2 - 3450 586 Louver
4 - 3450 589 Retainer, Louver Mtg.

ADAPTER PACKAGE . . . . . Part No. 2027 817
Consists of:
1 - 2468 809 Bracket, Compressor Mtg. Frt.
1 - 2806 152 Support, Rr. Rt.
1 - 2806 812 Support, Rr. Lt.
1 - 2946 134 Support, Rr. Lt.
1 - 2203 035 Bracket, Idler Pulley Adj.
1 - 2203 031 Idler, Pulley
1 - 2406 039 Fan and Pulley
1 - 2202 794 Pulley, Compressor Drive
1 - 3418 384 Belt, Compressor Drive
1 - 2006 395 Coil, Field
1 - 2006 396 Pulley and Hub
1 - 2006 397 Washer, Hub Mtg.
1 - 1658 638 Screw, Hub Mtg.
1 - 2812 840 Coil, Field
1 - 2870 253 Pulley and Hub
1 - 2097 102 Washer, Hub Mtg.
1 - 2812 765 Hose, Discharge, 3/8"
1 - 1742 762 Hose, Suction, 5/8"
1 - 2013 092 Hose, Liquid, 3/8"

ADAPTER PACKAGE . . . . . Part No. 2027 818
Consists of:
1 - 3450 635 Bracket, Frt. Mtg.
1 - 2951 866 Bracket, Rr. Mtg.
1 - 2968 253 Pulley, Compressor
1 - 2968 252 Pulley, Fan Drive
1 - 2968 251 Pulley, Fan
2 - 2772 142 Spacer, Drive Pulley
1 - 3450 642 Bracket, Idler Pulley Adj.
1 - 2013 876 Pulley, Idler
1 - 3451 409 Strap, Altr. Adj.
1 - 2951 825 Support, Rt.
1 - 3418 261 Bracket, Support Side Lt.
1 - 2013 877 Bolt
1 - 2951 747 Bracket, Frt.
1 - 3409 548 Baffle, Floor Air
1 - 2097 105 Coil, Field
1 - 2003 058 Hub and Pulley
1 - 2097 102 Washer, Hub Mtg.
1 - 1658 638 Screw, Hub Mtg.
1 - 1742 762 Hose, Suction, 5/8"
1 - 2013 092 Hose, Liquid, 3/8"
1 - 2812 765 Hose, Discharge, 3/8"
1 - 3451 443 Belt, Comp. Drive
1 - 2128 751 Belt, Fan and Altr. Drive

ADAPTER PACKAGE . . . . . Part No. 2027 819
Consists of:
1 - 2968 330 Bracket, Frt.
1 - 2951 809 Bracket, Rr.
1 - 2899 961 Bracket, Rr.
1 - 3462 023 Support, Rr. Lt.
1 - 3462 022 Support, Rr. Lt.
1 - 2899 576 Support, Rr. Rt.
1 - 3462 353 Support, Rr. Rt.
1 - 2814 696 Bracket, Pulley Mtg.
1 - 2899 962 Bracket. Spring
1 - 1999 184 Strap, Altr. Adj.
1 - 2013 678 Spacer
1 - 2004 767 Bracket, Pulley Adj.
1 - 2004 767 Pulley, Idler
1 - 2919 395 Hose, Radiator Inlet
1 - 1742 762 Hose, Suction, 5/8"
1 - 2013 092 Hose, Liquid 3/8"
1 - 2812 765 Hose, Discharge, 3/8"
1 - 2968 251 Pulley, Fan
1 - 2003 059 Spacer, Fan Pulley
1 - 2968 252 Pulley, Drive
1 - 2968 253 Pulley, Comp. Drive
1 - 1825 903 Belt, Comp. Drive
1 - 1551 006 Belt, Altr. Drive
1 - 2097 105 Coil, Field
1 - 2003 058 Pulley and Hub
1 - 2097 102 Washer, Hub Mtg.
1 - 1658 638 Screw, Hub Mtg.

ADAPTER PACKAGE . . . . . Part No. 3450 632
Consists of:
1 - 3450 632 Duct, Spot Cooler Air, Complete

CODE	PART NAME AND PART NUMBER

24-01-1 Cont'd.

CONDENSER
PACKAGE . . . . . Part No. 2027 787
Consists of:
1 - 2812 689 Condenser
4 - 2812 692 Brackets

CONDENSER
PACKAGE . . . . . Part No. 2027 814
Consists of:
1 - 2968 361 Condenser
1 - 2968 364 Mtg. and Tube Support
1 - 2014 004 Bracket, Mtg. Rt.
1 - 2772 101 Mtg. and Tube Support
3 - 2272 098 Bracket, Condenser Mtg.

24-25-2 PISTON RING
PACKAGE . . . . . Part No. 2275 207
Consists of:
1 - Ring
1 - 1377 825 Gasket, Oil Sump
1 - 1990 584 Gasket, Cyl. Head
1 - 1990 598 Gasket, Valve Plate

24-25-3 PISTON and
CONNECTING ROD
PACKAGE . . . . . Part No. 2541 330
Consists of:
1 - Ball, Oil Pressure Relief
1 - 1990 584 Gasket, Cylinder Head
1 - 1990 598 Gasket, Valve Seat
1 - Gasket, Oil Sump
1 - Piston and Connecting Rod
1 - Spring, Oil Pressure

PISTON and
CONNECTING ROD
PACKAGE . . . . . Part No. 2932 972
Consists of:
1 - Piston and Connecting Rod
1 - 1377 825 Gasket, Oil Sump
1 - 1990 584 Gasket, Cylinder Head
1 - 1990 598 Gasket, Valve Seat
1 - Ball, Oil Pressure Relief
1 - Spring, Oil Pressure

24-25-70 CRANKSHAFT GAS
SEAL PACKAGE . . . . . Part No. 1426 501
Consists of:
1 - Seal, Crankshaft Gas
1 - 1982 542 Seal, Crankshaft Bearing Housing

24-25-93 VALVE PLATE
PACKAGE . . . . . Part No. 2275 204
Consists of:
1 - 1990 584 Gasket, Cylinder Head
1 - 1990 598 Gasket, Valve Plate
1 - Plate, Valve

VALVE PLATE
PACKAGE . . . . . Part No. 2275 205
Consists of:
1 - 1990 584 Gasket, Cylinder Head
1 - 1990 598 Gasket, Valve Plate
1 - Plate, Valve

CODE	PART NAME AND PART NUMBER

24-25-154 CRANKSHAFT
PACKAGE . . . . . Part No. 2815 762
Consists of:
1 - Crankshaft
1 - 1377 825 Gasket, Oil Sump
1 - 1990 584 Gasket, Cylinder Head
1 - 1990 598 Gasket, Valve Plate
1 - 1377 831 Seal, Bearing Housing
1 - Seal, Gas
1 - 1747 982 Washer, Thrust

CRANKSHAFT
PACKAGE . . . . . Part No. 2815 755
Consists of:
1 - Crankshaft
1 - 1990 584 Gasket, Cylinder Head
1 - 1990 598 Gasket, Valve Plate
1 - 1377 825 Gasket, Oil Sump
1 - 1377 831 Seal, Bearing Housing
1 - Seal, Gas
1 - 1747 982 Washer, Thrust

24-25-162 BEARING HOUSING
PACKAGE . . . . . Part No. 3420 916
Consists of:
1 - Housing
1 - Seal
1 - 2919 681 Ball Bearing

BEARING HOUSING
PACKAGE . . . . . Part No. 2541 332
Consists of:
1 - Housing
1 - 1377 831 Seal

BEARING HOUSING
PACKAGE . . . . . Part No. 2196 315
Consists of:
1 - Housing
1 - 1377 831 Seal

24-25-246 OIL PUMP
PACKAGE . . . . . Part No. 2021 191
Consists of:
1 - Cover, Oil Pump
1 - Rotor, Outer
1 - Rotor, Inner
1 - 1747 988 Seal, Cover
1 - Shaft

Printed in U.S.A.
January 1972

POLICE

R1, R2, W1, W2, P1, P2
2 Door Sedan
4 Door Sedan
4 Door Station Wagon
D2
4 Door Sedan

For Parts Not Listed in Police Section, Refer to 1970-71 Parts Catalog

CODE	PART NAME	ENG. TYPE OR CU.IN.	V 1-2	B J 1-2	L 1-2	R 1-2	W 1-2	P 1-2	D 1-2	C 1	C 2	C 3	Y 1	PART NUMBER
GROUP 1 - ACCESSORIES														
1-48-1	HEATER, Complete	70	—	—	—	1	1	—	—	—	—	—	—	2936 681
	Heater Complete	71	—	—	—	1	1	—	—	—	—	—	—	3441 398
	Heater Complete W/Upper Level Vent	71	—	—	—	1	1	—	—	—	—	—	—	3441 624
GROUP 2 - FRONT SUSPENSION														
2-14-1	BOLT and Swivel Package Anchor Adjusting		—	—	—	2	2	—	—	—	—	—	—	2275 469
2-14-3	BAR or SPRING, 2D., 4D.	6	—	—	—	1	1	—	—	—	—	—	—	1857 778-9
	2D., 4D.	8	—	—	—	1	1	—	—	—	—	—	—	1857 780-1
	Sta. Wgn.		—	—	—	1	1	—	—	—	—	—	—	1857 778-9
	P		—	—	—	—	—	1	—	—	—	—	—	2269 578-9
	D		—	—	—	—	—	—	1	—	—	—	—	2269 622-3
GROUP 3 - AXLE—REAR														
	NOTE: For Parts refer to Rear Axle Section of the Parts Catalog.													
GROUP 4 - BRAKE—PARKING														
4-23-1	CABLE, Rear, Rt., Std.		—	—	—	1	1	—	—	—	—	—	—	3420 134
	w/Disc Brakes		—	—	—	1	1	—	—	—	—	—	—	3420 135
	CABLE, Rear, Lt., Std.		—	—	—	1	1	—	—	—	—	—	—	3420 141
	w/Disc Brakes		—	—	—	1	1	—	—	—	—	—	—	2808 594
GROUP 5 - BRAKE—SERVICE														
5-03-3	Shoe & Lining Package, Axle Set Front 11 x 3" - For City Of Los Angeles Calif.	70	—	—	—	1	1	—	—	—	—	—	—	2836 643
	Axle Set Rear 11 x 2 1/2" - For City Of Los Angeles Calif.	70	—	—	—	1	1	—	—	—	—	—	—	2836 644
GROUP 7 - COOLING														
7-08-2	SHROUD RAD. CORE FAN W/225 Eng. W/22" Core W/Max. Cooling w/318, 360, 383, 440 Eng. w/26"	71	—	—	—	—	—	1	—	—	—	—	—	2998 329
	Core	71	—	—	—	—	—	1	1	—	—	—	—	3443 522
7-14-4	HOSE, Rad. Inlet w/318, 360 Eng.	71	—	—	—	1	1	1	1	—	—	—	—	3462 102
GROUP 8 - ELECTRICAL														
8-33-5	RETAINER, Horn Ring, w/o Rim Horn Switch	70	—	—	—	—	—	1	1	—	—	—	—	2996 884
		71	—	—	—	1	—	1	1	—	—	—	—	2996 884

CARLINES J - Challenger, B - Barracuda, V - Valiant, L - Dart, R - Belvedere - Satallite, W - Coronet - Charger, P - Plymouth, D - Dodge, C - Chrysler, Y - Imperial

AR Indicates use as required.
= Indicates parts not listed in any previous parts book.
Numerals in parentheses ( ) refer to notes.
★ Indicates change or addition.

Printed in U.S.A.
January 1972

CODE	PART NAME		ENG. TYPE OR CU.IN.	V 1-2	B J 1-2	L 1-2	R 1-2	W 1-2	P 1-2	D 1-2	C 1	C 2	C 3	Y 1	PART NUMBER
GROUP 8 ELECTRICAL Cont'd.															
8-33-6	ORNAMENT, Horn Ring	71		—	—	—	1	—	1	—	—	—	—	—	3467 492
		71		—	—	—	—	1	—	1	—	—	—	—	3467 493
8-33-13	PAD and RING, Strg. Wheel														
	Horn, w/o Rim Horn Switch	Black		—	—	—	—	—	1	1	—	—	—	—	4044 FX9
	4 D. and Sta. Wgn.	71 Black		—	—	—	1	1	—	—	—	—	—	—	4044 FX9
8-33-20	PLATE, Strg. Wheel and Horn Ring Mtg., w/o Rim Horn Switch			—	—	—	1	1	1	1	—	—	—	—	3467 500
8-33-121	RING and FEED CABLE, Horn Contact	71		—	—	—	—	—	1	1	—	—	—	—	2822 187
GROUP 11 - EXHAUST															
11-08-5	BRACE, Exhaust Pipe		6	—	—	—	1	1	1	—	—	—	—	—	2530 790
11-08-23	NUT, Exhaust Pipe Brace Saddle Clamp		6	—	—	—	2	2	2	—	—	—	—	—	6025 804
GROUP 13 - FRAME OR FRONT FRAME STRUCTURE															
13-35-1	SHIELD, Battery Heat	70		—	—	—	1	1	—	—	—	—	—	—	3404 416
13-01-1	FRAME, 2D., 4D.			—	—	—	—	—	—	1	—	—	—	—	3417 198
	All	71		—	—	—	1	1	—	—	—	—	—	—	3404 440
				—	—	—	—	—	1	1	—	—	—	—	2530 975
13-54-4	HANGER, Front Rear Spring, 2D., 4D.			—	—	—	—	2	—	—	—	—	—	—	2539 507
13-54-15	HANGER, Rear	71	6	—	—	—	—	—	1	—	—	—	—	—	3400 942-3
		71	8	—	—	—	—	—	1	—	—	—	—	—	2948 090-1
	All	71		—	—	—	—	—	1	—	—	—	—		
GROUP 14 - FUEL															
14-72-1	GAUGE, w/440 Eng. exc. Wag.			—	—	—	—	—	1	1	—	—	—	—	=3621 608
14-73-1	PUMP PKG., w/383 & 440 Eng.			—	—	—	—	—	1	1	1	1	1	—	2495 528
GROUP 15 - HOOD															
15-11-3	HOOD LOCK	70		—	—	—	1	1	—	—	—	—	—	—	3412 315
GROUP 17 - REAR SPRING															
17-11-3	SPRING, w/Bushing, 2D., 4D		6	—	—	—	2	2	—	—	—	—	—	—	3004 655
	2D., 4D.		8	—	—	—	2	2	—	—	—	—	—	—	3004 767
	Sta. Wgn.			—	—	—	2	2	—	—	—	—	—	—	3514 965
	2 D., 4 D.	70	6	—	—	—	—	—	2	—	—	—	—	—	3004 846
	2 D., 4 D.	70	8	—	—	—	—	—	2	—	—	—	—	—	3420 168
	Sta. Wgn.	70		—	—	—	—	—	1	—	—	—	—	—	3514 970-1
	All	70		—	—	—	—	—	—	2	—	—	—	—	3420 169
	4 D., w/o Isolator	71	6	—	—	—	—	—	2	—	—	—	—	—	2585 240
	4 D.	71	8	—	—	—	—	—	2	—	—	—	—	—	3514 630
	Sta. Wgn.	71		—	—	—	—	—	1	—	—	—	—	—	3514 626-7
	4 D., w/o Isolator	71		—	—	—	—	—	—	2	—	—	—	—	3514 247
	Sta. Wgn.	71		—	—	—	—	—	1	—	—	—	—	—	3514 626-7
17-12-4	LEAF, w/Bushing, 2D., 4D		6	—	—	—	2	2	—	—	—	—	—	—	3400 872
	2D., 4 D		8	—	—	—	2	2	—	—	—	—	—	—	3400 874
	Sta. Wgn.			—	—	—	2	2	—	—	—	—	—	—	3400 949
	2D., 4D.		6	—	—	—	—	—	2	—	—	—	—	—	3400 878
	2 D., 4 D.	70	8	—	—	—	—	—	2	—	—	—	—	—	3402 147
	Sta. Wgn.			—	—	—	—	—	2	—	—	—	—	—	3402 004
	4 D.	71		—	—	—	—	—	2	—	—	—	—	—	3400 617
	Sta. Wgn.	71		—	—	—	—	—	2	—	—	—	—	—	3402 158
	All	70		—	—	—	—	—	—	2	—	—	—	—	3400 898
	4 D.	71		—	—	—	—	—	—	2	—	—	—	—	3400 617
17-17-3	BUSHING, Front, Pivot		6	—	—	—	2	2	2	—	—	—	—	—	1948 869
			8	—	—	—	2	2	2	2	—	—	—	—	2403 245

CARLINES J - Challenger, B - Barracuda, V - Valiant, L - Dart, R - Belvedere - Satellite, W - Coronet - Charger, P - Plymouth, D - Dodge, C - Chrysler, Y - Imperial

AR Indicates use as required.

Numerals in parentheses ( ) refer to notes.

# Indicates parts not listed in any previous parts book.

★ Indicates change or addition.

Printed in U.S.A. January 1972

CODE	PART NAME	ENG. TYPE OR CU.IN.	V 1-2	B J 1-2	L 1-2	R 1-2	W 1-2	P 1-2	D 1-2	C 1	C 2	C 3	Y 1	PART NUMBER
	GROUP 17 - REAR SPRING Cont'd.													
17-23-3	ABSORBER PACKAGE, Front	70	—	—	—	2	2	—	—	—	—	—	—	3004 961
	All		—	—	—	2	2	—	—	—	—	—	—	3004 960
		70	—	—	—	—	—	2	2	—	—	—	—	2525 461
	All	71	—	—	—	—	—	2	2	—	—	—	—	3402 142
	ABSORBER PACKAGE, Rear	70	—	—	—	2	2	—	—	—	—	—	—	2585 618
	All	71	—	—	—	2	2	—	—	—	—	—	—	3402 262
		70	—	—	—	—	—	2	2	—	—	—	—	3400 587
	All, 1 3/4" Dia.	71	—	—	—	—	—	2	2	—	—	—	—	3402 142
	All, 2 3/8" Dia.	71	—	—	—	—	—	2	2	—	—	—	—	3402 145
	17-30-0 SWAY BAR SHAFT—REAR SUSPENSION													
17-30-1	SWAY BAR, w/BUSHINGS, Rear Suspension, 2 D., 4 D., Los Angelus Police		—	—	—	1	1	—	—	—	—	—	—	2834 852
			—	—	—	—	—	1	1	—	—	—	—	3402 014
17-30-3	LINK w/BUSHING, Sway Bar, Rear Suspension, 2 D., 4 D., Los Angelus Police		—	—	—	2	2	2	2	—	—	—	—	2834 858
17-30-6	HANGER, Rear Suspension, Sway Bar Link, To Spring 2 D., 4 D., Los Angelus Police		—	—	—	2	2	2	2	—	—	—	—	2834 824
17-30-7	PLATE, Rear Spring Clamp, Sway Bar, Rear Suspension, 2 D., 4 D., Los Angelus Police		—	—	—	4	4	—	—	—	—	—	—	2416 749
			—	—	—	—	—	4	4	—	—	—	—	2416 737
17-30-8	KIT, Rear Suspension, Sway Bar Attaching, 2 D., 4 D., Los Angelus Police		—	—	—	1	1	1	1	—	—	—	—	3412 882
	GROUP 19 - STEERING													
19-15-4	SHAFT, Strg. Column w/Std. Strg.	70	—	—	—	1	1	—	—	—	—	—	—	2996 761
	w/Std. Strg.	71	—	—	—	1	1	—	—	—	—	—	—	3575 541
	w/Std. Strg.		—	—	—	—	—	1	1	—	—	—	—	2996 758
19-15-17	COVER, Strg. Column Shaft Coupling Body, w/Power Strg.		—	—	—	1	1	1	1	—	—	—	—	2530 538
19-15-20	SPRING, Strg. Column Shaft Coupling Ground, w/Std. Strg.		—	—	—	1	1	1	1	—	—	—	—	2768 287
19-15-23	COUPLING, Strg. Column Shaft w/Std. Strg.		—	—	—	1	1	1	1	—	—	—	—	2530 541
	Bolt		—	—	—	4	4	4	4	—	—	—	—	6026 435
19-15-24	PIN, Strg. Column Shaft Lower Coupling, w/Power Strg.		—	—	—	1	1	1	1	—	—	—	—	2266 743
19-15-28	SEAL, Strg. Column Shaft Coupling Body, w/Power Strg.		—	—	—	1	1	1	1	—	—	—	—	2800 741
19-15-35	SPRING, Strg. Column Shaft Coupling Body, w/Power Strg.		—	—	—	1	1	1	1	—	—	—	—	2925 492
19-15-43	FLANGE, Strg. Column Shaft Coupling, w/Std. Strg.		—	—	—	1	1	1	1	—	—	—	—	2530 189
19-15-44	SHOE, Strg. Column Shaft Coupling Body, w/Power Strg.		—	—	—	2	2	2	2	—	—	—	—	2800 738
19-15-111	SHIELD, Strg. Column Shaft Coupling w/Std. Strg.		—	—	—	—	—	1	1	—	—	—	—	2852 470
19-30-4	WHEEL, Strg., w/Full or Partial Horn Ring	Black	—	—	—	1	1	1	1	—	—	—	—	4008 FX9
19-48-7	SMALL PARTS PACKAGE, Gearshift Control, w/3 Speed Man. Trans. Column Shift		—	—	—	1	1	—	—	—	—	—	—	2808 425
			—	—	—	—	—	1	1	—	—	—	—	2808 427

NOTE: For Parts Refer to Rear Axle Section of the Parts Catalog.

CARLINES J - Challenger B - Barracuda V - Valiant L - Dart R - Belvedere - Satellite W - Coronet - Charger P - Plymouth D - Dodge C - Chrysler Y - Imperial

AR Indicates use as required.

# Indicates parts not listed in any previous parts book.

Numerals in parentheses ( ) refer to notes.

★ Indicates change or addition.

Printed in U.S.A. January 1972

CODE	PART NAME	ENG. TYPE OR CU.IN.	V 1-2	B J 1-2	L 1-2	R 1-2	W 1-2	P 1-2	D 1-2	C 1	C 2	C 3	Y 1	PART NUMBER
GROUP 21 - TRANSMISSION														
AUTOMATIC TRANSMISSION														
21-03-8	BLOCKOUT, First and Second, U-Shaped		—	—	—	1	1	1	1	—	—	—	—	=3412768

NOTES

CARLINES J - Challenger, B - Barracuda, V - Valiant, L - Dart, R - Belvedere - Satellite, W - Coronet - Charger, P - Plymouth, D - Dodge, C - Chrysler, Y - Imperial

AR Indicates use as required.

# Indicates parts not listed in any previous parts book.

Numerals in parentheses ( ) refer to notes.

★ Indicates change or addition.

Printed in U.S.A.
January 1972

CODE	PART NAME		MODEL CODES	SEE BOTTOM NOTE 21	23	27	29	41	43	45	46	PART NUMBER
			GROUP 23 - BODY									
23-11-12	SPACER, W/NUT, Frt. Door Inside Pnl. Support to Outside Pnl. Belt Reinf.	70	P-K	1	—	—	—	—	—	—	—	2894 798-9
23-32-17	CROSSMEMBER, Frt. Suspension Use w/225 Eng.	71	R-K,W-K	—	—	—	—	1	—	1	—	3583 080
23-32-43	SPACER, Rear Floor Pan to Shock Absorber C/Member	70	R-K	1	—	—	—	1	—	1	—	3506 115
		70	W-K	1	—	—	—	1	—	1	—	3506 115
		70	P-K	1	—	—	—	1	—	—	—	3506 061
		70	D-K	—	—	—	—	1	—	—	—	3506 061
		Upr. 70	P-K	—	—	—	—	—	—	1	—	3499 764
		Lwr. 70	P-K	—	—	—	—	—	—	1	—	3499 786
23-32-45	PLATE, W/SCREW, Floor Pan to Shock Absorber C/Member	Short 70	R-K	1	—	—	—	1	—	—	—	3506 117
		Short 70	W-K	1	—	—	—	1	—	—	—	3506 117
	PLATE, W/SCREW, Rear Floor Pan to Shock Absorber C/Member,	Long 70	R-K	1	—	—	—	1	—	—	—	3506 119
		Long 70	W-K	1	—	—	—	1	—	—	—	3506 119
			P-K	1	—	—	—	1	—	—	—	3506 063
			D-K	—	—	—	—	1	—	—	—	3506 063
	PLATE, Rear Floor Pan to Shock Absorber C/Member	70	P-K	—	—	—	—	—	—	1	—	3499 757

NOTES

CARLINES: J - Challenger, B - Barracuda, V - Valiant, L - Dart, R - Belvedere - Satellite, W - Coronet - Charger, P - Plymouth, D - Dodge, C - Chrysler, Y - Imperial

NUMERALS INDICATE: 21 - 2 DR. SED., 23 - 2 DR. H.T., 27 - CONV. CPE., 29 - FAST BACK, 41 - 4 DR. SED., 43 - 4 DR. H.T., 45 - 6 PASS. STA. WGN., 46 - 9 PASS. STA. WGN.

AR Indicates use as required.
\# Indicates parts not listed in any previous parts book
Numerals in parentheses ( ) refer to notes.
★ Indicates change or addition.

Printed in U.S.A.
January 1972

Right and left part numbers are on same line, first number is right, second number is left.

NOTES

TAXI

1970 Text

Body Types
R1, R2, W1, W2, P1, P2
4 Door Sedan

BODY TYPES

CODE	PART NAME	ENG. TYPE OR CU.IN.	V 1-2	B J 1-2	L 1-2	R 1-2	W 1-2	P 1-2	D 1-2	C 1	C 2	C 3	Y 1	PART NUMBER
GROUP 1 - ACCESSORIES														
1-48-1	HEATER, Complete	70	—	—	—	1	1	—	—	—	—	—	—	2936 681
	Heater, Complete	71	—	—	—	1	1	—	—	—	—	—	—	3441 398
	Heater Complete W/Upper Level Vent.	71	—	—	—	1	1	—	—	—	—	—	—	3441 624
GROUP 2 - FRONT SUSPENSION														
2-14-1	BOLT and SWIVEL PACKAGE, Anchor Adjusting		—	—	—	2	2	—	—	—	—	—	—	2275 469
2-14-3	BAR or SPRING		—	—	—	1	1	—	—	—	—	—	—	1857 778-9
			—	—	—	—	—	1	—	—	—	—	—	2269 578-9
			—	—	—	—	—	—	1	—	—	—	—	2269 622-3
GROUP 3 - AXLE—REAR														
	NOTE: For Parts Refer to Rear Axle Section of the Parts Catalog.													
GROUP 4 - BRAKE—PARKING														
4-23-1	CABLE, Rear, Rt.		—	—	—	1	1	—	—	—	—	—	—	3420 134
GROUP 5 - BRAKE—SERVICE														
5-3-3	SHOE & LINING PACKAGE, Front		—	—	—	1	1	1	1	—	—	—	—	3004 856
	Rear		—	—	—	1	1	1	1	—	—	—	—	3004 862
5-3-23	SPRING, Rear Wheel Brake Shoe Return		—	—	—	4	4	4	4	—	—	—	—	2768 024
5-34-1	SPRING, Tanden Brake M/Cyl. Pedal Return		—	—	—	1	1	—	—	—	—	—	—	2534 347
5-34-6	SEAT, Tanden Brake M/Cyl. Pedal Return Spring		—	—	—	1	1	—	—	—	—	—	—	2260 709
5-39-1	MASTER CYLINDER, Repair Package	70	—	—	—	1	1	—	—	—	—	—	—	3420 980
	W/Disc. Brakes	71	—	—	—	1	1	—	—	—	—	—	—	3514 650
5-39-3	Master Cylinder W/Disc. Brakes	70	—	—	—	1	1	—	—	—	—	—	—	2944 479
	Master Cylinder New York Taxi Cabs w/Manual Disc Brakes	71	—	—	—	1	1	—	—	—	—	—	—	=3461 312
5-39-18	GASKET, M/Cyl. Mtg.	71	—	—	—	1	1	—	—	—	—	—	—	2401 862
5-39-20	COVER, M/Cyl. Reservoir	71	—	—	—	1	1	—	—	—	—	—	—	2881 511
5-39-24	GASKET, M/Cyl. Reservoir Cover	71	—	—	—	1	1	—	—	—	—	—	—	2881 512
5-39-29	WIRE, M/Cyl. Cover Bail.	71	—	—	—	1	1	—	—	—	—	—	—	2944 381
5-40-1	BOOT, Tandem Brake M/Cyl.,		—	—	—	1	1	—	—	—	—	—	—	1828 388
5-40-4	RETAINER, Tandem Brake M/Chl. Boot		—	—	—	1	1	—	—	—	—	—	—	1828 389
5-44-6	SPRING, M/Cyl. Secondary Piston Return	71	—	—	—	1	1	—	—	—	—	—	—	2944 222
5-47-2	ROD, Tandem Brake M/Cyl. Push	70	—	—	—	1	1	—	—	—	—	—	—	2534 246
		71	—	—	—	1	1	—	—	—	—	—	—	2944 196
5-47-10	RING, Tandem Brake M/Cyl. Push Rod Retainer W/Disc. Brakes		—	—	—	1	1	—	—	—	—	—	—	2074 960
GROUP 7 - COOLING														
7-08-2	SHROUD Rad. Core Fan W/225 Eng. W/22" Core W/Max. Cooling	71	—	—	—	—	—	1	1	—	—	—	—	2998 329

CARLINES: J - Challenger, B - Barracuda, V - Valiant, L - Dart, R - Belvedere - Satallite, W - Coronet - Charger, P - Plymouth, D - Dodge, C - Chrysler, Y - Imperial

AR Indicates use as required.

Numerals in parentheses ( ) refer to notes.

# Indicates parts not listed in any previous parts book.

★ Indicates change or addition.

Printed in U.S.A.
January 1972

CODE	PART NAME	ENG. TYPE OR CU.IN.	V 1-2	B J 1-2	L 1-2	R 1-2	W 1-2	P 1-2	D 1-2	C 1	C 2	C 3	Y 1	PART NUMBER
GROUP 7 - COOLING														
7-08-2	SHROUD Cont'd.													
	w/318 Eng. w/26" Core	71	—	—	—	—	—	1	1	—	—	—	—	3443 522
7-14-4	HOSE, Rad. Inlet w/318 Eng.	71	—	—	—	1	1	1	1	—	—	—	—	3462 102
GROUP 8 - ELECTRICAL														
8-05-2	LAMP, Dome, W/N. Y. Taxi Headlining	70	—	—	—	—	1	—	—	—	—	—	—	2926 814
8-12-2	LAMP, Open Door Indicator		—	—	—	1	1	1	1	—	—	—	—	2426 179
8-12-3	SOCKET		—	—	—	—	—	1	1	—	—	—	—	1753 632
8-12-17	CONTACT, Socket		—	—	—	—	—	1	1	—	—	—	—	2256 966
GROUP 11 - EXHAUST														
11-08-5	BRACE, Exhaust Pipe	6	—	—	—	1	1	1	—	—	—	—	—	2530 790
11-08-23	NUT, Exhaust Pipe Brace Saddle Clamp	6	—	—	—	2	2	2	—	—	—	—	—	6025 804
GROUP 13 - FRAME OR FRONT FRAME STRUCTURE														
13-35-1	SHIELD, Battery Heat	70	—	—	—	1	1	—	—	—	—	—	—	3404 416
	All	71	—	—	—	1	1	—	—	—	—	—	—	3404 440
			—	—	—	—	—	1	1	—	—	—	—	2530 975
13-54-4	HANGER, FRONT REAR SPRING		—	—	—	—	2	—	—	—	—	—	—	2462 086
13-54-15	HANGER, REAR	71	—	—	—	—	—	1	1	—	—	—	—	3400 942-3
GROUP 17 - REAR SPRINGS														
17-11-3	SPRING, w/BUSHING	6	—	—	—	2	2	—	—	—	—	—	—	3004 655
		70 8	—	—	—	2	2	—	—	—	—	—	—	2585 641
	All	71 8	—	—	—	2	2	—	—	—	—	—	—	2585 640
		70	—	—	—	—	—	2	—	—	—	—	—	3004 846
		70	—	—	—	—	—	—	2	—	—	—	—	2585 239
	All	71	—	—	—	—	—	2	2	—	—	—	—	2585 240
17-12-4	LEAF, w/BUSHING, Main		—	—	—	2	2	—	—	—	—	—	—	3400 872
		70	—	—	—	—	—	2	—	—	—	—	—	3400 878
		70	—	—	—	—	—	—	2	—	—	—	—	3400 870
	All	71	—	—	—	—	—	2	2	—	—	—	—	3400 617
17-17-3	BUSHING, Front, Pivot		—	—	—	2	2	2	2	—	—	—	—	1948 869
17-23-3	ABSORBER PACKAGE, Front	70	—	—	—	2	2	—	—	—	—	—	—	3004 961
	All	71	—	—	—	2	2	—	—	—	—	—	—	3004 960
			—	—	—	—	—	2	2	—	—	—	—	2525 461
	ABSORBER PACKAGE, Rear	70	—	—	—	2	2	—	—	—	—	—	—	2585 618
	All	71	—	—	—	2	2	—	—	—	—	—	—	3402 262
			—	—	—	—	—	2	2	—	—	—	—	3400 587
	All	71	—	—	—	—	—	2	2	—	—	—	—	3402 019
MANUAL TRANSMISSION														
GROUP 21 - TRANSMISSION														**002**
21-84-1	CABLE, w/HOUSING, Speedometer, Lwr.	70	—	—	—	—	—	1	1	—	—	—	—	2927 666
		71	—	—	—	1	1	1	1	—	—	—	—	2927 666
	EXTENSION, Speedometer, Upper, 6" Lgh.		—	—	—	1	1	—	—	—	—	—	—	2927 670
			—	—	—	—	—	1	1	—	—	—	—	2927 920
21-84-4	SHAFT or CABLE PACKAGE, Speedometer, 80" lgh.		—	—	—	1	1	1	1	—	—	—	—	2448 294
AUTOMATIC TRANSMISSION														**0025**
21-84-1	CABLE, w/HOUSING, Speedometer, Lwr.	70	—	—	—	—	—	1	1	—	—	—	—	2927 666
		71	—	—	—	1	1	1	1	—	—	—	—	2927 666
	EXTENSION, Speedometer, Upper, 6" Lgh.		—	—	—	1	1	—	—	—	—	—	—	2927 670
			—	—	—	—	—	1	1	—	—	—	—	2927 920
21-84-4	SHAFT OR CABLE PACKAGE, Speedometer		—	—	—	1	1	1	1	—	—	—	—	2443 294

CARLINES J - Challenger V - Valiant R - Belvedere - Satellite P - Plymouth C - Chrysler
B - Barracuda L - Dart W - Coronet - Charger D - Dodge Y - Imperial

AR Indicates use as required. Numerals in parentheses ( ) refer to notes.

# Indicates parts not listed in any previous parts book. ★ Indicates change or addition.

Printed in U.S.A. January 1972

CODE	PART NAME		MODEL CODES	SEE BOTTOM NOTE 21	23	27	29	41	43	45	46	PART NUMBER
	GROUP 23 - BODY											
23-04-18	INSERT PANEL, Center Floor											
	New York, Taxi	70	W-T	—	—	—	—	1	—	—	—	2836 719
23-15-3	HINGE, Rear Door Lwr. and Integral Check	70	W-T	—	—	—	—	1	—	—	—	3508 970-1
23-20-14	PLATE, Body Side Sill Rear Door Scuff											
	New York City, Rt.	70	W-T	—	—	—	—	1	—	—	—	2836 716
	Lt.	70	W-T	—	—	—	—	1	—	—	—	2836 717
		71	W-T	—	—	—	—	2	—	—	—	3571 422
	PLATE, BODY Side Rear Door Scuff											
	New York City Rt.	70	P-T, D-T	—	—	—	—	1	—	—	—	3412 179
	Lt.	70	P-T, D-T	—	—	—	—	1	—	—	—	3412 180
23-20-41	MAT, Rear Floor, Heavy Duty											
	New York City, Black	70	W-T	—	—	—	—	1	—	—	—	2836 775
23-32-17	CROSSMEMBER, Frt. Suspension											
	Use w/225 Eng.	71	R-T,W-T	—	—	—	—	1	—	1	—	3583 080
23-32-43	SPACER, Rear Floor Pan to Shock Abs.											
	Crossmember	70	R-T	1	—	—	—	1	—	—	—	3506 115
		70	W-T	1	—	—	—	1	—	—	—	3506 115
		70	D-T	—	—	—	—	1	—	—	—	3506 061
23-32-45	PLATE, W/SCREW, Floor Pan to Shock Abs.											
	Crossmember Short	70	R-T	1	—	—	—	1	—	—	—	3506 117
	Short	70	W-T	1	—	—	—	1	—	—	—	3506 117
	PLATE, W/SCREW, Rear Floor Pan to Shock											
	Abs. Crossmember Long	70	R-T	1	—	—	—	1	—	—	—	3506 119
	Long	70	W-T	1	—	—	—	1	—	—	—	3506 119
		70	D-T	—	—	—	—	1	—	—	—	3506 063
23-52-1	HELPER SPRING, Front Seat Cushion											
	Coil Type	70	W-T	—	—	—	—	1	—	—	—	3412 192
		71	W-T	—	—	—	—	1	—	—	—	3571 423

NOTES

CARLINES J - Challenger, B - Barracuda, V - Valiant, L - Dart, R - Belvedere - Satallite, W - Coronet - Charger, P - Plymouth, D - Dodge, C - Chrysler, Y - Imperial

NUMERALS INDICATE: 21 - 2 DR. SED., 23 - 2 DR. H.T., 27 - CONV. CPE., 29 - FAST BACK, 41 - 4 DR. SED., 43 - 4 DR. H.T., 45 - 6 PASS. STA. WGN., 46 - 9 PASS. STA. WGN.

AR Indicates use as required.
\# Indicates parts not listed in any previous parts book
Numerals in parentheses ( ) refer to notes.
★ Indicates change or addition.

Printed in U.S.A.
January 1972

Right and left part numbers are on same line, first number is right, second number is left.

GROUP 1 - ACCESSORIES

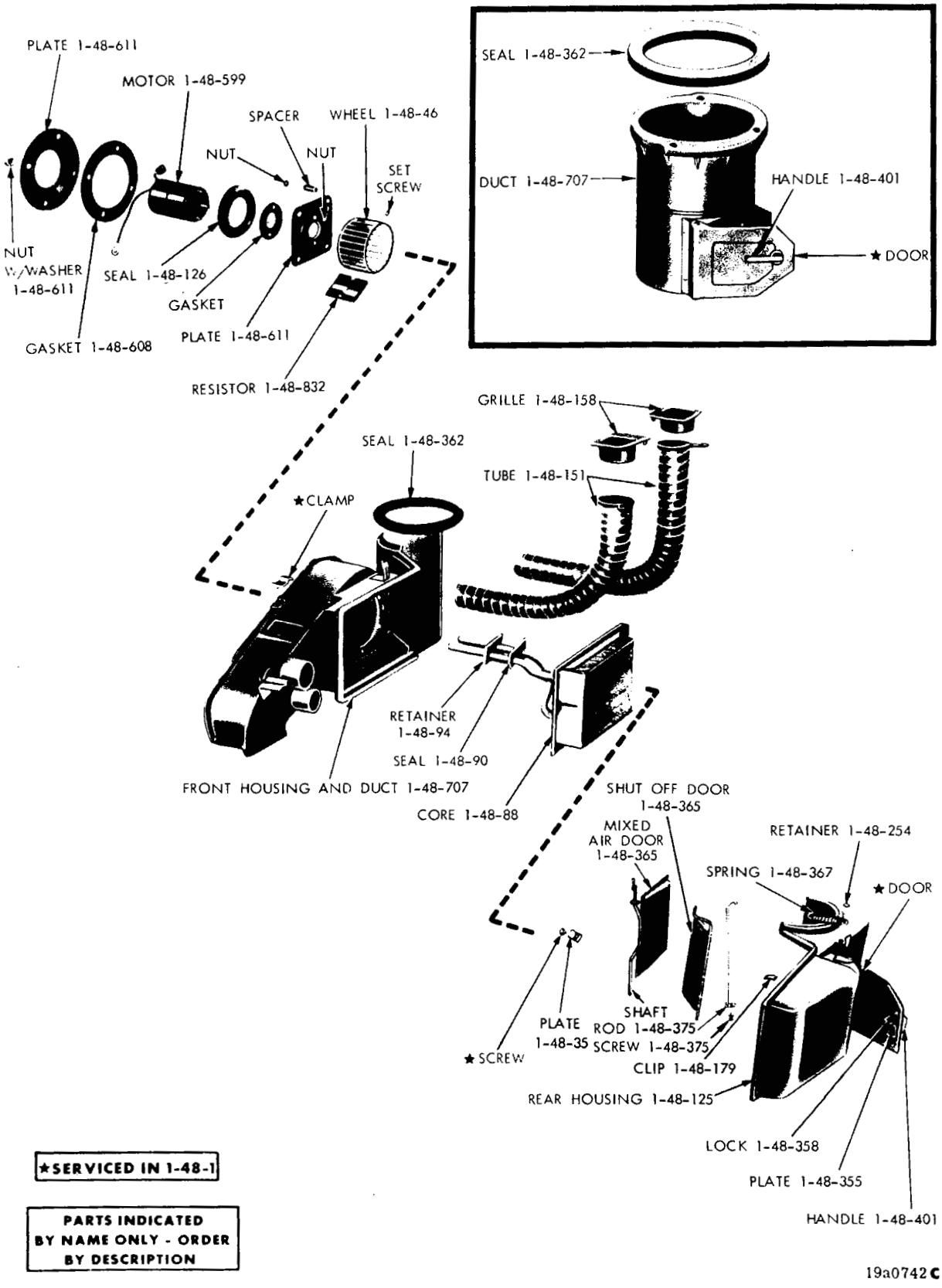

★SERVICED IN 1-48-1

PARTS INDICATED BY NAME ONLY - ORDER BY DESCRIPTION

19a0742**C**

HEATER AND FRESH AIR DUCT - VALIANT AND DART

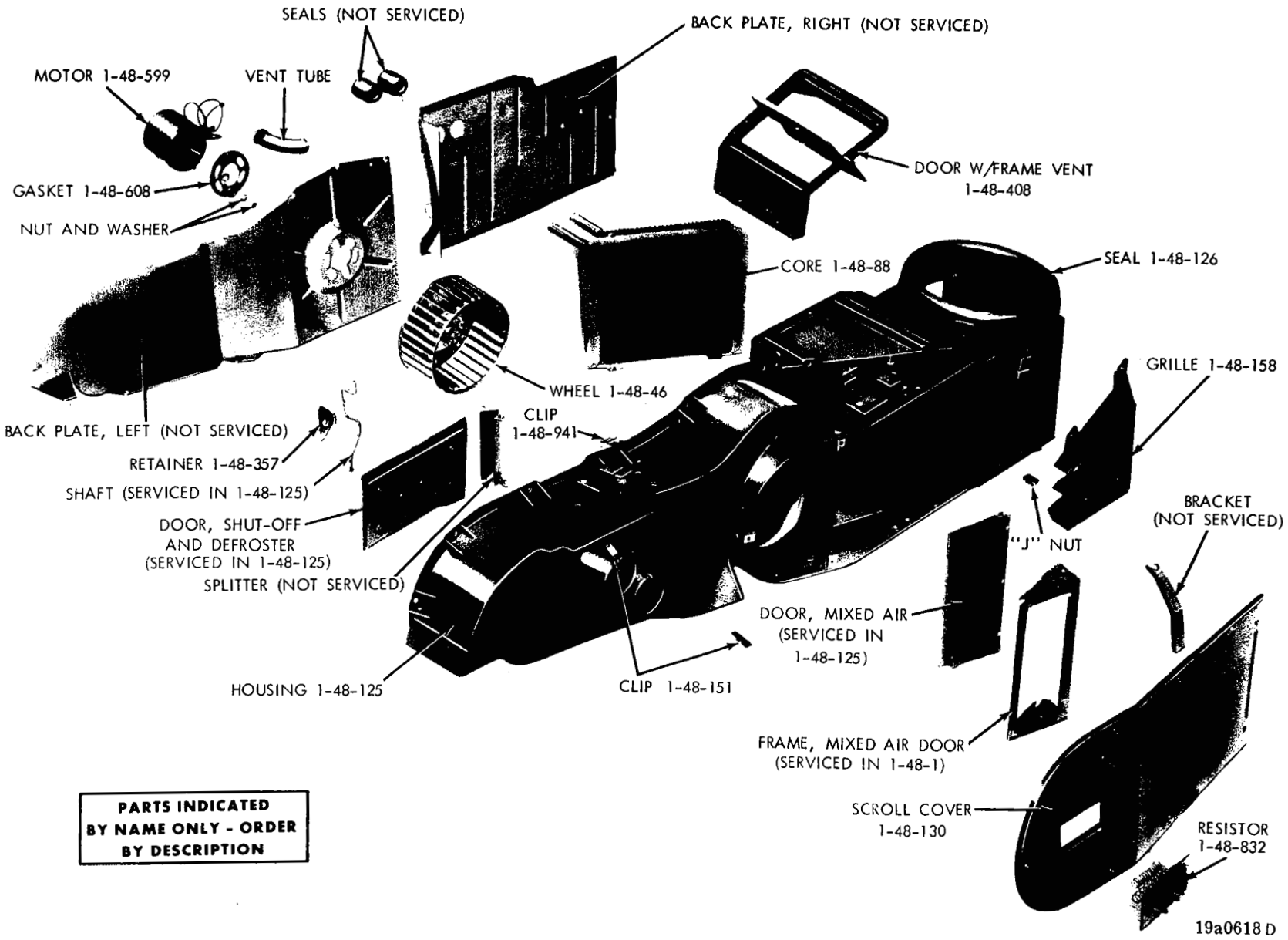

PARTS INDICATED BY NAME ONLY - ORDER BY DESCRIPTION

HEATER - BELVEDERE AND CORONET

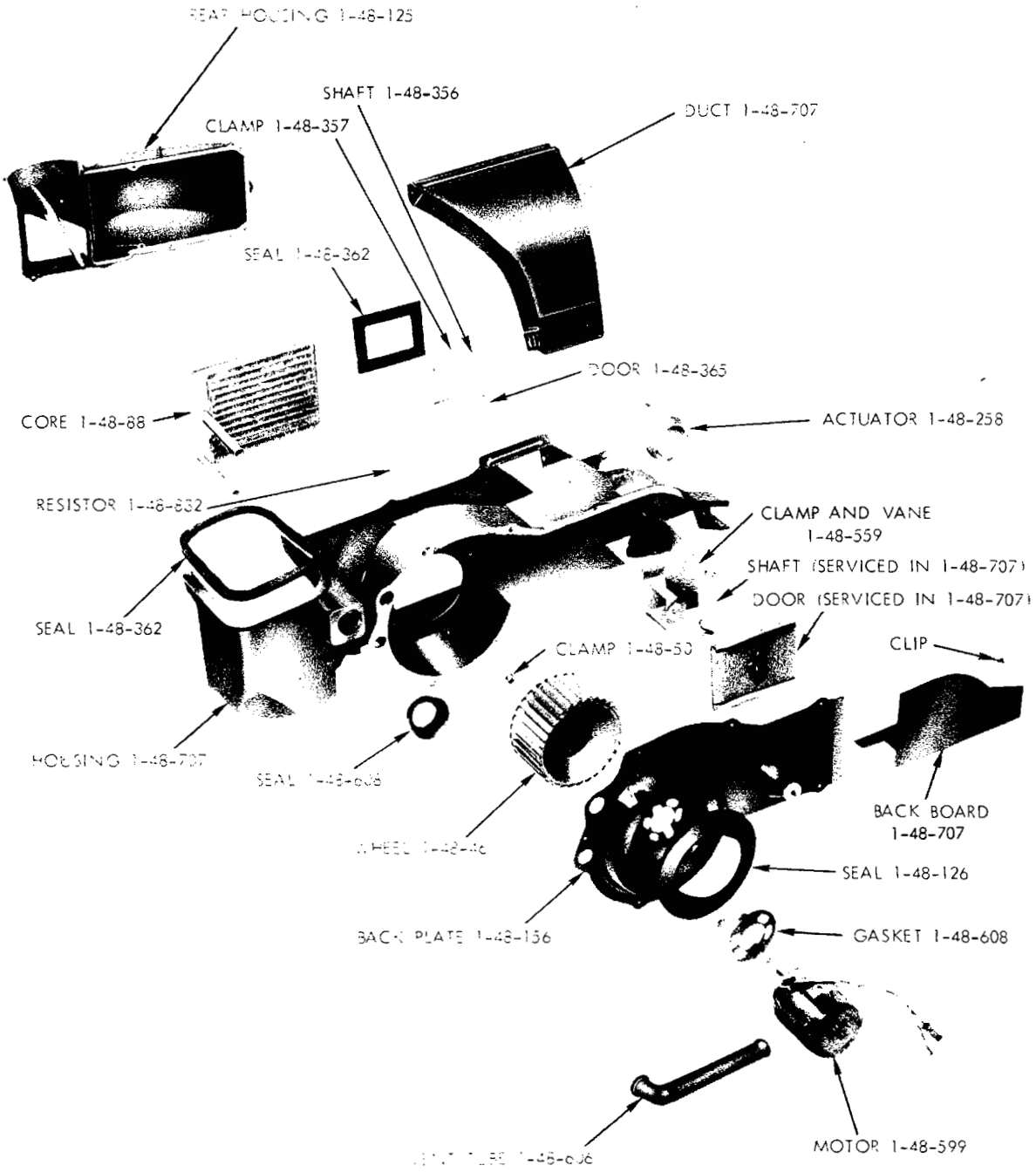

PARTS INDICATED BY NAME ONLY - ORDER BY DESCRIPTION

19a3410 **D**

HEATER - SATELLITE, CORONET AND CHARGER (1971)

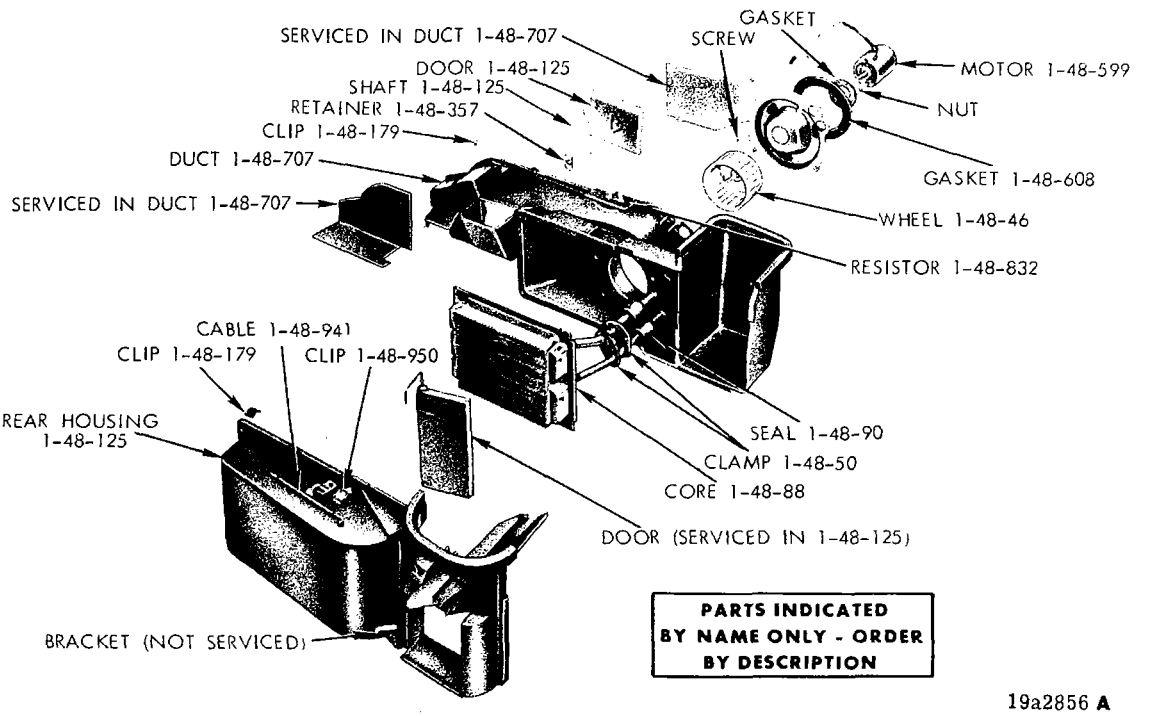

HEATER - BARRACUDA AND CHALLENGER

NOTES

NOTES

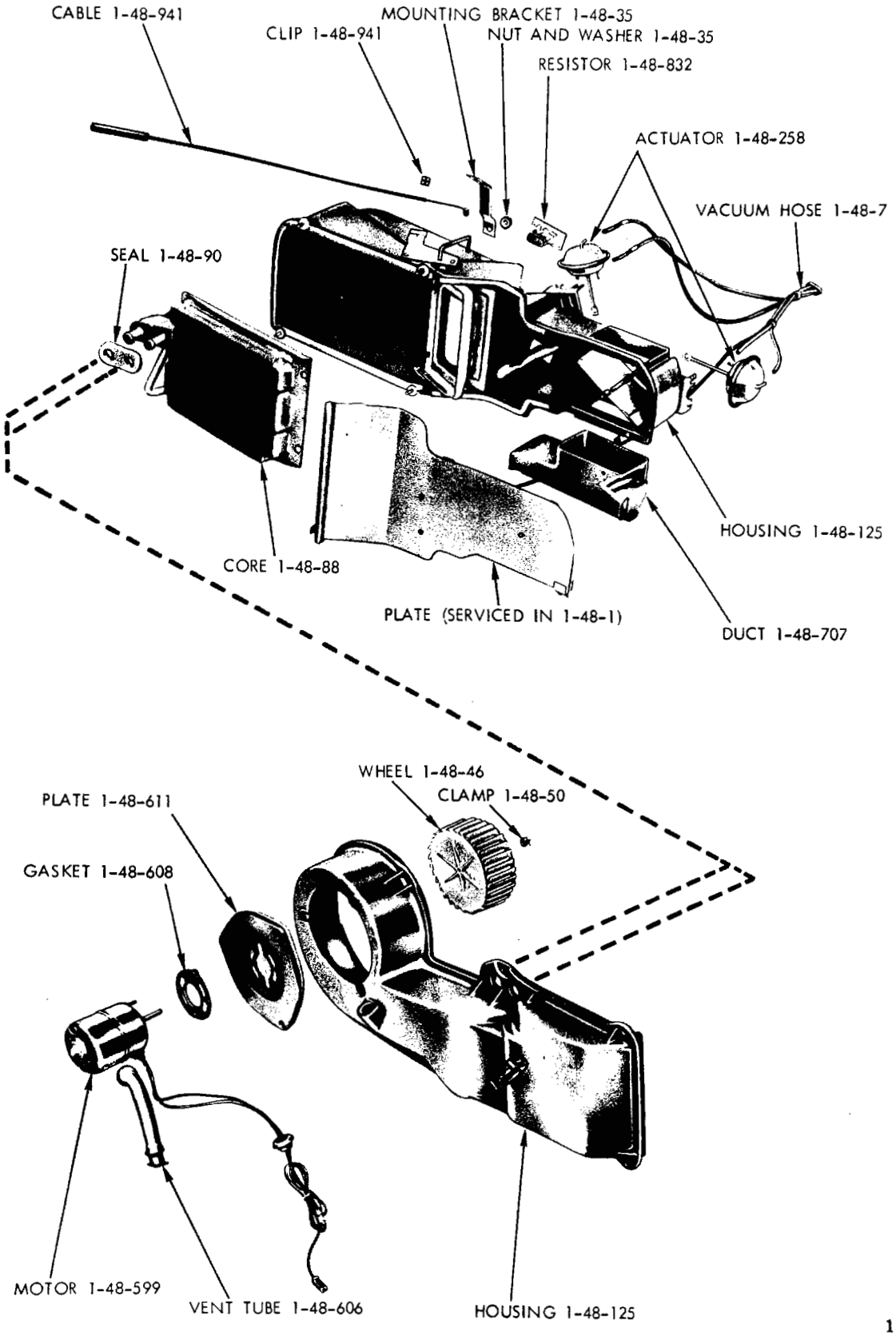

HEATER - PLYMOUTH, DODGE AND CHRYSLER

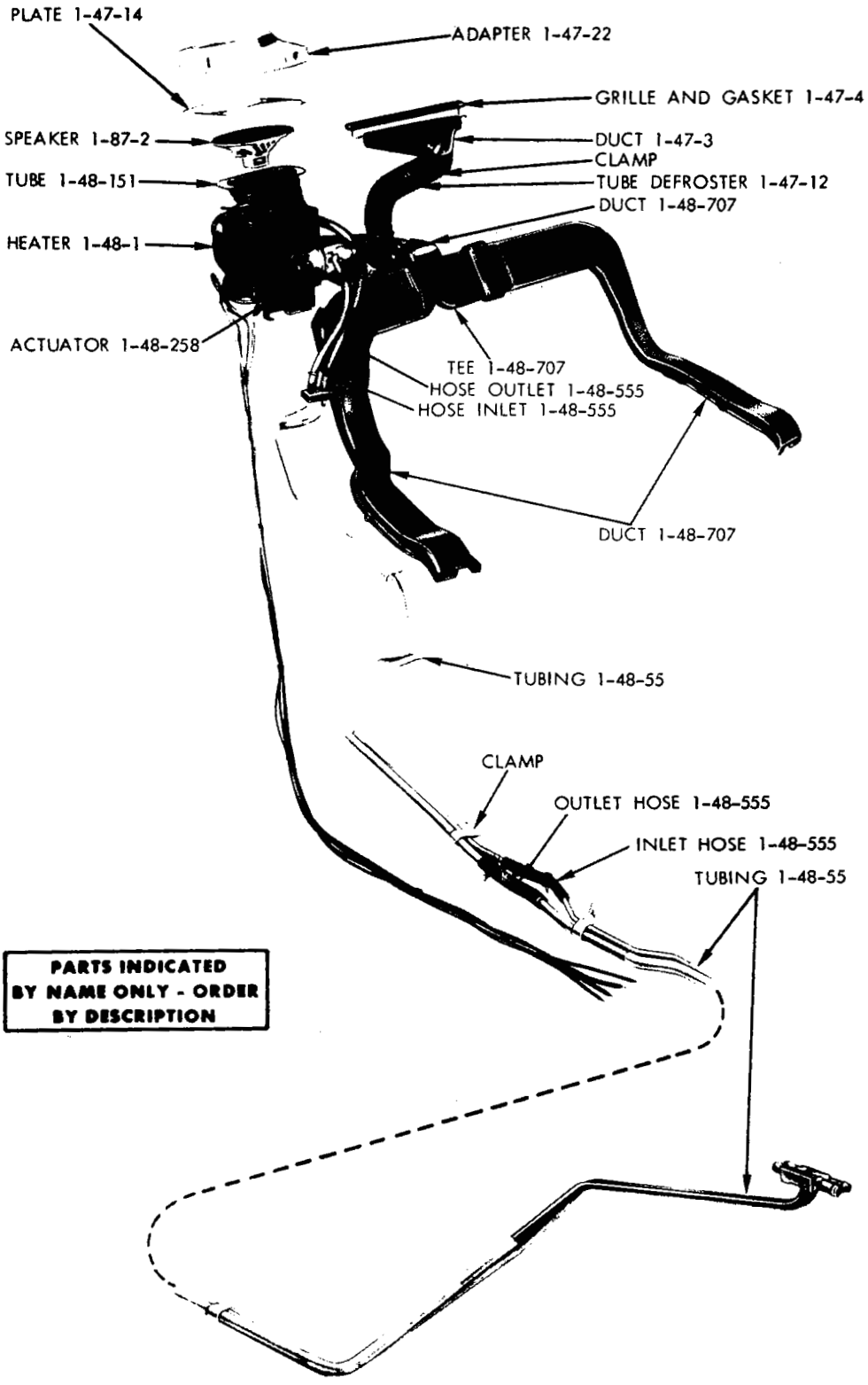

REAR SEAT HEATER AND PLUMBING - CHRYSLER AND IMPERIAL

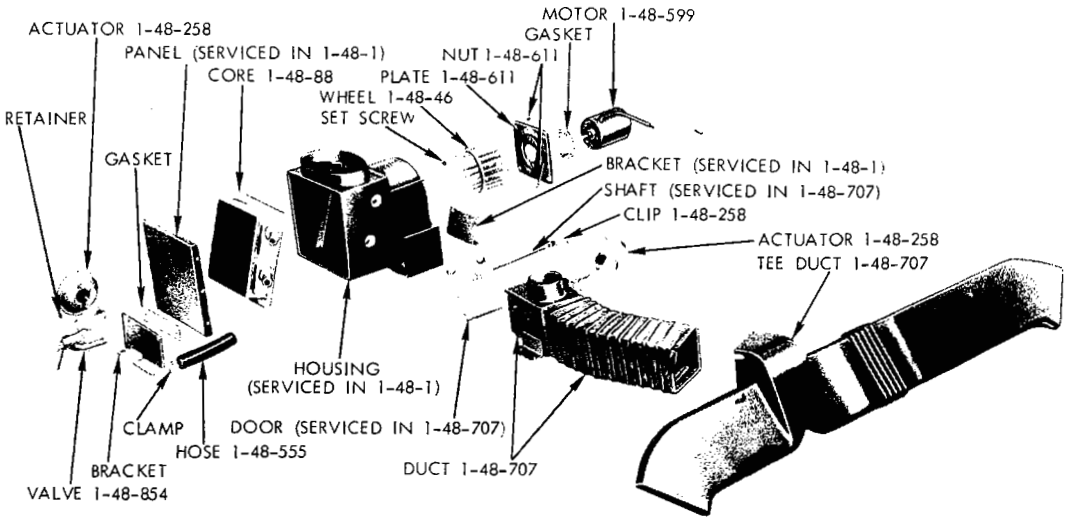

19a2453

REAR HEATER AND DEFROSTER - CHRYSLER AND IMPERIAL

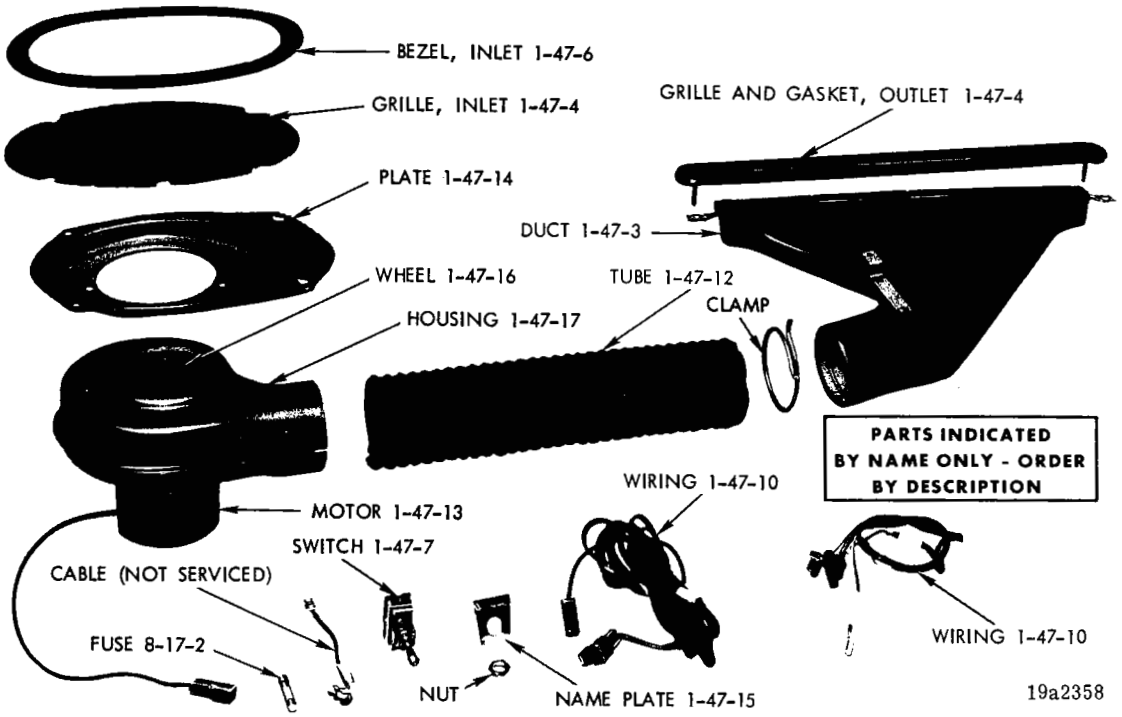

19a2358

REAR WINDOW DEFOGGER - VALIANT AND DART

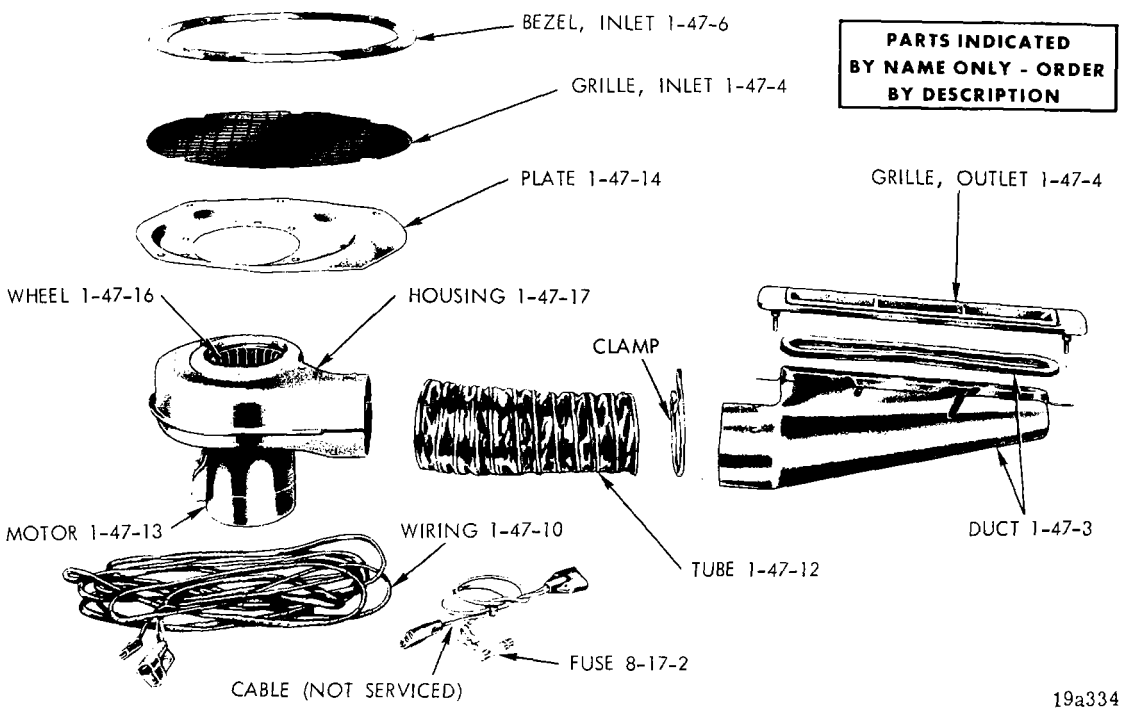

REAR WINDOW DEFOGGER - BARRACUDA AND CHALLENGER

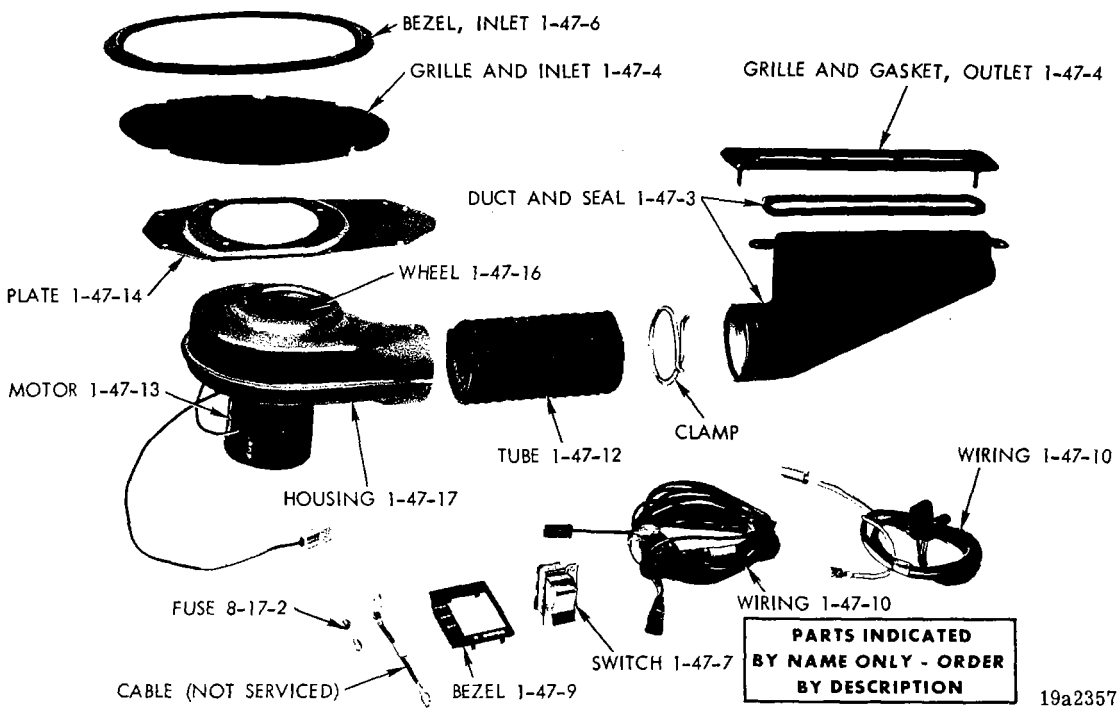

REAR WINDOW DEFOGGER - CHARGER (TYPICAL OF BELVEDERE AND CORONET)

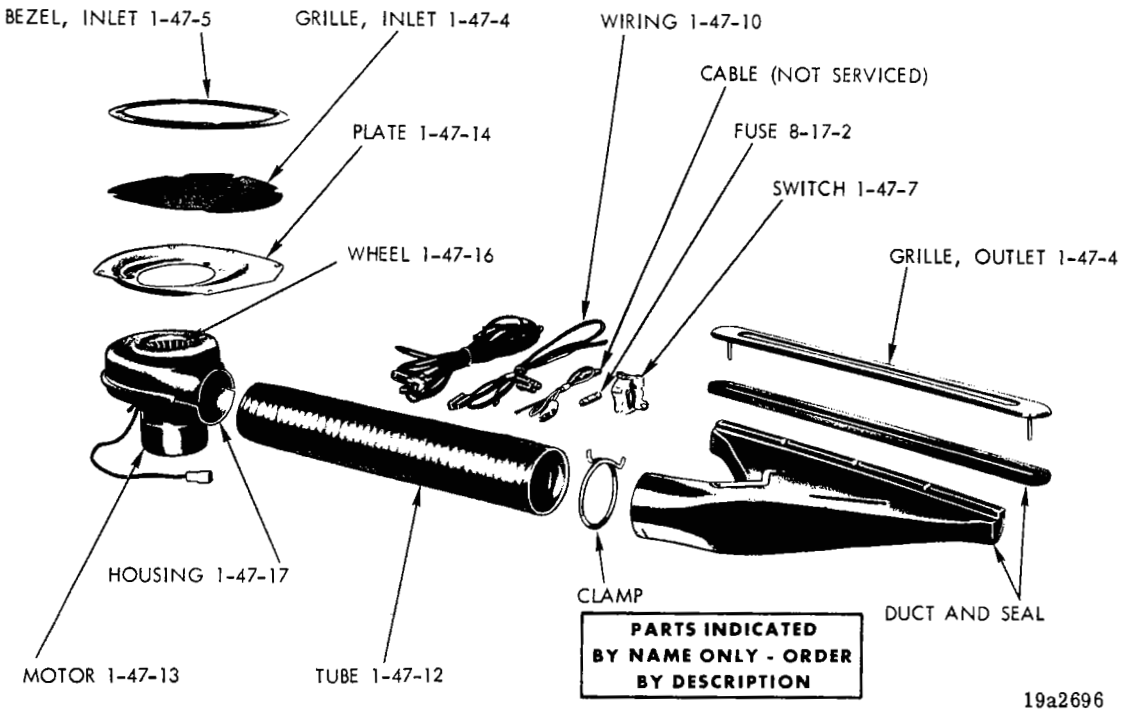

REAR WINDOW DEFOGGER - PLYMOUTH, DODGE, CHRYSLER AND IMPERIAL

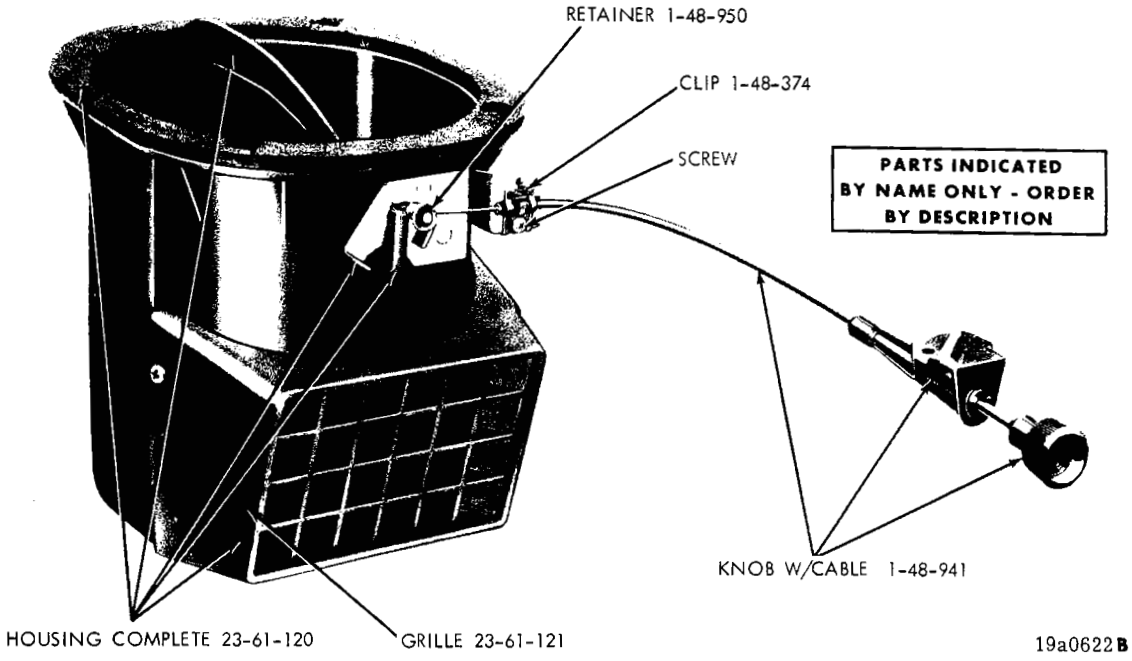

FRESH AIR DOOR - BELVEDERE AND CORONET

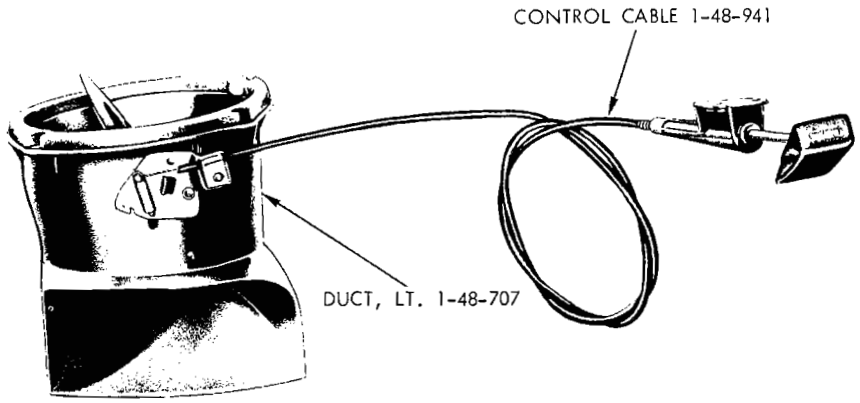

19a2896

FRESH AIR DOOR AND CONTROLS - BARRACUDA AND CHALLENGER

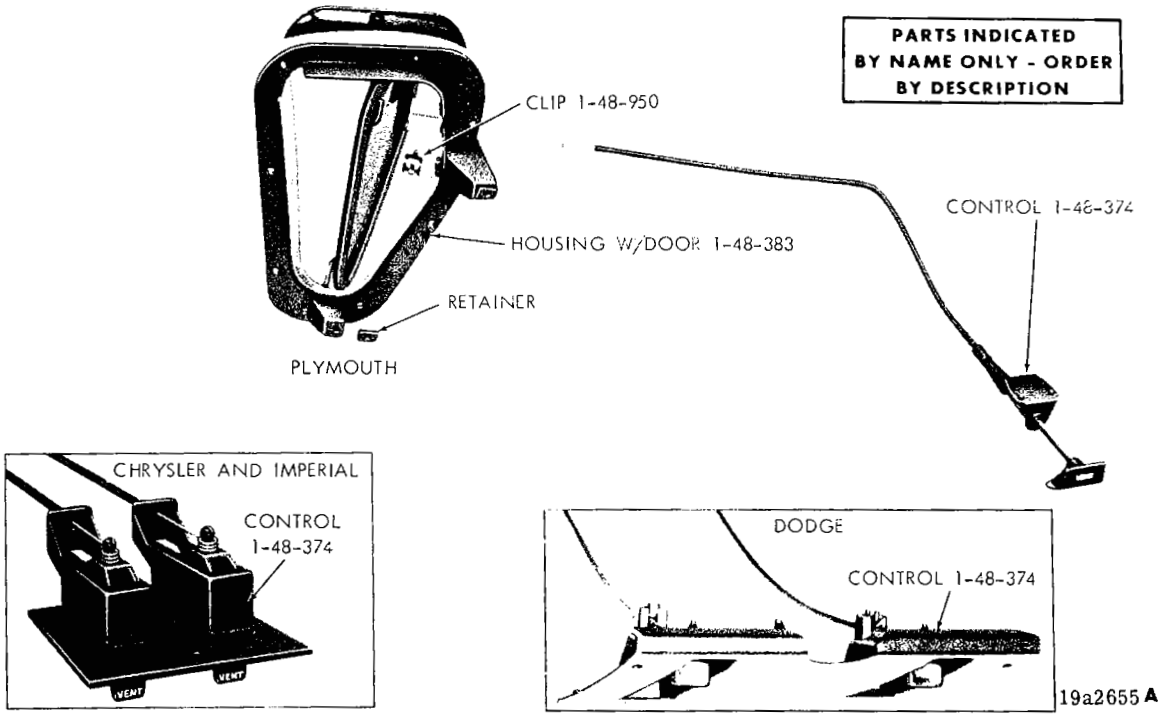

19a2655 A

FRESH AIR DOOR AND CONTROLS - PLYMOUTH, DODGE, CHRYSLER AND IMPERIAL

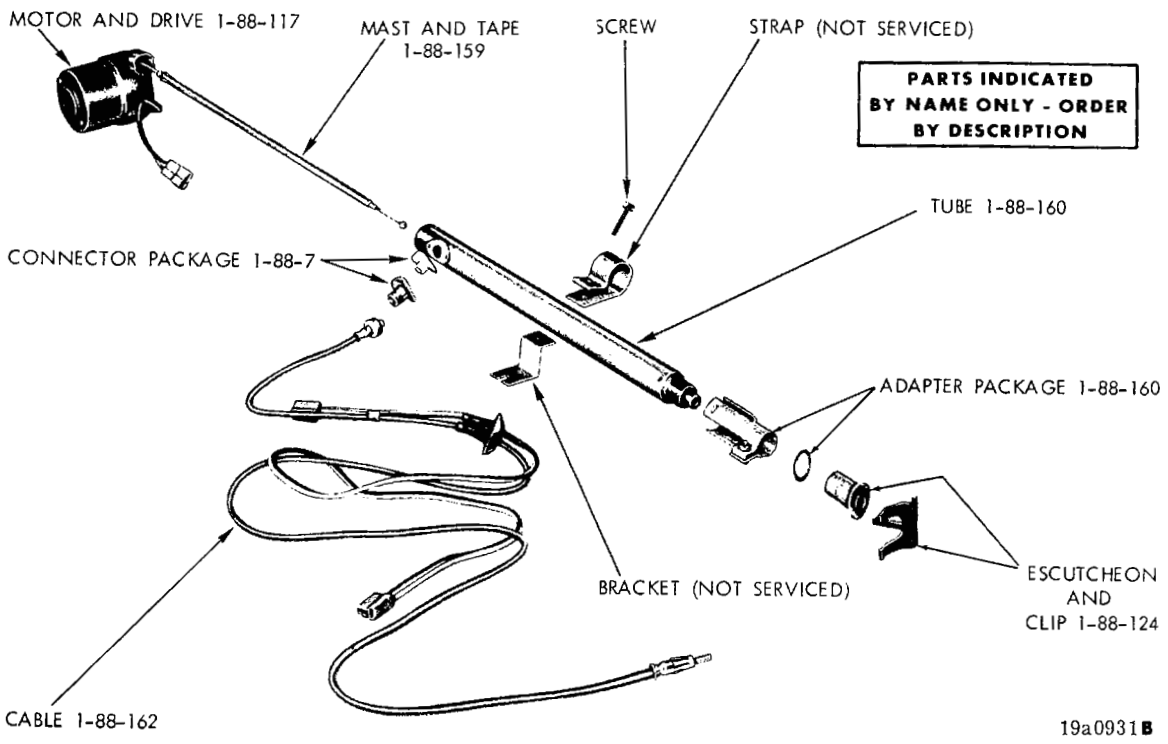

POWER ANTENNA - CHRYSLER AND IMPERIAL

NOTES

CODE	PART NAME	ENG. TYPE OR CU.IN.	V 1-2	B J 1-2	L 1-2	R 1-2	W 1-2	P 1-2	D 1-2	C 1	C 2	C 3	Y 1	PART NUMBER
	NOTE: For Parts Not Listed See Respective Groups.													
1-18-0	**TIRE REPAIR**													
1-18-7	INFLATOR		—	1	—	—	—	—	—	—	—	—	—	3400 920
	BRACKET, Inflator Hold Down		—	1	—	—	—	—	—	—	—	—	—	3504 420
1-47-0	**REAR WINDOW DEFOGGER**													
1-47-1	DEFOGGER PACKAGE													
	V	70	1	—	—	—	—	—	—	—	—	—	—	2837 969
	L	70	—	—	1	—	—	—	—	—	—	—	—	2837 971
	V-H 2 Dr. H.T. L-L, L-H, 2 Dr. H.T. 4 Dr.	71	1	—	1	—	—	—	—	—	—	—	—	3441 903
	R, W, 2D., 2D. H.T., 4D.	70	—	—	—	1	1	—	—	—	—	—	—	3441 320
	W Fast Back	70	—	—	—	—	1	—	—	—	—	—	—	2936 885
	DEFOGGER PACKAGE BASIC													
	V, P, All D 2 Dr. H.T., 4 Dr. C, 2 Dr. H.T., 4 Dr., 4 Dr. H.T. Y, 2 Dr. H.T., 4 Dr. H.T.	70	1	—	—	—	—	1	1	1	1	1	1	3441 539
	V, L. Fast Back., P 2 Dr. 2 Dr. H.T. 4 Dr. D 2 Dr. H.T. 4 Dr. C 2 Dr. H.T. 4 Dr. 4 D.H.T. Y 2 Dr. H.T. 4 Dr. H.T.	71	1	—	1	—	—	1	1	1	1	1	1	3441 539
	B, 2 Dr. H.T. J, 2 Dr. H.T. Fast Back P, 2 Dr. Fast Back, 4 Dr. H.T., D, 4 Dr. H.T.	70	—	1	—	—	—	1	1	—	—	—	—	3441 540
	B 2 D.H.T. J 2 Dr. H.T. R 2 Dr. H.T. 4 Dr. W 2 Dr. H.T. 4 Dr. and Fast Back. P Fast Back 4 Dr. H.T. D. 4 Dr. H.T.	71	—	1	—	1	1	1	1	—	—	—	—	3441 540
	NOTE: When Using Basic Package, Must Also Use Adapter Package													
1-47-2	ADAPTER PACKAGE													
	V,L		1	—	1	—	—	—	—	—	—	—	—	3420 943
	B, 2 Dr. H.T. J, 2 Dr. H.T. Fast Back	71	—	1	—	—	—	—	—	—	—	—	—	3420 912
	R, 2 Dr. H.T. 4 Dr. W, 2 Dr. H.T. 4 Dr. Fast Back	71	—	—	—	1	1	—	—	—	—	—	—	3579 234
	P. 2 Dr., 2 Dr. H.T. Fast Back 4 Dr., 4 Dr. H.T.		—	—	—	—	—	1	—	—	—	—	—	3420 944
	D 2 Dr. H.T. 4 Dr. H.T.	71	—	—	—	—	—	—	1	—	—	—	—	3420 944
	D. 2 Dr. H.T., 4 Dr., 4 Dr. H.T.	70	—	—	—	—	—	—	1	—	—	—	—	3420 945
	C. 2 Dr. H.T., 4 Dr., 4 Dr. H.T.	70	—	—	—	—	—	—	—	1	1	1	—	3420 946
	C 2 Dr. H.T. 4 Dr. 4 Dr. H.T.	71	—	—	—	—	—	—	—	1	1	1	—	3579 235
	Y	70	—	—	—	—	—	—	—	—	—	—	1	3420 947
	Y 2 Dr. H.T. 4 Dr. H.T.	71	—	—	—	—	—	—	—	—	—	—	1	3579 236
	W RR. DUAL SPEAKERS													
	B, 2 Dr. H.T.		—	1	—	—	—	—	—	—	—	—	—	3441 426
	J, 2 Dr. H.T.,		—	1	—	—	—	—	—	—	—	—	—	3441 426
	P, 2 Dr., 2 Dr. H.T. Fast Back 4 Dr. H.T.		—	—	—	—	—	1	—	—	—	—	—	3441 426
	D, 2 Dr. H.T., 4 Dr. H.T.		—	—	—	—	—	—	1	—	—	—	—	3441 426
	C, Y, 2 Dr. H.T.		—	—	—	—	—	—	—	1	1	1	1	3441 426
1-47-3	DUCT, Rr. Window Defogger		1	—	1	1	1	1	1	1	1	1	1	2837 748
	V-H 2 Dr. H.T. L-L, L-H 2 Dr. H.T. 4 Dr.		1	—	1	—	—	—	—	—	—	—	—	2485 738
	Rr. Htr. Defroster		—	—	—	—	—	—	—	1	1	1	1	2607 776
	Duct And Seal, Defogger Outlet		—	1	—	1	1	1	1	—	—	—	—	2607 754
1-47-4	OUTLET, Defogger Service		1	—	1	1	1	1	1	1	1	1	1	2521 668
	Rear Heater	71	—	—	—	—	—	—	—	1	1	1	1	2521 668
	GRILLE and GASKET, Defogger Inlet		1	1	1	1	1	1	1	1	1	1	1	2837 220
	GRILLE, Rr. Shelf Speaker	70	—	—	—	—	—	1	1	1	1	1	1	2291 876
1-47-6	BEZEL, Defogger Inlet		1	1	1	1	1	1	1	1	1	1	1	2837 219
	BEZEL, Defogger Outlet		—	1	—	1	1	1	1	—	—	—	—	3441 005
	BEZEL, Defogger Rear	71	—	—	—	—	—	—	—	—	—	—	1	2985 574
		71	—	—	1	—	—	—	—	—	—	—	—	2219 627

CARLINES J - Challenger, B - Barracuda, V - Valiant, L - Dart, R - Belvedere · Satellite, W - Coronet - Charger, P - Plymouth, D - Dodge, C - Chrysler, Y - Imperial

AR Indicates use as required.

# Indicates parts not listed in any previous parts book.

Numerals in parentheses ( ) refer to notes.

★ Indicates change or addition.

Printed in U.S.A. January 1972

CODE	PART NAME		ENG. TYPE OR CU.IN.	V 1-2	B J 1-2	L 1-2	R 1-2	W 1-2	P 1-2	D 1-2	C 1	C 2	C 3	Y 1	PART NUMBER
1-47-0	**REAR WINDOW DEFOGGER Cont'd.**														
1-47-7	SWITCH, Defogger			—	1	—	—	—	—	—	—	—	—	—	2947 411
	R, W	70		—	—	—	1	1	—	—	—	—	—	—	2947 262
	R, W	71		—	—	—	1	1	—	—	—	—	—	—	3488 520
	V, L			1	—	1	—	—	—	—	—	—	—	—	2820 455
	P, D, C	70		—	—	—	—	—	1	1	1	1	1	—	2864 440
	P,D	71		—	—	—	—	—	1	1	—	—	—	—	2864 440
	C, W Rr. Htr. or Defogger	71		—	—	—	—	—	—	—	1	1	1	—	3488 182
	Y W Rr. Htr. or Dual A Cond.	71		—	—	—	—	—	—	—	—	—	—	1	3488 022
	Nut, Defogger Switch	71		—	—	—	—	—	1	1	—	—	—	—	2820 116
1-47-8	KNOB, Rr. Window Defogger Sw.	70		—	—	—	1	1	—	—	—	—	—	—	2947 556
1-47-9	BEZEL, Defogger Sw., Rr. Air	70		—	—	—	—	—	—	—	1	1	1	—	2984 911
	Bezel, Defogger Switch	71		—	—	—	1	1	—	—	—	—	—	—	3488 526
1-47-10	WIRING, Defogger Motor			—	1	—	—	—	—	—	—	—	—	—	2822 529
	V, L			1	—	1	—	—	—	—	—	—	—	—	2889 561
	R, W, P, D, C, Y	70		—	—	—	1	1	1	1	1	1	1	1	2822 529
	R, W	71		—	—	—	1	1	—	—	—	—	—	—	2889 777
	P, D, C, Y	71		—	—	—	—	—	1	1	1	1	1	1	2822 529
1-47-12	TUBE, Flexible, Blower To Duct			1	1	1	1	1	1	1	1	1	1	1	2096 989
	Tube, Defogger Flex.			1	1	1	—	—	1	1	1	1	1	1	2096 989
1-47-13	MOTOR and BRACKET, Defogger Blower	70		1	1	1	1	1	1	1	1	1	1	1	2096 772
		71		1	1	1	1	1	1	1	1	1	1	1	3441 526
1-47-14	PLATE, Defogger Blower Mtg.	70		1	1	1	—	—	1	1	1	1	1	1	2607 141
		71		1	1	1	1	1	1	1	1	1	1	1	2607 141
	Blower and Speaker Mtg.			—	1	—	—	—	1	1	1	1	1	1	2936 347
	Blower Mtg. Except Fast Back	70		—	—	—	1	1	—	—	—	—	—	—	1887 582
	Fast Back	70		—	—	—	—	1	—	—	—	—	—	—	2607 769
1-47-15	NAME PLATE, Defogger Switch	70		1	—	1	—	—	—	—	—	—	—	—	2580 360
		71		1	—	1	—	—	1	1	—	—	—	—	2631 657
	Decal, Rr. Window Defogger Switch Nomenclature J-H	71		—	1	—	—	—	—	—	—	—	—	—	2947 666
	DECAL, Defogger Sw.			—	—	—	—	—	1	1	—	—	—	—	2947 186
1-47-16	WHEEL, Defogger Blower			1	1	1	1	1	1	1	1	1	1	1	1239 241
1-47-17	HOUSING, Defogger Blower			1	1	1	1	1	1	1	1	1	1	1	1262 318
1-47-22	ADAPTER, Defogger Blower and Speaker			—	1	—	—	—	1	1	1	1	1	1	2936 346
1-47-23	PLATE, Defogger Switch Mtg.	70		—	—	—	1	1	—	—	1	1	1	—	2947 246
1-47-24	SLEEVE, Defogger Blower Motor Term.	70		1	1	1	1	1	1	1	1	1	1	1	1264 933
1-48-0	**HEATER AND COMPONENTS**														
	NOTE: All These Heaters Are For Replacement Only Not For Field Installation														
1-48-1	HEATER, Complete w o A Cond. w Frt. Hsg. Stamped 2936864	70		1	—	1	—	—	—	—	—	—	—	—	2936 864
	w o A Cond. w Frt. Hsg. Stamped 3441506			1	—	1	—	—	—	—	—	—	—	—	3441 506
	w A Cond.			1	—	1	—	—	—	—	—	—	—	—	3441 200
	w o A Cond.			—	1	—	—	—	—	—	—	—	—	—	2936 602
	w oA Cond.	70		—	—	—	1	1	—	—	—	—	—	—	2936 680
	w o A Cond.	71		—	—	—	1	1	—	—	—	—	—	—	3441 398
	w Upper Level Vent	71		—	—	—	1	1	—	—	—	—	—	—	3441 624
	w o A Cond.			—	—	—	—	—	1	1	—	—	—	—	2936 066
	w Upper Level Vent	71		—	—	—	—	—	1	1	—	—	—	—	3441 657
	w o A Cond.			—	—	—	—	—	—	—	1	1	1	1	2936 067
	w Upper Level Vent	71		—	—	—	—	—	—	—	1	1	1	—	3441 658
	HEATER ASSY. COMPLETE														
		CANADA		—	—	—	—	—	1	1	—	—	—	—	2936 068
		CANADA		—	—	—	—	—	—	—	1	1	1	1	2936 069
	REAR Htr. Complete			—	—	—	—	—	—	—	1	1	1	1	2936 513
	Nut And Washer, Htr. To Dash	71		—	—	—	4	4	—	—	—	—	—	—	= 6028 905

CARLINES: J - Challenger, B - Barracuda, V - Valiant, L - Dart, R - Belvedere - Satellite, W - Coronet - Charger, P - Plymouth, D - Dodge, C - Chrysler, Y - Imperial

AR Indicates use as required.

Numerals in parentheses ( ) refer to notes.

# Indicates parts not listed in any previous parts book.

★ Indicates change or addition.

Printed in U.S.A. January 1972

CODE	PART NAME	ENG. TYPE OR CU.IN.	V 1-2	B J 1-2	L 1-2	R 1-2	W 1-2	P 1-2	D 1-2	C 1	C 2	C 3	Y 1	PART NUMBER
1-48-0	**HEATER AND COMPONENTS Cont'd.**													
1-48-4	CONTROL, Heater													
	Use 2820487 w 2884107 For Complete Control		1	—	1	—	—	—	—	—	—	—	—	2884 107
	w Rallye I Pnl.	70	—	1	—	—	—	—	—	—	—	—	—	2884 704
	B, J-H w Rallye I Pnl. w o A Cond.	71	—	1	—	—	—	—	—	—	—	—	—	2884 704
	J-S w o Rallye I Pnl.	71	—	1	—	—	—	—	—	—	—	—	—	2884 704
	B w o Rallye I Pnl. w o A Cond.	71	—	1	—	—	—	—	—	—	—	—	—	2884 722
	J-H w A Cond. w Rallye I Pnl.	71	—	1	—	—	—	—	—	—	—	—	—	2884 722
	w o Rallye I Pnl. J		—	1	—	—	—	—	—	—	—	—	—	2884 717
	w o Rallye I Pnl. B	70	—	1	—	—	—	—	—	—	—	—	—	2884 722
	w o A/Cond.	70	—	—	—	1	1	—	—	—	—	—	—	3431 167
	w o Upper Level Vent up to June	71	—	—	—	1	1	—	—	—	—	—	—	3431 139
	W/O Upper Level Vent After June 71 Approx.	71	—	—	—	1	1	—	—	—	—	—	—	# 3431 577
	w Upper Level Vent up to June 71	71	—	—	—	1	1	—	—	—	—	—	—	3431 281
	W Upper Level Vent After June 71 Approx.	71	—	—	—	1	1	—	—	—	—	—	—	# 3431 575
	w A Cond.	70	—	—	—	—	—	1	—	—	—	—	—	2884 332
	w o A. Cond.	70	—	—	—	—	—	—	1	—	—	—	—	2884 344
	w Upper Level Vent	71	—	—	—	—	—	1	1	—	—	—	—	3431 353
	w o A Cond.	70	—	—	—	—	—	—	—	1	1	1	—	2884 360
	w o Upper Level Vent Up To June 71	71	—	—	—	—	—	—	—	1	1	1	—	3431 194
	W O Upper Level Vent After June 71 Approx.	71	—	—	—	—	—	—	1	1	1	—	—	# 3431 583
	w Upper Level Vent Up to June 71	71	—	—	—	—	—	—	—	1	1	1	—	3431 334
	W Upper Level Vent After June 71 Approx.	71	—	—	—	—	—	—	—	1	1	1	—	# 3431 584
	w o A, Cond.	70	—	—	—	—	—	—	—	—	—	—	1	2884 359
	w o A/Cond.	71	—	—	—	—	—	—	—	—	—	—	1	3431 195
	NOTE: For Further Information See Part Type Code 24-24-39 or 24-24-161													
1-48-5	ADAPTER, Rr. Htr. Inlet and Speaker		—	—	—	—	—	1	1	1	1	1	1	2936 346
	Adapter, Rr. Window Defogger Blower And Speaker	71	—	1	—	—	—	1	1	1	1	1	1	2936 346
	Plate, Rr. Htr. Inlet and Speaker Mtg.	71	—	—	—	—	—	—	—	1	1	1	1	2936 347
1-48-7	HOSE and CONNECTOR, Htr. Control Vacuum													
	w o A Cond.		—	—	—	—	—	—	—	1	1	1	1	2884 562
	w A/Cond. and Htr.	70	—	—	—	—	—	1	1	—	—	—	—	2884 557
	w A Cond.	71	—	—	—	1	1	—	—	—	—	—	—	3431 165
	w Upper Level Vent	71	—	—	—	1	1	—	—	—	—	—	—	3431 280
	w Upper Level Vent	71	—	—	—	—	—	—	—	1	1	1	—	3431 379
	Grommet and Hose Htr. Control w/Upper Level Vent	71	—	—	—	—	—	1	1	—	—	—	—	3431 377
	EXTENSION, A/Cond. and Htr. ATC Control Vacuum		—	—	—	—	—	—	1	—	—	—	—	2884 557
	Hose, Ext. Htr. Control Vac. W Upper Level Vent.	71	—	—	—	—	—	1	1	—	—	—	—	3431 461
	NOTE: For Further Information See Part Type Code 24-28-24													
1-48-10	LAMP, Htr. Control and A Cond.		—	1	—	—	—	—	—	—	—	—	—	2947 378
	Htr. Control		—	—	—	1	1	—	—	—	—	—	—	3431 162
	LAMP and SOCKET, Htr. and A Cond.	70	—	—	—	—	—	—	1	—	—	—	—	2884 265
	Socket, Htr. Control Up to June 71	71	—	—	—	1	1	—	—	—	—	—	—	3431 157
	After June 71 Approx.	71	—	—	—	1	1	—	—	—	—	—	—	# 3431 570
	NOTE: For Further Information See Part Type Code 24-24-167													
1-48-12	PUSH BUTTON, Slider Htr. Control													
	Fan	70	—	—	—	1	1	—	—	—	—	—	—	2884 745
	Htr. and Defroster	70	—	—	—	1	1	—	—	—	—	—	—	2884 746
	Temp.	70	—	—	—	1	1	—	—	—	—	—	—	2884 747
	PUSH BUTTON EXTENSION, Htr. Control FAN, Htr. or A Cond.	70	—	—	—	—	—	—	1	—	—	—	—	2884 205

CARLINES J - Challenger, B - Barracuda, V - Valiant, L - Dart, R - Belvedere - Satellite, W - Coronet - Charger, P - Plymouth, D - Dodge, C - Chrysler, Y - Imperial

AR Indicates use as required.

# Indicates parts not listed in any previous parts book.

Numerals in parentheses ( ) refer to notes.

★ Indicates change or addition.

Printed in U.S.A. January 1972

CODE	PART NAME	ENG. TYPE OR CU.IN.	V 1-2	B J 1-2	L 1-2	R 1-2	W 1-2	P 1-2	D 1-2	C 1	C 2	C 3	Y 1	PART NUMBER
1-48-0	**HEATER AND COMPONENTS Cont'd.**													
1-48-12	PUSH BUTTON Cont'd.													
	HEAT, Htr. or A/Cond.	70	—	—	—	—	—	—	1	—	—	—	—	2884 262
	EXTENSION and COVER, Push Button Htr. Control													
	HI HEAT		—	—	—	—	—	—	—	1	1	1	1	2884 379
	DEFROSTER		—	—	—	—	—	—	—	1	1	1	1	2884 380
	HEAT		—	—	—	—	—	—	—	1	1	1	1	2884 378
	Heat, w/Upper Level Vent	71	—	—	—	—	—	—	—	1	1	1	—	3431 343
	OFF		—	—	—	—	—	—	—	1	1	1	1	2884 377
	Vent, w/Upper Level Vent	71	—	—	—	—	—	—	—	1	1	1	—	3431 342
	NOTE: For Further Information See Part Type Code 24-24-164													
1-48-15	REPAIR KIT, Htr. Control Vacuum Hose		AR	AR	AR	AR	AR	AR	AR	AR	AR	AR	AR	2275 215
1-48-33	SLIDER, Push Button Htr. Control													
	Air, Defroster Temp.	70	—	—	—	—	—	—	1	—	—	—	—	2884 346
	Heat and Defroster	70	—	—	—	—	—	—	2	—	—	—	—	2884 573
	CLIP, Retainer Push Button Slider	70	—	—	—	2	2	—	—	—	—	—	—	2197 678
1-48-35	PLATE, Htr. Defroster Dr. Mtg.		2	—	2	—	—	—	—	—	—	—	—	2277 551
	A/Cond. and Htr. Shut Off Dr. Mtg.		2	—	2	—	—	—	—	—	—	—	—	2277 551
	BRACKET, Htr. Support		—	—	—	—	—	1	1	1	1	1	1	2936 070
	Bracket and Clip, Htr. Control Support R-L, R-H, W-L, W-H	71	—	—	—	1	1	—	—	—	—	—	—	3431 293
1-48-46	WHEEL, Htr. Blower Motor		1	1	1	—	—	—	—	—	—	—	—	2277 597
	Htr. Blower		—	—	—	1	1	—	—	—	—	—	—	3420 614
	Htr. Blower		—	—	—	—	—	1	1	1	1	1	1	2808 880
	Rr. Htr. Blower		—	—	—	—	—	—	—	1	1	1	1	2277 597
	NOTE: For Further Information See Part Type Code 24-28-210													
1-48-50	CLAMP, Htr, Blower Motor Wheel		1	1	1	1	1	1	1	1	1	1	1	2837 680
1-48-55	TUBING, Rr. Htr. U/Body Frt.	70	—	—	—	—	—	—	—	1	1	1	—	3441 129
		71	—	—	—	—	—	—	—	1	1	1	—	3441 779
	Rr. Htr. U/Body Rr.		—	—	—	—	—	—	—	1	1	1	—	3441 133
	Rr. Htr. U/Body Frt.	70	—	—	—	—	—	—	—	—	—	—	1	2936 547
		71	—	—	—	—	—	—	—	—	—	—	1	3441 782
	Rr. Htr. U/Body Rr. Up to June 71		—	—	—	—	—	—	—	—	—	—	1	2936 550
	After June 71 Approx.		—	—	—	—	—	—	—	—	—	—	1	#3502 197
	Htr. Control Vac. w/Upper Level Vent	71	—	—	—	1	1	—	—	—	—	—	—	3431 436
	Seal, Rr. Htr. Tubing To Floor		—	—	—	—	—	—	—	1	1	1	1	2936 536
1-48-70	BEZEL, Htr. Control		1	—	1	—	—	—	—	—	—	—	—	2884 889
	w/Upper Level Vent	71	—	—	—	—	—	1	—	—	—	—	—	3431 364
	COVER, Htr. Control w/o Htr.	70	1	—	—	—	—	—	—	—	—	—	—	2884 772
	BEZEL, Htr. and A/Cond. Control		—	—	1	—	—	—	—	—	—	—	—	2884 899
	BEZEL and Cover w/o Rallye I/Pnl. B, J-H.		—	1	—	—	—	—	—	—	—	—	—	3431 045
	w/o Rallye I/Pnl. J-S	70	—	1	—	—	—	—	—	—	—	—	—	3431 044
	w/Rallye I/Pnl.		—	1	—	—	—	—	—	—	—	—	—	3431 043
	BEZEL, A/Cond. and Htr. Control		—	—	—	—	—	1	1	—	—	—	—	2884 243
	w/o A/Cond.		—	—	—	—	—	1	1	—	—	—	—	2884 085
	w/o A/Cond.	70	—	—	—	—	—	—	—	1	1	1	—	2884 221
	w/o A/Cond.	71	—	—	—	—	—	—	—	1	1	1	—	3431 199
	w/Upper Level Vent	71	—	—	—	—	—	—	—	1	1	1	—	3431 382
	w/A/Cond. and Htr. Control	70	—	—	—	—	—	—	—	1	1	1	—	2884 293
		71	—	—	—	—	—	—	—	1	1	1	—	3431 200
	Rr. Heat, Rr. Fan.	70	—	—	—	—	—	—	—	1	1	1	—	2984 910
		71	—	—	—	—	—	—	—	1	1	1	—	2985 573
	Rr. Defogger Rr. Air	70	—	—	—	—	—	—	—	1	1	1	—	2984 911
	Hr. Control	70	—	—	—	—	—	—	—	—	—	—	1	2884 319
	Htr. Control w/o A/Cond.	71	—	—	—	—	—	—	—	—	—	—	1	3431 202
	BEZEL, Rr. Air Sw., Clock and A/Cond.	70	—	—	—	—	—	—	—	—	—	—	1	2984 740
		71	—	—	—	—	—	—	—	—	—	—	1	2985 544
	Rr. Fan, Rr. Htr. Sw., Clock and A/Cond.	70	—	—	—	—	—	—	—	—	—	—	1	2984 739
		71	—	—	—	—	—	—	—	—	—	—	1	2985 543

CARLINES: J - Challenger, B - Barracuda, V - Valiant, L - Dart, R - Belvedere - Satellite, W - Coronet - Charger, P - Plymouth, D - Dodge, C - Chrysler, Y - Imperial

AR Indicates use as required.

Numerals in parentheses ( ) refer to notes.

# Indicates parts not listed in any previous parts book.

★ Indicates change or addition.

Printed in U.S.A. January 1972

1-48-0 HEATER AND COMPONENTS Cont'd.

CODE	PART NAME	ENG. TYPE OR CU.IN.	V 1-2	B J 1-2	L 1-2	R 1-2	W 1-2	P 1-2	D 1-2	C 1	C 2	C 3	Y 1	PART NUMBER
	NOTE: For Further Information See Part Type Code 24-24-140, 8-37-463													
1-48-88	CORE, Heater													
	w/or/w/o A/Cond.		1	—	1	—	—	—	—	—	—	—	—	2933 000
	w/A/Cond.		—	1	—	—	—	—	—	—	—	—	—	3441 180
	w/o A/Cond.		—	1	—	—	—	—	—	—	—	—	—	3420 815
	w/o A/Cond.	71	—	—	—	1	1	—	—	—	—	—	—	3579 171
	W/A/Cond.	71	—	—	—	1	1	—	—	—	—	—	—	3441 180
	w/o A/Cond.	70	—	—	—	1	1	—	—	—	—	—	—	2932 999
	W/A/Cond. And Htr. (Partial)	70	—	—	—	1	1	—	—	—	—	—	—	3420 577
	w/o A/Cond.		—	—	—	—	—	1	1	1	1	1	—	2932 831
	w/o A/Cond.	71	—	—	—	—	—	1	1	1	1	1	—	3579 169
	w/A/Cond.	70	—	—	—	—	—	1	1	1	1	1	1	2936 201
	w/A/Cond.	71	—	—	—	—	—	1	1	1	1	1	1	3420 787
	CORE, Heater													
	Canada	70	—	—	—	1	1	—	—	—	—	—	—	2932 998
	CANADA		—	—	—	—	—	1	1	1	1	1	1	2936 111
	Rr. Htr.		—	—	—	—	—	—	—	1	1	1	1	2837 079
1-48-90	SEAL, Htr. Core Tube To Hsg. w/o A/Cond.		1	—	1	—	—	—	—	—	—	—	—	2936 868
	W A/Cond. Up to Feb. 71		1	—	1	—	—	—	—	—	—	—	—	3441 863
	Htr. Core Tube To Dash W/A/Cond.													
	After Feb. 71 Approx.	71	1	—	1	—	—	—	—	—	—	—	—	= 3502 080
	Htr. Core Tube Sealing (To Dash)													
	w/O A/Cond.	71	1	—	1	—	—	—	—	—	—	—	—	= 3502 080
	Htr. Core To Mixed Air Dr. Shaft		1	—	1	—	—	—	—	—	—	—	—	2277 648
	Htr. Core Tubes		—	1	—	—	—	—	—	—	—	—	—	2936 604
	1.38" O.D.	71	—	—	—	1	1	—	—	—	—	—	—	3441 584
	1.25" O.D.	71	—	—	—	1	1	—	—	—	—	—	—	3441 585
	Htr. Blower Motor Mtg. Plate	70	—	—	—	—	—	1	1	1	1	1	1	2936 126
1-48-94	RETAINER, Htr. Core Tube Seal To Dash		1	—	1	—	—	—	—	—	—	—	—	2485 135
1-48-125	HEATER HSG. and Defroster Dr. Package	70	—	—	—	1	1	—	—	—	—	—	—	2809 091
	Hsg. Htr. Rr.		1	—	1	—	—	—	—	—	—	—	—	2607 171
	HSG., Htr. Rr.		—	1	—	—	—	—	—	—	—	—	—	2936 622
	Hsg. Htr. Rr.	71	—	—	—	1	1	—	—	—	—	—	—	3441 456
	HOUSING, Complete	70	—	—	—	1	1	—	—	—	—	—	—	2837 502
	Housing Htr. Vent Complete	71	—	—	—	—	—	1	1	1	1	1	—	3441 674
	HOUSING and BRACKET (Pass. Side)		—	—	—	—	—	1	1	—	—	—	—	2936 073
	Housing Heater w/Upper Level Vent	71	—	—	—	—	—	1	1	—	—	—	—	3441 661
		71	—	—	—	—	—	—	—	1	1	1	—	3441 662
	Housing And Bracket		—	—	—	—	—	—	—	1	1	1	1	2936 074
	HOUSING Htr. Blower (Eng. Side)		—	—	—	—	—	1	1	1	1	1	1	2936 124
	Housing Htr. Blower P, D, C W/Upper Level Vent. Y, W/O A/Cond. After April 1, 71	71	—	—	—	—	—	1	1	1	1	1	1	= 3502 013
	NOTE: For Further Information See Part Type Code 24-28-128													
1-48-126	SEAL, Htr. To Dash		—	1	—	—	—	—	—	—	—	—	—	2936 608
	A/Cond. and Htr. Unit Mtg. at Plenum		—	1	—	1	1	—	—	—	—	—	—	2607 312
	Htr. To Dash		1	—	1	—	—	—	—	—	—	—	—	2277 553
	Htr. To Dash Up to June 71	71	—	—	—	1	1	—	—	—	—	—	—	3441 454
	Htr. To Dash After June 71 Approx.	71	—	—	—	1	1	—	—	—	—	—	—	= 3502 082
	Htr. Hsg. To Plenum	70	—	—	—	1	1	—	—	—	—	—	—	2607 312
	GASKET, Htr. Hsg. Scroll Cover Mtg.	70	—	—	—	1	1	—	—	—	—	—	—	2485 478
	NOTE: For Further Information See Part Type Code 24-28-92													
1-48-130	COVER, Htr. Hsg. Scroll	70	—	—	—	1	1	—	—	—	—	—	—	2521 686
1-48-132	NUT, Htr. Hsg. Mtg. Insert	71	—	—	—	1	1	—	—	—	—	—	—	3579 191
	Htr. Back Plate To Dist. Duct Mtg.	71	—	—	—	1	1	—	—	—	—	—	—	3579 191
1-48-141	DUCT, Htr. Defroster		—	1	—	—	—	—	—	—	—	—	—	2936 641
	Htr. Defroster	71	—	—	—	1	1	—	—	—	—	—	—	3441 354
	Htr. Defroster		—	—	—	—	—	1	1	—	—	—	—	2936 136
	Htr. and A/Cond. Defroster		—	—	—	—	—	1	1	—	—	—	—	3441 182

CARLINES J - Challenger, B - Barracuda, V - Valiant, L - Dart, R - Belvedere - Satellite, W - Coronet - Charger, P - Plymouth, D - Dodge, C - Chrysler, Y - Imperial

AR Indicates use as required.

Numerals in parentheses ( ) refer to notes.

# Indicates parts not listed in any previous parts book.

★ Indicates change or addition.

Printed in U.S.A. January 1972

CODE	PART NAME	ENG. TYPE OR CU.IN.	V 1-2	B J 1-2	L 1-2	R 1-2	W 1-2	P 1-2	D 1-2	C 1	C 2	C 3	Y 1	PART NUMBER
1-48-0	**HEATER AND COMPONENTS Cont'd.**													
1-48-141	DUCT Cont'd.													
	Htr. Defroster		—	—	—	—	—	—	—	1	1	1	1	2936 137
	Htr., A/Cond. or ATC. Center Air Outlet	70	—	—	—	—	—	—	—	1	1	1	—	2936 380
	Htr. and A/Cond.	70	—	—	—	—	—	—	—	1	1	1	1	3441 183
	Htr., A/Cond. or ATC Defroster		—	—	—	—	—	—	—	1	1	1	1	2936 139
	A/Cond. and Htr. Center Air Outlet	70	—	—	—	—	—	—	—	—	—	—	1	2936 320
	OUTLET, Htr. Center Vent R-L, W-L W/Upper Level Vent R-H, W-H 2 Dr. H. T. W/Upper Level Vent W/Coupe Pkg.	71	—	—	—	1	1	—	—	—	—	—	—	3502 010
	R-M, R-P, R-S, R-H 4 Dr. And Wgn. W-M, W-P, W-S, W-H 4 Dr. And Wgn. W/Upper Level Vent R-H, W-H 2 Dr. H.t. w/Upper Level Vent W/O Coupe Pkg.	71	—	—	—	1	1	—	—	—	—	—	—	3502 009
	AIR OUTLET, A/Cond., Htr. Center	70	—	—	—	—	—	—	—	—	—	—	1	2936 314
	Air outlet, A/Cond. Htr. Or ATC. Center	71	—	—	—	—	—	—	—	—	—	—	1	3441 588
	AIR OUTLET, A/Cond., Htr. Center	70	—	—	—	—	—	—	—	1	1	1	—	2936 372
	Outlet, Htr. Vent Center w/Upper Level Vent	71	—	—	—	—	—	—	—	1	1	1	—	3441 346
	Clip, Htr. Vent. Ctr. Duct Mtg.	71	—	—	—	—	—	2	2	—	—	—	—	2837 285
	Clip, Htr. Ctr. Vent Duct To Bezel W/Upper Level Vent	71	—	—	—	2	2	—	—	—	—	—	—	6029 149
	Cap, Htr. Ctr. Vent Outlet Mtg. W/Upper Level Vent		—	—	—	6	6	—	—	—	—	—	—	6029 262
	NOTE: For Further Information See Part Type Code 24-28-78 or 24-28-73 or 24-28-72													
1-48-145	GROMMET, Htr. Control Vac. Hose Dash	71	—	—	—	—	—	—	—	1	1	1	1	1886 101
1-48-151	TUBE, Htr. Defroster	70	—	—	—	AR	AR	—	—	—	—	—	—	2837 940
	Htr. Defroster		1	—	1	—	—	—	—	—	—	—	—	2837 168-9
	A/Cond. and Htr. or ATC Spotcooler Rt. Duct (Flex)	70	—	—	—	—	—	1	1	1	1	1	1	2837 940
	TUBE, Rr. Htr. Air Inlet		—	—	—	—	—	—	—	1	1	1	1	2837 087
	Rr. Htr. Defroster (Flex)	70	—	1	—	—	—	1	1	1	1	1	1	2096 989
		71	—	—	—	—	—	—	—	1	1	1	1	2096 989
	Clip, Htr. Defr. Tube Mtg.		2	—	2	—	—	—	—	—	—	—	—	6026 147
	Clip, Htr. Defr. Tube Retaining		2	—	2	—	—	—	—	—	—	—	—	6026 147
	Clip Htr. Defr. Outlet Tube To Grille Mtg.		4	—	4	—	—	—	—	—	—	—	—	6026 147
	NOTE: For Further Information See Part Type Code 24-28-24													
1-48-156	BACKPLATE, Htr. Distribution Duct		—	1	—	—	—	—	—	—	—	—	—	2936 610
		71	—	—	—	1	1	—	—	—	—	—	—	3441 477
	Plate, Htr. Control Mtg.	71	—	—	—	—	—	1	—	—	—	—	—	3431 370
1-48-158	GRILLE and GASKET, Rr. Defogger Outlet		1	—	1	—	—	—	—	—	—	—	—	2219 627
	Defogger Outlet	70	1	—	—	1	1	—	—	—	—	—	—	2521 668
	BEZEL, Rr. Htr. Outlet	70	—	—	—	—	—	—	—	1	1	1	—	2521 668
	GRILLE, Htr. Hsg. Vent	70	—	—	—	1	1	—	—	—	—	—	—	2607 283
	GRILLE, Htr. Defroster Outlet													
	Blue	70	1	—	1	—	—	—	—	—	—	—	—	4214-5 EB7
	Blue	71	1	—	1	—	—	—	—	—	—	—	—	4214-5 GB7
	Briar	70	1	—	1	—	—	—	—	—	—	—	—	4214-5 FE5
	Green	70	1	—	1	—	—	—	—	—	—	—	—	4214-5 EF8
	Green	71	1	—	1	—	—	—	—	—	—	—	—	4214-5 GF7
	Tan	70	1	—	1	—	—	—	—	—	—	—	—	4214-5 FT4
	Tan	71	1	—	1	—	—	—	—	—	—	—	—	4214-5 GT7
	Black		1	—	1	—	—	—	—	—	—	—	—	4214-5 CX9

CODE	PART NAME	ENG. TYPE OR CU.IN.	V 1-2	B J 1-2	L 1-2	R 1-2	W 1-2	P 1-2	D 1-2	C 1	C 2	C 3	Y 1	PART NUMBER
1-48-0	**HEATER AND COMPONENTS Cont'd.**													
1-48-158	GRILLE and GASKET Cont'd.													
	Gold	71	1	—	1	—	—	—	—	—	—	—	—	4214-5 GY6
	Blue	70	—	—	—	1	1	—	—	—	—	—	—	4244-5 EB7
	Green	70	—	—	—	1	1	—	—	—	—	—	—	4244-5 EF8
	Orange	70	—	—	—	1	1	—	—	—	—	—	—	4244-5 FK5
	Tan	70	—	—	—	1	1	—	—	—	—	—	—	4244-5 FT4
	Black	70	—	—	—	1	1	—	—	—	—	—	—	4244-5 DX9
	Gold	70	—	—	—	1	1	—	—	—	—	—	—	4244-5 FY4
	Retainer Htr. Defr. Outlet Grille Mtg.		6	—	6	—	—	—	—	—	—	—	—	9420 252
1-48-179	CLIP, Htr. Rr. Hsg. To Frt. Hsg. Mtg.		11	9	11	—	—	—	—	—	—	—	—	2521 336
	Htr. Cont. Arm Pivot Pin W/Upper Level Vent	71	—	—	—	—	—	—	—	1	1	1	—	2820 453
	Retainer Push Button Slider	70	—	—	—	2	2	—	—	—	—	—	—	2197 678
1-48-254	RETAINER, Rr. Htr. Water Valve Actuator Shaft	70	—	—	—	—	—	—	—	1	1	1	1	2197 678
	Htr. Vent Door Control Cable Mtg.		—	1	—	—	—	—	—	—	—	—	—	2076 405
	Push Nut, Actuator and Crank Mtg.	71	—	—	—	—	2	2	—	—	—	—	2	2076 405
1-48-258	ACTUATOR, Htr. Def. Dr. Vac.		—	—	—	—	—	—	—	1	1	1	1	3441 217
	Htr. Shut Off Dr. Vac.		—	—	—	—	—	—	—	1	1	1	1	3441 217
	Htr. Shut Off Dr. Vac. w Upper Level Vent.	71	—	—	—	—	—	—	—	1	1	1	—	3441 672
	Rr. Htr. w Valve Shaft		—	—	—	—	—	—	—	1	1	1	1	3441 215
	Rr. Htr. Vac. Def. Door		—	—	—	—	—	—	—	1	1	1	1	3441 215
	Hrt. Dist. Duct. Vent. Dr. Vac	71	—	—	—	1	1	—	—	—	—	—	—	3441 637
	Htr. Vent. Dr. Vac. W Upper Level Vent.	71	—	—	—	—	—	1	1	1	1	1	—	3441 686
	Clip, Rr. Htr. Door Vac. Actr. Shaft Retainer		—	—	—	—	—	—	—	1	1	1	1	6008 145
	NOTE: See Part Type Code 24-29-1 For Actuators													
1-48-280	CONNECTOR, Rr. Htr. Vacuum Hose In-Line		—	—	—	—	—	—	—	1	1	1	1	1886 110
	A/Cond. And Htr. Vac. Hose		—	1	—	—	—	1	1	1	1	1	1	1886 110
	Htr. Control Vac. Hoses		—	—	—	—	—	—	—	1	1	1	1	1886 110
1-48-325	BAFFLE, Htr. Floor Air		1	1	1	1	1	1	1	1	1	1	1	3409 548
	NOTE: For Further Information See Part Type Code 24-28-318													
1-48-355	LOCKPLATE, Fresh Air Vent Dr.		1	—	1	—	—	—	—	—	—	—	—	2277 516
1-48-356	SHAFT, Htr. Shut Off and Defroster Dr.	70	—	—	—	1	1	—	—	—	—	—	—	2607 289
	Htr. Shut Off Door	71	1	—	1	—	—	—	—	—	—	—	—	3441 497
	Htr. Dist. Duct Vent W Upper Level Vent	71	—	—	—	1	1	—	—	—	—	—	—	# 3441 635
	NOTE: For Further Information See Part Type Code 24-28-399													
1-48-357	RETAINER, Htr. Mixed Air Dr. Control Cable	70	1	—	1	—	—	—	—	—	—	—	—	2197 678
	Htr. Temp. Door Cable To Control	71	1	—	1	—	—	—	—	—	—	—	—	2197 678
	Htr. Control and Defroster Cable To Arm	70	—	—	—	2	2	—	—	—	—	—	—	2197 678
	Fresh Air Dr. Control Cable Lt.	70	—	—	—	1	1	—	—	—	—	—	—	2197 678
	Htr. Dist. Duct Vent Dr. Vac. Shaft W/Upper Level Vent(Round)	71	—	—	—	1	1	—	—	—	—	—	—	2197 678
	Htr. Vent Door	71	—	—	—	—	—	1	1	1	1	1	—	2197 678
	Htr. Shut Off and Defroster Dr. To Shaft	70	—	—	—	1	1	—	—	—	—	—	—	2162 360
	Htr. Vent Dr. Shaft W Upper Level Vent.	71	—	—	—	—	—	1	1	1	1	1	—	3441 685
	CLAMP, Htr. Dist. Duct Vent W/Upper Level Vent	71	—	—	—	1	1	—	—	—	—	—	—	# 3441 636
1-48-358	LOCK, A/Cond. and Htr. Vent Dr.		1	—	1	—	—	—	—	—	—	—	—	2277 515
	Fresh Air Vent Dr.		1	—	1	—	—	—	—	—	—	—	—	2277 515

CARLINES: J - Challenger, B - Barracuda, V - Valiant, L - Dart, R - Belvedere - Satellite, W - Coronet - Charger, P - Plymouth, D - Dodge, C - Chrysler, Y - Imperial

AR Indicates use as required.

# Indicates parts not listed in any previous parts book.

Numerals in parentheses ( ) refer to notes.

★ Indicates change or addition.

Printed in U.S.A. January 1972

1-48-0 HEATER AND COMPONENTS Cont'd.

CODE	PART NAME	ENG. TYPE OR CU.IN.	V 1-2	B J 1-2	L 1-2	R 1-2	W 1-2	P 1-2	D 1-2	C 1	C 2	C 3	Y 1	PART NUMBER
1-48-362	SEAL, Fresh Air Vent Duct Mtg.		1	—	1	—	—	—	—	—	—	—	—	2277 669
	Htr. To Plenum Mtg.		1	—	1	—	—	—	—	—	—	—	—	2277 669
	Htr. To Plenum Mtg.		—	1	—	1	1	—	—	—	—	—	—	2936 605
	Htr. Ctr. Vent Duct	71	—	—	—	1	1	—	—	—	—	—	—	3441 630
	Htr. Vent Hsg. W/Upper Level Vent.	71	—	—	—	—	—	1	1	1	1	1	—	3441 679
1-48-365	DOOR, Htr. Shut Off	70	1	—	1	—	—	—	—	—	—	—	—	2837 553
	Htr. Mixed Air		1	—	1	—	—	—	—	—	—	—	—	2485 970
	A Cond. and Htr. Shut Off Dr.		1	—	1	—	—	—	—	—	—	—	—	2277 518
	Door & Seal, Htr. Dist. Duct Vent W/Upper Level Vent		—	—	—	1	1	—	—	—	—	—	—	3441 631
	NOTE: For Further Information See Part Type Code 24-28-90, 23-33-132													
1-48-374	CONTROL, Fresh Air Dr.	70	—	—	—	—	—	—	—	1	1	1	1	2864 392
	Gray	71	—	—	—	—	—	—	—	2	—	2	2	4248 GA6
	Blue	71	—	—	—	—	—	—	—	2	2	2	2	4248 GB7
	Russet	71	—	—	—	—	—	—	—	2	2	2	2	4248 GE9
	Green	71	—	—	—	—	—	—	—	2	2	2	2	4248 GF7
	Tan	71	—	—	—	—	—	—	—	2	2	2	2	4248 GT6
	Black	71	—	—	—	—	—	—	—	2	2	2	2	4248 GX9
	Gold	71	—	—	—	—	—	—	—	2	2	2	2	4248 GY6
	Dark Blue	71	—	—	—	—	—	—	—	—	—	—	2	4248 GB9
	Burgundy	71	—	—	—	—	—	—	—	—	—	—	2	4248 GM9
	A Cond. and Htr. (Complete)	70	—	—	—	—	—	—	—	1	1	1	—	2884 368
		71	—	—	—	—	—	—	—	1	1	1	—	3431 196
	Vac. Regulator A Cond. and Htr. Control	71	—	—	—	1	1	—	—	—	—	—	—	3431 134
	NOTE: For Further Information See Part Type Code 23-33-132													
1-48-375	ROD, A Cond. or Htr. Unit To Plenum Mtg.		1	—	1	—	—	—	—	—	—	—	—	2277 591
1-48-383	VENT, Fresh Air Side Cowl		—	—	—	—	—	1	1	1	1	1	1	2936 020-1
1-48-401	HANDLE, A Cond. or Htr. Vent Dr.		1	—	1	—	—	—	—	—	—	—	—	2277 517
	Fresh Air Vent Dr.		1	—	1	—	—	—	—	—	—	—	—	2277 517
1-48-408	FRAME, Htr. Hsg. Vent Dr	70	—	—	—	1	1	—	—	—	—	—	—	2607 290
1-48-457	RETAINER, Htr. Shut Off and Defroster Dr. To Shaft	70	—	—	—	1	1	—	—	—	—	—	—	2162 360
1-48-516	WIRING, Htr. Control		—	—	—	—	—	—	—	1	1	1	1	2926 151
	Rr. Htr. Motor		—	—	—	—	—	—	—	1	1	1	1	2822 206
	Htr. w/Upper Vent	71	—	—	—	—	—	1	1	—	—	—	—	3513 426
		71	—	—	—	—	—	—	—	1	1	1	—	3513 456
	NOTE: For Further Information See Part Type Code 24-24-124													
1-48-555	HOSE, Htr. Core To Pump 50 Ft. Roll 5/8" I.D.		—	1	—	1	1	1	1	1	1	1	1	1315 466
	A Cond. and Htr. Water Outlet Tube To Pump	70	—	—	—	1	1	—	—	—	—	—	—	1315 466
	Htr. Valve To Pump, w/A/Cond.		—	1	—	1	1	1	1	1	1	1	1	1315 466
	Htr. Valve To Core W/A/Cond.	71	—	1	—	—	—	—	—	—	—	—	—	1595 160
	Htr. Core To Valve W/A/Cond.	71	—	1	—	—	—	—	—	—	—	—	—	1595 160
	Frt. Htr. Core To Tee		—	—	—	—	—	—	—	1	1	1	1	1315 466
	Rr. Htr. Tee To Pump		—	—	—	—	—	—	—	1	1	1	—	1315 466
	Rr. Htr. Water Or ATC Valve To Tee		—	—	—	—	—	—	—	1	1	1	1	1315 466
	Rr. Htr. Core To Outlet Tube	70	—	—	—	—	—	—	—	1	1	1	1	1315 466
	Rr. Htr. Outlet Tube Rr. To Outlet Tube Frt.		—	—	—	—	—	—	—	—	—	—	1	1315 466
		71	—	—	—	—	—	—	—	1	1	1	—	1779 885
	Rr. Htr. Valve To Core		—	—	—	—	—	—	—	1	1	1	1	1315 466
	Eng. To Htr. Core w/O A/Cond. 50 Ft. Roll 1/2" I.D.		1	1	1	1	1	1	1	1	1	1	—	2936 388
	Engine To Valve	71	—	1	—	1	1	—	—	—	—	—	—	2936 388
	Engine To Valve	71	—	—	—	—	—	1	1	1	1	1	—	2936 388
	Valve To Htr. Core	71	—	—	—	1	1	1	1	1	1	1	—	2936 388

CARLINES: J - Challenger, B - Barracuda, V - Valiant, L - Dart, R - Belvedere - Satellite, W - Coronet - Charger, P - Plymouth, D - Dodge, C - Chrysler, Y - Imperial

AR Indicates use as required.

# Indicates parts not listed in any previous parts book.

Numerals in parentheses ( ) refer to notes.

★ Indicates change or addition.

Printed in U.S.A. January 1972

1-48-0 HEATER AND COMPONENTS Cont'd.

CODE	PART NAME	ENG. TYPE OR CU.IN.	V 1-2	B J 1-2	L 1-2	R 1-2	W 1-2	P 1-2	D 1-2	C 1	C 2	C 3	Y 1	PART NUMBER
1-48-555	HOSE Cont'd.													
	Rr. Htr. Water Valve To Frt. Core	71	—	—	—	—	—	—	—	1	1	1	—	2936 388
	Rr. Htr. Inlet Engine To Tee		—	—	—	—	—	—	—	1	1	1	1	2936 388
	Rr. Htr. Tee To Frt. Core		—	—	—	—	—	—	—	1	1	1	1	2936 388
	Rr. Htr. Tee To Water or ATC Valve		—	—	—	—	—	—	—	1	1	1	1	2936 388
	Rr. Htr. Inlet Tube Rr. To Water Valve		—	—	—	—	—	—	—	1	1	1	1	2936 388
	Rr. Qtr. Engine to Tee	70	—	—	—	—	—	—	—	—	—	—	1	2936 388
	Rr. Htr. Inlet Tube Frt., To Inlet Rr.	70	—	—	—	—	—	—	—	1	1	1	—	3441 275
	Rr. Htr. Outlet Tube Rr. To Outlet Tube Frt.	70	—	—	—	—	—	—	—	1	1	1	—	1595 160
	Rr. Htr. Inlet Tube Frt. To Inlet Rr.		—	—	—	—	—	—	—	—	—	—	1	2936 388
	Rr. Htr. Vacuum (Body)		—	—	—	—	—	—	—	1	1	1	1	2884 595
	Rr. Htr. Vacuum (I/Pnl.) Htr. & A/C.		—	—	—	—	—	—	—	1	1	1	1	2884 596
	NOTE: For Further Information See Part Type Code 24-28-24													
1-48-557	SLEEVE, Htr. Hose		1	1	—	—	—	—	—	—	—	—	1	2127 280
	Rr. Htr. Engine to Tee		—	—	—	—	—	—	—	—	—	—	1	2537 992
1-48-559	BRACKET, Htr. Hose Support	6	1	1	1	1	1	—	—	—	—	—	—	3441 036
	Htr. Hose Support	8	1	1	1	1	1	1	1	1	1	1	—	3441 058
	Htr. Hose Support To Fender Shield	70 8	—	—	—	1	1	—	—	—	—	—	—	3441 284
	Htr. Hose Support w/Leece Neville Alter.		—	—	—	1	1	1	1	—	—	—	—	3441 236
	Htr. Hose Support To Valve Cover		—	—	—	—	—	1	1	—	—	—	—	3441 036
	Htr. Hose Support To Altr.		—	1	—	1	1	1	1	1	1	1	1	2936 706
	Rr. Htr. W/A/Cond. Hoses To Altr. Support		—	—	—	—	—	—	—	1	1	1	1	2936 706
	CLIP, Htr. and A/Cond. Vacuum Hose Connecting Retaining		—	—	—	1	1	1	1	1	1	1	1	2820 826
	Clamp and Vane Htr. Shut Off and Defr. Door	71	—	—	—	1	1	—	—	—	—	—	—	3441 619
1-48-572	NIPPLE, Eng. To Htr. Hose													
	1.70" Lgh. 1/4" Thd.		1	1	1	1	1	1	1	1	1	1	1	3441 020
	1.70" Lgh. 3/8" Thd.		1	1	1	1	1	1	1	1	1	1	1	2936 298
	Htr. Hose To Pump 3" Lgh. 3/8" Thd.		—	1	—	1	1	1	1	1	1	1	1	2936 757
1-48-573	SHIELD, Htr. Hose w/A/Cond.		—	1	—	1	1	1	1	1	1	1	—	2951 014
	Htr. Hose		1	1	1	1	1	1	1	—	—	—	—	2899 109
1-48-599	MOTOR, Htr. Blower		—	1	—	—	—	—	—	—	—	—	—	3420 859
	Htr. Blower		1	—	1	—	—	—	—	—	—	—	—	3420 859
	Htr. Blower	70	—	—	—	1	1	—	—	—	—	—	—	2837 820
	Htr. Blower	71	—	—	—	1	1	—	—	—	—	—	—	3579 172
	Htr. Blower		—	—	—	—	—	1	1	1	1	1	1	3420 923
	Rr. Htr. Blower		—	—	—	—	—	—	—	1	1	1	1	2837 678
	NOTE: For Further Information See Part Type Code 24-28-195													
1-48-606	TUBE, Htr. Blower Motor Vent	70	—	—	—	1	1	—	—	—	—	—	—	2607 285
	Htr. Blower Motor Vent	71	—	—	—	1	1	—	—	—	—	—	—	3441 481
	HTR., Blower Motor Vent.		—	—	—	—	—	1	1	1	1	1	1	2936 127
	HTR., A/Cond. or ATC Blower Motor Cooling		—	—	—	—	—	1	1	1	1	1	1	2936 127
	Htr. A/Cond. or ATC Blower Motor Vent	70	—	—	—	—	—	1	1	1	1	1	1	2936 127
1-48-608	GASKET, Htr. Blower Motor Mtg.		—	1	—	—	—	—	—	—	—	—	—	3441 059
	Htr. Blower Motor Mtg. w/Upper Level Vent	71	1	—	1	—	—	—	—	—	—	—	—	2277 834
	Htr. Blower Motor Mtg. w/Upper Level Vent	71	—	—	—	1	1	1	1	1	1	1	1	2076 088
	Htr. Blower Motor Mtg.		—	—	—	1	1	1	1	1	1	1	1	2485 429
	Seal, Htr. Blower Mtr. Vent Tube	71	—	—	—	1	1	—	—	—	—	—	—	3441 482
	Gasket, Rr. Htr. Blower Motor Mtg.	71	—	—	—	—	—	—	—	1	1	1	1	2277 834
1-48-611	PLATE, Htr. Blower Motor Mtg.		—	—	—	—	—	1	1	1	1	1	1	2936 131
		71	1	—	1	—	—	—	—	—	—	—	—	2277 543
	Rr. Htr. Blower Motor Mtg.	71	—	—	—	—	—	—	—	1	1	1	1	2607 645
	PLATE and GASKET, Htr. Motor Mtg.		1	—	1	—	—	—	—	—	—	—	—	2277 699

CARLINES J - Challenger, B - Barracuda, V - Valiant, L - Dart, R - Belvedere - Satellite, W - Coronet - Charger, P - Plymouth, D - Dodge, C - Chrysler, Y - Imperial

AR Indicates use as required.

# Indicates parts not listed in any previous parts book.

Numerals in parentheses ( ) refer to notes.

★ Indicates change or addition.

Printed in U.S.A. January 1972

CODE	PART NAME	ENG. TYPE OR CU.IN.	V 1-2	B J 1-2	L 1-2	R 1-2	W 1-2	P 1-2	D 1-2	C 1	C 2	C 3	Y 1	PART NUMBER
1-48-0	**HEATER AND COMPONENTS Cont'd.**													
1-48-707	DUCT and DOOR, Fresh Air Vent Rt.		1	—	1	—	—	—	—	—	—	—	—	2277 770
	Fresh Air Vent Lt.		1	—	1	—	—	—	—	—	—	—	—	2607 807
	DUCT and FRT. HSG. Htr. Distribution	70	1	—	1	—	—	—	—	—	—	—	—	2837 551
		71	1	—	1	—	—	—	—	—	—	—	—	3441 507
	Duct and Hsg. Htr. Distribution w/Upper Level Vent	71	—	—	—	1	1	—	—	—	—	—	—	3441 626
	Duct and Hsg. Htr. Distribution w/o Upper Level Vent	71	—	—	—	1	1	—	—	—	—	—	—	3441 468
	Duct Htr. Center Vent w/Upper Level Vent	71	—	—	—	1	1	—	—	—	—	—	—	3441 650
	Duct Htr. Vent Center w/Upper Level Vent	71	—	—	—	—	—	1	1	—	—	—	—	3441 688
	Duct, Htr. Vent Center W/ Upper Level Vent.	71	—	—	—	—	—	—	—	1	1	1	—	3441 690
	DUCT and FRT. HSG. Htr. Distribution		—	1	—	—	—	—	—	—	—	—	—	2936 612
	DUCT, Htr. and A/Cond. Defroster		—	1	—	—	—	—	—	—	—	—	—	3441 009
	DUCT, Ventilation Lt.		—	1	—	1	1	—	—	—	—	—	—	2936 642
	DUCT, Htr. Air Distribution		—	—	—	—	—	1	1	1	1	1	1	2936 119
	Duct, Htr. Air Distribution W/Upper Level Vent	71	—	—	—	—	—	1	1	1	1	1	—	2936 119
	Rr. Htr. Distribution Complete		—	—	—	—	—	—	—	1	1	1	1	2936 519
	DUCT, Rr. Htr. (Under Seat)		—	—	—	—	—	—	—	1	1	1	1	2936 523-4
	Rr. Htr. Distribution Tee		—	—	—	—	—	—	—	1	1	1	1	2936 522
	Retainer, Htr. Dist. Duct Vent Door Vac. Shaft w/Upper Level Vent	71	—	—	—	1	1	—	—	—	—	—	—	2197 678
	Clip, Htr. Dist. Duct To Back board Mtg.		9	—	9	—	—	—	—	—	—	—	—	6026 450
	Clip, Htr. Dist. Duct Back board		—	5	—	—	—	—	—	—	—	—	—	6026 450
	Clip, Htr. Dist. Duct Back Plate Mtg.		—	5	—	—	—	—	—	—	—	—	—	6026 450
	Clip, Htr. Dist. Duct B/Board Mtg. W/Upper Level Vent.	71	—	—	—	5	5	—	—	—	—	—	—	6026 450
	Fastener, Htr. Air Dist. Duct		—	—	—	—	—	3	3	3	3	3	3	6027 479
	Fastener, Htr. Air Dist. Duct W/Upper Level Vent	71	—	—	—	—	—	3	3	3	3	3	3	6027 479
	NOTE: For Further Information See Part Type Code 24-28-73													
1-48-709	CLIP, Rr. Htr. Underseat, Duct To Tee Duct		—	—	—	—	—	—	—	1	1	1	1	2521 729
1-48-712	See Part Type Code 24-28-117 Levers													
1-48-719	FRAME, Ventilation Rt.		—	1	—	1	1	—	—	—	—	—	—	2936 809
1-48-720	HOOK, Ventilation Frame Mtg. Rt.		—	1	—	1	1	—	—	—	—	—	—	2936 812
1-48-770	SWITCH, Htr. Temp. Control Blower		1	—	1	—	—	—	—	—	—	—	—	2864 591
	Htr. Fan Control	70	—	—	—	1	1	—	—	—	—	—	—	2864 806
	Htr. Control Blower	71	—	—	—	1	1	—	—	—	—	—	—	3431 149
	Htr. Cont Rol Blower W/O A/Cond. Up To Jan. 71 Approx.		—	—	—	—	—	1	1	—	—	—	—	2884 094
	Htr. Control Blower W/O A/Cond. After Jan. 71 Approx.	71	—	—	—	—	—	1	1	—	—	—	—	= 3431 497
	Htr. Control Blower w/A/Cond. Up To Feb. 71		—	—	—	—	—	1	1	—	—	—	—	2884 338
	Htr. Control Blower W/A/Cond. After Feb. 71 Approx.	71	—	—	—	—	—	1	1	—	—	—	—	= 3431 496
	Htr. Control Blower w/o A/Cond.	70	—	—	—	—	—	—	1	—	—	—	—	2884 201
	Htr. Control Blower W/Upper Level Vent. Up To Jan. 71 Approx.	71	—	—	—	—	—	1	1	—	—	—	—	3431 350
	Htr. Control Blower W/Upper Level Vent. After Jan. 71 Approx	71	—	—	—	—	—	1	1	—	—	—	—	= 3431 495
	Htr. Control Blower w/A/Cond.		—	—	—	—	—	—	—	1	1	1	1	2884 300
	Htr. Control Vac. w/Upper Level Vent	71	—	—	—	1	1	1	—	—	—	—	—	3431 285
	Htr. Control Vacuum w/A/Cond.	70	—	—	—	—	—	—	—	1	1	1	1	2884 291
	Rr. Htr. Vacuum (3 Positions) w/A/Cond.	70	—	—	—	—	—	—	—	1	1	1	—	2864 442

CARLINES: J - Challenger, B - Barracuda, V - Valiant, L - Dart, R - Belvedere - Satellite, W - Coronet - Charger, P - Plymouth, D - Dodge, C - Chrysler, Y - Imperial

AR Indicates use as required.

Numerals in parentheses ( ) refer to notes.

# Indicates parts not listed in any previous parts book.

★ Indicates change or addition.

Printed in U.S.A. January 1972

1-48-0 HEATER AND COMPONENTS Cont'd.

CODE	PART NAME	ENG. TYPE OR CU.IN.	V 1-2	B J 1-2	L 1-2	R 1-2	W 1-2	P 1-2	D 1-2	C 1	C 2	C 3	Y 1	PART NUMBER
1-48-770	SWITCH Cont'd.													
	Htr. Push Button Control		—	—	—	—	—	—	—	1	1	1	1	2497 387
	Htr. Push Button Control w/Upper Level Vent	71	—	—	—	—	—	—	—	1	1	1	—	3431 338
	Htr. Blower (4 Positions)		—	—	—	—	—	—	—	1	1	1	1	2884 242
	Rr. Htr. Vacuum w/A/Cond. (3 Positions)	70	—	—	—	—	—	—	—	—	—	—	1	2947 260
	Rr. Heater Vacuum	71	—	—	—	—	—	—	—	1	1	1	—	3488 185
		71	—	—	—	—	—	—	—	—	—	—	1	3488 024
	Rr. Htr. Blower, w/A/Cond.	70	—	—	—	—	—	—	—	—	—	—	1	2947 258
	Rr. Window Defogger	70	—	—	—	—	—	—	—	—	—	—	1	2947 258
	Rr. Blower Rocker, w/Dual A/Cond., ATC	70	—	—	—	—	—	—	—	—	—	—	1	2947 258
	Htr. Control Blower	70	—	1	—	—	—	—	—	—	—	—	—	2884 727
	Rr. Htr. Blower	70	—	—	—	—	—	—	—	1	1	1	—	2864 440
	NOTE: For Additional Information See Part Type Code 24-24-5 or 24-24-150													
1-48-783	INSULATOR, Wiring Terminal		—	—	—	—	—	AR	AR	AR	AR	AR	—	2497 481
	Htr. Control Blower Switch	71	1	—	1	—	—	—	—	—	—	—	—	2298 882
	Htr. Blower Motor term.		—	—	—	—	—	1	1	1	1	1	1	2298 882
1-48-832	RESISTOR, Htr. Blower Motor		1	1	1	—	—	—	—	—	—	—	—	2521 409
	Htr. Blower Motor	70	—	—	—	1	1	—	—	—	—	—	—	2607 302
	Htr. Blower Motor	71	—	—	—	1	1	—	—	—	—	—	—	3441 822
	Htr. Blower Motor		—	—	—	—	—	1	1	1	1	1	—	2936 103
	Htr. Blower Motor		—	—	—	—	—	—	—	1	1	1	1	2936 106
	NOTE: For Further Information See Part Type Code, 24-24-67													
1-48-854	VALVE, Rr. Htr. Water Valve ATC		—	—	—	—	—	—	—	1	1	1	1	2936 517
	Htr. Water w/Upper Level Vent	71	—	—	—	1	1	1	1	1	1	1	—	3579 173
	Valve, Heater Control W/ Upper Level Vent.	71	—	—	—	1	1	1	1	1	1	1	—	3441 609
	Rr. Htr. Tee To Frt. Core Water w/Upper Level Vent	71	—	—	—	—	—	—	—	1	1	1	—	3579 173
	NOTE: For Further Information See Part Type Code 24-01-36													
1-48-940	PLATE and ARM													
	Htr. Control Vacuum w/A/Cond.	70	—	—	—	—	—	—	—	1	1	1	—	2884 291
	Htr. Control Mtg.	70	—	—	—	—	—	—	—	1	1	1	1	2884 361
	Plate and Lever Htr. Cont. Mtg.	71	—	—	—	—	—	—	—	1	1	1	1	3431 204
1-48-941	CONTROL CABLE													
	Htr. Control or Defroster		1	—	1	1	1	1	1	1	1	1	1	2809 041
	Htr. Air Shut Off Dr.		1	—	1	—	—	1	—	—	—	—	—	2809 041
	Htr. or A/Cond. Temp.		1	—	1	1	1	1	—	1	1	1	1	2809 041
	Htr. Temp.		—	1	—	1	1	—	—	—	—	—	—	2884 730
	Htr. and Defroster		—	1	—	1	1	—	—	—	—	—	—	2884 731
	Cable and Clip, Htr. & Defroster Control W/Upper Level Vent	71	—	—	—	1	1	—	—	—	—	—	—	3431 477
	Fresh Air Door Rt. or Lt.		—	2	—	—	—	2	—	—	—	—	—	2932 881
	Fresh Air Door Rt. or Lt.	71	—	—	—	—	—	—	2	—	—	—	—	2932 881
	Fresh Air Door	70	—	—	—	1	1	—	—	—	—	—	—	2932 880-1
	Control Cable Package Fresh Air Door	71	—	1	—	1	1	—	—	—	—	—	—	3579 200
	Htr. Temp. Secondary		—	—	—	—	—	—	1	—	—	—	—	2884 430
	Htr. Control Defroster or Air Shut Off	70	—	—	—	—	—	—	1	—	—	—	—	2884 568
	CABLE and INSULATOR, A/Cond. and Htr. Evaporator Temp-Control		1	—	1	—	—	—	—	—	—	—	—	2808 967
	CABLE and CLAMP, Evaporator Temp. Control		1	—	1	—	—	—	—	—	—	—	—	2808 966
	NOTE: For Further Information See Part Type Code 24-01-65													
1-48-942	KNOB and SPRING, Clip A/Cond. and Htr. Control		—	—	—	—	—	2	2	—	—	—	—	2884 413
	Knob, Htr. Control		—	—	—	—	—	2	2	—	—	—	—	2884 413

CARLINES J - Challenger, B - Barracuda, V - Valiant, L - Dart, R - Belvedere - Satellite, W - Coronet - Charger, P - Plymouth, D - Dodge, C - Chrysler, Y - Imperial

AR Indicates use as required.

Numerals in parentheses ( ) refer to notes.

# Indicates parts not listed in any previous parts book.

★ Indicates change or addition.

Printed in U.S.A. January 1972

CODE	PART NAME	ENG. TYPE OR CU.IN.	V 1-2	B J 1-2	L 1-2	R 1-2	W 1-2	P 1-2	D 1-2	C 1	C 2	C 3	Y 1	PART NUMBER
1-48-0	**HEATER AND COMPONENTS Cont'd.**													
1-48-942	KNOB and SPRING Cont'd.													
	KNOB, Htr. Temp. Control		1	—	1	—	—	—	—	—	—	—	—	2864 740
	KNOB, A/Cond. and Htr. Cont.		1	—	1	—	—	—	—	—	—	—	—	2864 740
	Knob, Htr. Control		2	—	2	—	—	—	—	—	—	—	—	2864 740
	KNOB and CLIP, Htr. Control	70	—	1	—	—	—	—	—	—	—	—	—	3431 087
	Knob and Clip A/Cond. and Htr. Control	70	—	1	—	—	—	—	—	—	—	—	—	3431 330
	NOTE: For Further Information See Part Type Code 24-28-104 or 24-24-156													
1-48-945	PLATE, Htr. Control Mtg.		—	—	—	—	—	1	1	—	—	—	—	2884 669
	Clamp, Htr. Vent Hsg. Mtg. w/Upper Level Vent	71	—	—	—	—	—	1	1	1	1	1	—	3441 675
1-48-950	RETAINER, Control Cable (Round)		1	—	1	1	1	—	—	1	1	1	1	2197 678
	Retainer, Temp. Control Cable To Control W/A/Cond.	71	1	—	1	—	—	—	—	—	—	—	—	9414 711
	Clip, Self Adjusting Cable	71	3	—	3	1	1	—	—	—	—	—	—	6028 590
	Clip, Htr. Temp. Cont. Cable Mtg.	71	3	—	3	—	—	3	1	1	1	1	1	6015 143
	Clip, Htr. Mixed Air Dr. Control Cable Mtg.	71	1	—	1	—	—	—	—	—	—	—	—	6015 143
	Clip, Htr. Defr. Dr. Cont. Cable Mtg.	71	1	—	1	—	—	—	—	—	—	—	—	6015 143
	Clip, Htr. Defr. Dr. Cont. Cable	71	1	—	1	—	—	—	—	—	—	—	—	6015 143
	Clip, Htr. Shut Off Dr. Cont. Cable	71	1	—	1	—	—	—	—	—	—	—	—	6015 143
	Clip, Htr. Temp. Cont. Cable W/A/Cond.	71	1	—	1	—	—	—	—	—	—	—	—	6015 143
	Clip, A/Cond. And Htr. Temp. Control Cable	70	—	1	—	—	—	—	—	—	—	—	—	3431 457
	Clip, A/Cond. And Htr. Valve Control Cable Mtg.		—	1	—	—	—	—	—	—	—	—	—	2884 656
	Clip, Htr. Mixed Air Dr. Control Cable Mtg.	71	—	1	—	—	—	—	—	—	—	—	—	6015 143
	Clip, Htr. Vent Dr. Control Cable	71	—	1	—	—	—	—	—	—	—	—	—	6015 143
	Clip, Htr. Control Cable	71	—	—	—	1	1	—	—	—	—	—	—	6028 590
	Strap, Htr. Control Cable Retaining	71	—	—	—	1	1	—	—	—	—	—	—	6015 149
	Clip, Mixed Air Door Cont. Cable Mtg.	71	—	—	—	1	1	1	1	1	1	1	1	2884 656
	Clip, Htr. Vent Door Control Cable Mtg.	71	—	—	—	1	1	—	—	—	—	—	—	2884 656
	Clip, Htr. Shut Off Door Control Cable Retaining W/Upper Level Vent	71	—	—	—	—	—	1	1	—	—	—	—	6015 143
	Clip, Htr. Def. Door Cable Retainer W/Upper Level Vent.	71	—	—	—	—	—	1	1	—	—	—	—	6015 143
1-63-0	**FLOOR MATS**													
1-63-1	CARPET PROTECTOR, Frt. Use Rt. Side only on R, W													
	Blue	70	1	1	1	1	1	—	—	—	—	—	—	1620-1 FB6
	Blue	71	1	1	1	1	1	—	—	—	—	—	—	1620-1 GB6
	Red	70	1	1	—	1	1	—	—	—	—	—	—	1620-1 FE5
	Green	70	1	1	1	1	1	—	—	—	—	—	—	1620-1 EF9
	Green	71	1	1	1	1	1	—	—	—	—	—	—	1620-1 GF8
	Orange	70	—	1	—	1	1	—	—	—	—	—	—	1620-1 FK6
	Tan	70	1	1	1	1	1	—	—	—	—	—	—	1620-1 FT4
	Tan	71	1	1	1	1	1	—	—	—	—	—	—	1620-1 GT6
	Black		1	1	1	1	1	—	—	—	—	—	—	1620-1 EX9
	Gold	70	—	—	—	1	1	—	—	—	—	—	—	1620-1 FY5
	Gold	71	1	1	1	1	1	—	—	—	—	—	—	1620-1 GY7

CODE	PART NAME	ENG. TYPE OR CU.IN.	V 1-2	B J 1-2	L 1-2	R 1-2	W 1-2	P 1-2	D 1-2	C 1	C 2	C 3	Y 1	PART NUMBER
1-63-0	**FLOOR MATS Cont'd.**													
1-63-1	CARPET PROTECTOR Cont'd.													
	CARPET PROTECTOR, Frt. Lt.													
	Blue	70	—	—	—	1	1	—	—	—	—	—	—	1625 EB9
	Green	70	—	—	—	1	1	—	—	—	—	—	—	1625 EF9
	Orange	70	—	—	—	1	1	—	—	—	—	—	—	1625 FK6
	Tan	70	—	—	—	1	1	—	—	—	—	—	—	1625 FT4
	Black	70	—	—	—	1	1	—	—	—	—	—	—	1625 EX9
	Gold	70	—	—	—	1	1	—	—	—	—	—	—	1625 FY4
	CARPET PROTECTOR, Frt. Lt.													
	Blue	70	—	—	—	—	—	1	1	1	1	1	1	1623 FB4
	Green	70	—	—	—	—	—	1	1	1	1	1	1	1623 EF9
	Orange	70	—	—	—	—	—	1	1	—	—	—	—	1623 DK6
	Tan	70	—	—	—	—	—	1	1	1	1	1	1	1623 FT4
	Black		—	—	—	—	—	1	1	1	1	1	1	1623 EX9
	Gold	70	—	—	—	—	—	1	1	1	1	1	1	1623 FY5
	CARPET PROTECTOR Frt. Lt.													
	Blue, Dark	70	—	—	—	—	—	—	—	1	1	1	1	1623 FB9
	Blue	71	—	—	—	—	—	1	1	1	1	1	1	1623 GB6
	Beige	70	—	—	—	—	—	—	—	1	1	1	—	1623 FL5
	Russet	71	—	—	—	—	—	1	1	1	1	1	1	1623 GE9
	Oxblood	70	—	—	—	—	—	—	—	1	1	1	1	1623 FR7
	Green	71	—	—	—	—	—	1	1	1	1	1	1	1623 GF8
	Turquoise	70	—	—	—	—	—	—	—	1	1	1	1	1623 FQ6
	Burgundy	70	—	—	—	—	—	—	—	—	—	—	1	1623 EM9
	Burgundy	71	—	—	—	—	—	—	—	—	—	—	1	1623 GM9
	Tan	70	—	—	—	—	—	—	—	—	—	—	1	1623 FT7
	Tan	71	—	—	—	—	—	1	1	1	1	1	1	1623 GT6
	Gold	71	—	—	—	—	—	1	1	1	1	1	1	1623 GY7
	Gunmetal	71	—	—	—	—	—	—	1	1	1	1	1	1623 GA7
	CARPET PROTECTOR, Frt. Lt. Blue, Light	70	—	—	—	—	—	1	1	1	1	1	1	1622 FB4
	Green	70	—	—	—	—	—	1	1	1	1	1	1	1622 EF9
	Tan	70	—	—	—	—	—	1	1	1	1	1	1	1622 FT4
	Black	70	—	—	—	—	—	1	1	1	1	1	1	1622 EX9
	Gold	70	—	—	—	—	—	1	1	1	1	1	1	1622 FY5
	Orange	70	—	—	—	—	—	1	1	—	—	—	—	1622 FK6
	CARPET PROTECTOR, Frt. Rt.													
	Blue	70	—	—	—	—	—	—	—	1	1	1	1	1622 FB9
	Blue	71	—	—	—	—	—	1	1	1	1	1	1	1622 GB6
	Beige	70	—	—	—	—	—	—	—	1	1	1	—	1622 FL5
	Russet	71	—	—	—	—	—	1	1	1	1	1	1	1622 GE9
	Turquoise	70	—	—	—	—	—	—	—	1	1	1	1	1622 FQ6
	Green	71	—	—	—	—	—	1	1	1	1	1	1	1622 GF8
	Oxblood	70	—	—	—	—	—	—	—	1	1	1	1	1622 FR7
	Tan	71	—	—	—	—	—	1	1	1	1	1	1	1622 GT6
	Burgundy	70	—	—	—	—	—	—	—	—	—	—	1	1622 EM9
	Burgundy	71	—	—	—	—	—	—	—	—	—	—	1	1622 GM9
	Gunmetal	71	—	—	—	—	—	—	1	1	1	1	1	1622 GA7
	Tan	70	—	—	—	—	—	—	—	—	—	—	1	1622 FT7
	Black	71	—	—	—	—	—	1	1	1	1	1	1	1622 EX9
	Gold	71	—	—	—	—	—	1	1	1	1	1	1	1622 GY7
	CARPET PROTECTOR, Rr.													
	Blue, Dark	70	2	—	2	2	2	—	—	—	—	—	—	1624 EB9
	Blue	71	2	—	2	—	—	—	—	—	—	—	—	1624 GB6
	Red	70	2	—	—	2	2	—	—	—	—	—	—	1624 FE5
	Green	70	2	—	2	2	2	—	—	—	—	—	—	1624 EF9
	Green	71	2	—	2	—	—	—	—	—	—	—	—	1624 GF8
	Tan	70	2	—	2	2	2	—	—	—	—	—	—	1624 FT4
	Tan	71	2	—	2	—	—	—	—	—	—	—	—	1624 GT6
	Black	70	2	—	2	2	2	—	—	—	—	—	—	1624 EX9

CARLINES J - Challenger, B - Barracuda, V - Valiant, L - Dart, R - Belvedere - Satellite, W - Coronet - Charger, P - Plymouth, D - Dodge, C - Chrysler, Y - Imperial

AR Indicates use as required.

# Indicates parts not listed in any previous parts book.

Numerals in parentheses ( ) refer to notes.

★ Indicates change or addition.

Printed in U.S.A. January 1972

CODE	PART NAME	ENG. TYPE OR CU.IN.	V 1-2	B J 1-2	L 1-2	R 1-2	W 1-2	P 1-2	D 1-2	C 1	C 2	C 3	Y 1	PART NUMBER
1-63-0	**FLOOR MATS Cont'd.**													
1-63-1	CARPET PROTECTOR Cont'd.													
	Black	71	2	—	2	—	—	—	—	—	—	—	—	1624 EX9
	Gold	70	—	—	—	2	2	—	—	—	—	—	—	1624 FY5
	Gold	71	2	—	2	—	—	—	—	—	—	—	—	1624 GY7
	Orange	70	—	—	—	2	2	—	—	—	—	—	—	1624 FK6
	CARPET PROTECTOR, Rr.													
	Blue, Med.	70	—	1	—	—	—	—	—	—	—	—	—	1628 FB6
	Blue	71	—	2	—	—	—	—	—	—	—	—	—	1628 GB6
	Red	70	—	1	—	—	—	—	—	—	—	—	—	1628 FE5
	Green	70	—	1	—	—	—	—	—	—	—	—	—	1628 FF9
	Green	71	—	2	—	—	—	—	—	—	—	—	—	1628 GF8
	Orange	70	—	1	—	—	—	—	—	—	—	—	—	1628 FK6
	Tan	70	—	1	—	—	—	—	—	—	—	—	—	1628 FT4
	Tan	71	—	2	—	—	—	—	—	—	—	—	—	1628 GT6
	Black		—	2	—	—	—	—	—	—	—	—	—	1628 FX9
	Gold	71	—	2	—	—	—	—	—	—	—	—	—	1628 GY7
	CARPET PROTECTOR, Rr.													
	Blue	70	—	—	—	—	—	2	2	2	2	2	2	1626 FB4
	Blue	71	—	—	—	1	1	2	2	2	2	2	2	1626 GB6
	Russet	71	—	—	—	—	—	2	2	2	2	2	2	1626 GE9
	Green	70	—	—	—	—	—	2	2	2	2	2	2	1626 EF9
	Green	71	—	—	—	1	1	2	2	2	2	2	2	1626 GF8
	Orange	70	—	—	—	—	—	2	2	—	—	—	—	1626 FK6
	Tan	70	—	—	—	—	—	2	2	2	2	2	2	1626 FT4
	Tan	71	—	—	—	1	1	2	2	2	2	2	2	1626 GT6
	Black		—	—	—	2	2	2	2	2	2	2	2	1626 EX9
	Gold	70	—	—	—	—	—	2	2	2	2	2	2	1626 FY5
	Gold	71	—	—	—	1	1	2	2	2	2	2	2	1626 GY7
	Gunmetal	71	—	—	—	—	—	—	2	2	2	2	2	1626 GA7
	Burgundy	71	—	—	—	—	—	—	—	—	—	—	2	1626 GM9
	MAT PROTECTOR, Rr.													
	Blue, Dark	70	—	—	—	—	—	—	—	1	1	1	1	1626 FB9
	Beige	70	—	—	—	—	—	—	—	1	1	1	—	1626 FL5
	Red	70	—	—	—	—	—	—	—	1	1	1	1	1626 FR7
	Turquoise	70	—	—	—	—	—	—	—	1	1	1	1	1626 FQ6
	Burgundy	70	—	—	—	—	—	—	—	—	—	—	1	1626 EM9
	Tan	70	—	—	—	—	—	—	—	—	—	—	1	1626 FT7
	Carpet Protector Set Mats and Container													
	Black		1	—	1	—	—	—	—	—	—	—	—	9453 EX9
	FLOORMAT - Rr. - Dr to Dr Type													
	Brown		AR	AR	AR	AR	AR	AR	AR	AR	AR	AR	AR	3514 623
	Green		AR	AR	AR	AR	AR	AR	AR	AR	AR	AR	AR	3514 621
	FLOORMAT - Frt. - Dr. to Dr. Type													
	Brown		AR	AR	AR	AR	AR	AR	AR	AR	AR	AR	AR	3514 622
	Green		AR	AR	AR	AR	AR	AR	AR	AR	AR	AR	AR	3514 620
1-72-0	**DOOR LOCKS**													
1-72-5	LOCK, Rr. Door Child Guard		1	—	1	1	1	1	1	1	1	1	1	2809 730
1-74-0	**LUGGAGE RACK**													
1-74-1	DECK LID LUGGAGE RACK PACKAGE		—	1	—	—	—	—	—	—	—	—	—	3419 498
	W-P, W-S, Fast Back	70	—	—	—	—	1	—	—	—	—	—	—	3419 382
	R, W 2 Dr. H.T. w/Fast Back	71	—	—	—	1	1	—	—	—	—	—	—	= 3620 518
	Roof Luggage Rack Package, Sta. Wgn.	70	—	—	—	1	1	—	—	—	—	—	—	2932 073
	Roof Luggage Rack Package Sta. Wgn.	71	—	—	—	1	1	—	—	—	—	—	—	3440 127

CARLINES: J - Challenger, B - Barracuda, V - Valiant, L - Dart, R - Belvedere - Satellite, W - Coronet - Charger, P - Plymouth, D - Dodge, C - Chrysler, Y - Imperial

AR Indicates use as required.

Numerals in parentheses ( ) refer to notes.

# Indicates parts not listed in any previous parts book.

★ Indicates change or addition.

Printed in U.S.A. January 1972

CODE	PART NAME	ENG. TYPE OR CU.IN.	V 1-2	B J 1-2	L 1-2	R 1-2	W 1-2	P 1-2	D 1-2	C 1	C 2	C 3	Y 1	PART NUMBER
1-74-0	**LUGGAGE RACK Cont'd.**													
1-74-1	DECK LID LUGGAGE RACK PACKAGE Cont'd.													
	Roof Luggage Rack Package, Sta. Wgn.	70	—	—	—	—	—	1	1	1	1	1	—	2933 973
	Roof Luggage Rack Package Sta. Wgn.	71	—	—	—	—	—	1	1	1	1	1	—	3499 839
1-87-0	**RADIO**													
1-87-1	RADIO PACKAGE													
	AM Radio Push Button (Knob Type)		1	—	1	—	—	—	—	—	—	—	—	2884 854
	AM Radio Thumbwheel	70	1	—	1	—	—	—	—	—	—	—	—	2884 931
	AM Radio Push Button (Knob Type)		—	1	—	—	—	—	—	—	—	—	—	2884 853
	AM Radio W/Stereo Tape		—	1	—	—	—	—	—	—	—	—	—	2884 852
	AM-FM, w/Multiplex (T/Wheel)	70	—	1	—	—	—	—	—	—	—	—	—	2884 658
	AM Radio 2 Watt. (Knob Type)	70	—	—	—	1	1	—	—	—	—	—	—	2884 861
	AM Radio 2 Watt. (Knob Type)	71	—	—	—	1	1	—	—	—	—	—	—	3501 132
	AM Radio 5.5 Watt, (Knob Type)	70	—	—	—	1	1	—	—	—	—	—	—	2884 860
	AM-FM Radio (Knob Type)	70	—	—	—	1	1	—	—	—	—	—	—	2884 862
	AM Radio w/Stereo Tape	70	—	—	—	1	1	—	—	—	—	—	—	2884 636
	AM Radio 2 Watt. (Knob Type)	70	—	—	—	—	—	1	—	—	—	—	—	2884 856
	AM Radio 2 Watt (Knob Type)	71	—	—	—	—	—	1	1	—	—	—	—	3501 160
	AM Radio 5.5 Watt. (Knob Type)	70	—	—	—	—	—	1	—	—	—	—	—	2884 855
	AM-FM Radio		—	—	—	—	—	1	—	—	—	—	—	3420 888
	AM-FM Multiplex Push Button (Thumbwheel)	70	—	—	—	—	—	1	—	—	—	—	—	2884 748
	AM Radio 2 Watt. (Knob Type)	70	—	—	—	—	—	—	1	—	—	—	—	2884 858
	AM Radio 5.5 Watt. (Knob Type)	70	—	—	—	—	—	—	1	—	—	—	—	2884 857
	AM Radio w/Stereo Tape Player	70	—	—	—	—	—	—	1	—	—	—	—	2884 882
	AM-FM Radio	70	—	—	—	—	—	—	1	—	—	—	—	3420 889
	AM-FM Multiplex Push Button (Thumbwheel)	70	—	—	—	—	—	—	1	—	—	—	—	2884 749
	AM-FM Search Tune	70	—	—	—	—	—	—	—	1	1	1	—	2884 606
	AM-FM Search Tune (Knob Type)	71	—	—	—	—	—	—	—	1	1	1	1	3501 134
	AM Radio w/Stereo Tape Player	70	—	—	—	—	—	—	—	1	1	1	—	2884 593
	AM Radio w/Stereo Tape Player	71	—	—	—	—	—	—	—	1	1	1	—	3501 135
	AM Radio (Knob Type)	70	—	—	—	—	—	—	—	1	1	1	—	2884 859
	AM Radio 5.5 Watt (Knob Type)	71	—	—	—	—	—	—	—	1	1	1	—	3501 133
	AM Radio w/Stereo Tape Thumbwheel	70	—	—	—	—	—	—	—	—	—	—	1	2884 845
	AM-FM Search Tune "Less Knobs"	70	—	—	—	—	—	—	—	—	—	—	1	2884 876
	AM-Search and Tune "Less Knobs"	70	—	—	—	—	—	—	—	—	—	—	1	2884 848
	AM-FM Multiplex w/Tape		—	—	—	—	—	—	—	1	1	1	—	2884 607
	AM-FM Multiplex w/Stereo Tape	70	—	—	—	—	—	—	—	—	—	—	1	2884 844
	NOTE: The Following Radios And Tape Player Recorder Stereo Cassette Are For Replacement Only Not For Field Installation													
	AM Radio Dual Audio W/Input Socket For use W/Stereo Cassette "Less Knobs"	71	1	—	1	—	—	—	—	—	—	—	—	3501 053
	AM Radio Dual Audio W/Input Socket For Use W/Stereo Cassette "Less Knobs"	71	—	1	—	—	—	—	—	—	—	—	—	3501 054
	AM-FM Multiplex W/Input Socket For Use W/Stereo Cassette	71	—	1	—	—	—	—	—	—	—	—	—	3501 050
	AM Radio Dual Audio W/Input Socket For Use W/Stereo Cassette "Less Knobs"	71	—	—	—	1	1	—	—	—	—	—	—	3501 059

CARLINES J - Challenger, B - Barracuda, V - Valiant, L - Dart, R - Belvedere - Satellite, W - Coronet - Charger, P - Plymouth, D - Dodge, C - Chrysler, Y - Imperial

AR Indicates use as required.

Numerals in parentheses ( ) refer to notes.

# Indicates parts not listed in any previous parts book.

★ Indicates change or addition.

Printed in U.S.A. January 1972

CODE	PART NAME	ENG. TYPE OR CU.IN.	V 1-2	B J 1-2	L 1-2	R 1-2	W 1-2	P 1-2	D 1-2	C 1	C 2	C 3	Y 1	PART NUMBER
1-87-0	**RADIO Cont'd.**													
1-87-1	RADIO PACKAGE Cont'd.													
	AM-FM Multiplex 5.5 Watt "Less Knobs"	71	—	—	—	1	1	—	—	—	—	—	—	3501 014
	AM Radio Deluxe (Knob Type) "Less Knobs"	71	—	—	—	—	—	1	1	—	—	—	—	3501 157
	AM Radio Dual Audio W/Input Socket For Use W/Stereo Cassette "Less Knobs"	71	—	—	—	—	—	1	1	—	—	—	—	3501 158
	AM-FM Multiplex W/Input Socket For Use W/Stereo Cassette (T/Wheel Type)	71	—	—	—	—	—	1	1	—	—	—	—	3501 159
	AM-FM Multiplex 5.5 Watt "Less Knobs"	71	—	—	—	—	—	—	—	1	1	1	1	3501 166
	AM-FM Multiplex W/Stereo Tape "Less Knobs"	71	—	—	—	—	—	—	—	—	—	—	1	3501 167
	Tapeplayer Recorder Stereo Cassette "Less Knobs"	71	1	1	1	1	1	1	1	1	1	1	1	3501 045
	Torque Screw Cassette Theft Proof Mtg.	71	2	2	2	2	2	2	2	2	2	2	2	3501 522
	NOTE: See P.T.C. 1-87-70													
1-87-2	SPEAKER, Instrument Panel Radio		1	—	1	—	—	—	—	—	—	—	—	2496 874
	Radio		—	1	—	—	—	—	—	—	—	—	—	2884 778
	Radio	71	—	—	—	—	—	—	2	2	2	2	2	2884 099
	Instrument Panel Stereo		—	2	—	—	—	2	2	—	—	—	—	2884 438
	Instrument Panel Radio Type I	70	—	—	—	1	1	—	—	—	—	—	—	2864 785
	Instrument Panel Radio	71	—	—	—	1	1	—	—	—	—	—	—	3501 020
	AM Radio w/Stereo Player	70	—	—	—	2	2	—	—	—	—	—	—	2864 699
	Instrument Panel Radio		—	—	—	—	—	1	1	—	—	—	—	2884 571
	Wheel Hsg. Cover Grille	Sta. Wgn.	—	—	—	—	—	2	2	2	2	2	—	2947 832
	Instrument Panel Radio		—	—	—	—	—	—	—	1	1	1	—	2884 304
	w/AM-FM Multiplex Radio	70	—	—	—	—	—	—	—	2	2	2	2	2864 699
	Instrument Panel Radio (High Energy Magnetic)		—	—	—	—	—	—	—	—	—	—	1	2884 304
	Rr. Compartment Radio		AR	AR	AR	—	—	AR	AR	AR	AR	AR	AR	2427 603
	Rear Compartment Wgn.	71	—	—	—	1	1	—	—	—	—	—	—	3488 211
	RR. SPEAKER AND CONTROL PACKAGE													
	Speaker and Fader Control	70	1	—	—	—	—	—	—	—	—	—	—	2864 331
	Speaker and Fader Control	70	—	—	1	—	—	—	—	—	—	—	—	2864 332
	Speaker and Control w/Rallye I/Pnl.	70	—	1	—	—	—	—	—	—	—	—	—	2947 884
	Speaker And Control W/Rallye I/Pnl.	71	—	1	—	—	—	—	—	—	—	—	—	3501 183
	Speaker and Control w/o Rallye I/Pnl.	70	—	1	—	—	—	—	—	—	—	—	—	2947 881
	Speaker And Control W/O Rallye I/Pnl.	71	—	1	—	—	—	—	—	—	—	—	—	3501 182
	Speaker and Fader Control	70	—	—	—	1	1	—	—	—	—	—	—	2947 234
	Speaker and Fader Control Except Sta. Wgn.		—	—	—	—	—	1	1	—	—	—	—	2947 220
	Speaker and Control Sta. Wgn.		—	—	—	—	—	1	1	—	—	—	—	2947 882
	Speaker and Fader Control Except Sta. Wgn.		—	—	—	—	—	—	—	1	1	1	—	2947 223
	Speaker and Control Sta. Wgn.		—	—	—	—	—	—	—	1	1	1	—	2947 883
	Rr. Speaker Fader Package	71	1	—	1	—	—	—	—	—	—	—	—	3488 434
	R, W Exc. Wgn.	71	—	—	—	1	1	—	—	—	—	—	—	3488 423
	R, W Wgn.	71	—	—	—	1	1	—	—	—	—	—	—	3488 424
1-87-5	SWITCH, Radio Foot Selector w/Cable		—	—	—	—	—	—	—	1	1	1	1	2822 329
1-87-7	GROMMET, Frt. Floor Carpet Radio Selector Switch		—	—	—	—	—	—	—	1	1	1	1	2292 474

CARLINES: J - Challenger, B - Barracuda, V - Valiant, L - Dart, R - Belvedere - Satellite, W - Coronet - Charger, P - Plymouth, D - Dodge, C - Chrysler, Y - Imperial

AR Indicates use as required.

Numerals in parentheses ( ) refer to notes.

# Indicates parts not listed in any previous parts book.

★ Indicates change or addition.

Printed in U.S.A. January 1972

1-87-0 RADIO Cont'd.

CODE	PART NAME	ENG. TYPE OR CU.IN.	V 1-2	B J 1-2	L 1-2	R 1-2	W 1-2	P 1-2	D 1-2	C 1	C 2	C 3	Y 1	PART NUMBER
1-87-12	BRACKET, Stereo Cassette Recorder Player Upper	71	1	1	1	1	1	1	1	1	1	1	1	3501 062
	To Floor Pan	71	1	—	1	—	—	—	—	—	—	—	—	3501 169
	To Console	71	—	1	—	1	1	—	—	—	—	—	—	3501 123
	To Floor Pan	71	—	1	—	1	1	—	—	—	—	—	—	3501 170
	To Floor Pan	71	—	—	—	—	—	1	1	1	1	1	1	3501 171
1-87-16	KEY BOLT, Radio Mtg. to Inst. Pnl.	70	2	—	2	—	—	—	—	—	—	—	—	2864 516
1-87-17	NUT, Radio Speaker To Grille	70	—	—	—	—	—	—	—	8	8	8	8	1839 995
	Rr. Speaker Cont. Mtg. w/Rallye I/Pnl.		—	1	—	—	—	—	—	—	—	—	—	1887 603
	Rr. Speaker Cont. Mtg. w/o Rallye I/Pnl.	71	—	1	—	—	—	—	—	—	—	—	—	2427 119
1-87-19	CROSSOVER, Mtg. Plate and Cover		—	1	—	1	1	1	1	1	1	1	1	2884 863
1-87-20	BASE, Rr. Seat Back Speaker Grille Medallion		—	—	—	—	—	—	—	—	—	—	1	2656 961
1-87-21	GRILLE, Rr. Seat Speaker Cv. Cp.	70	—	—	—	—	—	1	—	—	—	—	—	2888 536
	Cv. Cp.	70	—	—	—	—	—	—	1	—	—	—	—	2767 496
	C M, Cv. Cp.	70	—	—	—	—	—	—	—	—	1	—	—	2888 538
	C-E, Cv. Cp.	70	—	—	—	—	—	—	—	1	—	—	—	2767 497
	300-H 2 D.H.T.	70	—	—	—	—	—	—	—	—	1	—	—	3571 209
	C-H 2 Dr. H.T.	71	—	—	—	—	—	—	—	—	—	1	—	3520 699
	Y-M, 2D.H.T.	70	—	—	—	—	—	—	—	—	—	—	1	2767 498
	Y-M 2 Dr. H.T.	71	—	—	—	—	—	—	—	—	—	—	1	3520 721
	NOTE: Also See P.T.C. 23-96-31													
1-87-22	BEZEL, Radio w/Eyelets	V-L 70	1	—	1	—	—	—	—	—	—	—	—	2770 561
	AM Radio	V-L, V-H	1	—	1	—	—	—	—	—	—	—	—	2884 817
	COVER, w/o Radio	V-L, V-H	1	—	1	—	—	—	—	—	—	—	—	2884 773
	Bezel, I/Pnl. W/Htr. And Radio	L-H 70	—	—	1	—	—	—	—	—	—	—	—	2884 893
	Bezel, I/Pnl. W/Htr. And Radio	L-H 71	—	—	1	—	—	—	—	—	—	—	—	3501 197
	Bezel, I/Pnl. W/Htr. And Radio Openings L-L (Silver)		—	—	1	—	—	—	—	—	—	—	—	2884 897
	Bezel I/Pnl. W/A Cond. And Radio Openings		—	—	1	—	—	—	—	—	—	—	—	2884 899
	Bezel, I/Pnl. W/Htr. And Radio Openings W/Interior Wood Trim V-L, L-L Fast back	71	1	—	1	—	—	—	—	—	—	—	—	2884 886
	Bezel, I/Pnl. W/Htr. And Radio Openings W/Interior Wood Trim V-H,	71	1	—	—	—	—	—	—	—	—	—	—	= 3501 189
	BEZEL, I/Pnl. w/Radio Rallye I/P	B,J-S,J-H	—	1	—	—	—	—	—	—	—	—	—	2884 880
	I/Pnl. w/Radio Exc. Rallye I/P.	J-H	—	1	—	—	—	—	—	—	—	—	—	2884 878
	Rr. Speaker Control		—	1	—	—	—	—	—	—	—	—	—	2947 673
	Rr. Speaker Fader Control		—	1	—	—	—	—	—	—	—	—	—	2947 484
	Rr. Speaker Fader Control	71	—	—	—	1	1	—	—	—	—	—	—	3488 322
	Rr. Speaker Control	70	—	—	—	—	—	1	1	—	—	—	—	2947 041
	Rr. Speaker Control P-E, P-L, D-E, D-S	71	—	—	—	—	—	1	1	—	—	—	—	2947 041
	Rr. Speaker Control P-M, P-H, D-L, D-M, D-H	71	—	—	—	—	—	1	1	—	—	—	—	3488 003
	T/BEZEL, w/AM Radio Stereo w/Rr. Speaker	70	—	—	—	—	—	—	1	—	—	—	—	2884 425
	BEZEL, I/Pnl. w/AM Radio	70	—	—	—	—	—	—	1	—	—	—	—	2884 835
	I/Pnl. w/AM Tape Player	70	—	—	—	—	—	—	1	—	—	—	—	2884 827
	I/Pnl. w/AM FM Multiplex Radio	70	—	—	—	—	—	—	1	—	—	—	—	2884 801
	I/Pnl. w/AM-FM Search Tune	70	—	—	—	—	—	—	—	1	1	1	—	2984 907
	I/Pnl. w/Multiplex or Tape Player	70	—	—	—	—	—	—	—	1	1	1	—	2984 908
	I/Pnl. AM Radio	70	—	—	—	—	—	—	—	1	1	1	—	2984 906
	Rr. Speaker Opening	70	—	—	—	—	—	—	—	1	1	—	—	2947 142

CARLINES: J - Challenger, B - Barracuda, V - Valiant, L - Dart, R - Belvedere - Satellite, W - Coronet - Charger, P - Plymouth, D - Dodge, C - Chrysler, Y - Imperial

AR Indicates use as required.

# Indicates parts not listed in any previous parts book.

Numerals in parentheses ( ) refer to notes.

★ Indicates change or addition.

Printed in U.S.A. January 1972

CODE	PART NAME	ENG. TYPE OR CU.IN.	V 1-2	B J 1-2	L 1-2	R 1-2	W 1-2	P 1-2	D 1-2	C 1	C 2	C 3	Y 1	PART NUMBER
1-87-0	**RADIO Cont'd.**													
1-87-22	BEZEL Cont'd.													
	Bezel and Grille Rear Comp. Speaker													
	Blue	71	—	—	—	1	1	—	—	—	—	—	—	2826 GB7
	Green	71	—	—	—	1	1	—	—	—	—	—	—	2826 GF7
	Tan	71	—	—	—	1	1	—	—	—	—	—	—	2826 GT7
	Black	71	—	—	—	1	1	—	—	—	—	—	—	2826 GX9
	PLATE, I/Pnl. Ctr. w/Tape Player WP, W-S Fast Back	70	—	—	—	—	1	—	—	—	—	—	—	2927 930
	PLATE, R-M, R-S All W-M All W-S 2 Dr., H.T. CV. CP.	70	—	—	—	1	1	—	—	—	—	—	—	2927 930
	PLATE, I/Pnl. Finish Ctr. RP. w/Radio W-P, W-S except Fast Back	70	—	—	—	1	1	—	—	—	—	—	—	2984 674
	PLATE, I/Pnl. Finish Ctr. w/AM Radio w/Stereo R-P, W-P, W-S exc. Fast Back	70	—	—	—	1	1	—	—	—	—	—	—	2984 676
	PLATE, I/Pnl. Finish Ctr. w/Radio R-M, R-S W-M All W-P, W-S Fast Back W-S 2 Dr. H.T. CV. CPE.	70	—	—	—	1	1	—	—	—	—	—	—	2984 697
	PLATE AND APPLIQUE, I/Pnl. CTR. W-P, W-S 2 Dr. H.T. CV. CPE. and Fast Back R-S, W-M All w/o Stereo	70	—	—	—	1	1	—	—	—	—	—	—	2984 440
	I/Pnl. Ctr. W-P, W-S Fast Back R-S, W-M All W-S 2 Dr. H.T. CV. CPE. w/AM Radio and Stereo	70	—	—	—	1	1	—	—	—	—	—	—	2984 442
	PLATE, I/Pnl. Ctr. Except Fast Back, Black	70	—	—	—	1	1	—	—	—	—	—	—	4518 FX9
	Blue	70	—	—	—	1	1	—	—	—	—	—	—	4518 FB9
	Green	R-M 70	—	—	—	1	—	—	—	—	—	—	—	4518 FF8
	Orange	R-M 70	—	—	—	1	—	—	—	—	—	—	—	4518 FK5
	Tan	70	—	—	—	1	1	—	—	—	—	—	—	4518 FT4
	Gold	R-L 70	—	—	—	1	—	—	—	—	—	—	—	4518 FY4
	I/Pnl., w/Radio and Htr. Opening	70	1	—	—	—	—	—	—	—	—	—	—	2884 886
	Blue	70	—	—	—	1	1	—	—	—	—	—	—	4519 FB7
	Green	70	—	—	—	1	1	—	—	—	—	—	—	4519 FF8
	Burnt Orange	70	—	—	—	1	—	—	—	—	—	—	—	4519 FK5
	Tan	70	—	—	—	1	1	—	—	—	—	—	—	4519 FT4
	Black	70	—	—	—	1	1	—	—	—	—	—	—	4519 FX9
	Gold	70	—	—	—	1	—	—	—	—	—	—	—	4519 FY4
	Blue - B	70	—	1	—	—	—	—	—	—	—	—	—	4281 FB5
	Red - B	70	—	1	—	—	—	—	—	—	—	—	—	4281 FE5
	Green - B	70	—	1	—	—	—	—	—	—	—	—	—	4281 FF8
	Burnt Orange - B-P	70	—	1	—	—	—	—	—	—	—	—	—	4281 FK5
	Tan - B	70	—	1	—	—	—	—	—	—	—	—	—	4281 FT4
	Black - B	70	—	1	—	—	—	—	—	—	—	—	—	4281 FX9
	NOTE: For Further Information See Part Type Code 23-33-135													
1-87-23	MEDALLION, Rr. Seat Back Speaker Grille													
	D-L CV. CPE.	70	—	—	—	—	—	—	1	—	—	—	—	2767 510
	C-M, CV. CPE.	70	—	—	—	—	—	—	—	—	1	—	—	2787 751
	Y-M 2 Dr. H.T.		—	—	—	—	—	—	—	—	—	—	1	2401 231
1-87-25	BRACKET, Rr. Seat Radio Speaker Grille Mtg.		—	—	—	—	—	—	—	—	—	1	1	2942 333
	Bracket and Seal Rr. Speaker Mtg. Rt. Wgn.	71	—	—	—	1	1	—	—	—	—	—	—	3488 209

CARLINES J - Challenger, B - Barracuda, V - Valiant, L - Dart, R - Belvedere - Satellite, W - Coronet - Charger, P - Plymouth, D - Dodge, C - Chrysler, Y - Imperial

AR Indicates use as required. Numerals in parentheses ( ) refer to notes.

# Indicates parts not listed in any previous parts book. ★ Indicates change or addition.

Printed in U.S.A. January 1972

CODE	PART NAME	ENG. TYPE OR CU.IN.	V 1-2	B J 1-2	L 1-2	R 1-2	W 1-2	P 1-2	D 1-2	C 1	C 2	C 3	Y 1	PART NUMBER
1-87-0	**RADIO Cont'd.**													
1-87-30	PLATE, I Pnl. Radio Speaker Mtg.		1	—	1	—	—	—	—	—	—	—	—	2770 342
	Stereo Speaker and Grille Mtg.		—	2	—	—	—	—	—	—	—	—	—	2884 684
	I/Pnl. Speaker Mtg. To I Pnl.	70	—	—	—	1	1	—	—	—	—	—	—	2864 776
	Rr. Seat Speaker and Grille Mtg. Cv. Cp.	70	—	—	—	—	—	1	1	1	1	—	—	2767 508
1-87-48	SHROUD, Cassette Player Upper	71	1	1	1	1	1	1	1	1	1	1	1	4129 GX9
	Lower	71	1	1	1	1	1	1	1	1	1	1	1	4124 GX9
1-87-50	PEDESTAL, Cassette Player Shroud	71	1	—	1	—	—	—	—	—	—	—	—	4126 GX9
	w/Console	71	—	1	—	1	1	—	—	—	—	—	—	4130 GX9
	w/o Console	71	—	1	—	1	1	—	—	—	—	—	—	4127 GX9
		71	—	—	—	—	—	1	1	1	1	1	1	4125 GX9
1-87-51	SHAFT, Channel Selector Auto. Ejector	70	—	—	—	—	—	1	1	—	—	—	—	2884 496
	Channel Selector Auto. Ejector w/Knob		—	1	—	—	—	—	—	1	1	1	1	2884 497
1-87-54	MICROPHONE, Stereo Cassette	71	1	1	1	1	1	1	1	1	1	1	1	3501 046
1-87-55	CARTRIDGE, Stereo Tape Demonstration													
	w/Cassette System	71	1	1	1	1	1	1	1	1	1	1	1	3501 151
	W/8 Track System	71	—	1	—	—	—	—	—	1	1	1	1	3501 176
1-87-58	CONTROL, Rr. Speaker Fader w/Rallye I Pnl.		—	1	—	—	—	—	—	—	—	—	—	2947 444
	Rr. Speaker Stereo		—	1	—	—	—	—	—	—	—	—	—	2947 672
	Rr. Speaker Fader w/o Rallye I/Pnl.		—	1	—	—	—	—	—	—	—	—	—	2947 723
	Rr. Compartment Speaker Fader (Shaft Type)	70	—	—	—	1	1	—	—	—	—	—	—	2820 568
	Rr. Speaker Stereo	70	—	—	—	1	1	—	—	—	—	—	—	2820 928
	Rr. Speaker	71	—	—	—	1	1	—	—	—	—	—	—	3488 325
	Rr. Speaker Fader (T Wheel Type)		—	—	—	—	—	1	1	—	—	—	—	2864 368
	Rr. Speaker Stereo		—	—	—	—	—	1	1	—	—	—	—	2864 366
	Rr. Speaker Fader (T Wheel Type)		—	—	—	—	—	—	—	1	1	1	1	2947 133
	Rr. Speaker Stereo (T Wheel Type)		—	—	—	—	—	—	—	1	1	1	1	2864 397
1-87-61	BRACKET, Radio Mtg. to Inst. Pnl.		1	—	1	—	—	—	—	—	—	—	—	2864 790
1-87-70	CHOKE, Radio Noise Suppression		—	—	—	—	—	—	—	—	—	—	1	2884 928
	Socket, Radio Shorting	71	—	1	—	1	1	1	1	1	1	1	1	3501 104
	NOTE: To Play Radio When Stereo Cassette Is Removed Install 3501104 Socket													
1-87-180	KNOB, Radio Control (Primary)	70	2	—	—	—	—	—	—	—	—	—	—	2884 764
	Radio Control (Primary) V, LM, LL Fast Back	71	2	—	2	—	—	—	—	—	—	—	—	2884 764
	Radio Control (Primary)	70	—	—	2	2	2	—	—	—	—	—	—	2884 767
	Radio Control (Primary) LL, LH 2 Dr. H.T. 4 Dr.	71	—	—	2	—	—	—	—	—	—	—	—	2884 767
	Radio Control (Primary)	71	—	2	—	2	2	2	2	—	—	—	—	2884 776
	Radio Control (Secondary)	70	—	—	2	2	2	—	—	—	—	—	—	2884 769
	Radio Control (Secondary) LH, LL 2 Dr. H. T. 4 Dr.	71	—	—	2	—	—	—	—	—	—	—	—	2884 769
	Radio Control (Secondary)	71	—	2	—	2	2	2	—	—	—	—	—	2884 775
	Radio Tone Control		2	—	2	—	—	—	—	—	—	—	—	2497 408
	Radio Control (Primary)	71	—	—	—	—	—	—	—	2	2	2	—	3501 037
	Radio Control (Primary)	71	—	—	—	—	—	—	—	—	—	—	2	3501 039
	Radio Control (Secondary)	71	—	—	—	—	—	—	—	2	2	2	—	3501 033
	Radio Control (Secondary)	71	—	—	—	—	—	—	—	—	—	—	2	3501 035
	KNOB and SPRING, Radio Control	70	—	—	—	—	—	—	—	2	2	2	—	2884 926
	KNOB and INSERT, Radio Tone Control	70	—	—	—	—	—	—	—	2	2	2	2	2884 317
	KNOB, Radio Tone Control	70	—	—	—	—	—	—	—	—	—	—	2	2884 481
	Knob, Stereo Cassette (Primary)	71	1	1	1	1	1	1	1	1	1	1	1	3501 077
	Knob, Stereo Cassette (Secondary)	71	1	1	1	1	1	1	1	1	1	1	1	3501 078
	Knob And Spring, Rr. Speaker Control		—	1	—	—	—	—	—	—	—	—	—	2947 359

CARLINES: J - Challenger, B - Barracuda, V - Valiant, L - Dart, R - Belvedere - Satellite, W - Coronet - Charger, P - Plymouth, D - Dodge, C - Chrysler, Y - Imperial

AR Indicates use as required.

Numerals in parentheses ( ) refer to notes.

# Indicates parts not listed in any previous parts book.

★ Indicates change or addition.

Printed in U.S.A. January 1972

CODE	PART NAME	ENG. TYPE OR CU.IN.	V 1-2	B J 1-2	L 1-2	R 1-2	W 1-2	P 1-2	D 1-2	C 1	C 2	C 3	Y 1	PART NUMBER
1-87-0	**RADIO Cont'd.**													
1-87-180	KNOB Cont'd.													
	Rr. Speaker Fader And Stereo Control	70	—	—	—	1	1	—	—	—	—	—	—	2820 186
	Rr. Speaker Fader	71	—	—	—	1	1	—	—	—	—	—	—	3488 323
1-87-292	BEZEL, Rr. Speaker Control Unit and Stereo		1	—	1	1	1	—	—	—	—	—	—	2580 361
1-87-334	GASKET, Rr. Seat Speaker Grille Screen CV CP.	70	—	—	—	—	—	1	1	1	1	1	—	2767 504
1-87-404	WIRING, Rr. Compt. Spkr.		1	1	1	1	1	1	1	1	1	1	1	2580 038
	Rr. Radio Spkr. (Dual)		—	1	—	—	—	—	—	—	—	—	—	2983 583
	Stereo Tape and Rr. Spkr.	70	—	1	—	—	—	—	—	—	—	—	—	2983 312
	Stereo Tape I/Pnl.	70	—	—	—	1	1	—	—	—	—	—	—	2926 402
	Stereo	71	—	—	—	1	1	—	—	—	—	—	—	3513 099
	Radio Tape w/Rr. Spkr. Jumper	70	—	—	—	1	1	—	—	—	—	—	—	2926 097
	Stereo Tape I/Pnl. w/o Rr. Speaker		—	—	—	—	—	1	1	—	—	—	—	2983 104
	Stereo Tape I/Pnl. w/Rr. Spkr.		—	—	—	—	—	1	1	—	—	—	—	2983 110
	Fader Switch Jumper		—	—	—	—	—	1	1	—	—	—	—	2983 129
	Fader Switch	71	—	—	—	1	1	—	—	—	—	—	—	3513 555
	Fader Switch	70	—	—	—	—	—	—	1	—	—	—	—	2983 131
	Stereo Tape I/Pnl. w Rr. Spkr.	70	—	—	—	—	—	—	1	—	—	—	—	2983 157
	Radio Rr. Spkr., Stereo, Sta. Wgn. Only		—	—	—	—	—	1	1	1	1	1	—	2983 105
	Radio Rr. Spkr. Stereo Cv. Cp.	70	—	—	—	—	—	1	1	1	1	1	—	2983 106
	Fader Switch Jumper		—	—	—	—	—	—	—	1	1	1	—	2889 376
	Radio w/Multiplex and Stereo		—	—	—	—	—	—	—	1	1	1	—	2926 431
	Fader Control Switch Jumper		—	—	—	—	—	—	—	—	—	—	1	2926 720
	Stereo Cassette Unit	71	1	—	1	—	—	—	—	—	—	—	—	3513 143
	Cable, Stereo Cassette Unit To Radio (Floor Mtg.) 44" Long.	71	1	1	1	1	1	1	1	1	1	1	1	3501 106
	Cable, Stereo Cassette Unit To Radio (Console Mtg.) 9" Long	71	—	1	—	1	1	—	—	—	—	—	—	3501 107
1-88-0	**RADIO ANTENNA**													
1-88-1	ANTENNA PACKAGE, Manual 60"		1	—	1	1	1	—	—	—	—	—	—	2889 826
	Manual 60"	71	—	—	—	1	1	—	—	—	—	—	—	3513 033
	Manual 60"		—	1	—	—	—	—	—	—	—	—	—	2983 171
	Manual 60"		—	—	—	—	—	1	1	1	1	1	—	2926 691
	Power Antenna		—	—	—	—	—	—	—	1	1	1	—	2926 690
	Power Antenna	70	—	—	—	—	—	—	—	—	—	—	1	3420 924
1-88-6	ADAPTER, Manual Antenna Mtg.		1	—	1	—	—	—	—	—	—	—	—	2889 927
	ADAPTER and GASKET, Manual B.		—	1	—	—	—	—	—	—	—	—	—	2983 162
	Manual J		—	1	—	—	—	—	—	—	—	—	—	2983 164
	Adaptor and Gasket, Antenna	71	—	1	—	—	—	—	—	—	—	—	—	3501 143
	ADAPTER Antenna Mtg. Manual Except Fast Back		—	1	—	1	1	—	—	—	—	—	—	2889 924
	Fast Back	70	—	—	—	—	1	—	—	—	—	—	—	2889 925
	ADAPTER and GASKET Manual Antenna		—	—	—	—	—	1	—	1	1	1	—	2926 626
		70	—	—	—	—	—	—	1	—	—	—	—	2936 627
	4 Dr. Wgn.	71	—	—	—	1	—	—	—	—	—	—	—	3513 034
	2 Dr. H.T.	71	—	—	—	1	—	—	—	—	—	—	—	3513 041
	4 Dr. Wgn.	71	—	—	—	—	1	—	—	—	—	—	—	3513 007
	2 Dr. H.T. Fast Back	71	—	—	—	—	1	—	—	—	—	—	—	3513 037
		71	—	—	—	—	—	—	—	1	1	1	—	3513 054
	GASKET, Power Antenna Escutcheon		—	—	—	—	—	—	—	1	1	1	—	2809 027
	Pwr. Antenna	70	—	—	—	—	—	—	—	—	—	—	1	2585 164
1-88-7	PIN and CONNECTOR PACKAGE, Power Antenna		—	—	—	—	—	—	—	1	1	1	1	2258 899

CARLINES J - Challenger, B - Barracuda, V - Valiant, L - Dart, R - Belvedere - Satellite, W - Coronet - Charger, P - Plymouth, D - Dodge, C - Chrysler, Y - Imperial

AR Indicates use as required.

Numerals in parentheses ( ) refer to notes.

# Indicates parts not listed in any previous parts book.

★ Indicates change or addition.

Printed in U.S.A. January 1972

CODE	PART NAME	ENG. TYPE OR CU.IN.	V 1-2	B J 1-2	L 1-2	R 1-2	W 1-2	P 1-2	D 1-2	C 1	C 2	C 3	Y 1	PART NUMBER
1-88-0	**RADIO ANTENNA Cont'd.**													
1-88-12	BODY And CABLE, Manual Antenna Trans - Am B, J.		1	1	1	—	—	—	—	—	—	—	—	2926 673
	Manual Antenna Exc. Trans-AM		—	1	—	—	—	—	—	—	—	—	—	2983 306
	Manual Antenna		—	—	—	—	—	1	1	1	1	1	—	2926 673
1-88-107	GASKET, Antenna Upr. Adapter Mtg.		1	1	1	1	1	1	1	1	1	1	—	2889 935
1-88-117	MOTOR and DRIVE, Power Antenna		—	—	—	—	—	—	—	1	1	1	1	2926 688
1-88-120	CAP NUT, Antenna Mtg.	70	1	1	1	1	1	1	1	1	1	1	—	2926 565
1-88-124	ESCUTCHEON and CLIP PACKAGE		—	—	—	—	—	—	—	1	1	1	—	2932 849
	Imperial	70	—	—	—	—	—	—	—	—	—	—	1	2932 850
1-88-126	BRACE, Power Antenna Mtg.		—	—	—	—	—	—	—	1	1	1	—	2983 715
	BRACKET, Power Antenna Mtg. To Dash		—	—	—	—	—	—	—	1	1	1	1	2926 265
1-88-159	MAST, Manual Antenna 76.5"		1	1	1	1	1	1	1	1	1	1	—	2889 934
	Manual 60"		1	1	1	1	1	1	1	1	1	1	—	2889 919
	Manual 31"	71	—	—	—	—	—	1	1	1	1	1	—	≠ 3513 745
	Power		—	—	—	—	—	—	—	1	1	1	—	2771 994
	MAST and TAPE, Power	70	—	—	—	—	—	—	—	—	—	—	1	2770 181
1-88-160	ANTENNA MAST ADAPTER, INSULATOR and SPACER PACKAGE		—	—	—	—	—	—	—	1	1	1	1	2932 848
	Insulator Package, Spacer Power Antenna	71	—	—	—	—	—	—	—	1	1	1	—	2809 026
	TUBE, Power Antenna Mast		—	—	—	—	—	—	—	—	—	—	1	2983 849
1-88-162	CABLE, Power Antenna Lead		—	—	—	—	—	—	—	1	—	—	1	2926 686
	Antenna, Extension Trans-AM	70	—	1	—	—	—	—	—	—	—	—	—	3501 144
	Antenna Extension	71	—	1	—	—	—	—	—	—	—	—	—	3501 144
	CABLE AND BRKT., w/S Lead In Antenna		—	—	—	—	—	—	—	—	—	—	1	2983 844
1-88-170	COLLAR, Manual Antenna Mtg.		—	1	—	—	1	1	1	1	1	1	—	2889 917
	COLLAR and CLIP, Manual Antenna		1	1	1	1	1	—	—	—	—	—	—	2983 242
	REINFORCEMENT, Manual Antenna Collar and Clip		—	—	—	—	—	1	1	1	1	1	—	2983 153
1-88-200	SPRING, Hood Grounding w/S Antenna		—	—	—	—	—	—	—	—	—	—	2	2983 841
	NOTE: For Antenna Switch See P.T.C. 8-42-1													

CARLINES J - Challenger, B - Barracuda, V - Valiant, L - Dart, R - Belvedere - Satellite, W - Coronet - Charger, P - Plymouth, D - Dodge, C - Chrysler, Y - Imperial

AR Indicates use as required.

# Indicates parts not listed in any previous parts book.

Numerals in parentheses ( ) refer to notes.

★ Indicates change or addition.

Printed in U.S.A. January 1972

NOTES

GROUP 2 - FRONT SUSPENSION

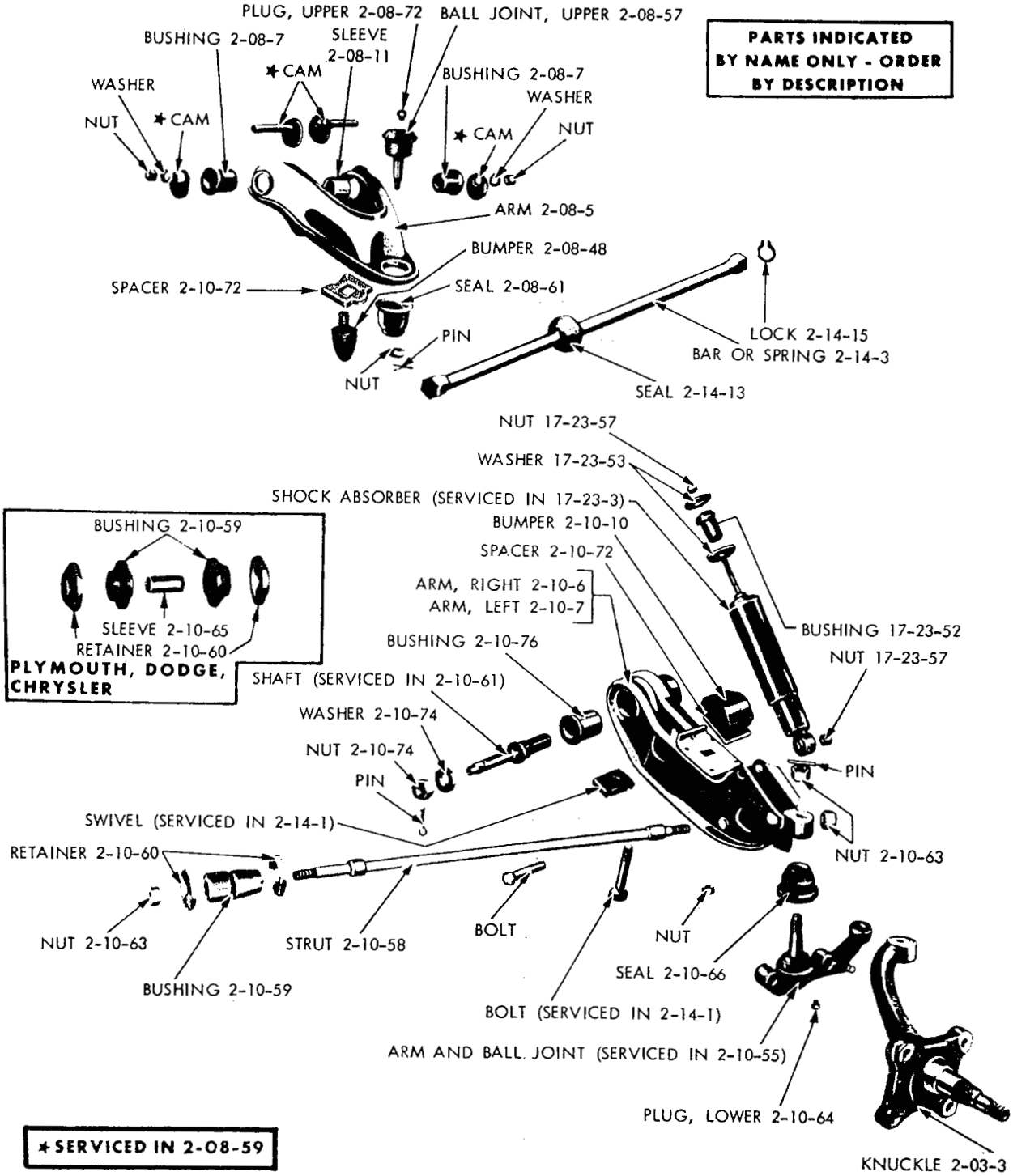

19a3703

FRONT SUSPENSION - EXCEPT IMPERIAL

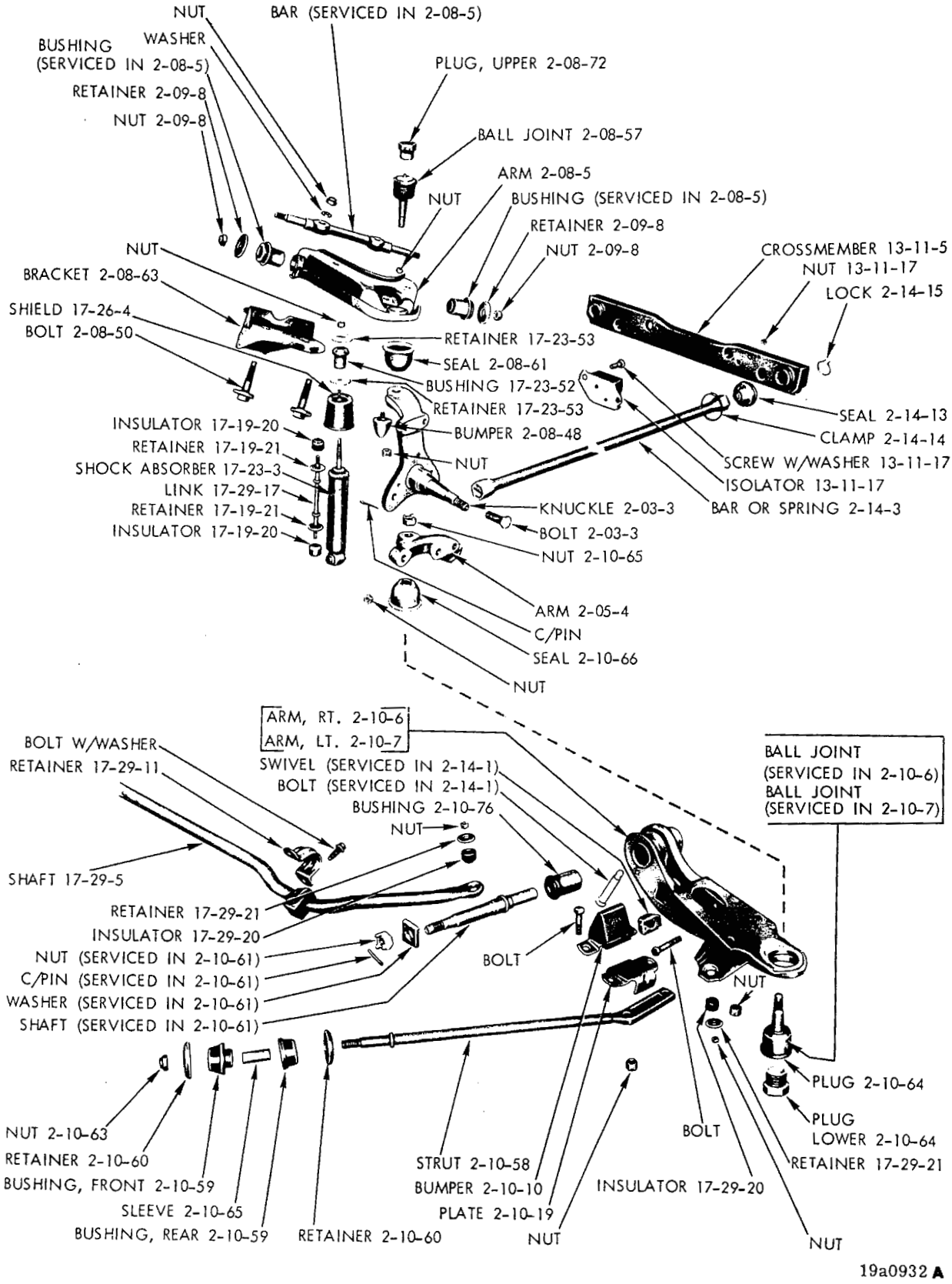

FRONT SUSPENSION - IMPERIAL

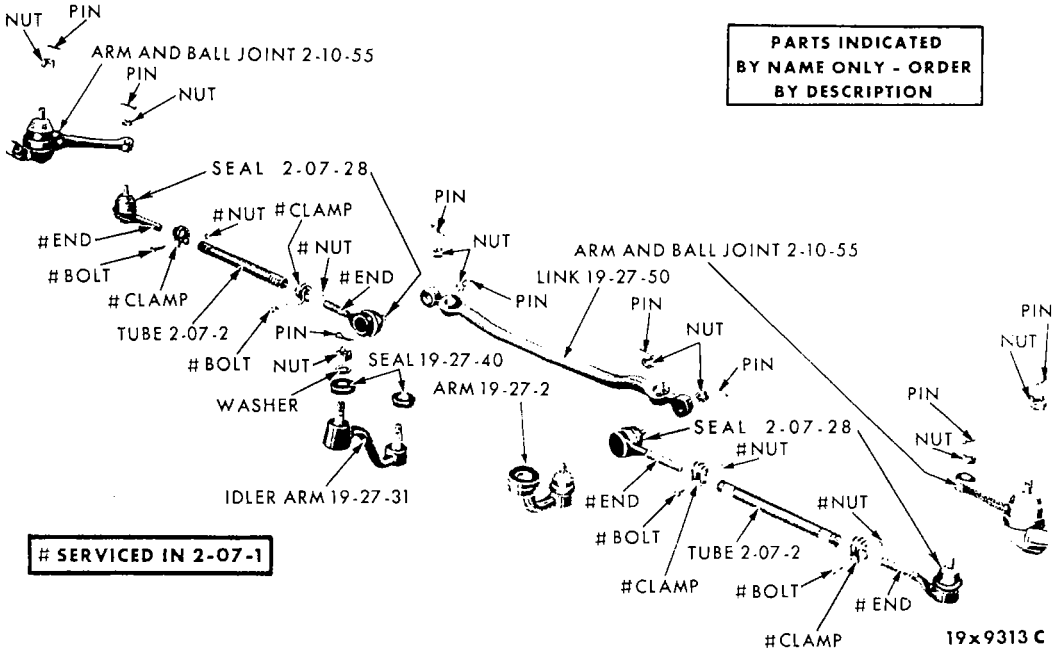

TIE RODS - VALIANT AND DART

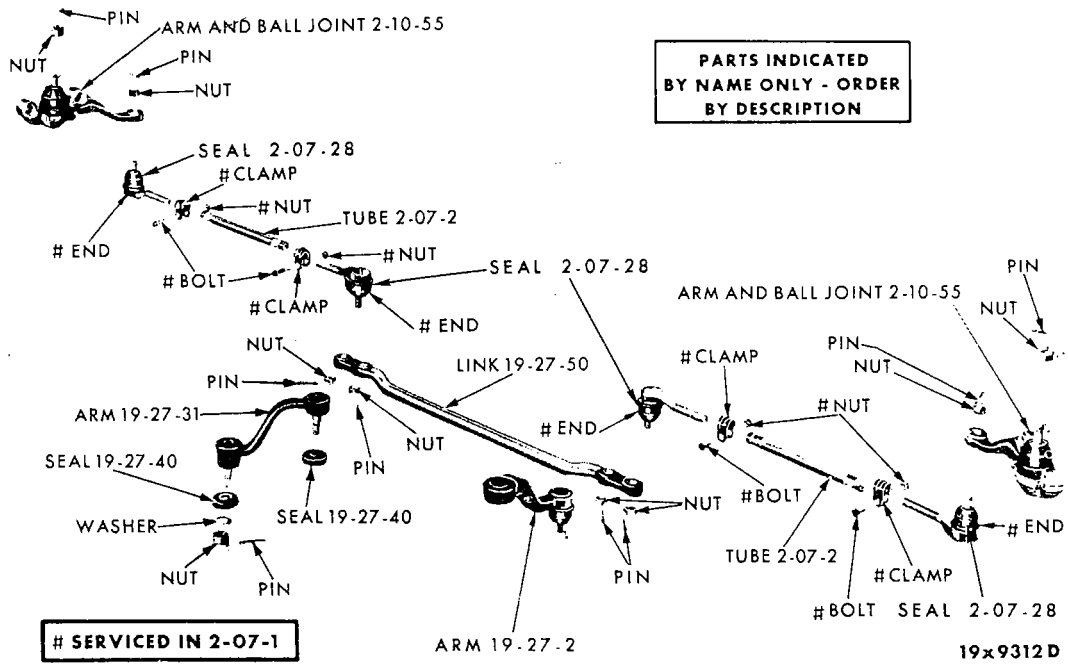

TIE RODS - BELVEDERE, CORONET, BARRACUDA AND CHALLENGER

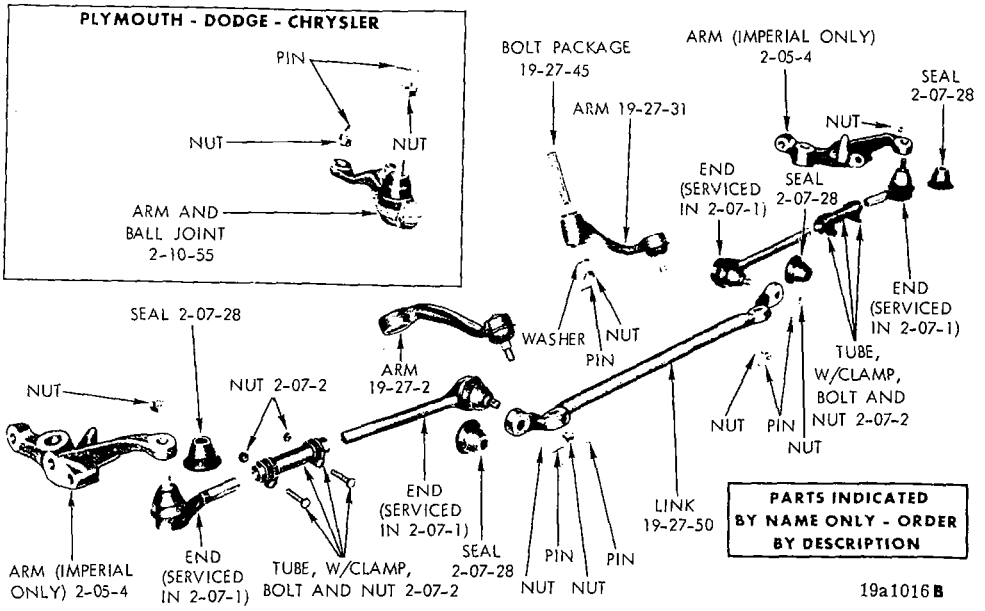

TIE RODS - PLYMOUTH, DODGE, CHRYSLER AND IMPERIAL

NOTES

CODE	PART NAME	ENG. TYPE OR CU.IN.	V 1-2	B J 1-2	L 1-2	R 1-2	W 1-2	P 1-2	D 1-2	C 1	C 2	C 3	Y 1	PART NUMBER
2-03-0	**STEERING KNUCKLE**													
2-03-3	KNUCKLE, w/9" Brakes	6	1	—	1	—	—	—	—	—	—	—	—	2071 432-3
	w/10" Brakes		1	—	1	—	—	—	—	—	—	—	—	2835 972-3
	w/o Disc Brakes		1	—	1	—	—	—	—	—	—	—	—	2835 972-3
	w/o Disc Brakes		—	2	—	2	2	—	—	—	—	—	—	2535 697
	KNUCKLE PACKAGE, w/o Disc Brakes		—	—	—	—	—	2	2	2	2	2	—	3004 816
	KNUCKLE, w/Disc Brakes		1	—	1	—	—	—	—	—	—	—	—	2269 798-9
	w/Disc Brakes		—	1	—	1	1	—	—	—	—	—	—	2535 694-5
	w/Disc Brakes		—	—	—	—	—	1	1	1	1	1	—	2535 422-3
	w/Disc Brakes	70 8	—	—	—	—	—	—	—	—	—	—	1	2535 426-7
	w/Disc Brakes	71 8	—	—	—	—	—	—	—	—	—	—	1	2948 728-9
	BOLT, w/Disc Brakes		4	—	4	—	—	—	—	—	—	—	—	6026 483
			—	4	—	4	4	4	4	4	4	4	—	6027 635
		8	—	—	—	—	—	—	—	—	—	—	4	6026 705
2-05-0	**STEERING LINKAGE KNUCKLE ARM**													
2-05-4	ARM	8	—	—	—	—	—	—	—	—	—	—	1	2535 446-7
2-07-0	**STEERING KNUCKLE TIE ROD**													
2-07-1	END PACKAGE, Inner, L.H. Thd.		2	2	2	2	2	—	—	—	—	—	—	3420 155
	Outer, R.H. Thd.		2	2	2	2	2	—	—	—	—	—	—	3420 154
	Inner		—	—	—	—	—	2	2	2	2	2	—	3004 795
	Outer		—	—	—	—	—	2	2	2	2	2	—	3004 794
	Inner	8	—	—	—	—	—	—	—	—	—	—	2	3004 787
	Outer	8	—	—	—	—	—	—	—	—	—	—	1	3004 788-9
2-07-2	TUBE		2	2	2	2	2	—	—	—	—	—	—	2072 437
	TUBE, w/CLAMP, BOLT, and NUT		—	—	—	—	—	2	2	2	2	2	—	2269 786
		8	—	—	—	—	—	—	—	—	—	—	2	1634 619
2-07-17	PLUG, Tie Rod Eng Cover		4	4	4	4	4	4	4	4	4	4	4	1858 115
2-07-28	SEAL, Tie Rod Dust		4	4	4	4	4	4	4	4	4	4	—	2835 896
		8	—	—	—	—	—	—	—	—	—	—	4	2535 457
2-08-0	**FRONT WHEEL UPPER CONTROL ARM**													
2-08-5	ARM		1	—	1	—	—	—	—	—	—	—	—	2071 456-7
			—	1	—	1	1	—	—	—	—	—	—	1857 856-7
			—	—	—	—	—	1	1	1	1	1	—	2269 104-5
		70 8	—	—	—	—	—	—	—	—	—	—	1	2535 376-7
		71 8	—	—	—	—	—	—	—	—	—	—	1	3402 508-9
2-08-7	BUSHING		4	4	4	4	4	—	—	—	—	—	—	2071 204
			—	—	—	—	—	4	4	4	4	4	—	2269 124
2-08-11	SLEEVE, Arm		2	2	2	2	2	—	—	—	—	—	—	1857 840
2-08-48	BUMPER, Arm (also Specify 1 of 9416107 Nut)		2	2	2	2	2	2	2	2	2	2	2	2535 204
2-08-50	BOLT, Arm Cam	8	—	—	—	—	—	—	—	—	—	—	4	2071 862
	Arm Support Bracket, Upper Mounting	8	—	—	—	—	—	—	—	—	—	—	4	2071 534
	Lower Mounting	8	—	—	—	—	—	—	—	—	—	—	2	2071 533
2-08-55	NUT, Bumper Bolt		2	2	2	2	2	2	2	2	2	2	2	9416 107
2-08-57	BALL JOINT PACKAGE, Upper		2	—	2	—	—	—	—	—	—	—	—	3514 974
			—	2	—	2	2	2	2	2	2	2	—	2298 534
		8	—	—	—	—	—	—	—	—	—	—	2	2808 394
2-08-59	CAM and BUSHING PACKAGE		2	2	2	2	2	—	—	—	—	—	—	2084 920
			—	—	—	—	—	2	2	2	2	2	—	2808 445
2-08-61	SEAL, Ball Joint Upper		2	—	2	—	—	—	—	—	—	—	—	2462 848
			—	2	—	2	2	2	2	2	2	2	—	2269 127
		8	—	—	—	—	—	—	—	—	—	—	2	2462 887
2-08-63	BRACKET, Side Rail Arm Mounting		1	—	1	—	—	—	—	—	—	—	—	2260 300-1
	Rt.		—	1	—	1	1	—	—	—	—	—	—	2467 982
	Lt.		—	1	—	1	1	—	—	—	—	—	—	2204 185
	Control Arm Support Mounting	8	—	—	—	—	—	—	—	—	—	—	1	2071 536-7

CARLINES J - Challenger, B - Barracuda, V - Valiant, L - Dart, R - Belvedere - Satellite, W - Coronet - Charger, P - Plymouth, D - Dodge, C - Chrysler, Y - Imperial

AR Indicates use as required.

# Indicates parts not listed in any previous parts book.

Numerals in parentheses ( ) refer to notes.

★ Indicates change or addition.

Printed in U.S.A. January 1972

CODE	PART NAME	ENG. TYPE OR CU.IN.	V 1-2	B J 1-2	L 1-2	R 1-2	W 1-2	P 1-2	D 1-2	C 1	C 2	C 3	Y 1	PART NUMBER
2-08-0	**FRONT WHEEL UPPER CONTROL ARM Cont'd.**													
2-08-70	REINFORCEMENT, Arm Mounting Bracket To Fender Shield		—	—	—	2	2	—	—	—	—	—	—	2530 688
	Arm Mounting Bracket To Fender Shield Brace	71	—	1	—	1	1	—	—	—	—	—	—	2962 030-1
2-08-71	NUT, Arm Cam Bolt		4	4	4	4	4	4	4	4	4	4	—	1825 449
	All	8	—	—	—	—	—	—	—	—	—	—	4	6029 033
2-08-72	PLUG, Upper Ball Joint		2	2	2	2	2	2	2	2	2	2	2	1858 115
2-09-0	**FRONT WHEEL UPPER CONTROL ARM PIVOT**													
2-09-8	RETAINER, Arm Pivot Bushing	8	—	—	—	—	—	—	—	—	—	—	4	2207 116
	NUT, Arm Pivot Bushing	8	—	—	—	—	—	—	—	—	—	—	4	6028 775
2-10-0	**FRONT WHEEL LOWER CONTROL ARM**													
2-10-6	ARM, w/SHAFT, w/or w/o Sway Bar, Rt. (Also Specify 1 of 6023 932 Nut)		1	—	1	—	—	—	—	—	—	—	—	2535 364
	w/Shaft, w/o Sway Bar, Rt. (Also Specify 1 of 6023 932 Nut)		—	1	—	1	1	—	—	—	—	—	—	2535 878
	w/Shaft, w/Sway Bar, Rt. (Also Specify 1 of 6023932 Nut)		—	1	—	1	1	—	—	—	—	—	—	2535 974
	w/Shaft, w/or w/o Sway Bar, Rt. (Also Specify 1 of 6027186 Nut)		—	—	—	—	—	1	1	1	1	1	—	2535 434
	RIVET, Arm Plate		2	2	2	2	2	—	—	—	—	—	—	6023 293
	ARM PACKAGE, Rt.	8	—	—	—	—	—	—	—	—	—	—	1	2808 620
2-10-7	ARM, w/Shaft, w/or w/o Sway Bar, Lt. (Also Specify 1 of 6023932 Nut)		1	—	1	—	—	—	—	—	—	—	—	2535 365
	w/Shaft, w/o Sway Bar, Lt. (Also Specify 1 of 6023932 Nut)		—	1	—	1	1	—	—	—	—	—	—	2535 879
	w/Shaft, w/Sway Bar, Lt. (Also Specify 1 of 6023932 Nut)		—	1	—	1	1	—	—	—	—	—	—	2535 975
	w/Shaft, w/or w/o Sway Bar, Lt. (Also Specify 1 of 6027186 Nut)		—	—	—	—	—	1	1	1	1	1	—	2535 435
	RIVET, Arm Plate		2	2	2	2	2	—	—	—	—	—	—	6023 293
	ARM PACKAGE, Lt.	8	—	—	—	—	—	—	—	—	—	—	1	2808 621
2-10-10	BUMPER, Arm	70	2	2	2	2	2	—	—	—	—	—	—	2535 027
	All	71	2	2	2	2	2	—	—	—	—	—	—	= 2948 716
			—	—	—	—	—	2	2	2	2	2	—	2269 218
		8	—	—	—	—	—	—	—	—	—	—	2	2071 653
	NUT		2	2	2	2	2	2	2	2	2	2	—	9416 107
2-10-19	PLATE, Bumper Support	8	—	—	—	—	—	—	—	—	—	—	2	2071 640
2-10-55	ARM and BALL JOINT PACKAGE, Lower, w/o Disc Brakes	70	1	—	1	—	—	—	—	—	—	—	—	3420 160-1
	w/o Disc Brakes	71	1	—	1	—	—	—	—	—	—	—	—	2948 604-5
	w/o Disc Brakes		—	1	—	1	1	—	—	—	—	—	—	3420 156-7
	w/o Disc Brakes	70	—	—	—	—	—	1	1	1	1	1	—	3004 817-8
	w/o Disc Brakes	71	—	—	—	—	—	1	1	1	1	1	—	2948 614-5
	w/Disc Brakes	70	1	—	1	—	—	—	—	—	—	—	—	3420 162-3
	w/Disc Brakes	71	1	—	1	—	—	—	—	—	—	—	—	2948 606-7
	w/Disc Brakes		—	1	—	1	1	—	—	—	—	—	—	3420 156-7
	w/Disc Brakes	70	—	—	—	—	—	1	1	1	1	1	—	3004 817-8
	w/Disc Brakes	71	—	—	—	—	—	1	1	1	1	1	—	2948 614-5
	All	8	—	—	—	—	—	—	—	—	—	—	2	2808 395
2-10-57	BUSHING and RETAINER PACKAGE		2	—	2	—	—	—	—	—	—	—	—	2084 918
			—	2	—	2	2	—	—	—	—	—	2	2808 664
			—	—	—	—	—	2	2	2	2	2	—	2808 665
2-10-58	STRUT, Arm		2	—	2	—	—	—	—	—	—	—	—	2071 417
			—	2	—	2	2	—	—	—	—	—	—	2462 585
			—	—	—	—	—	2	2	2	2	2	—	2269 245
		8	—	—	—	—	—	—	—	—	—	—	2	2535 755
	PIN		2	2	2	2	2	2	2	2	2	2	2	6027 381

CARLINES J - Challenger, B - Barracuda, V - Valiant, L - Dart, R - Belvedere - Satellite, W - Coronet - Charger, P - Plymouth, D - Dodge, C - Chrysler, Y - Imperial

AR Indicates use as required.

# Indicates parts not listed in any previous parts book.

Numerals in parentheses ( ) refer to notes.

★ Indicates change or addition.

Printed in U.S.A. January 1972

CODE	PART NAME	ENG. TYPE OR CU.IN.	V 1-2	B J 1-2	L 1-2	R 1-2	W 1-2	P 1-2	D 1-2	C 1	C 2	C 3	Y 1	PART NUMBER
2-10-0	**FRONT WHEEL LOWER CONTROL ARM Cont'd.**													
2-10-59	BUSHING, Arm Strut		2	—	2	—	—	—	—	—	—	—	—	2071 443
	Front		—	2	—	2	2	—	—	—	—	—	2	2462 740
	Rear		—	2	—	2	2	—	—	—	—	—	2	2462 741
	Front		—	—	—	—	—	2	2	2	2	2	—	2207 282
	Rear		—	—	—	—	—	2	2	2	2	2	—	2207 296
2-10-60	RETAINER, Arm Strut Bushing		4	—	4	—	—	—	—	—	—	—	—	2071211
			—	4	—	4	4	4	4	4	4	4	4	2207 322
2-10-61	SHAFT PACKAGE, Arm		2	—	2	—	—	—	—	—	—	—	—	2808 580
			—	2	—	2	2	—	—	—	—	—	—	2808 579
			—	—	—	—	—	2	2	2	2	2	—	2808 687
		8	—	—	—	—	—	—	—	—	—	—	2	2808 686
2-10-63	NUT, Strut Bushing		2	—	2	—	—	—	—	—	—	—	—	6024 657
	Arm Strut Bushing		—	2	—	2	2	2	2	2	2	2	2	6028 777
	Arm Strut		2	2	2	2	2	2	2	2	2	2	—	6024 803
	Arm Strut Bumper	8	—	—	—	—	—	—	—	—	—	—	4	6028 512
	BOLT, Arm Strut Bumper	8	—	—	—	—	—	—	—	—	—	—	4	6026 031
2-10-64	PLUG, Ball Joint, Lower		2	2	2	2	2	2	2	2	2	2	2	1858 115
2-10-65	SLEEVE, Strut Bushing		—	2	—	2	2	—	—	—	—	—	2	2535 463
			—	—	—	—	—	2	2	2	2	2	—	2535 464
2-10-66	SEAL, Ball Joint		2	2	2	2	2	—	—	—	—	—	—	2269 215
			—	—	—	—	—	2	2	2	2	2	—	2269 214
		8	—	—	—	—	—	—	—	—	—	—	2	2462 886
2-10-68	NUT, Ball Joint Stud	8	—	—	—	—	—	—	—	—	—	—	2	1671 405
2-10-72	SPACER, Arm Bumper	8	—	2	—	2	2	—	2	2	—	—	—	2071 727
2-10-74	WASHER, Arm Shaft		2	2	2	2	2	—	—	—	—	—	—	2071 470
	NUT, Arm Shaft		2	2	2	2	2	—	—	—	—	—	—	6028 484
	Arm Camber Shaft		—	—	—	—	—	2	2	2	2	2	2	6027 186
2-10-76	BUSHING, Arm Shaft		2	2	2	2	2	—	—	—	—	—	—	1858 024
			—	—	—	—	—	2	2	2	2	2	—	2269 189
		8	—	—	—	—	—	—	—	—	—	—	2	2071 506
2-14-0	**FRONT SUSPENSION TORSION PARTS**													
2-14-1	BOLT and SWIVEL PACKAGE, Anchor Adjusting		2	—	2	—	—	—	—	—	—	—	—	2275 469
	Std. 225, 318, 383 Eng.	70	—	2	—	2	2	—	—	—	—	—	—	2275 468
	H.D., or w/Sway Bar, 225, 318, 383 Eng.	70	—	2	—	2	2	—	—	—	—	—	—	2275 469
	Std., 340, and 383 Eng., w/4 bbl. Carb., 426, 440 Eng.	70 8	—	2	—	2	2	—	—	—	—	—	—	2275 469
	Std., R-M, W-M, Charger	70	—	—	—	2	2	—	—	—	—	—	—	2275 469
	Std., Charger, w/Reduced Rate Suspension	70 8	—	—	—	—	2	—	—	—	—	—	—	2275 468
	Police and Taxi	70	—	—	—	2	2	—	—	—	—	—	—	2275 469
	All	71	—	2	—	2	2	—	—	—	—	—	—	2275 468
	All		—	—	—	—	—	2	—	—	—	—	—	2525 086
		6	—	—	—	—	—	—	2	—	—	—	—	2525 086
	All	8	—	—	—	—	—	—	2	2	2	2	—	2525 087
	All	8	—	—	—	—	—	—	—	—	—	—	2	2808 417
	NOTE: The Anchor End of Torsion Bars or Springs, are stamped with the last 3 digits of the part number. Numbers ending with an even digit designate a Torsion Bar or Spring for the right side of the car, with an odd digit for the left side. Example 888-Right Side, 889-Left Side.													
	STANDARD													
2-14-3	BAR or SPRING	6	1	—	1	—	—	—	—	—	—	—	—	2535 888-9
	225 Eng., w/Air Cond.	6	1	—	1	—	—	—	—	—	—	—	—	2535 890-1
	318 Eng., w/o Air Cond.	8	1	—	1	—	—	—	—	—	—	—	—	2535 890-1
	318 Eng., w/Air Cond.	8	1	—	1	—	—	—	—	—	—	—	—	2535 892-3
	340 Eng.	8	1	—	1	—	—	—	—	—	—	—	—	2535 892-3
	All	6	—	1	—	—	—	—	—	—	—	—	—	1857 774-5
	318, 383 Eng., w/2 Bbl. Carb.	70 8	—	1	—	—	—	—	—	—	—	—	—	1857 776-7

CARLINES J - Challenger, B - Barracuda, V - Valiant, L - Dart, R - Belvedere - Satellite, W - Coronet - Charger, P - Plymouth, D - Dodge, C - Chrysler, Y - Imperial

AR Indicates use as required.

Numerals in parentheses ( ) refer to notes.

# Indicates parts not listed in any previous parts book.

★ Indicates change or addition.

Printed in U.S.A. January 1972

2-14-0 FRONT SUSPENSION TORSION PARTS Cont'd.

CODE	PART NAME		ENG. TYPE OR CU.IN.	V 1-2	B J 1-2	L 1-2	R 1-2	W 1-2	P 1-2	D 1-2	C 1	C 2	C 3	Y 1	PART NUMBER
2-14-3	BAR or SPRING Cont'd.														
	318 Eng.	71	8	—	1	—	—	—	—	—	—	—	—	—	1857 774-5
	383 Eng., w/2 Bbl. Carb.	71	8	—	1	—	—	—	—	—	—	—	—	—	1857 776-7
	340, 383 Eng., w/4 bbl. Carb.		8	—	1	—	—	—	—	—	—	—	—	—	1857 778-9
	426, 440 Eng.	70	8	—	1	—	—	—	—	—	—	—	—	—	1857 780-1
	426, 440 Eng.	71	8	—	1	—	—	—	—	—	—	—	—	—	1857 778-9
	Except Sta. Wgn.		6	—	—	—	1	1	—	—	—	—	—	—	1857 774-5
	Except Sta. Wgn., 318, 383 Eng.	70	8	—	—	—	1	1	—	—	—	—	—	—	1857 776-7
	Except Sta. Wgn., 318, 340, 383 Eng.	71		—	—	—	1	1	—	—	—	—	—	—	1857 776-7
	Sta. Wgn.			—	—	—	1	1	—	—	—	—	—	—	1857 774-5
	R-M, W-M		8	—	—	—	1	1	—	—	—	—	—	—	1857 778-9
	Charger, 318, 383 Eng., w/Reduced Rate Suspension		8	—	—	—	—	1	—	—	—	—	—	—	1857 776-7
	Charger, 225, 318, 383 Eng.			—	—	—	—	1	—	—	—	—	—	—	1857 778-9
	426, 440 Eng.	70	8	—	—	—	1	1	—	—	—	—	—	—	1857 780-1
	426, 440 Eng.	71	8	—	—	—	1	1	—	—	—	—	—	—	1857 778-9
	Police, 2D., 4D.		6	—	—	—	1	1	—	—	—	—	—	—	1857 778-9
	Police, 2D., 4D.		8	—	—	—	1	1	—	—	—	—	—	—	1857 780-1
	Police, Sta. Wgn.			—	—	—	1	1	—	—	—	—	—	—	1857 778-9
	Taxi			—	—	—	1	1	—	—	—	—	—	—	1857 778-9
	Except Sta. Wgn.	70	6	—	—	—	—	—	1	—	—	—	—	—	2269 576-7
	Except Sta. Wgn.	71	6	—	—	—	—	—	1	—	—	—	—	—	2269 574-5
	Except Sta. Wgn., 318, 440 Eng.	70	8	—	—	—	—	—	1	—	—	—	—	—	2269 578-9
	Except Sta. Wgn., 383 Eng.	70	8	—	—	—	—	—	1	—	—	—	—	—	2269 574-5
	Except Sta. Wgn., Except 440 Eng.	71		—	—	—	—	—	1	—	—	—	—	—	2269 574-5
	440 Eng.	71	8	—	—	—	—	—	1	—	—	—	—	—	2269 578-9
	Sta. Wgn., All			—	—	—	—	—	1	—	—	—	—	—	2269 574-5
	Police and Taxi			—	—	—	—	—	1	—	—	—	—	—	2269 578-9
	Except Sta. Wgn.		6	—	—	—	—	—	—	1	—	—	—	—	2269 574-5
	Taxi	71	6	—	—	—	—	—	—	1	—	—	—	—	2269 578-9
	w/o Air Cond., 318, 383 Eng.	70	8	—	—	—	—	—	—	1	—	—	—	—	2269 618-9
	w/o Air Cond., 318, 360, 383 Eng.	71	8	—	—	—	—	—	—	1	—	—	—	—	2269 618-9
	w/Air Cond., 318, 383, 440 Eng.	70	8	—	—	—	—	—	—	1	—	—	—	—	2269 620-1
	w/Air Cond., 360, 383 Eng.	71	8	—	—	—	—	—	—	1	—	—	—	—	2269 620-1
	Except Sta. Wgn., 440 Eng., w/o H/Perf.	70	8	—	—	—	—	—	—	1	—	—	—	—	2269 620-1
	Except Sta. Wgn., 440 Eng., w/o Air Cond.	71	8	—	—	—	—	—	—	1	—	—	—	—	2269 620-1
	Except Sta. Wgn., 440 Eng., w/Air Cond.	71	8	—	—	—	—	—	—	1	—	—	—	—	2269 622-3
	Except Sta. Wgn., 440 Eng., w/H/Perf.		8	—	—	—	—	—	—	1	—	—	—	—	2269 622-3
	Sta. Wgn.	70	8	—	—	—	—	—	—	1	—	—	—	—	2269 618-9
	Sta. Wgn., w/o Air Cond.	71		—	—	—	—	—	—	1	—	—	—	—	2269 618-9
	Sta. Wgn., w/Air Cond.	71		—	—	—	—	—	—	1	—	—	—	—	2269 620-1
	Police and Taxi		8	—	—	—	—	—	—	1	—	—	—	—	2269 622-3
	w/o Air Cond., 360, 383, 440 Eng.		8	—	—	—	—	—	—	—	1	1	1	—	2269 620-1
	w/Air Cond., 360, 383, 440 Eng.		8	—	—	—	—	—	—	—	1	1	1	—	2269 622-3
	w/H/Perf., 440 Eng.		8	—	—	—	—	—	—	—	1	1	1	—	2269 622-3
	All		8	—	—	—	—	—	—	—	—	—	—	1	= 2535 512-3
	HEAVY DUTY														
	All			1	—	1	—	—	—	—	—	—	—	—	2535 892-3
	Except 426, 440 Eng.			—	1	—	1	1	—	—	—	—	—	—	1857 778-9
	426, 440 Eng.		8	—	1	—	1	1	—	—	—	—	—	—	1857 780-1
	Extreme Duty			—	1	—	1	1	—	—	—	—	—	—	1857 780-1
	All			—	—	—	—	—	1	—	—	—	—	—	2269 578-9
	All		6	—	—	—	—	—	—	1	—	—	—	—	2269 578-9
	All		8	—	—	—	—	—	—	1	—	—	—	—	2269 622-3

CARLINES J - Challenger, B - Barracuda, V - Valiant, L - Dart, R - Belvedere - Satellite, W - Coronet - Charger, P - Plymouth, D - Dodge, C - Chrysler, Y - Imperial

AR Indicates use as required.

Numerals in parentheses ( ) refer to notes.

# Indicates parts not listed in any previous parts book.

★ Indicates change or addition.

Printed in U.S.A. January 1972

CODE	PART NAME	ENG. TYPE OR CU.IN.	V 1-2	B J 1-2	L 1-2	R 1-2	W 1-2	P 1-2	D 1-2	C 1	C 2	C 3	Y 1	PART NUMBER
2-14-0	**FRONT SUSPENSION TORSION PARTS Cont'd.**													
2-14-3	BAR or SPRING Cont'd.													
	All	8	—	—	—	—	—	—	—	1	1	1	—	2269 622-3
	All	8	—	—	—	—	—	—	—	—	—	—	1	2535 516-7
2-14-13	SEAL, Rear End Anchor		2	2	2	2	2	—	—	—	—	—	—	2071 173
			—	—	—	—	—	2	2	2	2	2	—	2269 250
		8	—	—	—	—	—	—	—	—	—	—	2	2269 260
2-14-14	CLAMP, Rear End Anchor	8	—	—	—	—	—	—	—	—	—	—	2	2269 234
2-14-15	LOCK, Rear End Anchor		2	2	2	2	2	—	—	—	—	—	—	1671 446
			—	—	—	—	—	2	2	2	2	2	2	1639 171

NOTES

CARLINES J - Challenger, B - Barracuda, V - Valiant, L - Dart, R - Belvedere - Satellite, W - Coronet - Charger, P - Plymouth, D - Dodge, C - Chrysler, Y - Imperial

AR Indicates use as required.

Numerals in parentheses ( ) refer to notes.

# Indicates parts not listed in any previous parts book.

★ Indicates change or addition.

Printed in U.S.A. January 1972

NOTES

GROUP 3 - AXLE - REAR

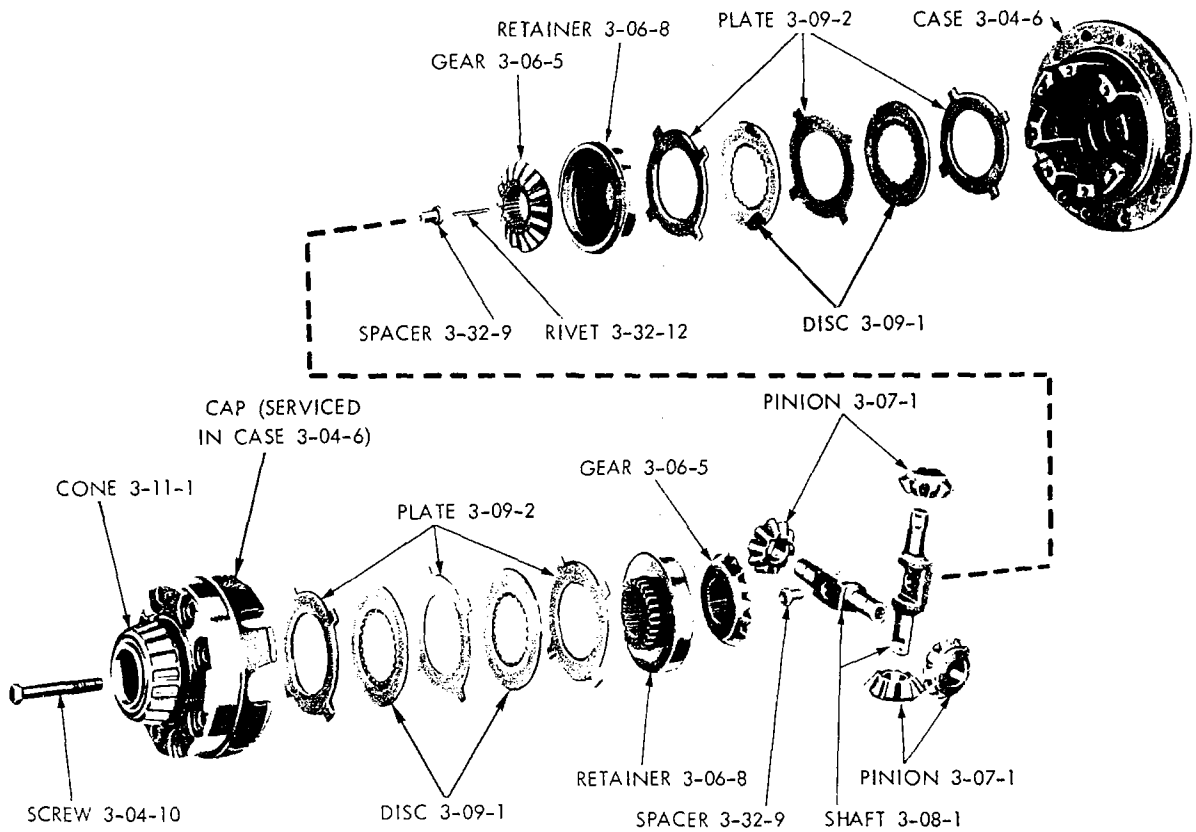

NOTES

19a2930

"SURE-GRIP" REAR AXLE DIFFERENTIAL

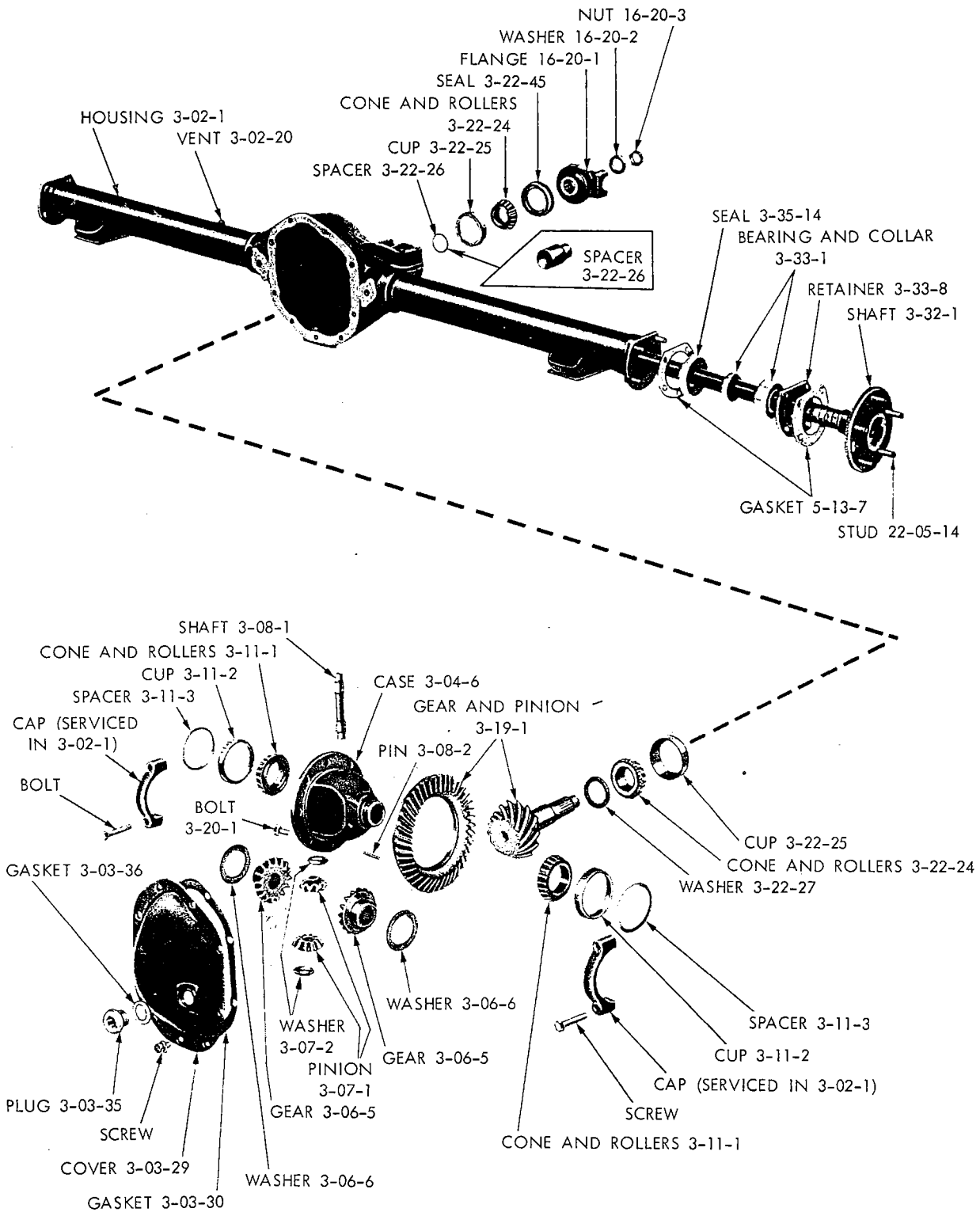

PARTS INDICATED BY NAME ONLY - ORDER BY DESCRIPTION

19a3567**A**

REAR AXLE DIFFERENTIAL AND CARRIER - 7 1/4" DIA. - VALIANT, DART, BELVEDERE, CORONET, CHALLENGER AND BARRACUDA

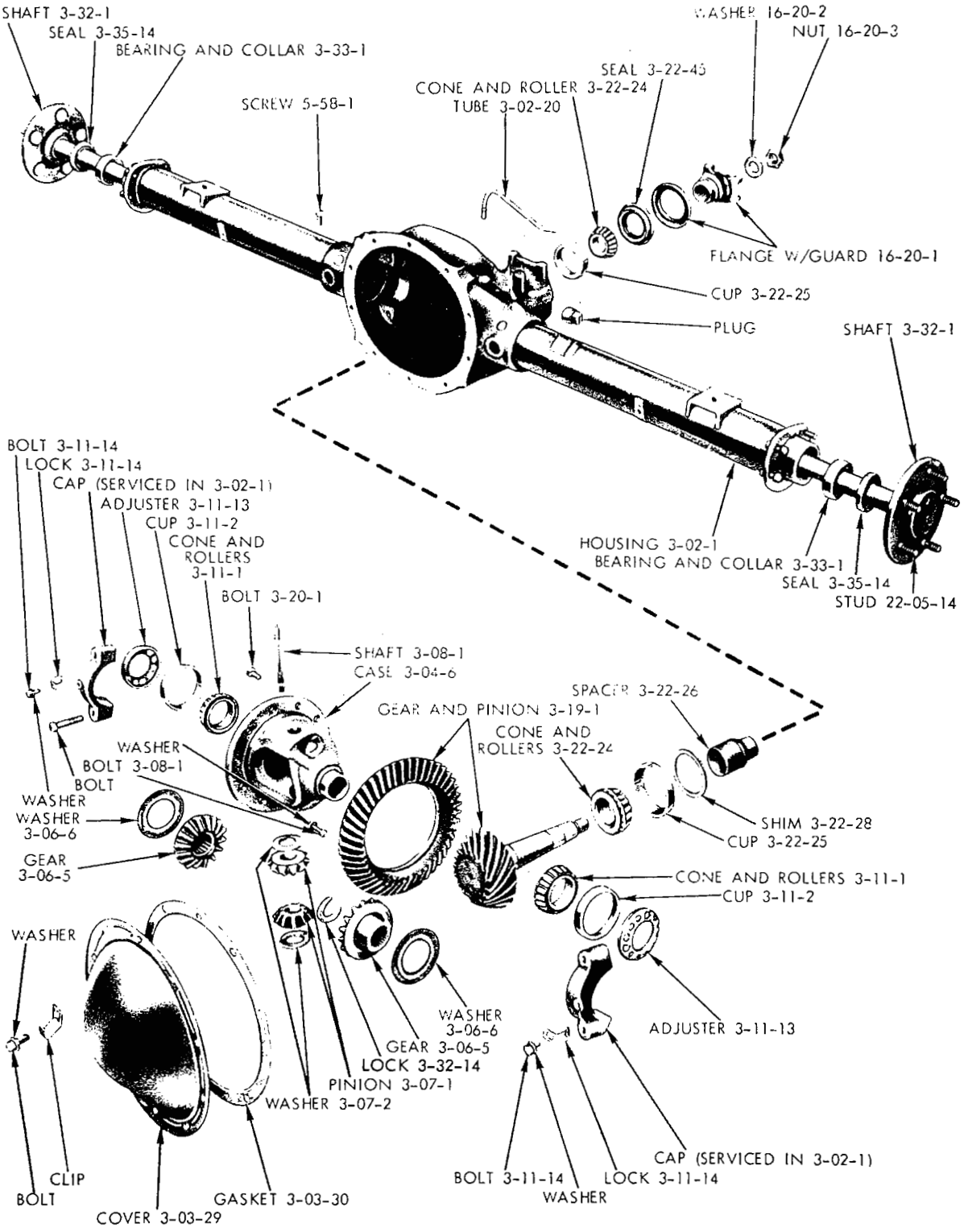

PARTS INDICATED BY NAME ONLY - ORDER BY DESCRIPTION

19a2718B

REAR AXLE DIFFERENTIAL AND CARRIER - 8 1/4" DIA. GEAR TYPE - BELVEDERE, SATELLITE, CORONET, CHARGER, PLYMOUTH AND DODGE

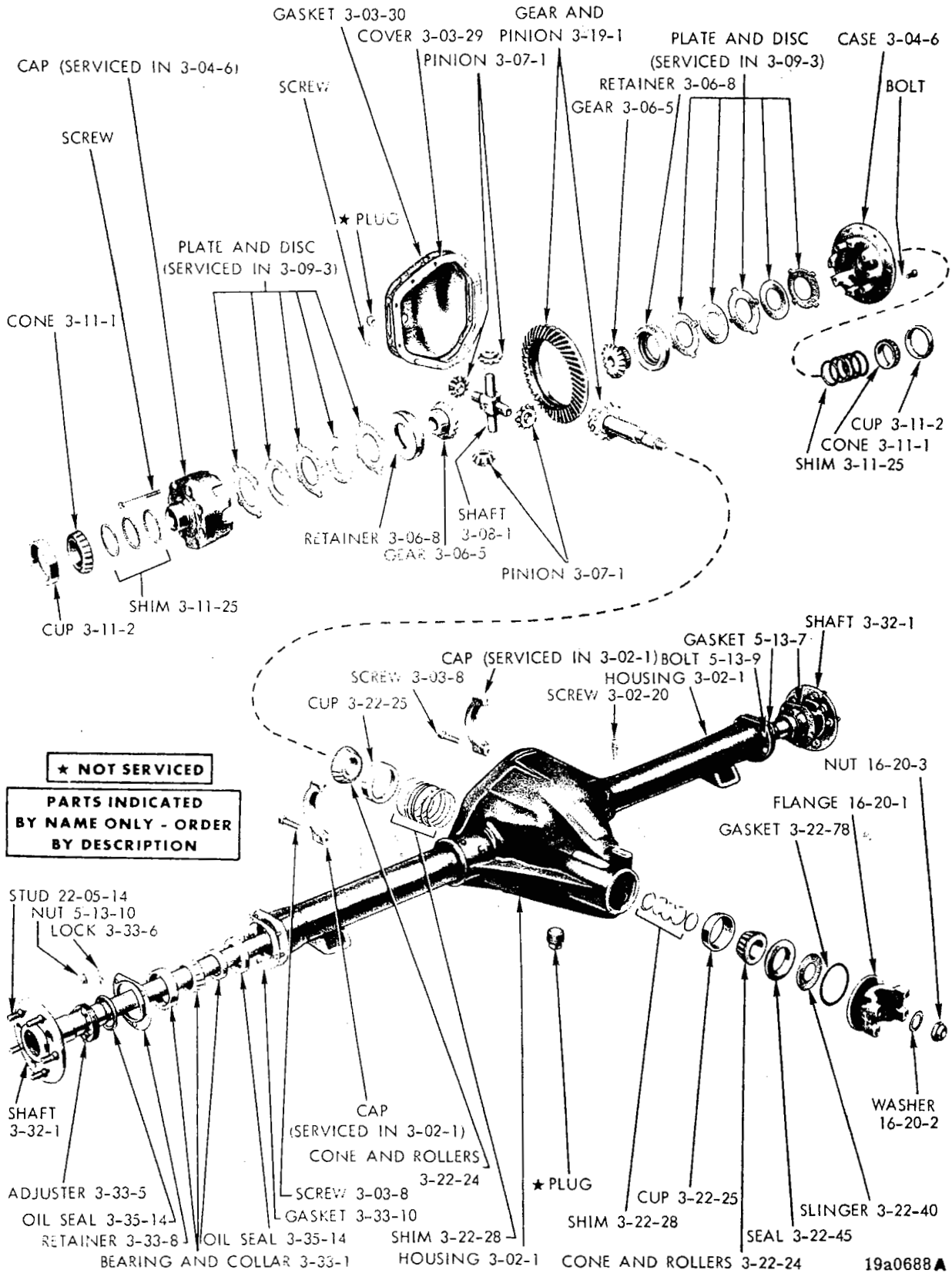

REAR AXLE DIFFERENTIAL AND CARRIER - WITH 9 3/4" DIA. GEAR - WITH 4 SPEED TRANSMISSION - WITH 426 AND 440 ENGINE - BARRACUDA, CHALLENGER, ROAD RUNNER, GTX, SUPER BEE, CHARGER AND CORONET (1970)

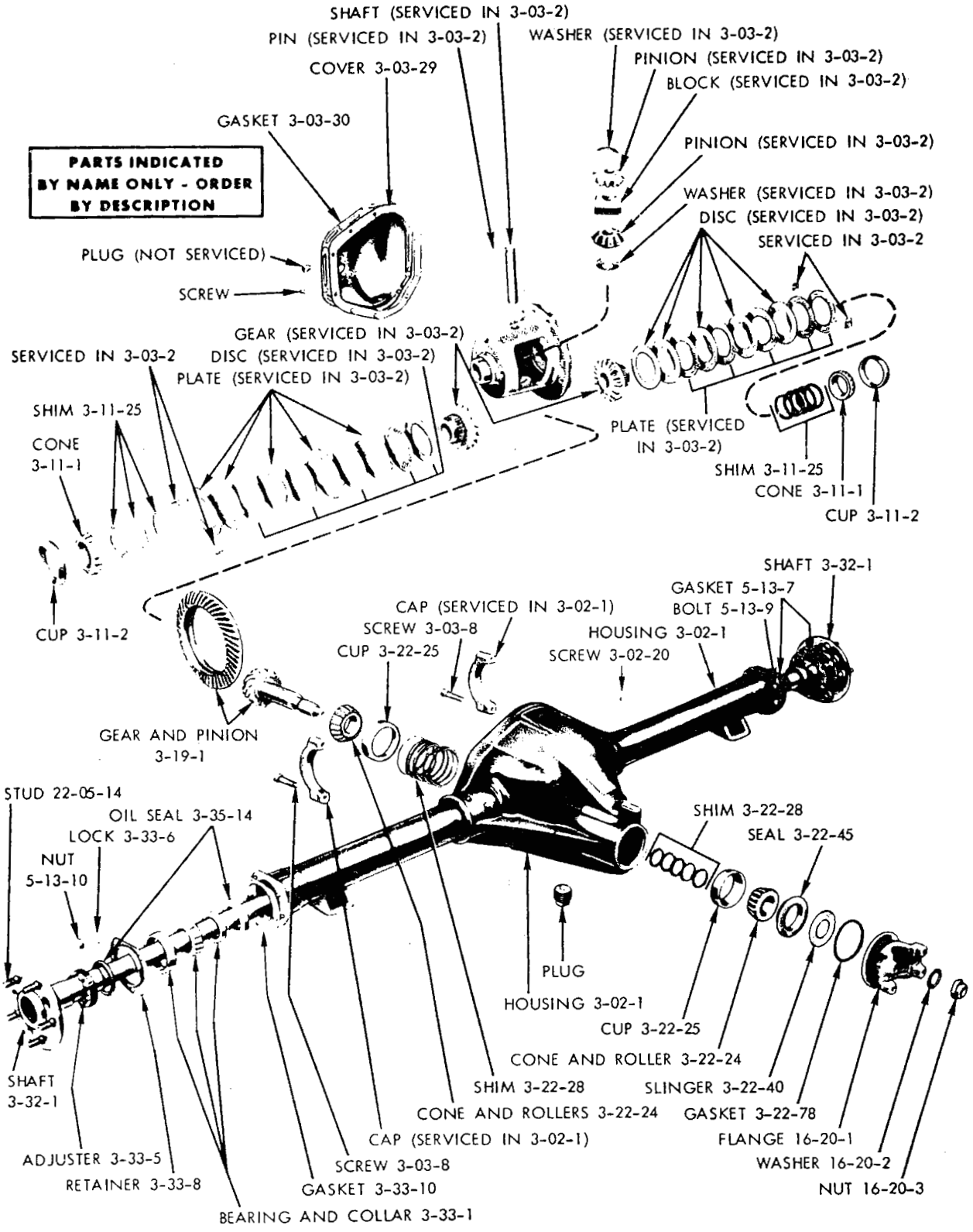

19a3707

REAR AXLE DIFFERENTIAL AND CARRIER - WITH 9 3/4" DIA. GEAR - WITH 4 SPEED MANUAL TRANSMISSION - WITH 426 AND 440 ENGINES - BARRACUDA, CHALLENGER, ROAD RUNNER, GTX AND CHARGER - WITH SURE-GRIP (1971)

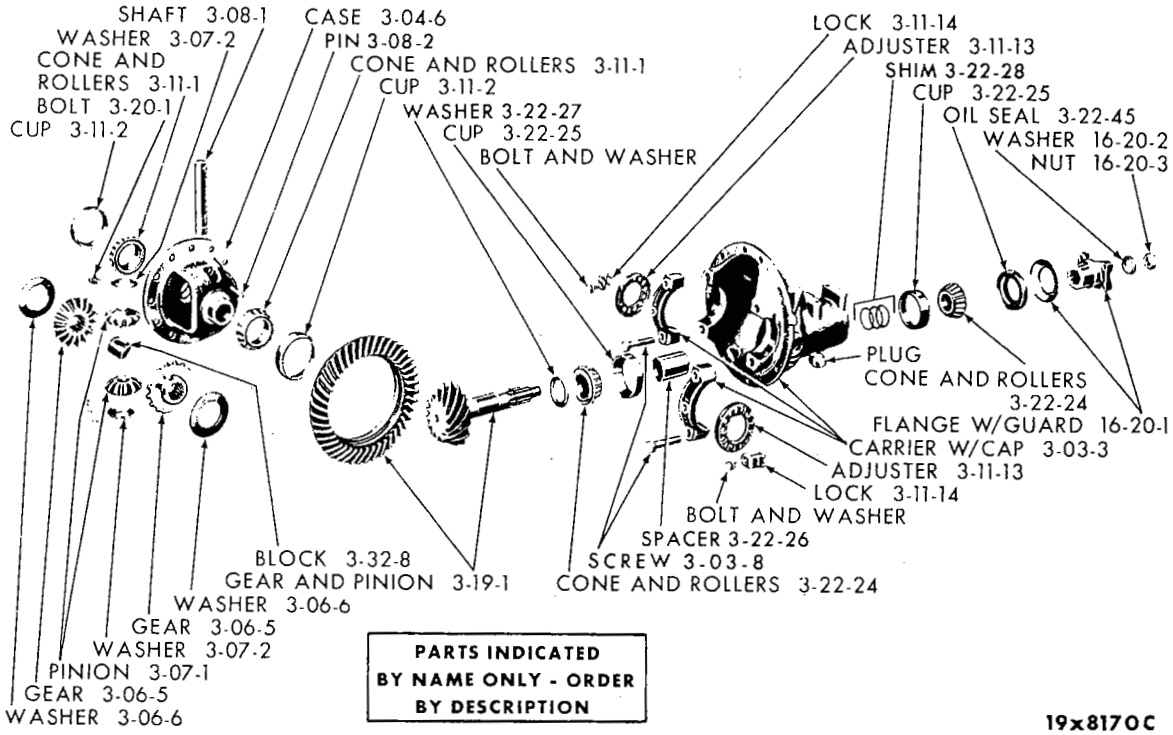

REAR AXLE DIFFERENTIAL AND CARRIER (WITHOUT SURE-GRIP) - 8 3/4" DIA. GEAR TYPE

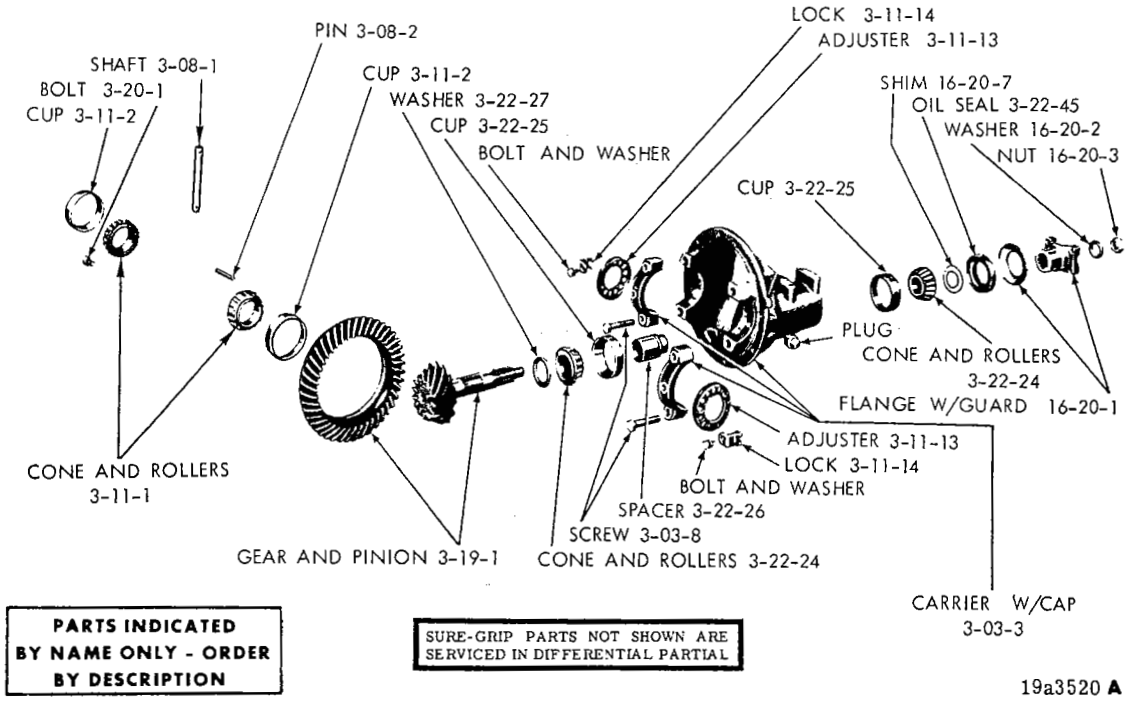

REAR AXLE DIFFERENTIAL AND CARRIER (WITH SURE-GRIP) - 8 3/4" DIA. GEAR TYPE

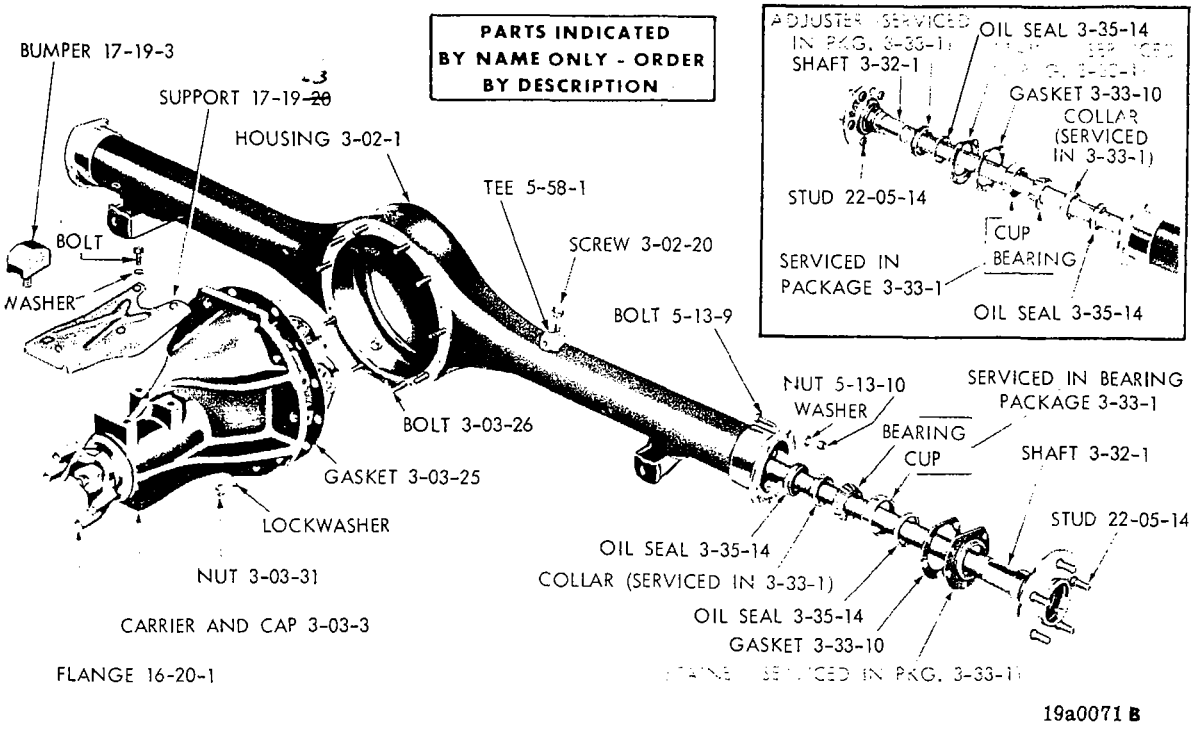

REAR AXLE HOUSING AND CARRIER - 8 3/4" DIA. GEAR TYPE

NOTES

NOTES

3-02-0 REAR AXLE HOUSING

NOTE: The 7 1/4" diameter gear axle has a 1 3/8" diameter stem and is embossed with carrier part number 2070 062 or 2070 051 below the yoke. It has a separate cover and uses (9) nine cover screws.

NOTE: The 8 3/4" diameter gear axles with a 1 3/8" diameter pinion shaft has Carrier part number 1820657 or 2070741 embossed 2 inches below the yoke. It has a banjo type housing with welded on cover. It has (10) ten nuts that fasten the carrier assembly to the housing.

NOTE: The 1970 B,J,P,D,C and Y models with 8 3/4" diameter gear axle only used a 1 7/8" diameter pinion shaft. Carrier part number 2881 488 or 2881 489 is embossed 2 inches below the yoke.

NOTE: The 1970 R and W models with 8 3/4" diameter gear axle used a 1 3/4" and 1 7/8" diameter pinion shaft. Carrier part number 2881 488 or 2881 489 is embossed 2 inches below the yoke.

NOTE: The 1971 8 3/4" diameter gear axle with 1 7/8" diameter pinion shaft has carrier part number 2881 488 or 2881 489 embossed 2 inches below the yoke.

NOTE: The 1971 model 8 3/4" diameter gear axles only used 1 3/8" and 1 7/8" diameter stems.

NOTE: The 8 1/4" diameter gear axle has a 15/8" diameter pinion shaft and carrier part number 2852 905 embossed on it. It has a separate cover and uses (10) ten cover screws.

NOTE: Differential and Carriers have a metal tag bolted on them giving the ratio of the rear axle.

NOTE: Some 1969 8 1/4" dia. gear axles were used on the 1970 R and W models. See the 1969 book for parts.

NOTE: Some 1969 8 1/4" dia. gear axles were used on the 1970 R and W models. See the 1969 book for parts.

CODE	PART NAME	ENG. TYPE OR CU.IN.	V 1-2	B J 1-2	L 1-2	R 1-2	W 1-2	P 1-2	D 1-2	C 1	C 2	C 3	Y 1	PART NUMBER
3-02-1	HOUSING, 7 1/4" dia. Gear, 53 13/64" lgh.		1	—	1	—	—	—	—	—	—	—	—	3432 647
	w/8 3/4" dia. Gear, One Piece Tube Type, 52 37/64" lgh.		1	—	1	—	—	—	—	—	—	—	—	3432 295
	w/8 3/4" dia. Gear, 56 7/16" lgh.		—	1	—	—	—	—	—	—	—	—	—	2852 882
	w/9 3/4" dia. Gear	8	—	1	—	—	—	—	—	—	—	—	—	3432 212
	w/7 1/4" dia. Gear, 57 7/64" lgh.	70	—	1	—	—	—	—	—	—	—	—	—	3507 234
	w/7 1/4" dia. Gear	71	—	1	—	—	—	—	—	—	—	—	—	3507 463
	w/7 1/4" dia. Gear, Except Sta. Wgn. 54 9/32" lgh.	6	—	—	—	1	1	—	—	—	—	—	—	3507 246
	w/7 1/4" dia., except Sta. Wgn., w/3507 246 Housing and 2 of 2852 948 Outer Seals	6	—	—	—	1	1	—	—	—	—	—	—	# 3579 289
	w/7 1/4" dia. Gear, except Sta. Wgn.	71 6	—	—	—	1	1	—	—	—	—	—	—	3507 500
	w/8 1/4" dia. Gear, w/2.45, 2.71 and 3.21 to 1 Ratio 59 5/32" Lgh.	70	—	—	—	1	1	—	—	—	—	—	—	2881 055
	w/8 1/4" dia., w/2.45, 2.71, 2.94 and 3.21 to 1 ratio, used with Small Shaft Bearing, 62" Track	71	—	—	—	1	1	—	—	—	—	—	—	3507 527
	w/8 1/4" dia. Gear, w/2.45, 2.71 and 3.21 to 1 ratio, Used with Large Shaft Bearings	71	—	—	—	1	1	—	—	—	—	—	—	# 3507 168
	w/8 3/4" dia. Gear, One Piece Tube Type, 54 29/32" lgh.	70	—	—	—	1	1	—	—	—	—	—	—	2852 838
	w/8 3/4" dia. Gear Axle, One Piece Tube Type, except Sta. Wgn., 57 47/64" Lgh.	71	—	—	—	1	1	—	—	—	—	—	—	3507 502
	w/8 3/4" dia. Gear, Sta. Wgn., 59 1/8" Lgh.	71	—	—	—	1	1	—	—	—	—	—	—	3507 501
	w/9 3/4" dia. Gear	70 8	—	—	—	1	1	—	—	—	—	—	—	3432 555
	w/9 3/4" dia. Gear	71 8	—	—	—	1	1	—	—	—	—	—	—	3507 530
	w/8 1/4" dia. Gear, w/2.71 and 3.21 to 1 Ratio, 62" Track	8	—	—	—	—	—	1	—	—	—	—	—	3432 843
	w/8 3/4" dia. Gear, P, C1, Sta. Wgn., D, One Piece Tube Type, 59 1/8" lgh., w/9/16" Center Hole in Seat		—	—	—	—	—	1	1	1	—	—	—	3432 298
	w/8 3/4" dia. Gear, P, C1, Sta. Wgn., D, One Piece Tube Type, w/1 5/8" Center Hole In Seat	71	—	—	—	—	—	1	1	1	—	—	—	3507 658
	w/8 3/4" Dia. Gear, Except Sta. Wgn., One Piece Tube Type, 57 3/4"													

CARLINES: J - Challenger, B - Barracuda, V - Valiant, L - Dart, R - Belvedere - Satellite, W - Coronet - Charger, P - Plymouth, D - Dodge, C - Chrysler, Y - Imperial

AR Indicates use as required.

# Indicates parts not listed in any previous parts book.

Numerals in parentheses ( ) refer to notes.

★ Indicates change or addition.

Printed in U.S.A. January 1972

CODE	PART NAME	ENG. TYPE OR CU.IN.	V 1-2	B J 1-2	L 1-2	R 1-2	W 1-2	P 1-2	D 1-2	C 1	C 2	C 3	Y 1	PART NUMBER
3-02-0	**REAR AXLE HOUSING Cont'd.**													
3-02-1	HOUSING Cont'd.													
	Lgh. w/8 3/4" dia. Gear, except Sta. Wgn., One Piece Tube Type, 57 3/4" lgh.	70	—	—	—	—	—	1	—	1	1	1	1	3432 819
		71	—	—	—	—	—	1	—	1	1	1	—	3432 819
	One Piece Tube Type	71	—	—	—	—	—	—	—	—	—	—	1	3507 563
	w/8 1/4" dia. Gear, w/2.71 to 1 ratio, 63 13/32" Track	71	—	—	—	—	—	—	1	—	—	—	—	3507 528
	w/8 1/4" dia. Gear, w/3.21 to 1 ratio, 62" Track	71	—	—	—	—	—	—	1	—	—	—	—	3432 843
	NUT, Hsg. to carrier bolt, w/7 1/4" and 8 3/4" dia. Gear	70	10	10	10	10	10	10	10	10	10	10	10	6027 412
	w/8 3/4" dia. Gear	71	10	10	10	10	10	10	10	10	10	10	10	6028 915
3-02-20	SCREW, Rr. Axle Brake Tube Tee Vent		1	1	1	1	1	1	1	1	1	1	1	2404 119
	VENT, Rr. Axle Tube		—	—	—	1	1	1	1	—	—	—	—	2881 187

NOTES

CARLINES J - Challenger, B - Barracuda, V - Valiant, L - Dart, R - Belvedere - Satellite, W - Coronet - Charger, P - Plymouth, D - Dodge, C - Chrysler, Y - Imperial

AR Indicates use as required.

Numerals in parentheses ( ) refer to notes.

# Indicates parts not listed in any previous parts book.

★ Indicates change or addition.

Printed in U.S.A.
January 1972

3-03-0 REAR AXLE DIFFERENTIAL AND CARRIER

NOTE: Differential with Carrier and Tubes and Differential, with Carrier are shown below in Chart Form by Ratio. The chart also includes other information such as Gear size and Stem size.

NOTE: The Differential with Carrier and Housing does not include axle shafts.

NOTE: Component parts for Cone and Spring type Carriers are not serviced separately. For replacement refer to Code 3-03-2 Differential, Partial.

NOTE: Cone and Spring type Carriers can be identified by orange paint around the filler plug. Also, by removing the filler plug and looking inside.

3-03-1 DIFFERENTIAL, w/CARRIER AND HOUSING

RATIO	GEAR DIA.	STEM DIA.	WITH OR W/O SURE GRIP	MODEL	REMARKS	SERVICE NO.
2.76 To 1	7 1/4"	1 3/8"	w/o	V, L	See Note 5	3432 440
2.76 to 1	7 1/4"	1 3/8"	w/o	V1, L1	71 See Note 6	= 3507 725
2.76 To 1	7 1/4"	1 3/8"	w/o	B, J	70	3507 223
2.76 to 1	7 1/4"	1 3/8"	w/o	B, J	71 UP TO approx. June 1971, See Note 5	3507 516
2.76 to 1	7 1/4"	1 3/8"	w/o	B, J	71 AFTER approx. June 1971, See Note 6	= 3507 721
2.76 To 1	7 1/4"	1 3/8"	With	V1, L1	See Note 5	3432 448
2.76 to 1	7 1/4"	1 3/8"	with	V1, L1	71 See Note 6	= 3507 726
2.93 To 1	7 1/4"	1 3/8"	w/o	R1, W1	70	3507 221
2.93 to 1	7 1/4"	1 3/8"	w/o	R1, W1	71	3507 519
3.23 to 1	7 1/4"	1 3/8"	w/o	V1, L1	See Note 5	3432 441
3.23 to 1	7 1/4"	1 3/8"	w/o	V1, L1	71 See Note 6	= 3507 727
3.23 To 1	7 1/4"	1 3/8"	w/o	R1, W1	70	3507 222
3.23 to 1	7 1/4"	1 3/8"	w/o	R1, W1	71	3507 520
3.23 To 1	7 1/4"	1 3/8"	w/o	B1, J1	70	3507 224
3.23 to 1	7 1/4"	1 3/8"	w/o	B,J	71	3507 517
3.23 To 1	7 1/4"	1 3/8"	With	B1, J1	70	3507 225
3.55 To 1	7 1/4"	1 3/8"	w/o	V1, L1	See Note 5	3432 443
3.55 to 1	7 1/4"	1 3/8"	w/o	V1, L1	71 See Note 6	= 3507 728
3.91 To 1	7 1/4"	1 3/8"	w/o	V1, L1	70	3432 442
2.45 To 1	8 1/4"	1 5/8"	w/o	R2, W2	70	3432 613
2.45 to 1	8 1/4"	1 5/8"	w/o	R2, W2	71 See Note 3	3507 521
2.45 to 1	8 1/4"	1 5/8"	w/o	R2, W2	71 See Note 4	= 3507 169
2.71 To 1	8 1/4"	1 5/8"	w/o	R2, W2	70	3432 614
2.71 to 1	8 1/4"	1 5/8"	w/o	R2, W2	71 See Note 3	3507 522
2.71 to 1	8 1/4"	1 5/8"	w/o	R2, W2	71 See Note 4	= 3507 170
2.71 To 1	8 1/4"	1 5/8"	w/o	P2		3432 842
2.71 to 1	8 1/4"	1 5/8"	w/o	D2	71	3507 568
3.21 to 1	8 1/4"	1 5/8"	w/o	R, W	71 See Note 3	3507 524
3.21 to 1	8 1/4"	1 5/8"	w/o	R2, W2	71 See Note 4	= 3507 171
3.21 to 1	8 1/4"	1 5/8"	w/o	D1, P		3507 390
3.54 To 1	9 3/4"	——	With	B2, J2	70	3432 213
3.54 To 1	9 3/4"	——	With	B2, J2	71	3507 550
3.54 To 1	9 3/4"	——	With	R2, W2	70	3432 556
3.54 To 1	9 3/4"	——	With	R2, W2	71	3507 552
4.10 To 1	9 3/4"	——	With	B2, J2	70	3432 214
4.10 To 1	9 3/4"	——	With	R2, W2	70	3432 557
4.10 To 1	9 3/4"	——	With	R,W	71	3507 553
	DIFFERENTIAL w/CARRIER, w/o HOUSING					
2.76 To 1	8 3/4"	——	w/o	B2, J2, R, W, P2, D2, C1	70 See Note 1	2881 375
2.76 To 1	8 3/4"	——	With	R, W, P2, D2, C	70 See Note 1	2881 379
2.94 To 1	8 3/4"	——	With	R, W, Y	70 See Note 1	2881 494
2.94 To 1	8 3/4"	——	w/o	R, W, P, D, Y	70 See Note 1	2881 492
2.94 to 1	8 3/4"	1 3/8"	w/o	R,W,P,D	71 See Note 1	2881 372
3.23 To 1	8 3/4"	With	V, L,	B2, J2, R, W, P, D C	70 See Note 1	2881 382
3.23 To 1	8 3/4"	——	w/o	V, L, B2, J2, R, W, P, D, C	70 See Note 1	2881 381
3.23 to 1	8 3/4"	1 3/8"	w/o	V, L, B2, J2, R,		

CARLINES J - Challenger, B - Barracuda, V - Valiant, L - Dart, R - Belvedere - Satallite, W - Coronet - Charger, P - Plymouth, D - Dodge, C - Chrysler, Y - Imperial

AR Indicates use as required.

\# Indicates parts not listed in any previous parts book.

Numerals in parentheses ( ) refer to notes.

★ Indicates change or addition.

Printed in U.S.A. January 1972

3-03-0 REAR AXLE DIFFERENTIAL AND CARRIER Cont'd.

3-03-1 DIFFERENTIAL, w/CARRIER Cont'd.

RATIO	GEAR DIA.	STEM DIA.	WITH OR W/O SURE GRIP	MODEL	REMARKS	SERVICE NO.
———	——	——	———	W, P2, D2	71 See Note 1	2881 381
3.55 To 1	8 3/4"	1 3/8"	w/o	R, W, P, D	70 See Note 1	2881 304
3.55 To 1	8 3/4"	1 7/8"	With	V2, L2, B2, J2, R2,		
———	——	——	———	W2	70 See Note 1	2931 860
3.91 To 1	8 3/4"	1 3/8"	w/o	R1, W1	70 See Note 1	2931 811
3.91 To 1	8 3/4"	1 7/8"	With	V2, L2, B2, J2, R2,		
———	——	——	———	W2	70 See Note 1	3432 219
2.76 To 1	8 3/4"	1 7/8"	w/o	V, L, B2, J2, R, W,		
———	——	——	———	P2, D2, C	See Note 2	3507 428
2.76 To 1	8 3/4"	1 7/8"	With	P2, D2, C	70 See Note 2	3507 446
2.76 To 1	8 3/4"	1 7/8"	With	P2, D, C	71 See Note 2	3507 446
2.94 to 1	8 3/4"	1 7/8"	With	R, W, Y	See Note 2	3507 441
2.94 to 1	8 3/4"	1 7/8"	w/o	R, W, P, D, Y	70 See Note 2	3507 423
2.94 to 1	8 3/4"	1 7/8"	w/o	R, W, P, D, Y	71 See Note 2	3507 423
3.23 To 1	8 3/4"	1 7/8"	With	V, L, B2, J2,		
———	——	——	———	R, W, P, C	70 See Note 2	3507 448
3.23 to 1	8 3/4"	1 7/8"	With	V, L, B, J, R, W, Y	71 See Note 2	3507 448
3.23 To 1	8 3/4"	1 7/8"	w/o	V, L, B2, J2,		
———	——	——	———	R, W, P, D, C	70 See Note 2	3507 429
3.23 To 1	8 3/4"	1 7/8"	w/o	V, L, B, J, R, W,		
———	——	——	———	P, D2, C, Y	71 See Note 2	3507 429
3.55 To 1	8 3/4"	1 3/8"	w/o	R, W, P, D	See Note 2	3507 404
3.55 To 1	8 3/4"	1 7/8"	With	V2, L2, B2, J2,		
———	——	——	———	R2, W2	See Note 2	3507 449
3.91 To 1	8 3/4"	1 3/8"	w/o	R1, W1	70 See Note 2	3507 405
3.91 To 1	8 3/4"	1 7/8"	With	V2, L2, B2, J2,		
———	——	——	———	R2, W2	70 See Note 2	3507 450
3.91 To 1	8 3/4"	1 7/8"	With	V2, L2, B, J, R2, W2	71 See Note 2	3507 450

NOTE: 1 Used with 10 Tooth Pinion Spline with 1 1/8" Diameter Nut
NOTE: 2 Used with 29 Tooth Pinion Spline with 1 1/4" Diameter Nut
NOTE: 3 Used with Small Shaft Bearings
NOTE: 4 Used with Large Shaft Bearings

NOTES

CARLINES J - Challenger B - Barracuda V - Valiant L - Dart R - Belvedere - Satallite W - Coronet - Charger P - Plymouth D - Dodge C - Chrysler Y - Imperial

AR Indicates use as required.
# Indicates parts not listed in any previous parts book.
Numerals in parentheses ( ) refer to notes.
★ Indicates change or addition.

Printed in U.S.A.
January 1972

3-03-0 REAR AXLE DIFFERENTIAL AND CARRIER Cont'd.

CODE	PART NAME		ENG. TYPE OR CU.IN.	V 1-2	B J 1-2	L 1-2	R 1-2	W 1-2	P 1-2	D 1-2	C 1	C 2	C 3	Y 1	PART NUMBER
	NOTE: 5 without Collapsible Spacer														
	NOTE: 6 with Collapsible Spacer														
3-03-2	DIFFERENTIAL, Partial, w/7 1/4" dia. Gear. w/Sure-Grip, w/o Gear and Pinion Set, w/1 5/8" O.D. Hubs, w/Sure-Grip	70	6	1	1	1	—	—	—	—	—	—	—	—	2881 342
		71	6	1	—	1	—	—	—	—	—	—	—	—	2881 342
	w/1 25/32" O.D. Hubs, w/Sure-Grip	70	6	1	1	1	—	—	—	—	—	—	—	—	3432 437
	w/8 3/4" dia. Gear, w/Sure Grip, w/o Gear and Pinion set B2, J2, Cone and Spring Type Clutch	70		1	1	1	1	1	1	1	1	1	1	—	2881 343
	B2, J2	71		1	1	1	1	1	1	1	1	1	1	1	2881 343
	w/9 3/4" dia. Gear, w/Sure-Grip, w/0 Gear and Pinion Set	71		—	1	—	1	1	—	—	—	—	—	—	3507 531
3-03-3	CARRIER, w/CAPS, w/8 3/4" dia. Gear, 1 3/8" dia. Stem	70		1	—	1	1	1	1	1	—	—	—	—	1820 698
	w/8 3/4" dia. Gear, 1 3/8" dia. Stem	71		1	1	1	1	1	1	1	1	—	—	—	1820 698
	w/8 3/4" dia. Gear, 1 3/8" and 1 7/8" dia. Stem, B2, J2	70		—	1	—	—	—	—	—	—	—	—	—	2881 098
	w/8 3/4" dia. Gear, 1 3/4" and 1 7/8" dia. Stem,	70		—	—	—	1	1	1	1	1	1	1	1	2881 098
	w/8 3/4" dia. Gear, 1 7/8" dia. Stem	71		—	1	1	1	1	1	1	1	1	1	1	2881 098
	w/8 3/4" dia. Gear, 1 3/4" dia. Stem, Canada	70		—	—	—	—	—	1	1	—	—	—	—	1634 984
3-03-8	SCREW, Differential Brg., Cap, w/7 1/4" dia. Gear	70		4	4	4	4	4	—	—	—	—	—	—	9419 882
	Phosphate Coated, 3/8"-16x2	71		4	—	4	—	—	—	—	—	—	—	—	9419 882
	3/8" - 16 x 2"	71		4	—	4	—	—	—	—	—	—	—	—	= 3507 572
	w/8 3/4" dia. Gear, B2, J2			4	4	4	4	4	4	4	4	4	4	4	314 948
	B2, J2, 1/2 - 13 x 2 39/64" lgh.			4	4	4	4	4	4	4	4	4	4	4	3432 695
	w/9 3/4" dia. Gear	70		—	—	—	4	4	—	—	—	—	—	—	181 170
		71		4	—	4	4	—	—	—	—	—	—	—	181 170
3-03-25	GASKET, Carrier, w/8 3/4" dia. Gear, B2, J2			1	1	1	1	1	1	1	1	1	1	1	1673 367
3-03-26	BOLT, Hsg. to Carrier, w/8 3/4" dia. Gear, B2 J2			10	10	10	10	10	10	10	10	10	10	10	1115 927
3-03-29	COVER, Carrier, w/7 1/4" dia. Gear, R1, W1, except Sta. Wgn.			1	1	1	1	1	—	—	—	—	—	—	2070 119
	w/8 1/4" dia. Gear, 1 5/8" dia. Stem, R, W, w/2.71, 2.45 and 3.21 to 1 ratio, P2, w/2.71 and 3.21 to 1 ratio	70		—	—	—	1	1	1	—	—	—	—	—	2852 921
	w/8 1/4" dia. Gear, 1 5/8" dia. Stem, R, W, w/2.45, 2.71, 2.94 and 3.21 to 1 ratio, P, D, w/2.71 and 3.21 to 1 ratio	71		—	—	—	1	1	1	1	—	—	—	—	2852 921
	COVER, w/CLIPS, w/9 3/4" dia. Gear, w/426 and 440 Engines		8	—	1	—	1	1	—	—	—	—	—	—	3432 299
3-03-30	GASKET, Carrier Cover, w/7 1/4" dia. Gear, R1, W1, except Sta. Wgn.			1	1	1	1	1	—	—	—	—	—	—	2070 120
	w/9 3/4" dia. Gear, w/426 and 440 Engines		8	—	1	—	1	1	—	—	—	—	—	—	2515 343
	w/8 1/4" dia. Gear, 1 5/8" dia. Stem, R, W, w/2.45, 2.71 and 3.21 to 1 ratio, P2, w/2.71 and 3.21 to 1 ratio	70		—	—	—	1	1	1	—	—	—	—	—	2852 922

CODE	PART NAME	ENG. TYPE OR CU.IN.		V 1-2	B J 1-2	L 1-2	R 1-2	W 1-2	P 1-2	D 1-2	C 1	C 2	C 3	Y 1	PART NUMBER
3-03-0	**REAR AXLE DIFFERENTIAL AND CARRIER Cont'd.**														
3-03-30	GASKET Cont'd.														
	w/8 1/4" dia. Gear, R, W, w/2.45, 2.71, 2.94 and 3.21 to 1 ratio, P, D, w/2.71 and 3.21 to 1 ratio	71		—	—	—	1	1	1	1	—	—	—	—	2852 922
3-03-31	NUT, Hsg. to Carrier Bolt, w/8 3/4" dia. Gear	70		10	10	10	10	10	10	10	10	10	10	10	6027 412
		71		10	10	10	10	10	10	10	10	10	10	10	6028 915
3-03-35	PLUG, Carrier Cover Filler, w/7 1/4" Dia. Gear, R1, W1, except Wgn.			1	1	1	1	1	—	—	—	—	—	—	1392 371
	w/8 1/4" dia. Gear	70	8	—	—	—	1	1	1	—	—	—	—	—	1392 371
3-03-36	GASKET, Carrier Cover Filler Plug, w/7 1/4" dia. Gear, R1, W1, except Sta. Wgn.			1	1	1	1	1	—	—	—	—	—	—	2070 122
	w/8 1/4" dia. Gear	70	8	—	—	—	1	1	1	—	—	—	—	—	2070 122
3-4-0	**DIFFERENTIAL CASE**														
3-04-6	CASE, w/o Sure-Grip, w/7 1/4" dia. Gear, R1, W1, except Sta. Wgn.	70		1	1	1	1	1	—	—	—	—	—	—	2404 193
	w/o Sure-Grip, w/7 1/4" dia. Gear, R1, W1, except Sta. Wgn., UP TO approx. Aug. 1971	71		1	1	1	1	1	—	—	—	—	—	—	2404 193
	AFTER approx. Aug. 1971	71		1	1	1	1	1	—	—	—	—	—	—	≠3507 166
	w/o Sure-Grip, w/8 3/4" dia. Gear, B2, J2			1	1	1	1	1	1	1	1	1	1	1	3004 986
	w/Sure-Grip, w/9 3/4" dia. Gear, w/426 and 440 Engines	70	8	—	1	—	1	1	—	—	—	—	—	—	1929 751
	w/o Sure-Grip, w/8 1/4" dia. Gear, 1 5/8" dia. Stem, R, W, P, w/2.71 and 3.21 to 1 ratio, w/225 and 318 Eng.	70		—	—	—	1	1	1	—	—	—	—	—	2881 423
	w/o Sure-Grip, w/8 1/4" dia. Gear, R, W, w/2.71, 2.94 and 3.21 to 1 ratio, w/225 and 318 Eng., D, w/2.71 and 3.21 to 1 ratio, w/225, 318 and 360 Eng.	71		—	—	—	1	1	1	1	—	—	—	—	2881 423
	w/o Sure-Grip, w/8 1/4" dia. Gear, 1 5/8" dia. Stem, w/2.45 to 1 ratio, w/383 Eng.	8		—	—	—	1	1	—	—	—	—	—	—	3432 435
3-04-10	SCREW, Case, w/9 3/4" dia. Gear, w/Sure-Grip, w/426, 440 Eng.	70	8	—	8	—	8	8	—	—	—	—	—	—	1929 760
3-06-0	**DIFFERENTIAL SIDE GEAR**														
3-06-5	GEAR, w/o Sure-Grip, w/7 1/4" dia. Gear, R1, W1, except Sta. Wgn.			2	2	2	2	2	—	—	—	—	—	—	2404 194
	w/o Sure-Grip, w/8 3/4" dia. Gear, B2, J2, O.D. of Long Neck or Hub 1.686, Select Fit	70		2	1	2	2	2	2	2	2	2	2	2	2404 202
	w/o Sure-Grip, w/8 3/4" dia. Gear, B2, J2, O.D. of Long Neck or Hub 1.688, Select Fit	70		2	1	2	2	2	2	2	2	2	2	2	2404 203
	w/o Sure-Grip, w/8 3/4" dia. Gear, O.D. of Long Neck or Hub 1.686	71		2	2	2	2	2	2	2	2	2	2	2	2404 202
	w/o Sure-Grip, w/8 3/4" dia. Gear, O.D. of Long Neck or Hub 1.688	71		2	2	2	2	2	2	2	2	2	2	2	2404 203
	w/o Sure-Grip, w/8 1/4" dia. Gear, 1 5/8" dia. Stem, R, W, w/2.45, 2.71 and 3.21 to ratio, P, w/2.71 and														

CARLINES J - Challenger, B - Barracuda, V - Valiant, L - Dart, R - Belvedere - Satellite, W - Coronet - Charger, P - Plymouth, D - Dodge, C - Chrysler, Y - Imperial

AR Indicates use as required.

# Indicates parts not listed in any previous parts book.

Numerals in parentheses ( ) refer to notes.

★ Indicates change or addition.

Printed in U.S.A. January 1972

CODE	PART NAME	ENG. TYPE OR CU.IN.	V 1-2	B J 1-2	L 1-2	R 1-2	W 1-2	P 1-2	D 1-2	C 1	C 2	C 3	Y 1	PART NUMBER
3-06-0	**DIFFERENTIAL SIDE GEAR Cont'd.**													
3-06-5	GEAR Cont'd.													
	3.21 to 1 ratio	70	—	—	—	2	2	2	—	—	—	—	—	2852 908
	w/o Sure-Grip, w/8 1/4" dia. Gear, 1 5/8" dia. Stem, R, W, w/2.45, 2.71, 2.94 and 3.21 to 1 ratio, P, D, w/2.71 and 3.21 to 1 ratio	71	—	—	—	2	2	2	2	—	—	—	—	2852 908
	w/Sure-Grip, w/9 3/4" dia. Gear, w/426 and 440 Engines, Early Type, 23T	8	—	2	—	2	2	—	—	—	—	—	—	2852 514
	w/Sure-Grip, 9 3/4" dia. Gear, w/426 and 440 Engines, Late Type, 35T	70 8	—	2	—	2	2	—	—	—	—	—	—	2955 837
3-06-6	WASHER, Thrust, w/7 1/4" dia. Gear, R1, W1, except Sta. Wgn., w/o Sure-Grip		2	2	2	2	2	—	—	—	—	—	—	2404 196
	w/8 3/4" dia. Gear, B2, J2, w/o Sure-Grip		2	2	2	2	2	2	2	2	2	2	2	1633 960
	w/8 1/4" dia. Gear, 1 5/8" dia. Stem, R, W, w/2.45, 2.71 and 3.21 to 1 ratio, P, w/2.71 and 3.21 to 1 ratio, w/o Sure-Grip	70	—	—	—	2	2	2	—	—	—	—	—	2852 911
	w/8 1/4" dia. Gear, 1 5/8" dia. Stem, R, W, w/2.45, 2.71, 2.94 and 3.21 to 1 ratio, P, D, w/2.71 and 3.21 to 1 ratio	71	—	—	—	2	2	2	2	—	—	—	—	2852 911
3-06-8	RETAINER, w/Sure-Grip, w/9 3/4" dia. Gear, w/426 and 440 Engines	70 8	—	2	—	2	2	—	—	—	—	—	—	2852 513
3-07-0	**DIFFERENTIAL PINION**													
3-07-1	PINION, w/o Sure-Grip, w/7 1/4" dia. Gear, R1, W1, except Sta. Wgn.		2	2	2	2	2	—	—	—	—	—	—	2404 195
	w/o Sure-Grip, w/8 3/4" dia. Gear, B2, J2		2	2	2	2	2	2	2	2	2	2	2	1633 959
	w/Sure-Grip, w/9 3/4" dia. Gear, w/426 and 440 Engines	70 8	—	2	—	2	2	—	—	—	—	—	—	1929 756
	w/o Sure-Grip, w/8 1/4" dia. Gear, 1 5/8" dia. Stem, R, W, w/2.45, 2.71 and 3.21 to 1 ratio, P, w/2.71 and 3.21 to 1 ratio	70	—	—	—	2	2	2	—	—	—	—	—	2852 909
	w/o Sure-Grip, w/8 1/4" dia. Gear, 1 5/8" dia. Stem, R, W, w/2.45, 2.71, 2.94 and 3.21 to 1 ratio, P, D, w/2.71 and 3.21 to 1 ratio	71	—	—	—	2	2	2	2	—	—	—	—	2852 909
3-07-2	WASHER, w/o Sure-Grip, w/7 1/4" dia. Gear, R1, W1, except Sta. Wgn		2	2	2	2	2	—	—	—	—	—	—	2404 197
	w/o Sure-Grip, w/8 3/4" dia. Gear, B2, J2		2	2	2	2	2	2	2	2	2	2	2	1633 961
	w/o Sure-Grip, w/8 1/4" dia. Gear, 1 5/8" dia. Stem, R, W, w/2.45, 2.71 and 3.21 to 1 ratio, P, w/2.71 and 3.21 to 1 ratio	70	—	—	—	2	2	2	—	—	—	—	—	2852 912
	w/o Sure-Grip, w/8 1/4" dia. Gear, 1 5/8" dia. Stem, R, W, w/2.45, 2.71, 2.94 and 3.21 to 1 ratio, P, D, w/2.71 and 3.21 to 1 ratio	71	—	—	—	2	2	2	2	—	—	—	—	2852 912
3-08-0	**DIFFERENTIAL PINION SHAFT**													
3-08-1	SHAFT, w/o Sure-Grip, w/7 1/4" dia. Gear, R1, W1, except Sta. Wgn.		1	1	1	1	1	—	—	—	—	—	—	2404 198

CARLINES J - Challenger, B - Barracuda, V - Valiant, L - Dart, R - Belvedere - Satellite, W - Coronet - Charger, P - Plymouth, D - Dodge, C - Chrysler, Y - Imperial

AR Indicates use as required.

# Indicates parts not listed in any previous parts book.

Numerals in parentheses ( ) refer to notes.

★ Indicates change or addition.

Printed in U.S.A. January 1972

CODE	PART NAME	ENG. TYPE OR CU.IN.	V	B J	L	R	W	P	D	C	C	C	Y	PART NUMBER
			1-2	1-2	1-2	1-2	1-2	1-2	1-2	1	2	3	1	
3-08-0	**DIFFERENTIAL PINION SHAFT Cont'd.**													
3-08-1	SHAFT Cont'd.													
	w/o Sure-Grip, w/8 3/4" dia. Gear, B2, J2	70	1	1	1	1	1	AR	1	1	1	1	1	1633 928
	w/and w/o Sure-Grip, w/8 3/4" dia. Gear, w/1 3/8" dia. Stem, B2, J2	71	1	1	1	1	1	1	1	1	1	1	1	1633 928
	w/Sure-Grip, 9 3/4" Dia. Gear, w/426 and 440 Engines	70 8	—	2	—	2	2	—	—	—	—	—	—	2852 516
	w/Sure-Grip, w/9 3/4" dia. Gear, w/426 and 440 Eng.	71 8	—	1	—	1	1	—	—	—	—	—	—	1922 276
	w/o Sure-Grip, w/8 1/4" dia. Gear, 1 5/8" dia. Stem, R, W, w/2.45, 2.71 and 3.21 to 1 ratio, P, w/2.71 and 3.21 to 1 ratio	70	—	—	—	1	1	1	—	—	—	—	—	2852 913
	w/o Sure-Grip, w/8 1/4" dia. Gear, 1 5/8" dia. Stem, R, W, w/2.45, 2.71, 2.94 and 3.21 to 1 ratio, P, D, w/2.71 and 3.21 to 1 ratio	71	—	—	—	1	1	1	1	—	—	—	—	2852 913
	SCREW, Shaft Lock	8	—	—	—	1	1	1	1	1	—	—	—	6028 045
	WASHER	8	—	—	—	1	1	1	1	1	—	—	—	120 214
3-08-2	PIN, Lock, w/7 1/4" dia. Gear, w/o Sure-Grip, R1, W1, except Sta. Wgn.	70	1	1	1	1	1	—	—	—	—	—	—	152 229
	w/8 3/4" dia. Gear, w/o Sure-Grip, B2, J2	70	1	1	1	1	1	1	1	1	1	1	1	455 313
	w/8 3/4" dia. Gear, w/and w/o Sure-Grip, w/1 3/8" dia. Stem, B2, J2	71	1	1	1	1	1	1	1	1	1	1	1	455 313
3-09-0	**DIFFERENTIAL CLUTCH PARTS**													
3-09-1	DISC, Differential Clutch, w/Sure-Grip, w/9 3/4" dia. Gear w/426 and 440 Eng., Flat Type	70 8	—	2	—	2	2	—	—	—	—	—	—	1929 758
	Dished Type	70 8	—	2	—	2	2	—	—	—	—	—	—	2238 893
3-09-2	PLATE, Differential Clutch, w/Sure-Grip, w/9 3/4" dia. Gear, w/426 and 440 Eng., Flat Type	70 8	—	4	—	4	4	—	—	—	—	—	—	1929 759
	Dished Type	70 8	—	2	—	2	2	—	—	—	—	—	—	2228 429
3-09-3	REPAIR KIT, Differential, w/Sure-Grip w/9 3/4" dia. Gear, w/426 and 440 Eng.	70 8	—	1	—	1	1	—	—	—	—	—	—	2852 523
3-11-0	**DIFFERENTIAL BEARINGS**													
3-11-1	CONE, w/ROLLERS, w/7 1/4" dia. Gear, R1, W1, except Sta. Wgn.		2	2	2	2	2	—	—	—	—	—	—	1937 771
	w/8 3/4" dia. Gear, B2, J2, 2" I.D.		2	2	2	2	2	2	2	2	2	2	2	2852 729
	w/8 1/4" dia. Gear, 1 5/8" dia. Stem, R,W, w/2.45, 2.71 and 3.71 to 1 ratio, P, w/2.71 and 3.21 to 1 ratio, 1 25/32" I.D.	70	—	—	—	2	2	2	—	—	—	—	—	2881 194
	w/8 1/4" dia. Gear, 1 5/8" dia. Stem, R, W, w/2.45, 2.71, 2.94 and 3.21 ratio, P, D, w/2.71 and 3.21 to 1 Ratio, 1 25/32" I.D.	71	—	—	—	2	2	2	2	—	—	—	—	2881 194
	w/9 3/4" dia. Gear, w/426, 440 Eng.	70 8	—	2	—	2	2	—	—	—	—	—	—	1799 296

CODE	PART NAME	ENG. TYPE OR CU.IN.	V 1-2	B J 1-2	L 1-2	R 1-2	W 1-2	P 1-2	D 1-2	C 1	C 2	C 3	Y 1	PART NUMBER
3-11-0	**DIFFERENTIAL BEARINGS Cont'd.**													
3-11-1	CONE w/ROLLERS Cont'd.													
	w/9 3/4" dia. Gear, w/426 and 440 Eng. 71	8	—	2	—	2	2	—	—	—	—	—	—	1799 296
3-11-2	CUP, w/7 1/4" dia. Gear, R1, W1, except Sta. Wgn., 2 57/64" O.D.		2	2	2	2	2	—	—	—	—	—	—	1937 770
	w/8 3/4" dia. Gear, B2 J2, 3 17/64" O.D.		2	2	2	2	2	2	2	2	2	2	2	2852 728
	w/9 3/4" dia. Gear, w/426 and 440 Eng. 70	8	—	2	—	2	2	—	—	—	—	—	—	1799 295
	w/9 3/4" dia. Gear, w/426 and 440 Eng., w/4-Speed Trans. 71	8	—	2	—	2	2	—	—	—	—	—	—	1799 295
	w/8 1/4" dia. Gear, 1 5/8" dia. Stem, R, W, w/2.45, 2.71 and 3.21 to 1 ratio, P, w/2.71 and 3.21 to 1 ratio, 2 57/64" O.D. 70		—	—	—	2	2	2	—	—	—	—	—	2881 193
	w/8 1/4" dia. Gear, 1 5/8" dia. Stem, R, W, w/2.45, 2.71, 2.94 and 3.21 to 1 ratio, P, D, w/2.71 and 3.21 to 1 ratio, 2 57/64" O.D. 71		—	—	—	2	2	2	2	—	—	—	—	2881 193
3-11-3	SPACER, Adj., w/7 1/4" dia. Gear, R1, W1, except Sta. Wgn. .2500" thk.		2	2	2	2	2	—	—	—	—	—	—	2070 848
	.2520" thk.		2	2	2	2	2	—	—	—	—	—	—	2070 849
	.2540" thk.		2	2	2	2	2	—	—	—	—	—	—	2070 082
	.2560" thk.		2	2	2	2	2	—	—	—	—	—	—	2070 441
	.2580" thk.		2	2	2	2	2	—	—	—	—	—	—	2070 442
	.2600" thk.		2	2	2	2	2	—	—	—	—	—	—	2070 084
	.2620" thk.		2	2	2	2	2	—	—	—	—	—	—	2070 443
	.2640" thk.		2	2	2	2	2	—	—	—	—	—	—	2070 444
	.2660" thk.		2	2	2	2	2	—	—	—	—	—	—	2070 086
	.2680" thk.		2	2	2	2	2	—	—	—	—	—	—	2070 445
	.2700" thk.		2	2	2	2	2	—	—	—	—	—	—	2070 446
	.2720" thk.		2	2	2	2	2	—	—	—	—	—	—	2070 088
	.2740" thk.		2	2	2	2	2	—	—	—	—	—	—	2070 447
	.2760" thk.		2	2	2	2	2	—	—	—	—	—	—	2070 448
	.2780" thk.		2	2	2	2	2	—	—	—	—	—	—	2070 090
	.2800" thk.		2	2	2	2	2	—	—	—	—	—	—	2070 449
	.2820" thk.		2	2	2	2	2	—	—	—	—	—	—	2070 450
	.2840" thk.		2	2	2	2	2	—	—	—	—	—	—	2070 092
	.2860" thk.		2	2	2	2	2	—	—	—	—	—	—	2070 696
	.2880" thk.		2	2	2	2	2	—	—	—	—	—	—	2070 697
	.2900" thk.		2	2	2	2	2	—	—	—	—	—	—	2070 698
	.2920" thk.		2	2	2	2	2	—	—	—	—	—	—	2070 850
	.2940" thk.		2	2	2	2	2	—	—	—	—	—	—	2070 851
3-11-13	ADJUSTER, w/8 3/4" dia. Gear, B2, J2		2	2	2	2	2	2	2	2	2	2	2	601 864
	w/8 1/4" dia. Gear, 1 5/8" dia. Stem, R, W, w/2.45, 2.71 and 3.21 to 1 ratio, P, w/2.71 and 3.21 to 1 ratio 70		—	—	—	2	2	2	—	—	—	—	—	2852 916
	w/8 1/4" dia. Gear, 1 5/8" dia. Stem, R, W, w/2.45, 2.71, 2.94 and 3.21 to 1 ratio, P, D, w/2.71 and 3.21 to 1 ratio 71		—	—	—	2	2	2	2	—	—	—	—	2852 916

3-11-0 DIFFERENTIAL BEARINGS Cont'd.

CODE	PART NAME	ENG. TYPE OR CU.IN.	V 1-2	B J 1-2	L 1-2	R 1-2	W 1-2	P 1-2	D 1-2	C 1	C 2	C 3	Y 1	PART NUMBER
3-11-14	LOCK, Adj., w/8 3/4" dia. Gear, B2, J2		2	2	2	2	2	2	2	2	2	2	2	308 247
	w/8 1/4" dia. Gear, 1 5/8" dia. Stem, R, W, w/2.45, 2.71 and 3.21 to 1 Ratio, P, w/2.71 and 3.21 to 1 Ratio	70	—	—	—	2	2	2	—	—	—	—	—	2852 917
	w/8 1/4" dia. Gear, 1 5/8" dia. Stem, R, W, w/2.45, 2.71, 2.94 and 3.21 to 1 ratio, P, D, w/2.71 and 3.21 to 1 ratio	71	—	—	—	2	2	2	2	—	—	—	—	2852 917
	SCREW, Adj. Lock, w/8 3/4" dia. Gear		2	2	2	2	2	2	2	2	2	2	2	181 082
	w/8 1/4" dia. Gear		—	—	—	2	2	2	—	—	—	—	—	180 075
3-11-25	SHIM, Adj., w/9 3/4" dia. Gear, w/426 and 440 Engines .003" thk.	8	—	AR	—	AR	AR	—	—	—	—	—	—	1795 152
	.005" thk.	8	—	AR	—	AR	AR	—	—	—	—	—	—	1795 153

NOTES

CARLINES: J - Challenger, B - Barracuda, V - Valiant, L - Dart, R - Belvedere - Satellite, W - Coronet - Charger, P - Plymouth, D - Dodge, C - Chrysler, Y - Imperial

AR Indicates use as required.

Numerals in parentheses ( ) refer to notes.

# Indicates parts not listed in any previous parts book.

★ Indicates change or addition.

Printed in U.S.A. January 1972

3-19-0 DRIVE GEAR AND PINION SET

NOTE: Differential Gear and Pinions are serviced by MATCHED SET numbers only. They are catalogued below in charted form by ratio. The chart includes other information such as Gear and Pinion numbers which generally are stamped on the item, and may be used as reference to confirm the correct Gear and Pinion Set they are contained in. The SET NUMBER must be ordered for replacement of either Gear or Pinion.

3-19-1 GEAR and PINION SET

RATIO	GEAR DIA.	STEM DIA.	GEAR NO.	PINION	MODEL	SERVICE SET NUMBER
2.76 To 1	7 1/4"	1 3/8"	2800 275	2800 276	V,L,B,J See Note 3	2800 281
2.76 to 1 Pkg.	7 1/4"	1 3/8"	2800 275	3507 747	V1, L1, B, J, 71 See Note 4	≠ 3621 939
2.93 To 1	7 1/4"	1 3/8"	2070 480	2643 201	R1,W1 See Note 3	2643 204
2.93 to 1 Pkg.	7 1/4"	1 3/8"	———	———	V1, L1, 71 See Note 4	≠ 3621 927
3.23 To 1	7 1/4"	1 3/8"	2070 558	2643 202	V1,L1,B1,J1,R1,W1 See Note 3	2643 205
3.23 to 1 Pkg.	7 1/4"	1 3/8"	2070 558	3507 745	V1, L1, 71 See Note 4	≠ 3621 928
3.55 To 1	7 1/4"	1 3/8"	2070 559	2643 203	V,L 71 See Note 3	2643 206
3.55 to 1 Pkg.	7 1/4"	1 3/8"	2070 559	3507 744	V1, L1, 71 See Note 4	≠ 3621 929
3.55 To 1	7 1/4"	1 3/8"	2070 559	2643 203	V1, L1 70	2643 206
3.91 To 1	7 1/4"	1 3/8"	2070 560	2467 131	V,L 70	2467 135
3.91 to 1 Pkg.	7 1/4"	1 3/8"	———	———	V1, L1, 71 See Note 4	≠ 3621 930
2.71 to 1	7 1/4"	1 3/8"	2852 928	2852 929	R, W, D, 71 See Note 3	2931 892
2.71 To 1	8 1/4"	1 5/8"	2852 928	2852 929	R2,W2,P2	2931 892
2.45 To 1	8 1/4"	1 5/8"	2852 923	2852 924	R2, W2	2852 927
3.21 To 1	8 1/4"	1 5/8"	2852 938	2852 939	R, W, P 70	2852 942
3.21 To 1	8 1/4"	1 5/8"	2852 938	2852 939	R,W,P,D1 71	2852 942
2.76 To 1	8 3/4"	1 3/8"	2070 684	2070 685	B, J, P2, D2 70 See Note 1	2070 689
2.94 To 1	8 3/4"	1 3/8"	2643 118	2643 102	R, W, P, D See Note 1	2643 103
3.23 To 1	8 3/4"	1 3/8"	2070 611	2070 612	V, L, B, J, R, W, P, D See Note 1	2070 816
3.55 To 1	8 3/4"	1 3/8"	2070 898	2070 899	V2, L2, R, W, P, D 70 See Note 1	2070 915
3.91 To 1	8 3/4"	1 3/8"	2070 225	2070 226	V2, L2, R1, W1 70 See Note 1	2070 300
2.76 To 1	8 3/4"	1 3/4"	2070 684	2070 686	R, W 70	2070 690
2.76 to 1	8 3/4"	1 3/4"	2070 684	2070 686	P, D, Canada 70	2070 690
2.94 To 1	8 3/4"	1 3/4"	2643 118	2643 119	R, W 70	2643 120
3.23 To 1	8 3/4"	1 3/4"	2800 270	2800 271	R, W 70	2800 274
3.23 To 1	8 3/4"	1 3/4"	2070 611	2070 613	R, W 70	2070 817
3.23 To 1	8 3/4"	1 3/4"	2070 611	2070 613	P, D, Canada 70	2070 817
2.76 to 1 Pkg.	8 3/4"	1 7/8"	2070 684	3507 394	B2,J2,P2,D2,C 70 See Note 2	≠ 3549 061
2.94 To 1	8 3/4"	1 7/8"	2852 738	2881 464	R, W, P, D, C, Y 70 See Note 1	2881 497
3.23 To 1	8 3/4"	1 7/8"	2800 270	2881 465	B2, J2, P, D, C 70 See Note 1	2881 498
3.55 To 1	8 3/4"	1 7/8"	2881 325	2931 877	B2, J2, R2, W2 70 See Note 1	2931 878
3.91 To 1	8 3/4"	1 7/8"	3432 215	3432 216	B2, J2, R2, W2 70 See Note 1	3432 217
3.54 To 1	9 3/4"	——	2852 531	2852 537	B2, J2, R2, W2	2852 575
4.10 To 1	9 3/4"	——	1922 311	2953 804	B2, J2, R2, W2	2953 805
2.76 To 1	8 3/4"	1 3/8"	2070 684	3507 316	B, J, P, D 70 See Note 2	3507 323
2.76 To 1	8 3/4"	1 3/8"	2070 684	3507 316	V,L,P,D,C1, 71 See Note 2	3507 323
2.94 To 1	8 3/4"	1 3/8"	2643 118	3507 317	R,W,P,D See Note 2	3507 324
3.23 To 1	8 3/4"	1 3/8"	2070 611	3507 318	V,L, B2, J2, R, W, P, D See Note 2	3507 325
3.23 To 1	8 3/4"	1 3/8"	2070 611	3507 318	V, L, B2, J2, R, W, P2, D2 71 See Note 2	3507 325
3.55 To 1	8 3/4"	1 3/8"	2070 898	3507 319	V2, L2, R, W, P, D See Note 2	3507 326
3.91 To 1	8 3/4"	1 3/8"	2070 225	3507 320	V, L, R, W 70 See Note 2	3507 327
3.91 To 1	8 3/4"	1 3/8"	2070 225	3507 320	V2, L2, 71 See Note 2	3507 327
2.76 To 1	8 3/4"	1 7/8"	2070 684	3507 394	B2, J2, R, W, P, D, C See Note 2	3507 455
2.94 To 1	8 3/4"	1 7/8"	2852 738	3507 395	R, W, Y See Note 2	3507 456
3.23 To 1	8 3/4"	1 7/8"	2800 270	3507 396	B2,J2,R,W,P,D,C,Y See Note 2	3507 457
3.55 To 1	8 3/4"	1 7/8"	2881 325	3507 397	B, J, R, W, D 70 See Note 2	3507 458
3.55 To 1	8 3/4"	1 7/8"	2881 325	3507 397	B2, J2, R2, W2 71 See Note 2	3507 458
3.91 To 1	8 3/4"	1 7/8"	3432 215	3507 398	B, J, R, W 70 See Note 2	3507 459
3.91 To 1	8 3/4"	1 7/8"	3432 215	3507 398	B, J, R2, W2 71 See Note 2	3507 459
4.10 To 1	8 3/4"	1 7/8"	1673 362	3507 399	70 See Note 2	3507 460

NOTE: 1 Used with 10 Tooth Pinion Spline with 1 1/8" Diameter Nut
NOTE: 2 Used with 29 Tooth Pinion Spline with 1 1/4" Diameter Nut
NOTE: 3 Used without Collapsible Spacer
NOTE: 4 Used with Collapsible Spacer in 1971 Models

CARLINES J - Challenger, B - Barracuda, V - Valiant, L - Dart, R - Belvedere - Satallite, W - Coronet - Charger, P - Plymouth, D - Dodge, C - Chrysler, Y - Imperial

AR Indicates use as required.
# Indicates parts not listed in any previous parts book.
Numerals in parentheses ( ) refer to notes.
★ Indicates change or addition.

Printed in U.S.A.
January 1972

CODE	PART NAME	ENG. TYPE OR CU.IN.	V 1-2	B J 1-2	L 1-2	R 1-2	W 1-2	P 1-2	D 1-2	C 1	C 2	C 3	Y 1	PART NUMBER
3-19-0	**DRIVE GEAR AND PINION SET Cont'd.**													
3-19-15	BOLT, w/WASHER, Drive Pinion Carrier Cover, w/9 3/4" dia. Gear	70 8	—	10	—	10	10	—	—	—	—	—	—	2908 482
		71	—	10	—	10	10	—	—	—	—	—	—	2954 031
3-20-0	**DRIVE GEAR BOLT OR SCREW**													
3-20-1	BOLT or SCREW, w/7 1/4" dia. Gear 3/8" - 24 w/.388"-.391" dia. Shoulder	71	8	8	8	8	8	—	—	—	—	—	—	#2931 799
	w/8 3/4" dia. Gear 3/8" - 24 w/.388"-.391-- dia. Shoulder	71	12	12	12	12	12	12	12	12	12	12	12	#2931 799
	w/9 3/4" dia. Gear	8	—	12	—	12	12	—	—	—	—	—	—	1795 170
	w/8 1/4" dia. Gear	70	—	—	—	10	10	10	—	—	—	—	—	2881 499
	w/8 1/4" dia. Gear	71	—	—	—	10	10	10	10	—	—	—	—	2881 499
	SCREW PACKAGE, w/8 3/4" dia. Gear (Consists of 12 Screws part number 2931 799)		1	1	1	1	1	1	1	1	1	1	1	#3621 458
3-22-0	**DRIVE PINION BEARINGS**													
3-22-24	CONE, w/ROLLERS, Frt. Brg., w/7 1/4" Dia. Gear, 1 3/8" dia. Stem, R1, W1, except Sta. Wgn.		1	1	1	1	1	—	—	—	—	—	—	2070 316
	Rr.		1	1	1	1	1	—	—	—	—	—	—	2070 318
	Frt., w/8 3/4" dia. Gear		1	1	1	1	1	1	1	1	1	1	1	1820 552
	Rr. w/1 3/8" dia. Stem	70	1	1	1	1	1	1	1	—	—	—	—	1401 809
		71	1	1	1	1	1	1	1	1	—	—	—	1401 809
	Rr., w/1 3/4" dia. Stem	70	—	—	—	1	1	—	—	—	—	—	—	2808 226
	Rr., w/1 7/8" dia. Stem	70	—	1	—	1	1	1	1	1	—	—	1	2852 731
	Rr., w/1 7/8" dia. Stem	71	—	1	—	1	1	1	1	1	1	1	1	2852 731
	Frt., w/9 3/4" dia. Gear, w/426 and 440 Eng.	8	—	1	—	1	1	—	—	—	—	—	—	1799 300
		8	—	1	—	1	1	—	—	—	—	—	—	1327 846
	Frt., w/8 1/4" dia. Gear, 1 5/8" dia. Stem, R, W, w/2.45, 2.71 and 3.21 to 1 ratio, P, w/2.71 and 3.21 to 1 ratio	70	—	—	—	1	1	1	—	—	—	—	—	2070 316
	Rr.	70	—	—	—	1	1	1	—	—	—	—	—	2800 484
	Frt., w/8 1/4" dia. Gear, 1 5/8" dia. Stem, R, W, w/2.45, 2.71, 2.94 and 3.21 to 1 ratio, P, D, w/2.71 and 3.21 to 1 ratio	71	—	—	—	1	1	1	1	—	—	—	—	2070 316
	Rr.	71	—	—	—	1	1	1	1	—	—	—	—	2800 484
	Frt., w/8 3/4" dia. Gear, 1 3/4" dia. Stem, Canada	70	—	—	—	—	—	1	1	—	—	—	—	1401 809
3-22-25	CUP, Frt. Brg., w/7 1/4" dia. Gear, 1 3/8" dia. Stem, R1, W1, except Sta. Wgn.		1	1	1	1	1	—	—	—	—	—	—	2070 317
	Rr.		1	1	1	1	1	—	—	—	—	—	—	2070 319
	Frt., w/8 3/4" dia. Gear		1	1	1	1	1	1	1	1	1	1	1	1820 551
	Rr., 1 7/8" dia. Stem	70	—	1	—	1	1	1	1	1	—	—	1	2852 732
	Rr., 1 7/8" dia. Stem	71	—	1	—	1	1	1	1	1	1	1	1	2852 732
	Rr., w/1 3/8" dia. Stem	70	1	1	1	1	1	1	1	—	—	—	—	1401 810
		71	1	1	1	1	1	1	1	1	—	—	—	1401 810
	Rr., w/1 3/4" dia. Gear	70	—	—	—	1	1	—	—	—	—	—	—	1327 847
	Frt., w/9 3/4" dia. Gear, w/426 and 440 Eng.	8	—	1	—	1	1	—	—	—	—	—	—	1799 299
	Rr.	8	—	1	—	1	1	—	—	—	—	—	—	1327 847

CARLINES J - Challenger, B - Barracuda, V - Valiant, L - Dart, R - Belvedere - Satellite, W - Coronet - Charger, P - Plymouth, D - Dodge, C - Chrysler, Y - Imperial

AR Indicates use as required.

Numerals in parentheses ( ) refer to notes.

# Indicates parts not listed in any previous parts book.

★ Indicates change or addition.

Printed in U.S.A. January 1972

CODE	PART NAME	ENG. TYPE OR CU.IN.	V 1-2	B J 1-2	L 1-2	R 1-2	W 1-2	P 1-2	D 1-2	C 1	C 2	C 3	Y 1	PART NUMBER
3-22-0	**DRIVE PINION BEARINGS Cont'd.**													
3-22-25	CLIP Cont'd.													
	Frt., w/8 1/4" dia. Gear, 1 5/8" dia. Stem, R, W, w/2.45, 2.71 and 3.21 to 1 ratio, P, w/2.71 and 3.21 to 1 ratio	70	—	—	—	1	1	1	—	—	—	—	—	2070 317
	Rr.	70	—	—	—	1	1	1	—	—	—	—	—	2800 485
	Frt., w/8 1/4" dia. Gear, 1 5/8" dia. Stem, R, W, w/2.45, 2.71, 2.94 and 3.21 to 1 ratio, P, D, w/2.71 and 3.21 to 1 ratio	71	—	—	—	1	1	1	1	—	—	—	—	2070 317
	Rr.	71	—	—	—	1	1	1	1	—	—	—	—	2800 485
	Frt., w/8 3/4" dia. Gear, 1 3/4" dia. Stem, Canada	70	—	—	—	—	—	1	1	—	—	—	—	1401 810
	Rr., w/8 3/4" dia. Gear, 1 3/4" dia. Stem, Canada	70	—	—	—	—	—	1	1	—	—	—	—	1327 847
3-22-26	SPACER, Frt. Brg. Adj., w/7 1/4" dia. Gear, 1 3/8" dia. Stem, R1, W1, except													
	Sta. Wgn., .074" thk.		AR	AR	AR	AR	AR	—	—	—	—	—	—	2070 094
	.075" thk.		AR	AR	AR	AR	AR	—	—	—	—	—	—	2070 454
	.076" thk.		AR	AR	AR	AR	AR	—	—	—	—	—	—	2070 095
	.077" thk.		AR	AR	AR	AR	AR	—	—	—	—	—	—	2070 455
	.078" thk.		AR	AR	AR	AR	AR	—	—	—	—	—	—	2070 096
	.079" thk.		AR	AR	AR	AR	AR	—	—	—	—	—	—	2070 456
	.080" thk.		AR	AR	AR	AR	AR	—	—	—	—	—	—	2070 097
	.081" thk.		AR	AR	AR	AR	AR	—	—	—	—	—	—	2070 457
	.082" thk.		AR	AR	AR	AR	AR	—	—	—	—	—	—	2070 098
	.083" thk.		AR	AR	AR	AR	AR	—	—	—	—	—	—	2070 458
	.084" thk.		AR	AR	AR	AR	AR	—	—	—	—	—	—	2070 099
	.085" thk.		AR	AR	AR	AR	AR	—	—	—	—	—	—	2070 459
	.086" thk.		AR	AR	AR	AR	AR	—	—	—	—	—	—	2070 100
	.087" thk.		AR	AR	AR	AR	AR	—	—	—	—	—	—	2070 460
	.088" thk.		AR	AR	AR	AR	AR	—	—	—	—	—	—	2070 101
	.089" thk.		AR	AR	AR	AR	AR	—	—	—	—	—	—	2070 461
	.090" thk.		AR	AR	AR	AR	AR	—	—	—	—	—	—	2070 102
	.091" thk.		AR	AR	AR	AR	AR	—	—	—	—	—	—	2070 462
	.092" thk.		AR	AR	AR	AR	AR	—	—	—	—	—	—	2070 103
	.093" thk.		AR	AR	AR	AR	AR	—	—	—	—	—	—	2070 463
	.094" thk.		AR	AR	AR	AR	AR	—	—	—	—	—	—	2070 104
	.095" thk.		AR	AR	AR	AR	AR	—	—	—	—	—	—	2070 464
	.096" thk.		AR	AR	AR	AR	AR	—	—	—	—	—	—	2070 105
	.097" thk.		AR	AR	AR	AR	AR	—	—	—	—	—	—	2070 465
	.098" thk.		AR	AR	AR	AR	AR	—	—	—	—	—	—	2070 106
	.099" thk.		AR	AR	AR	AR	AR	—	—	—	—	—	—	2070 466
	.100" thk.		AR	AR	AR	AR	AR	—	—	—	—	—	—	2070 107
	.101" thk.		AR	AR	AR	AR	AR	—	—	—	—	—	—	2070 467
	.102" thk.		AR	AR	AR	AR	AR	—	—	—	—	—	—	2070 108
	.103" thk.		AR	AR	AR	AR	AR	—	—	—	—	—	—	2070 468
	.104" thk.		AR	AR	AR	AR	AR	—	—	—	—	—	—	2070 109
	.105" thk.		AR	AR	AR	AR	AR	—	—	—	—	—	—	2070 469
	.106" thk.		AR	AR	AR	AR	AR	—	—	—	—	—	—	2070 110
	Frt. Brg., w/7 1/4" dia. Gear, 1 3/8" dia. Stem, Collapsible Type	71	1	1	1	—	—	—	—	—	—	—	—	# 3507 575
	Brg. Adj., w/8 3/4" dia. Gear, 1 3/4" and 1 7/8" dia. Stem, Collapsible Type, 2 63/64" lgh.	70	1	1	1	1	1	1	1	1	1	1	1	2931 687
	w/8 3/4" dia. Gear, 1 7/8" dia. Stem, Collapsible Type,													

CODE	PART NAME	ENG. TYPE OR CU.IN.	V 1-2	B J 1-2	L 1-2	R 1-2	W 1-2	P 1-2	D 1-2	C 1	C 2	C 3	Y 1	PART NUMBER
3-22-0	**DRIVE PINION BEARINGS Cont'd.**													
3-22-26	SPACER Cont'd.													
	2 63/64" lgh.	71	—	1	—	1	1	1	1	1	1	1	1	2931 687
	Rr., w/8 3/4" dia. Gear, 1 3/8" dia. Stem, 2 11/16" lgh.	70	1	1	1	1	1	1	1	—	—	—	—	1738 826
		71	1	1	1	1	1	1	1	1	—	—	—	1738 826
	w/8 1/4" dia. Gear, 1 5/8"dia. Stem, R, W, w/2.45, 2.71 and 3.21 to 1 ratio, P, w/2.71 and 3.21 to 1 ratio, Collapsible Type	70	—	—	—	1	1	1	—	—	—	—	—	2931 874
	w/8 1/4" dia. Gear, 1 5/8" dia. Stem, R, W, w/2.45, 2.71, 2.94 and 3.21 to 1 ratio, P, D, w/2.71 and 3.21 to 1 ratio	71	—	—	—	1	1	1	1	—	—	—	—	2931 874
3-22-27	WASHER, Rr. Brg., w/7 1/4" and 8 3/4" Dia. Gear, 1 3/8" dia. Stem, .084" thk.	70	AR	AR	AR	AR	AR	AR	AR	—	—	—	—	1738 794
	.086" thk.	70	AR	AR	AR	AR	AR	AR	AR	—	—	—	—	1738 795
	.088" thk.	70	AR	AR	AR	AR	AR	AR	AR	—	—	—	—	1738 796
	.090" thk.	70	AR	AR	AR	AR	AR	AR	AR	—	—	—	—	1738 797
	.092" thk.	70	AR	AR	AR	AR	AR	AR	AR	—	—	—	—	1738 798
	.094" thk.	70	AR	AR	AR	AR	AR	AR	AR	—	—	—	—	1738 799
	.096" thk.	70	AR	AR	AR	AR	AR	AR	AR	—	—	—	—	1738 800
	.098" thk.	70	AR	AR	AR	AR	AR	AR	AR	—	—	—	—	1738 801
	.100" thk.	70	AR	AR	AR	AR	AR	AR	AR	—	—	—	—	1738 802
	Rr., w/7 1/4" and 8 3/4" dia. Gear, 1 3/8" dia. Stem .084" thk.	71	AR	AR	AR	AR	AR	AR	AR	AR	—	—	—	1738 794
	.086" thk.	71	AR	AR	AR	AR	AR	AR	AR	AR	—	—	—	1738 795
	.088" thk.	71	AR	AR	AR	AR	AR	AR	AR	AR	—	—	—	1738 796
	.090" thk.	71	AR	AR	AR	AR	AR	AR	AR	AR	—	—	—	1738 797
	.092" thk.	71	AR	AR	AR	AR	AR	AR	AR	AR	—	—	—	1738 798
	.094" thk.	71	AR	AR	AR	AR	AR	AR	AR	AR	—	—	—	1738 799
	.096" thk.	71	AR	AR	AR	AR	AR	AR	AR	AR	—	—	—	1738 800
	.098" thk.	71	AR	AR	AR	AR	AR	AR	AR	AR	—	—	—	1738 801
	.100" thk.	71	AR	AR	AR	AR	AR	AR	AR	AR	—	—	—	1738 802
	Rr. Brg., w/8 3/4" dia. Gear, 1 3/4" dia. Stem, Canada .084" thk.	70	—	—	—	—	—	AR	AR	—	—	—	—	1738 812
	.086" thk.	70	—	—	—	—	—	AR	AR	—	—	—	—	1738 813
	.088" thk.	70	—	—	—	—	—	AR	AR	—	—	—	—	1738 814
	.090" thk.	70	—	—	—	—	—	AR	AR	—	—	—	—	1738 815
	.092" thk.	70	—	—	—	—	—	AR	AR	—	—	—	—	1738 816
	.094" thk.	70	—	—	—	—	—	AR	AR	—	—	—	—	1738 817
	.096" thk.	70	—	—	—	—	—	AR	AR	—	—	—	—	1738 818
	.098" thk.	70	—	—	—	—	—	AR	AR	—	—	—	—	1738 819
	.100" thk.	70	—	—	—	—	—	AR	AR	—	—	—	—	1738 820
3-22-28	SHIM, Frt. Brg. Adj., w/8 3/4" dia. Gear, 1 3/8" dia. Stem, 1 19/32" O.D. .014" thk.	70	2	—	2	2	2	2	2	—	—	—	—	1820 703
	.016" thk.	70	2	—	2	2	2	2	2	—	—	—	—	1820 704
	.018" thk.	70	2	—	2	2	2	2	2	—	—	—	—	1820 705
	.020" thk.	70	2	—	2	2	2	2	2	—	—	—	—	1820 706
	.022" thk.	70	2	—	2	2	2	2	2	—	—	—	—	1828 725
	.024" thk.	70	2	—	2	2	2	2	2	—	—	—	—	1829 440
	.026" thk.	70	2	—	2	2	2	2	2	—	—	—	—	1829 441
	Frt. Brg. Adj., w/8 3/4" dia. Gear, 1 3/8" dia. Stem, 1 19/32" O.D. .014" thk.	71	2	2	2	2	2	2	2	2	—	—	—	1820 703
	.016" thk.	71	2	2	2	2	2	2	2	2	—	—	—	1820 704

CARLINES: J - Challenger, B - Barracuda, V - Valiant, L - Dart, R - Belvedere - Satellite, W - Coronet - Charger, P - Plymouth, D - Dodge, C - Chrysler, Y - Imperial

AR Indicates use as required.

Numerals in parentheses ( ) refer to notes.

# Indicates parts not listed in any previous parts book.

★ Indicates change or addition.

Printed in U.S.A. January 1972

CODE	PART NAME	ENG. TYPE OR CU.IN.	V 1-2	B J 1-2	L 1-2	R 1-2	W 1-2	P 1-2	D 1-2	C 1	C 2	C 3	Y 1	PART NUMBER
3-22-0	**DRIVE PINION BEARINGS Cont'd.**													
3-22-28	SHIM Cont'd.													
	.018" thk. 71		2	2	2	2	2	2	2	2	—	—	—	1820 705
	.020" thk. 71		AR	AR	AR	AR	AR	AR	AR	AR	—	—	—	1820 706
	.022" thk. 71		2	2	2	2	2	2	2	2	—	—	—	1828 725
	.024" thk. 71		2	2	2	2	2	2	2	2	—	—	—	1829 440
	.026" thk. 71		2	2	2	2	2	2	2	2	—	—	—	1829 441
	Frt. Brg. Adj., w/8 3/4" dia. Gear, 1 3/4" dia. Stem, Canada .014" thk. 70		—	—	—	—	—	AR	AR	—	—	—	—	1738 805
	.016" thk. 70		—	—	—	—	—	AR	AR	—	—	—	—	1738 806
	.018" thk. 70		—	—	—	—	—	AR	AR	—	—	—	—	1738 807
	.022" thk. 70		—	—	—	—	—	AR	AR	—	—	—	—	1829 442
	.024" thk. 70		—	—	—	—	—	AR	AR	—	—	—	—	1829 443
	.026" thk. 70		—	—	—	—	—	AR	AR	—	—	—	—	1829 444
	w/9 3/4" dia. Gear, Frt., w/426 and 440 Engines .014" thk.	8	—	2	—	2	2	—	—	—	—	—	—	2881 085
	.015" thk.	8	—	2	—	2	2	—	—	—	—	—	—	2881 181
	.016" thk.	8	—	2	—	2	2	—	—	—	—	—	—	2881 086
	.018" thk.	8	—	2	—	2	2	—	—	—	—	—	—	2881 087
	.020" thk.	8	—	2	—	2	2	—	—	—	—	—	—	2881 088
	.021" thk.	8	—	2	—	2	2	—	—	—	—	—	—	2881 182
	.022" thk.	8	—	2	—	2	2	—	—	—	—	—	—	2881 089
	.023" thk.	8	—	2	—	2	2	—	—	—	—	—	—	2881 183
	Rr. .003" thk.	8	—	2	—	2	2	—	—	—	—	—	—	1922 314
	.005" thk.	8	—	2	—	2	2	—	—	—	—	—	—	1922 315
	Rr., w/8 3/4" dia. Gear, 1 7/8" dia. Stem, 2 45/64" O.D., w/3 Inside Tabs, .020" thk.	8	—	AR	—	—	—	—	—	—	—	—	—	3432 320
	.021" thk.	8	—	AR	—	—	—	—	—	—	—	—	—	3432 321
	.022" thk.	8	—	AR	—	—	—	—	—	—	—	—	—	3432 322
	.023" thk.	8	—	AR	—	—	—	—	—	—	—	—	—	3432 323
	.024" thk.	8	—	AR	—	—	—	—	—	—	—	—	—	3432 324
	.025" thk.	8	—	AR	—	—	—	—	—	—	—	—	—	3432 325
	.026" thk.	8	—	AR	—	—	—	—	—	—	—	—	—	3432 326
	.027" thk.	8	—	AR	—	—	—	—	—	—	—	—	—	3432 327
	.028" thk.	8	—	AR	—	—	—	—	—	—	—	—	—	3432 328
	.029" thk.	8	—	AR	—	—	—	—	—	—	—	—	—	3432 329
	.030" thk.	8	—	AR	—	—	—	—	—	—	—	—	—	3432 330
	.031" thk.	8	—	AR	—	—	—	—	—	—	—	—	—	3432 331
	.032" thk.	8	—	AR	—	—	—	—	—	—	—	—	—	3432 332
	.033" thk.	8	—	AR	—	—	—	—	—	—	—	—	—	3432 333
	.034" thk.	8	—	AR	—	—	—	—	—	—	—	—	—	3432 334
	.035" thk.	8	—	AR	—	—	—	—	—	—	—	—	—	3432 335
	.036" thk.	8	—	AR	—	—	—	—	—	—	—	—	—	3432 336
	.037" thk.	8	—	AR	—	—	—	—	—	—	—	—	—	3432 337
	.038" thk.	8	—	AR	—	—	—	—	—	—	—	—	—	3432 338
	Frt., w/8 1/4" dia. Gear, 1 5/8" dia. Stem, R, W, w/2.45, 2.71 and 3.21 to 1 ratio, P, w/2.71 and 3.21 to 1 ratio, 1 11/32" O.D. Rr., 3 3/32" O.D. 70 .020" thk.		—	—	—	1	1	1	—	—	—	—	—	2931 817
	70 .060" thk.		—	—	—	1	1	1	—	—	—	—	—	2931 960
	70 .061" thk.		—	—	—	1	1	1	—	—	—	—	—	2931 961
	70 .062" thk.		—	—	—	1	1	1	—	—	—	—	—	2931 962
	70 .063" thk.		—	—	—	1	1	1	—	—	—	—	—	2931 963
	70 .064" thk.		—	—	—	1	1	1	—	—	—	—	—	2931 964
	70 .065" thk.		—	—	—	1	1	1	—	—	—	—	—	2931 965
	70 .066" thk.		—	—	—	1	1	1	—	—	—	—	—	2931 966

3-22-0 DRIVE PINION BEARINGS Cont'd.

3-22-28 SHIM Cont'd.

CODE	PART NAME	ENG. TYPE OR CU.IN.	V 1-2	B J 1-2	L 1-2	R 1-2	W 1-2	P 1-2	D 1-2	C 1	C 2	C 3	Y 1	PART NUMBER
		70 .067" thk.	—	—	—	1	1	1	—	—	—	—	—	2931 967
		70 .068" thk.	—	—	—	1	1	1	—	—	—	—	—	2931 968
		70 .069" thk.	—	—	—	1	1	1	—	—	—	—	—	2931 969
		70 .070" thk.	—	—	—	1	1	1	—	—	—	—	—	2931 970
		70 .071" thk.	—	—	—	1	1	1	—	—	—	—	—	2931 971
		70 .072" thk.	—	—	—	1	1	1	—	—	—	—	—	2931 972
		70 .073" thk.	—	—	—	1	1	1	—	—	—	—	—	2931 973
		70 .074" thk.	—	—	—	1	1	1	—	—	—	—	—	2931 974
		70 .075" thk.	—	—	—	1	1	1	—	—	—	—	—	2931 975
		70 .076" thk.	—	—	—	1	1	1	—	—	—	—	—	2931 976
		70 .077" thk.	—	—	—	1	1	1	—	—	—	—	—	2931 977
		70 .078" thk.	—	—	—	1	1	1	—	—	—	—	—	2931 978
	Frt., w/8 1/4" dia. Gear, 1 5/8" dia. Stem, R, W, w/2.45, 2.71, 2.94 and 3.21 to 1 ratio, P, D, w/2.71 and 3.21 to 1 ratio, 1 11/32" O.D.	71 .020" thk.	—	—	—	1	1	1	1	—	—	—	—	2931 817
	Rr., 3 3/32" O.D.	71 .060" thk.	—	—	—	1	1	1	1	—	—	—	—	2931 960
		71 .061" thk.	—	—	—	1	1	1	1	—	—	—	—	2931 961
		71 .062" thk.	—	—	—	1	1	1	1	—	—	—	—	2931 962
		71 .063" thk.	—	—	—	1	1	1	1	—	—	—	—	2931 963
		71 .064" thk.	—	—	—	1	1	1	1	—	—	—	—	2931 964
		71 .065" thk.	—	—	—	1	1	1	1	—	—	—	—	2931 965
		71 .066" thk.	—	—	—	1	1	1	1	—	—	—	—	2931 966
		71 .067" thk.	—	—	—	1	1	1	1	—	—	—	—	2931 967
		71 .068" thk.	—	—	—	1	1	1	1	—	—	—	—	2931 968
		71 .069" thk.	—	—	—	1	1	1	1	—	—	—	—	2931 969
		71 .070" thk.	—	—	—	1	1	1	1	—	—	—	—	2931 970
		71 .071" thk.	—	—	—	1	1	1	1	—	—	—	—	2931 971
		71 .072" thk.	—	—	—	1	1	1	1	—	—	—	—	2931 972
		71 .073" thk.	—	—	—	1	1	1	1	—	—	—	—	2931 973
		71 .074" thk.	—	—	—	1	1	1	1	—	—	—	—	2931 974
		71 .075" thk.	—	—	—	1	1	1	1	—	—	—	—	2931 975
		71 .076" thk.	—	—	—	1	1	1	1	—	—	—	—	2931 976
		71 .077" thk.	—	—	—	1	1	1	1	—	—	—	—	2931 977
		71 .078" thk.	—	—	—	1	1	1	1	—	—	—	—	2931 978
	Rr., w/8 3/4" dia. Gear, 1 3/4" and 1 7/8" dia. Stem, 2 45/64" O.D. w/3 Inside Tabs	.020" thk. 70	—	—	—	1	1	1	1	1	—	—	1	3432 320
		.021" thk. 70	—	—	—	1	1	1	1	1	—	—	1	3432 321
		.022" thk. 70	—	—	—	1	1	1	1	1	—	—	1	3432 322
		.023" thk. 70	—	—	—	1	1	1	1	1	—	—	1	3432 323
		.024" thk. 70	—	—	—	1	1	1	1	1	—	—	1	3432 324
		.025" thk. 70	—	—	—	1	1	1	1	1	—	—	1	3432 325
		.026" thk. 70	—	—	—	1	1	1	1	1	—	—	1	3432 326
		.027" thk. 70	—	—	—	1	1	1	1	1	—	—	1	3432 327
		.028" thk. 70	—	—	—	1	1	1	1	1	—	—	1	3432 328
		.029" thk. 70	—	—	—	1	1	1	1	1	—	—	1	3432 329
		.030" thk. 70	—	—	—	1	1	1	1	1	—	—	1	3432 330
		.031" thk. 70	—	—	—	1	1	1	1	1	—	—	1	3432 331
		.032" thk. 70	—	—	—	1	1	1	1	1	—	—	1	3432 332
		.033" thk. 70	—	—	—	1	1	1	1	1	—	—	1	3432 333
		.034" thk. 70	—	—	—	1	1	1	1	1	—	—	1	3432 334
		.035" thk. 70	—	—	—	1	1	1	1	1	—	—	1	3432 335
		.136" thk. 70	—	—	—	1	1	1	1	1	—	—	1	3432 336
		.037" thk. 70	—	—	—	1	1	1	1	1	—	—	1	3432 337
		.038" thk. 70	—	—	—	1	1	1	1	1	—	—	1	3432 338

CODE	PART NAME	ENG. TYPE OR CU.IN.	V 1-2	B J 1-2	L 1-2	R 1-2	W 1-2	P 1-2	D 1-2	C 1	C 2	C 3	Y 1	PART NUMBER
3-22-0	**DRIVE PINION BEARINGS Cont'd.**													
3-22-28	SHIM Cont'd.													
	Frt., w/8 3/4" dia. Gear, 1 3/8" and 1 7/8" dia. Stem .020" thk.	70	—	—	—	—	—	1	1	1	1	1	1	2931 818
	Rr., w/8 3/4" dia. Gear, 1 7/8" dia. Stem, 2 45/64" O.D., w/3 Inside Tabs 71 .020" thk.		—	—	—	1	1	1	1	1	1	1	1	3432 320
	71 .021" thk.		—	—	—	1	1	1	1	1	1	1	1	3432 321
	71 .022" thk.		—	—	—	1	1	1	1	1	1	1	1	3432 322
	71 .023" thk.		—	—	—	1	1	1	1	1	1	1	1	3432 323
	71 .024" thk.		—	—	—	1	1	1	1	1	1	1	1	3432 324
	71 .025" thk.		—	—	—	1	1	1	1	1	1	1	1	3432 325
	71 .026" thk.		—	—	—	1	1	1	1	1	1	1	1	3432 326
	71 .027" thk.		—	—	—	1	1	1	1	1	1	1	1	3432 327
	71 .028" thk.		—	—	—	1	1	1	1	1	1	1	1	3432 328
	71 .029" thk.		—	—	—	1	1	1	1	1	1	1	1	3432 329
	71 .030" thk.		—	—	—	1	1	1	1	1	1	1	1	3432 330
	71 .031" thk.		—	—	—	1	1	1	1	1	1	1	1	3432 331
	71 .032" thk.		—	—	—	1	1	1	1	1	1	1	1	3432 332
	71 .033" thk.		—	—	—	1	1	1	1	1	1	1	1	3432 333
	71 .034" thk.		—	—	—	1	1	1	1	1	1	1	1	3432 334
	71 .035" thk.		—	—	—	1	1	1	1	1	1	1	1	3432 335
	71 .036" thk.		—	—	—	1	1	1	1	1	1	1	1	3432 336
	71 .037" thk.		—	—	—	1	1	1	1	1	1	1	1	3432 337
	71 .038" thk.		—	—	—	1	1	1	1	1	1	1	1	3432 338
	Frt., w/8 3/4" dia. Gear, 1 7/8" dia. Stem 71 .020" thk.		—	1	—	1	1	1	1	1	1	1	1	2931 818
3-22-40	SLINGER, Frt. Brg. Oil, w/9 3/4" dia. Gear	8	—	1	—	1	1	—	—	—	—	—	—	1795 193
3-22-45	OIL SEAL, Frt. Brg., w/7 1/4" dia. Gear, 1 3/8" dia. Stem, R1, W1, except Sta. Wgn., 3 5/32" O.D.		1	1	1	1	1	—	—	—	—	—	—	2881 041
	Frt., w/8 3/4" dia. Gear, 1 3/8", 1 3/4" and 1 7/8" dia. Stem, 3 3/8" O.D.	70	1	1	1	1	1	1	1	1	1	1	1	2931 862
	Frt., w/8 3/4" dia. Gear, 1 3/8" and 1 7/8" dia. Stem, 3 3/8" O.D.	71	1	1	1	1	1	1	1	1	1	1	1	2931 862
	Frt., w/9 3/4" dia. Gear, w/426 and 440 Engines	8	—	1	—	1	1	—	—	—	—	—	—	# 3507 585
	Frt., w/8 3/4" dia. Gear, 1 3/4" dia. Stem, Canada	70	—	—	—	—	—	1	1	—	—	—	—	1828 719
	Frt., w/8 1/4" dia. Gear, 1 5/8" dia. Stem, R, W, w/2.45, 2.71 and 3.21 to 1 ratio, P, w/2.71 and 3.21 to 1 ratio	70	—	—	—	1	1	1	—	—	—	—	—	2881 041
	Frt., w/8 1/4" dia. Gear, 1 5/8" dia. Stem, R, W, w/2.45, 2.71, 2.94 and 3.21 to 1 ratio, P, D, w/2.71 and 3.21 to 1 ratio	71	—	—	—	1	1	1	1	—	—	—	—	2881 041
3-22-78	GASKET, Frt. Brg. Oil Seal, w/9 3/4" dia. Gear, w/426 and 440 Engines	70 8	—	1	—	1	1	—	—	—	—	—	—	1791 591
3-32-0	**DRIVE SHAFT**													
3-32-1	SHAFT, w/7 1/4" dia. Gear, 1 3/8" dia. Stem		2	—	2	—	—	—	—	—	—	—	—	2404 442
	w/8 3/4" dia. Gear, 1 3/8" dia. Stem, 27 11/16" lgn.	70	2	—	2	—	—	—	—	—	—	—	—	2800 182
	w/8 3/4" dia. Gear, 27 11/16" lgh.	71	2	—	2	—	—	—	—	—	—	—	—	2800 182

CARLINES					
	J - Challenger B - Barracuda	V - Valiant L - Dart	R - Belvedere - Satellite W - Coronet - Charger	P - Plymouth D - Dodge	C - Chrysler Y - Imperial

AR Indicates use as required.
Numerals in parentheses ( ) refer to notes.
# Indicates parts not listed in any previous parts book.
★ Indicates change or addition.

Printed in U.S.A.
January 1972

3-32-0 DRIVE SHAFT Cont'd.

CODE	PART NAME	ENG. TYPE OR CU.IN.	V 1-2	B J 1-2	L 1-2	R 1-2	W 1-2	P 1-2	D 1-2	C 1	C 2	C 3	Y 1	PART NUMBER
3-32-1	SHAFT Cont'd.													
	w/7 1/4" dia. Gear, 1 3/8" dia. Stem, 30 33/64" Lgh.	70	—	2	—	—	—	—	—	—	—	—	—	3432 792
	w/7 1/4" dia. Gear, 1 3/8" dia. Stem, R1, W1, except Sta. Wgn.	71	—	2	—	2	2	—	—	—	—	—	—	3432 792
	w/8 3/4" dia. Gear, 1 3/8" and 1 7/8" dia. Stem, 29 31/32" lgh., w/o Studs		—	2	—	—	—	—	—	—	—	—	—	3432 780
	w/9 3/4" dia. Gear, w/426 and 440 Eng., Rt.	8	—	1	—	—	—	—	—	—	—	—	—	3432 209
	Lt., 30 7/16" lgh.	8	—	1	—	—	—	—	—	—	—	—	—	3432 210
	w/7 1/4" dia. Gear, 1 3/8" dia. Stem, R1, W1, except Sta. Wgn.	70 6	—	—	—	2	2	—	—	—	—	—	—	3432 798
	w/8 1/4" dia. Gear, 1 5/8" dia. Stem, w/2.45, 2.71 and 3.21 to 1 ratio, 29 37/64" lgh.	70	—	—	—	2	2	—	—	—	—	—	—	3432 820
	w/8 1/4" dia. Gear, 1 5/8" dia. Stem, w/2.45, 2.71, 2.94 and 3.21 to 1 ratio, w/1.40" dia. journal, 31" lgh., Early Type	71	—	—	—	2	2	—	—	—	—	—	—	3507 475
	w/9 3/4" dia. Gear, w/426 and 440 Eng., Early Type 23T., Rt.	70 8	—	—	—	1	1	—	—	—	—	—	—	2881 010
	Lt.	70 8	—	—	—	1	1	—	—	—	—	—	—	2881 011
	w/9 3/4" dia. Gear, w/426 and 440 Eng., Late Type, 35T., Rt., 28 9/32" lgh.	70 8	—	—	—	1	1	—	—	—	—	—	—	3507 160
	Lt., 29 21/32" lgh.	70 8	—	—	—	1	1	—	—	—	—	—	—	3507 161
	w/9 3/4" dia. Gear, w/426 and 440 Eng., Rt.	71 8	—	—	—	1	1	—	—	—	—	—	—	3507 507
	Lt.	71 8	—	—	—	1	1	—	—	—	—	—	—	3507 508
	w/8 3/4" dia. Gear, 1 3/8", 1 3/4" and 1 7/8" dia. Stem	70	—	—	—	2	2	—	—	—	—	—	—	3432 774
	w/8 3/4" dia. Gear, except Sta. Wgn., 30 5/8" lgh.	71	—	—	—	2	2	2	—	2	2	2	—	3432 830
	w/8 3/4" dia. Gear, R, W, P, C, Sta., Wgn., D	71	—	—	—	2	2	2	2	2	—	—	—	3432 786
	w/8 1/4" dia. Gear, 1 5/8" dia. Stem, w/1.62" dia. journal, 30 63/64" lgh., Late Type, 27T	71	—	—	—	2	2	—	—	—	—	—	—	2931 864
	w/8 1/4" dia. Gear, 1 5/8" dia. Stem, w/2.71 and 3.21 to 1 ratio, 30 63/64" lgh., 27T		—	—	—	—	—	2	—	—	—	—	—	2931 864
	w/8 3/4" dia. Gear, 1 3/8" and 1 7/8" dia. Stem, except Sta. Wgn.	70	—	—	—	—	—	2	—	2	2	2	—	3432 830
	w/8 3/4" dia. Gear, 1 3/8" and 1 7/8" dia. Stem, P, C1, Sta. Wgn., D	70	—	—	—	—	—	2	2	2	—	—	—	3432 786
	w/8 1/4" dia. Gear, 1 5/8" dia. Stem, 31 43/64" lgh.	71	—	—	—	—	—	—	2	—	—	—	—	3507 490
	w/8 3/4" dia. Gear, 1 7/8" dia. Stem, 29" Lgh.	70 8	—	—	—	—	—	—	—	—	—	—	2	3432 832
	w/8 3/4" dia. Gear	71 8	—	—	—	—	—	—	—	—	—	—	2	3507 557
	RETAINER, w/8 3/4" dia. Gear		2	2	2	2	2	2	2	2	2	2	2	6026 648
3-32-8	BLOCK, Thrust, w/8 3/4" dia. Gear		1	1	1	1	1	1	1	1	1	1	1	2467 268
	w/9 3/4" dia. Gear		1	1	1	1	1	1	1	1	1	1	1	3507 545
3-32-9	SPACER, Thrust Block, w/9 3/4" dia. Gear, w/Sure-Grip, w/426 and 440 Engines	70 8	—	2	—	2	2	—	—	—	—	—	—	2852 517
3-32-12	RIVET, Thrust Spacer, w/9 3/4" dia. Gear	70 8	—	—	—	1	1	—	—	—	—	—	—	104 148

CARLINES J - Challenger, B - Barracuda, V - Valiant, L - Dart, R - Belvedere - Satellite, W - Coronet - Charger, P - Plymouth, D - Dodge, C - Chrysler, Y - Imperial

AR Indicates use as required.

# Indicates parts not listed in any previous parts book.

Numerals in parentheses ( ) refer to notes.

★ Indicates change or addition.

Printed in U.S.A. January 1972

CODE	PART NAME	ENG. TYPE OR CU.IN.	V 1-2	B J 1-2	L 1-2	R 1-2	W 1-2	P 1-2	D 1-2	C 1	C 2	C 3	Y 1	PART NUMBER
3-32-0	**DRIVE SHAFT Cont'd.**													
3-32-14	LOCK, Drive Shaft, w/8 1/4" dia. Gear, 1 5/8" dia. Stem, R, W, w/2.45, 2.71 and 3.21 to 1 ratio, P, w/ 2.71 and 3.21 to 1 ratio	70	—	—	—	2	2	2	—	—	—	—	—	2852 883
	w/8 1/4" dia. Gear, 1 5/8" dia. Stem, R, W, w/2.45, 2.71, 2.94 and 3.21 to 1 ratio, P, D, w/2.71 and 3.21 to 1 ratio	71	—	—	—	2	2	2	2	—	—	—	—	2852 883
3-33-0	**DRIVE SHAFT BEARING**													
3-33-1	REPAIR PACKAGE, Drive Shaft Bearing, w/7 1/4" dia. Gear, 1 3/8" dia. Stem, 6 1/2" Brg.		2	—	2	—	—	—	—	—	—	—	—	= 3420 090
	w/8 1/4", 8 3/4" and 9 3/4" dia. Gear, Rt.		1	1	1	1	1	1	1	1	1	1	—	= 3621 992
	Lt.		1	1	1	1	1	1	1	1	1	1	—	= 3621 993
	Rt.		—	—	—	—	—	—	—	—	—	—	1	= 3683 956
	Lt.		—	—	—	—	—	—	—	—	—	—	1	= 3683 957
	w/7 1/4" dia. Gear 1 3/8" dia. Stem, R1, W1, except Sta. Wgn., 7" Brg.		—	2	—	2	2	—	—	—	—	—	—	= 3420 091
	BEARING, COLLAR and CUP PACKAGE, w/8 1/4" dia. Gear, 1 5/8" dia. Stem, w/1330 Yoke	70	—	—	—	—	—	—	—	—	—	—	2	2808 586
	BEARING, w/COLLAR, w/8 1/4" dia. Gear, 1 5/8" dia. Stem, w/2.45, 2.71 and 3.21 to 1 ratio, 2 1/4" O.D.	70	—	—	—	2	2	—	—	—	—	—	—	2852 949
	w/8 1/4" dia. Gear, 1 5/8" dia. Stem, w/2.45, 2.71, 2.94 and 3.21 to 1 ratio, 2 1/4" O.D., Small Type	71	—	—	—	2	2	—	—	—	—	—	—	2852 949
	w/2.71 and 3.21 to 1 ratio, 2 17/32" O.D., Large Type	71	—	—	—	2	2	2	2	—	—	—	—	2931 851
	w/2.71 and 3.21 to 1 ratio, 2 17/32" O.D.	70	—	—	—	—	—	2	—	—	—	—	—	2931 851
3-33-2	CUP, w/8 3/4" dia. Gear, 2 7/8" O.D.	70	—	2	—	2	2	2	2	2	2	2	2	2467 103
3-33-6	LOCK, Brg. Adj., w/8 3/4" and 9 3/4" dia. Gear		1	1	1	1	1	1	1	1	1	1	1	2467 166
3-33-8	RETAINER, Brg., w/7 1/4" dia. Gear, w/o Slot on Outer Edge	70 6	2	2	2	—	—	—	—	—	—	—	—	2467 096
	w/o Slot on Outer Edge	71 6	2	—	2	—	—	—	—	—	—	—	—	2467 096
	w/Slot on Outer Edge		2	—	2	—	—	—	—	—	—	—	—	2467 459
	w/7 1/4" dia. Gear, R1, W1, except Sta. Wgn., w/Slot on Outer Edge		—	2	—	2	2	—	—	—	—	—	—	2800 437
	w/8 3/4" dia. Gear, w/3 Holes	70	2	—	2	2	2	—	—	—	—	—	—	2881 059
	w/9 3/4" dia. Gear, Rt.	8	—	1	—	1	1	—	—	—	—	—	—	2404 115
	Lt.	8	—	1	—	1	1	—	—	—	—	—	—	2404 475
3-33-10	GASKET, Brg. Retainer, w/9 3/4" dia. Gear, 4 5/8" Width, Steel	8	—	2	—	2	2	—	—	—	—	—	—	2070 933
3-35-0	**DRIVE SHAFT OIL SEAL**													
3-35-14	OIL SEAL, w/7 1/4" dia. Gear, Inner Steel and Leather		2	—	2	—	—	—	—	—	—	—	—	2404 052
	Steel and Rubber	71	2	—	2	—	—	—	—	—	—	—	—	3432 691
	w/7 1/4" dia. Gear, Inner, 2 19/64" O.D.		—	2	—	2	2	—	—	—	—	—	—	2852 948
	w/8 3/4" dia. Gear, Outer, 2 7/16" O.D.		2	2	2	2	2	2	2	2	2	2	2	2404 216

CODE	PART NAME	ENG. TYPE OR CU.IN.		V 1-2	B J 1-2	L 1-2	R 1-2	W 1-2	P 1-2	D 1-2	C 1	C 2	C 3	Y 1	PART NUMBER
3-35-0	**DRIVE SHAFT OIL SEAL Cont'd.**														
3-35-14	OIL SEAL Cont'd.														
	w/9 3/4" dia. Gear, w/426 and 440 Eng., Inner			—	2	—	2	2	—	—	—	—	—	—	2852 574
	w/7 1/4" dia. Gear, except Sta. Wgn. Inner, 2 39/64" O.D.	70	6	—	—	—	2	2	—	—	—	—	—	—	2643 464
	w/8 1/4" dia. Gear, 1 5/8" dia. Stem, w/2.45, 2.71 and 3.21 to 1 ratio, 2 19/64" O.D.	70		—	—	—	2	2	—	—	—	—	—	—	2852 948
	w/8 1/4" dia. Gear, 1 5/8" dia. Stem, w/2.45, 2.71, 2.94 and ratio, 2 19/64" O.D., Early Type	71		—	—	—	2	2	—	—	—	—	—	—	2852 948
	w/8 1/4" dia. Gear, 1 5/8" dia. Stem, 2 37/64" O.D., R, W, Late Type	71		—	—	—	2	2	2	2	—	—	—	—	2931 875
	w/8 1/4" dia. Gear, 1 5/8" dia. Stem, w/2.71 and 3.21 to 1 Ratio, 2 37/64" O.D.	70		—	—	—	—	—	2	—	—	—	—	—	2931 875
	SEAL and GASKETS PACKAGE, Brg. w/8 3/4" dia. Gear			2	2	2	2	2	2	2	2	2	2	2	= 3621 967

NOTES

CARLINES J - Challenger, B - Barracuda, V - Valiant, L - Dart, R - Belvedere - Satellite, W - Coronet - Charger, P - Plymouth, D - Dodge, C - Chrysler, Y - Imperial

AR Indicates use as required.

# Indicates parts not listed in any previous parts book.

Numerals in parentheses ( ) refer to notes.

★ Indicates change or addition.

Printed in U.S.A. January 1972

GROUP 4 - BRAKE-PARKING

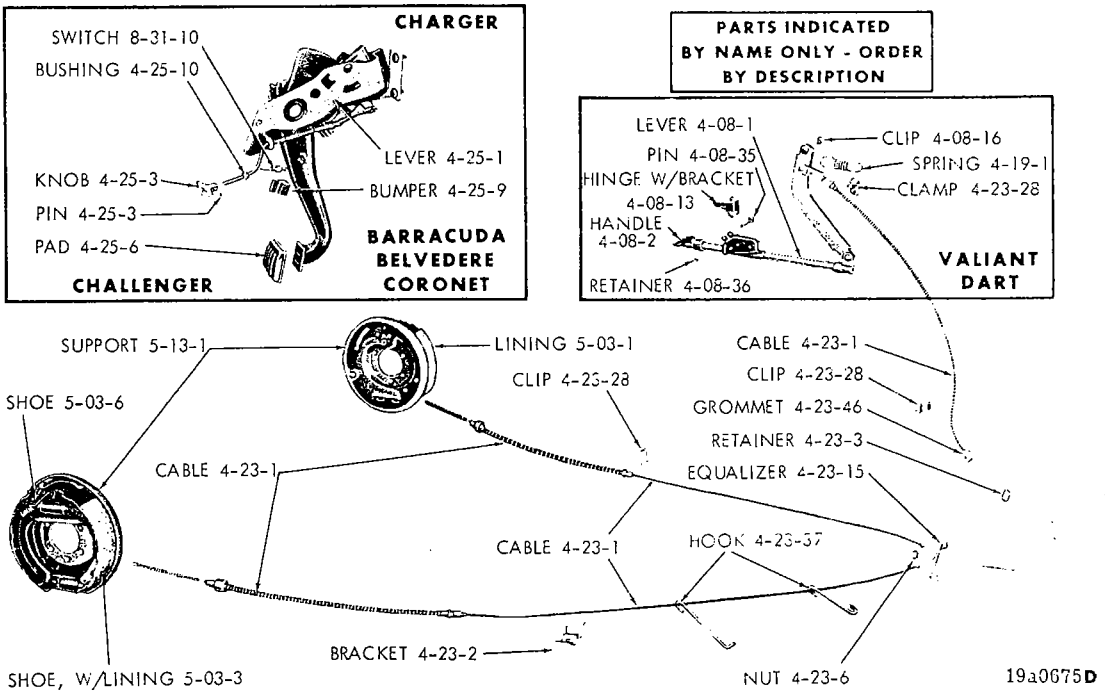

PARKING BRAKE SYSTEM - EXCEPT PLYMOUTH, DODGE, CHRYSLER AND IMPERIAL (1970-71)

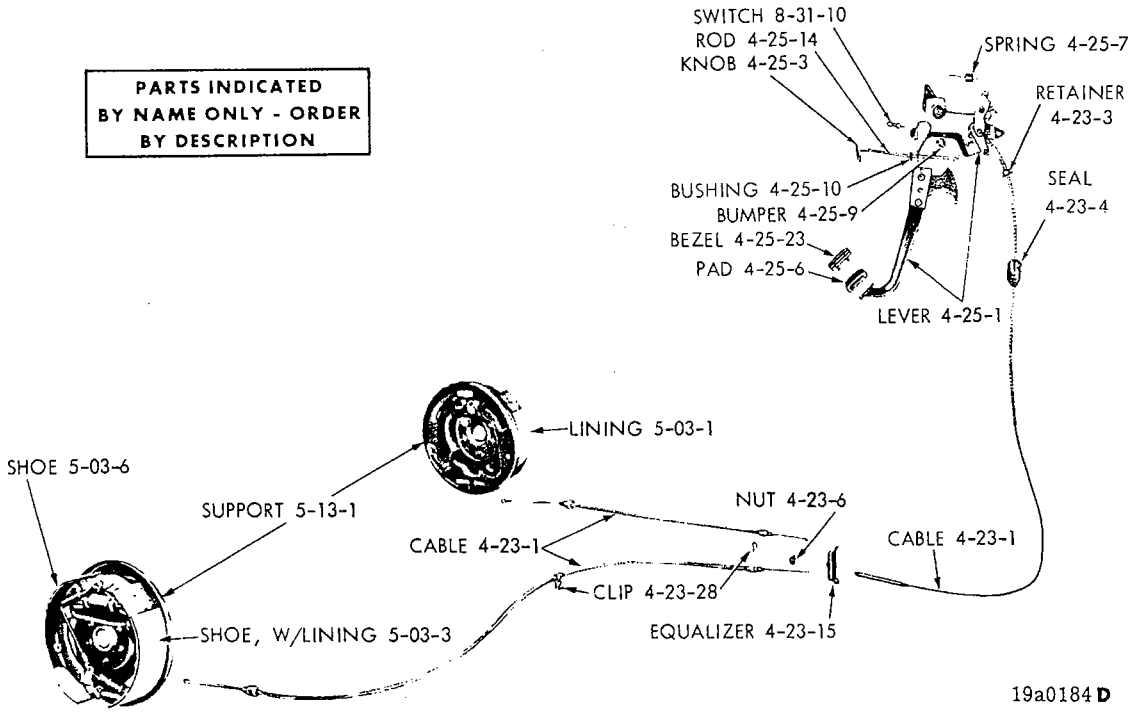

PARKING BRAKE SYSTEM - PLYMOUTH, DODGE AND CHRYSLER

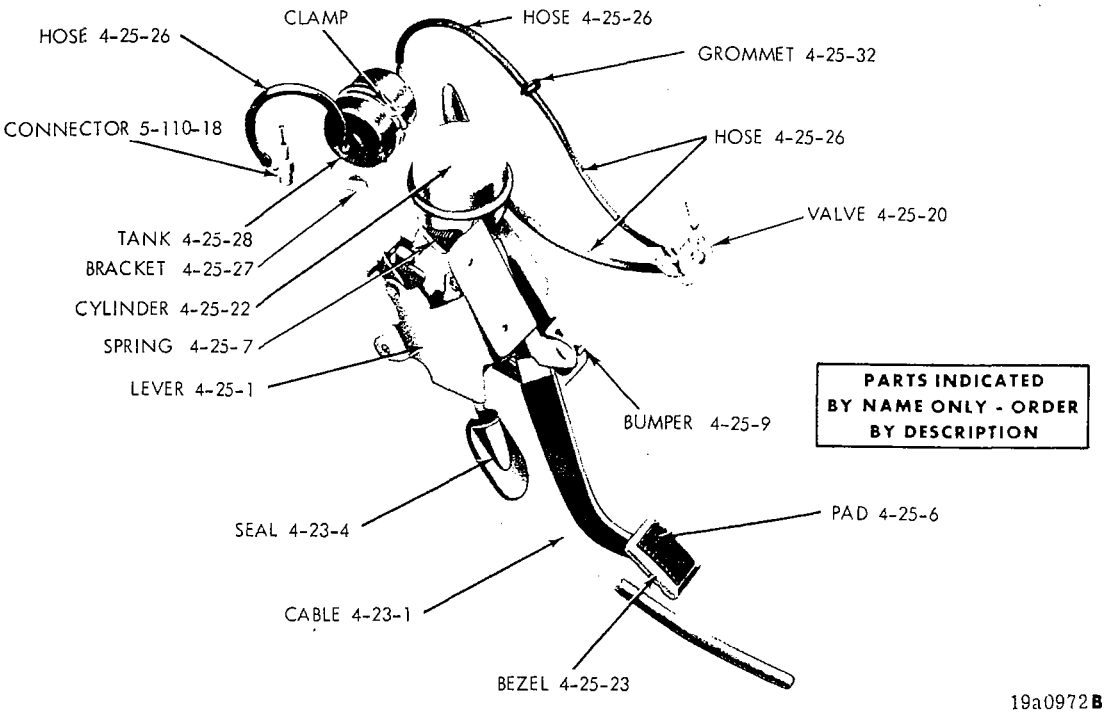

PARKING BRAKE (VACUUM RELEASE) - IMPERIAL

NOTES

CODE	PART NAME	ENG. TYPE OR CU.IN.		V 1-2	B j 1-2	L 1-2	R 1-2	W 1-2	P 1-2	D 1-2	C 1	C 2	C 3	Y 1	PART NUMBER
4-08-0	**PARKING BRAKE LEVER (HAND OPERATED)**														
4-08-1	LEVER			1	—	1	—	—	—	—	—	—	—	—	2883 524
4-08-2	HANDLE			1	—	1	—	—	—	—	—	—	—	—	2823 549
4-08-13	HINGE, w BRACKET and BOLT			1	—	1	—	—	—	—	—	—	—	—	2534 964
	Nut			1	—	1	—	—	—	—	—	—	—	—	120 376
4-08-16	CLIP			1	—	1	—	—	—	—	—	—	—	—	1635 232
4-08-35	PIN			1	—	1	—	—	—	—	—	—	—	—	1732 198
4-08-36	RETAINER			1	—	1	—	—	—	—	—	—	—	—	2197 678
4-09-0	**HAND BRAKE LEVER MOUNTING PLATE**														
4-09-1	PLATE, Hand Brake Support			1	—	1	—	—	—	—	—	—	—	—	3439 154
4-10-0	**TRANSMISSION PARKING LOCK**														
4-10-8	SHAFT, Trans. Park Sprag			1	1	1	1	1	1	1	1	1	1	1	2466 892
4-10-10	SPRAG, Trans. Park Lock			1	1	1	1	1	1	1	1	1	1	1	2801 157
4-10-11	SPRING, Trans. Park Sprag			1	1	1	1	1	1	1	1	1	1	1	2466 909
4-10-32	PLUG, Trans. Park Sprag			1	1	1	1	1	1	1	1	1	1	1	2538 042
4-10-33	SNAP-RING, Park Sprag Plug			1	1	1	1	1	1	1	1	1	1	1	2538 034
4-10-35	ROD, Trans. Park Sprag, Except														
	340 Eng.	70		1	—	1	—	—	—	—	—	—	—	—	2466 906
	198, 225, 318 Eng., Std.	70		—	1	—	1	1	1	1	—	—	—	—	2466 906
	225, 318 Eng., H.D.	70		—	—	—	1	1	1	1	—	—	—	—	2466 894
	340, 383, 426, 440 Eng.	70	8	1	1	1	1	1	1	1	1	1	1	1	2466 894
	Std.	1971		1	1	1	1	1	1	1	—	—	—	—	2466 906
	Heavy Duty	1971		1	1	1	1	1	1	1	—	—	—	—	2466 894
	All	1971	8	—	—	—	—	—	—	—	1	1	1	1	2466 894
4-10-40	E-Ring, Trans. Park Sprag Retainer			1	1	1	1	1	1	1	1	1	1	1	1626 749
4-19-0	**PARKING BRAKE LEVER RETURN SPRING**														
4-19-1	SPRING			1	—	1	—	—	—	—	—	—	—	—	1556 693
4-23-0	**PARKING BRAKE CABLE**														
4-23-1	CABLE, Front	70		1	—	—	—	—	—	—	—	—	—	—	2823 501
	V, 2D.H.T.	71		1	—	—	—	—	—	—	—	—	—	—	3575 578
	V, Fast-Back, 4D.	71		1	—	—	—	—	—	—	—	—	—	—	3575 576
	All	70		—	—	1	—	—	—	—	—	—	—	—	2534 966
	L, 2D.H.T., 4D.	71		—	—	1	—	—	—	—	—	—	—	—	3575 578
	L, Fast-Back	71		—	—	1	—	—	—	—	—	—	—	—	3575 576
	All, B	70		—	1	—	—	—	—	—	—	—	—	—	2950 124
	All, J	70		—	1	—	—	—	—	—	—	—	—	—	2996 056
	All	70		—	—	—	1	1	—	—	—	—	—	—	2823 518
	All, Up to March	71		—	1	—	—	—	—	—	—	—	—	—	3467 911
	All, after March	71		—	1	—	—	—	—	—	—	—	—	—	= 3575 581
	All	71		—	—	—	1	1	—	—	—	—	—	—	= 3575 588
	Except Sta. Wgn.	70		—	—	—	—	—	1	—	—	—	—	—	2996 058
	Sta. Wgn.	70		—	—	—	—	—	1	—	—	—	—	—	2996 059
	All	70		—	—	—	—	—	—	1	—	—	—	—	2996 059
	Except Sta. Wgn.	70	8	—	—	—	—	—	—	—	1	1	1	—	2996 060
	Sta. Wgn.	70	8	—	—	—	—	—	—	—	—	—	1	—	2996 059
	All	70	8	—	—	—	—	—	—	—	—	—	—	1	2996 060
	Except Sta. Wgn.	71		—	—	—	—	—	1	—	—	—	—	—	3575 141
	Sta. Wgn.	71		—	—	—	—	—	1	—	—	—	—	—	3575 142
	All	71		—	—	—	—	—	—	1	—	—	—	—	3575 142
	Except Sta. Wgn.	71	8	—	—	—	—	—	—	—	1	1	1	—	3575 143
	Sta. Wgn.	71	8	—	—	—	—	—	—	—	—	—	1	—	3575 142
	All	71	8	—	—	—	—	—	—	—	—	—	—	1	3575 143
	CABLE, INTER., B	71		—	1	—	—	—	—	—	—	—	—	—	3467 976

CARLINES J - Challenger, B - Barracuda, V - Valiant, L - Dart, R - Belvedere - Satellite, W - Coronet - Charger, P - Plymouth, D - Dodge, C - Chrysler, Y - Imperial

AR Indicates use as required.

# Indicates parts not listed in any previous parts book.

Numerals in parentheses ( ) refer to notes.

★ Indicates change or addition.

Printed in U.S.A. January 1972

4-23-0 PARKING BRAKE CABLE Cont'd.

CODE	PART NAME	ENG. TYPE OR CU.IN.	V 1-2	B J 1-2	L 1-2	R 1-2	W 1-2	P 1-2	D 1-2	C 1	C 2	C 3	Y 1	PART NUMBER
4-23-1	CABLE Cont'd.													
	J	71	—	1	—	—	—	—	—	—	—	—	—	3467 977
	2 D.H.T., Fast-Back, up to March	71	—	—	—	1	1	—	—	—	—	—	—	3467 906
	After March	71	—	—	—	1	1	—	—	—	—	—	—	= 3575 584
	4D. and Sta. Wgn., up to March	71	—	—	—	1	1	—	—	—	—	—	—	3467 905
	After March	71	—	—	—	1	1	—	—	—	—	—	—	= 3575 583
	CABLE, Rear, Rt.	70	1	—	1	—	—	—	—	—	—	—	—	2996 072
	All	70 6	—	1	—	—	—	—	—	—	—	—	—	3420 136
	318, 383 Eng. Std.	70 8	—	1	—	—	—	—	—	—	—	—	—	3420 136
	318, 383 Eng., H.D.	70 8	—	1	—	—	—	—	—	—	—	—	—	3420 137
	w/o Disc Brakes	70 8	—	1	—	—	—	—	—	—	—	—	—	3420 137
	w/Disc Brakes	70 8	—	1	—	—	—	—	—	—	—	—	—	3420 136
	225, 318, 383 Eng., Std.	70	—	—	—	1	1	—	—	—	—	—	—	3420 135
	225, 318, 383 Eng., H.D.	70	—	—	—	1	1	—	—	—	—	—	—	3420 134
	R-M, W-M, 383 Eng., w/o Disc Brakes	70 8	—	—	—	1	1	—	—	—	—	—	—	3420 134
	R-M, W-M, 383 Eng., w/Disc Brakes	70 8	—	—	—	1	1	—	—	—	—	—	—	3420 135
	426, 440 Eng., w/o Disc Brakes	70 8	—	—	—	1	1	—	—	—	—	—	—	3420 134
	426, 440 Eng., w/Disc Brakes	70 8	—	—	—	1	1	—	—	—	—	—	—	3420 135
	Police and Taxi, Std.	70	—	—	—	1	1	—	—	—	—	—	—	3420 134
	Police, w/Disc Brakes	70	—	—	—	1	1	—	—	—	—	—	—	3420 135
	Sta. Wgn., All	70	—	—	—	1	1	—	—	—	—	—	—	3420 134
	All	70	—	—	—	—	—	1	1	1	1	1	1	3420 102
	CABLE, Rear, Lt.	70	1	—	1	—	—	—	—	—	—	—	—	2808 596
	All	70 6	—	1	—	—	—	—	—	—	—	—	—	3420 142
	318, 383 Eng., Std.	70 8	—	1	—	—	—	—	—	—	—	—	—	3420 142
	318, 383 Eng., H.D.	70 8	—	1	—	—	—	—	—	—	—	—	—	3420 101
	w/o Disc Brakes	70 8	—	1	—	—	—	—	—	—	—	—	—	3420 101
	w/Disc Brakes	70 8	—	1	—	—	—	—	—	—	—	—	—	3420 142
	225, 318, 383 Eng., Std.	70	—	—	—	1	1	—	—	—	—	—	—	2808 594
	225, 318, 383 Eng., H.D.	70	—	—	—	1	1	—	—	—	—	—	—	3420 141
	R-M, W-M, 383 Eng., w/o Disc Brakes	70 8	—	—	—	1	1	—	—	—	—	—	—	3420 141
	R-M, W-M, 383 Eng., w/Disc Brakes	70 8	—	—	—	1	1	—	—	—	—	—	—	2808 594
	426, 440 Eng., w/o Disc Brakes	70 8	—	—	—	1	1	—	—	—	—	—	—	3420 141
	426, 440 Eng., w/Disc Brakes	70 8	—	—	—	1	1	—	—	—	—	—	—	2808 594
	Police and Taxi, Std.	70	—	—	—	1	1	—	—	—	—	—	—	3420 141
	Police, w/Disc Brakes	70	—	—	—	1	1	—	—	—	—	—	—	2808 594
	Sta. Wgn., All	70	—	—	—	1	1	—	—	—	—	—	—	3420 141
	All	70	—	—	—	—	—	1	1	1	1	1	1	3420 101
	CABLE, REAR, Rt.													
	Std.	71 6	1	—	1	—	—	—	—	—	—	—	—	3467 942
	H.D.	71 6	1	—	1	—	—	—	—	—	—	—	—	3467 943
	All	71 8	1	—	1	—	—	—	—	—	—	—	—	3467 943
	All	71	—	—	—	—	—	1	1	1	1	1	1	3467 947
	CABLE, REAR, Lt.													
	All	71	1	—	1	—	—	—	—	—	—	—	—	3467 941
	All	71	—	—	—	—	—	1	1	1	1	1	1	3467 946
	CABLE, REAR, All	71 6	—	2	—	—	—	—	—	—	—	—	—	3467 944
	w/o H.D., w/Disc Brakes	71 8	—	2	—	—	—	—	—	—	—	—	—	3467 944
	w/H.D., w/o Disc Brakes.	71 8	—	2	—	—	—	—	—	—	—	—	—	3467 945
	w/o H.D., w/Disc Brakes, Except Sta. Wgn.	71	—	—	—	2	2	—	—	—	—	—	—	3467 944
	w/H.D., w/o Disc Brakes, Except Sta. Wgn.	71	—	—	—	2	2	—	—	—	—	—	—	3467 945
	Sta. Wgn.	71	—	—	—	2	2	—	—	—	—	—	—	3467 945
	Police and Taxi	71	—	—	—	2	2	—	—	—	—	—	—	3467 945
	w/Trailer Tow Pkg.	71	—	—	—	2	2	—	—	—	—	—	—	3467 945

CARLINES J - Challenger, B - Barracuda, V - Valiant, L - Dart, R - Belvedere - Satellite, W - Coronet - Charger, P - Plymouth, D - Dodge, C - Chrysler, Y - Imperial

AR Indicates use as required.

Numerals in parentheses ( ) refer to notes.

# Indicates parts not listed in any previous parts book.

★ Indicates change or addition.

Printed in U.S.A. January 1972

CODE	PART NAME	ENG. TYPE OR CU.IN.	V 1-2	B J 1-2	L 1-2	R 1-2	W 1-2	P 1-2	D 1-2	C 1	C 2	C 3	Y 1	PART NUMBER
4-23-0	**PARKING BRAKE CABLE Cont'd.**													
4-23-2	BRACKET, Front Floor Pan Cable Guide	70	—	—	—	1	1	1	1	1	1	1	1	2574 185
	Front Floor Pan Cable Guide	71	—	—	—	—	—	1	1	1	1	1	1	2574 185
	Rear Side Rail Cable	71	—	2	—	2	2	—	—	—	—	—	—	3570 345
	Center Floor Pan Brake Cable		—	1	—	—	—	—	—	—	—	—	—	3569 625
4-23-3	RETAINER, Cable Lower	70	1	1	1	1	1	1	1	1	1	1	1	2071 132
	Cable Lower	71	1	1	1	1	1	1	1	1	1	1	1	# 3467 939
	Cable at Lever	70	—	—	—	—	—	1	1	1	1	1	1	1946 468
	Cable at Lever	71	—	—	—	—	—	1	1	1	1	1	—	# 3467 924
	Cable Upper	71	—	1	—	1	1	—	—	—	—	—	—	# 3467 924
4-23-4	SEAL, Front Floor Pan Cable		—	—	—	—	—	1	1	1	1	1	1	2259 118
4-23-6	NUT, Cable Adjusting		—	1	—	—	—	—	—	—	—	—	—	6028 727
			1	—	1	1	1	1	1	1	1	1	1	6023 997
4-23-7	SUPPORT, Rear Side Rail Cable	70	1	1	1	1	1	1	1	1	1	1	1	2251 398
	Rear Side Rail Cable	71	1	—	1	—	—	1	1	1	1	1	1	2251 398
4-23-15	EQUALIZER, Cable	70	1	1	1	1	1	1	1	1	1	1	1	2401 768
		71	1	—	1	—	—	1	1	1	1	1	1	2401 768
4-23-24	PIN, Cable Upper Clevis		1	—	1	—	—	—	—	—	—	—	—	2265 269
			—	1	—	1	1	—	—	—	—	—	—	6025 994
4-23-28	CLAMP, Brake Cable	70	1	1	1	1	1	—	—	—	—	—	—	2534 926
		71	1	—	1	—	—	—	—	—	—	—	—	2534 926
	CLIP, Rear Cable To Cable Support		2	2	2	2	2	2	2	2	2	2	2	2201 467
	Cable Rear	70	1	1	1	1	1	1	1	1	1	1	1	2534 931
		71	1	—	1	—	—	1	1	1	1	1	1	2534 931
	Brake Cable, 426, and 440 Eng., w/High Performance		—	1	—	1	1	—	—	—	—	—	—	2534 931
4-23-36	CONNECTOR, Brake Cable	71	—	2	—	2	2	—	—	—	—	—	—	2071 094
	Front To Inter. Cable	71	—	1	—	1	1	—	—	—	—	—	—	3467 950
4-23-37	HOOK, Inter. Cable Middle	71	—	1	—	—	—	—	—	—	—	—	—	3467 903
		71	—	—	—	1	1	—	—	—	—	—	—	# 3575 592
	Inter. Cable Adjusting	71	—	1	—	—	—	—	—	—	—	—	—	3467 918
		71	—	—	—	1	1	—	—	—	—	—	—	# 3575 589
4-23-39	SCREW, Cable Clip, 426, 440 Eng.		—	1	—	1	1	—	—	—	—	—	—	3432 494
4-23-46	GROMMET, Dash Panel Cable Hole	70	1	—	1	1	1	—	—	—	—	—	—	2401 772
		71	1	1	1	1	1	—	—	—	—	—	—	2401 772
4-25-0	**PARKING BRAKE LEVER (FOOT OPERATED)**													
4-25-1	LEVER	70	—	1	—	—	—	—	—	—	—	—	—	2950 301
	All	70	—	—	—	1	1	—	—	—	—	—	—	2534 952
	All	70	—	—	—	—	—	1	1	1	1	1	—	2950 320
	All	70	8	—	—	—	—	—	—	—	—	—	1	2950 315
	SCREW, w/WASHER, Lever Mounting	70	—	1	—	1	1	—	—	—	—	—	—	6025 346
	BOLT, Lever Pedal Pivot	70	—	—	—	—	—	1	1	1	1	1	1	6025 287
	LEVER, All		—	1	—	1	1	—	—	—	—	—	—	3467 922
	All	71	—	—	—	—	—	1	1	1	1	1	—	2996 095
	All	71	8	—	—	—	—	—	—	—	—	—	1	3467 930
4-25-3	KNOB, Lever Release		—	1	—	1	1	—	—	—	—	—	—	2823 521
		70	—	—	—	—	—	1	1	1	1	1	—	2950 102
	All	71	—	1	—	1	1	1	1	1	1	1	—	2823 521
4-25-6	PAD, Pedal	70	—	1	—	—	—	—	—	—	—	—	—	2996 053
		70	—	—	—	1	1	—	—	—	—	—	—	2534 937
		70	—	—	—	—	—	1	1	1	1	1	1	2467 514
	All	71	—	1	—	1	1	—	—	—	—	—	—	2996 053
	All	71	—	—	—	—	—	1	1	1	1	1	1	2467 514
4-25-7	SPRING, Pedal Return	70	—	—	—	—	—	1	1	1	1	1	1	2409 462
	Auxiliary Release Lever		8	—	—	—	—	—	—	—	—	—	1	2409 188
	All	71	—	1	—	1	1	—	—	—	—	—	—	3467 916
	All	71	—	—	—	—	—	1	1	1	1	1	1	3467 515
4-25-9	BUMPER, Pedal Stop	70	—	1	—	—	—	—	—	—	—	—	—	2467 567

CARLINES: J - Challenger, B - Barracuda, V - Valiant, L - Dart, R - Belvedere - Satellite, W - Coronet - Charger, P - Plymouth, D - Dodge, C - Chrysler, Y - Imperial

AR Indicates use as required.

# Indicates parts not listed in any previous parts book.

Numerals in parentheses ( ) refer to notes.

★ Indicates change or addition.

Printed in U.S.A. January 1972

CODE	PART NAME	ENG. TYPE OR CU.IN.	V 1-2	B J 1-2	L 1-2	R 1-2	W 1-2	P 1-2	D 1-2	C 1	C 2	C 3	Y 1	PART NUMBER
4-25-0	**PARKING BRAKE LEVER (FOOT OPERATED) Cont'd.**													
4-25-9	BUMPER Cont'd.													
		70	—	—	—	1	1	—	—	—	—	—	—	2883 508
			—	—	—	—	—	1	1	1	1	1	1	2467 515
	All	71	—	1	—	1	1	—	—	—	—	—	—	2467 567
4-25-10	BUSHING, Lever Release Rod	70	—	1	—	1	1	—	—	—	—	—	—	2467 571
	All	71	—	1	—	1	1	—	—	—	—	—	—	3467 923
			—	—	—	—	—	1	1	1	1	1	—	2950 312
4-25-14	ROD, Lever Release		—	—	—	—	—	1	1	1	1	1	—	2950 318
4-25-15	CLIP, Lever Release Rod		—	—	—	—	—	1	1	1	1	1	—	1137 669
	Release Rod To Vacuum Cylinder	8	—	—	—	—	—	—	—	—	—	—	1	1137 669
4-25-17	NUT, Lever Pedal Pivot		—	—	—	—	—	1	1	1	1	1	1	1927 232
	BOLT, Lever Pedal Pivot		—	—	—	—	—	1	1	1	1	1	1	6025 287
4-25-20	VALVE, Vacuum Release	8	—	—	—	—	—	—	—	—	—	—	1	2950 115
	Screw, w/WASHER	8	—	—	—	—	—	—	—	—	—	—	3	6026 895
4-25-22	CYLINDER, Lever Vacuum	8	—	—	—	—	—	—	—	—	—	—	1	2950 117
	NUT, w/WASHER Cylinder Mounting	8	—	—	—	—	—	—	—	—	—	—	2	6025 002
4-25-23	BEZEL, Pedal Pad													
		70	—	1	—	—	—	—	—	—	—	—	—	2996 051
		70	—	—	—	1	1	—	—	—	—	—	—	2534 938
	All		—	—	—	—	—	1	1	1	1	1	1	2467 513
	All	71	—	1	—	1	1	—	—	—	—	—	—	2996 051
4-25-26	HOSE, Vacuum Cylinder To Release Valve	8	—	—	—	—	—	—	—	—	—	—	AR	2448 620
	Release Valve To Surge Tank	8	—	—	—	—	—	—	—	—	—	—	AR	2448 620
	Surge Tank To Manifold	8	—	—	—	—	—	—	—	—	—	—	AR	2448 620
4-25-27	BRACKET, Valve Surge Tank	8	—	—	—	—	—	—	—	—	—	—	1	2405 465
4-25-28	TANK PACKAGE, Valve Surge	8	—	—	—	—	—	—	—	—	—	—	1	2421 268
4-25-32	GROMMET, Vacuum Hose	8	—	—	—	—	—	—	—	—	—	—	1	2277 767
4-26-0	**PARKING BRAKE OPERATING LEVER**													
4-26-1	LEVER, w/PIN, 10" Brakes		1	1	1	1	1	—	—	—	—	—	—	2881 660-1
	11" Brakes		—	1	—	1	1	1	1	1	1	1	1	2260 800-1
4-26-3	LEVER, w/PIN (Located In The Rear Wheel Brake)	6	1	—	1	—	—	—	—	—	—	—	—	3461 698-9
4-26-17	STRUT, LEVER, 9" Brakes	6	2	—	2	—	—	—	—	—	—	—	—	2781 581
	10" Brakes		1	—	1	—	—	—	—	—	—	—	—	2534 666-7
	10" Brakes		—	2	—	2	2	—	—	—	—	—	—	2409 823
	11" Brakes	70	—	1	—	1	1	1	1	1	1	1	1	2533 892-3
	11" Brakes	71	—	1	—	1	1	1	1	1	1	1	1	= 3580 750-1
4-26-18	SPRING, Lever Strut, 9" Brakes	6	2	—	2	—	—	—	—	—	—	—	—	2072 646
	10" Brakes		2	2	2	2	?	—	—	—	—	—	—	2533 822
	11" Brakes		—	2	—	2	2	2	2	2	2	2	2	2533 822
4-26-26	WASHER, Lever Pin		2	2	2	2	2	2	2	2	2	2	2	2072 643
4-26-27	LOCK, Lever Pin Washer		2	2	2	2	2	2	2	2	2	2	2	2072 644

NOTES

CARLINES J - Challenger, B - Barracuda, V - Valiant, L - Dart, R - Belvedere - Satellite, W - Coronet - Charger, P - Plymouth, D - Dodge, C - Chrysler, Y - Imperial

AR Indicates use as required.

# Indicates parts not listed in any previous parts book.

Numerals in parentheses ( ) refer to notes.

★ Indicates change or addition.

Printed in U.S.A.
January 1972

GROUP 5 - BRAKE-SERVICE

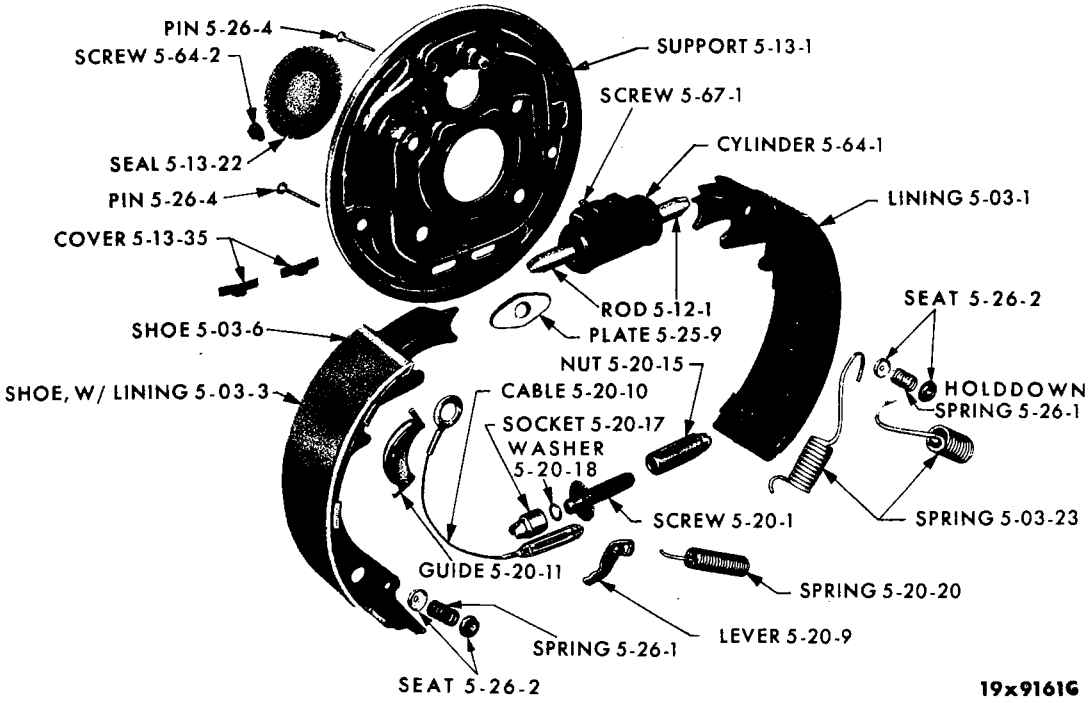

FRONT WHEEL BRAKE

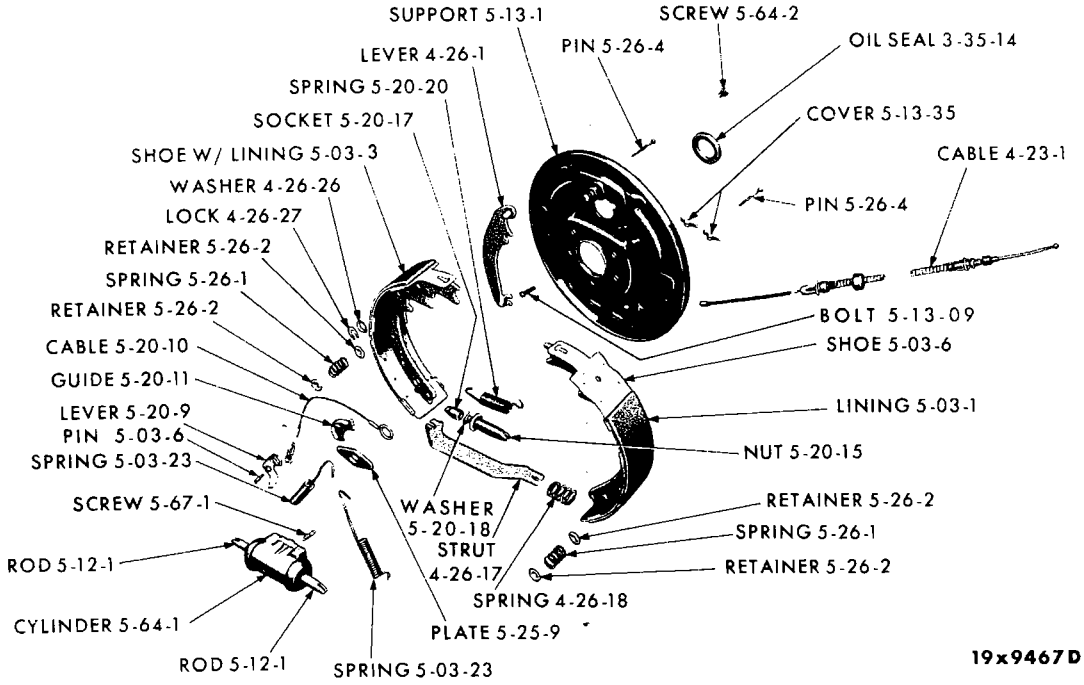

REAR WHEEL BRAKE

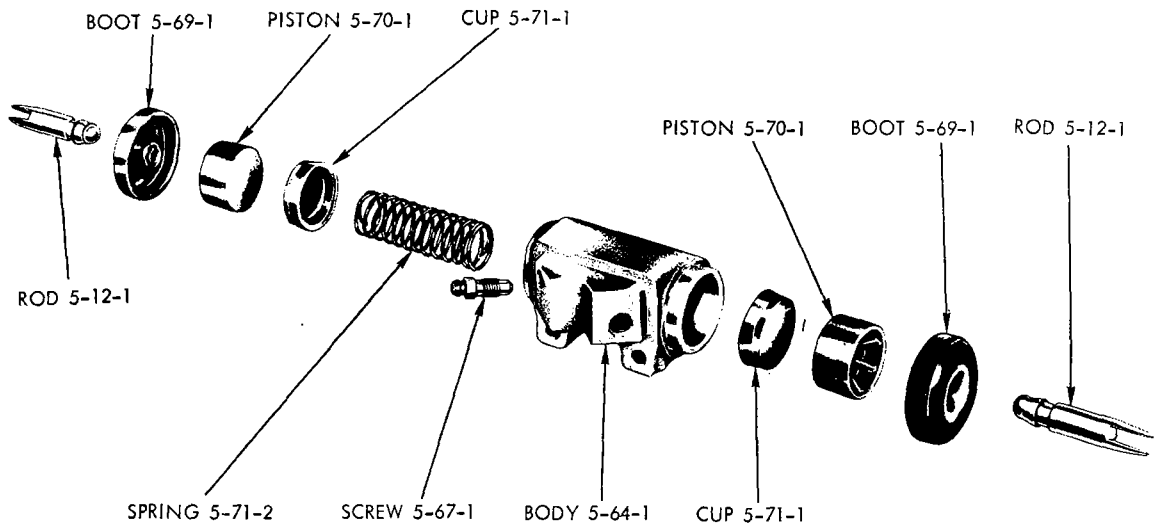

19a2879

FRONT WHEEL CYLINDER

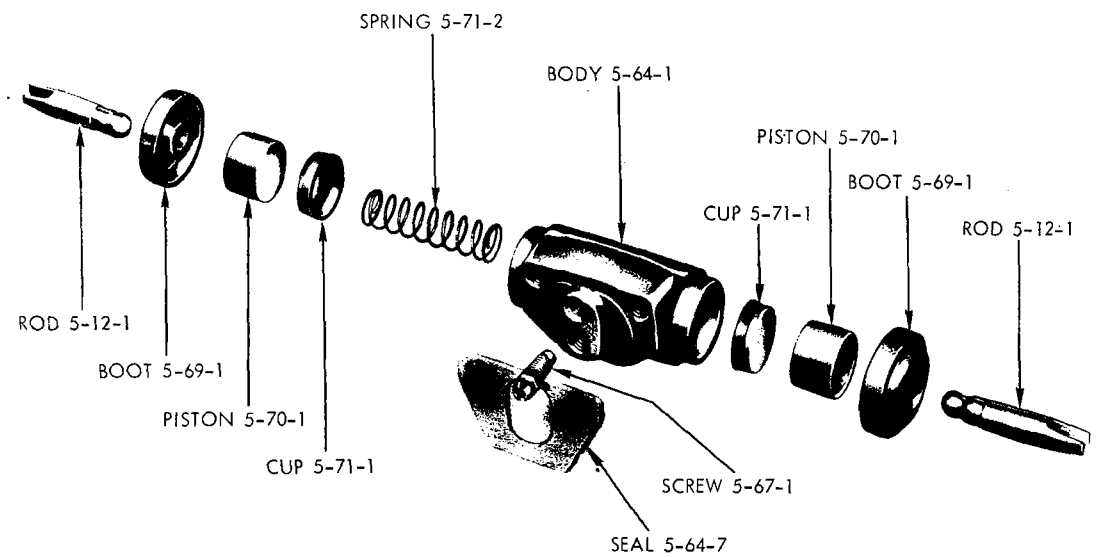

19a1099

REAR WHEEL CYLINDER

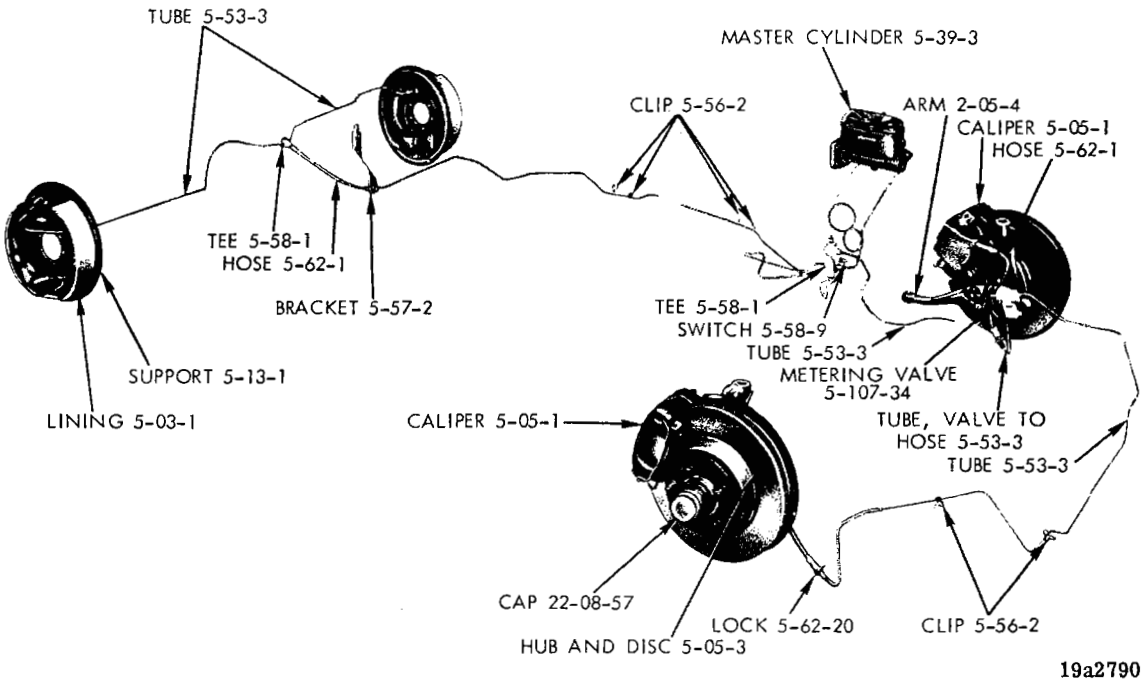

DISC BRAKE SYSTEM - PLYMOUTH, DODGE, CHRYSLER AND IMPERIAL

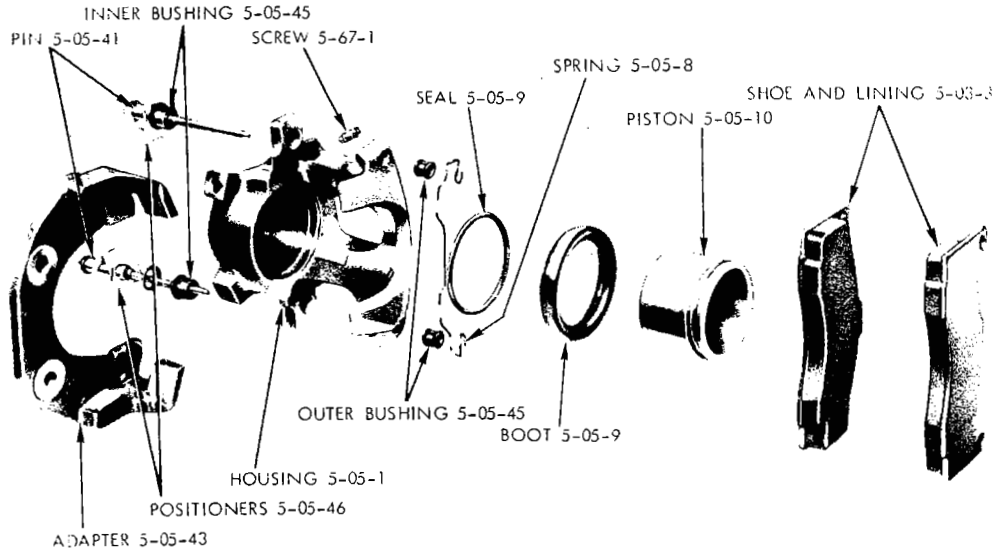

CALIPER DISC BRAKE - ALL EXCEPT VALIANT AND DART

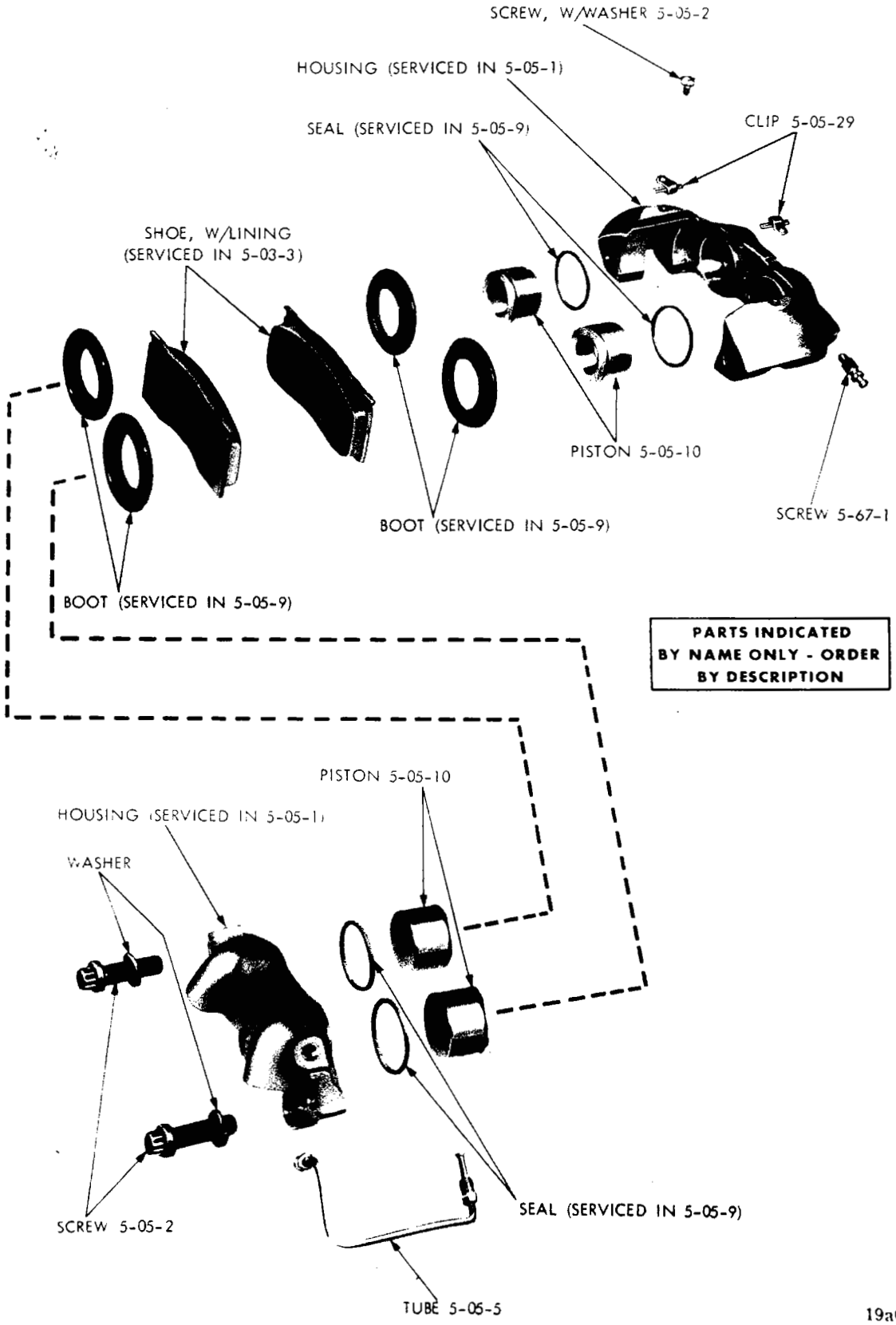

CALIPER DISC BRAKE - VALIANT AND DART

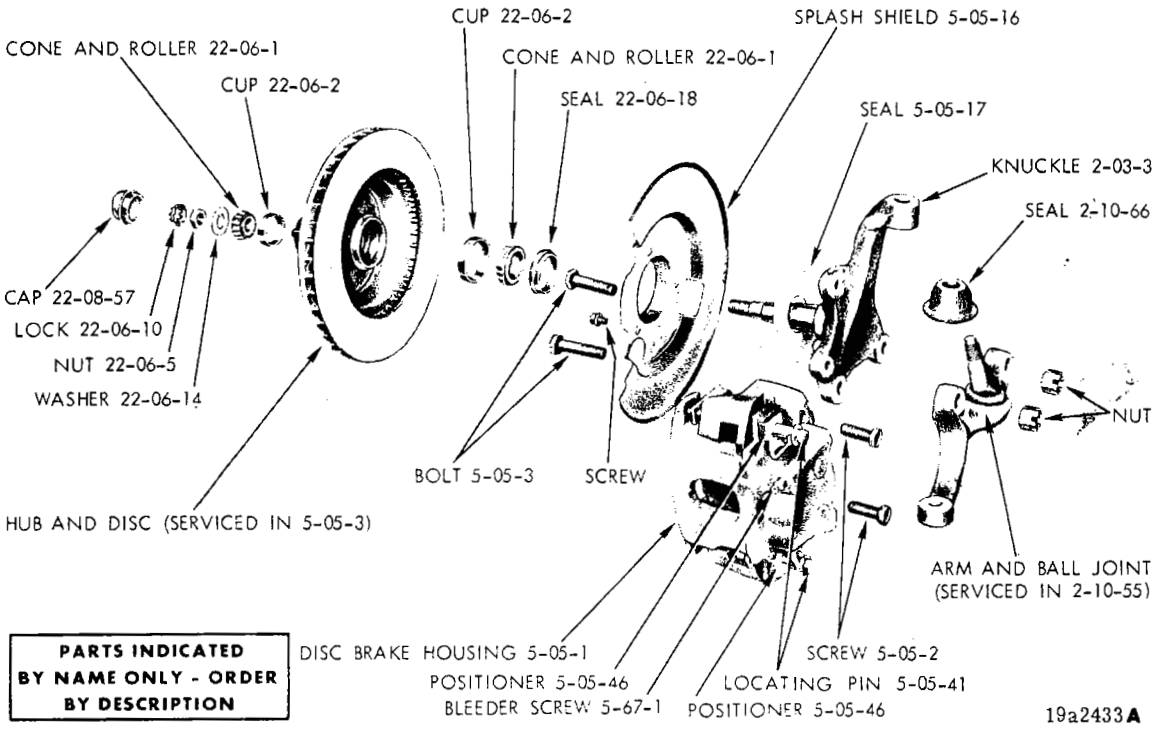

DISC BRAKE AND CALIPER - PLYMOUTH, DODGE, CHRYSLER AND IMPERIAL

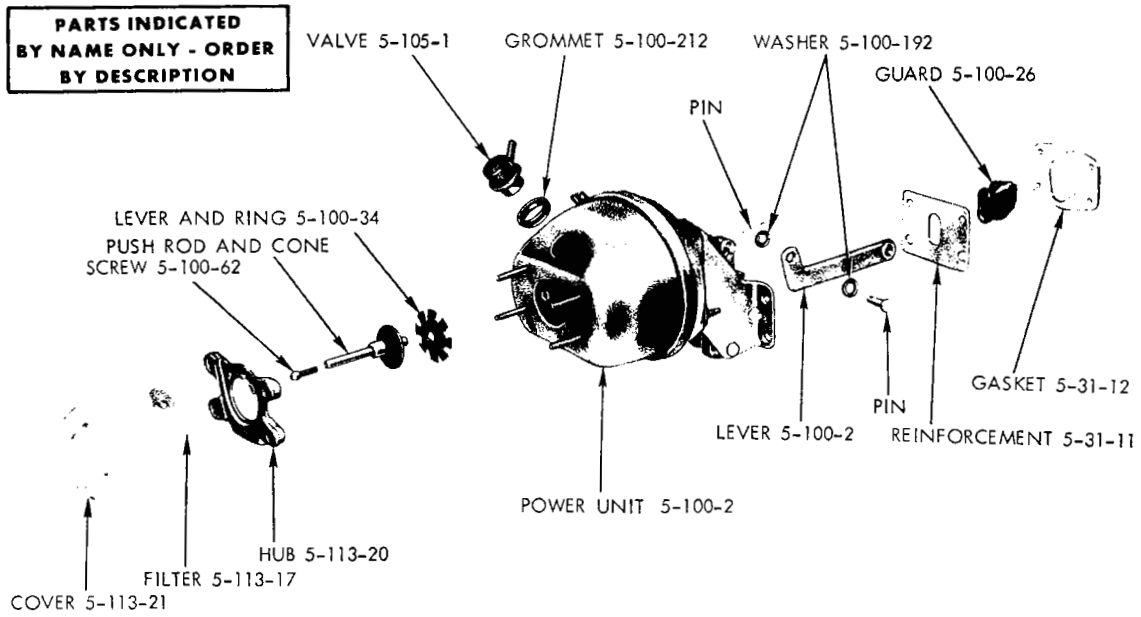

POWER BRAKE UNIT - VALIANT AND DART

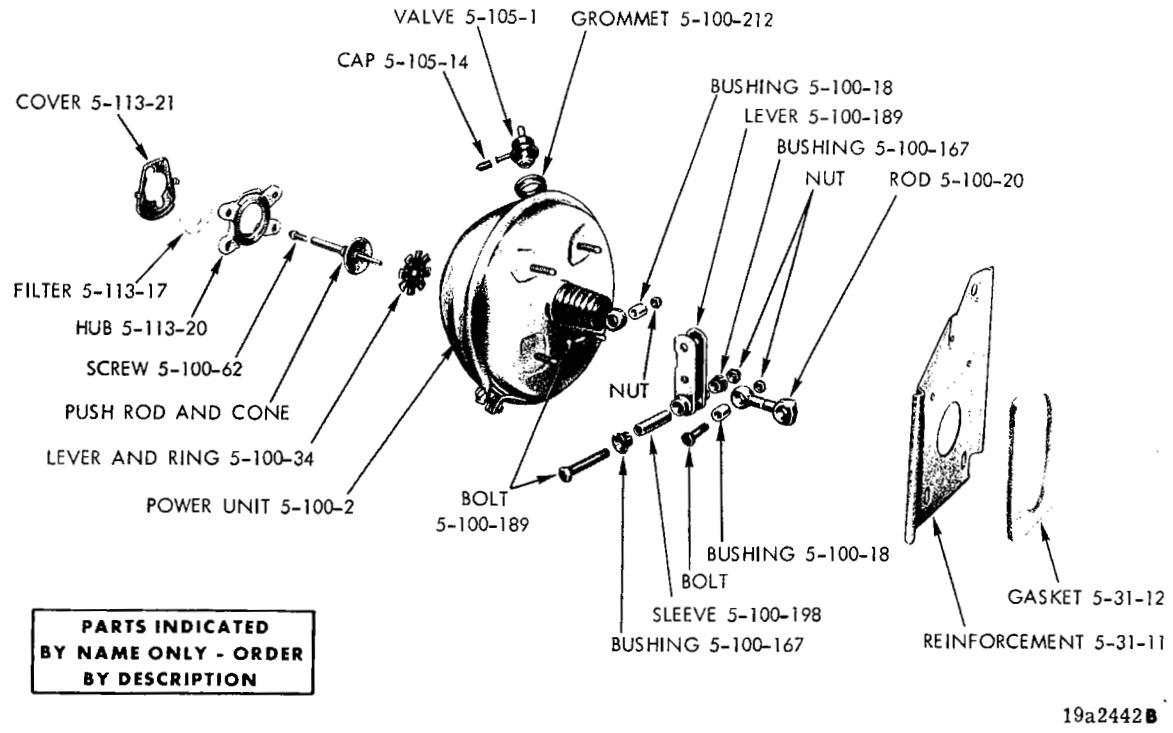

POWER BRAKE UNIT - BELVEDERE, CORONET, CHARGER, BARRACUDA AND CHALLENGER
(TYPICAL OF PLYMOUTH, DODGE, CHRYSLER AND IMPERIAL)

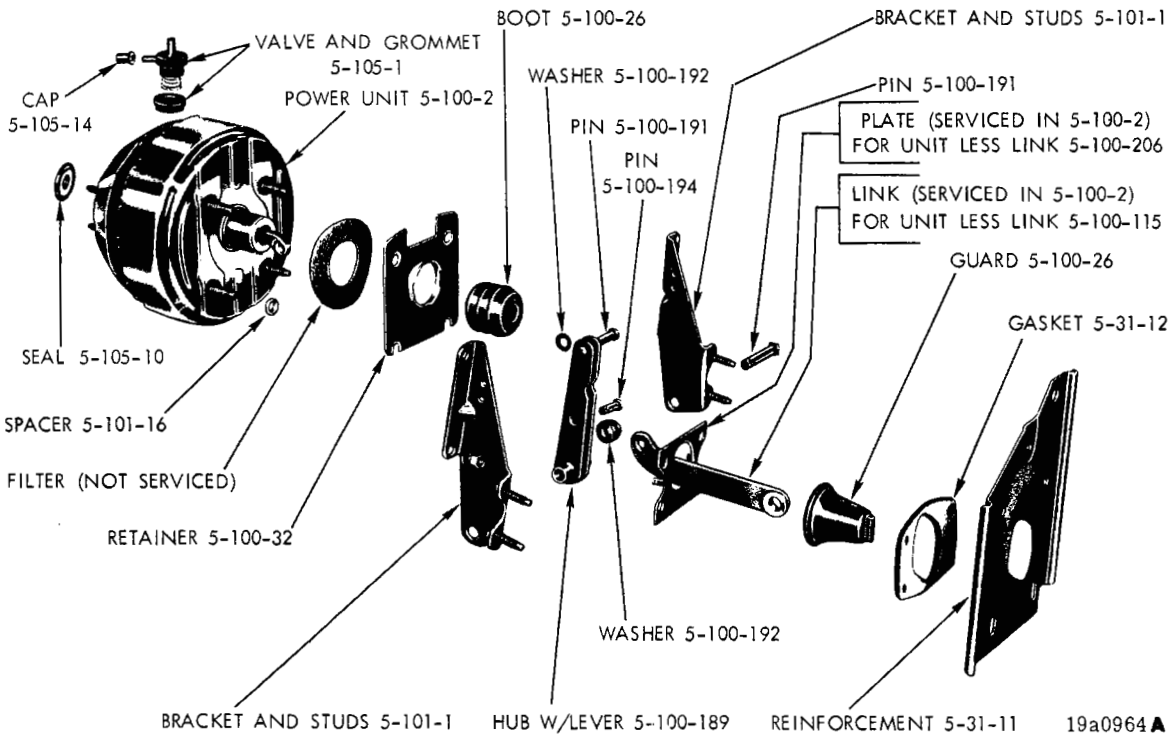

POWER BRAKE UNIT - BELVEDERE, CORONET, CHARGER, BARRACUDA
AND CHALLENGER (WITH 426 ENGINE)

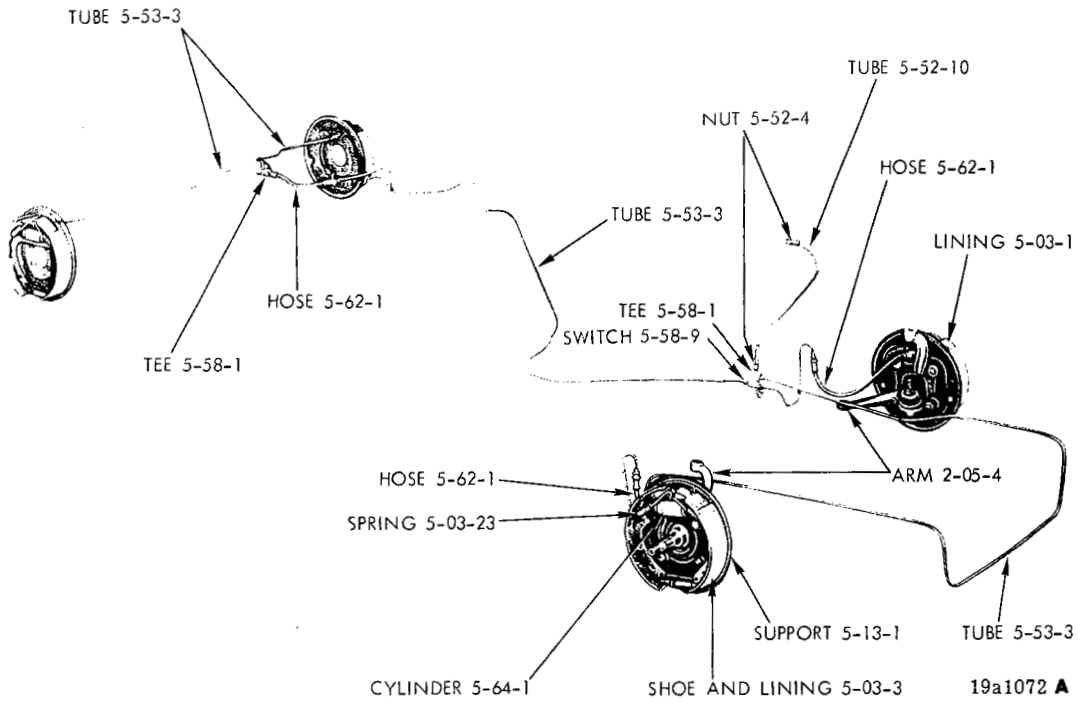

HYDRAULIC BRAKE SYSTEM - ALL

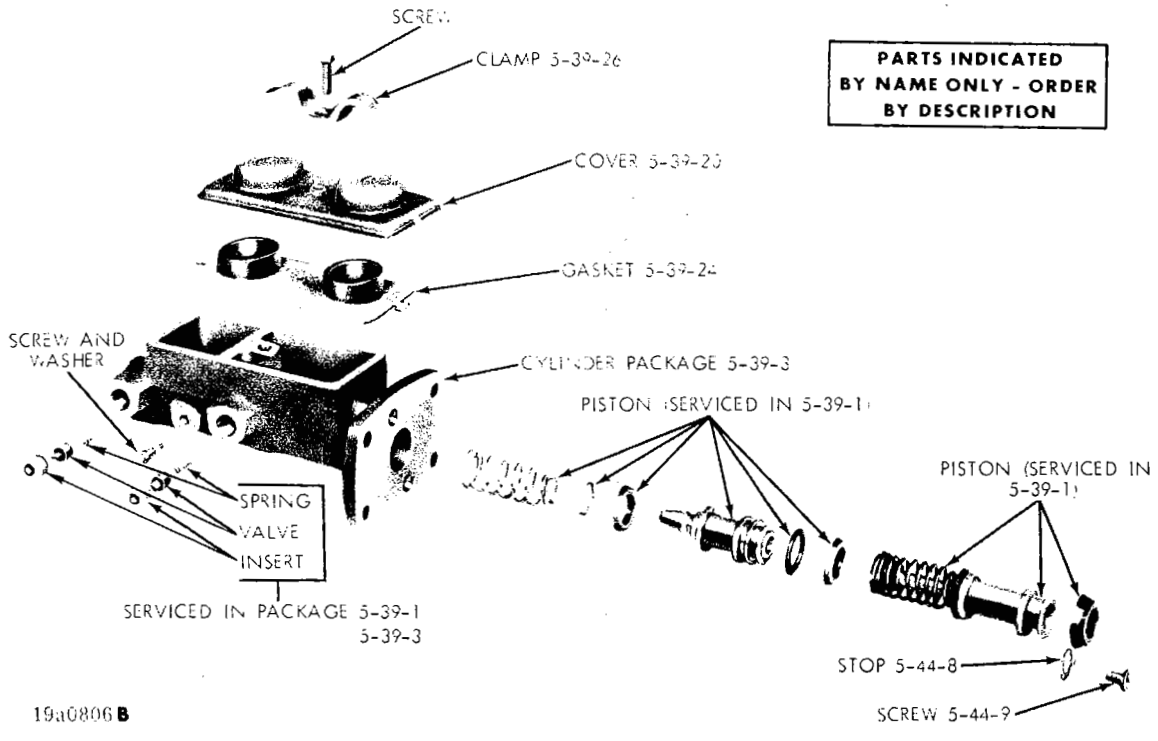

MASTER CYLINDER - WITH DRUM BRAKES (1970)

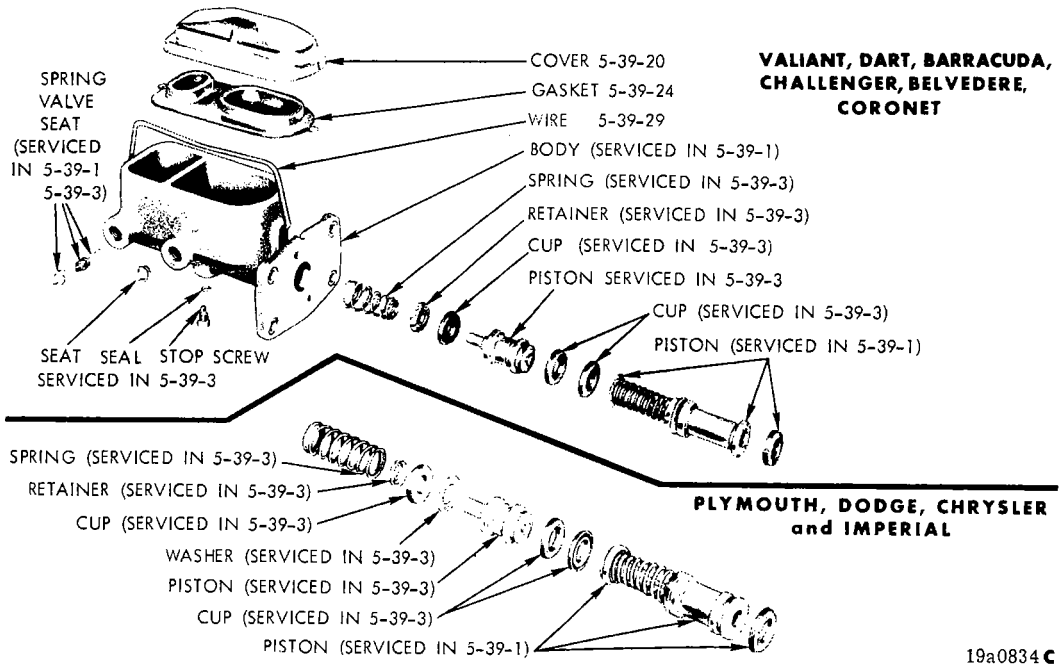

MASTER CYLINDER (WITH DISC BRAKES) - ALL (1970)

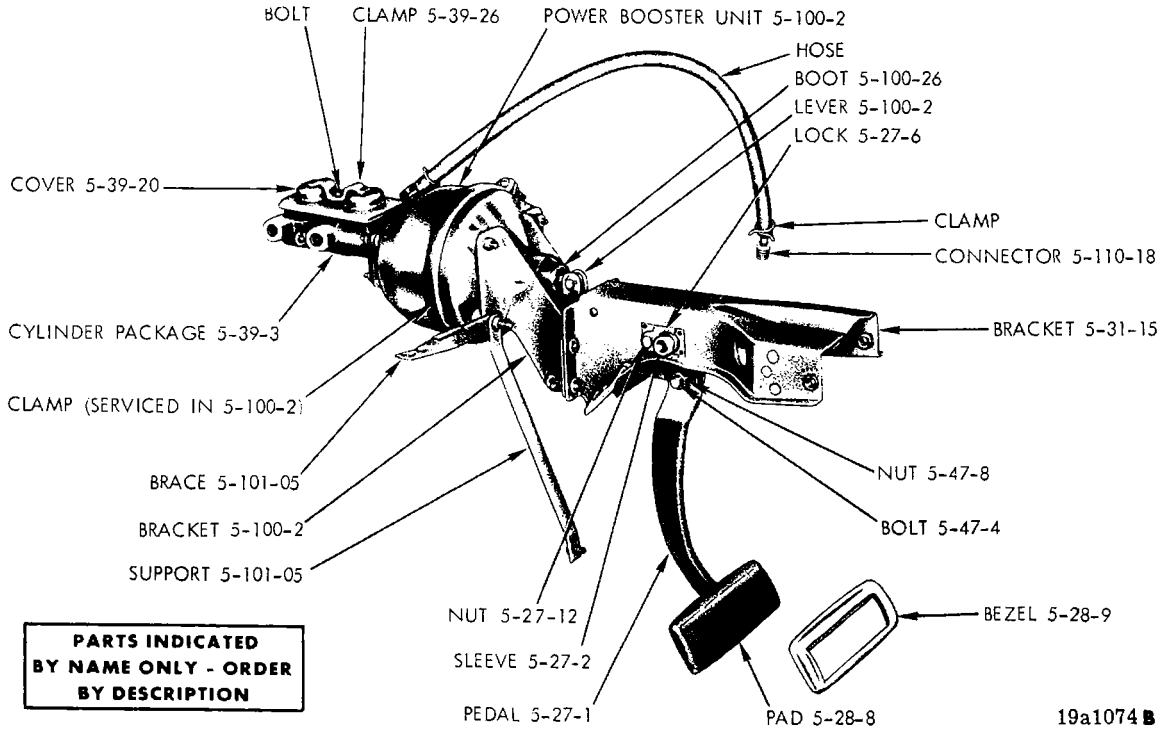

BRAKE PEDAL AND BRACKET (WITH BOOSTER) - VALIANT AND DART

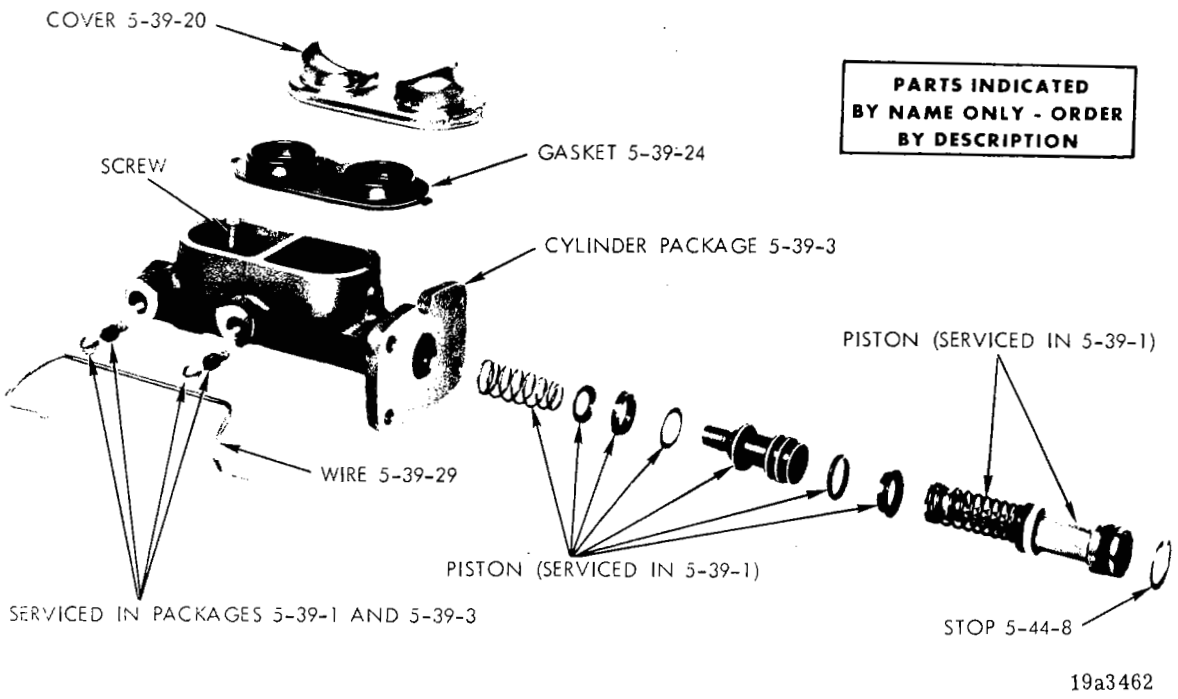

MASTER CYLINDER - WITH DRUM BRAKES (1971)

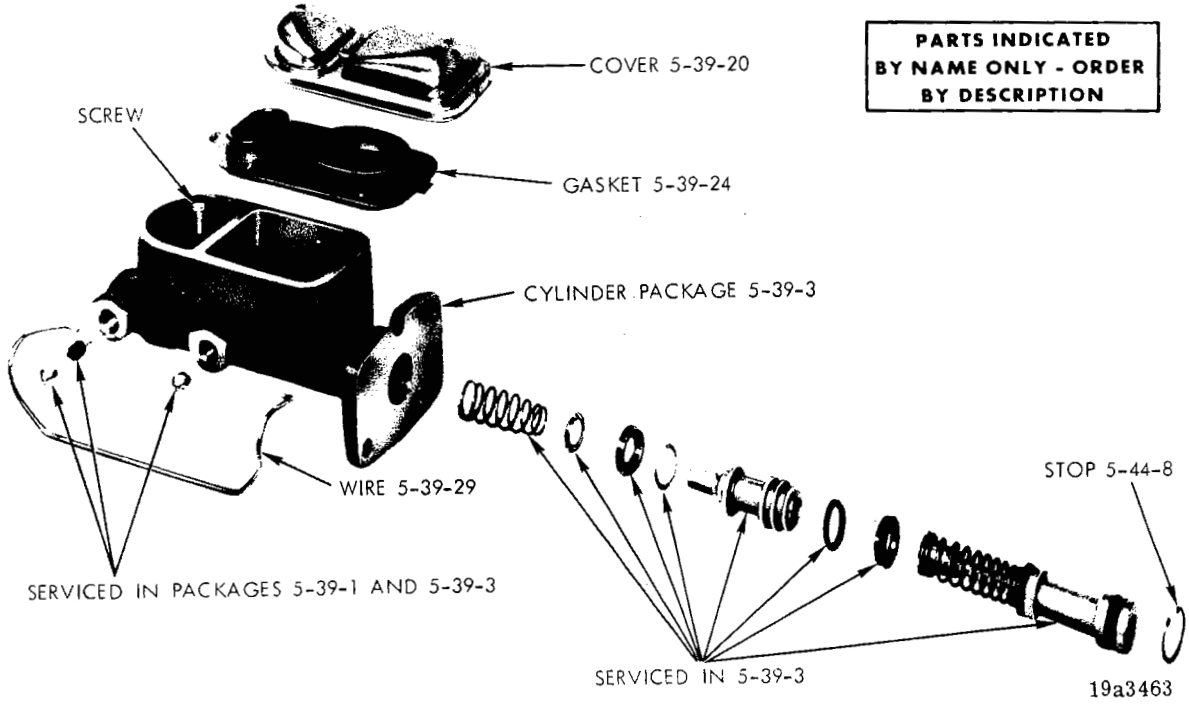

MASTER CYLINDER - WITH DISC BRAKES (1971)

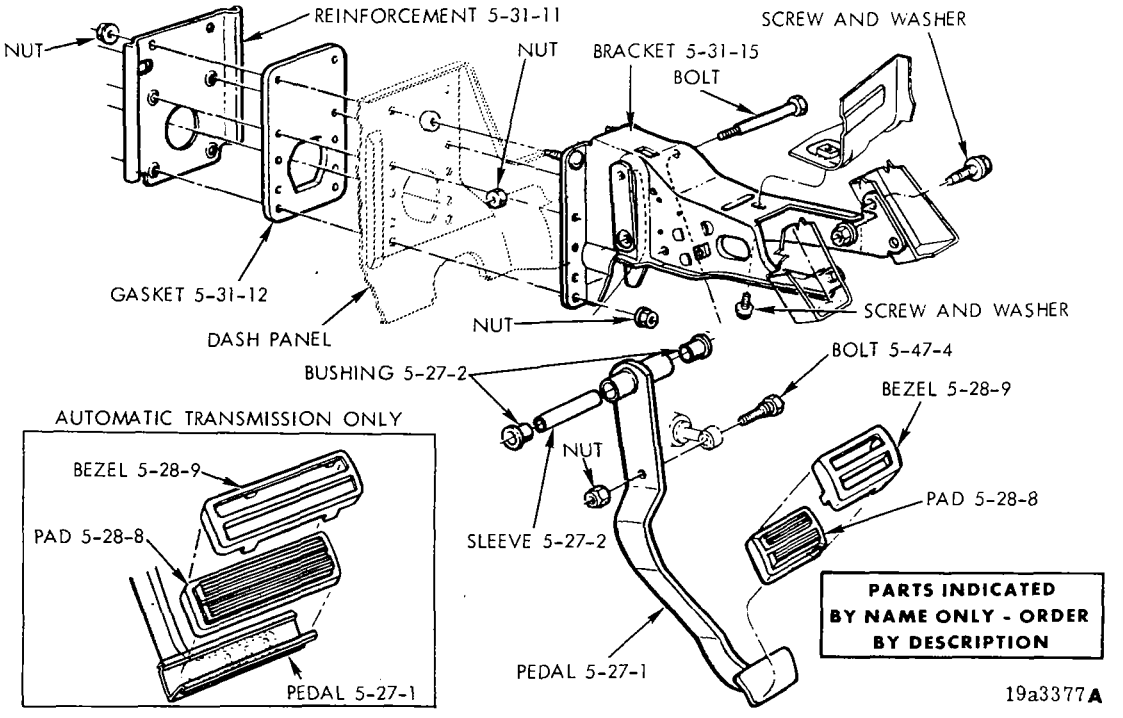

POWER BRAKE PEDAL AND BRACKET - PLYMOUTH, DODGE, CHRYSLER AND IMPERIAL

NOTES

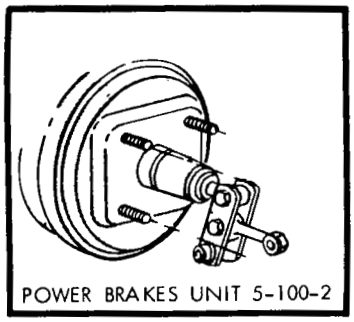

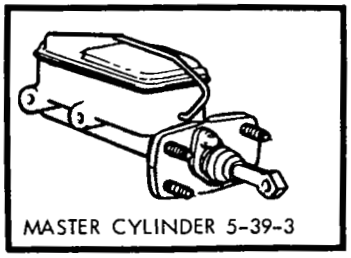

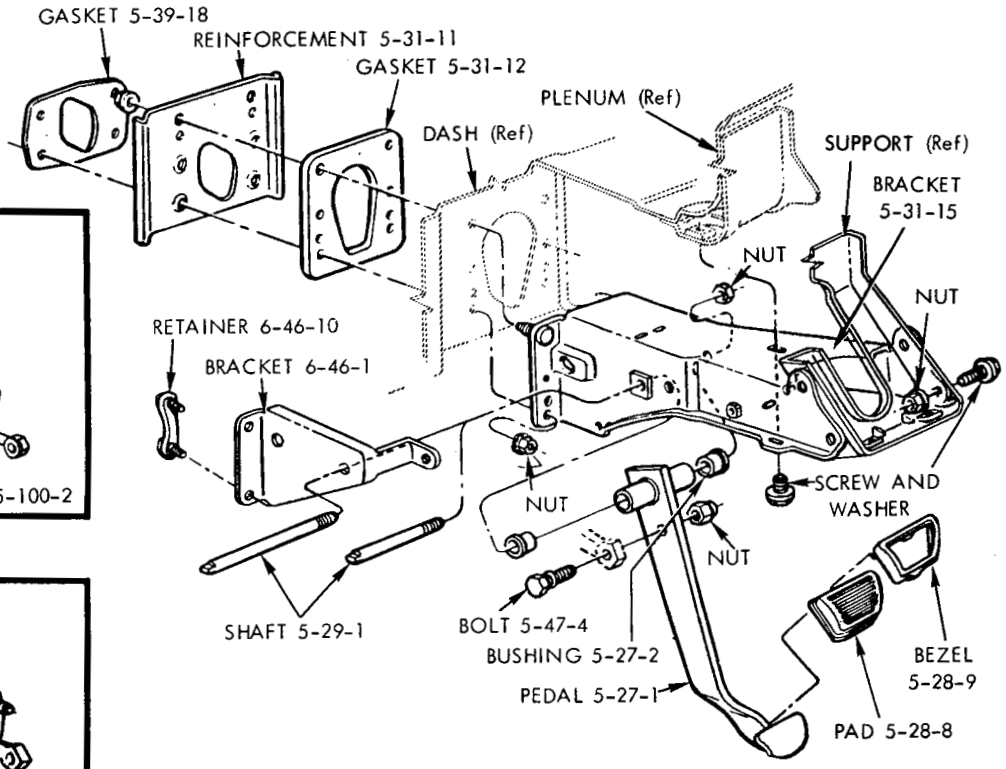

PARTS INDICATED BY NAME ONLY - ORDER BY DESCRIPTION

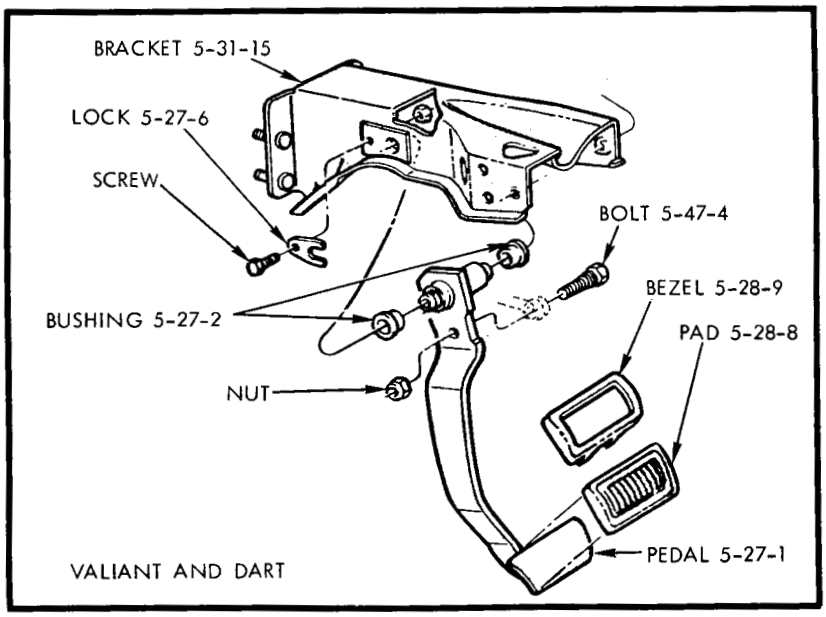

19a3378

BRAKE PEDAL AND LINKAGE - CORONET, BELVEDERE, BARRACUDA AND CHALLENGER

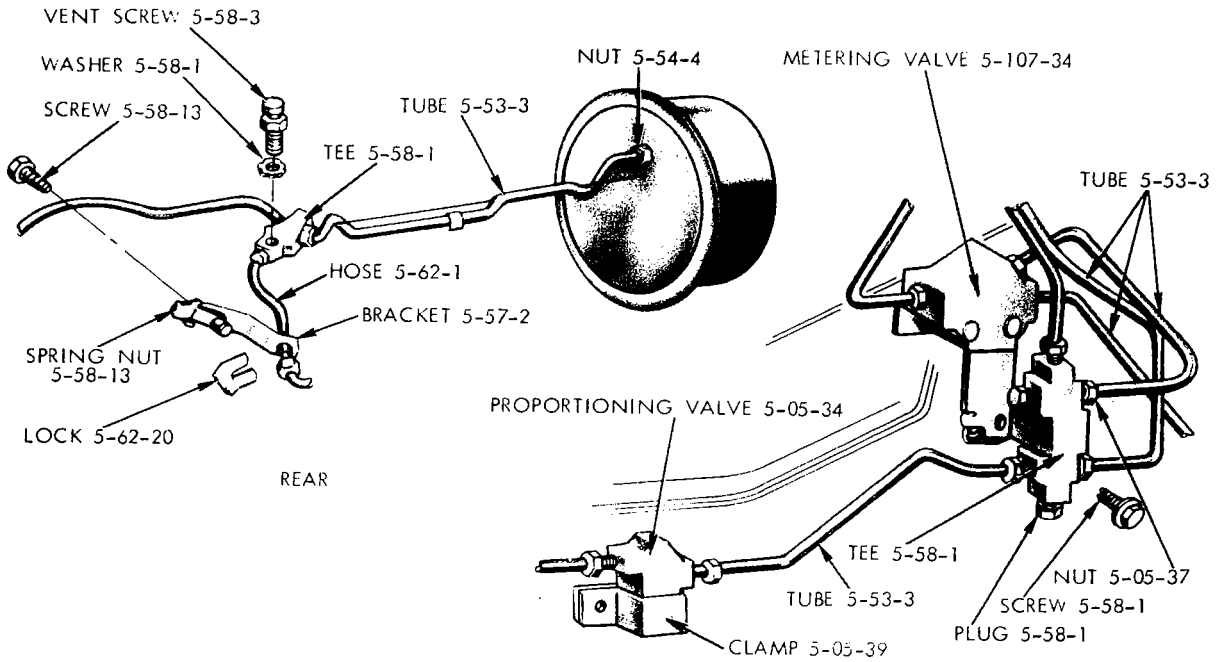

BELVEDERE AND CORONET (TYPICAL OF PLYMOUTH, DODGE, CHRYSLER AND IMPERIAL)

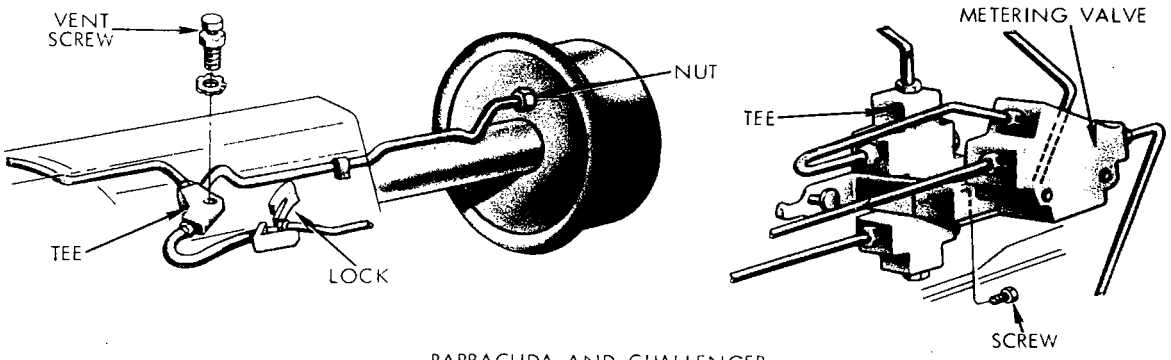

BARRACUDA AND CHALLENGER

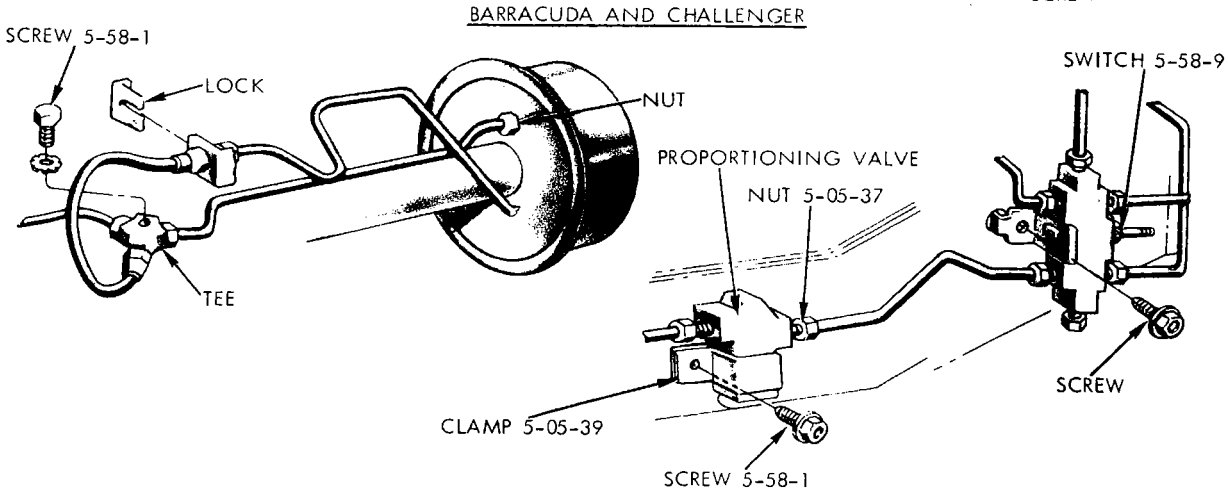

VALIANT AND DART

19a2897 A

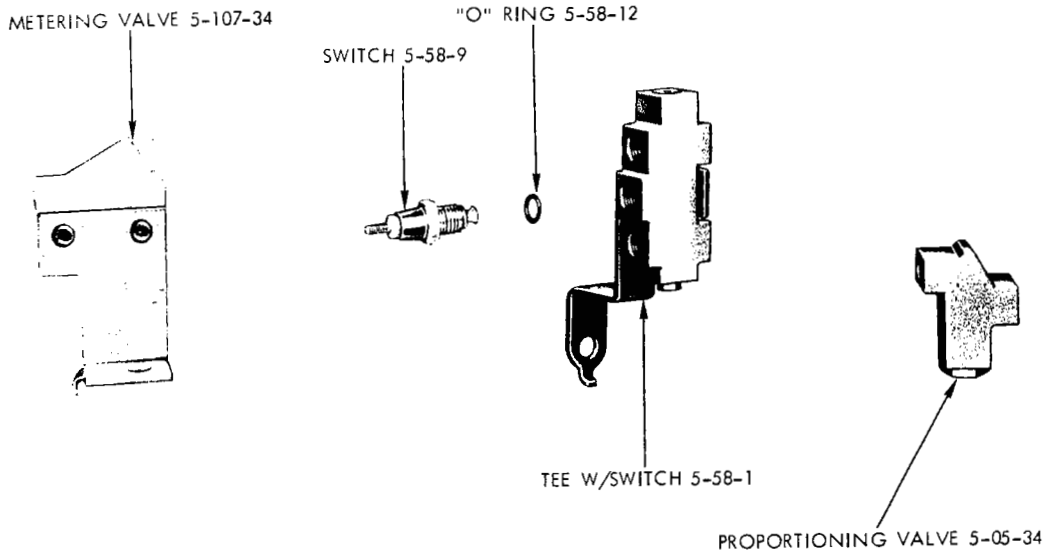

19a3087

TEE AND VALVES

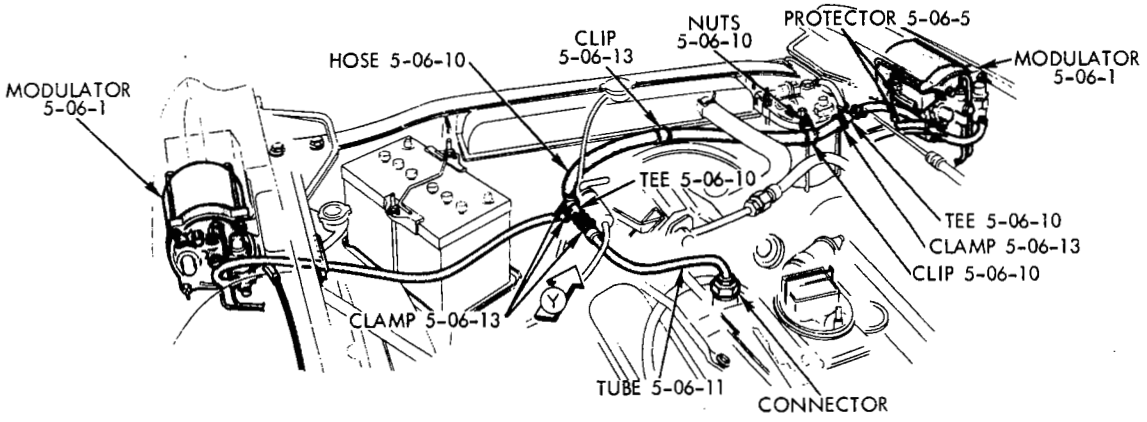

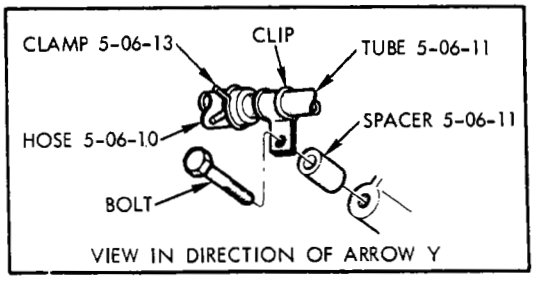

19a3709

WHEEL SLIP BRAKE CONTROL VACUUM HOSES (1971)

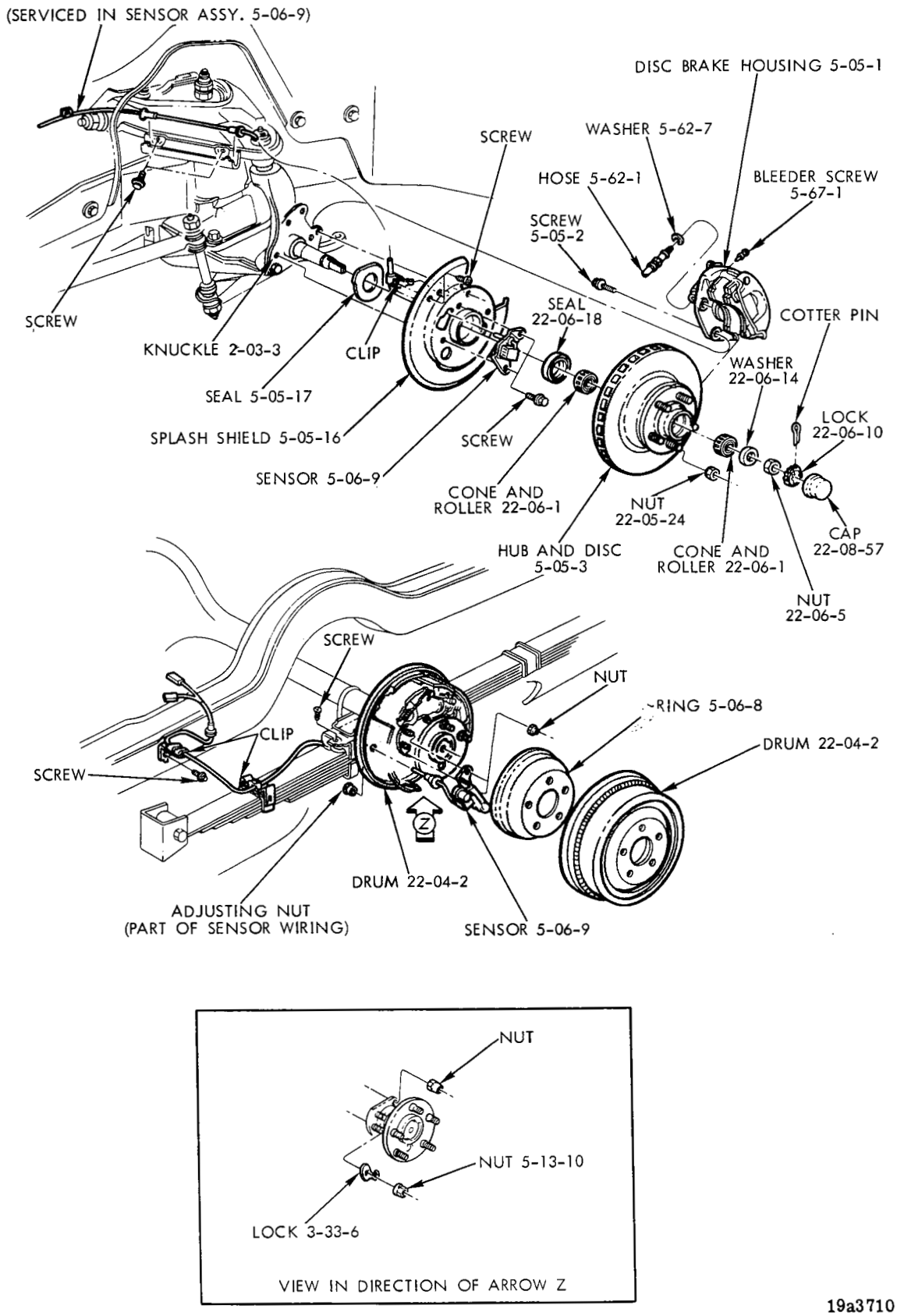

19a3710

WHEEL SLIP BRAKE CONTROL SENSOR AND WIRING ROUTING (1971)

CODE	PART NAME		ENG. TYPE OR CU.IN.	V 1-2	B J 1-2	L 1-2	R 1-2	W 1-2	P 1-2	D 1-2	C 1	C 2	C 3	Y 1	PART NUMBER
5-01-0	**BRAKE FLUID**														
5-01-2	FLUID, Hi Temp.														
	12 oz.			AR	AR	AR	AR	AR	AR	AR	AR	AR	AR	AR	2933 249
	1 Quart			AR	AR	AR	AR	AR	AR	AR	AR	AR	AR	AR	2933 250
	1 Gallon			AR	AR	AR	AR	AR	AR	AR	AR	AR	AR	AR	2933 251
	5 Gallon			AR	AR	AR	AR	AR	AR	AR	AR	AR	AR	AR	2933 252
	30 Gallon			AR	AR	AR	AR	AR	AR	AR	AR	AR	AR	AR	2933 253
	FLUID, Heavy Duty,														
	1 Gallon	Canada		AR	AR	AR	AR	AR	AR	AR	AR	AR	AR	AR	2458 409
	5 Gallon	Canada		AR	AR	AR	AR	AR	AR	AR	AR	AR	AR	AR	2458 410
	Super Heavy Duty,														
	123 oz.	Canada		AR	AR	AR	AR	AR	AR	AR	AR	AR	AR	AR	2458 412
	1 Gallon	Canada		AR	AR	AR	AR	AR	AR	AR	AR	AR	AR	—	2458 413
	5 Gallon	Canada		AR	AR	AR	AR	AR	AR	AR	AR	AR	AR	AR	2458 414
5-03-0	**WHEEL BRAKE SHOE AND LINING**														
5-03-1	LINING PACKAGE, For Bonding														
	9" Brakes			1	—	1	—	—	—	—	—	—	—	—	3579 268
	10 x 2 1/4" Frt., 10 x 1 3/4"Rr.	70		1	—	1	—	—	—	—	—	—	—	—	3420 957
	10 x 2 1/4" Frt., 10 x 1 3/4" Rr.	71		1	—	1	—	—	—	—	—	—	—	—	3579 277
	10 x 2 1/2" Frt., 10 x 1 3/4" Rr.	70		—	1	—	1	1	—	—	—	—	—	—	3420 955
	10 x 2 1/2" Frt., 10 x 2 1/2" Rr.	70		—	1	—	1	1	—	—	—	—	—	—	3420 958
	11" x 3" Frt., 11 x 3" Rr.	70		—	1	—	1	1	1	1	1	1	1	—	3420 964
	11 x 2 3/4" Frt., 11" x 2" Rr.	70		—	—	—	—	—	1	1	—	—	—	—	3420 959
	11 x 2 3/4" Frt., 11 x 2 1/2" Rr.	70		—	1	—	1	1	1	1	—	—	—	—	3420 960
	11 x 3" Frt., 11 x 2 1/2" Rr.	70		—	1	—	1	1	1	1	—	—	—	—	3420 963
	TAXI, 11 x 3 Rrt., 11 x 2 1/2" Rr.	70		—	—	—	1	1	—	—	—	—	—	—	2585 683
	TAXI, 11 x 3 Frt., 11 x 3" Rr.	70		—	—	—	—	—	1	1	—	—	—	—	2585 685
5-03-3	SHOE and LINING PACKAGE, FRONT (For One Axle)			—	—	—	—	—	—	1	—	—	—	—	
	9" Brakes	70		1	—	1	—	—	—	—	—	—	—	—	3004 851
	9" Brakes	71		1	—	1	—	—	—	—	—	—	—	—	3579 269
	10 x 2 1/4" Brakes	70		1	—	1	—	—	—	—	—	—	—	—	3420 145
	10 x 2 1/4" Brakes	71		1	—	1	—	—	—	—	—	—	—	—	3579 274
	10 x 2 1/2" Brakes			—	1	—	1	1	—	—	—	—	—	—	3420 146
	11 x 2 3/4" Brakes	70		—	—	—	—	—	1	1	1	—	—	—	3420 147
	11 x 3" Brakes w/Auto Adj.			—	1	—	1	1	1	1	1	1	1	1	3420 148
	11 x 3" Brakes w/Man. Adj.	70		—	1	—	1	1	1	1	1	1	1	—	3420 956
	SHOE and LINING PACKAGE, REAR (For One Axle)														
	9" Brakes	70		1	—	1	—	—	—	—	—	—	—	—	3004 858
	9" Brakes	71		1	—	1	—	—	—	—	—	—	—	—	3579 270
	10" x 1 3/4" Brakes	70		1	1	1	1	1	—	—	—	—	—	—	3420 952
	10 x 1 3/4" Brakes	71		1	—	1	—	—	—	—	—	—	—	—	3579 275
	10 x 2 1/2" Brakes			—	1	—	1	1	—	—	—	—	—	—	3420 146
	11" x 2" Brakes			—	—	—	—	—	1	1	—	—	—	—	3420 953
	11 x 2 1/2" Brakes w/Auto. Adj.			—	1	—	1	1	1	1	1	1	1	—	3420 954
	11 x 2 1/2" Brakes w/Man. Adj.			—	1	—	1	1	1	1	1	1	1	—	3420 149
	11 x 3" Brakes w/Man. Adj.	70		—	—	—	—	—	1	1	1	1	1	—	3420 150
	11" x 3" w/Auto Adj.	70		—	—	—	—	—	—	—	—	—	—	1	3420 148
	11 x 3" w/Auto. Adj.	71		—	—	—	—	—	—	—	—	—	—	1	# 3579 294
	SHOE and LINING PACKAGE (Axle Set)														
	For Disc Brakes	70		1	—	1	—	—	—	—	—	—	—	—	3004 759
	For Disc Brakes	71		1	—	1	—	—	—	—	—	—	—	—	3579 276
	For Disc Brakes	70		—	1	—	1	1	1	1	1	1	1	1	3004 828
	For Disc Brakes	71		—	1	—	1	1	1	1	1	1	1	1	3579 254
	For Disc Brakes H/Duty			—	1	—	—	—	—	—	—	—	—	—	3579 266

CARLINES J - Challenger B - Barracuda V - Valiant L - Dart R - Belvedere - Satellite W - Coronet - Charger P - Plymouth D - Dodge C - Chrysler Y - Imperial

AR Indicates use as required.

Numerals in parentheses ( ) refer to notes.

# Indicates parts not listed in any previous parts book.

★ Indicates change or addition.

Printed in U.S.A. January 1972

CODE	PART NAME	ENG. TYPE OR CU.IN.	V 1-2	B J 1-2	L 1-2	R 1-2	W 1-2	P 1-2	D 1-2	C 1	C 2	C 3	Y 1	PART NUMBER
5-03-0	**WHEEL BRAKE SHOE AND LINING Cont'd.**													
5-03-6	RIM and WEB, Front Wheel Brakes													
	10 x 2 1/4" Brakes		4	—	4	—	—	—	—	—	—	—	—	2880 530
	10 x 2 1/2 Brakes		—	4	—	4	4	—	—	—	—	—	—	2880 529
	10 x 2 3/4" Brakes		—	—	—	—	—	4	4	4	4	—	—	2880 544
	11 x 3" Brakes w/Auto. Adj.		—	4	—	4	4	4	4	4	4	4	—	2880 545
	9" x 2" Brakes		4	—	4	—	—	—	—	—	—	—	—	2880 595
	RIM and WEB, Front w/Auto. Adj. Lever Pin													
	9" x 2" Brakes		1	—	1	—	—	—	—	—	—	—	—	2944 674-5
	10 x 2 1/4" Brakes		1	—	1	—	—	—	—	—	—	—	—	2944 676-7
	10 x 2 1/2" Brakes		—	1	—	1	1	—	—	—	—	—	—	2944 678-9
	11 x 2 3/4" Brakes		—	—	—	—	—	1	1	1	1	—	—	2944 680-1
	11 x 3 Brakes		—	1	—	1	1	1	1	1	1	1	—	2944 682-3
	11 x 3" Brakes	71	—	1	—	1	1	1	1	—	—	—	—	2944 682-3
	RIM and WEB, Rear Wheel Brakes													
	9" x 2" Brakes		4	—	4	—	—	—	—	—	—	—	—	2880 632
	10 x 1 3/4" Brakes	70	4	4	4	4	4	—	—	—	—	—	—	2880 547
	10 x 1 3/4" Brakes	71	4	—	4	—	—	—	—	—	—	—	—	2880 547
	10 x 2 1/2" Brakes		—	4	—	4	4	—	—	—	—	—	—	2880 529
	11 x 2" Brakes		—	—	—	—	—	4	4	—	—	—	—	2880 584
	11 x 2 1/2" Brakes		—	4	—	4	4	4	4	4	4	4	—	2880 585
	11 x 3" Brakes w/Man. Adj.		—	—	—	—	—	4	4	4	4	4	4	2880 545
	RIM and WEB, Rr. w/Auto. Adj. Lever Pin													
	9" x 2" Brakes		1	—	1	—	—	—	—	—	—	—	—	2944 684-5
	10" x 1 3/4" Brakes		1	—	1	—	—	—	—	—	—	—	—	2944 686-7
	10 x 2 1/2" Brakes		—	1	—	1	1	—	—	—	—	—	—	2944 678-9
	11 x 2" Brakes		—	—	—	—	—	1	1	—	—	—	—	2944 688-9
	11 x 2 1/2" Brakes		—	1	—	1	1	1	1	1	1	1	—	2944 690-1
	11 x 3" Brakes	70	—	—	—	—	—	—	—	—	—	—	1	2944 682-3
5-03-23	SPRING, Brake Shoe Return FRONT and REAR													
	9" Brakes		8	—	8	—	—	—	—	—	—	—	—	2881 676
	10" Brakes (Primary)		4	4	4	4	4	—	—	—	—	—	—	2267 044
	10" Brakes (Secondary)		4	4	4	4	4	—	—	—	—	—	—	2260 835
	11" Brakes		—	8	—	8	8	8	8	8	8	8	8	2260 789
5-05-0	**DISC BRAKES**													
5-05-1	HOUSING, Disc Brakes	70	1	—	1	—	—	—	—	—	—	—	—	2925 220-1
	Housing, Disc. Brake Also Specify 1-3579276	71	1	—	1	—	—	—	—	—	—	—	—	2925 220-1
	HOUSING, Complete		1	—	1	—	—	—	—	—	—	—	—	2925 160-1
	Housing (C Body)	71	—	—	—	—	—	1	1	1	1	1	1	3579 264-5
	C Body (Partl.)	70	—	—	—	—	—	1	1	1	1	1	1	2925 206-7
	C Body (Partl.)	71	—	—	—	—	—	1	1	1	1	1	—	= 3461 762-3
	E and B Body (Partl.)	70	—	1	—	1	1	—	—	—	—	—	—	2944 712-3
	E And B Body (Partl.)	71	—	1	—	1	1	—	—	—	—	—	—	3461 964-5
5-05-2	SCREW, Disc Brake Hsg.		4	—	4	—	—	—	—	—	—	—	—	2881 597
	Screw, Disc Brake Hsg. To Knuckle		4	—	4	—	—	—	—	—	—	—	—	6027 984
			—	4	—	4	4	—	—	—	—	—	—	6028 323
			—	—	—	—	—	4	4	4	4	4	4	6028 320
	WASHER, Disc Brake Hsg. to Knuckle		4	—	4	—	—	—	—	—	—	—	—	6028 758
	SCREW and WASHER, Disc Hsg. Clip Mtg.		4	—	4	—	—	—	—	—	—	—	—	2781 018
5-05-3	HUB w/DISC													
	V, L	70	1	—	1	—	—	—	—	—	—	—	—	2660 296-7
	V,L	71	2	—	2	—	—	—	—	—	—	—	—	3580 502
	B, J, R, W	70	—	1	—	1	1	—	—	—	—	—	—	3461 818-9
	B, J, R, W	71	—	2	—	2	2	—	—	—	—	—	—	= 3580 506
	P, D, C	70	—	—	—	—	—	1	1	1	1	1	—	2925 174-5

CARLINES J - Challenger B - Barracuda V - Valiant L - Dart R - Belvedere - Satellite W - Coronet - Charger P - Plymouth D - Dodge C - Chrysler Y - Imperial

AR Indicates use as required.

# Indicates parts not listed in any previous parts book.

Numerals in parentheses ( ) refer to notes.

★ Indicates change or addition.

Printed in U.S.A. January 1972

CODE	PART NAME	ENG. TYPE OR CU.IN.	V 1-2	B J 1-2	L 1-2	R 1-2	W 1-2	P 1-2	D 1-2	C 1	C 2	C 3	Y 1	PART NUMBER
5-05-0	**DISC BRAKES Cont'd.**													
5-05-3	HUB w/DISC Cont'd.													
	Y	70	—	—	—	—	—	—	—	—	—	—	1	2925 212-3
	Y	71	—	—	—	—	—	—	—	—	—	—	2	3580 522
	Y, W/Skid Control	71	—	—	—	—	—	—	—	—	—	—	2	3461 948
	PACKAGE, Hub w/Disc	70	—	1	—	1	1	—	—	—	—	—	—	3549 801-2
	Package, Hub W/Disc	71	—	—	—	—	—	2	2	2	2	2	—	= 3549 840
5-05-5	TUBE, Disc Hsg. Crossover		1	—	1	—	—	—	—	—	—	—	—	2881 594-5
5-05-8	SPRING, Disc Brake Otr. Shoe	70	—	2	—	2	2	2	2	2	2	2	2	2925 199
		71	—	2	—	2	2	2	2	2	2	2	2	3461 894
5-05-9	SEAL and BOOT PACKAGE		1	—	1	—	—	—	—	—	—	—	—	2808 699
	SEAL, BOOT and BUSHING PACKAGE	70	—	1	—	1	1	1	1	1	1	1	1	3004 865
		71	—	1	—	1	1	1	1	1	1	1	1	3579 255
5-05-10	PISTON, Disc Brake		8	—	8	—	—	—	—	—	—	—	—	2881 591
	Disc Brake		—	2	—	2	2	2	2	2	2	2	2	2925 201
5-05-16	SHIELD, Disc Brake Splash													
	V, L		2	—	2	—	—	—	—	—	—	—	—	2823 288
			—	1	—	1	1	—	—	—	—	—	—	2944 710-1
	P, D, C		—	—	—	—	—	1	1	1	1	1	—	2925 186-7
	Y	70	—	—	—	—	—	—	—	—	—	—	1	2925 216-7
	Y.	71	—	—	—	—	—	—	—	—	—	—	1	3580 674-5
5-05-17	SEAL, Disc Brake Splash Shield to Knuckle		2	2	2	2	2	2	2	2	2	2	2	2944 704
5-05-26	BOOT, Frt. Whl. Disc Brk. Piston		8	—	8	—	—	—	—	—	—	—	—	2944 733
5-05-29	CLIP, Frt. Whl. Disc Brake Shoe - Anti-Rattle	70	4	—	4	—	—	—	—	—	—	—	—	2881 596
5-05-34	PROPORTIONING VALVE, Brake Tube	70	1	1	1	1	1	—	—	—	—	—	—	2852 045
	NOTE: For Further Information See Part Type Code 5-58-1													
5-05-35	LOCK WASHER, Disc Brake Hsg.		4	—	4	—	—	—	—	—	—	—	—	2881 598
5-05-37	NUT, Tee Tube To Prpg. Valve	70	1	1	1	1	1	—	—	—	—	—	—	2852 044
	Master Cyl. To Brake Tee Frt.		1	1	1	—	—	—	—	—	—	—	—	2852 044
	Tee To Lt. Hose Tube	70	1	—	1	1	1	1	1	1	1	1	—	2852 044
	Tee To Lt. or Rt. Hose Tube Tee		1	1	1	1	1	1	1	1	1	1	—	2852 044
	Tee To Metering Valve Tube Tee		—	1	—	1	1	1	1	1	1	1	1	2852 044
	Modulator To J/Blk. Brake Tube	71	—	—	—	—	—	—	—	—	—	—	4	2852 044
	J/Blk. Brake Tube	71	—	—	—	—	—	—	—	—	—	—	2	2852 044
	Mtrg. Valve To Modulator Brake Tube	71	—	—	—	—	—	—	—	—	—	—	1	2852 044
5-05-39	CLAMP, Brake Tube Prpg. Valve	70	1	1	1	1	1	—	—	—	—	—	—	2852 043
5-05-41	PIN, Disc Brake Hsg. Locating		—	—	—	—	—	4	4	4	4	4	4	2925 208
	B, J, R, W Up to March 71 Approx.		—	4	—	4	4	—	—	—	—	—	—	2944 719
	After March 71 Approx.		—	4	—	4	4	—	—	—	—	—	—	= 3621 960
5-05-43	ADAPTER, Disc Brake		—	—	—	—	—	2	2	2	2	2	—	2925 209
	B, J, R, W		—	1	—	1	1	—	—	—	—	—	—	3461 976-7
	P,D,C.	71	—	—	—	—	—	2	2	2	2	2	—	3461 755
	Y		—	—	—	—	—	—	—	—	—	—	2	2944 727
5-05-45	BUSHING PACKAGE, Locating Pin Inner and Outer		—	4	—	4	4	4	4	4	4	4	4	3004 864
5-05-46	POSITIONER, Disc Brakes	70	—	2	—	2	2	2	2	2	2	2	2	2944 722-3
		71	—	2	—	2	2	2	2	2	2	2	2	3461 770-1
5-05-47	SHIELD, Metering Valve	70	—	—	—	1	1	—	—	—	—	—	—	3404 695
5-06-0	**WHEEL SKID CONTROL**													
5-06-1	MODULATOR, Whl. Slip Brk. Cont. Frt. Up to Feb. 71 Approx.	71	—	—	—	—	—	—	—	—	—	—	2	3461 391
	After Feb. 71 Approx.	71	—	—	—	—	—	—	—	—	—	—	2	= 3580 032
	REAR, Up to Feb. 71 Approx.	71	—	—	—	—	—	—	—	—	—	—	1	3461 336

CARLINES: J - Challenger, B - Barracuda, V - Valiant, L - Dart, R - Belvedere - Satellite, W - Coronet - Charger, P - Plymouth, D - Dodge, C - Chrysler, Y - Imperial

AR Indicates use as required.

# Indicates parts not listed in any previous parts book.

Numerals in parentheses ( ) refer to notes.

★ Indicates change or addition.

Printed in U.S.A. January 1972

CODE	PART NAME	ENG. TYPE OR CU.IN.	V 1-2	B J 1-2	L 1-2	R 1-2	W 1-2	P 1-2	D 1-2	C 1	C 2	C 3	Y 1	PART NUMBER
5-06-0	**WHEEL SKID CONTROL Cont'd.**													
5-06-1	MODULATOR Cont'd.													
	REAR, After Feb. 71 Approx.	71	—	—	—	—	—	—	—	—	—	—	1	= 3580 034
	Hose, Whl. Slip Brk. Cont. Frt. And Rr. Modulator	71	—	—	—	—	—	—	—	—	—	—	3	6029 256
5-06-2	BRACKET, Whl. Slip Brk. Cont. Frt. Modulator.	71	—	—	—	—	—	—	—	—	—	—	2	3461 381
	Rear	71	—	—	—	—	—	—	—	—	—	—	1	3461 387
5-06-3	BRACE, Whl. Slip Brk. Cont. Frt. Modulator	71	—	—	—	—	—	—	—	—	—	—	2	3461 379
5-06-4	SUPPORT, Whl. Slip Brk. Cont. Rr. Modulator	71	—	—	—	—	—	—	—	—	—	—	1	3461 384
5-06-5	PROTECTOR, Whl. Slip Brk. Cont. Frt. Modulator Vac. Hose	71	—	—	—	—	—	—	—	—	—	—	2	3461 396
5-06-6	BRACKET, Logic Cont. Whl. Slip System Upper	71	—	—	—	—	—	—	—	—	—	—	1	3488 502
	Lower	71	—	—	—	—	—	—	—	—	—	—	1	3488 501
	Screw, Logic Controller Brkt. Mtg.	71	—	—	—	—	—	—	—	—	—	—	4	9414 597
	Nut And Coned Washer Logic Controller Brkt. Mtg.	71	—	—	—	—	—	—	—	—	—	—	2	6025 004
5-06-7	CONTROL - Unit Electronic Skid	71	—	—	—	—	—	—	—	—	—	—	1	3488 093
	Screw, Logic Controller Mtg.	71	—	—	—	—	—	—	—	—	—	—	3	9417 075
	Clip, Logic Controller Wiring	71	—	—	—	—	—	—	—	—	—	—	1	6015 288
5-06-8	RING., Rr. Whl. Slip Brk. Cont. Drive	71	—	—	—	—	—	—	—	—	—	—	2	3461 943
5-06-9	SENSOR and Wiring Frt. Whl. Slip	71	—	—	—	—	—	—	—	—	—	—	1	3461 946-7
	Rear	71	—	—	—	—	—	—	—	—	—	—	1	3461 944-5
	Clip, Frt. Whl. Slip Brake Cont. Speed Sensor Wiring	71	—	—	—	—	—	—	—	—	—	—	2	6015 238
5-06-10	TEE, Whl. Slip Cont. Vac. Hose To Rt. Frt. And Rr. Modulator	71	—	—	—	—	—	—	—	—	—	—	1	3461 394
	To Lt. Frt. Modulator	71	—	—	—	—	—	—	—	—	—	—	1	3461 393
	Hose, Whl. Slip Brake Control Tube To Tee Vac.	71	—	—	—	—	—	—	—	—	—	—	1	6029 302
	Hose, Whl. Slip Brake Control Tee To Tee Vac.	71	—	—	—	—	—	—	—	—	—	—	1	6029 302
	Clip, Whl. Slip Brake Control Vac. Hose Rr. Modulator	71	—	—	—	—	—	—	—	—	—	—	1	9413 545
	Nut, Whl. Slip Brake Control Vac. Hose Rr. Modulator Clip	71	—	—	—	—	—	—	—	—	—	—	1	120 376
5-06-11	TUBE, Whl. Slip Brk. Cont. Int. Man.	71	—	—	—	—	—	—	—	—	—	—	1	3461 398
	Junction Blk. Brake	71	—	—	—	—	—	—	—	—	—	—	2	3466 733
	Package - Jumper Tube	71	—	—	—	—	—	—	—	—	—	—	1	= 3461 427
	Spacer, Whl. Slip Brake Control Tube Mtg.	71	—	—	—	—	—	—	—	—	—	—	2	6023 533
5-06-12	JUNCTION BLOCK, - Brake Tube	71	—	—	—	—	—	—	—	—	—	—	2	3466 732
5-06-13	CLIP, Modulator To Union Rr. Brk. Tube	71	—	—	—	—	—	—	—	—	—	—	4	2883 929
	S-Clip, Modulator To Union Rr. Brk. Tube	71	—	—	—	—	—	—	—	—	—	—	5	2925 705
	Clip, Whl. Slip Brk. Cont. Vac. Hose Shroud	71	—	—	—	—	—	—	—	—	—	—	1	3461 395
	Clamp, Whl. Slip Brake Control Vac. Hose Tee	71	—	—	—	—	—	—	—	—	—	—	4	870 469
	Clamp, Whl. Slip Brake Control Vac. Hose Modulator	71	—	—	—	—	—	—	—	—	—	—	3	443 828
5-06-14	RETAINER, Upper Control Arm Anti-Skid Wiring	71	—	—	—	—	—	—	—	—	—	—	2	3513 492
5-06-15	SOCKET, Whl. Slip Brk. Cont. System Warning	71	—	—	—	—	—	—	—	—	—	—	1	2097 003

CODE	PART NAME	ENG. TYPE OR CU.IN.	V 1-2	B J 1-2	L 1-2	R 1-2	W 1-2	P 1-2	D 1-2	C 1	C 2	C 3	Y 1	PART NUMBER
5-06-0	**WHEEL SKID CONTROL Cont'd.**													
5-06-15	SOCKET Cont'd.													
	Fuseholder, Whl. Slip Brake Cont. System	71	—	—	—	—	—	—	—	—	—	—	1	2257 679
5-06-16	WIRING, Whl. Slip Control System (Eng. Compt.)	71	—	—	—	—	—	—	—	—	—	—	1	3513 504
	Whl. Slip Brk. Control System (Inst. Panel)	71	—	—	—	—	—	—	—	—	—	—	1	3513 519
	Whl. Slip Brk. Control (Body) Up to March 71 Approx.	71	—	—	—	—	—	—	—	—	—	—	1	3513 612
	After March 71 Approx.	71	—	—	—	—	—	—	—	—	—	—	1	3513 737
5-12-0	**WHEEL CYLINDER PISTON PUSH ROD**													
5-12-1	ROD, Frt. and Rr. Wheel Brake Cyl. Piston		4	4	4	4	4	4	4	4	4	4	4	2260 787
5-13-0	**WHEEL BRAKE SUPPORT**													
5-13-1	SUPPORT, Frt. 9" Brake		2	—	2	—	—	—	—	—	—	—	—	2880 501
	10 x 2 1/4" Brakes		2	—	2	—	—	—	—	—	—	—	—	3461 534-5
	10 x 2 1/2" Brakes		—	2	—	2	2	—	—	—	—	—	—	3461 536
	11 x 2 3/4" Brakes		—	—	—	—	—	2	2	2	2	—	—	3461 537
	11 x 3" Brakes		—	2	—	2	2	—	—	—	—	—	—	3461 538
	11 x 3" Brakes	70	—	—	—	—	—	2	2	2	2	2	—	3461 539
	11 x 3" Brakes	71	—	—	—	—	—	2	2	—	—	—	—	3461 539
	SUPPORT, Rear													
	9" Brakes		1	—	1	—	—	—	—	—	—	—	—	2880 568-9
	10 x 1 3/4" w/7 1/4" Axle		1	1	1	—	—	—	—	—	—	—	—	2880 570-1
	10 x 1 3/4" w/8 3/4 Axle	70	1	—	1	1	1	—	—	—	—	—	—	2880 582-3
	10 x 1 3/4" w/8 3/4 Axle	71	1	—	1	—	—	—	—	—	—	—	—	2880 582-3
	10 x 2 1/2" Brakes		—	1	—	1	1	—	—	—	—	—	—	2880 602-3
	11 x 2" Brakes		—	—	—	—	—	1	1	—	—	—	—	2880 626-7
	11 x 2 1/2" Brakes		—	1	—	1	1	1	1	1	1	1	—	2880 646-7
	11 x 3" Brakes	70	—	—	—	—	—	1	1	1	1	1	1	2880 648-9
	11 x 3" Brakes	71	—	—	—	—	—	—	—	—	—	—	1	3461 986-7
	Plug, Rr. Wheel Brakes Support		—	—	—	—	—	—	—	—	—	—	2	3461 985
5-13-7	GASKET, Axle Hsg. Brake Support Plate													
	7/64" Thk. 2.74" I.D.		4	—	4	—	—	—	—	—	—	—	—	2467 095
	7/64" Thk. 2.87" I.D.		2	2	2	2	2	2	2	2	2	2	2	2070 933
	7/64" Thk. 2.92" I.D.		2	2	2	2	2	2	2	2	2	2	2	2881 314
5-13-9	BOLT, Frt. Wheel Brake Mtg.													
	Upper, 10" and 11" Brakes		4	4	4	4	4	4	4	4	4	4	—	2207 604
	Upper, 9" Brakes		4	—	4	—	—	—	—	—	—	—	—	2072 682
	Lower 10" and 11" Brakes		—	4	—	4	4	4	4	4	4	4	—	6027 605
	Lower 9" Brakes		4	—	4	—	—	—	—	—	—	—	—	2072 681
	BOLT, Frt. Wheel Brake Mtg.													
	Lower Frt. 10" Brakes	70	4	—	4	—	—	—	—	—	—	—	—	9422 752
	Lower Frt. 10" Brakes	71	4	—	4	—	—	—	—	—	—	—	—	6028 757
	Lower Rr. 10" Brakes		4	—	4	—	—	—	—	—	—	—	—	6025 739
	Bolt, Rr. Wheel Brake Mtg. W/Teeth		10	10	10	10	10	10	10	10	10	10	10	2404 164
	W/O Teeth	70	10	—	10	10	10	—	—	—	—	—	—	3432 222
	Rr.	70	8	8	8	8	8	8	8	8	8	8	—	2265 572
	Rr	71	8	—	8	8	8	8	8	—	—	—	—	3507 259
5-13-10	NUT, Frt. Whl. Brake Mtg. Bolt Lower Frt.		2	—	2	—	—	—	—	—	—	—	—	6028 512
	Lower Rr.		2	—	2	—	—	—	—	—	—	—	—	6025 735
	Frt. Whl. Brake Mtg. Bolt Upper		4	4	4	4	4	4	4	4	4	4	—	601 014
	NUT, Rr. Whl. Brake Mtg. Bolt Rt.		1	1	1	1	1	1	1	1	1	1	1	2404 168
	Nut, Rr. Whl. Brake Mtg. Bolt		9	9	9	9	9	9	9	9	9	9	9	6026 131
	Rr. Whl. Brake Mtg. Bolt (Lock Nut Type)	70	AR	AR	AR	AR	AR	AR	AR	AR	AR	AR	AR	1927 232

CARLINES J - Challenger, B - Barracuda, V - Valiant, L - Dart, R - Belvedere - Satellite, W - Coronet - Charger, P - Plymouth, D - Dodge, C - Chrysler, Y - Imperial

AR Indicates use as required.

Numerals in parentheses ( ) refer to notes.

# Indicates parts not listed in any previous parts book.

★ Indicates change or addition.

Printed in U.S.A. January 1972

CODE	PART NAME	ENG. TYPE OR CU.IN.	V 1-2	B J 1-2	L 1-2	R 1-2	W 1-2	P 1-2	D 1-2	C 1	C 2	C 3	Y 1	PART NUMBER
5-13-0	**WHEEL BRAKE SUPPORT Cont'd.**													
5-13-22	SEAL, Frt. Whl. Brake Support To Strg. - Knuckle 10", 11" Brakes	70	2	2	2	2	2	2	2	2	2	2	—	2266 890
	10, 11" Brakes	71	2	2	2	2	2	2	2	2	2	2	—	2944 704
	9" Brakes		2	—	2	—	—	—	—	—	—	—	—	2401 960
5-13-35	COVER, Whl. Brake Adj. Screw Hole		4	4	4	4	4	4	4	4	4	4	4	2072 614
5-20-0	**WHEEL BRAKE ADJUSTER**													
5-20-1	SCREW, Man. Adj.		—	—	—	2	2	2	2	2	2	2	—	2265 201
	Auto. Adj.		2	2	2	2	2	2	2	2	2	2	2	2881 686-7
5-20-4	SPRING, Man. Adj. Screw Lock		—	—	—	2	2	2	2	2	2	2	—	2944 844
5-20-9	LEVER, Auto. Adj.		2	2	2	2	2	2	2	2	2	2	2	3461 665
5-20-10	CABLE, Auto. Adj.													
	9" Brakes		2	—	2	—	—	—	—	—	—	—	—	3461 662
	10" Brakes		2	2	2	2	2	—	—	—	—	—	—	3461 663
	11" Brakes		—	2	—	2	2	2	2	2	2	2	2	3461 664
5-20-11	GUIDE, Auto. Adj. Cable		2	2	2	2	2	2	2	2	2	2	2	2260 793
5-20-15	NUT, Auto. Adj. Pivot Screw													
	Auto. Adj.		1	1	1	1	1	1	1	1	1	1	1	2944 692-3
	NUT, Screw Lock, Man. Adj.		—	—	—	2	2	2	2	2	2	2	—	2260 671
5-20-17	BUTTON, Auto. Adj.		4	4	4	4	4	4	4	4	4	4	4	2944 586
	Washer, Auto. Adj. Button		4	4	4	4	4	4	4	4	4	4	4	6027 559
	SOCKET, Man. Adj. Screw		—	—	—	4	4	4	4	4	4	4	—	2265 068
5-20-20	SPRING, Auto. Adj. Lever		2	2	2	2	2	2	2	2	2	2	2	2944 580-1
	Auto. Adj. 9" Brakes		4	—	4	—	—	—	—	—	—	—	—	2880 593
	Auto. Adj. 10" Brakes		4	4	4	4	4	—	—	—	—	—	—	2880 525
	Auto. Adj. 11" Brakes		—	4	—	4	4	4	4	4	4	4	4	2880 555
	SPRING, Auto. Adj. Cable		4	4	4	4	4	4	4	4	4	4	4	3461 660
5-25-0	**BRAKE SHOE GUIDE**													
5-25-9	PLATE, Brake Shoe Guide													
	9" Brakes		4	—	4	—	—	—	—	—	—	—	—	2881 675
	10" Brakes		4	4	4	4	4	—	—	—	—	—	—	2267 045
	11" Brakes		—	4	—	4	4	4	4	4	4	4	4	2260 788
5-26-0	**BRAKE SHOE GUIDE SPRING**													
5-26-1	SPRING, Brake Shoe Hold Down													
	9", 10" and 11" Brakes		8	8	8	8	8	8	8	8	8	8	8	2260 791
	BRAKE SHOE HOLD DOWN SPRING													
★	RETAINER and PIN PACKAGE	70	1	1	1	1	1	1	1	1	1	1	—	2808 525
5-26-2	RETAINER, Hold Down Spring													
	9", 10" and 11" Brakes		8	8	8	8	8	8	8	8	8	8	8	2260 792
5-26-4	PIN, Hold Down Spring													
	2 1/8" Lgh. Fig. 12 Stamped on Head		4	—	4	—	—	4	4	—	—	—	—	2405 720
	2 11/32" Lgh. Fig. 1 Stamped on Head		4	4	4	4	4	4	4	4	4	4	—	2260 548
	2 5/8" Lgh. Fig. 10 Stamped on Head		—	4	—	4	4	4	4	4	4	4	4	2260 549
5-27-0	**BRAKE PEDAL AND BUSHING**													
5-27-1	PEDAL, w/Man. Trans. Exc. 340 Eng.		1	—	1	—	—	—	—	—	—	—	—	2823 617
	w/Man. Trans. w/340 Eng.		1	—	1	—	—	—	—	—	—	—	—	2883 454
	w/Auto. Trans.		1	—	1	—	—	—	—	—	—	—	—	2823 618
	w/Power Brakes, w/Auto. Trans.	70	—	—	—	1	1	—	—	—	—	—	—	2996 417
	w/Man. or Power Brakes, w/Man. Trans.	70	—	—	—	1	1	—	—	—	—	—	—	2880 650
	w/Man. Brakes, w/Auto. Trans.	70	—	—	—	1	1	—	—	—	—	—	—	2880 651
	w/Man. Brakes, w/Man. Trans.		—	—	—	—	—	1	1	1	1	1	—	2950 013
	w/Power Brakes, w/Man. Trans.		—	—	—	—	—	1	1	1	1	1	—	2950 018

CARLINES: J - Challenger, B - Barracuda, V - Valiant, L - Dart, R - Belvedere - Satellite, W - Coronet - Charger, P - Plymouth, D - Dodge, C - Chrysler, Y - Imperial

AR Indicates use as required.

# Indicates parts not listed in any previous parts book.

Numerals in parentheses ( ) refer to notes.

★ Indicates change or addition.

Printed in U.S.A. January 1972

CODE	PART NAME	ENG. TYPE OR CU.IN.	V 1-2	B J 1-2	L 1-2	R 1-2	W 1-2	P 1-2	D 1-2	C 1	C 2	C 3	Y 1	PART NUMBER
5-27-0	**BRAKE PEDAL AND BUSHING Cont'd.**													
5-27-1	PEDAL Cont'd.													
	w/Man. Brakes, w/Auto. Trans.	70	—	—	—	—	—	1	1	1	1	—	—	2950 011
	w/Man. Brakes. w/Auto Trans.	71	—	—	—	—	—	1	1	1	1	—	—	2950 276
	w/Power Brakes, w/Auto. Trans.	70	—	—	—	—	—	1	1	1	1	1	1	2925 579
	w/Power Brakes w/Auto Trans.	71	—	—	—	—	—	1	1	1	1	1	1	3467 229
	w/Man. or Power Brakes, w/Man. Trans.	70	—	1	—	—	—	—	—	—	—	—	—	2950 877
	w/Man. or Power Brakes w/Man. Trans.	71	—	1	—	1	1	—	—	—	—	—	—	3575 106
	w/Man. or Power Brakes, w/Auto. Trans.	70	—	1	—	—	—	—	—	—	—	—	—	2950 878
	w/Man. OR Power Brakes w/Auto. Trans.	71	—	1	—	1	1	—	—	—	—	—	—	3575 107
5-27-2	SLEEVE, Brake Pedal, Exc. 340 Eng.		1	—	1	—	—	—	—	—	—	—	—	2073 634
	V,L 340 Eng.		1	—	1	—	—	—	—	—	—	—	—	2883 461
	P, D, C,Y		—	—	—	—	—	1	1	1	1	1	1	2950 289
	B,J	70	—	1	—	—	—	—	—	—	—	—	—	2996 419
	BUSHING, Brake Pedal Hub, Exc. 340 Eng.		2	—	2	—	—	—	—	—	—	—	—	2467 771
	w/340 Eng.		2	—	2	—	—	—	—	—	—	—	—	2883 482
			—	2	—	2	2	2	2	2	2	2	2	2467 770
5-27-6	LOCK, Brake Pedal Sleeve, Exc. 340 Eng.		1	—	1	—	—	—	—	—	—	—	—	2781 105
	w/340 Eng.		1	—	1	—	—	—	—	—	—	—	—	2883 463
5-27-12	NUT, Brake Pedal Sleeve Lock Screw		1	—	1	—	—	—	—	—	—	—	—	2208 008
5-28-0	**BRAKE PEDAL PAD**													
5-28-8	PAD, w/Auto. Trans.	70	1	—	1	1	1	—	—	—	—	—	—	2643 707
	w/Auto Trans.	71	1	—	1	—	—	—	—	—	—	—	—	3575 101
	w/Man. Trans.	70	1	—	1	1	1	—	—	—	—	—	—	2643 712
	w/Man. Trans.	71	1	—	1	—	—	—	—	—	—	—	—	2643 712
	w/man. Trans.		—	1	—	1	1	—	—	—	—	—	—	2950 887
	w/Auto. Trans.		—	1	—	1	1	—	—	—	—	—	—	2950 899
	w/Man. Brakes, w/Bezel	70	—	—	—	—	—	1	1	1	1	1	—	2530 426
	w/Man. Trans.	71	1	—	1	—	—	1	1	1	1	1	—	3467 530
	w/Man. Brakes, w/o Bezel	70	—	—	—	—	—	1	1	—	—	—	—	2467 768
	w/Man. Brakes, w/Bezel	70	—	—	—	—	—	1	1	1	1	1	—	2461 708
	w/Man. Brakes, w/o Bezel	70	—	—	—	—	—	1	1	—	—	—	—	2461 709
	w/Power Brakes, w/o Bezel, w/Disc	70	—	—	—	—	—	1	1	1	1	1	1	2461 709
	w/Auto. Trans.	71	—	—	—	—	—	1	1	1	1	1	1	2950 279
5-28-9	BEZEL, Brake Pedal Pad w/Man. Trans.	70	1	—	1	1	1	—	—	—	—	—	—	2643 714
	w/Auto. Trans.	70	1	—	1	1	1	—	—	—	—	—	—	2643 709
	w/Auto. Trans.	71	1	—	1	—	—	—	—	—	—	—	—	3575 102
	w/Man. Trans.	70	—	1	—	—	—	—	—	—	—	—	—	2950 898
	w/Man. Trans.	71	—	1	—	1	1	—	—	—	—	—	—	2950 898
	w/Auto. Trans.	70	—	1	—	—	—	—	—	—	—	—	—	2950 900
	w/Auto. Trans.	71	—	1	—	1	1	—	—	—	—	—	—	2950 900
	w/Disc Pwr. Brakes w/Auto. Trans.		—	—	—	—	—	1	1	1	1	1	1	2823 557
	w/o Disc w/Auto. Trans.		—	—	—	—	—	1	1	1	1	1	—	2467 766
	w/Man. Trans.		1	—	1	—	—	1	1	1	1	1	—	2467 769
5-29-0	**BRAKE PEDAL SHAFT**													
5-29-1	SHAFT, Brake Pedal													
	w/Auto. Trans.		—	1	—	1	1	—	—	—	—	—	—	3467 022
	w/Man. Trans.	70	—	—	—	1	1	—	—	—	—	—	—	3467 024
	w/Man. Trans.		—	1	—	1	1	—	—	—	—	—	—	3467 023

CARLINES J - Challenger, B - Barracuda, V - Valiant, L - Dart, R - Belvedere - Satellite, W - Coronet - Charger, P - Plymouth, D - Dodge, C - Chrysler, Y - Imperial

AR Indicates use as required.

# Indicates parts not listed in any previous parts book.

Numerals in parentheses ( ) refer to notes.

★ Indicates change or addition.

Printed in U.S.A. January 1972

CODE	PART NAME	ENG. TYPE OR CU.IN.	V 1-2	B J 1-2	L 1-2	R 1-2	W 1-2	P 1-2	D 1-2	C 1	C 2	C 3	Y 1	PART NUMBER
5-31-0	**BRAKE PEDAL BRACKET**													
5-31-11	REINFORCEMENT, Brake Pedal Bracket													
	Power Brakes		—	1	—	1	1	—	—	—	—	—	—	2950 686
	Man. Brakes	70	—	1	—	—	—	—	—	—	—	—	—	2950 684
	Man. Brakes	71	—	1	—	1	1	—	—	—	—	—	—	3575 105
	Power Brakes	70	—	—	—	1	1	—	—	—	—	—	—	2534 248
	Man. Brakes	70	—	—	—	1	1	—	—	—	—	—	—	2534 271
	Power Brakes		—	—	—	—	—	1	1	1	1	1	1	2925 584
	Man. Brakes	70	—	—	—	—	—	1	1	1	1	—	—	2950 016
	Man. Brakes	71	—	—	—	—	—	1	1	1	1	—	—	3575 139
5-31-12	GASKET, Bracket Reinforcement	70	—	—	—	1	1	—	—	—	—	—	—	2534 258
	Pedal, Bracket Reinforcement		—	—	—	—	—	1	1	1	1	1	1	2925 582
	B, J, R, W.		—	1	—	1	1	—	—	—	—	—	—	2950 883
5-31-13	NUT and WASHER, Brkt. Reinf. to Dash	70	—	AR	—	—	—	—	—	—	—	—	—	2076 232
5-31-15	BRACKET, Brake Pedal													
	Power Brakes	70	—	1	—	—	—	—	—	—	—	—	—	2950 874
	Power Brakes	71	—	1	—	—	—	—	—	—	—	—	—	3467 952
	Man. Brakes	70	—	1	—	—	—	—	—	—	—	—	—	2950 873
	Man. Brakes	71	—	1	—	—	—	—	—	—	—	—	—	3467 951
	V,L	70	1	—	1	—	—	—	—	—	—	—	—	3467 084
	V,L. Exc. 340 Eng.	71	1	—	1	—	—	—	—	—	—	—	—	3467 518
	V,L w/340 Eng.	71	1	—	1	—	—	—	—	—	—	—	—	3575 120
	R,W	70	—	—	—	1	1	—	—	—	—	—	—	2881 572
	Power Brakes	71	—	—	—	1	1	—	—	—	—	—	—	3467 122
	Man. Brakes	71	—	—	—	1	1	—	—	—	—	—	—	3467 123
	P,D,C,Y	70	—	—	—	—	—	1	1	1	1	1	1	2996 490
	P,D,C,Y.	71	—	—	—	—	—	1	1	1	1	1	1	3467 543
5-39-0	**MASTER CYLINDER**													
5-39-1	MASTER CYLINDER REPAIR PACKAGE WITH DISC BRAKES													
	V, L	70	1	—	1	—	—	—	—	—	—	—	—	3549 828
	V,L	71	1	—	1	—	—	—	—	—	—	—	—	3579 258
	426 Eng.	70	—	1	—	1	1	—	—	—	—	—	—	3420 968
	P, D, C, Y	70	—	—	—	—	—	1	1	1	1	1	1	3420 120
	B,J,R,W,P,D,C,Y.	71	—	1	—	1	1	1	1	1	1	1	1	3579 260
	Except 426 Eng.	70	—	1	—	—	—	—	—	—	—	—	—	3420 969
	Except 426 Eng.	70	—	—	—	1	1	—	—	—	—	—	—	3420 967
	WITH DRUM BRAKES													
	w/Man. and Pwr. Brakes	70	1	1	1	—	—	—	—	—	—	—	—	3420 962
	w/Man. And Pwr. Brakes	71	1	—	1	—	—	—	—	—	—	—	—	3579 257
	w/Manual Brakes After Approx. June 1, 71	71	1	—	1	—	—	—	—	—	—	—	—	= 3621 969
	w/Manual Brakes	71	—	1	—	1	1	1	1	1	1	1	—	3579 259
	w/Man. Brakes Except Sta. Wgn. P, D, C	70	—	—	—	1	1	1	1	1	1	1	—	2808 578
	w/Power Brakes	70	—	1	—	—	—	—	—	—	—	—	—	2808 578
5-39-3	MASTER CYINDER WITH DISC BRAKES													
	V,L	70	1	—	1	—	—	—	—	—	—	—	—	2808 600
	V,L	71	1	—	1	—	—	—	—	—	—	—	—	3461 178
	w/o 426 Eng.	70	—	1	—	—	—	—	—	—	—	—	—	2944 453
	w/426 Eng.		—	1	—	1	1	—	—	—	—	—	—	2944 476
	w/o 426 Eng.	70	—	—	—	1	1	—	—	—	—	—	—	2944 477
	P,D,C,Y	70	—	—	—	—	—	1	1	1	1	1	1	2883 089
	B,J,R,W,P,D,C,Y	71	—	1	—	1	1	1	1	1	1	1	1	3461 176
	WITH DRUM BRAKES													
	w/Man. and Power Brakes	70	1	—	1	—	—	—	—	—	—	—	—	3420 961
	w/Man. And Power Brakes	71	1	—	1	—	—	—	—	—	—	—	—	3461 184
	w/Manual Brakes	71	—	1	—	1	1	—	—	—	—	—	—	3461 184
	w/Man. and Power Brakes	70	—	1	—	1	1	1	1	1	1	1	—	2808 577

CARLINES: J - Challenger, B - Barracuda, V - Valiant, L - Dart, R - Belvedere - Satellite, W - Coronet - Charger, P - Plymouth, D - Dodge, C - Chrysler, Y - Imperial

AR Indicates use as required.

# Indicates parts not listed in any previous parts book.

Numerals in parentheses ( ) refer to notes.

★ Indicates change or addition.

Printed in U.S.A. January 1972

CODE	PART NAME	ENG. TYPE OR CU.IN.	V 1-2	B J 1-2	L 1-2	R 1-2	W 1-2	P 1-2	D 1-2	C 1	C 2	C 3	Y 1	PART NUMBER
5-39-0	**MASTER CYLINDER Cont'd.**													
5-39-3	MASTER CYLINDER WITH DISC BRAKES Cont'd.													
	w/Power Brakes	71	—	1	—	1	1	—	—	—	—	—	—	3461 182
	w/Manual Brakes	71	—	—	—	—	—	1	1	1	1	1	—	3461 182
5-39-11	BOLT, Master Cyl. Mtg.		—	4	—	4	4	4	4	4	4	—	—	2260 046
5-39-12	SPACER, Master Cyl. to Booster	70	—	1	—	—	—	—	—	—	—	—	—	2944 482
5-39-18	GASKET, Master Cyl. Mtg.	70	1	1	1	1	1	1	1	1	1	—	—	2401 862
		71	1	—	1	—	—	—	—	—	—	—	—	3461 212
	Power Brake Mtg. To Dash	71	1	—	1	—	—	—	—	—	—	—	—	3461 212
	Power Brake Mtg. to Dash w/426 Eng.		—	1	—	1	1	—	—	—	—	—	—	2401 862
	Power Brake Mtg. To Dash	71	—	—	—	—	—	1	1	1	1	1	—	2401 862
5-39-20	COVER, Master Cyl. Reservoir													
	w/Disc Exc. Wgn.	70	1	—	1	1	1	1	1	1	1	1	1	2881 511
	w/Disc Brakes	71	1	1	1	1	1	1	1	1	1	1	1	2944 225
	w/Pwr. Drum, Sta. Wgn.	70	—	—	—	1	1	—	—	—	—	—	—	2881 511
	w/Man. Drum	70	1	1	1	1	1	1	1	1	1	1	—	2823 999
	w/Man. Drum	71	1	1	1	1	1	1	1	1	1	—	—	3461 046
	w/Disc	70	—	1	—	—	—	—	—	—	—	—	—	2944 465
	w/Disc, w/426 Eng.		—	1	—	1	1	—	—	—	—	—	—	2944 465
5-39-24	GASKET, Reservoir Cover													
	Use w/2944465 Cover		—	1	—	1	1	—	—	—	—	—	—	2944 466
	Use w/2823999 Cover	70	1	1	1	1	1	1	1	1	1	1	—	2823 994
	Use w/3461046 Cover	71	1	1	1	1	1	1	1	1	1	—	—	3461 047
	Use w/2881511 Cover		1	—	1	1	1	1	1	1	1	1	1	2881 512
	Use w/2944225 Cover	71	1	1	1	1	1	1	1	1	1	1	1	2944 227
5-39-26	CLAMP, Master Cyl. Cover	70	1	1	1	1	1	1	1	1	1	—	—	2823 950
5-39-29	WIRE, Master Cyl. Cover Bail	70	1	—	1	—	—	—	—	—	—	—	—	2881 513
		71	1	1	1	1	1	1	1	1	1	—	—	3461 202
	w/Disc Brakes	70	1	—	1	—	—	—	—	—	—	—	—	2944 381
	w/Disc Brakes	71	1	1	1	1	1	1	1	1	1	1	1	3461 201
	B,J	70	—	1	—	—	—	—	—	—	—	—	—	2944 467
	w/426 Eng.		—	1	—	1	1	—	—	—	—	—	—	2944 467
	Except 426 Eng.	70	—	—	—	1	1	1	1	1	1	1	1	2944 381
5-40-0	**MASTER CYLINDER BOOT**													
5-40-1	BOOT, Master Cyl.													
	w/Disc Brakes	70	1	—	1	1	1	—	—	—	—	—	—	1828 388
	w/Disc Brakes	71	1	—	1	—	—	—	—	—	—	—	—	1828 388
	w/Man. Drum Brakes		1	1	1	1	1	1	1	1	1	—	—	1828 388
5-40-4	RETAINER, Master Cyl. Boot													
	w/Disc Brakes	70	1	—	1	1	1	—	—	—	—	—	—	1828 389
	w/Disc Brakes	71	1	—	1	—	—	—	—	—	—	—	—	3461 205
	w/Man. Drum Brakes	70	1	1	1	1	1	1	1	1	1	—	—	1828 389
	w/Man. Drum Brakes	71	1	1	1	1	1	1	1	1	1	—	—	3461 205
5-44-0	**MASTER CYLINDER PISTON**													
5-44-3	PISTON, Master Cyl.													
	w/Disc	70	1	—	1	—	—	—	—	—	—	—	—	2881 503
5-44-6	SPRING, Master Cyl. Piston	71	1	1	1	1	1	1	1	1	1	1	1	2944 222
5-44-8	STOP, Master Cyl. Primary Piston													
	w/Disc	70	—	1	—	—	—	—	—	—	—	—	—	2265 635
	w/Pwr.Drum	70	1	1	1	1	1	1	1	1	1	1	—	2265 635
	w/Man. Drum	70	1	1	1	1	1	1	1	1	1	—	—	1828 389
	w/Man. Drum	71	1	1	1	1	1	1	1	1	1	1	1	6029 170
5-44-9	SCREW, Master Cyl. Primary Piston	70	AR	AR	AR	AR	AR	AR	AR	AR	AR	AR	—	2200 341
	Master Cyl. Secondary Piston Stop	71	1	1	1	1	1	1	1	1	1	1	1	6028 159
5-44-11	SEAL, Master Cyl. Stop Screw													
	w/Disc Brakes		1	1	1	1	1	1	1	1	1	1	1	2881 519

CARLINES J - Challenger, B - Barracuda, V - Valiant, L - Dart, R - Belvedere - Satellite, W - Coronet - Charger, P - Plymouth, D - Dodge, C - Chrysler, Y - Imperial

AR Indicates use as required.

# Indicates parts not listed in any previous parts book.

Numerals in parentheses ( ) refer to notes.

★ Indicates change or addition.

Printed in U.S.A. January 1972

CODE	PART NAME	ENG. TYPE OR CU.IN.	V 1-2	B J 1-2	L 1-2	R 1-2	W 1-2	P 1-2	D 1-2	C 1	C 2	C 3	Y 1	PART NUMBER
5-47-0	**MASTER CYLINDER PISTON PUSH ROD**													
5-47-2	ROD, Master Cyl. Push													
	w/Disc Brakes	70	1	—	1	—	—	—	—	—	—	—	—	2265 640
	w/Disc Brakes	71	1	—	1	—	—	—	—	—	—	—	—	3461 211
	w/Disc Brakes	71	—	1	—	1	1	—	—	—	—	—	—	2534 246
	Rod, Output Push W/Disc Brakes	71	—	1	1	1	1	1	1	1	1	1	—	2944 499
	w/Man. Drum Brakes (Pri. Piston)	70	1	—	1	—	—	—	—	—	—	—	—	2265 640
	w/Man. Drum Brakes (Pri. Piston)	71	1	—	1	—	—	—	—	—	—	—	—	3461 211
	w/Man. Drum Brakes		—	1	—	1	1	—	—	—	—	—	—	2944 196
	w/Man. Drum Brakes	70	—	—	—	1	1	—	—	—	—	—	—	2534 246
	w/Man. Drum Brakes	70	—	—	—	—	—	1	1	1	1	—	—	2409 978
	W/Man. Drum Brakes Pri. Piston	71	—	—	—	—	—	1	1	1	1	1	—	3461 210
5-47-4	BOLT, Master Cyl. Push Rod		1	1	1	1	1	1	1	1	1	1	1	2201 181
5-47-10	RING, Master Cyl. Push Rod Retainer													
	w/Disc Brakes		1	—	1	—	—	—	—	—	—	—	—	2074 960
	w/Man. Drum Brake		1	1	1	1	1	1	1	1	1	—	—	2074 960
5-52-0	**MASTER CYLINDER BRAKE TUBE**													
5-52-4	NUT, Master Cyl. to Brake Tee Tube													
	Frt.		AR	AR	AR	AR	AR	AR	AR	AR	AR	AR	AR	6026 887
	Frt.		AR	AR	AR	AR	AR	AR	AR	AR	AR	AR	AR	6026 436
	Rr.		AR	AR	AR	AR	AR	AR	AR	AR	AR	AR	AR	6026 888
	Rr.		AR	AR	AR	AR	AR	AR	AR	AR	AR	AR	AR	0137 396
5-52-10	TUBE, Master Cyl. to Brake Tee													
	Frt. w/Man. Brakes		—	—	—	—	—	1	1	1	1	—	—	2880 409
	Rr. w/Man. Brakes		—	—	—	—	—	1	1	1	1	—	—	2880 411
5-53-0	**BRAKE TUBING AND COVER**													
5-53-3	TUBING, 25 Foot Roll													
	3/16" O.D.		1	1	1	1	1	1	1	1	1	1	1	1843 251
	1/4" O.D.		1	1	1	1	1	1	1	1	1	1	1	1843 252
	5/16" O.D.		1	1	1	1	1	1	1	1	1	1	1	1843 253
	3/8" O.D.		1	1	1	1	1	1	1	1	1	1	1	1843 254
5-53-4	COVER, Tubing 25 Foot Roll													
	3/16" O.D. Tubing		1	1	1	1	1	1	1	1	1	1	1	1843 257
	1/4" O.D. Tubing		1	1	1	1	1	1	1	1	1	1	1	1843 258
5-54-0	**REAR AXLE BRAKE TUBE**													
5-54-4	NUT, Rr. Axle Brake Tube Outer	70	2	2	2	2	2	2	2	2	2	2	2	2643 974
		71	2	2	2	2	2	2	2	2	2	2	2	6029 113
	Brk. Tee To Rt. and Lt. Hose Tube w/o Disc Brakes		1	1	1	1	1	1	1	1	1	1	1	2643 974
	Brk. Tee to Rr. Hose Tube w/o Disc Brakes		1	1	1	1	1	1	1	1	1	1	1	2643 974
	Tee to Rt. And Lt. Hose Tube	71	—	—	—	—	—	—	—	—	—	—	2	2643 974
	J/Blk. To Rt. And Lt. Hose Brk. Tube w/Skid Control	71	—	—	—	—	—	—	—	—	—	—	2	2643 974
	Metering Valve To Rt. and Lt. Tube W/Disc Brakes		—	1	—	1	1	1	1	1	1	1	1	2643 974
	w/Disc Brakes	71	—	—	—	—	—	1	1	1	1	1	1	2643 974
5-55-0	**BRAKE TUBE**													
5-55-1	TUBE, Frt. Whl. Brake Hose to Whl. Cyl.													
	w/9" Drum Brakes Rt.		1	—	1	—	—	—	—	—	—	—	—	2856 083
	w/9" Drum Brakes Lt.		1	—	1	—	—	—	—	—	—	—	—	2856 081
	w/10" Drum Brakes	70	1	—	1	—	—	—	—	—	—	—	—	3461 672-3
	w/10" Drum Brakes	71	1	—	1	—	—	—	—	—	—	—	—	3461 960-1
	Nut, Tube Cyl. End.	70	2	—	2	—	—	—	—	—	—	—	—	6028 547
		71	2	—	2	—	—	—	—	—	—	—	—	# 6029 159

CARLINES: J - Challenger, B - Barracuda, V - Valiant, L - Dart, R - Belvedere - Satellite, W - Coronet - Charger, P - Plymouth, D - Dodge, C - Chrysler, Y - Imperial

AR Indicates use as required.

Numerals in parentheses ( ) refer to notes.

# Indicates parts not listed in any previous parts book.

★ Indicates change or addition.

Printed in U.S.A. January 1972

CODE	PART NAME	ENG. TYPE OR CU.IN.	V 1-2	B J 1-2	L 1-2	R 1-2	W 1-2	P 1-2	D 1-2	C 1	C 2	C 3	Y 1	PART NUMBER
5-56-0	**BRAKE TUBE CLIP**													
5-56-2	CLIP, Brake Tee to Rr. Hose Tube Frt. Reinf.		1	—	1	—	—	1	1	1	1	1	—	2123 341
	Brake Tee to Rr. Hose Tube Rr. Reinf.		1	—	1	—	—	—	—	—	—	—	—	2883 929
	Brake Tee to Prpg. Valve Tube	70	1	—	1	—	—	—	—	—	—	—	—	2123 341
	Brake Tee to Rr. Hose Tube Frt.		2	—	2	1	1	—	—	—	—	—	—	2123 341
	Brake Tee to Rr. Hose Tube Rr.		3	—	3	4	4	—	—	—	—	—	—	2123 341
	Brake Tee to Rr. Hose Tube		—	AR	—	2	2	5	5	5	5	AR	5	2123 341
	Brake Tee to Rr. Hose Tube (Barb Type)		1	—	1	—	—	—	—	—	—	—	—	2207 933
	Brake Tee to Rr. Hose Tube (Barb Type)	70	—	—	—	1	1	—	—	—	—	—	—	2467 719
	Metering Valve to Rt. Hose Tube		—	—	—	—	—	5	5	5	5	5	—	1119 423
	Metering Valve To Rt. Hose Tube Center	71	—	—	—	—	—	—	—	—	—	—	1	2073 041
	Metering Valve to Rr. Hose Tube Sill		—	—	—	—	—	1	1	1	1	1	1	2781 518
	Metering Valve to Rr. Hose Tube		—	—	—	—	—	5	5	5	5	5	5	2123 341
	Brake Tee to Metering Valve Tube		—	—	—	—	—	1	1	1	1	1	—	1119 423
	Brake Tee to Rt. Hose Tube		—	—	—	—	—	5	5	5	5	5	—	1119 423
	Brake Tee to Rr. Hose Tube Sill		—	—	—	—	—	1	1	1	1	1	1	2781 518
	Master Cyl. to Brake Tee Tube		1	1	1	1	1	1	1	1	1	1	1	2465 517
	Tube Sill	71	—	—	—	—	—	1	1	1	1	1	1	3466 870
5-57-0	**BRAKE TUBE BRACKET**													
5-57-2	BRACKET, Frt. Whl. Brake Hose to Knuckle													
	w/Drum Brakes, w/10" Brakes	70	1	—	1	—	—	—	—	—	—	—	—	3461 890-1
	w/Disc Brakes, w/10" Brakes		1	—	1	—	—	—	—	—	—	—	—	3461 676-7
	w/Drum Brakes, w/9" Brakes Rt.		1	—	1	—	—	—	—	—	—	—	—	2852 374
	w/Drum Brakes, w/9" Brakes Lt.		1	—	1	—	—	—	—	—	—	—	—	2852 373
	w/Drum Brakes, w/9" Brakes	71	1	—	1	—	—	—	—	—	—	—	—	3461 962-3
	BRACKET, Frt. Whl. Brake Hose to Frame		—	—	—	—	—	2	2	2	2	2	—	2944 988
	Y		—	—	—	—	—	—	—	—	—	—	2	2944 989
	Bracket, Rr. Axle Brake Hose	70	—	—	—	1	1	—	—	—	—	—	—	2823 304
	Rr. Axle Brake Hose		—	—	—	—	—	1	1	1	1	1	1	2460 676
	Brake Tube Rr. Hose	71	—	1	—	—	—	—	—	—	—	—	—	3466 396
	Brake Tube Rr. Hose	71	1	—	1	—	—	—	—	—	—	—	—	3466 397
	Brake Tube Rr. Hose	71	—	—	—	1	1	—	—	—	—	—	—	3404 975
	Nut, Brake Tube Rr. Hose Brkt. Screw	71	—	—	—	—	—	1	1	1	1	1	1	6029 355
5-58-0	**BRAKE TUBE TEE**													
5-58-1	TEE, Brake Tube Warning													
	Warning		1	—	1	1	1	—	—	—	—	—	—	3420 021
	w/Warning Switch w/o/Screw		1	1	1	1	—	—	—	—	—	—	—	2925 882
	Brake Tube W/Warning Switch W/Screw		—	1	—	1	1	—	—	—	—	—	—	3404 607
	Warning	70	—	—	—	—	—	1	1	1	1	1	1	2925 883
	Brake Tube Pr. Pg. W/Disc Brakes W/O Screw		1	—	1	1	1	—	—	—	—	—	—	3466 350
	Brake Tube Pr. Pg. W/Disc Brakes W/Screw		—	1	—	1	1	—	—	—	—	—	—	3466 351
	TEE, Rr. Axle Brake Hose		1	1	1	1	1	1	1	1	1	1	1	3404 742
	Rr. Axle Brake Hose	70	—	—	—	1	1	—	—	—	—	—	—	2856 076
	Rr. Axle Brake Tube	70	1	—	1	—	—	—	—	—	—	—	—	1940 621
	Rr. Axle Brake Tube	70	—	—	—	—	—	1	1	1	1	1	1	3404 742
	Brake Tube	71	—	—	—	—	—	1	1	1	1	—	—	3466 792
	Union, Rr. Brake Tube W/ Anti-Skid Control	71	—	—	—	—	—	—	—	—	—	—	1	3466 783
	NOTE: For Further Information See P.T.C. 5-107-34													

CARLINES J - Challenger, B - Barracuda, V - Valiant, L - Dart, R - Belvedere - Satellite, W - Coronet - Charger, P - Plymouth, D - Dodge, C - Chrysler, Y - Imperial

AR Indicates use as required.

Numerals in parentheses ( ) refer to notes.

# Indicates parts not listed in any previous parts book.

★ Indicates change or addition.

Printed in U.S.A. January 1972

CODE	PART NAME	ENG. TYPE OR CU.IN.	V 1-2	B J 1-2	L 1-2	R 1-2	W 1-2	P 1-2	D 1-2	C 1	C 2	C 3	Y 1	PART NUMBER
5-58-0	**BRAKE TUBE TEE Cont'd.**													
5-58-12	"O"RING, Brake Tee to Indicator	70	1	1	1	1	1	1	1	1	1	1	1	2881 984
	Brake Tee to Indicator	71	1	1	1	1	1	—	—	—	—	—	—	2881 984
	Metering Valve to Indicator	71	—	—	—	—	—	1	1	1	1	1	1	2881 984
5-58-13	SPRING NUT	70	—	—	—	1	1	—	—	—	—	—	—	152 267
	SCREW, Spring Nut	70	—	—	—	1	1	—	—	—	—	—	—	6026 860
5-62-0	**BRAKE FLEXIBLE HOSE**													
5-62-1	HOSE, Frt. Whl. Brake													
	9" and 10" Brakes		2	—	2	—	—	—	—	—	—	—	—	3461 729
	10" and 11" Brakes		—	2	—	2	2	—	—	—	—	—	—	3461 730
	w/Drum Brakes		—	—	—	—	—	2	2	2	2	2	—	3461 731
	w/Disc Brakes		—	2	—	2	2	2	2	2	2	2	2	2925 163
	HOSE, Rr. Axle Brakes													
			1	1	1	1	1	—	—	—	—	—	—	3461 728
	B,J	70	—	1	—	—	—	—	—	—	—	—	—	3461 727
	P, D, C, Y		—	—	—	—	—	1	1	1	1	1	1	3461 725
5-62-7	GASKET, Frt. Whl. Brake Cyl. Hose		—	2	—	2	2	2	2	2	2	2	—	2072 612
5-62-20	LOCK, Frt. or Rr. Axle Brake Hose		AR	AR	AR	AR	AR	AR	AR	AR	AR	AR	AR	2208 893
5-63-0	**WHEEL CYLINDER REPAIR PACKAGE**													
5-63-1	CYLINDER REPAIR PACKAGE, Frt.													
	9" Brakes		2	—	2	—	—	—	—	—	—	—	—	3549 819
	10 and 11" Brakes	70	2	—	2	2	2	2	2	2	2	2	2	3549 803
	10 and 11" Brakes	71	2	2	2	2	2	2	2	2	2	2	—	3420 140
	CYLINDER PACKAGE, Rr.													
	9" Brakes	70	2	2	2	—	—	—	—	—	—	—	—	2808 695
	9" Brakes	71	2	2	2	—	—	—	—	—	—	—	—	=3420 999
	10 and 11" Brakes	70	2	2	2	2	2	2	2	2	2	2	2	2808 697
	10 and 11" Brakes	71	2	2	2	2	2	2	2	2	2	2	2	=3421 000
	11 x 3" Brakes	70	—	—	—	—	—	—	—	—	—	—	2	3549 804
5-64-0	**WHEEL BRAKE CYLINDER**													
5-64-1	CYLINDER, Frt. Whl., Complete													
	9" Brakes		1	—	1	—	—	—	—	—	—	—	—	2881 620-1
	10 and 11" Brakes Rt.		1	1	1	1	1	—	—	—	—	—	—	3420 995
	11" Brakes Lt.		—	—	—	—	—	1	1	1	1	1	—	3420 995
	10 and 11" Brakes Lt.		1	1	1	1	1	—	—	—	—	—	—	3420 996
	11" Brakes Rt.		—	—	—	—	—	1	1	1	1	1	—	3420 996
	CYLINDER, Rr. Whl., Complete													
	9" Brakes		2	—	2	—	—	—	—	—	—	—	—	3461 656
	10" and 11" Brakes		2	2	2	2	2	2	2	2	2	2	2	3420 997
5-64-2	SCREW, Frt. Whl. Brake													
	Cyl. Mtg.	70	4	—	4	—	—	—	—	—	—	—	—	6028 434
	W/9" Brakes	71	4	—	4	—	—	—	—	—	—	—	—	6026 058
	W/10 and 11" Brakes	71	—	4	—	4	4	4	4	4	4	—	—	6028 921
	Screw, Rr. Whl. Brake Cyl. Mtg.													
	W/10 and 11" Brakes		—	4	—	4	4	4	4	4	4	4	4	6028 921
5-64-7	SEAL, Rr. Whl. Brake Cyl. to Support		2	2	2	2	2	2	2	2	2	2	2	2534 663
5-66-0	**WHEEL CYLINDER TUBE INSERT**													
5-66-6	INSERT, Cyl. Tube		2	2	2	2	2	2	2	2	2	2	2	2072 678
5-67-0	**WHEEL CYLINDER BLEEDER SCREW**													
5-67-1	SCREW, Bleeder w/o Disc Brakes		2	2	2	2	2	2	2	2	2	2	2	2881 619
	Bleeder w/Disc Brakes		2	2	2	2	2	2	2	2	2	2	2	2781 019

CARLINES: J - Challenger, B - Barracuda, V - Valiant, L - Dart, R - Belvedere - Satellite, W - Coronet - Charger, P - Plymouth, D - Dodge, C - Chrysler, Y - Imperial

AR Indicates use as required.

Numerals in parentheses ( ) refer to notes.

# Indicates parts not listed in any previous parts book.

★ Indicates change or addition.

Printed in U.S.A. January 1972

CODE	PART NAME	ENG. TYPE OR CU.IN.	V 1-2	B J 1-2	L 1-2	R 1-2	W 1-2	P 1-2	D 1-2	C 1	C 2	C 3	Y 1	PART NUMBER
5-69-0	**WHEEL CYLINDER BOOT**													
5-69-1	BOOT, Frt. Whl. Cyl.													
	9" Brakes		4	—	4	—	—	—	—	—	—	—	—	2881 624
	10" and 11" Brakes		4	4	4	4	4	4	4	4	4	4	—	3461 513
	BOOT, Rr. Whl. Cyl.													
	9" Brakes		4	—	4	—	—	—	—	—	—	—	—	2881 604
	10" and 11" Brakes		4	4	4	4	4	4	4	4	4	4	4	2881 618
5-70-0	**WHEEL CYLINDER PISTON**													
5-70-1	PISTON, Frt. Whl. Brake Cyl.													
	9" Brakes		4	—	4	—	—	—	—	—	—	—	—	2072 655
	PISTON, Rr. Whl. Brake Cyl.													
	9" Brakes		4	—	4	—	—	—	—	—	—	—	—	2072 656
	10" and 11" Brakes		4	4	4	4	4	4	4	4	4	4	4	2260 843
5-71-0	**WHEEL CYLINDER PISTON CUP**													
5-71-1	CUP, Frt. Whl. Brake Cyl. Piston													
	9" Brakes		4	—	4	—	—	—	—	—	—	—	—	1669 337
	10" and 11" Brakes		4	4	4	4	4	4	4	4	4	4	—	3461 511
	CUP, Rr. Whl. Brake Cyl. Piston													
	9" Brakes		4	—	4	—	—	—	—	—	—	—	—	2265 574
	10" and 11" Brakes		4	4	4	4	4	4	4	4	4	4	4	2260 844
5-71-2	SPRING, Frt. Whl. Cyl. Piston													
	9" and 10" Brakes		2	2	2	—	—	—	—	—	—	—	—	1923 765
	SPRING, Rr. Whl. Cyl. Piston													
	9" Brakes		2	—	2	—	—	—	—	—	—	—	—	2072 637
	10" and 11" Brakes		2	2	2	2	2	2	2	2	2	2	2	1923 765
5-100-0	**POWER BRAKE POWER UNIT**													
5-100-1	FOR FIELD INSTALLATION													
	Power Brake Package													
	Drum and Disc Midland Ross	70	1	—	1	—	—	—	—	—	—	—	—	3420 972
	Drum and Disc 10" Brakes	71	1	—	1	—	—	—	—	—	—	—	—	3579 290
	w/9" Drum Brakes All w/Disc Brakes		1	—	1	—	—	—	—	—	—	—	—	= 3549 094
	Drum	70	—	1	—	—	—	—	—	—	—	—	—	3420 971
	Drum 10" And 11" Brakes	71	—	1	—	1	1	—	—	—	—	—	—	3579 292
	Drum, except Sta. Wgn.	70	—	—	—	1	1	—	—	—	—	—	—	3004 622
	Drum, Sta. Wgn.	70	—	—	—	1	1	—	—	—	—	—	—	3420 001
	Drum	70	—	—	—	—	—	1	1	1	1	1	—	3004 867
	Drum, P, D. Wgn. C-All	71	—	—	—	—	—	1	1	1	1	1	—	3549 942
	Drum, P, D Exc. Wgn.	71	—	—	—	—	—	1	1	—	—	—	—	3549 943
	KIT, Booster Modification w/Power Brakes	71	1	1	1	1	1	—	—	—	—	—	—	= 3621 997
5-100-2	POWER UNIT, WITH DISC BRAKES													
	V,L	70	1	—	1	—	—	—	—	—	—	—	—	3461 104
	V,L.	71	1	—	1	—	—	—	—	—	—	—	—	3461 110
	w/o 426 Eng.	70	—	1	—	—	—	—	—	—	—	—	—	3420 987
	Less Linkage w/340 Eng. w/3-2 Bbl. Carb.	70	—	1	—	—	—	—	—	—	—	—	—	3461 118
	Less Linkage w/340 Eng. w/3-2 Bbl. Carb.	71	—	1	—	—	—	—	—	—	—	—	—	3579 272
	Less Linkage, w/426 Eng.	70	—	1	—	—	—	—	—	—	—	—	—	2944 486
	w/Linkage w/426 Eng.	71	—	1	—	1	1	—	—	—	—	—	—	3461 301
	Less Linkage, w/o 426 Eng.	70	—	1	—	—	—	—	—	—	—	—	—	2944 490
	Less Linkage	71	—	1	—	1	1	—	—	—	—	—	—	3579 272
	Less Linkage, w/426 Eng.	70	—	—	—	1	1	—	—	—	—	—	—	2881 801
	P,D,C,Y	70	—	—	—	—	—	1	1	1	1	1	1	3461 034

CARLINES J - Challenger, B - Barracuda, V - Valiant, L - Dart, R - Belvedere - Satellite, W - Coronet - Charger, P - Plymouth, D - Dodge, C - Chrysler, Y - Imperial

AR Indicates use as required.

Numerals in parentheses ( ) refer to notes.

# Indicates parts not listed in any previous parts book.

★ Indicates change or addition.

Printed in U.S.A. January 1972

5-100-0 POWER BRAKE POWER UNIT Cont'd.

CODE	PART NAME	ENG. TYPE OR CU.IN.	V 1-2	B J 1-2	L 1-2	R 1-2	W 1-2	P 1-2	D 1-2	C 1	C 2	C 3	Y 1	PART NUMBER
5-100-2	POWER UNIT Cont'd.													
	w/Man. Trans.	71	—	—	—	—	—	1	1	1	1	1	—	3461 278
	w/Auto. Trans.	71	—	—	—	—	—	1	1	1	1	1	—	3579 267
		71	—	—	—	—	—	—	—	—	—	—	1	3461 278
	BENDIX, R.W.	70	—	—	—	1	1	—	—	—	—	—	—	2883 056
	POWER UNIT, With Drum Brakes	70	1	—	1	—	—	—	—	—	—	—	—	2944 006
	V,L.	71	1	—	1	—	—	—	—	—	—	—	—	3461 110
	V, L w/198, 225, 318 Eng. w/Power Drum Brakes	71	1	—	1	—	—	—	—	—	—	—	—	=3461 109
	Less Linkage, w/o 426 Eng.	70	—	1	—	—	—	—	—	—	—	—	—	2944 489
	Less Linkage w/o 426 Eng. w/10" Brakes.	71	—	1	—	1	1	—	—	—	—	—	—	3461 287
	Less Linkage w/o 426 Eng. w/11" Brakes	71	—	1	—	1	1	—	—	—	—	—	—	3579 272
	w/Power Brakes	71	—	1	—	1	1	—	—	—	—	—	—	=3461 360
	w/426 Eng.	70	—	1	—	—	—	—	—	—	—	—	—	2944 309
	Less Linkage, w/426 Eng.	70	—	1	—	—	—	—	—	—	—	—	—	2881 800
	W/426 Eng.	71	—	1	—	1	1	—	—	—	—	—	—	3461 300
	w/426 Eng.	70	—	—	—	1	1	—	—	—	—	—	—	2944 160
	w/o 426 Eng.	70	—	—	—	1	1	—	—	—	—	—	—	3004 608
	P, D. Sta. Wgn. Only C-All Midland Ross	70	—	—	—	—	—	1	1	1	1	1	—	3004 829
	P, D. Sta. Wgn. Bendix	70	—	—	—	—	—	1	1	—	—	—	—	3461 140
	P, D Exc. Sta. Wgn.	70	—	—	—	—	—	1	1	—	—	—	—	3549 834
	For Field Installed Unit	70	—	—	—	—	—	1	1	1	1	1	—	2944 041
	For Field Installed Unit	71	—	—	—	—	—	1	1	1	1	1	—	3461 310
5-100-15	SPRING, Power Brake Lever Push Rod	70	—	1	—	1	1	—	—	—	—	—	—	2534 228
5-100-18	BUSHING, Pwr. Brkae Lever Push Rod, Lwr	70	—	1	—	1	1	—	—	—	—	—	—	2534 231
	Pwr. Brake Lever Push Rod, Upr.	70	—	1	—	1	1	—	—	—	—	—	—	2534 346
5-100-20	ROD, Brake Pedal to Booster Linkage		1	—	1	—	—	—	—	—	—	—	—	3461 010
	Brake Pedal to P/Brake Linkage	71	—	1	—	1	1	—	—	—	—	—	—	3461 148
	Master Cyl. Output Push		—	1	—	1	1	1	1	1	1	1	—	2944 499
	Lever Push	70	—	1	—	—	—	—	—	—	—	—	—	2944 289
	Plunger Push	70	—	—	—	1	1	—	—	—	—	—	—	2534 233
	Pedal Push	71	—	1	—	1	1	1	1	1	1	1	—	3461 148
	Plunger Push, w/o Disc Brakes	70	—	—	—	—	—	1	1	1	1	1	—	2944 009
	Plunger Push, w/Disc Brakes		—	—	—	—	—	1	1	1	1	1	1	2944 116
5-100-26	BOOT, Pedal Linkage to Firewall		1	—	1	—	—	—	—	—	—	—	—	2643 731
	Plunger to Push Rod w/Power and Disc Brakes		—	1	—	1	1	—	—	—	—	—	—	3461 001
	Plunger to Push Rod w/Auto. Trans. w/Disc Brakes		—	—	—	—	—	1	1	1	1	1	—	3461 001
	Push Rod w/o Disc Brakes		—	1	—	1	1	1	1	1	1	1	—	2823 375
	Valve Oper, Push Rod		—	1	—	1	1	1	1	1	1	1	1	2534 349
	Push Rod w/Disc Brakes		—	1	—	1	1	1	1	1	1	1	—	3461 005
	Plunger to Push Rod		1	1	1	1	1	1	1	1	1	1	1	2944 020
	GUARD, Brake Pedal Linkage w/426 Eng.		—	1	—	1	1	—	—	—	—	—	—	2467 592
5-100-32	RETAINER, Rr. Cyl. Shell Boot w 426 Eng.	70	—	1	—	1	1	—	—	—	—	—	—	2823 993
	Push Rod Boot	70	—	—	—	1	1	1	1	1	1	1	—	2823 378
	Push Rod to Plunger		1	1	1	1	1	1	1	1	1	1	1	2401 166
	Master Cylinder Push Rod Seal		—	1	—	1	1	1	1	1	1	1	1	2401 885
	CLIP, Plunger to Push Rod	70	—	1	—	—	—	—	—	—	—	—	—	3461 002
5-100-34	LEVER, w/Reaction Ring		1	1	1	1	1	1	1	1	1	1	1	2944 019
5-100-62	SCREW, Master Cyl. Push Rod	70	—	—	—	1	1	1	1	1	1	1	—	2660 776
	Master Cyl. Push Rod	70	1	1	1	—	—	—	—	—	—	—	—	2944 497
	Master Cyl. Push Rod.	71	1	1	1	1	1	1	1	1	1	1	1	2660 776

CARLINES: J - Challenger, B - Barracuda, V - Valiant, L - Dart, R - Belvedere - Satellite, W - Coronet - Charger, P - Plymouth, D - Dodge, C - Chrysler, Y - Imperial

AR Indicates use as required.

# Indicates parts not listed in any previous parts book.

Numerals in parentheses ( ) refer to notes.

★ Indicates change or addition.

Printed in U.S.A.
January 1972

CODE	PART NAME	ENG. TYPE OR CU.IN.	V 1-2	B J 1-2	L 1-2	R 1-2	W 1-2	P 1-2	D 1-2	C 1	C 2	C 3	Y 1	PART NUMBER
5-100-0	**POWER BRAKE POWER UNIT Cont'd.**													
5-100-115	LINKAGE, Brake Pedal w/426 Eng.	70	—	1	—	—	—	—	—	—	—	—	—	2944 488
	w/426 Eng.	70	—	—	—	1	1	—	—	—	—	—	—	2467 594
5-100-161	SEAL, Valve Body to Reaction Hub Vacuum	70	—	—	—	1	1	1	1	1	1	1	1	2266 942
	Valve Body to Rr. Cyl. Shell		—	1	—	1	1	1	1	1	1	1	1	2401 126
5-100-167	BUSHING, M/Cyl. Push Rod to Plunger		1	—	—	—	—	—	—	—	—	—	—	2401 853
5-100-180	RETAINER, Valve Silencer w/426 Eng.	71	—	1	—	1	1	—	—	—	—	—	—	2401 135
5-100-189	HUB and LEVER, w/o 426 Eng.	70	—	—	—	1	1	—	—	—	—	—	—	2534 226
		71	1	—	1	—	—	—	—	—	—	—	—	3461 262
		71	—	1	—	1	1	1	1	1	1	1	—	3461 295
	HUB and LEVER, w/426 Eng.	70	—	—	—	1	1	—	—	—	—	—	—	2823 989
	w/o 426 Eng.	70	—	1	—	—	—	—	—	—	—	—	—	2944 286
	w/426 Eng.	70	—	1	—	—	—	—	—	—	—	—	—	2944 487
	Bolt, P/Brake Lever Hub Exc. 426 Eng.	71	—	1	—	1	1	—	—	—	—	—	—	6029 291
5-100-191	PIN, Lever Pivot w/426 Eng.	70	—	1	—	1	1	—	—	—	—	—	—	2074 986
5-100-192	WASHER, Linkage Pin Spring		2	—	2	—	—	—	—	—	—	—	—	869 770
	Pedal Linkage Clevis Bowed w/426 Eng.	70	—	2	—	2	2	—	—	—	—	—	—	2467 600
	Valve Oper. Rod Bowed w/426 Eng.	70	—	2	—	2	2	—	—	—	—	—	—	2075 005
5-100-194	PIN, Valve Oper. Rod Clevis w/426 Eng.	70	—	1	—	1	1	—	—	—	—	—	—	2075 006
	Brake Pedal Linkage Clevis		—	1	—	1	1	—	—	—	—	—	—	2075 006
	Power Brake Linkage Clevis	71	—	2	—	2	2	—	—	—	—	—	—	2075 006
	Power Brake Push Rod Clevis	71	1	2	1	2	2	2	2	2	2	2	—	2075 006
	Power Brake Hub Linkage Clevis	71	1	—	1	—	—	—	—	—	—	—	—	3461 281
	Power Brake Linkage Lever Clevis	71	1	—	1	—	—	—	—	—	—	—	—	3461 282
5-100-197	SILENCER, Valve Body Rr. w/Disc Brakes	70	—	—	—	1	1	1	1	1	1	1	1	2401 154
	Valve Body Rr. w/426 Eng.	71	—	1	—	1	1	—	1	—	—	—	—	3461 302
	Valve	70	—	—	—	2	2	2	2	2	2	2	—	2823 380
	Valve, Rr. w/o 426 Eng.		—	1	—	1	1	1	1	1	1	1	—	3461 008
5-100-198	SLEEVE, Power Brake Lever Hub	70	—	1	—	—	—	—	—	—	—	—	—	2944 290
	R, W	70	—	—	—	1	1	—	—	—	—	—	—	2534 227
	B,J,R,W.	71	—	1	—	1	1	—	—	—	—	—	—	2534 227
5-100-199	RETAINER, Valve Silencer	70	—	1	—	1	1	1	1	1	1	1	—	2823 381
		71	—	1	—	1	1	1	1	1	1	1	—	3461 290
5-100-206	SEAL and PLATE		—	1	—	1	1	1	1	1	1	1	—	2401 894
	PLATE, Rr. Cyl. Shell Brkt. Mtg. w/426 Eng.	70	—	1	—	1	1	—	—	—	—	—	—	2467 593
5-100-212	GROMMET, Vacuum Connector to Frt. Hsg.		1	1	1	1	1	1	1	1	1	1	1	2467 576
5-100-214	BRACE, Power Brake To Fender Shld.	71	1	—	1	—	—	—	—	—	—	—	—	2881 890
5-101-0	**POWER UNIT MOUNTING BRACKET**													
5-101-1	BRACKET and STUDS, w/426 Eng. Rt.	70	—	1	—	1	1	—	—	—	—	—	—	2823 991
	w/426 Eng. Lt.	70	—	1	—	1	1	—	—	—	—	—	—	2823 990
	Bracket, P/Brake Mtg. Rt.	71	1	—	1	—	—	—	—	—	—	—	—	3461 280
	Lt.	71	1	—	1	—	—	—	—	—	—	—	—	3461 279
5-101-5	SUPPORT, Power Brake to Dash Pnl.		1	—	1	—	—	—	—	—	—	—	—	2823 604
	BRACE, Power Brake to Fender Shield		1	—	1	—	—	—	—	—	—	—	—	2823 603
5-101-16	SPACER, Bracket to Booster w/426 Eng.	70	—	4	—	4	4	—	—	—	—	—	—	2823 992
5-105-0	**POWER BRAKE VACUUM CONNECTOR**													
5-105-1	VALVE and GROMMET PACKAGE w/Drum or Disc Brakes, Midland Ross	70	1	—	1	—	—	—	—	—	—	—	—	2808 609
	w/Drum or Disc Brakes Midland Ross		1	1	1	1	1	1	1	1	1	1	—	3420 974
	w/Drum or Disc Brakes Bendix		—	1	—	1	1	1	1	1	1	1	—	3420 973

CARLINES J - Challenger, B - Barracuda, V - Valiant, L - Dart, R - Belvedere - Satellite, W - Coronet - Charger, P - Plymouth, D - Dodge, C - Chrysler, Y - Imperial

AR Indicates use as required.

# Indicates parts not listed in any previous parts book.

Numerals in parentheses ( ) refer to notes.

★ Indicates change or addition.

Printed in U.S.A. January 1972

CODE	PART NAME	ENG. TYPE OR CU.IN.	V 1-2	B J 1-2	L 1-2	R 1-2	W 1-2	P 1-2	D 1-2	C 1	C 2	C 3	Y 1	PART NUMBER
5-101-0	**POWER BRAKE VACUUM CONNECTOR Cont'd.**													
5-105-1	VALVE AND GROMMET PACKAGE Cont'd.													
	w/Drum or Disc Brakes Midland Ross		—	1	—	1	1	1	1	1	1	1	1	3004 625
	w/Drum or Disc Brakes Bendix	70	—	—	—	1	1	1	1	1	1	1	1	3004 626
	w/426 Eng., Bendix		—	1	—	1	1	—	—	—	—	—	—	3420 128
	w/Drum Brakes w/o Disc Bendix	70	—	—	—	1	1	1	1	1	1	1	1	3420 129
	Valve Package, Booster Check W/340 Eng. W/Disc Brakes		—	1	—	—	—	—	—	—	—	—	—	3579 263
5-105-6	GROMMET, Vacuum Check Valve	70	—	—	—	1	1	1	1	1	1	1	1	2823 377
	w/426 Eng.		—	1	—	1	1	—	—	—	—	—	—	2823 377
5-105-10	SEAL, Frt. Cyl. Shell w/426 Eng.		—	1	—	1	1	—	—	—	—	—	—	2401 128
5-105-14	CAP, Vacuum Hose and Check Valve Bendix		—	1	—	1	1	1	1	1	1	1	1	2944 022
	Midland Ross	71	1	1	1	1	1	1	1	1	1	1	1	2944 127
5-107-0	**BOOSTER BRAKE TUBE**													
5-107-15	TUBE, Brake Tee to Metering Valve		—	1	—	1	1	—	—	—	—	—	—	3404 615
5-107-34	VALVE, Metering w/Disc Brakes	71	—	1	—	1	1	—	—	—	—	—	—	3466 157
	w/Disc Brakes	70	—	—	—	1	1	—	—	—	—	—	—	3466 156
		70	—	—	—	—	—	1	1	1	1	1	—	3466 155
		70	—	—	—	—	—	—	—	—	—	—	1	3466 154
	W/Switch	71	—	—	—	—	—	1	1	1	1	1	1	3466 781
	Metering Proportioning W/H.D. Disc Brakes	71	—	—	—	—	—	1	1	—	—	—	—	3466 795
5-107-35	SLEEVE, Metering Valve to Rt. Hose Tube	70	—	—	—	—	—	—	—	—	—	—	2	2880 485
	Tee To Rt. Hose Tube w/Anti Skid	71	—	—	—	—	—	—	—	—	—	—	2	2880 485
5-107-36	SEAL, Brake Tube Metering Valve	70	—	—	—	—	—	1	1	1	1	1	1	2880 499
		71	—	—	—	—	—	1	1	1	1	1	1	3466 782
	Plug, Brake Tube Metering Valve W/Anti-Skid	71	—	—	—	—	—	—	—	—	—	—	1	3466 780
5-107-37	SHIELD, Metering Valve	70	—	—	—	1	1	—	—	—	—	—	—	3404 695
5-110-0	**POWER BRAKE HOSE CHECK VALVE**													
5-110-18	CONNECTOR													
	2 WAY, w/A/Cond. w/o ATC		1	1	1	1	1	1	1	1	1	1	1	1944 092
	2 Way w/A/Cond.	71	1	—	1	—	1	1	—	—	—	—	—	2405 466
	2 Way W/O A/Cond.	71	—	1	—	1	1	1	1	1	1	1	—	3461 304
	1 WAY, w/o A/Cond.		1	1	1	1	1	1	1	1	1	1	—	1944 154
	3 WAY, w/A/Cond.		—	—	—	—	1	1	1	1	1	1	1	1948 838
	3 Way W/A/Cond. W/440 Eng.	71	—	—	—	1	1	—	—	—	—	—	—	3461 311
	3 Way W/O A/Cond. W/383 Eng.	71	—	—	—	—	1	1	—	—	—	—	—	3461 323
	4 WAY, w/ATC		—	—	—	—	—	—	—	—	—	—	1	2460 416
	4 Way W/A/Cond. W/440 Eng.	71	—	—	—	—	1	—	—	—	—	—	—	3461 324
5-111-0	**POWER BRAKE VACUUM HOSE**													
5-111-17	HOSE, Power Brake to Intake Manifold w/383, 440 Eng.		—	1	—	1	1	1	1	1	1	1	1	2883 083
	HOSE, Flexible Vacuum Hose .34 I.D.		AR	AR	AR	AR	AR	AR	AR	AR	AR	AR	AR	0883 031
5-111-19	CLAMP, Hose	70	2	2	2	2	2	2	2	2	2	2	2	448 797
5-113-0	**POWER BRAKE AIR CLEANER**													
5-113-17	FILTER, Plunger to Push Rod Boot		—	1	—	1	1	1	1	1	1	1	—	3461 003
	Push Rod Boot	70	—	1	—	—	—	—	—	—	—	—	—	3461 009
		71	—	1	—	1	1	1	1	1	1	1	—	3461 291
	Booster Hub		—	1	—	1	1	1	1	1	1	1	—	3461 004
	Air Cleaner, Bendix	70	—	—	—	2	2	2	2	2	2	2	—	2823 379
	Frt. Hsg. Air Inlet, Midland Ross		1	1	1	1	1	1	1	1	1	1	1	2467 575
	Rr. Cyl. Shell w/426 Eng.	70	—	1	—	1	1	—	—	—	—	—	—	2401 139
5-113-20	HUB, Air Intake		1	1	1	1	1	1	1	1	1	1	1	2467 578
5-113-21	COVER, Air Int. and Filter	70	1	—	1	1	1	1	1	1	1	1	—	2467 577
	Air Intake and Filter	71	1	1	1	1	1	1	1	1	1	1	1	3461 268

CARLINES: J - Challenger, B - Barracuda, V - Valiant, L - Dart, R - Belvedere - Satellite, W - Coronet - Charger, P - Plymouth, D - Dodge, C - Chrysler, Y - Imperial

AR Indicates use as required.

# Indicates parts not listed in any previous parts book.

Numerals in parentheses ( ) refer to notes.

★ Indicates change or addition.

Printed in U.S.A. January 1972

GROUP 6 - CLUTCH

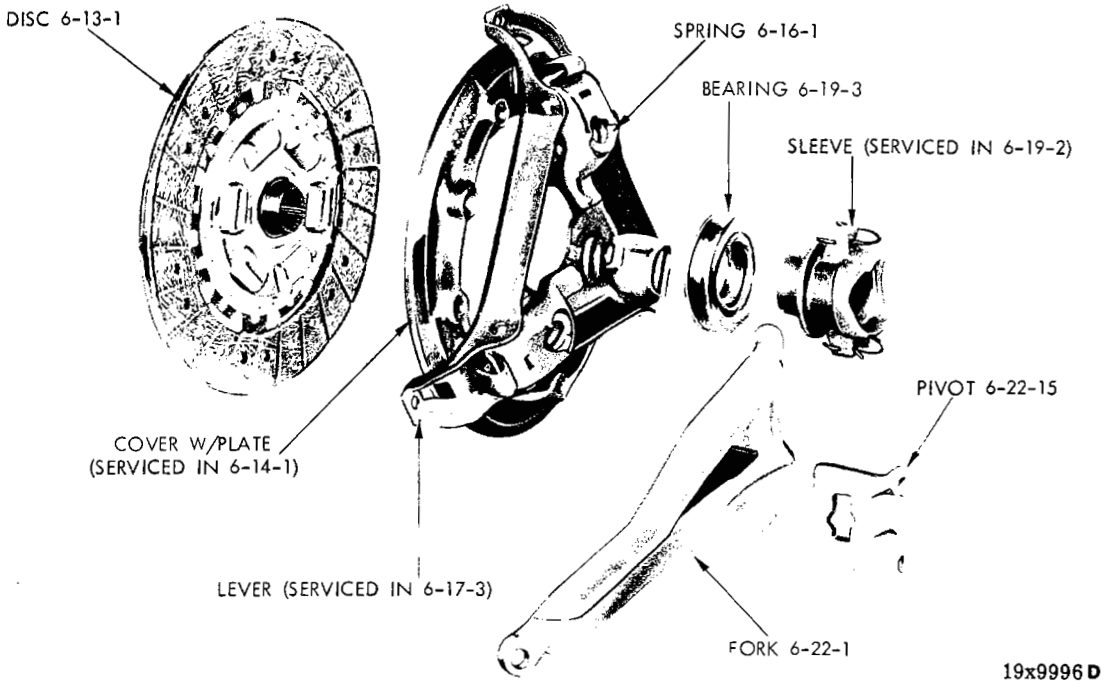

CLUTCH - 6 CYLINDER

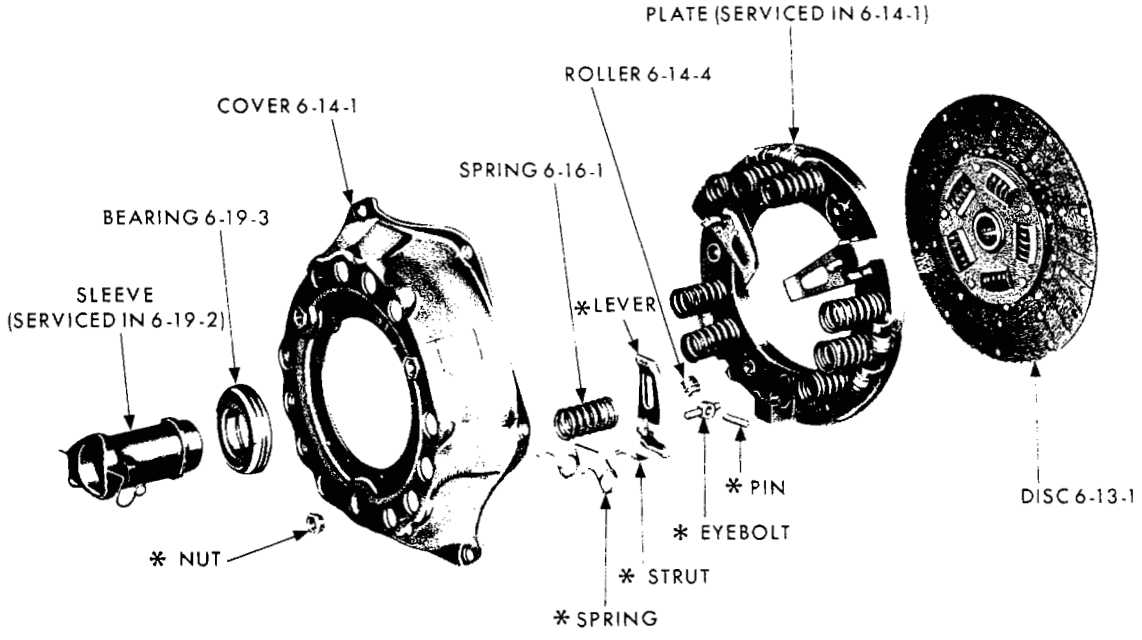

*** SERVICED IN LEVER PACKAGE 6-17-3**

CLUTCH - 6 AND 8 CYLINDER

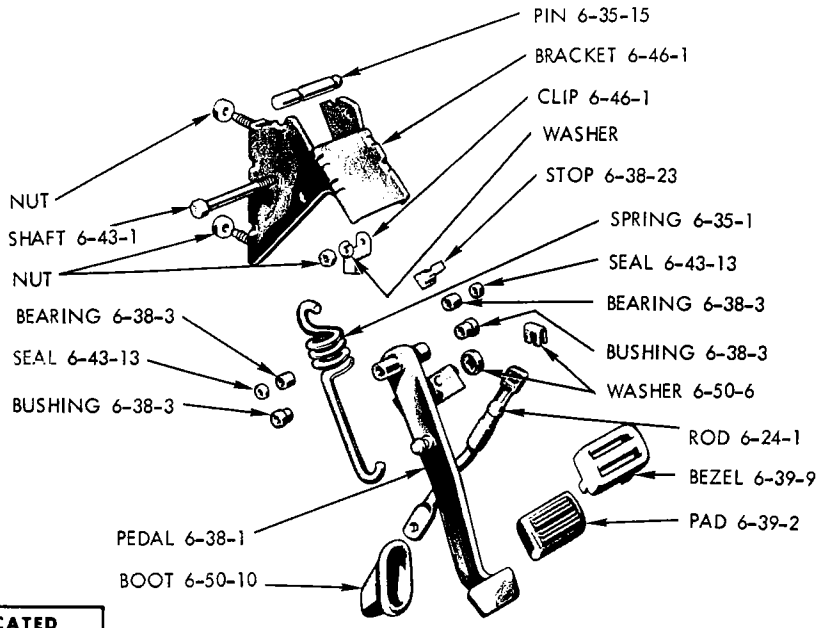

PARTS INDICATED BY NAME ONLY - ORDER BY DESCRIPTION

19a2520

CLUTCH PEDAL AND BRACKET - PLYMOUTH, DODGE AND CHRYSLER

NOTES

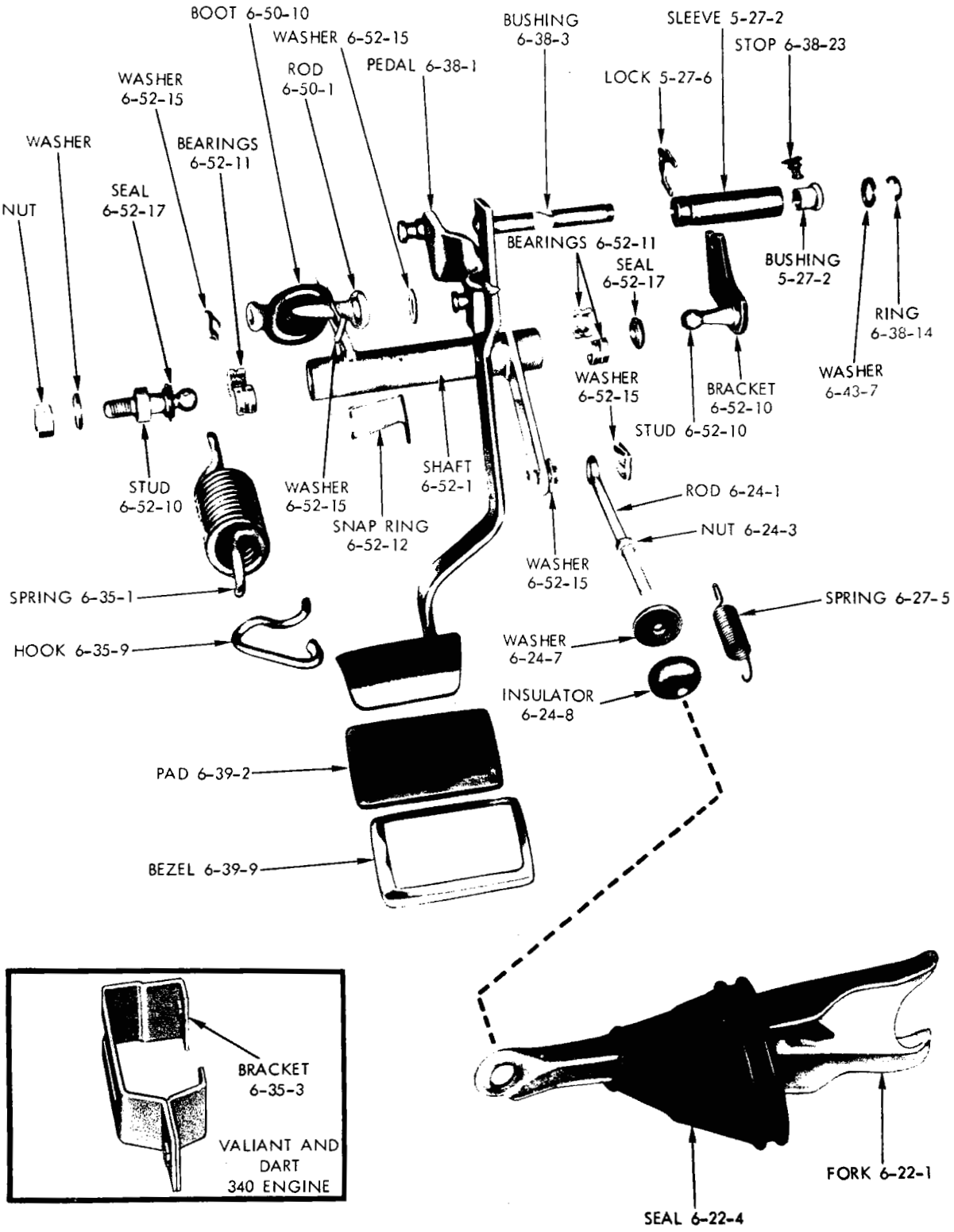

PARTS INDICATED BY NAME ONLY - ORDER BY DESCRIPTION

19a1017C

CLUTCH AND BRAKE PEDAL LINKAGE - VALIANT AND DART

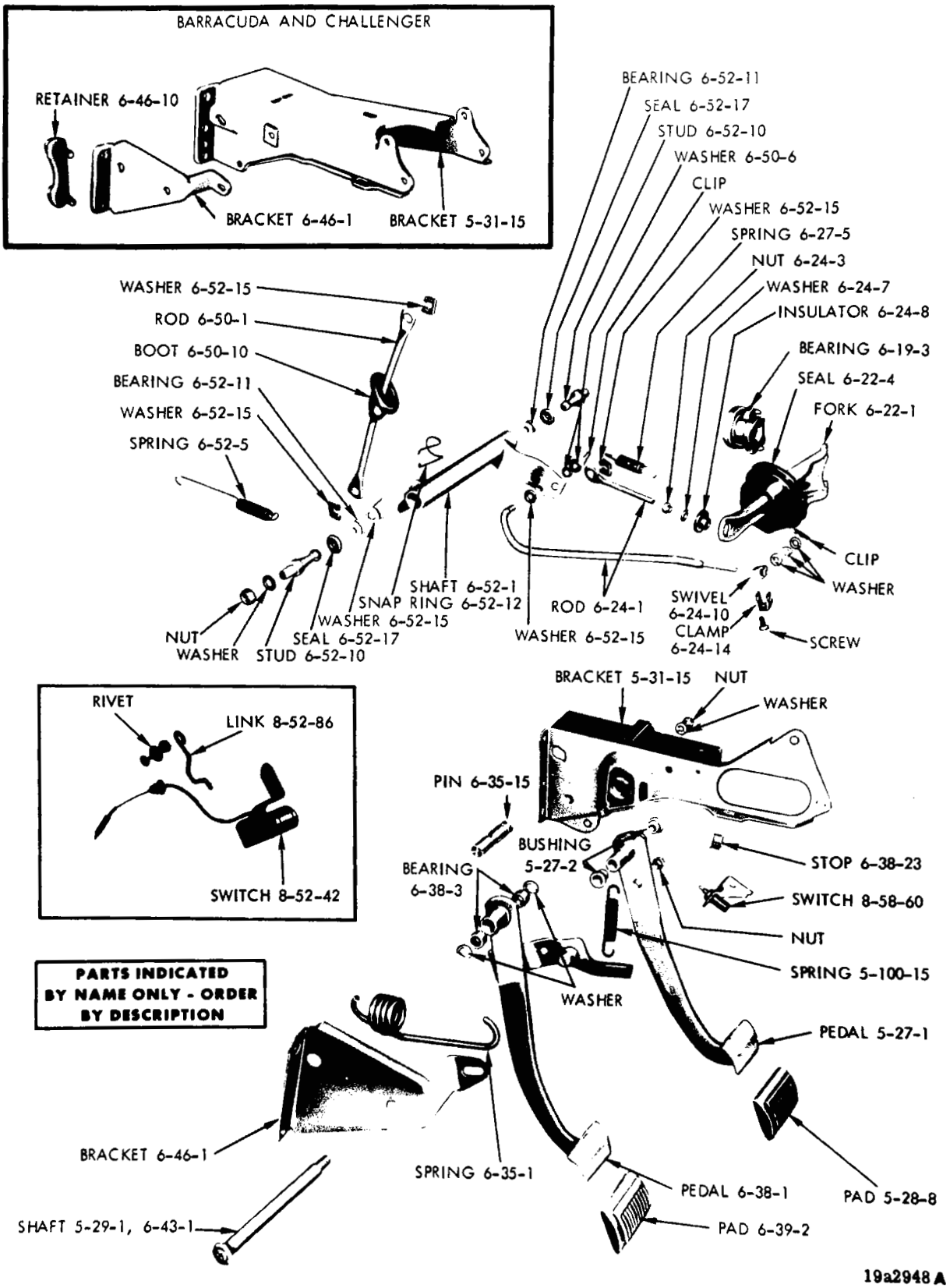

CLUTCH AND BRAKE PEDAL LINKAGE - BELVEDERE, CORONET, BARRACUDA AND CHALLENGER

Printed in U.S.A.

CODE	PART NAME		ENG. TYPE OR CU.IN.	V 1-2	B J 1-2	L 1-2	R 1-2	W 1-2	P 1-2	D 1-2	C 1	C 2	C 3	Y 1	PART NUMBER
6-09-0	**CLUTCH HOUSING**														
6-09-1	HOUSING		6	1	1	1	—	—	—	—	—	—	—	—	2658 955
	Export w/4 Speed Trans.	70	6	1	1	1	—	—	—	—	—	—	—	—	2806 718
	Export 4 Speed Trans.	71	6	1	—	1	—	—	—	—	—	—	—	—	2806 718
	Std.		6	—	—	—	1	1	1	1	—	—	—	—	2658 955
	Export	71	6	—	—	—	1	1	—	—	—	—	—	—	2658 955
	H.D.		6	—	—	—	1	1	1	1	—	—	—	—	2536 918
	318, 340 Eng.	70	8	1	1	1	1	1	1	1	—	—	—	—	2892 480
	318, 340, 360 Eng.	71	8	1	1	1	1	1	1	1	1	—	—	—	2892 480
	383, 426, 440 Eng.		8	—	1	—	1	1	1	1	1	—	—	—	2892 511
	SCREW, w/WASHER, Housing to Cyl. Block		6	3	3	3	3	3	3	3	—	—	—	—	6023 187
	BOLT, Cyl. Block to Housing	71	6	2	2	2	2	2	2	2	—	—	—	—	9418 208
6-09-11	STRUT, Housing to Cylinder Block		6	1	1	1	1	1	1	1	—	—	—	—	2468 197
6-10-0	**CLUTCH HOUSING PAN**														
6-10-2	PAN		6	1	1	1	—	—	—	—	—	—	—	—	2129 885
	Std.		6	—	—	—	1	1	1	1	—	—	—	—	2129 885
	Export	71	6	—	—	—	1	1	—	—	—	—	—	—	2129 885
	H.D.		6	—	—	—	1	1	1	1	—	—	—	—	2532 792
	318, 340 Eng.	70	8	1	1	1	1	1	1	1	—	—	—	—	2843 892
	318, 340, 360 Eng.	71	8	1	1	1	1	1	1	1	1	—	—	—	2843 892
	383, 426, 440 Eng.		8	—	1	—	1	1	1	1	1	—	—	—	2899 035
6-10-3	SCREW, w/WASHER, Pan Attaching			AR	AR	AR	AR	AR	AR	AR	AR	—	—	—	1947 953
6-10-10	SEAL, Housing Dust Pan		6	1	1	1	1	1	1	1	—	—	—	—	2463 173
	318, 340 Eng.	70	8	1	1	1	1	1	1	1	—	—	—	—	2892 911
	318, 340, 360 Eng.	71	8	1	1	1	1	1	1	1	1	—	—	—	2892 911
	SCREW, w/WASHER, 318, 340, 360 Eng.		8	1	1	1	1	1	1	1	1	—	—	—	6026 919
6-13-0	**CLUTCH DISC**														
6-13-1	DISC, 9 1/4"		6	1	1	1	1	1	1	1	—	—	—	—	2448 336
	9 1/2"		6	1	1	1	—	—	—	—	—	—	—	—	2401 120
	10" Clutch, Export	71	6	—	—	—	1	1	—	—	—	—	—	—	2908 473
	10 1/2", 318, 340 Eng.	70	8	1	1	1	1	1	1	1	—	—	—	—	2266 232
	10 1/2", 318, 340, 360 Eng.	71	8	1	1	1	1	1	1	1	1	—	—	—	2266 232
	11"		6	—	—	—	1	1	1	1	—	—	—	—	2409 683
	11", 383 Eng.		8	—	1	—	1	1	1	1	1	—	—	—	3410 160
	11", 426, 440 Eng.		8	—	1	—	1	1	—	—	—	—	—	—	3410 161
6-14-0	**CLUTCH COVER AND PRESSURE PLATE**														
6-14-1	COVER, w/PLATE, 9 1/4"		6	1	1	1	1	1	1	1	—	—	—	—	2525 464
	9 1/2"		6	1	1	1	—	—	—	—	—	—	—	—	2800 827
	10" Clutch, Export	71	6	—	—	—	1	1	—	—	—	—	—	—	2239 683
	10 1/2", 318 Eng.		8	1	1	1	1	1	1	1	—	—	—	—	2122 255
	10 1/2", 340 Eng.		8	1	1	1	1	1	—	—	—	—	—	—	2409 688
	10 1/2", 360 Eng.	71	8	—	—	—	—	—	1	1	1	—	—	—	#3515 150
	11"	70	6	—	—	—	1	1	1	1	—	—	—	—	2409 682
	11"	71	6	1	1	1	1	1	1	1	—	—	—	—	#3515 560
	11", 383 Eng.		8	—	1	—	1	1	1	1	1	—	—	—	3410 157
	11", 426 Eng.		8	—	1	—	1	1	—	—	—	—	—	—	3410 158
	11", 440 Eng.		8	—	1	—	1	1	—	—	—	—	—	—	3410 159
6-14-2	BOLT, Clutch Eye, 318 Eng.	71		3	3	3	3	3	3	3	—	—	—	—	3410 993
6-14-4	ROLLER, Centrifugal		8	AR	AR	AR	AR	AR	AR	AR	AR	—	—	—	2122 262
6-14-10	SCREW, Cover to Flywheel, 7/8" Lgh.		6	AR	AR	AR	AR	AR	AR	AR	—	—	—	—	307 555
	1" Lgh.			AR	AR	AR	AR	AR	AR	AR	AR	—	—	—	314 926
	1" Lgh., Indented Head			—	AR	—	AR	AR	AR	AR	AR	—	—	—	#6029 071

CARLINES J - Challenger, B - Barracuda, V - Valiant, L - Dart, R - Belvedere - Satellite, W - Coronet - Charger, P - Plymouth, D - Dodge, C - Chrysler, Y - Imperial

AR Indicates use as required. Numerals in parentheses ( ) refer to notes.

# Indicates parts not listed in any previous parts book. ★ Indicates change or addition.

Printed in U.S.A. January 1972

CODE	PART NAME		ENG. TYPE OR CU.IN.	V 1-2	B J 1-2	L 1-2	R 1-2	W 1-2	P 1-2	D 1-2	C 1	C 2	C 3	Y 1	PART NUMBER
6-16-0	**CLUTCH PRESSURE SPRING**														
6-16-1	SPRING, 6 3/4 Coils, White			AR	AR	AR	AR	AR	AR	AR	AR	—	—	—	1406 504
	6 3/4 Coils, Red		6	AR	AR	AR	AR	AR	AR	AR	—	—	—	—	2530 379
	7 Coils, White		6	AR	AR	AR	—	—	—	—	—	—	—	—	2800 826
	7 1/4 Coils, Red			AR	AR	AR	AR	AR	AR	AR	—	—	—	—	1067 037
	7 3/4 Coils, Tan		8	AR	AR	AR	AR	AR	AR	AR	AR	—	—	—	866 591
	8 3/4 Coils, Red Stripe		6	AR	AR	AR	AR	AR	AR	AR	—	—	—	—	2208 268
	383 Eng., 3 Speed Trans.	71	8	—	—	—	—	—	6	6	6	—	—	—	3410 982
	426, 440 Eng., w/4 Speed Trans.		8	—	9	—	9	9	—	—	—	—	—	—	3410 982
	426, 440 Eng., w/4 Speed Trans.		8	—	3	—	3	3	—	—	—	—	—	—	3410 983
	Export	71	6	—	—	—	6	6	—	—	—	—	—	—	864 397
	Export	71	6	—	—	—	3	3	—	—	—	—	—	—	1321 044
6-17-0	**CLUTCH RELEASE LEVER**														
6-17-3	LEVER PACKAGE, 9 1/4" Clutch, (Borg and Beck)		6	1	1	1	1	1	1	1	—	—	—	—	2240 634
	9 1/4" Clutch (Auburn)		6	1	1	1	1	1	1	1	—	—	—	—	2525 473
	9 1/2" Clutch		6	1	1	1	—	—	—	—	—	—	—	—	2808 435
	10 1/2" Clutch, 318, 340 Eng.		8	1	1	1	1	1	1	1	—	—	—	—	2495 052
	11" Clutch, 383 Eng.		8	—	—	—	1	1	1	1	1	—	—	—	3420 026
	11" Clutch, 426, 440 Eng.		8	—	—	—	1	1	—	—	—	—	—	—	3420 025
	PIN, Release Lever		6	3	3	3	3	3	3	3	—	—	—	—	2266 240
6-19-0	**CLUTCH RELEASE BEARING**														
6-19-2	SLEEVE, w/BEARING			1	—	1	—	—	—	—	—	—	—	—	2405 077
	Std.	70	6	—	1	—	1	1	1	1	—	—	—	—	2405 077
	H.D.	70	6	—	1	—	1	1	1	1	—	—	—	—	2461 494
	All	71	6	1	1	1	1	1	1	1	—	—	—	—	2405 077
	318, 340, 383 Eng.	70	8	1	1	1	1	1	1	1	1	—	—	—	2405 077
	Except 426, 440 Eng.	71	8	1	1	1	1	1	1	1	1	—	—	—	2405 077
	426, 440 Eng.		8	—	1	—	1	1	—	—	—	—	—	—	2823 570
6-19-3	BEARING, w/o SLEEVE, Except 426, 440 Eng.			1	1	1	1	1	1	1	1	—	—	—	658 998
	426, 440 Eng.		8	—	1	—	1	1	—	—	—	—	—	—	2530 444
6-20-0	**CLUTCH RELEASE BEARING RETURN SPRING**														
6-20-14	SPRING			2	2	2	2	2	2	2	2	—	—	—	2073 687
6-22-0	**CLUTCH RELEASE FORK**														
6-22-1	FORK, w/SPRING			1	—	1	—	—	—	—	—	—	—	—	2781 106
				—	1	—	1	1	—	—	—	—	—	—	2643 702
				—	—	—	—	—	1	1	1	—	—	—	2260 047
6-22-4	SEAL, Fork	70		1	1	1	1	1	1	1	1	—	—	—	2260 021
	All	71		1	1	1	1	1	1	1	1	—	—	—	3515 300
6-22-15	PIVOT, Fork			1	—	1	—	—	—	—	—	—	—	—	2800 848
	198, 225, 318, 340 Eng.			—	1	—	1	1	—	—	—	—	—	—	2409 680
	383, 426, 440 Eng.		8	—	1	—	1	1	—	—	—	—	—	—	2892 263
	Except 383 Eng.			—	—	—	—	—	1	1	1	—	—	—	2260 719
	383 Eng.		8	—	—	—	—	—	1	1	1	—	—	—	2892 264
6-22-19	SPRING, Pivot			1	—	1	—	—	—	—	—	—	—	—	2823 559
				—	1	—	1	1	1	1	1	—	—	—	2072 901
	RIVET, Release Fork Pivot Spring			2	2	2	2	2	2	2	2	—	—	—	6023 660
6-24-0	**CLUTCH RELEASE ROD**														
6-24-1	ROD			1	—	1	—	—	—	—	—	—	—	—	2781 108
	198, 225, 318, 340 Eng.			—	1	—	1	1	—	—	—	—	—	—	2534 240
	383, 426, 440 Eng.		8	—	1	—	1	1	—	—	—	—	—	—	3467 235

CARLINES: J - Challenger, B - Barracuda, V - Valiant, L - Dart, R - Belvedere - Satellite, W - Coronet - Charger, P - Plymouth, D - Dodge, C - Chrysler, Y - Imperial

AR Indicates use as required.

\# Indicates parts not listed in any previous parts book.

Numerals in parentheses ( ) refer to notes.

★ Indicates change or addition.

Printed in U.S.A. January 1972

CODE	PART NAME		ENG. TYPE OR CU.IN.	V 1-2	B J 1-2	L 1-2	R 1-2	W 1-2	P 1-2	D 1-2	C 1	C 2	C 3	Y 1	PART NUMBER
6-24-0	**CLUTCH RELEASE ROD Cont'd.**														
6-24-1	ROD Cont'd.														
	All			—	—	—	—	—	1	1	1	—	—	—	2461 745
	ROD, Interlock	70	6	1	—	1	—	—	—	—	—	—	—	—	2950 288
	All	71	6	1	—	1	—	—	—	—	—	—	—	—	2925 598
			6	—	—	—	1	1	—	—	—	—	—	—	2823 546
	Clip		6	AR	—	AR	AR	AR	—	—	—	—	—	—	6025 071
6-24-3	NUT, Fork Rod Adjusting			1	1	1	1	1	1	1	1	—	—	—	1407 347
6-24-7	WASHER, Release Fork Rod			1	1	1	1	1	1	1	1	—	—	—	2461 483
	Release Interlock			AR	—	AR	AR	AR	—	—	—	—	—	—	631 217
6-24-8	INSULATOR, Rod			1	1	1	1	1	1	1	1	—	—	—	3467 234
6-24-10	SWIVEL, Interlock		6	1	—	1	1	1	—	—	—	—	—	—	2404 859
	Release Fork Rod	71		—	1	—	1	1	—	—	—	—	—	—	2401 740
6-24-14	CLAMP, Interlock		6	1	—	1	1	1	—	—	—	—	—	—	2204 274
6-27-0	**CLUTCH RELEASE FORK RETURN SPRING**														
6-27-5	SPRING		6	1	—	1	—	—	—	—	—	—	—	—	2643 705
	All		8	1	—	1	—	—	—	—	—	—	—	—	2461 480
	All			—	1	—	1	1	—	—	—	—	—	—	2643 705
	318 Eng.	70	8	—	—	—	—	—	1	1	—	—	—	—	2260 023
	318, 360 Eng.	71	8	—	—	—	—	—	1	1	1	—	—	—	2260 023
6-35-0	**CLUTCH RELEASE OVER-CENTER SPRING**														
6-35-1	SPRING, Std.	70	6	1	—	1	—	—	—	—	—	—	—	—	2266 784
	Std.	71	6	1	—	1	—	—	—	—	—	—	—	—	2996 472
	H.D.		6	1	—	1	—	—	—	—	—	—	—	—	2461 515
	318 Eng.		8	1	—	1	—	—	—	—	—	—	—	—	2996 472
	340 Eng.		8	1	—	1	—	—	—	—	—	—	—	—	2883 468
	All		6	—	1	—	—	—	—	—	—	—	—	—	3575 119
	318 Eng.		8	—	1	—	—	—	—	—	—	—	—	—	2950 921
	340, 383 Eng.		8	—	1	—	1	1	—	—	—	—	—	—	2950 922
	426, 440 Eng.		8	—	1	—	1	1	—	—	—	—	—	—	2950 923
	Std.		6	—	—	—	1	1	—	—	—	—	—	—	2534 530
	H.D.		6	—	—	—	1	1	—	—	—	—	—	—	2534 239
	318, 383 Eng., w/3 Speed Trans.		8	—	—	—	1	1	—	—	—	—	—	—	2534 239
	383, 426, 440 Eng., w/4 Speed Trans.		8	—	—	—	1	1	—	—	—	—	—	—	2950 936
	Std.		6	—	—	—	—	—	1	1	—	—	—	—	2461 523
	H.D.		6	—	—	—	—	—	1	1	—	—	—	—	2461 749
	318 Eng.		8	—	—	—	—	—	1	1	—	—	—	—	2461 749
	360, 383 Eng.		8	—	—	—	—	—	1	1	1	—	—	—	2530 446
6-35-3	BRACKET, Spring, 340 Eng.		8	1	—	1	—	—	—	—	—	—	—	—	2883 464
6-35-9	HOOK, Spring			1	—	1	—	—	—	—	—	—	—	—	2266 777
6-35-15	PIN, Spring Anchor, 340 Eng.		8	1	—	1	—	—	—	—	—	—	—	—	2883 467
	All	70		—	1	—	—	—	—	—	—	—	—	—	2950 918
	All	71		—	1	—	—	—	—	—	—	—	—	—	3467 535
	All	70		—	—	—	1	1	—	—	—	—	—	—	2534 236
	All	71		—	—	—	1	1	—	—	—	—	—	—	3467 535
	All			—	—	—	—	—	1	1	1	—	—	—	2950 088
6-38-0	**CLUTCH PEDAL**														
6-38-1	PEDAL, All	70		1	—	1	—	—	—	—	—	—	—	—	3467 082
	Except 340 Eng.	71		1	—	1	—	—	—	—	—	—	—	—	3467 082
	340 Eng.	71	8	1	—	1	—	—	—	—	—	—	—	—	3467 987
	3 Speed Trans.	70	6	—	1	—	—	—	—	—	—	—	—	—	3467 079
	3 Speed Trans.	71	6	—	1	—	—	—	—	—	—	—	—	—	3575 110
	4 Speed Trans.	70	6	—	1	—	—	—	—	—	—	—	—	—	3467 098
	All	70	8	—	1	—	—	—	—	—	—	—	—	—	3467 098
	All	71	8	—	1	—	—	—	—	—	—	—	—	—	3575 111
	Std.	70	6	—	—	—	1	1	—	—	—	—	—	—	3467 086

CARLINES J - Challenger, B - Barracuda, V - Valiant, L - Dart, R - Belvedere - Satellite, W - Coronet - Charger, P - Plymouth, D - Dodge, C - Chrysler, Y - Imperial

AR Indicates use as required.

# Indicates parts not listed in any previous parts book.

Numerals in parentheses ( ) refer to notes.

★ Indicates change or addition.

Printed in U.S.A. January 1972

CODE	PART NAME		ENG. TYPE OR CU.IN.	V 1-2	B J 1-2	L 1-2	R 1-2	W 1-2	P 1-2	D 1-2	C 1	C 2	C 3	Y 1	PART NUMBER
6-38-0	**CLUTCH PEDAL Cont'd.**														
6-38-1	PEDAL Cont'd.														
	3 Speed	71	6	—	—	—	1	1	—	—	—	—	—	—	3575 110
	H.D.	70	6	—	—	—	1	1	—	—	—	—	—	—	3467 087
	All	71	6	—	—	—	1	1	—	—	—	—	—	—	3575 111
	All	70	8	—	—	—	1	1	—	—	—	—	—	—	3467 087
	All	71	8	—	—	—	1	1	—	—	—	—	—	—	3575 111
	Std.		6	—	—	—	—	—	1	1	—	—	—	—	3467 091
	H.D.		6	—	—	—	—	—	1	1	—	—	—	—	3467 093
	All		8	—	—	—	—	—	1	1	1	—	—	—	3467 093
6-38-3	BEARING, Pedal, 340 Eng.	71	8	2	—	2	—	—	—	—	—	—	—	—	2883 462
	All			—	2	—	2	2	2	2	2	—	—	—	1946 377
	BUSHING, Pedal			2	2	2	2	2	2	2	—	—	—	—	2467 770
	SLEEVE, Pedal Pivot			—	—	—	—	—	1	1	1	—	—	—	2996 449
6-38-7	SEAL, Pedal Bearing, 340 Eng.		8	2	—	2	—	—	—	—	—	—	—	—	2883 479
6-38-14	RING, Shaft Lock			1	—	1	—	—	—	—	—	—	—	—	2072 831
6-38-23	STOP, Pedal, All			1	1	1	1	1	—	—	—	—	—	—	2266 820
	All			—	—	—	—	—	1	1	1	—	—	—	1940 147
6-39-0	**CLUTCH PEDAL PAD**														
6-39-2	PAD, Pedal	70		1	—	1	1	1	—	—	—	—	—	—	2643 712
	All	71		1	—	1	—	—	—	—	—	—	—	—	3467 530
	All	70		—	1	—	—	—	—	—	—	—	—	—	2950 887
	All	71		—	1	—	1	1	—	—	—	—	—	—	2950 887
	All			—	—	—	—	—	1	1	1	—	—	—	3467 530
6-39-9	BEZEL, Pad	70		—	1	—	—	—	—	—	—	—	—	—	2950 898
		71		1	—	1	—	—	—	—	—	—	—	—	2467 769
		71		—	1	—	1	1	—	—	—	—	—	—	2950 898
				—	—	—	—	—	1	1	1	—	—	—	2467 769
6-43-0	**CLUTCH PEDAL SHAFT**														
6-43-1	SHAFT, All			—	—	—	1	1	—	—	—	—	—	—	3467 024
	All			—	—	—	—	—	1	1	1	—	—	—	2950 290
	Nut, Pedal Pivot			—	—	—	—	—	1	1	1	—	—	—	9417 668
6-43-7	WASHER, Shaft Ring			1	—	1	—	—	—	—	—	—	—	—	2073 632
6-43-13	SEAL, Pedal Bearing			—	2	—	2	2	2	2	2	—	—	—	1730 019
6-46-0	**CLUTCH PEDAL BRACKET**														
6-46-1	BRACKET	70		—	1	—	—	—	—	—	—	—	—	—	3467 203
	All	70		—	—	—	1	1	—	—	—	—	—	—	3467 081
		71		—	1	—	1	1	—	—	—	—	—	—	3467 203
	All			—	—	—	—	—	1	1	1	—	—	—	3467 095
	BOLT, Pedal Pivot			—	—	—	—	—	1	1	1	—	—	—	6028 552
6-46-10	RETAINER, Bracket Stud	70		—	1	—	—	—	—	—	—	—	—	—	2950 680
		70		—	—	—	1	1	—	—	—	—	—	—	2781 125
		71		—	1	—	1	1	—	—	—	—	—	—	2950 680
6-50-0	**CLUTCH PEDAL ROD**														
6-50-1	ROD			1	—	1	—	—	—	—	—	—	—	—	2781 147
	198, 225, 318 Eng.			—	1	—	—	—	—	—	—	—	—	—	2950 889
	340, 383, 426, 440 Eng.		8	—	1	—	1	1	—	—	—	—	—	—	2950 696
	Std.	70	6	—	—	—	1	1	—	—	—	—	—	—	2534 249
	H.D.	70	6	—	—	—	1	1	—	—	—	—	—	—	2534 272
	225, 318 Eng.	71		—	—	—	1	1	—	—	—	—	—	—	2950 889
	318 Eng., and 383 Eng., w/3 Speed Trans.		8	—	—	—	1	1	—	—	—	—	—	—	2534 249
	383 Eng., w/4 Speed Trans., 426, 440 Eng.		8	—	—	—	1	1	—	—	—	—	—	—	2534 272

CARLINES: J - Challenger, B - Barracuda, V - Valiant, L - Dart, R - Belvedere - Satellite, W - Coronet - Charger, P - Plymouth, D - Dodge, C - Chrysler, Y - Imperial

AR Indicates use as required.

# Indicates parts not listed in any previous parts book.

Numerals in parentheses ( ) refer to notes.

★ Indicates change or addition.

Printed in U.S.A. January 1972

CODE	PART NAME		ENG. TYPE OR CU.IN.	V 1-2	B J 1-2	L 1-2	R 1-2	W 1-2	P 1-2	D 1-2	C 1	C 2	C 3	Y 1	PART NUMBER
6-50-0	**CLUTCH PEDAL ROD Cont'd.**														
6-50-1	ROD Cont'd.														
	Std.		6	—	—	—	—	—	1	1	—	—	—	—	2950 080
	H.D.		6	—	—	—	—	—	1	1	—	—	—	—	2950 086
	318 Eng.		8	—	—	—	—	—	1	1	—	—	—	—	2950 080
	360, 383 Eng.		8	—	—	—	—	—	1	1	1	—	—	—	2950 086
	PIN, Pedal Rod			1	1	1	1	1	1	1	1	—	—	—	6027 996
6-50-6	WASHER, Pedal Dampener			AR	AR	AR	AR	AR	AR	AR	AR	—	—	—	2405 086
	Pedal Pin Spring	70		AR	—	AR	AR	AR	AR	AR	AR	—	—	—	2405 085
	Pedal Rod Spring	71		1	—	1	—	—	1	1	1	—	—	—	2405 085
	Pedal Linkage Spring	70		—	3	—	—	—	—	—	—	—	—	—	2405 085
		71		—	3	—	3	3	—	—	—	—	—	—	2405 085
	Torque Shaft Spring			AR	—	AR	—	—	AR	AR	AR	—	—	—	2405 085
6-50-10	BOOT, Pedal Rod			1	1	1	1	1	—	—	—	—	—	—	2266 783
				—	—	—	—	—	1	1	1	—	—	—	2266 818
6-52-0	**CLUTCH TORQUE SHAFT**														
6-52-1	SHAFT, w/PINS		6	1	—	1	—	—	—	—	—	—	—	—	2950 251
	All		8	1	—	1	—	—	—	—	—	—	—	—	2950 238
	All		6	—	1	—	—	—	—	—	—	—	—	—	2950 901
	318, 340 Eng.		8	—	1	—	—	—	—	—	—	—	—	—	2950 914
	383, 426, 440 Eng.		8	—	1	—	—	—	—	—	—	—	—	—	2950 913
	Std.		6	—	—	—	1	1	—	—	—	—	—	—	2950 901
	H.D.		6	—	—	—	1	1	—	—	—	—	—	—	2950 914
	Export	71	6	—	—	—	1	1	—	—	—	—	—	—	3575 140
	All	70	8	—	—	—	1	1	—	—	—	—	—	—	2950 914
	225, 318, 340 Eng.	71		—	—	—	1	1	—	—	—	—	—	—	2950 914
	383, 426, 440 Eng.	71	8	—	—	—	1	1	—	—	—	—	—	—	2950 913
	Std.		6	—	—	—	—	—	1	1	—	—	—	—	2950 091
	H.D.		6	—	—	—	—	—	1	1	—	—	—	—	3467 147
	All		8	—	—	—	—	—	1	1	1	—	—	—	3467 147
6-52-4	HOOK, Retainer, Spring, All		6	—	—	—	1	1	—	—	—	—	—	—	2823 600
	All			—	—	—	—	—	1	1	1	—	—	—	2950 025
6-52-5	SPRING, Shaft to Fork, All		6	—	—	—	1	1	—	—	—	—	—	—	2643 717
	All			—	—	—	—	—	1	1	1	—	—	—	2530 428
	Shaft Return, All		6	—	—	—	1	1	—	—	—	—	—	—	2823 601
	All			—	—	—	—	—	1	1	1	—	—	—	2950 024
6-52-7	BRACKET, Shaft Return Spring, All		6	—	—	—	1	1	—	—	—	—	—	—	2823 602
6-52-10	BRACKET, Shaft Engine		6	1	—	1	—	—	—	—	—	—	—	—	2781 121
	All	70	6	—	1	—	—	—	—	—	—	—	—	—	2996 499
	All		8	1	—	1	—	—	—	—	—	—	—	—	2925 588
	Frame Clutch Torque Shaft			—	1	—	1	1	—	—	—	—	—	—	3466 470
	STUD, Shaft Engine			—	1	—	1	1	1	1	1	—	—	—	2461 765
	Shaft Frame			1	1	1	1	1	1	1	1	—	—	—	2461 766
6-52-11	BEARING, Shaft Pivot			4	4	4	4	4	4	4	4	—	—	—	2265 938
6-52-12	RING, Pivot Snap			1	1	1	1	1	1	1	1	—	—	—	2401 910
6-52-15	WASHER, Shaft Dampener			2	2	2	2	2	2	2	2	—	—	—	2405 086
	Shaft Spring			AR	AR	AR	AR	AR	AR	AR	AR	—	—	—	2405 085
6-52-17	SEAL, Shaft			2	2	2	2	2	2	2	2	—	—	—	2265 942

NOTES

CARLINES J - Challenger, B - Barracuda, V - Valiant, L - Dart, R - Belvedere - Satellite, W - Coronet - Charger, P - Plymouth, D - Dodge, C - Chrysler, Y - Imperial

AR Indicates use as required.

Numerals in parentheses ( ) refer to notes.

# Indicates parts not listed in any previous parts book.

★ Indicates change or addition.

Printed in U.S.A. January 1972

NOTES

GROUP 7 - COOLING

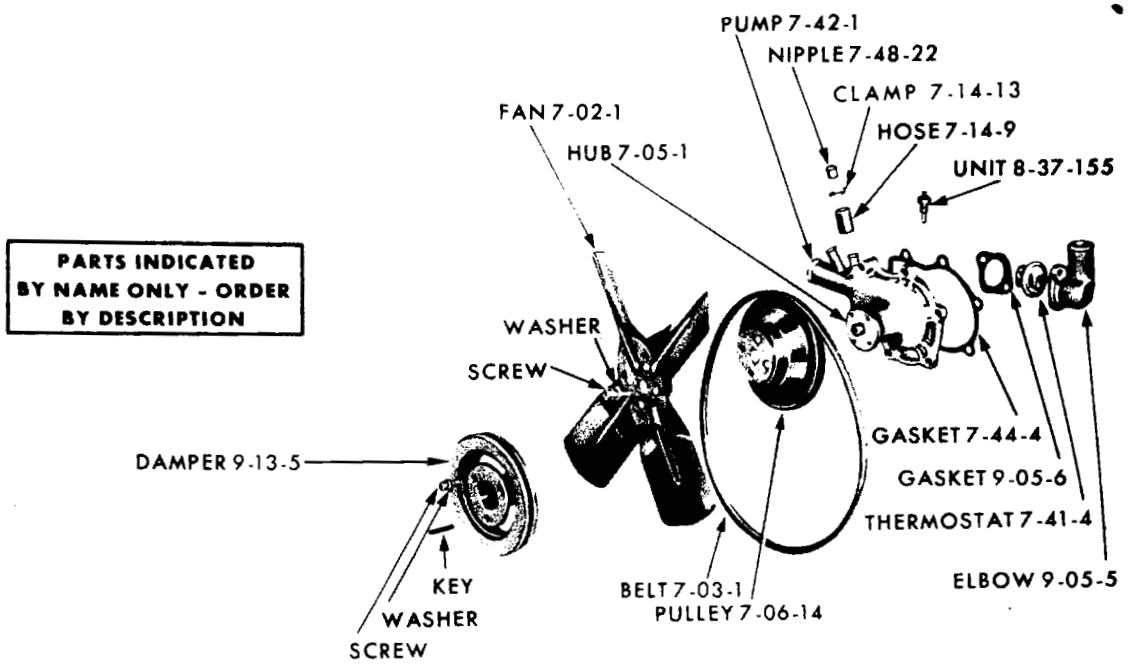

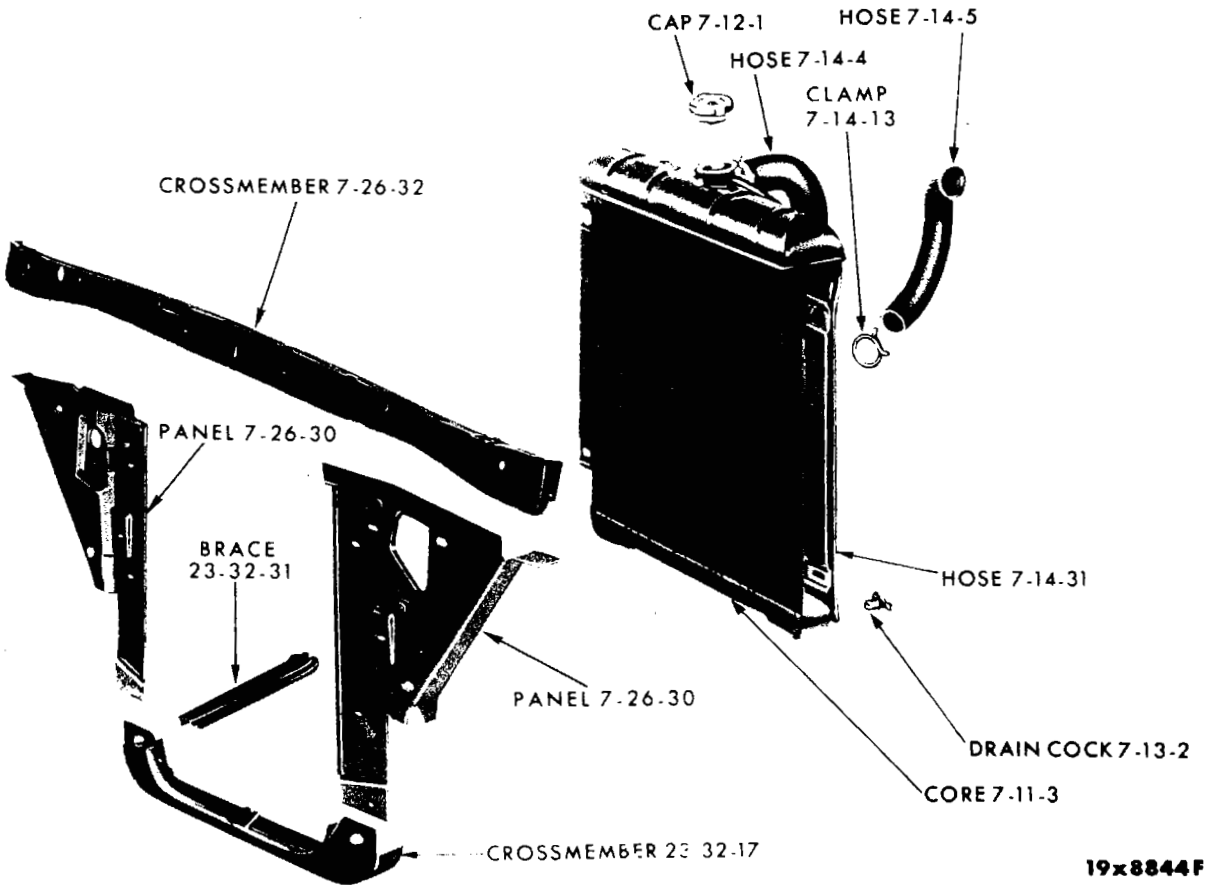

COOLING SYSTEM - 6 CYLINDER

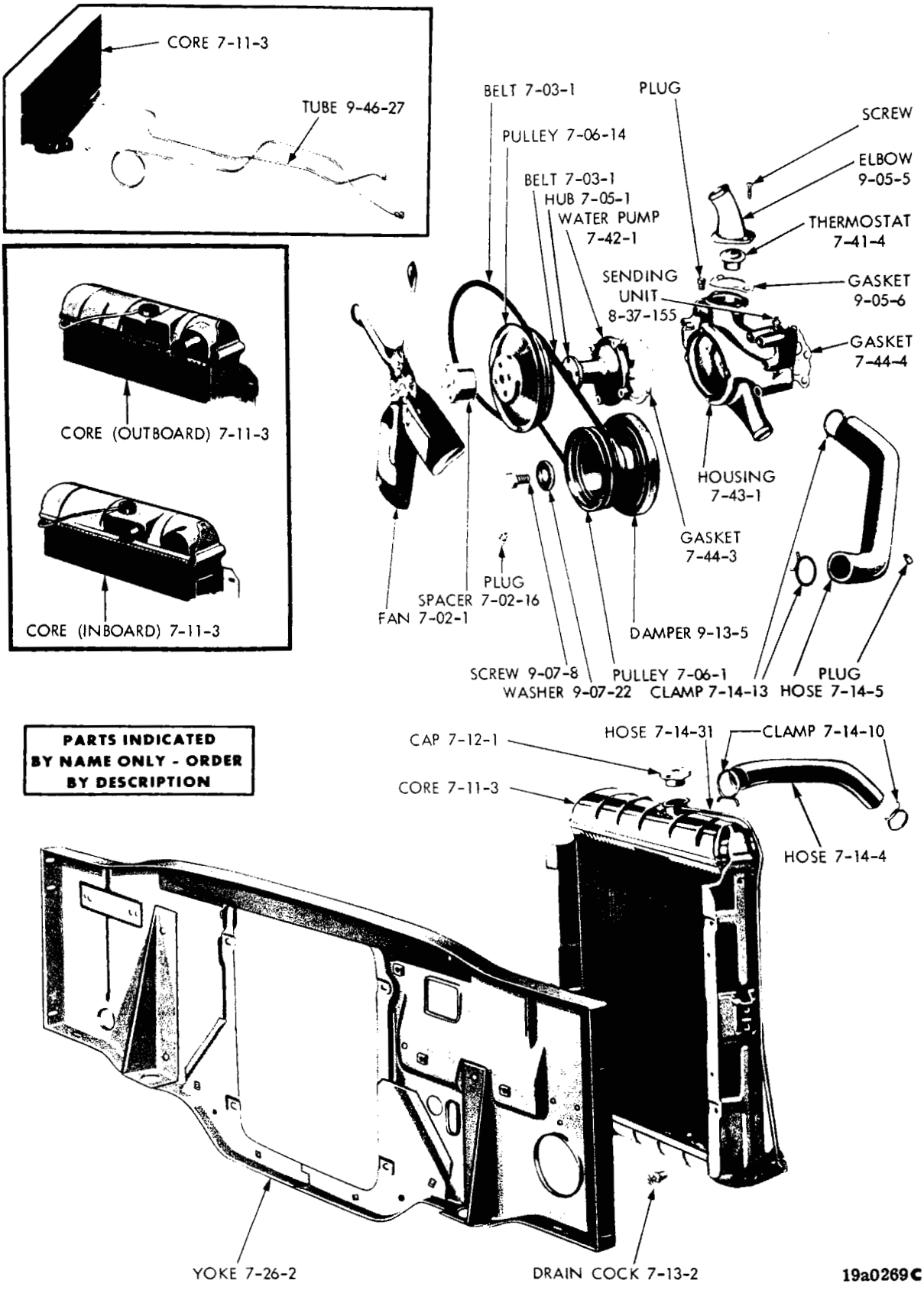

COOLING SYSTEM - 8 CYLINDER

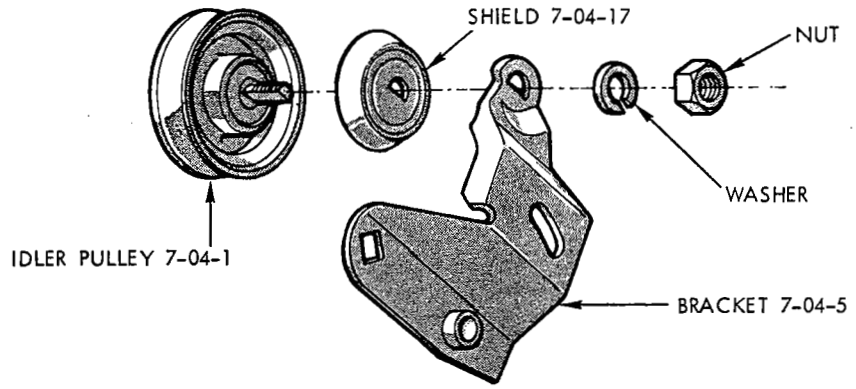

8 CYLINDER 318 - 340 ENGINE

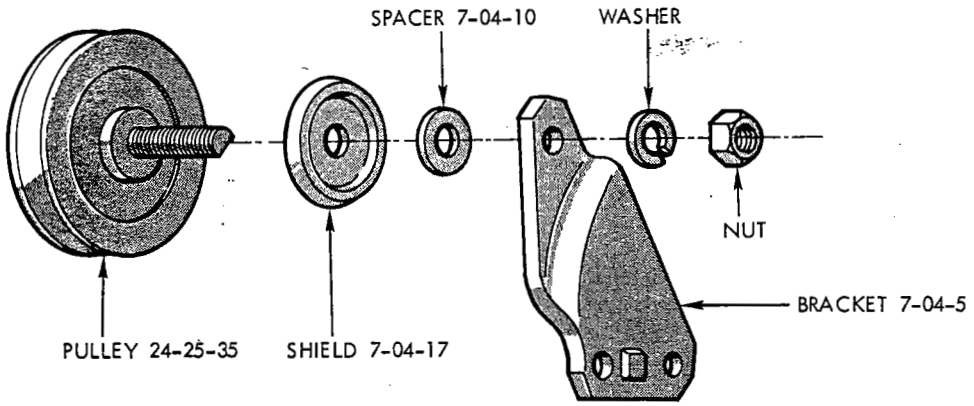

6 CYLINDER 225 ENGINE

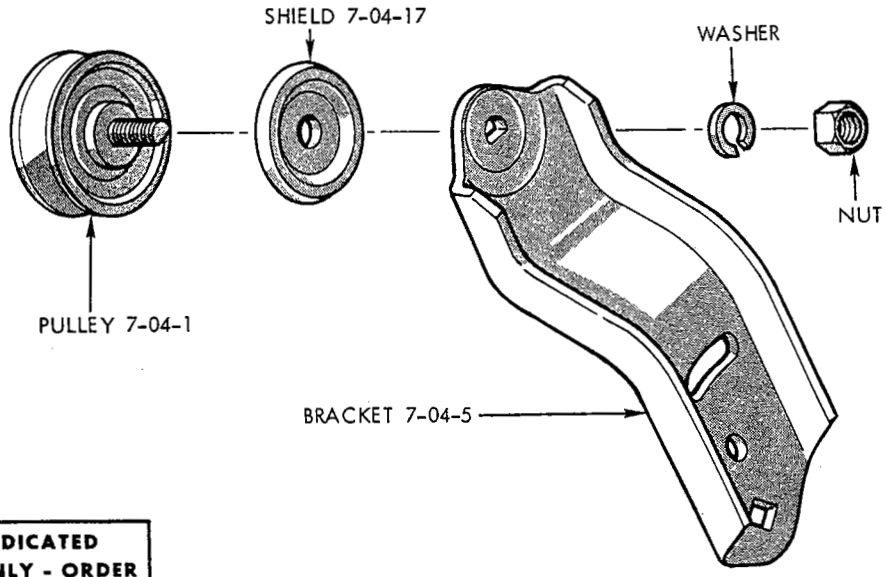

PARTS INDICATED BY NAME ONLY - ORDER BY DESCRIPTION

8 CYLINDER 383 - 440 ENGINE

19a3376 **A**

IDLER PULLEY AND PARTS

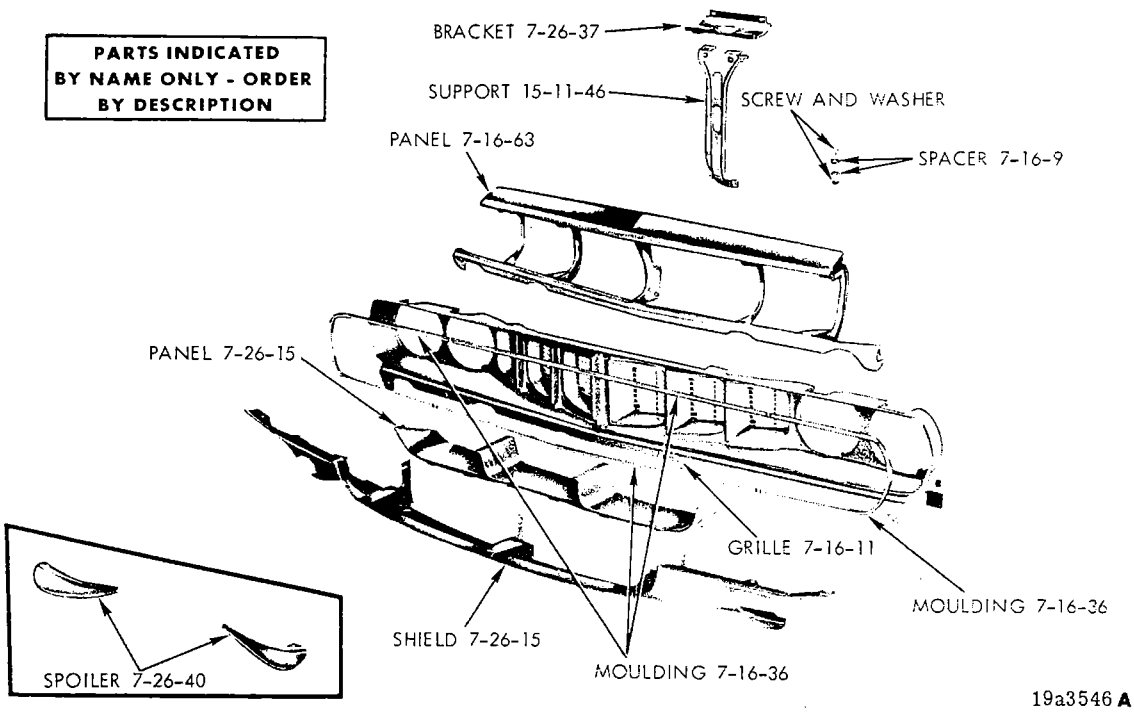

GRILLE - BARRACUDA (1971)

NOTES

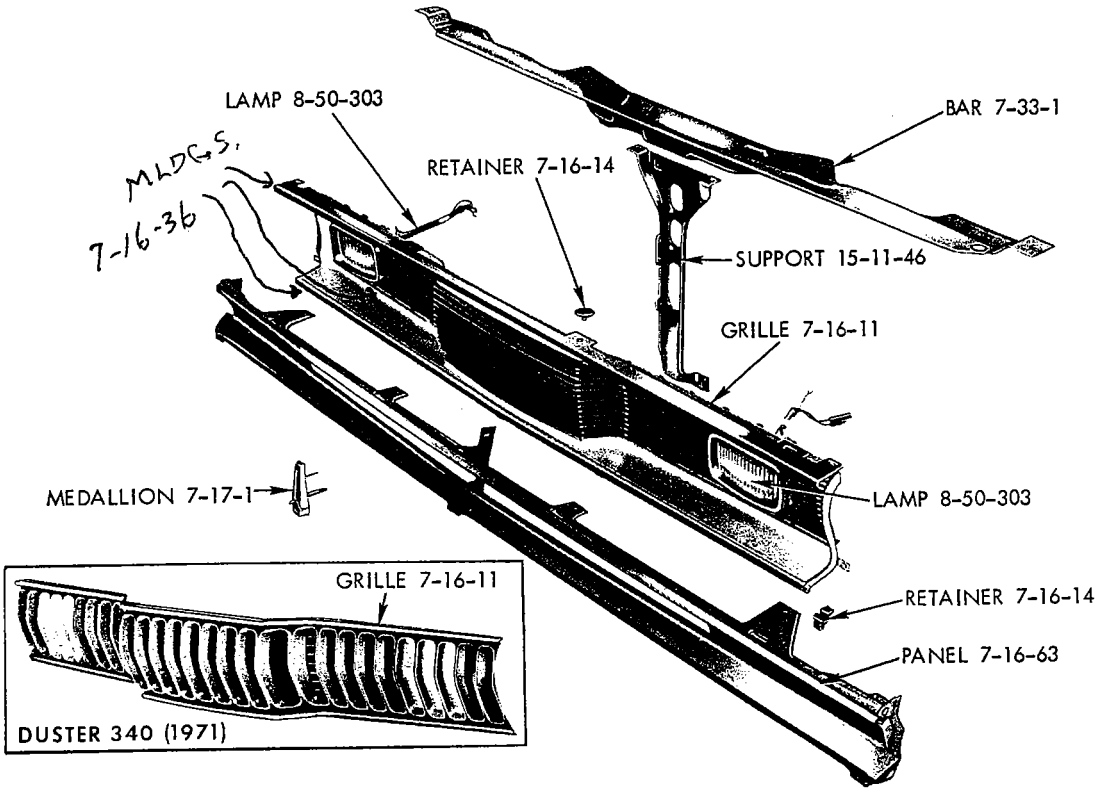

GRILLE - VALIANT AND DUSTER (1970-71)

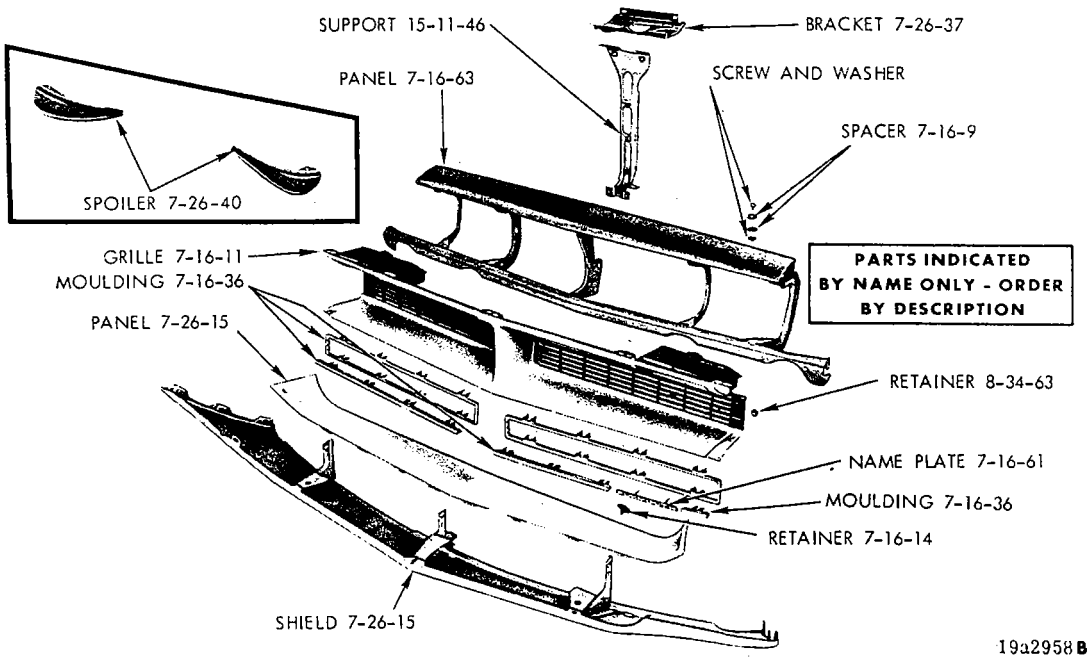

GRILLE - BARRACUDA (1970)

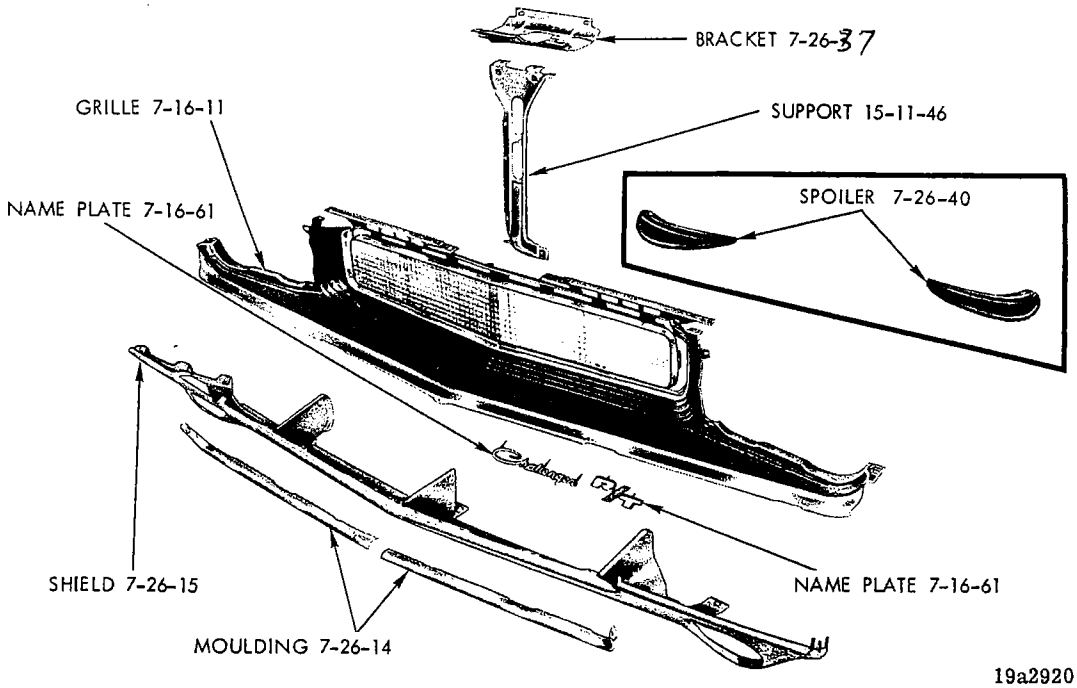

GRILLE - CHALLENGER (1970)

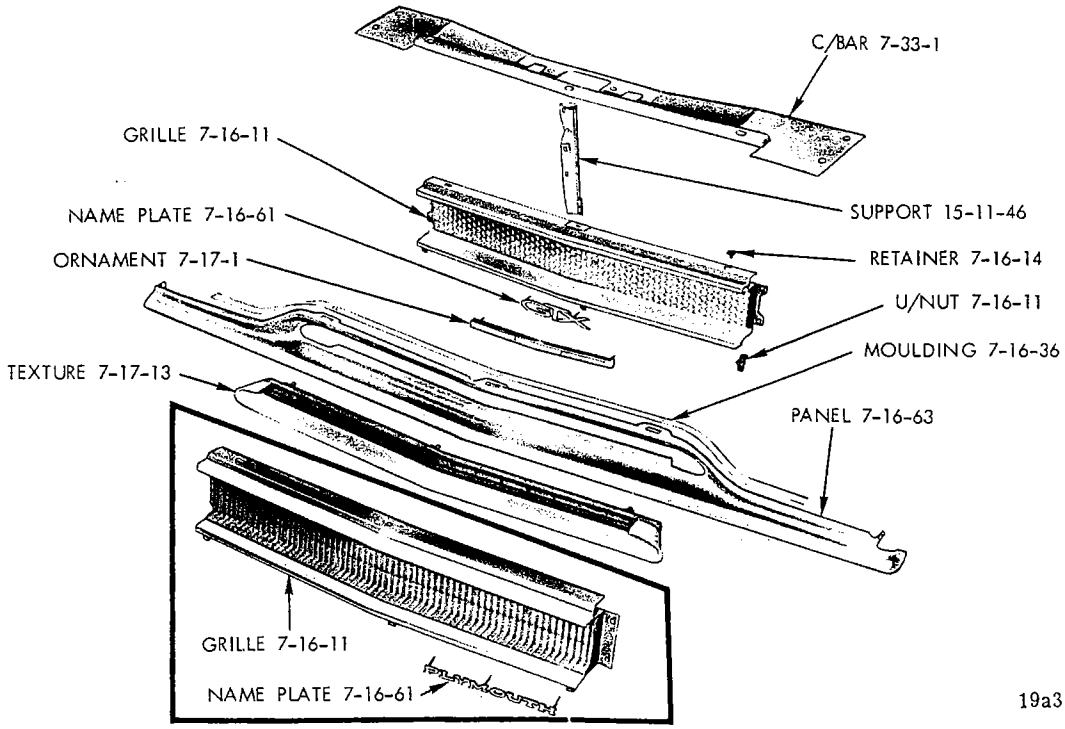

GRILLE - BELVEDERE (1970)

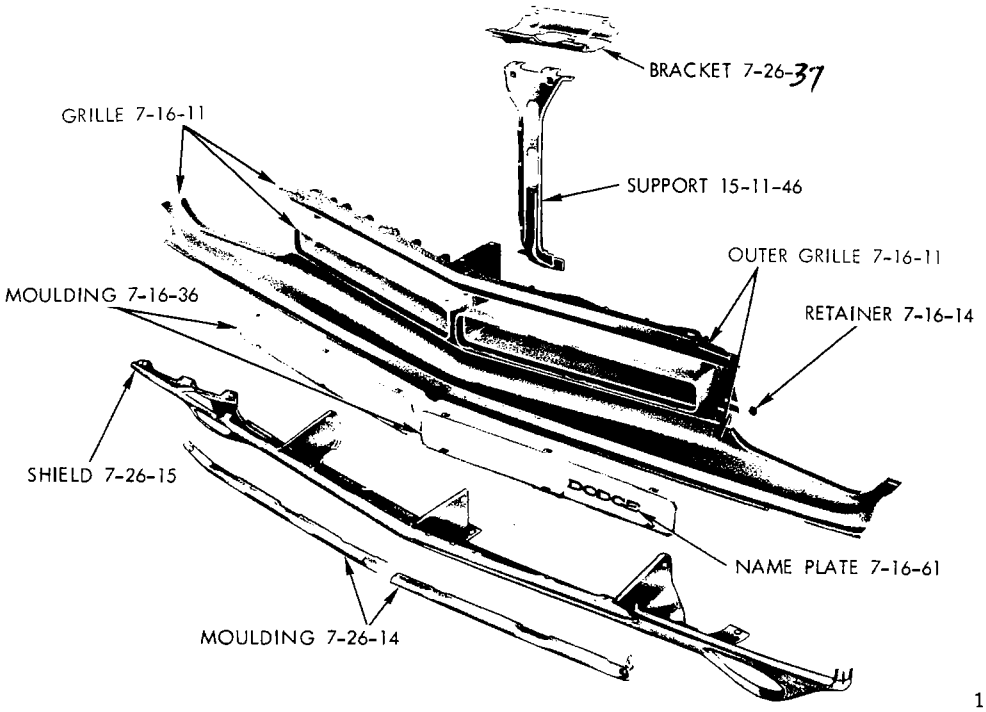

GRILLE - CHALLENGER (1971)

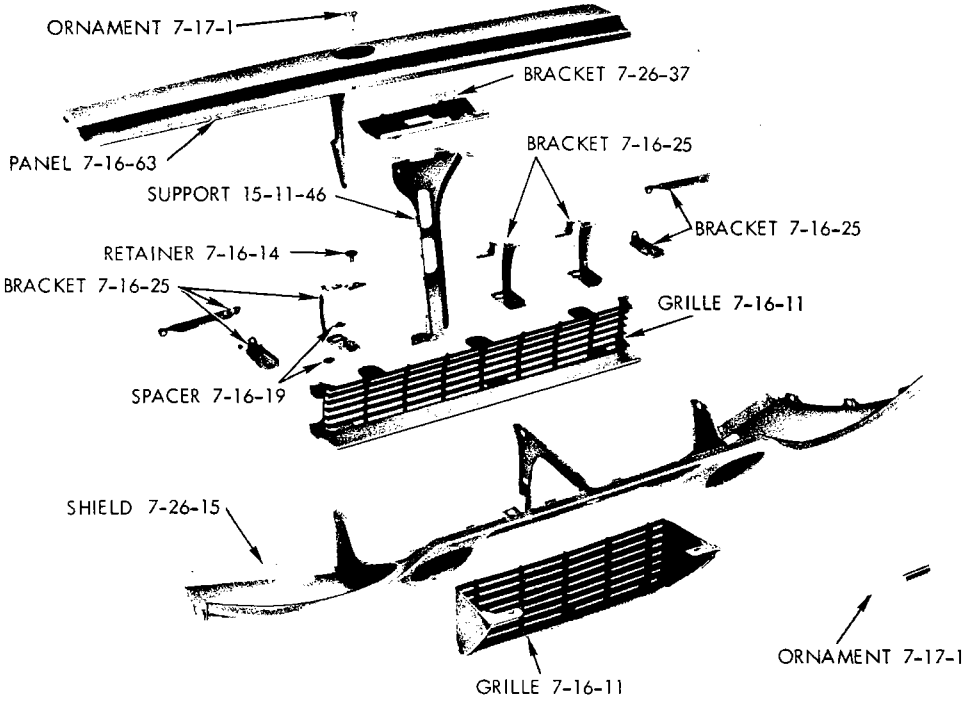

GRILLE - SATELLITE 2 DOOR HARDTOP (1971)

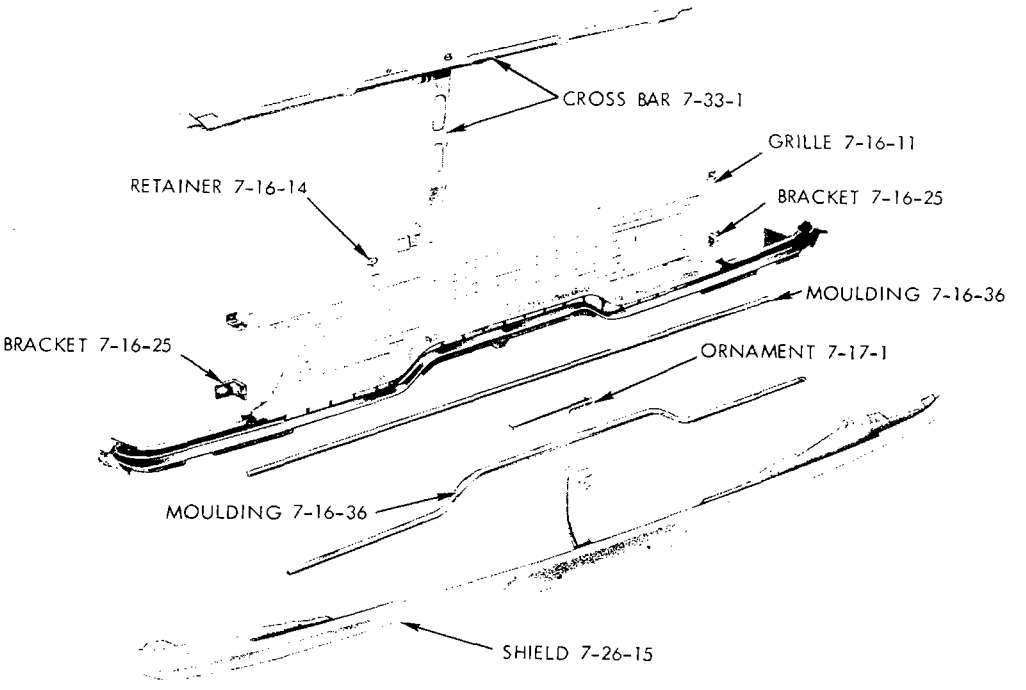

GRILLE - SATELLITE 4 DOOR SEDAN AND WAGON (1971)

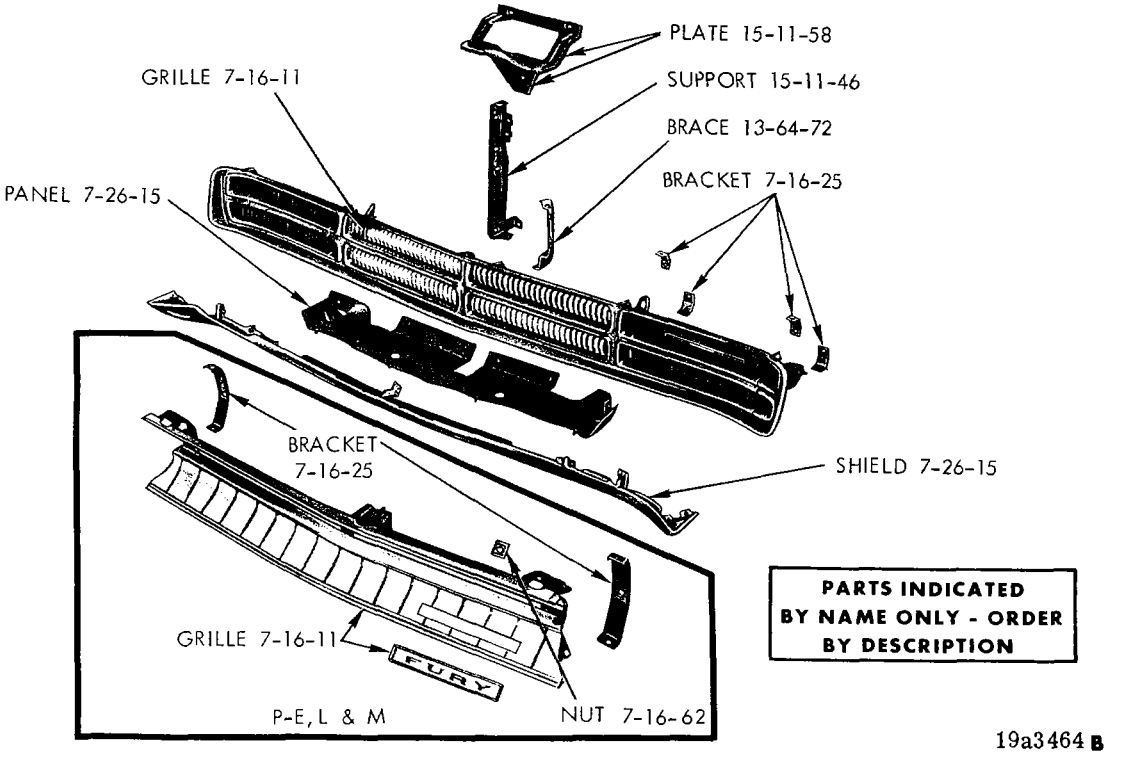

GRILLE - PLYMOUTH FURY (1971)

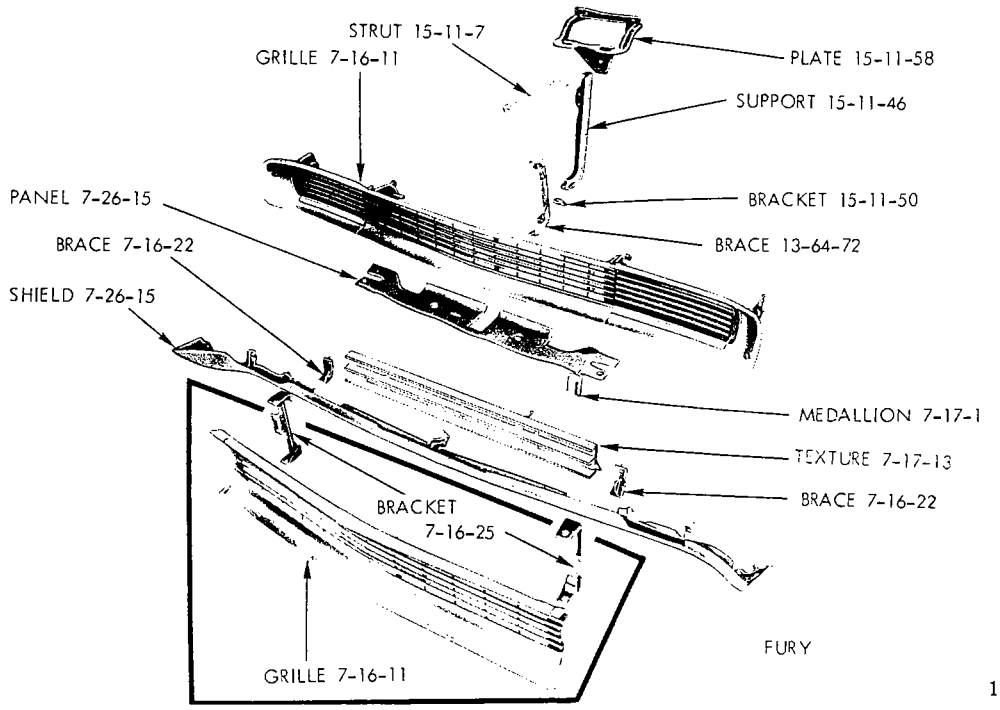

GRILLE - PLYMOUTH (1970)

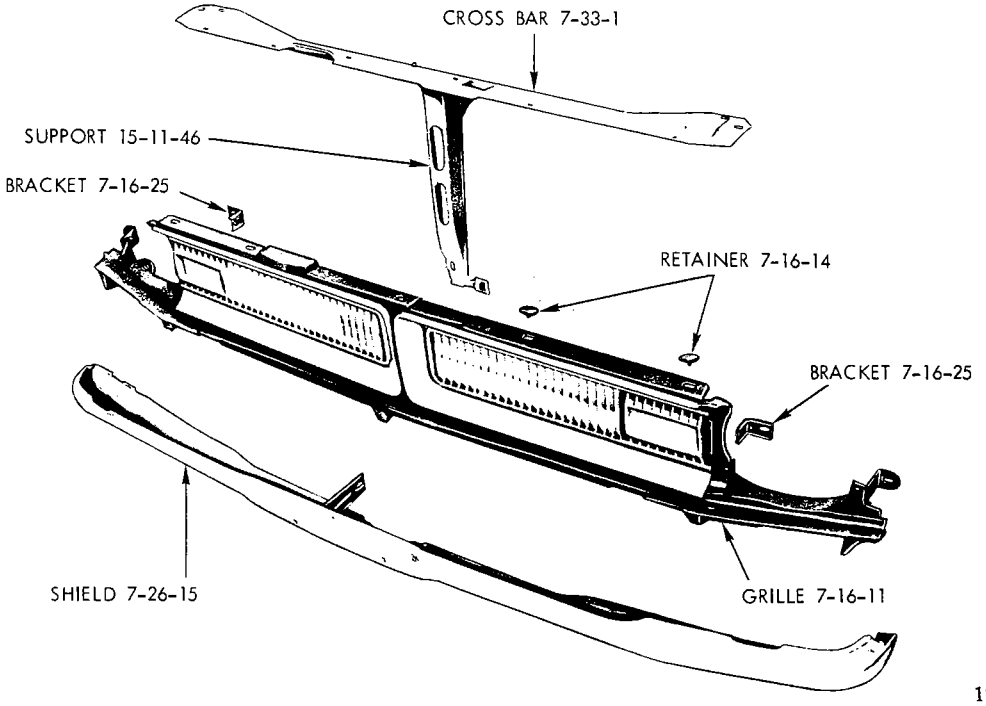

GRILLE - DART (1970 and 1971)

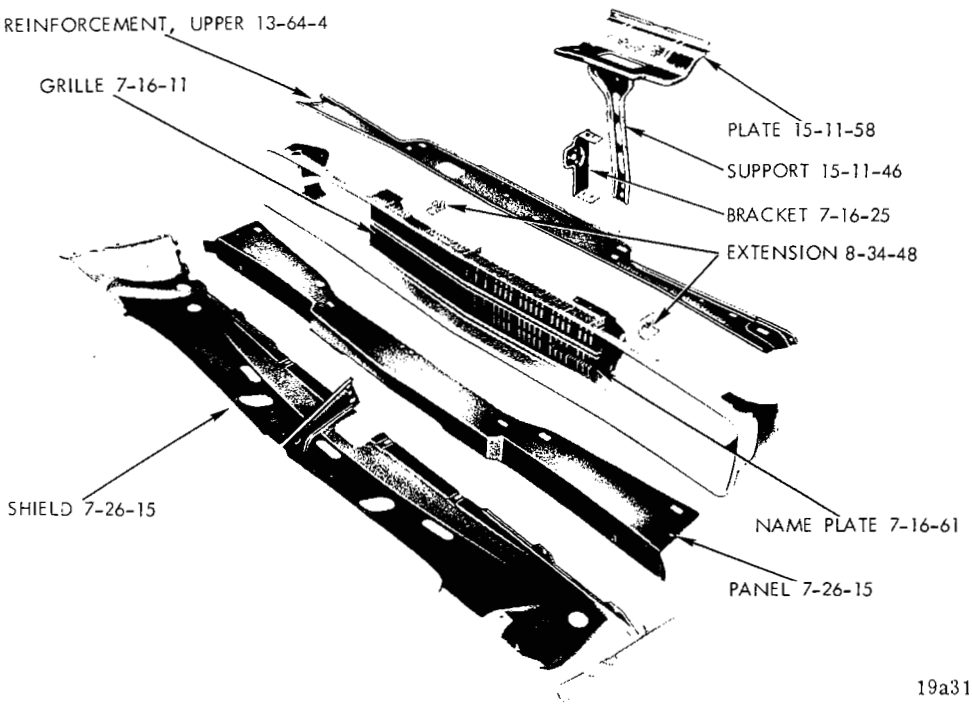

GRILLE - CHARGER

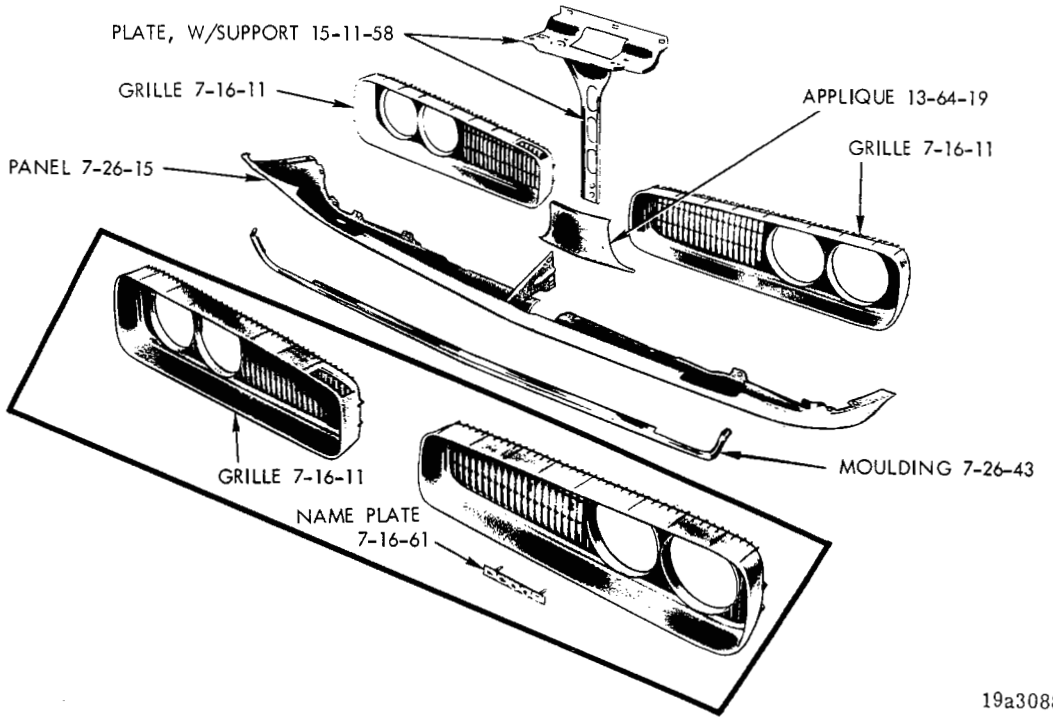

GRILLE - CORONET

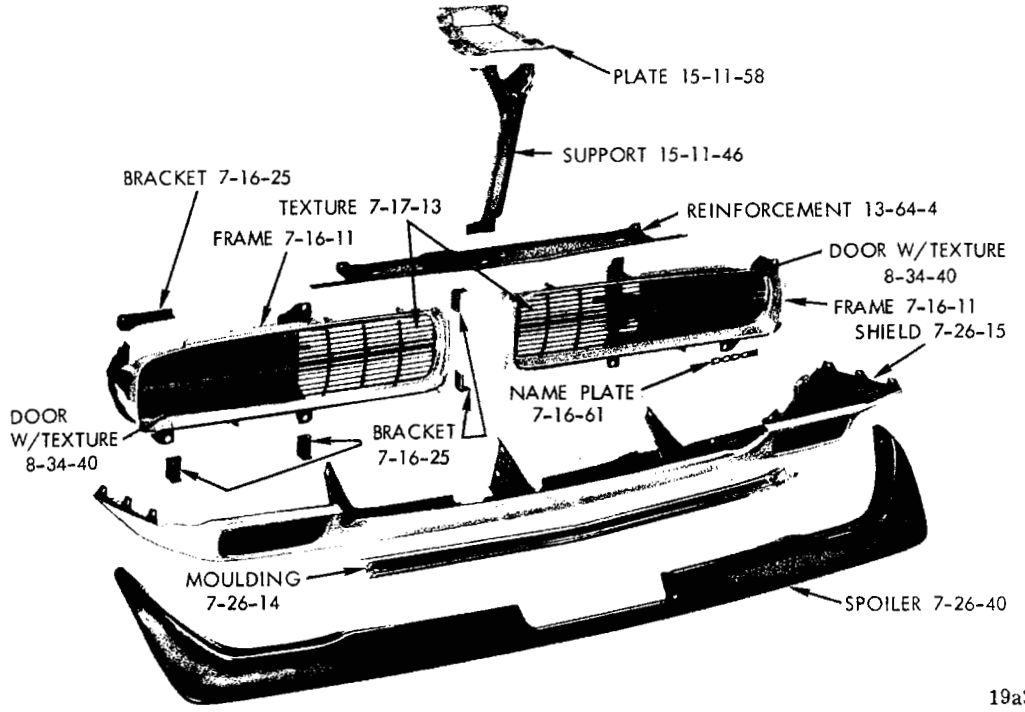

GRILLE - CORONET CHARGER SE (1971)

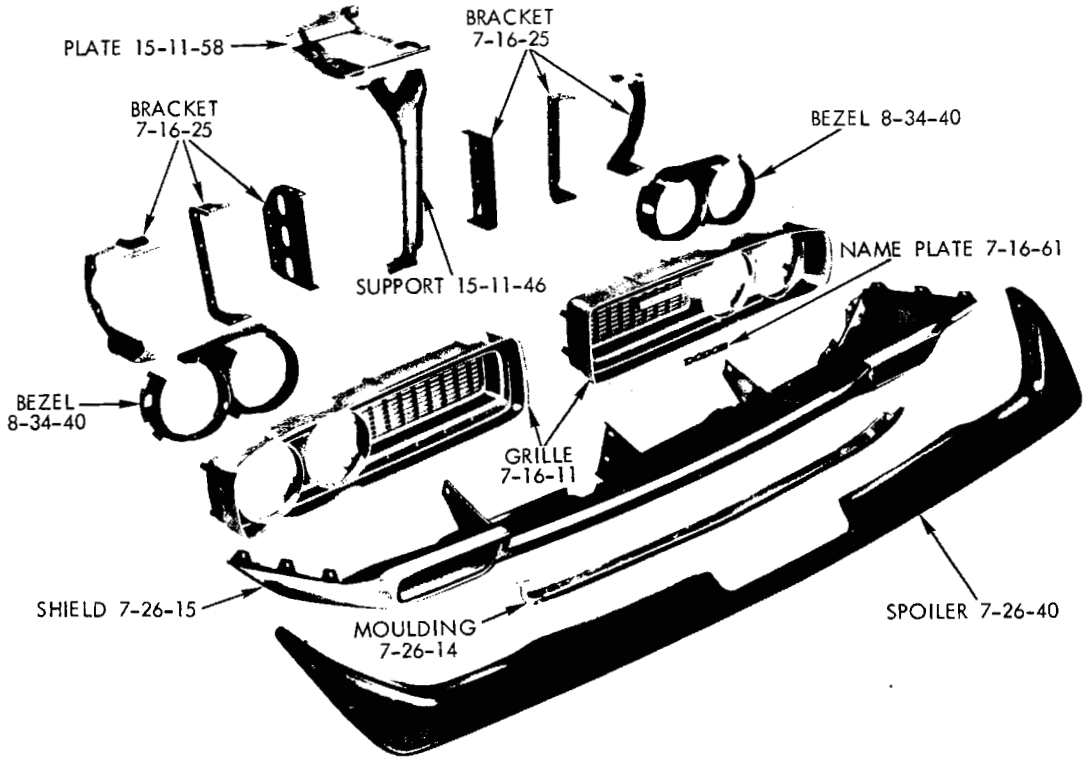

GRILLE - CORONET 2 DOORS (1971)

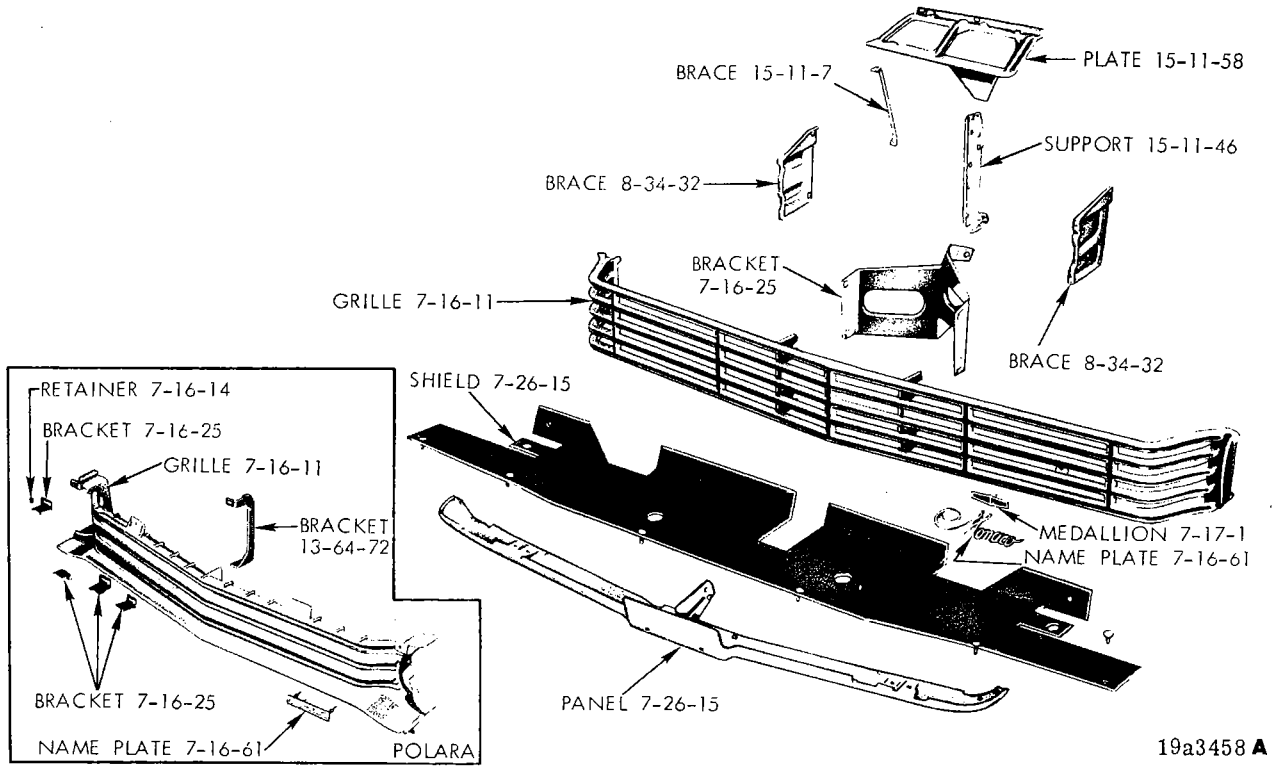

GRILLE - DODGE (1971)

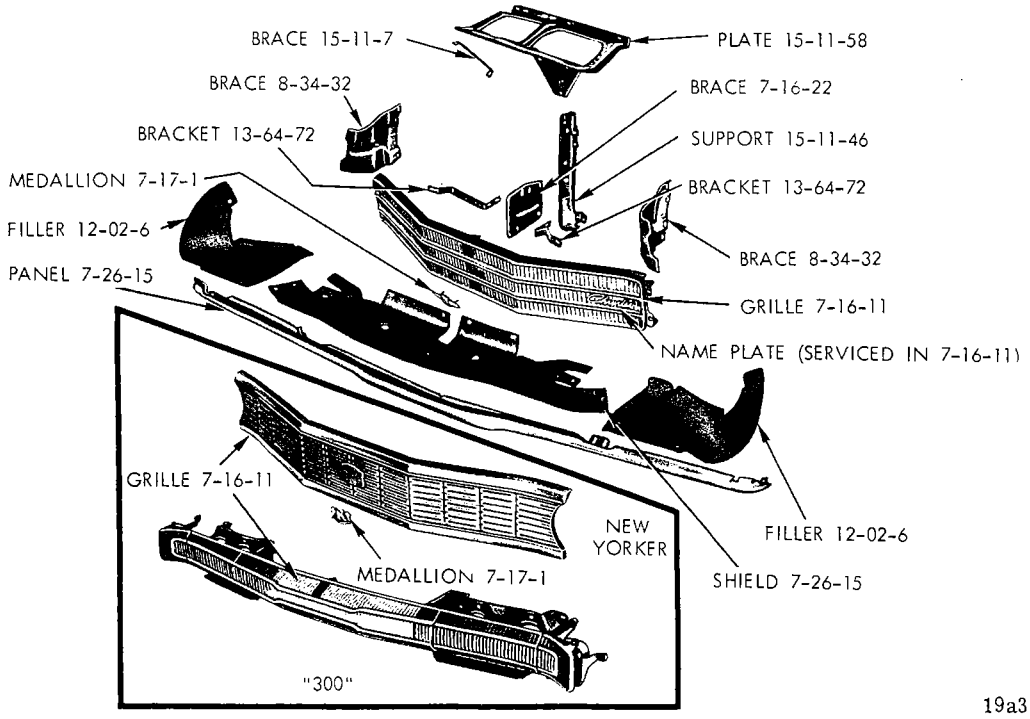

GRILLE - CHRYSLER (1971)

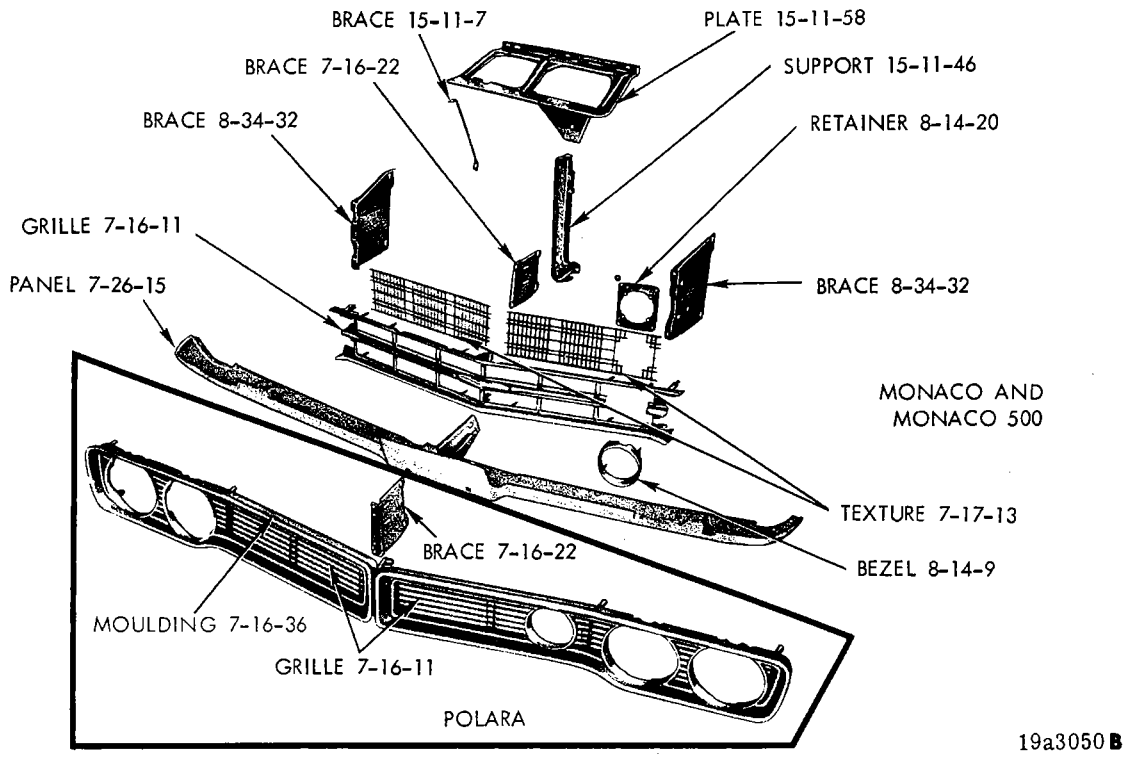

GRILLE - DODGE

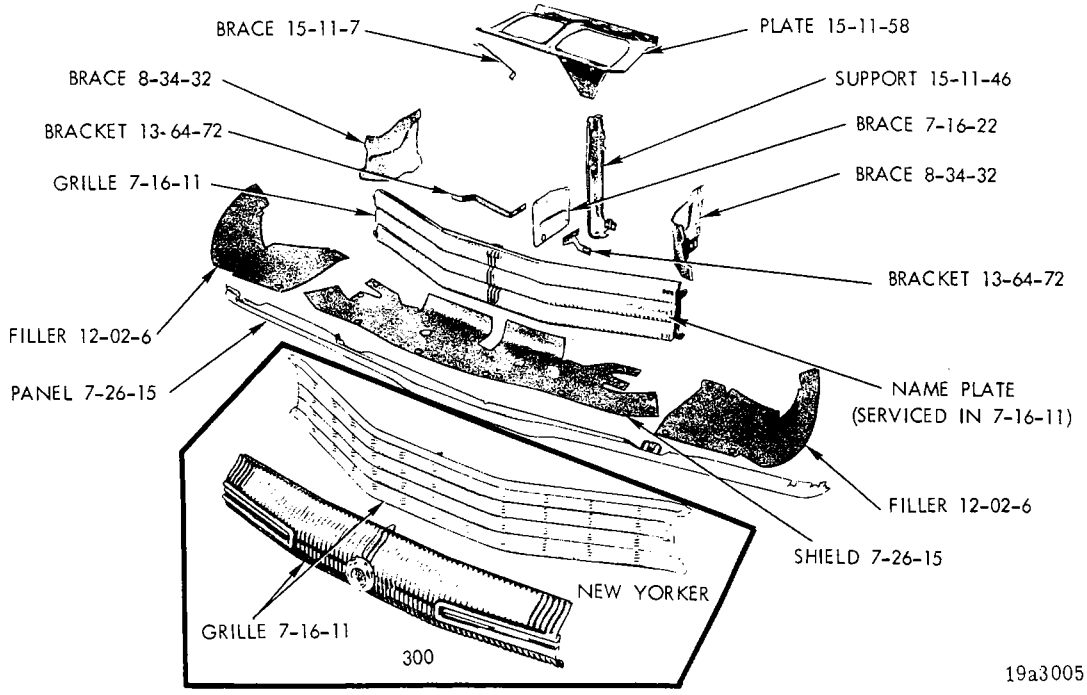

GRILLE - CHRYSLER

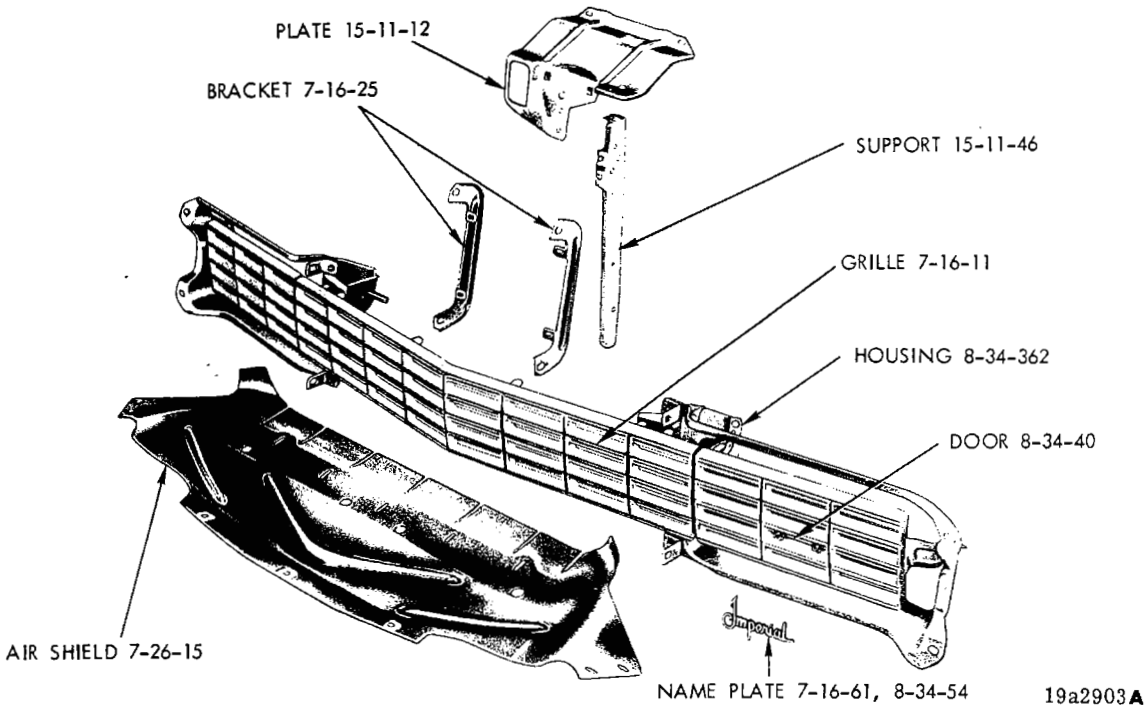

GRILLE - IMPERIAL

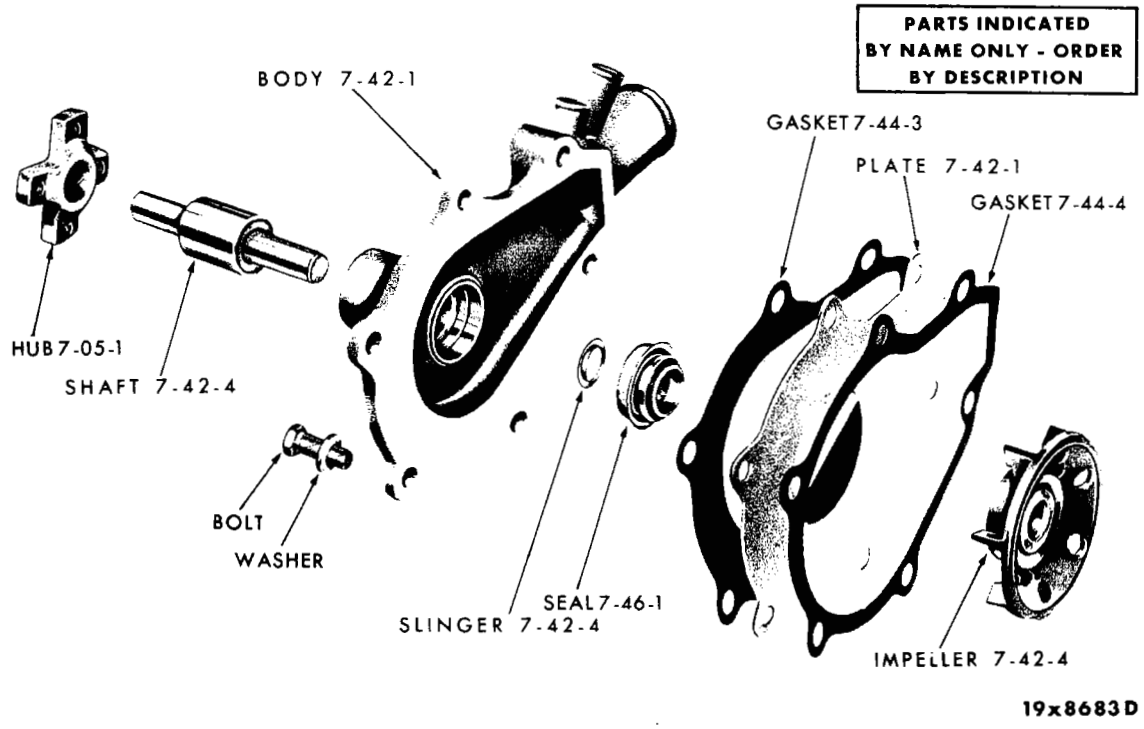

WATER PUMP - 6 CYLINDER

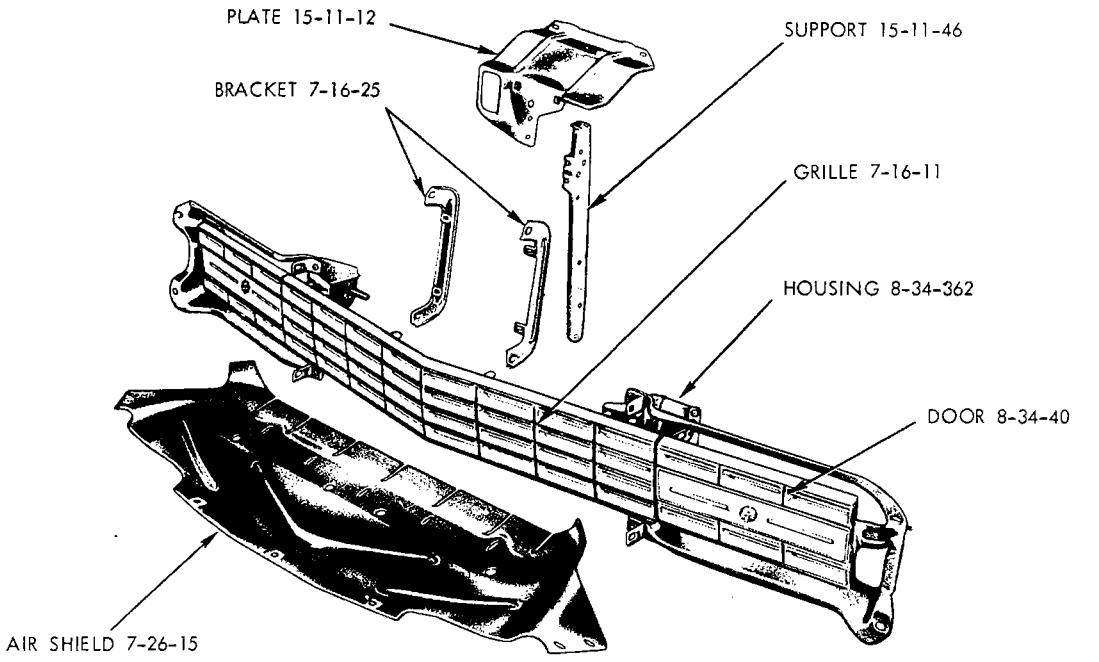

GRILLE - IMPERIAL (1971)

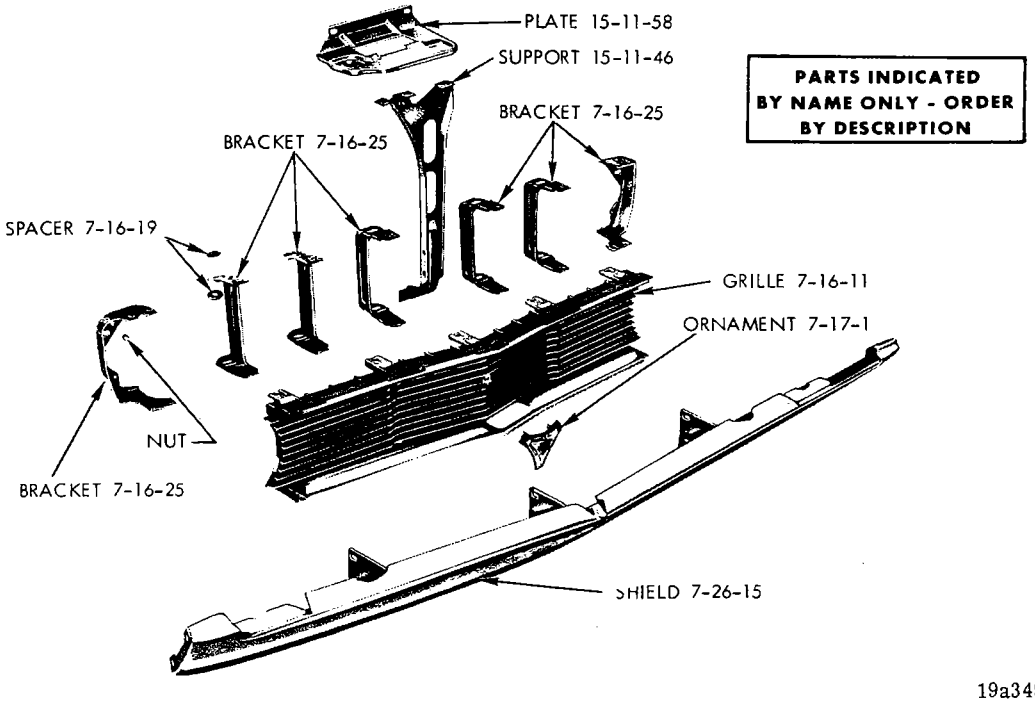

GRILLE - CORONET 4 DOOR SEDAN AND WAGONS (1971)

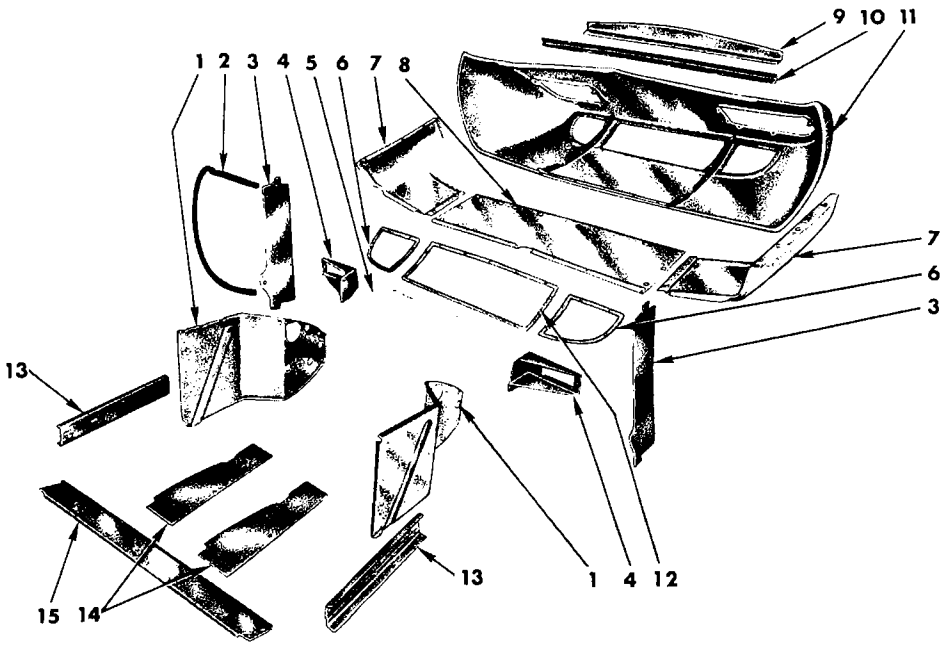

19a3317

NOSE CONE - SUPERBIRD (1970)

REF. NO.	PART NUMBER	DESCRIPTION
1	3412 606-7	BULKHEAD
2	3571 162	SEAL
3	3571 163	SEAL
4	3571 154-5	BRACKET
5	3571 156	PANEL
6	3571 146-7	FRAME
7	3571 167-8	PANEL
8	3571 148	PANEL
9	3412 616	SPOILER
10	3571 174	TRIP
11	3571 192	NOSE CONE ASSY. (SHEET METAL ONLY)
11	3571 101	NOSE CONE ASSY. COMPLETE
12	3571 157	FRAME
13	3571 150-1	SUPPORT
14	3571 172	SEAL
15	3571 152	CROSSMEMBER

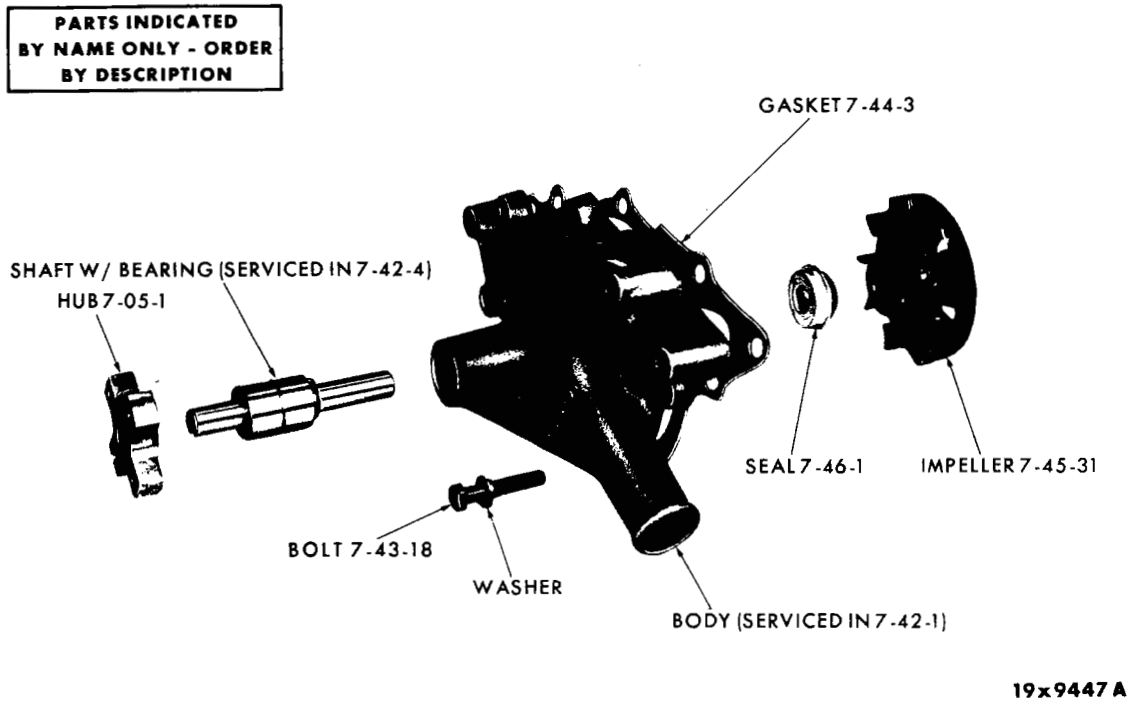

WATER PUMP - 318 AND 340 ENGINE

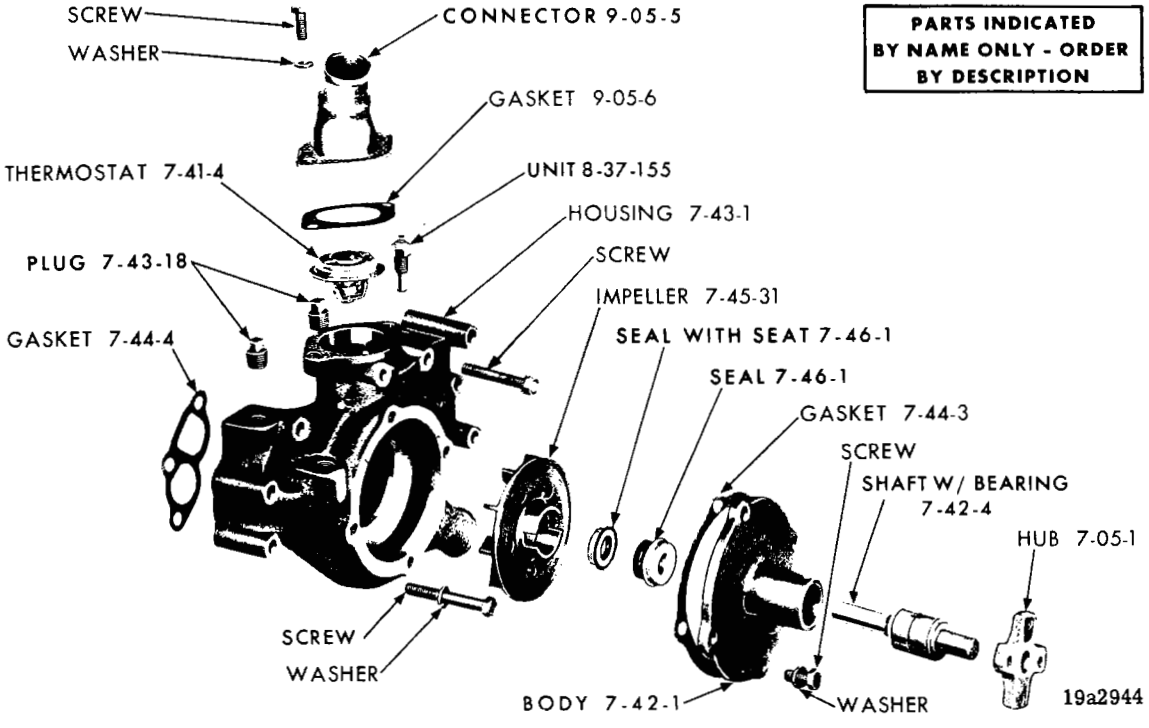

WATER PUMP - 383, 426 AND 440 ENGINES

Figure 1

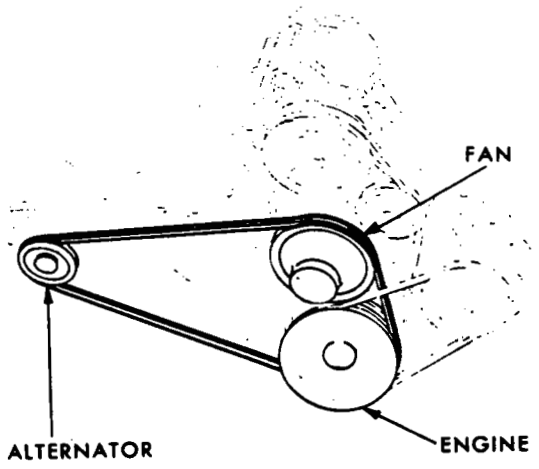

Figure 2

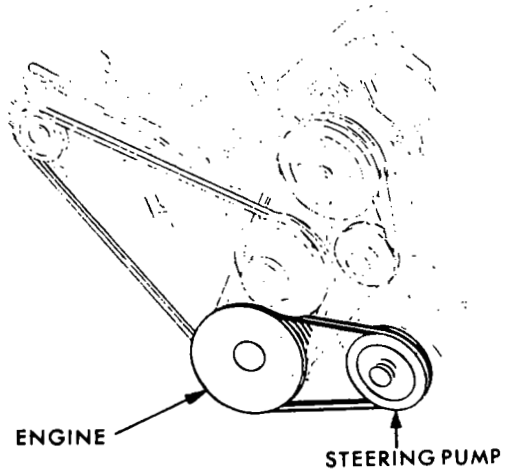

Figure 3

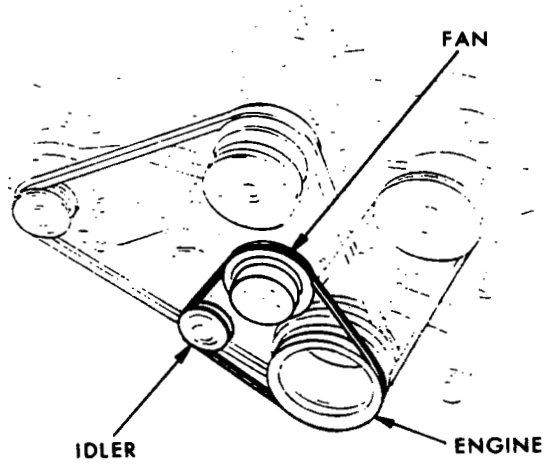

Figure 4

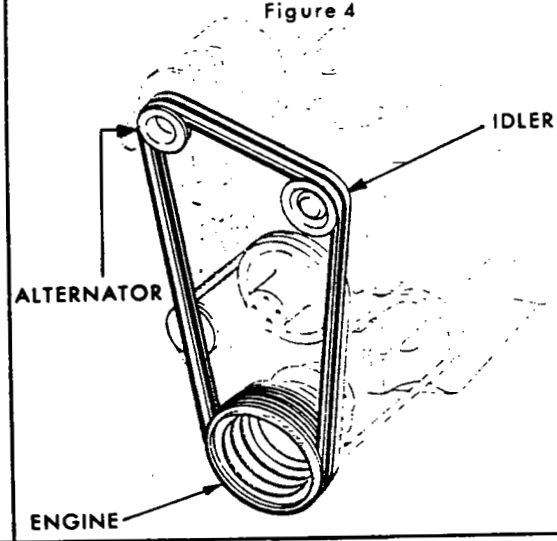

Figure 5

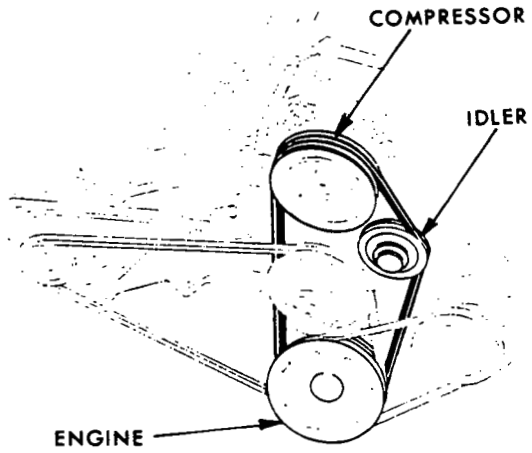

Figure 6

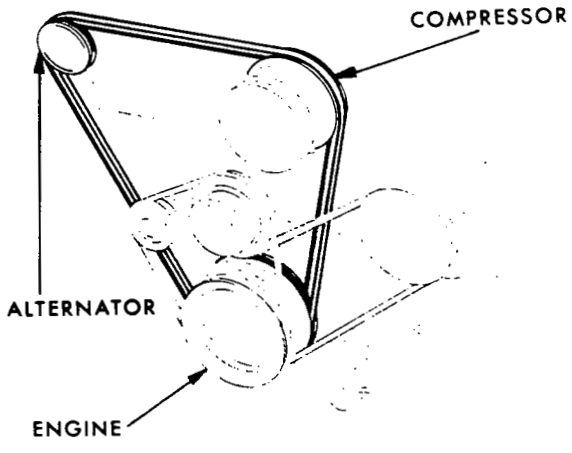

19x9214A

BELT CHART

CODE	PART NAME	ENG. TYPE OR CU.IN.	V 1-2	B J 1-2	L 1-2	R 1-2	W 1-2	P 1-2	D 1-2	C 1	C 2	C 3	Y 1	PART NUMBER
7-02-0	**FAN ASSEMBLY**													
7-02-1	FAN, STANDARD W/198, 225 Eng. 4 Blades 17" Dia.		1	1	1	1	1	1	1	—	—	—	—	1947 907
	W/225 Eng. 4 Blades 18" Dia.	71	—	—	—	—	—	1	1	—	—	—	—	2780 920
	W/318 Eng. 4 Blades 18" Dia.		—	1	—	1	1	1	1	—	—	—	—	2265 034
	W/318, 360, 383, 440 Eng. 7 Blades 18" Dia.		1	1	1	1	1	1	1	1	1	1	—	2863 224
	W/340 Eng. 7 Blades 18" Dia.		1	—	1	—	—	—	—	—	—	—	—	2863 215
	W/340, 426 Eng. 7 Blades 18 1/2" Dia.		—	1	—	1	1	—	—	—	—	—	—	2863 216
	Fan, A/Conditioning													
	W/198, 225 Eng. 7 Blades 17" Dia.		1	—	1	—	—	—	—	—	—	—	—	2863 200
	W/225 Eng. 4 Blades 18" Dia.	70	—	1	—	1	1	1	1	—	—	—	—	2780 920
	W/225 Eng. 4 Blades 18" Dia.	71	—	1	—	1	1	—	—	—	—	—	—	2780 920
	W/225 Eng. 7 Blades 18" Dia.	70	—	—	—	—	—	1	1	—	—	—	—	2863 213
	W/318 Eng. W/2.71 And 2.76 to 1 Axle Ratio 5 Blades	70	—	—	—	—	—	1	1	—	—	—	—	3462 109
	W/318 Eng. W/2.71 or 2.76 Axle Ratio 18 1/4" Dia. (Flex. Blade)	71	—	1	—	1	1	1	1	—	—	—	—	3462150
	W/318, 340, 360, 383, 426, 440 Eng. 7 Blades 18 1/2" Dia.		—	1	—	1	1	1	1	1	1	1	1	2863 216
	W/318, 340 Eng. 7 Blades 18" Dia.		1	—	1	—	—	—	—	—	—	—	—	2863 215
	Fan, High Capacity													
	W/198, 225 Eng. 7 Blades 17" Dia.		1	—	1	—	—	—	—	—	—	—	—	2863 200
	W/198, 225 Eng. 7 Blades 18" Dia.		—	1	—	1	1	1	1	—	—	—	—	2863 213
	W/225 Eng. 4 Blade W/Medium Capacity Fan Police Type 18" Dia.	CANADA 71	—	—	—	—	—	1	1	—	—	—	—	2780 920
	W/318 Eng. 7 Blades W/Leece-Neville Alt. 18" Dia.	70	—	—	—	1	1	1	1	—	—	—	—	2863 227
	W/318, 360 Eng. 7 Blades 18" Dia.		1	1	1	1	1	1	1	1	1	1	—	2863 227
	W/383, 440 Eng..7 Blades 18" Dia.		—	1	—	1	1	1	1	1	1	1	—	2863 223
7-02-16	SPACER, Fan													
	W/198, 225, 383, 440 Eng. Lgh. 1.06"		1	—	1	1	1	1	—	—	—	—	—	1851 959
	W/225 Eng. Lgh. 1.24"	70	—	—	—	1	1	—	—	—	—	—	—	1825 932
	W/198, 225, 318, Eng. Lgh. 1.72"		—	1	—	1	1	1	1	—	—	—	—	1674 746
	W/318, 360 Eng. Lgh 1.40"		1	—	1	—	—	1	1	1	1	1	—	1730 155
	W/318, 360 Eng. Lgh. 2.00"	71	—	1	—	1	1	1	1	1	1	1	—	1825 956
	W/318, 383, 440 Eng. Lgh. 1.60"		—	1	—	1	1	1	1	1	1	1	—	2120 510
	W/318 Eng. Lgh. 2.20"		—	1	—	1	1	—	—	—	—	—	—	2265 036
	W/383, 440 Eng. W/A/Cond.		—	1	—	1	1	1	1	1	1	1	1	2003 059
7-03-0	**FAN AND RELATED DRIVE BELTS**													
	NOTE: See Illustration In Group 7													
7-03-1	BELT													
	Engine To Alternator To Fan													
	(See Fig. 1)													
	W/198, 225 Eng. Lgh. 3/8" x 57.00"	70	1	1	1	1	1	1	1	—	—	—	—	2843 277
	W/198, 225 Eng. 46 Amp. & 60 Amp. Alt. Lgh. 3/8" x 57.00"	70	1	1	1	1	1	1	1	—	—	—	—	2532 659
	W/198, 225 Eng. Lgh. 3/8 x 57.00"	71	1	1	1	1	1	1	1	—	—	—	—	2532 659
	W/225 Eng. Lgh. 3/8" x 54.50"	70	1	1	1	—	—	—	—	—	—	—	—	2806 203
	W/225 Eng. W/Leece-Neville Alt. Lgh. 3/8" x 41.50"		—	—	—	1	1	1	1	—	—	—	—	2264 463
	W/318, 340, 360 Eng. W/A/Cond.	71	1	1	1	1	1	1	1	—	—	—	—	2128 751
	W/318, 360 Eng. w/Leece-Neville Alt. Dual O.S. - Lgh. 45.00"		—	—	—	1	1	1	1	—	—	—	—	3418 404
	W/318, 340, 360 Eng. W/60 Amp.													

CODE	PART NAME	ENG. TYPE OR CU.IN.	V 1-2	B J 1-2	L 1-2	R 1-2	W 1-2	P 1-2	D 1-2	C 1	C 2	C 3	Y 1	PART NUMBER
7-03-0	**FAN AND RELATED DRIVE BELTS Cont'd.**													
7-03-1	BELT Cont'd.													
	Alt. Dual O.S. Lgh. 47.50"		—	—	—	1	1	1	1	—	—	—	—	3512 522
	W/318, 340, 360 Eng. W/O/A/Cond. O.S. Lgh. 47.50"		1	1	1	1	1	1	1	1	1	1	—	3418 943
	W/383, 440 Eng. W/A/Cond. O.S. Lgh. 53.50"	71	—	1	—	1	1	1	1	1	1	1	1	1551 006
	W/383 Eng. W/Leece - Neville Altr. Lgh. 3/8" x 54.00"		—	—	—	1	1	1	1	—	—	—	—	2863 555
	W/383, 440 Eng. W/O/A/Cond. Lgh. 3/8" x 44.75"		—	—	—	—	—	1	1	1	1	1	—	2951 304
	W/383, 440 Eng. W/O/A/Cond. Lgh. 3/8" x 46.50"		—	1	—	1	1	—	—	—	—	—	—	2806 216
	W/426 Eng. Lgh. 3/8" x 43.00"		—	1	—	1	1	—	—	—	—	—	—	2658 895
	W/440 Eng. W/Leece - Neville Altr. Lgh. 3/8" x 55.50"		—	—	—	—	—	1	1	—	—	—	—	2863 557
	Engine To Power Steering Pump													
	(See Fig. 2)													
	W/198, 225 Eng. O.S. 40.75"		1	1	1	1	1	—	—	—	—	—	—	3512 025
	W/198, 225 Eng. O.S. Lgh. 39.00" After April 71 Approx.	71	1	—	1	—	—	—	—	—	—	—	—	≠3671 259
	W/225 Eng. O.S. Lgh. 39.00"		—	—	—	—	—	1	1	—	—	—	—	1401 622
	W/225 Eng. O.S. Lgh. 39.00" After May 71 Approx.	71	—	—	—	—	—	1	1	—	—	—	—	≠3671 259
	W/318, 340, 360 Eng. W/O/A/Cond. O.S. Lgh. 42.50"		1	1	1	1	1	1	1	1	1	1	—	2951 984
	W/318, 340, 360 Eng. W/A/Cond. O.S. Lgh. 45.50"		1	1	1	1	1	1	1	1	1	1	—	2951 898
	W/318, 340, 360 Eng. W/Leece Neville Alt. O.S. Lgh. 33.50"		—	—	—	1	1	1	1	—	—	—	—	3462 043
	W/383, 440 Eng. O.S. Lgh. 44.00"	70	—	1	—	1	1	—	—	—	—	—	—	2951 202
	W/383, 440 Eng. W/Leece Neville Altr. W/O/A/Cond. O.S. 40.75"		—	—	—	1	1	1	1	—	—	—	—	2402 378
	W/383, 440 Eng. O.S. 42.50"		—	1	—	1	1	1	1	1	1	1	1	3419 000
	W/426 Eng. O.S. Lgh. 39.38"		—	1	—	1	1	—	—	—	—	—	—	2268 386
	Engine To Fan													
	(See Fig. 3)													
	W/318, Eng. W/A/Cond. O.S. Lgh. 37.50"	70	—	—	—	—	—	1	1	—	—	—	—	3462 911
	W/318, 340, 360 Eng. W/A/Cond. O.S. Lgh. 37.00"		1	1	1	1	1	1	1	1	1	1	—	3418 339
	W/383, 440 Eng., W/A/Cond. O.S. Lgh. 3/8" x 36.50"	70	—	—	1	1	1	1	1	1	1	1	1	2658 793
	W/318 Eng. W/A/Cond. O.S. Lgh. 37.50"		—	1	—	1	1	1	1	—	—	—	—	3462 911
	W/383, 440 Eng. W/A/Cond. O.S. Lgh. 36.00"	71	—	1	—	1	1	1	1	1	1	1	1	3462 866
	Engine To Compressor													
	(See Fig. 5)													
	W/225 Eng. W/A/Cond. O.S. Lgh. 50.00"		1	1	1	1	1	1	1	—	—	—	—	3418 384
	W/318, 340, 360 Eng. O.S. Lgh. 50.4"	71	1	1	1	1	1	1	1	—	—	—	—	3451 443
	W/383, 440 Eng. W/A/Cond. O.S. Lgh. 57.38"	71	—	1	—	1	1	1	1	1	1	1	1	1825 903
	Engine To Alternator To Compressor													
	(See Fig.6)													
	W/318, 340, 360, Eng. W/A/Cond. Dual Lgh. 54.26"		1	1	1	1	1	1	1	1	1	1	—	3462 974
	W/383, 440 Eng. W/A/Cond. Dual 3/8" x 59.00"		—	—	—	—	—	1	1	1	1	1	—	2951 614
	W/383, 440 Eng. W/A/Cond. Dual O.S. Lgh. 60.00"		—	1	—	1	1	—	—	—	—	—	—	2658 792

CARLINES: J - Challenger, B - Barracuda, V - Valiant, L - Dart, R - Belvedere - Satellite, W - Coronet - Charger, P - Plymouth, D - Dodge, C - Chrysler, Y - Imperial

AR Indicates use as required.

# Indicates parts not listed in any previous parts book.

Numerals in parentheses ( ) refer to notes.

★ Indicates change or addition.

Printed in U.S.A. January 1972

CODE	PART NAME	ENG. TYPE OR CU.IN.	V 1-2	B J 1-2	L 1-2	R 1-2	W 1-2	P 1-2	D 1-2	C 1	C 2	C 3	Y 1	PART NUMBER
7-03-0	**FAN AND RELATED DRIVE BELTS Cont'd.**													
7-03-1	BELT Cont'd.													
	W/383 Eng. W/A/Cond. W/Leece Neville Altr. Dual Lgh. 3/8" x 66.00"		—	—	—	1	1	1	1	—	—	—	—	2951 159
	W/440 Eng. Dual O. S. Lgh. 64.50"		—	—	—	—	—	—	—	—	—	—	1	2951 280
	W/440 Eng. W/A/Cond. W/Leece Neville Altr. Dual 3/8" x 67.50"		—	—	—	—	—	2	2	—	—	—	—	2951 161
7-04-0	**FAN AND ALTERNATOR IDLER PULLEY**													
7-04-1	PULLEY, Idler, W/318, 340, 360, 383, 440 Eng. W/A/Cond. W/O Leece Neville Alt.		1	1	1	1	1	1	1	1	1	1	1	2240 397
	Bolt, W/Pump Body Fan Belt Idler Pulley Mtg. 3/8 x 5.75"	71	1	1	1	1	1	1	1	—	—	—	—	215 510
7-04-5	BRACKET, Fan Belt Idler Pulley W/383, 440 Eng. W/A/Cond.		—	1	—	1	1	1	1	1	1	1	1	2951 020
	W/318, 340, 360 Eng. W/A/Cond.		1	1	1	1	1	1	1	1	1	1	—	3418 332
7-04-10	SPACER, Fan Belt Idler Pulley W/383, 440 Eng. W/A/Cond. W/Leece Neville Altr.		—	—	—	1	1	1	1	1	1	1	1	2465 381
	W/383, 440 Eng. W/A/Cond.		—	1	—	1	1	1	1	1	1	1	—	2951 176
7-04-17	SHIELD, Fan Belt Idler Pulley Brg. W/318, 340, 360, 383, 440 Eng. W/A/Cond.		1	1	1	1	1	1	1	1	1	1	1	2658 758
7-05-0	**FAN PULLEY HUB**													
7-05-1	HUB, Fan Pulley		1	1	1	1	1	1	1	1	1	1	1	2129 265
7-06-0	**FAN DRIVE PULLEY**													
7-06-1	PULLEY, Drive W/225 Eng. W/Leece-Neville Altr. 2 Groove		—	—	—	1	1	1	1	—	—	—	—	2264 449
	W/318, 340, 360 Eng. W/O A/Cond. W/O Pwr. Strg. 1 Groove		1	1	1	1	1	1	1	1	1	1	—	1821 449
	W/318, 340, 360 Eng. W/A/Cond. 3 Groove		1	1	1	1	1	1	1	1	1	1	—	3418 928
	W/318, 340, 360 Eng. W/Leece Neville Altr. 3 Groove		—	—	—	1	1	1	1	—	—	—	—	3418 612
	W/383, 440 Eng. W/Pwr. Strg. 2 Groove		—	1	—	1	1	1	1	1	1	1	1	2946 789
	W/383, 440 Eng. W/A/Cond. 4 Groove		—	1	—	1	1	1	1	1	1	1	1	2951 122
	W/383, 440 Eng. W/Leece Neville Altr. 3 Groove		—	—	—	1	1	1	1	—	—	—	—	2806 637
	W/426 Eng. W/Pwr. Strg. 2 Groove		—	1	—	1	1	—	—	—	—	—	—	2946 713
	Pwr. Strg. Pump Drive W/198, 225 Eng. 2 Groove		1	1	1	1	1	1	1	—	—	—	—	2205 518
	Fan And Pwr. Strg. Pump Drive W/318, 340, 360 Eng. W/O/A/Cond. 2 Groove		1	1	1	1	1	1	1	1	1	1	—	2946 789
	W/383, 440 Eng. W/A/Cond. 2 Groove	71	—	1	—	1	1	1	1	1	1	1	1	2968 252
	Fan And Alternator Drive W/383, 440 Eng. W/O/A/Cond. W/O/Pwr. Strg. 1 Groove		—	1	—	1	1	1	1	1	1	—	—	1821 449
7-06-14	PULLEY, Fan W/198, 225 Eng. W/O/A/Cond. W/O Leece-Neville Altr. 1 Groove		1	1	1	1	1	1	1	—	—	—	—	2202 666

CARLINES: J - Challenger, B - Barracuda, V - Valiant, L - Dart, R - Belvedere - Satellite, W - Coronet - Charger, P - Plymouth, D - Dodge, C - Chrysler, Y - Imperial

AR Indicates use as required.

Numerals in parentheses ( ) refer to notes.

# Indicates parts not listed in any previous parts book.

★ Indicates change or addition.

Printed in U.S.A. January 1972

CODE	PART NAME	ENG. TYPE OR CU.IN.	V 1-2	B J 1-2	L 1-2	R 1-2	W 1-2	P 1-2	D 1-2	C 1	C 2	C 3	Y 1	PART NUMBER
7-06-0	**FAN DRIVE PULLEY Cont'd.**													
7-06-14	PULLEY Cont'd.													
	W/198, 225 Eng. W/A/Cond. 2 Groove		1	1	1	1	1	1	1	—	—	—	—	2406 039
	W/225 Eng. W/Leece-Neville Altr. 2 Groove		—	—	—	1	1	1	1	—	—	—	—	2264 450
	W/318 Eng. W/A/Cond. 1 Groove	70	—	—	—	—	—	1	1	—	—	—	—	3462 825
	W/318 Eng. W/A/Cond. 1 Groove	71	—	1	—	1	1	1	1	—	—	—	—	3462 825
	W/318, 340, 360 Eng. W/A/Cond. 1 Groove		1	1	1	1	1	1	1	1	1	1	—	3418 227
	W/318, 340, 360 Eng. W/O/A/Cond. W/O Leece-Neville Altr. 1 Groove		1	1	1	1	1	1	1	1	1	1	—	2951 836
	W/318, 340, 360 Eng. W/Leece Neville Altr. 2 Groove		—	—	—	1	1	1	1	—	—	—	—	2806 643
	W/383, 440 Eng. W/A/Cond. 1 Groove		—	1	—	1	1	1	1	1	1	1	1	2951 092
	W/383, 440 Eng. W/Leece-Neville Altr. W/O/A/Cond. 2 Groove		—	—	—	1	1	1	1	—	—	—	—	2806 643
	W/383, 440 Eng. W/O/A/Cond. W/O Leece-Neville Altr. 1 Groove		—	1	—	1	1	1	1	1	1	1	1	1821 452
	W/383, 440 Eng. W/A/Cond. W/Leece Neville Altr. 1 Groove	71	—	1	—	1	1	1	1	—	—	—	—	2951 092
	W/426 Eng. 1 Groove		—	1	—	1	1	—	—	—	—	—	—	2946 716
7-07-0	**FAN FLUID DRIVE UNIT OR THERMAL DRIVE UNIT**													
7-07-1	DRIVE, Fan													
	W/318, 360 Eng. W/A/Cond. W/2.71/2.76 and 2.94 Axle 6" Dia.		—	1	—	1	1	1	1	1	1	1	—	3462 108
	W/318 Eng. W/A/Cond. W/2.71/2.76 Axle 6" Dia.		1	—	1	—	—	—	—	—	—	—	—	3462 106
	W/318, 340 Eng. W/A/Cond. W/2.94 Axle 7 1/4" Dia.		1	—	1	—	—	—	—	—	—	—	—	3462 105
	W/318, 340 Eng. W/A/Cond. W/O 2.71/2.76 and 2.94 Axle 7 1/4" Dia.	70	—	1	—	1	1	1	1	—	—	—	—	3462 107
	W/318, 340, 360, 383 Eng. W/A/Cond. W/O 2.71/2.76/2.94 Axle	71	—	1	—	1	1	1	1	1	1	1	—	3462 107
	W/340 Eng. W/O A/Cond. 6" Dia.		1	—	1	—	—	—	—	—	—	—	—	2863 233
	W/340, 383, 426, 440 Eng. W/O A/Cond. - W/7 Blade Fan 7 1/4" Dia.	71	—	1	—	1	1	1	1	1	1	1	1	3462 112
	W/383, 426, 440 Eng. W/O A/Cond.	70	—	1	—	1	1	1	1	1	1	1	1	2806 070
	W/383, 440 Eng. W/A/Cond.	70	—	—	—	1	1	—	—	—	—	—	—	2658 456
	W/383, 440 Eng. W/A/Cond. 7 1/4" Dia.		—	1	—	1	1	1	1	1	1	1	—	2863 260
	W/383, 440 Eng. W/A/Cond. W/2.71/2.76 Axle 6" Dia.		—	1	—	—	—	1	1	1	1	1	—	2863 264
	W/440 Eng. W/A/Cond. 7 1/4" Dia.		—	—	—	—	—	—	—	—	—	—	1	2863 267
7-08-0	**RADIATOR CORE FAN SHROUD**													
7-08-2	SHROUD,													
	W/225 Eng. W/22" Core W/A/Cond.		1	—	1	—	—	—	—	—	—	—	—	2998 324
	W/225 Eng. W/22" Core W/A/Cond.		—	1	—	1	1	—	—	—	—	—	—	2998 327
	W/225 Eng. W/22" Core W/A/Cond.	70	—	—	—	—	—	1	1	—	—	—	—	2998 329
	W/318, 340 Eng. W/22" Core W/A/Cond.		1	—	1	—	—	—	—	—	—	—	—	2998 325
	W/340 Eng. W/and W/O A/Cond. W/26" Core		—	1	—	—	—	—	—	—	—	—	—	2998 326

CARLINES J - Challenger, B - Barracuda, V - Valiant, L - Dart, R - Belvedere - Satellite, W - Coronet - Charger, P - Plymouth, D - Dodge, C - Chrysler, Y - Imperial

AR Indicates use as required.

# Indicates parts not listed in any previous parts book.

Numerals in parentheses ( ) refer to notes.

★ Indicates change or addition.

Printed in U.S.A. January 1972

CODE	PART NAME	ENG. TYPE OR CU.IN.	V 1-2	B J 1-2	L 1-2	R 1-2	W 1-2	P 1-2	D 1-2	C 1	C 2	C 3	Y 1	PART NUMBER
7-08-0	**RADIATOR CORE FAN SHROUD Cont'd.**													
7-08-2	SHROUD Cont'd.													
	W/383, 440 Eng. W/22" Core W/O A/Cond.		—	—	—	—	—	1	1	1	1	1	—	2998 330
	W/383, 440 Eng. W/22" Core W/O A/Cond.		—	1	—	1	1	—	—	—	—	—	—	2998 328
	W/318, 383, 426, 440 Eng. W/26" Core W/A/Cond.		—	1	—	1	1	—	—	—	—	—	—	2998 326
	W/318, 360, 383, 440 Eng. W/26" Core W/A/Cond.	71	—	—	—	—	—	1	1	1	1	1	—	3443 522
	W/318, 383, 440 Eng. W/26" Core W/A/Cond.	70	—	—	—	—	—	1	1	1	1	1	—	2785 435
	W/440 Eng., W/28" Core		—	—	—	—	—	—	—	—	—	—	1	2998 981
7-08-13	BRACKET, Radiator Core Fan Shroud Mtg. W/22" Core		—	2	—	2	2	2	2	2	2	2	—	2949 176

NOTES

7-11-0 RADIATOR CORE

		Models	Year	Eng. (cu. in.)	Core Width Inches	Added Remarks	Core Stamped Number	Service Part Number
7-11-3	CORE, Radiator							
		V,L.	70	198	19		2998 932	2998 933
		V,L.	70	198	19		2998 933	2998 933
		V,L.	70	198	22		2998 935	2998 935
		V,L.	70	225	19		2998 932	2998 933
		V,L.	70	225	19		2998 933	2998 933
		B,J,R,W.	70	225	19		2998 936	2998 937
		B,J,R,W.	70	225	19		2998 937	2998 937
		P,D.	70	225	19		2998 940	2998 940
		V,L.	70	225	22	W/A/Cond.	2998 934	2998 935
		V,L.	70	225	22		2998 935	2998 935
		B,J,R,W.	70	225	22	W/A/Cond.	2998 938	2998 939
		B,J,R,W.	70	225	22		2998 939	2998 939
		P,D.	70	225	22	W/A/Cond.	2998 941	2998 941
		V,L.	70	318	19		2998 943	2998 943
		B,J.	70	318	19		2998 947	2998 973
		B,J,R,W.	70	318	19		2998 946	2998 973
		R,W.	70	318	19		2998 973	2998 973
		P,D.	70	318	19	W/A/Cond.	2998 951	2998 951
		V,L.	70	318	22	W/A/Cond.	2998 944	2998 944
		V,L.	70	318	22		2998 945	2998 945
		B,J.	70	318	26	W/A/Cond.	2998 948	2998 974
		B,J,R,W.	70	318	26		2998 949	2998 949
		P,D.	70	318	26	W/A/Cond.	2998 952	2998 952
		P,D.	70	318	26		2998 953	2998 953
		B,J,R,W.	70	318	26		2998 974	2998 974
		V,L.	70	340	22	W/A/Cond.	2998 945	2998 945
		V,L.	70	340	22		2998 978	2998 978
		B,J,R,W.	70	340	26		2998 974	2998 974
		B,J,R,W.	70	383	22		2998 954	2998 957
		B,J,R,W.	70	383	22	W/A/Cond.	2998 957	2998 957
		B,J,R,W.	70	383	22		2998 960	2998 957
		P,D,C.	70	383	22		2998 963	2998 964
		P,D,C.	70	383	22		2998 964	2998 964
		B,J,R,W.	70	383	26	W/A/Cond.	2998 956	2998 956
		B,J,R,W.	70	383	26	W/A/Cond.	2998 958	2998 958
		R,W.	70	383	26		2998 959	2998 959
		B,J,R,W.	70	383	26	W/A/Cond.	2998 961	2998 958
		P,D.	70	383	26	W/A/Cond.	2998 965	2998 965
		P,D.	70	383	26	W/A/Cond.	2998 967	2998 970
		P,D,C.	70	383	26	W/A/Cond.	2998 968	2998 968
		B,J,R,W.	70	440	22		2998 960	2998 957
		P,D,C.	70	440	22		2998 969	2998 964
		B,J,R,W.	70	440	26	W/A/Cond.	2998 956	2998 956
		B,J,R,W.	70	440	26	W/A/Cond.	2998 958	2998 958
		P,D,C.	70	440	26	W/A/Cond.	2998 970	2998 970
		Y.	70	440	28		2998 971	2998 980
		Y.	70	440	28		2998 972	2998 980
		V,L.	71	198	19		3443 986	3443 986
		V,L.	71	198	19		3443 987	3443 986
		B,J,R,W.	71	198	19		3443 945	3443 945
		B,J,R,W.	71	198	19		3443 984	3443 945
		V,L.	71	198	22		3443 988	3443 988
		B,J,R,W.	71	198	22		3443 981	3443 981
		V, L.	71	225	19		3443 986	3443 986
		V,L.	71	225	19		3443 987	3443 986
		B,J,R,W.	71	225	19		3443 984	3443 945
		P,D.	71	225	19		3443 980	3443 980
		B,J,R,W.	71	225	19		3443 945	3443 945
		V,L.	71	225	22	W/A/Cond.	3443 985	3443 988

CARLINES J - Challenger, B - Barracuda; V - Valiant, L - Dart; R - Belvedere - Satallite, W - Coronet - Charger; P - Plymouth, D - Dodge; C - Chrysler, Y - Imperial

AR Indicates use as required.

Numerals in parentheses ( ) refer to notes.

# Indicates parts not listed in any previous parts book.

★ Indicates change or addition.

Printed in U.S.A.
January 1972

7-11-0 RADIATOR CORE Cont'd.

	Models	Year	Eng. (cu. in.)	Core Width Inches	Added Remarks	Core Stamped Number	Service Part Number
7-11-3 CORE Cont'd.							
	V,L.	71	225	22		3443 988	3443 988
	B,J,R,W.	71	225	22	W/A/Cond.	3443 981	3443 981
	B,J,R,W.	71	225	22	W/A/Cond.	3443 944	3443 981
	P,D.	71	225	22		3443 979	3443 979
	V,L.	71	318	19		3443 978	3443 978
	B,J,R,W.	71	318	19		3443 973	3443 968
	B,J,R,W.	71	318	19		3443 972	3443 968
	R,W.	71	318	19		3443 968	3443 968
	P,D.	71	318	19		3443 967	3443 967
	V,L.	71	318	22	W/A/Cond.	3443 977	3443 976
	V,L.	71	318	22		3443 976	3443 976
	B,J.	71	318	26	W/A/Cond.	3443 971	3443 969
	B,J,R,W.	71	318	26	W/A/Cond.	3443 969	3443 969
	B,J,R,W.	71	318	26		3443 970	3443 970
	P,D.	71	318	26		3443 965	3443 965
	P,D.	71	318	26	W/A/Cond.	3443 966	3443 966
	V,L.	71	340	22		3443 975	3443 975
	V,L.	71	340	22		3443 976	3443 976
	V, L.	71	340	22	W/A/Cond.	3443 977	3443 976
	B,J,R,W.	71	340	26		3443 969	3443 969
	B,J,R,W.	71	340	26		3443 970	3443 970
	P,D,C.	71	360	22		3443 964	3443 964
	P,D,C.	71	360	26	W/A/Cond.	3443 963	3443 965
	P,D,C.	71	360	26		3443 965	3443 965
	B,J,R,W.	71	383	22		3443 962	3443 938
	B,J,R,W.	71	383	22		3443 961	3443 938
	P,D,C.	71	383	22		3443 950	3443 950
	P,D,C.	71	383	22		3443 952	3443 950
	B,J,R,W.	71	383	26	W/A/Cond.	3443 940	3443 959
	P,D,C.	71	383	26	W/A/Cond.	3443 947	3443 947
	P,D,C.	71	383	26	W/A/Cond.	3443 949	3443 947
	P,D,C.	71	383	26	W/A/Cond.	3443 951	3443 951
	P,D,C	71	383	26	W/A/Cond.	3443 953	3443 953
	B,J,R,W.	71	383	26	W/A/Cond.	3443 959	3443 959
	B,J,R,W.	71	383	26	W/A/Cond.	3443 960	3443 959
	B,J,R,W.	71	426	26		3443 959	3443 959
	B,J,R,W.	71	440	22		3443 938	3443 938
	P,D,C.	71	440	22		3443 950	3443 950
	P,D,C.	71	440	26	W/A/Cond.	3443 947	3443 947
	P,D,C.	71	440	26	W/A/Cond.	3443 953	3443 953
	B,J,R,W.	71	440	26	W/A/Cond.	3443 959	3443 959
	B, J, R, W	71	440	26	W/A/Cond.	3443 960	3443 969
	Y.	71	440	28		3443 946	3443 946

NOTES

CARLINES	J - Challenger B - Barracuda	V - Valiant L - Dart	R - Belvedere - Satallite W - Coronet - Charger	P - Plymouth D - Dodge	C - Chrysler Y - Imperial

AR Indicates use as required.
# Indicates parts not listed in any previous parts book.
Numerals in parentheses ( ) refer to notes.
★ Indicates change or addition.

Printed in U.S.A.
January 1972

CODE	PART NAME	ENG. TYPE OR CU.IN.	V 1-2	B J 1-2	L 1-2	R 1-2	W 1-2	P 1-2	D 1-2	C 1	C 2	C 3	Y 1	PART NUMBER
7-11-0	**RADIATOR CORE Cont'd.**													
7-11-31	INSULATOR, Radiator Core Upr. Mtg. 28" Core		—	—	—	—	—	—	—	—	—	—	2	2579 307
7-11-35	SPACER, Radiator Core Upr. Mtg. 28" Core		—	—	—	—	—	—	—	—	—	—	2	2579 306
7-11-60	PAD, Radiator Core Lwr Mtg. 28" Core		—	—	—	—	—	—	—	—	—	—	2	2579 260
7-12-0	**RADIATOR FILLER CAP**													
7-12-1	CAP, Radiator Pressure 16 = W/Coolant Recovery System		1	1	1	1	1	1	1	1	1	1	1	2998 982
	R, W W/318, 383 Eng. 4 Dr. 4 Dr. H.T. and Wgn. P, D, C 2 Dr. H.T. 4 Dr. 4 Dr. H.T. and Wgn.	71	—	—	—	1	1	1	1	1	1	1	—	= 3412 851
7-13-0	**RADIATOR DRAIN COCK**													
7-13-2	DRAIN COCK		1	1	1	1	1	1	1	1	1	1	1	1686 198
7-14-0	**RADIATOR HOSE**													
7-14-4	HOSE, Radiator Inlet. 318/AIR	70				1								3462117
	W/198, 225 Eng.		1	—	1	—	—	—	—	—	—	—	—	1881 805
	W/198, 225 Eng. W/O A/Cond.		—	1	—	1	1	1	1	—	—	—	—	2863 241
	W/198, 225 Eng. W/A/Cond. W/Max. Cooling		1	1	1	1	1	1	1	—	—	—	—	2863 291
	W/198, 225 Eng. W/O/Air Cond. W/O Max. Cooling.		—	1	—	—	—	—	—	—	—	—	—	3462 175
	W/318 Eng. W/O/A/Cond.		1	1	1	1	1	1	1	—	—	—	—	1881 806
	W/340 Eng. W/Carb. Fresh Air Package	70	—	1	—	—	—	—	—	—	—	—	—	3462 193
	W/340 Eng. W/Carb. Fresh Air Package	71	—	1	—	1	1	—	—	—	—	—	—	= 3462 118
	W/383, 440 Eng. W/O A/Cond.	70	—	1	—	1	1	1	1	1	1	1	—	1881 804
	w/383, 440 Eng. Police w/Leece Neville Alt. 426 Eng. All.		—	—	—	1	1	1	1	—	—	—	—	2863 230
	W/383, 440 Eng. W/A/Cond. W/ Max. Cooling, W/Leece Neville Altr.		—	—	—	1	1	1	1	—	—	—	—	2863 230
	W/318, 340 Eng. W/A/Cond. W/Max. Cooling.		1	—	1	—	—	—	—	—	—	—	—	2863 292
	W/340 Eng.		1	—	1	—	—	—	—	—	—	—	—	2863 292
	W/440 Eng.		—	—	—	—	—	—	—	—	—	—	1	3549 429
	W/170, 225 Eng. Export Only		1	—	—	—	—	—	—	—	—	—	—	3462 158
	W/383 Eng., Police W/O Leece Neville Altr.		—	—	—	1	1	1	1	—	—	—	—	2863 257
	W/383, 440 Eng., W/A/Cond. W/ Max. Cooling		—	1	—	1	1	1	1	1	1	1	—	2863 257
	W/426 Eng.		—	1	—	—	—	—	—	—	—	—	—	3462 184
	W/383, 440 Eng. W/O/A/Cond. W/O Max. Cooling		—	1	—	1	1	1	1	1	1	1	—	3462 114
	W/318, 340, 360 Eng. W/A/Cond. W/Max. Cooling	71	—	1	—	1	1	1	1	1	1	1	—	3462 102
	W/360 Eng. W/O/A/Cond. W/O Max. Cooling	71	—	—	—	—	—	1	1	1	1	1	—	3462 200
	W/440 Eng. W/O A/Cond. W/O Max. Cooling		—	1	—	—	—	—	—	—	—	—	—	3462 116
7-14-5	HOSE, Radiator Outlet W/198, 225 Eng.		1	1	1	1	1	1	1	—	—	—	—	2863 278
	W/318, 340 Eng.		1	—	1	—	—	—	—	—	—	—	—	3462 164

CARLINES J - Challenger, B - Barracuda, V - Valiant, L - Dart, R - Belvedere - Satellite, W - Coronet - Charger, P - Plymouth, D - Dodge, C - Chrysler, Y - Imperial

AR Indicates use as required.

# Indicates parts not listed in any previous parts book.

Numerals in parentheses ( ) refer to notes.

★ Indicates change or addition.

Printed in U.S.A. January 1972

CODE	PART NAME	ENG. TYPE OR CU.IN.	V 1-2	B J 1-2	L 1-2	R 1-2	W 1-2	P 1-2	D 1-2	C 1	C 2	C 3	Y 1	PART NUMBER
7-14-0	**RADIATOR HOSE Cont'd.**													
7-14-5	HOSE Cont'd.													
	W/318, 340, 360 Eng.		—	1	—	1	1	1	1	1	1	1	—	3462 165
	W/383, 426, 440 Eng.	70	—	1	—	1	1	1	1	1	1	1	—	2863 256
	W/383, 426, 440 Eng.	71	—	1	—	1	1	1	1	1	1	1	—	3462 119
	W/440 Eng.		—	—	—	—	—	—	—	—	—	—	1	2863 290
7-14-9	HOSE, Water Pump By-Pass													
	W/318, 340, 360 Eng.		1	1	1	1	1	1	1	1	1	1	—	3462 688
	W/198, 225 Eng.		1	1	1	1	1	1	1	—	—	—	—	1315 466
7-14-13	CLIP, Over Flow Hose 28" Core		—	—	—	—	—	—	—	—	—	—	2	2578 045
		71	2	2	2	2	2	2	2	2	2	2	—	3443 925
	CLAMP, Radiator Outlet Hose		2	2	2	2	2	2	2	2	2	2	2	870 469
7-14-31	HOSE, Radiator Overflow (9/32" Sold by the foot)		AR	AR	AR	AR	AR	AR	AR	AR	AR	AR	AR	1904 950
7-16-0	**RADIATOR GRILLE**													
7-16-11	GRILLE													
	VALIANT, Exc. Duster	70	1	—	—	—	—	—	—	—	—	—	—	2949 526
	VALIANT, Exc. Duster 340	71	1	—	—	—	—	—	—	—	—	—	—	3573 721
	VALIANT, Duster	70	1	—	—	—	—	—	—	—	—	—	—	2998 364
	VALIANT, Duster 340 and Twister	71	1	—	—	—	—	—	—	—	—	—	—	3442 739
	BARRACUDA	70	—	1	—	—	—	—	—	—	—	—	—	2949 558
	BARRACUDA, W/340 Eng. W/3-2 BBL. Carb.	70	—	1	—	—	—	—	—	—	—	—	—	3443 808
	B-H, B-P, B-S Pntd. Tex. Argent	71	—	1	—	—	—	—	—	—	—	—	—	3442 647
	B-S Pntd. FJ6 Avocado	71	—	1	—	—	—	—	—	—	—	—	—	3573 611
	B-S Pntd. GY3 Citron Yella	71	—	1	—	—	—	—	—	—	—	—	—	3573 612
	B-S Pntd. FC7 Plum Met.	71	—	1	—	—	—	—	—	—	—	—	—	3573 613
	B-S Pntd. GW3 Bright White	71	—	1	—	—	—	—	—	—	—	—	—	3443 587
	B-S Pntd. EV2 Tor. Red	71	—	1	—	—	—	—	—	—	—	—	—	3443 589
	B-S Pntd. GB5 Bright Blue	71	—	1	—	—	—	—	—	—	—	—	—	3443 593
	B-S Pntd. GF7 Med. Yellow Green Met.	71	—	1	—	—	—	—	—	—	—	—	—	3443 597
	B-S Pntd. GK6 Medium Bronze Met.	71	—	1	—	—	—	—	—	—	—	—	—	3443 599
	B-S Pntd. FE5 Red	71	—	1	—	—	—	—	—	—	—	—	—	3443 601
	CHALLENGER J-S	70	—	1	—	—	—	—	—	—	—	—	—	2998 216
	CHALLENGER J-H	70	—	1	—	—	—	—	—	—	—	—	—	2949 577
	CHALLENGER W/340 Eng. W/3-2 Bbl. Carb.	70	—	1	—	—	—	—	—	—	—	—	—	2998 216
	J-S Std. J-H W/Decor Group "A and B"	71	—	1	—	—	—	—	—	—	—	—	—	3443 276
	J-H W/O Decor Group "A and B"	71	—	1	—	—	—	—	—	—	—	—	—	3443 278
	RADIATOR Outer W/O Decor Group "A and B" J-H	71	—	1	—	—	—	—	—	—	—	—	—	3442 741
	DART	70	—	—	1	—	—	—	—	—	—	—	—	2949 548
	DART	71	—	—	1	—	—	—	—	—	—	—	—	3573 667
	BELVEDERE and Satellite R-L, R-H	70	—	—	—	1	—	—	—	—	—	—	—	2949 860
	SATELLITE R-L	71	—	—	—	1	—	—	—	—	—	—	—	3442 011
	ROAD RUNNER R-M	70	—	—	—	1	—	—	—	—	—	—	—	2949 997
	ROAD RUNNER R-M, Satellite R-P, R-S 2 Dr. H.T.	71	—	—	—	1	—	—	—	—	—	—	—	3442 207
	SPORT SATELLITE GTX R-P R-S	70	—	—	—	1	—	—	—	—	—	—	—	2998 002
	SATELLITE R-H, R-P Exc. 2 Dr. H.T. W/O Mouldings	71	—	—	—	1	—	—	—	—	—	—	—	3443 013
	SATELLITE R-H, R-P Exc. 2 Dr. H.T. W/Mouldings	71	—	—	—	1	—	—	—	—	—	—	—	# 3574 188

CARLINES: J - Challenger, B - Barracuda, V - Valiant, L - Dart, R - Belvedere - Satellite, W - Coronet - Charger, P - Plymouth, D - Dodge, C - Chrysler, Y - Imperial

AR Indicates use as required.

Numerals in parentheses ( ) refer to notes.

# Indicates parts not listed in any previous parts book.

★ Indicates change or addition.

Printed in U.S.A. January 1972

7-16-0 RADIATOR GRILLE Cont'd.

CODE	PART NAME	ENG. TYPE OR CU.IN.	V 1-2	B J 1-2	L 1-2	R 1-2	W 1-2	P 1-2	D 1-2	C 1	C 2	C 3	Y 1	PART NUMBER
7-16-11	GRILLE Cont'd.													
	SATELLITE R-H 2 Dr. H.T.	71	—	—	—	1	—	—	—	—	—	—	—	3443 014
	RADIATOR Air Shield 2 Dr. H.T.	71	—	—	—	1	—	—	—	—	—	—	—	3442 233
	CORONET, Coronet 440 W-L, W-H	70	—	—	—	—	1	—	—	—	—	—	—	2949 808-9
	CHARGER Fast Back	70	—	—	—	—	1	—	—	—	—	—	—	2998 440
	SUPER BEE, Coronet 500, Coronet R/T W-M, W-P, W-S	70	—	—	—	—	1	—	—	—	—	—	—	2998 200-1
	CORONET, W-L, W-H, W-P	71	—	—	—	—	1	—	—	—	—	—	—	3442 079
	CHARGER Super Bee W-M, W-S R/T 2 Dr. H.T. W/O Concealed H/Lamp W-H, W-P W/Charger Colored Bumper	71	—	—	—	—	1	—	—	—	—	—	—	3442 378-9
	W-H, W-P W/O Charger Colored Bumper	71	—	—	—	—	1	—	—	—	—	—	—	3442 894-5
	FRAME Charger Super Bee W-M R/T 2 Dr. H.T. W-S W/Concealed H/Lamps	71	—	—	—	—	1	—	—	—	—	—	—	3442 864-5
	FURY I, II, III, P-E, P-L, P-M	70	—	—	—	—	—	1	—	—	—	—	—	2949 339
	SPORTS FURY, Sports Fury G/T P-H	70	—	—	—	—	—	1	—	—	—	—	—	2998 359
	DODGE POLARA D-L, D-M Lt. W/Superlite	70	—	—	—	—	—	—	1	—	—	—	—	2949 357
	DODGE POLARA D-L, D-M Rt.	70	—	—	—	—	—	—	1	—	—	—	—	2949 758
	DODGE POLARA D-L, D-M W/O Superlite	70	—	—	—	—	—	—	1	—	—	—	—	2949 759
	DODGE D-H, D-P W/Superlite	70	—	—	—	—	—	—	1	—	—	—	—	2998 466
	DODGE D-H, D-P W/O Superlite	70	—	—	—	—	—	—	1	—	—	—	—	2998 360
	DODGE POLARA D-E, D-L, D-M, D-S	71	—	—	—	—	—	—	1	—	—	—	—	3442 052
	DODGE MONACO D-H	71	—	—	—	—	—	—	1	—	—	—	—	3442 608
	FURY I, II, III, P-E, P-L, P-M Exc. "Gran Coupe"	71	—	—	—	—	—	1	—	—	—	—	—	3442 409
	FURY "Gran Coupe" P-M Sport Fury P-H	71	—	—	—	—	—	1	—	—	—	—	—	3443 248-9
	NEWPORT, Custom Newport C-E, C-L	70	—	—	—	—	—	—	—	1	—	—	—	2949 683
	NEWPORT, Custom Newport C-E C-L	71	—	—	—	—	—	—	—	1	—	—	—	3443 709
	CHRYSLER 300 C-M Black	70	—	—	—	—	—	—	—	—	1	—	—	2949 687
	CHRYSLER 300 C-M Black and Light Argent	70	—	—	—	—	—	—	—	—	1	—	—	3443 356
	CHRYSLER 300 C-S	71	—	—	—	—	—	—	—	—	1	—	—	3443 703
	NEW YORKER, Town & Country C-H, C-P	70	—	—	—	—	—	—	—	—	—	1	—	2949 716
	NEW YORKER, Town & Country C-H, C-P	71	—	—	—	—	—	—	—	—	—	1	—	3443 720
	IMPERIAL Y		—	—	—	—	—	—	—	—	—	—	1	2949 734
	Screw, Rad. Grille To Vert. Supt. Brace 1" Long D-L, D-M	70	—	—	—	—	—	—	4	—	—	—	—	6028 741
	Screw, Rad. Grille To H/Lamp. Mtg. Pnl. Plate 1.875" Long D-L, D-M	70	—	—	—	—	—	—	8	—	—	—	—	6028 994
7-16-14	RETAINER, Radiator Grille Lower V, R,	70	5	—	—	3	—	—	—	—	—	—	—	2998 638
	V.	71	5	—	—	—	—	—	—	—	—	—	—	3443 540
	Retainer, Radiator Grille		AR	AR	AR	AR	—	—	—	—	—	—	—	2998 430
	J,D.		—	AR	—	—	—	—	AR	—	—	—	—	3443 220
7-16-19	SPACER, Radiator Grille long B, R, W		—	AR	—	3	10	—	—	—	—	—	—	2949 305
	Short B, R, W.		—	AR	—	3	10	—	—	—	—	—	—	2949 311

CARLINES: J - Challenger, B - Barracuda, V - Valiant, L - Dart, R - Belvedere - Satellite, W - Coronet - Charger, P - Plymouth, D - Dodge, C - Chrysler, Y - Imperial

AR Indicates use as required.

# Indicates parts not listed in any previous parts book.

Numerals in parentheses ( ) refer to notes.

★ Indicates change or addition.

Printed in U.S.A. January 1972

CODE	PART NAME	ENG. TYPE OR CU.IN.	V 1-2	B J 1-2	L 1-2	R 1-2	W 1-2	P 1-2	D 1-2	C 1	C 2	C 3	Y 1	PART NUMBER
7-16-0	**RADIATOR GRILLE Cont'd.**													
7-16-19	SPACER Cont'd.													
	J-H, J-S		—	2	—	—	—	—	—	—	—	—	—	3443 263
	Long Fast Back Plastic	70	—	—	—	—	8	—	—	—	—	—	—	2998 434
	Short Fast Back Plastic	70	—	—	—	—	8	—	—	—	—	—	—	2998 435
7-16-22	BRACE, Radiator Grille Lower Panel													
	Vertical Lock Support		1	—	—	—	—	—	—	—	—	—	—	2898 238
	Radiator Grille Lwr. Frame Vert. J-H, J-S	70	—	1	—	—	—	—	—	—	—	—	—	2949 960
	BRACE, Vertical Lock Support													
	C-E, C-L, C-H, C-P		—	—	—	—	—	—	—	1	—	1	—	2898 459
	CM, CS.		—	—	—	—	—	—	—	—	1	—	—	2949 704
	SUPPORT, Radiator Grille Bracket except Fast Back, 4D.H.T	70	—	—	—	—	4	—	—	—	—	—	—	2998 700
	BRACE, Radiator Air Panel Bracket Frame Side Rail Cap		—	—	—	—	—	2	—	—	—	—	—	2998 291
	Front Side Rail Cap	71	—	—	—	—	—	2	—	—	—	—	—	3443 376
7-16-25	BRACKET, Radiator Grille To Fender Head Lamp Panel		—	—	2	2	—	—	—	—	—	—	—	2949 368
	Fender H/Lamp Pnl. B	71	—	2	—	—	—	—	—	—	—	—	—	3442 991
	Vertical Lock Supt. B	71	—	1	—	—	—	—	—	—	—	—	—	3443 291
	D-H	71	—	—	—	—	—	—	1	—	—	—	—	3443 042
	Bumper Mtg. 2 Dr. H.T. Rt. 1 Reqd. Lt. 2 Reqd.	71	—	—	—	3	—	—	—	—	—	—	—	3442 372-3
	Bezel Bumper Mtg. Upper 2 Dr. H.T.	71	—	—	—	2	—	—	—	—	—	—	—	3443 238
	Lower 2Dr. H.T.	71	—	—	—	2	—	—	—	—	—	—	—	3443 241
	Center w Fast Back	70	—	—	—	—	1	—	—	—	—	—	—	2998 651
	Inter. Except Fast Back	70	—	—	—	—	1	—	—	—	—	—	—	2998 250-1
	Inner, Except Fast Back,	70	—	—	—	—	1	—	—	—	—	—	—	2998 252-3
	Outer Except Fast Back	70	—	—	—	—	1	—	—	—	—	—	—	2998 248-9
	Bumper, W-P Fast Back Std. W-M, W'gs 2 Dr. H.T. W/Concealed H/Lamps.	71	—	—	—	—	8	—	—	—	—	—	—	3443 281
	Bumper Inner W-H, W-P 2 Dr. H.T. Std. W-M, W-S 2 Dr. H.T. W/O Concealed H/Lamps	71	—	—	—	—	2	—	—	—	—	—	—	3442 298
	Bumper Outer W-H, W-P 2 Dr. H.T. Std. W-M, W-S 2 Dr. H.T. W/O Concealed H/Lamps.	71	—	—	—	—	1	—	—	—	—	—	—	3442 310-1
	Bumper Intermediate W-H, W-P 2 Dr. H.T. Std. W-M, W-S 2Dr. H.T. W/O Concealed H/Lamps	71	—	—	—	—	2	—	—	—	—	—	—	3442 304
	Bumper Mtg. 4 Dr. Sedan Wgn.	71	—	—	—	—	5	—	—	—	—	—	—	3442 094
	Housing Bumper Upper Outer W-P Fast Back Std. W-M, W-S 2 Dr. H.T. W/Concealed H/Lamps	71	—	—	—	—	1	—	—	—	—	—	—	3443 284-5
	H/Lamp Bezel Bumper W-L, W-H, W-P 4 Dr. And Wgn. (Up to Nov. 71)	71	—	—	—	—	1	—	—	—	—	—	—	3442 100-1
	H/Lamp Bezel Bumper W-L, W-H, W-P 4 Dr. And Wgn. After Nov. 71	71	—	—	—	—	1	—	—	—	—	—	—	= 3573 838-9
	H/Lamp Door Motor Mtg. Bumper W-P Fastback Std. W-M, W-S 2 Dr. H.T. W/Concealed H/Lamps	71	—	—	—	—	1	—	—	—	—	—	—	3442 876
	Bezel Bumper	70	—	—	—	—	—	1	—	—	—	—	—	2998 530-1
	Bumper Mtg.	70	—	—	—	—	—	1	—	—	—	—	—	2998 534-5
	Extension To Bumper	70	—	—	—	—	—	6	—	—	—	—	—	2998 540
	Bezel Bumper Outer P-E, P-L P-M Exc. "Gran Coupe" Up To Nov. 71	71	—	—	—	—	—	2	—	—	—	—	—	= 3442 712

CARLINES: J - Challenger, B - Barracuda, V - Valiant, L - Dart, R - Belvedere - Satellite, W - Coronet - Charger, P - Plymouth, D - Dodge, C - Chrysler, Y - Imperial

AR Indicates use as required.

Numerals in parentheses ( ) refer to notes.

# Indicates parts not listed in any previous parts book.

★ Indicates change or addition.

Printed in U.S.A. January 1972

7-16-0 RADIATOR GRILLE Cont'd.

CODE	PART NAME	ENG. TYPE OR CU.IN.	V 1-2	B J 1-2	L 1-2	R 1-2	W 1-2	P 1-2	D 1-2	C 1	C 2	C 3	Y 1	PART NUMBER
7-16-25	BRACKET Cont'd.													
	Bezel Bumper Outer P-E, P-L, P-M Exc. "Gran Coupe" After Nov. 71	71	—	—	—	—	—	2	—	—	—	—	—	= 3573 856
	Bumper Mtg. PM "Gram Coupe" 4 Dr. Ht. P-H	71	—	—	—	—	—	8	—	—	—	—	—	= 3442 945
	Bumper	71	—	—	—	—	—	—	8	—	—	—	—	3443 456
	H/Lamp Bezel Bumper Lower	71	—	—	—	—	—	—	2	—	—	—	—	3443 460
	Front Bumper Grille	71	—	—	—	—	—	—	1	—	—	—	—	3464 854
	Bumper Mtg.		—	—	—	—	—	—	—	—	—	—	2	2949 188
	Lower	71	—	—	—	—	—	—	—	—	—	—	2	3443 154
7-16-36	MOULDING, Radiator Grille													
	Upper Inner Exc. 71 Duster 340		1	—	—	—	—	—	—	—	—	—	—	= 3443 399
	Upper Outer		1	—	—	—	—	—	—	—	—	—	—	2949 968
	Lower Inner Exc. 71 Duster 340		1	—	—	—	—	—	—	—	—	—	—	= 3443 406
	Lower Outer		1	—	—	—	—	—	—	—	—	—	—	2949 970
	INNER D-L, D-M	70	—	—	—	—	—	—	1	—	—	—	—	2998 578-9
	OUTER D-L, D-M	70	—	—	—	—	—	—	1	—	—	—	—	2998 580-1
	Rt. Side B-S.	70	—	1	—	—	—	—	—	—	—	—	—	2998 238
	Inner, Lt. Side B-S.	70	—	1	—	—	—	—	—	—	—	—	—	2998 239
	Outer, Lt. Side B-S	70	—	1	—	—	—	—	—	—	—	—	—	2998 243
	Texture, B-H, B-S, B-P.	70	—	1	—	—	—	—	—	—	—	—	—	2998 166-7
	Inner B	71	—	2	—	—	—	—	—	—	—	—	—	= 3443 315
	Outer B	71	—	1	—	—	—	—	—	—	—	—	—	= 3443 316-7
	Rad. Inner Grille J	71	—	2	—	—	—	—	—	—	—	—	—	= 3443 510
	Upper R-H, R-P 4 Dr. And Sta. Wgn.	71	—	—	—	1	—	—	—	—	—	—	—	= 3442 220
	Lower R-H, R-P 4 Dr. And Sta. Wgn.	71	—	—	—	1	—	—	—	—	—	—	—	= 3442 248
	BEZEL, R-H, R-P 4 Dr. and Sta. Wgn.	71	—	—	—	1	—	—	—	—	—	—	—	= 3442 218-9
	LOWER, Panel	70	—	—	—	1	—	—	—	—	—	—	—	3443 106
7-16-37	RETAINER, Rad. Grille Upper and Lower Mldg. 4 Dr. and Fast Back	70	AR	—	—	—	—	—	—	—	—	—	—	3443 416
	Mldg.	71	—	AR	—	—	—	—	—	—	—	—	—	3443 696
7-16-61	NAME/PLATE, Rad. Grille													
	VALIANT, Fast Back, 4 Dr. Sed.	70	1	—	—	—	—	—	—	—	—	—	—	2573 169
	W/FASTBACK "CHARGER"	70	—	—	—	—	1	—	—	—	—	—	—	2998 278
	J, W "DODGE"	71	—	1	—	—	1	—	—	—	—	—	—	3443 554
	"POLARA"	71	—	—	—	—	—	—	1	—	—	—	—	3443 652
	J-S, R/T		—	1	—	—	—	—	—	—	—	—	—	2998 547
	CHALLENGER	70	—	1	—	—	—	—	—	—	—	—	—	2998 546
	B - "PLYMOUTH"	70	—	1	—	—	—	—	—	—	—	—	—	2998 282
	R-S "GTX"	70	—	—	—	1	—	—	—	—	—	—	—	2949 992
	R-S, "GTX"	71	—	—	—	1	—	—	—	—	—	—	—	3443 541
	W-L, W-H	70	—	—	—	—	1	—	—	—	—	—	—	2998 060
	R-L, R-M, R-H	70	—	—	—	1	—	—	—	—	—	—	—	2949 862
	PLYMOUTH, "FURY"	71	—	—	—	—	—	1	—	—	—	—	—	= 3443 304
	"PLYMOUTH" R-H	71	—	—	—	1	—	—	—	—	—	—	—	3443 899
	UPPER PANEL "PLYMOUTH" R-M, R-H, R-P, R-S 2 Dr. H.T.	71	—	—	—	1	—	—	—	—	—	—	—	3445 250
	D-H "MONACO"	71	—	—	—	—	—	—	1	—	—	—	—	3443 780
7-16-62	NUT, Radiator Grille Name Plate Retainer	70	—	2	—	—	—	—	—	—	—	—	—	1839 995
		71	—	—	—	—	—	3	—	—	—	—	—	3443 391
7-16-63	PANEL, Radiator Grille Lower		1	—	—	—	—	—	—	—	—	—	—	3419 941
	Lower	70	—	—	—	1	—	—	—	—	—	—	—	3419 943
	Upper	71	—	—	—	1	—	—	—	—	—	—	—	3579 662
	Upper B	71	—	1	—	—	—	—	—	—	—	—	—	3579 661
	Grille Panel B	70	—	1	—	—	—	—	—	—	—	—	—	3419 942

CARLINES: J - Challenger, B - Barracuda, V - Valiant, L - Dart, R - Belvedere - Satellite, W - Coronet - Charger, P - Plymouth, D - Dodge, C - Chrysler, Y - Imperial

AR Indicates use as required.

Numerals in parentheses ( ) refer to notes.

Printed in U.S.A. January 1972

# Indicates parts not listed in any previous parts book.

★ Indicates change or addition.

CODE	PART NAME	ENG. TYPE OR CU.IN.	V 1-2	B J 1-2	L 1-2	R 1-2	W 1-2	P 1-2	D 1-2	C 1	C 2	C 3	Y 1	PART NUMBER
7-17-0	**RADIATOR GRILLE MEDALLION OR ORNAMENT**													
	See exterior moulding illustrations Catalog													
7-17-1	ORNAMENT, Radiator Grille R-M (Bird)		—	—	—	1	—	—	—	—	—	—	—	3443 513
	R-P	70	—	—	—	1	—	—	—	—	—	—	—	2949 993
	R-P 2 Dr. H.T.	71	—	—	—	1	—	—	—	—	—	—	—	3443 362
	R-P 4 Dr. Wgn.	71	—	—	—	1	—	—	—	—	—	—	—	3443 240
	Radiator Grille Panel.	71	—	—	—	1	—	—	—	—	—	—	—	3443 262
	4 Dr. and Wgn.	71	—	—	—	—	1	—	—	—	—	—	—	3443 110
	Medallion, Radiator Grille													
	V	70	1	—	—	—	—	—	—	—	—	—	—	2949 473
	P-POLICE-Taxi Pe-P-L-PM	70	—	—	—	—	—	1	—	—	—	—	—	3443 270
	P-H Sports Fury	70	—	—	—	—	—	1	—	—	—	—	—	2998 288
	C-E, C-L	71	—	—	—	—	—	—	—	1	—	—	—	3443 784
	C-H, C-P.	71	—	—	—	—	—	—	—	—	1	1	—	2964 806
	Medallion, Rad. Grille Crest													
	D-H	71	—	—	—	—	—	—	1	—	—	—	—	3443 688
	APPLIQUE-Radiator Grille Extension													
	P-H	70	—	—	—	—	—	1	—	—	—	—	—	2998 586-7
7-17-05	RETAINER, Radiator Grille Texture (Rubber)													
	J-H, J-S	70	—	6	—	—	—	—	—	—	—	—	—	2998 227
	Texture End - J-H, J-S	70	—	2	—	—	—	—	—	—	—	—	—	2998 738
7-17-13	TEXTURE, Radiator Grille Lwr Pnl Opng.	70	—	—	—	1	—	—	—	—	—	—	—	2998 882
	Radiator Grille Inner Opening B	71	—	1	—	—	—	—	—	—	—	—	—	3442 996-7
	Intermediate Opening. B	71	—	1	—	—	—	—	—	—	—	—	—	3442 998-9
	Outer Opening. B	71	—	1	—	—	—	—	—	—	—	—	—	3443 000-1
	W-P Fast Back	71	—	—	—	—	1	—	—	—	—	—	—	= 3574 144-5
	W-M, W-S W/Concealed H/Lamps	71	—	—	—	—	1	—	—	—	—	—	—	3442 866-7
	Radiator Air Pnl.	70	—	—	—	—	—	1	—	—	—	—	—	3443 011
	Radiator Grille X-Way Lamp Lt. Side													
	D-H, D-P	70	—	—	—	—	—	—	1	—	—	—	—	2949 425
	D-H, D-P w/o X-Way													
	Lamp Lt Side	70	—	—	—	—	—	—	1	—	—	—	—	2998 052
	D-H, D-P Rt Side	70	—	—	—	—	—	—	1	—	—	—	—	2998 052
7-17-21	GASKET, Radiator Grille Pnl. Orn.	71	—	—	—	1	—	—	—	—	—	—	—	3443 261
7-17-23	DECAL, Radiator Grille Upper Pnl. R, 2 Dr.													
	H.T. "Plymouth".	71	—	—	—	1	—	—	—	—	—	—	—	3442 889
7-26-0	**RADIATOR YOKE**													
7-26-2	YOKE, 22" Core	70	—	—	—	—	—	1	1	—	—	—	—	3417 751
	Cv-Cp And Sta. Wgn.	70	—	—	—	—	—	—	—	1	1	1	—	3417 751
	2 D.H.T., 4D., 4 D.H.T.	70	—	—	—	—	—	—	1	1	1	1	—	3417 351
		71	—	—	—	—	—	1	1	1	1	1	—	3482 530
	Yoke - 26" Core W/A/Cond.	70	—	—	—	—	—	1	1	—	—	—	—	3417 786
	CV-CP and Sta. Wgn. W/A/Cond.	70	—	—	—	—	—	—	—	1	1	1	—	3417 786
	Exc. CV. CP. and Sta. Wgn.													
	w/A/Cond.	70	—	—	—	—	—	—	1	1	1	1	—	3417 350
		71	—	—	—	—	—	1	1	1	1	1	—	3482 529
	Y		—	—	—	—	—	—	—	—	—	—	1	2933 962
7-26-10	RETAINER, Radiator Air Shld-Plastic	70	—	—	—	—	—	8	8	—	—	—	—	2898 909
			—	—	—	—	—	8	8	12	12	12	—	2898 909
7-26-14	MOULDING, Radiator Air Shield													
	J-H, J-s		—	1	—	—	—	—	—	—	—	—	—	2998 228-9
	W, 2Dr. H.T. Fast Back	71	—	—	—	—	1	—	—	—	—	—	—	3443 204
7-26-15	SHIELD, Radiator Air - L		—	—	1	—	—	—	—	—	—	—	—	2998 626
	B	70	—	1	—	—	—	—	—	—	—	—	—	2998 544
	B.	71	—	1	—	—	—	—	—	—	—	—	—	3442 794
	J		—	1	—	—	—	—	—	—	—	—	—	2998 542
	R, 2 Dr. H.T.	71	—	—	—	1	—	—	—	—	—	—	—	3442 228
	Complete R, 4 Dr. & Wgn.	71	—	—	—	1	—	—	—	—	—	—	—	3579 663
	W Fastback	70	—	—	—	—	1	—	—	—	—	—	—	3419 944

CARLINES J - Challenger V - Valiant R - Belvedere - Satellite P - Plymouth C - Chrysler
B - Barracuda L - Dart W - Coronet - Charger D - Dodge Y - Imperial

AR Indicates use as required. Numerals in parentheses ( ) refer to notes.

# Indicates parts not listed in any previous parts book. ★ Indicates change or addition.

Printed in U.S.A. January 1972

CODE	PART NAME	ENG. TYPE OR CU.IN.	V 1-2	B J 1-2	L 1-2	R 1-2	W 1-2	P 1-2	D 1-2	C 1	C 2	C 3	Y 1	PART NUMBER
7-26-0	**RADIATOR YOKE Cont'd.**													
7-26-15	SHIELD Cont'd.													
	W, 2Dr. H.T. Fast Back.	71	—	—	—	—	1	—	—	—	—	—	—	3442 315
	W, 4 Dr. and Wgn.	71	—	—	—	—	1	—	—	—	—	—	—	3442 104
	P-Rubber	70	—	—	—	—	—	1	—	—	—	—	—	2949 922
	P. - RUBBER	71	—	—	—	—	—	1	—	—	—	—	—	3443 639
	P (Canada Only)	71	—	—	—	—	—	1	—	—	—	—	—	2949 782
	D		—	—	—	—	—	—	1	—	—	—	—	2949 782
	Y		—	—	—	—	—	—	—	—	—	—	1	2931 432
	C-Rubber		—	—	—	—	—	—	—	1	1	1	—	2898 191
	C - METAL		—	—	—	—	—	—	—	1	1	1	—	3514 077
	PANEL, Radiator A/Shld Trim Plastic-B		—	1	—	—	—	—	—	—	—	—	—	2949 524
	Ext. Pnl. Pntd. B.	71	—	1	—	—	—	—	—	—	—	—	—	3442 793
	W Fastback		—	—	—	—	1	—	—	—	—	—	—	2998 078
	W Except Fastback	70	—	—	—	—	1	—	—	—	—	—	—	2998 437
	P - METAL	70	—	—	—	—	—	1	—	—	—	—	—	2998 635
	Complete P. - METAL	70	—	—	—	—	—	1	—	—	—	—	—	3579 601
	P. - METAL	71	—	—	—	—	—	1	—	—	—	—	—	3443 446
	D		—	—	—	—	—	—	1	—	—	—	—	2998 637
7-26-16	RETAINER-, Air Shld- Plastic		—	—	—	—	—	8	8	12	12	12	—	2898 909
	To Side Rail	70	—	—	—	—	—	2	2	2	2	2	—	2860 454
7-26-18	SHIM, Radiator Yoke Side Pnl. Fender Thin. for Thick Shim use 2-OF 1902763	70	—	—	—	AR	AR	AR	AR	AR	AR	AR	AR	1902 763
7-26-26	BRACKET, Radiator Yoke Grille Lwr Pnl													
	Brace	70	—	—	—	2	—	—	—	—	—	—	—	2998 283
7-26-30	PANEL and Reinf. Radiator Yoke Rt.	70	1	—	1	—	—	—	—	—	—	—	—	3417 355
	Rt.	71	1	—	1	—	—	—	—	—	—	—	—	3482 774
	PANEL, Radiator Yoke Side Lt- 19" & 22"													
	Core	70	—	—	—	1	1	—	—	—	—	—	—	2998 057
		70	1	—	1	—	—	—	—	—	—	—	—	2949 535
		71	1	—	1	—	—	—	—	—	—	—	—	3443 829
		70	—	—	—	1	1	—	—	—	—	—	—	3417 411
		70	—	1	—	—	—	—	—	—	—	—	—	2949 594-5
		71	—	1	—	1	1	—	—	—	—	—	—	3443 306-7
	W/26" CORE RT.	70	—	1	—	—	—	—	—	—	—	—	—	2949 598
	LT.	70	—	1	—	—	—	—	—	—	—	—	—	2949 599
	RT.	70	—	—	—	1	1	—	—	—	—	—	—	3417 410
	LT.	70	—	—	—	1	1	—	—	—	—	—	—	2998 059
		71	—	1	—	1	1	—	—	—	—	—	—	3443 310-1
7-26-32	C/MEMBER, Radiator Yoke Side Pnl	70	—	1	-	—	—	—	—	—	—	—	—	2949 602
		71	—	1	—	1	1	—	—	—	—	—	—	3443 314
	V,L		1	—	1	—	—	—	—	—	—	—	—	2998 863
	R, W	70	—	—	—	1	1	—	—	—	—	—	—	2949 460
7-26-37	BRACKET, Radiator Yoke C/Mbr.	70	—	1	—	—	—	—	—	—	—	—	—	3443 877
	B,J,R 2 Dr. H.T.		—	1	—	1	—	—	—	—	—	—	—	3443 877
7-26-40	SPOILER, Radiator Air Shld Air B		—	1	—	—	—	—	—	—	—	—	—	3443 352-3
	J		—	1	—	—	—	—	—	—	—	—	—	3443 354-5
		71	—	—	—	1	—	—	—	—	—	—	—	3442 954-5
		71	—	—	—	—	1	—	—	—	—	—	—	3443 180
7-26-43	MOULDING-Radiator Air Pnl													
	W-Except Fastback	70	—	—	—	—	1	—	—	—	—	—	—	2998 380
7-33-0	**RADIATOR CROSS BAR**													
7-33-1	Cross Bar Radiator Grille		1	—	—	—	—	—	—	—	—	—	—	2949 977
	J.	71	—	1	—	—	—	—	—	—	—	—	—	3442 752
	L		—	—	1	—	—	—	—	—	—	—	—	2949 552
	R	70	—	—	—	1	—	—	—	—	—	—	—	2949 874
	R, 4 Dr. and Wgn.	71	—	—	—	1	—	—	—	—	—	—	—	3442 160

CARLINES J - Challenger, B - Barracuda, V - Valiant, L - Dart, R - Belvedere · Satellite, W - Corcnet - Charger, P - Plymouth, D - Dodge, C - Chrysler, Y - Imperial

AR Indicates use as required.

Numerals in parentheses ( ) refer to notes.

# Indicates parts not listed in any previous parts book.

★ Indicates change or addition.

Printed in U.S.A. January 1972

CODE	PART NAME	ENG. TYPE OR CU.IN.	V 1-2	B J 1-2	L 1-2	R 1-2	W 1-2	P 1-2	D 1-2	C 1	C 2	C 3	Y 1	PART NUMBER
7-41-0	**THERMOSTAT**													
7-41-4	THERMOSTAT													
	190 Degree W/198, 225 Eng.	70	1	1	1	1	1	1	1	—	—	—	—	3418 335
	185 Degree W/198, 225 Eng.	71	1	1	1	1	1	1	1	—	—	—	—	3512 992
	190 degrees w/340, 383, 426, 440 Eng.		1	1	1	1	1	1	1	1	1	1	—	2808 662
	195 Degrees w/318, 383, 440 Eng.	70	1	1	1	1	1	1	1	1	1	1	1	3418 459
	195 Degrees W/318, 383, 440 Eng.	71	1	1	1	1	1	1	1	1	1	1	1	3514 181
	185 Degree W/318, 340, 360, 383, 426, 440 Eng.	71	1	1	1	1	1	1	1	1	1	1	1	3514 774
7-42-0	**WATER PUMP**													
7-42-1	PUMP PACKAGE													
	W/198, 225 Eng.		1	1	1	1	1	1	1	—	—	—	—	2808 679
	W/318, 340, 360 Eng. W/O A/Cond.		1	1	1	1	1	1	1	1	1	1	—	3420 038
	W/318, 340, 360 Eng. W/A/Cond.		1	1	1	1	1	1	1	1	1	1	—	3420 037
	W/383, 440 Eng. W/O A/Cond.		—	1	—	1	1	1	1	1	1	1	1	2808 680
	W/383, 426, 440 Eng. W/A/Cond.	71	—	1	—	1	1	1	1	1	1	1	1	2808 681
	W/426 Eng. Std.		—	1	—	1	1	—	—	—	—	—	—	2808 681
7-42-04	WATER PUMP Repair Pkg.													
	W/318, 340 Eng. W/O Air		1	1	1	1	1	1	1	—	—	—	—	3420 035
	W/198, W/225, Eng.		1	1	1	1	1	1	1	—	—	—	—	2808 682
	W/170 Eng.	70	1	1	1	—	—	—	—	—	—	—	—	2808 682
	W/318, W/340 W/Air Cond.		1	1	1	1	1	1	1	—	—	—	—	3420 036
	W/383, 426 and 440 Eng. W/Air Cond.		—	1	—	1	1	1	1	1	1	1	1	2808 684
	W/383, 440 Eng. W/O Air Cond.		—	1	—	1	1	1	1	1	1	1	1	2808 683
7-43-0	**HOUSING, W/PUMP**													
7-43-01	HOUSING.													
	W/383, W/426, and 440 Eng.	70	—	1	—	1	1	1	1	1	1	1	1	2951 806
	W/383, 426 and 440 Eng.	71	—	1	—	1	1	1	1	1	1	1	1	2780 988
7-43-5	SCREW, W/Pump Body W/198, 225 Eng.													
	3/8" x 1 3/4"	71	1	1	1	1	1	1	1	—	—	—	—	180 128
	W/318, 340, 360 Eng. 3/8" x 2 3/4"		2	2	2	2	2	2	2	2	2	2	—	2129 379
	W/383, 426, 440 Eng. 3/8" x 7/8"	71	—	4	—	4	4	—	4	4	4	4	4	180 122
7-43-08	CAP, W/Pump Htr. Hole													
	W/198, 225, 318, 340, 360 Eng.		1	1	1	1	1	1	1	1	1	1	—	2128 425
7-43-18	PLUG, W/Pump Hsg. Htr. Hole													
	W/383, 426, 440 Eng.		—	2	—	2	2	2	2	2	2	2	2	1859 127
7-44-0	**GASKET, W/PUMP BODY**													
7-44-3	GASKET													
	W/198, 225 Eng.		1	1	1	1	1	1	1	—	—	—	—	1947 521
	W/318, 340, 360 Eng.		1	1	1	1	1	1	1	1	1	1	—	2129 013
	W/383, 426, 440 Eng.	71	—	1	—	1	1	—	1	1	1	1	1	1737 705
7-44-4	GASKET-w/Pump Hsg To Cyl. Blk													
	W/383, 426, 440 Eng.		—	2	—	2	2	2	2	2	2	2	2	1737 761
	W/198 and W/225 Eng. Inter-Plate		1	1	1	1	1	1	1	—	—	—	—	1947 523
7-45-0	**WATER PUMP IMPELLER**													
7-45-31	IMPELLER, Water Pump													
	W/383, 426 and 440 Eng. W/A/Cond.		—	1	—	1	1	1	1	1	1	1	1	2843 923
	W/383, and 440 Eng. W/O Air Cond.		—	1	—	1	1	1	1	1	1	1	—	2843 635
	W/426 Eng. W/O Air Cond.		—	1	—	1	1	—	—	—	—	—	—	2843 923

CARLINES: J - Challenger, B - Barracuda, V - Valiant, L - Dart, R - Belvedere - Satellite, W - Coronet - Charger, P - Plymouth, D - Dodge, C - Chrysler, Y - Imperial

AR Indicates use as required.

Numerals in parentheses ( ) refer to notes.

# Indicates parts not listed in any previous parts book.

★ Indicates change or addition.

Printed in U.S.A. January 1972

CODE	PART NAME	ENG. TYPE OR CU.IN.	V 1-2	B J 1-2	L 1-2	R 1-2	W 1-2	P 1-2	D 1-2	C 1	C 2	C 3	Y 1	PART NUMBER
7-46-0	**SEAL, WATER PUMP**													
7-46-1	SEAL, Water Pump, Assy. W/198, 225, 318, 340, 360, 383, 426, 440 Eng.		1	1	1	1	1	1	1	1	1	1	1	2951 838
	Seal, Water Pump Body W/198, 225, 318, 340, 360, 383, 426, 440 Eng.		1	1	1	1	1	1	1	1	1	1	1	295 1010
7-48-0	**WATER PUMP ELBOW OR NIPPLE**													
7-48-19	CLAMP-W/Pump By Pass Hose W/318, 340, 383, 426, 440 Eng.		2	2	2	2	2	2	2	—	—	—	—	870 469
7-48-22	NIPPLE, W/Pump By-Pass W/198, 225 Eng.		1	1	1	1	1	1	1	—	—	—	—	1947 643
	W/318, 340, 360 Eng.		1	1	1	1	1	1	1	1	1	1	—	2402 903
7-52-0	**WATER RECOVERY TANK**													
7-52-2	TANK, Recovery R, W W/318, 383, Eng. 4 Dr. 4 Dr. H.T. and Wgn. P, D, C 2 Dr. H.T. 4 Dr. 4 Dr. H.T. and Wgn.	71	—	—	—	1	1	1	1	1	1	1	—	= 3412 849
7-52-11	BRACKET, Recovery Tank Support	71	—	—	—	—	—	1	1	1	1	1	—	= 3412 884

NOTES

CARLINES J - Challenger, B - Barracuda, V - Valiant, L - Dart, R - Belvedere - Satellite, W - Coronet - Charger, P - Plymouth, D - Dodge, C - Chrysler, Y - Imperial

AR Indicates use as required.

# Indicates parts not listed in any previous parts book.

Numerals in parentheses ( ) refer to notes.

★ Indicates change or addition.

Printed in U.S.A. January 1972

GROUP 8 INDEX

	PAGE NOS. 1970	1971
ALTERNATOR, DISTRIBUTOR & STARTER		
Alternator	8-7	8-7
Distributor - 6 Cylinder	8-2	8-2
Distributor - 8 Cylinder (Chrysler Built)	8-3	8-3
Distributor - 8 Cylinder (Prestolite)	8-4	8-4
Starter - 1889 100	8-5	8-5
Starter - 2875 560	8-6	8-6
BACK-UP LAMPS		
Valiant 4 Door Sedan	8-48	8-48
Valiant Duster	8-36	8-36
Valiant 2 Door Hardtop	----	8-40
Dart	8-40	8-92
Dart Demon	----	8-93
Barracuda	8-37	8-95
Challenger	8-49	8-92
Belvedere except Station Wagon	8-48	----
Satellite 4 Door	----	8-96
Coronet and Satellite Sta. Wgn.	----	8-101
Coronet	8-41	----
Coronet 4 Door	----	8-93
Satellite 2 Door	----	8-96
Charger and All Station Wagons	8-49	8-91
Plymouth	8-39	----
Plymouth Fury I & II	----	8-97
Plymouth Fury III & Sports	8-39	8-98
Dodge Polara	8-44	8-94
Chrysler Newport	8-45	8-45
Chrysler 300	8-45	8-45
Chrysler New Yorker	8-46	8-98
Imperial	8-50	8-50
Dodge Monaco	8-50	8-95
CORNERING LAMP		
Dodge, Chrysler and Imperial	8-31	8-31
ELECTRICAL SYSTEM		
System	8-1	8-1
HEADLAMP		
Valiant	8-85	8-85
Dart	8-9	8-103
Barracuda	8-7	8-103
Challenger	8-10	8-103
Belvedere and Satellite	8-8	8-103
Coronet	8-10	8-103
Charger	8-11	8-85
Plymouth	8-8	8-102
Plymouth Sport Fury	8-9	8-86
Dodge	8-11	8-103
Chrysler	8-12	8-103
Imperial	8-12	8-87
Super Bird	8-84	----
Bezel Chart	8-103	8-103
INSTRUMENT CLUSTER		
Valiant (Except Duster 340)	8-60	8-60
Valiant Duster 340 and Swinger 340	8-61	8-61
Dart	8-65	8-65
Barracuda and Challenger (Rallye)	8-62	8-62

	PAGE NOS. 1970	1971
INSTRUMENT CLUSTER - Continued		
Challenger and Barracuda	8-63	8-63
Belvedere and Coronet	8-64	----
Charger and Charger R/T	8-67	----
Satellite and Coronet (Rallye)	8-69	8-69
Satellite and Coronet (Without Rallye)	8-68	8-68
Plymouth	8-65	8-65
Dodge	8-66	8-66
Chrysler	8-72	8-72 and 8-74
Imperial	8-73	8-73 and 8-76
Switches and A/C Controls		
Chrysler	8-70	----
Imperial	8-71	----
LAMP - BULB TYPES		
Chart	----	8-80
LICENSE LAMP		
Valiant	8-51	8-51
Dart, Challenger, Coronet	8-52	8-52
Barracuda	8-51	8-51
Belvedere except Station Wagon	8-53	8-53
Satellite, Coronet, Plymouth, Dodge	----	8-101
Coronet and Charger	8-52	----
Plymouth, Dodge, Chrysler, Imperial Except Sta. Wgn.	8-53	8-53
Plymouth and Dodge (Except Station Wagon)	----	8-101
Station Wagon	8-53	----
Satellite and Coronet Sta. Wgn.	----	8-101
PARKING AND TURN SIGNAL LAMP		
Valiant	8-25	8-88
Dart	8-27	8-27
Barracuda	8-26	8-88
Challenger and Charger	8-28	8-28
Coronet	8-28	8-90
Belvedere	8-26	----
Satellite	----	8-89
Plymouth	8-27	8-27
Dodge	8-29	8-29
Chrysler (Except 300)	8-29	8-29
Chrysler 300	8-30	8-30
Imperial	8-30	8-30
ROAD LAMP AND X-PRESS SUPERLITE		
Barracuda	8-24	8-24
Dodge	8-25	----
SIDE MARKER LAMP AND REFLECTOR		
Valiant Front	8-13	8-13
Valiant Rear	8-14	8-14
Dart Front	8-16	8-16
Dart Rear	8-17	8-17
Barracuda Front	8-21	8-21
Barracuda Rear	8-14	8-14
Challenger Front	8-22	8-22
Challenger Rear	8-17	8-17

GROUP 8 INDEX - Continued

	PAGE NOS. 1970	1971
SIDE MARKER LAMP AND REFLECTOR - Continued		
Belvedere Front and Rear	8-15	----
Satellite Front	----	8-99
Coronet Front	8-23	8-99
Coronet Rear	8-18	8-100
Charger Front	8-23	8-99
Charger Rear	8-18	8-100
Plymouth Sport Fury Front	8-22	8-22
Plymouth Rear	8-16	8-16
Plymouth Front	----	8-21
Dodge Front	8-19	8-19
Dodge Rear	8-19	8-100
Chrysler Front and Rear	8-20	8-20
Station Wagons Rear	8-24	8-24
Imperial Front	8-31	8-31
Imperial Rear	8-21	8-21
TAILGATE TAIL, STOP & TURN SIGNAL LAMP		
Plymouth	8-47	8-47
Dodge	8-47	8-47
TAIL, STOP, TURN SIGNAL & BACK-UP LAMP		
Valiant 4 Door Sedan	8-36	8-91
Valiant Duster and Duster 340	8-36	8-36
Dart	8-40	8-92
Dart Demon	----	8-93
Barracuda	8-37	8-95
Challenger	8-43	8-92
Belvedere and Satellite	8-37 and 8-38	8-88
Belvedere Station Wagon	8-38	8-38
Coronet, Deluxe, 440 and Super Bee	8-41	8-83
Coronet 500 and R/T	8-41	----
Charger and Charger R/T	8-42	8-91
Coronet 4 Door	----	8-93
Coronet Station Wagon	8-42	8-94
Satellite	----	8-96
Satellite Station Wagon	----	8-97
Plymouth Fury I & II	8-39	8-97
Plymouth Fury III & Sports Fury	8-39	8-98
Plymouth Station Wagon	8-40	8-40

	PART NOS. 1970	1971
TAIL, STOP, TURN SIGNAL & BACK-UP LAMP - Continued		
Dodge Polara	8-44	8-94
Dodge Monaco	8-44	8-95
Dodge Station Wagon	8-43	8-43
Chrysler Newport	8-45	8-45
Chrysler 300	8-45	8-45
Chrysler New Yorker	8-46	8-98
Chrysler Station Wagon	8-35	8-35
Imperial	8-46	8-46
TURN SIGNAL INDICATOR LAMP		
Valiant, Challenger, Dart, Belvedere, Coronet and Chrysler Wagon	8-32	8-32
Charger	8-32	----
Belvedere	8-33	----
Barracuda	8-34	8-34
Plymouth	8-33	----
Chrysler (Except Station Wagon).	8-34	8-34
Imperial	8-35	8-35
V, B, R, P	----	8-102
TERMINALS		
Chart	8-77	8-77
Chart	8-78	8-78
Chart	8-79	8-79
HORN AND TURN SIGNAL CONTROLS		
Barracuda and Challenger	8-54	8-54
Plymouth & Dodge w/Tilt Strg.	8-58	----
Chrysler & Imperial w/Tilt Strg.	8-60	----
Plymouth, Dodge, Chrysler, Imperial	8-55	8-55
NOX SYSTEM	----	8-105
STEERING WHEEL		
Soft Rim - V, L, R, W	8-56	8-56
w/3 Spoke Horn Buttons	----	8-57
Plymouth and Dodge	8-58	----
Chrysler and Imperial	8-58	----
Chart	8-104	8-104

GROUP 8 - ELECTRICAL

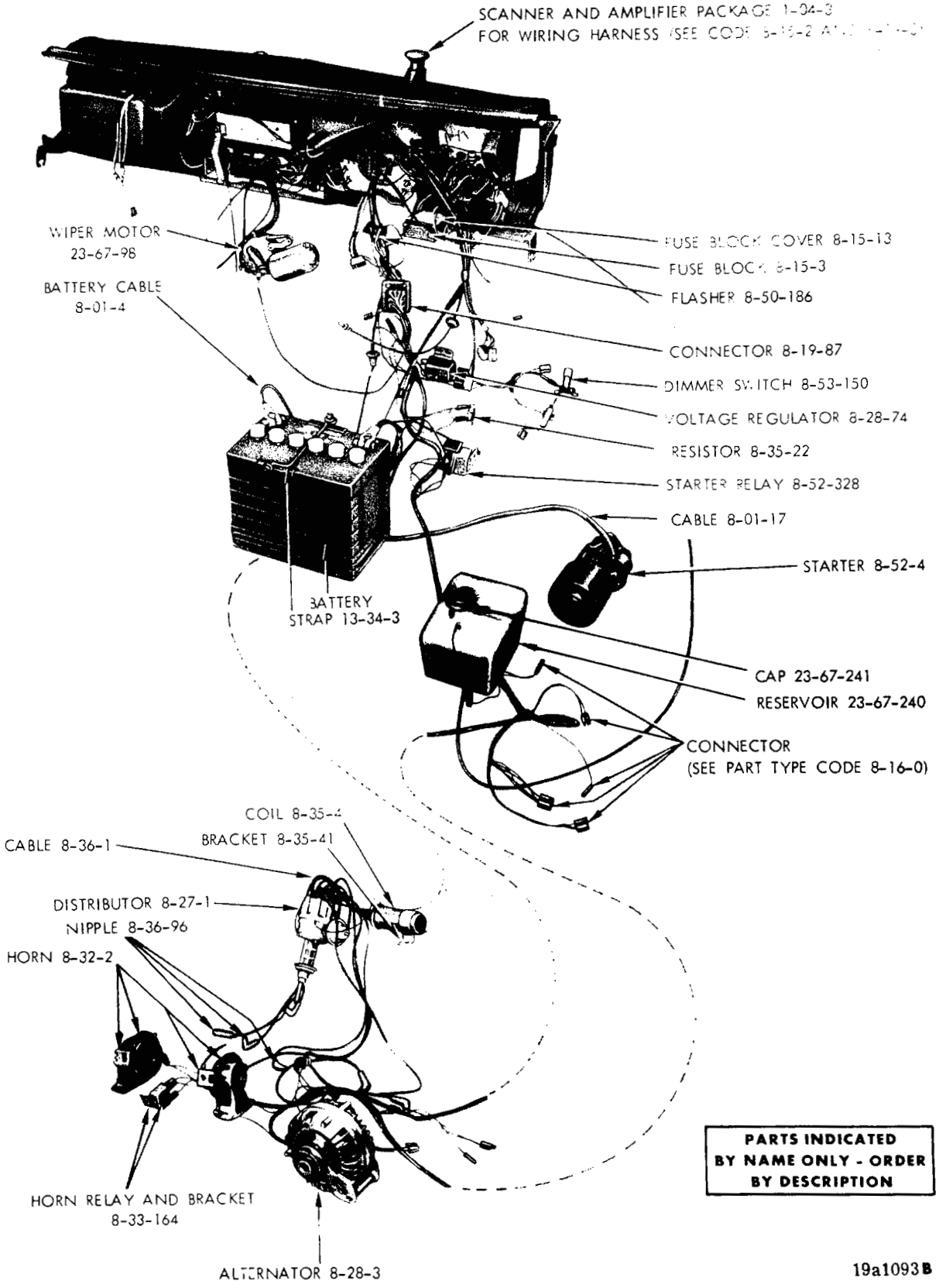

Printed in U.S.A. December 1971

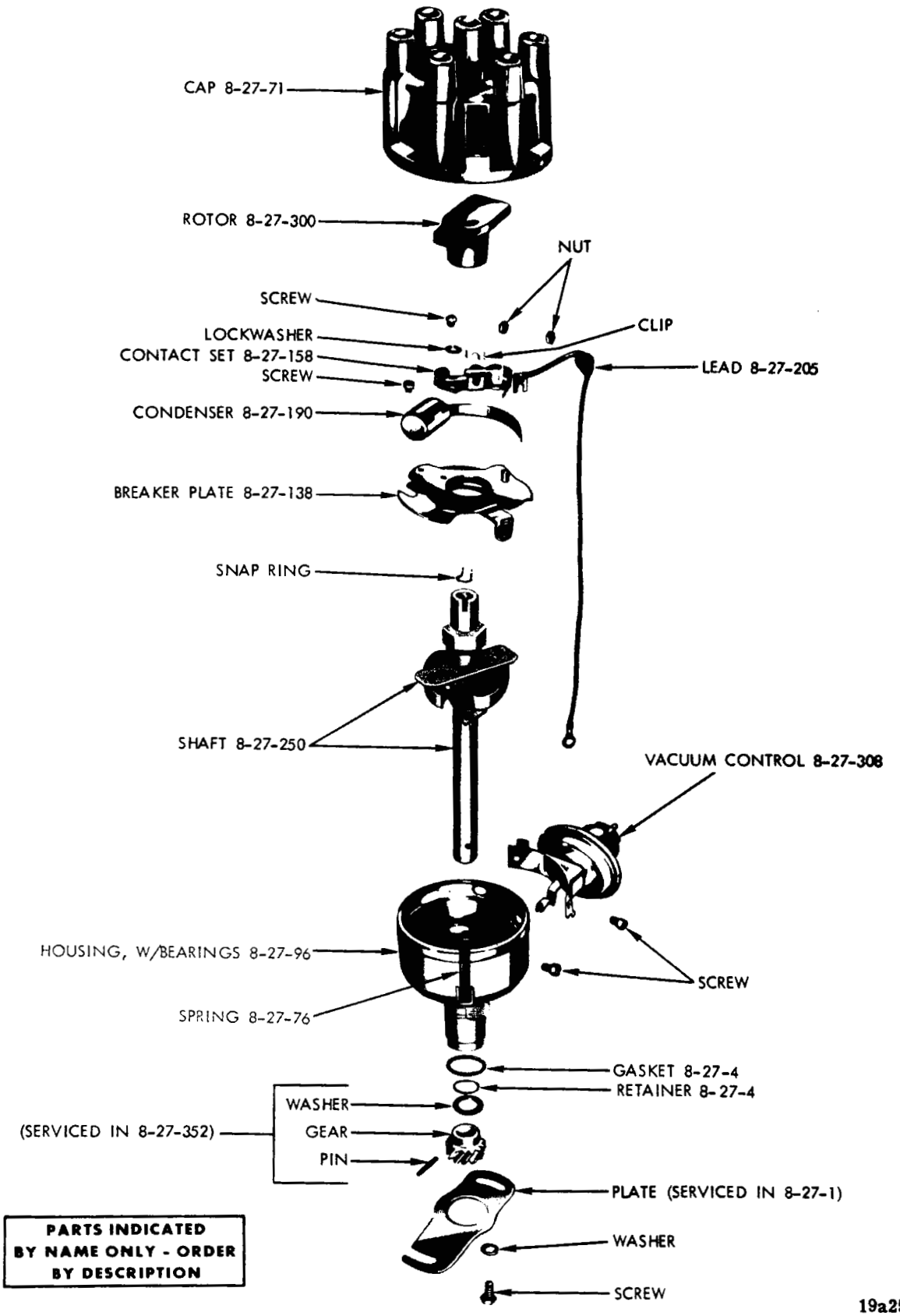

DISTRIBUTOR - 6 CYLINDER

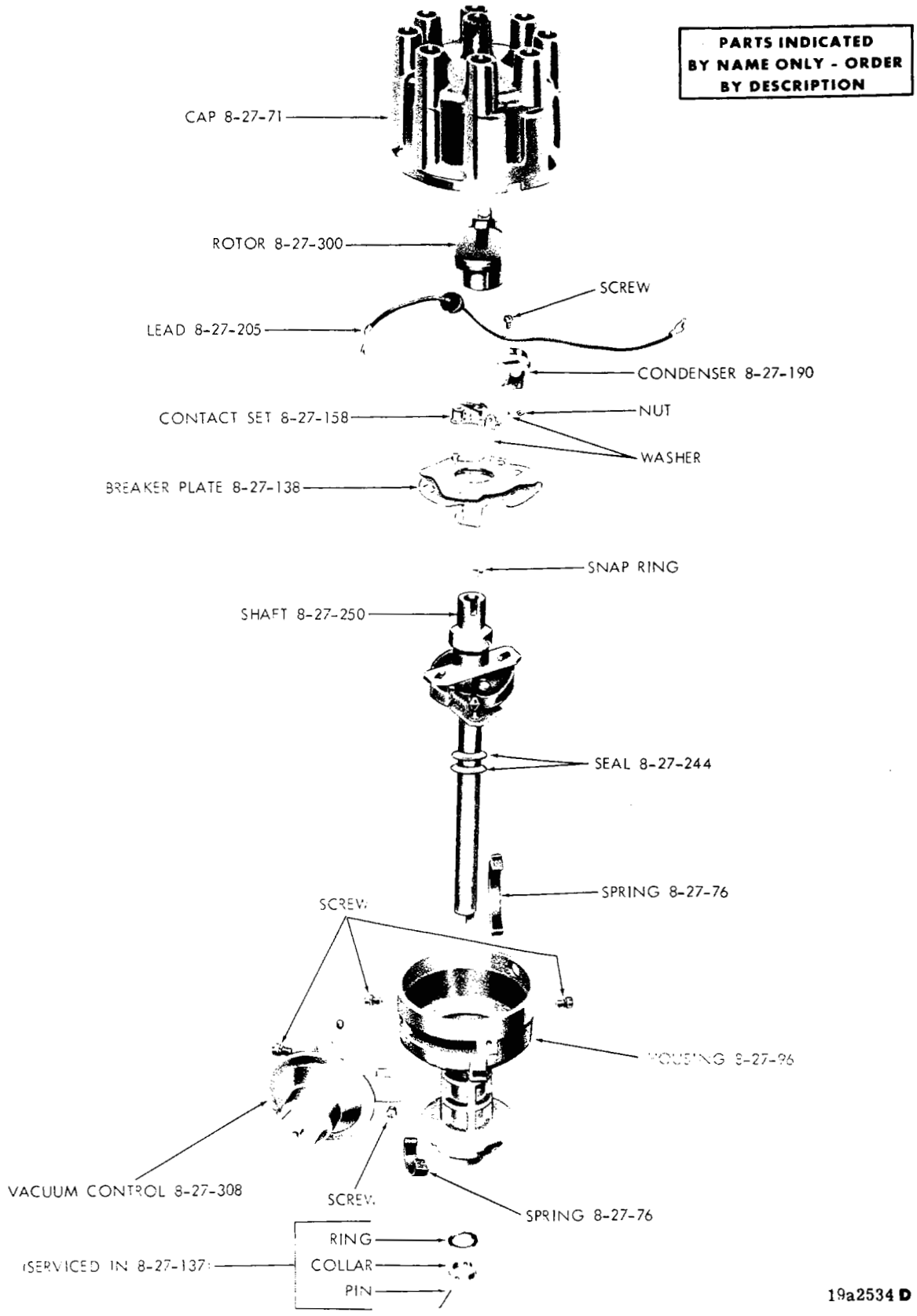

DISTRIBUTOR (8 CYLINDER) CHRYSLER BUILT

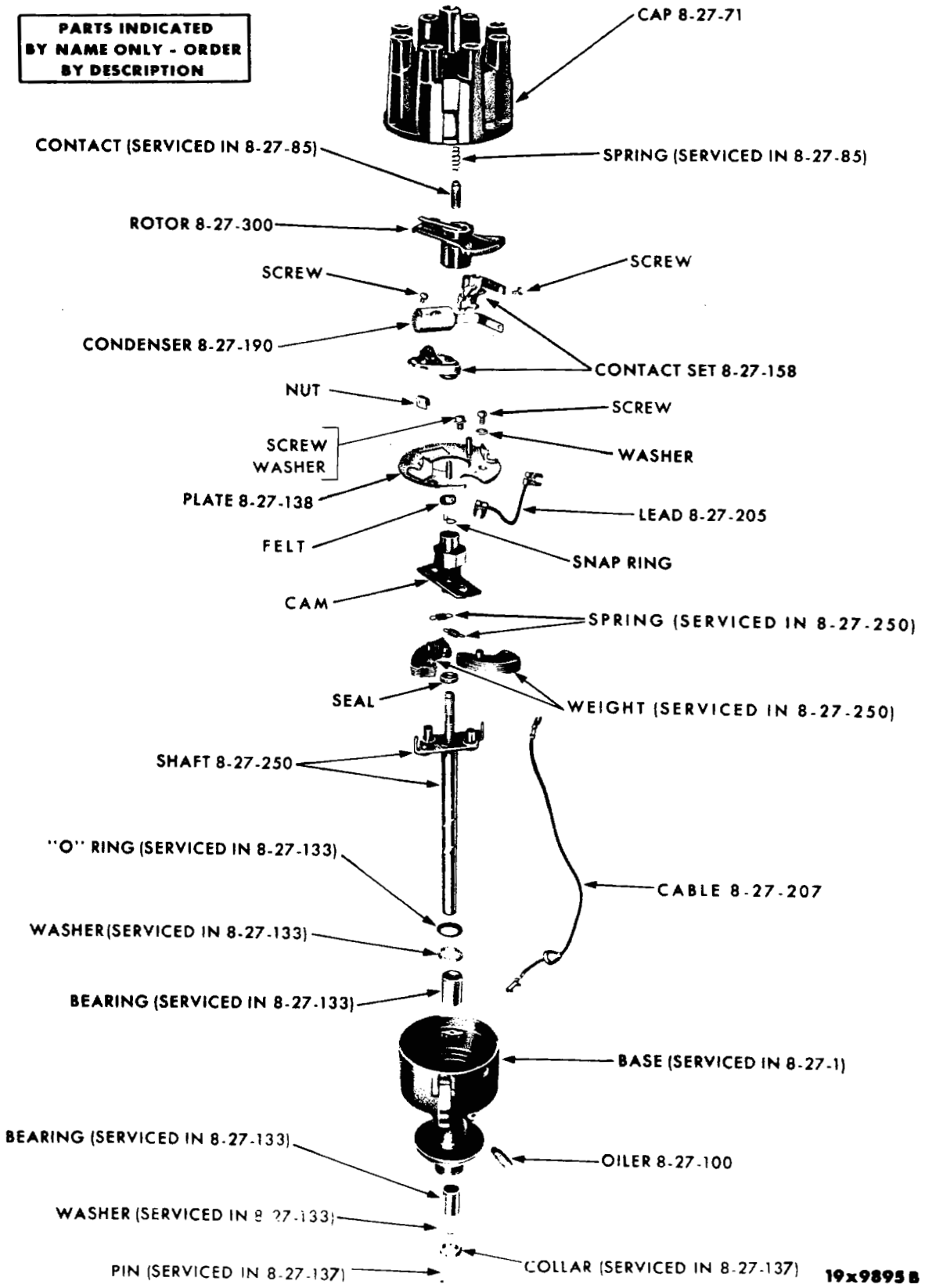

DISTRIBUTOR (8 CYLINDER) PRESTOLITE

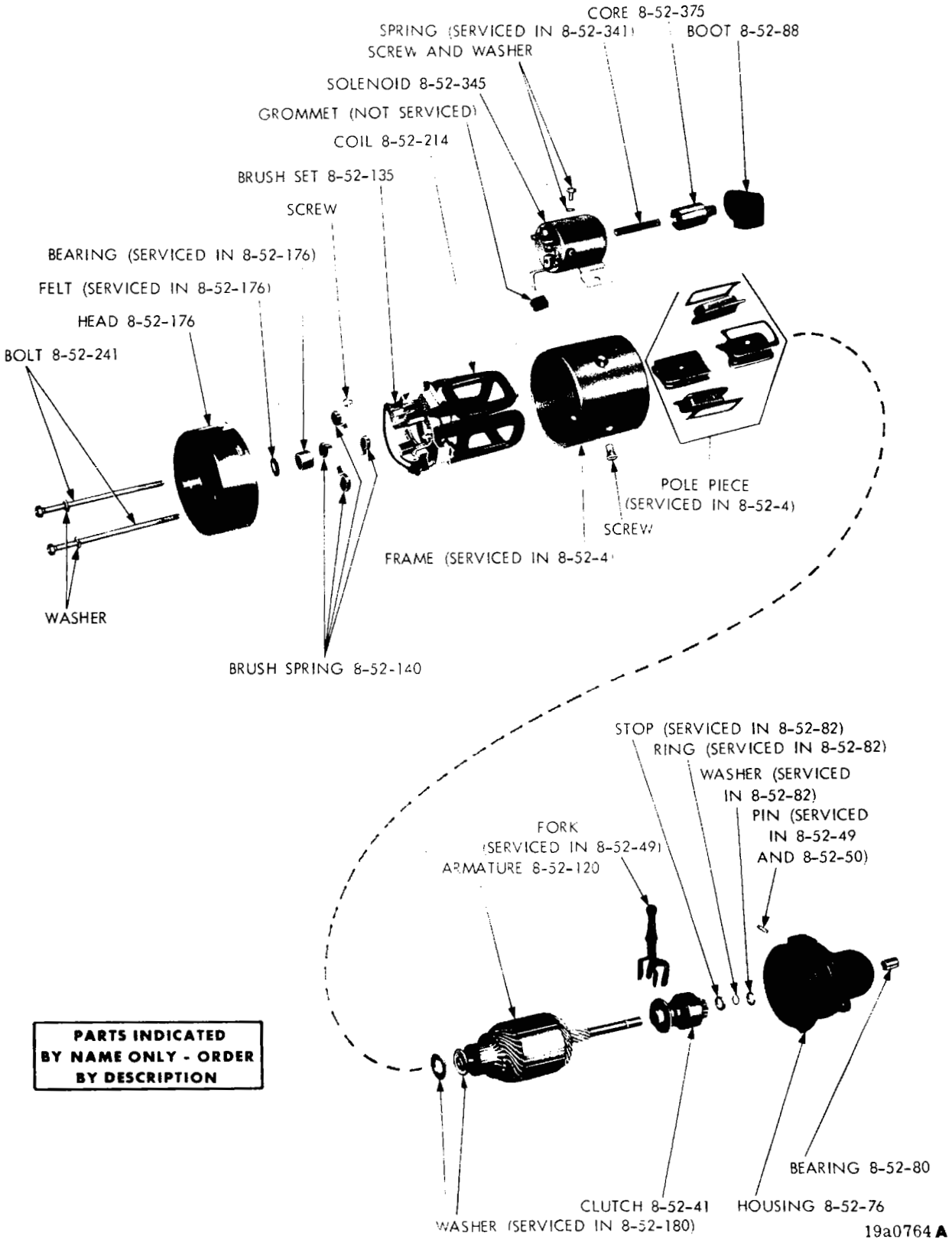

STARTER ASSEMBLY (1889 100)

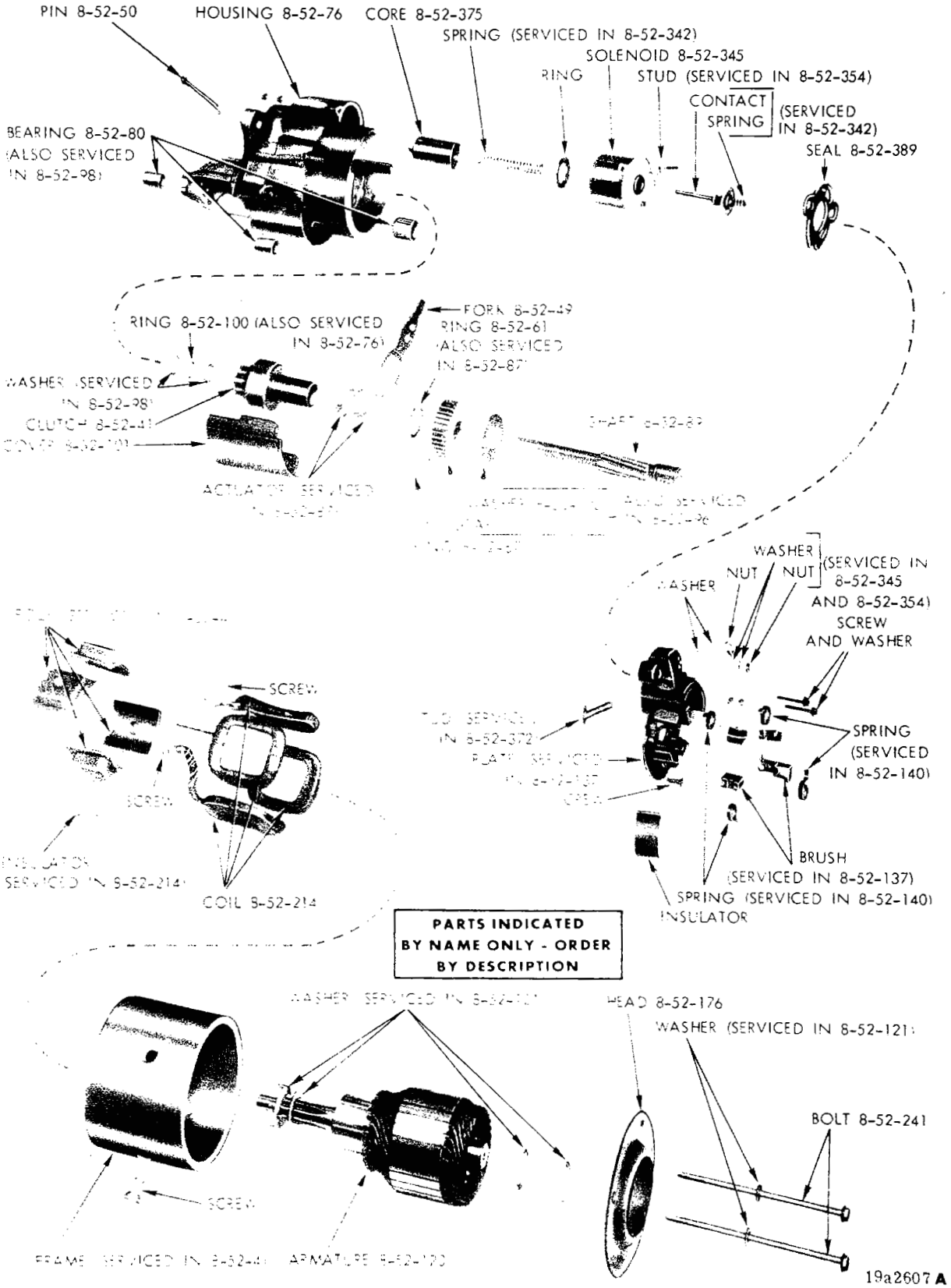

STARTER ASSEMBLY (2875 560)

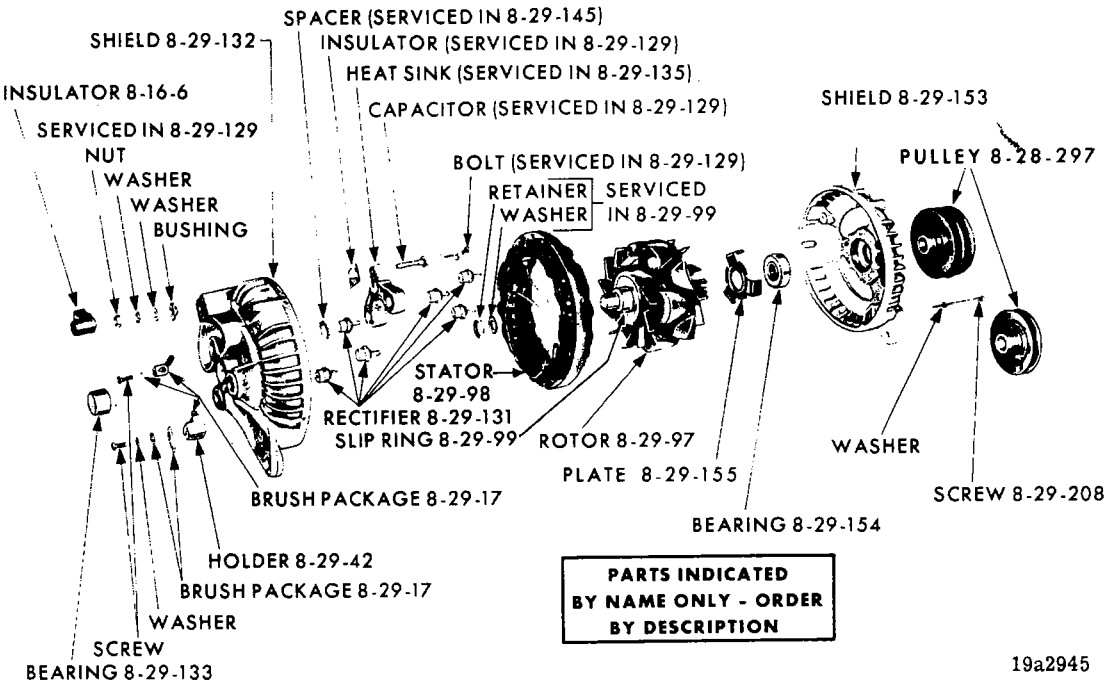

ALTERNATOR

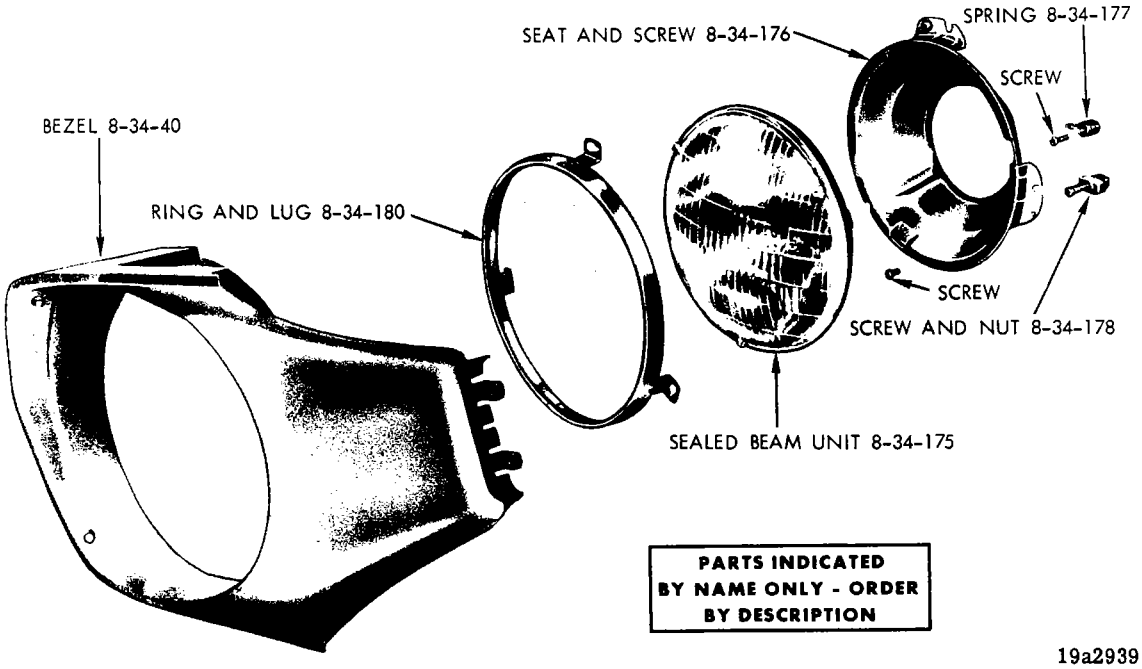

HEADLAMP - BARRACUDA

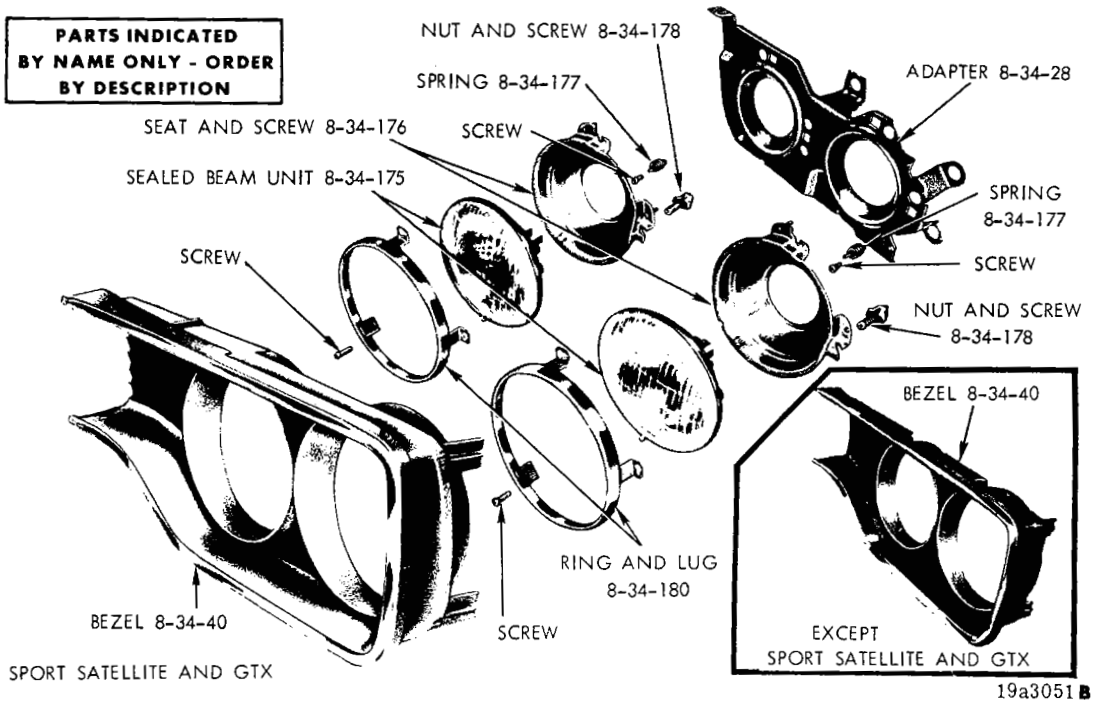

HEADLAMP - BELVEDERE

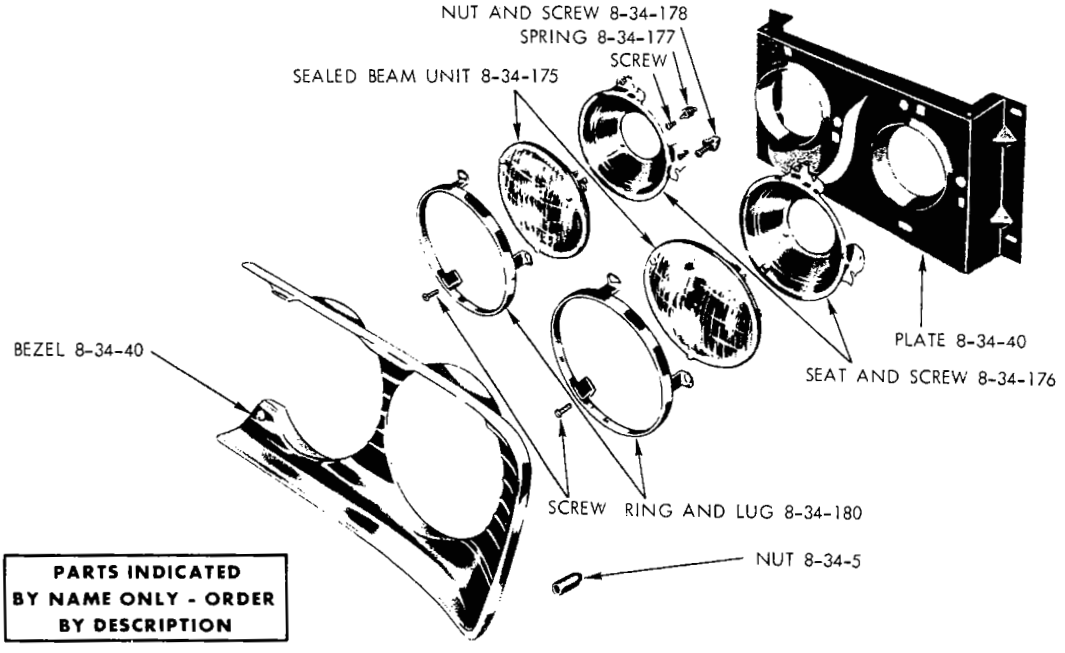

HEADLAMP - PLYMOUTH FURY EXCEPT SPORT FURY

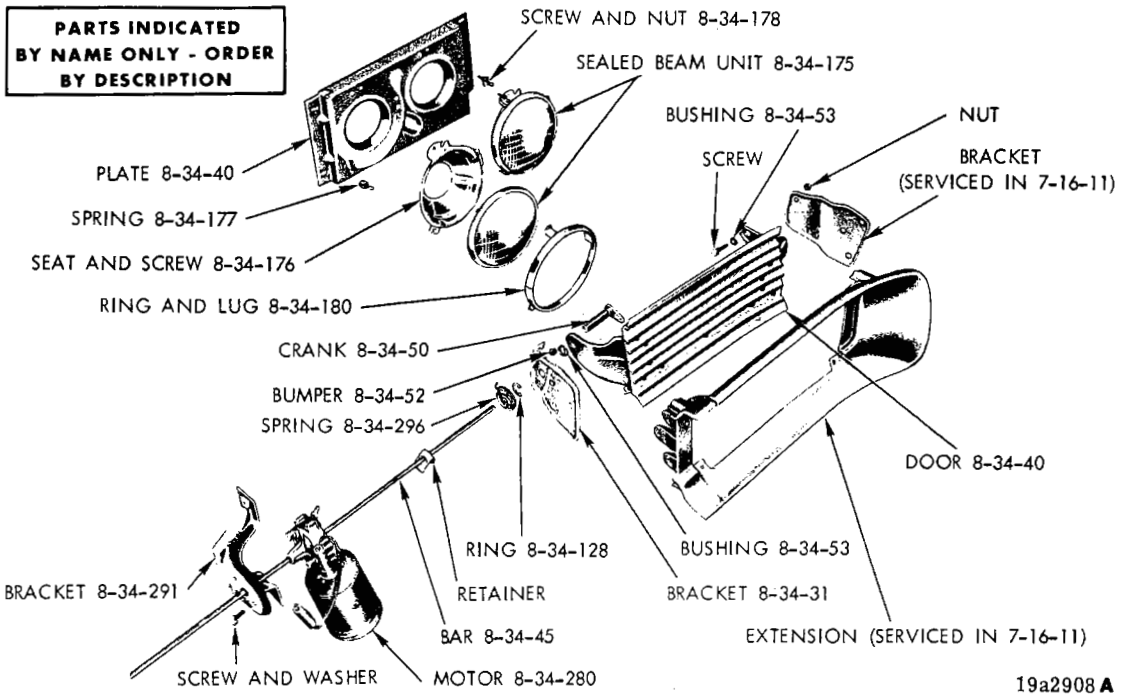

HEADLAMP - PLYMOUTH SPORT FURY

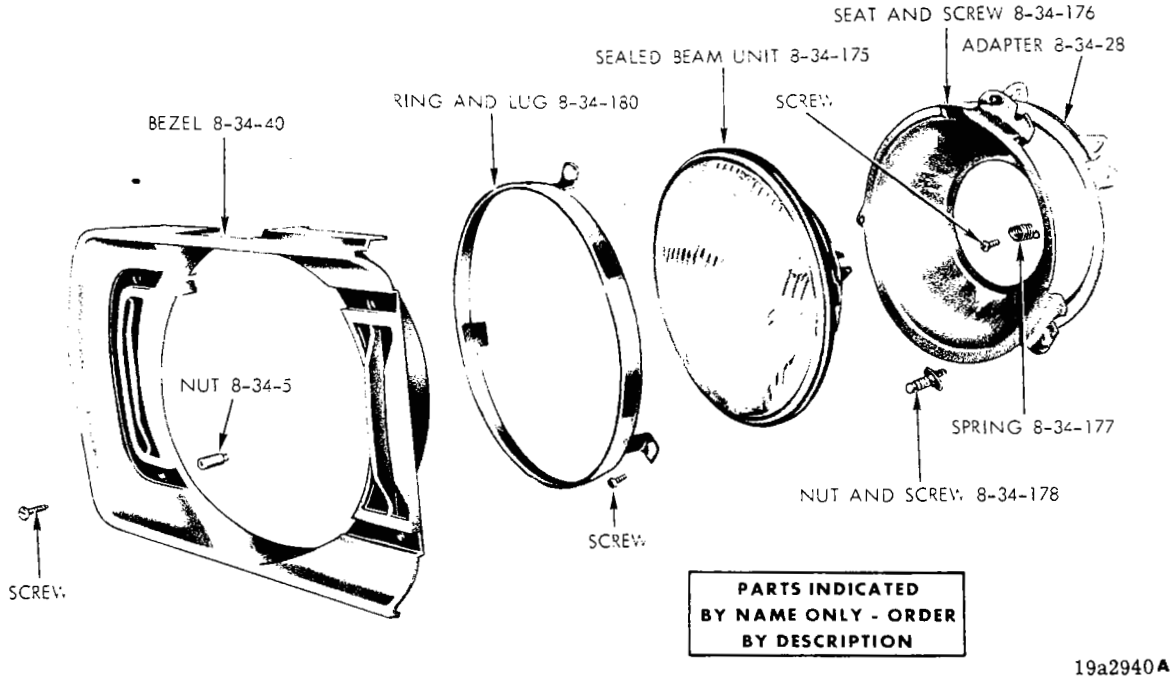

HEADLAMP - DART

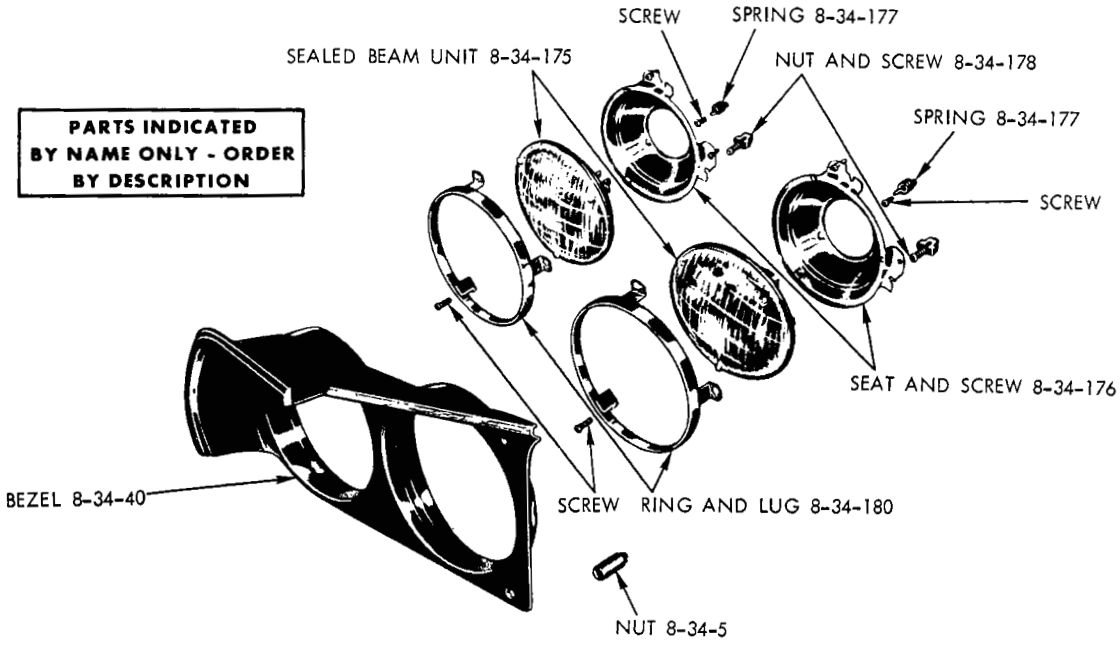

HEADLAMP - CHALLENGER

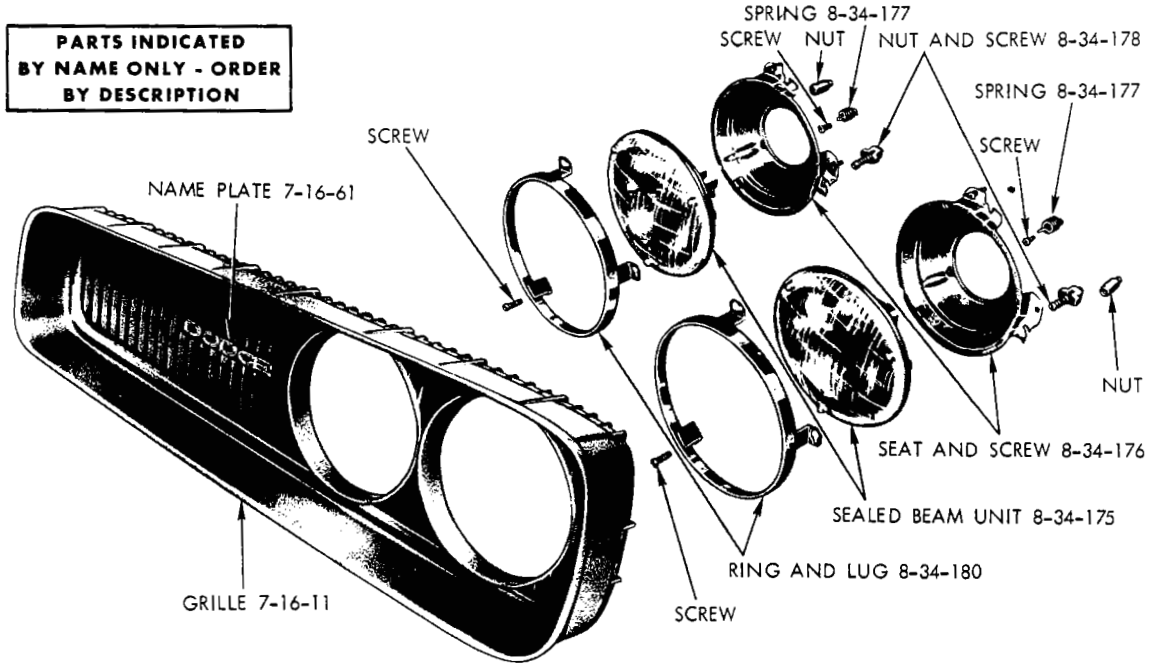

HEADLAMP - CORONET EXCEPT CHARGER AND CHARGER R/T

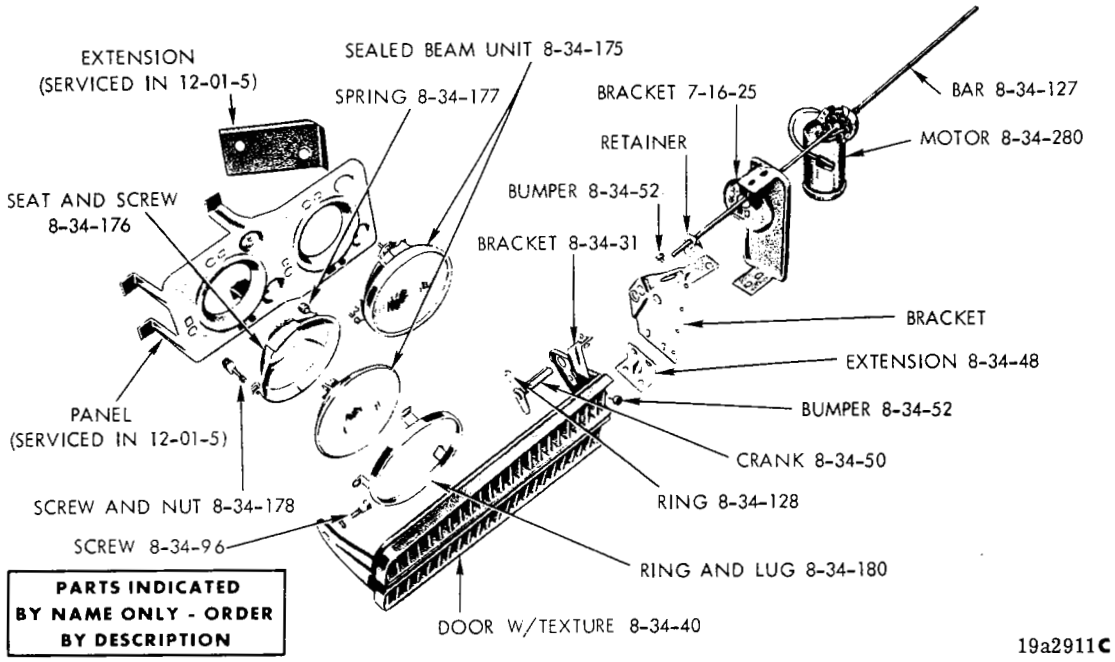

HEADLAMP - CHARGER AND CHARGER R/T

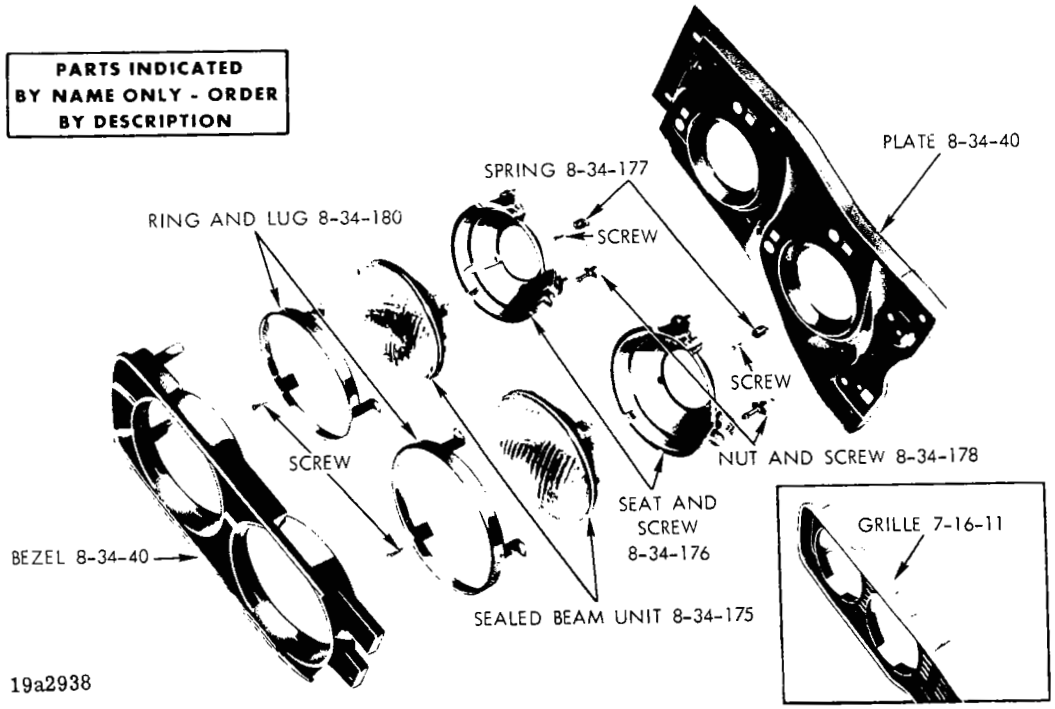

HEADLAMP - DODGE EXCEPT CORONET

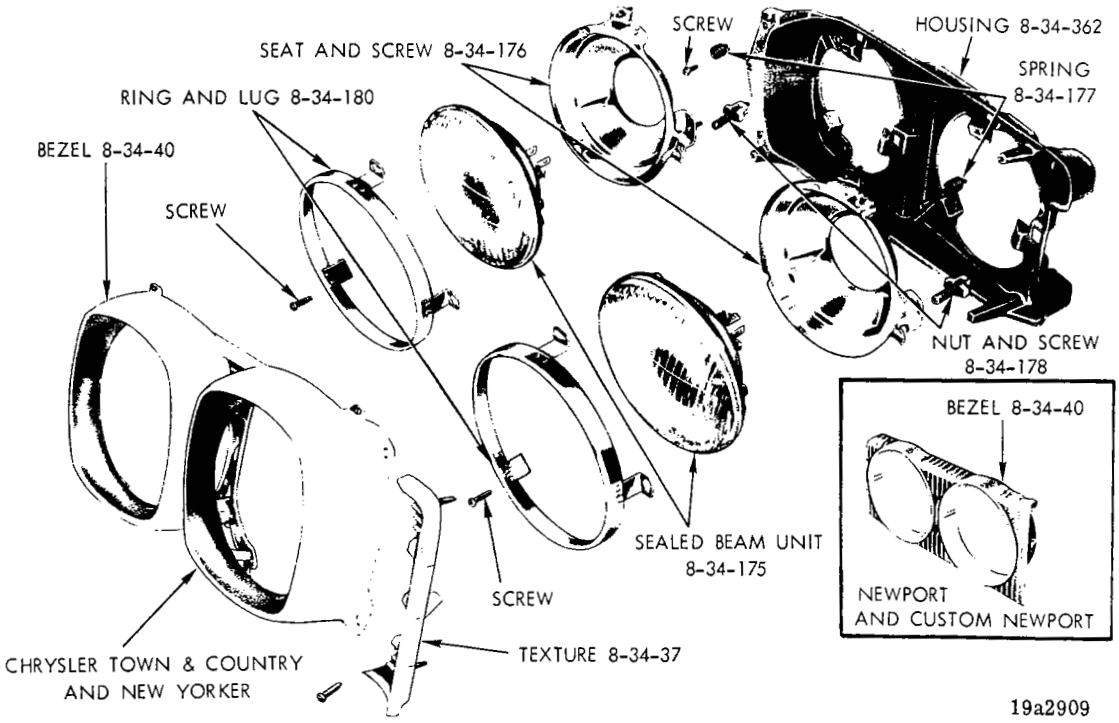

HEADLAMP - CHRYSLER EXCEPT CHRYSLER 300

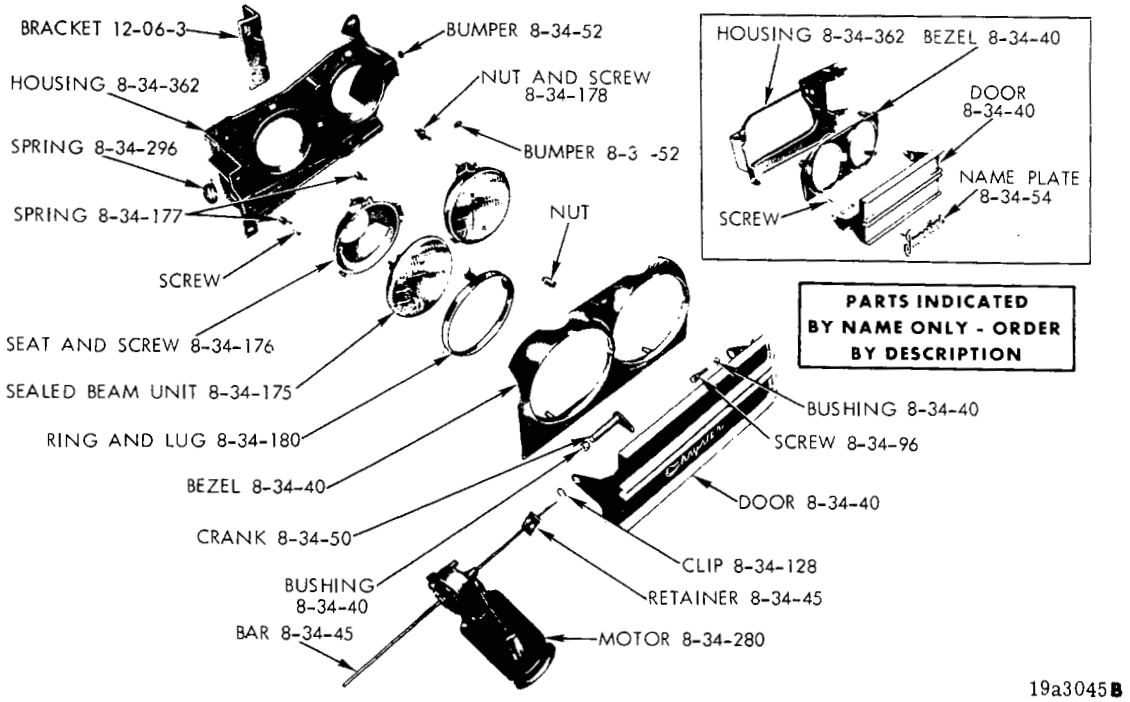

HEADLAMP - CHRYSLER 300 (WITH IMPERIAL INSERT)

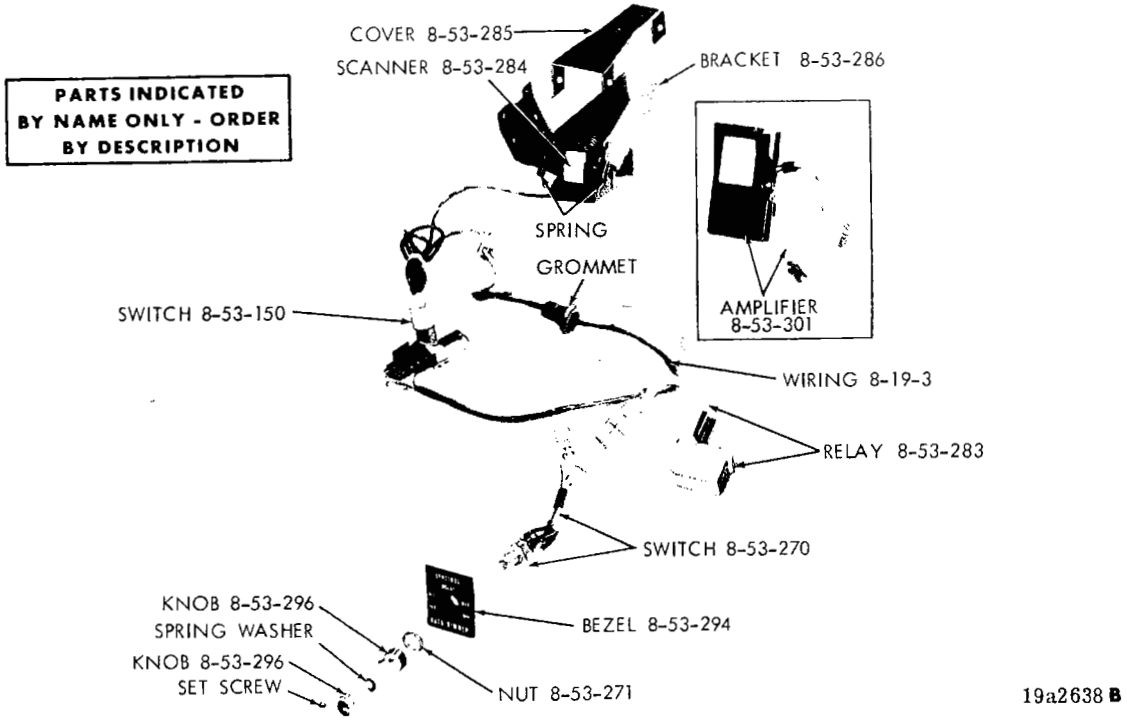

HEADLAMP SENTINEL DIMMER SYSTEM - CHRYSLER AND IMPERIAL

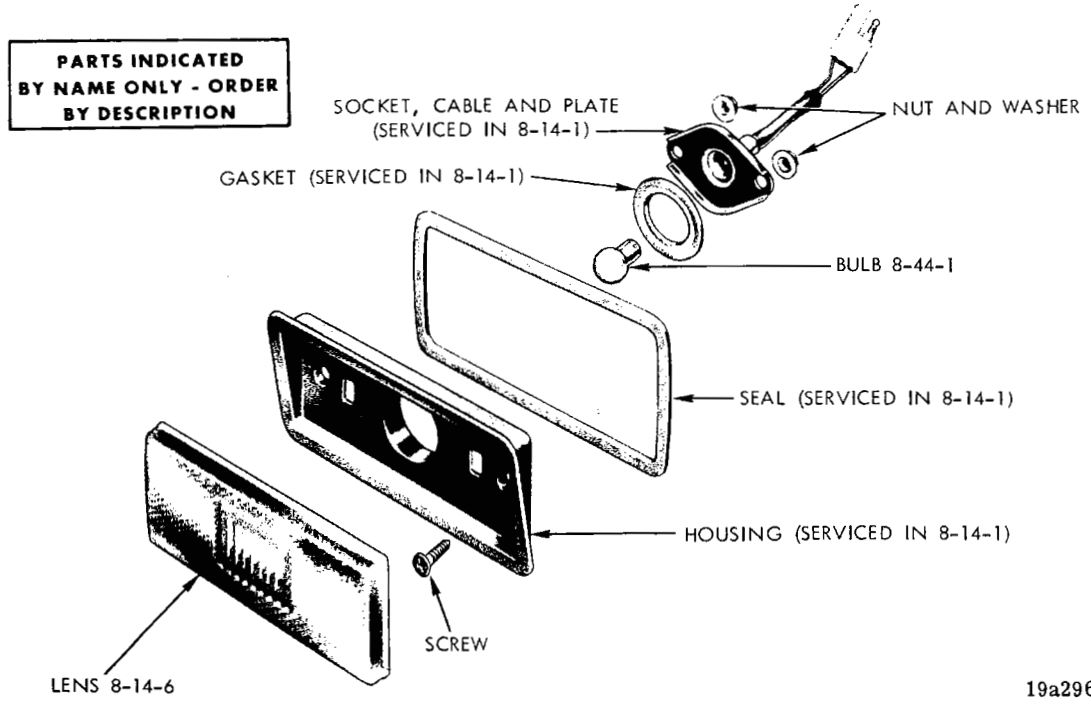

SIDE MARKER LAMP AND REFLECTOR (FRONT) - VALIANT

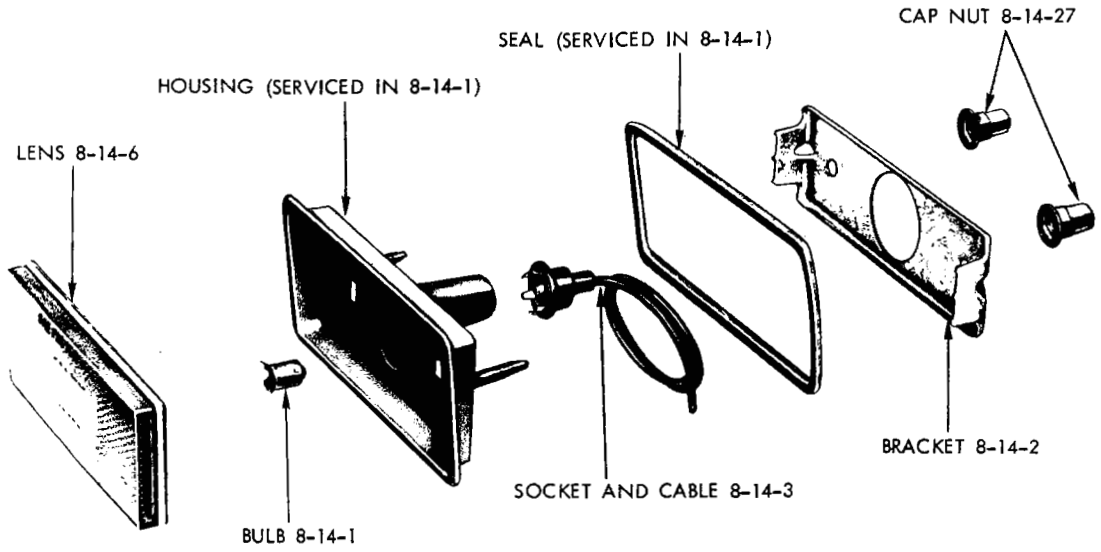

SIDE MARKER LAMP AND REFLECTOR (REAR) - VALIANT

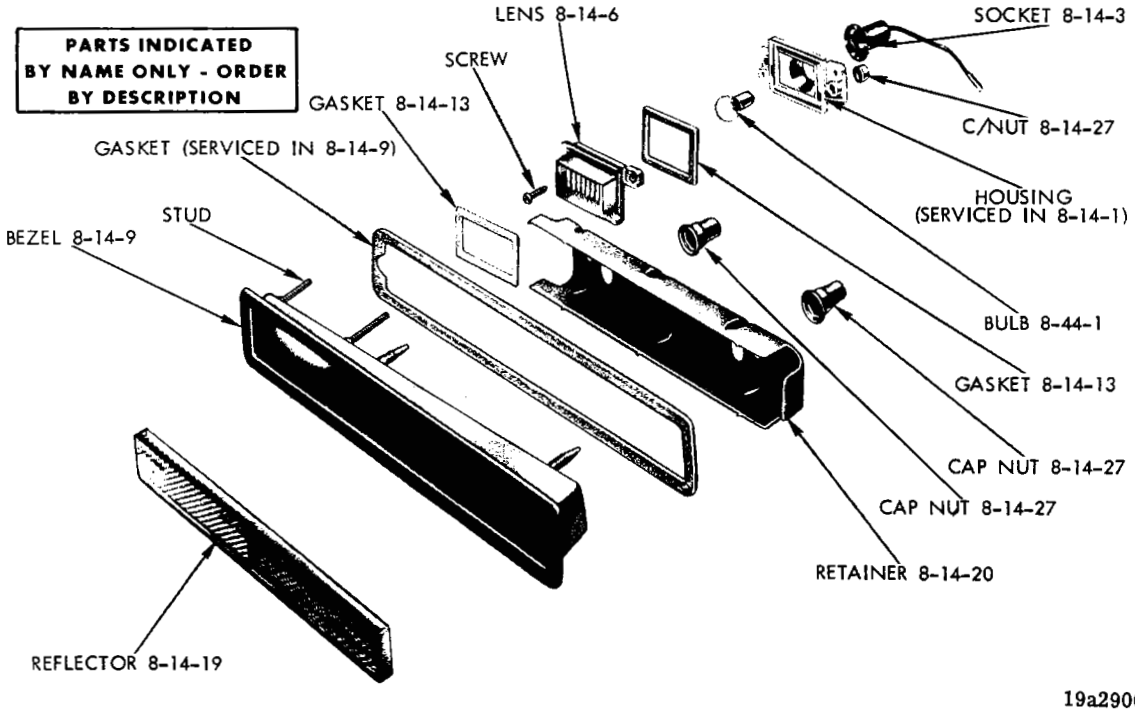

SIDE MARKER LAMP (REAR) - BARRACUDA

Printed in U.S.A.

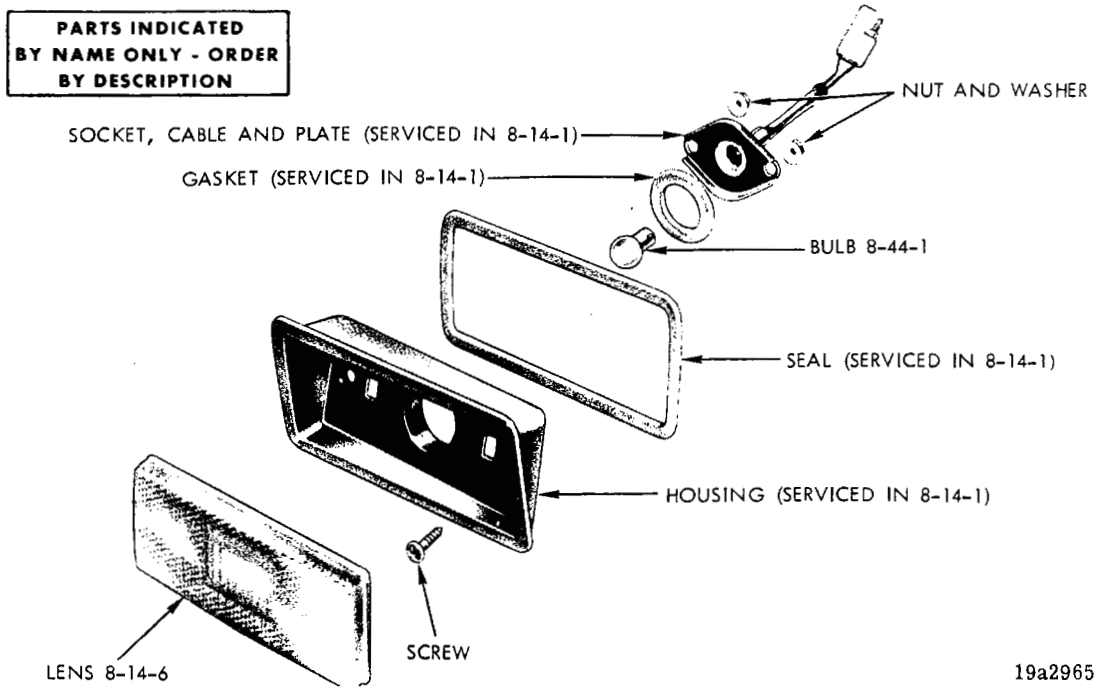

SIDE MARKER LAMP AND REFLECTOR (FRONT) - BELVEDERE

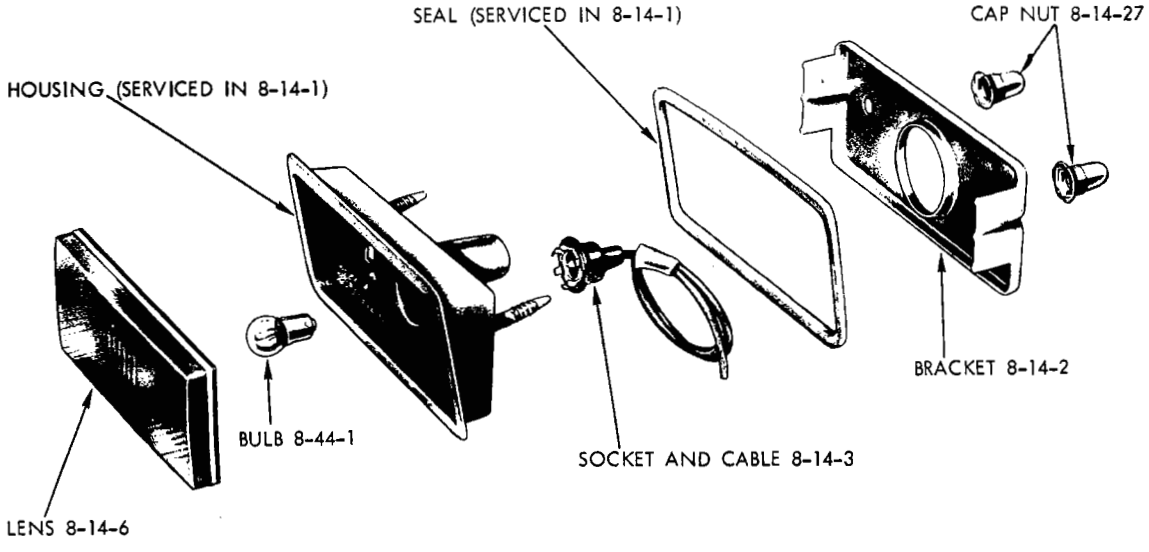

SIDE MARKER LAMP AND REFLECTOR (REAR) - BELVEDERE EXCEPT STATION WAGON

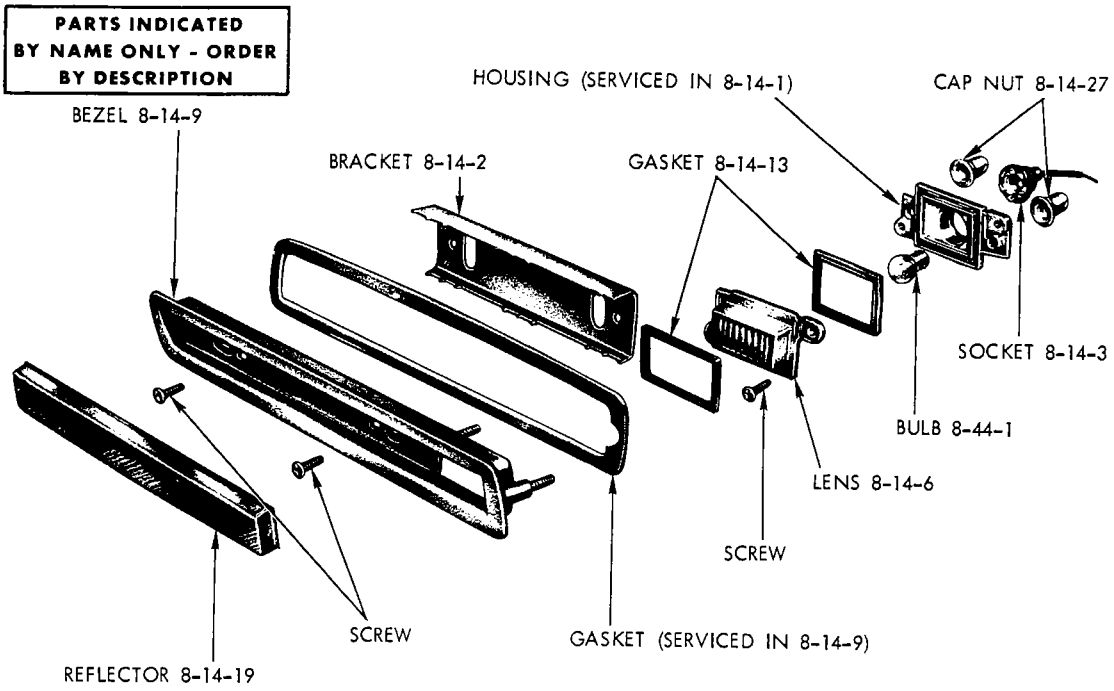

SIDE MARKER LAMP (REAR) - PLYMOUTH EXCEPT STATION WAGON

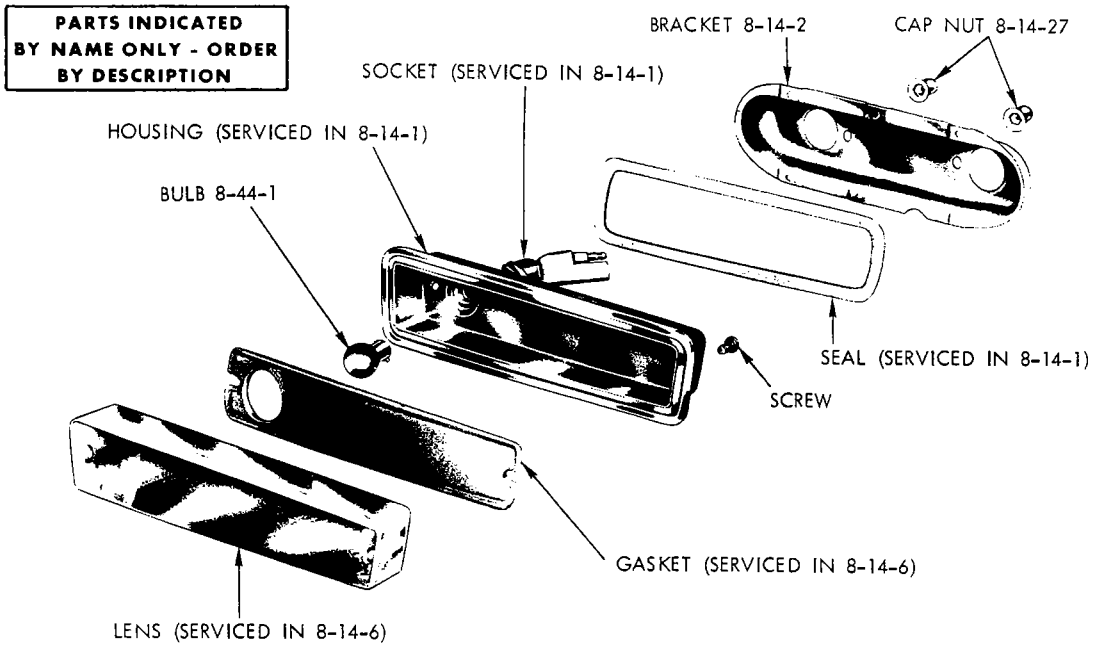

SIDE MARKER LAMP (FRONT) - DART

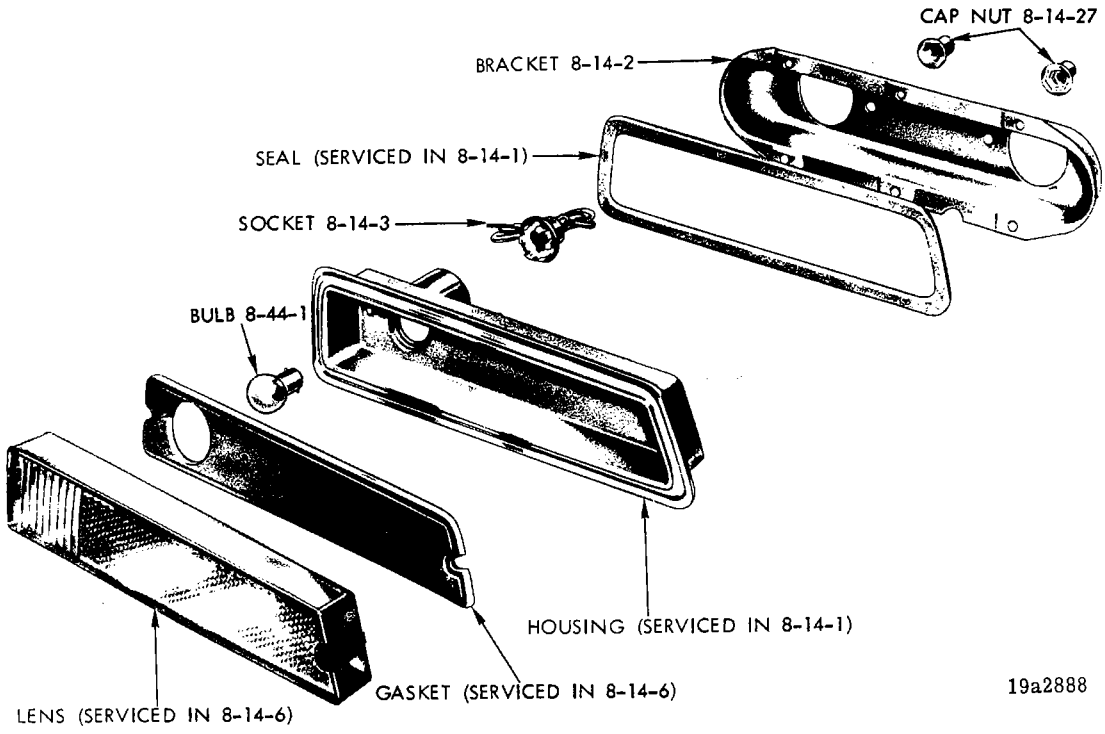

SIDE MARKER LAMP (REAR) - DART

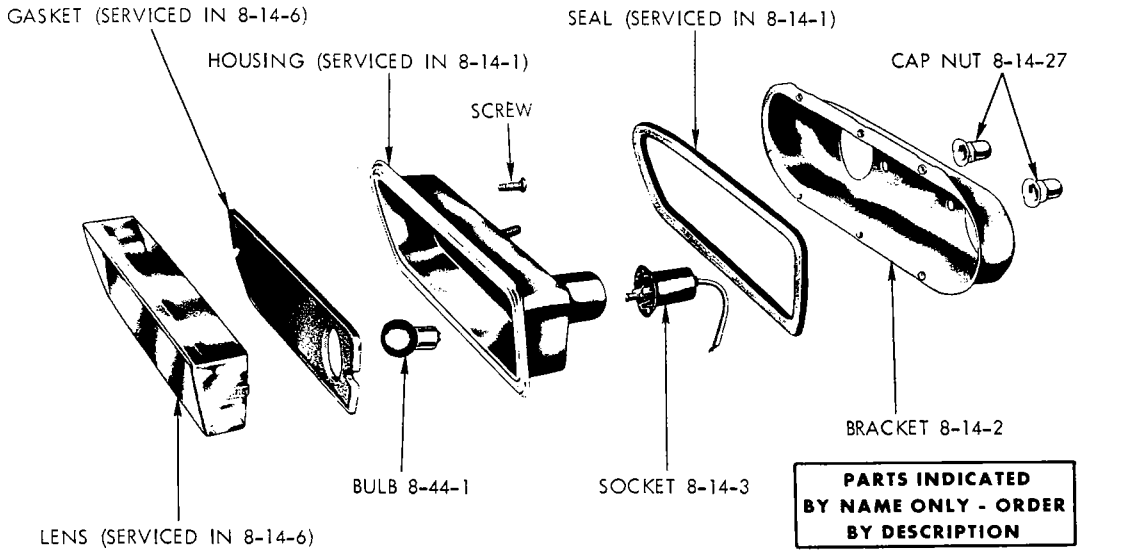

SIDE MARKER LAMP (REAR) - CHALLENGER

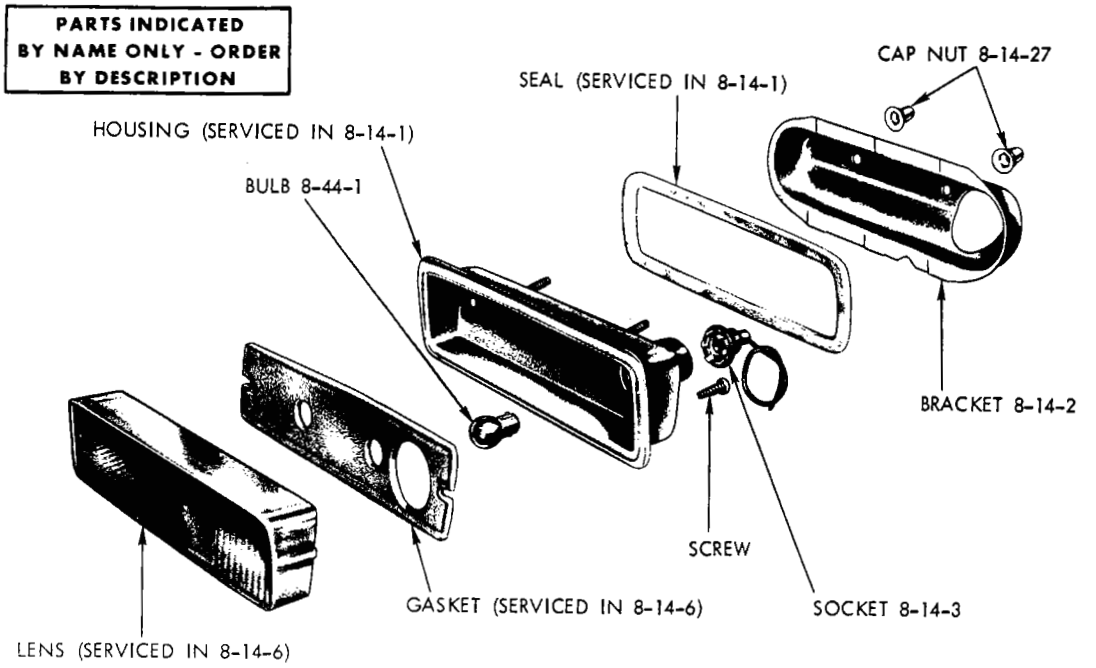

SIDE MARKER LAMP (REAR) - CHARGER AND CHARGER R/T

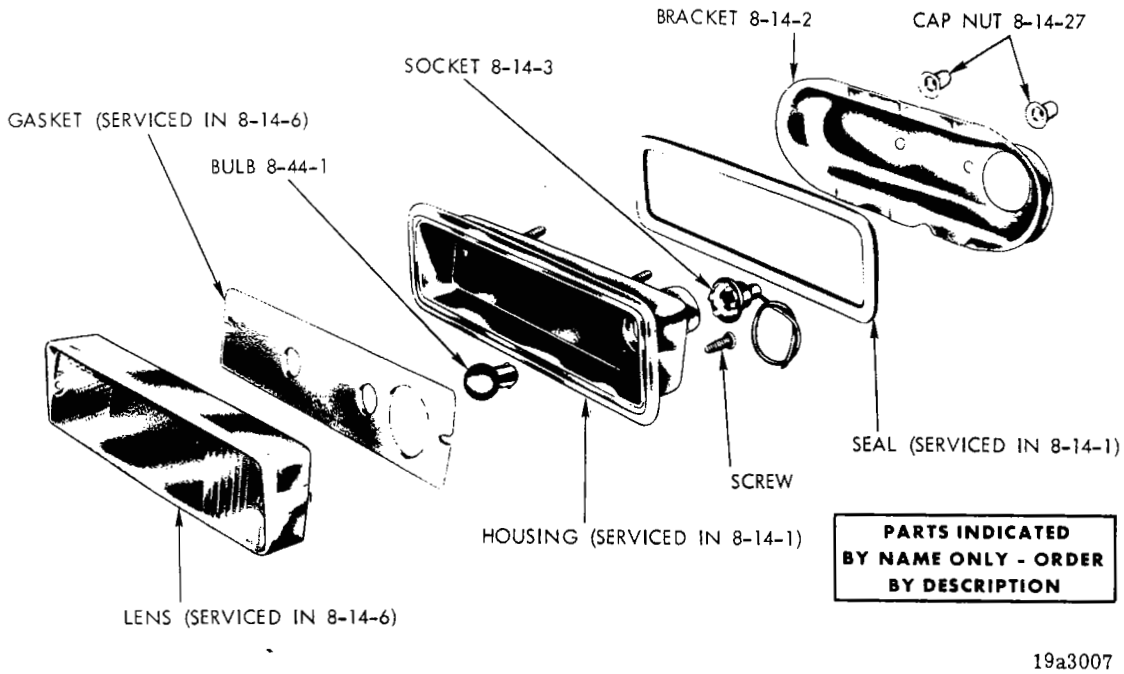

SIDE MARKER LAMP (REAR) - CORONET 2 DOOR SEDAN, 2 DOOR HARDTOP, CONVERTIBLE COUPE AND 4 DOOR SEDAN

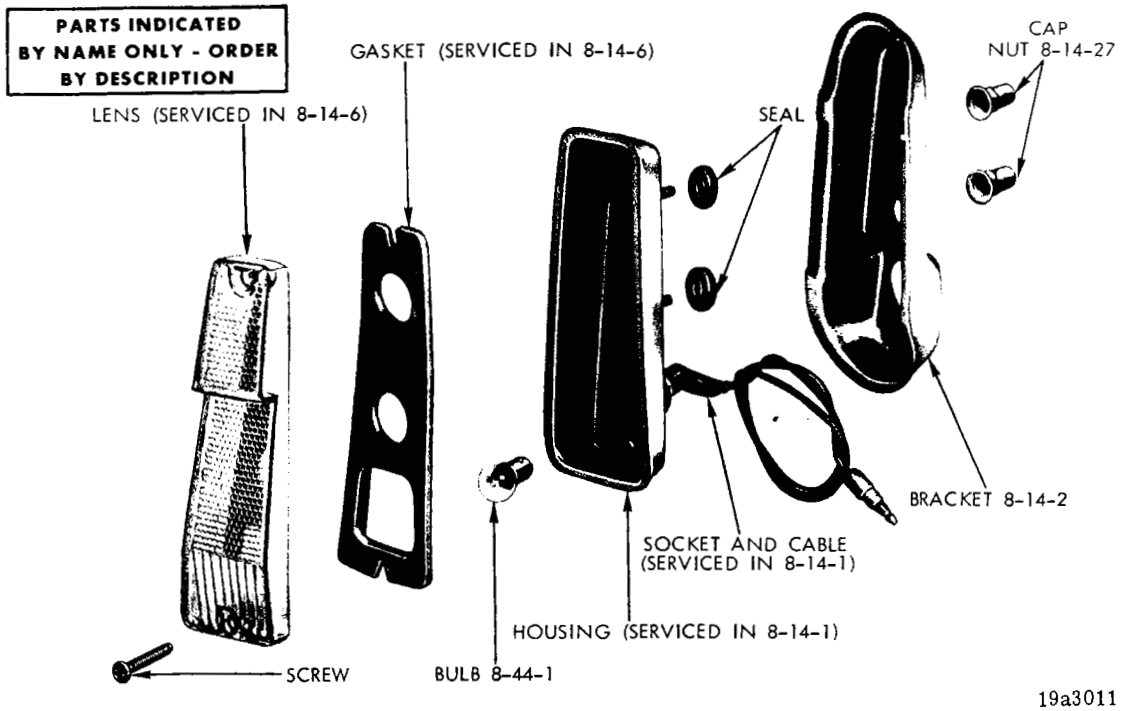

SIDE MARKER LAMP (FRONT) - DODGE

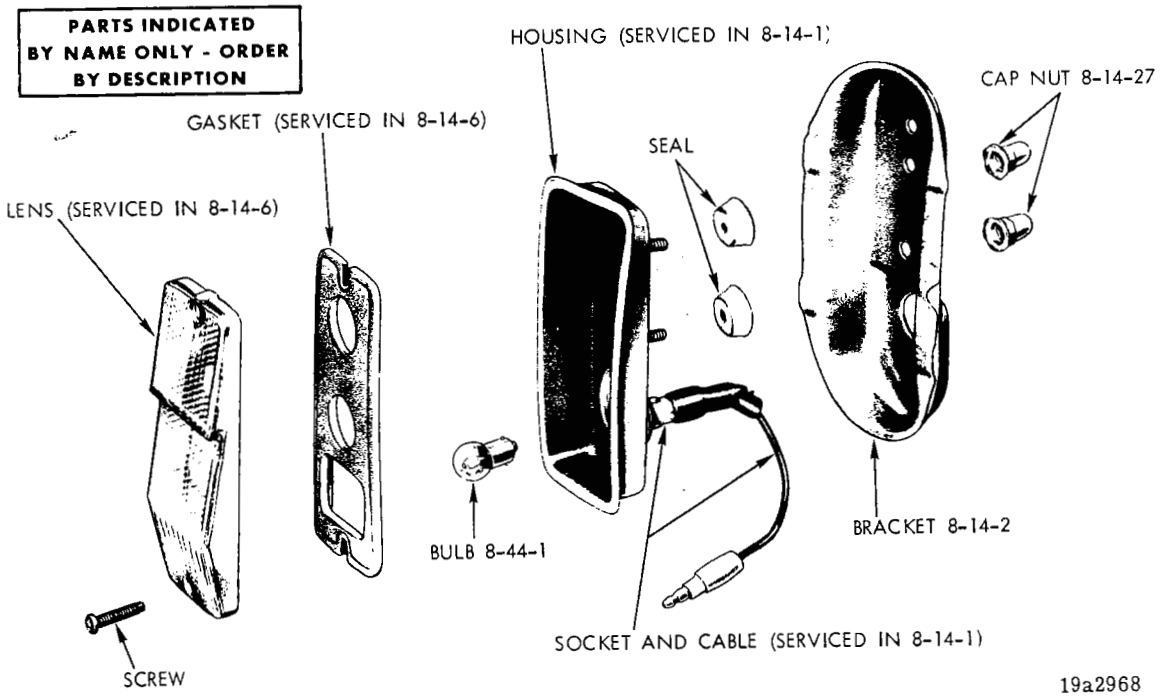

SIDE MARKER LAMP AND REFLECTOR (REAR) - DODGE EXCEPT CORONET

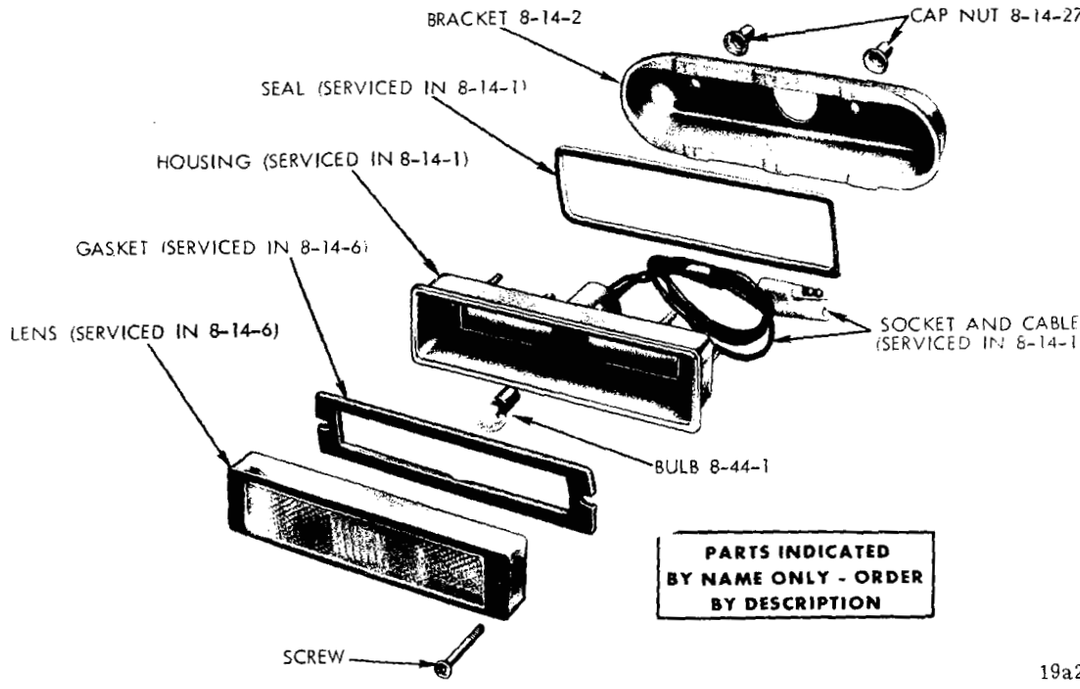

SIDE MARKER LAMP AND REFLECTOR (FRONT) - CHRYSLER

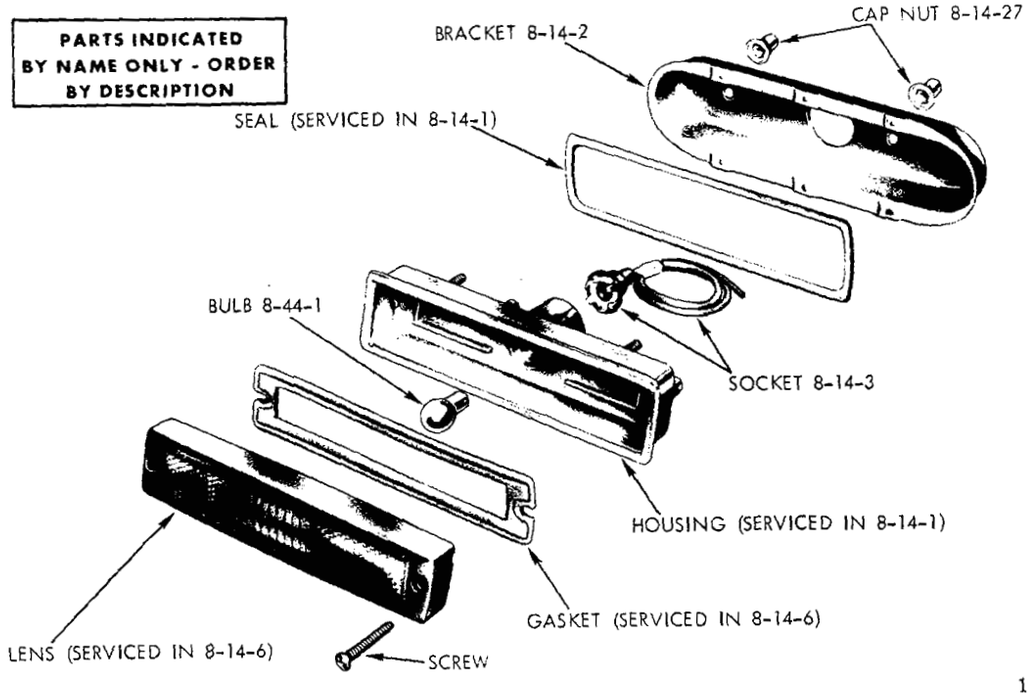

SIDE MARKER LAMP AND REFLECTOR (REAR) - CHRYSLER EXCEPT STATION WAGON

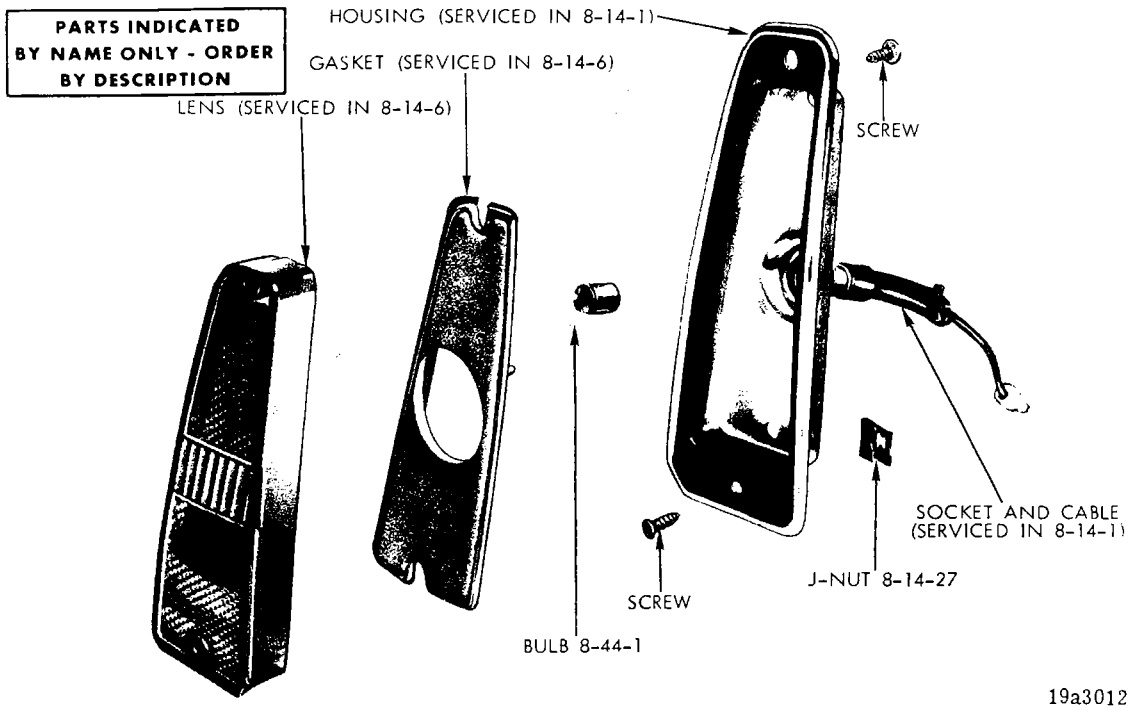

SIDE MARKER LAMP (REAR) - IMPERIAL

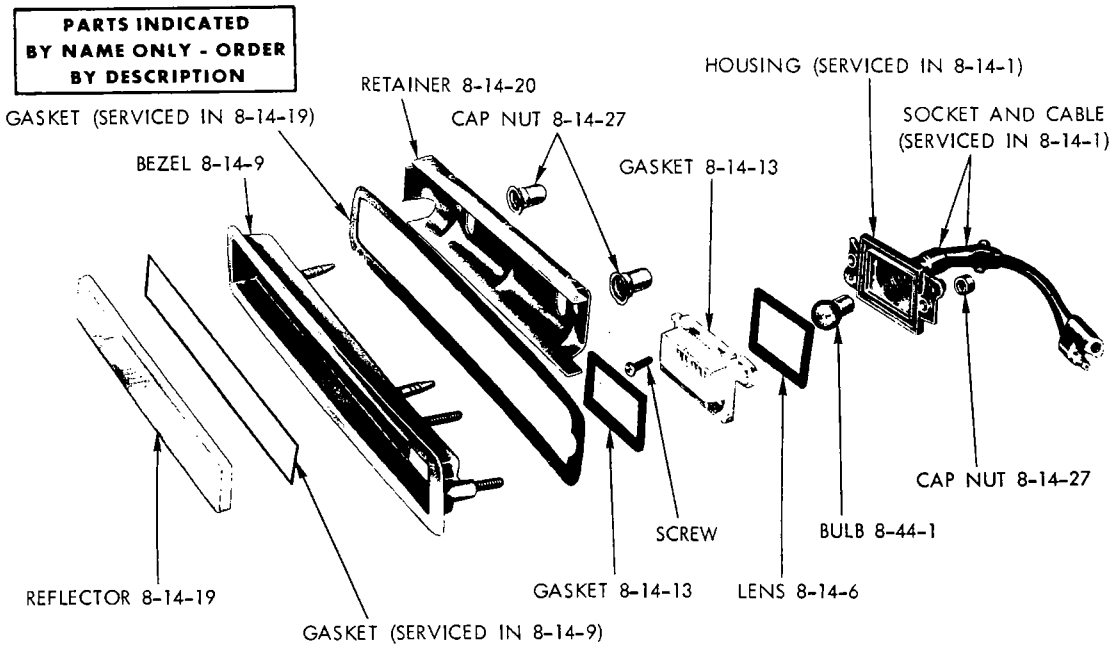

SIDE MARKER LAMP (FRONT) - BARRACUDA AND PLYMOUTH

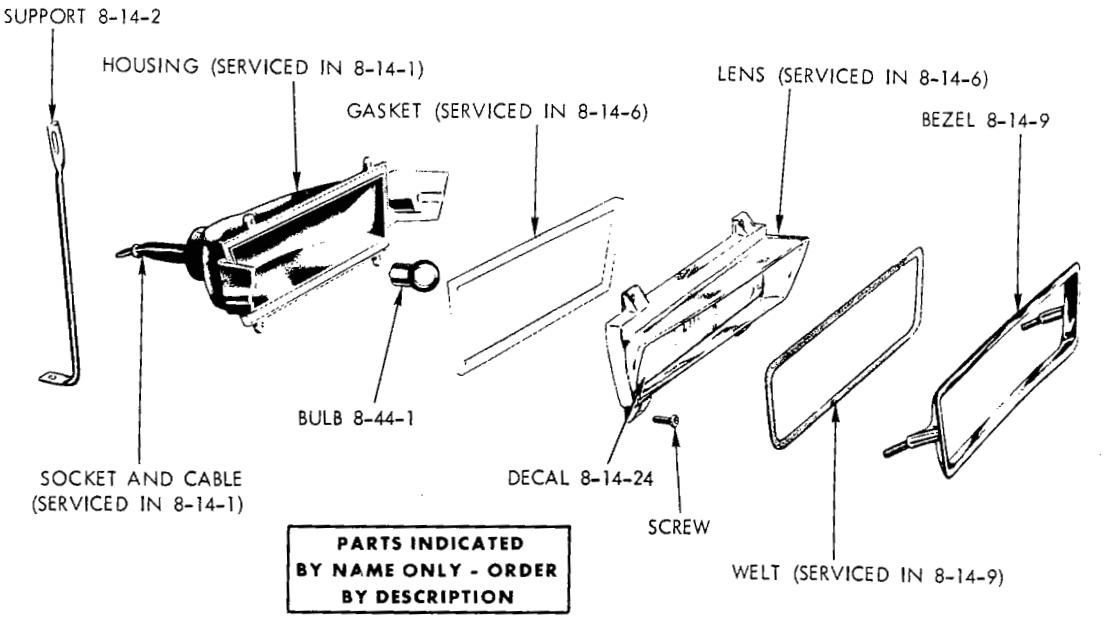

FRONT FENDER SIDE MARKER LAMP - PLYMOUTH SPORT FURY
2 DOOR HARDTOP AND SPECIAL 2 DOOR HARDTOP

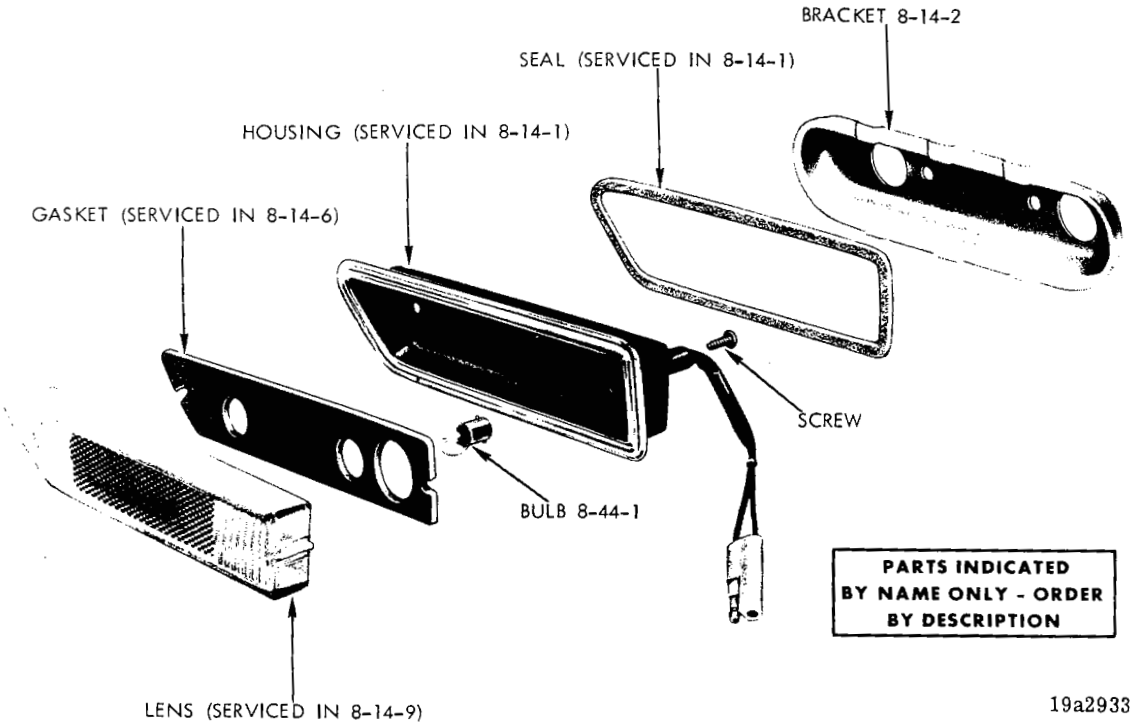

FRONT SIDE MARKER LAMP - CHALLENGER

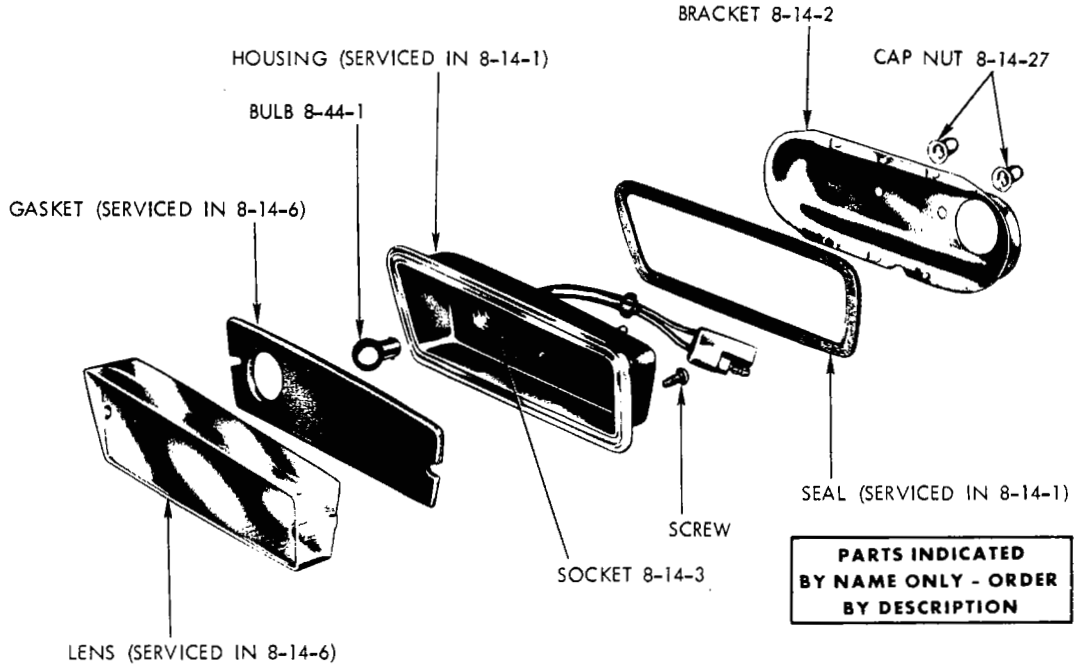

FENDER SIDE MARKER LAMP - CHARGER AND CHARGER R/T

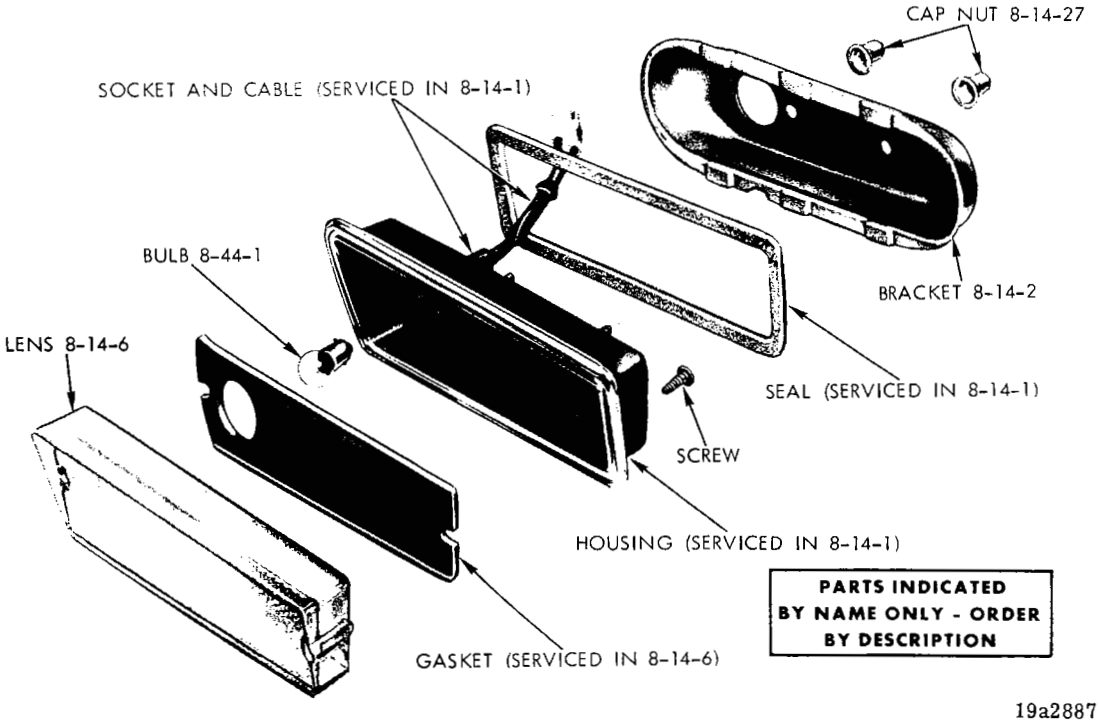

FRONT FENDER SIDE MARKER LAMP - CORONET EXCEPT CHARGER AND CHARGER R/T

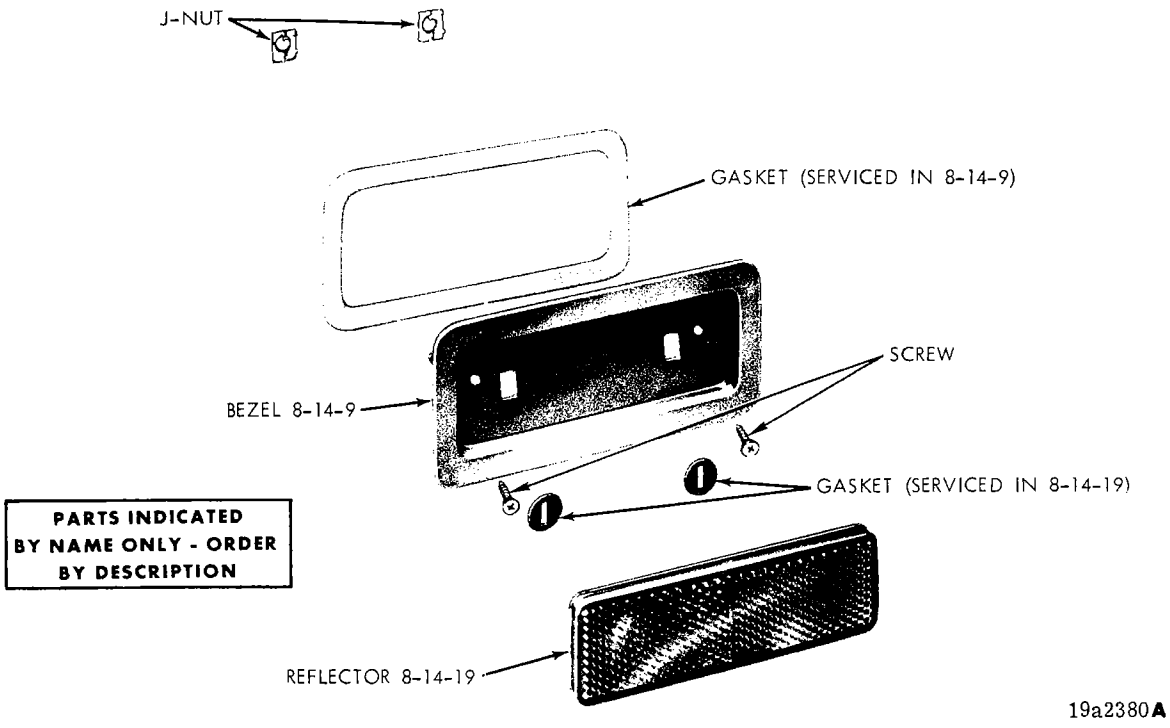

REAR QUARTER PANEL SIDE MARKER REFLECTOR - PLYMOUTH, DODGE AND CHRYSLER STATION WAGONS

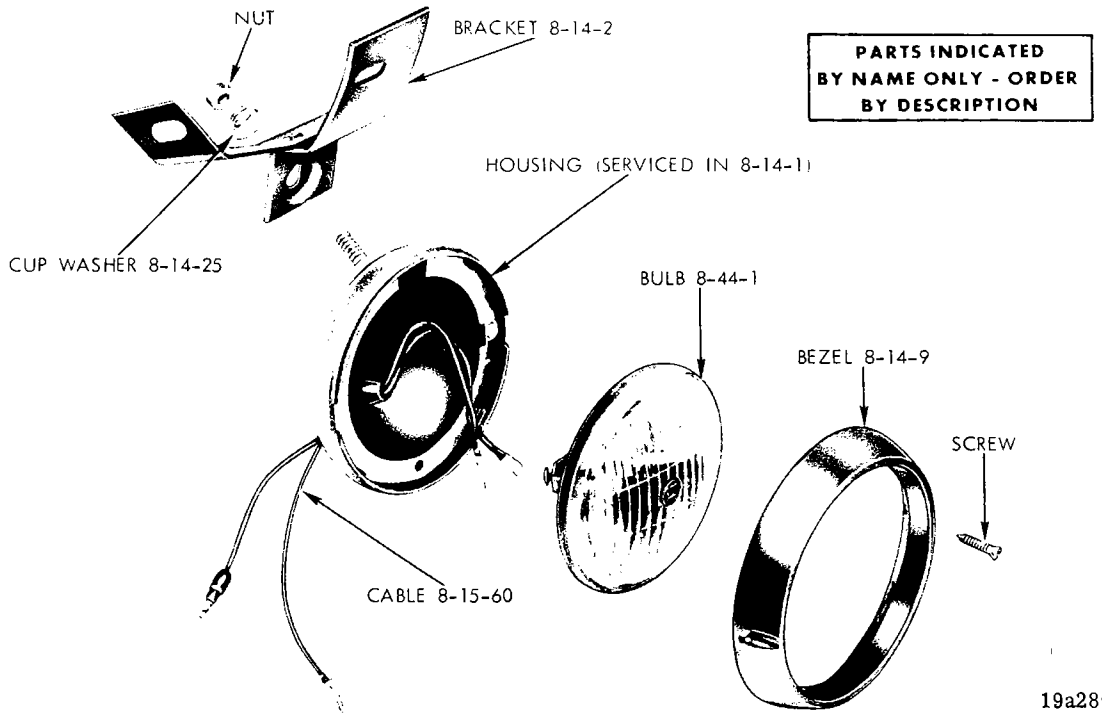

ROAD LAMP - BARRACUDA

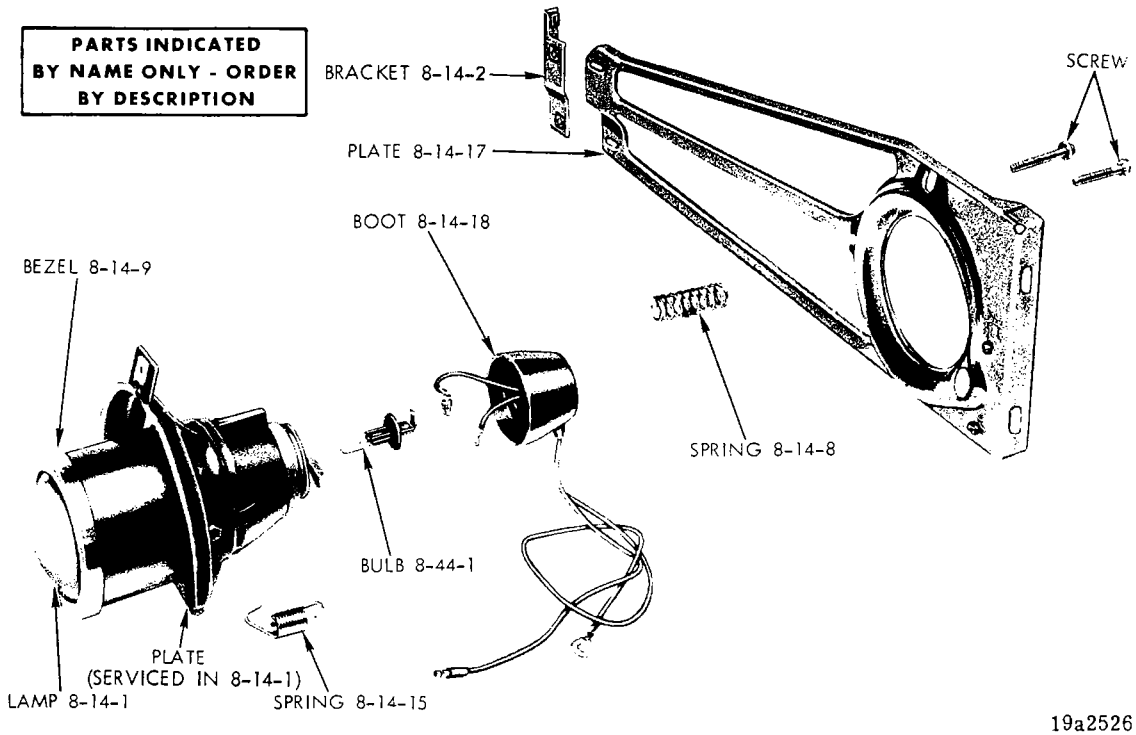

X-PRESS SUPERLITE - DODGE

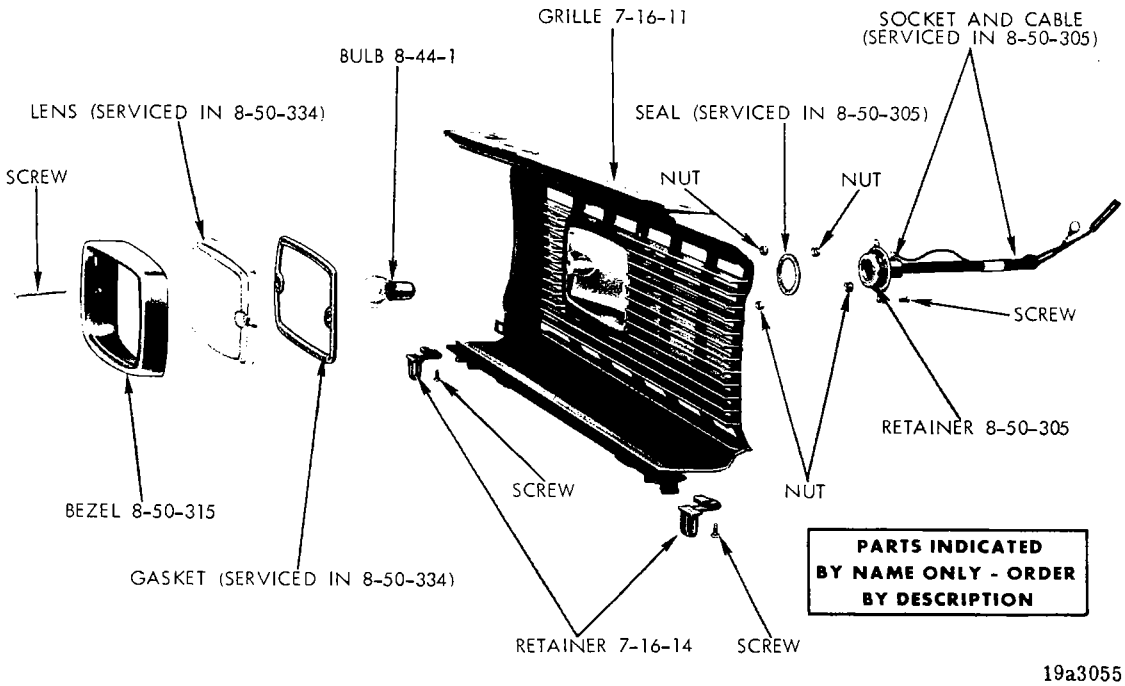

PARKING AND TURN SIGNAL LAMP - VALIANT

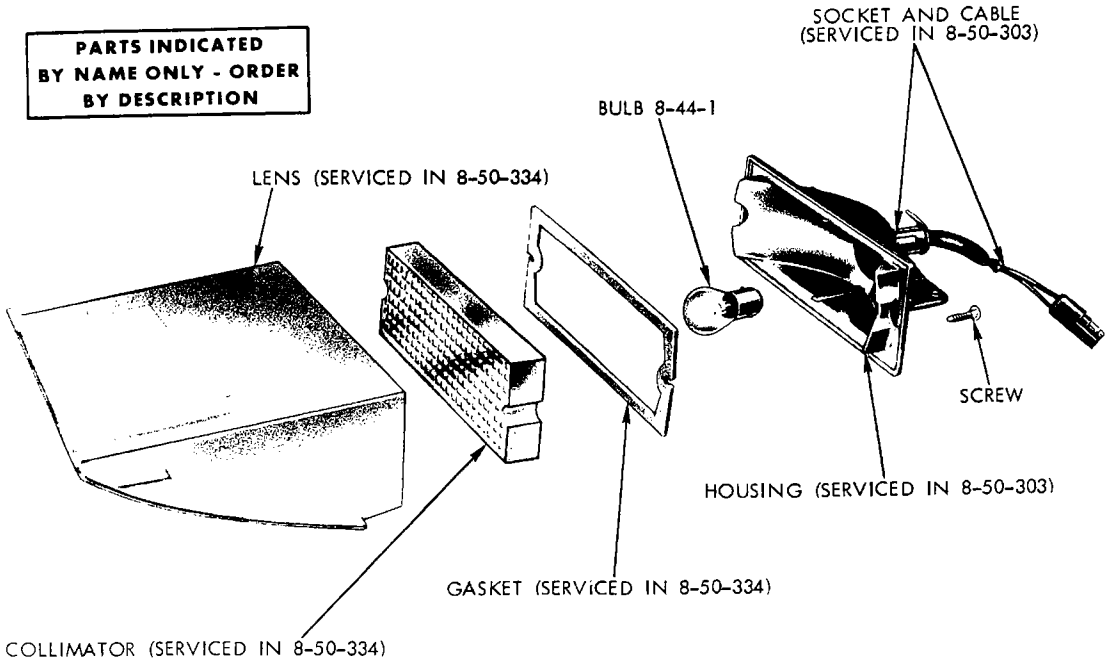

PARKING AND TURN SIGNAL LAMP - BARRACUDA

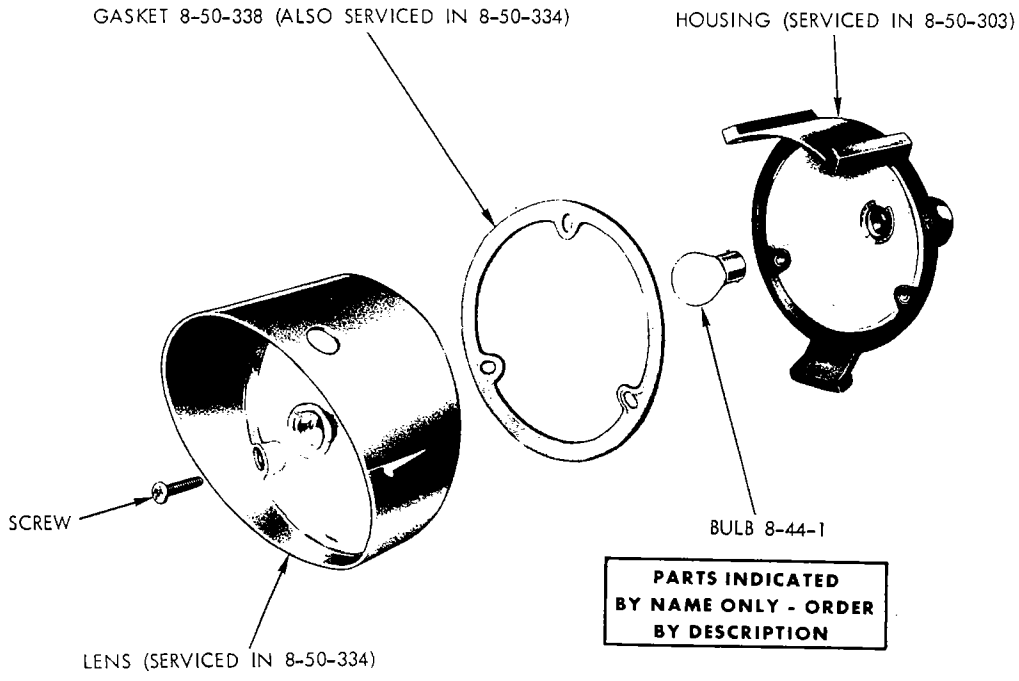

PARKING AND TURN SIGNAL LAMP - BELVEDERE

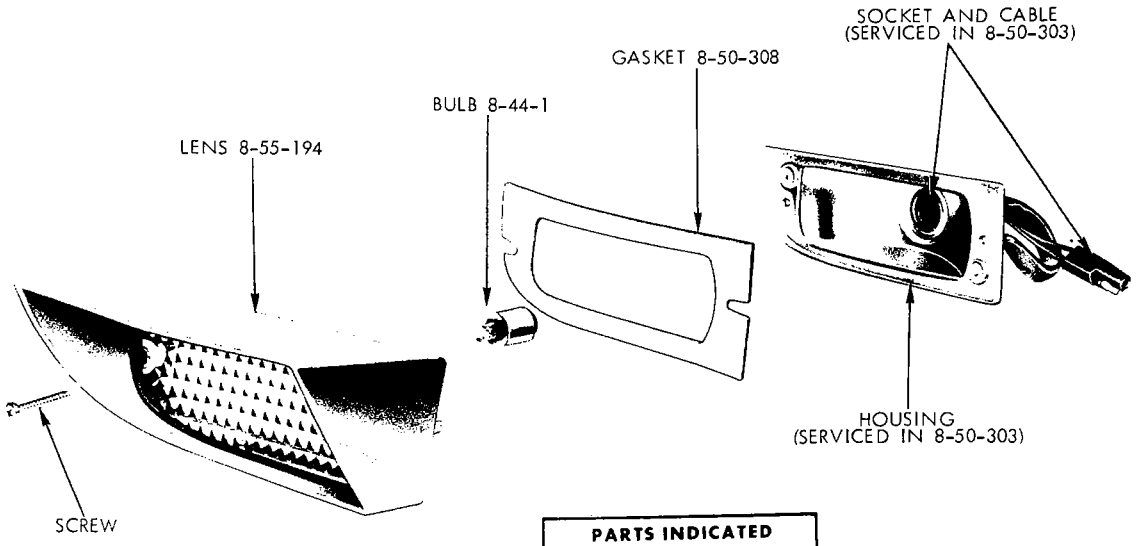

19a2862

PARKING AND TURN SIGNAL LAMP - PLYMOUTH FURY

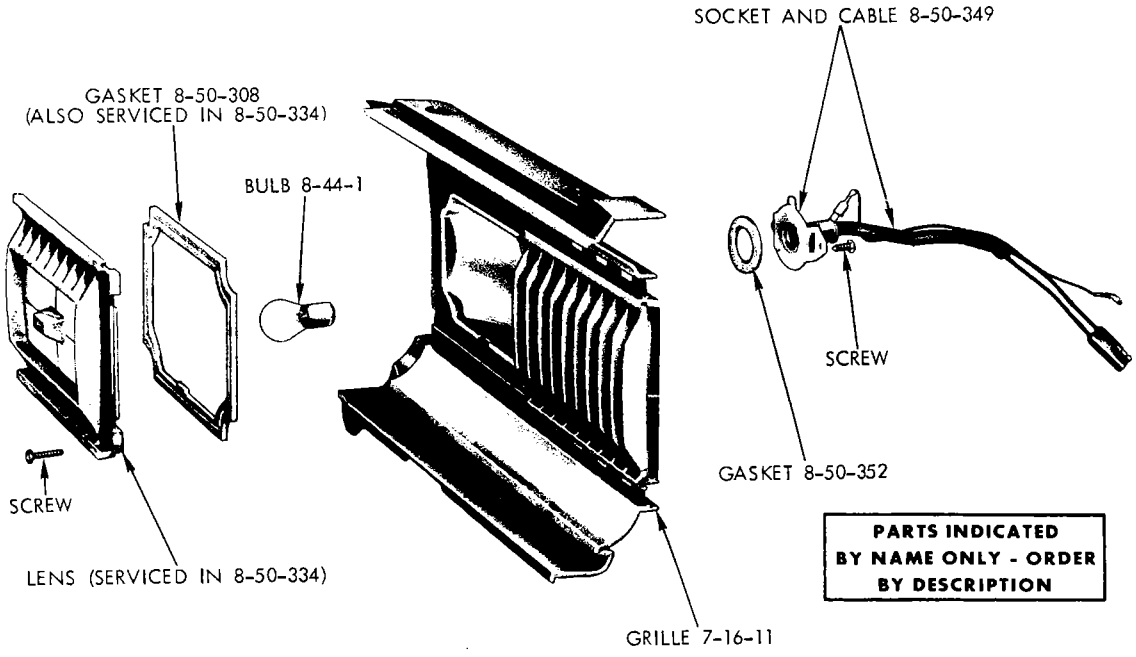

19a3046

PARKING AND TURN SIGNAL LAMP - DART

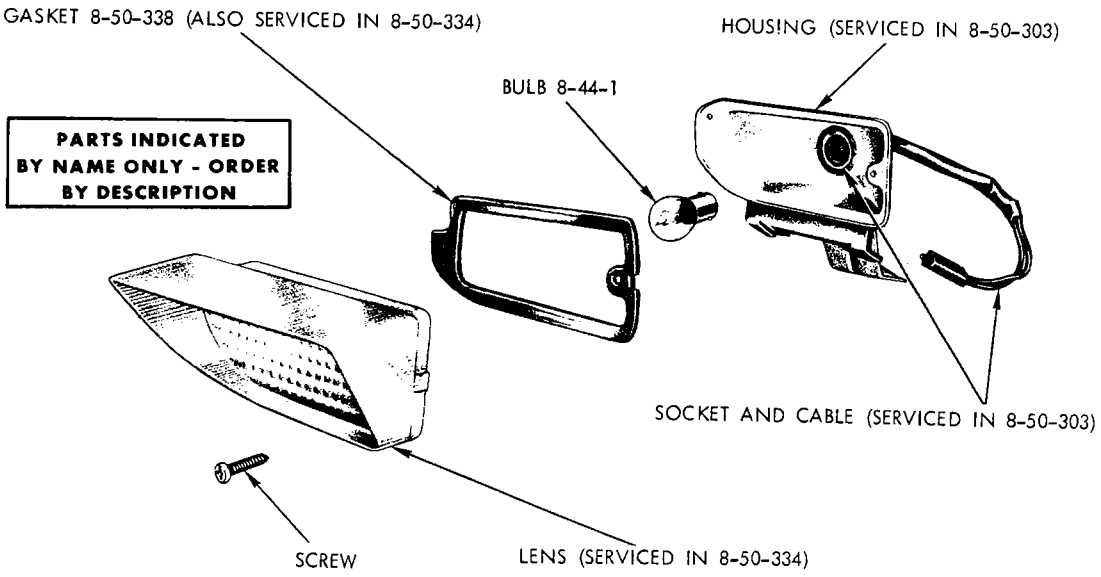

19a2817

PARKING AND TURN SIGNAL LAMP - CORONET EXCEPT CHARGER AND CHARGER R/T

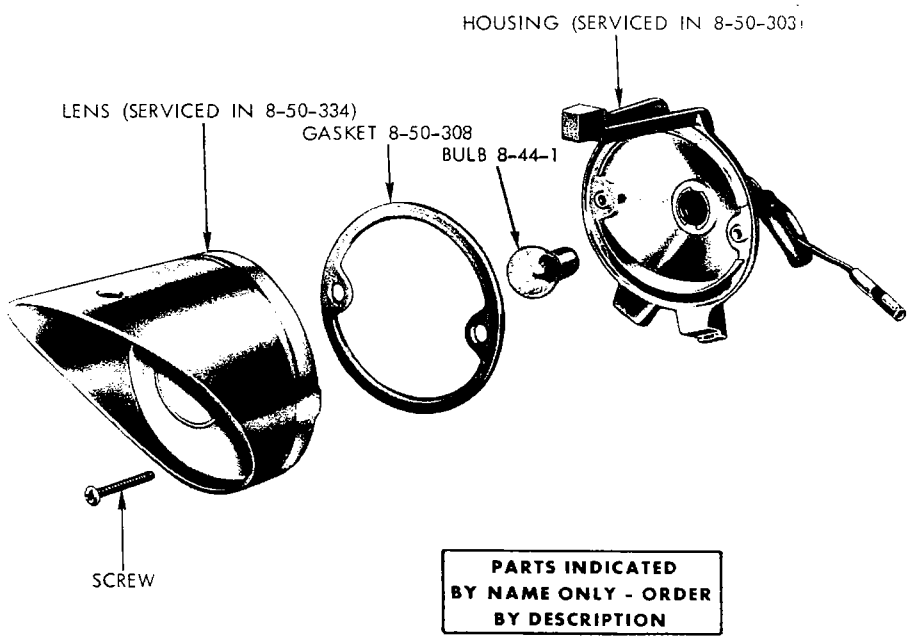

19a2832

PARKING AND TURN SIGNAL LAMP - CHALLENGER AND CORONET CHARGER AND CHARGER R/T

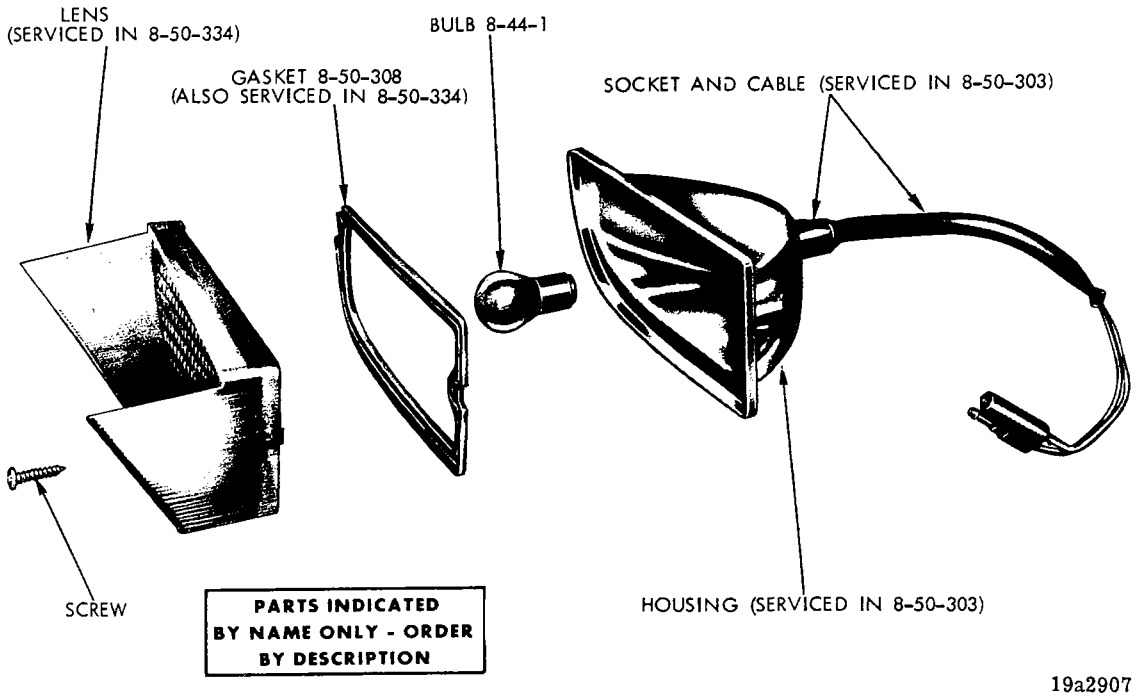

PARKING AND TURN SIGNAL LAMP - DODGE

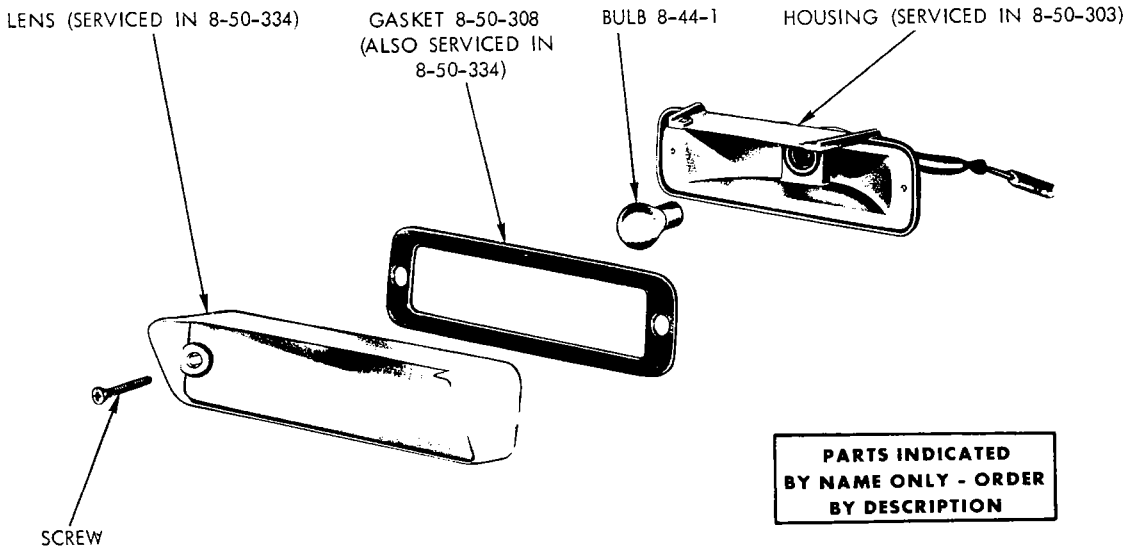

PARKING AND TURN SIGNAL LAMP - CHRYSLER

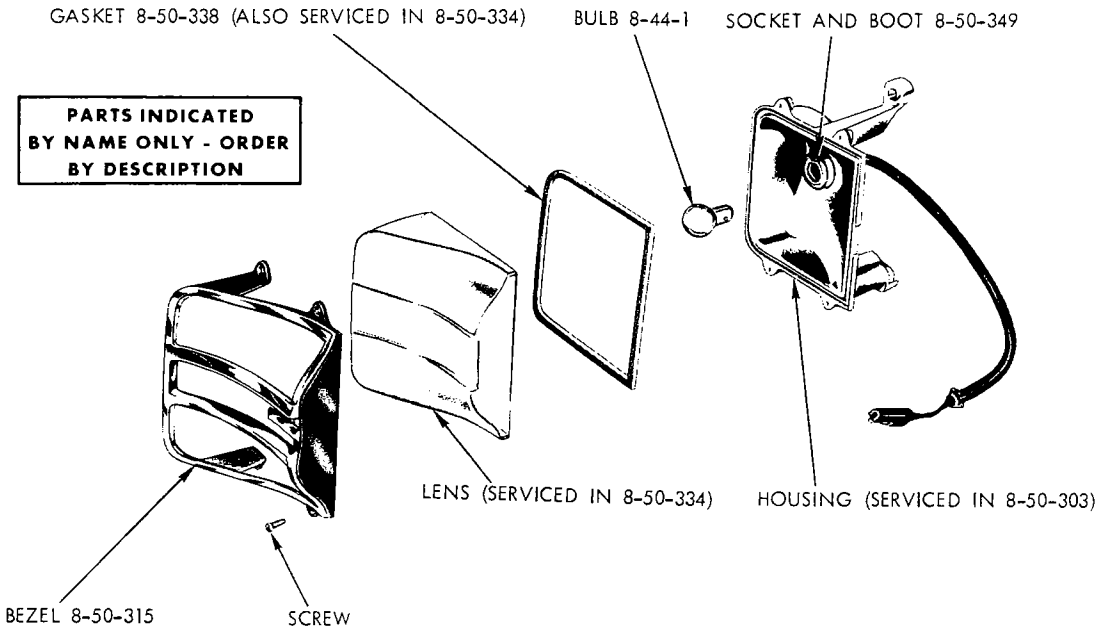

PARKING AND TURN SIGNAL LAMP - CHRYSLER 300

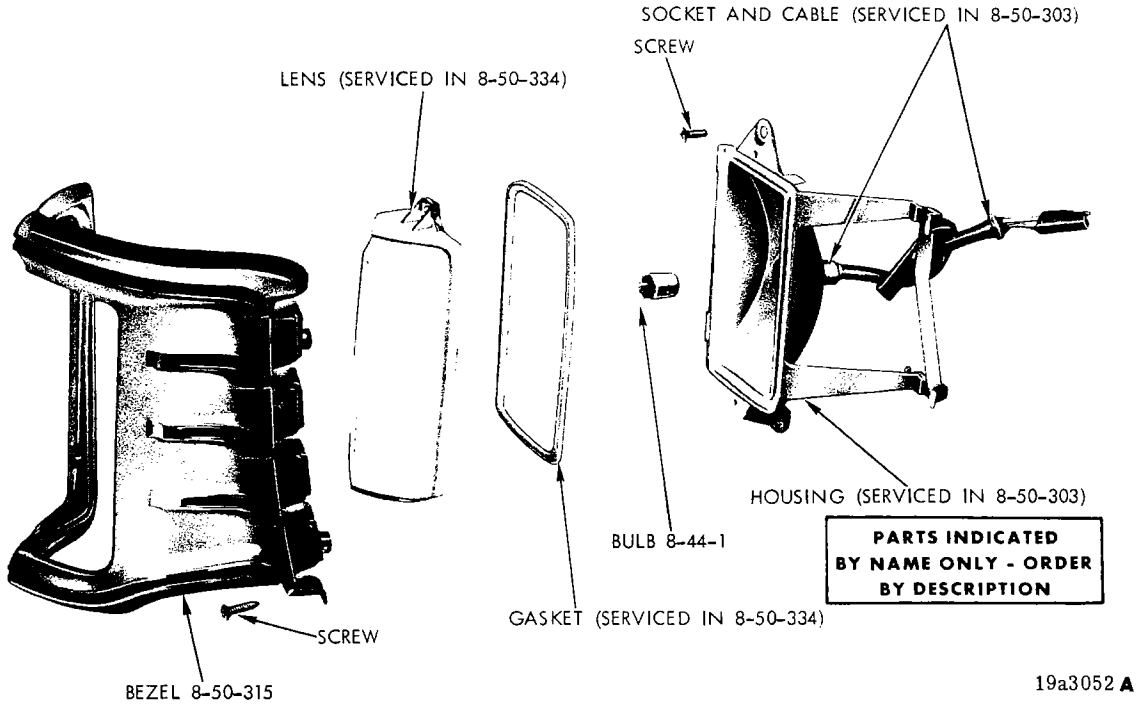

PARKING AND TURN SIGNAL LAMP - IMPERIAL

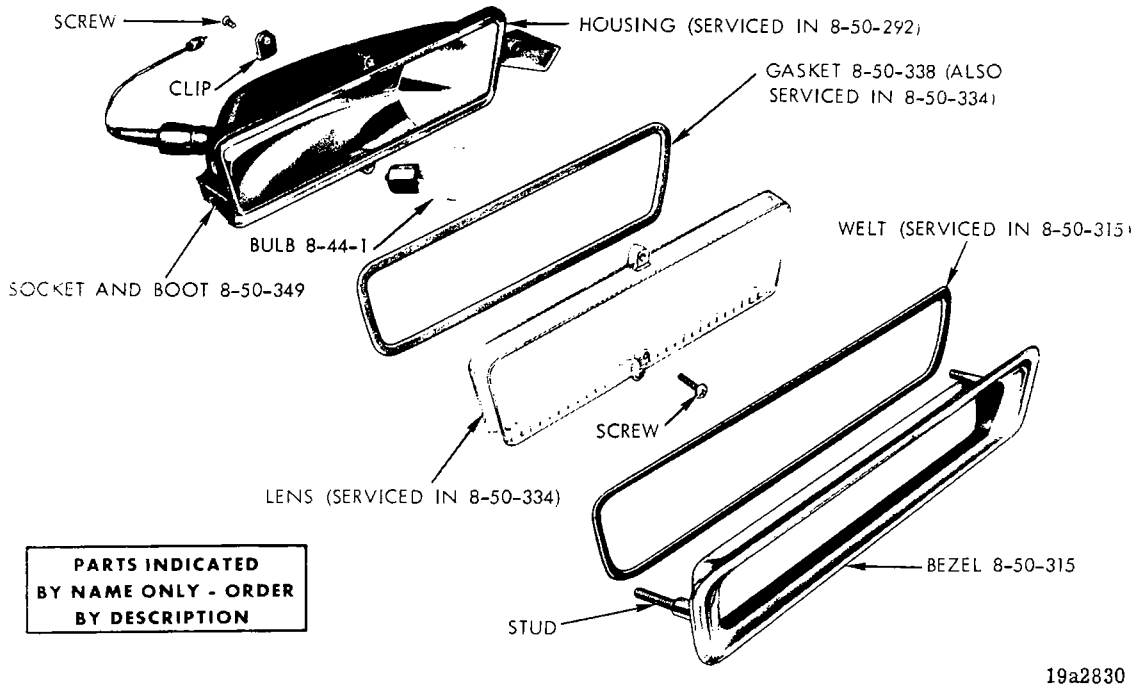

CORNERING LAMP - DODGE EXCEPT CORONET (1970 ONLY)

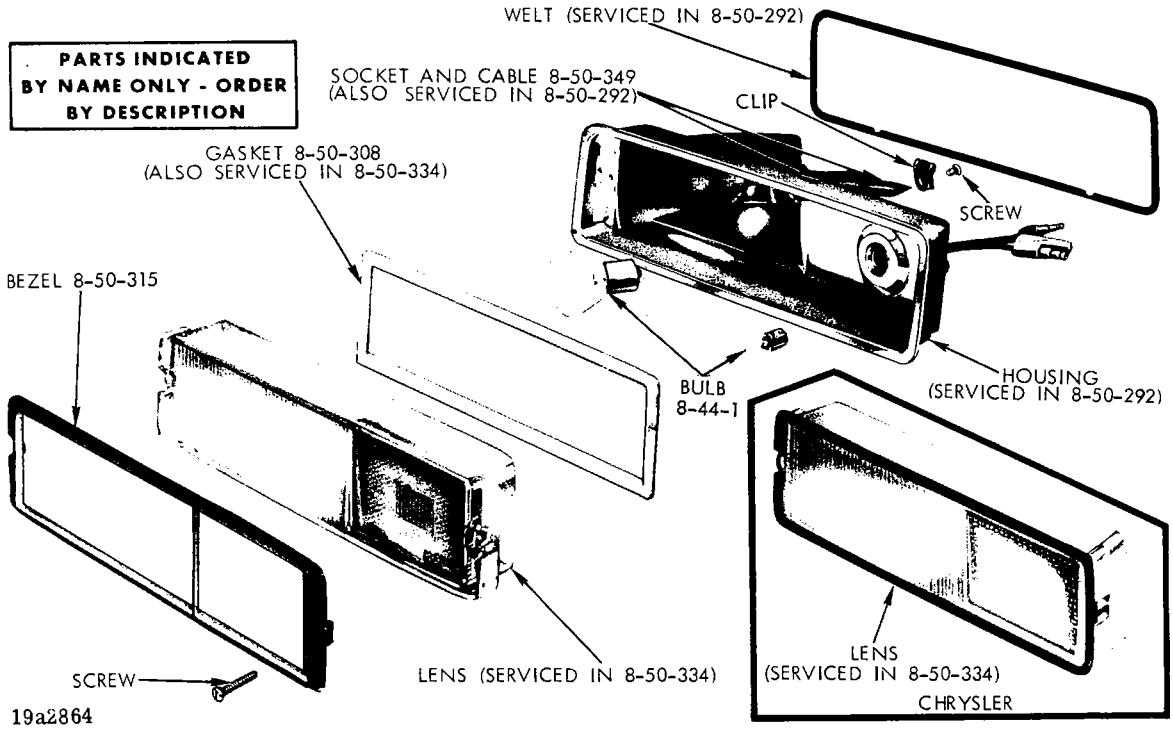

CORNERING AND SIDE MARKER LAMP - CHRYSLER AND IMPERIAL

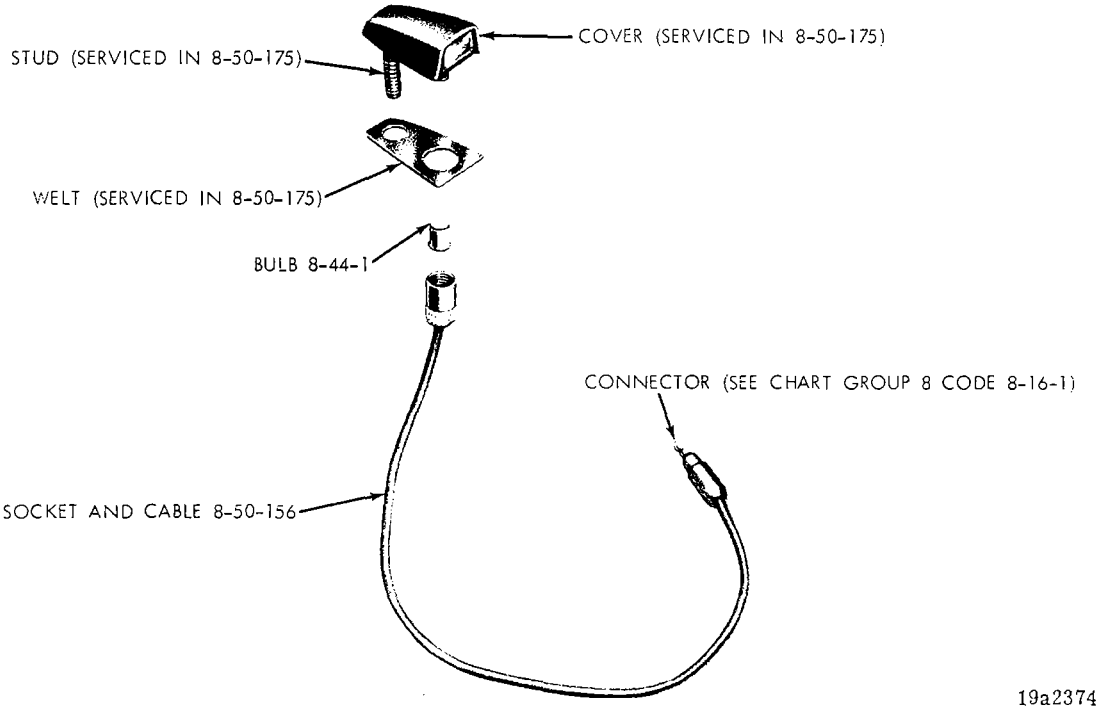

1970 ONLY

TURN SIGNAL INDICATOR LAMP - VALIANT, CHALLENGER, DART, BELVEDERE EXCEPT ROAD RUNNER AND GTX, CORONET EXCEPT CHARGER AND CHARGER R/T AND CHRYSLER STATION WAGON

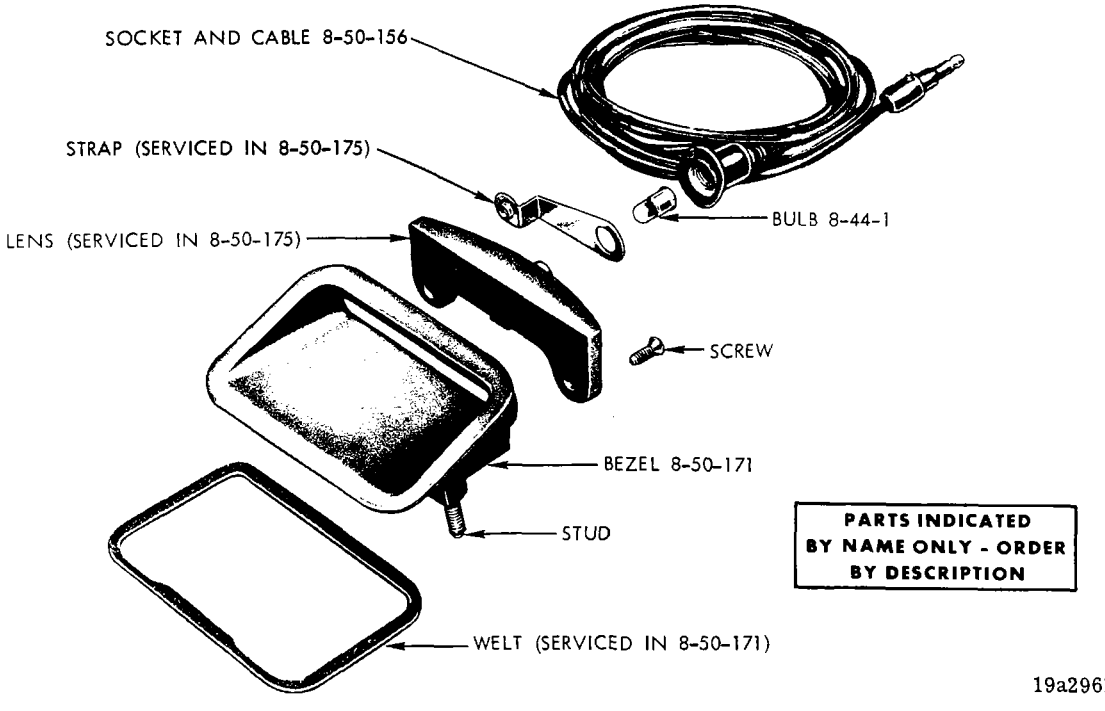

HOOD PANEL TURN SIGNAL INDICATOR LAMP - CHARGER AND CHARGER R/T

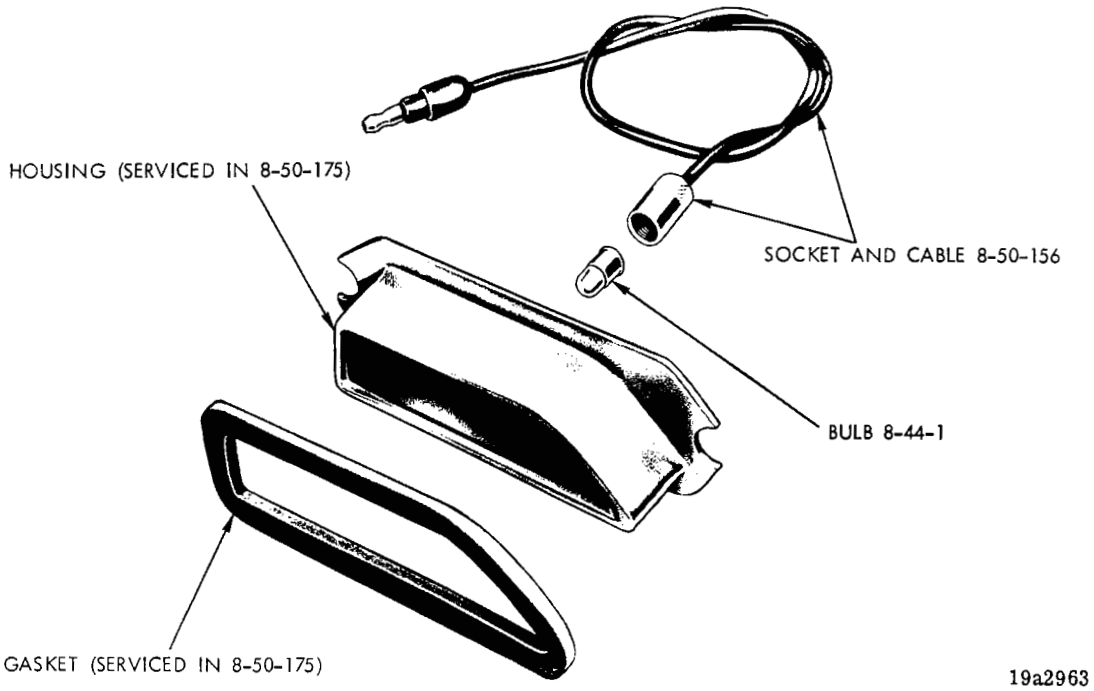

HOOD TURN SIGNAL INDICATOR LAMP - BELVEDERE ROAD RUNNER AND GTX

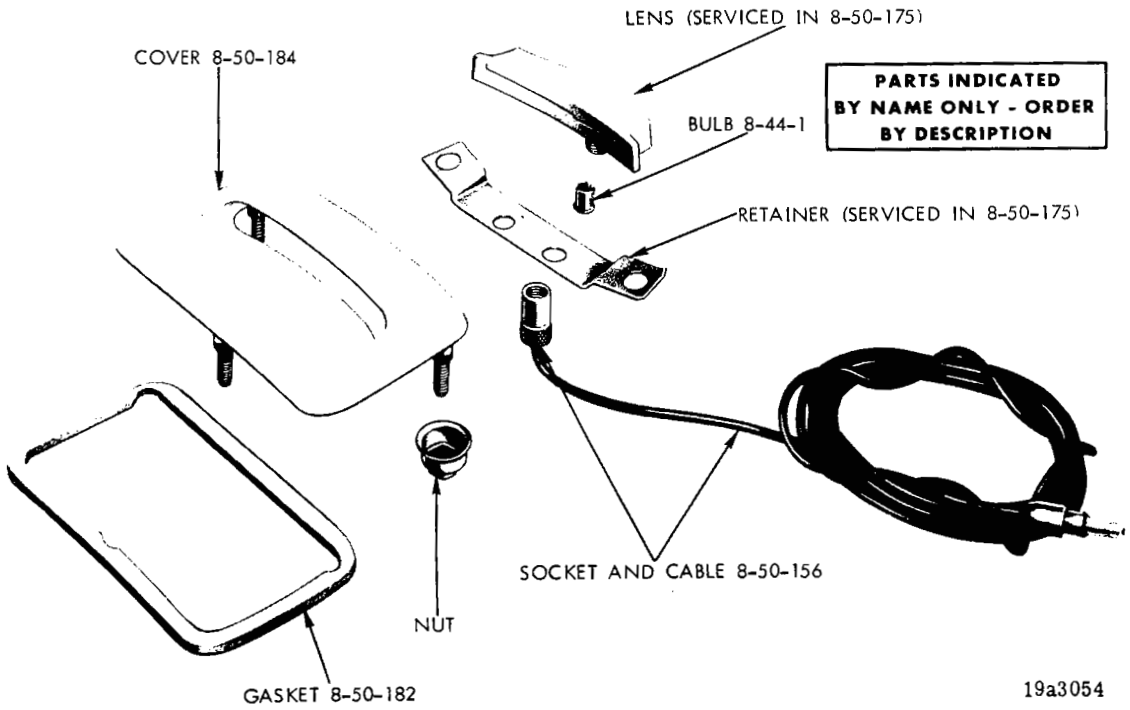

HOOD PANEL TURN SIGNAL INDICATOR LAMP - PLYMOUTH

PARTS INDICATED BY NAME ONLY - ORDER BY DESCRIPTION

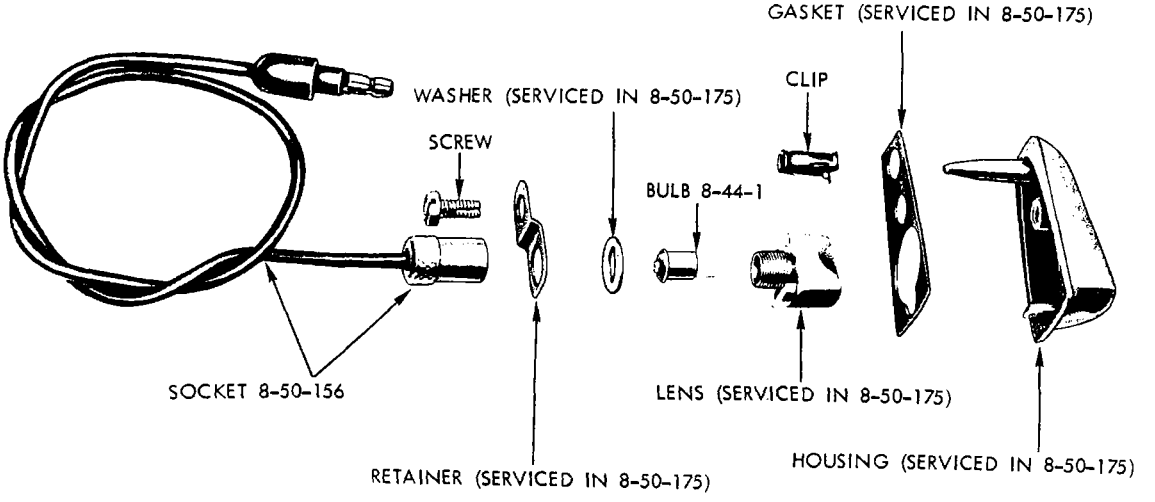

19a2962

FENDER TURN SIGNAL INDICATOR LAMP - BARRACUDA

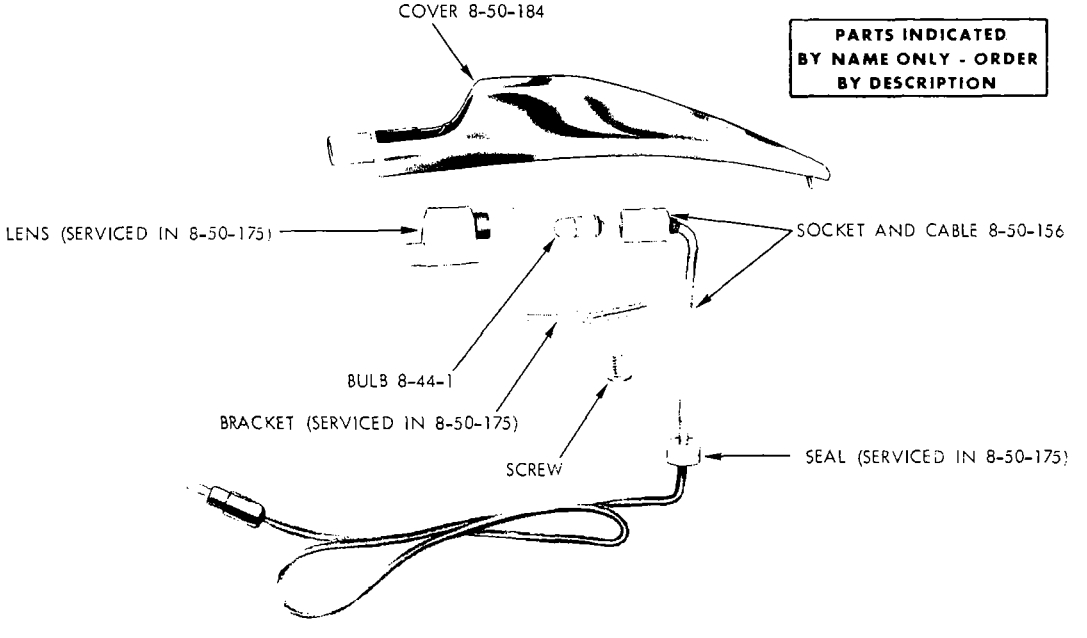

19a2444 **A**

FENDER TURN SIGNAL INDICATOR LAMP - CHRYSLER (EXCEPT STATION WAGON)

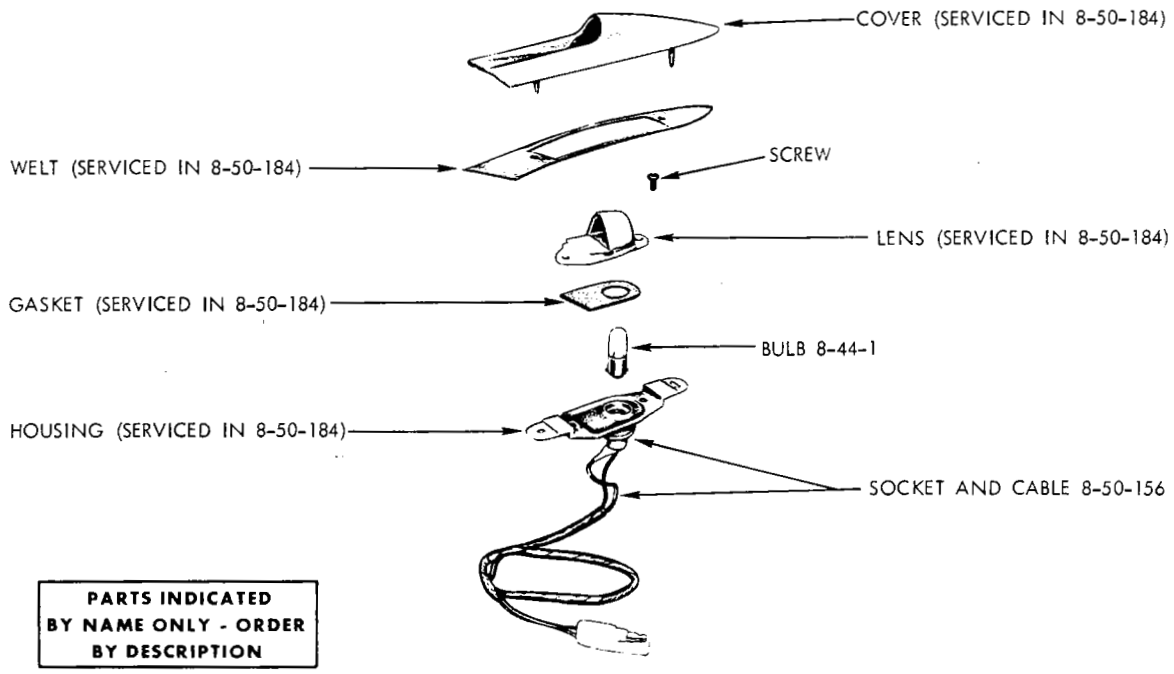

FRONT FENDER TURN SIGNAL INDICATOR LAMP - IMPERIAL

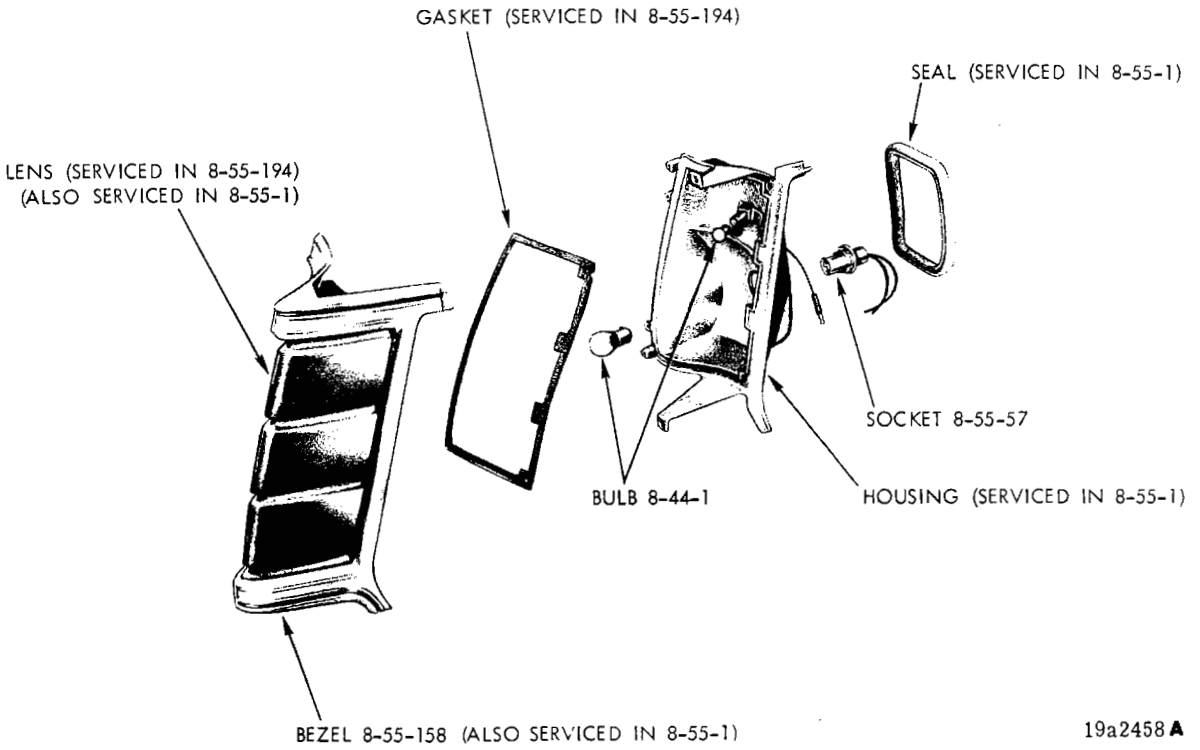

QUARTER PANEL TAIL, STOP AND TURN SIGNAL LAMP - CHRYSLER STATION WAGON

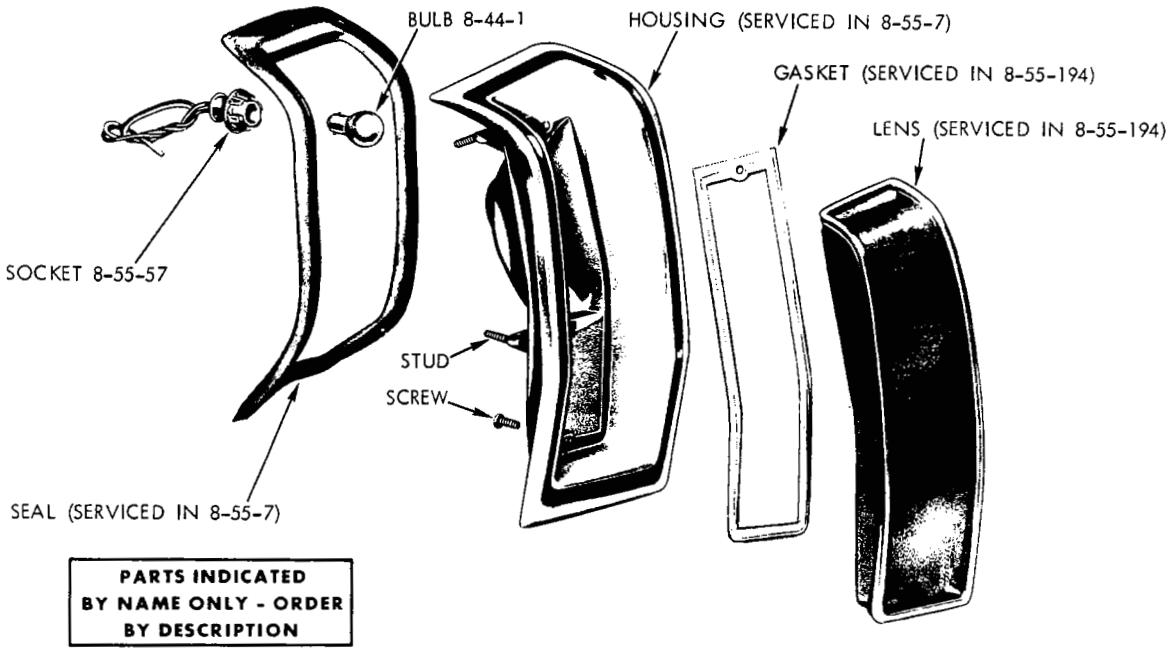

TAIL, STOP AND TURN SIGNAL LAMP - VALIANT 4 DOOR SEDAN (1970)

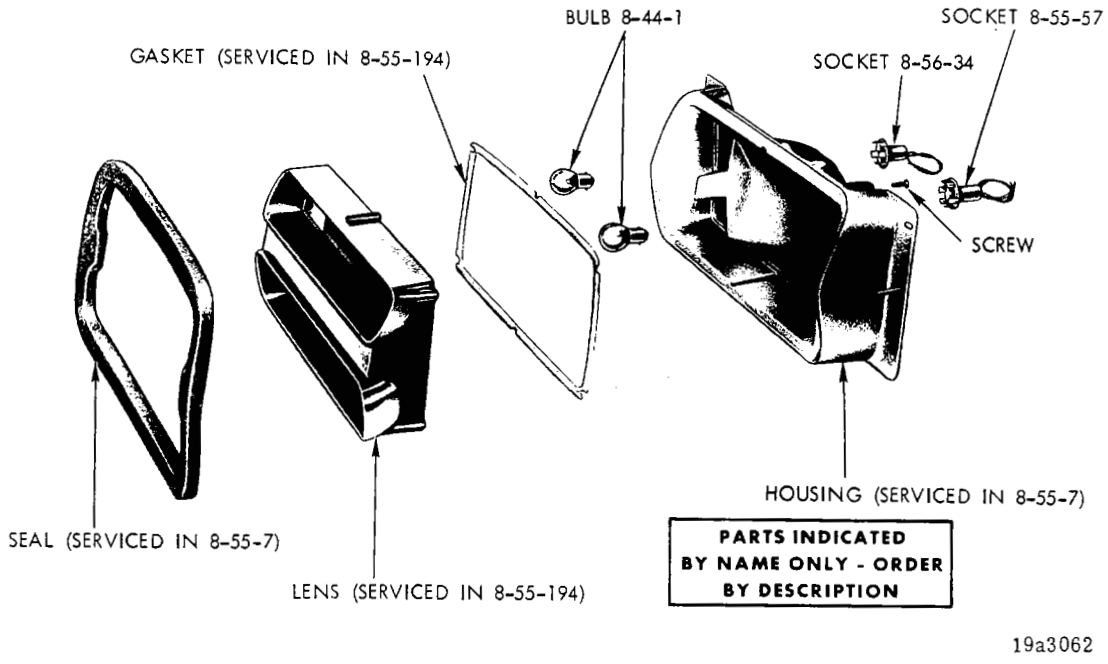

TAIL, STOP, TURN SIGNAL AND BACK-UP LAMP - VALIANT DUSTER AND DUSTER 340

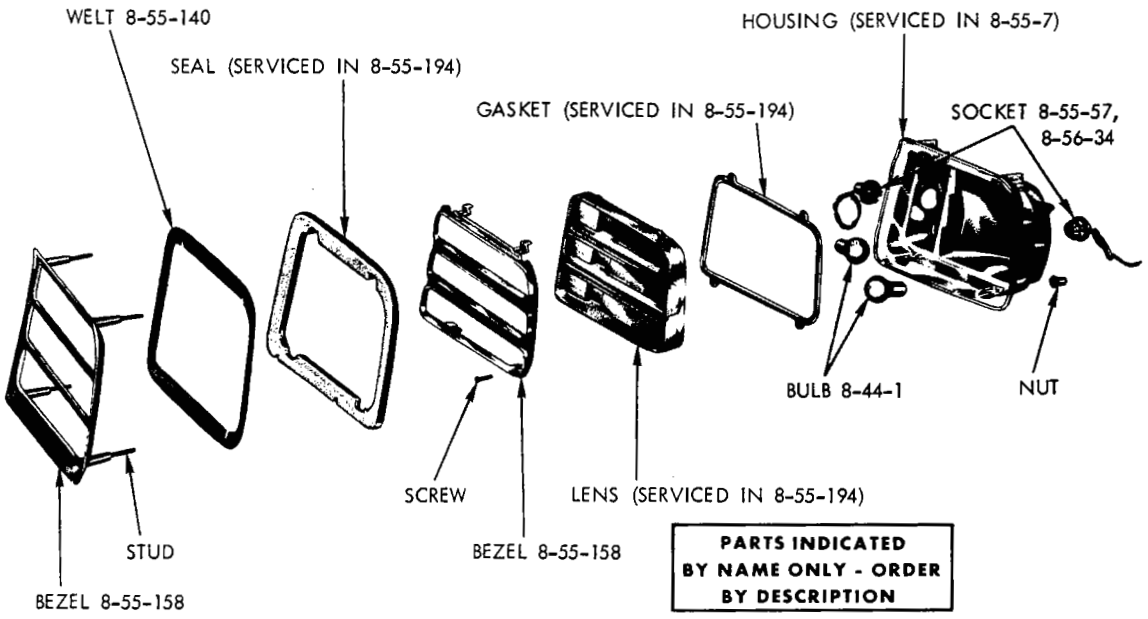

TAIL, STOP, TURN SIGNAL AND BACK-UP LAMP - BARRACUDA

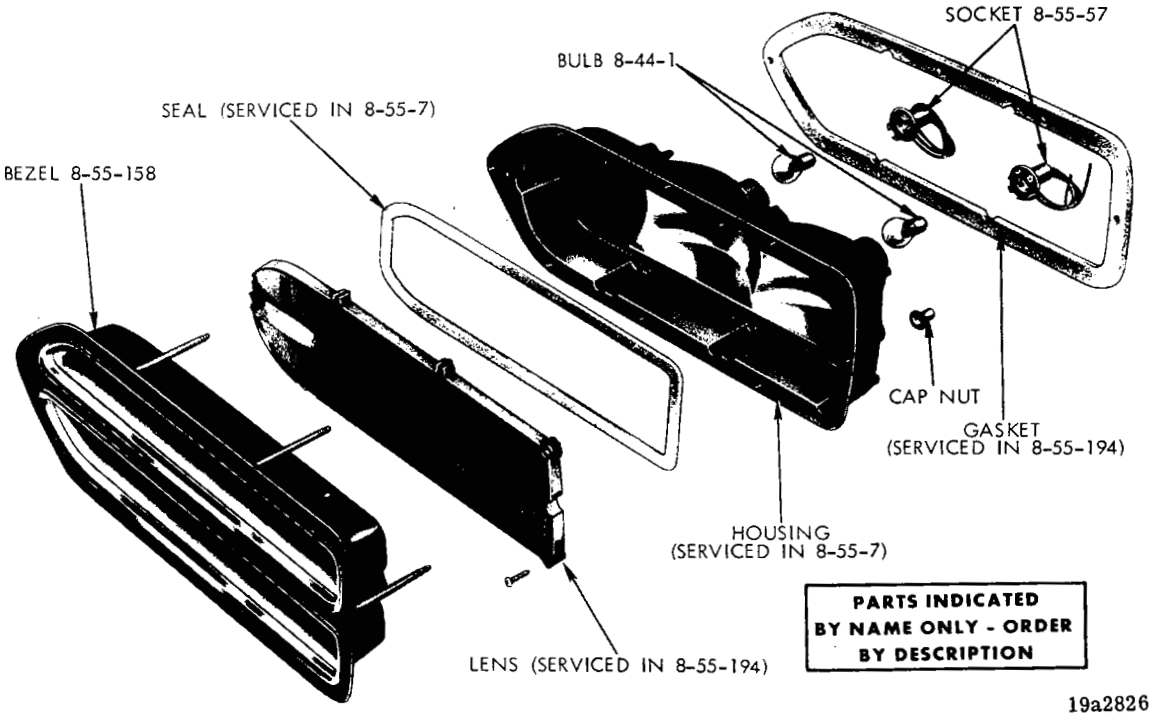

TAIL, STOP AND TURN SIGNAL LAMP - BELVEDERE 2 DOOR HARDTOP AND 4 DOOR SPORT SATELLITE AND GTX

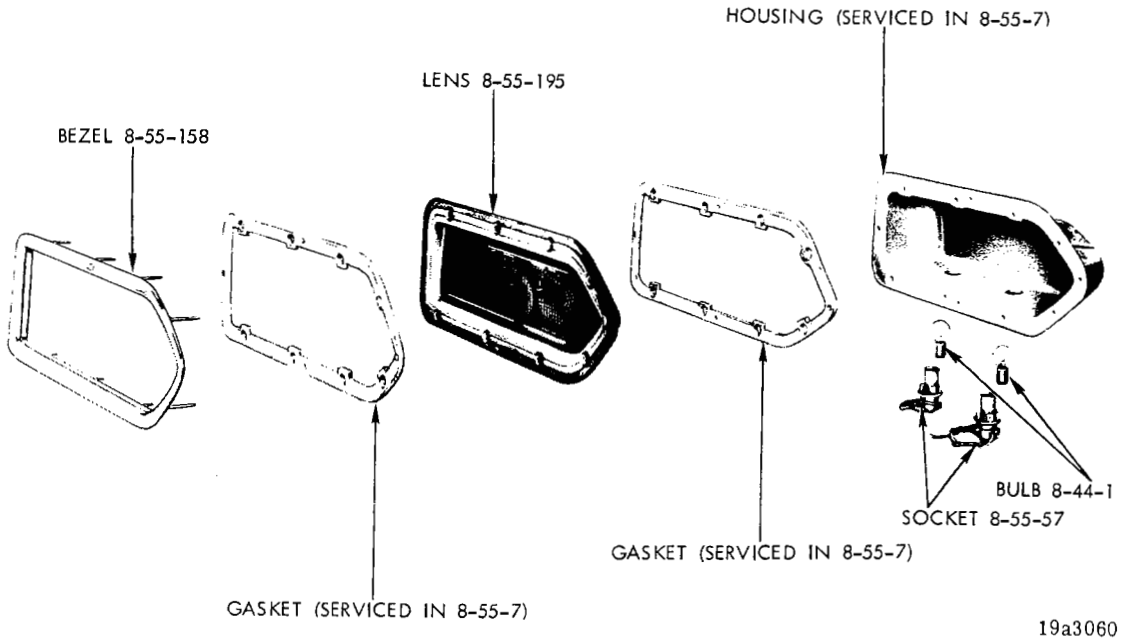

TAIL, STOP AND TURN SIGNAL LAMP - BELVEDERE EXCEPT ROAD RUNNER, SPORT SATELLITE AND GTX

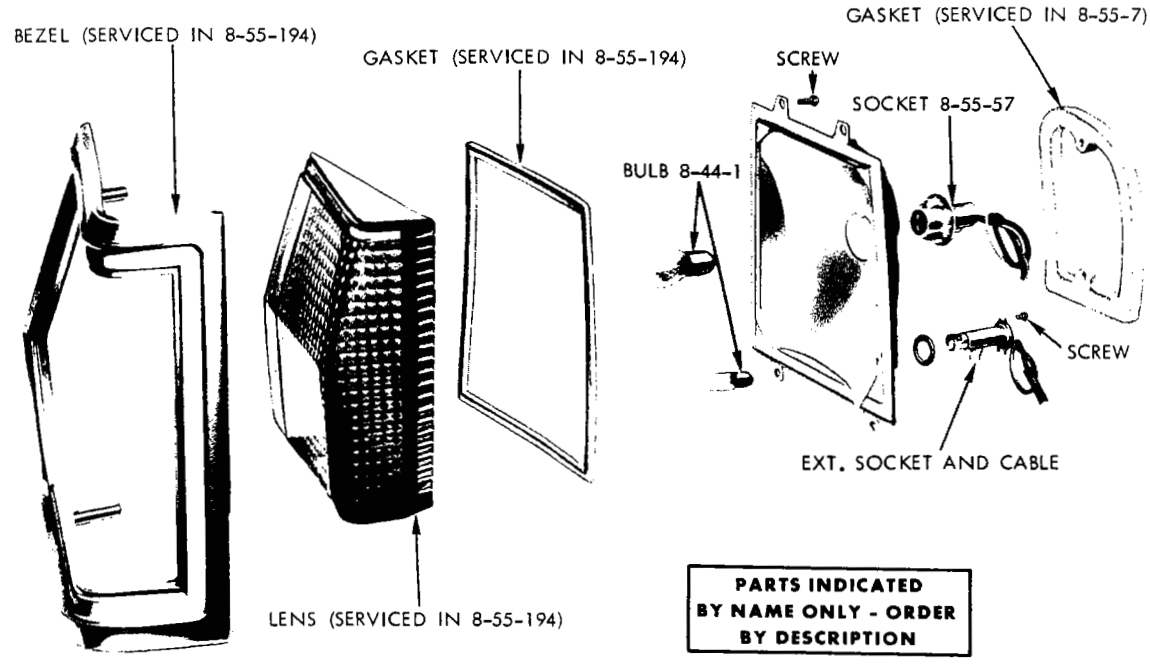

TAIL, STOP, TURN SIGNAL AND SIDE MARKER LAMP - BELVEDERE STATION WAGON

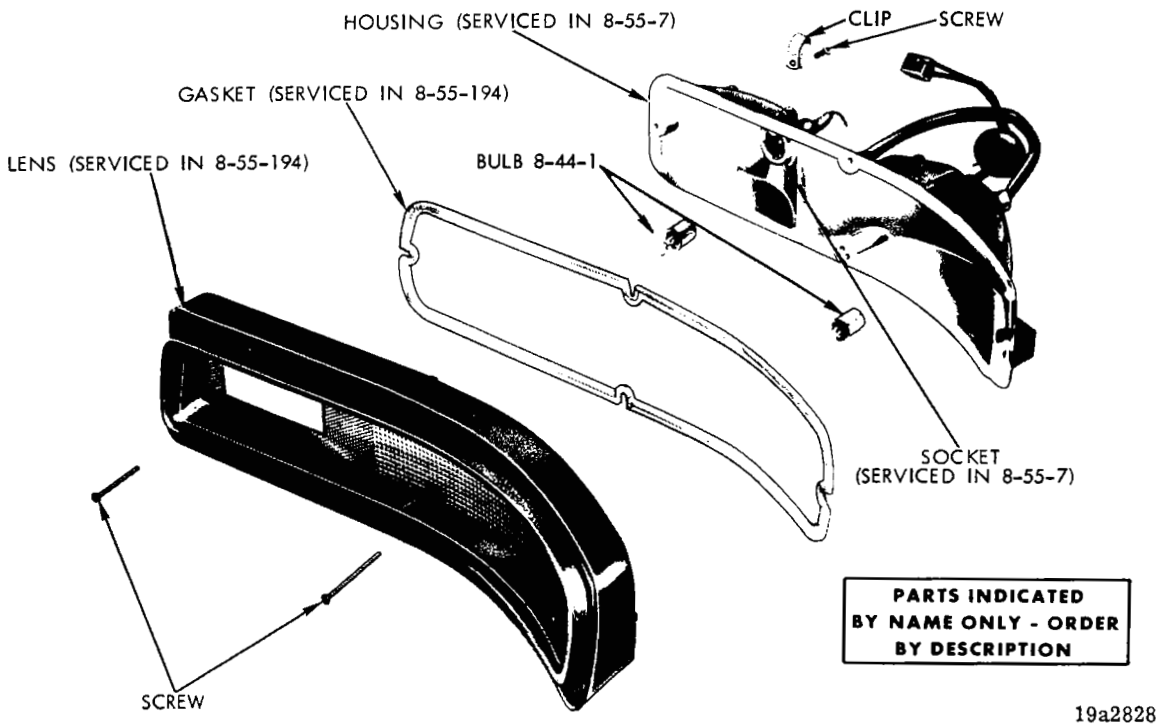

TAIL, STOP, TURN SIGNAL AND BACK-UP LAMP - PLYMOUTH FURY I AND II
2 DOOR SEDAN, 2 DOOR HARDTOP AND 4 DOOR SEDAN

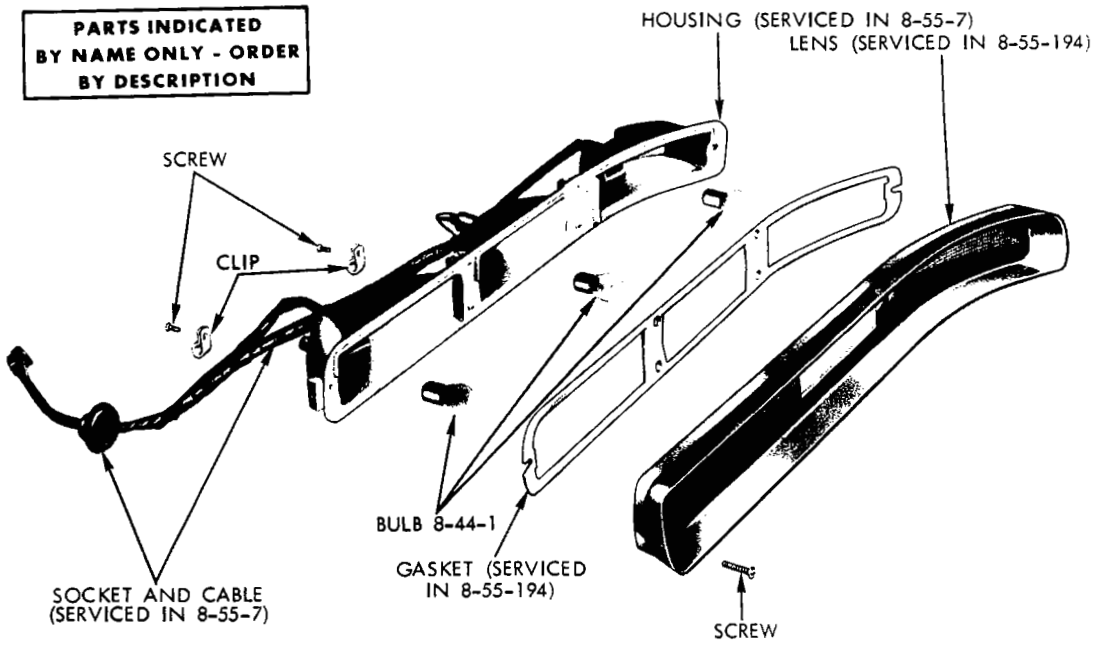

TAIL, STOP, TURN SIGNAL AND BACK-UP LAMP - PLYMOUTH FURY III
AND SPORT FURY (EXCEPT STATION WAGON)

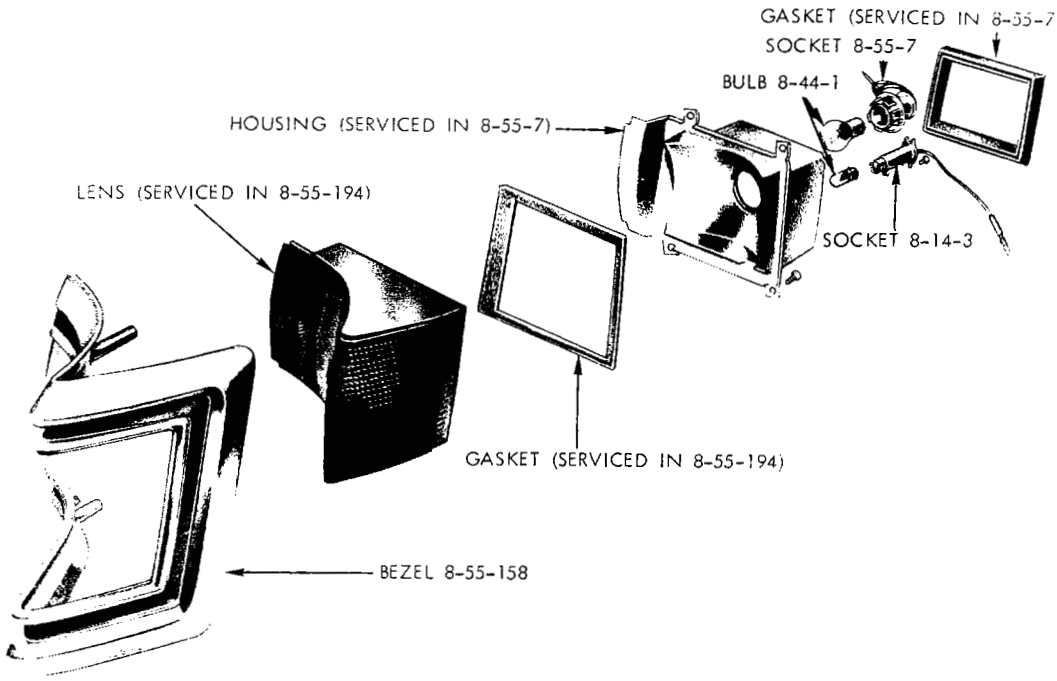

TAIL, STOP, TURN SIGNAL AND SIDE MARKER LAMP - PLYMOUTH FURY (STATION WAGON)

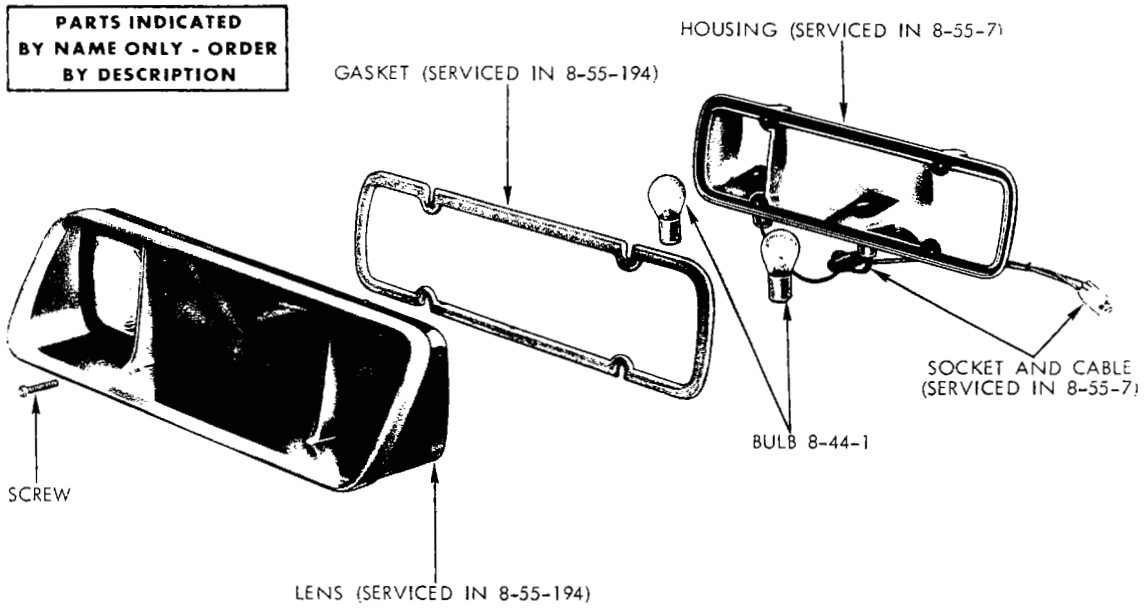

19a2921

TAIL, STOP, TURN SIGNAL AND BACK-UP LAMP - DART

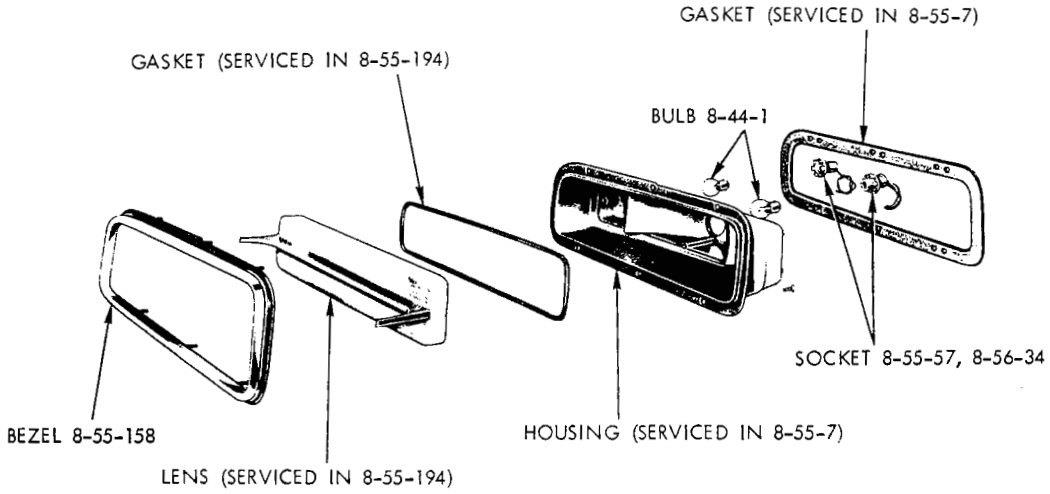

19a2823

TAIL, STOP, TURN SIGNAL AND BACK-UP LAMP - CORONET EXCEPT STATION WAGON, CORONET DELUXE, SUPER BEE AND CORONET 440

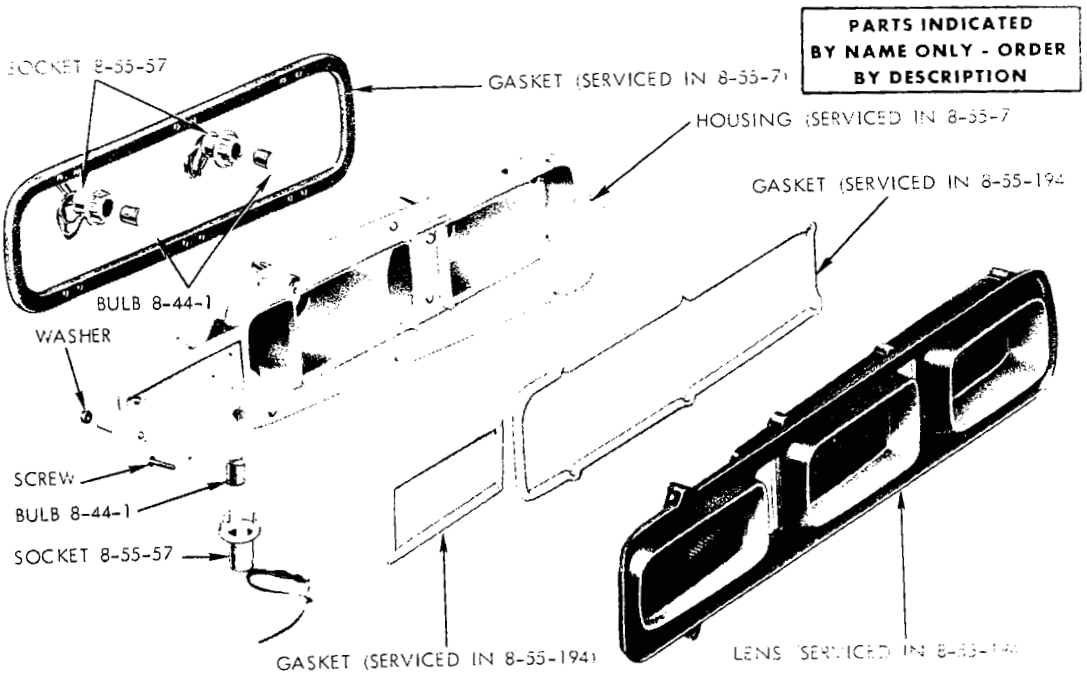

19a282

TAIL, STOP, TURN SIGNAL AND BACK-UP LAMP - CORONET 500 AND CORONET R/T 2 DOOR HARDTOP, CONVERTIBLE COUPE AND 4 DOOR SEDAN

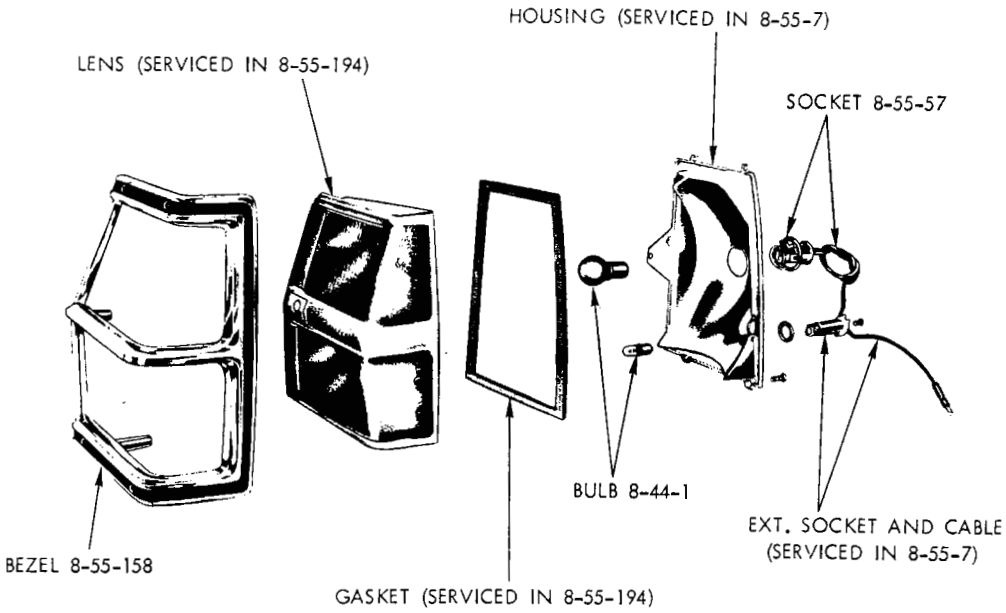

TAIL, STOP, TURN SIGNAL AND SIDE MARKER LAMP - CORONET STATION WAGON

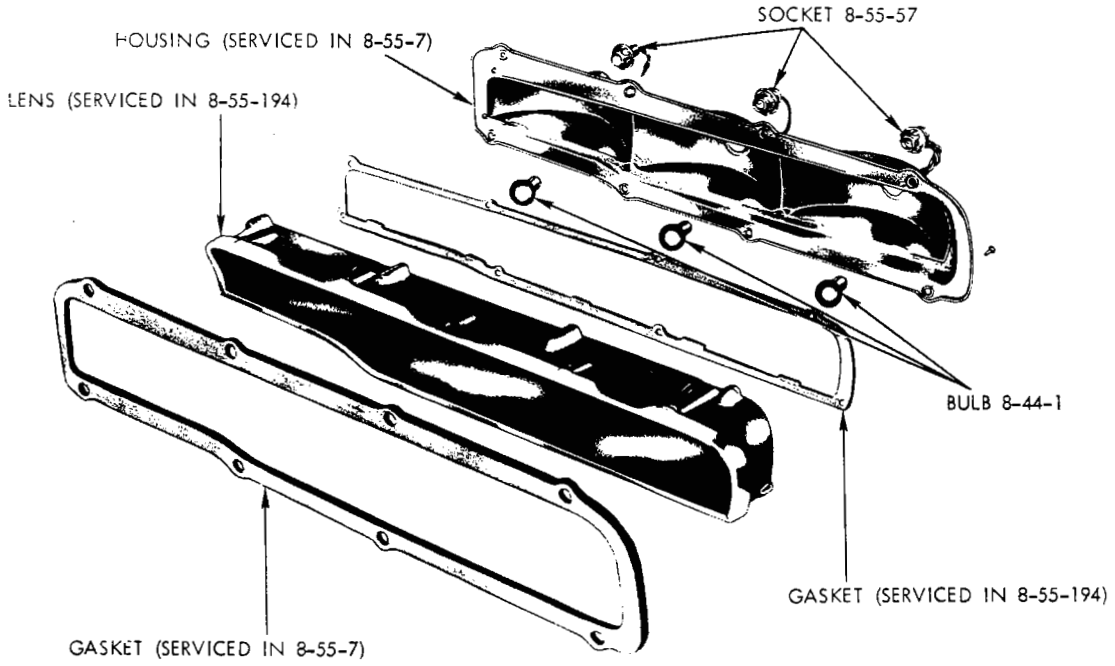

TAIL, STOP AND TURN SIGNAL LAMP - CHARGER AND CHARGER R/T

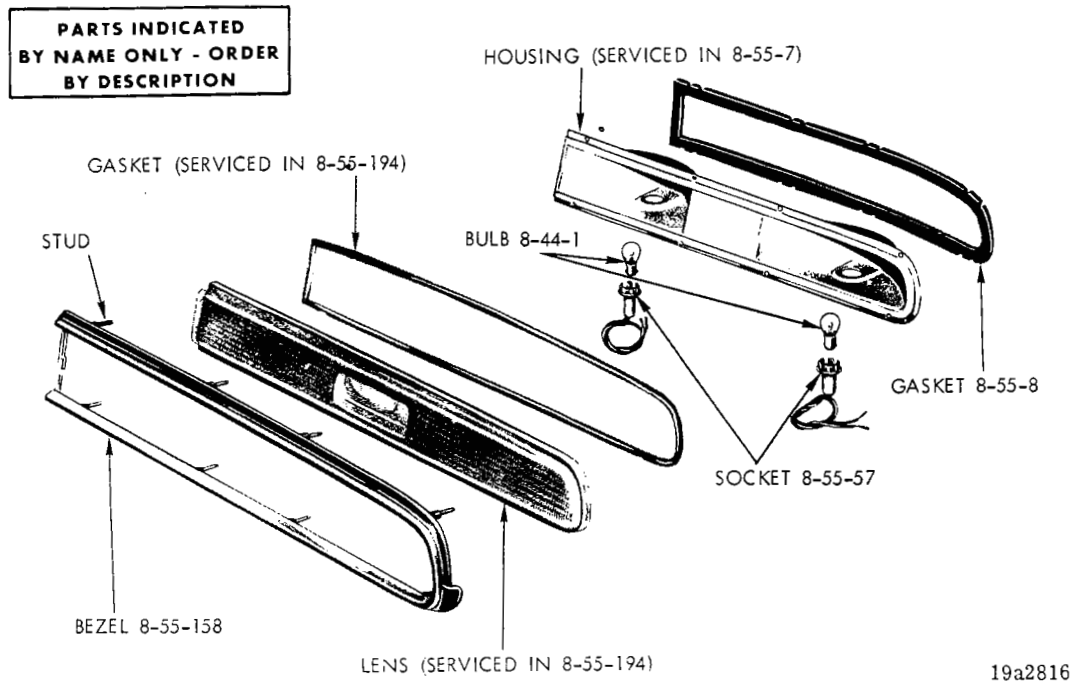

TAIL, STOP AND TURN SIGNAL LAMP - CHALLENGER

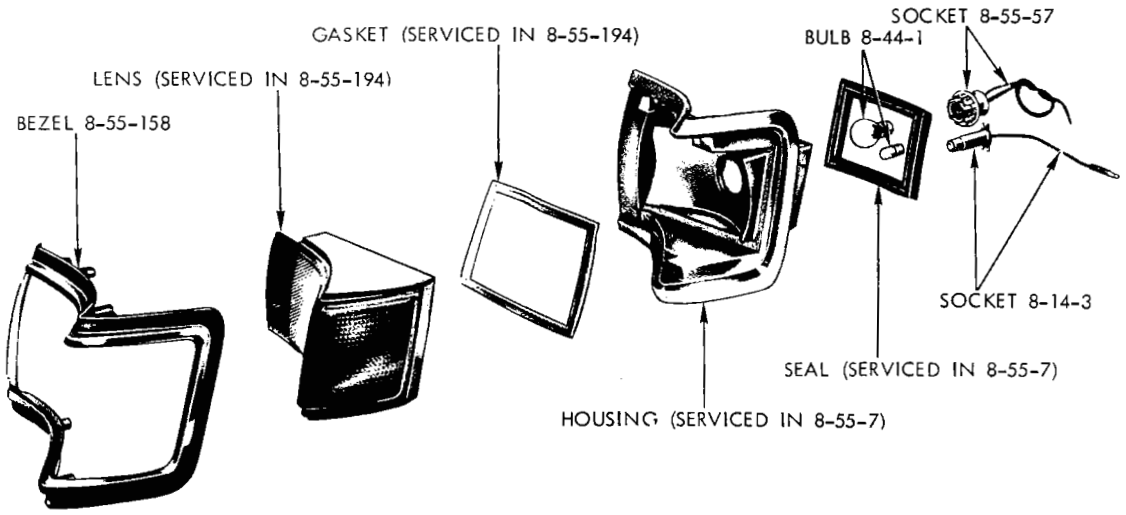

TAIL, STOP, TURN SIGNAL AND SIDE MARKER LAMP - DODGE (STATION WAGON)

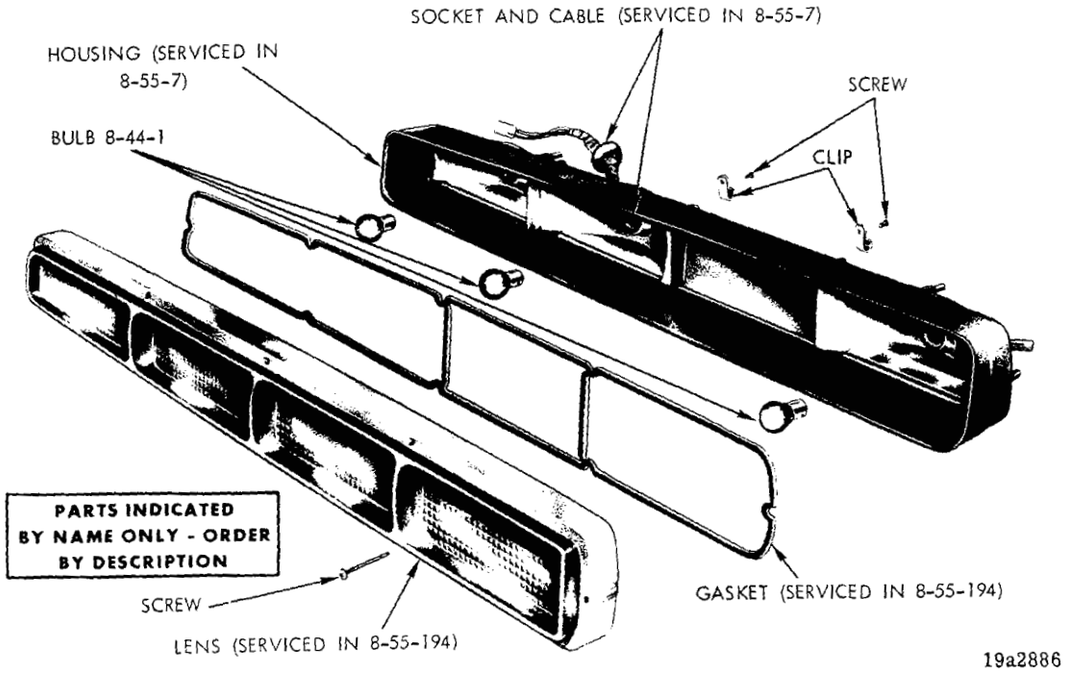

TAIL, STOP, TURN SIGNAL AND BACK-UP LAMP - DODGE POLARA AND DODGE POLARA CUSTOM (EXCEPT STATION WAGON)

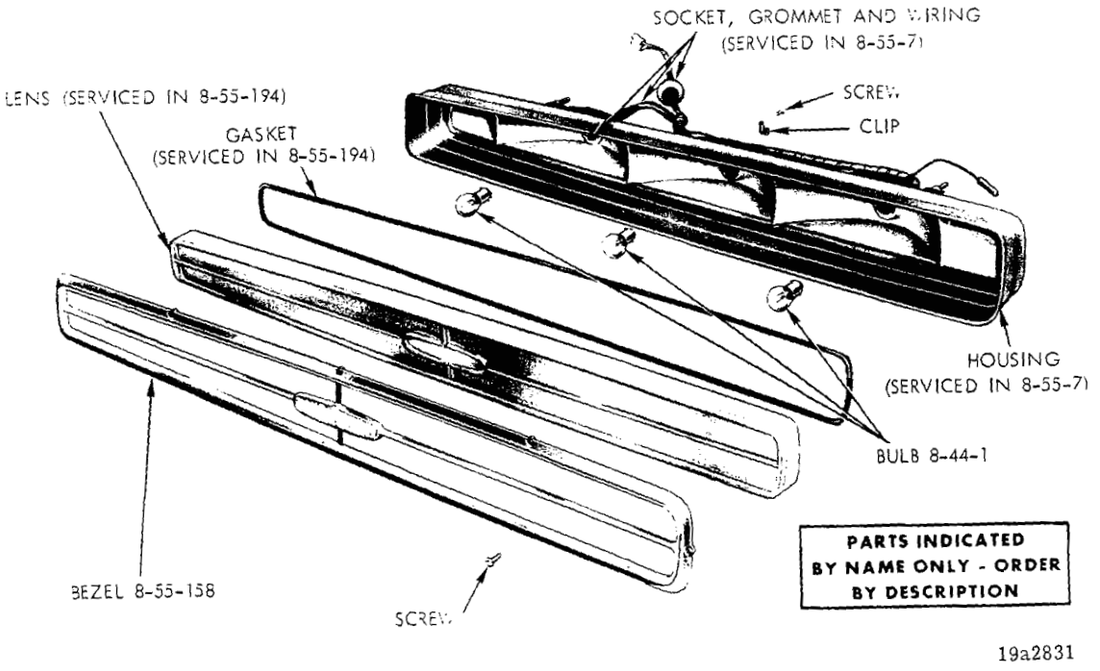

TAIL, STOP AND TURN SIGNAL LAMP - DODGE MONACO AND MONACO 500 (EXCEPT STATION WAGON)

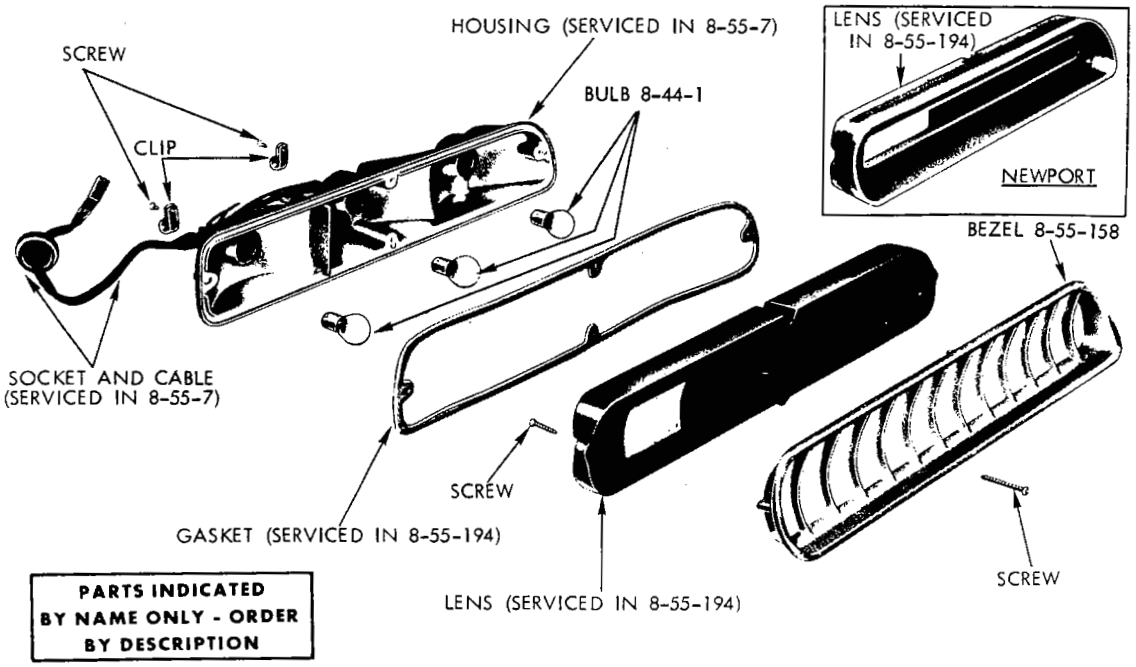

TAIL, STOP, TURN SIGNAL AND BACK-UP LAMP - CHRYSLER NEWPORT AND CUSTOM NEWPORT

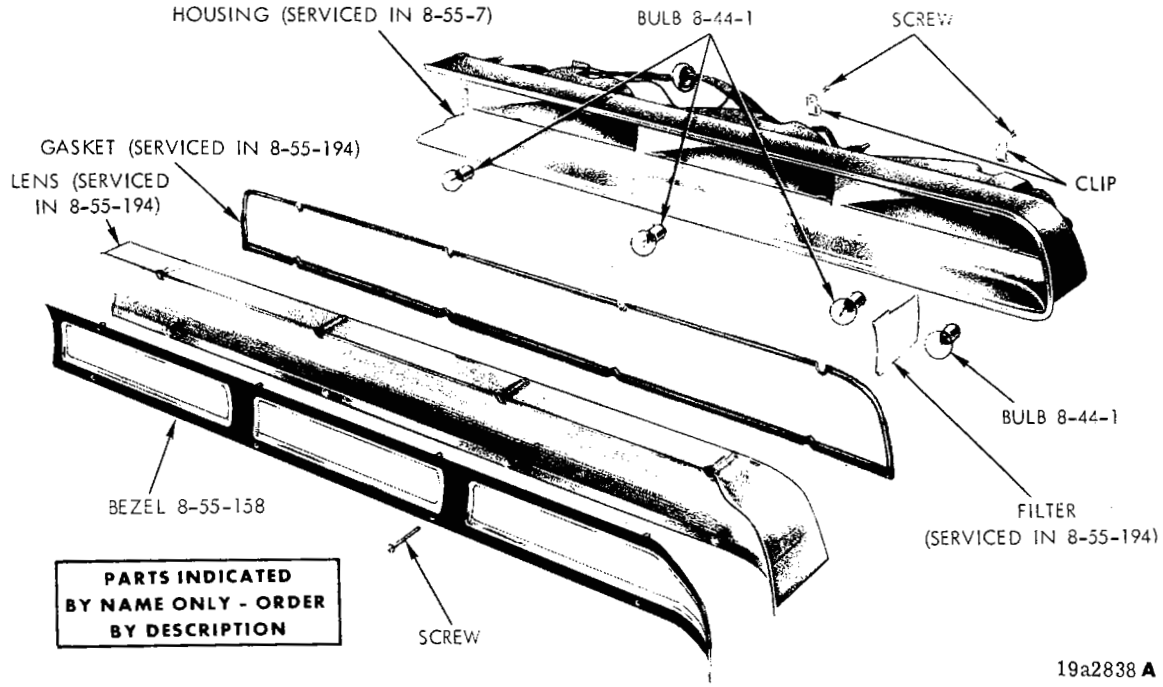

TAIL, STOP, TURN SIGNAL AND BACK-UP LAMP - CHRYSLER 300

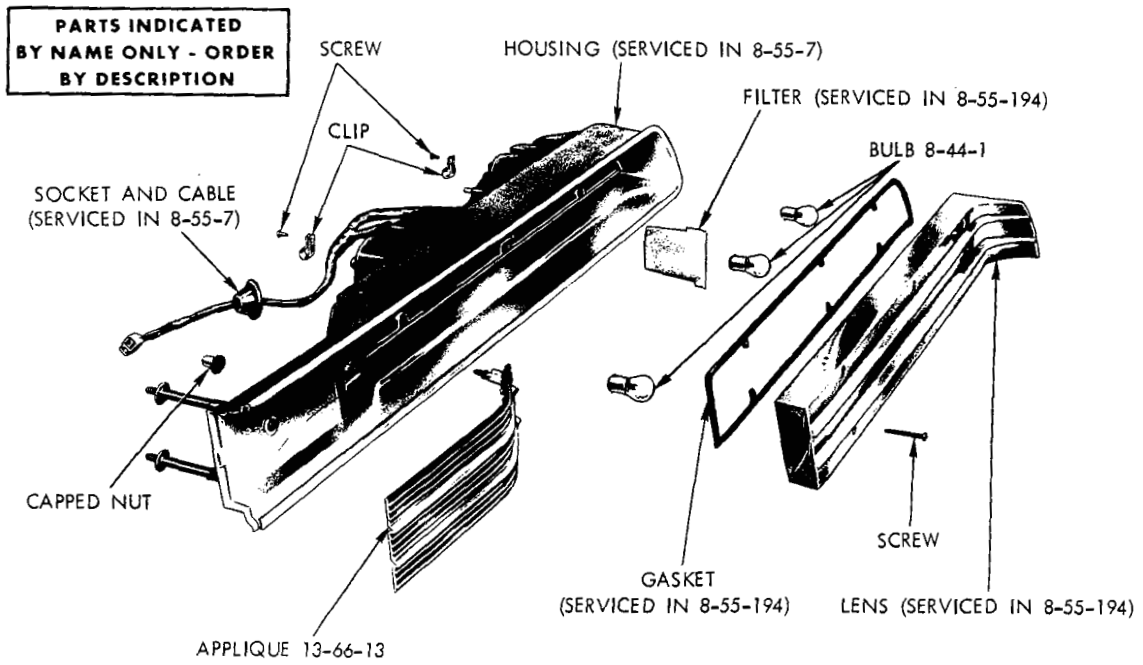

TAIL, STOP, TURN SIGNAL AND BACK-UP LAMP - CHRYSLER NEW YORKER

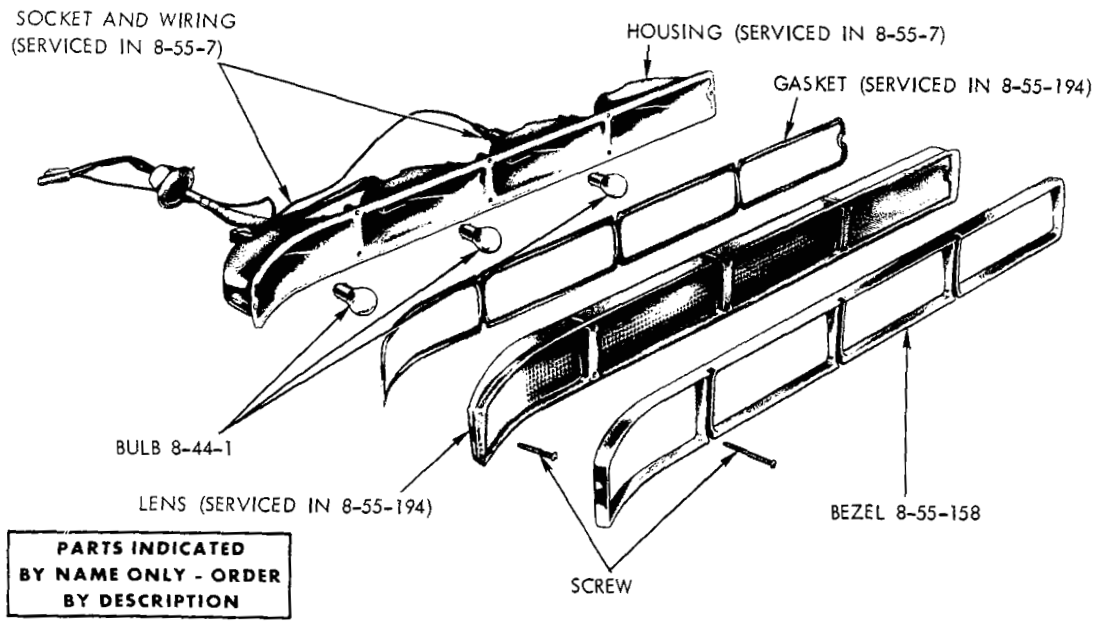

TAIL, STOP AND TURN SIGNAL LAMP - IMPERIAL

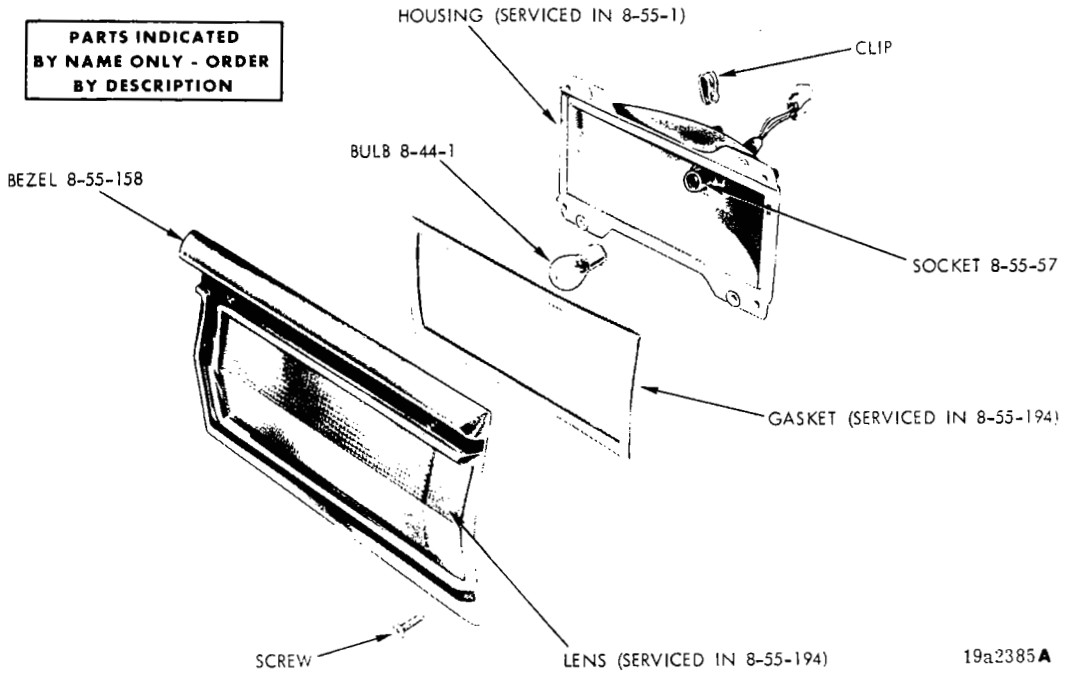

TAILGATE TAIL, STOP AND TURN SIGNAL LAMP - PLYMOUTH (STATION WAGON)

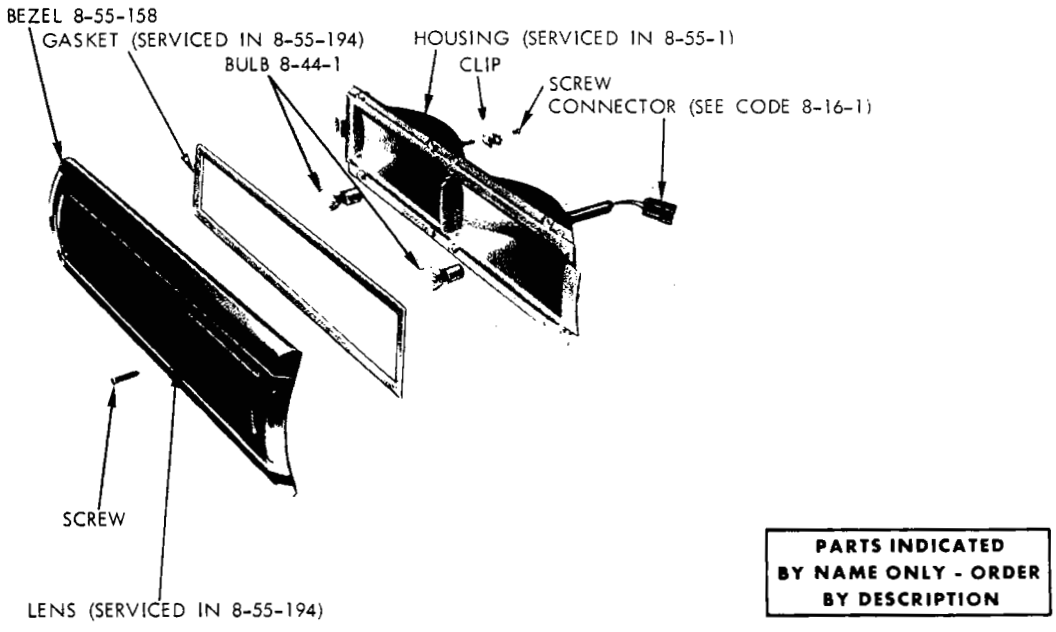

TAILGATE TAIL, STOP AND TURN SIGNAL LAMP - DODGE STATION WAGON

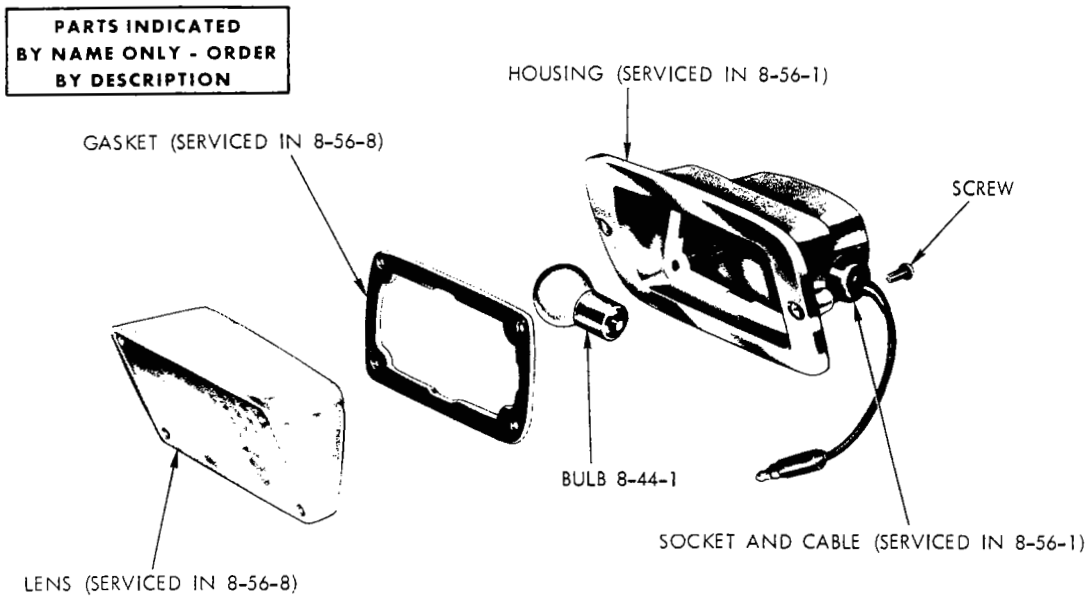

BACK-UP LAMP - VALIANT 4 DOORS

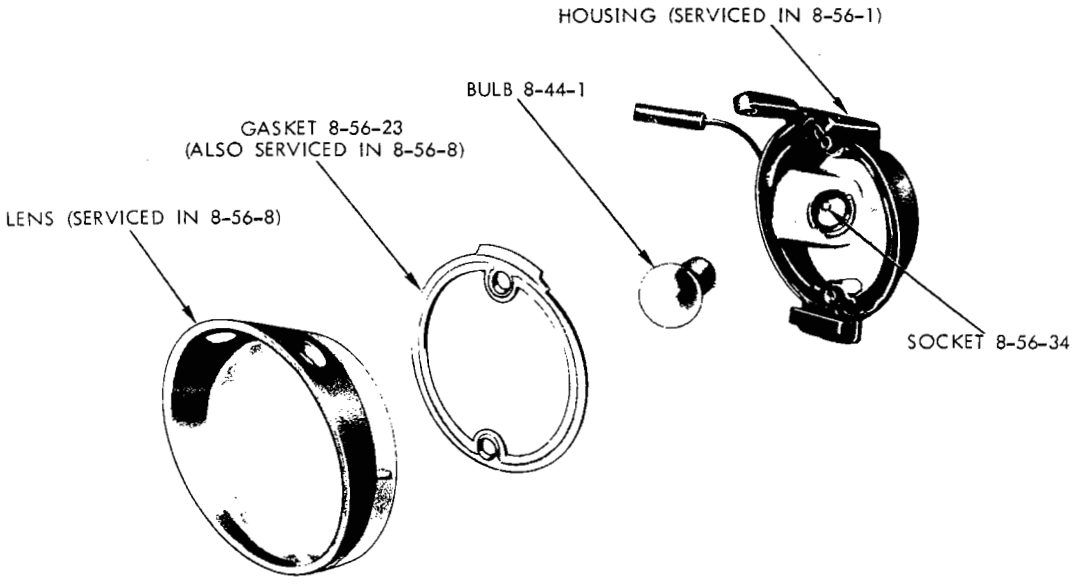

BACK-UP LAMP - BELVEDERE EXCEPT STATION WAGON

PARTS INDICATED BY NAME ONLY - ORDER BY DESCRIPTION

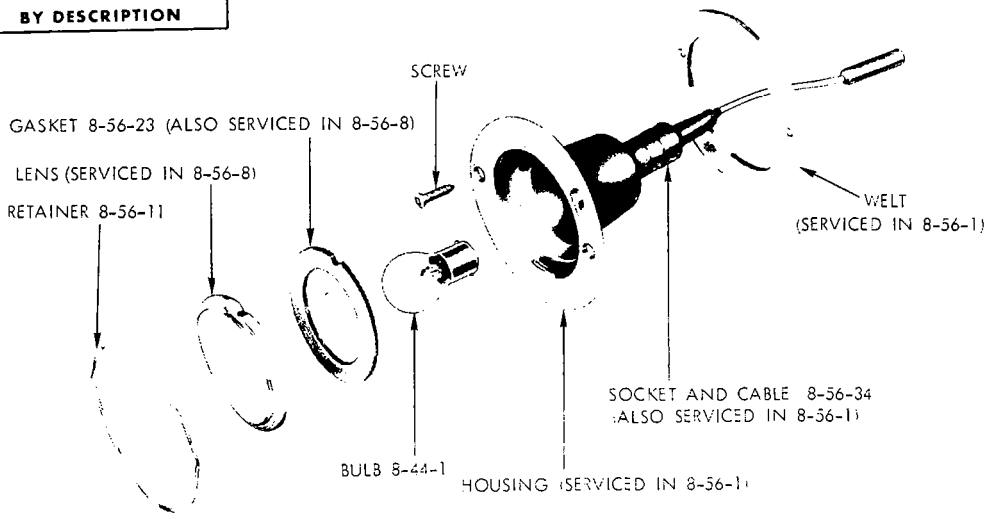

19a2090 C

BACK-UP LAMP - CHARGER AND CHARGER R/T AND ALL STATION WAGONS

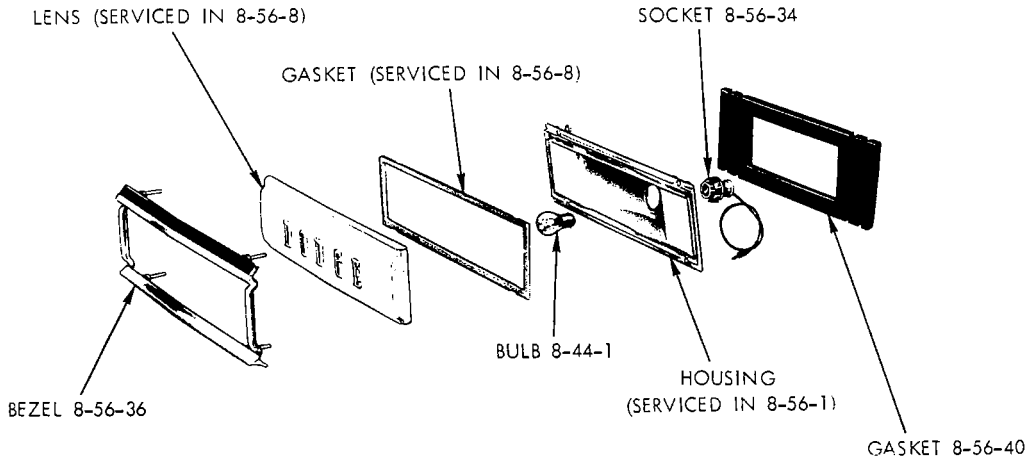

19a2818

BACK-UP LAMP - CHALLENGER

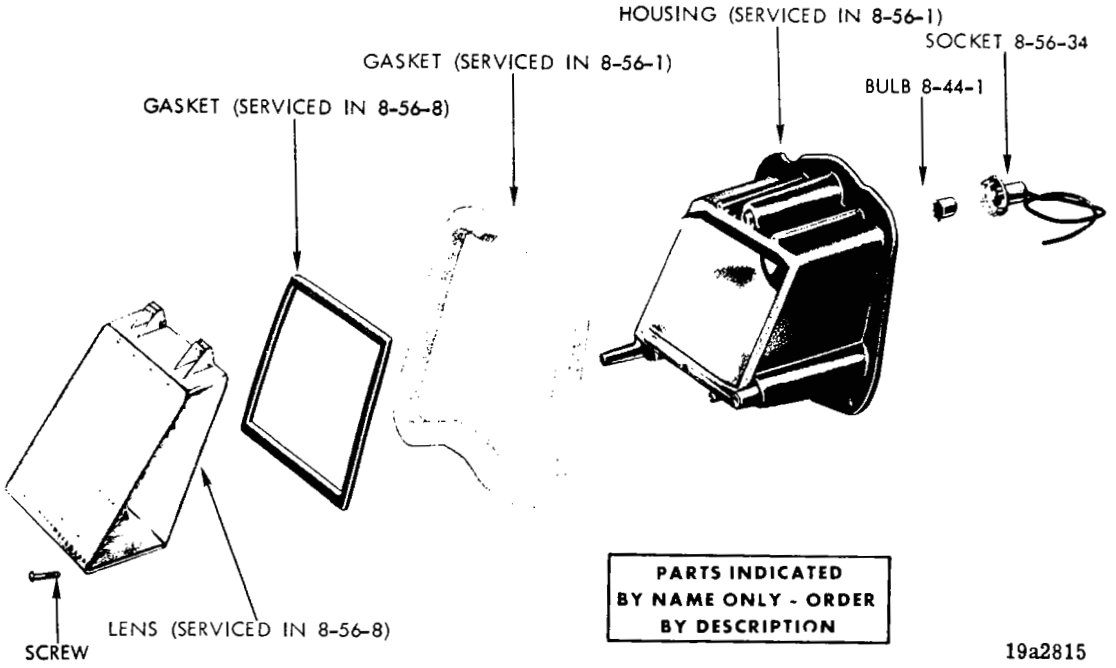

BACK-UP LAMP - DODGE MONACO AND MONACO 500 (EXCEPT STATION WAGON)

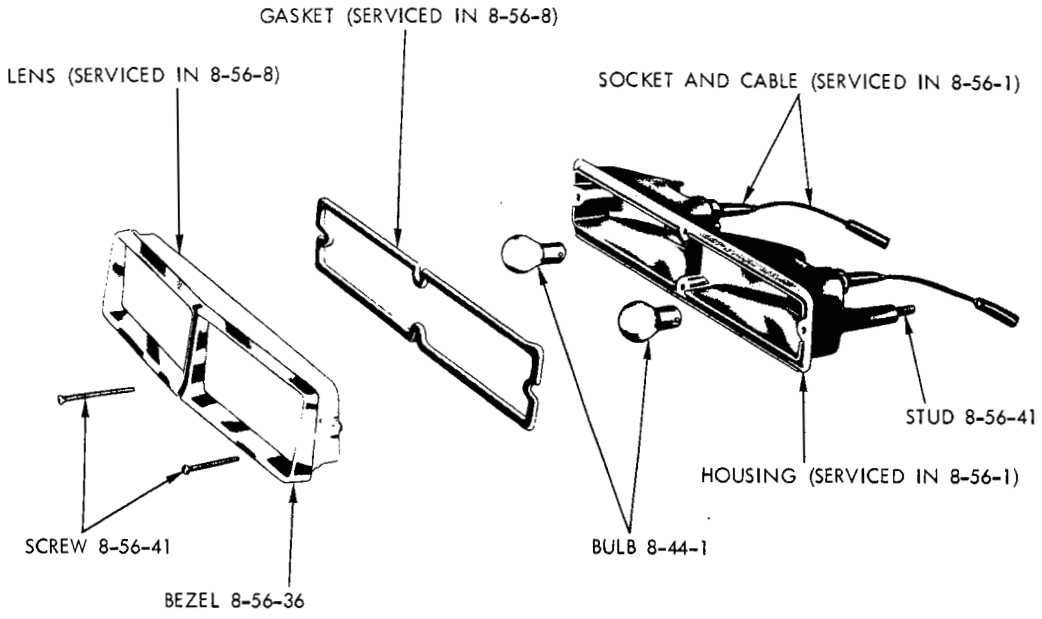

BACK-UP LAMP - IMPERIAL

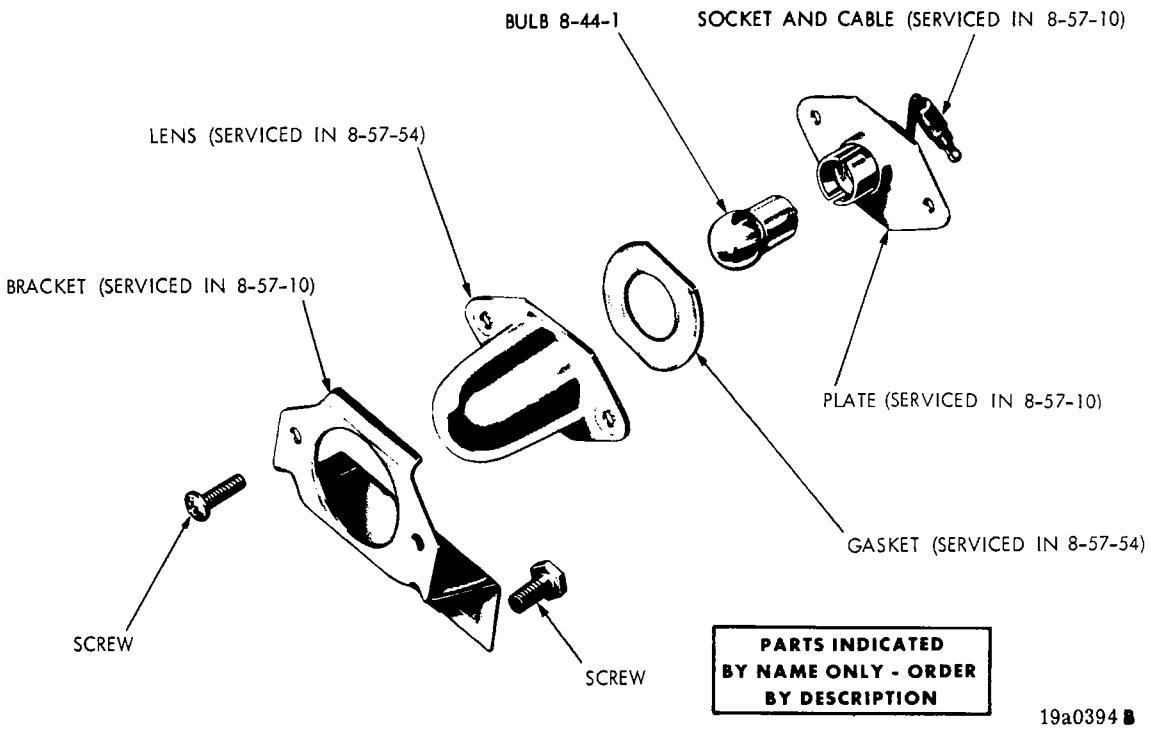

LICENSE LAMP - VALIANT

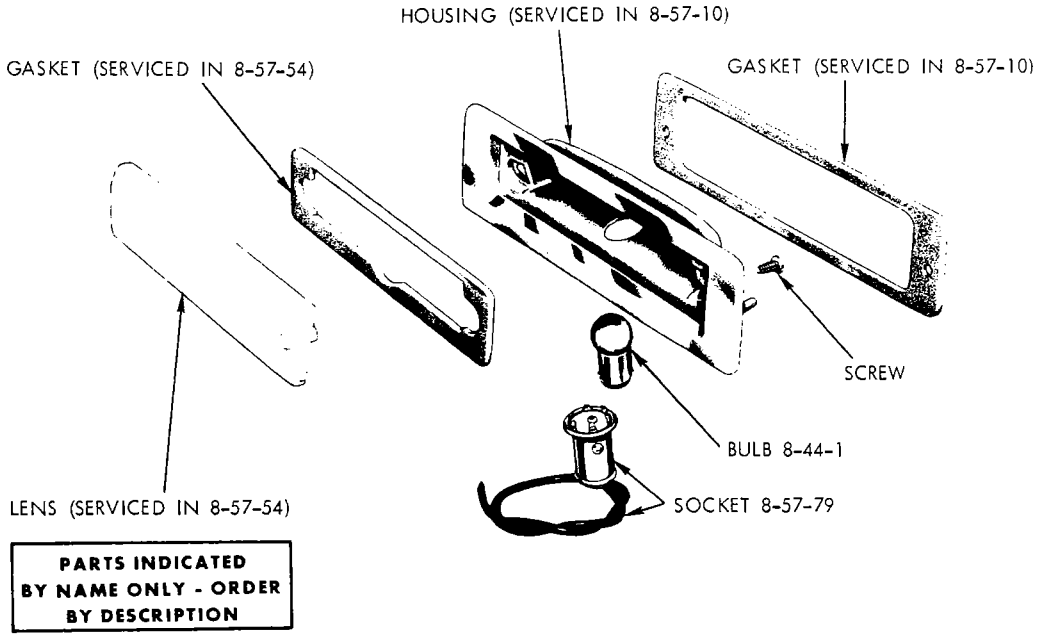

LICENSE LAMP - BARRACUDA

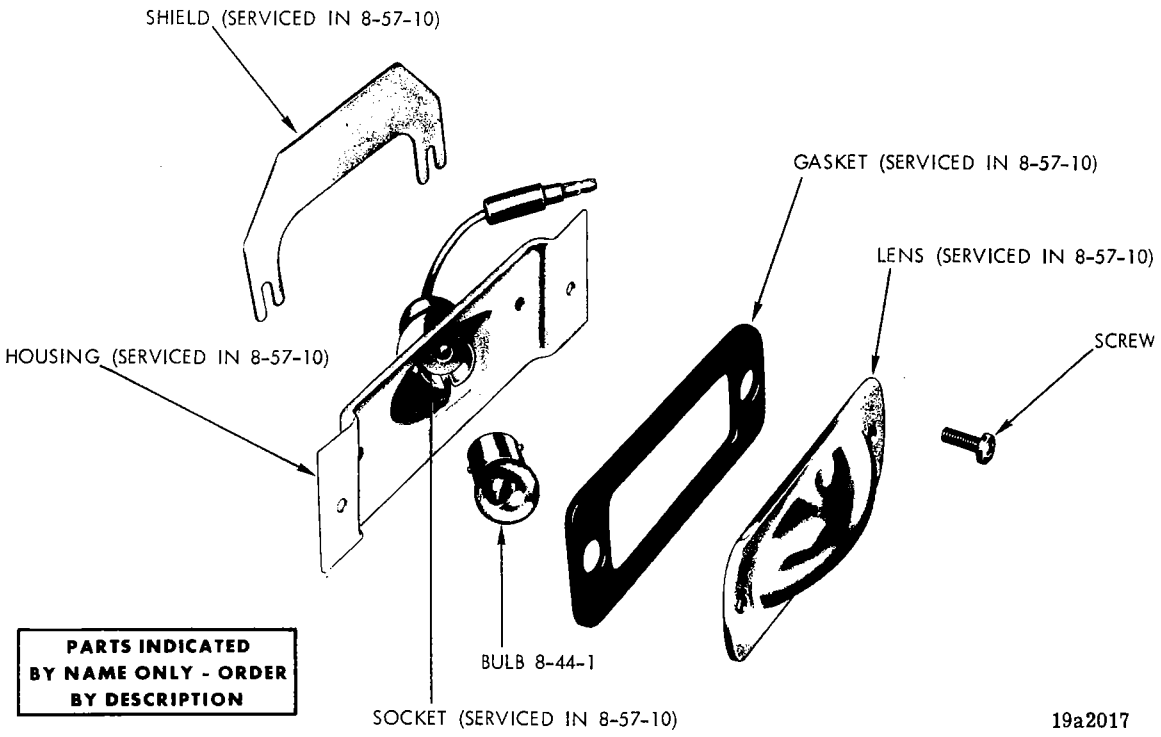

LICENSE LAMP - CHARGER AND CHARGER R/T

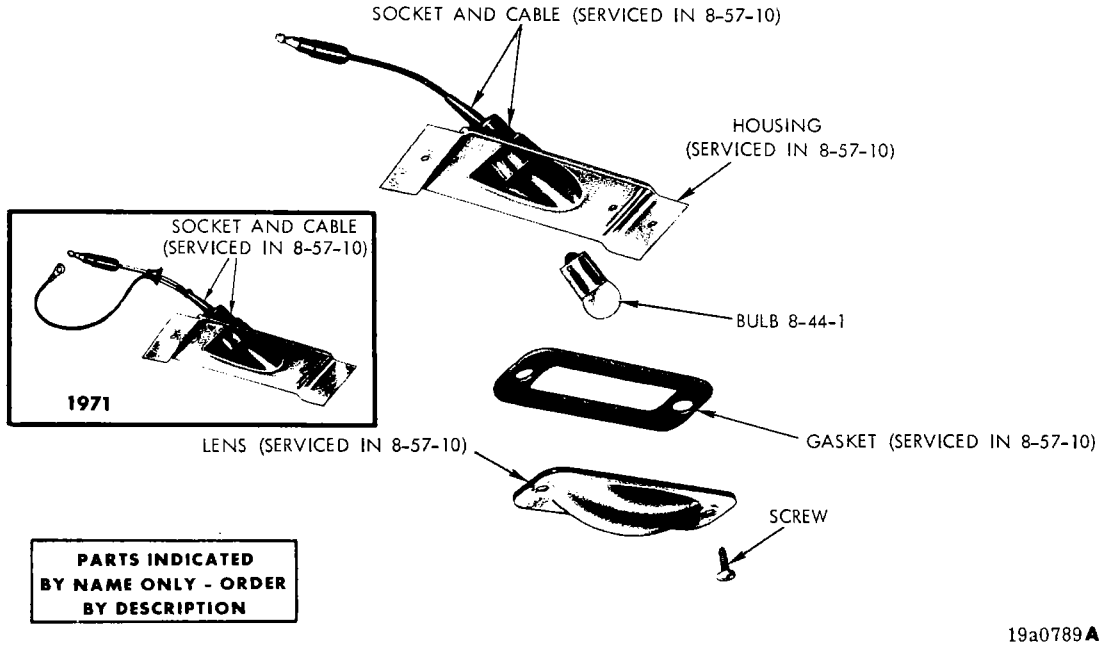

LICENSE LAMP - CHALLENGER, DART AND CORONET 2 DOOR SEDAN, 2 DOOR HARDTOP, CONVERTIBLE COUPE AND 4 DOOR SEDAN (1970-71)

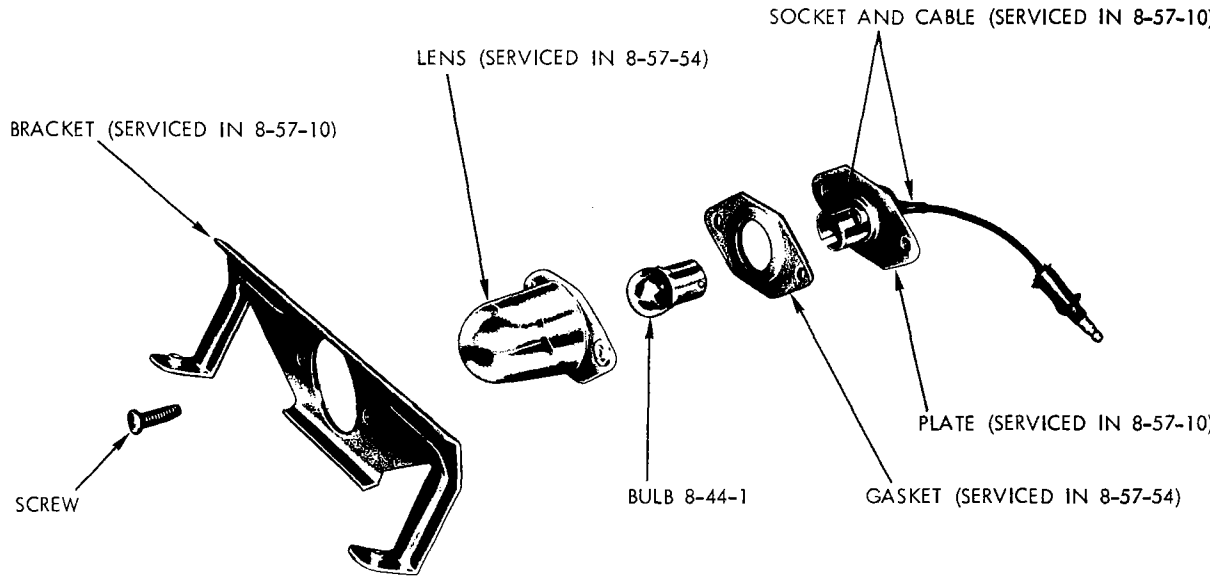

PARTS INDICATED BY NAME ONLY - ORDER BY DESCRIPTION

19a2010**A**

LICENSE LAMP - BELVEDERE, PLYMOUTH, DODGE, CHRYSLER AND IMPERIAL (EXCEPT STATION WAGON)

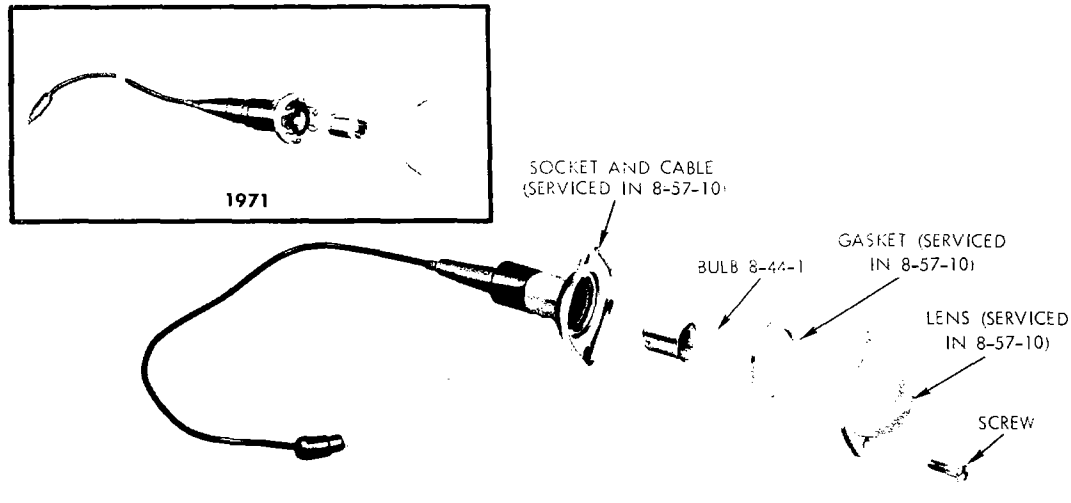

PARTS INDICATED BY NAME ONLY - ORDER BY DESCRIPTION

19a3155**A**

LICENSE LAMP - STATION WAGONS

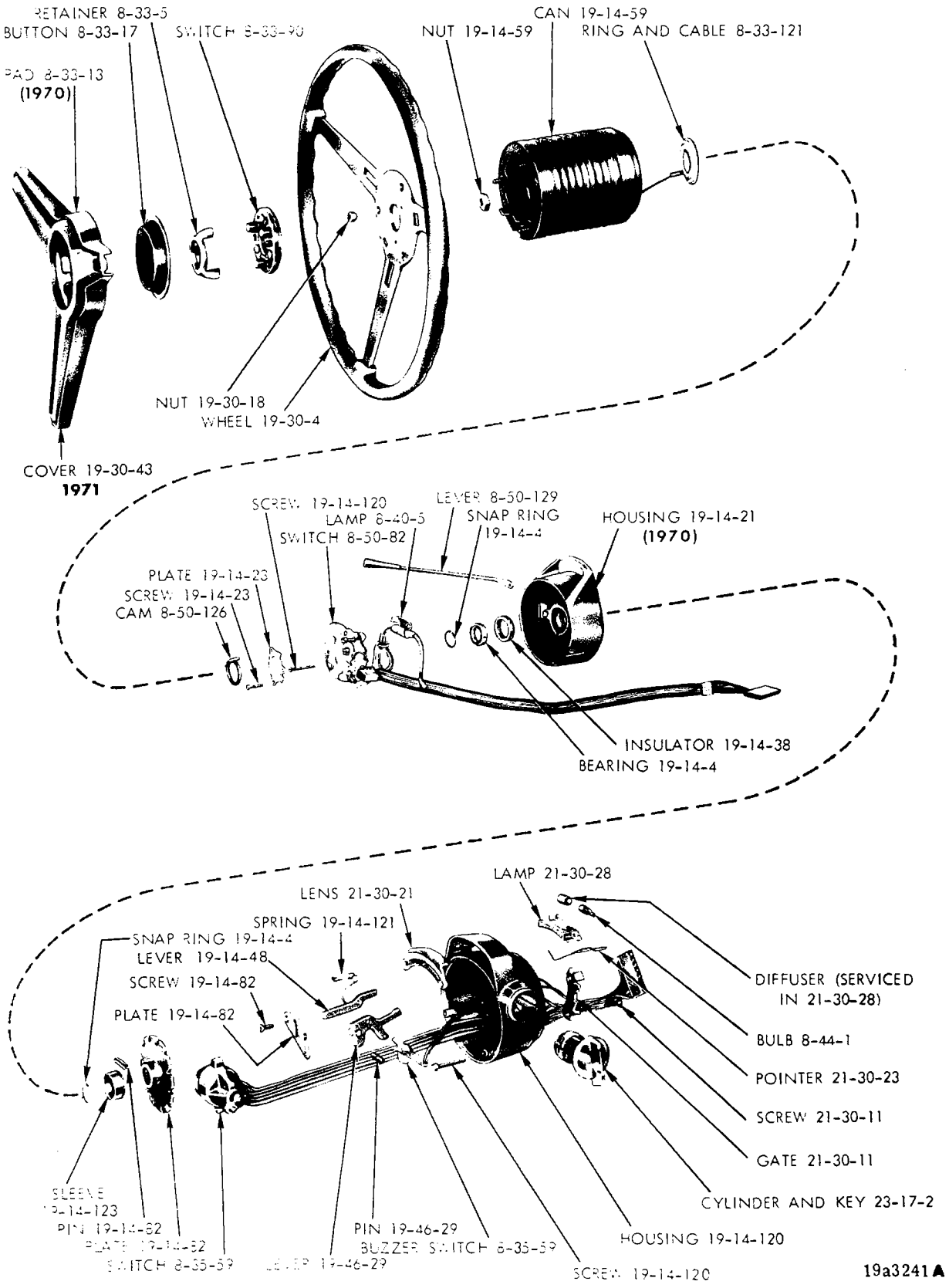

HORN AND TURN SIGNAL CONTROLS - BARRACUDA AND CHALLENGER

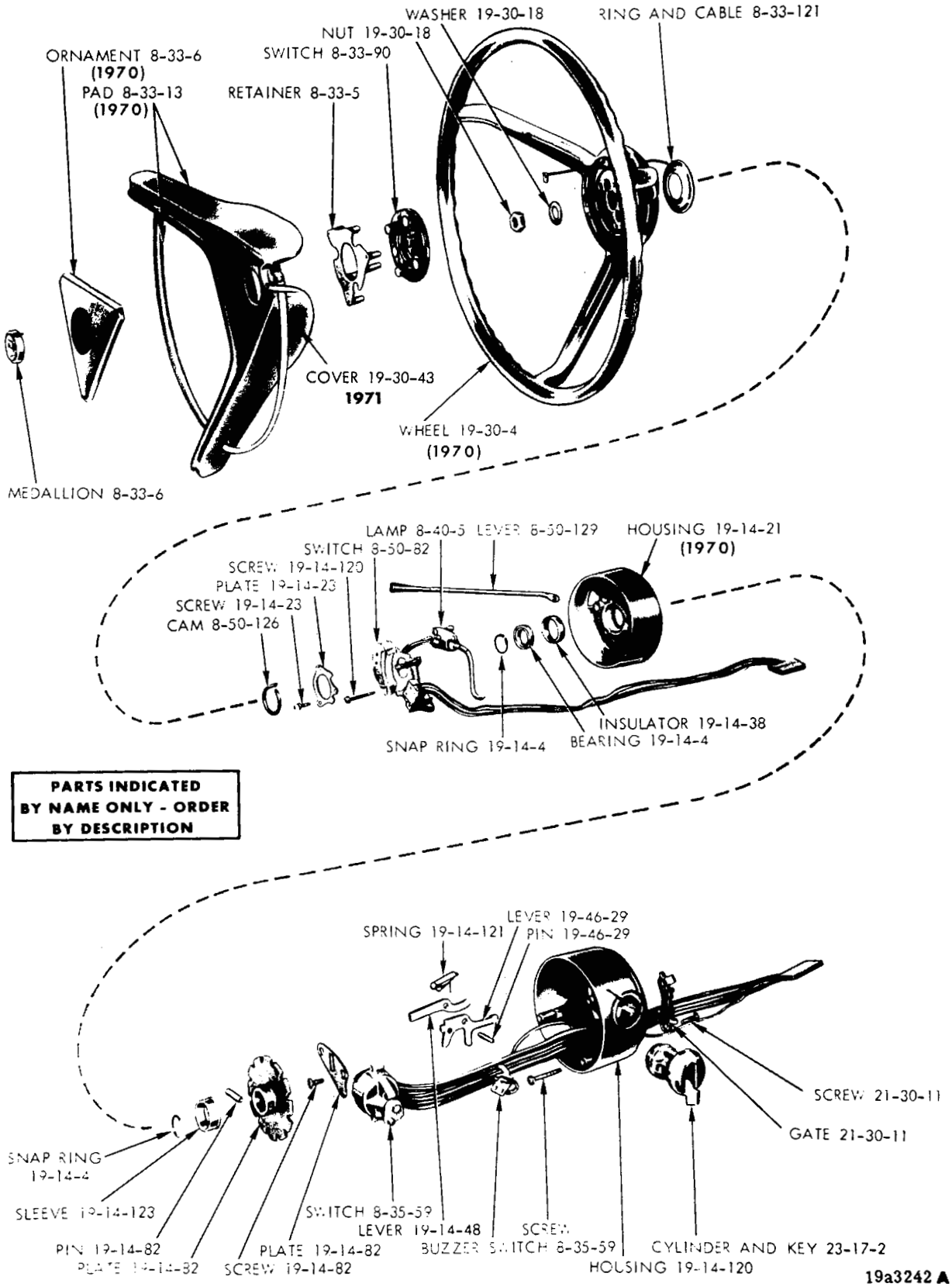

HORN AND TURN SIGNAL CONTROLS - WITHOUT TILT AND TILT-TELESCOPIC STEERING WHEEL - PLYMOUTH, DODGE, CHRYSLER AND IMPERIAL

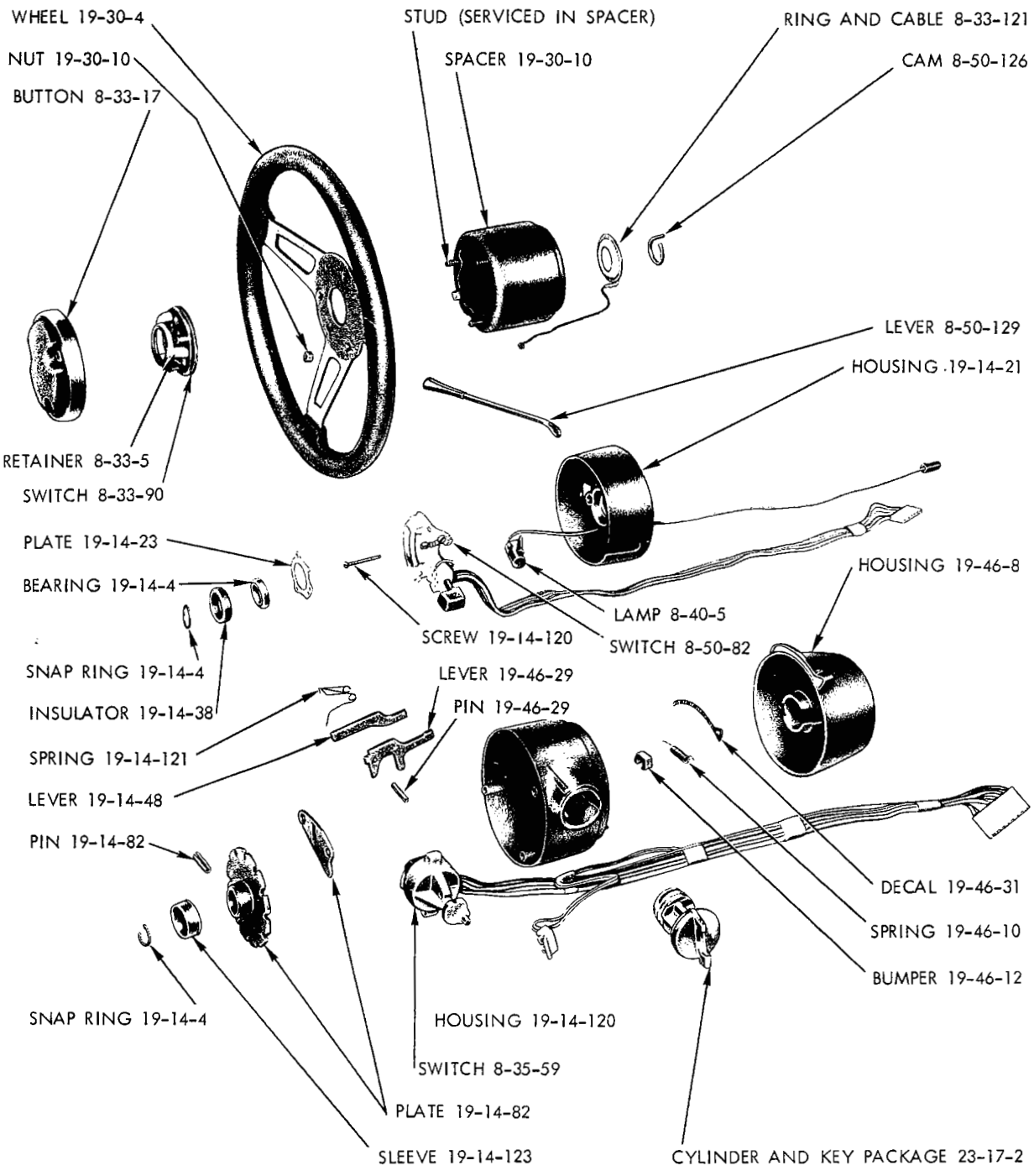

19a3779

SOFT RIM STEERING WHEEL AND ATTACHING PARTS
WITH FLOOR SHIFT - V, L, R AND W MODELS

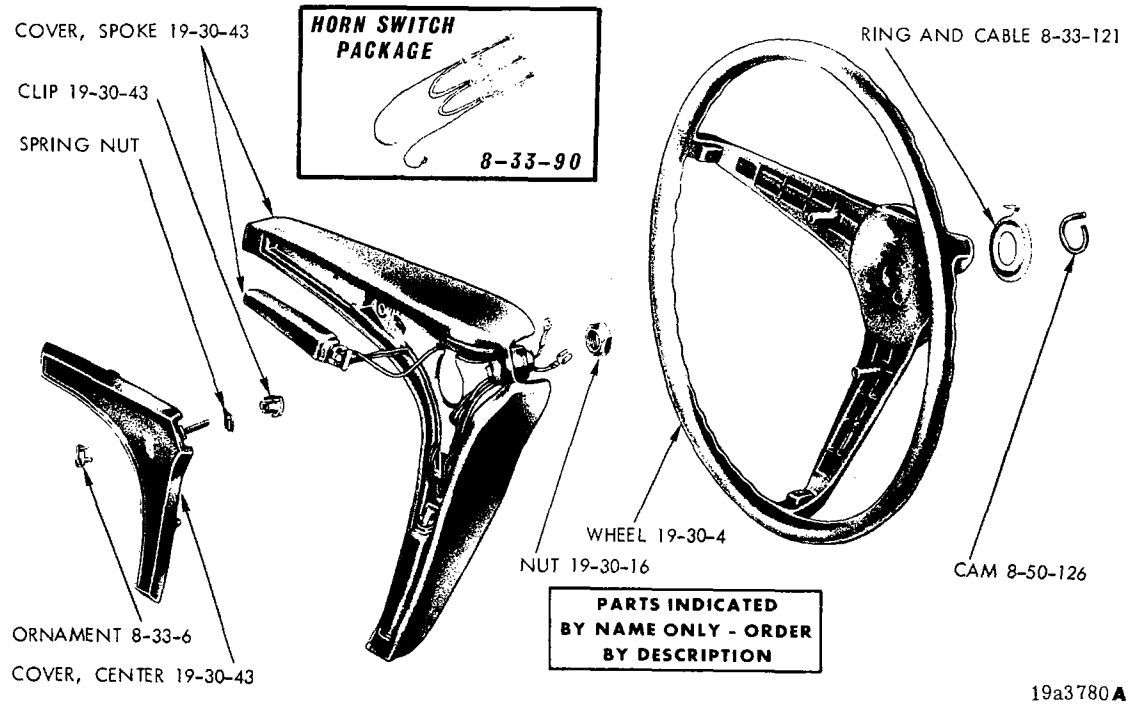

STEERING WHEEL WITH 3 SPOKE HORN BUTTONS (1971)

NOTES

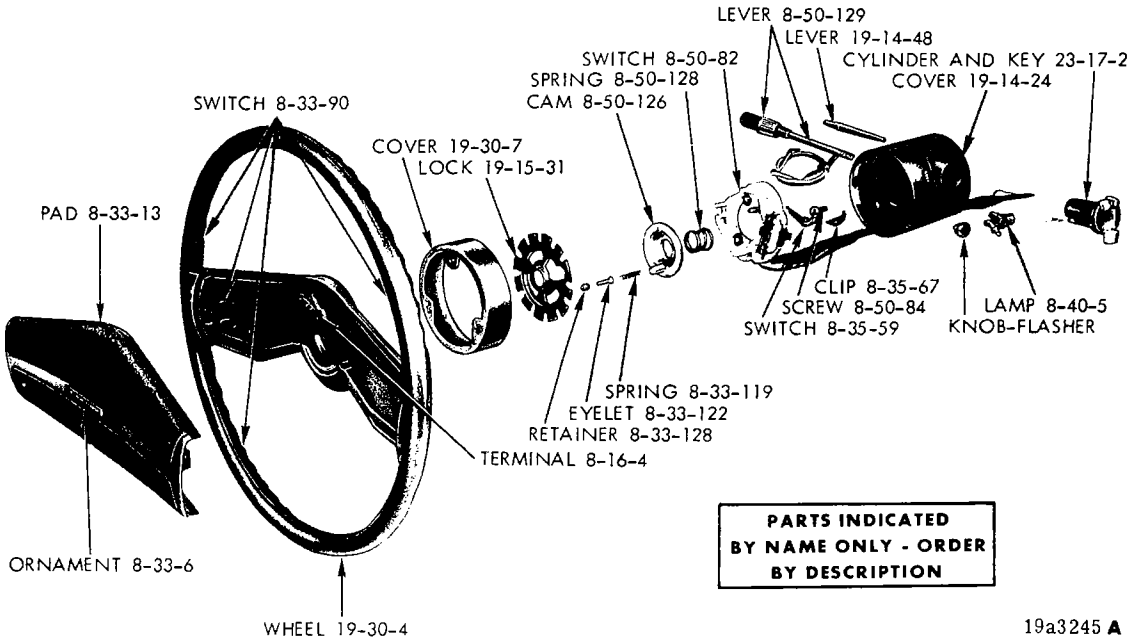

STEERING WHEEL WITH RIM HORN SWITCH WITH TILT STEERING WHEEL - PLYMOUTH AND DODGE

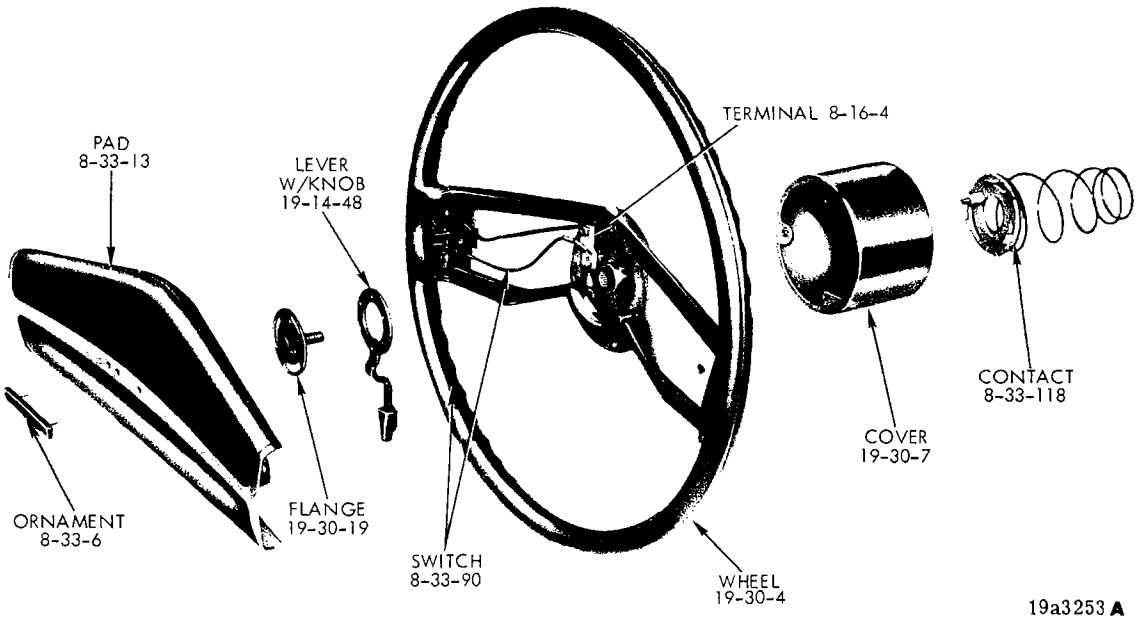

STEERING WHEEL WITH HORN RIM WITH TILT-TELESCOPIC - CHRYSLER AND IMPERIAL

NOTES

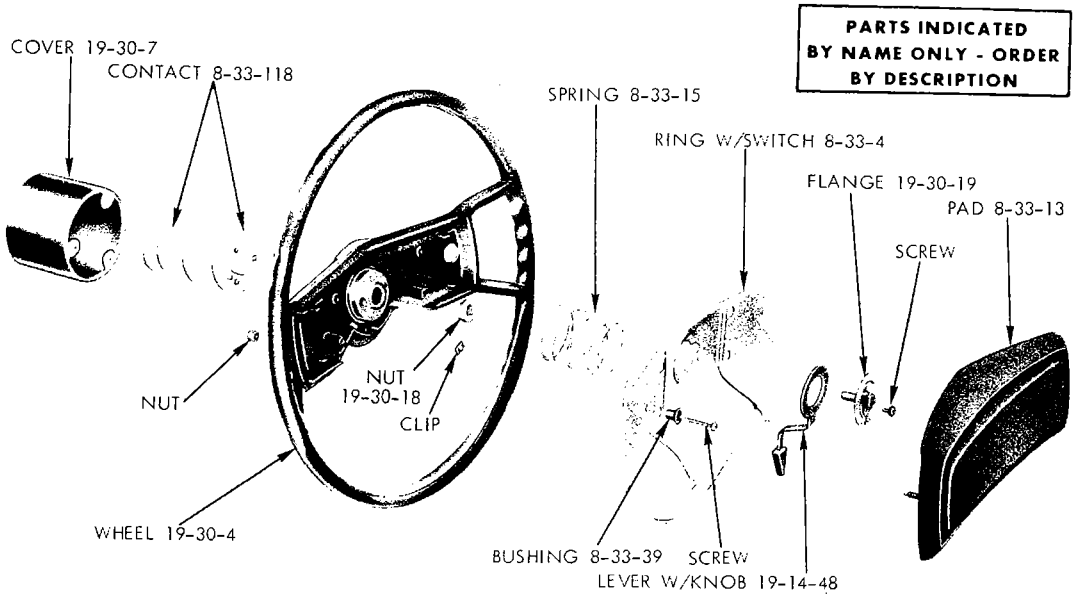

STEERING WHEEL, HORN AND TURN SIGNAL CONTROLS (WITHOUT HORN RIM SWITCH-WITH TILT-TELESCOPIC STEERING) - CHRYSLER AND IMPERIAL

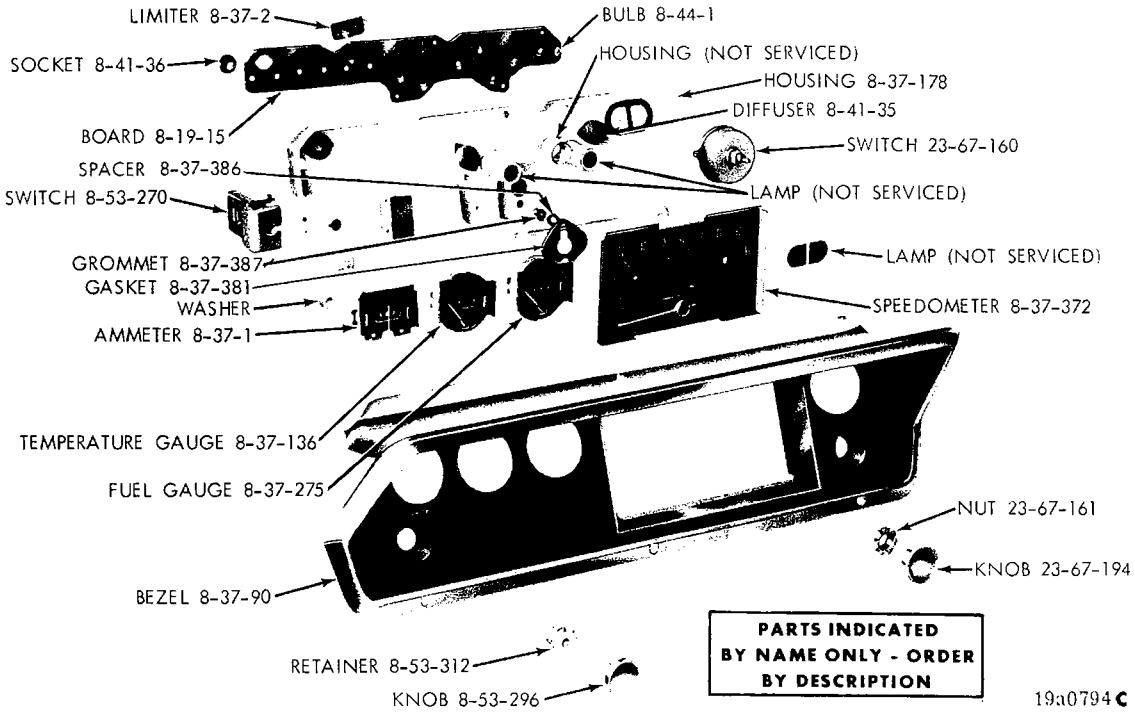

SPEEDOMETER AND INSTRUMENT CLUSTER - VALIANT EXCEPT DUSTER 340

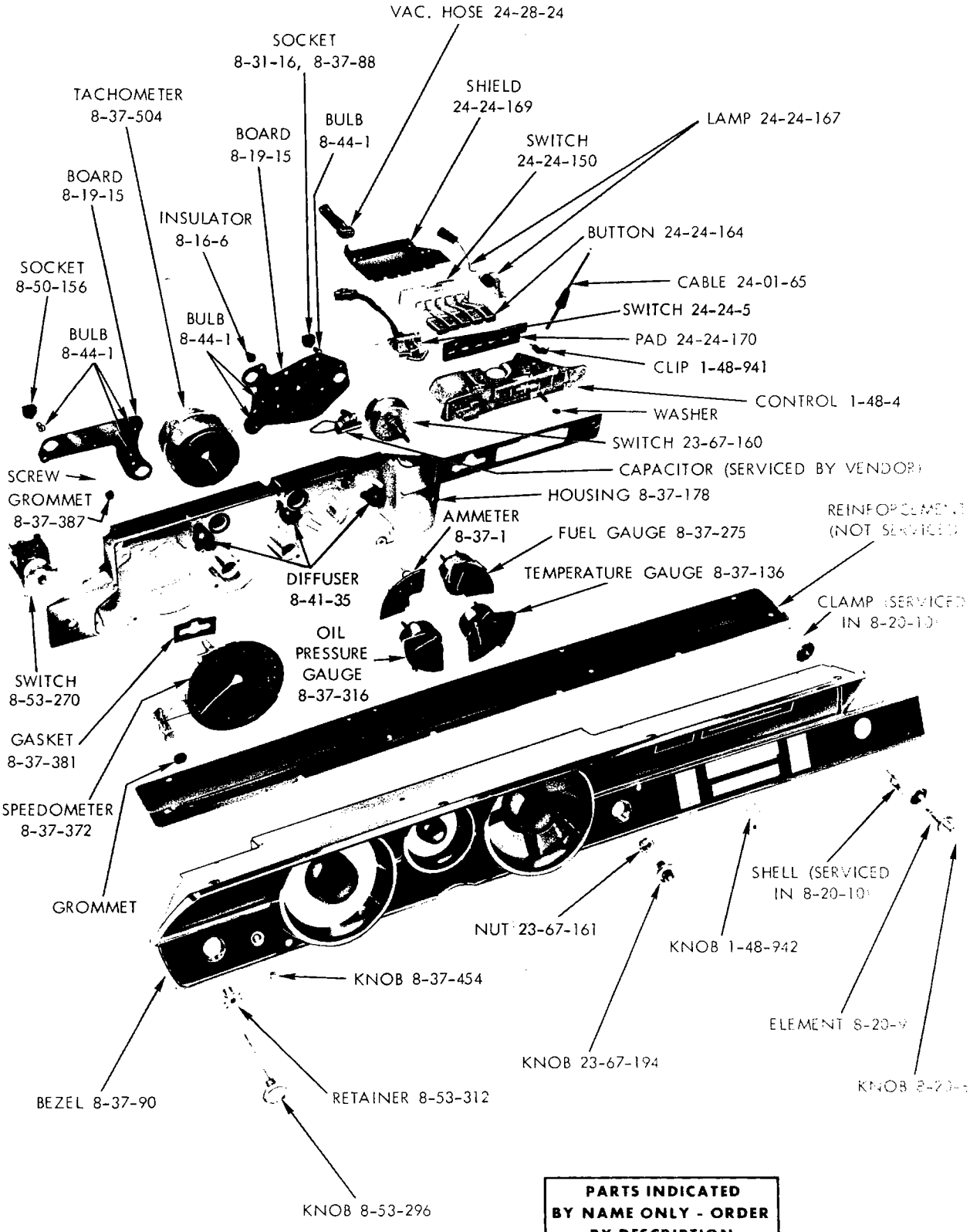

INSTRUMENT CLUSTER - VALIANT DUSTER 340 AND DART SWINGER 340 (1970) - VALIANT DUSTER 340 AND DEMON 340 (1971)

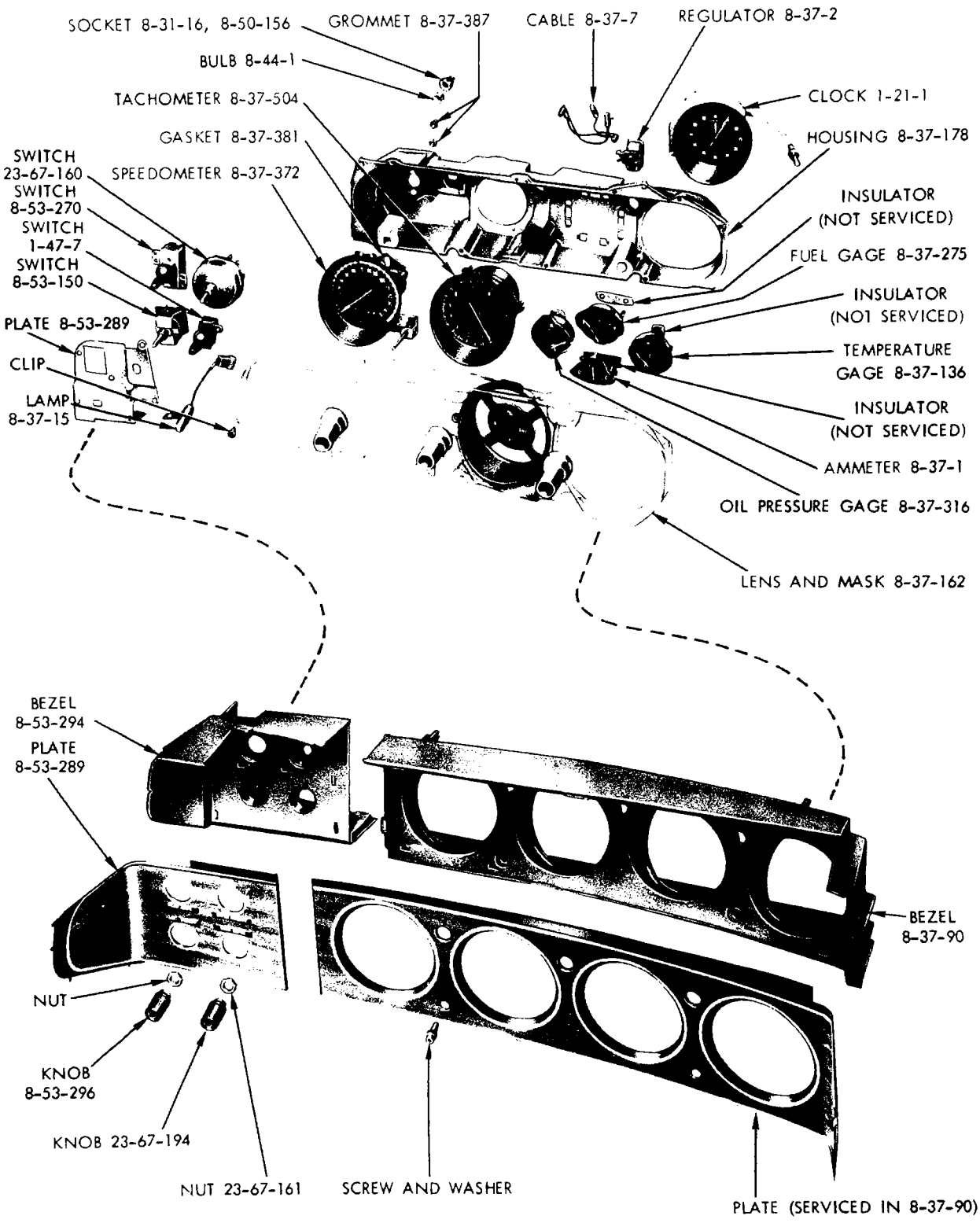

PARTS INDICATED BY NAME ONLY - ORDER BY DESCRIPTION

19a2872

INSTRUMENT CLUSTER (RALLYE) - BARRACUDA AND CHALLENGER

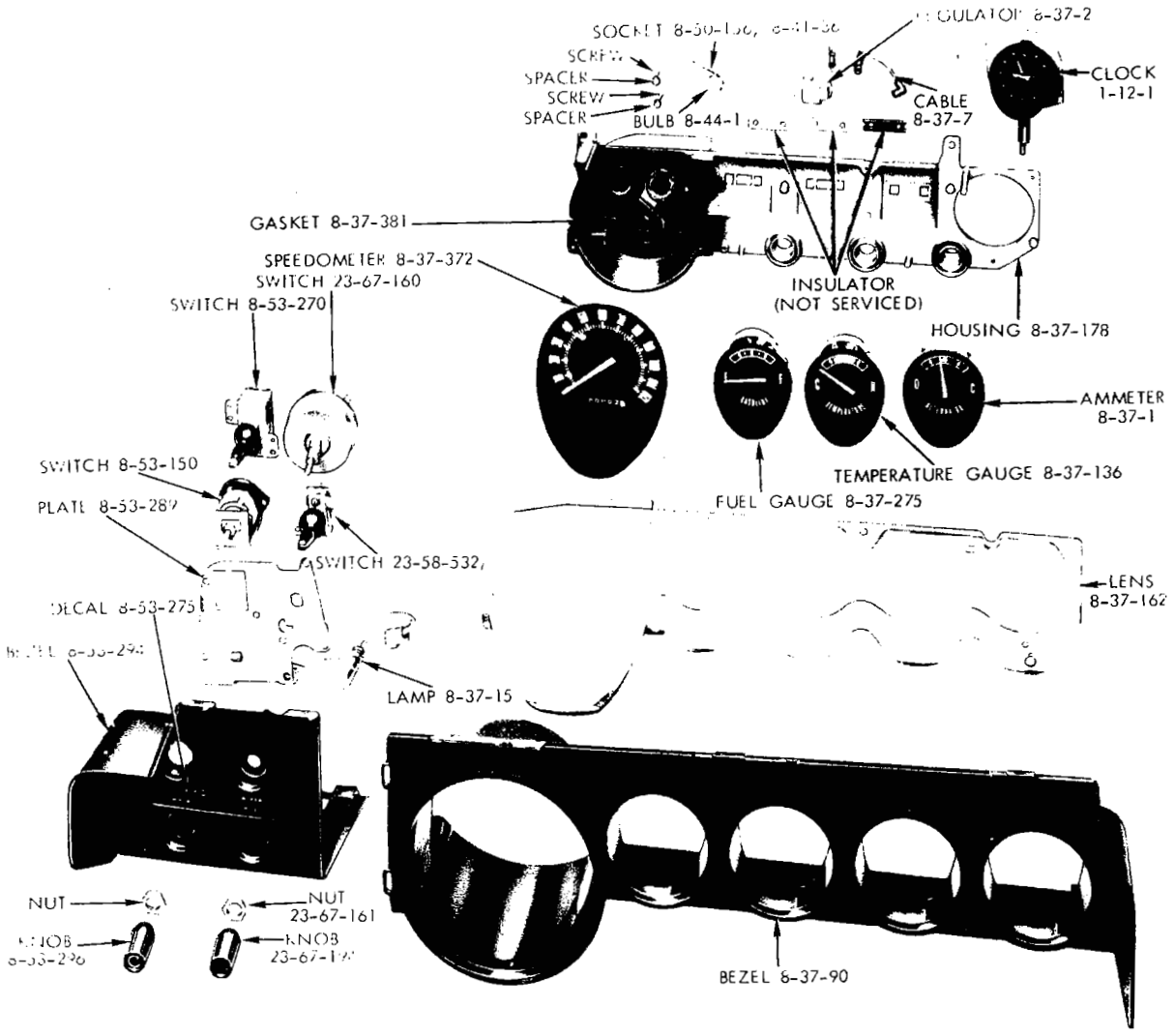

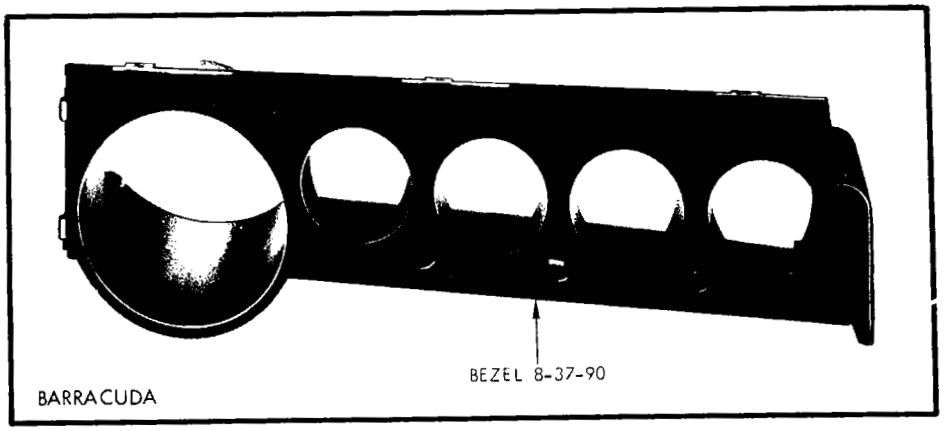

PARTS INDICATED BY NAME ONLY - ORDER BY DESCRIPTION

19a2899 **A**

INSTRUMENT CLUSTER - CHALLENGER AND BARRACUDA

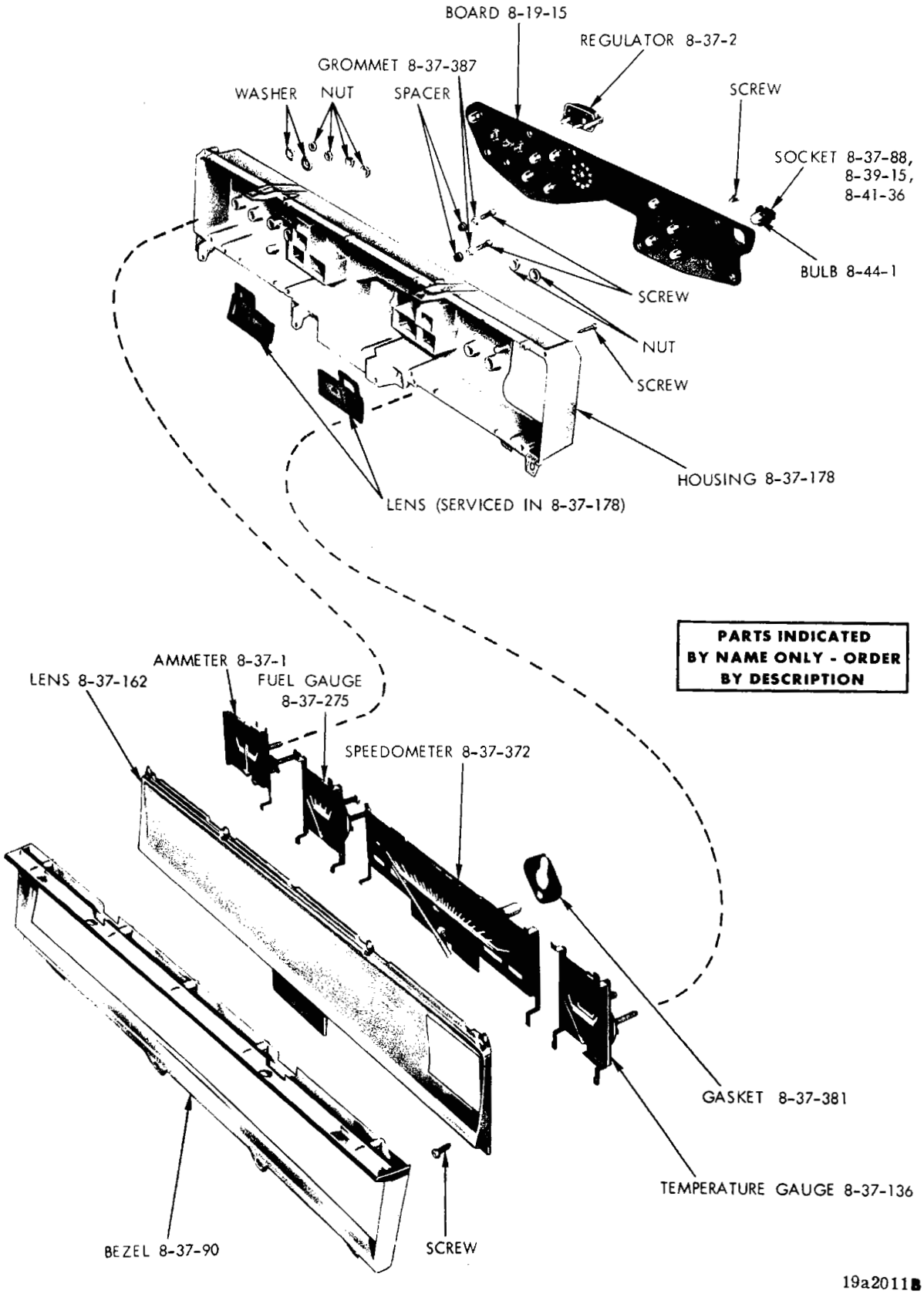

SPEEDOMETER AND INSTRUMENT CLUSTER - BELVEDERE AND CORONET

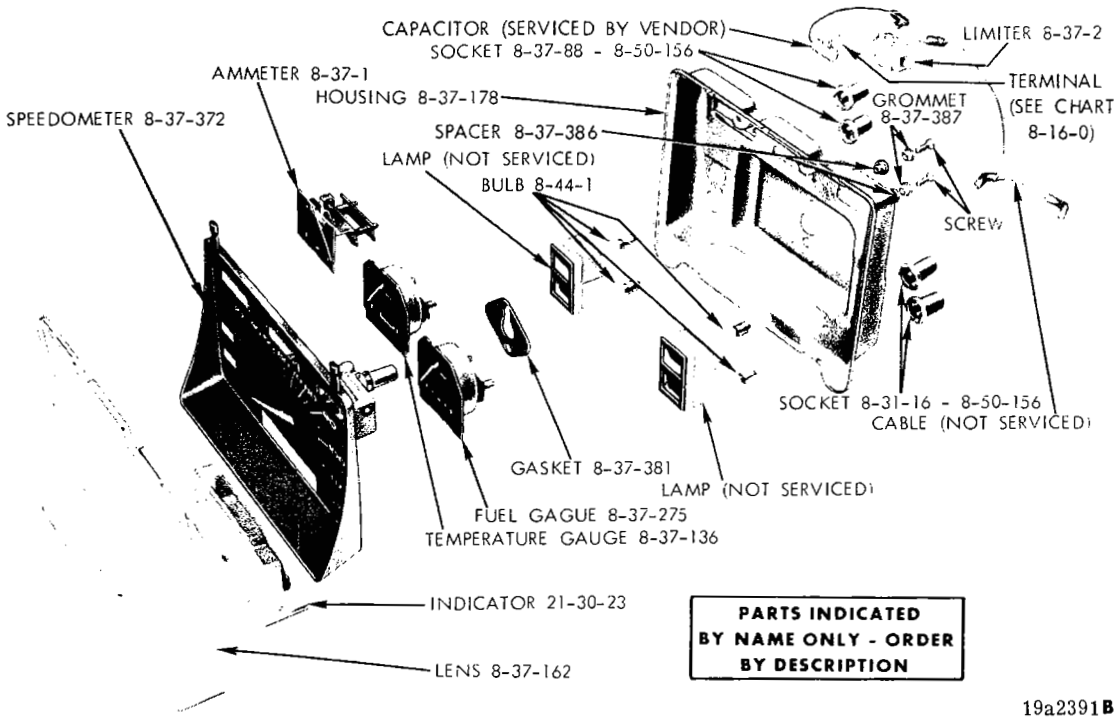

SPEEDOMETER AND INSTRUMENT CLUSTER - PLYMOUTH FURY

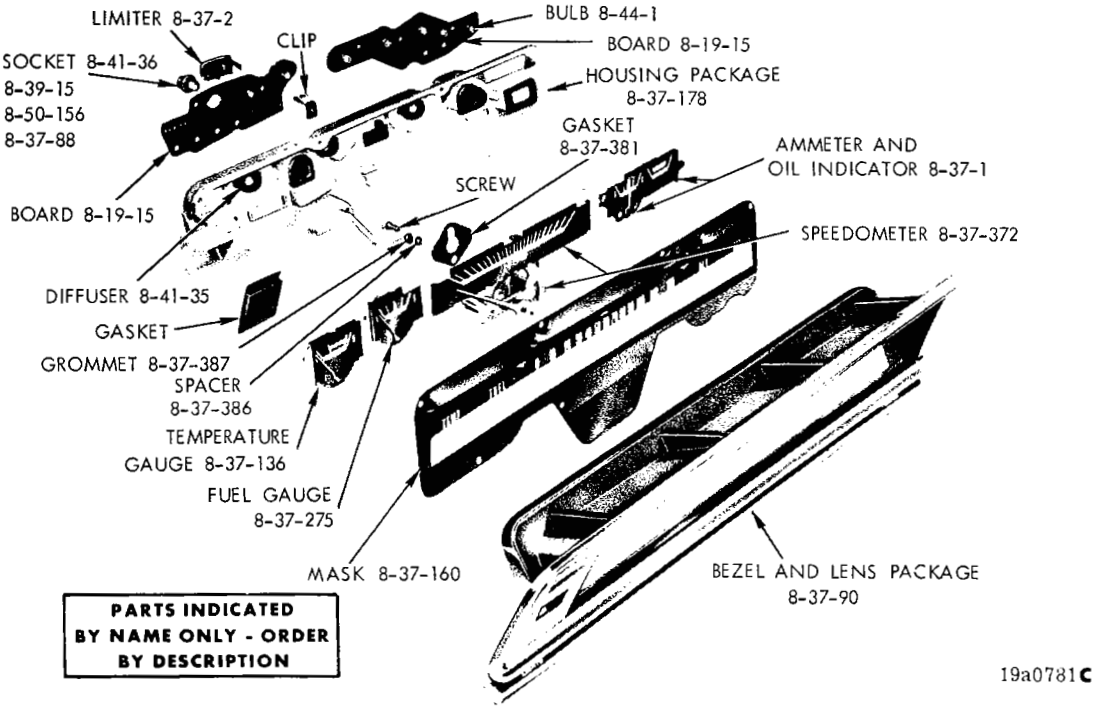

SPEEDOMETER AND INSTRUMENT CLUSTER - DART EXCEPT SWINGER 340

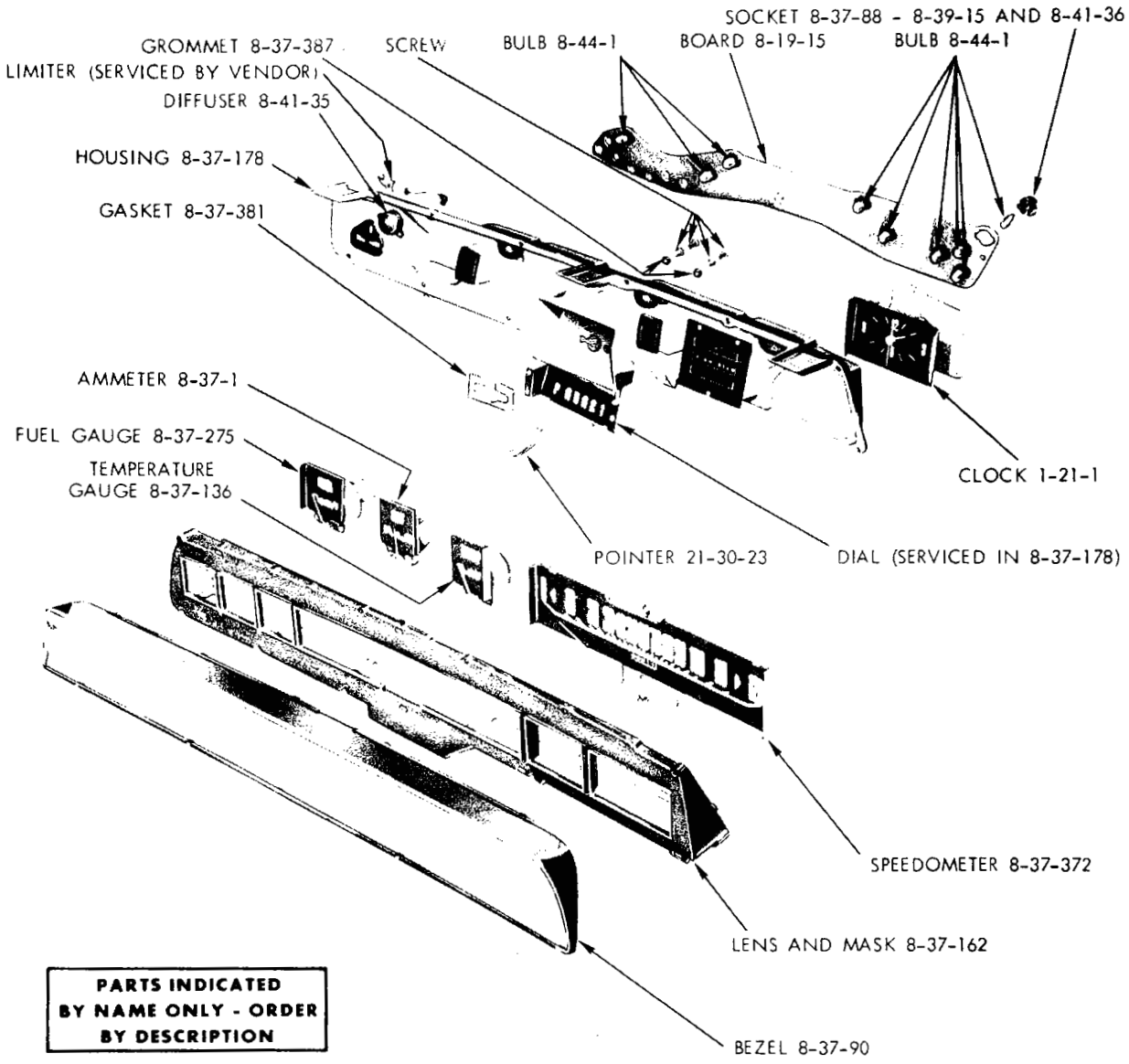

19a2461A

INSTRUMENT CLUSTER - DODGE EXCEPT CORONET, CHARGER AND CHARGER R/T

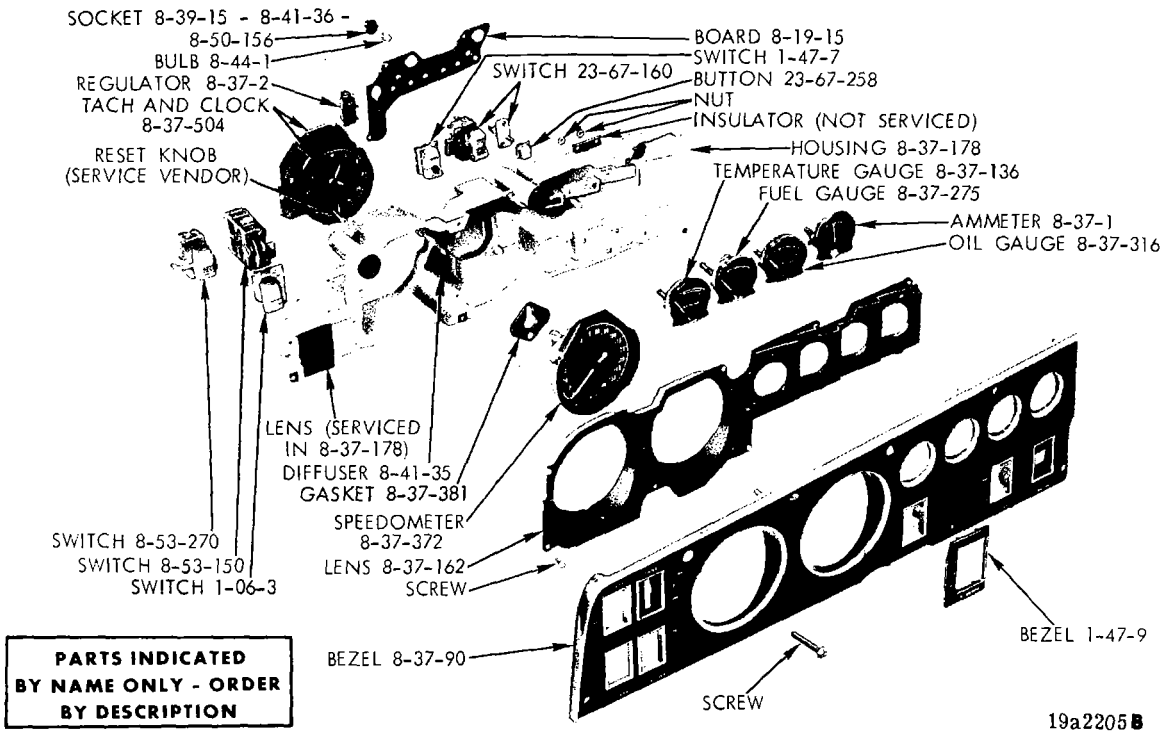

SPEEDOMETER AND INSTRUMENT CLUSTER - CHARGER AND CHARGER R/T

NOTES

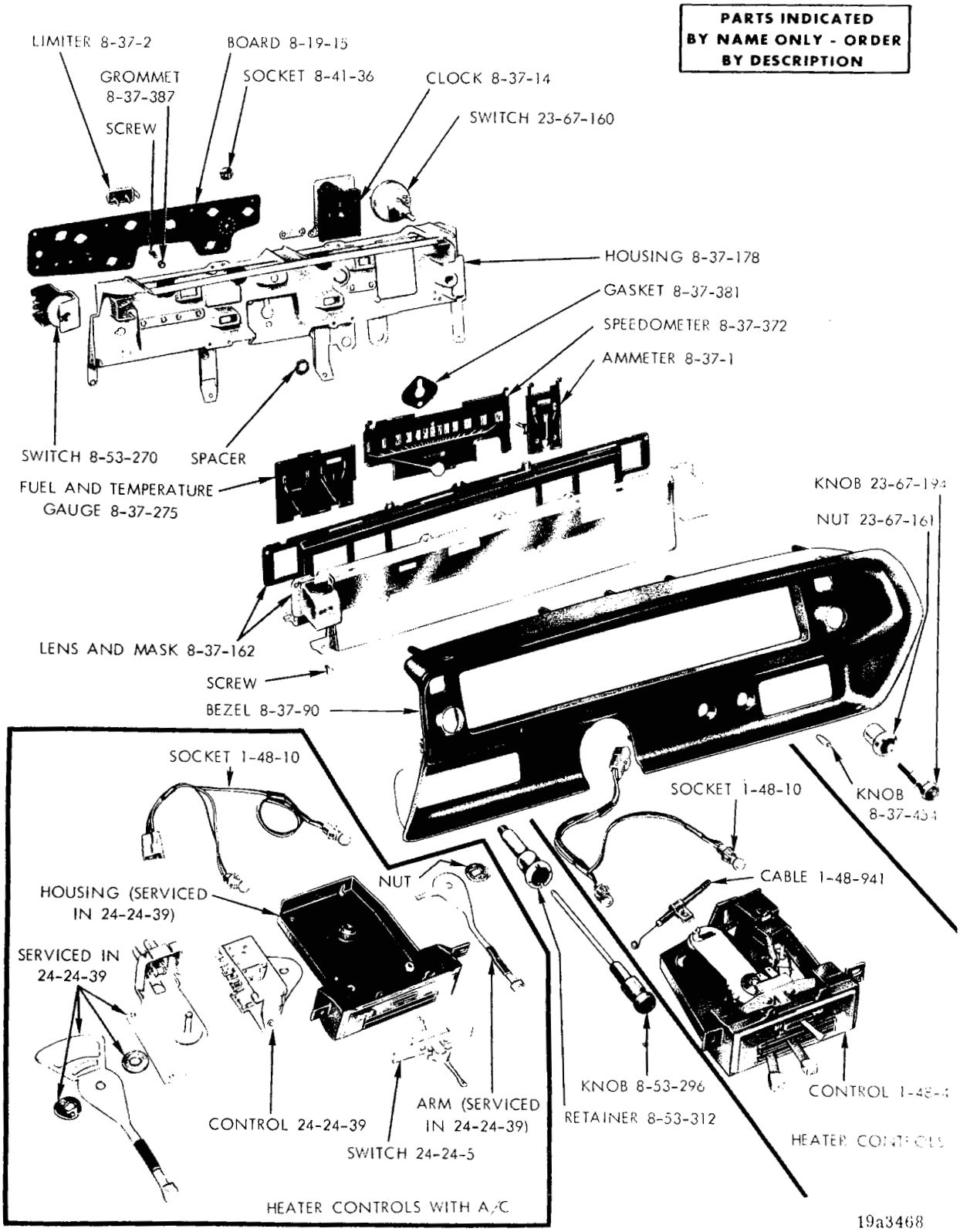

INSTRUMENT CLUSTER - SATELLITE AND CORONET WITHOUT RALLYE INSTRUMENT PANEL

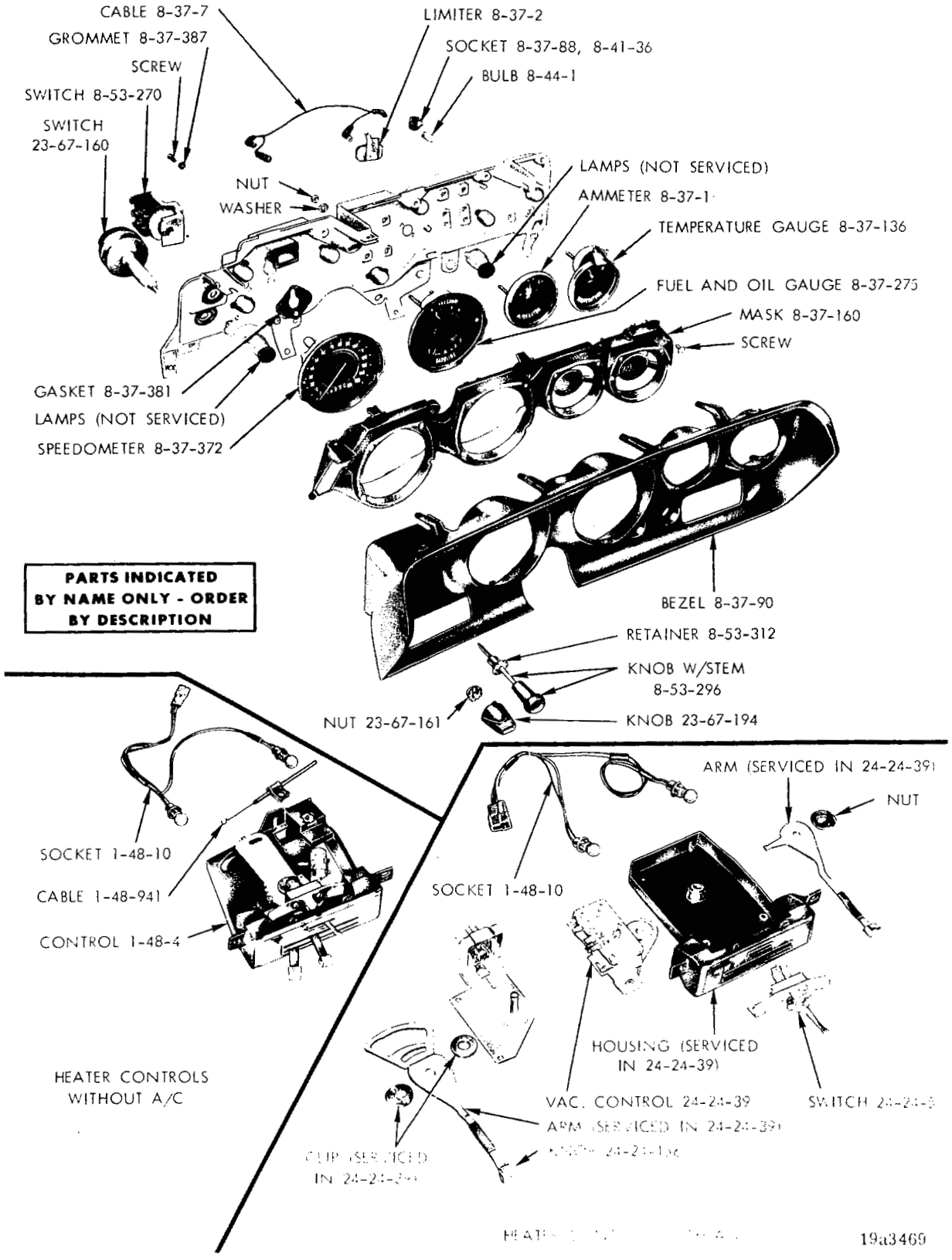

INSTRUMENT CLUSTER - SATELLITE AND CORONET (RALLYE)

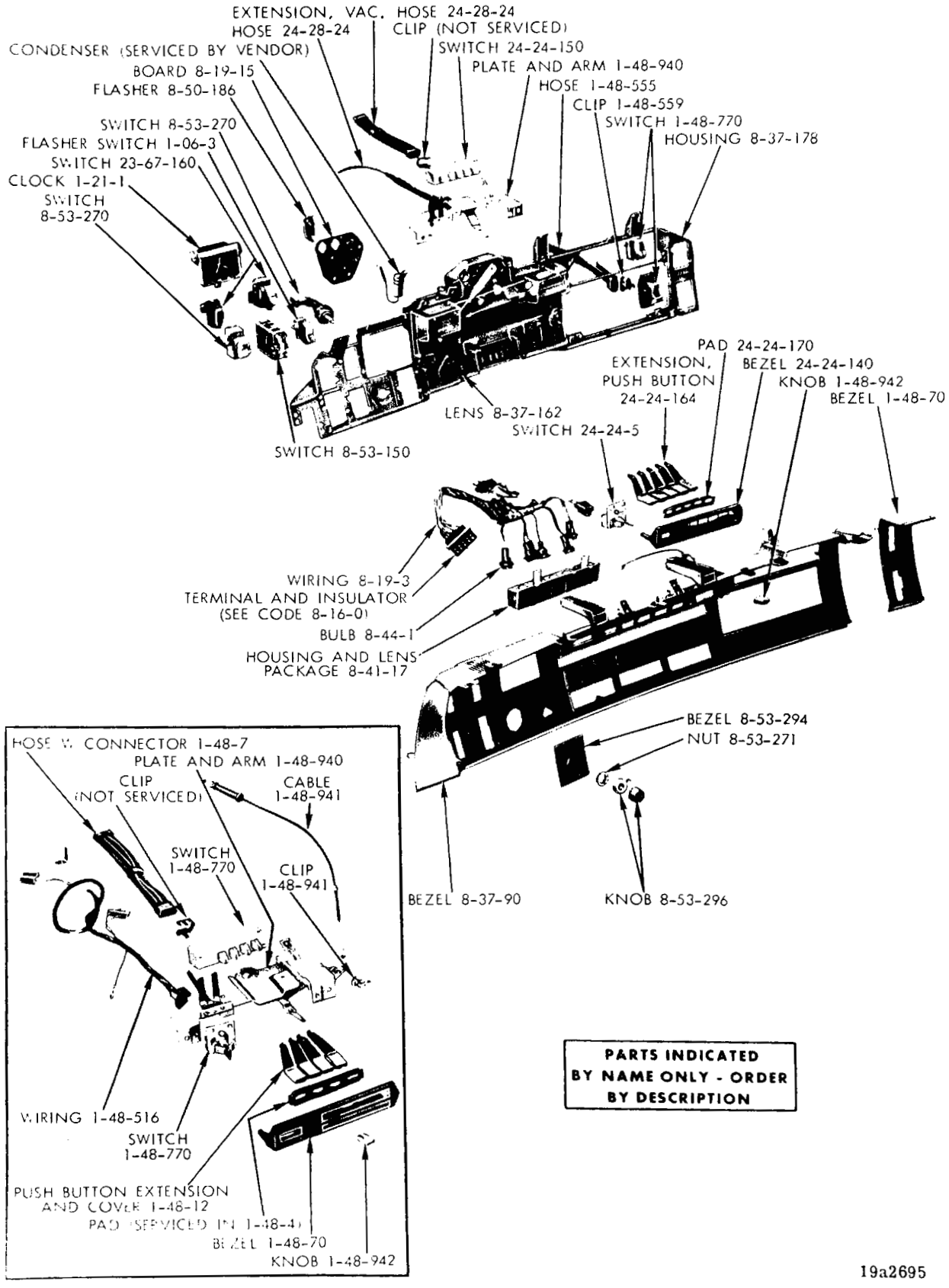

(1970)
INSTRUMENT CLUSTER, SWITCHES AND AIR CONDITIONING CONTROLS - CHRYSLER

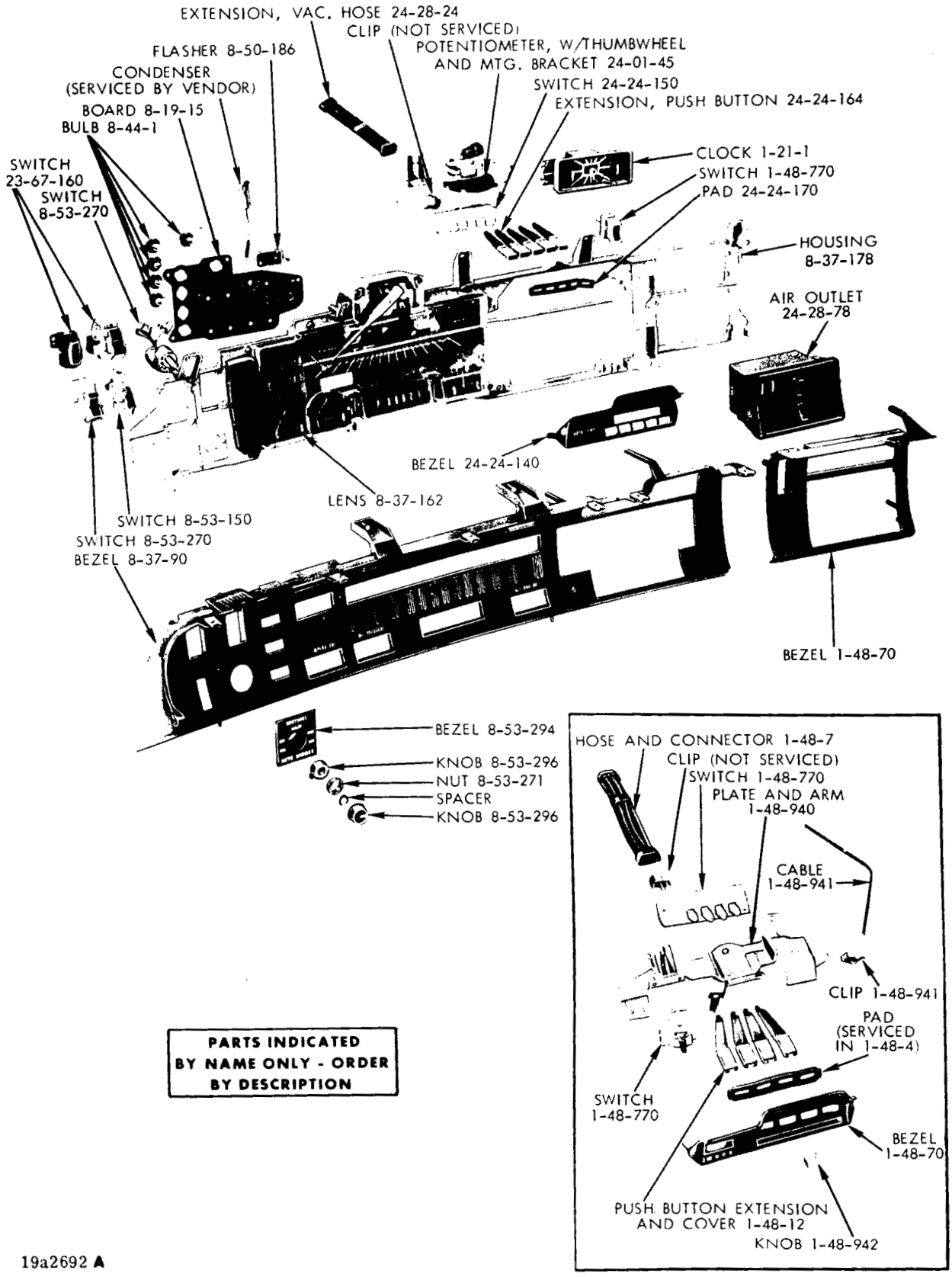

PARTS INDICATED BY NAME ONLY - ORDER BY DESCRIPTION

19a2692 **A**

(1970)

INSTRUMENT CLUSTER, SWITCHES AND AIR CONDITIONING CONTROLS - IMPERIAL

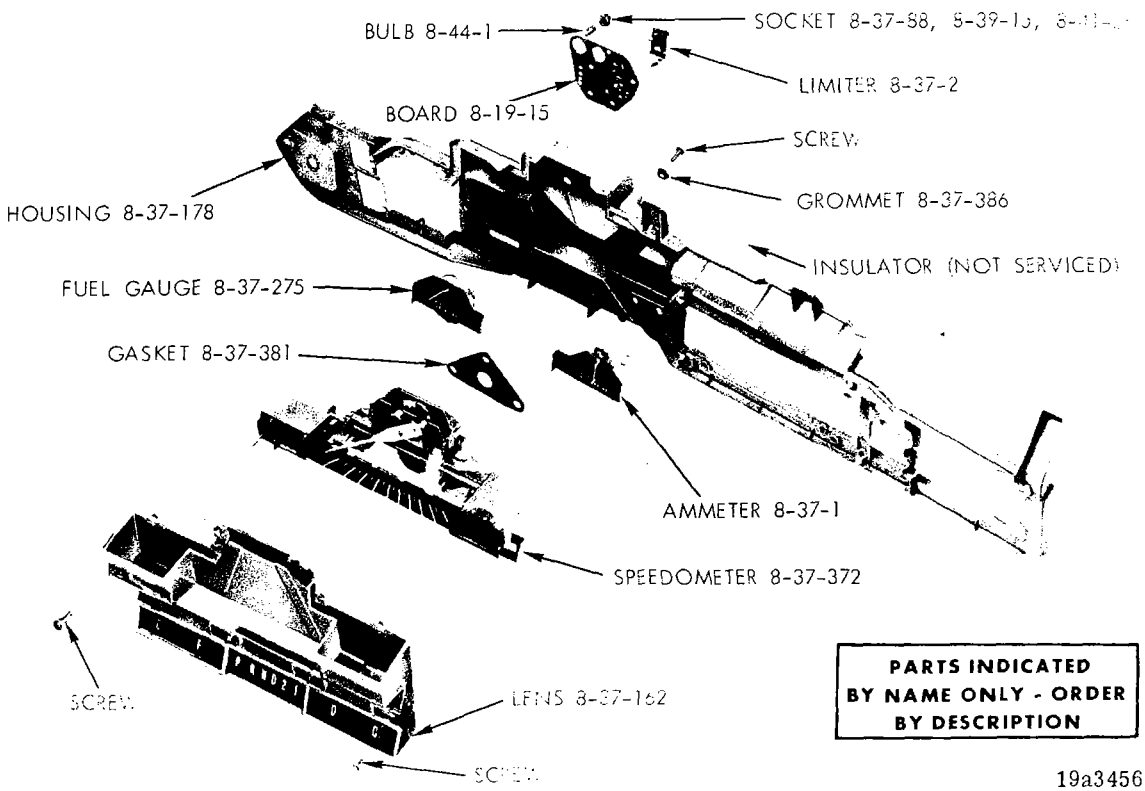

SPEEDOMETER AND INSTRUMENT CLUSTER - CHRYSLER

NOTES

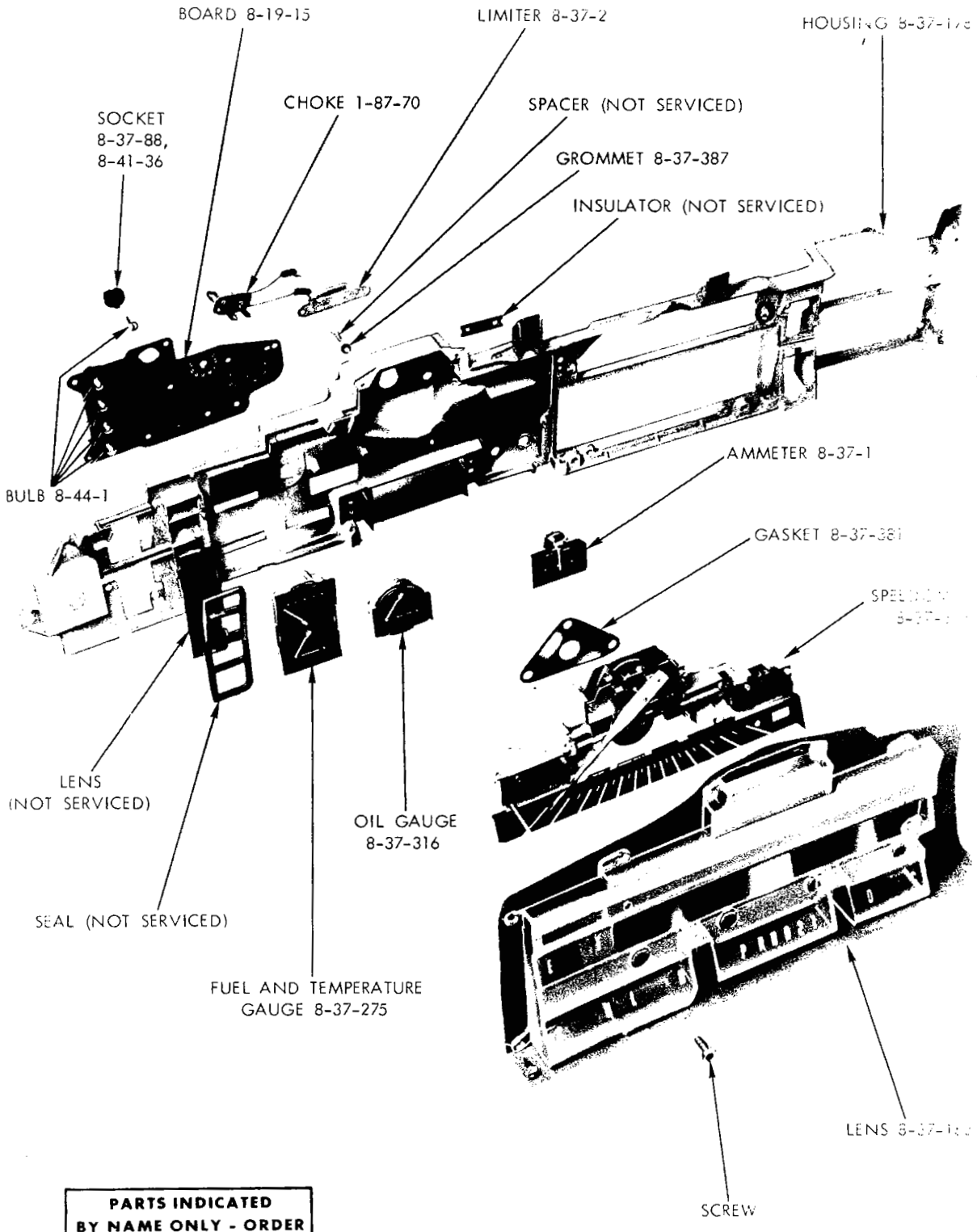

PARTS INDICATED BY NAME ONLY - ORDER BY DESCRIPTION

19a3547

SPEEDOMETER AND INSTRUMENT CLUSTER - IMPERIAL

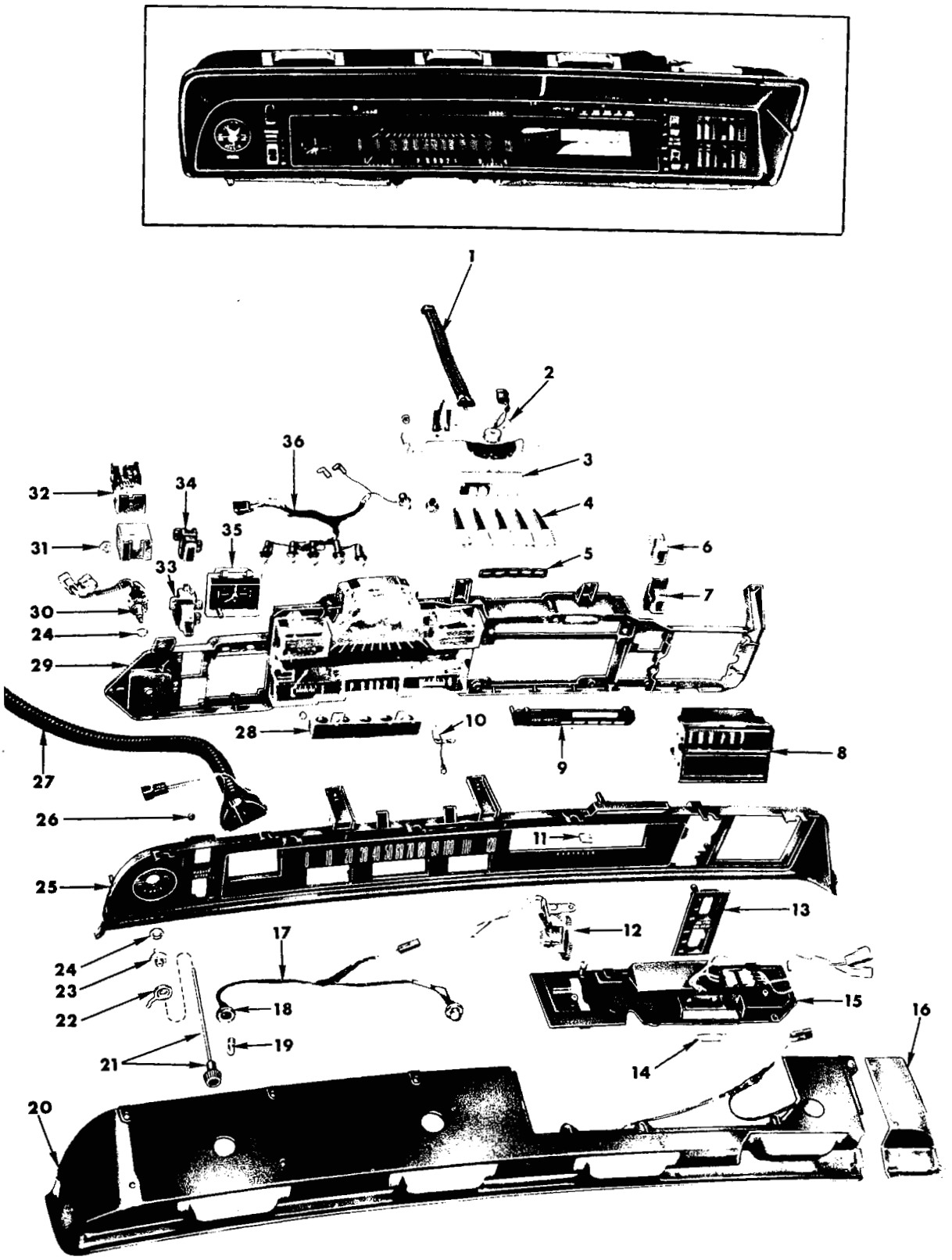

INSTRUMENT CLUSTER - CHRYSLER (1971)

INSTRUMENT CLUSTER - CHRYSLER (1971)

Ref. No.	Name	Part Type Code
1	Vacuum Hose	24-28-24
2	Potentiometer, w/Thumbwheel and Mounting Bracket	24-01-45
3	Switch	24-24-150
4	Extension, Push Button	24-24-164
5	Pad	24-24-170
6	Switch	1-47-7
7	Switch	1-48-770
8	Air Outlet	24-28-78
9	Bezel	24-24-140
10	Wire	Not Serviced
11	Nut	
12	Control	1-87-2
13	Bezel	1-48-70
14	Bulb	8-44-1
15	Lamp	8-42-1
16	Panel	8-41-41
17	Wiring	8-19-3
18	Socket	8-41-36
19	Bulb	8-44-1
20	Panel	8-41-41
21	Knob, w/Stem	8-53-296
22	Knob	8-53-296
23	Decal	8-53-275
24	Nut	8-53-271
25	Bezel	8-37-90
26	Spring Washer	
27	Adapter	24-24-53
28	Housing and Lens Package	8-41-17
29	Housing	8-37-178
30	Switch	8-53-270
31	Retainer	8-53-312
32	Switch	8-53-270
33	Switch	23-67-160
34	Switch	23-67-160
35	Clock	8-37-14
36	Wiring	8-19-3

PARTS INDICATED BY NAME ONLY - ORDER BY DESCRIPTION

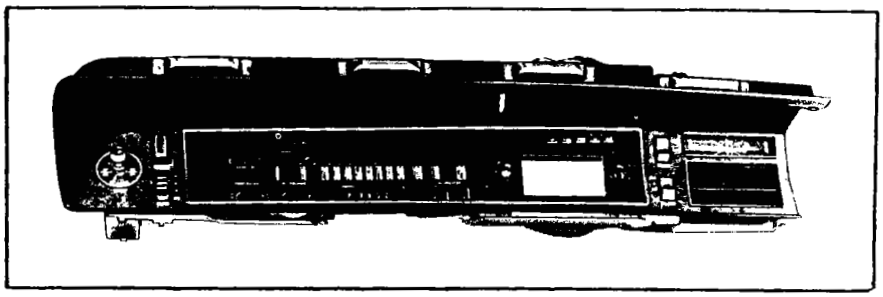

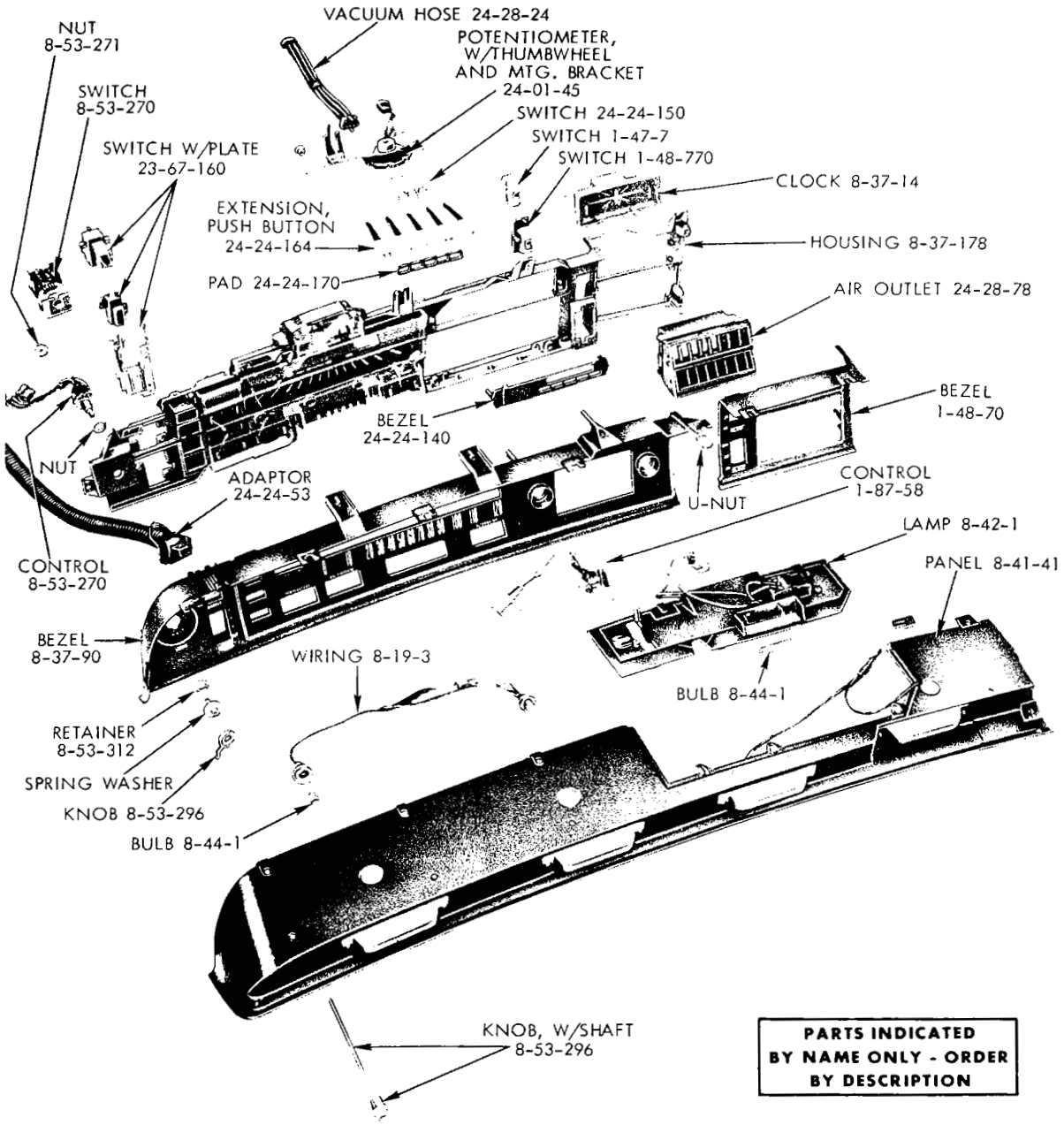

19a3747

INSTRUMENT CLUSTER - IMPERIAL (1971)

CONNECTOR 1842003

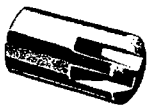

CONNECTOR

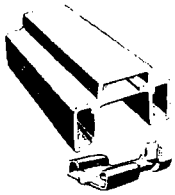

TERMINAL
1879609 PACKAGE

CONNECTOR 611896

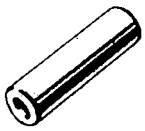

TERMINAL 1842009

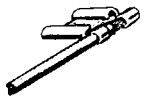

TERMINAL 2427736



TERMINAL 870621

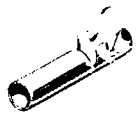

TERMINAL 2291588



TERMINAL 2291259

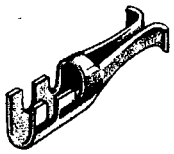

TERMINAL 1770660

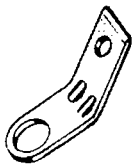

TERMINAL 903895



TERMINAL 1819836
(SILVER PLATED)

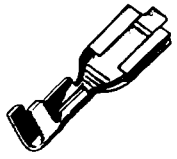

TERMINAL 2258591

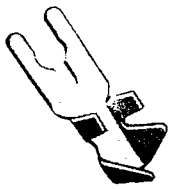

TERMINAL 2258118



TERMINAL 2290069



TERMINAL 2258590



TERMINAL 2290207



TERMINAL 2291838

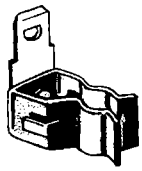

TERMINAL (FEMALE)
1842026





INSULATOR (FEMALE)
TERMINAL (MALE)
1842012





INSULATOR (MALE)
2298882 PACKAGE

INSULATOR 2291093



TERMINAL 2427545



INSULATOR 2258651

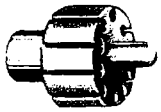

INSULATOR 2258102



INSULATOR

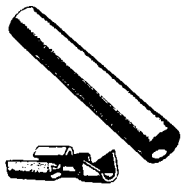

TERMINAL
2240264 PACKAGE

TERMINAL 2197947



INSULATOR

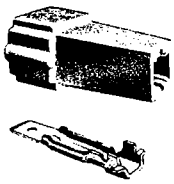

TERMINAL
2240536 PACKAGE

INSULATOR

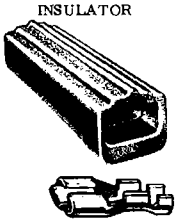

TERMINAL
2084421 PACKAGE

INSULATOR
1972881

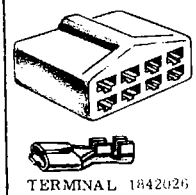

TERMINAL 1842026
2084424 PACKAGE

TERMINAL 2197945

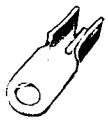

TERMINAL 2822565

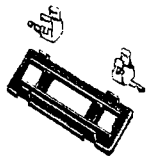

BASE 2822564

TERMINAL 2427725



TERMINAL 2427848



INSULATOR 1842019



TERMINAL 1842018



TERMINAL 1842020
2448822 PACKAGE

TERMINAL 2257443-4



TERMINAL 2427529



INSULATOR

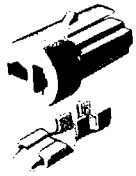

TERMINAL
2495239 PACKAGE

TERMINAL 2496541



2231119

2233028
PLUG AND WIRE

CONNECTOR (10)

TERMINAL (20)
1790322
1843444 PACKAGE

TERMINAL 2580061

19x9957 D

PLUGS, TERMINALS, INSULATORS AND CONNECTORS

CONNECTOR 2427523
COVER 2427646
TERMINAL 2427529



2495237 PACKAGE

CONNECTOR 2427502
COVER 2427567
TERMINAL 2427529



2495235 PACKAGE

CONNECTOR 2427506
COVER 2427560



TERMINAL 2427529
2495234 PACKAGE

CONNECTOR 2427499
COVER 2427498

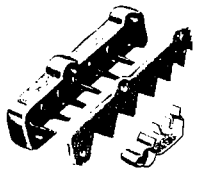

TERMINAL 2427529
2495236 PACKAGE

CONNECTOR 2496346



TERMINAL 2258118
2495517 PACKAGE

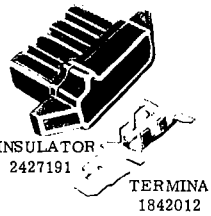

2495223 PACKAGE

INSULATOR



2495224 PACKAGE

INSULATOR 2496533

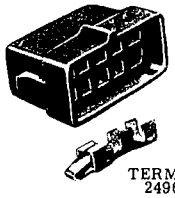

2495541 PACKAGE

INSULATOR 2580288

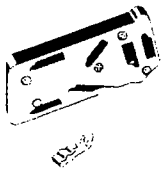

TERMINAL 2427529
2584842 PACKAGE

INSULATOR

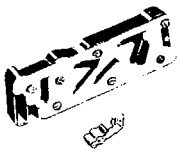

TERMINAL 2427529
2584843 PACKAGE

INSULATOR 2497982

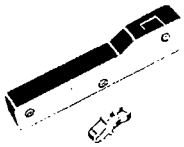

TERMINAL 2427848
2584953 PACKAGE

INSULATOR 2497892

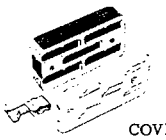

TERMINAL
2427529
2584954 PACKAGE

WIRING, WITH 3 WAY CONNECTOR



2926502

INSULATOR 2291258





TERMINAL
2584841 PACKAGE

INSULATOR 2497701



PLUG 2497346

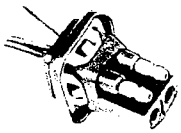

MOLD AND CABLE
2580267



MOLD AND CABLE
2580064



MOLD AND CABLE
2580065



CONNECTOR 2631340



TERMINAL 2496532



TERMINAL, INSULATOR AND CABLE

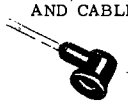

2230985

SLEEVE 930304



PLUG 665151



SLEEVE 1264933



19a0632C

PLUGS, TERMINALS, INSULATORS AND CONNECTORS

Printed in U.S.A.

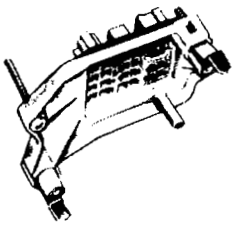 2983217	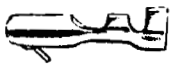 2257839	 3513637	 2291663
 3513150	 3513155	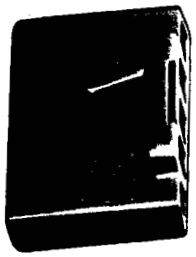 3513156	 2889427 (TYPICAL OF 3513349)
 2889428 (TYPICAL OF 3513350)	 2889542	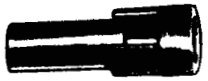 2889543	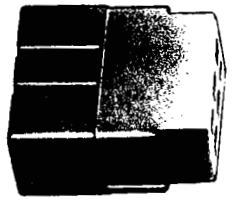 2983239
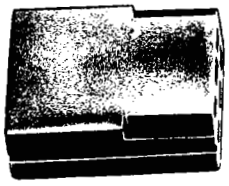 3513347 (TYPICAL OF 2983237)			

19a3507

TERMINAL CHART

LAMP CHART

BULB TYPES

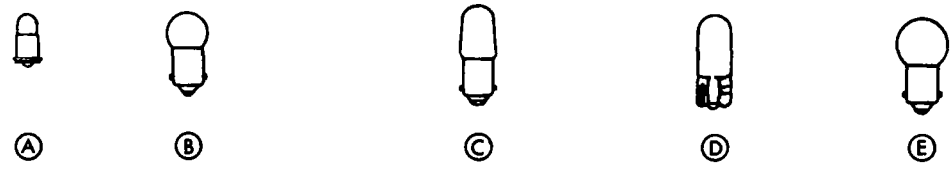

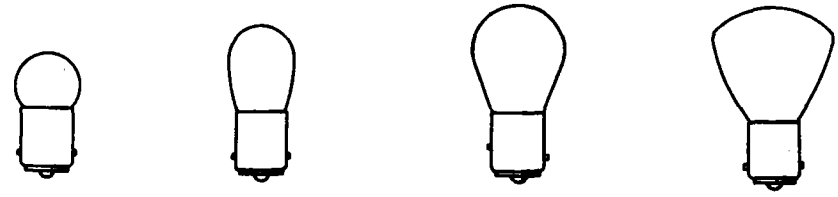

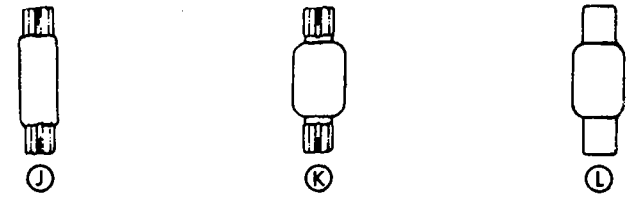

FILAMENT TYPES

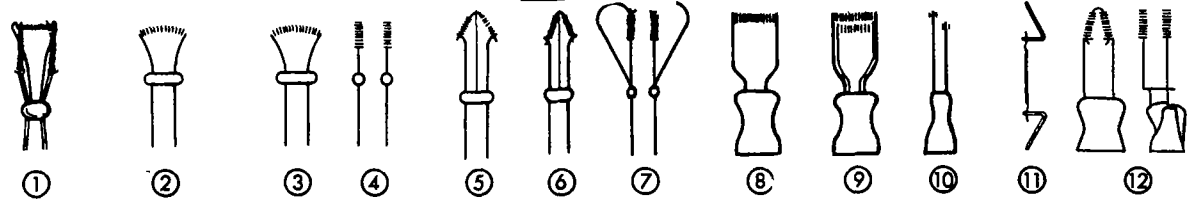

BASE TYPES



MINIATURE BAYONET SINGLE CONTACT

BAYONET SINGLE CONTACT

BAYONET DOUBLE CONTACT



TYPE - INDEXING BAYONET DOUBLE CONTACT



TYPE - END CONTACT DOUBLE WEDGE

19al3770

LAMP - BULB TYPES CHART

LAMP - BULB TYPES CHART

TYPE	BASE CONTACT	FILAMENT	C-POWER	TRADE NO.	VOLTS	PART NUMBER
A	Single	1	.5	330	14.0	9423 277
B	Single	5	1.	53	14.5	131 282
	Single	1	1.	53x	14.4	152 280
	Single	5	.7	1445	14.4	274 004
	Single	2	1.	51	7.5	115 273
C	Single	5	.85	1813	14.4	274 148
	Single	5	1.4	1815	14.0	193 065
	Single	5	3.	1816	13.0	152 240
	Single	1	2.	1891	14.0	152 244
	Single	1	.75	1892	14.4	274 020
	Single	1	2.	1893	14.0	9416 927
D	Wedge	5	2.	158	14.0	9415 969
	Single Wedge	1	1.	161	14.0	9417 561
	Single Wedge	5	3.	168	14.0	9425 542
	Single Wedge	1	2.	194	14.0	9421 330
	Single	2	1.6	256	14.0	9420 536
E	Single	5	2.	57	14.0	127 934
	Single	2	1.6	257	14.0	9412 348
	Single	1	2.	1895	14.0	9417 863
	Single	1	2.	1895A	14.0	9427 794
	Single	2	2.	55	7.0	125 588
F	Single	2	4.	67	13.5	142 450
	Double	2	4.	68	13.5	142 451
	Single	2	6.	89	13.0	142 452
	Double	2	6.	90	13.0	142 453
	Single	5	--	97A	13.5	9427 795
	Single	3-4	4.	1155	13.5	9417 865
	Single	2	4.	67AF	13.5	9420 830
	Double	2	4.	64	6.0	142 311
	Double	2	6.	82	6.5	142 312
	Single	2	6.	81	6.0	142 306
	Single	2	3.	63	6.0	142 303
G	Single	8	15.	1003	12.8	151 577
	Double	8	15.	1004	12.8	151 578
	Double	2	15.	210	6.2	151 559
	Single	2	15.	209	6.5	151 579
H	Single	2	15.	93	12.8	142 454
	Double	2	15.	94	12.8	142 455
	Double	8	32.	1034	12.8	151 567
	Double	8	16.32	1034A	12.0	9418 772
	Double	8	19.	1034NA	12.8	9422 798
	Single	10	21.	1129	6.0	142 308
	Double	10	21.	1130	6.0	142 449
	Single	8	32.	1073	12.8	151 576
	Single	8	4.	1095	14.0	9418 903
	Single	8	21.	1141	12.8	142 456
	Double	8	21.	1142	12.8	142 457

CONTINUED ON NEXT PAGE

LAMP - BULB TYPES CHART - CONTINUED

TYPE	BASE CONTACT	FILAMENT	C-POWER	TRADE NO.	VOLTS	PART NUMBER
H	Double	8	--	1142IF	12.8	147 680
Cont'd	Single	8	32.	1156	12.8	9417 866
	Double	8	32.	1157	12.8	9417 867
	Double	8	32.	1157A	12.8	9419 780
	Double	8	32.	1157NA	12.8	9423 295
	Double	2	10.	91	13.0	113 238
	Single	2	15.	87	6.0	142 304
	Double	2	21.	1130	6.0	142 447
	Double	9-10	21.3	1154	6.0	145 416
	Double	2	15.	88	6.75	142 446
I	Single	5	50.	1195	12.5	193 096
	Single	2	50.	1293	12.5	9427 336
	Double	12	32.	1000	62.	142 307
J	End Contact	11	6.	562	13.5	9427 943
	Double Wedge	11	4.	704	13.5	9428 704
K	Double Wedge	11	6.	550	13.5	9423 841
	Double Wedge	11	12.	551	12.8	9428 310
L	Festoon Cap	11	12.	211-1	12.8	9422 525
	Festoon Cap-Double	11	12.	211-2	12.8	9431 808

REFER TO TEXT CODE 8-44-1 FOR LOCATION CHART

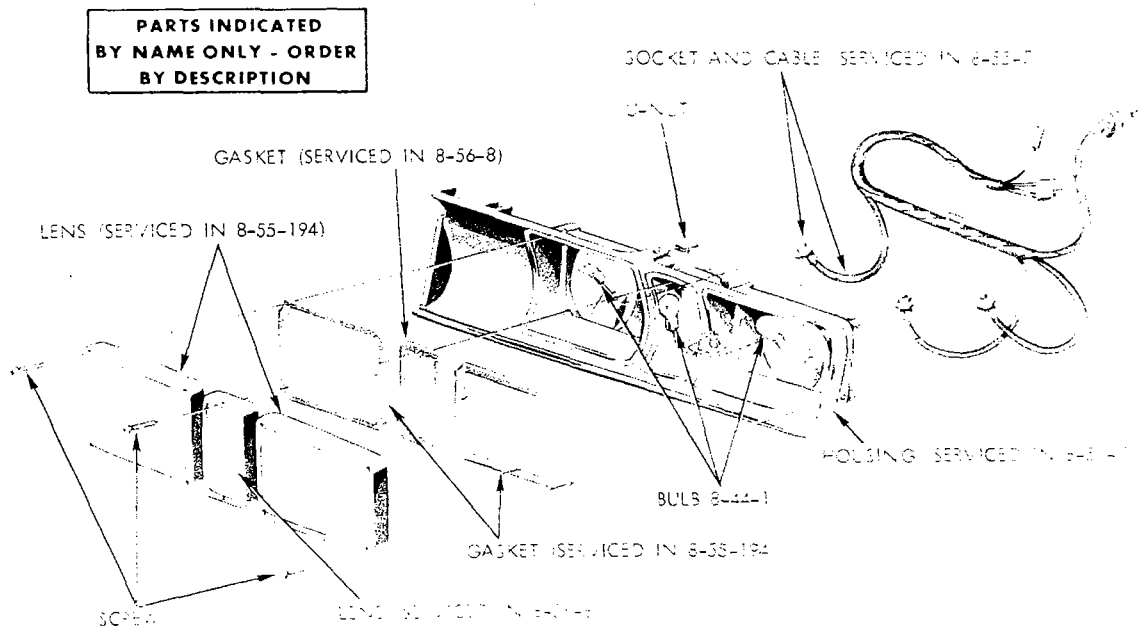

1971
TAIL, STOP, TURN SIGNAL AND BACK-UP LAMP - CHARGER, SUPER BEE AND SE

NOTES

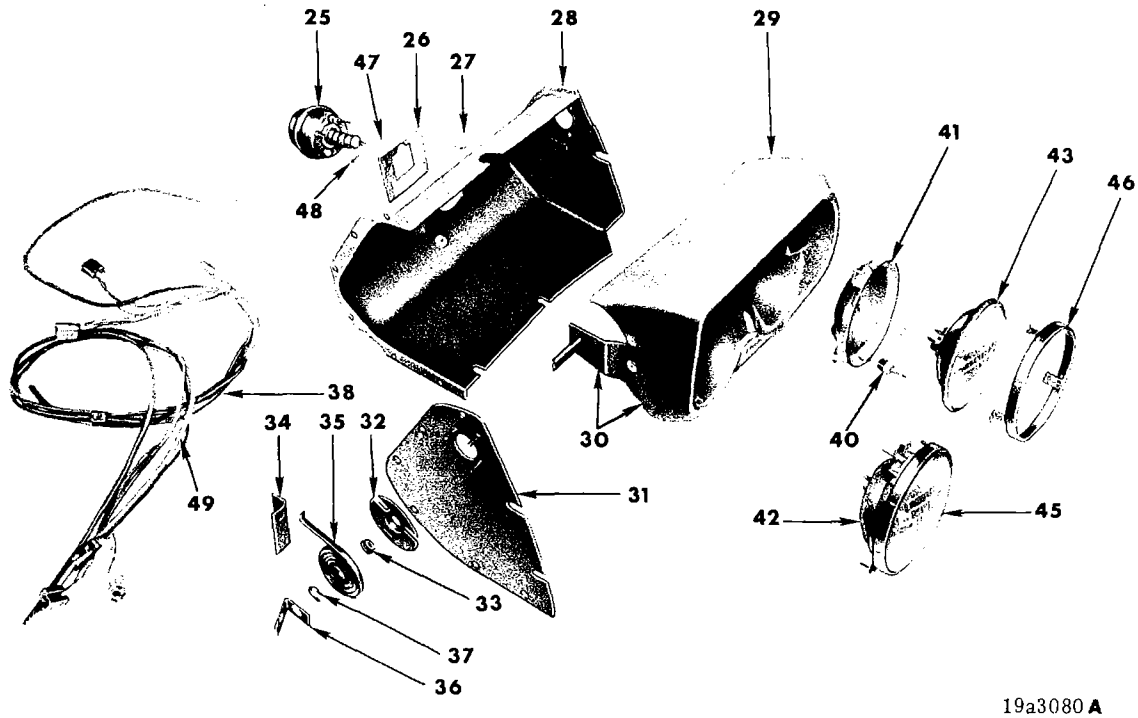

HEADLAMP - SUPERBIRD (1970)

REF. NO.	PART NUMBER	DESCRIPTION
25	2926 961	ACTUATOR
26	3412 636	PLATE
27	144 229	GROMMET
28	3412 766-7	COMPARTMENT
29	3412 620-1	HEADLAMP HOUSING ONLY
30	3412 764-5	HEADLAMP DOOR ASSEMBLY
31	3412 666-7	PLATE
32	3412 631	CAP
33	6027 280	BUSHING
34	3412 694	BRACKET
35	3412 630	SPRING
36	6027 292	CLIP
37	1922 183	"C" CLIP
38	3571 160	WIRING
40	2785 842	ADJ. SCREW AND NUT
41	2786 882-3	HIGH HEADLAMP SEAT
42	2786 884-5	LOW HEADLAMP SEAT
43	152 286	SEAL BEAM LOW
45	152 285	SEAL BEAM HIGH
46	2449 525	"J" RING
47	2857 976	SHAFT, CLIP
48	9416 049	SCREW
49	3412 675	VAC. HOSE 22" BLACK
49	3412 676	VAC. HOSE 22" YELLOW
49	3412 677	VAC. HOSE 16" BLACK
49	3412 678	VAC. HOSE 16" YELLOW
49	2926 337	TUBE AND CONNECTOR HEADLAMP DOOR VAC. CONTROL

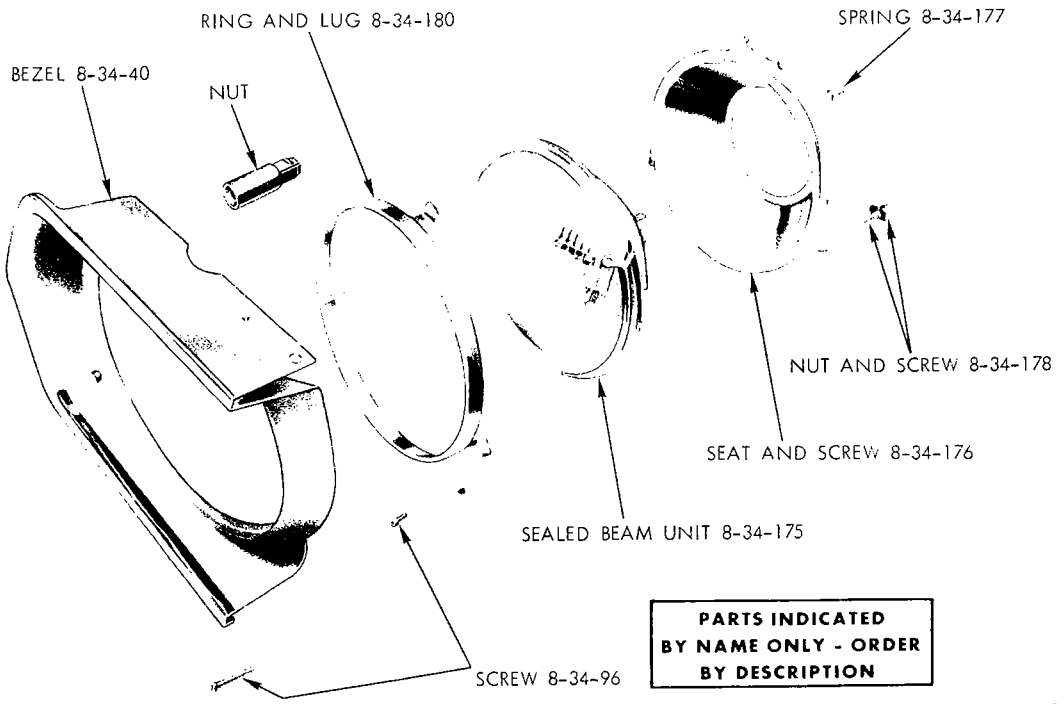

HEADLAMP - VALIANT

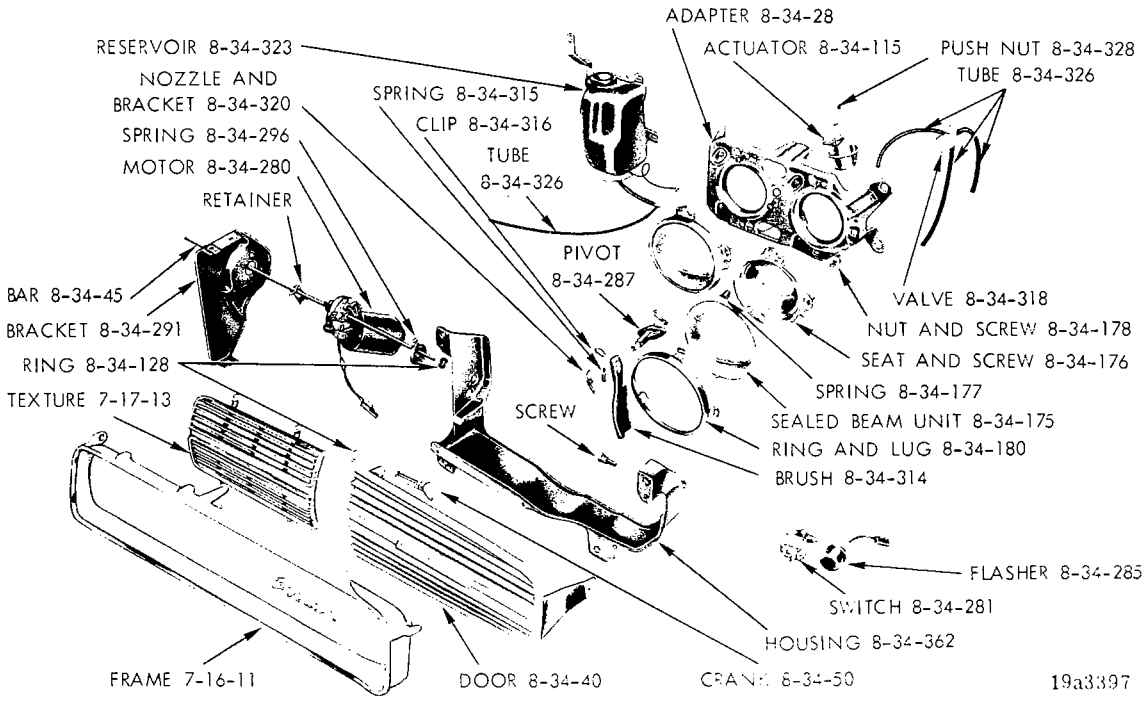

HIDEAWAY HEADLAMP AND WASHER SYSTEM - CHARGER 2 DOOR HARDTOP AND FASTBACK

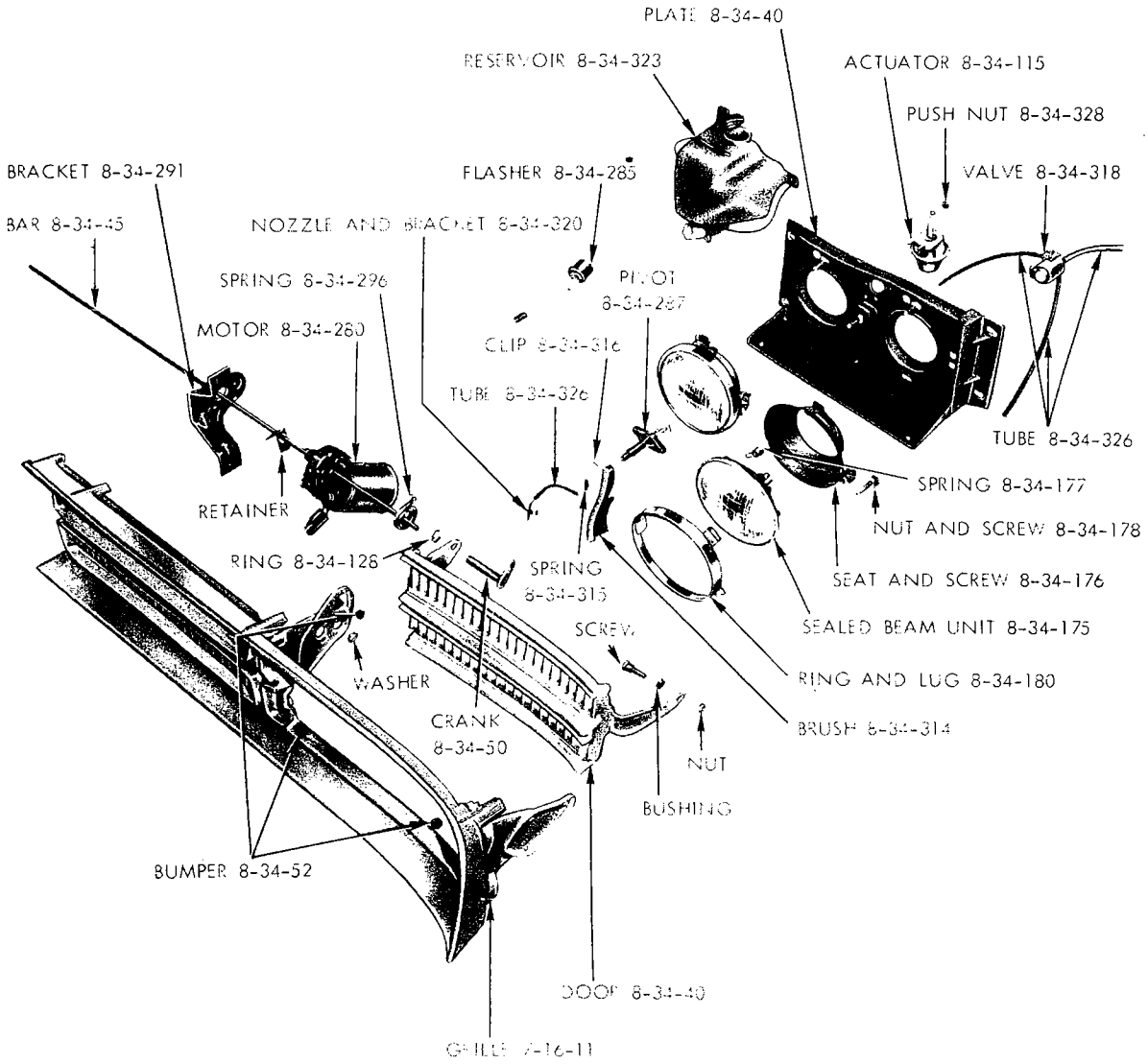

PARTS INDICATED BY NAME ONLY - ORDER BY DESCRIPTION

19a3592 **A**

HIDEAWAY HEADLAMP AND WASHER SYSTEM - SPORT FURY AND SPORT FURY GT

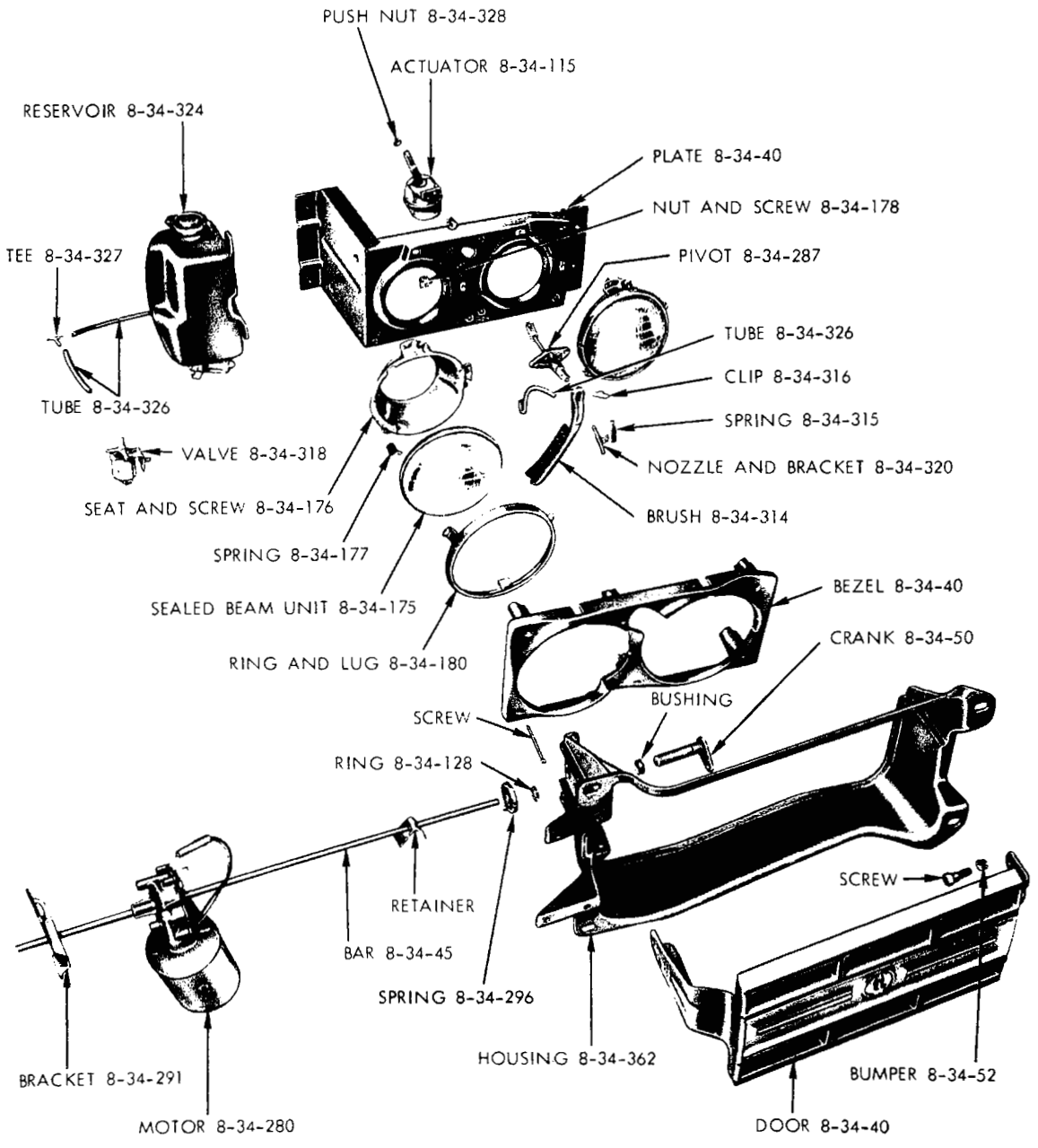

PARTS INDICATED BY NAME ONLY - ORDER BY DESCRIPTION

19a3593A

HIDEAWAY HEADLAMP AND WASHER SYSTEM - IMPERIAL

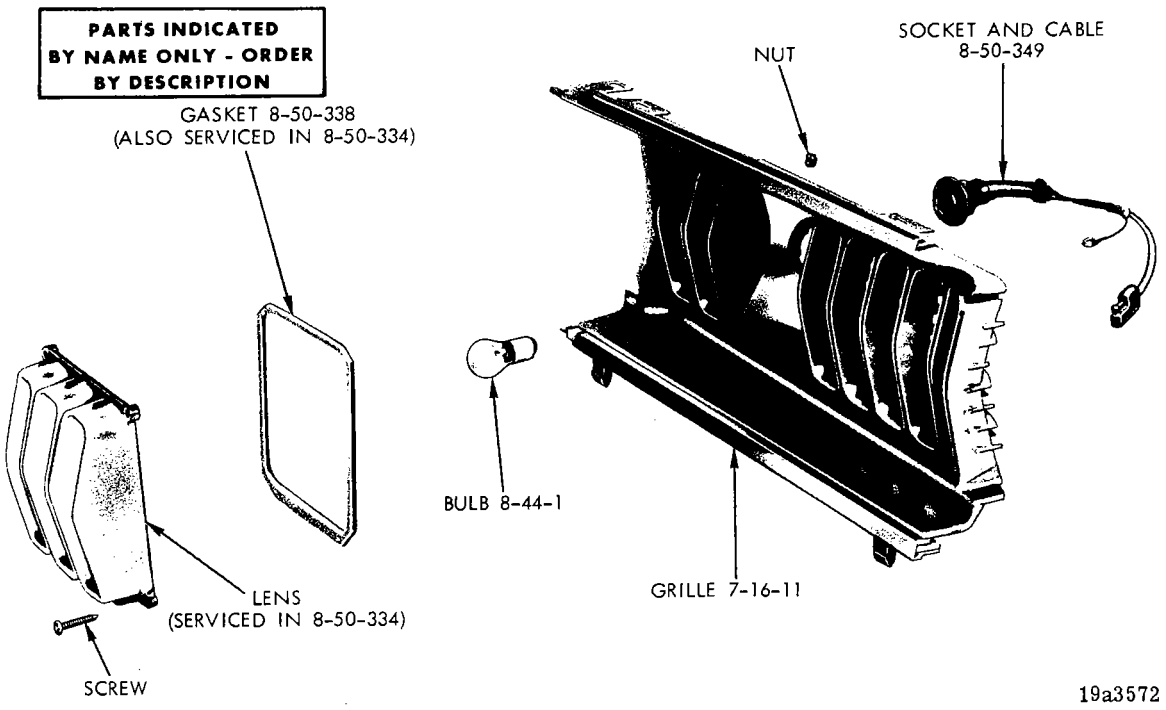

PARKING AND TURN SIGNAL LAMP - VALIANT

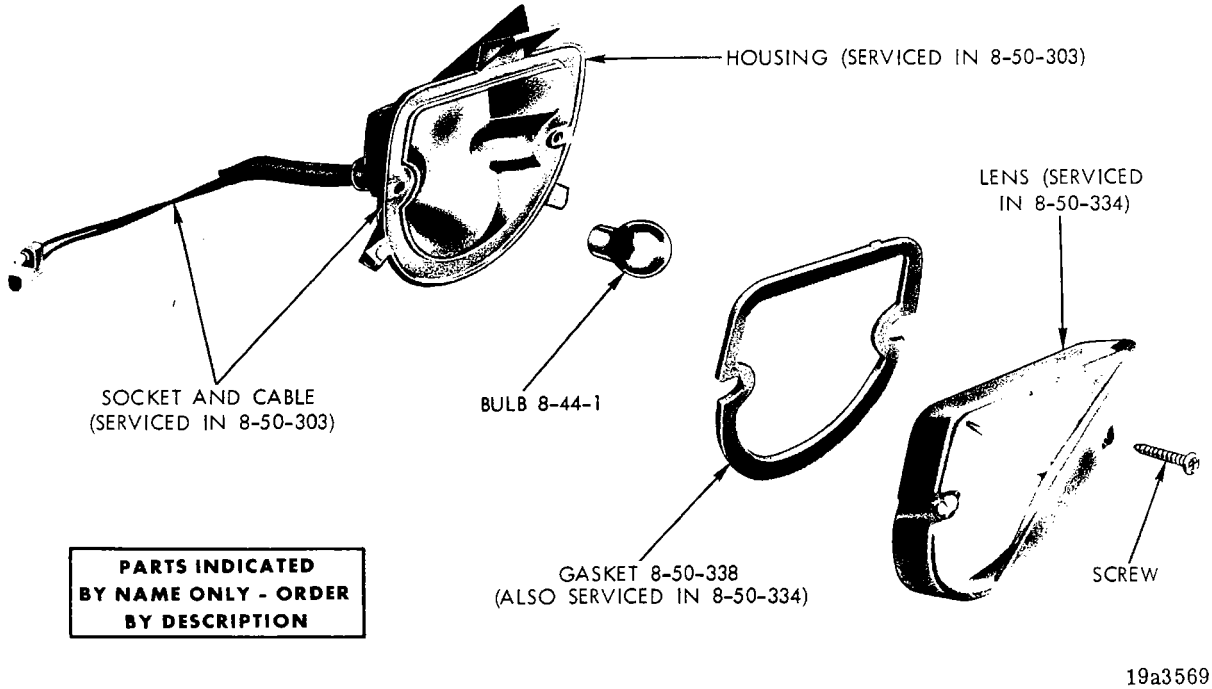

PARKING AND TURN SIGNAL LAMP - BARRACUDA

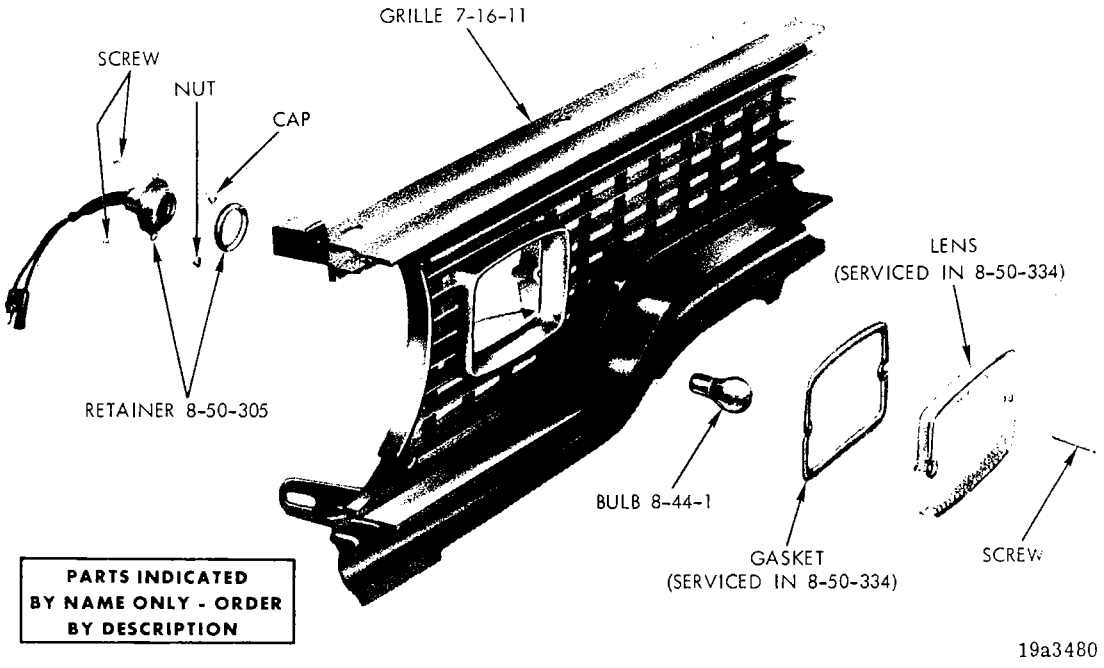

PARKING AND TURN SIGNAL LAMP - SATELLITE 4 D. AND STATION WAGON

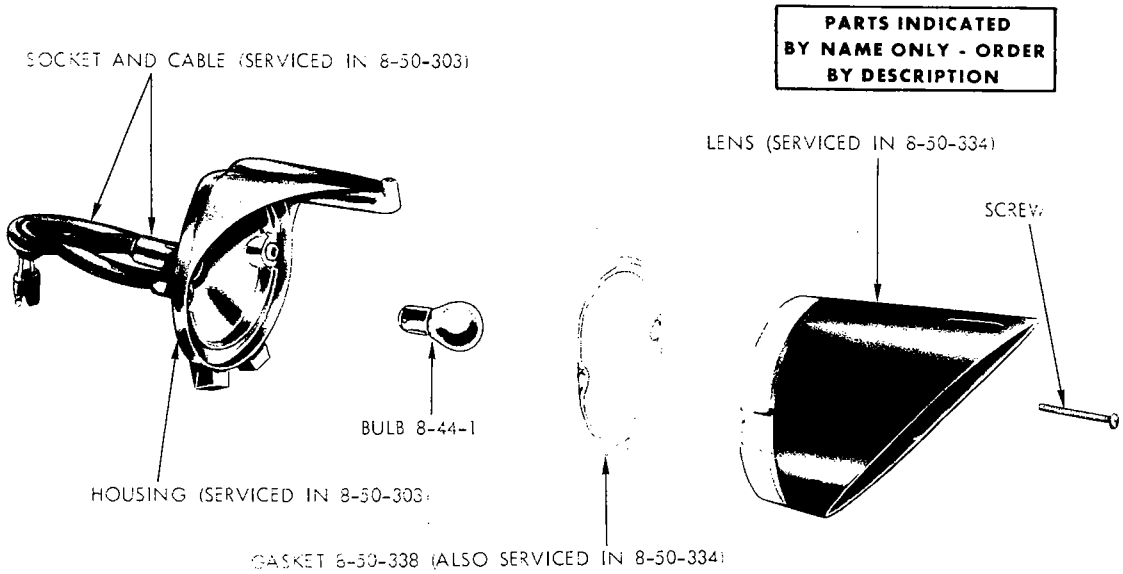

PARKING AND TURN SIGNAL LAMP - SATELLITE ROAD RUNNER
AND GTX 2 DOOR HARDTOP

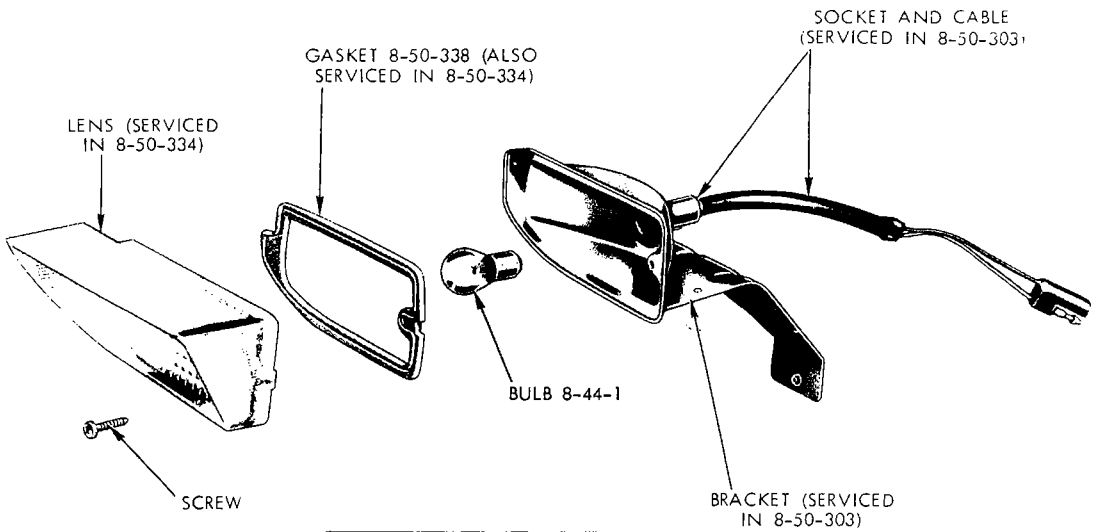

19a3399

PARKING AND TURN SIGNAL LAMP - CORONET 4 D. AND STATION WAGON

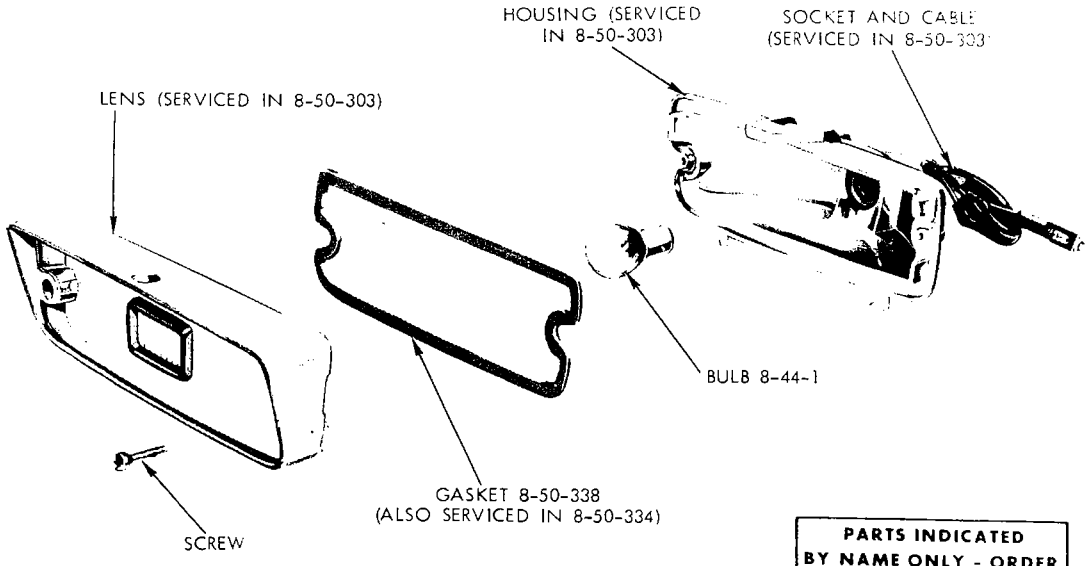

PARKING AND TURN SIGNAL LAMP - CORONET 2 DOOR HARDTOP

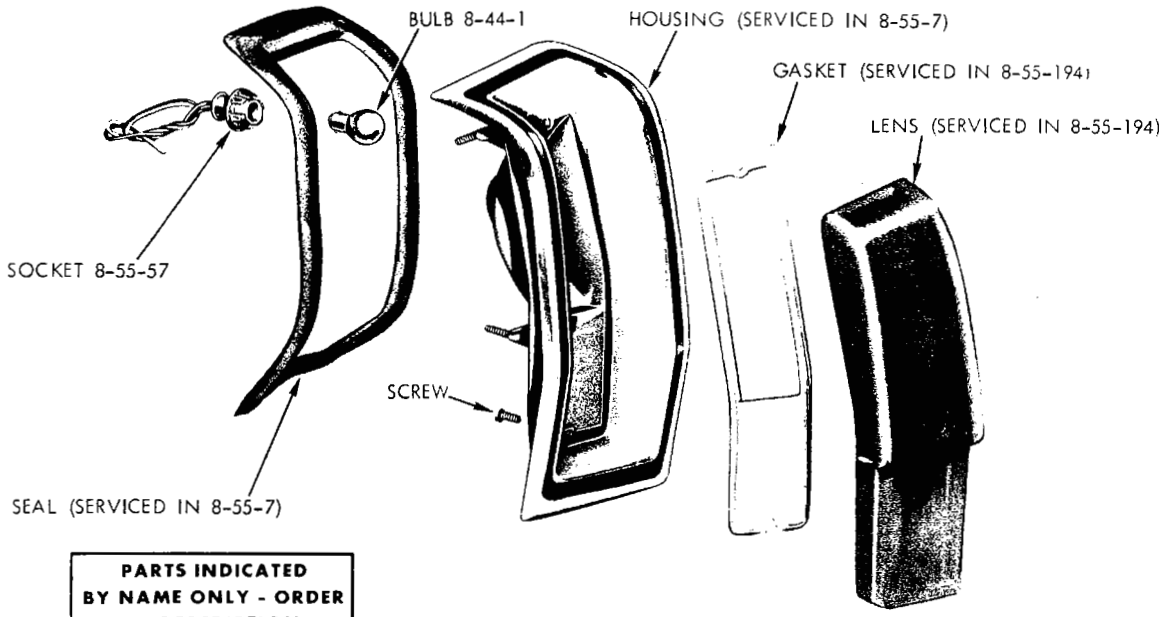

TAIL, STOP AND TURN SIGNAL LAMP - VALIANT 4 DOOR SEDAN (1971)

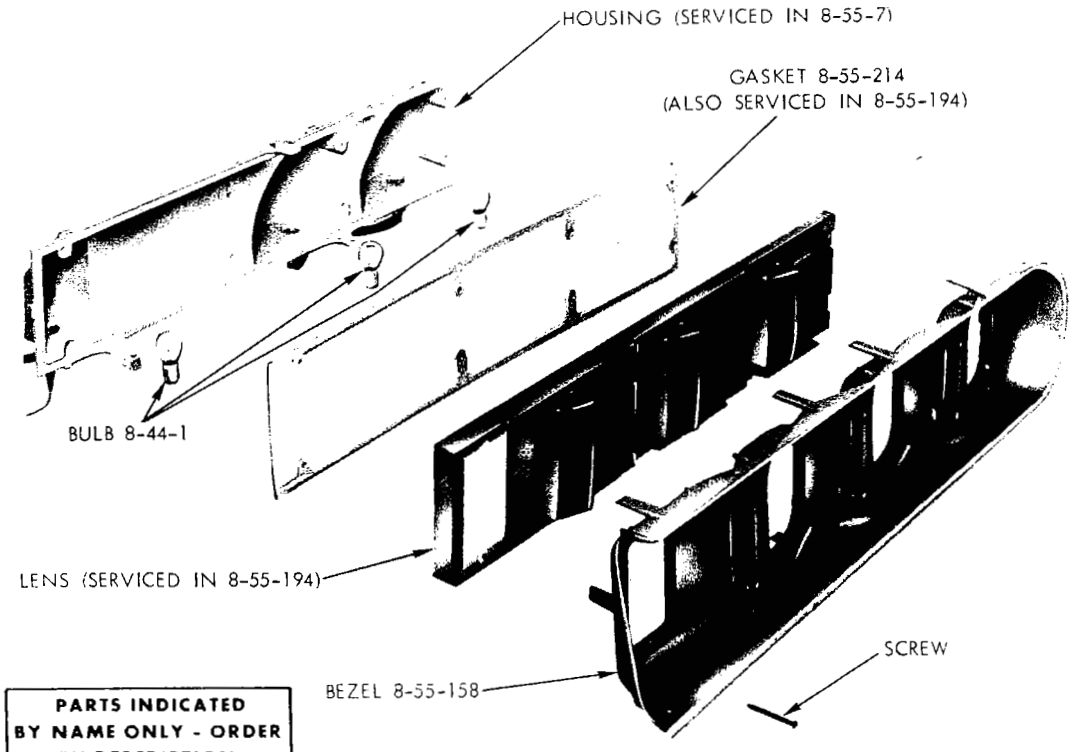

TAIL, STOP, TURN SIGNAL AND BACK-UP LAMP - CHARGER 500 AND CHARGER R/T

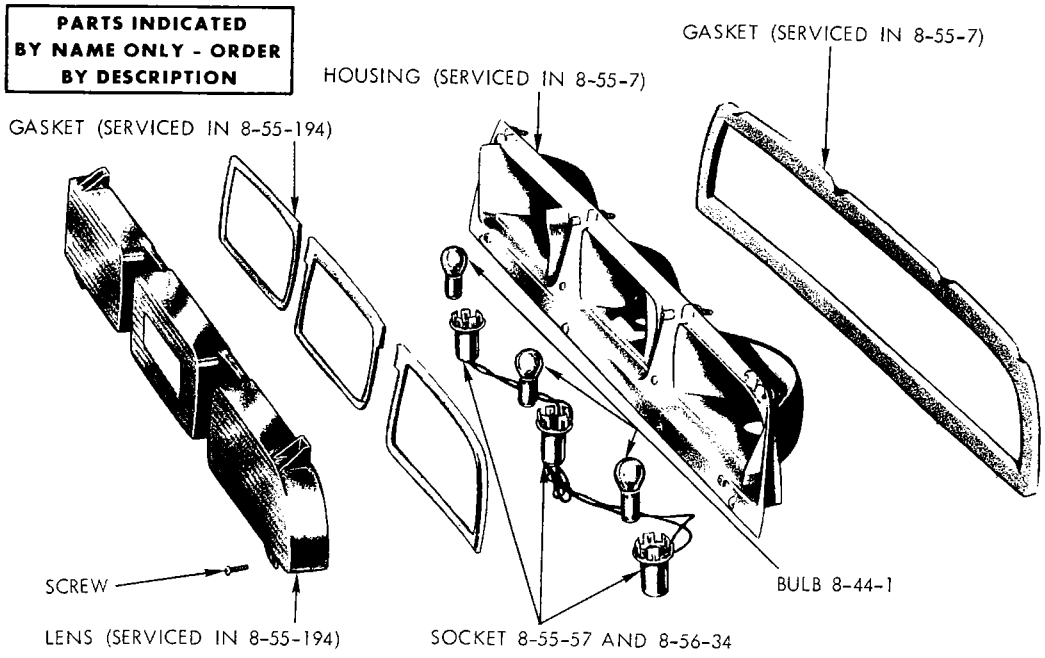

TAIL, STOP, TURN SIGNAL AND BACK-UP LAMP - CHALLENGER

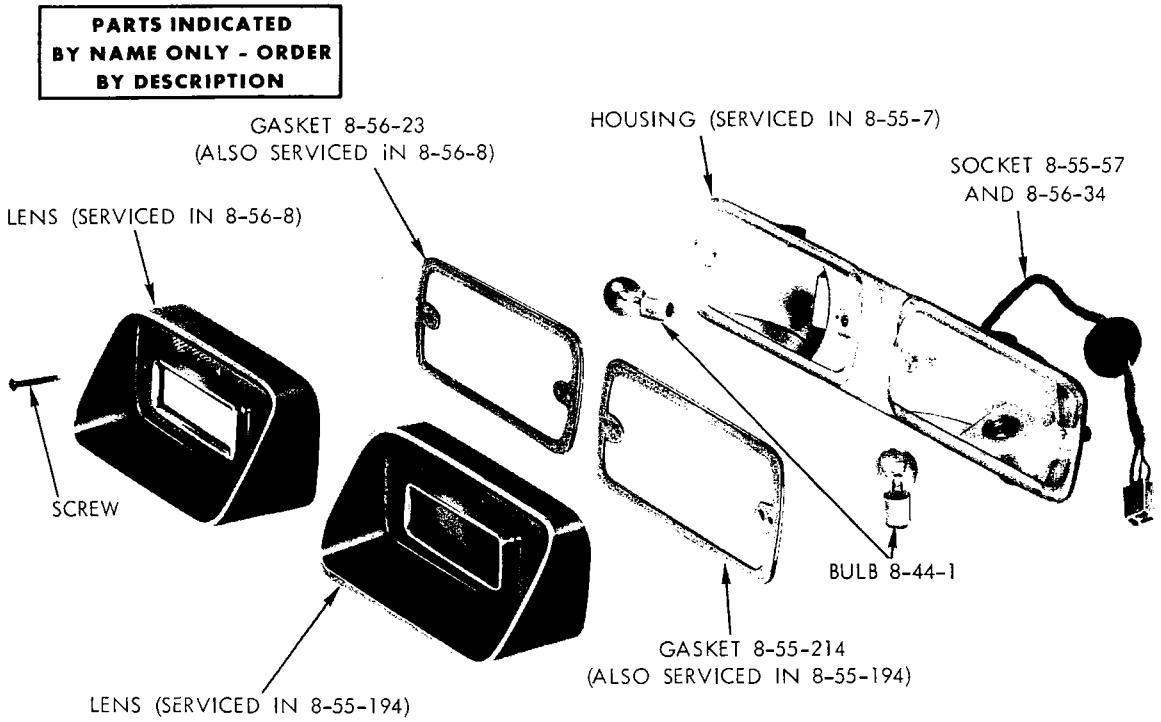

TAIL, STOP, TURN SIGNAL AND BACK-UP LAMP - DART EXCEPT DEMON

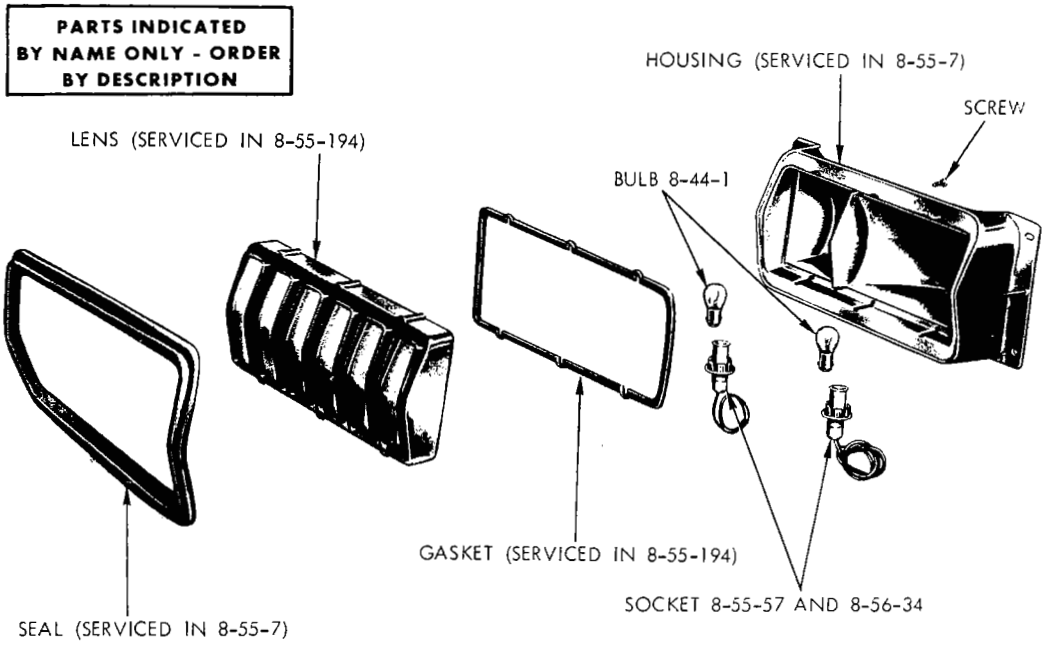

TAIL, STOP, TURN SIGNAL AND BACK-UP LAMP - DEMON

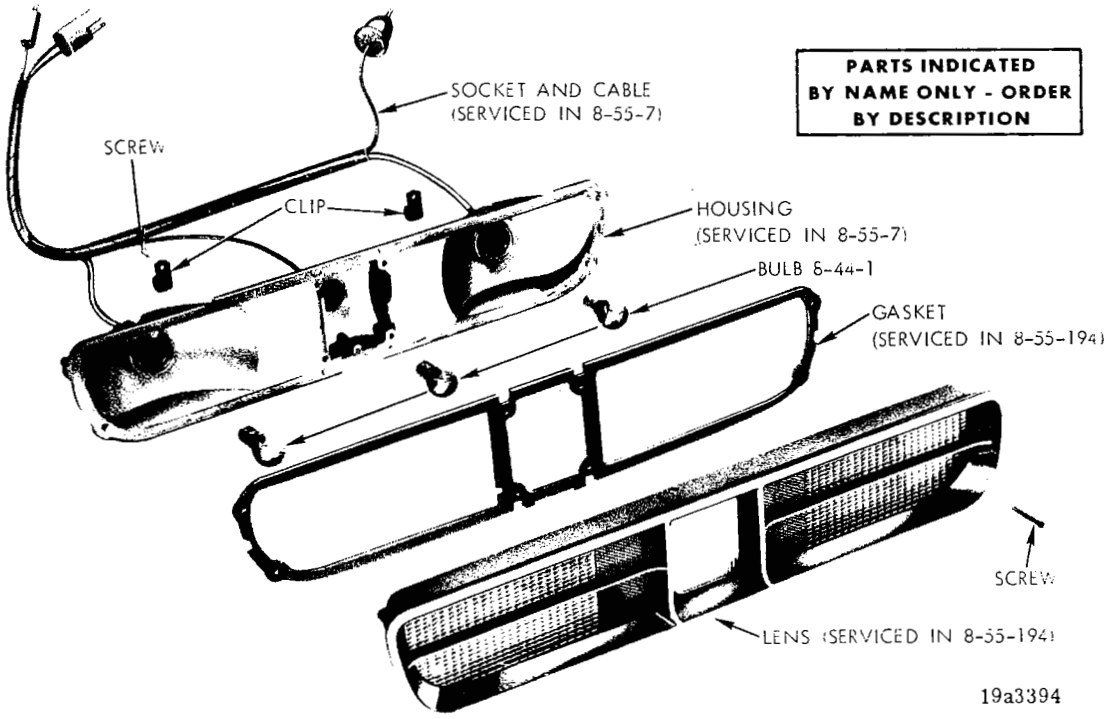

TAIL, STOP, TURN SIGNAL AND BACK-UP LAMP - CORONET 4 D.

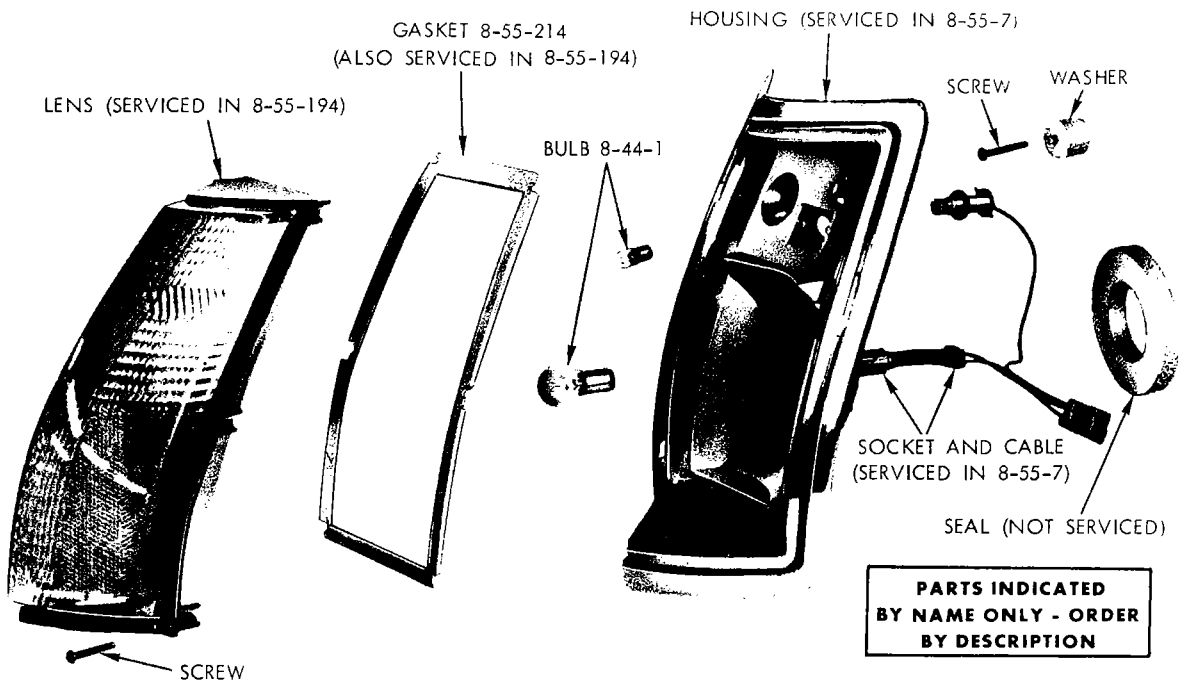

TAIL, STOP, TURN SIGNAL AND SIDE MARKER LAMP - CORONET STATION WAGON

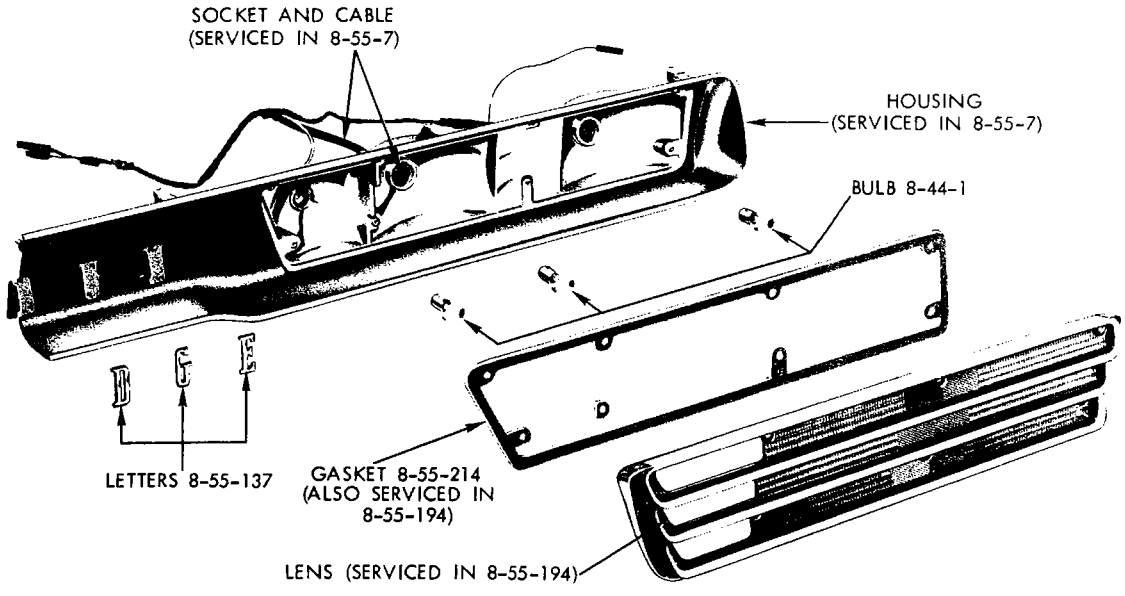

TAIL, STOP, TURN SIGNAL AND BACK-UP LAMP - DODGE POLARA

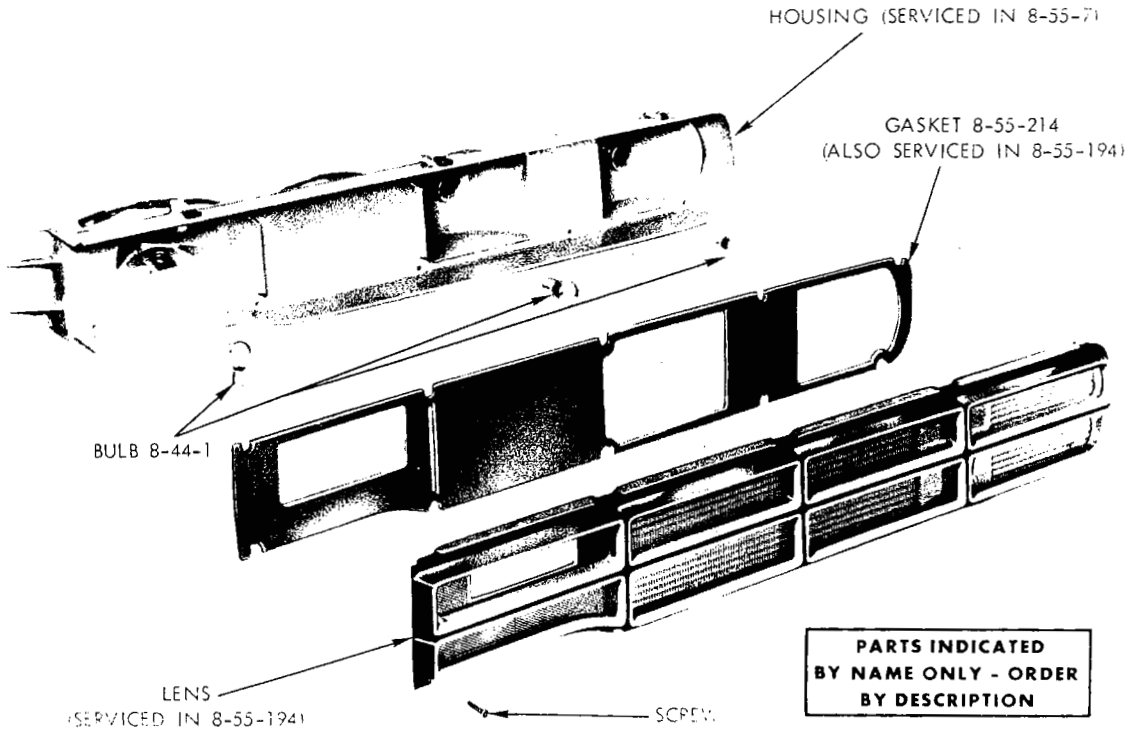

19a3570

TAIL, STOP, TURN SIGNAL AND BACK-UP LAMP - DODGE MONACO

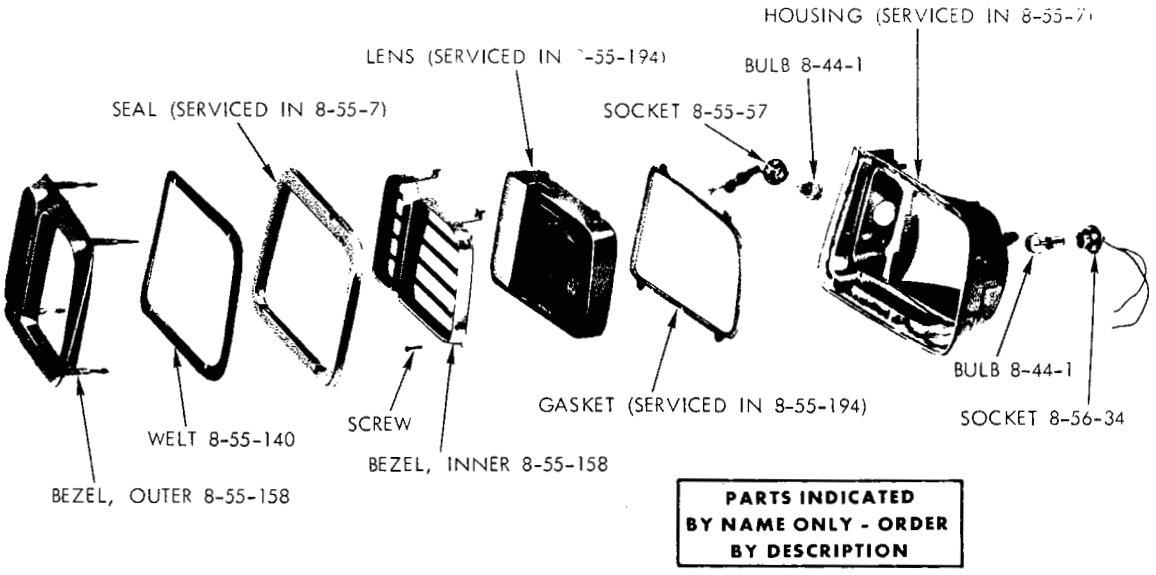

19a3421

TAIL, STOP, TURN SIGNAL AND BACK-UP LAMP - BARRACUDA

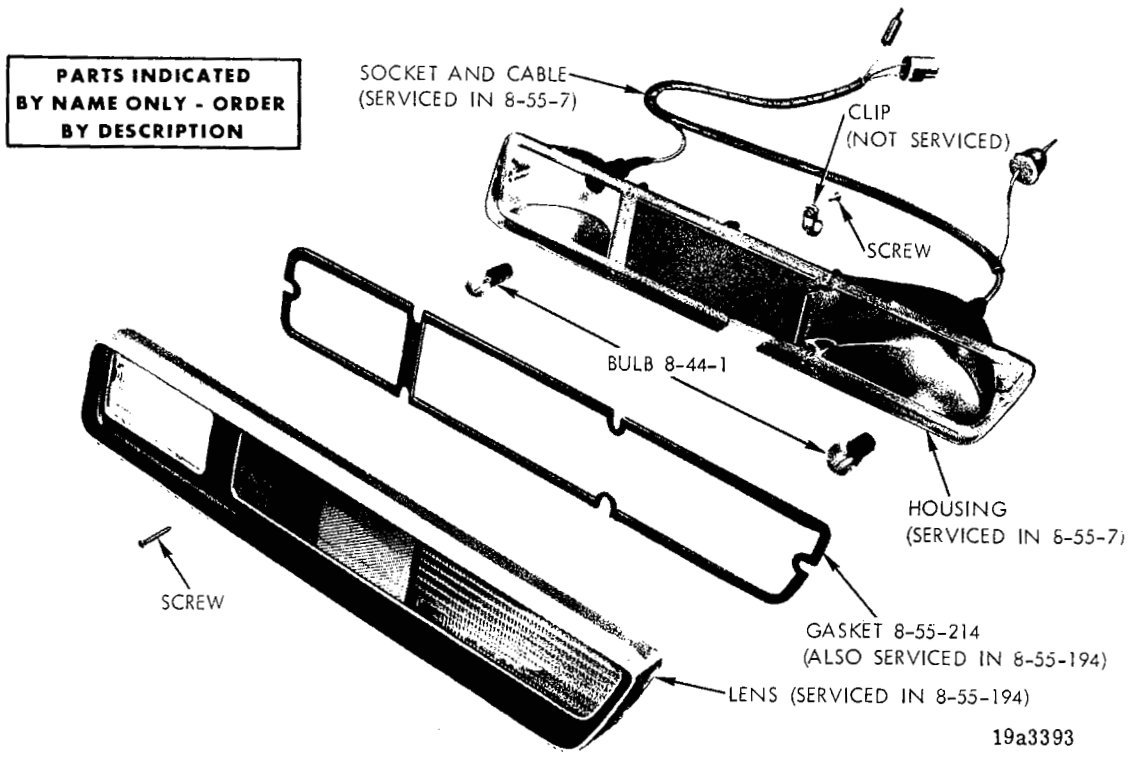

TAIL, STOP, TURN SIGNAL AND BACK-UP LAMP - SATELLITE 4 D.

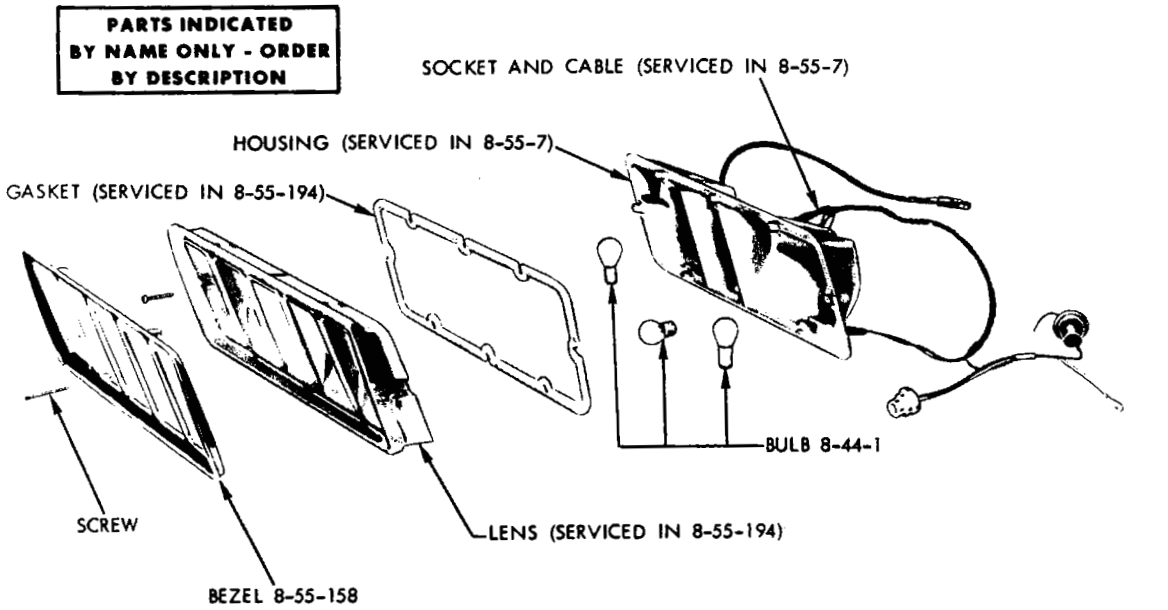

TAIL, STOP, TURN SIGNAL AND BACK-UP LAMP - SATELLITE 2 DOOR HARDTOP

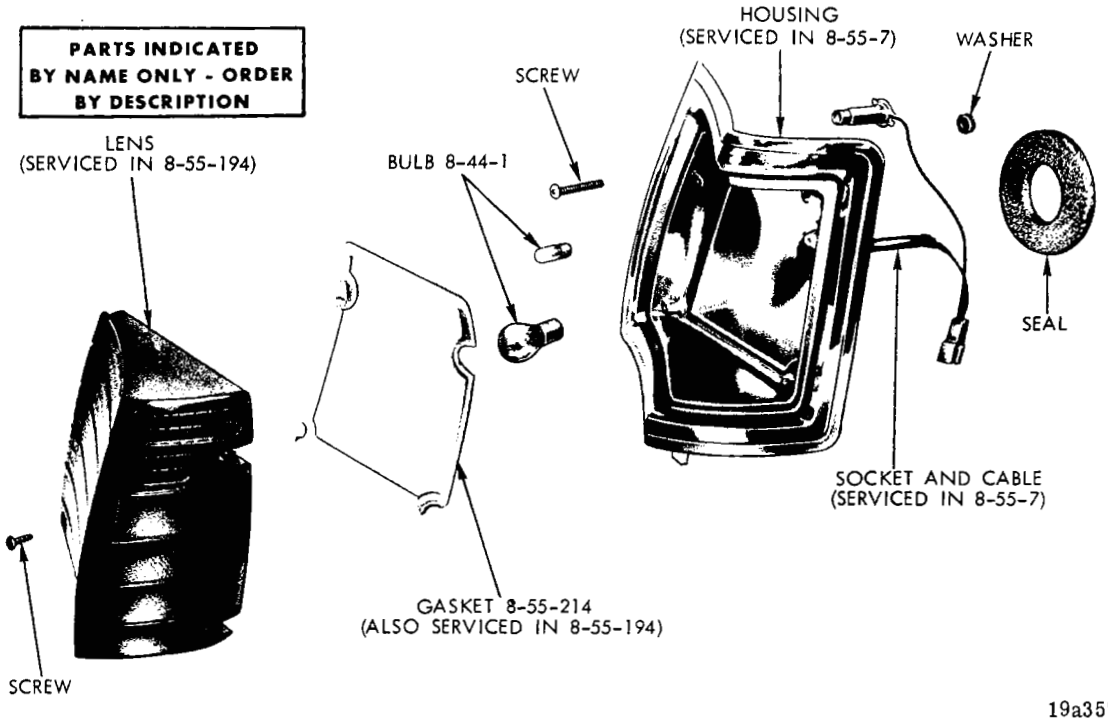

TAIL, STOP, TURN SIGNAL AND SIDE MARKER LAMP - SATELLITE STATION WAGON

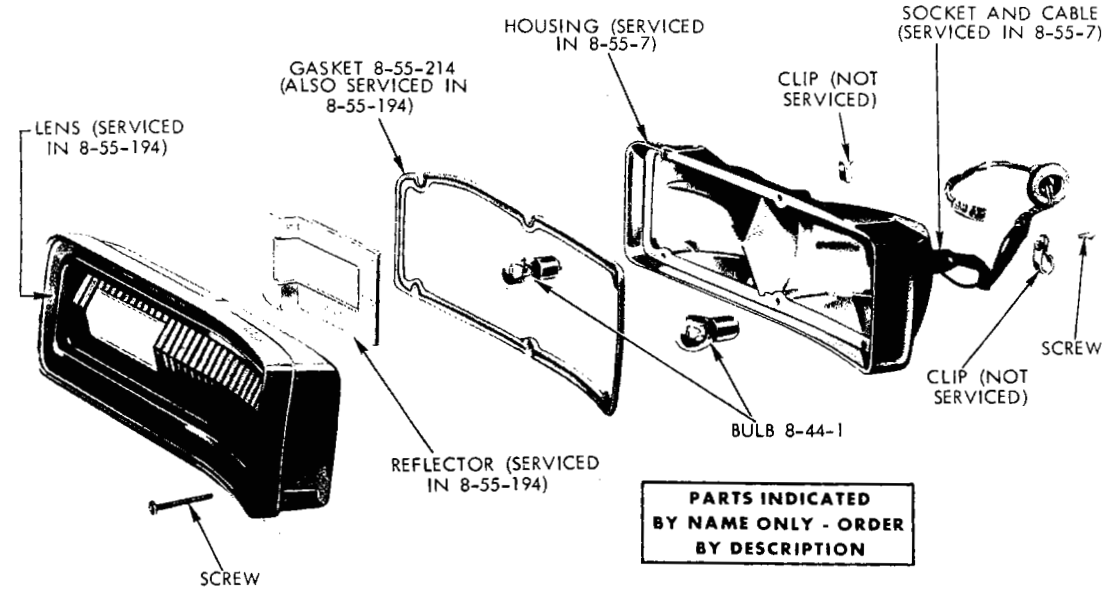

TAIL, STOP, TURN SIGNAL AND BACK-UP LAMP - PLYMOUTH FURY I AND II EXCEPT STATION WAGON

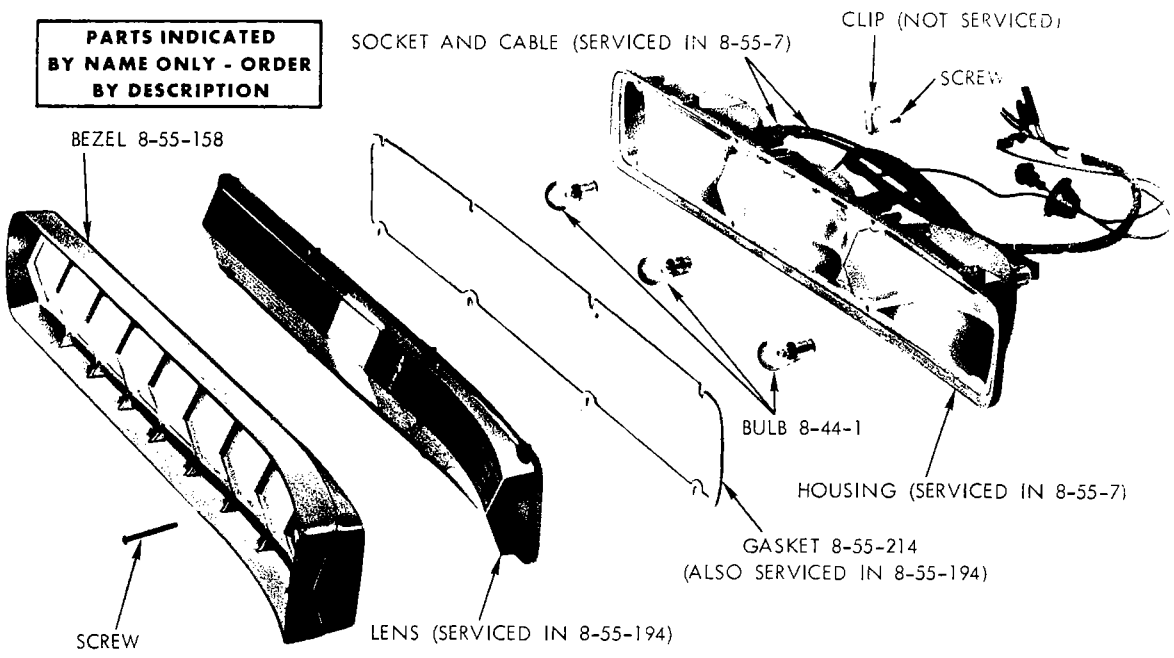

TAIL, STOP, TURN SIGNAL AND BACK-UP LAMP -
FURY III, SPORT FURY AND SPORT FURY GT EXCEPT STATION WAGON

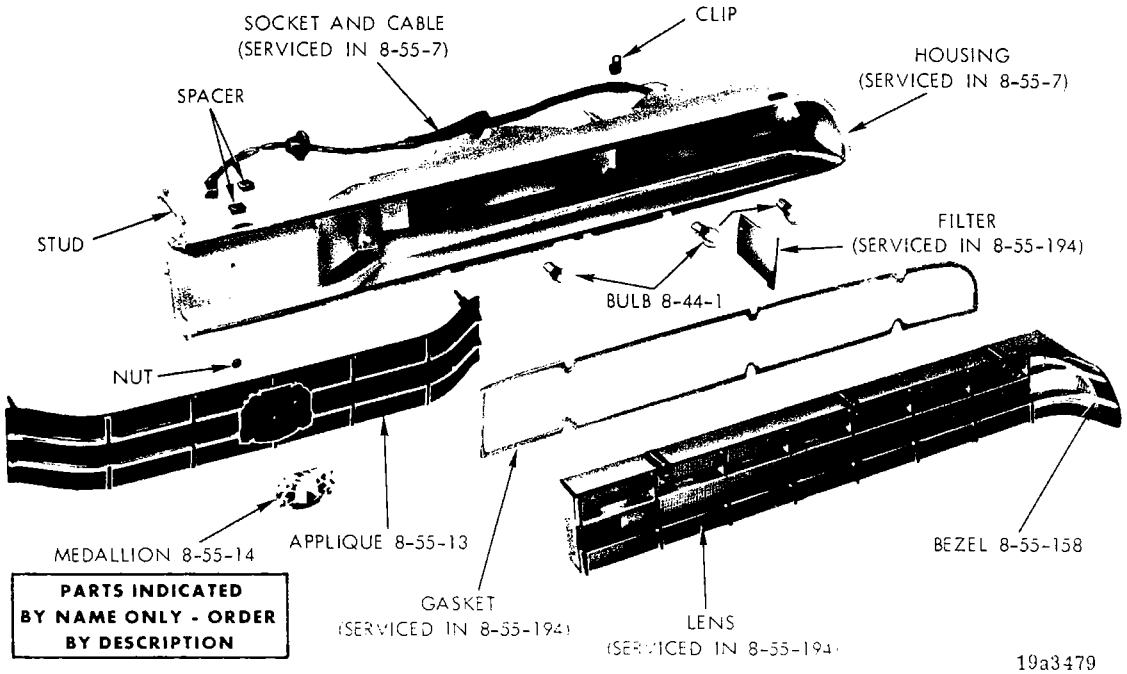

TAIL, STOP, TURN SIGNAL AND BACK-UP LAMP - CHRYSLER NEW YORKER

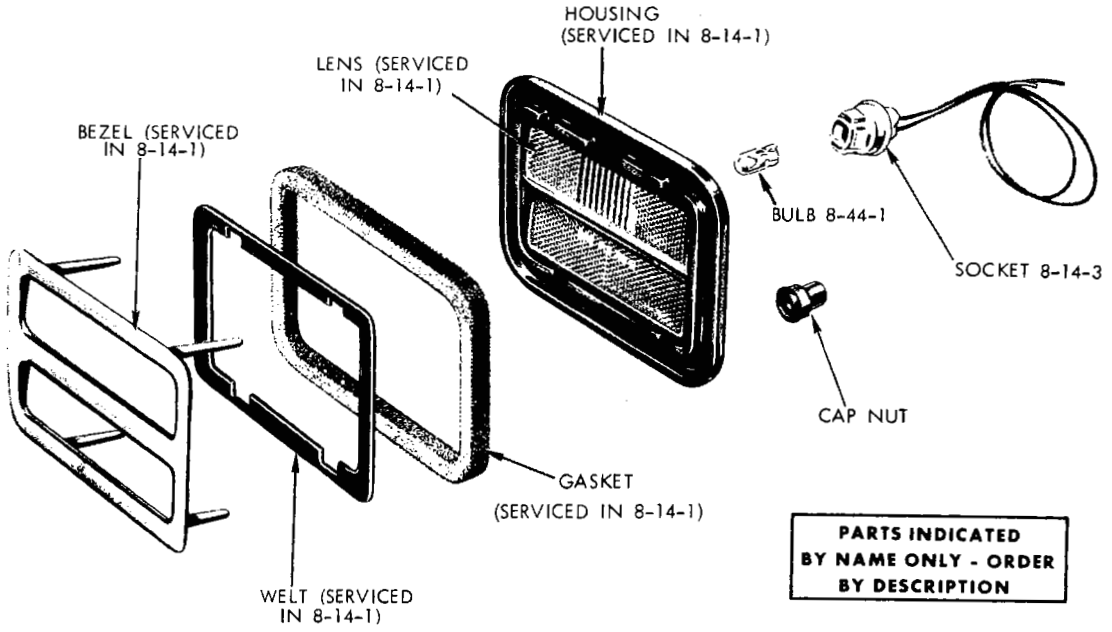

FRONT FENDER SIDE MARKER LAMP - CORONET 4 D. AND STATION WAGON

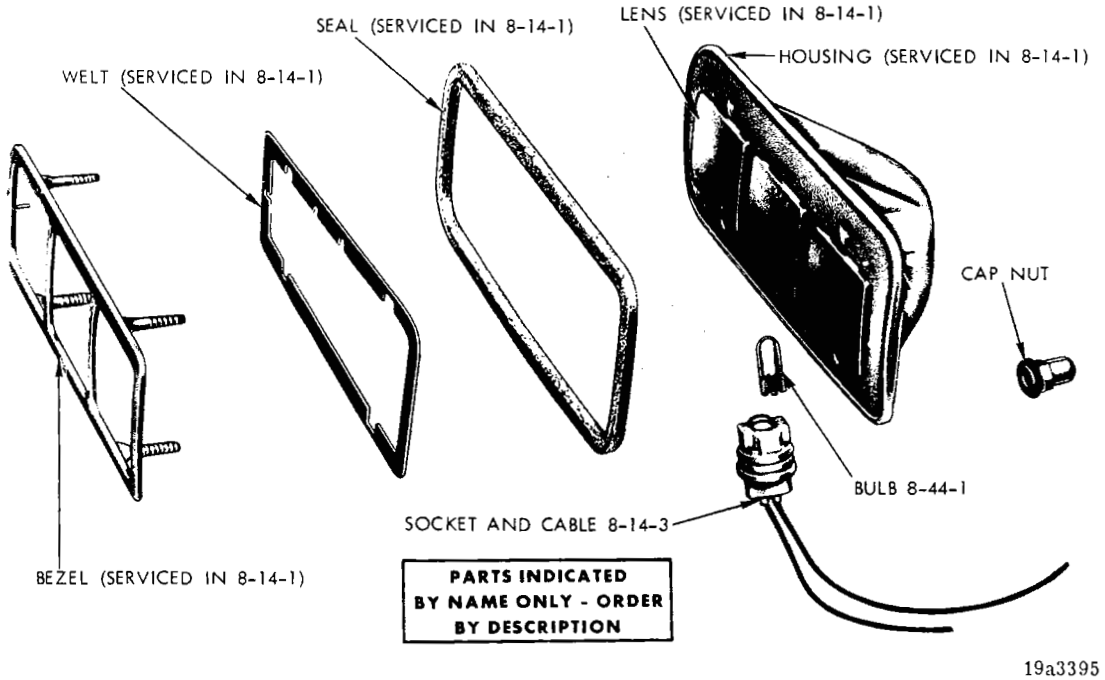

FRONT FENDER SIDE MARKER - SATELLITE AND ROAD RUNNER

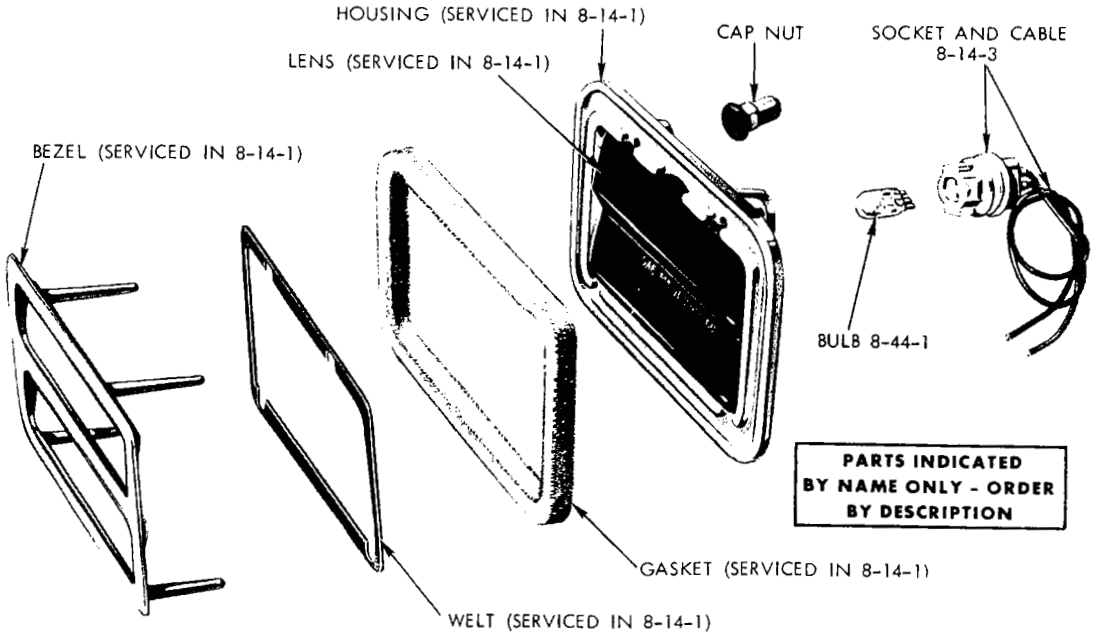

QUARTER PANEL SIDE MARKER LAMP - CORONET EXCEPT STATION WAGON

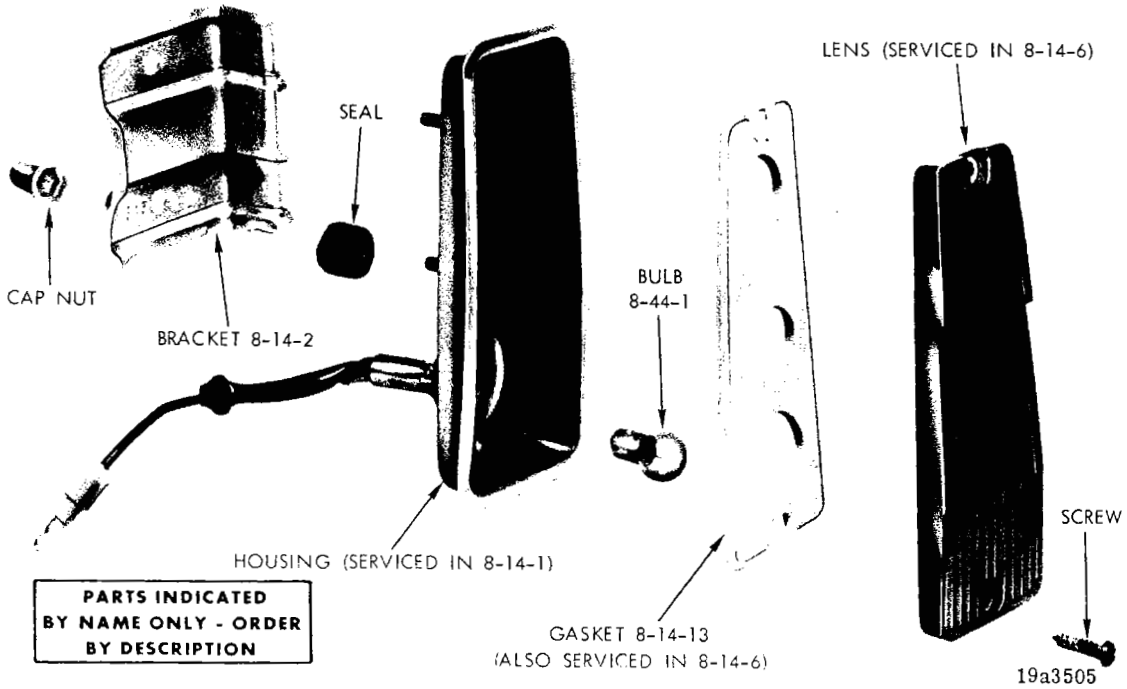

REAR SIDE MARKER LAMP - DODGE POLARA AND MONACO (EXCEPT STATION WAGON)

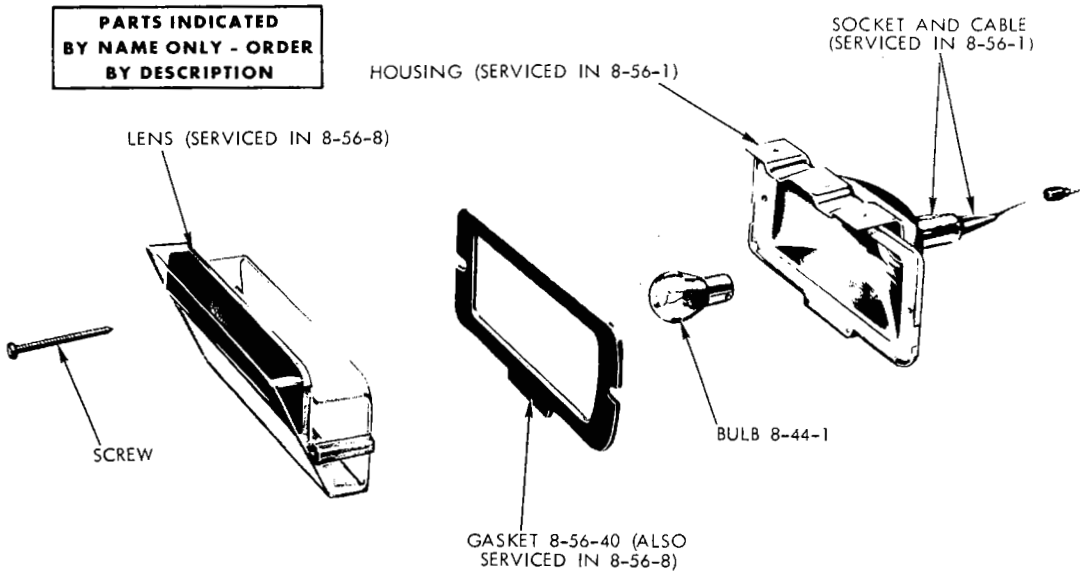

BACK-UP LAMP - SATELLITE AND CORONET STATION WAGON

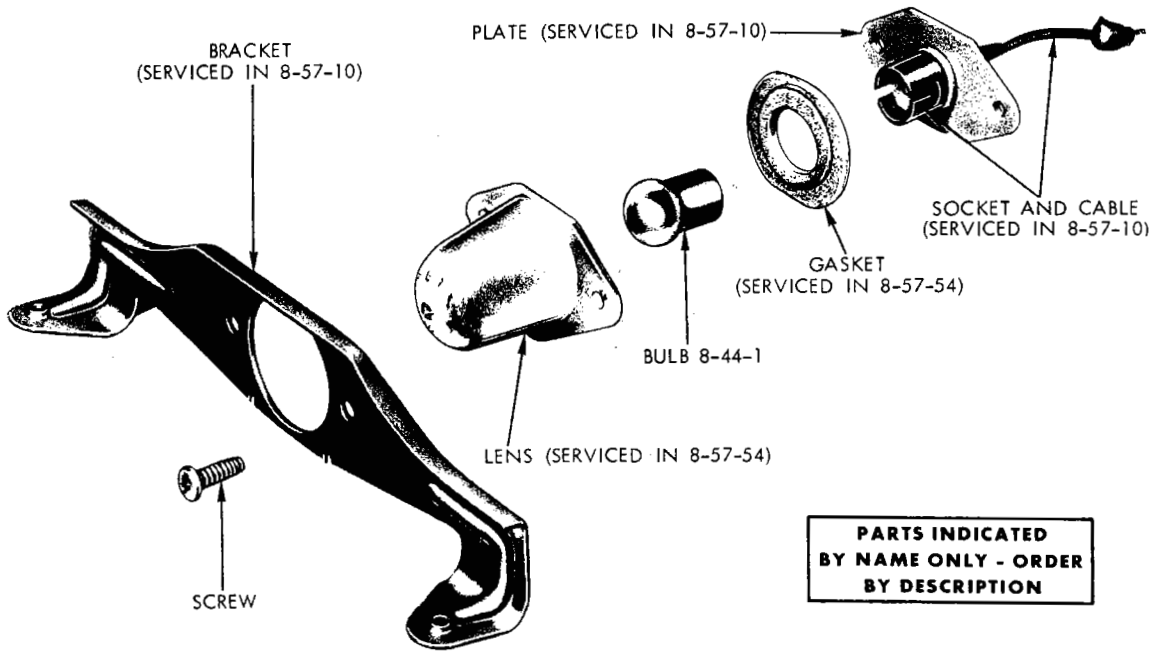

LICENSE LAMP - SATELLITE AND CORONET (ALL),
PLYMOUTH AND DODGE (EXCEPT STATION WAGON)

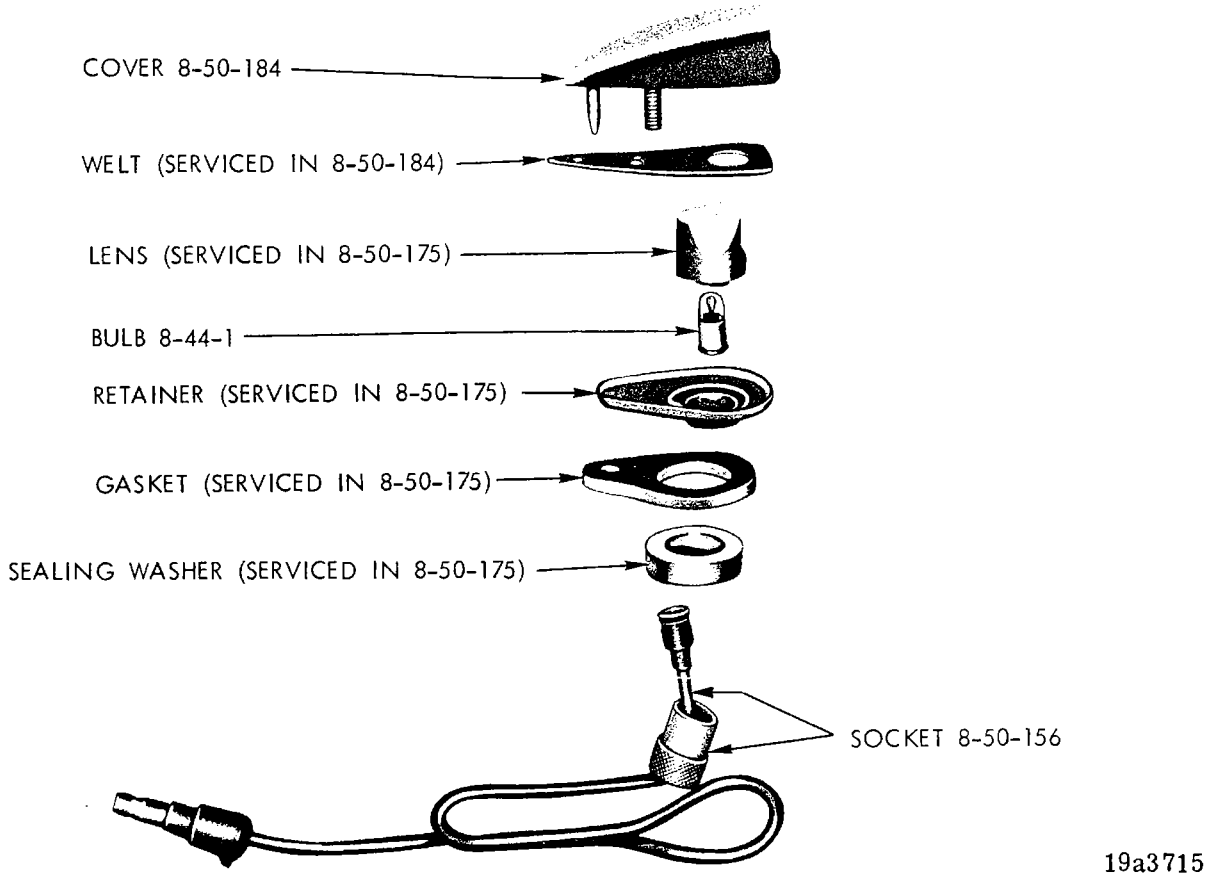

TURN SIGNAL INDICATOR LAMP - V, B, E, P EXCEPT SPORT FURY GT (1971)

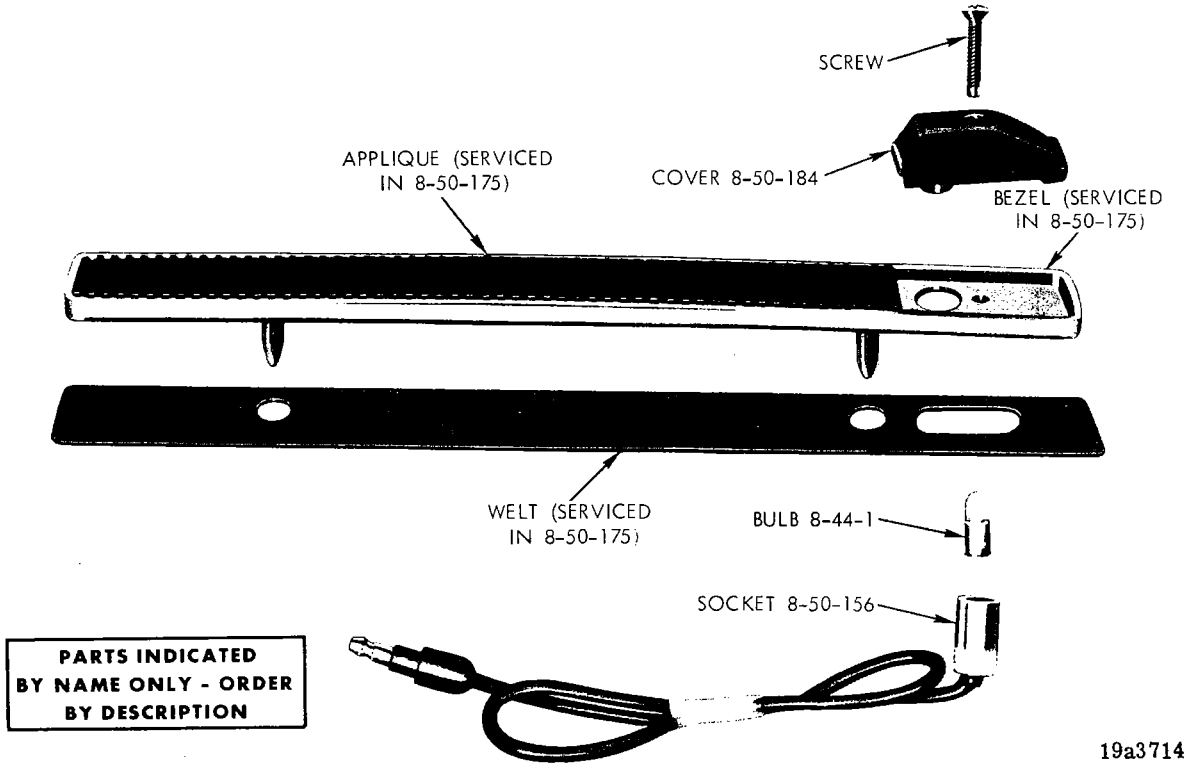

FENDER TURN SIGNAL INDICATOR LAMP - SPORT FURY GT (1971)

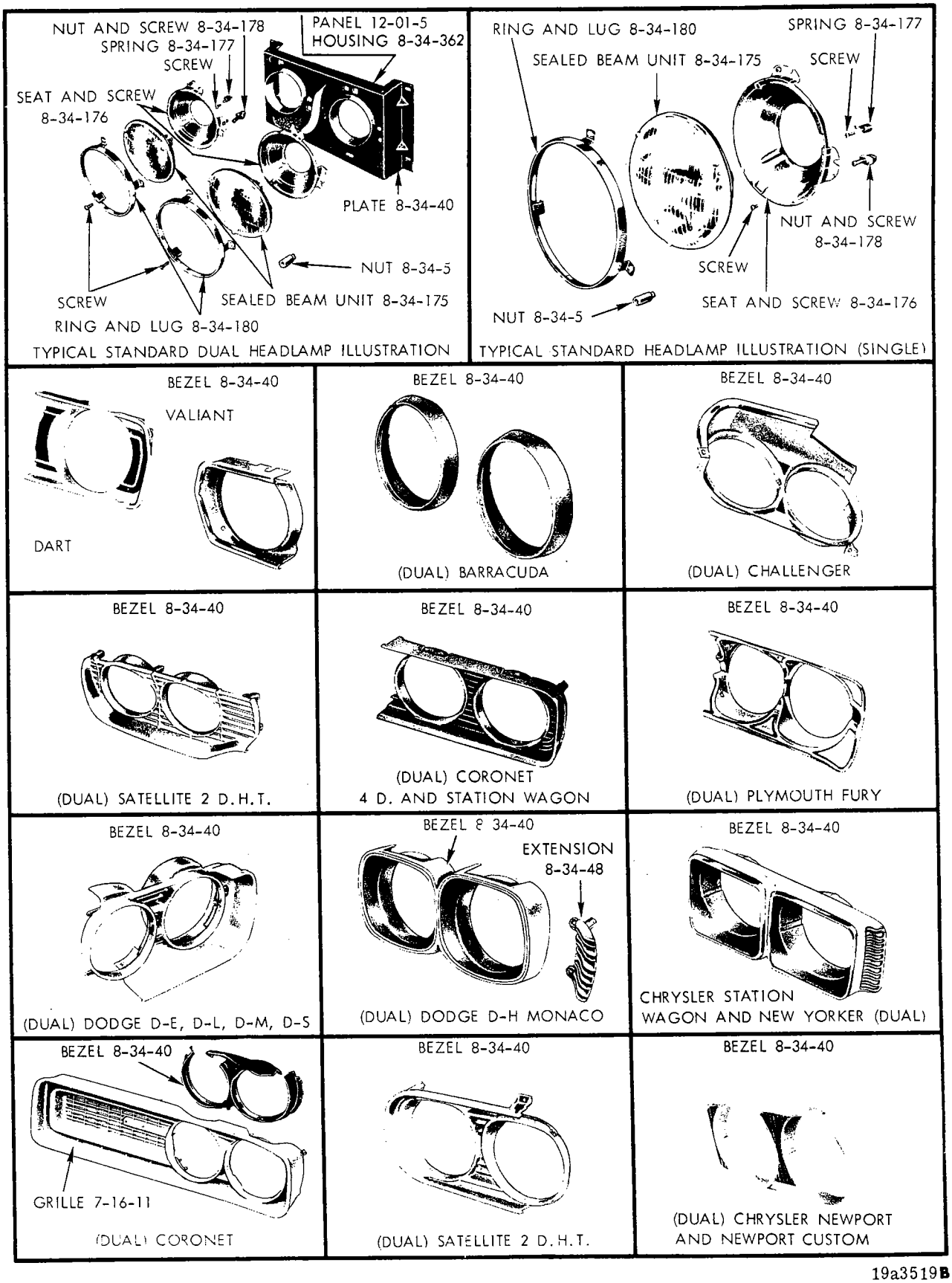

19a3519B

STANDARD HEADLAMP BEZEL CHART

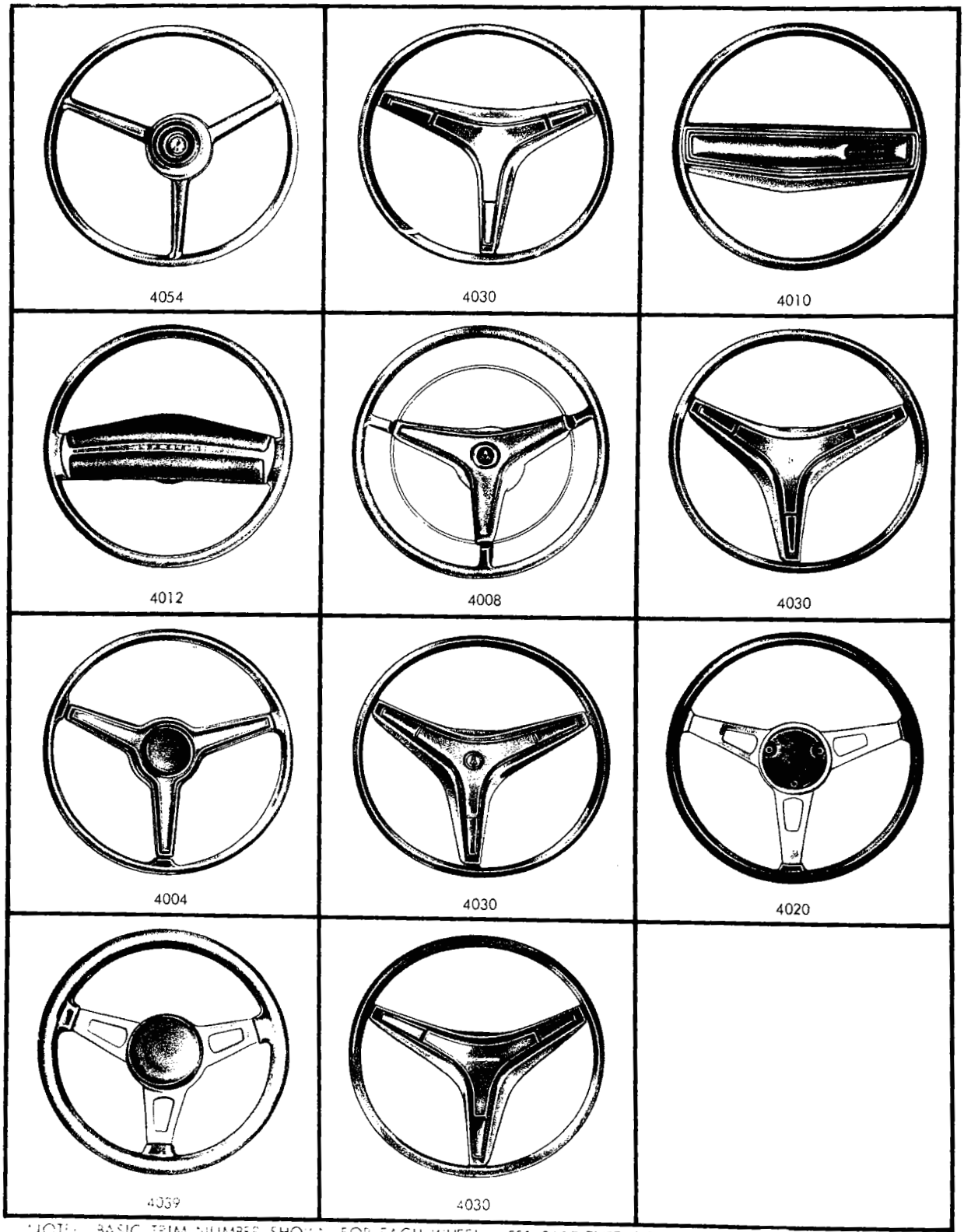

NOTE: BASIC TRIM NUMBER SHOWN FOR EACH WHEEL. SEE PART TYPE CODE 19-30-4 FOR PART NUMBER. ALSO SEE 8-33-13 AND 8-33-6 FOR PAD AND ORNAMENT. ALSO SEE 19-30-43 FOR CENTER AND SPOKE COVERS.

19a3545A

STEERING WHEEL CHART (1970-71)

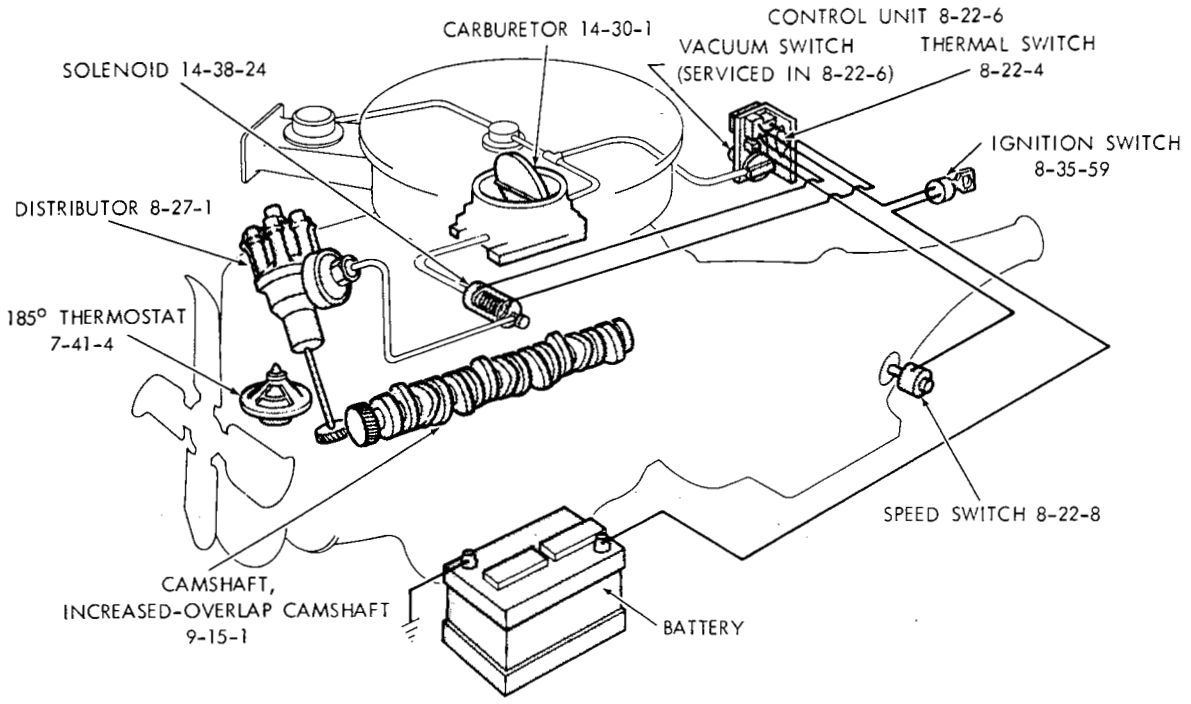

NO_x CONTROL SYSTEM - AUTOMATIC TRANSMISSION

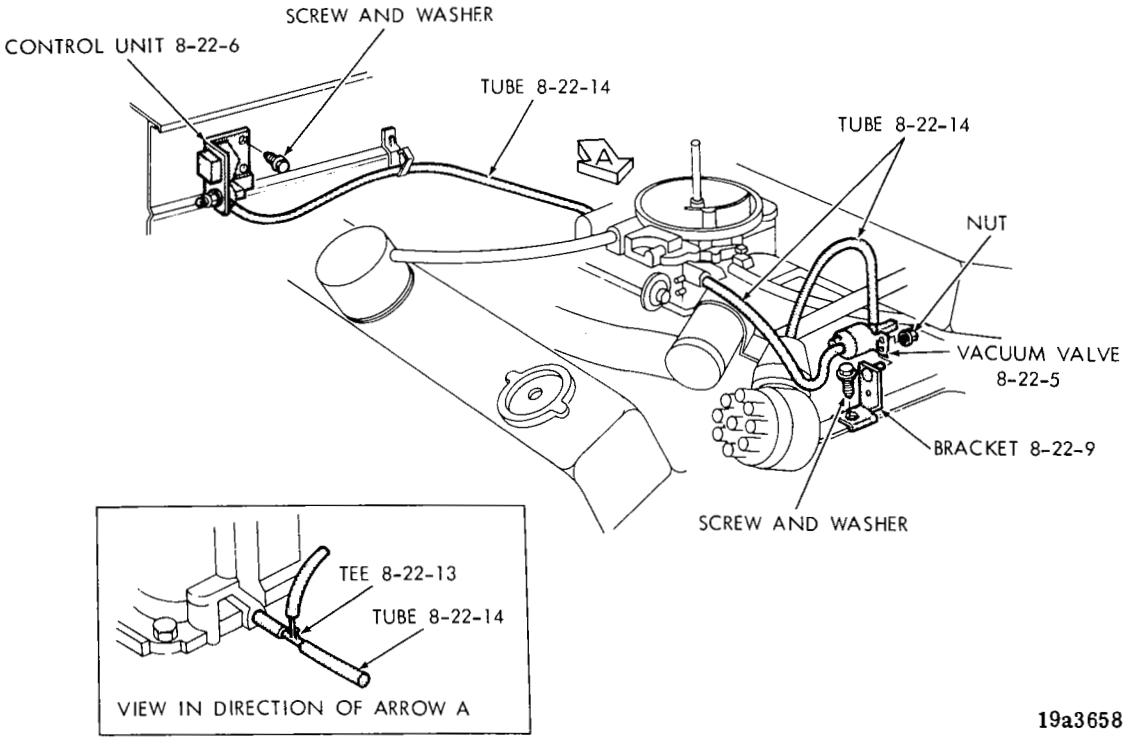

NO_x SPARK ADVANCE CONTROL DASH AND ENGINE ROUTING

NOX SYSTEM

NOTES

CODE	PART NAME		ENG. TYPE OR CU.IN.	V 1-2	B J 1-2	L 1-2	R 1-2	W 1-2	P 1-2	D 1-2	C 1	C 2	C 3	Y 1	PART NUMBER
8-01-0	**BATTERY AND STARTER CABLE**														
8-01-4	CABLE, Ground, Battery and Eng., No. 6 Gauge 27 1/2" Long		6	1	1	1	1	1	—	—	—	—	—	—	2983 771
	No. 4 Gauge, 23" Long		8	1	—	1	—	—	—	—	—	—	—	—	2983 778
	No. 4 Gauge, 23" Long, except 426 Eng.		8	—	1	—	1	1	—	—	—	—	—	—	2983 778
	No. 2 Gauge, 18" Long, w. 426 Eng.		8	—	1	—	1	1	—	—	—	—	—	—	2983 776
	No. 4 Gauge, 23" Long			—	—	—	—	—	1	1	1	1	1	—	2983 778
	No. 2 Gauge, 28" Long	70		—	—	—	—	—	—	—	—	—	—	1	2983 780
	No. 8 Gauge, 15" Long	71		—	—	—	—	—	—	—	—	—	—	1	3513 509
8-01-5	PLUG, Battery Vent	71		AR	AR	AR	AR	AR	AR	AR	AR	AR	AR	AR	≠3438 684
8-01-7	STRAP, Battery Ground Cable Battery		6	1	—	1	1	1	—	—	—	—	—	—	6015 149
	CLIP, Battery Wiring Starter Motor Mtg.		8	—	—	—	—	—	1	1	1	1	1	1	6015 636
8-01-11	BOLT, Battery Cable Clamp			2	2	2	2	2	2	2	2	2	2	2	1622 535
8-01-12	NUT, Battery Cable Clamp Bolt			2	2	2	2	2	2	2	2	2	2	2	1622 536
8-01-17	CABLE, Positive, Battery to Starter Motor to Starter Relay	70	6	1	—	1	—	—	—	—	—	—	—	—	2983 731
		71	6	1	—	1	—	—	—	—	—	—	—	—	2983 649
			8	1	—	1	—	—	—	—	—	—	—	—	2770 662
			6	—	1	—	—	—	—	—	—	—	—	—	2983 649
	w 318 and 340 Eng.		8	—	1	—	—	—	—	—	—	—	—	—	2983 648
	w 383 and 440 Eng.		8	—	1	—	—	—	—	—	—	—	—	—	2983 649
	Std.	70	6	—	—	—	1	1	—	—	—	—	—	—	2983 594
	Heavy Duty, w Auto. Trans.	70	6	—	—	—	1	1	—	—	—	—	—	—	2983 594
	Heavy Duty, w Manual Trans.	70	6	—	—	—	1	1	—	—	—	—	—	—	2983 593
	Std.	71	6	—	—	—	1	1	—	—	—	—	—	—	2983 649
	Heavy Duty, w Auto. Trans.	71	6	—	—	—	1	1	—	—	—	—	—	—	2983 649
	Heavy Duty, w 3 Speed Manual Trans., Column Shift Exp.	71	6	—	—	—	1	1	—	—	—	—	—	—	2983 649
	Heavy Duty, w Manual Trans.	71	6	—	—	—	1	1	—	—	—	—	—	—	3513 513
	Heavy Duty, w 3 Speed Manual Trans., Floor Shift, Exp.	71	6	—	—	—	1	1	—	—	—	—	—	—	3513 513
	w 318 Eng.	70	8	—	—	—	1	1	—	—	—	—	—	—	2926 083
	w 318 and 340 Eng.	71	8	—	—	—	1	1	—	—	—	—	—	—	2983 648
	w 383 and 440 Eng.	70	8	—	—	—	1	1	—	—	—	—	—	—	2926 085
	w 383 and 440 Eng.	71	8	—	—	—	1	1	—	—	—	—	—	—	2983 649
	w Auto. Trans.	70	6	—	—	—	—	—	1	1	—	—	—	—	2983 547
	Std., w 3 Speed Manual Trans., P except Sta. Wgn.	70	6	—	—	—	—	—	1	1	—	—	—	—	2983 821
	Heavy Duty, w 3 Speed Manual Trans., P except Sta. Wgn.	70	6	—	—	—	—	—	1	1	—	—	—	—	2983 822
	Std.	71	6	—	—	—	—	—	1	1	—	—	—	—	3513 266
	Heavy Duty, w Auto. Trans.	71	6	—	—	—	—	—	1	1	—	—	—	—	3513 266
	Heavy Duty, w 3 Speed Manual Trans.	71	6	—	—	—	—	—	1	1	—	—	—	—	3513 268
	w 60 Amp. Alternator	70		—	—	—	—	—	1	1	1	1	1	1	2983 636
		71	8	—	—	—	—	—	1	1	1	1	1	1	3513 196
		70	8	—	—	—	—	—	1	1	1	1	1	1	2983 499
	Battery and Manual Trans. Switch and Low Oil Switch, w 426 Eng.	70	8	—	1	—	—	—	—	—	—	—	—	—	2983 718
	Battery and Manual Trans. Switch and Low Oil Switch, w 426 Eng.	71	8	—	1	—	—	—	—	—	—	—	—	—	3513 303
	Battery and Auto. Trans. Switch and Low Oil Switch, w 426 Eng.	70	8	—	1	—	—	—	—	—	—	—	—	—	2983 719
	Battery and Auto. Trans. Switch and Low Oil Switch, w 426 Eng.	71	8	—	1	—	—	—	—	—	—	—	—	—	3513 304
	Oil and B Up Lamp Switch, w Manual Trans., w 426 Eng.	70	8	—	—	—	1	1	—	—	—	—	—	—	2983 702
	Oil and B Up Lamp Switch, w Manual Trans., w 426 Eng.	71	8	—	—	—	1	1	—	—	—	—	—	—	3513 303
	Oil and Neutral Safety Switch, w Auto. Trans., w 426 Eng.	70	8	—	—	—	1	1	—	—	—	—	—	—	2983 160

CARLINES: J - Challenger, B - Barracuda, V - Valiant, L - Dart, R - Belvedere - Satellite, W - Coronet - Charger, P - Plymouth, D - Dodge, C - Chrysler, Y - Imperial

AR Indicates use as required.

≠ Indicates parts not listed in any previous parts book.

Numerals in parentheses ( ) refer to notes.

★ Indicates change or addition.

Printed in U.S.A. January 1972

CODE	PART NAME		ENG. TYPE OR CU.IN.	V 1-2	B J 1-2	L 1-2	R 1-2	W 1-2	P 1-2	D 1-2	C 1	C 2	C 3	Y 1	PART NUMBER
8-01-0	**BATTERY AND STARTER CABLE Cont'd.**														
8-01-17	CABLE Cont'd.														
	Oil and Neutral Safety Switch, w/Auto. Trans., w/426 Eng.	71	8	—	—	—	1	1	—	—	—	—	—	—	3513 304
8-01-23	SCREW and WASHER, Battery Ground Cable, w/318 and 340 Eng.		8	1	1	1	—	—	—	—	—	—	—	—	6026 919
	SCREW and WASHER, w/426 Eng.		8	—	1	—	1	1	—	—	—	—	—	—	6025 393
	SCREW and WASHER, w/318 Eng.		8	—	—	—	1	1	1	1	—	—	—	—	6026 919
	BOLT, to Body			1	1	1	1	1	2	2	2	2	2	2	6028 505
8-05-0	**DOME LAMP AND SWITCH**														
8-05-2	LAMP, Dome and Reading, B 2D.H.T., J Sp. 2D.H.T.	70		—	1	—	—	—	1	1	—	—	—	—	2947 912
	B-P 2 D.H.T.	71		—	1	—	—	—	1	1	—	—	—	—	3488 441
	2 D.H.T., w/Formal Roof Pkg., J	71		—	1	—	—	—	—	—	—	—	—	—	3488 441
	LAMP, Dome, D-L, D-M, C-E, C-L, Y-L	70		—	—	—	—	—	1	1	1	1	1	1	2947 928
	D except D-M, D-H, up to approx. Nov. 15, 1970	71		—	—	—	—	—	1	1	1	1	1	—	3488 440
	after approx. Nov. 15, 1970	71		—	—	—	—	—	1	1	1	1	1	—	3488 504
8-05-6	HOUSING, Dome Lamp			1	—	1	1	1	—	—	—	—	—	—	2292 994
	2 D.H.T.			—	1	—	—	—	—	—	—	—	—	—	2292 994
	w/Relocating Dome Lamp, 2D. and 4D., P-E	Canada		—	—	—	—	—	1	—	—	—	—	—	2292 994
	w/Relocating Dome Lamp, 4D., D-E, D-L, D-S	Canada		—	—	—	—	—	—	1	—	—	—	—	2292 994
	w/o Relocating Dome Lamp	70 Canada		—	—	—	—	—	1	1	—	—	—	—	2822 520
	HOUSING, CLIP and TERMINAL, Dome Lamp, Rr. Sta. Wgn.	70		—	—	—	1	1	—	—	—	—	—	—	2926 129
	HOUSING and SWITCH, Dome Lamp, Rr., Sta. Wgn.			—	—	—	1	1	1	1	1	—	—	—	2161 308
8-05-8	BEZEL and LENS, Dome Lamp, Rr., Sta. Wgn.			—	—	—	1	1	1	1	1	—	—	—	2161 307
8-05-10	GASKET, Dome Lamp, Rr., Sta. Wgn.			—	—	—	1	1	1	1	1	—	—	—	2589 097
8-05-12	SOCKET, Dome Lamp			1	—	1	1	1	—	—	—	—	—	—	1704 875
	2 D.H.T.			—	1	—	—	—	—	—	—	—	—	—	1704 875
	w/Relocating Dome Lamp, 2D. and 4D., P-E	Canada		—	—	—	—	—	1	—	—	—	—	—	1704 875
	w/Relocating Dome Lamp, 4D., D-E, D-L, D-S	Canada		—	—	—	—	—	—	1	—	—	—	—	1704 875
8-05-23	LENS, Dome Lamp			1	—	1	1	1	—	—	—	—	—	—	2292 995
	2 D.H.T.			—	1	—	—	—	—	—	—	—	—	—	2292 995
	w/Relocating Dome Lamp, 2D. and 4D., P-E	Canada		—	—	—	—	—	1	—	—	—	—	—	2292 995
	w/Relocating Dome Lamp, 4D., D-E, D-L, D-S	Canada		—	—	—	—	—	—	1	—	—	—	—	2292 995
8-05-28	BRACKET, Dome Lamp, Rr., Sta. Wgn.			—	—	—	1	1	1	1	1	—	—	—	2086 597
	Dome Lamp Mtg., except Sta. Wgn.	71		—	—	—	1	1	—	—	—	—	—	—	3488 492
	Sta. Wgn.	71		—	—	—	1	1	—	—	—	—	—	—	3488 197
	Dome Lamp Mtg. to Roof Bow, 2D.H.T., Y-L	70		—	—	—	—	—	1	1	1	1	1	1	2947 534
	P 2D. and 2D.H.T., D 2D.H.T., C 2D.H.T.	71		—	—	—	—	—	1	1	1	1	1	—	2947 534
	except Cv. Cp. and Sta. Wgn.	70		—	—	—	—	—	1	—	—	—	—	—	2947 535
	2D., 4D. and 4D.H.T.	70		—	—	—	—	—	—	1	1	1	1	1	2947 535
	Fastback, 4D. and 4D.H.T.	71		—	—	—	—	—	1	1	1	1	1	—	2947 535
8-05-31	CONTACT, Dome Lamp Socket			AR	AR	AR	AR	AR	AR	AR	AR	AR	AR	AR	2256 966
8-05-32	CORE, Dome Lamp Socket, Rr., Sta. Wgn.			—	—	—	1	1	1	1	1	—	—	—	2161 316

CODE	PART NAME	ENG. TYPE OR CU.IN.	V 1-2	B J 1-2	L 1-2	R 1-2	W 1-2	P 1-2	D 1-2	C 1	C 2	C 3	Y 1	PART NUMBER
8-10-0	**UNDERHOOD LAMP**													
8-10-1	LAMP PACKAGE		1	1	1	1	1	1	1	1	1	1	1	2580 612
8-10-2	SWITCH		1	1	1	1	1	1	1	1	1	1	1	2580 611
8-10-3	SLEEVE		1	1	1	1	1	1	1	1	1	1	1	1264 933
8-11-0	**QUARTER OR COURTESY LAMP**													
8-11-2	LAMP, Courtesy, Cv. Cp.	70	—	—	—	—	—	1	—	—	—	—	—	2947 493
		70	—	—	—	—	—	—	1	—	—	—	—	2947 493
	Arm Rest Switch, Lt. Door		—	—	—	—	—	—	—	—	—	—	1	2926 574
	Backlite Courtesy	71	—	—	—	—	—	—	—	—	—	—	2	3488 439
8-11-6	SWITCH and COVER, Arm Rest Courtesy Lamp		—	—	—	—	—	—	—	—	—	—	2	2926 601
8-11-8	SOCKET, Pocket Panel Lamp, Cv. Cp.	70	—	2	—	2	2	—	—	—	—	—	—	2926 848
	Cv. Cp.	71	—	2	—	—	—	—	—	—	—	—	—	2926 848
	W-M, W-H 2 D.H.T., W-P except Sta. Wgn., W-S	70	—	—	—	2	2	—	—	—	—	—	—	2426 141
	P-H, 2 D.H.T. and Sp. 2 D.H.T., D-L 2 D.H.T. and Cv. Cp., D-H 2 D.H.T., C-E 2 D.H.T. and Cv. Cp., C-H 2 D.H.T.	70	—	—	—	—	—	2	2	2	2	2	—	2426 141
	P-M 2 D.H.T. and Fastback, P-H 2 D.H.T., Fastback and 4 D.H.T., P-P, C-E, 2 D.H.T., C-H 2 D.H.T.	71	—	—	—	—	—	2	—	2	2	2	—	2426 141
	C-E 2 D.H.T. and Cv. Cp., C-H 2 D.H.T.	70	—	—	—	—	—	—	—	1	1	1	—	1314 619
	2 D.H.T., C-E	71	—	—	—	—	—	—	—	1	—	1	—	1314 619
		71	—	—	—	—	—	—	—	—	1	—	—	1314 619
	w/BRKT., Courtesy Lamp	71	—	—	—	—	—	2	2	—	—	—	—	3513 600
	Arm Rest Switch Lamp, Lt. Door		—	—	—	—	—	—	—	—	—	—	1	2584 971
8-11-11	NUT, Console Courtesy Lp. Mtg.	70	—	—	—	4	4	4	4	4	4	4	—	6027 630
	NUT, Courtesy Lp. Mtg.	70	—	—	—	—	—	—	2	—	—	—	—	1839 995
	U/NUT, Arm Rest Switch Lp. Mtg. Brkt. Mtg., Lt. Door	70	—	—	—	—	—	—	—	—	—	—	2	6025 502
8-11-12	LENS, Qtr. Arm Rest Courtesy Lp. Ret., Cv. Cp.	70	—	—	—	—	—	1	1	1	1	—	—	2879 246-7
	Rr. Console Lamp, C-E 2D.H.T. and Cv. Cp., C-H 2D.H.T.	70	—	—	—	—	—	—	—	1	1	1	—	2631 727
	C-E 2D.H.T., C-S 2D.H.T., C-H 2D.H.T. and 4D.H.T.	71	—	—	—	—	—	—	—	1	1	1	—	2631 727
	Backlite Courtesy Lamp		—	—	—	—	—	—	—	—	—	—	2	2947 716
	Arm Rest Switch Lamp, Black, Lt. Door	70	—	—	—	—	—	—	—	—	—	—	1	2927 358
8-11-15	HOUSING, Rr. Console Lamp, C-E 2D.H.T. and Cv. Cp., C-H 2D.H.T.	70	—	—	—	—	—	—	—	1	1	1	—	2631 728
	C-E 2D.H.T., C-S 2D.H.T., C-H 2D.H.T. and 4D.H.T.	71	—	—	—	—	—	—	—	1	1	1	—	2631 728
	Door Courtesy Lamp		—	—	—	—	—	—	—	—	—	—	2	2572 774
	Door Arm Rest Switch Plate and Remote Handle, w/o Light	Frt. Rt.	—	—	—	—	—	—	—	—	—	—	1	2878 344
	w/Light	Frt. Lt.	—	—	—	—	—	—	—	—	—	—	1	2878 347
	w/o Light	Rr.	—	—	—	—	—	—	—	—	—	—	1	2878 344-5
8-11-16	BEZEL, Console Courtesy Lamp, R-M, R-P, R-S, W-M, W-H 2D.H.T., W-P except Sta. Wgn., W-S, P-H 2D.H.T. and Sp. 2D.H.T., P-M except Sta. Wgn., D 2D.H.T. and Cv. Cp., C-E 2D.H.T. and Cv. Cp., C-H 2D.H.T.	70	—	—	—	2	2	2	2	2	2	2	—	2572 521
	2D.H.T., P-M, P-H, P-P, C-E	71	—	—	—	—	—	2	—	2	2	2	—	2572 521

CARLINES: J - Challenger, B - Barracuda, V - Valiant, L - Dart, R - Belvedere - Satellite, W - Coronet - Charger, P - Plymouth, D - Dodge, C - Chrysler, Y - Imperial

AR Indicates use as required.

# Indicates parts not listed in any previous parts book.

Numerals in parentheses ( ) refer to notes.

★ Indicates change or addition.

Printed in U.S.A. January 1972

CODE	PART NAME	ENG. TYPE OR CU.IN.	V 1-2	B J 1-2	L 1-2	R 1-2	W 1-2	P 1-2	D 1-2	C 1	C 2	C 3	Y 1	PART NUMBER
8-11-0	**QUARTER OR COURTESY LAMP Cont'd.**													
8-11-16	BEZEL Cont'd.													
	P Fastback, C-H 4D.H.T.	71	—	—	—	—	—	2	—	—	—	2	—	2572 521
	GRILLE, Arm Rest Courtesy Lp. Lens, Cv. Cp.	70	—	—	—	—	—	2	2	2	2	—	—	2879 258
	BEZEL, LENS, RETAINER and SEAL, Courtesy Lamp, Cv. Cp.	70	—	—	—	—	—	1	—	—	—	—	—	2947 845
		70	—	—	—	—	—	—	1	—	—	—	—	2947 845
	BEZEL, Door Courtesy Lamp		—	—	—	—	—	—	—	—	—	—	2	2572 776
	Backlite Courtesy Lamp		—	—	—	—	—	—	—	—	—	—	2	2572 776
8-11-18	CONTACT, Socket		AR	AR	AR	AR	AR	AR	AR	AR	AR	AR	AR	2256 966
8-11-21	SCREW, Arm Rest Switch Lamp Mtg.	70	—	—	—	—	—	—	—	—	—	—	2	6027 962
	SCREW and WASHER, Arm Rest Switch Lamp Mtg. Brkt. Mtg.	70	—	—	—	—	—	—	—	—	—	—	2	6023 411
8-11-24	RETAINER and STUD, Roof Console Courtesy Lamp, B 2D.H.T., J Sp. 2D.H.T.	70	—	1	—	—	—	—	—	—	—	—	—	3415 613
	2 D.H.T., B-P, J w/Formal Roof Pkg.	71	—	1	—	—	—	—	—	—	—	—	—	3415 613
8-11-25	BRACKET, Qtr. Arm Rest Courtesy Lamp Ret., Cv. Cp.	70	—	—	—	—	—	1	1	1	1	—	—	2877 432-3
8-11-28	CORE, Backlite Courtesy Lamp Socket	70	—	—	—	—	—	—	—	—	—	—	2	2161 316
	Door Courtesy Lamp Socket		—	—	—	—	—	—	—	—	—	—	2	2161 316
8-11-29	CONTACT, INSULATOR and SPRING PACKAGE, Pocket Panel Lamp, Cv. Cp.		—	2	—	—	—	—	—	—	—	—	—	2983 167
	Courtesy Lamp	71	—	—	—	—	—	2	2	—	—	—	—	2983 168
8-12-0	**AUTOMATIC DOOR LAMP SWITCH**													
8-12-2	SWITCH, 2 Terminal	Frt.	2	—	2	2	2	—	—	—	—	—	—	2947 844
	2 Terminal	Frt.	—	2	—	—	—	2	2	2	2	2	2	2889 084
	3 Terminal	Frt. 71	2	—	2	2	2	—	—	—	—	—	—	3488 435
	3 Terminal	Frt. 71	—	2	—	—	—	2	2	2	2	2	2	3488 442
		Rr.	—	—	—	2	2	2	2	2	2	2	2	2822 592
	Door Ajar, B 2 D.H.T., J Fastback	70	—	2	—	—	—	—	—	—	—	—	—	2947 560
	2 D.H.T., B-P, J w/Formal Roof Pkg.	71	—	1	—	—	—	—	—	—	—	—	—	2947 560
8-12-4	SHIELD, Door Ajar Switch, B 2D.H.T., J Fastback	70	—	2	—	—	—	—	—	—	—	—	—	2947 562
	2D.H.T., B-P, J w/Formal Roof Pkg.	71	—	2	—	—	—	—	—	—	—	—	—	2947 562
8-12-6	BRACKET, Rr. Door Auto. Lamp Switch Mtg.	70	—	—	—	1	1	—	—	—	—	—	—	2631 718-9
8-12-13	SOCKET, O/Hd. Console Door Ajar Warning Lamp, B 2D.H.T., J Fastback	70	—	1	—	—	—	—	—	—	—	—	—	2983 581
	2D.H.T., B-P, J	71	—	1	—	—	—	—	—	—	—	—	—	2983 581
8-13-0	**TRUNK LAMP**													
8-13-1	LAMP PACKAGE	70	1	1	1	1	1	1	1	1	1	1	1	2580 612
	V, L except Fastback	71	1	—	1	—	—	—	—	—	—	—	—	2580 612
	LAMP and SWITCH	70	—	1	—	—	—	—	—	—	—	—	—	2947 516
		71	—	1	—	—	—	—	—	—	—	—	—	3488 436
	except Sta. Wgn.		—	—	—	—	—	—	1	—	—	—	—	2947 517
8-13-2	SWITCH		1	—	1	—	—	—	—	—	—	—	—	2580 611
	except Sta. Wgn.	70	—	—	—	1	1	—	—	—	—	—	—	2580 611
	except Sta. Wgn.	71	—	—	—	1	1	—	—	—	—	—	—	2947 286
	except Sta. Wgn.		—	—	—	—	—	1	—	1	1	1	1	2947 286
8-13-3	SOCKET, w/BRKT.	70	1	—	1	—	—	—	—	—	—	—	—	2096 857
	V, L except Fastback	71	1	—	1	—	—	—	—	—	—	—	—	2096 857
	except Sta. Wgn.	70	—	—	—	1	1	—	—	—	—	—	—	2096 857

CARLINES J - Challenger, B - Barracuda, V - Valiant, L - Dart, R - Belvedere - Satellite, W - Coronet - Charger, P - Plymouth, D - Dodge, C - Chrysler, Y - Imperial

AR Indicates use as required.

Numerals in parentheses ( ) refer to notes.

# Indicates parts not listed in any previous parts book.

★ Indicates change or addition.

Printed in U.S.A. January 1972

CODE	PART NAME	ENG. TYPE OR CU.IN.	V 1-2	B J 1-2	L 1-2	R 1-2	W 1-2	P 1-2	D 1-2	C 1	C 2	C 3	Y 1	PART NUMBER
8-13-0	**TRUNK LAMP Cont'd.**													
8-13-4	CONTACT, INSULATOR and SPRING PACKAGE, Socket		1	—	1	—	—	—	—	—	—	—	—	2584 972
	except Sta. Wgn.		—	—	—	1	1	—	—	—	—	—	—	2584 972
8-13-5	INSULATOR, Socket		1	—	1	—	—	—	—	—	—	—	—	1345 803
	except Sta. Wgn.	70	—	—	—	1	1	—	—	—	—	—	—	1345 803
8-13-6	CONTACT, Socket		2	—	2	—	—	—	—	—	—	—	—	2256 966
	except Sta. Wgn.	70	—	—	—	2	2	—	—	—	—	—	—	2256 966
8-14-0	**SIDE MARKER LAMP, ROAD LAMP AND X-PRESS SUPER LITE**													
8-14-1	LAMP and REFLECTOR PACKAGE, Side Marker	Frt. 70	2	—	—	—	—	—	—	—	—	—	—	3420 790
	except 2D.H.T.	Frt. 71	2	—	—	—	—	—	—	—	—	—	—	3420 790
	2D.H.T.	Frt. 71	2	—	—	—	—	—	—	—	—	—	—	3620 764
		Rr. 70	2	—	—	—	—	—	—	—	—	—	—	3420 823
	2D.H.T.	Rr. 71	2	—	—	—	—	—	—	—	—	—	—	3403 684-5
	except 2D.H.T.	Rr. 71	2	—	—	—	—	—	—	—	—	—	—	3420 823
	Amber, 2 D.H.T.	Rr. 71	1	—	—	—	—	—	—	—	—	—	—	3479 404-5
	LAMP, B, P-K, P-T, P-E, P-L, P-M, P-H Sta. Wgn.	Frt. 70	—	2	—	—	—	2	—	—	—	—	—	3403 618
	B	Frt. 71	—	2	—	—	—	2	—	—	—	—	—	3403 618
	LAMP, REFLECTOR and BEZEL PACKAGE, B	Frt. 70	—	1	—	—	—	—	—	—	—	—	—	3420 646-7
	LAMP, REFLECTOR and BEZEL PACKAGE, B	Rr. 70	—	1	—	—	—	—	—	—	—	—	—	3420 714-5
		Rr. 71	—	1	—	—	—	—	—	—	—	—	—	= 3621 622-3
	LAMP, B	Rr. 70	—	2	—	—	—	—	—	—	—	—	—	3403 637
	B, up to approx. Sept., 1970	Rr. 71	—	2	—	—	—	—	—	—	—	—	—	3403 637
	B, after approx. Sept., 1970	Rr. 71	—	2	—	—	—	—	—	—	—	—	—	3479 424
	J	Frt.	—	1	—	—	—	—	—	—	—	—	—	3403 454-5
	J	Rr.	—	1	—	—	—	—	—	—	—	—	—	3403 472-3
		Frt.	—	—	1	—	—	—	—	—	—	—	—	3403 674-5
		Rr. 70	—	—	1	—	—	—	—	—	—	—	—	3403 684-5
	except Fastback	Rr. 71	—	—	1	—	—	—	—	—	—	—	—	3403 684-5
	Amber, except Fastback,		—	—	1	—	—	—	—	—	—	—	—	3479 404-5
	Fastback	Rr. 71	—	—	2	—	—	—	—	—	—	—	—	3620 718
	LAMP and REFLECTOR PACKAGE	Frt. 70	—	—	—	1	—	—	—	—	—	—	—	3420 788-9
	LAMP and REFLECTOR PACKAGE, except Sta. Wgn.	Rr. 70	—	—	—	1	—	—	—	—	—	—	—	3420 828-9
	LAMP, 2D.H.T.	Frt. 71	—	—	—	2	—	—	—	—	—	—	—	3514 401
	4D. and Sta. Wgn.	Frt. 71	—	—	—	2	—	—	—	—	—	—	—	3514 412
	4D.	Rr. 71	—	—	—	2	—	—	—	—	—	—	—	3514 414
	2D.H.T.	Rr. 71	—	—	—	2	—	—	—	—	—	—	—	3514 416
	except Charger and Charger R/T	Frt. 70	—	—	—	—	1	—	—	—	—	—	—	3403 774-5
	Charger and Charger R/T	Frt. 70	—	—	—	—	1	—	—	—	—	—	—	3403 738-9
	4 D., Up to May 1, 1971	Frt. 71	—	—	—	—	1	—	—	—	—	—	—	3514 422-3
	Sta. Wgn., Up to May 1, 1971, W-K, W-L, W-H	Frt. 71	—	—	—	—	1	—	—	—	—	—	—	3514 422-3
	After May 1, 1971	Frt. 71	—	—	—	—	2	—	—	—	—	—	—	= 3621 800
	Sta. Wgn., Up to May 1, 1971, W-P	Frt. 71	—	—	—	—	1	—	—	—	—	—	—	3514 424-5
	After May 1, 1971	Frt. 71	—	—	—	—	2	—	—	—	—	—	—	= 3621 801
	2D.H.T. and Fastback	Frt. 71	—	—	—	—	2	—	—	—	—	—	—	3579 152
	except Charger and Charger R/T	Rr. 70	—	—	—	—	1	—	—	—	—	—	—	3403 570-1
	Charger and Charger R/T	Rr. 70	—	—	—	—	1	—	—	—	—	—	—	3403 748-9
	4D.	Rr. 71	—	—	—	—	2	—	—	—	—	—	—	3579 151
	2D.H.T. and Fastback	Rr. 71	—	—	—	—	2	—	—	—	—	—	—	3579 153
	except Sta. Wgn., P-H	Frt. 70	—	—	—	—	—	1	—	—	—	—	—	3403 718-9
	LAMP, REFLECTOR and BEZEL PACKAGE, except Sta. Wgn.	Rr. 70	—	—	—	—	—	1	—	—	—	—	—	3420 854-5

CARLINES: J - Challenger, B - Barracuda, V - Valiant, L - Dart, R - Belvedere - Satellite, W - Coronet - Charger, P - Plymouth, D - Dodge, C - Chrysler, Y - Imperial

AR Indicates use as required.

Numerals in parentheses ( ) refer to notes.

# Indicates parts not listed in any previous parts book.

★ Indicates change or addition.

Printed in U.S.A. January 1972

8-14-0 SIDE MARKER LAMP, ROAD LAMP AND X-PRESS SUPER LITE Cont'd.

CODE	PART NAME	ENG. TYPE OR CU.IN.	V 1-2	B J 1-2	L 1-2	R 1-2	W 1-2	P 1-2	D 1-2	C 1	C 2	C 3	Y 1	PART NUMBER
8-14-1	LAMP and REFLECTOR PACKAGE Cont'd.													
	LAMP, except Sta. Wgn.	Rr.	—	—	—	—	—	2	—	—	—	—	—	3403 637
		Frt.	—	—	—	—	—	—	1	—	—	—	—	3403 438-9
	except Sta. Wgn.	Rr. 70	—	—	—	—	—	—	1	—	—	—	—	3403 448-9
	except Sta. Wgn.	Rr. 71	—	—	—	—	—	—	1	—	—	—	—	3479 008-9
	C-E, C-L	Rr.	—	—	—	—	—	—	—	1	1	1	—	3403 496-7
		Frt.	—	—	—	—	—	—	—	1	1	1	—	3403 508-9
		Rr.	—	—	—	—	—	—	—	—	—	—	1	3403 430-1
	LAMP, Road Lamp, B		—	2	—	—	—	—	—	—	—	—	—	3403 840
	LAMP, X-Press Super Lite, w/PLATE	70	—	—	—	—	—	—	1	—	—	—	—	2998 608
	Complete	70	—	—	—	—	—	—	1	—	—	—	—	2998 400
8-14-2	BRACKET, Side Marker Lamp, Mtg.	Rr.70	2	—	—	—	—	—	—	—	—	—	—	3403 736
	except 2 D.H.T.	Rr. 71	2	—	—	—	—	—	—	—	—	—	—	3403 736
	2 D.H.T.	Rr. 71	2	—	—	—	—	—	—	—	—	—	—	3403 692
	Road Lamp, B	70	—	1	—	—	—	—	—	—	—	—	—	3403 838-9
	Road Lamp, B	71	—	1	—	—	—	—	—	—	—	—	—	3479 316-7
	J	Frt.	—	2	—	—	—	—	—	—	—	—	—	3403 468
	J	Rr.	—	2	—	—	—	—	—	—	—	—	—	3403 486
		Frt.	—	—	2	—	—	—	—	—	—	—	—	3403 682
		Rr. 70	—	—	2	—	—	—	—	—	—	—	—	3403 692
	except Fastback	Rr. 71	—	—	2	—	—	—	—	—	—	—	—	3403 692
	Fastback	Rr. 71	—	—	2	—	—	—	—	—	—	—	—	3403 736
	except Sta. Wgn.	Rr. 70	—	—	—	1	—	—	—	—	—	—	—	3403 828-9
	except Charger and Charger R/T	Frt. 70	—	—	—	—	1	—	—	—	—	—	—	3403 784-5
	except Charger, Charger R/T and Sta. Wgn.	Rr. 70	—	—	—	—	1	—	—	—	—	—	—	3403 580-1
	Charger, Charger R/T	Frt. 70	—	—	—	—	1	—	—	—	—	—	—	3403 746-7
	Charger, Charger R/T	Rr. 70	—	—	—	—	1	—	—	—	—	—	—	3403 756-7
	SUPPORT, Side Marker Lamp Mtg., except Sta. Wgn., P-H	Frt. 70	—	—	—	—	—	2	—	—	—	—	—	2930 703
	BRACKET, except Sta. Wgn.	Rr.	—	—	—	—	—	2	—	—	—	—	—	3403 770
	X-Press Super Lite Mtg. Panel	Inner 70	—	—	—	—	—	—	1	—	—	—	—	2949 362
	Side Marker Lamp	Frt.	—	—	—	—	—	—	1	—	—	—	—	3403 446-7
	except Sta. Wgn.	Rr. 70	—	—	—	—	—	—	1	—	—	—	—	3403 794-5
	except Sta. Wgn.	Rr. 71	—	—	—	—	—	—	1	—	—	—	—	3479 346
	w/o Cornering Lamp	Frt.	—	—	—	—	—	—	—	2	2	2	—	3403 506
	C-E, C-L	Rr.	—	—	—	—	—	—	—	2	2	2	—	3403 506
8-14-3	SOCKET, Side Marker Lamp	Rr.	2	2	2	—	—	—	—	—	—	—	—	2983 545
	except Sta. Wgn., C-E, C-L	Rr. 70	—	—	—	2	2	2	2	2	2	2	2	2983 545
	except Sta. Wgn.	71	—	—	—	2	2	—	—	—	—	—	—	3513 314
	except Sta. Wgn.	Rr. 71	—	—	—	—	—	2	—	2	2	2	—	2983 545
		Frt. 71	2	2	2	—	—	2	—	2	2	2	2	2097 003
	SOCKET, CABLE and EXTENSION, Sta. Wgn.	Rr.	—	—	—	—	—	2	2	—	—	—	—	3403 790
	SOCKET and BOOT, w Cornering Lamp	Frt. 70	—	—	—	—	—	—	2	2	2	2	—	2983 279
		Frt. 70	—	—	—	—	—	—	—	—	—	—	2	2983 279
8-14-4	CONTACT, Fender Side Marker Lamp Socket		AR	AR	AR	AR	AR	AR	AR	AR	AR	AR	AR	2256 966
8-14-6	LENS, Side Marker Lamp, Amber	Frt. 70	2	—	—	2	—	—	—	—	—	—	—	3403 765
	Amber	Frt. 71	2	—	—	—	—	—	—	—	—	—	—	3403 765
	R except Sta. Wgn.	Rr. 70	2	—	—	2	—	—	—	—	—	—	—	3403 737
	V except 2 D.H.T., L Fastback	Rr. 71	2	—	2	—	—	—	—	—	—	—	—	3403 737
	Amber, V except 2 D.H.T., L Fastback	Rr. 71	2	—	2	—	—	—	—	—	—	—	—	3403 765
	Amber, R 4D.	Rr. 70	2	—	—	2	—	—	—	—	—	—	—	3403 765
	Amber, B, P-K, P-T, P-E, P-L, P-M, P-H Sta. Wgn.	Frt. 70	—	2	—	—	—	2	—	—	—	—	—	3403 622
	Amber, B	Frt. 71	—	2	—	—	—	2	—	—	—	—	—	3403 622
	Amber, B	Rr.	—	2	—	—	—	—	—	—	—	—	—	3403 622

CARLINES: J - Challenger, B - Barracuda, V - Valiant, L - Dart, R - Belvedere - Satellite, W - Coronet - Charger, P - Plymouth, D - Dodge, C - Chrysler, Y - Imperial

AR Indicates use as required.

# Indicates parts not listed in any previous parts book.

Numerals in parentheses ( ) refer to notes.

★ Indicates change or addition.

Printed in U.S.A. January 1972

8-14-0 SIDE MARKER LAMP, ROAD LAMP AND X-PRESS SUPER LITE Cont'd.

CODE	PART NAME		ENG. TYPE OR CU.IN.	V 1-2	B J 1-2	L 1-2	R 1-2	W 1-2	P 1-2	D 1-2	C 1	C 2	C 3	Y 1	PART NUMBER
8-14-6	LENS Cont'd.														
	Red, B, P except Sta. Wgn.	Rr.		—	2	—	—	—	2	—	—	—	—	—	3403 638
	LENS and GASKET PACKAGE, J	Frt.		—	1	—	—	—	—	—	—	—	—	—	3420 794-5
	J	Rr.		—	1	—	—	—	—	—	—	—	—	—	3420 820-1
	Amber, J, Exp.	Rr.		—	1	—	—	—	—	—	—	—	—	—	3420 928-9
		Frt.		—	—	1	—	—	—	—	—	—	—	—	3420 730-1
		Rr. 70		—	—	1	—	—	—	—	—	—	—	—	3420 782-3
	V 2 D.H.T., L except Fastback	Rr. 71		1	—	1	—	—	—	—	—	—	—	—	3420 782-3
	Amber	Rr. 70		—	—	1	—	—	—	—	—	—	—	—	3420 926-7
	Amber, V 2 D.H.T., L except Fastback	Rr. 71		1	—	1	—	—	—	—	—	—	—	—	3420 926-7
		Frt. 70		—	—	—	—	1	—	—	—	—	—	—	3420 792-3
	except Charger, Charger R/T and Sta. Wgn.	Rr. 70		—	—	—	—	1	—	—	—	—	—	—	3420 830-1
	except Sta. Wgn., P-H	Frt. 70		—	—	—	—	—	1	—	—	—	—	—	3420 842-3
		Frt.		—	—	—	—	—	—	1	—	—	—	—	3420 866-7
	except Sta. Wgn.	Rr. 70		—	—	—	—	—	—	1	—	—	—	—	3420 868-9
	except Sta. Wgn.	Rr. 71		—	—	—	—	—	—	1	—	—	—	—	3514 376-7
	Amber, Exp., 4 D.	Rr. 71		—	—	—	—	—	—	1	—	—	—	—	3620 700-1
	w/o Cornering Lamp	Frt.		—	—	—	—	—	—	—	1	1	1	—	3420 862-3
	except Sta. Wgn.	Rr.		—	—	—	—	—	—	—	1	1	1	—	3420 852-3
		Rr.		—	—	—	—	—	—	—	—	—	—	1	3420 796-7
8-14-8	CONTACT, INSULATOR and SPRING PACKAGE, Socket			AR	AR	AR	AR	AR	AR	AR	AR	AR	AR	AR	2584 972
				AR	AR	AR	AR	AR	AR	AR	AR	AR	AR	AR	2983 322
8-14-9	BEZEL, Road Lamp, B			—	2	—	—	—	—	—	—	—	—	—	3403 845
	Side Marker Lamp, up to approx. June 1, 1970, B	Frt. 70		—	1	—	—	—	—	—	—	—	—	—	3403 630-1
	after approx. June 1, 1970	Frt. 70		—	1	—	—	—	—	—	—	—	—	—	3479 380-1
	B	Frt. 71		—	1	—	—	—	—	—	—	—	—	—	3479 380-1
	up to approx. June 1, 1970, B	Rr. 70		—	1	—	—	—	—	—	—	—	—	—	3403 640-1
	after approx. June 1, 1970, B	Rr. 70		—	1	—	—	—	—	—	—	—	—	—	3479 386-7
	B	Rr. 71		—	1	—	—	—	—	—	—	—	—	—	3479 386-7
	Sta. Wgn., W-K, W-L, W-H, P-K, P-L, P-M, D-L, D-M, C w/Ornament Pkg.	Rr. 70		—	—	—	2	2	2	2	2	—	—	—	2932 932
	BEZEL and REFLECTOR PACKAGE, Sta. Wgn., W-P	Rr. 70		—	—	—	—	2	—	—	—	—	—	—	3514 385
	P-K, P-T, P-E, P-L, P-M, P-H Sta. Wgn.	Frt. 70		—	—	—	—	—	1	—	—	—	—	—	3479 382-3
		Frt. 71		—	—	—	—	—	1	—	—	—	—	—	3479 382-3
	except Sta. Wgn., P-H	Frt. 70		—	—	—	—	—	1	—	—	—	—	—	3403 728-9
	except Sta. Wgn., up to approx. June 1, 1970	Rr. 70		—	—	—	—	—	1	—	—	—	—	—	3403 766-7
	except Sta. Wgn., after approx. June 1, 1970	Rr. 70		—	—	—	—	—	1	—	—	—	—	—	3479 384-5
	except Sta. Wgn.	Rr. 71		—	—	—	—	—	1	—	—	—	—	—	3479 384-5
	Sta. Wgn., P-H	Rr. 70		—	—	—	—	—	2	—	—	—	—	—	3514 334
	Sta. Wgn., P-K, P-L, P-M, D-E, D-L, D-H, D-S, C w/Ornament Pkg.	Rr. 71		—	—	—	—	—	2	2	2	—	—	—	2932 932
	Sta. Wgn., P-H, C w/o Ornament Pkg.	Rr. 71		—	—	—	—	—	2	—	2	—	—	—	3620 759
	X-Press Super Lite, D-H, D-P	70		—	—	—	—	—	—	1	—	—	—	—	2998 548
	Sta. Wgn., D-H	Rr. 70		—	—	—	—	—	—	2	—	—	—	—	3514 383
	Sta. Wgn., w/o Ornament Pkg.	Rr. 70		—	—	—	—	—	—	—	2	—	—	—	3514 383
8-14-13	GASKET, Frt. Side Marker Lp. Bezel, B, P-K, P-T, P-E, P-L, P-M, P-H Sta. Wgn.	70		—	2	—	—	—	2	—	—	—	—	—	3403 624
	Frt. Side Marker Lp. Bezel, B	71		—	2	—	—	—	2	—	—	—	—	—	3403 624
	Rr. Side Marker Lp. Bezel, B, P except Sta. Wgn.			—	2	—	—	—	2	—	—	—	—	—	3403 624

CARLINES J - Challenger, B - Barracuda, V - Valiant, L - Dart, R - Belvedere - Satellite, W - Coronet - Charger, P - Plymouth, D - Dodge, C - Chrysler, Y - Imperial

AR Indicates use as required.

Numerals in parentheses ( ) refer to notes.

# Indicates parts not listed in any previous parts book.

★ Indicates change or addition.

Printed in U.S.A. January 1972

8-14-0 SIDE MARKER LAMP, ROAD LAMP AND X-PRESS SUPER LITE Cont'd.

CODE	PART NAME	ENG. TYPE OR CU.IN.	V 1-2	B J 1-2	L 1-2	R 1-2	W 1-2	P 1-2	D 1-2	C 1	C 2	C 3	Y 1	PART NUMBER
8-14-13	GASKET Cont'd.													
	Frt. Side Marker Lp. Lens, B, P-K, P-T, P-E, P-L, P-M, P-H Sta. Wgn.	70	—	2	—	—	—	2	—	—	—	—	—	3403 621
	B	71	—	2	—	—	—	2	—	—	—	—	—	3403 621
	Rr. Side Marker Lp. Lens, B, P except Sta. Wgn.		—	2	—	—	—	2	—	—	—	—	—	3403 621
	Rr. Side Marker Lp. Lens, except Sta. Wgn.	71	—	—	—	—	—	—	2	—	—	—	—	3479 018
8-14-15	SPRING, X-Press Super Lite Adj.	70	—	—	—	—	—	—	1	—	—	—	—	2949 173
		70	—	—	—	—	—	—	1	—	—	—	—	2998 628
8-14-17	PANEL, X-Press Super Lite Mtg.	70	—	—	—	—	—	—	1	—	—	—	—	2949 361
8-14-18	BOOT, X-Press Super Lite	70	—	—	—	—	—	—	1	—	—	—	—	2949 254
8-14-19	REFLECTOR, Frt. Side Marker Lp., B, P-K, P-T, P-E, P-L, P-M, P-H Sta. Wgn., up to approx. April 1, 1970	70	—	2	—	—	—	2	—	—	—	—	—	3403 627
	after approx. April 1, 1970 Amber	70	—	2	—	—	—	2	—	—	—	—	—	3620 708
	B, Exp. Amber	71	—	2	—	—	—	—	—	—	—	—	—	3403 627
	Rr. Side Marker Lp., B, P except Sta. Wgn. Red	70	—	2	—	—	—	2	—	—	—	—	—	3403 646
	Rr. Side Marker Lp., Sta. Wgn.	70	—	—	—	2	2	2	2	2	—	—	—	2930 963
	Rr. Side Marker Lo., B, P except Sta. Wgn., up to approx. April 1, 1970 Amber	70	—	2	—	—	—	2	—	—	—	—	—	3403 627
	after approx. April 1, 1970 Amber	70	—	2	—	—	—	2	—	—	—	—	—	3620 709
	Frt. Side Marker Lp., B Amber	71	—	2	—	—	—	2	—	—	—	—	—	3620 708
	Rr. Side Marker Lp., B, P except Sta. Wgn. RED ~~Amber~~	71	—	2	—	—	—	2	—	—	—	—	—	3620 709
8-14-20	RETAINER, Rr. Side Marker Lp. and Reflector Bezel, B		—	2	—	—	—	—	—	—	—	—	—	3403 635
	Frt. Side Marker Lp. and Reflector Bezel, B		—	2	—	—	—	—	—	—	—	—	—	3403 635
	Frt. Side Marker Lp. and Reflector Bezel, P-K, P-T, P-E, P-L, P-M, P-H Sta. Wgn.	70	—	—	—	—	—	2	—	—	—	—	—	3403 635
	Frt. Side Marker Lp. and Reflector Bezel	71	—	—	—	—	—	2	—	—	—	—	—	3403 635
	Rr. Side Marker Lp. and Reflector Mtg., except Sta. Wgn.	70	—	—	—	1	—	—	—	—	—	—	—	3403 828-9
	X-Press Superlite Bezel, D-H, D-P	70	—	—	—	—	—	—	1	—	—	—	—	2949 424
8-14-23	SWITCH, Road Lamp, B	70	—	1	—	—	—	—	—	—	—	—	—	2947 772
	B	71	—	1	—	—	—	—	—	—	—	—	—	3488 447
		70	—	—	—	—	—	—	1	—	—	—	—	2947 764
	CAP, Switch Mtg.		—	—	—	—	—	—	AR	—	—	—	—	6027 455
8-14-24	DECAL PACKAGE, Side Marker Lamp Fury Frt.		—	—	—	—	—	2	—	—	—	—	—	#3685 270
	Fury I Frt.		—	—	—	—	—	2	—	—	—	—	—	#3685 272
	Fury II Frt.		—	—	—	—	—	2	—	—	—	—	—	#3685 274
	Fury III Frt.		—	—	—	—	—	2	—	—	—	—	—	#3685 276
	Sport Fury Frt.		—	—	—	—	—	2	—	—	—	—	—	#3685 278
8-14-25	CUP WASHER, Road Lamp, B		—	2	—	—	—	—	—	—	—	—	—	3403 886
8-14-27	NUT and WASHER, Frt. Fender Side Marker Lp. and Reflector Socket and Plate Att.	70	4	—	—	4	—	—	—	—	—	—	—	6023 214
	C/NUT, Qtr. Panel Side Marker Lp. Mtg.	70	4	—	—	—	—	—	—	—	—	—	—	6027 639
	C/NUT, Frt. Fender Side Marker Lp. and Reflector Bezel Mtg., B, P-K, P-T, P-E, P-L, P-M, P-H Sta. Wgn.	70	—	4	—	—	—	4	—	—	—	—	—	6027 639
	C/NUT, Frt. Fender Side Marker Lp. Mtg., B, P-K, P-T, P-E, P-L, P-M, P-H Sta. Wgn.	70	—	4	—	—	—	4	—	—	—	—	—	6028 399

CARLINES: J - Challenger, B - Barracuda, V - Valiant, L - Dart, R - Belvedere - Satellite, W - Coronet - Charger, P - Plymouth, D - Dodge, C - Chrysler, Y - Imperial

AR Indicates use as required.

Numerals in parentheses ( ) refer to notes.

# Indicates parts not listed in any previous parts book.

★ Indicates change or addition.

Printed in U.S.A. January 1972

CODE	PART NAME	ENG. TYPE OR CU.IN.		V 1-2	B J 1-2	L 1-2	R 1-2	W 1-2	P 1-2	D 1-2	C 1	C 2	C 3	Y 1	PART NUMBER
8-14-0	**SIDE MARKER LAMP, ROAD LAMP AND X-PRESS SUPER LITE Cont'd.**														
8-14-27	NUT and WASHER Cont'd.														
	C/NUT, Qtr. Panel Side Marker Lp. Mtg., B, P except Sta. Wgn.	70		—	4	—	—	—	4	—	—	—	—	—	6028 399
	C/NUT, Qtr. Panel Side Marker Lp. and Reflector Bezel Mtg., B	70		—	4	—	—	—	—	—	—	—	—	—	6027 639
	C/NUT, Frt. Fender Side Marker Lp. and Reflector Mtg., J, C w/o Cornering Lp.	70		—	4	4	—	4	—	—	4	4	4	—	6027 625
	C/NUT, Qtr. Panel Side Marker Lp. Reflector Mtg., J, W except Sta. Wgn., C-E, C-L	70		—	4	4	—	4	—	—	4	4	4	—	6027 625
	C/NUT, Qtr. Panel Side Marker Lp. and Reflector Mtg., except Sta. Wgn.	70		—	—	—	4	—	—	—	—	—	—	—	6027 639
	J/NUT, Side Marker Lp. Reflector Bezel Mtg., Sta. Wgn.	70		—	—	—	4	4	4	4	4	—	—	—	6023 481
	NUT and WASHER, Frt. Fender Side Marker Lamp Mtg.	70		—	—	—	—	—	6	—	—	—	—	—	6023 201
	NUT, X-Press Super Lite Att. Snap Collar	70		—	—	—	—	—	—	2	—	—	—	—	6027 948
	NUT, X-Press Super Lite Att. Plate	70		—	—	—	—	—	—	2	—	—	—	—	6027 944
	U/NUT, X-Press Super Lite Att.	70		—	—	—	—	—	—	2	—	—	—	—	6025 506
	C/NUT, Rr. Bumper Side Marker Lp. and Reflector Mtg., except Sta. Wgn.	70		—	—	—	—	—	—	4	—	—	—	—	6027 625
	NUT, X-Press Super Lite Sw. Mtg.	70		—	—	—	—	—	—	1	—	—	—	—	2427 119
	J/NUT, Rr. Bumper Side Marker Lp. and Reflector	70		—	—	—	—	—	—	—	—	—	—	4	6024 214
8-14-29	RELAY and BRACKET, Road Lamp, B	70		—	1	—	—	—	—	—	—	—	—	—	3004 186
	B	71		—	1	—	—	—	—	—	—	—	—	—	3513 557
8-15-0	**CHASSIS AND BODY WIRING**														
8-15-2	WIRING, H/Lamp and Eng. Comp't.	70	6	1	—	1	—	—	—	—	—	—	—	—	2983 423
		71		1	—	1	—	—	—	—	—	—	—	—	3513 577
	w/318 and 340 Eng.	70	8	1	—	1	—	—	—	—	—	—	—	—	2983 424
		70		—	—	—	—	—	—	—	—	—	—	1	2983 812
		71		—	—	—	—	—	—	—	—	—	—	1	3513 623
	Eng. Comp't.	71	6	1	—	1	—	—	—	—	—	—	—	—	3513 578
	w/318 and 340 Eng.	71	8	1	—	1	—	—	—	—	—	—	—	—	3513 579
	w/340 Eng., w/Elect. Ignition Control	71		1	—	1	—	—	—	—	—	—	—	—	=3513 746
		70	6	—	1	—	—	—	—	—	—	—	—	—	2983 435
		71	6	—	1	—	—	—	—	—	—	—	—	—	3513 551
	w/318 and 340 Eng.	70	8	—	1	—	—	—	—	—	—	—	—	—	2983 437
	w/318 and 340 w/1-4 Bbl. Carb., Eng.	71	8	—	1	—	—	—	—	—	—	—	—	—	3513 251
	2D.H.T., w/340 Eng., w/3-2 Bbl. Carb.	70	8	—	1	—	—	—	—	—	—	—	—	—	2983 886
	w/383 and 440 w/1-4 Bbl. Carb., Eng.	70	8	—	1	—	—	—	—	—	—	—	—	—	2983 809
	w/383 Eng.	71	8	—	1	—	—	—	—	—	—	—	—	—	3513 252
	Eng., w/426 Eng. From Altr. to Eng. Idle Solenoid to Ignition Coil to Temp. Gauge		8	—	1	—	1	1	—	—	—	—	—	—	2983 490
	Eng. Comp't., From Altr. Regulator to Ignition Ballast to Bulkhead Connector		8	—	1	—	1	1	—	—	—	—	—	—	2983 491
	w/426 Eng.	71	8	—	1	—	—	—	—	—	—	—	—	—	3513 294
	w/440 Eng., w/3-2 Bbl. Carb.	70	8	—	1	—	—	—	—	—	—	—	—	—	2983 734
	w/440 Eng., w/3-2 Bbl. Carb.	71	8	—	1	—	—	—	—	—	—	—	—	—	3513 253
		70	6	—	—	—	1	1	—	—	—	—	—	—	2983 462
		71	6	—	—	—	1	1	—	—	—	—	—	—	3513 551
	w/60 Amp. Alternator	70		—	—	—	1	1	—	—	—	—	—	—	2983 726

CARLINES J - Challenger, B - Barracuda, V - Valiant, L - Dart, R - Belvedere - Satellite, W - Coronet - Charger, P - Plymouth, D - Dodge, C - Chrysler, Y - Imperial

AR Indicates use as required.

Numerals in parentheses ( ) refer to notes.

# Indicates parts not listed in any previous parts book.

★ Indicates change or addition.

Printed in U.S.A. January 1972

8-15-0 CHASSIS AND BODY WIRING Cont'd.

8-15-2 WIRING Cont'd.

CODE	PART NAME	ENG. TYPE OR CU.IN.	V 1-2	B J 1-2	L 1-2	R 1-2	W 1-2	P 1-2	D 1-2	C 1	C 2	C 3	Y 1	PART NUMBER
	w/60 Amp. Alternator	71	—	—	—	1	1	—	—	—	—	—	—	3513 514
	w/65 Amp. Compact L/N Altr.	70	—	—	—	1	1	—	—	—	—	—	—	2926 789
	w/65 Amp. Compact L/N Altr.	71	—	—	—	1	1	—	—	—	—	—	—	3513 515
	w/318 Eng.	70 8	—	—	—	1	1	—	—	—	—	—	—	2983 464
	w/318 and 340 Eng.	71 8	—	—	—	1	1	—	—	—	—	—	—	3513 251
	w/340 Eng., w/Elect. Ignition Control	71	—	1	—	1	1	—	—	—	—	—	—	=3513 747
	w/383 and 440 w/1-4 Bbl. Carb., Eng.	70 8	—	—	—	1	1	—	—	—	—	—	—	2983 808
	w/383 and 440 w/1-4 Bbl. Carb., Eng.	71 8	—	—	—	1	1	—	—	—	—	—	—	3513 252
	w/426 Eng.	71 8	—	—	—	1	1	—	—	—	—	—	—	3513 294
	w/440 Eng., w/3-2 Bbl. Carb.	70 8	—	—	—	1	1	—	—	—	—	—	—	2983 591
	w/440 Eng., w/3-2 Bbl. Carb.	71 8	—	—	—	1	1	—	—	—	—	—	—	3513 253
		70 6	—	—	—	—	—	1	1	—	—	—	—	2983 373
		71 6	—	—	—	—	—	1	1	—	—	—	—	3513 261
	w/60 Amp. Altr.	71 6	—	—	—	—	—	1	1	—	—	—	—	3513 520
	w/65 Amp. Compact L/N Altr.	70	—	—	—	—	—	1	1	—	—	—	—	2983 376
	w/65 Amp. Compact L/N Altr.	71	—	—	—	—	—	1	1	—	—	—	—	3513 603
	w/318 Eng.	70 8	—	—	—	—	—	1	1	—	—	—	—	2983 374
	w/318 and 360 Eng.	71 8	—	—	—	—	—	1	1	—	—	—	—	3513 262
	w/60 Amp. Altr., w/318 and 360 Eng.	71 8	—	—	—	—	—	1	1	—	—	—	—	3513 523
	w/383 and 440 w/1-4 Bbl. Carb., Eng.	70 8	—	—	—	—	—	1	1	—	—	—	—	2983 811
	w/383 and 440 Eng.	71 8	—	—	—	—	—	1	1	—	—	—	—	3513 263
	w/60 Amp. Alt., w/383 and 440 Eng.	71 8	—	—	—	—	—	1	1	—	—	—	—	3513 522
	w/440 Eng., w/3-2 Bbl. Carb.	70 8	—	—	—	—	—	1	—	—	—	—	—	2983 807
		70 8	—	—	—	—	—	—	—	1	1	1	—	2983 810
	w/360 Eng.	71 8	—	—	—	—	—	—	—	1	—	—	—	=3513 693
	w/360 Eng., w/60 Amp. Altr., w/A/Cond., w/Auto. Temp. Control	71 8	—	—	—	—	—	—	—	1	—	—	—	=3513 694
	w/383 and 440 Eng.	71 8	—	—	—	—	—	—	—	1	1	1	—	3513 195
	w/60 Amp. Alt., w/383 and 440 Eng.	71 8	—	—	—	—	—	—	—	1	1	1	—	3513 521
	Road Lamp, B	70	—	1	—	—	—	—	—	—	—	—	—	2983 711
	B	71	—	1	—	—	—	—	—	—	—	—	—	3513 573
	H/Lamp to Bulkhead, B	70	—	1	—	—	—	—	—	—	—	—	—	2983 492
		71	—	1	—	—	—	—	—	—	—	—	—	3513 512
	J	70	—	1	—	—	—	—	—	—	—	—	—	2983 432
	W Charger and Charger R/T	70	—	—	—	1	1	—	—	—	—	—	—	2983 519
	4D. and Sta. Wgn.	71	—	—	—	1	—	—	—	—	—	—	—	3513 248
	w/426 Eng.	71 8	—	—	—	1	—	—	—	—	—	—	—	3513 247
	w/340, 383, w/1-4 Bbl. Carb. and 440 Eng. w/Carb. Fresh Air Pkg., R-M R-S	71 8	—	—	—	1	—	—	—	—	—	—	—	3513 247
	R-H, R-P, 2D.H.T., W except Fastback	71 8	—	—	—	1	1	—	—	—	—	—	—	3513 247
	w/340, 383 w/1-4 Bbl. Carb. and 440 Eng., w/o Carb. Fresh Air Pkg., R-M, R-S	71 8	—	—	—	1	—	—	—	—	—	—	—	3513 250
	w/Turn Ind. Fender Hd. Mtd., W except Charger and Charger R/T	70	—	—	—	—	1	—	—	—	—	—	—	2983 468
	w/o Turn Ind. Fender Hd. Mtd., W except Charger and Charger R/T	70	—	—	—	—	1	—	—	—	—	—	—	2983 761
	w/Concealed H/Lamp, w/383 w/1-4 Bbl. Carb. and 440 Eng., W-M, W-S	71 8	—	—	—	—	1	—	—	—	—	—	—	3513 249
	Fastback	71	—	—	—	—	1	—	—	—	—	—	—	3513 249
	w/o Turn Ind. Fender Hd. Mtd., P-K, P-T, P-E, P-L, P-M	70	—	—	—	—	—	1	—	—	—	—	—	2983 367
	w/o Turn Ind. Fender Hd. Mtd., P-K, P-T, P-E, P-L, P-M, D w/o Cornering Lamp	71	—	—	—	—	—	1	1	—	—	—	—	3513 617

CARLINES J - Challenger, B - Barracuda, V - Valiant, L - Dart, R - Belvedere - Satellite, W - Coronet - Charger, P - Plymouth, D - Dodge, C - Chrysler, Y - Imperial

AR Indicates use as required.

# Indicates parts not listed in any previous parts book.

Numerals in parentheses ( ) refer to notes.

★ Indicates change or addition.

Printed in U.S.A. January 1972

CODE	PART NAME	ENG. TYPE OR CU.IN.	V	B J	L	R	W	P	D	C	C	C	Y	PART NUMBER
			1-2	1-2	1-2	1-2	1-2	1-2	1-2	1	2	3	1	
8-15-0	**CHASSIS AND BODY WIRING Cont'd.**													
8-15-2	WIRING Cont'd.													
	w/Turn Ind. Fender Hd. Mtd.	70		—	—	—	—	—	1	—	—	—	—	—	2983 379
	w/Turn Ind. Fender Hd. Mtd., P-K, P-T, P-E, P-L, P-M, D w/o Cornering Lamp	71		—	—	—	—	—	1	1	—	—	—	—	3513 618
	P-M w/Grand Coupe Pkg., P-H, P-P	71		—	—	—	—	—	1	—	—	—	—	—	3513 619
	w/o Cornering Lamp	70		—	—	—	—	—	—	1	—	—	—	—	2983 367
	w/Cornering Lamp	70		—	—	—	—	—	—	1	—	—	—	—	2983 369
	w/Cornering Lamp	71		—	—	—	—	—	—	1	—	—	—	—	3513 620
	w/o Cornering Lamp	70		—	—	—	—	—	—	—	1	—	1	—	2983 460
	w/o Cornering Lamp	71		—	—	—	—	—	—	—	1	1	1	—	3513 621
	w/Cornering Lamp	70		—	—	—	—	—	—	—	1	—	1	—	2983 368
	w/Cornering Lamp	71		—	—	—	—	—	—	—	1	1	1	—	3513 622
		70		—	—	—	—	—	—	—	—	1	—	—	2983 461
	Manual Trans. Switch, w/Nox Exhaust Emission Control	71		1	—	1	—	—	—	—	—	—	—	—	3513 605
	Manual Trans. Switch, w/340 Eng., w/Nox Exhaust Emission Control	71	8	—	1	—	1	1	—	—	—	—	—	—	3513 607
	Manual Trans. Switch, w/Nox Exhaust Emission Control	71		—	—	—	—	—	1	1	1	—	—	—	3513 374
	Auto. Trans. Switch	70		—	—	—	—	—	1	1	1	1	1	1	2983 800
	Auto. Trans. Switch, w/Nox Exhaust Emission Control	71		—	—	—	—	—	1	1	1	1	1	1	3513 203
	Auto. Trans. Switch, w/o Nox Exhaust Emission Control	71		—	—	—	—	—	1	1	1	1	1	1	3513 376
	Auto. Trans., w/3 Way Connector on End			1	1	1	1	1	1	1	1	1	1	1	2926 502
8-15-3	FUSE BLOCK			1	—	1	—	—	—	—	—	—	—	—	2983 640
		70		—	1	—	—	—	1	1	1	1	1	1	3420 880
		71		—	1	—	1	1	1	1	—	—	—	—	3513 318
		70		—	—	—	1	1	—	—	—	—	—	—	2983 640
	w/o H/Lamp Sentinel	71		—	—	—	—	—	—	—	1	1	1	—	3513 318
	w/H/Lamp Sentinel	71		—	—	—	—	—	—	—	1	1	1	—	3513 495
		71		—	—	—	—	—	—	—	—	—	—	1	3513 320
	SCREW, Mtg.	70		1	—	1	1	1	—	—	—	—	—	—	6026 394
8-15-4	WIRING, Body, 4D.	70		1	—	—	—	—	—	—	—	—	—	—	2983 294
	Sp. 2D.H.T.	70		1	—	—	—	—	—	—	—	—	—	—	2983 476
	4D.	71		1	—	—	—	—	—	—	—	—	—	—	3513 148
	Fastback	71		1	—	—	—	—	—	—	—	—	—	—	3513 606
	2D.H.T.	71		1	—	—	—	—	—	—	—	—	—	—	2983 347
	2D.H.T., B	70		—	1	—	—	—	—	—	—	—	—	—	2983 454
	2D.H.T., B	71		—	1	—	—	—	—	—	—	—	—	—	3513 181
	except Cv. Cp., J	70		—	1	—	—	—	—	—	—	—	—	—	2983 455
	2D.H.T., J	71		—	1	—	—	—	—	—	—	—	—	—	3513 077
		70		—	—	1	—	—	—	—	—	—	—	—	2983 347
	Fastback	71		—	—	1	—	—	—	—	—	—	—	—	3513 018
	except Fastback	71		—	—	1	—	—	—	—	—	—	—	—	2983 347
	except Cv. Cp. and Sta. Wgn.	70		—	—	—	1	—	—	—	—	—	—	—	2983 359
	except Sta. Wgn.	71		—	—	—	1	1	—	—	—	—	—	—	3513 338
	Sta. Wgn., w/o Power Tailgate Window	70		—	—	—	1	1	—	—	—	—	—	—	2983 317
	Sta. Wgn., w/Power T/Gate Window	70		—	—	—	1	1	—	—	—	—	—	—	2983 318
	Sta. Wgn., w/Power Tailgate Window and Door Gate Release	71		—	—	—	1	1	—	—	—	—	—	—	3513 311
	2 D., 2 D.H.T. and 4 D., W-K, W-T, W-L W-M, W-H	70		—	—	—	—	1	—	—	—	—	—	—	2983 340
	2D.H.T. and 4D., W-P, W-S	70		—	—	—	—	1	—	—	—	—	—	—	2983 337
	Charger and Charger R/T	70		—	—	—	—	1	—	—	—	—	—	—	2983 344

CARLINES J - Challenger, B - Barracuda, V - Valiant, L - Dart, R - Belvedere - Satellite, W - Coronet - Charger, P - Plymouth, D - Dodge, C - Chrysler, Y - Imperial

AR Indicates use as required.

# Indicates parts not listed in any previous parts book.

Numerals in parentheses ( ) refer to notes.

★ Indicates change or addition.

Printed in U.S.A. January 1972

8-15-0 CHASSIS AND BODY WIRING Cont'd.

CODE	PART NAME	ENG. TYPE OR CU.IN.	V 1-2	B J 1-2	L 1-2	R 1-2	W 1-2	P 1-2	D 1-2	C 1	C 2	C 3	Y 1	PART NUMBER
8-15-4	WIRING Cont'd.													
	Cv. Cp.	70	—	—	—	—	—	1	—	—	—	—	—	2926 897
	except Cv. Cp. and Sta. Wgn.	70	—	—	—	—	—	1	—	—	—	—	—	2926 893
	Sta. Wgn.	70	—	—	—	—	—	1	1	—	—	—	—	2926 705
	except Sta. Wgn.	71	—	—	—	—	—	1	—	—	—	—	—	3513 022
	Sta. Wgn.	71	—	—	—	—	—	1	1	—	—	—	—	3513 563
	Cv. Cp.	70	—	—	—	—	—	—	1	—	—	—	—	2983 128
	2D.H.T., 4D. and 4D.H.T., D-K, D-T, D-L, D-M	70	—	—	—	—	—	—	1	—	—	—	—	2926 892
	except Sta. Wgn., D-H, D-P	70	—	—	—	—	—	—	1	—	—	—	—	2926 899
	except Sta. Wgn.	71	—	—	—	—	—	—	1	—	—	—	—	3513 271
	Cv. Cp.	70	—	—	—	—	—	—	—	1	1	—	—	2983 112
	2D.H.T., 4D. and 4D.H.T.	70	—	—	—	—	—	—	—	1	1	1	—	2983 113
	Sta. Wgn.	70	—	—	—	—	—	—	—	1	—	—	—	2983 304
	except Sta. Wgn.	71	—	—	—	—	—	—	—	1	1	1	—	3513 554
	Sta. Wgn.	71	—	—	—	—	—	—	—	1	—	—	—	3513 562
		70	—	—	—	—	—	—	—	—	—	—	1	2983 145
		71	—	—	—	—	—	—	—	—	—	—	1	3513 125
	Folding Top Courtesy Lamp and Body, Cv. Cp., B	70	—	1	—	—	—	—	—	—	—	—	—	2983 562
	Cv. Cp., B	71	—	1	—	—	—	—	—	—	—	—	—	3513 182
	Cv. Cp., J	70	—	1	—	—	—	—	—	—	—	—	—	2983 556
	Cv. Cp., J	71	—	1	—	—	—	—	—	—	—	—	—	3513 160
	Cv. Cp., R-M	70	—	—	—	1	—	—	—	—	—	—	—	2983 358
		71	—	—	—	1	—	—	—	—	—	—	—	2983 328
	Cv. Cp.	70	—	—	—	—	1	—	—	—	—	—	—	2983 349
	Overhead Console, B 2D.H.T., J Sp. 2D.H.T.	70	—	1	—	—	—	—	—	—	—	—	—	2983 789
	2D.H.T., B-P, J	71	—	1	—	—	—	—	—	—	—	—	—	3513 412
	Console, w/Auto. Trans., R-M, R-P, R-S, W-M, W-H 2 D.H.T., W-P 2 D.H.T., Cv. Cp. and Charger	70	—	—	—	1	1	—	—	—	—	—	—	2926 365
	Console, P-M except Sta. Wgn., P-H 2 D.H.T., Fastback and 4 D.H.T.	70	—	—	—	—	—	1	—	—	—	—	—	2926 365
	Console, except Sta. Wgn., P-M, P-H, P-P	71	—	—	—	—	—	1	—	—	—	—	—	2926 365
	Console, 2D.H.T. and Cv. Cp., D-H	70 Canada	—	—	—	—	—	—	1	—	—	—	—	2926 365
	Console, D-L 2D.H.T. and Cv. Cp., D-H 2D.H.T.	70	—	—	—	—	—	—	1	—	—	—	—	2983 352
	Console, C-E 2D.H.T. and Cv. Cp., C-H 2D.H.T.	70	—	—	—	—	—	—	—	1	1	1	—	2983 447
	Console, C-E 2D.H.T., C-H 2D.H.T.	71	—	—	—	—	—	—	—	1	1	1	—	2983 447
	Rr. Qtr. and Dome Lamp, 2D.H.T., Y-L, up to approx. Jan. 1, 1970	70	—	—	—	—	—	—	—	—	—	—	1	2983 507
	after approx. Jan. 1, 1970	70	—	—	—	—	—	—	—	—	—	—	1	2983 881
	Rr. Qtr. and Courtesy Lamp, 2D.H.T.	70	—	—	—	—	—	—	—	—	—	—	1	2983 532
8-15-13	COVER, Fuse Block Base		1	—	1	1	1	—	—	—	—	—	—	2291 846
	WATER SHIELD, Bulkhead	70	—	—	—	—	—	1	1	1	1	1	1	2926 891
		71	—	—	—	—	—	1	1	1	1	1	1	3513 593
8-15-15	WIRING, H/Lamp Delay Relay	70	1	—	1	—	—	—	—	—	—	—	—	2983 470
	H/Lamp Washer Relay, P-M, P-H P-P	71	—	—	—	—	—	1	—	—	—	—	—	3513 449
8-15-17	WIRING, Brake System Warning Lamp Switch		1	1	1	1	1	1	1	1	1	1	1	2822 623
	CABLE, Brake System Warning Lamp	71	1	—	1	—	—	1	1	1	1	1	1	3513 655
8-15-23	WIRING, Time Delay Relay and Lamp	70	—	—	—	—	—	1	—	—	—	—	—	2983 631
		71	—	—	—	—	—	1	1	—	—	—	—	3513 171
		70	—	—	—	—	—	—	1	—	—	—	—	2983 576

CARLINES: J - Challenger, B - Barracuda, V - Valiant, L - Dart, R - Belvedere - Satellite, W - Coronet - Charger, P - Plymouth, D - Dodge, C - Chrysler, Y - Imperial

AR Indicates use as required.

# Indicates parts not listed in any previous parts book.

Numerals in parentheses ( ) refer to notes.

★ Indicates change or addition.

Printed in U.S.A. January 1972

CODE	PART NAME	ENG. TYPE OR CU.IN.	V 1-2	B J 1-2	L 1-2	R 1-2	W 1-2	P 1-2	D 1-2	C 1	C 2	C 3	Y 1	PART NUMBER
8-15-0	**CHASSIS AND BODY WIRING Cont'd.**													
8-15-23	WIRING Cont'd.													
	Ignition and Seat Belt Lamp	71	—	—	—	1	1	—	—	—	—	—	—	3513 141
8-15-25	RETAINER, Cowl Side Wiring Conduit Att.	70	—	—	—	2	2	—	—	—	—	—	—	6001 419
	Door Lock Wiring Locator Clip, 4D.H.T.	71	—	—	—	—	—	—	—	—	—	—	2	3513 561
8-15-26	WIRING, Ammeter, w/60 Amp. Alternator	71	—	—	—	1	1	—	—	—	—	—	—	3513 591
8-15-27	CABLE, Fusible Link		1	—	1	—	—	—	—	—	—	—	—	2822 229
			—	1	—	—	—	—	—	—	—	—	—	2983 706
	w/60 Amp. Alternator		—	—	—	1	1	—	—	—	—	—	—	2822 692
		70	—	—	—	1	1	—	—	—	—	—	—	2631 828
		71	—	—	—	1	1	—	—	—	—	—	—	2983 706
		70	—	—	—	—	—	1	1	1	1	1	1	2889 419
		71	—	—	—	—	—	1	1	1	1	1	1	3513 537
	CABLE PACKAGE	70	—	—	—	—	—	—	—	—	—	—	1	2983 798
		71	—	—	—	—	—	—	—	—	—	—	1	3513 360
	WIRING, Turn Signal Fuse Cable	70	1	1	1	1	1	1	1	1	1	1	1	2983 883
8-15-32	CLIP and BUSS BAR, Fuse Block Fuse, 2 Way		AR	—	AR	—	—	—	—	—	—	—	—	2291 842
	CLIP and BUSS BAR, Fuse Block Fuse, 3 Way		1	—	1	1	1	—	—	—	—	—	—	2291 841
	CLIP, Fuse Block Ret.		—	2	—	2	2	2	2	2	2	2	2	2983 634
	CLIP and BUSS BAR, Fuse Block		—	2	—	2	2	2	2	2	2	2	1	2926 247
	CLIP, Eng. Comp't Wiring Locator		—	AR	—	—	—	AR	AR	AR	AR	AR	AR	6015 238
	STRAP, Eng. Harness Locator		1	1	—	—	—	—	—	—	—	—	—	2765 032
	CLIP, Eng. Comp't. Wiring Locator		—	—	—	AR	AR	—	—	AR	AR	AR	AR	6015 288
	CLIP, Altr. Wiring Fuel Line		—	—	—	1	1	1	1	—	—	—	—	2765 032
	CLIP and BUSS BAR, Fuse Block, 2 Way		—	—	—	—	—	—	—	—	—	—	1	2926 649
8-15-35	WIRING, Transistor Regulator		1	1	1	1	1	1	1	1	1	1	1	2926 896
8-15-40	WIRING, Auto. H/Lamp Sentinel and Dimmer		—	—	—	—	—	—	—	1	1	1	1	2983 604
8-15-52	WIRING, Rr. Lamp, Sta. Wgn.		—	—	—	—	—	1	1	1	—	—	—	2983 728
8-15-53	WIRING, Accessory Lamp, V-L	70	1	—	—	—	—	—	—	—	—	—	—	2983 862
	V-L, V-H, L Fastback	71	1	—	1	—	—	—	—	—	—	—	—	3513 126
	V-S	70	1	—	1	—	—	—	—	—	—	—	—	2983 646
	V-S, L-L except Fastback, L-M, L-H	71	1	—	1	—	—	—	—	—	—	—	—	3513 127
	Map, Ignition Switch and Title Lamp	70	—	1	—	—	—	—	—	—	—	—	—	2983 713
		71	—	1	—	—	—	—	—	—	—	—	—	3513 427
	Map Lamp Switch and Socket	70	—	—	—	1	1	—	—	—	—	—	—	2983 589
	Strg. Column Switch Jumper, w/Tilt Strg. Wheel	71	—	—	—	1	1	—	—	—	—	—	—	3513 510
	Dome and Rr. Lamp, Sta. Wgn.	71	—	—	—	1	1	—	—	—	—	—	—	3513 572
	Strg. Column Switch Jumper, w/Tilt and Tilt-Telescopic Strg. Wheel		—	—	—	—	—	1	1	1	1	1	1	2983 684
	Cornering Lamp Jumper, w/Tilt and Tilt-Telescopic Strg. Wheel		—	—	—	—	—	—	1	1	1	1	1	2983 686
	Dome Lamp, except Sta. Wgn.	70	—	—	—	—	—	1	1	1	1	1	—	2983 877
	Sta. Wgn.	70	—	—	—	—	—	1	1	1	—	—	—	2983 878
	except Sta. Wgn., up to approx. Nov. 15, 1970	71	—	—	—	—	—	1	1	1	1	1	—	=3513 394
	Sta. Wgn., up to approx. Nov. 15, 1970	71	—	—	—	—	—	1	1	1	—	—	—	=3513 393
	Dome and Rr. Lamp, Sta. Wgn. up to approx. Jan. 1, 1970	70	—	—	—	—	—	1	1	1	—	—	—	2926 407
	after approx. Jan. 1, 1970	70	—	—	—	—	—	1	1	1	—	—	—	2983 879
	Courtesy Lamp	71	—	—	—	—	—	1	1	—	—	—	—	3513 589
	Dome Lamp, 4D.H.T., up to approx. Jan. 1, 1970, Y-L	70	—	—	—	—	—	—	—	—	—	—	1	2983 533
	after approx. Jan. 1, 1970	70	—	—	—	—	—	—	—	—	—	—	1	2983 880
	Rr. Courtesy Lamp, 4D.H.T., Y-M	70	—	—	—	—	—	—	—	—	—	—	1	2983 487
	4D.H.T.	71	—	—	—	—	—	—	—	—	—	—	1	3513 367

CARLINES: J - Challenger, B - Barracuda, V - Valiant, L - Dart, R - Belvedere - Satellite, W - Coronet - Charger, P - Plymouth, D - Dodge, C - Chrysler, Y - Imperial

AR Indicates use as required.

Numerals in parentheses ( ) refer to notes.

# Indicates parts not listed in any previous parts book.

★ Indicates change or addition.

Printed in U.S.A. January 1972

CODE	PART NAME	ENG. TYPE OR CU.IN.	V 1-2	B J 1-2	L 1-2	R 1-2	W 1-2	P 1-2	D 1-2	C 1	C 2	C 3	Y 1	PART NUMBER
8-15-0	**CHASSIS AND BODY WIRING Cont'd.**													
8-15-53	WIRING Cont'd.													
	2D.H.T.	71	—	—	—	—	—	—	—	—	—	—	1	3513 368
8-15-60	WIRING, Road Lamp, B		—	1	—	—	—	—	—	—	—	—	—	2983 561

NOTES

CARLINES J - Challenger, B - Barracuda, V - Valiant, L - Dart, R - Belvedere - Satellite, W - Corcnet - Charger, P - Plymouth, D - Dodge, C - Chrysler, Y - Imperial

AR Indicates use as required.

# Indicates parts not listed in any previous parts book.

Numerals in parentheses ( ) refer to notes.

★ Indicates change or addition.

Printed in U.S.A. January 1972

8-16-0 CABLE AND CONNECTIONS

CODE		PART NO.
	NOTE: For a More Practical and Economical Method of Servicing only the More Complicated Assemblies Will Be Stocked For Service. These Will Be Found in Their Respective Groups.	
	On the More Simple Assemblies, the Required Length and Size of Cables, Terminals, etc. Should be Specified. For Visual Chart of Insulator and Terminal Packages see Front of Group.	
8-16-1	CONNECTOR and TERMINAL PACKAGE, Headlamp Cable	1879 609
	TERMINAL and INSULATOR PACKAGE	
	8 Pole, Male and Female	2448 822
	8 Pole, Male, Upper, Bulkhead Disconnect	2495 223
	8 Pole, Male, Lower, Bulkhead Disconnect	2495 224
	8 Pole, Female	2084 424
	Male and Female	2298 882
	Female, Miniature	2084 421
	Female, Miniature	2240 264
	Male, Miniature	2240 536
	Electric Vent-Wing Motor Wiring	2495 239
	Window Lift Switch, 3 Way	2495 234
	Window Lift Switch, 5 Way, Imperial	2495 235
	Window Lift Switch, 5 Way, P, D, C	2584 954
	Window Lift Switch, 6 Way, w/Lockout Switch	2495 236
	Window Lift Switch, 6 Way, w/o Lockout Switch	2495 237
	Window Lift Switch, 10 Way	2584 843
	Power Vent Switch, 5 Way	2584 953
	Turn Signal Switch Wiring, Female	2495 541
	Turn Signal Switch, Male	2585 030
	Printed Circuit Board	2495 517
	Single Cable, Bullet Type	1843 444
	Seat Adj. Switch, 6 Way	2584 842
	A/Cond. Vac. Switch	2584 841
	Window Lift Switch, 5 Way	2809 016
	Frt. Door Window Lift Switch, Left, 7 Way	2809 017
	Frt. Door Window Lift Switch, Right, 10 Way	2809 018
	Frt. Door Window Lift Switch, Left, 10 Way	2809 019
	Windshield Wiper Switch, Female	2809 039
	Headlamp Switch, 5 Way, Female	2809 038
	Fusible Link, Female	2809 037
	Map Lamp Take-Off Wiring	2809 036
	Auto. Pilot, 4 Way	2809 035
	Windshield Wiper Switch, 4 Way	2809 034
	w/CABLE, Fuel Gage Tank Unit	2230 985
8-16-3	CABLE, No. 8 Brown, 100 Ft. Spool	2275 220
	No. 16 Blue, w/Stripe, 100 Ft. Spool	2421 455
	No. 12 Red, 100 Ft. Spool	1752 491
	No. 14 Green, 100 Ft. Spool	1752 490
	No. 16 Blue, 100 Ft. Spool	1752 489
	No. 18 Yellow, 100 Ft. Spool	1752 488
	No. 10 Black, 100 Ft. Spool	1752 492
	WIRE and Spool Triple CONDUCTOR, No. 14 Gage, Red, Green and Black, 100 Ft. Spool	2298 769
	WIRE and Spool Double CONDUCTOR, No. 14 Gage, Green and Black, 100 Ft. Spool	2298 770
8-16-4	TERMINAL, Female Side	1842 009
	Printed Circuit Board Wiring, Female	2291 259
	Cold Crimp, Female	2291 588
	Printed Circuit Wiring, Female	2258 118
	K-Type, Female	1819 836
	Miniature Blade Wiring, Female	2580 061
	Fuse Block, w/CLIP, Male	2291 838
	Wiring, 1.025" Long, 203 Hole Eyelet, No. 12 Wire	2290 069
	Wiring, .910" Long, Snap-On No. 8 Stud Spade, No. 12 Wire	2258 591
	Wiring, .77" Long, Female K-Type	1704 562
	Wiring, 1.36" Long, No. 6 Eyelet, No. 8 Wire	2258 590
	Wiring, .553" Long, EWL Term. Block, No. 14 Wire	2427 529

8-16-0 CABLE AND CONNECTIONS Cont'd.

CODE		PART NO.
8-16-4	TERMINAL Cont'd.	
	Wiring, .570" Long, for Nail Hd. Term. Sending Unit, No. 18 Wire	2427 736
	Wiring, 1.625" Long, 47 Hole Eyelet, No. 6 Wire	2197 947
	Wiring, .697" Long, Female Hair Pin, No. 12 Wire	2427 848
	Wiring, Fuse Clip	2290 207
	Wiring, .083" Pin Female Type	2926 174
	w/INSULATOR and CABLE, Glove Box Lamp, No. 16 Red	2257 443
	w/INSULATOR and CABLE, Glove Box Lamp, No. 14 Brown	2257 444
	Cable Connector	870 821
	Electric Window Lift Safety Switch Wiring	903 895
	Printed Circuit Board Clip	2427 725
	Turn Signal Switch and Horn Wiring	2496 532
	Battery to Starter Cable	2197 945
	Ignition Coil Feed Cable	2496 541
	Block, Single Post	2771 917
	Qtr. Courtesy Lamp Bulb	2822 565
	Dome Lamp Wiring, Female	2889 434
	Dome Lamp Wiring, Male	2889 435
	Circuit Breaker Feed and Rr. Dome Lamp Hsg. Ground	2926 050
	A/Cond. and Heater Control Lamp and Socket	1842 012
	Cluster Wiring Ground	2926 594
	Reading Lamp Ground Wire	2926 607
	Cluster Lamp Wiring	2926 617
	Wiring Fuse Clip	2926 722
	Body Wiring, 6 Way Male, Imperial	2983 237
	Body Wiring, 6 Way Female, Imperial	2983 239
	Wiring, .093 Pin Male	2983 409
	Wiring, .093 Pin Female	2983 410
	Wiring, .125 Pin Male	2983 411
	Wiring, .125 Pin Female	2983 412
	Alternator Wiring	2983 508
	Strg. Wheel Horn Wire	2996 872
	Frt. Fender Side Marker Lamp	2983 754
	Horn Button Switch	2257 839
	Dr. Switch Wiring Insulator	2983 513
	Frt. Fender Side Marker Lamp Socket	2983 882
	Nox Emission Switch Wiring	3513 482
	Park and T/Signal Socket Ground	3513 307
	Side Marker Socket Wiring	3513 586
	Concealed H/Lamp Relay Wiring	3513 637
	Wiring, .156 Dia., Male	3513 543
	Wiring, .156 Dia., Female	3513 544
8-16-5	SLEEVE, Wiring Terminal, Black	1264 933
	Starting Motor Terminal	930 304
	Starting Motor Terminal	1188 502
8-16-6	INSULATOR, Alternator Battery Terminal	2291 093
	Printed Circuit Board Wiring Terminal, 5 Pole, Female	2291 258
	Printed Circuit Wiring Terminal	2258 651
	Headlamp Switch, 7 Pole, Female	2258 102
	Neutral Safety Cable Terminal	2497 701
	Back-Up Lamp Switch Wiring	2770 859
	A/Cond. and Heater Vac. Control Switch Wiring, 3 Way	2857 754
	Terminal Wiring, 2 Way	2857 761
	Starter and Ignition Switch Wiring	2889 597
	Dome Lamp Wiring Terminal, 2 Way, Female	2889 427
	Dome Lamp Wiring Terminal, 2 Way, Male	2889 428
	Ignition Lamp Time Delay Relay	2889 650
	Dome Lamp Wiring Terminal, Female	2889 542
	Dome Lamp Wiring Terminal, Male	2889 543
	Qtr. Courtesy Lamp	2926 051
	Bulkhead Disconnect, 8 Pole, Upper	2427 191
	Bulkhead Disconnect, 8 Pole, Lower	2427 192
	Terminal Wiring, 8 Pole, Male, w/Center Ridge	2631 318
	Terminal Wiring, 8 Pole, Male, w/Upper Ridge	2631 319

8-16-0 CABLE AND CONNECTIONS Cont'd.

CODE		PART NO.
8-16-6	INSULATOR Cont'd.	
	Terminal Wiring, 8 Pole, Male, w/Lower Ridge	2631 317
	Bulkhead Connector Wiring Terminal, 4 Pole, Male, w/Lower Ridge on Lt. Side	2926 254
	Bulkhead Connector Wiring Terminal, 4 Pole, Male, w/Lower Ridge on Rt. Side	2926 255
	Bulkhead Connector Wiring Terminal, 8 Pole, Male, w/Upper Ridge	2926 256
	Bulkhead Connector Wiring Terminal, 8 Pole, Male, w/Center Ridge	2926 257
	Bulkhead Connector Wiring Terminal, 8 Pole, Male, w/Upper and Lower Ridge	2926 258
	Seat Adj. Wiring Terminal, 8 Way	2926 374
	w/Lift Switch Wiring Terminal, 5 Way	2926 172
	w/Lift Switch Wiring Terminal, 10 Way	2926 171
	Power Vent Switch Terminal, 5 Way, Lt. Frt. Door	2926 204
	Cornering Lamp Switch Wiring Terminal, 3 Way, Male	2983 407
	Wiring Terminal, 6 Way Male	2983 237
	Wiring Terminal, 6 Way Female	2983 239
	Ignition Switch Wiring Terminal, 8 Way, Male	2983 401
	Ignition Switch Wiring Terminal, 8 Way, Female	2983 402
	Speed Control Switch Wiring Terminal, 4 Way, Male	2983 405
	Speed Control Switch Wiring Terminal, 4 Way, Female	2983 406
	Turn Signal Switch Wiring Terminal, 8 Way, Male	2983 403
	Wiring Terminal, 8 Way, Female	2983 404
	Wiring Terminal, 3 Way, Female	2983 408
	Low Fuel Relay, 4 Way, Female	2983 335
	Turn Signal Fuse Cable Wiring Terminal	2983 884
	Concealed H/Lamp Relay	2291 663
	Ammeter and Oil Ind. Dial	2809 009
	Dr. Switch Wiring	2983 514
	Inst. Cluster Lamp Socket	1838 911
	Tailgate Switch Wiring, Female	3513 150
	ATC Control Wiring, 8 Way	3513 154
	ATC Control Wiring, 5 Way, 1.360" Length	3513 155
	ATC Control Wiring, 5 Way, 1.249" Length	3513 156
	Inst. Panel Wiring, 6 Way Female	3513 347
	Body Wiring, 6 Way Male	3513 348
	A/Cond. and Heater Switch	3513 477
	Nox Emission Thermal Switch Wiring	3513 507
	Wiring Terminal, 2 Way Male	3513 350
	Road Lamp Relay Wiring Terminal, 4 Way	3513 550
	Bulkhead	3513 632
	Wiring Terminal, .156 Dia., Male	3513 545
	Wiring Terminal, .156 Dia., Female	3513 546
8-16-8	CONNECTOR, 2 Way Polarized, Female	1842 003
	Single Cable	611 898
	Back-Up Lamp Switch Wiring, w/Manual Trans.	2631 340
	Self Stripping	2926 651
8-16-10	PLUG, Cable Connector, No. 12 Cable	665 151
	w/WIRING, Molded 2 Pole, Male and Female	2233 028
	w/WIRING, Molded 4 Pole, 2 Male and 2 Female	2497 346
	w/WIRING, Molded 2 Pole, Male and Female	2231 119
8-16-16	MOLD and CABLE, Single Female	2580 064
	Single Male	2580 065
	Dual Female	2580 267
8-16-19	RETAINER, Transistor Regulator Conn.	2926 861

NOTES

8-17-0 FUSES

8-17-2	FUSES	AMP.	SIZE	PART NO.
	All Models	1	5/8	149 559
	All Models	2	5/8	148 086
	All Models	2	1-1/4	145 511
	All Models	3	5/8	445 635
	All Models	3	1-1/4	106 652
	All Models	4	1-1/4	148 511
	All Models	5	5/8	126 049
	All Models	5	1-1/4	142 630
	All Models	6	3/4	147 683
	All Models	7-1/2	7/8	150 866
	All Models	7-1/2	1-1/4	455 107
	All Models	9	7/8	147 684
	All Models	10	5/8	142 864
	All Models	10	1-1/4	117 142
	All Models	14	1-1/16	147 685
	All Models	15	1-1/4	120 151
	All Models	20	5/8	106 650
	All Models	20	1-1/4	106 653
	All Models	30	1-1/4	120 114
	All Models	30	1-7/16	147 686
	All Models	60	43/50	2258 284

NOTES

CODE	PART NAME	ENG. TYPE OR CU.IN.	V 1-2	B J 1-2	L 1-2	R 1-2	W 1-2	P 1-2	D 1-2	C 1	C 2	C 3	Y 1	PART NUMBER
8-17-0	**FUSES Cont'd.**													
8-17-23	FUSE HOLDER, H/Lamp Delay Relay	70	1	—	1	—	—	1	1	1	1	1	—	1885 608
		71	—	—	—	—	—	1	1	1	1	1	—	1885 608
	Auto. H/Lamp Sentinel and Dimmer		—	—	—	—	—	—	—	1	1	1	1	2257 682
	Rr. Blower Switch	70	—	—	—	—	—	—	—	—	—	—	1	1885 608
	Rr. Blower Switch and H/Lamp Washer Relay, P-H, P-P	71	—	—	—	—	—	1	—	—	—	—	1	1885 608
8-17-30	CIRCUIT BREAKER, w/BRKT., 30 Amp.	70	—	—	—	1	1	—	—	—	—	—	—	3004 122
	30 Amp.		—	1	—	—	—	1	1	1	1	1	1	2926 324
	30 Amp.	71	—	—	—	1	1	—	—	—	—	—	—	2926 324
	15 Amp., w/Power Door Lock	70	—	—	—	1	1	1	1	1	1	1	1	2926 325
	15 Amp., Sta. Wgn., w/Power Door T/Gate Release, up to approx. Jan. 1971	71	—	—	—	1	1	—	—	—	—	—	—	2926 325
	15 Amp., Sta. Wgn., w/Power Door T/Gate Release, after approx. Jan. 1971	71	—	—	—	1	1	—	—	—	—	—	—	#3513 738
	15 Amp., w/Power Door Lock, Up to approx. Jan. 1971	71	—	—	—	—	—	1	1	1	1	1	1	2926 325
	15 Amp. w/Power Door Lock, after approx. Jan. 1971	71	—	—	—	—	—	1	1	1	1	1	1	#3513 738
	5 Amp.		—	—	—	—	1	1	—	1	1	1	1	2983 415
	A/Cond.	71	1	1	1	1	1	1	1	1	1	1	1	3450 248
8-19-0	**INSTRUMENT PANEL WIRING**													
8-19-3	WIRING, Inst. Panel, V-L	70	1	—	—	—	—	—	—	—	—	—	—	2983 271
	V-L, V-H, L-L Fastback	71	1	—	1	—	—	—	—	—	—	—	—	3513 118
	V-S, L-M	70	1	—	1	—	—	—	—	—	—	—	—	2983 846
	V-S, L-M	71	1	—	1	—	—	—	—	—	—	—	—	3513 122
	w/o Rallye Inst. Panel	70	—	1	—	—	—	—	—	—	—	—	—	2983 829
	w/o Rallye Inst. Panel	71	—	1	—	—	—	—	—	—	—	—	—	3513 109
	w/Rallye Inst. Panel	70	—	1	—	—	—	—	—	—	—	—	—	2983 830
	w/Rallye Inst. Panel	71	—	1	—	—	—	—	—	—	—	—	—	3513 110
	w/426 Eng.	71	—	1	—	1	1	—	—	—	—	—	—	3513 498
	w/426, Eng., w/Elect. Ignition Control	71	—	1	—	—	—	—	—	—	—	—	—	#3513 749
	w/Auto. Speed Control, except 426 Eng.	70 8	—	1	—	—	—	—	—	—	—	—	—	2983 249
	w/o Rr. Seat Speaker, w/AM Radio-Stereo Player, w/AM-FM Multiplex Radio		—	1	—	—	—	—	—	—	—	—	—	2983 246
	L-L, L-H	70	—	—	1	—	—	—	—	—	—	—	—	2983 534
	L-L except Fastback, L-H	71	—	—	1	—	—	—	—	—	—	—	—	3513 136
	R-K, R-T, R-L, R-H, R-P, W-K, W-T, W-L, W-H, W-P except Charger, W-S 2D.H.T. and Cv. Cp. w/o Rallye Inst. Panel	70	—	—	—	1	1	—	—	—	—	—	—	2983 392
	R-K, R-T, R-L, R-H, W-K, W-T, W-L, W-H	71	—	—	—	1	1	—	—	—	—	—	—	3513 083
	R-M, R-S, W-M, W-S 2D.H.T. and Cv. Cp. w/Rallye Inst. Panel	70	—	—	—	1	1	—	—	—	—	—	—	2983 550
	R-M, R-P, R-S, W-M, W-P, W-S	71	—	—	—	1	1	—	—	—	—	—	—	3513 085
	w/426 Eng.	70 8	—	—	—	1	1	—	—	—	—	—	—	2983 496
	Charger and Charger R/T	70	—	—	—	—	1	—	—	—	—	—	—	2983 550
		70	—	—	—	—	—	1	—	—	—	—	—	2983 371
		71	—	—	—	—	—	1	1	—	—	—	—	3513 167
	Indicator Lamp	71	—	—	—	1	1	—	—	—	—	—	—	3513 646
	Low Fuel and Lock Door Ind. Lamp	71	—	—	—	—	—	1	1	—	—	—	—	3513 321
	w/Aux. Driving Lamp	70	—	—	—	—	—	—	1	—	—	—	—	2983 300
	w/o Aux. Driving Lamp	70	—	—	—	—	—	—	1	—	—	—	—	2983 301
	w/o H/Lamp Sentinel	70	—	—	—	—	—	—	—	1	1	1	—	2983 267

CARLINES J - Challenger, B - Barracuda, V - Valiant, L - Dart, R - Belvedere - Satellite, W - Coronet - Charger, P - Plymouth, D - Dodge, C - Chrysler, Y - Imperial

AR Indicates use as required.

Numerals in parentheses ( ) refer to notes.

# Indicates parts not listed in any previous parts book.

★ Indicates change or addition.

Printed in U.S.A. January 1972

CODE	PART NAME	ENG. TYPE OR CU.IN.	V	B J	L	R	W	P	D	C	C	C	Y	PART NUMBER
			1-2	1-2	1-2	1-2	1-2	1-2	1-2	1	2	3	1	
8-19-0	**INSTRUMENT PANEL WIRING Cont'd.**													
8-19-3	WIRING Cont'd.													
	w/o H/Lamp Sentinel	71	—	—	—	—	—	—	—	1	1	1	—	3513 594
	w/H/Lamp Sentinel	70	—	—	—	—	—	—	—	1	1	1	—	2983 265
	w/H/Lamp Sentinel	71	—	—	—	—	—	—	—	1	1	1	—	3513 339
		70	—	—	—	—	—	—	—	—	—	—	1	2983 541
	w/H/Lamp Sentinel, up to approx. Oct. 1970	71	—	—	—	—	—	—	—	—	—	—	1	3513 402
	From Oct. 1970 to Jan.)971	71	—	—	—	—	—	—	—	—	—	—	1	3513 690
	after approx. Jan. 1971	71	—	—	—	—	—	—	—	—	—	—	1	#3513 716
	w/o H/Lamp Sentinel	71	—	—	—	—	—	—	—	—	—	—	1	#3513 716
	Lamp on Reminder Buzzer Diode	70	1	1	1	1	1	1	1	1	1	1	1	2983 595
	Inst. Warning Lamp and Ammeter	70	—	—	—	—	—	—	—	1	1	1	—	2926 134
		71	—	—	—	—	—	—	—	1	1	1	—	3513 361
	Cluster Lamp	70	—	—	—	—	—	—	—	1	1	1	—	2926 133
	Cluster Lamp	70	—	—	—	—	—	—	—	—	—	—	1	2926 603
	Cluster Lamp	71	—	—	—	—	—	—	—	2	2	2	2	3513 455
8-19-7	WIRING EXTENSION, H/Lamp Switch, 3 Way		—	—	—	—	—	AR	AR	AR	AR	AR	—	2231 105
8-19-10	RETAINER, Inst. Panel Wiring Harness	71	—	—	—	1	1	—	—	—	—	—	—	3513 189
8-19-15	PRINTED CIRCUIT BOARD, V-L		1	—	—	—	—	—	—	—	—	—	—	2771 222
	V-S, L-M		1	—	1	—	—	—	—	—	—	—	—	2771 651-2
	V-H, L-L Fastback	71	1	—	1	—	—	—	—	—	—	—	—	2771 222
	L-L, L-H Rt.	70	—	—	1	—	—	—	—	—	—	—	—	2771 151
	Lt.	70	—	—	1	—	—	—	—	—	—	—	—	2771 147
	L-L except Fastback, L-H Rt.	71	—	—	1	—	—	—	—	—	—	—	—	2771 151
	Lt.	71	—	—	1	—	—	—	—	—	—	—	—	2771 147
	R-K, R-T, R-L, R-H, R-P, W-K, W-T, W-L, W-H, W-P except Charger, W-S 2D.H.T. and Cv. Cp. w/o Rallye Inst. Panel	70	—	—	—	1	1	—	—	—	—	—	—	2857 014
	R-M, R-S, W-M, W-P Charger, W-S Charger R/T, W-S 2D.H.T. and Cv. Cp. w/Rallye Inst. Panel	70	—	—	—	1	1	—	—	—	—	—	—	2857 161
	R-K, R-T, R-L, R-H, W-K, W-T, W-L, W-H	71	—	—	—	1	1	—	—	—	—	—	—	2985 415
		70	—	—	—	—	—	—	1	—	—	—	—	2984 922
			—	—	—	—	—	—	—	1	1	1	—	2927 259
			—	—	—	—	—	—	—	—	—	—	1	2984 630
8-19-18	SCREW, Printed Circuit Board Mtg.		4	—	4	—	—	—	—	—	—	—	—	451 322
	SCREW and WASHER, to Hsg.		AR	AR	AR	AR	AR	AR	AR	AR	AR	AR	AR	6027 175
8-19-83	LAMP, Ash Receiver		1	—	1	—	—	—	—	—	—	—	—	2947 245
			—	1	—	—	—	—	—	—	—	—	—	2947 389
		70	—	—	—	1	1	—	—	—	—	—	—	2947 154
		71	—	—	—	1	1	—	—	—	—	—	—	3488 071
			—	—	—	—	—	1	1	—	—	—	—	2947 073
		70	—	—	—	—	—	—	—	2	2	2	2	2947 007
		71	—	—	—	—	—	—	—	1	1	1	2	3488 446
8-19-87	INSULATOR, GASKET, and CLIP, Bulkhead Connector		AR	AR	AR	AR	AR	—	—	—	—	—	—	2631 315
			—	—	—	—	—	1	1	1	1	1	1	2983 666
8-19-88	SPACER, Bulkhead Insulator		—	1	—	1	1	—	—	—	—	—	—	2983 216
8-20-0	**CIGAR LIGHTER**													
8-20-1	CIGAR LIGHTER PACKAGE, V-L, V-H 2 D.H.T., L-L Fastback	71	1	—	1	—	—	—	—	—	—	—	—	2947 219
		70	—	—	1	—	—	—	—	—	—	—	—	2947 219
8-20-3	CIRCUIT BREAKER, Rr. Comp't. Cigar Lighter, w/Console, D-L 2D.H.T. and Cv. Cp., D-H 2D.H.T., D-P, C-E 2D.H.T. and Cv. Cp., C-H 2D.H.T.	70	—	—	—	—	—	—	1	1	1	1	—	1887 222

CARLINES J - Challenger V - Valiant R - Belvedere - Satellite P - Plymouth C - Chrysler
B - Barracuda L - Dart W - Coronet - Charger D - Dodge Y - Imperial

AR Indicates use as required. Numerals in parentheses ( ) refer to notes. Printed in U.S.A.

# Indicates parts not listed in any previous parts book. ★ Indicates change or addition. January 1972

8-20-0 CIGAR LIGHTER Cont'd.

CODE	PART NAME	ENG. TYPE OR CU.IN.	V 1-2	B J 1-2	L 1-2	R 1-2	W 1-2	P 1-2	D 1-2	C 1	C 2	C 3	Y 1	PART NUMBER
8-20-3	CIRCUIT BREAKER Cont'd.													
	2D.H.T., C-E	71	—	—	—	—	—	—	—	1	—	1	—	1887 222
		71	—	—	—	—	—	—	—	—	1	—	—	1887 222
	Rr. Comp't. Cigar Lighter, Rr. of Seat Ctr. Section, w/o Console, C-E 2D.H.T. and Cv. Cp., C-H 2D.H.T.	70	—	—	—	—	—	—	—	1	1	1	—	1887 222
	2D.H.T., C-E	71	—	—	—	—	—	—	—	1	—	1	—	1887 222
		71	—	—	—	—	—	—	—	—	1	—	—	1887 222
	"B" PILLAR Cigar Lighter, 4D. and 4D.H.T.		—	—	—	—	—	—	—	—	—	2	—	1887 222
	Rr. Qtr. Panel Arm Rest Cigar Lighter, 2D. H.T.		—	—	—	—	—	—	—	—	—	—	2	1887 222
	Frt. Dr. Arm Rest Cigar Lighter	Rt.	—	—	—	—	—	—	—	—	—	—	1	1887 222
	Rr. Door Arm Rest Cigar Lighter, 4D.H.T.		—	—	—	—	—	—	—	—	—	—	2	1887 222
8-20-5	HOUSING, B Pillar Cigar Lighter, 4D. and 4D.H.T.		—	—	—	—	—	—	—	—	—	2	—	2864 250
8-20-8	KNOB, Inst. Panel Cigar Lighter		1	1	1	1	1	1	1	1	1	1	1	2290 188
	Rr. Comp't. Cigar Lighter, w/Console, D-L 2D.H.T. and Cv. Cp., D-H 2D.H.T., D-P, C-E 2D.H.T. and Cv. Cp., C-H 2D.H.T.	70	—	—	—	—	—	—	1	1	1	1	—	2631 665
	2D.H.T., C-E	71	—	—	—	—	—	—	—	1	—	1	—	2631 665
		71	—	—	—	—	—	—	—	—	1	—	—	2631 665
	Rr. Comp't. Cigar Lighter, Rr. of Seat Ctr., w/o Console, C-E 2D.H.T. and Cv. Cp., C-H 2D.H.T.	70	—	—	—	—	—	—	—	1	1	1	—	2631 665
	2D.H.T., C-E	71	—	—	—	—	—	—	—	1	—	1	—	2631 665
		71	—	—	—	—	—	—	—	—	1	—	—	2631 665
	B Pillar Cigar Lighter, 4D. and 4D.H.T.		—	—	—	—	—	—	—	—	—	2	—	2631 665
	Rr. Qtr. Panel Arm Rest Cigar Lighter, 2D.H.T.		—	—	—	—	—	—	—	—	—	—	2	2631 665
	Frt. Dr. Arm Rest Cigar Lighter	Rt.	—	—	—	—	—	—	—	—	—	—	1	2631 665
	Rr. Dr. Arm Rest Cigar Lighter, 4D.H.T.		—	—	—	—	—	—	—	—	—	—	2	2631 665
8-20-9	ELEMENT, Inst. Panel Cigar Lighter		1	1	1	1	1	1	1	1	1	1	1	3004 190
	Rr. Comp't. Cigar Lighter, w/Console, D-L 2D.H.T. and Cv. Cp., D-H 2D.H.T., D-P, C-E 2D.H.T. and Cv. Cp., C-H 2D.H.T.	70	—	—	—	—	—	—	1	1	1	1	—	3004 190
	2D.H.T., C-E	71	—	—	—	—	—	—	—	1	—	1	—	3004 190
		71	—	—	—	—	—	—	—	—	1	—	—	3004 190
	Rr. Comp't. Cigar Lighter, Rr. of Seat Ctr., w/o Console, C-E 2D.H.T. and Cv. Cp., C-H 2D.H.T.	70	—	—	—	—	—	—	—	1	1	1	—	3004 190
	2D.H. T., C-E	71	—	—	—	—	—	—	—	1	—	1	—	3004 190
		71	—	—	—	—	—	—	—	—	1	—	—	3004 190
	B Pillar Cigar Lighter, 4D. and 4D.H.T.		—	—	—	—	—	—	—	—	—	2	—	3004 190
	Rr. Qtr. Panel Arm Rest Cigar Lighter, 2D.H.T.		—	—	—	—	—	—	—	—	—	—	2	3004 190
	Frt. Dr. Arm Rest Cigar Lighter	Rt.	—	—	—	—	—	—	—	—	—	—	1	3004 190
	Rr. Dr. Arm Rest Cigar Lighter, 4D.H.T.		—	—	—	—	—	—	—	—	—	—	2	3004 190
8-20-10	SHELL and CLAMP, Inst. Panel Cigar Lighter		1	1	1	1	1	1	1	1	1	1	1	2932 727
	Rr. Comp't. Cigar Lighter, w/Console, D-L 2 D.H.T. and Cv. Cp., D-H 2 D.H.T., D-P, C-E 2 D.H.T. and Cv. Cp., C-H 2 D.H.T.	70	—	—	—	—	—	—	1	1	1	1	—	2932 727
	2D.H.T., C-E	71	—	—	—	—	—	—	—	1	—	1	—	2932 727
		71	—	—	—	—	—	—	—	—	1	—	—	2932 727
	Rr. Comp't. Cigar Lighter, Rr. of Seat Ctr., w/o Console, C-E 2D.H.T. and Cv. Cp., C-H 2D.H.T.	70	—	—	—	—	—	—	—	1	1	1	—	2932 727

CARLINES J - Challenger, B - Barracuda, V - Valiant, L - Dart, R - Belvedere - Satellite, W - Coronet - Charger, P - Plymouth, D - Dodge, C - Chrysler, Y - Imperial

AR Indicates use as required.

# Indicates parts not listed in any previous parts book.

Numerals in parentheses ( ) refer to notes.

★ Indicates change or addition.

Printed in U.S.A. January 1972

CODE	PART NAME		ENG. TYPE OR CU.IN.	V 1-2	B J 1-2	L 1-2	R 1-2	W 1-2	P 1-2	D 1-2	C 1	C 2	C 3	Y 1	PART NUMBER
8-20-0	**CIGAR LIGHTER Cont'd.**														
8-20-10	SHELL and CLAMP Cont'd.														
	2D.H.T., C-E	71		—	—	—	—	—	—	—	1	—	1	—	2932 727
		71		—	—	—	—	—	—	—	—	1	—	—	2932 727
	B Pillar Cigar Lighter, 4D. and 4D.H.T.			—	—	—	—	—	—	—	—	—	2	—	2932 727
	Rr. Qtr. Panel Arm Rest Cigar Lighter, 2D.H.T.			—	—	—	—	—	—	—	—	—	—	2	2932 727
	Frt. Dr. Arm Rest Cigar Lighter	Rt.		—	—	—	—	—	—	—	—	—	—	1	2932 727
	Rr. Dr. Arm Rest Cigar Lighter, 4D.H.T.			—	—	—	—	—	—	—	—	—	—	2	2932 727
8-20-16	BEZEL, Frt. Seat Cigar Lighter, w/o Console, C-E 2 D.H.T. and Cv. Cp., C-H 2 D.H.T.	70		—	—	—	—	—	—	—	1	1	1	—	2080 996
	2D.H.T., C-E	71		—	—	—	—	—	—	—	1	—	1	—	2080 996
		71		—	—	—	—	—	—	—	—	1	—	—	2080 996
8-20-22	BRACKET, B Pillar Cigar Lighter, 4D. and 4D.H.T.			—	—	—	—	—	—	—	—	—	2	—	2864 251
8-21-0	**TERMINAL BLOCK**														
8-21-1	TERMINAL BLOCK, Ammeter Wiring	70		—	—	—	1	1	—	—	—	—	—	—	1842 267
8-22-0	**NOX EXHAUST EMISSION CONTROL**														
8-22-3	WIRING, Nox Control, w/Auto. Trans.	71		1	—	1	—	—	—	—	—	—	—	—	3513 549
	w/Manual Trans.	71		1	—	1	—	—	—	—	—	—	—	—	3513 373
	Auto. Trans. Switch and Nox	71		—	1	—	—	—	—	—	—	—	—	—	3513 257
	Manual Trans. Switch and Nox	71		—	1	—	—	—	—	—	—	—	—	—	3513 255
	Manual Trans. Switch and Nox,	71	6	—	—	—	1	1	—	—	—	—	—	—	3513 255
	Manual Trans. Switch and Nox, w/318 and 340 Eng.	71	8	—	—	—	1	1	—	—	—	—	—	—	3513 255
	Auto. Trans. Switch and Nox	71		—	—	—	1	1	—	—	—	—	—	—	3513 257
	Speed Sensor Switch Jumper, w/Manual Trans.	71		1	—	1	—	—	1	1	1	—	—	—	3513 548
	Manual Trans. Switch and Nox Jumper	71		—	1	—	1	1	—	—	—	—	—	—	3513 548
	Manual Trans. Nox Switch and Jumper, w/340 Eng.	71	8	—	1	—	—	—	—	—	—	—	—	—	3513 548
8-22-4	SWITCH, Nox Thermal, w/Manual Trans.	71		1	1	1	1	1	1	1	1	—	—	—	3438 465
8-22-5	VACUUM VALVE, Nox	71		1	1	1	1	1	1	1	1	1	1	1	3438 474
8-22-6	CONTROL UNIT, Nox, w/Auto. Trans.	71	6	1	1	1	1	1	1	1	—	—	—	—	3438 481
	w/Auto. Trans., w/318 and 340 Eng.	71	8	1	1	1	1	1	—	—	—	—	—	—	3438 482
	w/Auto. Trans., w/318 and 360 Eng.	71	8	—	—	—	—	—	1	1	1	—	—	—	3438 482
	w/Auto. Trans., w/383 Eng.	71	8	—	1	—	1	1	1	1	1	—	—	—	3438 483
		71		—	—	—	—	—	—	—	—	—	—	1	3438 483
8-22-8	SPEED SWITCH, Nox, w/Auto. Trans.	71		1	1	1	1	1	1	1	1	1	1	1	3438 494
8-22-9	BRACKET, Nox Speed Switch, w/Auto. Trans.	71		1	—	1	—	—	—	—	—	—	—	—	3438 533
	Nox Control Valve	71	6	1	1	1	1	1	1	1	—	—	—	—	3512 669
	w/318 and 340 Eng.	71	8	1	1	1	1	1	—	—	—	—	—	—	3512 671
	w/318 and 360 Eng.	71	8	—	—	—	—	—	1	1	1	—	—	—	3512 671
	w/383 Eng.	71	8	—	1	—	1	1	1	1	1	—	—	—	3512 673
	w/440 Eng., Std., C-P	71	8	—	—	—	—	—	1	1	1	1	1	—	3512 673
8-22-11	SWITCH, Nox Trans., w/Manual Trans.	71		1	1	1	1	1	1	1	1	—	—	—	3438 472
8-22-12	GASKET, Nox Trans. Switch, w/Manual Trans.	71		1	1	1	1	1	1	1	1	—	—	—	3515 027
	Trans. Emission Control Switch Hole Plug, w/Manual Trans.	71		1	1	1	1	1	1	1	1	—	—	—	3515 027
8-22-13	TEE, Nox Vacuum Control, w/Auto. Trans.	71		1	1	1	1	1	1	1	1	1	1	1	2857 908
8-22-14	TUBE, Nox Tee to Vacuum Switch	71		AR	AR	AR	AR	AR	AR	AR	AR	AR	AR	AR	2448 621
	Nox Control Valve to Dist	71		AR	AR	AR	AR	AR	AR	AR	AR	AR	AR	AR	2448 621
	Carb. to Nox Control Valve	71		AR	AR	AR	AR	AR	AR	AR	AR	AR	AR	AR	2448 621

CARLINES J - Challenger, B - Barracuda, V - Valiant, L - Dart, R - Belvedere - Satellite, W - Coronet - Charger, P - Plymouth, D - Dodge, C - Chrysler, Y - Imperial

AR Indicates use as required.

Numerals in parentheses ( ) refer to notes.

# Indicates parts not listed in any previous parts book.

★ Indicates change or addition.

Printed in U.S.A. January 1972

CODE	PART NAME	ENG. TYPE OR CU.IN.	V 1-2	B J 1-2	L 1-2	R 1-2	W 1-2	P 1-2	D 1-2	C 1	C 2	C 3	Y 1	PART NUMBER
8-22-0	**NOX EXHAUST EMISSION CONTROL Cont'd.**													
8-22-14	TUBE Cont'd.													
	Nox Carb. to Tee	71	AR	AR	AR	AR	AR	AR	AR	AR	AR	AR	AR	2448 621
	Nox Carb. to Vacuum Switch	71	AR	AR	AR	AR	AR	AR	AR	AR	AR	AR	AR	2448 621
	Nox - Tee to Choke Vacuum Diaph.	71	AR	AR	AR	AR	AR	AR	AR	AR	AR	AR	AR	2448 621
	Carb. to Dist. Vacuum Control	71	AR	AR	AR	AR	AR	AR	AR	AR	AR	AR	AR	2448 621
	Carb. to Vac. Adv. Control Valve	71	AR	AR	AR	AR	AR	AR	AR	AR	AR	AR	AR	2448 621

NOTES

8-27-0 IGNITION DISTRIBUTOR

8-27-1 DISTRIBUTOR ASSEMBLY

Models		Cyl.	Eng. (cu. in.)	Trans.	Breaker Points	Distributor Identification Stamped Complete	Replacement Assy's (Partial) (Less Cap & Rotor)
V,B,J,L	70	6	198	Manual	S	3438 237	3438 238
V,B,J,L	70	6	198	Auto.	S	2875 826	2875 827
V,B,J,L	71	6	198	All	S	3438 509	3438 510
V,B,J,L, w/Nox Exh. Emission Control	71	6	198	All	S	3438 524	3438 525
V,B,J,L,R,W,P,D		6	225	Manual	S	2875 822	2875 823
V,B,J,L,R,W,P,D		6	225	Auto.	S	2875 826	2875 827
V,B,J,L, w/170 Eng. Conversion, Exp.		6	225	Manual	S	3438 306	3438 307
V,B,J,L, w/170 Eng. Conversion, Exp.		6	225	Auto.	S	3438 309	3438 310
V,L,R,W, w/225 Eng. 2 Bbl. Carb. Conversion, Exp.		6	225	Manual	S	2875 830	2875 831
V,L,R,W, w/225 Eng. 2 Bbl. Carb. Conversion, Exp.		6	225	Auto.	S	2875 833	2875 834
V,B,J,L,R,W,P,D, w/Nox Exh. Emission Control	71	6	225	Manual	S	3438 440	3438 441
V,B,J,L,R,W,P,D, w/Nox Exh. Emission Control	71	6	225	Auto.	S	3438 442	3438 443
V,B,J,L,R,W,P,D		8	318	Manual	S	3438 255	3438 256
V,B,J,L,R,W,P,D		8	318	Auto.	S	3438 225	3438 226
V,B,J,L,R,W,P,D, w/Nox Exh. Emission Control	71	8	318	All	S	3438 453	3438 454
V,B,J,L	70	8	340	Manual	D	3438 317	3438 318
V,B,J,L	70	8	340	Auto.	S	3438 325	3438 326
B,J, w/3-2 Bbl. Carb.	70	8	340	Manual	D	3438 521	3438 530
B,J, w/3-2 Bbl. Carb.	70	8	340	Auto.	D	3438 523	3438 532
B,J, w/3-2 Bbl. Carb.	71	8	340	Manual	D	3438 615	3438 616
B,J, w/3-2 Bbl. Carb.	71	8	340	Auto.	D	3438 617	3438 618
V, B, J, L, R, W	71	8	340	Manual	D	3438 522	3438 530
V,B,J,L,R,W	71	8	340	Auto.	S	3438 517	3438 520
V,B,J,L,R,W w/Elect. Ignition System		8	340	Manual		#3656 151	#3656 153
V,B,J,L,R,W w/Elect. Ignition System		8	341	Auto.		#3438 896	#3438 897
P,D,C-E, w/Nox Exh. Emission Control	71	8	360	All	S	3438 453	3438 454
P,D,C-E	71	8	360	All	S	3438 422	3438 423
B,J,R,W,P,D,C, w/2 Bbl. Carb.	70	8	383	All	S	3438 231	3438 232
B,J,R,W,P,D,C, w/2 Bbl. Carb.	71	8	383	All	S	3438 534	3438 535
B,J,R,W,P,D,C, w/2 Bbl. Carb., w/Nox Exhaust Emission Control	71	8	383	All	S	3438 544	3438 545
B,J,R,W,P,D,C, w/1-4 Bbl. Carb. Interchangeable w/Dist. No. 3438 433	70	8	383	All	S	3438 233	3438 234
B,J,R,W,P,D,C, w/1-4 Bbl. Carb.	71	8	383	All	S	3438 690	3438 691
B,J,R,W		8	426	Manual	D	2875 987	2875 988
B,J,R,W	70	8	426	Auto.	D	2875 989	2875 990
B,J,R,W	71	8	426	Auto.		3438 579	3438 580
B,J,R,W w/Elect. Ignition System		8	426	Manual		#3438 891	#3438 892
B,J,R,W w/Elect. Iginition System		8	426	Auto.		#3438 893	#3438 894
P,D,C,Y, Std.	70	8	440	All	S	3438 219	3438 221
P,D,C,Y, Std.	71	8	440	All	S	3438 559	3438 560
B,J,R,W,P,D,C, w/H/Perf., w/1-4 Bbl. Carb.	70	8	440	All	S	3438 222	3438 224
R,W,P,D,C, w/H/Perf., w/1-4 Bbl. Carb.	71	8	440	All	S	3438 694	3438 695
B,J,R,W,P, w/3-2 Bbl. Carb., up to approx. Jan. 1, 1970	70	8	440	Manual	D	3438 314	3438 316
B,J,R,W,P, w/3-2 Bbl. Carb., after approx. Jan. 1, 1970	70	8	440	Manual	D	3438 348	3438 355

CARLINES J - Challenger, B - Barracuda, V - Valiant, L - Dart, R - Belvedere - Satallite, W - Coronet - Charger, P - Plymouth, D - Dodge, C - Chrysler, Y - Imperial

AR Indicates use as required.

Numerals in parentheses ( ) refer to notes.

# Indicates parts not listed in any previous parts book.

★ Indicates change or addition.

Printed in U.S.A. January 1972

8-27-0 IGNITION DISTRIBUTOR Cont'd.

8-27-1 DISTRIBUTOR ASSEMBLY Cont'd.

Models	Cyl.	Eng. (Cu. In.)	Trans.	Breaker Points	Distributor Identification Stamped Complete	Replacement Assy's (Partial) (Less Cap & Rotor)
B,J,R,W,P, w/3-2 Bbl. Carb., up to approx. Jan. 1, 1970 70	8	440	Auto.	D	2875 982	2875 983
B,J,R,W,P, w/3-2 Bbl. Carb., after approx. Jan. 1, 1970 70	8	440	Auto.	D	3438 349	3438 356
B,J,R,W, w/3-2 Bbl. Carb. 71	8	440	All	D	3438 577	3438 578

NOTES

8-27-0 IGNITION DISTRIBUTOR Cont.

CODE	PART NAME		ENG. TYPE OR CU.IN.	V 1-2	B J 1-2	L 1-2	R 1-2	W 1-2	P 1-2	D 1-2	C 1	C 2	C 3	Y 1	PART NUMBER
8-27-96	HOUSING and BEARING, Dist.		6	1	1	1	1	1	1	1	—	—	—	—	2875 516
	w/318 and 340 Eng.		8	1	1	1	1	1	—	—	—	—	—	—	2875 481
	w/340 Eng., w/3-2 Bbl. Carb.	70	8	—	1	—	—	—	—	—	—	—	—	—	3579 218
	w/383 and 440 w/1-4 Bbl. Carb., Eng.		8	—	1	—	1	1	1	1	1	1	1	1	2875 501
	w/440 Eng., w/3-2 Bbl. Carb., B	71	8	—	1	—	—	—	—	—	—	—	—	—	3620 722
	w/318 Eng.		8	—	—	—	1	1	1	1	—	—	—	—	2875 481
	w/360 Eng., C-E	71	8	—	—	—	—	—	1	1	1	—	—	—	2875 481
8-27-121	"O" RING, Dist. Hsg.		8	1	1	1	1	1	1	1	1	1	1	1	2875 923
8-27-244	SEAL, Dist. Hsg.			1	—	1	—	—	—	1	1	1	1	1	2875 028
	except 440 3-2 Bbl. Carb. Eng.			—	1	—	1	1	1	—	—	—	—	—	2875 028
8-27-259	SPACER, Dist. Cam			1	—	1	—	—	—	1	1	1	1	1	2642 988
	except 440 3-2 Bbl. Carb. Eng.			—	1	—	1	1	1	—	—	—	—	—	2642 988
8-27-320	TUBE, Carb. to Dist. Vac. Control			AR	AR	AR	AR	AR	AR	AR	AR	AR	AR	AR	2448 621
8-27-335	VALVE, Dist. Vacuum Control														
	w/383 Eng., w/2 Bbl. Carb.	71	8	—	1	—	1	1	—	—	—	—	—	—	3614 024
	w/440 Eng., w/1-4 Bbl. Carb.	71	8	—	—	—	1	1	—	—	—	—	—	—	3614 024
	w/383 Eng., w/2 Bbl. Carb., w/Auto. Trans.	71	8	—	—	—	—	—	1	1	—	—	—	—	3614 024
	w/383 Eng., w/2 Bbl. Carb., w/Auto. Trans.	71	8	—	—	—	—	—	—	—	1	—	—	—	3614 023

NOTES

CARLINES J - Challenger, B - Barracuda, V - Valiant, L - Dart, R - Belvedere - Satellite, W - Coronet - Charger, P - Plymouth, D - Dodge, C - Chrysler, Y - Imperial

AR Indicates use as required.

Numerals in parentheses ( ) refer to notes.

# Indicates parts not listed in any previous parts book.

★ Indicates change or addition.

Printed in U.S.A. January 1972

8-27-0 IGNITION DISTRIBUTOR COMPONENT PARTS

For Model Application See Code 8-27-1

DISTRIBUTOR ASSEMBLIES

	Distributor Identification Stamped	2875 822	2875 826	2875 830	2875 833	2875 982
	Replacement Assy's (Partial) (Less Cap and Rotor)	2875 823	2875 827	2875 831	2875 834	2875 983
CODE	REMARKS					
8-27-4	GASKET, Dist. Mtg. Oil Ret.	2095 630	2095 630	2095 630	2095 630	1326 836
	GASKET, Dist. Mtg. to Cyl. Block	2095 740	2095 740	2095 740	2095 740	———
8-27-26	CLAMP	———	———	———	———	1947 613
8-27-71	CAP	2642 986	2642 986	2642 986	2642 986	2585 000
8-27-76	SPRING, Cap Att.	1838 508	1838 508	1838 508	1838 508	———
8-27-77	SPRING and HINGE PACKAGE, Cap Clamp	———	———	———	———	1879 606
8-27-85	CONTACT and SPRING PACKAGE, Cap Plunger	———	———	———	———	2084 655
8-27-100	OILER	———	———	———	———	953 717
8-27-133	BEARING and THRUST WASHER PACKAGE, Shaft	———	———	———	———	2585 021
8-27-137	COLLAR and PIN PACKAGE, Shaft	———	———	———	———	2585 022
8-27-138	PLATE, Breaker	2875 861	2875 861	2875 861	2875 861	2585 162
8-27-158	CONTACT SET	2098 244	2098 244	2098 244	2098 244	———
	CONTACT SET (2 req.)	———	———	———	———	2421 173
8-27-190	CONDENSER	2098 058	2098 058	2098 058	3420 600	———
8-27-205	LEAD, Primary	2444 249	2444 249	2444 249	2444 249	3420 895
8-27-207	GROUND LEAD	———	———	———	———	1527 974
8-27-250	SHAFT, GOVERNOR and CAM, Drive	2875 821	2875 821	2875 829	2875 829	3420 921
8-27-300	ROTOR	1838 516	1838 516	1838 516	1838 516	1658 535
8-27-308	CONTROL VACUUM	2875 818	2875 825	2875 828	2875 832	3420 919
8-27-352	GEAR and PIN PACKAGE Shaft	2084 653	2084 653	2084 653	2084 653	———
	For Model Application See Code 8-27-1					

DISTRIBUTOR ASSEMBLIES

	Distributor Identification Stamped	2875 987 1BS-4014E	2875 989 1BS-4014F	3438 219	3438 222	3438 225
	Replacement Assy's (Partial) (Less Cap and Rotor)	2875 988	2875 990	3438 221	3438 224	3438 226
CODE	REMARKS					
8-27-4	GASKET, Dist. Mtg. Oil Ret.	1326 836	1326 836	1326 836	1326 836	1326 836
8-27-26	CLAMP	1947 613	1947 613	1947 613	1947 613	1947 612
8-27-71	CAP	2585 000	2585 000	2444 507	2444 507	2444 507
8-27-76	SPRING, Cap Att.	———	———	1838 508	1838 508	1838 508
8-27-77	SPRING and HINGE PACKAGE, Cap Clamp	1879 606	1879 606	———	———	———
8-27-100	OILER	953 717	953 717	———	———	———
8-27-133	BEARING and THRUST WASHER PACKAGE, Shaft	2585 021	2585 021	———	———	———
8-27-137	COLLAR and PIN PACKAGE Shaft	2585 022	2585 022	2932 988	2932 988	2932 988
8-27-138	PLATE, Breaker	2585 162	2585 162	2875 861	2875 861	2875 861
8-27-158	CONTACT SET	———	———	2098 244	2098 244	2098 244
	CONTACT SET (2 req.)	2421 173	2421 173	———	———	———
8-27-190	CONDENSER	3420 600	3420 600	3420 600	3420 600	3420 600
8-27-205	LEAD, Primary	3420 895	3420 895	2444 282	2444 282	2444 282
8-27-207	GROUND LEAD	1527 974	1527 974	———	———	———
8-27-250	SHAFT, GOVERNOR and CAM, Drive	3514 278	3514 280	3438 220	3438 223	3438 209
8-27-300	ROTOR	1658 535	1658 535	1838 516	1838 516	1838 516
8-27-308	CONTROL VACUUM	3514 279	3514 279	3514 329	3514 330	3438 229

NOTES

8-27-0 IGNITION DISTRIBUTOR COMPONENT PARTS Cont'd.

For Model Application See Code 8-27-1

DISTRIBUTOR ASSEMBLIES

	Distributor Identification Stamped	3438 231	3438 233 3438 433	3438 237	3438 255	3438 306
	Replacement Assy's (Partial) (Less Cap and Rotor)	3438 232	3438 234 3438 434	3438 238	3438 256	3438 307
CODE	REMARKS					
8-27-4	GASKET, Dist. Mtg. to Cyl. Clock	———	———	2095 740	———	2095 740
8-27-26	CLAMP	1947 613	1947 613	———	1947 612	———
8-27-71	CAP	2444 507	2444 507	2642 986	2444 507	2642 986
8-27-76	SPRING, Cap Att.	1838 508	1838 508	1838 508	1838 508	1838 508
8-27-137	COLAR and PIN PACKAGE, Shaft	2932 988	2932 988	———	2932 988	———
8-27-138	PLATE, Breaker	2875 861	2875 861	2875 861	2875 861	2875 861
8-27-158	CONTACT SET	2098 244	2098 244	2098 244	2098 244	2098 244
8-27-190	CONDENSER	3420 600	3420 600	3420 600	3420 600	3420 600
8-27-205	LEAD, Primary	2444 282	2444 282	2444 249	2444 282	2444 249
8-27-250	SHAFT, GOVERNOR and CAM, Drive	3438 235	3438 435	3438 239	3438 209	3438 308
8-27-300	ROTOR	1838 516	1838 516	1838 516	1838 516	1838 516
8-27-308	CONTROL VACUUM	3514 331	3514 330	2875 825	2875 794	2875 809
8-27-352	GEAR and PIN PACKAGE, Shaft	———	———	2084 653	———	2084 653
	For Model Application See Code 8-27-1					

DISTRIBUTOR ASSEMBLIES

	Distributor Identification Stamped	3438 309	3438 314	3438 317	3438 325	3438 348
	Replacement Assy's (Partial) (Less Cap and Rotor)	3438 310	3438 316	3438 318	3438 326	3438 355
CODE	REMARKS					
8-27-4	GASKET, Dist. Mtg. Oil Ret.	2095 630	1326 836	1326 836	1326 836	1326 836
	GASKET, Dist. Mtg. to Cyl. Block	2095 740	———	———	———	———
8-27-26	CLAMP	———	1947 613	1947 612	1947 612	———
8-27-71	CAP	2642 986	2585 000	2585 000	2444 507	2585 000
8-27-76	SPRING, Cap Att.	1838 508	———	———	1838 508	———
8-27-77	SPRING and HINGE PACKAGE, Cap Clamp	———	1879 606	1879 606	———	1879 606
8-27-100	OILER	———	953 717	953 717	———	953 717
8-27-133	BEARING and THRUST WASHER PACKAGE, Shaft	———	2585 021	2585 021	———	2585 021
	COLLAR and PIN PACKAGE, Shaft	———	2585 022	2585 022	2932 988	2585 022
8-27-138	PLATE, Breaker	2875 861	2585 162	2585 017	2875 861	3514 333
8-27-158	CONTACT SET	2098 244	———	———	2098 244	———
	CONTACT SET (2 req.)	———	2421 173	2421 175	———	2421 173
8-27-190	CONDENSER	3420 600	3420 600	3420 600	3420 600	3420 600
8-27-205	LEAD, Primary	3444 249	3420 895	2585 019	2444 282	3514 335
8-27-207	GROUND LEAD	1527 974	1527 974	———	———	———
8-27-250	SHAFT, Governor and Cam, Drive	3438 311	3514 262	3514 264	3438 328	2514 344
8-27-300	ROTOR	1838 516	1658 535	1658 535	1838 516	1658 535
8-27-308	CONTROL, Vacuum	2875 809	3420 919	3514 265	3438 339	3514 332
8-27-352	GEAR and PIN PACKAGE, Shaft	2084 653	———	———	———	———

NOTES

8-27-0 IGNITION DISTRIBUTOR COMPONENT PARTS Cont'd.

For Model Application See Code 8-27-1

DISTRIBUTOR ASSEMBLIES

	Distributor Identification Stamped	3438 349	3438 422	3438 440	3438 442	3438 453
	Replacement Assy's (Partial) (Less Cap and Rotor)	3438 356	3438 423	3438 441	3438 443	3438 454
CODE	REMARKS					
8-27-4	GASKET, Dist. Mtg. Oil Ret.	1326 836	1326 836	2095 630	2095 630	1326 836
	GASKET, Dist. Mtg. to Cyl. Block	———	———	2095 740	2095 740	———
8-27-71	CAP	2585 000	2444 507	2642 986	2642 986	2444 507
8-27-76	SPRING, Cap Att.	———	1838 508	1838 508	1838 508	1838 508
8-27-77	SPRING and HINGE PACKAGE, Cap Clamp	1879 606	———	———	———	———
8-27-100	OILER	953 717	———	———	———	———
8-27-133	BEARING and THRUST WASHER PACKAGE, Shaft	2585 021	———	———	———	———
8-27-137	COLLAR and PIN PACKAGE, Shaft	2585 022	2932 988	———	———	2932 988
8-27-138	PLATE, Breaker	3514 333	2875 861	2875 861	2875 861	2875 861
8-27-158	CONTACT SET	———	2098 244	2098 244	2098 244	2098 244
	CONTACT SET (2 req.)	2421 173	———	———	———	———
8-27-190	CONDENSER	3420 600	3420 600	3420 600	3420 600	3420 600
8-27-205	LEAD, Primary	3514 335	2444 282	2444 249	2444 249	2444 282
8-27-250	SHAFT, GOVERNOR and CAM, Drive	3514 345	3438 209	3438 444	3438 444	3438 455
8-27-300	ROTOR	1658 535	1838 516	1838 516	1838 516	1838 516
8-27-308	CONTROL, Vacuum	3514 332	3438 424	2875 818	2875 825	3438 424
8-27-352	GEAR and PIN PACKAGE, Shaft	———	———	2084 653	2084 653	———
	For Model Application See Code 8-27-1					

DISTRIBUTOR ASSEMBLIES

	Distributor Identification Stamped	3438 509	3438 517	3438 521	3438 522	3438 523
	Replacement Assy's (Partial) (Less Cap and Rotor)	3438 510	3438 520	3438 530	3438 530	3438 532
CODE	REMARKS					
8-27-4	GASKET, Dist. Mtg. Oil Ret.	2095 630	1326 836	1326 836	1326 836	1326 836
	GASKET, Dist. Mtg. to Cyl. Block	2095 740	———	———	———	———
8-27-71	CAP	2642 986	2444 507	2585 000	2585 000	2585 000
8-27-76	SPRING, Cap Att.	1838 508	1838 508	———	———	———
8-27-77	SPRING and HINGE PACKAGE, Cap Clamp	———	———	1879 606	1879 606	1879 606
8-27-100	OILER	———	———	953 717	953 717	953 717
8-27-137	COLLAR and PIN PACKAGE, Shaft	———	2932 988	3579 219	3579 219	3579 219
8-27-138	PLATE, Breaker	2875 861	2875 861	2585 017	2585 017	2585 017
8-27-158	CONTACT SET	2098 244	2098 244	———	———	———
	CONTACT SET (2 req.)	———	———	2421 175	2421 175	2421 175
8-27-190	CONDENSER	3420 600	3420 600	3420 600	3420 600	3420 600
8-27-205	LEAD, Primary	2444 249	2444 282	3579 217	3579 217	3579 217
8-27-207	GROUND LEAD	———	———	1527 974	1527 974	1527 974
8-27-250	SHAFT, GOVERNOR and CAM, Drive	3438 511	3438 518	3579 216	3579 216	3579 215
8-27-300	ROTOR	1838 516	1838 516	1658 535	1658 535	1658 535
8-27-308	CONTROL, Vacuum	3438 514	3438 229	3514 265	3514 265	3620 704
8-27-352	GEAR and PIN PACKAGE, Shaft	2084 653	———	———	———	———

NOTES

8-27-0 IGNITION DISTRIBUTOR COMPONENT PARTS Cont'd.

For Model Application See Code 8-27-1

DISTRIBUTOR ASSEMBLIES

	Distributor Identification Stamped	3438 524	3438 534	3438 544	3438 559	3438 577
	Replacement Assy's (Partial) (Less Cap and Rotor)	3438 525	3438 535	3438 545	3438 560	3438 578
CODE	REMARKS					
8-27-4	GASKET, Dist. Mtg. Oil Ret.	2095 630	1326 836	1326 836	1326 836	1326 836
	GASKET, Dist. Mtg. to Cyl. Block	2095 740	———	———	———	———
8-27-71	CAP	2642 986	2444 507	2444 507	2444 507	2585 000
8-27-76	SPRING, Cap Att.	1838 508	1838 508	1838 508	1838 508	———
8-27-77	SPRING and HINGE PACKAGE, Cap Clamp	———	———	———	———	1879 606
8-27-100	OILER	———	———	———	———	953 717
8-27-137	COLLAR and PIN PACKAGE, Shaft	———	2932 988	2932 988	2932 988	3579 219
8-27-138	PLATE, Breaker	2875 861	2875 861	2875 861	2875 861	3514 333
8-27-158	CONTACT SET	2098 244	2098 244	2098 244	2098 244	———
	CONTACT SET (2 req.)	———	———	———	———	2421 173
8-27-190	CONDENSER	3420 600	3420 600	3420 600	3420 600	3420 600
8-27-205	LEAD, Primary	2444 249	2444 282	2444 282	2444 282	3514 335
8-27-207	GROUND LEAD	———	———	———	———	1527 974
8-27-250	SHAFT, GOVERNOR and CAM, Drive	3438 529	3438 540	3438 546	3438 565	3620 721
8-27-300	ROTOR	1838 516	1838 516	1838 516	1838 516	1658 535
8-27-308	CONTROL, Vacuum	2875 825	3579 239	3579 239	3579 241	3514 332
8-27-352	GEAR and PIN PACKAGE, Shaft	2084 653	———	———	———	———
	For Model Application See Code 8-27-1					

DISTRIBUTOR ASSEMBLIES

	Distributor Identification Stamped	3438 579	3438 615	3438 617	3438 690	3438 694
	Replacement Assy's (Partial) (Less Cap and Rotor)	3438 580	3438 616	3438 618	3438 691	3438 695
CODE	REMARKS					
8-27-4	GASKET, Dist. Mtg. Oil Ret.	1326 836	1326 836	1326 836	1326 836	1326 836
8-27-71	CAP	2585 000	2585 000	2585 000	2444 507	2444 507
8-27-76	SPRING, Cap Att.	———	———	———	1838 508	1838 508
8-27-77	SPRING and HINGE PACKAGE, Cap Clamp	1879 606	1879 606	1879 606	———	———
8-27-100	OILER	953 717	953 717	953 717	———	———
8-27-137	COLLAR and PIN PACKAGE, Shaft	3579 219	3579 219	3579 219	2932 988	2932 988
8-27-138	PLATE, Breaker	2585 162	2585 017	2585 017	2875 861	2875 861
8-27-158	CONTACT SET	———	———	———	2098 244	2098 244
	CONTACT SET (2 req.)	2421 173	2421 175	2421 175	———	———
8-27-190	CONDENSER	3420 600	3420 600	3420 600	3420 600	3420 600
8-27-205	LEAD, Primary	2525 639	3579 217	3579 217	2444 282	2444 282
8-27-207	GROUND LEAD	1527 974	1527 974	1527 974	———	———
8-27-250	SHAFT, GOVERNOR and CAM, Drive	3620 723	3620 705	3620 705	3438 693	3438 697
8-27-300	ROTOR	1658 535	1658 535	1658 535	1838 516	1838 516
8-27-308	CONTROL, Vacuum	2808 897	3514 265	3620 704	3579 240	3514 330

NOTES

CARLINES J - Challenger, B - Barracuda, V - Valiant, L - Dart, R - Belvedere - Satallite, W - Coronet - Charger, P - Plymouth, D - Dodge, C - Chrysler, Y - Imperial

AR Indicates use as required.

# Indicates parts not listed in any previous parts book.

Numerals in parentheses ( ) refer to notes.

★ Indicates change or addition.

Printed in U.S.A.
January 1972

8-27-0 IGNITION DISTRIBUTOR COMPONENT PARTS Cont'd.

For Model Application See Code 8-27-1

DISTRIBUTOR ASSEMBLIES

	Distributor Identification Stamped	3438 891	3438 893	3438 896	3656 151	
	Replacement Assy's (Partial) (Less Cap and Rotor)	3438 892	3438 894	3438 897	3656 153	
CODE	REMARKS					
8-27-4	GASKET, Dist. Mtg. Oil Ret.	1326 836	1326 836	1326 836	1326 836	
8-27-54	RELUCTOR	3656 017	3656 017	3656 017	3656 017	
8-27-57	PLATE, Pick-Up	3656 023	3656 023	3656 023	3656 023	
8-27-58	PICK-UP	3656 025	3656 025	3656 025	3656 025	
8-27-71	CAP	2444 507	2444 507	2444 507	2444 507	
8-27-76	SPRING, Cap Att.	1838 508	1838 508	1838 508	1838 508	
8-27-137	COLLAR and PIN PACKAGE, Shaft	2932 988	2932 988	2932 988	2932 988	
8-27-250	SHAFT, GOVERNOR and CAM, Shaft	3656 046	3656 047	3656 061	3656 154	
8-27-300	ROTOR	1838 516	1838 516	1838 516	1838 516	
8-27-308	VACUUM CONTROL	3656 072	3656 072	3656 066	3656 156	

NOTES

CODE	PART NAME	ENG. TYPE OR CU.IN.	V	B J	L	R	W	P	D	C	C	C	Y	PART NUMBER
			1-2	1-2	1-2	1-2	1-2	1-2	1-2	1	2	3	1	

8-28-0 ALTERNATOR

NOTE; Service Alternators consist of an Alternator and Pulley. In most cases a double grooved Pulley type may be used as a service replacement of the single groove type. If not desirable, the Pulley may be transferred from the original unit.

All Alternators are stamped with a production assembly number which may or may not be the serviced Alternator. Part Type Code 8-28-3 below lists information relative to the Alternator stamped number cross-referenced to the applicable service number. The serviced part number must be ordered in all cases.

For component parts of Alternators refer to part type code 8-29-0 in which component parts are charted in code sequence in columns for the Alternator number appearing at the top of each column.

Leece-Neville Alternators and Regulators and components are not stocked in Chrysler Parts Depots. Order replacement parts for these units by description from your nearest Leece-Neville Distributor or Leece-Neville, 1374 E. 51st. Street, Cleveland, Ohio 44103.

8-28-3 ALTERNATOR

STAMPED NO.	PULLEY	GROVES	AMP. NO.											
3438 171	2444 478	S	30	1	1	1	1	1	1	1	1	1	1	1	3438 173
3438 172	2444 478	S	37	1	1	1	1	1	1	1	1	1	1	1	3438 173
3438 173	2444 478	S	50	1	1	1	1	1	1	1	1	1	1	1	3438 173
3438 174	2444 478	S	60	1	1	1	1	1	1	1	1	1	1	1	3438 174
3438 176	2095 059	D	37	1	1	1	1	1	1	1	1	1	1	1	3438 177
3438 177	2095 059	D	50	1	1	1	1	1	1	1	1	1	1	1	3438 177
3438 178	2875 711	D	50	1	1	1	1	1	1	1	1	1	1	1	3438 178
3438 179	2875 709	D	60	1	1	1	1	1	1	1	1	1	1	1	3438 179
3438 180	2875 711	D	60	1	1	1	1	1	1	1	1	1	1	1	3438 180
3438 378	2444 478	S	34	1	1	1	1	1	1	1	1	1	1	1	3438 173
3438 780	2095 005	S	37	1	1	1	1	1	1	1	1	1	1	1	3438 782
3438 782	2095 005	S	50	1	1	1	1	1	1	1	1	1	1	1	3438 782
2642 610	2642 609	D	60	—	—	—	1	1	1	1	—	—	—	—	2642 411
2642 229	2444 576	D	60	—	—	—	1	1	1	1	—	—	—	—	2642 411
2642 228	2444 578	S	60	—	—	—	—	—	—	1	—	—	—	—	2642 412

NOTE: Altr. Nos. 2642 411 and 2642 412 are Leece-Neville Altrs.

BOLT, Altr. Mtg., 3/8-16-4 1/4			AR	AR	AR	AR	AR	AR	AR	AR	AR	AR	AR	433 116
BOLT, Altr. Mtg., 3/8-16-4 1/2			AR	AR	AR	AR	AR	AR	AR	AR	AR	AR	AR	433 119
BOLT, Altr. Mtg., 3/8-16-6			AR	AR	AR	AR	AR	AR	AR	AR	AR	AR	AR	9417 928
BOLT, Altr. Mtg., 3/8-16-5 1/2			AR	AR	AR	AR	AR	AR	AR	AR	AR	AR	AR	9423 789
BOLT, Altr. Mtg., 3/8-16-4 7/8			AR	AR	AR	AR	AR	AR	AR	AR	AR	AR	AR	9428 486
BOLT, Altr. Mtg., 3/8-16-5 1/4			AR	AR	AR	AR	AR	AR	AR	AR	AR	AR	AR	9422 790
NUT, 3/8-16 9/16			AR	AR	AR	AR	AR	AR	AR	AR	AR	AR	AR	9417 668
8-28-14 SPACER, Altr. Adj. Strap to Water Pump Hsg., w/383, 426 and 440 Eng., w/o A/Cond.		8	—	1	—	—	—	—	—	—	—	—	—	2206 450
w/o A/Cond., except 318 Eng.		8	—	—	—	1	1	1	1	—	—	—	—	2206 450
w/o A/Cond.		8	—	—	—	—	—	—	—	1	1	1	1	2206 450
8-28-15 STRAP, Altr. Adj., w/Heater Hose Shield	70	6	1	1	1	1	1	1	1	—	—	—	—	2899 108
w/Heater Hose Shield	71	6	1	1	1	1	1	1	1	—	—	—	—	3512 553
w/o A/Cond., w/318 and 340 Eng.		8	1	1	1	1	1	—	—	—	—	—	—	2951 835
w/o A/Cond., w/383 and 440 Eng.		8	—	1	—	1	1	—	—	—	—	—	—	2951 018
w/426 Eng.		8	—	1	—	1	1	—	—	—	—	—	—	2780 630
w/o A/Cond., w/o 65 Amp. Compact L/N Altr., w/318 Eng.		8	—	—	—	1	1	1	1	—	—	—	—	2951 835
w/o A/Cond., w/o 65 Amp. Compact L/N Altr., w/360 Eng.	71	8	—	—	—	—	—	1	1	1	—	—	—	2951 835
w/60 Amp. Altr., w/Spec. Double Groove Pulley, w/383 Eng.		8	—	—	—	1	1	—	—	—	—	—	—	2951 299
w/65 Amp. Compact L/N Altr., w/318 Eng.		8	—	—	—	1	1	1	1	—	—	—	—	3418 610
w/65 Amp. Compact L/N Altr., w/360 Eng., C-E	71	8	—	—	—	—	—	1	1	1	—	—	—	3418 610
w/65 Amp. Compact L/N Altr., w/A/Cond., w/383 Eng.		8	—	—	—	1	1	—	—	—	—	—	—	3462 881

CARLINES: J - Challenger, B - Barracuda, V - Valiant, L - Dart, R - Belvedere - Satellite, W - Coronet - Charger, P - Plymouth, D - Dodge, C - Chrysler, Y - Imperial

AR Indicates use as required.

Numerals in parentheses ( ) refer to notes.

# Indicates parts not listed in any previous parts book.

★ Indicates change or addition.

Printed in U.S.A. January 1972

CODE	PART NAME	ENG. TYPE OR CU.IN.	V 1-2	B J 1-2	L 1-2	R 1-2	W 1-2	P 1-2	D 1-2	C 1	C 2	C 3	Y 1	PART NUMBER
8-28-0	**ALTERNATOR Cont'd.**													
8-28-15	STRAP Cont'd.													
	w/65 Amp. Compact L/N Altr., w/o A/Cond., w/383 Eng.	8	—	—	—	1	1	1	1	—	—	—	—	2843 218
	w/o A/Cond., w/383 and 440 Eng.	8	—	—	—	—	—	1	1	—	—	—	—	2951 299
	w/A/Cond., w/o 65 Amp. Compact L/N Altr., w/383 and 440 Eng.	8	—	—	—	—	—	1	1	—	—	—	—	2951 299
	w/Heater Hose Shield, w/65 Amp. Compact L/N Altr., w/A/Cond., w/383 and 440 w/1-4 Bbl. Carb., Eng.	8	—	—	—	—	—	1	1	—	—	—	—	2951 154
	w/65 Amp. Compact L/N Altr., w/A/Cond., w/440 Eng., w/1-4 Bbl. Carb.	8	—	—	—	—	—	1	1	—	—	—	—	2843 219
	w/o A/Cond.	8	—	—	—	—	—	—	—	1	1	1	—	2951 299
	w/Heater Hose Shield	8	—	—	—	—	—	—	—	—	—	—	1	2899 110
	w/o A/Cond.	8	—	—	—	—	—	—	—	—	—	—	1	2206 447
	Altr. to Fan Belt Idler Pulley Brkt.	8	—	—	—	—	—	—	—	—	—	—	1	2863 057
8-28-32	SUPPORT, Altr. Adj. Strap, w/65 Amp. Compact L/N Altr., w/318 Eng.	8	—	—	—	1	1	1	1	—	—	—	—	3418 611
	w/360 Eng., C-E 71	8	—	—	—	—	—	1	1	1	—	—	—	3418 611
	to Intake Manifold, w/383 Eng., w/65 Amp. Compact L/N Altr.	8	—	—	—	1	1	1	1	—	—	—	—	3462 876
	to Intake Manifold, w/440 Eng., w/1-4 Bbl. Carb., w/65 Amp. Compact L/N Altr.	8	—	—	—	—	—	1	1	—	—	—	—	3462 876
8-28-35	BLOCK, Altr. Mtg., w/383 Eng.	8	—	1	—	1	1	1	1	1	—	—	—	2951 296
8-28-36	BRACKET, Altr. and Coil Mt.	6	1	1	1	1	1	1	1	—	—	—	—	2465 166
	Altr. Adj., w/A/Cond., w/318 and 340 Eng.	8	1	1	1	1	1	—	—	—	—	—	—	2951 868
	Altr. Mtg., w/o A/Cond., w/318 and 340 Eng.	8	1	1	1	1	1	—	—	—	—	—	—	2951 834
	Altr. Adj., w/A/Cond., w/383 and 440 w/1-4 Bbl. Carb., Eng.	8	—	1	—	1	1	—	—	—	—	—	—	2951 746
	Altr. Mtg., w/A/Cond., w/383 and 440 w/1-4 Bbl. Carb., Eng.	8	—	1	—	1	1	1	1	1	1	1	—	2951 015
	Altr. Mtg., w/o A/Cond., w/383, 426 and 440 Eng.	8	—	1	—	1	1	—	—	—	—	—	—	2951 640
	Altr. Mtg., w/65 Amp. Compact L/N Altr.	6	—	—	—	1	1	1	1	—	—	—	—	2465 558
	Altr. Adj., w/A/Cond., w/318 Eng.	8	—	—	—	—	—	1	1	—	—	—	—	2951 868
	Altr. Adj., w/A/Cond., w/360 Eng. 71	8	—	—	—	—	—	1	1	1	—	—	—	2951 868
	Altr. Mtg., w/o A/Cond., w/318 Eng.	8	—	—	—	—	—	1	1	—	—	—	—	2951 834
	Altr. Mtg., w/o A/Cond., w/360 Eng. 71	8	—	—	—	—	—	1	1	1	—	—	—	2951 834
	w/60 Amp. Altr., w/Spec. Double Groove Pulley, w/383 Eng.	8	—	—	—	1	1	—	—	—	—	—	—	3512 516
	Altr. Mtg., w/o A/Cond., w/65 Amp. Compact L/N Altr., w/383 Eng.	8	—	—	—	1	1	—	—	—	—	—	—	2843 217
	Altr. Mtg., w/A/Cond., w/65 Amp. Compact L/N Altr., w/383 Eng.	8	—	—	—	1	1	—	—	—	—	—	—	2951 155
	w/60 Amp. Altr., w/Spec. Double Groove Pulley, w/383 and 440 Eng.	8	—	—	—	—	—	1	1	—	—	—	—	3512 516
	Altr. Adj., w/A/Cond., w/383 and 440 w/1-4 Bbl. Carb., Eng.	8	—	—	—	—	—	1	1	1	1	1	—	2951 749
	Altr. Mtg., w/o A/Cond., w/383 and 440 w/1-4 Bbl. Carb., Eng.	8	—	—	—	—	—	1	1	1	1	1	1	2951 640
	Altr. Mtg., w/o A/Cond., w/65 Amp. Compact L/N Altr., w/383 and 440 w/1-4 Bbl. Carb., Eng.	8	—	—	—	—	—	1	1	—	—	—	—	2843 217

CODE	PART NAME		ENG. TYPE OR CU.IN.	V 1-2	B J 1-2	L 1-2	R 1-2	W 1-2	P 1-2	D 1-2	C 1	C 2	C 3	Y 1	PART NUMBER
8-28-0	**ALTERNATOR Cont'd.**														
8-28-36	BRACKET Cont'd.														
	Altr. Mtg., w/A/Cond., w/65 Amp. Compact L/N Altr., w/383 and 440 w/1-4 Bbl. Carb., Eng.		8	—	—	—	—	—	1	1	—	—	—	—	2951 155
	Altr. Mtg.,		8	—	—	—	—	—	—	—	—	—	—	1	2806 040
8-28-38	SPACER, Altr. Mtg. Block, w/383 Eng., w/A/Cond.	70	8	—	1	—	1	1	1	1	1	—	—	—	6027 995
	w/383 Eng., w/o A/Cond.	70	8	—	—	—	—	—	1	1	1	—	—	—	6023 394
	w/383 Eng., w/o A/Cond.	71		—	—	—	—	—	1	1	1	—	—	—	6029 407
	Altr. Mtg. Brkt. Rr. Altr. Ear, w/318 and 340 Eng.	70	8	1	1	1	1	1	1	1	—	—	—	—	6025 215
	Altr. Mtg. Brkt., w/65 Amp. Compact L/N Altr., w/318 Eng.	70	8	—	—	—	1	1	1	1	—	—	—	—	6028 404
8-28-74	REGULATOR, Altr. Voltage			1	1	1	1	1	1	1	1	1	1	1	3438 150
	w/65 Amp L/N Altr.			—	—	—	1	1	1	1	—	—	—	—	3438 630
	REGULATOR REPLACEMENT PACKAGE, Voltage			1	1	1	1	1	1	1	1	1	1	1	3620 747
	SCREW and WASHER, Mtg.			2	2	2	2	2	2	2	2	2	2	2	6028 142
8-28-78	BRACKET, Voltage Regulator Mtg.	70		—	—	—	1	1	—	—	—	—	—	—	2926 621
8-28-292	SPACER, Altr.		8	1	1	1	1	1	1	1	1	1	1	1	2206 449
	w/383 and 440 Eng., w/A/Cond.	70		8	1	—	1	1	1	1	1	1	1	1	6025 215
	Altr. to Cyl. Head, w/383 and 440 Eng., w/o A/Cond.	70	8	—	1	—	1	1	—	—	—	—	—	—	2206 448
	w/440 Eng., w/o A/Cond.	70	8	—	—	—	—	—	1	1	1	1	1	1	2206 448
	w/318 Eng., w/o A/Cond.		8	1	1	1	1	1	1	1	—	—	—	—	6023 517
	w/340 Eng., w/o A/Cond.	71		1	1	1	—	—	—	—	—	—	—	—	6023 517
	w/426 Eng., w/o A/Cond.		8	—	1	—	1	1	—	—	—	—	—	—	6023 517
	w/440 Eng., w/1-4 Bbl. Carb. w/A/Cond.		8	—	1	—	1	1	1	1	1	1	1	—	6027 618
	w/318 Eng., w/65 Amp. Compact L/N Alt.		8	—	—	—	1	1	1	1	—	—	—	—	6028 403
	w/360 Eng., w/o A/Cond.	71	8	—	—	—	—	—	1	1	1	—	—	—	6023 517
	w/360 Eng., w/65 Amp. Compact L/N Altr.	71	8	—	—	—	—	—	1	1	1	—	—	—	6028 403
	w/440 Eng., w/60 Amp. Altr.		8	—	—	—	—	—	1	1	—	—	—	—	6028 889

NOTES

CARLINES J - Challenger, B - Barracuda, V - Valiant, L - Dart, R - Belvedere - Satellite, W - Coronet - Charger, P - Plymouth, D - Dodge, C - Chrysler, Y - Imperial

AR Indicates use as required.

# Indicates parts not listed in any previous parts book.

Numerals in parentheses ( ) refer to notes.

★ Indicates change or addition.

Printed in U.S.A. January 1972

8-29-0 ALTERNATOR COMPONENT PARTS

For Model Application See Code 8-28-3

ALTERNATOR ASSEMBLIES

CODE	REMARKS	30 3438 171	37 3438 172	50 3438 173	60 3438 174	37 3438 176
8-29-17	BRUSH and WASHER PACKAGE	3420 893	3420 893	3420 893	3420 893	3420 893
8-29-42	HOLDER, Brush (Axial)	2095 038	2095 038	2095 038	2095 038	2095 038
	HOLDER, Brush (Radial)	3438 159	3438 159	3438 159	3438 159	3438 159
8-29-97	ROTOR	2585 175	2585 175	2585 175	2585 175	2585 175
8-29-98	STATOR	2642 633	2642 633	2095 427	3000 008	2642 633
8-29-99	RETAINER, WASHER and SLIP RING PACKAGE, Rotor Grease	2586 512	2586 512	2586 512	2586 512	2586 512
8-29-129	CAPACITOR and INSULATOR PACKAGE	2421 137	2421 137	2421 137	2421 137	2421 137
8-29-131	RECTIFIER, Positive (3 req.)	2098 288	2098 288	2098 288	3000 046	2098 288
	RECTIFIER, Negative (3 req.)	2098 287	2098 287	2098 287	3000 047	2098 287
8-29-132	SHIELD, Rectifier End	3438 204	3438 204	3438 204	3438 204	3438 204
8-29-133	BEARING, Rectifier End Shield	2098 512	2098 512	2098 512	2098 512	2098 512
8-29-135	HEAT SINK, Rectifier	2095 925	2095 925	2095 925	2095 925	2095 925
8-29-145	SPACER, Rectifier Heat Sink	2095 760	2095 760	2095 760	2095 760	2095 760
8-29-153	SHIELD, Drive End	2095 945	2095 945	2095 945	2095 945	2095 945
8-29-154	BEARING, Drive End Shield	2098 478	2098 478	2098 478	2098 478	2098 478
8-29-155	PLATE, Drive End Shield Brg. Retainer	2095 012	2095 012	2095 012	2095 012	2095 012
8-29-208	SCREW, Frame (3 req.)	2098 633	2098 633	2098 633	2098 633	2098 633
	For Model Application See Code 8-28-3					

ALTERNATOR ASSEMBLIES

CODE	REMARKS	50 3438 177	50 3438 178	60 3438 179	60 3438 180	34 3438 378
8-29-17	BRUSH and WASHER PACKAGE	3420 893	3420 893	3420 893	3420 893	3420 893
8-29-42	HOLDER, Brush (Axial)	2095 038	2095 038	2095 038	2095 038	2095 038
	HOLDER, Brush (Radial)	3438 159	3438 159	3438 159	3438 159	3438 159
8-29-97	ROTOR	2585 175	2585 175	2585 175	2585 175	3438 757
8-29-98	STATOR	2095 427	2095 427	3000 008	3000 008	2642 633
8-29-99	RETAINER, WASHER and SLIP RING PACKAGE, Rotor Grease	2586 512	2586 512	2586 512	2586 512	2586 512
8-29-129	CAPACITOR and INSULATOR PACKAGE	2421 137	2421 137	2421 137	2421 137	2421 137
8-29-131	RECTIFIER, Positive (3 req.)	2098 288	2098 288	3000 046	3000 046	2098 288
	RECTIFIER, Negative (3 req.)	2098 287	2098 287	3000 047	3000 047	2098 287
8-29-132	SHIELD, Rectifier End	3438 204	3438 204	3438 204	3438 204	3438 204
8-29-133	BEARING, Rectifier End Shield	2098 512	2098 512	2098 512	2098 512	2098 512
8-29-135	HEAT SINK, Rectifier	2095 925	2095 925	2095 925	2095 925	2095 925
8-29-145	SPACER, Rectifier Heat Sink	2095 760	2095 760	2095 760	2095 760	2095 760
8-29-153	SHIELD, Drive End	2095 945	2095 945	2095 945	2095 945	2095 945
8-29-154	BEARING, Drive End Shield	2098 478	2098 478	2098 478	2098 478	2098 478
8-29-155	PLATE, Drive End Shield Brg. Ret.	2095 012	2095 012	2095 012	2095 012	2095 012
8-29-208	SCREW, Frame (3 req.)	2098 633	2098 633	2098 633	2098 633	2098 633
	For Model Application See Code 8-28-3					

ALTERNATOR ASSEMBLIES

CODE	REMARKS	37 3438 780	50 3438 782
8-29-17	BRUSH and WASHER PACKAGE	3420 893	3420 893
8-29-42	HOLDER, Brush (Axial)	2095 038	2095 038
	HOLDER, Brush (Radial)	3438 159	3438 159
8-29-97	ROTOR	3438 785	3438 785
8-29-98	STATOR	2642 633	2642 633
8-29-99	RETAINER, WASHER and SLIP RING PACKAGE, Rotor Grease	2586 512	2586 512
8-29-129	CAPACITOR and INSULATOR PACKAGE	2421 137	2421 137
8-29-131	RECTIFIER, Positive (3 req.)	2098 288	2098 288
	RECTIFIER, Negative (3 req.)	2098 287	2098 287
8-29-132	SHIELD, Rectifier End	3438 204	3438 204
8-29-133	BEARING, Rectifier End Shield	2098 512	2098 512
8-29-135	HEAT SINK, Rectifier	2095 925	2095 925

CARLINES J - Challenger, B - Barracuda, V - Valiant, L - Dart, R - Belvedere - Satallite, W - Coronet - Charger, P - Plymouth, D - Dodge, C - Chrysler, Y - Imperial

AR Indicates use as required.

# Indicates parts not listed in any previous parts book.

Numerals in parentheses ( ) refer to notes.

★ Indicates change or addition.

Printed in U.S.A.
January 1972

8-29-0 ALTERNATOR COMPONENT PARTS Cont'd.

For Model Application See Code 8-28-3

ALTERNATOR ASSEMBLIES

CODE	REMARKS		3438 780	3438 782
8-29-145	SPACER, Rectifier Heat Sink		2095 760	2095 760
8-29-153	SHIELD, Drive End		2095 945	2095 945
8-29-154	BEARING, Drive End Shield		2098 478	2098 478
8-29-155	PLATE, Drive End Shield Brg. Ret.		2095 012	2095 012
8-29-208	SCREW, Frame (3 req.)		2098 633	2098 633

ALTERNATOR ASSEMBLIES

For Model Application See Code 8-28-3

CODE	REMARKS		2642 411	2642 412
8-29-41	BRUSH and SPRING	Canada	2644 303	2644 303
	BLOCK, Terminal	Canada	2644 305	2644 305
	JUMPER, Brush Terminal	Canada	2644 302	2644 302
8-29-97	ROTOR	Canada	2649 425	2649 425
8-29-98	STATOR and TERMINAL	Canada	2649 486	2649 486
8-29-99	SLIP RING, Rotor	Canada	2644 292	2644 292
8-29-110	BEARING, Slip Ring End	Canada	2644 291	2644 291
8-29-130	CAPACITOR	Canada	2649 446	2649 446
	CLAMP, Capacitor Ret.	Canada	2649 445	2649 445
8-29-131	RECTIFIER, Negative	Canada	2649 442	2649 442
	RECTIFIER and LEAD, Orange	Canada	2649 443	2649 443
	RECTIFIER, Positive	Canada	2649 437	2649 437
	RECTIFIER and LEAD, Black	Canada	2649 438	2649 438
8-29-153	HOUSING, Brush Holder	Canada	2644 300	2644 300
	SEALING RING, Holder Hsg.	Canada	2644 299	2644 299
	GASKET, Holder Hsg.	Canada	2649 447	2649 447
8-29-154	BEARING, DRIVE END	Canada	2649 435	2649 935
8-29-160	FAN	Canada	2649 434	2649 434
8-29-164	MOUNT, Rectifier	Canada	2644 296	2644 296
	REG. RECTIFIER	Canada	2644 312	2644 312
8-29-179	BUSHING, Brg. Rect. Term. Insul	Canada	2644 309	2644 309
	RECT. MOUNT, Insul	Canada	2649 439	2649 439
	TERMINAL SCREW	Canada	2644 307	2644 307
	INSULATION	Canada	2649 441	2649 441
8-29-181	WASHER, Rectifier Mount	Canada	2649 440	2649 440
	TERM, Insulator	Canada	2649 440	2649 440
	INSULATOR, Term, Black	Canada	2644 306	2644 306
8-29-184	SCREW, Neg. Rect. Term	Canada	2644 313	2644 313
	TERMINAL	Canada	2649 444	2649 444
	TERMINAL	Canada	2644 308	2644 308
	STUD, Terminal	Canada	2644 301	2644 301

NOTES

CODE	PART NAME	ENG. TYPE OR CU.IN.	V 1-2	B J 1-2	L 1-2	R 1-2	W 1-2	P 1-2	D 1-2	C 1	C 2	C 3	Y 1	PART NUMBER
8-31-0	**PARKING BRAKE SIGNAL LAMP**													
8-31-8	HOUSING, Brake Warning Ind. Lamp, w/Rallye Inst. Panel		—	1	—	—	—	—	—	—	—	—	—	2984 207
8-31-10	SWITCH, Brake System Ind. Lamp	70	1	1	1	1	1	1	1	1	1	1	1	2822 023
		71	1	1	1	1	1	—	—	—	—	—	—	2822 023
	w/Disc Brakes	71	—	—	—	—	—	1	1	1	1	1	1	3488 449
	w/o Disc Brakes	71	—	—	—	—	—	1	1	1	1	1	—	3488 515
	Parking Brake Ind. Lamp	70	1	—	1	1	1	—	—	—	—	—	—	2889 053
		71	1	—	1	—	—	—	—	—	—	—	—	2889 053
		70	—	1	—	—	—	1	1	1	1	1	1	2291 852
		71	—	1	—	1	1	1	1	1	1	1	—	2291 852
	w/BRKT.	70	—	—	—	1	1	—	—	—	—	—	—	2661 763
8-31-11	BRACKET, Brake Ind. Lamp Switch Mtg.		1	—	1	—	—	—	—	—	—	—	—	2822 599
	NUT and WASHER, Mtg.		1	—	1	—	—	—	—	—	—	—	—	6023 215
8-31-16	SOCKET, Brake Warning Ind. Lamp, on Printed Circuit Board, R-K, R-T, R-L, R-H, W-K, W-T, W-L, W-H		1	—	1	1	1	—	—	—	—	—	—	2496 279
	R-P, W-P except Charger, W-S 2D.H.T. and Cv. Cp. w/o Rallye Inst. Panel	70	—	—	—	1	1	—	1	—	—	—	—	2496 279
	Dual Brake Warning Lamp, R-M, R-S, W-M, W-P Charger, W-S Charger R/T, W-S 2 D.H.T. and Cv. Cp. w/Rallye Inst. Panel	70	—	—	1	1	1	1	—	1	1	1	—	1753 632
	R-M, R-P, R-S, W-M, W-P, W-S	71	—	1	1	1	1	1	1	1	1	1	1	1753 632
8-31-18	CONTACT, Dual Brake Warning Lamp Socket		—	1	1	1	1	1	1	1	1	1	1	2256 966
8-32-0	**HORN**													
8-32-2	HORN PACKAGE, High Note		1	1	1	1	1	1	1	1	1	1	1	2808 869
	Low Note		1	1	1	1	1	1	1	1	1	1	1	2808 868
	w/BRKT., R-M		—	—	—	1	—	—	—	—	—	—	—	2926 233
8-32-18	SCREW and WASHER, Horn to Yoke Mtg.		AR	AR	AR	AR	AR	AR	AR	AR	AR	AR	AR	6023 253
8-33-0	**HORN CONTROLS**													
8-33-4	HORN RING, Partial, J	70	—	1	—	—	—	—	—	—	—	—	—	2950 781
	w/Switch, w/Tilt-Tel. Strg. Wheel, w/o Rim Horn Switch	70	—	—	—	—	—	—	—	1	1	1	1	2950 189
8-33-5	RETAINER, Horn Button, L-L, R-T, R-L, R-M, W-T, W-L	70	1	—	1	1	1	—	—	—	—	—	—	2996 704
	Horn Button, w/Soft Rim Strg. Wheel		1	1	1	1	1	—	—	—	—	—	—	3467 836
	w/Partial Horn Ring, L-L, L-H	70	1	—	1	—	—	—	—	—	—	—	—	2996 884
	Horn Ring, Export		1	—	1	1	1	1	1	—	—	—	—	2996 884
	Horn Button	70	—	1	—	—	—	—	—	—	—	—	—	2950 780
	w/Partial Horn Ring, J	70	—	1	—	—	—	—	—	—	—	—	—	2950 779
	Strg. Wheel Opening Cap, w/Wood Grain Wheel	70	—	—	—	1	1	1	1	—	—	—	—	2996 720
	Horn Ring, w/o Tilt Strg. Wheel	70	—	—	—	—	—	1	1	—	—	—	—	2925 556
	Horn Ring, w/o Tilt-Tel. Strg. Wheel	70	—	—	—	—	—	—	—	1	1	1	1	2925 556
8-33-6	ORNAMENT, Strg. Wheel, w/Rim Horn Switch	70	1	—	—	1	—	1	—	—	—	—	—	2996 888
	w/o Rim Horn Switch, R except R-M	70	1	—	—	1	—	1	—	—	—	—	—	3467 492
	w/o Rim Horn Switch, R-M	70	—	—	—	1	—	—	—	—	—	—	—	3467 499
	w/o Rim Horn Switch	70	—	—	1	—	1	—	1	—	—	—	—	3467 493
	w/Rim Horn Switch	70	—	—	1	—	1	—	1	—	—	—	—	2996 889
	w/o Tilt Strg. Wheel, w/o Rim Horn Switch — Dark Blue	70	—	—	—	—	—	1	1	—	—	—	—	4077 FB7
	Dark Green	70	—	—	—	—	—	1	1	—	—	—	—	4077 FF8
	Burnt Orange	70	—	—	—	—	—	1	1	—	—	—	—	4077 FK5
	Tan	70	—	—	—	—	—	1	1	—	—	—	—	4077 FT4

CARLINES J - Challenger, B - Barracuda, V - Valiant, L - Dart, R - Belvedere - Satellite, W - Coronet - Charger, P - Plymouth, D - Dodge, C - Chrysler, Y - Imperial

AR Indicates use as required.

Numerals in parentheses ( ) refer to notes.

# Indicates parts not listed in any previous parts book.

★ Indicates change or addition.

Printed in U.S.A. January 1972

8-33-0 HORN CONTROLS Cont'd.

CODE	PART NAME	ENG. TYPE OR CU.IN.	V 1-2	B J 1-2	L 1-2	R 1-2	W 1-2	P 1-2	D 1-2	C 1	C 2	C 3	Y 1	PART NUMBER
8-33-6	ORNAMENT Cont'd.													
	Black	70	—	—	—	—	—	1	1	—	—	—	—	4077 FX9
	Gold	70	—	—	—	—	—	1	1	—	—	—	—	4077 FY4
	w/Tilt-Tel. Strg. Wheel, w/Rim Horn Switch		—	—	—	—	—	—	—	1	1	1	—	2996 890
	MEDALLION, Strg. Wheel, w/o Tilt-Tel. Strg. Wheel, w/o Rim Horn Switch	70	—	—	—	—	—	—	—	1	1	1	—	2925 554
	ORNAMENT, Strg. Wheel, w/o Tilt-Tel. Strg. Wheel, w/o Rim Horn Switch Black	70	—	—	—	—	—	—	—	1	1	1	1	4069 EX9
	w/o Tilt-Tel. Strg. Wheel, w/Rim Horn Switch	70	—	—	—	—	—	—	—	—	—	—	1	2996 891
	w/o Tilt-Tel. Strg. Wheel	71	—	—	—	—	—	—	—	—	—	—	1	2996 891
	MEDALLION, Strg. Wheel, w/o Tilt-Tel. Strg. Wheel, w/o Rim Horn Switch	70	—	—	—	—	—	—	—	—	—	—	1	2996 916
	Export	71	1	—	—	—	—	—	—	—	—	—	—	3467 492
	w/Decal, w/3 Spoke Horn Button, R-T, R-L	71	1	—	—	1	—	—	—	—	—	—	—	3467 461
	w/o Decal, w/3 Spoke Horn Button, L-L, L-M, R-T, R-L, R-M	71	1	—	1	1	—	—	—	—	—	—	—	3467 859
	w/Decal, w/3 Spoke Horn Button, L-L L-M	71	—	—	1	—	—	—	—	—	—	—	—	3467 462
	Export	71	—	—	1	—	1	—	—	—	—	—	—	3467 493
	w/o Decal, w/o Rim Horn Switch, w/o Soft Rim Wheel, L-H	71	—	—	1	—	—	—	—	—	—	—	—	3467 859
	w/Decal, w/o Rim Horn Switch, w/o Soft Rim Wheel, L-H	71	—	—	1	—	—	—	—	—	—	—	—	3467 462
	w/Decal, w/o Rim Horn Switch, w/o Tilt Strg. Wheel, w/o Soft Rim Wheel, w/o Coupe Pkg., R-H	71	—	—	—	1	—	—	—	—	—	—	—	3467 461
	w/o Decal, w/o Rim Horn Switch, w/o Tilt Strg. Wheel w/o Soft Rim Wheel, w/o Coupe Pkg., R-H		—	—	—	1	—	—	—	—	—	—	—	3467 859
	w/Tilt Strg. Wheel, P w/Rim Horn Switch	71	—	—	—	1	—	1	—	—	—	—	—	2996 888
	w/3 Spoke Horn Button, R-M	71	—	—	—	1	—	—	—	—	—	—	—	3467 464
	w/o 3 Spoke Horn Button, w/o Tilt Strg. Wheel, w/o Rim Horn Switch, w/o Soft Rim Wheel, R-M	71	—	—	—	1	—	—	—	—	—	—	—	3467 487
	w/o 3 Spoke Horn Button, w/o Tilt Strg. Wheel, w/o Rim Horn Switch, w/o Soft Rim Wheel, R-T, R-L	71	1	—	—	1	—	—	—	—	—	—	—	3467 485
	w/o 3 Spoke Horn Button w/o Tilt Strg. Wheel, w/o Rim Horn Switch, w/o Soft Rim Wheel, R-T, R-L, R-H 2 D.H.T. w/Coupe Pkg.	71	1	—	—	1	—	—	—	—	—	—	—	3467 485
	w/o 3 Spoke Horn Button, w/o Rim Horn Switch, w/o Tilt Strg. Wheel, W-T, W-L, W-H 2 D.H.T. w/Coupe Pkg.		—	—	—	—	1	—	—	—	—	—	—	3467 486
	w/Tilt Strg. Wheel, D w/Rim Horn Switch	71	—	—	—	—	1	—	1	—	—	—	—	2996 889
	w/Decal, w/o Tilt Strg. Wheel, w/o Rim Horn Switch, P-T, P-E, P-L	71	—	—	—	—	—	1	—	—	—	—	—	3467 461
	w/o Decal, w/o Tilt Strg. Wheel, w/o Rim Horn Switch, P-T, P-E, P-L, D-T, D-E, D-S	71	—	—	—	—	—	1	1	—	—	—	—	3467 859
	w/Decal, w/o Tilt Strg. Wheel, w/o Rim Horn Switch, D-T, D-E, D-S	71	—	—	—	—	—	—	1	—	—	—	—	3467 462

CARLINES J - Challenger, B - Barracuda, V - Valiant, L - Dart, R - Belvedere - Satellite, W - Coronet - Charger, P - Plymouth, D - Dodge, C - Chrysler, Y - Imperial

AR Indicates use as required.

# Indicates parts not listed in any previous parts book.

Numerals in parentheses ( ) refer to notes.

★ Indicates change or addition.

Printed in U.S.A. January 1972

8-33-0 HORN CONTROLS Cont'd.

CODE	PART NAME	ENG. TYPE OR CU.IN.	V 1-2	B J 1-2	L 1-2	R 1-2	W 1-2	P 1-2	D 1-2	C 1	C 2	C 3	Y 1	PART NUMBER
8-33-6	ORNAMENT Cont'd.													
	w/o Rim Horn Switch, w/o Tilt-Tel. Strg. Wheel	71	—	—	—	—	—	—	—	1	1	1	—	3575 058
8-33-13	PAD and RING, Horn, Partial	Dark Blue 70	1	—	1	1	1	—	—	—	—	—	—	4042 FB7
		Red 70	1	—	—	—	—	—	—	—	—	—	—	4042 FE5
		Dark Green 70	1	—	1	1	1	—	—	—	—	—	—	4042 FF8
		Tan 70	1	—	1	1	1	—	—	—	—	—	—	4042 FT4
		Black 70	1	—	1	1	1	—	—	—	—	—	—	4042 FX9
		Burnt Orange 70	—	—	—	1	1	—	—	—	—	—	—	4042 FK5
		Gold 70	—	—	—	1	1	—	—	—	—	—	—	4042 FY4
	PAD, Strg. Wheel, w/Rim Horn Switch	Dark Blue 70	1	—	1	1	1	1	1	1	1	1	1	4011 FB7
		Red 70	1	—	—	—	—	—	—	—	—	—	—	4011 FE4
		Dark Green 70	1	—	1	1	1	1	1	1	1	1	1	4011 FF8
		Tan 70	1	—	1	1	1	1	1	1	1	1	1	4011 FT5
		Black 70	1	—	1	1	1	1	1	1	1	1	1	4011 FX9
		Gold 70	—	—	—	1	1	1	1	1	1	1	1	4011 FY4
		Burnt Orange 70	—	—	—	1	1	1	1	—	—	—	—	4011 FK4
		Dark Gold 70	—	—	—	—	—	—	—	1	1	1	1	4011 FY8
		Teal 70	—	—	—	—	—	—	—	1	1	1	1	4011 FP6
		Burgundy 70	—	—	—	—	—	—	—	—	—	—	1	4011 FM9
		Oxblood 70	—	—	—	—	—	—	—	1	1	1	—	4011 FR9
		Tan 70	—	—	—	—	—	—	—	—	—	—	1	4011 FT8
	PAD, Strg. Wheel Ornament, w/Soft Rim Wheel	Black 70	1	—	1	1	1	—	—	—	—	—	—	4005 FX9
	PAD, Strg. Wheel Spoke, w/o Rim Horn Switch	Brite Blue 70	—	1	—	—	—	—	—	—	—	—	—	4002 FB5
		Red 70	—	1	—	—	—	—	—	—	—	—	—	4002 FE5
		Dark Green 70	—	1	—	—	—	—	—	—	—	—	—	4002 FF8
		Burnt Orange 70	—	1	—	—	—	—	—	—	—	—	—	4002 FK5
		Tan 70	—	1	—	—	—	—	—	—	—	—	—	4002 FT4
		Black 70	—	1	—	—	—	—	—	—	—	—	—	4002 FX9
	PAD, Strg. Wheel Spoke, w/Rim Horn Switch, B	Brite Blue 70	—	1	—	—	—	—	—	—	—	—	—	4022 FB5
B		Red 70	—	1	—	—	—	—	—	—	—	—	—	4022 FE5
B		Dark Green 70	—	1	—	—	—	—	—	—	—	—	—	4022 FF8
B		Burnt Orange 70	—	1	—	—	—	—	—	—	—	—	—	4022 FK5
B		Tan 70	—	1	—	—	—	—	—	—	—	—	—	4022 FT4
B		Black 70	—	1	—	—	—	—	—	—	—	—	—	4022 FX9
	PAD, Strg. Wheel Spoke, w/Rim Horn Switch, J	Brite Blue 70	—	1	—	—	—	—	—	—	—	—	—	4021 FB5
J		Red 70	—	1	—	—	—	—	—	—	—	—	—	4021 FE5
J		Dark Green 70	—	1	—	—	—	—	—	—	—	—	—	4021 FF8
J		Burnt Orange 70	—	1	—	—	—	—	—	—	—	—	—	4021 FK5
J		Tan 70	—	1	—	—	—	—	—	—	—	—	—	4021 FT4
J		Black 70	—	1	—	—	—	—	—	—	—	—	—	4021 FX9
	PAD and RING, Horn, Full Horn Ring-Fleet, w/o Rim Horn Switch	Dark Blue 70	—	—	—	1	1	—	—	—	—	—	—	4044 FB7
		Dark Green 70	—	—	—	1	1	—	—	—	—	—	—	4044 FF8
		Burnt Orange 70	—	—	—	1	1	—	—	—	—	—	—	4044 FK5
		Tan 70	—	—	—	1	1	—	—	—	—	—	—	4044 FT4
		Black 70	—	—	—	1	1	—	—	—	—	—	—	4044 FX9
		Gold 70	—	—	—	1	1	—	—	—	—	—	—	4044 FY4
	PAD, Horn, Full Horn Ring-Fleet, w/o Tilt Strg. Wheel, w/o Rim Horn Switch	Dark Blue 70	—	—	—	—	—	1	1	—	—	—	—	4068 EB7
		Dark Green 70	—	—	—	—	—	1	1	—	—	—	—	4068 EF8
		Tan 70	—	—	—	—	—	1	1	—	—	—	—	4068 FT4
		Black 70	—	—	—	—	—	1	1	—	—	—	—	4068 EX9
		Gold 70	—	—	—	—	—	1	1	—	—	—	—	4068 FY4

CARLINES J - Challenger, B - Barracuda, V - Valiant, L - Dart, R - Belvedere - Satellite, W - Coronet - Charger, P - Plymouth, D - Dodge, C - Chrysler, Y - Imperial

AR Indicates use as required.

Numerals in parentheses ( ) refer to notes.

# Indicates parts not listed in any previous parts book.

★ Indicates change or addition.

Printed in U.S.A. January 1972

8-33-0 HORN CONTROLS Cont'd.

8-33-13 PAD and RING Cont'd.

CODE	PART NAME	ENG. TYPE OR CU.IN.	V 1-2	B J 1-2	L 1-2	R 1-2	W 1-2	P 1-2	D 1-2	C 1	C 2	C 3	Y 1	PART NUMBER
	PAD, Strg. Wheel Horn, Partial, w/o Tilt Strg. Wheel, w/o Rim Horn Switch	Dark Blue 70	—	—	—	—	—	1	1	—	—	—	—	4067 FB7
		Burnt Orange 70	—	—	—	—	—	1	1	—	—	—	—	4067 FK5
		Dark Green 70	—	—	—	—	—	1	1	—	—	—	—	4066 EF8
		Tan 70	—	—	—	—	—	1	1	—	—	—	—	4066 FT4
		Black 70	—	—	—	—	—	1	1	—	—	—	—	4066 EX9
		Gold 70	—	—	—	—	—	1	1	—	—	—	—	4066 FY4
	PAD, Strg. Wheel, w/Tilt Strg. Wheel	Dark Blue 70	—	—	—	—	—	1	1	—	—	—	—	4013 FB7
		Dark Green 70	—	—	—	—	—	1	1	—	—	—	—	4013 FF8
		Burnt Orange 70	—	—	—	—	—	1	1	—	—	—	—	4013 FK4
		Tan 70	—	—	—	—	—	1	1	—	—	—	—	4013 FT5
		Black 70	—	—	—	—	—	1	1	—	—	—	—	4013 FX9
		Gold 70	—	—	—	—	—	1	1	—	—	—	—	4013 FY4
	PAD, Strg. Wheel, w/Tilt-Tel. Strg. Wheel	Dark Blue 70	—	—	—	—	—	—	—	1	1	1	—	4013 FB7
		Dark Green 70	—	—	—	—	—	—	—	1	1	1	—	4013 FF3
		Teal 70	—	—	—	—	—	—	—	1	1	1	1	4013 FP6
		Oxblood 70	—	—	—	—	—	—	—	1	1	1	1	4013 FR9
		Tan 70	—	—	—	—	—	—	—	1	1	1	1	4013 FT5
		Black 70	—	—	—	—	—	—	—	1	1	1	1	4013 FX9
		Gold 70	—	—	—	—	—	—	—	1	1	1	1	4013 FY4
		Beige 70	—	—	—	—	—	—	—	1	1	1	—	4013 FY8
	PAD, Strg. Wheel, w/o Tilt-Tel. Strg. Wheel, w/o Rim Horn Switch	Dark Blue 70	—	—	—	—	—	—	—	1	1	1	1	4066 FB7
		Dark Green 70	—	—	—	—	—	—	—	1	1	1	1	4066 EF8
		Beige 70	—	—	—	—	—	—	—	1	1	1	—	4066 EY8
		Teal 70	—	—	—	—	—	—	—	1	—	1	1	4066 FP6
		Oxblood 70	—	—	—	—	—	—	—	1	1	1	1	4066 FR9
		Black 70	—	—	—	—	—	—	—	1	1	1	1	4066 EX9
		Tan 70	—	—	—	—	—	—	—	1	1	1	1	4066 FT4
		Gold 70	—	—	—	—	—	—	—	1	1	1	1	4066 FY4
		Burgundy 70	—	—	—	—	—	—	—	—	—	—	1	4066 FM9
		Walnut and Beige 70	—	—	—	—	—	—	—	—	—	—	1	4066 FT8
	PAD, Strg. Wheel, w/Tilt-Tel. Strg. Wheel w/o Rim Horn Switch	Dark Blue 70	—	—	—	—	—	—	—	1	1	1	1	4028 EB7
		Dark Green 70	—	—	—	—	—	—	—	1	1	1	1	4028 EF8
		Burgundy 70	—	—	—	—	—	—	—	—	—	—	1	4028 EM9
		Black 70	—	—	—	—	—	—	—	1	1	1	1	4028 EX9
		Beige 70	—	—	—	—	—	—	—	1	1	1	1	4028 EY8
		Teal 70	—	—	—	—	—	—	—	1	1	1	1	4028 FP6
		Red 70	—	—	—	—	—	—	—	1	1	1	1	4028 FR8
		Tan 70	—	—	—	—	—	—	—	1	1	1	1	4028 FT4
	PAD, Strg. Wheel, w/Tilt-Tel. Strg. Wheel	Dark Blue 70	—	—	—	—	—	—	—	—	—	—	1	4014 FB7
		Dark Green 70	—	—	—	—	—	—	—	—	—	—	1	4014 FF8
		Burgundy 70	—	—	—	—	—	—	—	—	—	—	1	4014 FM9
		Teal 70	—	—	—	—	—	—	—	—	—	—	1	4014 FP6
		Oxblood 70	—	—	—	—	—	—	—	—	—	—	1	4014 FR9
		Tan 70	—	—	—	—	—	—	—	—	—	—	1	4014 FT5
		Walnut and Beige 70	—	—	—	—	—	—	—	—	—	—	1	4014 FT8
		Black 70	—	—	—	—	—	—	—	—	—	—	1	4014 FX9
		Gold 70	—	—	—	—	—	—	—	—	—	—	1	4014 FY4
	PAD, Strg. Wheel Ornament, w/Rim Horn Switch	Black 71	1	1	1	1	1	—	—	—	—	—	—	4006 GX9
	PAD, Strg. Wheel Ornament, w/Soft Rim Wheel	Black 71	1	—	1	1	1	—	—	—	—	—	—	4005 FX9

CARLINES: J - Challenger, B - Barracuda, V - Valiant, L - Dart, R - Belvedere - Satellite, W - Coronet - Charger, P - Plymouth, D - Dodge, C - Chrysler, Y - Imperial

AR Indicates use as required.

# Indicates parts not listed in any previous parts book.

Numerals in parentheses ( ) refer to notes.

★ Indicates change or addition.

Printed in U.S.A. January 1972

8-33-0 HORN CONTROLS Cont'd.

CODE	PART NAME	ENG. TYPE OR CU.IN.	V 1-2	B J 1-2	L 1-2	R 1-2	W 1-2	P 1-2	D 1-2	C 1	C 2	C 3	Y 1	PART NUMBER
8-33-13	PAD and RING Cont'd.													
	PAD and Ring, Strg. Wheel Horn, Export	Black 71	1	—	1	—	1	—	—	—	—	—	—	4044 FX9
		Dark Blue 71	1	—	1	—	1	—	—	—	—	—	—	4044 FB7
		Tan 71	1	—	1	—	1	—	—	—	—	—	—	4044 GT6
	PAD, Strg. Wheel Spoke, w/o Rim Horn Switch	Black 71	—	1	—	—	—	—	—	—	—	—	—	4002 GX9
	PAD, Strg. Wheel, w/Tilt and Tilt-Tel. Strg. Wheel	Dark Blue 71	—	—	—	1	1	1	1	1	1	1	—	4013 GB7
		Dark Saddle 71	—	—	—	1	1	1	1	1	1	1	—	4013 GT7
		Black 71	—	—	—	1	1	1	1	1	1	1	—	4013 FX9
		Gold 71	—	—	—	1	1	—	—	—	—	—	—	4013 GY3
		Dark Green 71	—	—	—	1	1	1	1	1	1	1	—	4013 GF7
		Russet 71	—	—	—	—	—	1	1	1	1	1	—	4013 GE8
		Gold 71	—	—	—	—	—	1	1	1	1	1	—	4013 GY5
	D-H, C-E	Gun Metal 71	—	—	—	—	—	—	1	1	—	1	—	4013 GA6
		Dark Blue 71	—	—	—	—	—	—	—	—	—	—	1	4014 GB7
		Gun Metal 71	—	—	—	—	—	—	—	—	—	—	1	4014 GA6
		Burgundy 71	—	—	—	—	—	—	—	—	—	—	1	4014 GM9
		Blue 71	—	—	—	—	—	—	—	—	—	—	1	4014 GB9
		Russet 71	—	—	—	—	—	—	—	—	—	—	1	4014 GE8
		Dark Green 71	—	—	—	—	—	—	—	—	—	—	1	4014 GF7
		Dark Saddle 71	—	—	—	—	—	—	—	—	—	—	1	4014 GT7
		Black 71	—	—	—	—	—	—	—	—	—	—	1	4014 FX9
		Gold 71	—	—	—	—	—	—	—	—	—	—	1	4014 GY5
	PAD, Strg. Wheel, w/Rim Horn Switch	Dark Blue 71	—	—	—	—	—	1	1	1	1	1	1	4011 GB7
		Russet 71	—	—	—	—	—	1	1	1	1	1	1	4011 GE8
		Dark Green 71	—	—	—	—	—	1	1	1	1	1	1	4011 GF7
		Dark Saddle 71	—	—	—	—	—	1	1	1	1	1	1	4011 GT7
		Black 71	—	—	—	—	—	1	1	1	1	1	1	4011 FX9
		Gold 71	—	—	—	—	—	1	1	1	1	1	1	4011 GY5
	D-H, C-E	Gun Metal 71	—	—	—	—	—	—	1	1	—	1	1	4011 GA6
		Dark Blue 71	—	—	—	—	—	—	—	—	—	—	1	4011 GB9
		Burgundy 71	—	—	—	—	—	—	—	—	—	—	1	4011 GM9
8-33-15	SPRING, Horn Ring, w/Tilt-Tel. Strg. Wheel, w/o Rim Horn Switch	70	—	—	—	—	—	—	—	1	1	1	1	2925 561
8-33-17	BUTTON, Horn, w/o Rim Horn Switch	Dark Blue 70	1	—	1	—	—	—	—	—	—	—	—	4000 FB7
		Red 70	1	—	—	—	—	—	—	—	—	—	—	4000 FE5
		Green 70	1	—	1	—	—	—	—	—	—	—	—	4000 FF8
		Tan 70	1	—	1	—	—	—	—	—	—	—	—	4000 FT4
		Black 70	1	—	1	—	—	—	—	—	—	—	—	4000 FX9
	BUTTON, Horn, w/o Rim Horn Switch	Brite Blue 70	—	1	—	—	—	—	—	—	—	—	—	4003 FB5
		Red 70	—	1	—	—	—	—	—	—	—	—	—	4003 FE5
		Green 70	—	1	—	—	—	—	—	—	—	—	—	4003 FF8
		Burnt Orange 70	—	1	—	—	—	—	—	—	—	—	—	4003 FK5
		Tan 70	—	1	—	—	—	—	—	—	—	—	—	4003 FT4
		Black 70	—	1	—	—	—	—	—	—	—	—	—	4003 FX9
	CAP, Strg. Wheel Spoke, w/Rim Horn Switch	70	—	1	—	—	—	—	—	—	—	—	—	2996 936
	w/Rim Horn Switch	71	1	1	1	1	1	—	—	—	—	—	—	2996 936
	CAP, Strg. Wheel Ornament, Partial, w/Wood Grain Wheel	Blue 70	—	—	—	1	1	1	1	—	—	—	—	4047 EB7
		Green 70	—	—	—	1	1	1	1	—	—	—	—	4047 EF8
		Burnt Orange 70	—	—	—	1	1	1	1	—	—	—	—	4047 FK5
		Tan 70	—	—	—	1	1	1	1	—	—	—	—	4047 FT4
		Black 70	—	—	—	1	1	1	1	—	—	—	—	4047 DX9
		Gold 70	—	—	—	1	1	1	1	—	—	—	—	4047 FY4

CARLINES J - Challenger, B - Barracuda, V - Valiant, L - Dart, R - Belvedere - Satellite, W - Coronet - Charger, P - Plymouth, D - Dodge, C - Chrysler, Y - Imperial

AR Indicates use as required.

# Indicates parts not listed in any previous parts book.

Numerals in parentheses ( ) refer to notes.

★ Indicates change or addition.

Printed in U.S.A. January 1972

CODE	PART NAME		ENG. TYPE OR CU.IN.	V 1-2	B J 1-2	L 1-2	R 1-2	W 1-2	P 1-2	D 1-2	C 1	C 2	C 3	Y 1	PART NUMBER
8-33-0	**HORN CONTROLS Cont'd.**														
8-33-17	BUTTON Cont'd.														
	CAP, Strg. Wheel Ornament, w/o 3 Spoke Horn Button, w/o Rim Horn Switch, w/o Soft Rim Wheel	Dark Blue 71		1	—	1	—	—	—	—	—	—	—	—	4055 GB7
		Green 71		1	—	1	—	—	—	—	—	—	—	—	4055 GF7
		Tan 71		1	—	1	—	—	—	—	—	—	—	—	4055 GT6
		Black 71		1	—	1	—	—	—	—	—	—	—	—	4055 GX9
		Gold 71		1	—	1	—	—	—	—	—	—	—	—	4055 GY6
	BUTTON, Horn, w/o Rim Horn Switch, up to April 1971	Black 71		—	1	—	—	—	—	—	—	—	—	—	4003 GX9
	after April 1971	71		—	1	—	—	—	—	—	—	—	—	—	3575 564
	CAP, Strg. Wheel Ornament, w/o 3 Spoke Horn Button, w/o Soft Rim Wheel, w/o Rim Horn Switch, w/o Tilt Strg. Wheel	Dark Blue 71		—	—	—	1	1	—	—	—	—	—	—	4055 GB7
		Tan 71		—	—	—	1	1	—	—	—	—	—	—	4055 GT6
		Black 71		—	—	—	1	1	—	—	—	—	—	—	4055 GX9
8-33-20	PLATE, Strg. Wheel and Horn Ring Mtg., w/Partial Horn Ring, w/o Rim Horn Switch	70		1	—	1	—	—	—	—	—	—	—	—	3467 500
	Export	71		1	—	1	—	1	—	—	—	—	—	—	3467 500
	w/Full Horn Ring-Fleet, w/o Rim Horn Switch	70		—	—	—	1	1	—	—	—	—	—	—	3467 500
8-33-39	BUSHING, Horn Ring, w/Tilt-Tel. Strg. Wheel, w/o Rim Horn Switch	70	8	—	—	—	—	—	—	—	4	4	4	4	2950 182
8-33-46	TERMINAL, Strg. Wheel Horn Wire, w/Rim Horn Switch	71		1	1	1	1	1	—	—	—	—	—	—	3467 806
8-33-90	SWITCH, Horn, w/o Horn Ring, w/o Horn Rim Switch			1	1	1	1	1	—	—	—	—	—	—	2822 126
	w/o Horn Rim Switch, w/Horn Ring			1	1	1	1	1	1	1	1	1	1	1	2771 534
	SWITCH PACKAGE, Horn, w/3 Spoke Steering Button Wheel	71		1	—	1	1	1	1	1	1	1	1	—	=3620 872
	SWITCH, Horn Rim			1	1	1	1	1	—	—	—	—	—	—	3467 180
	w/o Tilt and Tilt-Telescopic Strg. Wheel			—	—	—	—	—	1	1	1	1	1	1	3467 179
	w/Tilt and Tilt-Telescopic Strg. Wheel			—	—	—	1	1	1	1	1	1	1	1	3467 181
	SCREW, w/o Rim Horn Switch			3	3	3	3	3	3	3	3	3	3	3	6028 281
8-33-114	CABLE, Horn Ground			1	—	1	1	1	1	1	1	1	1	1	2857 741
	WIRE, Strg. Wheel Horn, w/Rim Horn Switch			1	1	1	1	1	—	—	—	—	—	—	3467 182
	NUT, to Strg. Column	70		1	—	1	1	1	1	1	1	1	1	1	6027 403
8-33-118	CONTACT, Horn Ring and Feed Cable			—	1	—	—	—	—	—	—	—	—	—	2984 051
	Strg. Wheel Horn, w/Tilt-Tel. Strg. Wheel			—	—	–	—	—	—	—	1	1	1	1	2996 892
8-33-119	SPRING, Horn Contact Eyelet, w/Tilt and Tilt-Tel. Strg. Wheel			—	—	—	—	—	1	1	1	1	1	1	2996 897
8-33-121	RING and FEED CABLE, Horn Contact			1	—	1	1	1	1	1	1	1	1	—	2822 187
	RING, Horn Switch Contact, w/Rim Horn Switch			1	1	1	1	1	1	1	1	1	1	1	2947 874
8-33-122	EYELET, Horn Contact, w/Tilt Strg. Wheel			—	—	—	1	1	1	1	—	—	—	—	2996 896
8-33-128	RETAINER, Horn Contact Eyelet, w/Tilt Strg. Wheel			—	—	—	—	—	1	1	—	—	—	—	2996 898
8-33-164	RELAY and BRACKET, Horn, 12 Volt	70		1	—	1	—	—	—	—	—	—	—	—	2822 461
		70		—	1	—	—	—	1	1	1	1	1	1	2926 327
		70		—	—	—	1	1	—	—	—	—	—	—	2983 607

CODE	PART NAME	ENG. TYPE OR CU.IN.	V 1-2	B J 1-2	L 1-2	R 1-2	W 1-2	P 1-2	D 1-2	C 1	C 2	C 3	Y 1	PART NUMBER
	NOTE: For 1971 Models See Part Type Code 8-35-66													
8-34-0	**HEADLAMP**													
8-34-1	HEADLAMP, Single, Complete, B	70	1	1	1	—	—	—	—	—	—	—	—	2898 560-1
		71	1	—	1	—	—	—	—	—	—	—	—	2898 560-1
	Single, Complete, Exp., B	70	1	1	1	—	—	—	—	—	—	—	—	2898 562-3
		71	1	—	1	—	—	—	—	—	—	—	—	2898 562-3
	High Beam, J, W Charger and Charger R/T, P-H	70	—	1	—	1	1	1	1	1	1	1	1	2786 872-3
	High Beam, W except Charger and Charger R/T, P-K, P-T, P-E, P-L, P-M	70	—	—	—	—	1	1	—	—	—	—	—	2998 808-9
	High and Low Beam, J, W Charger and Charger R/T, P-H	70	—	1	—	1	1	1	1	1	1	1	1	2786 876-7
	High and Low Beam, Exp., J, W Charger and Charger R/T, P-H	70	—	1	—	1	1	1	1	1	1	1	1	2786 972-3
	High and Low Beam, W except Charger and Charger R/T, P-K, P-T, P-E, P-L, P-M	70	—	—	—	—	1	1	—	—	—	—	—	2998 810-1
	High and Low Beam, Exp., W except Charger and Charger R/T, P-K, P-T, P-E, P-L, P-M	70	—	—	—	—	1	1	—	—	—	—	—	2998 812-3
	High Beam, R 4D. and Sta. Wgn., W 2D.H.T. and Fastback, P-H, P-P	71	—	1	—	1	1	1	1	1	1	1	1	3443 176-7
	High Beam, R 2D.H.T., W 4D. and Sta. Wgn., P-K, P-T, P-E, P-L, P-M, D-S	71	—	—	—	1	1	1	1	—	—	—	—	3443 302-3
	High and Low Beam, R 4D. and Sta. Wgn., W 2D.H.T. and Fastback,	71	—	1	—	1	1	—	—	—	—	—	—	3443 172-3
	P-H, P-P	71	—	—	—	—	—	1	1	1	1	1	1	3573 784-5
	High and Low Beam, R 2D.H.T., W 4D. and Sta. Wgn.	71	—	—	—	1	1	—	—	—	—	—	—	3443 298-9
	P-K, P-T, P-E, P-L, P-M	71	—	—	—	—	—	1	—	—	—	—	—	3573 786-7
	High and Low Beam, Exp., R 4D. and Sta. Wgn., W 2D.H.T. and Fastback, P-H, P-P	71	—	1	—	1	1	1	—	1	1	1	1	3443 174-5
	High and Low Beam, Exp., R 2D.H.T., W 4D. and Sta. Wgn., P-K, P-T, P-E, P-L, P-M	71	—	—	—	1	1	1	—	—	—	—	—	3443 300-1
8-34-5	NUT, H/Lamp Bezel to Ext.	70	4	—	—	—	—	—	—	—	—	—	—	6027 012
	U/NUT, H/Lamp Bezel to Grille Lwr. Frame, J	70	—	AR	—	—	—	—	—	—	—	—	—	6026 634
	U/NUT, H/Lamp Bezel to Fender Side Panel, J	70	—	6	—	—	—	—	—	—	—	—	—	6026 634
	U/NUT, H/Lamp Bezel to H/Lamp Adapter	70	—	—	2	—	—	—	—	—	—	—	—	6024 695
	U/NUT, H/Lamp Bezel to H/Lamp Panel	70	—	—	—	4	—	—	—	—	—	—	—	6026 634
	U/NUT, H/Lamp Bezel Brkt., P-K, P-T, P-E, P-L, P-M	70	—	—	—	—	—	4	—	—	—	—	—	6026 636
	U/NUT, H/Lamp Bezel End Tie Plate, P-K, P-T, P-E, P-L, P-M	70	—	—	—	—	—	4	—	—	—	—	—	6026 634
	U/NUT, H/Lamp Bezel Outer Att., D-H D-P	70	—	—	—	—	—	—	4	—	—	—	—	6026 634
	U/NUT, H/Lamp Bezel Att., D-H, D-P	70	—	—	—	—	—	—	4	—	—	—	—	6027 567
	U/NUT, H/Lamp Hsg. to Grille Mtg. Panel	70	—	—	—	—	—	—	—	4	—	4	—	6025 507
	U/NUT, H/Lamp Hsg. to Grille Mtg. Brkt.	70	—	—	—	—	—	—	—	—	4	—	—	6025 507
8-34-8	BUZZER and BRACKET, H/Lamp on Warning	71	1	1	1	—	—	—	—	1	1	1	1	3579 201
		71	—	—	—	1	1	—	—	—	—	—	—	3579 202
		71	—	—	—	—	—	1	1	—	—	—	—	3579 203
8-34-28	ADAPTER, H/Lamp, B	71	—	1	—	—	—	—	—	—	—	—	—	3442 638-9
			—	—	1	—	—	—	—	—	—	—	—	2998 304-5

CARLINES J - Challenger, B - Barracuda, V - Valiant, L - Dart, R - Belvedere - Satellite, W - Coronet - Charger, P - Plymouth, D - Dodge, C - Chrysler, Y - Imperial

AR Indicates use as required.

Numerals in parentheses ( ) refer to notes.

# Indicates parts not listed in any previous parts book.

★ Indicates change or addition.

Printed in U.S.A. January 1972

8-34-0 HEADLAMP Cont'd.

CODE	PART NAME		ENG. TYPE OR CU.IN.	V 1-2	B J 1-2	L 1-2	R 1-2	W 1-2	P 1-2	D 1-2	C 1	C 2	C 3	Y 1	PART NUMBER
8-34-28	ADAPTER Cont'd.														
	2D.H.T.		71	—	—	—	2	—	—	—	—	—	—	—	3442 280
	4D. and Sta. Wgn.		71	—	—	—	2	2	—	—	—	—	—	—	3442 140
	2D.H.T., w/o Concealed H/Lamp		71	—	—	—	—	2	—	—	—	—	—	—	3442 358
	w/Concealed H/Lamp, W-M, W-S, 2D.H.T., W Fastback		71	—	—	—	—	2	—	—	—	—	—	—	3443 192
8-34-31	BRACKET, H/Lamp Panel, B		71	—	2	—	—	—	—	—	—	—	—	—	3442 991
	R 4D. and Sta. Wgn.		71	—	—	2	2	—	—	—	—	—	—	—	2949 368
	H/Lamp Bezel Bumper Mtg., 2 D.H.T.	Upper	71	—	—	—	2	—	—	—	—	—	—	—	3443 238
	2 D.H.T.	Lwr.	71	—	—	—	2	—	—	—	—	—	—	—	3443 241
	4 D. and Sta. Wgn.		71	—	—	—	—	1	—	—	—	—	—	—	3573 838-9
	H/Lamp Door, Charger and Charger R/T	Inner	70	—	—	—	—	1	—	—	—	—	—	—	2998 716-7
	P-L 2D. w/Fury Spec. Spring, P-H	Inner	70	—	—	—	—	—	1	—	—	—	—	—	2998 664-5
		Outer	70	—	—	—	—	—	1	—	—	—	—	—	#2998 414-5
	H/Lamp Bezel Bumper Mtg., P-K, P-T, P-E, P-L, P-M	Outer	71	—	—	—	—	—	2	—	—	—	—	—	3442 712
	except D-H	Upper	71	—	—	—	—	—	—	1	—	—	—	—	3443 462-3
		Lwr.	71	—	—	—	—	—	—	2	—	—	—	—	3443 460
	H/Lamp Door Hsg. Bumper			—	—	—	—	—	—	—	—	—	—	2	2898 882
8-34-32	BRACE, H/Lamp Adapter Yoke, J		70	—	1	—	—	—	—	—	—	—	—	—	2998 112-3
	H/Lamp Plate Yoke Brkt.		70	—	—	—	—	—	1	—	—	—	—	—	2949 942-3
			71	—	—	—	—	—	1	—	—	—	—	—	3443 432-3
			70	—	—	—	—	—	—	1	—	—	—	—	2949 806-7
			71	—	—	—	—	—	—	2	—	—	—	—	3442 668
			70	—	—	—	—	—	—	—	1	—	1	—	2998 600-1
	C-E, C-L		71	—	—	—	—	—	—	—	1	—	—	—	2998 600-1
				—	—	—	—	—	—	—	—	1	—	—	2998 590-1
	H/Lamp Hsg. Yoke Brkt., C-P		71	—	—	—	—	—	—	—	1	—	1	—	3443 774-5
8-34-37	TEXTURE, H/Lamp Bezel, C-P	Outer	70	—	—	—	—	—	—	—	1	—	1	—	2949 724-5
8-34-40	BEZEL, H/Lamp		70	1	—	—	—	—	—	—	—	—	—	—	2998 028-9
	V-L 4 D., V-L Fastback w/o Spring Spec. Duster Pkg., V-H		71	1	—	—	—	—	—	—	—	—	—	—	3573 718-9
	V-L Fastback, w/Spring Spec. Duster Pkg., V-S		71	1	—	—	—	—	—	—	—	—	—	—	3443 222-3
	B		70	—	1	—	—	—	—	—	—	—	—	—	2998 156-7
	B-P, B-S		71	—	4	—	—	—	—	—	—	—	—	—	3442 939
	B-H		71	—	4	—	—	—	—	—	—	—	—	—	3442 008
	J-H		70	—	1	—	—	—	—	—	—	—	—	—	2949 646-7
	J-S		70	—	1	—	—	—	—	—	—	—	—	—	2998 146-7
	J-H		71	—	1	—	—	—	—	—	—	—	—	—	3442 012-3
	J-H w/Trans. AM, J-S		71	—	1	—	—	—	—	—	—	—	—	—	3443 430-1
			70	—	—	1	—	—	—	—	—	—	—	—	2949 550-1
			71	—	—	1	—	—	—	—	—	—	—	—	3573 670-1
	R-L, R-H		70	—	—	—	1	—	—	—	—	—	—	—	2998 010-1
	R-M		70	—	—	—	1	—	—	—	—	—	—	—	2998 012-3
	R-P, R-S		70	—	—	—	1	—	—	—	—	—	—	—	2998 014-5
	4 D. and Sta. Wgn., R-K, R-T, R-L		71	—	—	—	1	—	—	—	—	—	—	—	#3442 014-5
	2D.H.T., R-M, R-P, R-S		71	—	—	—	1	—	—	—	—	—	—	—	3442 018-9
	4D. and Sta. Wgn., R-H, R-P		71	—	—	—	1	—	—	—	—	—	—	—	3442 156-7
	2D.H.T., R-H		71	—	—	—	1	—	—	—	—	—	—	—	3443 076-7
	4 D. and Sta. Wgn., W-K, W-T, W-L, W-H, W-P		71	—	—	—	—	1	—	—	—	—	—	—	3442 030-1
	P-K, P-T, P-E, P-L, P-M		70	—	—	—	—	—	1	—	—	—	—	—	3443 226-7
	P-K, P-T, P-E, P-L, P-M		71	—	—	—	—	—	1	—	—	—	—	—	3573 852-3
	D-H, D-P		70	—	—	—	—	—	—	1	—	—	—	—	2949 770-1
	D-K, D-T, D-E, D-L, D-M, D-S		71	—	—	—	—	—	—	1	—	—	—	—	3443 266-7
	D-H		71	—	—	—	—	—	—	1	—	—	—	—	3442 920-1

CARLINES J - Challenger, B - Barracuda, V - Valiant, L - Dart, R - Belvedere - Satellite, W - Coronet - Charger, P - Plymouth, D - Dodge, C - Chrysler, Y - Imperial

AR Indicates use as required.

Numerals in parentheses ( ) refer to notes.

# Indicates parts not listed in any previous parts book.

★ Indicates change or addition.

Printed in U.S.A. January 1972

8-34-0 HEADLAMP Cont'd.

CODE	PART NAME	ENG. TYPE OR CU.IN.	V 1-2	B J 1-2	L 1-2	R 1-2	W 1-2	P 1-2	D 1-2	C 1	C 2	C 3	Y 1	PART NUMBER
8-34-40	BEZEL Cont'd.													
	C-E, C-L	70	—	—	—	—	—	—	—	1	—	—	—	2949 688-9
	C-E, C-L	71	—	—	—	—	—	—	—	1	—	—	—	3443 716-7
	C-P	70	—	—	—	—	—	—	—	1	—	1	—	2949 348-9
	C-P	71	—	—	—	—	—	—	—	1	—	1	—	3443 722-3
			—	—	—	—	—	—	—	—	1	—	—	2949 710-1
		70	—	—	—	—	—	—	—	—	—	—	1	2898 168-9
		71	—	—	—	—	—	—	—	—	—	—	1	3443 580-1
	DOOR and TEXTURE, H/Lamp, Charger and Charger R/T	70	—	—	—	—	1	—	—	—	—	—	—	2998 550-1
	W-M 2D.H.T., W-P Fastback, W-S 2D.H.T.	71	—	—	—	—	1	—	—	—	—	—	—	3442 868-9
	P-H	70	—	—	—	—	—	1	—	—	—	—	—	2998 538-9
	P-M 4 D.H.T. and Fastback, P-H, P-P	71	—	—	—	—	—	1	—	—	—	—	—	3442 840-1
		70	—	—	—	—	—	—	—	—	1	—	—	2998 148-9
		71	—	—	—	—	—	—	—	—	1	—	—	3443 710-1
		70	—	—	—	—	—	—	—	—	—	—	1	2949 964-5
		71	—	—	—	—	—	—	—	—	—	—	1	3443 730-1
	PANEL, H/Lamp	70	—	—	—	1	—	—	—	—	—	—	—	2998 348-9
	except Charger and Charger R/T	70	—	—	—	—	2	—	—	—	—	—	—	3443 162
	Mtg., D-H	71	—	—	—	—	—	—	2	—	—	—	—	3442 772
	PLATE, H/Lamp Mtg. Panel, P-K, P-T, P-E, P-L, P-M	70	—	—	—	—	—	1	—	—	—	—	—	2998 298-9
	P-K, P-T, P-E, P-L, P-M	71	—	—	—	—	—	1	—	—	—	—	—	3442 854-5
	P-L 2D. w/Fury Spec. Spring, P-H	70	—	—	—	—	—	1	—	—	—	—	—	2998 780-1
	P-H, P-P	71	—	—	—	—	—	1	—	—	—	—	—	3443 294-5
		70	—	—	—	—	—	—	1	—	—	—	—	2998 270-1
	D-K, D-T, D-E, D-L, D-M, D-S	71	—	—	—	—	—	—	2	—	—	—	—	3442 660
		70	—	—	—	—	—	—	—	—	—	—	1	2949 306-7
		71	—	—	—	—	—	—	—	—	—	—	1	3443 736-7
	BUSHING, Door Hsg. Drive End		—	—	—	—	—	—	—	—	2	—	2	6027 280
	BUSHING, Door Idler End		—	—	—	—	—	—	—	—	2	—	—	6027 280
	BUSHING, Door Idler End		—	—	—	—	—	—	—	—	—	—	2	6027 279
8-34-42	MOULDING, H/Lamp Bezel, B	70	—	1	—	—	—	—	—	—	—	—	—	3443 214-5
8-34-44	APPLIQUE, H/Lamp Bezel Outer Lower, P-K, P-T, P-E, P-L, P-M	71	—	—	—	—	—	1	—	—	—	—	—	3442 722-3
8-34-45	BAR, H/Lamp Door Torsion, P-L 2D. w/Fury Spring Spec., P-H	70	—	—	—	—	—	1	—	—	—	—	—	2998 888
	W-M 2D.H.T., W-P Fastback, W-S 2D.H.T.	71	—	—	—	—	1	—	—	—	—	—	—	2998 895
	P-M 4 D.H.T. and Fastback, P-H, P-P	71	—	—	—	—	—	1	—	—	—	—	—	2998 888
			—	—	—	—	—	—	—	—	1	—	—	2998 892
			—	—	—	—	—	—	—	—	—	—	1	2998 895
	RETAINER	70	—	—	—	—	—	2	—	—	2	—	2	6027 292
8-34-48	EXTENSION, H/Lamp Door Inner Brkt. Charger and Charger R/T	70	—	—	—	—	2	—	—	—	—	—	—	2998 606
	H/Lamp Bezel, D-H	71	—	—	—	—	—	—	1	—	—	—	—	3442 770-1
	H/Lamp Door	71	—	—	—	—	—	—	—	—	1	—	—	3443 712-3
8-34-50	CRANK, H/Lamp Door, W Charger and Charger R/T, P-H	70	—	—	—	—	2	2	—	—	—	—	—	2998 884
	W-M 2 D.H.T., W-P Fastback, W-S 2 D.H.T., P-M 4 D.H.T. and Fastback, P-H, P-P	71	—	—	—	—	2	2	—	—	—	—	—	2998 890
			—	—	—	—	—	—	—	—	2	—	—	2998 890
			—	—	—	—	—	—	—	—	—	—	2	2998 894
8-34-52	BUMPER, H/Lamp Door Stop, Charger and Charger R/T	70	—	—	—	—	4	—	—	—	—	—	—	2785 824
	W-M 2D.H.T., W-P Fastback, W-S 2D.H.T.	71	—	—	—	—	4	—	—	—	4	—	—	2785 824

CARLINES J - Challenger, B - Barracuda, V - Valiant, L - Dart, R - Belvedere - Satellite, W - Coronet - Charger, P - Plymouth, D - Dodge, C - Chrysler, Y - Imperial

AR Indicates use as required.

# Indicates parts not listed in any previous parts book.

Numerals in parentheses ( ) refer to notes.

★ Indicates change or addition.

Printed in U.S.A. January 1972

CODE	PART NAME	ENG. TYPE OR CU.IN.	V 1-2	B J 1-2	L 1-2	R 1-2	W 1-2	P 1-2	D 1-2	C 1	C 2	C 3	Y 1	PART NUMBER
8-34-0	**HEADLAMP Cont'd.**													
8-34-52	BUMPER Cont'd.													
	H/Lamp Door, P-H, P-P		—	—	—	—	—	6	—	—	—	—	—	2785 824
	Rotating H/Lamp Motor		—	—	—	—	—	—	—	—	2	—	—	2842 869
	H/Lamp Door Hsg.	70	—	—	—	—	—	—	—	—	4	—	—	2785 824
			—	—	—	—	—	—	—	—	—	—	4	2785 824
8-34-53	BUSHING, H/Lamp Door, Charger and Charger R/T Inboard	70	—	—	—	—	2	—	—	—	—	—	—	2998 554
	Outboard	70	—	—	—	—	2	—	—	—	—	—	—	2998 553
	H/Lamp Door Arm, W Charger and Charger R/T, P-H Inner	70	—	—	—	—	2	2	—	—	—	—	—	2998 554
	Outer	70	—	—	—	—	2	2	—	—	—	—	—	2998 553
	P-M 4 D.H.T. and Fastback, P-H, P-P Inner	71	—	—	—	—	—	2	—	—	—	—	—	2998 554
8-34-54	MEDALLION, H/Lamp Door, Charger	70	—	—	—	—	1	—	—	—	—	—	—	2998 279
	NAME PLATE, H/Lamp Door Charger R/T	70	—	—	—	—	1	—	—	—	—	—	—	2998 510
	NAME PLATE, H/Lamp Door, 500, W-P CHARGER Lt.	70	—	—	—	—	1	—	—	—	—	—	—	3443 093
	NAME PLATE, H/Lamp Door, Imperial Lt.	70	—	—	—	—	—	—	—	—	—	—	1	2949 735
	NUT	70	—	—	—	—	—	—	—	—	—	—	2	6026 898
8-34-58	DECAL, Rotating H/Lamp Door, P-M 4 D.H.T. and Fastback, P-H, P-P	71	—	—	—	—	—	1	—	—	—	—	—	2998 799
	Hood Lock V/Support Yoke Plate Rotating H/Lamp Door	70	—	—	—	—	—	—	—	—	1	—	—	2998 799
	Hood Lock Plate Rotating H/Lamp Door	70	—	—	—	—	—	—	—	—	—	—	1	2998 799
8-34-60	SHIELD, H/Lamp Bezel, 2 D.H.T.	71	—	—	—	1	—	—	—	—	—	—	—	3443 052-3
	2 D.H.T.	71	—	—	—	—	1	—	—	—	—	—	—	= 3442 618-9
	4 D. and Sta. Wgn.	71	—	—	—	—	1	—	—	—	—	—	—	3442 622-3
	H/Lamp, except Charger and Charger R/T	70	—	—	—	—	1	—	—	—	—	—	—	2998 872-3
	Bezel to Tab., P-K, P-T, P-E, P-L, P-M	70	—	—	—	—	—	1	—	—	—	—	—	2998 668-9
	H/Lamp Bezel, P-K, P-T, P-E, P-L P-M	71	—	—	—	—	—	1	—	—	—	—	—	3443 346-7
8-34-63	RETAINER, H/Lamp Bezel		—	4	—	—	—	—	—	—	—	—	—	2998 734
	H/Lamp Mtg. Plate Shield Ext., P-H	70	—	—	—	—	—	6	—	—	—	—	—	2898 909
	TAPE, H/Lamp Bezel, J	71	—	1	—	—	—	—	—	—	—	—	—	3443 428-9
8-34-96	SCREW, H/Lamp Bezel to Ext.	70	4	—	—	—	—	—	—	—	—	—	—	6027 176
	Bezel to Grille, J-S, D-H, D-P	70	2	2	—	—	—	—	4	—	—	—	—	6025 974
	H/Lamp Bezel, B	70	—	4	—	—	—	—	—	—	—	—	—	6028 326
	H/Lamp Bezel, B	70	—	4	—	—	—	—	—	—	—	—	—	6028 327
	Bezel to Grille Lwr. Frame, J	70	—	AR	—	—	—	—	—	—	—	—	—	6028 754
	H/Lamp Bezel to Grille	70	—	—	—	6	4	—	—	—	—	—	—	6028 597
	H/Lamp Panel to Fender H/Lamp Panel	70	—	—	2	—	—	—	—	—	—	—	—	6025 312
	H/Lamp Dr. to Grille, Charger and Charger R/T Outboard		—	—	—	—	2	—	—	—	—	—	—	2785 728
	Bezel Shield Att., W except Charger and Charger R/T, P-K, P-T, P-E, P-L, P-M	70	—	—	—	—	8	8	—	—	—	—	—	6026 501
	Bezel to Brkt., P-K, P-T, P-E, P-L, P-M	70	—	—	—	—	—	4	—	—	—	—	—	6028 690
	H/Lamp Door Arm Outer Brkt., P-M 4 D.H.T. and Fastback, P-H P-P	71	—	—	—	—	—	2	—	—	—	—	—	2785 728
	H/Lamp Bezel to H/Lamp Hsg.		—	—	—	—	—	—	—	—	6	—	—	6025 909
	H/Lamp Bezel to Grille		—	—	—	—	—	—	—	—	—	—	10	6027 213
	H/Lamp Dr. Outer Brkt., P-H		—	—	—	—	—	2	—	—	—	—	—	2785 728
	H/Lamp Dr. Adj.		—	—	—	—	—	—	—	—	2	—	2	6027 382
	H/Lamp Dr. to Hsg.		—	—	—	—	—	—	—	—	—	—	2	2785 728
	H/Lamp Sealed Beam Unit Seat to Ret. Ring Mtg., B	70	6	6	6	—	—	—	—	—	—	—	—	6027 435
	Sealed Beam Unit Ret. Ring Mtg., J	70	—	AR	—	AR	AR	AR	AR	AR	AR	AR	AR	6027 435
	Sealed Beam Unit Seat Adj. Spring Mtg.,													

CARLINES: J - Challenger, B - Barracuda, V - Valiant, L - Dart, R - Belvedere - Satellite, W - Coronet - Charger, P - Plymouth, D - Dodge, C - Chrysler, Y - Imperial

AR Indicates use as required.

# Indicates parts not listed in any previous parts book.

Numerals in parentheses ( ) refer to notes.

★ Indicates change or addition.

Printed in U.S.A. January 1972

8-34-0 HEADLAMP Cont'd.

CODE	PART NAME	ENG. TYPE OR CU.IN.	V 1-2	B J 1-2	L 1-2	R 1-2	W 1-2	P 1-2	D 1-2	C 1	C 2	C 3	Y 1	PART NUMBER
8-34-96	SCREW Cont'd.													
	B	70	2	2	2	—	—	—	—	—	—	—	—	6027 517
	J		—	4	—	4	4	4	4	—	—	—	4	6027 517
	STUD, H/Lamp Hsg. to Grille Mtg.		—	—	—	—	—	—	—	4	4	4	—	6027 516
	Panel Brkt.	70	—	—	—	—	—	—	—	4	—	—	—	6025 772
	SCREW and WASHER, Hsg. Yoke Brkt. Brace to Hsg.	70	—	—	—	—	—	—	—	4	4	4	—	6025 329
	Hsg. Yoke Brkt. Brace to Brkt.	70	—	—	—	—	—	—	—	4	4	4	—	6025 329
	STUD, H/Lamp Hsg. to Grille Mtg. Panel	70	—	—	—	—	—	—	—	4	—	4	—	6025 772
8-34-115	ACTUATOR, H/Lamp Washer Vacuum, W-M, W-S, 2D.H.T., W-P Fastback, P-M 4D.H.T. and Fastback, P-H P-P	71	—	—	—	—	2	2	—	—	—	—	2	3514 449
8-34-127	BAR, Dr. Actuator, Charger and Charger R/T	70	—	—	—	—	2	—	—	—	—	—	—	2998 886
8-34-128	RETAINER, H/Lamp Door Crank, Charger and Charger R/T	70	—	—	—	—	2	—	—	—	—	—	—	1922 183
	RING, H/Lamp Door Actuator Pin Ret., P-L 2D. w/Fury Spring Spec., P-H W-M 2 D.H.T., W-P Fastback, W-S 2 D-H.T., P-M 4 D.H.T. and Fastback, P-H, P-P	70	—	—	—	—	—	2	—	—	2	—	2	1922 183
		71	—	—	—	—	2	2	—	—	2	—	2	1922 183
8-34-175	SEALED BEAM UNIT, H/Lamp, B	70	2	2	2	—	—	—	—	—	—	—	—	152 291
		71	2	—	2	—	—	—	—	—	—	—	—	152 291
	Exp., B	70	2	2	2	—	—	—	—	—	—	—	—	152 293
	Exp.,	71	2	—	2	—	—	—	—	—	—	—	—	152 293
	High Beam		—	2	—	2	2	2	2	2	2	2	2	152 285
	High and Low Beam		—	2	—	2	2	—	—	—	—	—	—	152 286
	High and Low Beam		—	—	—	—	—	2	2	2	2	2	2	= 152 600
	High and Low Beam, Exp.		—	2	—	2	2	2	2	2	2	2	2	152 287
8-34-176	SEAT and SCREW, H/Lamp Sealed Beam Unit, B	70	1	1	1	—	—	—	—	—	—	—	—	2898 568-9
		71	1	—	1	—	—	—	—	—	—	—	—	2898 568-9
	High Beam, J	70	—	1	—	1	1	1	1	1	1	1	1	2786 882-3
		71	—	1	—	1	1	1	1	1	1	1	1	3443 120-1
	High and Low Beam, J	70	—	1	—	1	1	1	1	1	1	1	1	2786 884-5
		71	—	1	—	1	1	1	1	1	1	1	1	3443 124-5
8-34-177	SPRING, Sealed Beam Unit Mtg. Seat Adj.		2	—	2	—	—	—	—	—	—	—	—	2445 845
	B	70	—	2	—	—	—	—	—	—	—	—	—	2445 845
	B	71	—	4	—	—	—	—	—	—	—	—	—	2445 845
	J		—	4	—	4	4	4	4	4	4	4	4	2445 845
8-34-178	SCREW and NUT, H/Lamp Adj.		4	—	4	—	—	—	—	—	—	—	—	2785 842
	B	70	—	4	—	—	—	—	—	—	—	—	—	2785 842
	B	71	—	8	—	—	—	—	—	—	—	—	—	2785 842
	J		—	8	—	8	8	8	8	—	—	—	—	2785 842
		70	—	—	—	—	—	—	—	8	8	8	8	2785 842
		71	—	—	—	—	—	—	—	8	8	8	8	3573 797
8-34-180	RING and LUG, Sealed Beam Unit Ret.	3 Tabs	2	—	2	—	—	—	—	—	—	—	—	2426 312
	B	3 Tabs 70	—	2	—	—	—	—	—	—	—	—	—	2426 312
	B	3 Tabs 71	—	4	—	—	—	—	—	—	—	—	—	2449 525
	J	3 Tabs	—	4	—	4	4	4	4	4	4	4	4	2449 525
	W except Charger and Charger R/T, P-K, P-T, P-E, P-L, P-M	5 Tabs 70	—	—	—	—	4	4	—	—	—	—	—	2998 682
	R 2 D.H.T., W 4 D. and Sta. Wgn., P-K, P-T, P-E, P-L, P-M, D-S	5 Tabs 71	—	—	—	4	4	4	4	—	—	—	—	2998 682
8-34-241	TERMINAL, Rotating H/Lamp Wiring, W Charger and Charger R/T, P-H	70	—	—	—	—	1	1	—	—	1	—	—	2926 594

CARLINES J - Challenger, B - Barracuda, V - Valiant, L - Dart, R - Belvedere - Satellite, W - Coronet - Charger, P - Plymouth, D - Dodge, C - Chrysler, Y - Imperial

AR Indicates use as required.

# Indicates parts not listed in any previous parts book.

Numerals in parentheses ( ) refer to notes.

★ Indicates change or addition.

Printed in U.S.A. January 1972

CODE	PART NAME	ENG. TYPE OR CU.IN.	V 1-2	B J 1-2	L 1-2	R 1-2	W 1-2	P 1-2	D 1-2	C 1	C 2	C 3	Y 1	PART NUMBER
8-34-0	**HEADLAMP Cont'd.**													
8-34-278	GEAR and GASKET PACKAGE, Rotating H/Lamp, W Charger and Charger R/T	70	—	—	—	—	1	—	—	—	1	—	1	3420 922
	P-H	70	—	—	—	—	—	1	—	—	—	—	—	3420 910
8-34-280	MOTOR, Rotating H/Lamp, W Charger and Charger R/T	70	—	—	—	—	1	—	—	—	1	—	1	3431 438
	P-L 2D. w/Fury Spring Spec., P-H W-M 2 D.H.T., W-P Fastback, W-S 2 D.H.T., P-M 4 D.H.T. and Fastback, P-H, P-P	70	—	—	—	—	—	1	—	—	—	—	—	3431 437
		71	—	—	—	—	1	1	—	—	—	—	—	3431 437
		71	—	—	—	—	—	—	—	—	1	—	1	3431 438
	SCREW, Mtg.	70	—	—	—	—	3	3	—	—	3	—	3	6028 654
8-34-281	SWITCH, H/Lamp Washer, W-M 2D.H.T., W-P Fastback, W-S 2D.H.T.	71	—	—	—	—	1	—	—	—	—	—	—	3488 516
8-34-282	RELAY and BRACKET, Concealed H/Lamp, W Charger and Charger R/T, P-H	70	—	—	—	—	1	1	—	—	—	—	—	2983 605
	H/Lamp Door Cover, W-P 2D.H.T., W Fastback, W-S 2D.H.T.	71	—	—	—	—	1	—	—	—	—	—	—	3513 489
	RELAY, Rotating H/Lamp	70	—	—	—	—	—	—	—	—	1	—	1	2983 414
	RELAY and BRACKET, Concealed H/Lamp, P-M 4 D.H.T. and Fastback, P-H, P-P	71	—	—	—	—	—	1	—	—	—	—	—	2983 605
	H/Lamp Washer, P-M 4D.H.T. and Fastback, P-H, P-P	71	—	—	—	—	—	1	—	—	—	—	—	3513 491
	H/Lamp Door Cover	71	—	—	—	—	—	—	—	—	1	—	1	3513 487
	H/Lamp Washer	71	—	—	—	—	—	—	—	—	—	—	1	3513 379
8-34-285	FLASHER, H/Lamp Washer System, W-M 2 D.H.T., W-P Fastback, W-S 2 D.H.T., P-M 4 D.H.T. and Fastback, P-H, P-P	71	—	—	—	—	1	1	—	—	—	—	1	3488 269
8-34-287	PIVOT, H/Lamp Washer, W-M 2D.H.T., W-P Fastback, W-S 2D.H.T.	71	—	—	—	—	1	—	—	—	—	—	—	3431 302-3
	P-M 4D.H.T. and Fastback, P-H, P-P	71	—	—	—	—	—	1	—	—	—	—	—	3431 300-1
		71	—	—	—	—	—	—	—	—	—	—	1	3431 304-5
8-34-289	BEZEL, H/Lamp Washer Switch, W-M 2D.H.T., W-P Fastback, W-S 2D.H.T.	71	—	—	—	—	1	—	—	—	—	—	—	3488 525
8-34-291	BRACKET, H/Lamp Door Motor Mtg., P-H	70	—	—	—	—	—	1	—	—	—	—	—	2998 509
	W-M, W-S, 2D.H.T., W-P Fastback	71	—	—	—	—	1	—	—	—	—	—	—	3442 876
	P-M 4D.H.T. and Fastback, P-H, P-P, up to approx. Sept., 1970	71	—	—	—	—	—	1	—	—	—	—	—	2998 509
	after approx. Sept., 1970	71	—	—	—	—	—	1	—	—	—	—	—	3573 794
	H/Lamp Door Actuator Mtg. Mtg.	70	—	—	—	—	—	—	—	—	—	—	1	2949 204
8-34-296	SPRING, H/Lamp Door Ret. W-M 2 D.H.T., W-P Fastback, W-S 2 D.H.T., P-M 4 D.H.T. and Fastback, P-H, P-P	71	—	—	—	—	2	2	—	—	—	—	2	3443 144
8-34-314	BRUSH, H/Lamp Washer Pivot, W-M 2 D.H.T., W-P Fastback, W-S 2 D.H.T., P-M 4 D.H.T. and Fastback, P-H, P-P	71	—	—	—	—	2	2	—	—	—	—	2	3431 308-9
8-34-315	SPRING, H/Lamp Washer Brush Mtg., W-M 2 D.H.T., W-P Fastback, W-S 2 D.H.T., P-M 4 D.H.T. and Fastback, P-H, P-P	71	—	—	—	—	2	2	—	—	—	—	2	3431 321
8-34-316	CLIP, H/Lamp Washer Brush Mtg., W-M 2 D.H.T., W-P Fastback, W-S 2 D.H.T., P-M 4 D.H.T. and Fastback, P-H, P-P	71	—	—	—	—	2	2	—	—	—	—	2	3431 325

CARLINES J - Challenger, B - Barracuda, V - Valiant, L - Dart, R - Belvedere - Satellite, W - Coronet - Charger, P - Plymouth, D - Dodge, C - Chrysler, Y - Imperial

AR Indicates use as required.

# Indicates parts not listed in any previous parts book.

Numerals in parentheses ( ) refer to notes.

★ Indicates change or addition.

Printed in U.S.A. January 1972

8-34-0 HEADLAMP Cont'd.

CODE	PART NAME	ENG. TYPE OR CU.IN.	V 1-2	B J 1-2	L 1-2	R 1-2	W 1-2	P 1-2	D 1-2	C 1	C 2	C 3	Y 1	PART NUMBER
8-34-317	PUMP, H/Lamp Washer, W-M, W-S, 2D.H.T., W-P Fastback, P-M 4D.H.T. and Fastback, P-H, P-P	71	—	—	—	—	1	1	—	—	—	—	1	2809 013
8-34-318	VALVE, H/Lamp Washer Solenoid, W-M, W-S, 2D.H.T., W-P Fastback, P-M 4D.H.T. and Fastback, P-H, P-P	71	—	—	—	—	1	1	—	—	—	—	1	3514 450
8-34-320	NOZZLE and BRACKET, H/Lamp Washer, W-M 2 D.H.T., W-P Fastback, W-S 2 D.H.T., P-M 4 D.H.T. and Fastback, P-H, P-P	71	—	—	—	—	2	2	—	—	—	—	2	3431 316-7
8-34-323	RESERVOIR, w/Seal Cap and Brkt., H/Lamp Washer, W-M, W-S, 4D.H.T., W-P Fastback	71	—	—	—	—	1	—	—	—	—	—	—	3431 410
	P-M 4 D.H.T. and Fastback, P-H, P-P	71	—	—	—	—	—	1	—	—	—	—	—	3431 416
		71	—	—	—	—	—	—	—	—	—	—	1	3431 411
8-34-324	CAP, H/Lamp Washer Reservoir, W-M 2 D.H.T., W-P Fastback, W-S 2 D.H.T., P-M 4 D.H.T. and Fastback, P-H, P-P	71	—	—	—	—	1	1	—	—	—	—	1	2497 500
8-34-325	FILTER, H/Lamp Washer, W-M, W-S, 2D.H.T., W-P Fastback, P-M 4D.H.T. and Fastback, P-H, P-P	71	—	—	—	—	1	1	—	—	—	—	1	2771 976
8-34-326	TUBING, H/Lamp Washer Reservoir to Tee, W-M 2D.H.T., W-P Fastback, W-S 2D.H.T.	71	—	—	—	—	1	—	—	—	—	—	1	3431 093
	P-M 4D.H.T. and Fastback, P-H, P-P	71	—	—	—	—	—	1	—	—	—	—	—	2197 650
	H/Lamp Washer Solenoid to Rt. Actuator, W-M 2 D.H.T., W-P Fastback, W-S 2 D.H.T., P-M 4 D.H.T. and Fastback, P-H, P-P	71	—	—	—	—	AR	AR	—	—	—	—	AR	3431 451
	Val. Manf. to Solenoid H/Lamp Washer, W-M 2 D.H.T., W-P Fastback, W-S 2 D.H.T., P-M 4 D.H.T. and Fastback, P-H, P-P	71	—	—	—	—	AR	AR	—	—	—	—	AR	2448 620
8-34-327	TEE, H/Lamp Washer Tubing, W-M 2 D.H.T., W-P Fastback, W-S 2 D.H.T., P-M 4 D.H.T. and Fastback, P-H, P-P	71	—	—	—	—	1	1	—	—	—	—	1	1523 160
8-34-328	PUSH NUT, H/Lamp Washer Shaft Mtg., W-M, W-S, 2D.H.T., W-P Fastback, P-M 4D.H.T. and Fastback, P-H, P-P	71	—	—	—	—	2	2	—	—	—	—	2	2197 678
	H/Lamp Washer Actuator and Crank Mtg., W-M 2 D.H.T., W-P Fastback, W-S 2 D.H.T., P-M 4 D.H.T. and Fastback, P-H, P-P	71	—	—	—	—	2	2	—	—	—	—	2	2076 405
8-34-362	HOUSING, H/Lamp Door, W-M 2D.H.T., W-P Fastback, W-S 2D.H.T.	71	—	—	—	—	1	—	—	—	—	—	—	3442 870-1
	H/Lamp, C-E, C-L	70	—	—	—	—	—	—	—	1	—	—	—	2949 690-1
	C-E, C-L	71	—	—	—	—	—	—	—	1	—	—	—	3443 718-9
	C-P	70	—	—	—	—	—	—	—	1	—	1	—	2949 726-7
	C-P	71	—	—	—	—	—	—	—	1	—	1	—	3443 724-5
			—	—	—	—	—	—	—	—	1	—	—	2949 712-3
	H/Lamp Door Ext.	71	—	—	—	—	—	—	—	—	1	—	—	3443 714-5
	H/Lamp Door	Rt.	—	—	—	—	—	—	—	—	—	—	1	2898 512
		Lt.	—	—	—	—	—	—	—	—	—	—	1	2949 621

CARLINES J - Challenger, B - Barracuda, V - Valiant, L - Dart, R - Belvedere - Satellite, W - Coronet - Charger, P - Plymouth, D - Dodge, C - Chrysler, Y - Imperial

AR Indicates use as required.

Numerals in parentheses ( ) refer to notes.

# Indicates parts not listed in any previous parts book.

★ Indicates change or addition.

Printed in U.S.A. January 1972

CODE	PART NAME	ENG. TYPE OR CU.IN.	V 1-2	B J 1-2	L 1-2	R 1-2	W 1-2	P 1-2	D 1-2	C 1	C 2	C 3	Y 1	PART NUMBER
8-35-0	**IGNITION COIL AND SWITCH**													
8-35-4	COIL, Ignition		1	1	1	1	1	1	1	1	1	1	1	2495 531
	C/WASHER, Mtg., w/426 Eng.	8	—	1	—	1	1	—	—	—	—	—	—	6022 185
	C/WASHER, w/340 Eng., w/3-2 Bbl. Carb.	8	—	2	—	—	—	—	—	—	—	—	—	6022 181
	C/WASHER, Mtg., w/440 Eng., w/3-2 Bbl. Carb.	8	—	2	—	2	2	2	—	—	—	—	—	6022 181
8-35-22	RESISTOR, Ignition Coil Primary		1	1	1	1	1	1	1	1	1	1	1	2275 590
	w/340 Eng., w/Elect. Ignition Control	8	1	1	1	1	1	—	—	—	—	—	—	=3656 199
	w/426 Eng., w/Elect Ignition Control	8	—	1	—	1	1	—	—	—	—	—	—	=3656 199
8-35-41	BRACKET, Ignition Coil Mtg., on Coil	6	1	1	1	1	1	1	1	—	—	—	—	1688 207
	Mtg., on Coil, w/318 and 340 Eng.	8	1	1	1	1	1	—	—	—	—	—	—	2642 670
	Mtg., on Coil, w/383, 426 and 440 Eng.	8	—	1	—	1	1	—	—	—	—	—	—	1688 207
	Mtg., w/440 Eng., w/3-2 Bbl. Carb.	8	—	1	—	1	1	1	—	—	—	—	—	3418 406
	Mtg., w/318 Eng. 70	8	—	—	—	1	1	—	—	—	—	—	—	2806 823
	Mtg., on Coil, w/318 Eng.	8	—	—	—	1	1	1	1	—	—	—	—	2642 670
	Mtg., on Coil, w/360 Eng., C-E 71	8	—	—	—	—	—	1	1	1	—	—	—	2642 670
	Mtg., on Coil, w/383 and 440 Eng.	8	—	—	—	—	—	1	1	1	1	1	1	1688 207
8-35-52	SCREW and WASHER, Ignition Coil Primary Resistor Mtg.		1	1	1	1	1	1	1	1	1	1	1	6028 142
	SCREW and WASHER, Ignition Coil Mtg., SCREW and WASHER, Ignition Coil Mtg., w/318 and 340 Eng.	8	1	1	1	—	—	—	—	—	—	—	—	6026 919
	SCREW and WASHER, Ignition Coil Mtg., w/318 Eng.	8	—	—	—	1	1	1	1	—	—	—	—	6026 919
	SCREW, Coil Mtg., w/A/Cond., w/318 Eng. 70	8	—	—	—	1	1	—	—	—	—	—	—	6026 912
	SCREW and WASHER, Ignition Coil Mtg., w/360 Eng. 71	8	—	—	—	—	—	1	1	1	—	—	—	6026 919
8-35-59	SWITCH, Ignition and Starter 70		1	1	1	1	1	—	—	—	—	—	—	2947 486
	71		1	1	1	—	—	—	—	—	—	—	—	2947 486
	w/o Tilt Strg. Wheel 71		—	—	—	1	1	1	1	—	—	—	—	2947 486
	w/Tilt Strg. Wheel 71		—	—	—	1	1	—	—	—	—	—	—	3488 398
	w/o Tilt Strg. Wheel 70		—	—	—	—	—	1	1	—	—	—	—	2947 486
	w/Tilt Strg. Wheel		—	—	—	—	—	1	1	—	—	—	—	2947 719
	w/o Tilt-Telescopic Strg. Wheel		—	—	—	—	—	—	—	1	1	1	1	2947 486
	w/Tilt-Telescopic Strg. Wheel		—	—	—	—	—	—	—	1	1	1	1	2947 719
	SWITCH, Buzzer, w/Tilt-Tel. Strg. Wheel 70		—	—	—	—	—	—	—	1	1	1	1	2947 720
	SWITCH, Ignition Key Buzzer 70		1	1	1	1	1	—	—	—	—	—	—	2947 488
	71		1	1	1	—	—	—	—	—	—	—	—	2947 488
	w/o Tilt Strg. Wheel 71		—	—	—	1	1	—	—	—	—	—	—	2947 488
	w/Tilt Strg. Wheel 71		—	—	—	1	1	—	—	—	—	—	—	**3488 432**
	w/o Tilt Strg. Wheel		—	—	—	—	—	1	1	—	—	—	—	**2947 488**
	w/Tilt Strg. Wheel		—	—	—	—	—	1	1	—	—	—	—	**3488 432**
	w/o Tilt-Tel. Strg. Wheel		—	—	—	—	—	—	—	1	1	1	1	**2947 488**
	w/Tilt-Tel. Strg. Wheel		—	—	—	—	—	—	—	1	1	1	1	3488 431
8-35-66	BUZZER, w/BRACKET, Key Warning 70		1	1	1	—	—	—	—	1	1	1	1	3420 884
	70		—	—	—	1	1	1	1	—	—	—	—	3420 885
	BUZZER, w/RELAY, Horn and Key Warning 71		1	—	1	--	—	—	—	—	—	—	—	3579 205
	71		—	1	—	1	1	1	1	1	1	1	1	3579 204
8-35-67	CLIP, Switch Ret., w/Tilt Strg. Wheel 71		—	—	—	1	1	—	—	—	—	—	—	3467 368
	w/Tilt Strg. Wheel		—	—	—	—	—	1	1	—	—	—	—	3467 368
	w/Tilt-Tel. Strg. Wheel		—	—	—	—	—	—	—	1	1	1	1	3467 367

8-36-0 IGNITION

CODE	PART NAME	ENG. TYPE OR CU.IN.	V 1-2	B J 1-2	L 1-2	R 1-2	W 1-2	P 1-2	D 1-2	C 1	C 2	C 3	Y 1	PART NUMBER
8-36-1	CABLE SET, Ignition, Resistor Type	6	1	1	1	1	1	1	1	—	—	—	—	2495 510
	Resistor Type, w/318 Eng.	8	1	1	1	1	1	1	1	—	—	—	—	3004 192
	Resistor Type, w/340 Eng. 70	8	1	—	1	—	—	—	—	—	—	—	—	3004 192
	Resistor Type, w/340 Eng. 71	8	1	—	1	—	—	—	—	—	—	—	—	3579 221
	Resistor Type, w/340 Eng., w/o 3-2 Bbl. Carb.	8	—	1	—	—	—	—	—	—	—	—	—	3004 192
	Resistor Type, w/340 Eng., w/3-2 Bbl. Carb.	8	—	1	—	—	—	—	—	—	—	—	—	3579 221
	Resistor Type, w/383 and 440 Eng.	8	—	1	—	1	1	—	—	—	—	—	—	3420 917
	Resistor Type, w/426 Eng.	8	—	1	—	1	1	—	—	—	—	—	—	3420 881
	Resistor Type, w/360 Eng., C-E		—	—	—	—	—	1	1	1	—	—	—	3004 192
	Resistor Type, w/383 and 440 Eng.	8	—	—	—	—	—	1	1	1	1	1	1	3420 915
	CABLE PACKAGE, Resistor Type, w/318 and 340 Eng.	8	8	8	8	8	8	—	—	—	—	—	—	2525 534
	Resistor Type, w/318 Eng.	8	—	—	—	8	8	8	8	—	—	—	—	2525 534
	Resistor Type, w/360 Eng., C-E 71	8	—	—	—	—	—	8	8	8	—	—	—	2525 534
	Resistor Type, w/426 Eng., except No. 5 and 7 Cable	8	—	6	—	6	6	—	—	—	—	—	—	2586 993
	Resistor Type, w/426 Eng., No. 5 and 7 Cable	8	—	2	—	2	2	—	—	—	—	—	—	2809 090
	Resistor Type, w/383 and 440 Eng., except No. 7 and 8 Cable	8	—	6	—	6	6	6	6	6	6	6	6	2808 771
	Resistor Type, w/383 and 440 Eng., No. 7 Cable	8	—	1	—	1	1	—	—	—	—	—	—	2808 771
	Resistor Type, w/383 and 440 Eng., No. 8 Cable	8	—	1	—	1	1	—	—	—	—	—	—	3420 886
	Resistor Type, w/383 and 440 Eng., No. 7 and 8 Cable	8	—	—	—	—	—	2	2	2	2	2	2	3420 886
8-36-4	BRACKET, Spark Plug Wire, w/383 and 440 Eng. Frt. Rt. 70		—	1	—	1	1	1	1	1	1	1	1	2951 535
	w/383 and 440 Eng. Frt. Rt. 71		—	1	—	1	1	1	1	1	1	1	1	3512 724
	w/383 and 440 Eng. Frt. Lt.		—	1	—	1	1	1	1	1	1	1	1	2951 534
	w/383 and 440 Eng. Frt. Ctr.		—	1	—	1	1	1	1	1	1	1	1	2951 536
	w/383 and 440 Eng. Frt. Lt. Inter.		—	1	—	1	1	1	1	1	1	1	1	2946 443
	w/426 Eng. Frt.		—	1	—	1	1	—	—	—	—	—	—	2951 546
8-36-14	SEPARATOR, Spark Plug Cable, w/318 and 340 Eng.	8	1	1	1	1	1	—	—	—	—	—	—	1841 499
	w/318 and 340 Eng., Four Wire Rr.	8	2	2	2	2	2	—	—	—	—	—	—	2875 604
	w/318 and 340 Eng., Two Wire Rr.	8	2	2	2	2	2	—	—	—	—	—	—	2875 605
	w/340 Eng., w/3-2 Bbl. Carb. 71	8	—	2	—	—	—	—	—	—	—	—	—	3438 597
	w/383 and 440 Eng.	8	—	1	—	1	1	1	1	1	1	1	1	1841 499
	w/383 and 440 Eng., Four Wire	8	—	3	—	3	3	3	3	3	3	3	3	2875 719
	w/426 Eng.	8	—	2	—	2	2	—	—	—	—	—	—	1841 499
	w/318 Eng.	8	—	—	—	—	—	1	1	—	—	—	—	1841 499
	w/318 Eng., Four Wire Rr.	8	—	—	—	—	—	2	2	—	—	—	—	2875 604
	w/360 Eng., Four Wire Rr. 71	8	—	—	—	—	—	2	2	2	—	—	—	2875 604
	w/318 Eng., Two Wire Rr.	8	—	—	—	—	—	2	2	—	—	—	—	2875 605
	w/360 Eng., Two Wire Rr. 71		—	—	—	—	—	2	2	2	—	—	—	2875 605
8-36-49	CABLE, Ignition Coil Secondary	6	1	1	1	1	1	1	1	—	—	—	—	2095 773
	w/318 Eng.	8	1	1	1	1	1	1	1	—	—	—	—	2444 469
	w/340 Eng.	8	1	1	1	1	1	—	—	—	—	—	—	2095 776
	w/383 Eng.	8	—	1	—	1	1	1	1	1	—	—	—	2095 772
	w/426 Eng.	8	—	1	—	1	1	—	—	—	—	—	—	2095 776
	w/440 Eng., w/1-4 Bbl. Carb.	8	—	1	—	1	1	1	1	1	1	1	1	2095 772
	w/440 Eng., w/3-2 Bbl. Carb.	8	—	1	—	1	1	1	—	—	—	—	—	2095 777
	w/360 Eng., C-E 71	8	—	—	—	—	—	1	1	1	—	—	—	2444 469
8-36-83	CABLE, Spark Plug, No. 1 and 6 Cable	6	2	2	2	2	2	2	2	—	—	—	—	2444 024
	No. 2 and 5 Cable	6	2	2	2	2	2	2	2	—	—	—	—	2444 025
	No. 3 and 4 Cable	6	2	2	2	2	2	2	2	—	—	—	—	2444 031

CARLINES: J - Challenger, B - Barracuda, V - Valiant, L - Dart, R - Belvedere - Satellite, W - Coronet - Charger, P - Plymouth, D - Dodge, C - Chrysler, Y - Imperial

AR Indicates use as required.

# Indicates parts not listed in any previous parts book.

Numerals in parentheses ( ) refer to notes.

★ Indicates change or addition.

Printed in U.S.A. January 1972

CODE	PART NAME	ENG. TYPE OR CU.IN.	V 1-2	B J 1-2	L 1-2	R 1-2	W 1-2	P 1-2	D 1-2	C 1	C 2	C 3	Y 1	PART NUMBER
8-36-0	**IGNITION Cont'd.**													
8-36-92	GROMMET, Spark Plug Cable Positioning, w/383 and 440 Eng.	8	—	1	—	1	1	2	2	2	2	2	2	2098 980
	w/426 Eng.	8	—	4	—	4	4	—	—	—	—	—	—	2098 980
8-36-96	NIPPLE, Coil Secondary Cable, Coil End		1	1	1	1	1	1	1	1	1	1	1	2095 768
	Dist. End		1	1	1	1	1	1	1	1	1	1	1	2095 766
	Spark Plug Cable, Dist. End		AR	AR	AR	AR	AR	AR	AR	AR	AR	AR	AR	2095 766
8-36-114	SPARK PLUG, Champion N-14Y	6	6	6	6	6	6	6	6	—	—	—	—	2098 381
	Chrysler Parts Brand No. 66P	6	6	6	6	6	6	6	6	—	—	—	—	3420 751
	Champion N-14Y, w/318 Eng.	8	8	8	8	8	8	—	—	—	—	—	—	2098 381
	Chrysler Parts Brand No. 66P	8	8	8	8	8	8	—	—	—	—	—	—	3420 751
	Champion N-9Y, w/340 Eng.	8	8	8	8	8	8	—	—	—	—	—	—	2642 493
	Chrysler Parts Brand No. 62P	8	8	8	8	—	—	—	—	—	—	—	—	3420 755
	Champion J-14Y, w/383 Eng., w/2 Bbl. Carb.	8	—	8	—	8	8	8	8	8	—	—	—	2444 870
	Chrysler Parts Brand No. 35P	8	—	8	—	8	8	8	8	8	—	—	—	3420 750
	Champion J-11Y, w/383 Eng., w/1-4 Bbl. Carb.	8	—	8	—	8	8	8	8	8	—	—	—	2642 913
	Chrysler Parts Brand No. 34P	8	—	8	—	8	8	8	8	8	—	—	—	3420 752
	Champion N-10Y, w/426 Eng.	8	—	8	—	8	8	—	—	—	—	—	—	2642 618
	Chrysler Parts Brand No. 62P	8	—	8	—	8	8	—	—	—	—	—	—	3420 755
	Champion J-11Y, w/440 Eng.	8	—	8	—	8	8	8	8	8	8	8	—	2642 913
	Chrysler Parts Brand No. 34P	8	—	8	—	8	8	8	8	8	8	8	—	3420 752
	Champion N-14Y, w/318 Eng. 70	8	—	—	—	—	—	8	8	—	—	—	—	2098 381
	Chrysler Parts Brand No. 66P 70	8	—	—	—	—	8	8	—	—	—	—	—	3420 751
	Champion N-13Y, w/318 and 360 Eng. 71	8	—	—	—	—	—	8	8	8	—	—	—	3438 413
	Champion RJ-13Y	8	—	—	—	—	—	—	—	—	—	—	8	3438 334
8-36-124	HEAT SHIELD, Spark Plug, w/383 and 440 Eng. Rt.	8	—	1	—	1	1	—	—	—	—	—	—	2951 347
	Lt.	8	—	1	—	1	1	—	—	—	—	—	—	3462 682
	w/383 and 440 Eng.	8	—	—	—	—	—	2	2	2	2	2	2	2951 347
8-36-136	TUBE, Spark Plug	6	6	6	6	6	6	6	6	—	—	—	—	2121 245
	w/426 Eng.	8	—	8	—	8	8	—	—	—	—	—	—	2780 567
8-36-137	SEAL, Spark Plug Tube	6	6	6	6	6	6	6	6	—	—	—	—	1947 708
	w/426 Eng.	8	—	8	—	8	8	—	—	—	—	—	—	2468 196
8-37-0	**INSTRUMENT PANEL INSTRUMENTS**													
8-37-1	AMMETER, V-L		1	—	—	—	—	—	—	—	—	—	—	2984 405
	2D.H.T., V-H 71		1	—	—	—	—	—	—	—	—	—	—	2984 405
	V-S, L-M		1	—	1	—	—	—	—	—	—	—	—	2771 641
	w/Rallye Inst. Panel		—	1	—	—	—	—	—	—	—	—	—	2984 179
	w/o Rallye Inst. Panel, B 70		—	1	—	—	—	—	—	—	—	—	—	2984 121
	w/o Rallye Inst. Panel, J 70		—	1	—	—	—	—	—	—	—	—	—	2984 161
	w/o Rallye Inst. Panel 71		—	1	—	—	—	—	—	—	—	—	—	2984 121
	w/OIL INDICATOR, L-L, L-H 70		—	—	1	—	—	—	—	—	—	—	—	2771 169
	w/OIL INDICATOR, L-L except Fastback, L-H 71		—	—	1	—	—	—	—	—	—	—	—	2771 169
	Fastback, L-L 71		—	—	1	—	—	—	—	—	—	—	—	2984 405
	40 Amp., R-K, R-T, R-L, R-H, R-P, W-K, W-T, W-L, W-H, W-P except Charger, W-S 2 D.H.T. and Cv. Cp. w/o Rallye Inst. Panel 70		—	—	—	1	1	—	—	—	—	—	—	2857 004
	60 Amp., R-K, R-T, R-L, W-K, W-T, W-L 70		—	—	—	1	1	—	—	—	—	—	—	2857 005
	R-M, R-S, W-M, W-P Charger, W-S Charger R/T, W-S 2D.H.T. and Cv. Cp. w/Rallye Inst. Panel 70		—	—	—	1	1	—	—	—	—	—	—	2857 169
	40 Amp., R-K, R-T, R-L, R-H, W-K, W-T, W-L, W-H 71		—	—	—	1	1	—	—	—	—	—	—	2985 396

CARLINES: J - Challenger, B - Barracuda, V - Valiant, L - Dart, R - Belvedere - Satellite, W - Coronet - Charger, P - Plymouth, D - Dodge, C - Chrysler, Y - Imperial

AR Indicates use as required.

Numerals in parentheses ( ) refer to notes.

Printed in U.S.A. January 1972

# Indicates parts not listed in any previous parts book.

★ Indicates change or addition.

CODE	PART NAME	ENG. TYPE OR CU.IN.	V 1-2	B J 1-2	L 1-2	R 1-2	W 1-2	P 1-2	D 1-2	C 1	C 2	C 3	Y 1	PART NUMBER
8-37-0	**INSTRUMENT PANEL INSTRUMENTS Cont'd.**													
8-37-1	AMMETER Cont'd.													
	60 Amp., R-K, R-T, R-L, W-K, W-T, W-L	71	—	—	—	1	1	—	—	—	—	—	—	2985 397
	w/o Tach, w/o Clock, R-M, R-P, W-M, W-P except Fastback, W-S	71	—	—	—	1	1	—	—	—	—	—	—	2985 219
	w/Clock, w/Tach., R-M, R-P, R-S, W-M, W-P, W-S	71	—	—	—	1	1	—	—	—	—	—	—	2985 221
	40 Amp.	70	—	—	—	—	—	1	—	—	—	—	—	2927 047
		71	—	—	—	—	—	1	1	—	—	—	—	2985 676
	60 Amp.	70	—	—	—	—	—	1	—	—	—	—	—	2927 048
	40 Amp.	70	—	—	—	—	—	—	1	—	—	—	—	2984 931
	60 Amp.	70	—	—	—	—	—	—	1	—	—	—	—	2984 932
		70	—	—	—	—	—	—	—	1	1	1	—	2927 223
		71	—	—	—	—	—	—	—	1	1	1	—	2985 674
		70	—	—	—	—	—	—	—	—	—	—	1	2984 887
		71	—	—	—	—	—	—	—	—	—	—	1	2985 517
8-37-2	REGULATOR or LIMITER, Inst. Voltage	70	1	—	1	1	1	—	1	1	1	1	—	2258 413
	V-L, V-H 2 D.H.T., L-L, L-H, R-K, R-T, R-L R-H, W-K, W-T, W-L, W-H	71	1	—	1	1	1	—	—	1	1	1	—	2258 413
			—	1	—	—	—	1	—	—	—	—	—	2209 216
	R-M, R-P, R-S, W-M, W-P, W-S	71	—	—	—	1	1	—	—	—	—	—	—	2985 707
		71	—	—	—	—	—	—	1	—	—	—	—	2209 216
			—	—	—	—	—	—	—	—	—	—	1	2985 168
8-37-7	CABLE, Voltage Regulator to Fuel and Temp. Gage, w/o Rallye Inst. Panel	70	—	1	—	—	—	—	—	—	—	—	—	2822 012
	w/o Clock, w/o Tach., R-M, R-P, R-P, R-S, W-M, W-P except Fastback, W-S	71	—	—	—	1	1	—	—	—	—	—	—	3513 283
			—	—	—	—	—	1	—	—	—	—	—	2822 012
8-37-14	CLOCK PACKAGE, V-S, L-M		1	—	1	—	—	—	—	—	—	—	—	2857 678
	w/Rallye Inst. Panel	70	—	1	—	—	—	—	—	—	—	—	—	2984 182
	w/o Rallye Inst. Panel, w/Inst. Panel Wood Grain		—	1	—	—	—	—	—	—	—	—	—	2984 951
	w/o Rally3 Inst. Panel, w/o Inst. Panel Wood Grain	70	—	1	—	—	—	—	—	—	—	—	—	2984 952
	w/Rallye Inst. Panel	71	—	1	—	—	—	—	—	—	—	—	—	2985 947
	R-K, R-T, R-L, R-H, R-P, W-K, W-T, W-L, W-H, W-P except Charger, W-S 2D.H.T. and Cv. Cp. w/o Rallye Inst. Panel	70	—	—	—	1	1	—	—	—	—	—	—	2889 620
	w/Electric Clock, R-K, R-T, R-L, R-H, W-K, W-T, W-L, W-H	71	—	—	—	1	1	—	—	—	—	—	—	2985 416
	R-M, R-S, W-M, W-P Charger, W-S Charger R/T, W-S 2D.H.T. and Cv. Cp. w/Rallye Inst. Panel	70	—	—	—	1	1	—	—	—	—	—	—	2857 182
	w/Electric Clock, R-M, R-P, R-S, W-M, W-P, W-S	71	—	—	—	1	1	—	—	—	—	—	—	2985 226
		70	—	—	—	—	—	1	—	—	—	—	—	2927 972
		71	—	—	—	—	—	1	1	—	—	—	—	2985 837
		70	—	—	—	—	—	—	1	—	—	—	—	2984 959
		70	—	—	—	—	—	—	—	1	1	1	—	2927 999
	up to Approx. July 1, 1971	71	—	—	—	—	—	—	—	1	1	1	—	2985 850
	after approx. July 1, 1971	71	—	—	—	—	—	—	—	1	1	1	—	= 3592 151
		70	—	—	—	—	—	—	—	—	—	—	1	2927 337
		71	—	—	—	—	—	—	—	—	—	—	1	2985 555
8-37-15	LAMP, Aux. Switch Title Lamp, w/Time Delay		—	1	—	—	—	—	—	—	—	—	—	2947 390
	w/Mtg. Brkt., w/Power Driver Door T/Gate Release, Sta. Wgn.	71	—	—	—	1	1	—	—	—	—	—	—	3488 235

CARLINES: J - Challenger, B - Barracuda, V - Valiant, L - Dart, R - Belvedere - Satellite, W - Coronet - Charger, P - Plymouth, D - Dodge, C - Chrysler, Y - Imperial

AR Indicates use as required.

Numerals in parentheses ( ) refer to notes.

# Indicates parts not listed in any previous parts book.

★ Indicates change or addition.

Printed in U.S.A. January 1972

8-37-0 INSTRUMENT PANEL INSTRUMENTS Cont'd.

CODE	PART NAME		ENG. TYPE OR CU.IN.	V 1-2	B J 1-2	L 1-2	R 1-2	W 1-2	P 1-2	D 1-2	C 1	C 2	C 3	Y 1	PART NUMBER
8-37-15	LAMP Cont'd.														
	w/Mtg. Brkt., w/Carb. Fresh Air Pkg., except 318 Eng., R-M, R-S, W-M, W-S	71	8	—	—	—	1	1	—	—	—	—	—	—	3488 235
	w/Mtg. Brkt., w/Rr. Window Defogger, except Sta. Wgn.	71		—	—	—	1	1	—	—	—	—	—	—	3488 235
	w/Mtg. Brkt., w/Power T/Gate Window, Sta. Wgn.	71		—	—	—	1	1	—	—	—	—	—	—	3488 235
	w/Mtg. Brkt., H/Lamp Washer, 2D.H.T., W-M, W-S	71		—	—	—	—	1	—	—	—	—	—	—	3488 235
	w/Mtg. Brkt., H/Lamp Washer, Fastback	71		—	—	—	—	1	—	—	—	—	—	—	3488 235
	Aux. Switch Title Lamp, w/Time Delay	70		—	—	—	—	—	1	—	—	—	—	—	2947 298
	Aux. Switch Title Lamp, w/Time Delay	71		—	—	—	—	—	1	1	—	—	—	—	2947 298
	H/Lamp Washer Indicator, P-M 4 D.H.T. and Fastback, P-H, P-P	71		—	—	—	—	—	1	—	—	—	—	—	3488 420
	Aux. Switch Title Lamp, w/Time Delay	70		—	—	—	—	—	—	1	—	—	—	—	2947 296
	Switch Title	70		—	—	—	—	—	—	1	—	—	—	—	2864 375
	SCREW, Switch Title Lamp Mtg.	70		—	—	—	—	—	—	2	—	—	—	—	9424 048
8-37-16	LENS, Switch Title Lamp	70		—	—	—	—	—	—	1	—	—	—	—	2864 376
8-37-70	RELAY and BRACKET, Low Fuel, B 2D.H.T.			—	1	—	—	—	1	1	1	1	1	1	2983 828
	Sp. 2D.H.T., J	70		—	1	—	—	—	—	—	—	—	—	—	2983 828
	2 D.H.T., w/Formal Roof Pkg., J	71		—	1	—	—	—	—	—	—	—	—	—	2983 828
		71		—	—	—	1	1	—	—	—	—	—	—	3513 565
8-37-75	LAMP, Rev. Ind., w/4 Speed Manual Trans.			1	—	1	—	—	—	—	—	—	—	—	2947 202
	w/4 Speed Manual Trans.	70		—	1	—	—	—	—	—	—	—	—	—	2947 445
	w/4 Speed Manual Trans.	71		—	1	—	1	1	—	—	—	—	—	—	3488 497
	w/4 Speed Manual Trans., except 318 Eng.	70	8	—	—	—	1	1	—	—	—	—	—	—	2947 840
	Overhead Console Wiring, 2D.H.T., B			—	1	—	—	—	—	—	—	—	—	—	2947 591
	Sp. 2D.H.T., J	70		—	1	—	—	—	—	—	—	—	—	—	2947 591
	2D.H.T., w/Formal Roof Pkg., J	71		—	1	—	—	—	—	—	—	—	—	—	2947 591
	Seat Belt Warning			1	—	1	—	—	—	—	—	—	—	—	2947 931
	B Cv. Cp., J 2D.H.T. and Cv. Cp.			—	1	—	—	—	—	—	—	—	—	—	2947 933
		70		—	—	—	1	1	1	1	—	—	—	—	2947 893
		71		—	—	—	—	—	1	1	—	—	—	—	2947 893
	SCREW, Overhead Console Warning Lamp Mtg.	70		—	2	—	—	—	—	—	—	—	—	—	6028 638
	SCREW, Seat Belt Warning Lamp Ground	70		—	—	—	—	—	1	1	—	—	—	—	6026 092
	SCREW, Rev. Ind. Lamp Grounding	70		—	—	—	1	1	—	—	—	—	—	—	6026 092
8-37-88	SOCKET, Low Oil Pressure Ind. Lamp, on Printed Circuit Board, V-L, L-L, L-H, R-K, R-T, R-L, R-H, R-P, W-K W-T, W-L, W-H, W-P except Charger, W-S 2D.H.T. and Cv. Cp. w/o Rallye Inst. Panel	70		1	—	1	1	1	—	1	—	—	—	—	2496 279
	V-L, V-H, L-L, L-H, R-K, R-T, R-L, R-H, W-K, W-T, W-L, W-H	71		1	—	1	1	1	—	—	—	—	—	—	2496 279
	Overhead Console Seat Belt Warning Lamp, 2D.H.T., B	70		—	1	—	—	—	—	—	—	—	—	—	2983 579
	2D.H.T., B-P, J	71		—	1	—	—	—	—	—	—	—	—	—	2983 579
	Sp. 2D.H.T., J	70		—	1	—	—	—	—	—	—	—	—	—	2983 579
	Overhead Console Low Fuel Warning Lamp, 2D.H.T., B	70		—	1	—	—	—	—	—	—	—	—	—	2983 816
	2D.H.T., B-P, J	71		—	1	—	—	—	—	—	—	—	—	—	2983 816
	Sp. 2D.H.T., J	70		—	1	—	—	—	—	—	—	—	—	—	2983 816
	Oil Warning Lamp, w/o Rallye Inst. Panel	71		—	1	—	—	—	—	—	—	—	—	—	1753 632

CARLINES J - Challenger, B - Barracuda, V - Valiant, L - Dart, R - Belvedere - Satellite, W - Coronet - Charger, P - Plymouth, D - Dodge, C - Chrysler, Y - Imperial

AR Indicates use as required.

# Indicates parts not listed in any previous parts book.

Numerals in parentheses ( ) refer to notes.

★ Indicates change or addition.

Printed in U.S.A. January 1972

8-37-0 INSTRUMENT PANEL INSTRUMENTS Cont'd.

CODE	PART NAME	ENG. TYPE OR CU.IN.	V 1-2	B J 1-2	L 1-2	R 1-2	W 1-2	P 1-2	D 1-2	C 1	C 2	C 3	Y 1	PART NUMBER
8-37-88	SOCKET Cont'd.													
		70	—	—	—	—	—	1	—	1	1	1	—	1753 632
		71	—	—	—	—	—	1	1	1	1	1	—	1753 632
	Rev. Ind. Lamp	71	—	—	—	1	1	—	—	—	—	—	—	2983 580
	Temp. Ind. Lamp		—	—	—	—	—	—	—	1	1	1	—	1753 632
	Seat Belt Warning Lamp		—	—	—	—	—	—	—	1	1	1	—	2096 374
	Low Fuel Warning Lamp		—	—	—	—	—	—	—	1	1	1	—	2496 279
	Warning Lamp, on Printed Circuit Board	70	—	—	—	—	—	—	—	—	—	—	5	2496 279
8-37-90	BEZEL, Speed and Inst. Cluster, V-L	70	1	—	—	—	—	—	—	—	—	—	—	2984 397
	V-L, V-H 2 D.H.T., L-L Fastback	71	1	—	1	—	—	—	—	—	—	—	—	2984 397
	w/o A/Cond., V-S, L-M	70	1	—	1	—	—	—	—	—	—	—	—	2985 436
	w/o A/Cond., V-S, L-M	71	1	—	1	—	—	—	—	—	—	—	—	2985 715
	w/A/Cond., V-S, L-M	70	1	—	1	—	—	—	—	—	—	—	—	2985 437
	w/A/Cond., V-S, L-M	71	1	—	1	—	—	—	—	—	—	—	—	2985 716
	w/o Rallye Inst. Panel, B	70	—	1	—	—	—	—	—	—	—	—	—	2985 801
	w/Rallye Inst. Panel	70	—	1	—	—	—	—	—	—	—	—	—	2984 192
	w/o Rallye Inst. Panel, J	70	—	1	—	—	—	—	—	—	—	—	—	2984 146
	w/Rallye Inst. Panel, up to approx. Feb. 1971, American Walnut	71	—	1	—	—	—	—	—	—	—	—	—	2985 807
	w/Rallye Inst. Panel, after approx. Feb. 1971, Kashmerr Walnut	71	—	1	—	—	—	—	—	—	—	—	—	2985 944
	w/o Rallye Inst. Panel	71	—	1	—	—	—	—	—	—	—	—	—	2985 801
	BEZEL and LENS PACKAGE, except Fastback, L-L	71	—	—	1	—	—	—	—	—	—	—	—	2984 490
	BEZEL and LENS PACKAGE, L-L	Mile 70	—	—	1	—	—	—	—	—	—	—	—	2984 490
	BEZEL and LENS PACKAGE, L-H	Mile	—	—	1	—	—	—	—	—	—	—	—	2984 491
	R-K, R-T, R-L, R-H, R-P, W-K, W-T, W-L, W-H, W-P except Charger, W-S 2D.H.T. and Cv. Cp. w/o Rallye Inst. Panel	70	—	—	—	1	1	—	—	—	—	—	—	2822 880
	R-M, R-S, W-M, W-P Charger, W-S Charger R/T, W-S 2D.H.T. and Cv. Cp. w/Rallye Inst. Panel	70	—	—	—	1	1	—	—	—	—	—	—	2984 775
	w/RADIO, R-K, R-T, R-L, R-H 2D.H.T. w/Spec. Coupe Pkg., W-K, W-T, W-L, W-H 2D.H.T. w/Spec. Coupe Pkg.	71	—	—	—	1	1	—	—	—	—	—	—	2985 364
	w/o RADIO, R-K, R-T, R-L, R-H 2D.H.T. w/Spec. Coupe Pkg. W-K, W-T, W-L, W-H 2D.H.T. w/Spec. Coupe Pkg.	71	—	—	—	1	1	—	—	—	—	—	—	2985 362
	w/RADIO, R-H 2D.H.T. w/o Spec. Coupe Pkg., 4D. and Sta. Wgn., W-H 2D.H.T. w/o Spec. Coupe Pkg., 4D. and Sta. Wgn.	71	—	—	—	1	1	—	—	—	—	—	—	2985 370
	w/o Radio, R-H 2 D.H.T. w/o Spec. Coupe Pkg., 4 D. and Sta. Wgn., W-H 2 D.H.T. w/o Spec. Coupe Pkg. 4 D. and Sta. Wgn.	71	—	—	—	1	1	—	—	—	—	—	—	2985 368
	w/o Radio, R-M, R-P, R-S, W-M, W-P, W-S	71	—	—	—	1	1	—	—	—	—	—	—	2985 157
	w/Radio, R-M, R-P, R-S, W-M, W-P, W-S	71	—	—	—	1	1	—	—	—	—	—	—	2985 158
	w/o Lock Door Lamp, w/o Seat Belt Lamp, w/o Low Fuel Warning Lamp, w/o Map and Courtesy Lamp, R-K, R-T, R-L, R-H, W-K, W-T, W-L, W-H	71	—	—	—	1	1	—	—	—	—	—	—	3488 330

CARLINES J - Challenger, B - Barracuda, V - Valiant, L - Dart, R - Belvedere - Satellite, W - Coronet - Charger, P - Plymouth, D - Dodge, C - Chrysler, Y - Imperial

AR Indicates use as required.

Numerals in parentheses ( ) refer to notes.

# Indicates parts not listed in any previous parts book.

★ Indicates change or addition.

Printed in U.S.A. January 1972

8-37-0 INSTRUMENT PANEL INSTRUMENTS Cont'd.

CODE	PART NAME	ENG. TYPE OR CU.IN.	V 1-2	B J 1-2	L 1-2	R 1-2	W 1-2	P 1-2	D 1-2	C 1	C 2	C 3	Y 1	PART NUMBER
8-37-90	BEZEL Cont'd.													
	w/o Accessory Switch, except Cv. Cp. and Sta. Wgn.	70	—	—	—	—	—	1	—	—	—	—	—	2984 557
	w/Accessory Switch	70	—	—	—	—	—	1	—	—	—	—	—	2984 558
	w/o Rr. Window Defogger, except Sta. Wgn., P-K, P-T, P-E, P-L, D-K, D-T, D-E, D-S	71	—	—	—	—	—	1	1	—	—	—	—	2985 002
	w/rR. Window Defogger, P-K, P-T, P-E, P-L, D-K, D-T, D-E, D-S	71	—	—	—	—	1	1	—	—	—	—		2985 003
	w/o Rr. Window Defogger, except Sta. Wgn., P-M, P-H, D-L, D-M, D-H	71	—	—	—	—	—	1	1	—	—	—	—	2985 008
	w/Rr. Window Defogger, P-M, P-H, D-E, D-L, D-M, D-H	71	—	—	—	—	—	1	1	—	—	—	—	2985 009
		70	—	—	—	—	—	—	1	—	—	—	—	2927 419
	w/Multiplex Radio or Tape Player	70	—	—	—	—	—	—	—	1	1	1	—	2984 908
	w/AM Radio, w/Stereo Tape, 8 Track	71	—	—	—	—	—	—	—	1	1	1	—	2985 565
	w/AM-FM Radio Search Tuner	70	—	—	—	—	—	—	—	1	1	1	—	2984 907
	w/AM-FM Radio Search Tuner	71	—	—	—	—	—	—	—	1	1	1	—	2985 566
	w/AM Radio	70	—	—	—	—	—	—	—	1	1	1	—	2984 906
	w/AM-FM Radio, w/Multiplex Radio	71	—	—	—	—	—	—	—	1	1	1	—	2985 564
	w/o Radio	70	—	—	—	—	—	—	—	1	1	1	—	2984 909
	w/o Radio	71	—	—	—	—	—	—	—	1	1	1	—	2985 567
	w/o Radio	70	—	—	—	—	—	—	—	—	—	—	1	2984 746
	w/o Radio	Mile 71	—	—	—	—	—	—	—	—	—	—	1	2985 549
	w/Radio Search Tuner AM-FM	Mile 70	—	—	—	—	—	—	—	—	—	—	1	2984 744
		Kilo 70	—	—	—	—	—	—	—	—	—	—	1	2984 745
	w/Radio Search Tuner AM-FM	71	—	—	—	—	—	—	—	—	—	—	1	2985 546
	w/AM-FM Multiplex, w/Stereo Tape	Mile 70	—	—	—	—	—	—	—	—	—	—	1	2984 747
		Kilo 70	—	—	—	—	—	—	—	—	—	—	1	2984 748
	w/AM-FM Multiplex, w/Stereo Tape, 8 Track	71	—	—	—	—	—	—	—	—	—	—	1	2985 547
	w/AM-FM Multiplex, w/Stereo Tape, Casette	71	—	—	—	—	—	—	—	—	—	—	1	2985 548
8-37-91	TRIM PLATE, Cluster Bezel, V-S, L-M	Ctr.	1	—	1	—	—	—	—	—	—	—	—	2927 714
	V-S, L-M	Rt.	1	—	1	—	—	—	—	—	—	—	—	2927 712
	V-S, L-M	Lt.	1	—	1	—	—	—	—	—	—	—	—	2985 442
	w/Inst. Panel Wood Grain		—	1	—	—	—	—	—	—	—	—	—	2984 759
8-37-93	CONTACT, Oil Warning Ind. Lamp Socket		—	—	—	—	—	1	1	1	1	1	—	2256 966
	Temp. Ind. Lamp Socket		—	—	—	—	—	—	—	2	2	2	—	2256 966
	Seat Belt Warning Lamp Socket		—	—	—	—	—	—	—	1	1	1	—	2256 966
8-37-101	COVER, Cluster, w/o A/Cond. Outlet	70	—	—	—	—	—	—	—	—	—	—	1	2927 408
8-37-112	REINFORCEMENT, Inst. Cluster Bezel, R-M, R-P, R-S, W-M, W-P, W-S	71	—	—	—	1	1	—	—	—	—	—	—	2985 239
8-37-136	TEMPERATURE GAUGE, V-L		1	—	—	—	—	—	—	—	—	—	—	2984 404
	2D.H.T., V-H	71	1	—	—	—	—	—	—	—	—	—	—	2984 404
	V-S, L-M		1	—	1	—	—	—	—	—	—	—	—	2771 639
	w/o Rallye Inst. Panel, B		—	1	—	—	—	—	—	—	—	—	—	2984 120
	w/Rallye Inst. Panel		—	1	—	—	—	—	—	—	—	—	—	2984 180
	w/o Rallye Inst. Panel, J	70	—	1	—	—	—	—	—	—	—	—	—	2984 160
	w/o Rallye Inst. Panel, J	71	—	1	—	—	—	—	—	—	—	—	—	2984 120
	L-L, L-H	70	—	—	1	—	—	—	—	—	—	—	—	2984 243
	L-L except Fastback, L-H	71	—	—	1	—	—	—	—	—	—	—	—	2984 243
	Fastback, L-L	71	—	—	1	—	—	—	—	—	—	—	—	2984 404
	R-K, R-T, R-L, R-H, R-P, W-K, W-T, W-L, W-H, W-P except Charger, W-S 2D.H.T. and Cv. Cp. w/o Rallye Inst. Panel	70	—	—	—	1	1	—	—	—	—	—	—	2984 236

CARLINES: J - Challenger, B - Barracuda, V - Valiant, L - Dart, R - Belvedere - Satellite, W - Coronet - Charger, P - Plymouth, D - Dodge, C - Chrysler, Y - Imperial

AR Indicates use as required.

Numerals in parentheses ( ) refer to notes.

Indicates parts not listed in any previous parts book.

★ Indicates change or addition.

Printed in U.S.A. January 1972

CODE	PART NAME	ENG. TYPE OR CU.IN.	V 1-2	B J 1-2	L 1-2	R 1-2	W 1-2	P 1-2	D 1-2	C 1	C 2	C 3	Y 1	PART NUMBER
8-37-0	**INSTRUMENT PANEL INSTRUMENTS Cont'd.**													
8-37-136	TEMPERATURE GAUGE Cont'd.													
	R-M, R-S, W-M, W-P Charger, W-S Charger R/T, W-S 2D.H.T. and Cv. Cp. w/Rallye Inst. Panel	70	—	—	—	1	1	—	—	—	—	—	—	2984 241
	w/o Clock or Tach., R-M, R-P, R-S, W-M, W-P except Fastback, W-S	71	—	—	—	1	1	—	—	—	—	—	—	2985 217
	w/Clock and Tach., R-M, R-P, R-S, W-M, W-P, W-S	71	—	—	—	1	1	—	—	—	—	—	—	2985 223
			—	—	—	—	—	1	—	—	—	—	—	2984 238
		70	—	—	—	—	—	—	1	—	—	—	—	2984 930
		71	—	—	—	—	—	—	1	—	—	—	—	2984 238
8-37-141	SPINNER, Inst. Gage Pointer, w/o Clock, w/o Tach., R-M, R-P, R-S, W-M, W-P except Fastback, W-S	71	—	—	—	1	1	—	—	—	—	—	—	2985 198
8-37-142	SPACER, Inst. Gage Mtg., Fuel and Temp. Gage	71	4	—	4	—	—	—	—	—	—	—	—	2984 084
	Ammeter	71	2	—	2	—	—	—	—	—	—	—	—	2984 084
8-37-155	SENDING UNIT, Temp. Gage		1	1	1	1	1	1	1	—	—	—	1	2426 458
	SWITCH, Temp. Sending Unit		—	—	—	—	—	—	—	1	1	1	1	2857 562
8-37-160	MASK, Cluster, L-L, L-H	Mile 70	—	—	1	—	—	—	—	—	—	—	—	2771 149
	L-L, L-H	Kilo 70	—	—	1	—	—	—	—	—	—	—	—	2771 150
	L-L except Fastback, L-H	Mile 71	—	—	1	—	—	—	—	—	—	—	—	2771 149
	L-L except Fastback, L-H	Kilo 71	—	—	1	—	—	—	—	—	—	—	—	2771 150
	w/o Clock or Tach., R-M, R-P, R-S, W-M, W-P except Fastback, W-S	71	—	—	—	1	1	—	—	—	—	—	—	2985 185
	w/Clock and Tach., R-M, R-P, R-S, W-M, W-P, W-S	71	—	—	—	1	1	—	—	—	—	—	—	2985 234
8-37-162	LENS, Cluster, w/o Rallye Inst. Panel		—	1	—	—	—	—	—	—	—	—	—	2984 110
	w/MASK, w/Rallye Inst. Panel	70	—	1	—	—	—	—	—	—	—	—	—	2984 867
	w/Mask, w/Rallye Inst. Panel	71	—	1	—	—	—	—	—	—	—	—	—	2985 953
	R-K, R-T, R-L, R-H, R-P, W-K, W-T, W-L, W-H, W-P except Charger	120 Mile 70	—	—	—	1	1	—	—	—	—	—	—	2984 503
	R-K, R-T, R-L, R-H, R-P, W-K, W-T, W-L, W-H, W-P except Charger, W-S 2D.H.T. and Cv. Cp. w/o Rallye Inst. Panel	Kilo 70	—	—	—	1	1	—	—	—	—	—	—	2984 505
	w/MASK, R-K, R-T, R-L, R-H, W-K, W-T, W-L, W-H	71	—	—	—	1	1	—	—	—	—	—	—	3514 398
	R-M, R-S, W-M, W-P Charger, W-S Charger R/T, W-S 2D.H.T. and Cv. Cp. w/Rallye Inst. Panel	70	—	—	—	1	1	—	—	—	—	—	—	2889 693
	W-S 2D.H.T. and Cv. Cp. w/o Rallye Inst. Panel	150 Mile 70	—	—	—	—	1	—	—	—	—	—	—	2984 504
			—	—	—	—	—	1	—	—	—	—	—	2927 037
		70	—	—	—	—	—	—	1	—	—	—	—	2984 954
		71	—	—	—	—	—	—	1	—	—	—	—	2927 [illegible]7
		70	—	—	—	—	—	—	—	1	1	1	—	2927 234
		71	—	—	—	—	—	—	—	1	1	1	—	2985 569
		70	—	—	—	—	—	—	—	—	—	—	1	2927 336
		71	—	—	—	—	—	—	—	—	—	—	1	2985 523
8-37-170	CLIP, Speed and Inst. Cluster Lens to Hsg.		—	AR	—	AR	AR	—	—	AR	AR	AR	AR	2889 588
8-37-178	HOUSING, Speed and Inst. Cluster, V-L		1	—	—	—	—	—	—	—	—	—	—	2771 201
	V-S, L-M		1	—	1	—	—	—	—	—	—	—	—	2857 671
	B w/o Rallye Inst. Panel, J-H w/Inst. Panel Wood Grain		—	1	—	—	—	—	—	—	—	—	—	2984 111
	w/Rallye Inst. Panel		—	1	—	—	—	—	—	—	—	—	—	2984 866
	w/o Rallye Inst. Panel, w/o Inst. Panel Wood Grain, J-H		—	1	—	—	—	—	—	—	—	—	—	2984 151

8-37-0 INSTRUMENT PANEL INSTRUMENTS Cont'd.

CODE	PART NAME	ENG. TYPE OR CU.IN.	V 1-2	B J 1-2	L 1-2	R 1-2	W 1-2	P 1-2	D 1-2	C 1	C 2	C 3	Y 1	PART NUMBER
8-37-178	HOUSING Cont'd.													
	HOUSING PACKAGE, L-L, L-H	70	—	—	1	—	—	—	—	—	—	—	—	3420 741
	L-L except Fastback, L-H	71	—	—	1	—	—	—	—	—	—	—	—	3420 741
	V-H 2 D.H.T., L-L Fastback	71	1	—	1	—	—	—	—	—	—	—	—	2771 201
	R-K, R-T, R-L, R-H, R-P, W-K, W-T, W-L, W-H, W-P except Charger, W-S 2D.H.T. and Cv. Cp. w/o Rallye Inst. Panel	70	—	—	—	1	1	—	—	—	—	—	—	2857 011
	R-M, R-S, W-M, W-P Charger, W-S Charger R/T, W-S 2D.H.T. and Cv. Cp. w/Rallye Inst. Panel	70	—	—	—	1	1	—	—	—	—	—	—	2984 654
	R-K, R-T, R-L, R-H, W-K, W-T, W-L, W-H w/o Tach. or Clock, R-M, R-P, R-S, W-M, W-P except Fastback, W-S	71	—	—	—	1	1	—	—	—	—	—	—	2985 401
		71	—	—	—	1	1	—	—	—	—	—	—	2985 833
	w/Tach. or Clock, R-M, R-P, R-S, W-M, W-P, W-S	71	—	—	—	1	1	—	—	—	—	—	—	2985 834
		70	—	—	—	—	—	1	—	—	—	—	—	2927 665
	w/Acc. Ind.	71	—	—	—	—	—	1	1	—	—	—	—	3514 434
		70	—	—	—	—	—	—	1	—	—	—	—	2984 943
	HOUSING PACKAGE	70	—	—	—	—	—	—	—	1	1	1	—	3420 858
		71	—	—	—	—	—	—	—	1	1	1	—	2985 588
	HOUSING PACKAGE	70	—	—	—	—	—	—	—	—	—	—	1	3420 838
		71	—	—	—	—	—	—	—	—	—	—	1	2985 585
8-37-188	SCREW, Speed and Inst. Cluster Hsg. to Bezel, V-S, L-M		8	—	8	—	—	—	—	—	—	—	—	2291 327
	SCREW, Tach. Hole Cover or Tach. Mtg. V-S, L-M		3	—	3	—	—	—	—	—	—	—	—	2291 327
8-37-190	PLATE and BRACKET, Inst. Panel Cluster, R-K, R-T, R-L, R-H, R-P, W-K, W-T, W-L, W-H, W-P except Charger, W-S 2D.H.T. and Cv. Cp. w/o Rallye Inst. Panel	70	—	—	—	1	1	—	—	—	—	—	—	2984 751
8-37-275	FUEL GAUGE, V-L		1	—	—	—	—	—	—	—	—	—	—	2984 403
	2D.H.T., V-H	71	1	—	—	—	—	—	—	—	—	—	—	2984 403
	V-S, L-M		1	—	1	—	—	—	—	—	—	—	—	2771 638
	w/Rallye Inst. Panel		—	1	—	—	—	—	—	—	—	—	—	2984 178
	w/o Rallye Inst. Panel, B	70	—	1	—	—	—	—	—	—	—	—	—	2984 119
	w/o Rallye Inst. Panel	71	—	1	—	—	—	—	—	—	—	—	—	2984 119
	w/o Rallye Inst. Panel, J-H	70	—	1	—	—	—	—	—	—	—	—	—	2984 159
	L-L, L-H	70	—	—	1	—	—	—	—	—	—	—	—	2771 167
	L-L except Fastback, L-H	71	—	—		—	—	—	—	—	—	—	—	2771 167
	L-L Fastback	71	—	—	1	—	—	—	—	—	—	—	—	2984 403
	R-K, R-T, R-L, R-H, R-P, W-K, W-T, W-L, W-H, W-P except Charger, W-S 2D.H.T. and Cv. Cp. w/o Rallye Inst. Panel	70	—	—	—	1	1	—	—	—	—	—	—	2857 002
	w/TEMPERATURE GAGE, R-K, R-T, R-L, R-H, W-K, W-T, W-L, W-H	71	—	—	—	1	1	—	—	—	—	—	—	2985 393
	R-M, R-S, W-M, W-P Charger, W-S Charger R/T, W-S 2D.H.T. and Cv. Cp. w/Rallye Inst. Panel	70	—	—	—	1	1	—	—	—	—	—	—	2857 172
	w/OIL GAGE, w/Electric Clock R-M, R-P, R-S, W-M, W-P, W-S	71	—	—	—	1	1	—	—	—	—	—	—	2985 214
	w/OIL GAGE, w/o Electric Clock, R-M, R-P, R-S, W-M, W-P W-S	71	—	—	—	1	1	—	—	—	—	—	—	2985 211
			—	—	—	—	—	1	—	—	—	—	—	2927 045
		70	—	—	—	—	—	—	1	—	—	—	—	2984 929
		71	—	—	—	—	—	—	1	—	—	—	—	2927 045

CARLINES J - Challenger, B - Barracuda, V - Valiant, L - Dart, R - Belvedere - Satellite, W - Coronet - Charger, P - Plymouth, D - Dodge, C - Chrysler, Y - Imperial

AR Indicates use as required.

# Indicates parts not listed in any previous parts book.

Numerals in parentheses ( ) refer to notes.

★ Indicates change or addition.

Printed in U.S.A. January 1972

CODE	PART NAME		ENG. TYPE OR CU.IN.	V	B J	L	R	W	P	D	C	C	C	Y	PART NUMBER
				1-2	1-2	1-2	1-2	1-2	1-2	1-2	1	2	3	1	
8-37-0	**INSTRUMENT PANEL INSTRUMENTS Cont'd.**														
8-37-275	FUEL GAUGE Cont'd.														
	w/TEMP. GAGE			—	—	—	—	—	—	—	1	1	1	—	2927 225
		70		—	—	—	—	—	—	—	—	—	—	1	2984 896
	w/TEMP. GAGE	71		—	—	—	—	—	—	—	—	—	—	1	2985 513
8-37-313	ADAPTER, Oil Pressure Sending Unit	71	6	—	—	—	—	—	1	1	—	—	—	—	2661 429
8-37-316	OIL GAGE, V-S, L-M			1	—	1	—	—	—	—	—	—	—	—	2771 640
	w/Rallye Inst. Panel			—	1	—	—	—	—	—	—	—	—	—	2984 181
	R-K, R-T, R-L, R-H, R-P, W-K, W-T, W-L, W-H, W-P except Charger, W-S 2D.H.T. and Cv. Cp. w/o Rallye Inst. Panel	70		—	—	—	1	1	—	—	—	—	—	—	2984 487
	R-M, R-S, W-M, W-P Charger, W-S Charger R/T, W-S 2D.H.T. and Cv. Cp. w/Rallye Inst. Panel	70		—	—	—	1	1	—	—	—	—	—	—	2857 171
	P-K, P-T, P-E, P-L			—	—	—	—	—	1	—	—	—	—	—	2984 068
	D-K, D-T, D-E, D-L, D-S	71		—	—	—	—	—	—	1	—	—	—	—	2984 068
		70		—	—	—	—	—	—	—	—	—	—	1	2984 888
		71		—	—	—	—	—	—	—	—	—	—	1	2985 515
8-37-322	HEAT SHIELD, Oil Sending Unit, w/426 Eng.			—	1	—	1	1	—	—	—	—	—	—	2781 298
8-37-372	SPEEDOMETER, V-L	Mile 70		1	—	—	—	—	—	—	—	—	—	—	2984 960
	V-L, V-H, L-L Fastback	Mile 71		1	—	1	—	—	—	—	—	—	—	—	3620 728
	V-S, L-M	150 Mile		1	—	1	—	—	—	—	—	—	—	—	2985 476
		Kilo 70	6	1	—	—	—	—	—	—	—	—	—	—	2984 961
	w/318 and 340 Eng.	Kilo 70	8	1	—	—	—	—	—	—	—	—	—	—	2984 998
	L-L Fastback	200 Kilo 71	6	1	—	1	—	—	—	—	—	—	—	—	3620 729
	w/318 Eng., L-L Fastback	240 Kilo 71	8	1	—	1	—	—	—	—	—	—	—	—	3620 730
	V-S, L-M	240 Kilo 70		1	—	1	—	—	—	—	—	—	—	—	2985 477
	V-S, L-M	240 Kilo 71		1	—	1	—	—	—	—	—	—	—	—	2889 426
	w/o Rallye Inst. Panel, w/Wood Grain	Mile		—	1	—	—	—	—	—	—	—	—	—	2984 964
		Kilo		—	1	—	—	—	—	—	—	—	—	—	2984 965
	w/o Rallye Inst. Panel, w/o Wood Grain	Mile		—	1	—	—	—	—	—	—	—	—	—	2984 966
		Kilo		—	1	—	—	—	—	—	—	—	—	—	2984 967
	w/Rallye Inst. Panel	Mile 70		—	1	—	—	—	—	—	—	—	—	—	2984 968
		Mile 71		—	1	—	—	—	—	—	—	—	—	—	2985 954
		Kilo 70		—	1	—	—	—	—	—	—	—	—	—	2984 969
		Kilo 71		—	1	—	—	—	—	—	—	—	—	—	2985 955
	L-L, L-H	Mile 70		—	—	1	—	—	—	—	—	—	—	—	2984 962
	L-L except Fastback, L-H	Mile 71		—	—	1	—	—	—	—	—	—	—	—	2984 962
	L-L, L-H	Kilo 70		—	—	1	—	—	—	—	—	—	—	—	2984 963
	L-L except Fastback, L-H	Kilo 71		—	—	1	—	—	—	—	—	—	—	—	2984 963
	R-T, R-L, R-H, R-P, W-T, W-L, W-H, W-P except Charger	120 Mile 70		—	—	—	1	1	—	—	—	—	—	—	2984 970
	R-T, R-L, R-H, W-T, W-L, W-H	Mile 71		—	—	—	1	1	—	—	—	—	—	—	2985 446
	R-T, R-L, R-H, R-P, W-T, W-L, W-H, W-P except Charger, W-S, 2D.H.T. and Cv. Cp. w/o Rallye Inst. Panel	Kilo		—	—	—	1	1	—	—	—	—	—	—	2984 971
	R-K, R-T, R-L, R-H, W-K, W-T, W-L W-H	Kilo 71		—	—	—	1	1	—	—	—	—	—	—	2985 447
	Certified, R-K, R-T, R-L, W-K, W-T, W-L	Mile 70		—	—	—	1	1	—	—	—	—	—	—	2984 972
	Certified, R-K, R-T, R-L, W-K, W-T, W-L	Mile 71		—	—	—	1	1	—	—	—	—	—	—	2985 448
	R-M, R-S, W-M, W-P Charger, W-S Charger R/T, W-S 2D.H.T. and Cv. Cp. w/Rallye Inst. Panel	Mile 70		—	—	—	1	1	—	—	—	—	—	—	2984 974
	R-M, R-P, R-S, W-M, W-P, W-S	Mile 71		—	—	—	1	1	—	—	—	—	—	—	2985 895
		Kilo 70		—	—	—	1	1	—	—	—	—	—	—	2984 975
		Kilo 71		—	—	—	1	1	—	—	—	—	—	—	2985 896

CARLINES: J - Challenger, B - Barracuda, V - Valiant, L - Dart, R - Belvedere - Satellite, W - Coronet - Charger, P - Plymouth, D - Dodge, C - Chrysler, Y - Imperial

AR Indicates use as required.

# Indicates parts not listed in any previous parts book.

Numerals in parentheses ( ) refer to notes.

★ Indicates change or addition.

Printed in U.S.A. January 1972

CODE	PART NAME	ENG. TYPE OR CU.IN.	V 1-2	B J 1-2	L 1-2	R 1-2	W 1-2	P 1-2	D 1-2	C 1	C 2	C 3	Y 1	PART NUMBER
8-37-0	**INSTRUMENT PANEL INSTRUMENTS Cont'd.**													
8-37-372	SPEEDOMETER Cont'd.													
	W-S 2D.H.T. and Cv. Cp., w/o Rallye Inst. Panel	150 Mile 70	—	—	—	—	1	—	—	—	—	—	—	2984 973
		Mile	—	—	—	—	—	1	—	—	—	—	—	2984 976
		Kilo	—	—	—	—	—	1	—	—	—	—	—	2984 977
	Certified	Mile	—	—	—	—	—	1	—	—	—	—	—	2984 978
		Mile 70	—	—	—	—	—	—	1	—	—	—	—	2984 979
		Mile 71	—	—	—	—	—	—	1	—	—	—	—	2984 976
		Kilo 70	—	—	—	—	—	—	1	—	—	—	—	2984 980
		Kilo 71	—	—	—	—	—	—	1	—	—	—	—	2984 977
	Certified	Mile 70	—	—	—	—	—	—	1	—	—	—	—	2984 981
	Certified	Mile 71	—	—	—	—	—	—	1	—	—	—	—	2984 978
	Certified	Mile 70	—	—	—	—	—	—	—	1	1	1	—	3412 798
	Certified	Mile 71	—	—	—	—	—	—	—	1	1	1	—	2985 967
		Mile 70	—	—	—	—	—	—	—	1	1	1	—	2984 982
		Mile 71	—	—	—	—	—	—	—	1	1	1	—	2985 599
		Kilo 70	—	—	—	—	—	—	—	1	1	1	—	2984 983
		Kilo 71	—	—	—	—	—	—	—	1	1	1	—	2985 600
		Mile 70	—	—	—	—	—	—	—	—	—	—	1	2984 984
		Mile 71	—	—	—	—	—	—	—	—	—	—	1	2985 590
		Kilo 70	—	—	—	—	—	—	—	—	—	—	1	2984 985
		Kilo 71	—	—	—	—	—	—	—	—	—	—	1	2985 591
8-37-381	GASKET, Speed to Hsg. Mtg.		1	1	1	1	1	1	1	—	—	—	—	2209 213
	Speed Mtg.		—	—	—	—	—	—	—	1	1	1	1	2927 253
8-37-386	SPACER, Speed to Hsg. Mtg. Screw		2	—	2	—	—	2	2	—	—	—	—	2984 633
8-37-387	GROMMET, Speed Hsg. Mtg. Screw		2	2	2	2	2	2	2	3	3	3	3	2209 214
8-37-440	PLATE, Speed Numerals	Kilo 70	—	—	—	—	—	—	—	1	1	1	—	2927 403
		Kilo 71	—	—	—	—	—	—	—	1	1	1	—	2985 570
		Kilo 71	—	—	—	—	—	—	—	—	—	—	1	2985 532
8-37-452	RESET, Clock, w/o Rallye Inst. Panel		—	1	—	—	—	—	—	—	—	—	—	2984 139
8-37-454	KNOB, Odometer Reset, V-S, L-M		1	—	1	—	—	—	—	1	1	1	1	2290 654
	Clock Reset and Odometer Reset	70	—	1	—	—	—	—	—	—	—	—	—	2984 219
	Clock Reset, up to approx. June 1971	71	—	1	—	—	—	—	—	—	—	—	—	2984 219
	after approx. June 1971	71	—	1	—	—	—	—	—	—	—	—	—	2985 949
	Odometer Reset, w/Rallye Inst. Panel	71	—	1	—	—	—	—	—	—	—	—	—	2985 943
	Clock Reset	70	—	—	—	1	1	—	—	—	—	—	—	2290 592
	Clock Reset	71	—	—	—	1	1	—	—	—	—	—	—	2985 356
			—	—	—	—	—	1	1	1	1	1	1	2857 543
8-37-455	PLUG, Clock Reset Stem Hole		—	—	—	1	—	—	—	—	—	—	—	2290 666
8-37-458	CABLE, Clock Reset, V-S, L-M	70	1	—	1	—	—	—	—	—	—	—	—	2857 739
	w/Rallye Inst. Panel	70	—	1	—	—	—	—	—	—	—	—	—	2984 220
		70	—	—	—	—	—	—	1	—	—	—	—	2927 119
8-37-459	NUT, Clock Reset Knob Mtg.		—	1	—	1	1	1	1	1	1	1	1	2257 804
	Clock Reset Cable Mtg., w/Rallye Inst. Panel	70	—	1	—	—	—	—	—	—	—	—	—	2820 116
	Odometer Reset Knob Mtg. w/Rallye Inst. Panel	70	—	1	—	—	—	—	—	—	—	—	—	2257 804
8-37-463	BEZEL, Clock and A/Cond.	70	—	—	—	—	—	—	—	—	—	—	1	2984 741
		71	—	—	—	—	—	—	—	—	—	—	1	2985 586
8-37-504	TACHOMETER, Inst. Panel, V-S, L-M		1	—	1	—	—	—	—	—	—	—	—	2857 729
	w/Rallye Inst. Panel		—	1	—	—	—	—	—	—	—	—	—	2984 185
	R-L, R-H, R-P, W-L, W-H, W-P except Charger, W-S 2D.H.T. and Cv. Cp. w/o Rallye Inst. Panel	70	—	—	—	1	1	—	—	—	—	—	—	2889 151
	w/CLOCK, R-M, R-S, W-M, W-P Charger, W-S Charger R/T, W-S 2D.H.T. and Cv. Cp. w/Rallye Inst. Panel	70	—	—	—	1	1	—	—	—	—	—	—	2857 178
	R-M, R-P, R-S, W-M, W-P, W-S	71	—	—	—	1	1	—	—	—	—	—	—	2985 170

CARLINES: J - Challenger, B - Barracuda, V - Valiant, L - Dart, R - Belvedere - Satellite, W - Coronet - Charger, P - Plymouth, D - Dodge, C - Chrysler, Y - Imperial

AR Indicates use as required.

# Indicates parts not listed in any previous parts book.

Numerals in parentheses ( ) refer to notes.

★ Indicates change or addition.

Printed in U.S.A. January 1972

CODE	PART NAME	ENG. TYPE OR CU.IN.	V 1-2	B J 1-2	L 1-2	R 1-2	W 1-2	P 1-2	D 1-2	C 1	C 2	C 3	Y 1	PART NUMBER
8-37-0	**INSTRUMENT PANEL INSTRUMENTS Cont'd.**													
8-37-505	PLATE, Tach. Mtg., R-L, R-H, R-P, W-L, W-H, W-P except Charger, W-S 2D.H.T. and Cv. Cp. w/o Rallye Inst. Panel	70	—	—	—	1	1	—	—	—	—	—	—	2889 180
8-37-545	WIRING, Tach., R-L, R-H, R-P, W-L, W-H, W-P except Charger, W-S 2D.H.T. and Cv. Cp. w/o Rallye Inst. Panel	70	—	—	—	1	1	—	—	—	—	—	—	2889 394
8-38-0	**GLOVE COMPARTMENT LAMP**													
8-38-3	LENS, Lamp		1	1	1	1	1	1	1	1	1	1	1	2822 583
8-38-23	LAMP PACKAGE		1	1	1	1	1	—	—	—	—	—	—	2864 325
			—	—	—	—	—	1	1	—	—	—	—	2947 285
		70	—	—	—	—	—	—	—	1	1	1	—	2947 218
		71	—	—	—	—	—	—	—	1	1	1	—	3488 496
	LAMP and SWITCH		1	—	1	—	—	—	—	—	—	—	—	2864 315
			—	—	—	1	1	1	1	—	—	—	—	2291 781
		70	—	—	—	—	—	—	—	1	1	1	1	2864 405
		71	—	—	—	—	—	—	—	1	1	1	1	3488 443
8-38-24	SWITCH		—	1	—	—	—	—	—	—	—	—	—	2947 924
8-39-0	**HIGH BEAM INDICATOR LAMP**													
8-39-9	LAMP, X-Press Super Light Switch Positioning Indicator	70	—	—	—	—	—	—	1	—	—	—	—	2947 180
8-39-15	SOCKET, on Printed Circuit Board, R except R-M and R-S, W-K, W-T, W-L, W-H, W-P except Charger, W-S 2D.H.T. and Cv. Cp. w/o Rallye Inst. Panel	70	1	—	1	1	1	—	1	—	—	—	—	2496 279
	R-K, R-T, R-L, R-H, W-K, W-T, W-L, W-H	71	1	—	1	1	1	—	—	—	—	—	—	2496 279
			—	1	—	—	—	—	—	—	—	—	—	2097 003
	R-M, R-S, W-M, W-P Charger, W-S Charger R/T, W-S 2D.H.T. and Cv. Cp. w/Rallye Inst. Panel	70	—	—	—	1	1	—	1	1	1	1	—	2097 003
	R-M, R-P, R-S, W-M, W-P, W-S	71	—	—	—	1	1	1	—	1	1	1	—	2097 003
			—	—	—	—	—	1	—	—	—	—	—	2584 971
		71	—	—	—	—	—	—	1	—	—	—	—	2584 971
8-39-17	CONTACT, Socket		—	—	—	—	—	1	1	—	—	—	—	2256 966
8-40-0	**IGNITION LAMP**													
8-40-5	LAMP, Ignition and Starter Switch, w/Time Delay, Std. Column	70	1	1	1	1	1	—	—	—	—	—	—	2947 751
	w/Time Delay, Std. Column	71	1	1	1	1	1	—	—	—	—	—	—	3488 479
	w/Time Delay, Std. Column, w/o Tilt Strg. Wheel	70	—	—	—	—	—	1	1	—	—	—	—	2947 751
	Std. Column, w/Time Delay w/o Tilt-Tilt-Tel. Strg., Wheel	71	—	—	—	—	—	1	1	1	1	1	1	3488 479
	w/Tilt Column, w/Tilt Strg. Wheel	70	—	—	—	—	—	1	1	—	—	—	—	2947 754
	Std. Column, w/o Tilt-Tel. Strg. Wheel	70	—	—	—	—	—	—	—	1	1	1	—	2947 915
	w/Tilt Column, w/Tilt-Tel. Strg. Wheel	70	—	—	—	—	—	—	—	1	1	1	1	2947 753
	w/Time Delay, w/Tilt-Tel. Strg. Wheel	71	—	—	—	—	—	—	—	1	1	1	1	3488 169
	SCREW, Mtg.	70	2	2	2	2	2	2	2	2	2	2	2	6023 088
8-40-10	RELAY, Ignition Lamp Thermal Time Delay		1	1	1	1	1	1	1	1	1	1	1	2889 565
8-40-21	PLUG, Ignition Switch Lamp Opening, w/o Ignition Switch Time Delay	Black 71	1	1	1	1	1	—	—	—	—	—	—	4243 GX9
	w/o Ignition Switch Time Delay, w/o Tilt and Tilt-Tel. Strg. Wheel, C-E, C-L	Black 71	—	—	—	—	—	1	1	1	1	—	—	4243 GX9

CARLINES J - Challenger, B - Barracuda, V - Valiant, L - Dart, R - Belvedere - Satellite, W - Coronet - Charger, P - Plymouth, D - Dodge, C - Chrysler, Y - Imperial

AR Indicates use as required.

# Indicates parts not listed in any previous parts book.

Numerals in parentheses ( ) refer to notes.

★ Indicates change or addition.

Printed in U.S.A. January 1972

CODE	PART NAME	ENG. TYPE OR CU.IN.	V 1-2	B J 1-2	L 1-2	R 1-2	W 1-2	P 1-2	D 1-2	C 1	C 2	C 3	Y 1	PART NUMBER
8-41-0	**INSTRUMENT PANEL LAMP**													
8-41-17	HOUSING and LENS PACKAGE, Warning Lamp		—	—	—	—	—	—	—	1	1	1	—	2932 818
8-41-35	DIFFUSER, Console Gear Selector Lamp		1	—	1	1	1	1	1	1	1	1	—	2427 533
	Clock or Tach. Ind. Lamp, R-M, R-S, W-M, W-P Charger, W-S Charger R/T, W-S 2 D.H.T. and Cv. Cp. w/Rallye Inst. Panel	70	—	—	—	1	1	—	—	—	—	—	—	2427 533
	A/Cond. and Heater Control Lamp		1	—	1	—	—	—	—	—	—	—	—	2580 381
	Clock or Clock Hole Cover Lamp, W-K, W-T, W-L, W-H	71	—	—	—	—	1	—	—	—	—	—	—	2426 216
	Auto. Temp. Control Lamp	70	—	—	—	—	—	—	1	—	—	—	—	2580 381
8-41-36	SOCKET, Inst. Lamp, V-L, R except R-M and R-S, W-K, W-T, W-H, W-P except Charger, W-S 2D.H.T. and Cv. Cp. w/o Rallye Inst. Panel	70	3	—	4	4	4	—	4	—	—	—	—	2496 279
	V-S, R-M, R-S, W-M, W-P Charger, W-S Charger R/T, W-S 2D.H.T. and Cv. Cp. w/Rallye Inst. Panel	70	4	—	—	3	3	—	—	—	—	—	—	2496 279
	V-L, R-K, R-T, R-L, R-H, W-K, W-T, W-L, W-H	71	3	—	4	3	3	—	—	—	—	—	5	2496 279
	V-S	71	4	—	—	—	—	—	—	—	—	—	—	2496 279
	w/o Rallye Inst. Panel	71	—	3	—	—	—	—	—	—	—	—	—	2771 134
	w/Rallye Inst. Panel	71	—	4	—	—	—	—	—	—	—	—	—	2771 134
	Speed and Inst. Lamp, R-K, R-T, R-L, R-H, W-K, W-T, W-L, W-H	71	—	—	—	1	1	—	—	—	—	—	—	2097 003
	R-M, R-P, R-S, W-M, W-P, W-S	71	—	—	—	7	7	—	—	—	—	—	—	2097 003
	R-M, R-S, W-M, W-P Charger, W-S Charger R/T, W-S 2D.H.T. and Cv. Cp. w/Rallye Inst. Panel	70	—	—	—	3	3	—	—	—	—	—	—	2097 003
	Cluster Lamp, w/o Rallye Inst. Panel		—	3	—	—	—	—	—	—	—	—	—	2983 876
	w/Rallye Inst. Panel		—	4	—	—	—	—	—	—	—	—	—	2983 876
		71	—	—	—	—	—	—	—	4	4	4	4	3513 609
	w/INSERT		—	—	—	—	—	3	3	—	—	—	—	2771 134
8-41-37	SPRING, Socket		—	—	—	—	—	3	3	—	—	—	—	1838 939
8-41-39	CONTACT, Socket		AR	AR	AR	—	—	AR	AR	AR	AR	AR	AR	2256 966
8-41-41	PANEL, Inst. Cluster Lamp, w/o Rallye Inst. Panel, B	70	—	1	—	—	—	—	—	—	—	—	—	2984 126
	w/Rallye Inst. Panel, B	70	—	1	—	—	—	—	—	—	—	—	—	2984 187
	w/o Rallye Inst. Panel, J	70	—	1	—	—	—	—	—	—	—	—	—	2984 166
	w/Rallye Inst. Panel, J	70	—	1	—	—	—	—	—	—	—	—	—	2984 081
	w/o Rallye Inst. Panel	71	—	1	—	—	—	—	—	—	—	—	—	2984 126
	w/Rallye Inst. Panel	71	—	1	—	—	—	—	—	—	—	—	—	2984 187
			—	—	—	—	—	1	1	—	—	—	—	2927 068
		70	—	—	—	—	—	—	—	1	1	1	—	2984 904
		71	—	—	—	—	—	—	—	1	1	1	—	2985 578
	Inst. Cluster Lamp End	71	—	—	—	—	—	—	—	1	1	1	—	2985 580
		70	—	—	—	—	—	—	—	—	—	—	1	2927 351
		71	—	—	—	—	—	—	—	—	—	—	1	2985 551
	S/NUT, Mtg.		—	—	—	—	—	AR	AR	—	—	—	—	6028 012
8-41-43	PLATE, Inst. Cluster Lamp Panel End	70	—	—	—	—	—	—	—	—	—	—	1	2927 615
8-42-0	**MAP AND COURTESY LAMP**													
8-42-1	LAMP, Map and Courtesy		1	1	1	—	—	—	—	—	—	—	—	2864 016
	Cv. Cp.	70	—	—	—	1	1	—	—	—	—	—	—	2864 016
	w/Switch	70	—	—	—	1	1	—	—	—	—	—	—	2820 034
		71	—	—	—	1	1	—	—	—	—	—	—	3488 334
	w/Indicator Lamp	71	—	—	—	1	1	—	—	—	—	—	—	3488 336

CARLINES: J - Challenger, B - Barracuda, V - Valiant, L - Dart, R - Belvedere - Satellite, W - Coronet - Charger, P - Plymouth, D - Dodge, C - Chrysler, Y - Imperial

AR Indicates use as required.

Numerals in parentheses ( ) refer to notes.

# Indicates parts not listed in any previous parts book.

★ Indicates change or addition.

Printed in U.S.A. January 1972

CODE	PART NAME	ENG. TYPE OR CU.IN.	V 1-2	B J 1-2	L 1-2	R 1-2	W 1-2	P 1-2	D 1-2	C 1	C 2	C 3	Y 1	PART NUMBER
8-42-0	**MAP AND COURTESY LAMP Cont'd.**													
8-42-1	LAMP Cont'd.													
	w/Power Antenna, w/Rr. Seat Speaker Opening	70	—	—	—	—	—	—	—	1	1	1	1	2947 124
	w/o Power Antenna, w/Rr. Seat Speaker	70	—	—	—	—	—	—	—	1	1	1	1	2947 123
	w/Power Antenna, w/o Rr. Seat Speaker	70	—	—	—	—	—	—	—	1	1	1	—	2947 122
	w/o Radio	70	—	—	—	—	—	—	—	1	1	1	1	2947 119
	w/Power Antenna, w/Rr. Seat Speaker	71	—	—	—	—	—	—	—	1	1	1	—	3488 131
	w/o Power Antenna, w/Rr. Seat Speaker	71	—	—	—	—	—	—	—	1	1	1	1	3488 133
	w/Power Antenna, w/o Rr. Seat Speaker	71	—	—	—	—	—	—	—	1	1	1	—	3488 132
	w/o Power Antenna, w/o Rr. Seat Speaker	71	—	—	—	—	—	—	—	1	1	1	1	3488 134
8-42-2	LAMP PACKAGE, Map and Courtesy	70	—	—	—	1	1	—	—	—	—	—	—	2864 324
		71	—	—	—	1	1	—	—	—	—	—	—	3488 425
8-42-5	LENS, Map and Courtesy Lamp	70	—	—	—	1	1	—	—	—	—	—	—	2820 036
8-42-10	SOCKET	70	—	—	—	1	1	—	—	1	1	1	1	1314 619
8-42-12	CONTACT, Socket		—	—	—	—	—	—	—	2	2	2	2	2256 966
8-42-25	SWITCH, Map and Courtesy Lamp		1	1	1	—	—	—	—	—	—	—	—	2864 243
8-42-29	BEZEL, Map and Courtesy Lamp Switch		1	1	1	—	—	—	—	—	—	—	—	2864 244

NOTES

8-44-0 BULBS

CODE	REMARKS	CARLINE	V-L	B-J	R-W	P-D-C	Y	SERVICE NO.
8-44-1	BULB LOCATIONS							
	Beam Indicator							
	H/Lamp	———	158	———	158	———	158	9415 969
		D,C	———	57	———	57	———	127 934
	Rallye Type	W	———	———	57	———	———	127 934
		P	———	———	———	1892	———	274 020
	Brake System Warning	V	158	———	158	———	———	9415 969
		L	57	57	———	57	57	127 934
	Rallye Type	———	———	———	57	———	———	127 934
	Portable Reading Lamp	———	———	———	———	———	89	142 452
	Oil Indicator	———	158	———	158	———	———	9415 969
		———	———	57	———	57	———	127 934
	Trunk Lamp	———	1004	———	———	———	———	151 578
		———	———	1003	1003	1003	1003	151 577
	Underhood Lamp	———	1004	———	———	———	———	151 578
		———	———	1003	1003	1003	1003	151 577
	Sentry Signal	———	———	———	———	———	158	9415 969
	Back-Up Lamp	———	1156	1156	1156	1156	1156	9417 866
	Courtesy Lamp	V,B	89	89	———	———	———	1424 452
		———	———	———	———	90	———	142 453
	Ignition Lamp	———	1445	1445	1445	1445	1445	274 004
	Glove Compartment	———	1891	1891	1891	1891	1891	152 244
	Fuel Indicator	P	———	———	———	57	———	127 934
	Dome Lamp	———	1004	1004	1004	———	———	151 578
	Gearshift Indicator	———	———	———	———	211-2	———	9431 808
	(Col.)	———	161	161	161	161	161	9417 561
	Gearshift Indicator							
	(Console)	L	57	57	57	57	———	127 934
	Low Fuel Indicator	———	———	1892	1892	———	———	274 020
		D	———	———	———	57	———	127 934
		C	———	———	———	158	———	9415 969
	Door and Pocket Panel							
	Reading	———	———	90	90	90	90	142 453
	Ash Reciver	C	1892	———	———	1892	1892	274 020
		P,D	———	1445	1445	1445	———	274 004
	Arm Rest Lamp	———	———	———	———	———	1445	274 004
	A/Cond. Control and							
	A.T.C	———	1445	———	———	1445	1445	274 004
		———	———	1815	———	———	———	193 065
		———	———	———	53	———	———	131 282
	Tail, Stop and Turn							
	Signal Lamp	———	1157	1157	1157	1157	1157	9417 867
	Map and Courtesy Lamp	———	89	89	———	———	———	142 452
		C	———	———	562	562	562	9427 943
	License Lamp	———	67	67	67	67	67	142 450
		J	———	68	———	———	———	142 451
	H/Lamp Washer Indicator	W,P	———	———	1445	1445	1445	274 004
	Radio AM-FM							
	w/Tape	R	1816	1816	1816	———	———	152 240
		W	———	———	1815	———	———	193 065
	Rallye Type	W	———	———	1816	———	———	152 240
	Map and Indicator Lamp	R,W	———	———	363	———	———	≠ 273 987
	Radio AM-FM							
	Stereo	L	1816	———	———	———	———	152 240
	Reverse 4 Speed	———	———	1815	1815	———	———	193 065
	Trans. Indicator	D	53	53	53	53	———	131 282
	Clock	———	———	■	■	■	■	———
	Cornering Lamp	———	———	———	———	1293	1293	9427 336
	Road Lamp	B	———	4415	———	———	———	3403 848
	Door Ajar	———	———	1892	1892	———	———	274 020
		———	———	———	———	57	———	127 934

CARLINES J - Challenger V - Valiant R - Belvedere - Satallite P - Plymouth C - Chrysler
B - Barracuda L - Dart W - Coronet - Charger D - Dodge Y - Imperial

AR **Indicates** use as required. Numerals in parentheses ( ) refer to notes. Printed in U.S.A.

Indicates parts not listed in any previous parts book. ★ Indicates change or addition. January 1972

8-44-0 BULBS Cont'd.

CODE	REMARKS	CARLINE	V-L	B-J	R-W	P-D-C	Y	SERVICE NO.
8-44-1	BULB LOCATIONS Cont'd.							
	Tachometer	J,D	———	■	■	■	———	———
	Turn Signal Indicator Lamp	———	158	———	158	———	———	9415 969
		———	———	57	———	57	———	127 934
	Rallye Type	———	———	———	57	———	———	127 934
	Switch Lighting	V,J,C	■	■	———	■	■	———
		L,B	1445	1445	———	———	———	274 004
		P,D	———	———	1892	1892	———	274 020
	Stereo Indicator	———	———	1445	———	1445	1445	274 004
		R	———	———	1892	———	———	274 020
	Side Marker Rr. Sta. Wgn.	———	———	———	1893	———	———	9416 927
	Side Marker	———	1895	1895	———	1895	1895	9417 863
		———	———	———	194	———	———	9421 330
	Sealed Beam, Single "7"	———	6012	———	———	———	———	152 291
	Sealed Beam, Hi Beam = 1"	———	———	4001	4001	4001	4001	152 285
	Sealed Beam Low Beam = 2	———	———	4000	4000	4000	4000	152 286
	Fasten Belt Indicator	P,D	53	———	———	53	———	131 282
		———	———	1892	1892	———	———	274 020
		C	———	———	———	57	———	127 934
		———	———	———	———	———	158	9415 969
	Fender Mtg. Turn Signal Indicator	———	330	330	330	330	330	9423 277
	Frt. Park and Turn Signal	B	1157NA	1157NA	———	———	1157NA	9423 295
		J,W	———	1157	1157	1157	———	9417 867
		R	———	———	1157A	———	———	9419 780
	Instrument Cluster and Speedometer	———	158	———	158	———	———	9415 969
		C	———	1816	———	1816	1816	152 240
	Rallye Type	———	———	1893	———	———	———	9416 927
	Rallye Type	———	———	———	57	———	———	127 934
		P,D	———	———	———	1893	———	9416 927
	X-Press Super Light	D	———	———	———	C41-163054	———	2949 241
	NOTE: ■ Included in Inst. Cluster Lighting							
	NOTE: Refer to Bulb Illustration for Bulb Identification							

NOTES

CARLINES	J - Challenger B - Barracuda	V - Valiant L - Dart	R - Belvedere - Satallite W - Coronet - Charger	P - Plymouth D - Dodge	C - Chrysler Y - Imperial

AR Indicates use as required.
= Indicates parts not listed in any previous parts book.
Numerals in parentheses ( ) refer to notes.
★ Indicates change or addition.

Printed in U.S.A.
January 1972

CODE	PART NAME		ENG. TYPE OR CU.IN.	V 1-2	B J 1-2	L 1-2	R 1-2	W 1-2	P 1-2	D 1-2	C 1	C 2	C 3	Y 1	PART NUMBER
8-47-0	**LICENSE MOUNTING PARTS**														
8-47-2	LICENSE FRAME ATTACHING PARTS PACKAGE			1	1	1	1	1	1	1	1	1	1	1	2768 643
8-47-8	Bracket, License Plate 70			1	—	—	—	—	—	—	—	—	—	—	2768 624
	Except 2 D.H.T. 71			1	—	—	—	—	—	—	—	—	—	—	2768 624
	B			—	1	—	—	—	—	—	—	—	—	—	2856 666
	J			—	1	—	—	—	—	—	—	—	—	—	2962 336
	Fastback	71		—	—	1	—	—	—	—	—	—	—	—	2768 624
	2 D.H.T.	71		—	—	—	1	—	—	—	—	—	—	—	3464 125
	2D., 2D.H.T., Cv. Cp. and 4D.	70		—	—	—	—	1	—	—	—	—	—	—	2962 532
	Charger and Charger R/T	70		—	—	—	—	1	—	—	—	—	—	—	2962 598
	2 D.H.T. and Fastback	Frt. 71		—	—	—	—	1	—	—	—	—	—	—	3464 344
	2 D.H.T. and Fastback	Rr. 71		—	—	—	—	1	—	—	—	—	—	—	3464 434
	4 D. and Sta. Wgn.	71		—	—	—	—	1	—	—	—	—	—	—	3464 320
		70		—	—	—	—	—	1	—	—	—	—	—	2962 666
				—	—	—	—	—	—	—	1	1	1	—	2931 323
		71		—	—	—	—	—	—	—	—	—	—	1	3464 773
	U/NUT, B			—	2	—	—	—	—	—	—	—	—	—	6025 507
	NUT and WASHER, J			—	4	—	—	AR	4	—	2	2	2	—	6023 204
8-47-14	SCREW and WASHER, License Plate Fastening			AR	AR	AR	AR	AR	AR	AR	AR	AR	AR	AR	6024 179
8-47-15	NUT, License Plate Fastening			AR	AR	AR	AR	AR	AR	AR	AR	AR	AR	AR	6023 925
8-47-67	SPRING, License Plate Mtg. Panel, B			—	1	—	—	—	—	—	—	—	—	—	1960 131
	except Sta. Wgn.	70		—	—	—	1	—	1	1	—	—	—	—	1960 131
	except Sta. Wgn.	71		—	—	—	1	—	1	—	—	—	—	—	3464 216-7
	except Charger, Charger R/T and Sta. Wgn., C-E, C-L	70		—	—	—	—	1	—	—	1	1	1	1	1960 131
	except Sta. Wgn.	71		—	—	—	—	1	—	—	1	1	1	1	1960 131
8-47-68	PANEL, License Plate Mtg., B	70		—	1	—	—	—	—	—	—	—	—	—	3445 763
	B	71		—	1	—	—	—	—	—	—	—	—	—	3615 134
	to Rr. Bumper Mtg., 2D., 2D.H.T., Cv. Cp. and 4D.	70		—	—	—	1	1	—	—	—	—	—	—	2931 030
	to Rr. Bumper Mtg., except Sta. Wgn.	71		—	—	—	1	—	1	—	—	—	—	—	3464 234
	except Sta. Wgn.	71		—	—	—	—	1	—	1	1	1	1	1	3464 244
	except Sta. Wgn.	70		—	—	—	—	1	1	1	1	1	1	1	2931 030
	NUT and WASHER	70		—	—	—	2	2	2	2	2	2	2	2	6023 204
8-47-76	PIN, License Plate Mtg. Panel, B			—	1	—	—	—	—	—	—	—	—	—	1960 127
	except Sta. Wgn.	70		—	—	—	1	—	1	1	1	1	1	1	1960 127
	except Sta. Wgn.	71		—	—	—	1	—	1	—	—	—	—	—	3464 215
	except Charger, Charger R/T and Sta. Wgn.	70		—	—	—	—	1	—	—	—	—	—	—	1960 127
	except Sta. Wgn.	71		—	—	—	—	1	—	1	1	1	1	1	1960 127
8-47-77	SPRING NUT, License Plate Mtg. Panel Hinge, B,W except Charger, Charger R/T and Sta. Wgn., C-E, C-L	70		—	1	—	—	1	—	—	1	1	1	1	6006 324
	except Sta. Wgn.	70		—	—	—	1	—	1	1	—	—	—	—	6006 324
8-47-126	BUTTON, License Plate, .62" Length			AR	AR	AR	AR	AR	AR	AR	AR	AR	AR	AR	2094 618
	.95" Length			AR	AR	AR	AR	AR	AR	AR	AR	AR	AR	AR	1943 547
8-50-0	**PARKING AND TURN SIGNAL LAMP**														
8-50-64	HOUSING, Turn Signal Indicator Lamp, w/Rallye Inst. Panel	Rt.		—	1	—	—	—	—	—	—	—	—	—	2984 696
		Lt.		—	1	—	—	—	—	—	—	—	—	—	2984 695
8-50-82	SWITCH, w/KNOB, Turn Signal	70		1	—	1	1	1	1	1	—	—	—	—	2947 503
		71		1	1	1	—	—	—	—	—	—	—	—	3488 477
	w/KNOB	70		—	1	—	—	—	—	—	—	—	—	—	2947 905
	w/o Tilt Strg. Wheel	71		—	—	—	1	1	1	1	1	1	1	1	3488 477
	w/Tilt Strg. Wheel	71		—	—	—	1	1	—	—	—	—	—	—	3575 247
	w/Tilt Strg. Wheel			—	—	—	—	—	1	1	—	—	—	—	3467 406

CARLINES: J - Challenger, B - Barracuda, V - Valiant, L - Dart, R - Belvedere - Satellite, W - Coronet - Charger, P - Plymouth, D - Dodge, C - Chrysler, Y - Imperial

AR Indicates use as required.

# Indicates parts not listed in any previous parts book.

Numerals in parentheses ( ) refer to notes.

★ Indicates change or addition.

Printed in U.S.A. January 1972

8-50-0 PARKING AND TURN SIGNAL LAMP Cont'd.

CODE	PART NAME	ENG. TYPE OR CU.IN.	V 1-2	B J 1-2	L 1-2	R 1-2	W 1-2	P 1-2	D 1-2	C 1	C 2	C 3	Y 1	PART NUMBER
8-50-82	SWITCH w/KNOB Cont'd.													
	w/Tilt-Telescopic Strg. Wheel	70	—	—	—	—	—	—	—	1	1	1	1	3467 407
	w/o Tilt-Telescopic Strg. Wheel	70	—	—	—	—	—	—	—	1	1	1	1	2947 536
	w/Tilt-Tel. Strg. Wheel	71	—	—	—	—	—	—	—	1	1	1	1	3575 246
	Emergency Flasher	70	—	—	—	—	—	—	—	1	1	1	—	2864 485
		70	—	—	—	—	—	—	—	—	—	—	1	2947 089
8-50-84	SCREW, Pan Head Cross Recess, w/Tilt Strg. Wheel	71	—	—	—	3	3	—	—	—	—	—	—	3467 417
	w/Tilt Strg. Wheel	71	—	—	—	1	1	—	—	—	—	—	—	3467 416
	w/Tilt and Tilt-Telescopic Strg. Wheel		—	—	—	—	—	3	3	3	3	3	3	3467 417
	w/Tilt and Tilt-Telescopic Strg. Wheel		—	—	—	—	—	1	1	1	1	1	1	3467 416
	SCREW, Oval Head Cross Recess, w/Tilt Strg. Wheel	71	—	—	—	2	2	—	—	—	—	—	—	3467 402
	w/Tilt and Tilt-Telescopic Strg. Wheel		—	—	—	—	—	2	2	2	2	2	2	3467 402
	SCREW, Truss Head Cross Recess, w/Tilt Strg. Wheel	71	—	—	—	1	1	—	—	—	—	—	—	3467 385
	w/Tilt and Tilt-Telescopic Strg. Wheel		—	—	—	—	—	1	1	1	1	1	1	3467 385
	SCREW and L/WASHER, w/Tilt Strg. Wheel	71	—	—	—	2	2	—	—	—	—	—	—	3467 431
	w/Tilt and Tilt-Telescopic Strg. Wheel		—	—	—	—	—	2	2	2	2	2	2	3467 431
	SCREW, Binding Head Cross Recess, w/Tilt and Tilt-Telescopic Strg. Wheel	71	—	—	—	2	2	2	2	2	2	2	2	3467 814
8-50-95	KNOB, Hazard Warning, w/Tilt Strg. Wheel		—	—	—	1	1	1	1	—	—	—	—	3467 813
	w/Tilt-Tel. Strg. Wheel	71	—	—	—	—	—	—	—	1	1	1	1	3575 253
8-50-126	CAM, Turn Signal Switch Cancelling		1	1	1	—	—	—	—	—	—	—	—	2258 704
		70	—	—	—	1	1	—	—	—	—	—	—	2258 704
	w/Tilt Strg. Wheel	71	—	—	—	1	1	—	—	—	—	—	—	3467 371
	w/o Tilt Strg.	71	—	—	—	1	1	—	—	—	—	—	—	2258 704
	w/o Tilt and Tilt-Telescopic Strg. Wheel		—	—	—	—	—	1	1	1	1	1	1	2258 704
	w/Tilt Strg.		—	—	—	—	—	1	1	—	—	—	—	3467 371
8-50-128	SPRING, Cancelling Cam, w/Tilt Strg. Wheel	70	—	—	—	—	—	1	1	—	—	—	—	3467 427
8-50-129	LEVER and KNOB, Turn Signal	70	1	—	1	—	—	—	—	—	—	—	—	2889 093
		71	1	—	1	—	—	—	—	—	—	—	—	2947 963
			—	1	—	—	—	—	—	—	—	—	—	= 2947 953
	w/o Auto. Speed Control	70	—	—	—	1	1	—	—	—	—	—	—	2889 093
	w/o Auto. Speed Control	71	—	—	—	1	1	—	—	—	—	—	—	2947 963
	w/o Tilt Strg. Wheel, w/Auto. Speed Control, up to approx. Feb., 1971	71	—	—	—	1	1	1	1	—	—	—	—	2947 954
	after approx. Feb., 1971	71	—	—	—	1	1	1	1	—	—	—	—	3488 538
	w/Tilt Strg. Wheel, w/Auto. Speed Control, up to approx. Feb., 1971	71	—	—	—	1	1	1	1	—	—	—	—	2947 956
	after approx. Feb., 1971	71	—	—	—	1	1	1	1	—	—	—	—	3488 540
	w/Tilt Strg. Wheel, w/o Auto. Speed Control	71	—	—	—	1	1	1	1	—	—	—	—	2947 952
	w/Tilt Strg. Wheel, w/o Auto. Speed Control	70	—	—	—	—	—	1	1	—	—	—	—	2926 586
	w/o Tilt Strg. Wheel, w/o Auto. Speed Control	70	—	—	—	—	—	1	1	—	—	—	—	2947 950
	w/o Tilt and Tilt-Telescopic Strg. Wheel, w/o Auto. Speed Control	71	—	—	—	—	—	1	1	1	1	1	1	2947 950
	w/o Tilt-Telescopic Strg. Wheel, w/o Auto. Speed Control	70	—	—	—	—	—	—	—	1	1	1	1	2947 950
	w/Tilt-Telescopic Strg. Wheel, w/o Auto. Speed Control	70	—	—	—	—	—	—	—	1	1	1	1	2947 839
	w/Tilt-Telescopic Strg. Wheel, w/o Auto. Speed Control	71	—	—	—	—	—	—	—	1	1	1	1	2947 951

CARLINES: J - Challenger, B - Barracuda, V - Valiant, L - Dart, R - Belvedere - Satellite, W - Coronet - Charger, P - Plymouth, D - Dodge, C - Chrysler, Y - Imperial

AR Indicates use as required.

# Indicates parts not listed in any previous parts book.

Numerals in parentheses ( ) refer to notes.

★ Indicates change or addition.

Printed in U.S.A. January 1972

8-50-0 PARKING AND TURN SIGNAL LAMP Cont'd.

CODE	PART NAME	ENG. TYPE OR CU.IN.		V 1-2	B J 1-2	L 1-2	R 1-2	W 1-2	P 1-2	D 1-2	C 1	C 2	C 3	Y 1	PART NUMBER
8-50-129	LEVER and KNOB Cont'd.														
	LEVER, w/Auto. Speed Control	70		—	1	—	—	—	—	—	—	—	—	—	2984 055
	w/Auto. Speed Control	70		—	—	—	1	1	—	—	—	—	—	—	2947 500
	w/Tilt Strg. Wheel, w/Auto. Speed Control	70		—	—	—	—	—	1	1	—	—	—	—	2947 524
	w/o Tilt Strg. Wheel, w/Auto. Speed Control	70		—	—	—	—	—	1	1	—	—	—	—	2947 500
	w/Tilt-Telescopic Strg. Wheel, w/Auto. Speed Control	70		—	—	—	—	—	—	—	1	1	1	1	2947 501
	w/Tilt-Tel Strg. Wheel, w/Auto. Speed Control, up to approx. Feb. 1971	71		—	—	—	—	—	—	—	1	1	1	1	2947 955
	after approx. Feb. 1971	71		—	—	—	—	—	—	—	1	1	1	1	3488 539
	w/o Tilt-Telescopic Strg. Wheel, w/Auto. Speed Control	70		—	—	—	—	—	—	—	1	1	1	1	2947 500
	w/o Tilt-Tel. Strg. Wheel, w/Auto. Speed Control, up to approx. Feb. 1971	71		—	—	—	—	—	—	—	1	1	1	1	2947 954
	after approx. Feb. 1971	71		—	—	—	—	—	—	—	1	1	1	1	3488 538
	Hazard Warning Switch, w/Tilt-Tel. Strg. Wheel	71		—	—	—	—	—	—	—	1	1	1	1	3575 254
	SCREW, Mtg.			1	1	1	1	1	1	1	1	1	1	1	6028 283
8-50-156	SOCKET, Turn Signal Lamp, on Printed Circuit Board, R except R-M, R-S, W-K, W-T, W-L, W-H, W-P except Charger, W-S 2 D.H.T. and Cv. Cp. w/o Rallye Inst. Panel	70		2	—	2	2	2	—	2	—	—	—	—	2496 279
	R-K, R-T, R-L, R-H, W-K, W-T, W-L, W-H	71		2	—	2	2	2	—	—	—	—	—	—	2496 279
				—	2	—	—	—	—	—	—	—	—	—	2097 003
	R-M, R-S, W-M, W-P Charger, W-S Charger R/T, W-S 2D.H.T. and Cv. Cp. w/Rallye Inst. Panel	70		—	—	—	2	2	2	—	—	—	—	—	2097 003
	R-M, R-P, R-S, W-M, W-P, W-S	71		—	—	—	2	2	2	—	—	—	—	—	2097 003
		Rt.		—	—	—	—	—	—	—	1	1	1	—	2096 374
		Lt.		—	—	—	—	—	—	—	1	1	1	—	2496 279
	SOCKET and CABLE, Fender Turn Signal Ind. Lamp, J-H w/340 Eng., W except Charger and Charger R/T	70		2	2	2	—	2	—	2	2	2	2	—	2930 801
		71		—	—	2	—	2	2	2	2	2	2	—	2930 801
	B, J-H except 340, 426 and 440 Eng., R 4D. and Sta. Wgn., P-K, P-T, P-E, P-L, P-M, P-H	71		2	2	—	2	—	2	—	—	—	—	—	2983 815
	2D.H.T., R-H, R-P	71		—	—	—	2	—	—	—	—	—	—	—	3513 636
	w/426 Eng.	71	8	—	—	—	2	—	—	—	—	—	—	—	3513 636
	w/440 Eng., R-M, R-S	71	8	—	—	—	2	—	—	—	—	—	—	—	3513 636
	C-E, C-L	71	8	—	—	—	—	—	—	—	2	2	2	—	2926 462
		71	8	—	—	—	—	—	—	—	—	—	—	2	2930 720
	B, J-H except 340 Eng.	70		—	2	—	—	—	—	—	—	—	—	—	2983 815
	R-K, R-T, R-L, R-H, R-P	70		—	—	—	2	—	—	—	—	—	—	—	2606 175
	R-M, R-S	70		—	—	—	2	—	—	—	—	—	—	—	2930 801
	Charger and Charger R/T	70		—	—	—	—	2	—	—	—	—	—	—	2853 712
		70		—	—	—	—	—	2	—	—	—	—	—	2983 856
8-50-159	CONTACT, Socket			AR	AR	AR	AR	AR	AR	AR	AR	AR	AR	AR	2256 966
8-50-171	BEZEL, Turn Signal Ind. Lamp, Charger and Charger R/T	70		—	—	—	—	1	—	—	—	—	—	—	3403 648-9
8-50-173	NUT, Turn Signal Ind. Lamp Mtg., W except Charger and Charger R/T, C-P	70		2	2	2	—	2	—	2	2	—	—	—	6028 273

CARLINES: J - Challenger, B - Barracuda, V - Valiant, L - Dart, R - Belvedere - Satellite, W - Coronet - Charger, P - Plymouth, D - Dodge, C - Chrysler, Y - Imperial

AR Indicates use as required.

Numerals in parentheses ( ) refer to notes.

# Indicates parts not listed in any previous parts book.

★ Indicates change or addition.

Printed in U.S.A. January 1972

8-50-0 PARKING AND TURN SIGNAL LAMP Cont'd.

CODE	PART NAME	ENG. TYPE OR CU.IN.	V 1-2	B J 1-2	L 1-2	R 1-2	W 1-2	P 1-2	D 1-2	C 1	C 2	C 3	Y 1	PART NUMBER
8-50-173	NUT Cont'd.													
	NUT, Lamp Mtg., R-K, R-T, R-L, R-H, R-P	70	—	—	—	2	—	—	—	—	—	—	—	6028 273
	NUT, Lamp Mtg., R-M, R-S	70	—	—	—	4	—	—	—	—	—	—	—	6023 215
	NUT and WASHER, Lamp Bezel Att., Charger and Charger R/T	70	—	—	—	—	4	—	—	—	—	—	—	6023 202
	NUT, Lamp Mtg.	70	—	—	—	—	—	—	—	—	—	—	4	1839 995
8-50-175	LAMP, Turn Signal Ind., J-H w/340 Eng.	70	2	2	—	—	—	—	—	—	—	—	—	2930 781
		71	2	—	—	—	—	—	—	—	—	—	—	3479 261
	B, Partial	70	—	2	—	—	—	—	—	—	—	—	—	3403 140
	B	71	—	2	—	—	—	—	—	—	—	—	—	3479 261
	J-H except 340 Eng., Partial		—	2	—	—	—	—	—	—	—	—	—	3403 140
	LAMP PACKAGE, Complete, B	70	—	2	—	—	—	—	—	—	—	—	—	3420 727
	Complete, J-H except 340 Eng.		—	2	—	—	—	—	—	—	—	—	—	3420 727
			—	—	2	—	—	—	2	—	—	—	—	2930 781
	R-K, R-T, R-L, R-H, R-P	70	—	—	—	2	—	—	—	—	—	—	—	3403 505
	R-M, R-S	70	—	—	—	1	—	—	—	—	—	—	—	3403 658-9
		71	—	—	—	2	—	—	—	—	—	—	—	3479 378
	Charger and Charger R/T	70	—	—	—	—	2	—	—	—	—	—	—	3403 654
	W except Charger and Charger R/T, C-P	70	—	—	—	—	2	—	—	2	—	—	—	2930 781
	C-E w/Grand Coupe Pkg., C-P	71	—	—	—	—	2	—	—	2	—	—	—	2930 781
		70	—	—	—	—	—	1	—	—	—	—	—	3403 918-9
	P-P	71	—	—	—	—	—	2	—	—	—	—	—	3479 187
	P-K, P-T, P-E, P-L, P-M, P-H	71	—	—	—	—	—	2	—	—	—	—	—	3479 378
	C-E, C-L		—	—	—	—	—	—	—	1	1	1	—	2930 578-9
	SCREW, Mtg., C-E, C-L	70	—	—	—	—	—	—	—	2	2	2	—	6026 540
8-50-184	COVER, Turn Signal Ind. Lamp, B	71	2	2	—	2	—	2	—	—	—	—	—	3479 246
	Charger and Charger R/T	70	—	—	—	—	2	—	—	—	—	—	—	3403 853
		70	—	—	—	—	—	2	—	—	—	—	—	3403 932
	C-E, C-L		—	—	—	—	—	—	—	1	1	1	—	2930 580-1
	COVER and Welt Package		—	—	—	—	—	—	—	—	—	—	1	2932 844-5
	HOUSING and LENS	70	—	—	—	—	—	—	—	—	—	—	2	3478 005
	STUD, Mtg.	70	—	—	—	—	—	6	—	—	—	—	—	6024 576
8-50-186	FLASHER, Turn Signal, Hazard Warning and Vari-Load		1	1	1	1	1	1	1	1	1	1	1	2932 877
	2 Lamp, B, P-K, P-T, P-E, P-L		—	1	—	—	—	1	—	—	—	—	—	2932 875
	2 Lamp, R except 2D.H.T., W Sta. Wgn.	71	1	—	1	1	1	—	—	—	—	—	—	2932 875
	2 Lamp, W-K, W-T, W-L, W-M, W-H	70	—	—	—	—	1	—	—	—	—	—	—	2932 875
	2 Lamp, Sta. Wgn.	70	—	—	—	1	1	—	—	—	—	—	—	2932 875
	2 Lamp, Sta. Wgn.		—	—	—	—	—	—	—	1	—	—	—	2932 875
	3 Lamp, J, C-E, C-L		—	1	—	—	—	—	1	1	1	1	1	2932 876
	3 Lamp, R except Sta. Wgn., W-P, W-S, P-M, P-H	70	—	—	—	1	1	1	—	—	—	—	—	2932 876
	3 Lamp, R 2D.H.T., W except Sta. Wgn., P-M, P-H, P-P	71	—	—	—	1	1	1	—	—	—	—	—	2932 876
8-50-191	CLIP, Flasher Mtg.		1	1	1	1	1	1	1	1	1	1	1	2947 896
8-50-292	LAMP, Cornering		—	—	—	—	—	—	1	—	—	—	—	3403 550-1
	w/Side Marker Lamp		—	—	—	—	—	—	—	1	1	1	—	3403 392-3
			—	—	—	—	—	—	—	—	—	—	1	3403 592-3
	STUD, Hsg.		—	—	—	—	—	—	—	4	4	4	4	6024 588
	SCREW, Lens and Bezel Mtg.		—	—	—	—	—	—	—	—	—	—	4	6028 334
	NUT and WASHER, Bezel to Hsg.		—	—	—	—	—	—	4	—	—	—	—	6023 202
	NUT and WASHER, Att.		—	—	—	—	—	—	—	4	4	4	4	6023 205
8-50-294	BRACKET, Cornering and Side Marker Lamp Mtg.		—	—	—	—	—	—	—	2	2	2	2	3403 406
8-50-303	LAMP, Parking and Turn Signal, B	70	—	1	—	—	—	—	—	—	—	—	—	3403 076-7
	B	71	—	1	—	—	—	—	—	—	—	—	—	3479 136-7
	J		—	1	—	—	—	—	—	—	—	—	—	3403 002-3
		70	—	—	—	1	—	—	—	—	—	—	—	3403 160-1

CARLINES J - Challenger, B - Barracuda, V - Valiant, L - Dart, R - Belvedere - Satellite, W - Coronet - Charger, P - Plymouth, D - Dodge, C - Chrysler, Y - Imperial

AR Indicates use as required.

# Indicates parts not listed in any previous parts book.

Numerals in parentheses ( ) refer to notes.

★ Indicates change or addition.

Printed in U.S.A. January 1972

8-50-0 PARKING AND TURN SIGNAL LAMP Cont'd.

CODE	PART NAME	ENG. TYPE OR CU.IN.	V 1-2	B J 1-2	L 1-2	R 1-2	W 1-2	P 1-2	D 1-2	C 1	C 2	C 3	Y 1	PART NUMBER
8-50-303	LAMP Cont'd.													
	2 D.H.T., up to Feb. 1971	71	—	—	—	2	—	—	—	—	—	—	—	3478 510
	2 D.H.T., after Feb. 1971	71	—	—	—	2	—	—	—	—	—	—	—	3479 426
	Charger and Charger R/T	70	—	—	—	—	1	—	—	—	—	—	—	3403 002-3
	except Charger and Charger R/T	70	—	—	—	—	1	—	—	—	—	—	—	3403 250-1
	2D.H.T. and Fastback	71	—	—	—	—	1	—	—	—	—	—	—	3478 594-5
	4D. and Sta. Wgn.	71	—	—	—	—	1	—	—	—	—	—	—	3478 834-5
		70	—	—	—	—	—	1	—	—	—	—	—	3403 092-3
		71	—	—	—	—	—	1	—	—	—	—	—	3479 310-1
			—	—	—	—	—	—	1	—	—	—	—	3403 414-5
		70	—	—	—	—	—	1	—	1	—	—	—	3403 212-3
		71	—	—	—	—	—	—	—	1	1	1	—	3403 212-3
		70	—	—	—	—	—	—	—	—	1	—	—	3403 262-3
			—	—	—	—	—	—	—	—	—	—	1	3403 530-1
	NUT, B	70	—	4	—	—	—	—	—	—	—	—	—	6025 505
	NUT, Att.	70	—	—	—	—	—	4	—	—	—	—	—	6025 002
	WASHER, Mtg.	70	—	—	—	—	—	—	—	—	6	—	—	6028 996
8-50-305	RETAINER, Parking and Turn Signal Lamp	70	2	—	—	—	—	—	—	—	—	—	—	3403 809
	2D.H.T.	71	2	—	—	—	—	—	—	—	—	—	—	3403 809
	4D. and Sta. Wgn., R-K, R-T, R-L, R-H, R-P	71	—	—	—	2	—	—	—	—	—	—	—	3479 157
8-50-306	SCREW, Parking and Turn Signal Lamp Att., B	70	—	4	—	—	—	—	—	—	—	—	—	6025 148
	SCREW, Mtg., Lwr., J, W Charger and Charger R/T	70	—	4	—	—	4	—	—	—	—	—	—	6027 169
	SCREW, Mtg., W except Charger and Charger R/T	70	—	—	—	—	AR	—	4	—	—	—	—	6025 148
	SCREW and WASHER	70	—	—	—	—	—	—	—	4	4	4	—	6028 141
	SCREW, Mtg.	70	—	—	—	—	—	—	—	—	6	—	—	6028 997
8-50-308	GASKET, Parking and Turn Signal Lamp, Fastback	71	1	—	—	—	—	—	—	—	—	—	—	3479 416-7
		70	—	—	2	—	—	—	—	—	—	—	—	3403 568
			—	—	—	—	—	1	—	—	—	—	—	3403 091
		70	—	—	—	—	—	—	2	—	—	—	—	3403 423
		70	—	—	—	—	—	—	—	2	—	2	—	3403 200
		71	—	—	—	—	—	—	—	2	2	2	2	3403 200
	Parking and Turn Signal Lamp Hsg.		—	2	—	—	—	—	—	—	—	—	—	3403 010
	Charger and Charger R/T	70	—	—	—	—	2	—	—	—	—	—	—	3403 010
	Hood Panel Turn Signal Ind. Lamp	70	—	—	—	—	—	2	—	—	—	—	—	3403 518
	Cornering and Side Marker Lamp		—	—	—	—	—	—	—	2	2	2	2	3403 398
8-50-315	BEZEL, Parking and Turn Signal Lamp	70	1	—	—	—	—	—	—	—	—	—	—	3403 410-1
	2 D.H.T.	71	1	—	—	—	—	—	—	—	—	—	—	3403 410-1
		70	—	—	—	—	—	—	—	—	1	—	—	3403 270-1
	up to approx. Oct. 1, 1969	70	—	—	—	—	—	—	—	—	—	—	1	3403 538-9
	after approx. Oct. 1, 1969		—	—	—	—	—	—	—	—	—	—	1	3403 954-5
	Cornering Lamp		—	—	—	—	—	—	1	—	—	—	—	3403 556-7
	Cornering Lamp and Side Marker Lamp		—	—	—	—	—	—	—	—	—	—	1	3403 600-1
8-50-334	LENS and GASKET PACKAGE, Parking and Turn Signal Lamp	70	1	—	—	—	—	—	—	—	—	—	—	3420 742-3
	Fastback	71	1	—	—	—	—	—	—	—	—	—	—	3514 336-7
	V-L, V-H 2 D.H.T.	71	1	—	—	—	—	—	—	—	—	—	—	3420 742-3
	B	70	—	1	—	—	—	—	—	—	—	—	—	3420 618-9
	B	71	—	1	—	—	—	—	—	—	—	—	—	3579 174-5
	Clear, J		—	1	—	—	—	—	—	—	—	—	—	3420 554-5
	Amber, J		—	1	—	—	—	—	—	—	—	—	—	3420 552-3
		70	—	—	1	—	—	—	—	—	—	—	—	3420 710-1
		71	—	—	1	—	—	—	—	—	—	—	—	3620 744-5
		70	—	—	—	1	—	—	—	—	—	—	—	3420 584-5

CARLINES J - Challenger, B - Barracuda, V - Valiant, L - Dart, R - Belvedere - Satellite, W - Coronet - Charger, P - Plymouth, D - Dodge, C - Chrysler, Y - Imperial

AR Indicates use as required.

Numerals in parentheses ( ) refer to notes.

# Indicates parts not listed in any previous parts book.

★ Indicates change or addition.

Printed in U.S.A. January 1972

CODE	PART NAME	ENG. TYPE OR CU.IN.	V 1-2	B J 1-2	L 1-2	R 1-2	W 1-2	P 1-2	D 1-2	C 1	C 2	C 3	Y 1	PART NUMBER
8-50-0	**PARKING AND TURN SIGNAL LAMP Cont'd.**													
8-50-334	LENS and GASKET PACKAGE Cont'd.													
	4D. and Sta. Wgn.	71	—	—	—	1	—	—	—	—	—	—	—	3514 324-5
	2D.H.T.	71	—	—	—	2	—	—	—	—	—	—	—	3514 306
	2 D.H.T., up to approx. Feb. 1971	71	—	—	—	2	—	—	—	—	—	—	—	3514 306
	2 D.H.T., after approx. Feb. 1971	71	—	—	—	2	—	—	—	—	—	—	—	=3621 673
	Clear, Charger and Charger R/T	70	—	—	—	—	1	—	—	—	—	—	—	3420 554-5
	Amber, Charger and Charger R/T	70	—	—	—	—	1	—	—	—	—	—	—	3420 552-3
	Clear, except Charger and Charger R/T	70	—	—	—	—	1	—	—	—	—	—	—	3420 702-3
	Amber, except Charger and Charger R/T	70	—	—	—	—	1	—	—	—	—	—	—	3420 648-9
	2D.H.T. and Fastback	71	—	—	—	—	1	—	—	—	—	—	—	3514 272-3
	Clear, 4D. and Sta. Wgn.	71	—	—	—	—	1	—	—	—	—	—	—	3420 702-3
	Amber, 4D. and Sta. Wgn.	71	—	—	—	—	1	—	—	—	—	—	—	3420 648-9
	Clear		—	—	—	—	—	1	—	—	—	—	—	3514 302-3
	Amber	71	—	—	—	—	—	1	—	—	—	—	—	3420 624-5
	Amber		—	—	—	—	—	—	1	—	—	—	—	3420 636-7
	Clear		—	—	—	—	—	—	1	—	—	—	—	3420 638-9
	Amber	70	—	—	—	—	—	—	—	1	—	1	—	3420 628-9
	Clear	70	—	—	—	—	—	—	—	1	—	1	—	3420 630-1
	Amber	71	—	—	—	—	—	—	—	1	1	1	—	3420 628-9
	Clear	71	—	—	—	—	—	—	—	1	1	1	—	3420 630-1
		70	—	—	—	—	—	—	—	—	1	—	—	3420 632-3
			—	—	—	—	—	—	—	—	—	—	1	3420 640-1
	Cornering Lamp		—	—	—	—	—	—	1	—	—	—	—	3420 704-5
	Cornering and Side Marker Lamp		—	—	—	—	—	—	—	1	1	1	—	3420 708-9
			—	—	—	—	—	—	—	—	—	—	1	3420 644-5
8-50-337	SCREW, Bezel Att.	70	—	—	—	—	—	—	—	—	8	—	—	6027 444
	SCREW, Bezel Mtg., Outboard	70	—	—	—	—	—	—	—	—	—	—	4	6025 974
8-50-338	GASKET, Parking and Turn Signal Lamp Lens	71	2	—	—	—	—	—	—	—	—	—	—	3478 549
	B	71	—	2	—	—	—	—	—	—	—	—	—	3479 142
		71	—	—	2	—	—	—	—	—	—	—	—	3403 568
		70	—	—	—	2	—	—	—	—	—	—	—	3403 164
	2D.H.T.	71	—	—	—	2	—	—	—	—	—	—	—	3478 513
	except Charger and Charger R/T	70	—	—	—	—	2	—	—	—	—	—	—	3403 260
	4D. and Sta. Wgn.	71	—	—	—	—	2	—	—	—	—	—	—	3403 260
	2D.H.T. and Fastback	71	—	—	—	—	2	—	—	—	—	—	—	3478 600
		71	—	—	—	—	—	—	2	—	—	—	—	3403 423
		70	—	—	—	—	—	—	—	—	2	—	—	3403 261
	Cornering Lamp Lens		—	—	—	—	—	—	2	—	—	—	—	3403 563
8-50-349	SOCKET, Parking and Turn Signal Lamp, except Fastback	71	2	—	—	—	—	—	—	—	—	—	—	3513 558
	w/CABLE, Fastback	71	2	—	—	—	—	—	—	—	—	—	—	3513 307
	SOCKET, CABLE, PLATE and GASKET PACKAGE		—	—	2	—	—	—	—	—	—	—	—	3420 712
	SOCKET and BOOT	70	—	—	—	—	—	—	—	—	2	—	—	2983 262
	SOCKET and BOOT, Cornering Lamp	70	—	—	—	—	—	—	2	2	2	2	2	2983 279
8-50-352	GASKET, Parking and Turn Signal Lamp Socket	70	—	—	2	—	—	—	—	—	—	—	—	3403 799
8-50-354	CONTACT, INSULATOR and SPRING PACKAGE, Socket		AR	AR	AR	AR	AR	AR	AR	AR	AR	AR	AR	2983 167
	Cornering Lamp		—	—	—	—	—	—	AR	AR	AR	AR	AR	2584 972
			AR	AR	AR	AR	AR	AR	AR	AR	AR	AR	AR	2983 169
8-52-0	**STARTING MOTOR**													
8-52-4	STARTING MOTOR		1	1	1	—	—	—	—	—	—	—	—	2875 560
	Std.	6	—	—	—	1	1	1	1	—	—	—	—	2875 560
	Heavy Duty, w/Manual Trans.	6	—	—	—	1	1	1	1	—	—	—	—	1889 100

CARLINES: J - Challenger, B - Barracuda, V - Valiant, L - Dart, R - Belvedere - Satellite, W - Coronet - Charger, P - Plymouth, D - Dodge, C - Chrysler, Y - Imperial

AR Indicates use as required.

Numerals in parentheses ( ) refer to notes.

# Indicates parts not listed in any previous parts book.

★ Indicates change or addition.

Printed in U.S.A. January 1972

CODE	PART NAME	ENG. TYPE OR CU.IN.	V 1-2	B J 1-2	L 1-2	R 1-2	W 1-2	P 1-2	D 1-2	C 1	C 2	C 3	Y 1	PART NUMBER
8-52-0	**STARTING MOTOR Cont'd.**													
8-52-4	STARTING MOTOR Cont'd.													
	Heavy Duty, w/Auto. Trans.	6	—	—	—	1	1	1	1	—	—	—	—	2875 560
		8	—	—	—	1	1	1	1	1	1	1	1	2875 560
8-52-39	SEAL, Cyl. Block to Starter Motor, except 318 and 340 Eng.		1	1	1	—	—	—	—	—	—	—	—	2892 915
	Std.	6	—	—	—	1	1	1	1	—	—	—	—	2892 915
	Heavy Duty, w/Auto. Trans.	6	—	—	—	1	1	1	1	—	—	—	—	2892 914
	except 318 Eng.	8	—	—	—	1	1	1	1	—	—	—	—	2892 915
		8	—	—	—	—	—	—	—	1	1	1	1	2892 915
8-52-42	SWITCH, Clutch Starter, w/Manual Trans. 70		1	—	1	—	—	—	—	—	—	—	—	2947 856
	w/Manual Trans. 71		1	—	1	—	—	—	—	—	—	—	—	3514 431
	w/Manual Trans. 70		—	1	—	—	—	—	—	—	—	—	—	2947 858
	w/Manual Trans. 71		—	1	—	1	1	—	—	—	—	—	—	3514 432
	w/Manual Trans. 70		—	—	—	1	1	—	—	—	—	—	—	2947 857
	w/Manual Trans., C-E, C-L 70		—	—	—	—	—	1	1	1	—	—	—	2947 859
	w/Manual Trans., C-E, C-L 71		—	—	—	—	—	1	1	1	—	—	—	3514 433
8-52-86	LINK PACKAGE, Clutch Starter Switch Actuator, w/Manual Trans., C-E, C-L		1	1	1	1	1	1	1	1	—	—	—	3514 257
8-52-328	RELAY, Starter		1	1	1	1	1	—	—	—	—	—	—	2444 442
			—	—	—	—	—	1	1	1	1	1	1	2875 618
	SCREW and WASHER, Mtg.		2	2	2	2	2	2	2	2	2	2	2	6028 142
8-52-369	GROMMET, Starter Solenoid, Heavy Duty, w/Manual Trans.	6	—	—	—	1	1	1	1	—	—	—	—	1889 362
8-52-389	SEAL, Starter Solenoid		1	1	1	1	1	1	1	1	1	1	1	2875 558

NOTES

CARLINES J - Challenger, B - Barracuda, V - Valiant, L - Dart, R - Belvedere - Satellite, W - Coronet - Charger, P - Plymouth, D - Dodge, C - Chrysler, Y - Imperial

AR Indicates use as required.

Numerals in parentheses ( ) refer to notes.

# Indicates parts not listed in any previous parts book.

★ Indicates change or addition.

Printed in U.S.A. January 1972

8-52-0 STARTING MOTOR COMPONENT PARTS

For Model Application See Code 8-52-4

STARTER ASSEMBLIES

CODE	REMARKS	1889 100	2875 560
8-52-5	SCREW and WASHER, Mtg.	———	6023 899
	STUD, Mtg.	———	2095 875
8-52-41	CLUTCH	2642 506	2444 658
8-52-49	FORK and PIN PACKAGE, Shifting	2084 093	———
8-52-50	PIN, Shifting Fork Pivot	456 098	2095 133
8-52-61	RING, Clutch Actuator Ret.	———	2095 130
8-52-67	SNAP RING, Pinion Shaft Gear Ret.	———	2095 117
8-52-76	HOUSING, Pinion	1889 066	———
	GEAR HOUSING and GEAR HOUSING COVER PACKAGE	———	= 3620 890
8-52-80	BEARING, Pinion Hsg. (2 req.)	2098 986	= 3656382
	BEARING, Gear Hsg.	———	= 3656 383
8-52-82	STOP, SNAP RING and STOP WASHER PACKAGE, Pinion	2448 804	———
8-52-87	ACTUATOR and RETAINING RING PACKAGE, Clutch Shifting	———	2275 556
8-52-88	BOOT, Shifting Fork	1889 147	———
8-52-89	SHAFT, Pinion	———	2095 118
8-52-96	GEAR and SNAP RING PACKAGE, Pinion Shaft	———	2275 557
8-52-98	THRUST WASHER and RETAINING RING PACKAGE, Pinion Shaft	———	2275 558
8-52-100	RING, Pinion Shaft Ret.	———	6022 006
8-52-101	COVER, Gear Hsg.	———	2095 116
8-52-102	WASHER, Pinion Shaft Gear	———	2095 114
8-52-120	ARMATURE	1889 079	2095 094
8-52-121	THRUST WASHER PACKAGE, Armature	———	2275 555
8-52-135	BRUSH PACKAGE	2525 529	———
8-52-137	PLATE and BRUSH PACKAGE, Brush Holder	———	2932 812
8-52-140	SPRING PACKAGE, Brush	2084 666	2084 666
8-52-150	HOLDER, Brush	1889 044	———
8-52-176	HEAD, Commutator End	1889 363	2095 076
8-52-180	THRUST WASHER PACKAGE, Commutator End	2240 529	———
8-52-214	FIELD SERIES COIL PACKAGE	2084 088	2275 248
8-52-241	SCREW, Thru (2 req.)	1889 080	2095 105
8-52-341	CONTACT and COVER GASKET PACKAGE, Solenoid	2084 091	———
8-52-342	CONTACT and SPRING PACKAGE, Solenoid Switch	———	2932 814
8-52-344	COVER and GASKET PACKAGE, Solenoid	2084 090	———
8-52-345	SOLENOID PACKAGE	2642 961	2932 813
8-52-354	STUD PACKAGE, Terminal Relay	2084 094	= 3579 193
8-52-375	CORE, Solenoid Moving	1889 151	———
	CORE and SHIFTING FORK PACKAGE	———	= 3620 733

NOTES

CODE	PART NAME	ENG. TYPE OR CU.IN.	V 1-2	B J 1-2	L 1-2	R 1-2	W 1-2	P 1-2	D 1-2	C 1	C 2	C 3	Y 1	PART NUMBER
8-53-0	**SWITCHES**													
8-53-150	SWITCH, Foot Dimmer		1	1	1	1	1	1	1	—	—	—	—	1881 938
	w/o Auto. H/Lamp Dimmer		—	—	—	—	—	—	—	1	1	1	1	1881 938
	w/Auto. H/Lamp Dimmer		—	—	—	—	—	—	—	1	1	1	1	2661 835
	Panel Lamp Dimmer		—	1	—	—	—	—	—	—	—	—	—	3420 865
	R except R-M, R-S, W-K, W-T, W-L, W-H, W-P except Charger, W-S 2D.H.T. and Cv. Cp. w/o Rallye Inst. Panel	70	—	—	—	1	1	—	—	—	—	—	—	3420 925
	R-M, R-S, W-M, W-P Charger, W-S Charger R/T, W-S 2D.H.T. and Cv. Cp. w/Rallye Inst. Panel	70	—	—	—	1	1	—	1	—	—	—	—	2809 047
		70	—	—	—	—	—	1	—	1	1	1	—	2932 873
		71	—	—	—	—	—	1	1	—	—	—	—	2932 873
	SCREW, Foot Dimmer Switch Mtg.		2	2	2	2	2	2	2	2	2	2	2	6024 699
	SCREW, Panel Lamp Dimmer Switch Mtg.	70	—	—	—	—	—	2	2	2	2	2	2	6024 654
8-53-270	SWITCH, H/Lamp Inst. Lamp and Dome Lamp		1	—	1	—	—	—	—	—	—	—	—	2809 087
		71	—	—	—	1	1	—	—	1	1	1	1	3514 427
	SWITCH, H/Lamp		—	1	—	—	—	—	—	—	—	—	—	2947 305
	R-K, R-T, R-L, R-H, R-P, W-K, W-T, W-L, W-H, W-P except Charger, W-S 2D.H.T. and Cv. Cp. w/o Rallye Inst. Panel	70	—	—	—	1	1	1	1	1	1	1	—	2947 763
	R-M, R-S, W-M, W-P Charger, W-S Charger R/T, W-S 2D.H.T. and Cv. Cp. w/Rallye Inst. Panel	70	—	—	—	1	1	—	—	—	—	—	—	3004 092
		71	—	—	—	—	—	1	1	—	—	—	—	2947 763
	H/Lamp Sentinel	70	—	—	—	—	—	—	—	1	1	1	1	2864 425
	H/Lamp Sentinel	71	—	—	—	—	—	—	—	1	1	1	1	3514 396
	H/Lamp Sentinel and Dimmer	70	—	—	—	—	—	—	—	1	1	1	1	2864 423
	H/Lamp Sentinel and Dimmer	71	—	—	—	—	—	—	—	1	1	1	1	3514 397
	H/Lamp Rocker	70	—	—	—	—	—	—	—	—	—	—	1	2947 449
	CONTROL, Auto. H/Lamp Dimmer and H/Lamp Sentinel	71	—	—	—	—	—	—	—	1	1	1	1	3488 104
	H/Lamp Sentinel	71	—	—	—	—	—	—	—	1	1	1	1	3488 121
	SCREW, H/Lamp Switch Mtg.	70	—	—	—	—	—	2	2	2	2	2	2	6024 654
8-53-271	U-NUT, Switch Mtg. Bezel Mtg.	70	—	4	—	—	—	—	—	—	—	—	—	6028 012
	NUT, Switch to Bezel Mtg.		—	—	—	—	—	—	—	1	1	1	1	2820 116
	NUT, H/Lamp Switch Mtg.	71	—	—	—	—	—	—	—	1	1	1	1	3488 122
8-53-275	DECAL, Switch Nomenclature, J-H Auto. H/Lamp Dimmer and Sentinel Control	71	—	—	—	—	—	—	—	1	1	1	1	3488 108
	H/Lamp Sentinel Control	71	—	—	—	—	—	—	—	1	1	1	1	3488 109
8-53-279	BRACKET, H/Lamp Switch, w/Auto. H/Lamp Dimmer and H/Lamp Sentinel		—	—	—	—	—	—	—	1	1	1	1	#3488 103
8-53-283	RELAY, H/Lamp Delay	70	1	—	1	—	—	—	—	—	—	—	—	2947 393
		70	—	1	—	—	—	—	—	—	—	—	—	2947 392
	w/BRKT.	71	—	1	—	—	—	—	—	—	—	—	—	3488 389
		70	—	—	—	1	1	—	—	—	—	—	—	2947 394
	w/BRKT.	71	—	—	—	1	1	—	—	—	—	—	—	3488 076
		70	—	—	—	—	—	1	1	1	1	1	1	2947 395
	w/BRKT.	71	—	—	—	—	—	1	1	—	—	—	—	3488 391
	Highway Beam	70	—	—	—	—	—	—	1	—	—	—	—	2926 759
	H/Lamp	70	—	—	—	—	—	—	1	—	—	—	—	2926 760
	Auto. H/Lamp Dimmer and H/Lamp Sentinel		—	—	—	—	—	—	—	1	1	1	1	2947 696
8-53-284	SCANNER		—	—	—	—	—	—	—	1	1	1	1	2947 065
8-53-285	COVER, Scanner		—	—	—	—	—	—	—	—	—	—	1	2947 866

CARLINES: J - Challenger, B - Barracuda, V - Valiant, L - Dart, R - Belvedere - Satellite, W - Coronet - Charger, P - Plymouth, D - Dodge, C - Chrysler, Y - Imperial

AR Indicates use as required.

Numerals in parentheses ( ) refer to notes.

# Indicates parts not listed in any previous parts book.

★ Indicates change or addition.

Printed in U.S.A. January 1972

8-53-0 SWITCHES Cont'd.

CODE	PART NAME	ENG. TYPE OR CU.IN.	V 1-2	B J 1-2	L 1-2	R 1-2	W 1-2	P 1-2	D 1-2	C 1	C 2	C 3	Y 1	PART NUMBER
8-53-286	BRACKET, Scanner	70	—	—	—	—	—	—	—	1	1	1	—	2947 520
		71	—	—	—	—	—	—	—	1	1	1	—	2947 868
			—	—	—	—	—	—	—	—	—	—	1	2947 868
8-53-287	SPRING, Scanner Mtg.		—	—	—	—	—	—	—	1	1	1	1	2947 066
8-53-289	TRIM PLATE, Switch Mtg. Bezel, w/o Rallye Inst. Panel, B	70	—	1	—	—	—	—	—	—	—	—	—	2947 785
	w/o Rallye Inst. Panel	71	—	1	—	—	—	—	—	—	—	—	—	3488 408
	PLATE, Switch Mtg. Reinf., w/o Rallye Inst. Panel, up to approx. July, 1971		—	1	—	—	—	—	—	—	—	—	—	2947 789
	after approx. July, 1971	71	—	1	—	—	—	—	—	—	—	—	—	= 3488 783
	PLATE, Switch Mtg. Reinf., w/Rallye Inst. Panel, up to approx. July, 1971		—	1	—	—	—	—	—	—	—	—	—	2947 790
	after approx. July, 1971		—	1	—	—	—	—	—	—	—	—	—	= 3488 784
	PLATE, TRIM PLATE and REINFORCEMENT, except Cv. Cp., w/Rr. Window Defogger, w/Rallye Inst. Panel	70	—	1	—	—	—	—	—	—	—	—	—	2947 820
	PLATE, TRIM PLATE and REINFORCEMENT, except Cv. Cp., w/Rr. Window Defogger, w/Rallye Inst. Panel, 2D.H.T.	71	—	1	—	—	—	—	—	—	—	—	—	3488 384
	PLATE, Switch Mtg. Reinf.	70	—	—	—	—	—	1	—	—	—	—	—	2864 358
	PLATE, Switch Mtg. Reinf.	70	—	—	—	—	—	—	1	—	—	—	—	2864 357
	PLATE, Switch Mtg. Reinf.	71	—	—	—	—	—	1	1	—	—	—	—	= 3488 002
8-53-294	BEZEL, Road Lamp Switch, B		—	1	—	—	—	—	—	—	—	—	—	2947 773
	w/TRIM PLATE, Switch Mtg., Cv. Cp., w/Cv. Power Top Lift, w/Rallye Inst. Panel	70	—	1	—	—	—	—	—	—	—	—	—	2947 823
	w/TRIM PLATE, Switch Mtg. Cv. Cp., w/Cv. Power Top Lift, w/Rallye Inst. Panel, B, J-H	71	—	1	—	—	—	—	—	—	—	—	—	3488 380
	w/TRIM PLATE, Switch Mtg., except Cv. Cp., w/o Rr. Window Defogger, w/o Cv. Power Top Lift, w/Rallye Inst. Panel	70	—	1	—	—	—	—	—	—	—	—	—	2947 822
	w/TRIM PLATE, Switch Mtg., 2D.H.T., w/o Rr. Window Defogger, w/Rallye Inst. Panel	71	—	1	—	—	—	—	—	—	—	—	—	3488 379
	w/TRIM PLATE, Switch Mtg., except Cv. Cp., w/Rr. Window Defogger, w/Rallye Inst. Panel	70	—	1	—	—	—	—	—	—	—	—	—	2947 824
	w/TRIM PLATE, Switch Mtg., 2D.H.T., w/Rr. Window Defogger, w/Rallye Inst. Panel	71	—	1	—	—	—	—	—	—	—	—	—	3488 381
	Switch Mtg., w/o Rallye Inst. Panel, B, up to approx. Feb. 1, 1970	70	—	1	—	—	—	—	—	—	—	—	—	2947 783
	after approx. Feb. 1, 1970	70	—	1	—	—	—	—	—	—	—	—	—	3488 392
	w/o Rallye Inst. Panel	71	—	1	—	—	—	—	—	—	—	—	—	3488 392
	Switch Mtg., w/o Rallye Inst. Panel, J-H	70	—	1	—	—	—	—	—	—	—	—	—	2947 791
	H/Lamp, Inst. Lamp and Dome Lamp Switch	70	—	—	1	—	—	—	—	—	—	—	—	2580 772
	L-L except Fastback, L-H	71	—	—	1	—	—	—	—	—	—	—	—	2580 772
	X-Press Super Light Switch Mtg.	70	—	—	—	—	—	—	1	—	—	—	—	2947 181
	w/TRIM PLATE, Switch Mtg., Cv. Cp., w/Cv. Power Top Lift	70	—	—	—	—	—	—	1	—	—	—	—	2947 768
	w/TRIM PLATE, Switch Mtg., Sta. Wgn., wPower Tailgate Window	70	—	—	—	—	—	—	1	—	—	—	—	2947 769

CARLINES J - Challenger, B - Barracuda, V - Valiant, L - Dart, R - Belvedere - Satellite, W - Coronet - Charger, P - Plymouth, D - Dodge, C - Chrysler, Y - Imperial

AR Indicates use as required.

Numerals in parentheses ( ) refer to notes.

= Indicates parts not listed in any previous parts book.

★ Indicates change or addition.

Printed in U.S.A. January 1972

8-53-0 SWITCHES Cont'd.

CODE	PART NAME	ENG. TYPE OR CU.IN.	V 1-2	B J 1-2	L 1-2	R 1-2	W 1-2	P 1-2	D 1-2	C 1	C 2	C 3	Y 1	PART NUMBER
8-53-294	BEZEL Cont'd.													
	w/TRIM PLATE, Switch Mtg., except Cv. Cp. and Sta. Wgn., w/o Rr. Window Defogger	70	—	—	—	—	—	—	1	—	—	—	—	2947 767
	w/TRIM PLATE, Switch Mtg., except Cv. Cp. and Sta. Wgn., w/Rr. Window Defogger	70	—	—	—	—	—	—	1	—	—	—	—	2947 770
	w/TRIM PLATE, Switch Mtg., except Cv. Cp. and Sta. Wgn., w/X-Press Super Light Switch, w/Rr. Window Defogger	70	—	—	—	—	—	—	1	—	—	—	—	2947 771
	Auto. H/Lamp Sentinel	70	—	—	—	—	—	—	—	1	1	1	—	2864 401
	Auto. H/Lamp Sentinel and Dimmer Control	70	—	—	—	—	—	—	—	1	1	1	—	2864 400
	Auto. H/Lamp Sentinel	70	—	—	—	—	—	—	—	—	—	—	1	2947 679
	Auto. H/Lamp Sentinel and Dimmer Control	70	—	—	—	—	—	—	—	—	—	—	1	2947 678
8-53-296	KNOB, H/Lamp, Inst. Lamp and Dome Lamp Switch, L-M		1	—	1	—	—	—	—	—	—	—	—	2820 135
	Panel Lamp Dimmer Switch		—	1	—	—	—	—	—	—	—	—	—	2947 380
	H/Lamp Switch	70	—	—	1	—	—	—	—	—	—	—	—	2947 588
	except Fastback, L-L, L-H	71	—	—	1	—	—	—	—	—	—	—	—	2947 588
	Fastback, L-L	71	—	—	1	—	—	—	—	—	—	—	—	2820 135
	w/STEM, H/Lamp, Inst. Lamp and Dome Lamp Switch, R-K, R-T, R-L, R-H, W-K, W-T, W-L, W-H	71	—	—	—	1	1	—	—	—	—	—	—	3488 031
	w/STEM, H/Lamp, Inst. Lamp and Dome Lamp, Switch, R-M, R-P, R-S, W-M, W-P, W-S	71	—	—	—	1	1	—	—	—	—	—	—	3488 267
	Auto. H/Lamp Sentinel and Dimmer Switch	70	—	—	—	—	—	—	—	1	1	1	1	2864 420
	w/SET SCREW, Auto. H/Lamp Sentinel Control	70	—	—	—	—	—	—	—	1	1	1	1	2947 084
	w/SHAFT, H/Lamp Switch, w/Auto. H/Lamp Sentinel and Dimmer Switch	71	—	—	—	—	—	—	—	1	1	1	—	3488 114
	w/SHAFT, H/Lamp Switch, w/o Auto. H/Lamp Sentinel and Dimmer Switch	71	—	—	—	—	—	—	—	1	1	1	—	3488 115
	Auto. H/Lamp Sentinel and Dimmer Switch	71	—	—	—	—	—	—	—	1	1	1	1	3488 120
	Auto. H/Lamp Sentinel Control	71	—	—	—	—	—	—	—	1	1	1	1	3488 118
	w/INLAY, Auto. H/Lamp Sentinel	70	—	—	—	—	—	—	—	—	—	—	1	2947 249
	w/SHAFT, H/Lamp Switch, w/Auto. H/Lamp Dimmer and Sentinel	71	—	—	—	—	—	—	—	—	—	—	1	3488 116
	w/SHAFT, H/Lamp Switch, w/o Auto. H/Lamp Dimmer and Sentinel	71	—	—	—	—	—	—	—	—	—	—	1	3488 117
8-53-301	AMPLIFIER, Auto. H/Lamp Sentinel		—	—	—	—	—	—	—	1	1	1	1	2820 546
8-53-303	BRACKET, Auto. H/Lamp Sentinel Amplifier Mtg.		—	—	—	—	—	—	—	1	1	1	1	2864 448
8-53-304	PHOTOCELL, Auto. H/Lamp Sentinel		—	—	—	—	—	—	—	1	1	1	1	2586 764
8-53-308	SPACER, Auto. H/Lamp Sentinel Photocell Mtg.		—	—	—	—	—	—	—	1	1	1	1	2820 409
8-53-312	RETAINER, H/Lamp, Inst. Lamp and Dome Lamp Switch Mtg., L-M		1	—	1	—	—	—	—	—	—	—	—	1887 604
	Fastback, L-L	71	—	—	1	—	—	—	—	—	—	—	—	1887 604
	R-K, R-T, R-L, R-H, W-K, W-T, W-L, W-H	71	—	—	—	1	1	—	—	—	—	—	—	3488 040
	R-M, R-P, R-S, W-M, W-P, W-S	71	—	—	—	1	1	—	—	1	1	1	1	1887 604

CODE	PART NAME		ENG. TYPE OR CU.IN.	V 1-2	B J 1-2	L 1-2	R 1-2	W 1-2	P 1-2	D 1-2	C 1	C 2	C 3	Y 1	PART NUMBER
8-53-0	**SWITCHES Cont'd.**														
8-53-~~237~~ 327	SWITCH, Oil Pressure, used with Ind. Light		6	1	1	1	1	1	1	1	—	—	—	—	3004 105
	used w/Ind. Light		8	1	1	1	1	1	1	1	1	1	1	—	3004 106
	used w/Ind. Light		8	—	—	—	—	—	—	—	—	—	—	1	2889 300
	SENDING UNIT, used with Oil Gauge, up to March 1971			1	1	1	1	1	1	1	—	—	—	1	2495 222
	used with Oil Gauge, after March, 1971	71		1	1	1	1	1	1	1	—	—	—	1	3488 609
8-53-331	CABLE, Oil Pressure Sending Unit, w/426 and 440 w/3-2 Bbl. Carb. W-M, W Charger and Charger R/T, W-S 2D.H.T. and Cv.Cp. w/Rallye Inst. Panel	70	8	—	—	—	1	1	—	—	—	—	—	—	2983 848
	w/426 and 440 w/3-2 Bbl. Carb., w/Rallye Inst. Panel, B, J-S, R-M, R-P, R-S, W-M, W-P, W-S	71		—	1	—	1	1	—	—	—	—	—	—	2983 848
8-55-0	**TAIL, STOP AND TURN SIGNAL LAMP**														
8-55-1	LAMP PACKAGE, Tailgate Tail, Stop and Turn Signal, Sta. Wgn., P-K														
	w/Ornamentation Pkg., P-M			—	—	—	—	—	1	—	—	—	—	—	2932 740-1
	Sta. Wgn., P-H			—	—	—	—	—	1	—	—	—	—	—	3420 840-1
	Sta. Wgn.			—	—	—	—	—	—	1	—	—	—	—	2932 750-1
	Qtr. Panel Tail, Stop, Turn Signal and Side Marker, Sta. Wgn.			—	—	—	—	—	—	—	1	—	—	—	3420 824-5
8-55-6	CAP, Qtr. Panel Tail, Stop, Turn Signal and B/Up Lamp Upper Inboard Mtg. Stud, B			—	2	—	—	—	—	—	—	—	—	—	2423 737
8-55-7	LAMP, 4 D.	70		1	—	—	—	—	—	—	—	—	—	—	3403 376-7
	4D.	71		1	—	—	—	—	—	—	—	—	—	—	3478 616-7
	2 D.H.T.	71		1	—	—	—	—	—	—	—	—	—	—	3403 582-3
	w/B/Up Lamp, Fastback			1	—	—	—	—	—	—	—	—	—	—	3403 944-5
	w/B/Up Lamp, B	70		—	1	—	—	—	—	—	—	—	—	—	3403 050-1
	w/B/Up Lamp, B	71		—	1	—	—	—	—	—	—	—	—	—	3478 628-9
	w/B/Up Lamp, J	70		—	1	—	—	—	—	—	—	—	—	—	3403 028-9
	w/B/Up Lamp, J	71		—	1	—	—	—	—	—	—	—	—	—	3478 844-5
	w/B/Up Lamp	70		—	—	1	—	—	—	—	—	—	—	—	3403 582-3
	w/B/Up Lamp, Fastback	71		—	—	1	—	—	—	—	—	—	—	—	3478 534-5
	w/B/Up Lamp, except Fastback	71		—	—	1	—	—	—	—	—	—	—	—	3478 738-9
	except Sta. Wgn., R-K, R-T, R-L, R-H	70		—	—	—	1	—	—	—	—	—	—	—	3403 240-1
	w/B/Up Lamp, 4D., R-K, R-T, R-L	71		—	—	—	1	—	—	—	—	—	—	—	3478 502-3
	except Sta. Wgn., R-M, R-P, R-S	70		—	—	—	1	—	—	—	—	—	—	—	3403 334-5
	w/B/Up Lamp, 2 D.H.T., R-M, R-H	71		—	—	—	1	—	—	—	—	—	—	—	3478 564-5
	w/B/Up Lamp, 4 D., R-H, R-P	71		—	—	—	1	—	—	—	—	—	—	—	3478 574-5
	w/B/Up Lamp, 2D. H.T., R-P, R-S	71		—	—	—	1	—	—	—	—	—	—	—	3478 560-1
	w/Side Marker Lamp, Sta. Wgn., up to approx. Jan. 1, 1970	70		—	—	—	1	—	—	—	—	—	—	—	3403 346-7
	after approx. Jan. 1, 1970	70		—	—	—	1	—	—	—	—	—	—	—	3403 934-5
	w/Side Marker Lamp, Sta. Wgn.	71		—	—	—	1	—	—	—	—	—	—	—	3514 408-9
	W-P Charger, w/Argent Paint, up to approx. Jan. 1, 1970	70		—	—	—	—	1	—	—	—	—	—	—	2930 988-9
	after approx. Jan. 1, 1970	70		—	—	—	—	1	—	—	—	—	—	—	3403 910-1
	W-P Charger, w/o Argent Paint, W-S Charger R/T, up to approx. Jan. 1, 1970	70		—	—	—	—	1	—	—	—	—	—	—	3403 424-5
	after approx. Jan. 1, 1970	70		—	—	—	—	1	—	—	—	—	—	—	3403 902-3
	w/B/Up Lamp, except Sta. Wgn., W-K, W-T, W-L, W-M, W-H	70		—	—	—	—	1	—	—	—	—	—	—	3403 188-9

CARLINES J - Challenger, B - Barracuda, V - Valiant, L - Dart, R - Belvedere - Satellite, W - Coronet - Charger, P - Plymouth, D - Dodge, C - Chrysler, Y - Imperial

AR Indicates use as required.

Numerals in parentheses ( ) refer to notes.

# Indicates parts not listed in any previous parts book.

★ Indicates change or addition.

Printed in U.S.A. January 1972

8-55-0 TAIL, STOP AND TURN SIGNAL LAMP Cont'd.

CODE	PART NAME	ENG. TYPE OR CU.IN.	V 1-2	B J 1-2	L 1-2	R 1-2	W 1-2	P 1-2	D 1-2	C 1	C 2	C 3	Y 1	PART NUMBER
8-55-7	LAMP Cont'd.													
	w/B/Up Lp., 2D.H.T., Cv. Cp. and 4D., W-P, W-S	70	—	—	—	—	1	—	—	—	—	—	—	3403 272-3
	w/Side Marker Lp., Sta. Wgn.	70	—	—	—	—	1	—	—	—	—	—	—	3403 362-3
	w/B/Up Lp., 4D.	71	—	—	—	—	1	—	—	—	—	—	—	3478 686-7
	w/B/Up Lp., W-M, W-H, 2 D.H.T., W-P Fastback and 2 D.H.T.	71	—	—	—	—	1	—	—	—	—	—	—	3478 748-9
	w/B/Up Lp., w/Charger Colored Bumper, 2D.H.T., W-M, W-H, W-P, W-S	71	—	—	—	—	1	—	—	—	—	—	—	3478 854-5
	w/Side Marker Lamp, Sta. Wgn., W-K, W-L	71	—	—	—	—	1	—	—	—	—	—	—	3514 418-9
	w/Side Marker Lamp, Sta. Wgn., W-H, up to approx. Sept. 1, 1970	71	—	—	—	—	1	—	—	—	—	—	—	3579 198-9
	w/Side Marker Lamp, Sta. Wgn., W-H, after approx. Sept. 1, 1970	71	—	—	—	—	1	—	—	—	—	—	—	3514 418-9
	w/Side Marker Lamp, Sta. Wgn., W-P	71	—	—	—	—	1	—	—	—	—	—	—	3579 198-9
	w/Side Marker Lamp, Sta. Wgn. up to approx. Dec. 1, 1969	70	—	—	—	—	—	1	—	—	—	—	—	3403 694-5
	after approx. Dec. 1, 1969		—	—	—	—	—	1	—	—	—	—	—	3403 986-7
	2D.H.T. and 4D., P-K, P-T, P-E, P-L	70	—	—	—	—	—	1	—	—	—	—	—	3403 062-3
	except Sta. Wgn., P-M, P-H	70	—	—	—	—	—	1	—	—	—	—	—	3403 324-5
	w/B/Up Lamp, except Sta. Wgn., P-K, P-T, P-E, P-L	71	—	—	—	—	—	1	—	—	—	—	—	3478 516-7
	w/B/Up Lamp, except Sta. Wgn., P-M, P-H, P-P	71	—	—	—	—	—	1	—	—	—	—	—	3478 728-9
	w/Side Marker Lp., Sta. Wgn.		—	—	—	—	—	—	1	—	—	—	—	3403 700-1
	except Sta. Wgn., D-K, D-T, D-L, D-M	70	—	—	—	—	—	—	1	—	—	—	—	3403 282-3
	except Sta. Wgn., D-H, D-P	70	—	—	—	—	—	—	1	—	—	—	—	3403 292-3
	w/B/Up Lp., except Sta. Wgn., D-K, D-T, D-E, D-L, D-M, D-S	71	—	—	—	—	—	—	1	—	—	—	—	3478 776-7
	w/B/Up Lamp, except Sta. Wgn., D-H	71	—	—	—	—	—	—	1	—	—	—	—	3478 820-1
	C-E		—	—	—	—	—	—	—	1	—	—	—	3403 114-5
	C-L, up to approx. May, 1970	70	—	—	—	—	—	—	—	1	—	—	—	3403 102-3
	C-L, after approx. May, 1970		—	—	—	—	—	—	—	1	—	—	—	3403 980-1
		70	—	—	—	—	—	—	—	—	1	—	—	3403 128-9
		71	—	—	—	—	—	—	—	—	1	—	—	3479 328-9
		70	—	—	—	—	—	—	—	—	—	1	—	3403 012-3
		71	—	—	—	—	—	—	—	—	—	1	—	3479 318-9
			—	—	—	—	—	—	—	—	—	—	1	3403 146-7
	WASHER, 2D.H.T., Cv. Cp. and 4D., W-P, W-S	70	—	—	—	—	2	—	—	—	—	—	—	6024 173
8-55-8	GASKET, Lamp, J	70	—	2	—	—	—	—	—	—	—	—	—	3403 037
8-55-9	NUT, Lamp Mtg., 4D.	70	8	—	—	—	—	—	—	—	—	—	—	6027 639
	NUT, Lamp Mtg., Sp. 2D.H.T.	70	8	—	—	—	—	—	—	—	—	—	—	6027 625
	NUT, Lamp Att., J	70	—	16	—	—	—	—	—	—	—	—	—	6025 001
	P/NUT, except Sta. Wgn., R-K, R-T, R-L, R-H	70	—	—	—	8	—	—	—	—	—	—	—	2197 678
	NUT and WASHER, Att., Charger and Charger R/T	70	—	—	—	—	16	—	—	—	—	—	—	6023 202
	NUT and WASHER, Mtg., D-K, D-T, D-L, D-M, D-H except Sta. Wgn., D-P, C-E, C-L	70	—	—	—	—	—	—	8	6	8	8	—	6023 205
8-55-10	STUD, Lamp Mtg., 4D.	70	8	—	—	—	—	—	—	—	—	—	—	6024 579
	STUD, Mtg., J	70	—	16	—	—	—	—	—	—	—	—	—	6024 579
	SCREW, Mtg., Sta. Wgn.	70	—	—	—	8	—	—	—	—	—	—	—	6028 344
	SCREW, Att., Sta. Wgn.	70	—	—	—	—	8	—	—	—	—	—	—	6026 097
	SCREW, Mtg., Upper, Sta. Wgn.	70	—	—	—	—	—	4	4	—	—	—	—	6027 357
	SCREW, Mtg., Lwr., Sta. Wgn.	70	—	—	—	—	—	4	4	—	—	—	—	6027 475

CARLINES: J - Challenger, B - Barracuda, V - Valiant, L - Dart, R - Belvedere - Satellite, W - Coronet - Charger, P - Plymouth, D - Dodge, C - Chrysler, Y - Imperial

AR Indicates use as required.

Numerals in parentheses ( ) refer to notes.

# Indicates parts not listed in any previous parts book.

★ Indicates change or addition.

Printed in U.S.A. January 1972

8-55-0 TAIL, STOP AND TURN SIGNAL LAMP Cont'd.

CODE	PART NAME	ENG. TYPE OR CU.IN.	V 1-2	B J 1-2	L 1-2	R 1-2	W 1-2	P 1-2	D 1-2	C 1	C 2	C 3	Y 1	PART NUMBER
8-55-10	STUD Cont'd.													
	STUD, Mtg., except Sta. Wgn.	70	—	—	—	—	—	8	—	8	—	—	—	6024 962
	STUD, Mtg., C-E, C-L	70	—	—	—	—	—	—	—	6	—	—	6	6024 588
8-55-11	COVER, Lamp Hsg., Fastback	70	1	—	—	—	—	—	—	—	—	—	—	3403 880-1
	R-M, R-P except Sta. Wgn., R-S	70	—	—	—	1	—	—	—	—	—	—	—	3403 882-3
	except Charger, Charger R/T and Sta. Wgn.	70	—	—	—	—	1	—	—	—	—	—	—	3403 884-5
8-55-13	APPLIQUE, Rr. Bumper Tail, Stop, Turn Signal and B/Up Lamp	70	—	—	—	—	—	—	—	—	—	1	—	3403 026
	C-E	71	—	—	—	—	—	—	—	1	—	—	—	3479 336
	C-L	71	—	—	—	—	—	—	—	1	—	—	—	3479 334
		71	—	—	—	—	—	—	—	—	—	1	—	3479 327
8-55-14	MEDALLION, Rr. Bumper Tail, Stop, Turn Signal and B/Up Lamp Applique	71	—	—	—	—	—	—	—	—	—	1	—	2964 806
8-55-23	REINFORCEMENT, Tail Lamp Mtg., Upper, 4D.	70	1	—	—	—	—	—	—	—	—	—	—	2901 980-1
	4D., Upper Mtg.	71	1	—	—	—	—	—	—	—	—	—	—	3506 220-1
	Tail Lamp Opening, 4D.	70	1	—	—	—	—	—	—	—	—	—	—	2902 708-9
	4D.	71	1	—	—	—	—	—	—	—	—	—	—	3506 056-7
	w/P/NUT, Tail Lamp Opening, Fastback		1	—	1	—	—	—	—	—	—	—	—	3446 422-3
	Tail Lamp Opening, 2D., 2D.H.T., Cv. Cp. and 4D.	70	—	—	—	1	—	—	—	—	—	—	—	2900 898-9
	w/SCREW, Upper, Charger and Charger R/T	70	—	—	—	—	1	—	—	—	—	—	—	2902 560-1
	w/SCREW, Lower, Charger and Charger R/T	70	—	—	—	—	1	—	—	—	—	—	—	2902 526-7
	Upper, Rr., Sta. Wgn.		—	—	—	—	—	1	—	—	—	—	—	2894 556-7
	Upper, Frt., Sta. Wgn.		—	—	—	—	—	1	1	—	—	—	—	2894 480-1
	Upper, Rr., Sta. Wgn.		—	—	—	—	—	—	1	—	—	—	—	2894 558-9
	Upper, Frt., Sta. Wgn.		—	—	—	—	—	—	—	1	—	—	—	2894 484-5
	Upper, Rr., Sta. Wgn.		—	—	—	—	—	—	—	1	—	—	—	2894 560-1
8-55-57	SOCKET, 4D.	70	2	—	—	—	—	—	—	—	—	—	—	2822 196
	Sp. 2D.H.T.	70	2	—	—	—	—	—	—	—	—	—	—	2926 370
	except 2 D.H.T.	71	2	—	—	—	—	—	—	—	—	—	—	2926 370
	B, W Charger and Charger R/T	70	—	2	—	—	4	—	—	—	—	—	—	2983 478
	B	71	—	2	—	—	—	—	—	—	—	—	—	2983 478
	J		—	4	—	—	—	—	—	—	—	—	—	2926 370
	Fastback	71	—	—	2	—	—	—	—	—	—	—	—	2587 284
	except Sta. Wgn., R-K, R-T, R-L, R-H	70	—	—	—	4	—	—	—	—	—	—	—	2587 284
	R-M, R-P except Sta. Wgn., R-S	70	—	—	—	4	—	—	—	—	—	—	—	2926 370
	2D.H.T., R-M, R-H, R-P, R-S	71	—	—	—	2	—	—	—	—	—	—	—	3513 011
	2 D., 2 D.H.T. and 4 D., W except W-P and W-S	70	—	—	—	—	2	—	—	—	—	—	—	1841 893
	Sta. Wgn.	70	—	—	—	2	2	—	—	—	—	—	—	1841 893
	Charger and Charger R/T	70	—	—	—	—	2	—	—	—	—	—	—	2983 538
	Cv. Cp.	70	—	—	—	—	4	—	—	—	—	—	—	2822 196
	2D.H.T. and 4D., W-P, W-S	70	—	—	—	—	4	—	—	—	—	—	—	2822 196
	Sta. Wgn.		—	—	—	—	—	2	2	—	—	—	—	2822 196
	w/BOOT, except Sta. Wgn., D-H, D-P, C-L	70	—	—	—	—	—	—	2	2	4	2	2	2983 279
	Sta. Wgn.		—	—	—	—	—	—	—	2	—	—	—	1841 893
8-55-63	CONTACT, INSULATOR and SPRING PACKAGE, Socket		AR	AR	AR	AR	AR	AR	AR	AR	AR	AR	AR	2983 167
			AR	AR	AR	AR	AR	AR	AR	AR	AR	AR	AR	2983 322
			AR	AR	AR	AR	AR	AR	AR	AR	AR	AR	AR	2983 169
			AR	AR	AR	AR	AR	AR	AR	AR	AR	AR	AR	2584 972
8-55-137	LETTER D, Tail Lamp Hsg., except Sta. Wgn., D except D-H	71	—	—	—	—	—	—	2	—	—	—	—	3478 783
	LETTER O, Tail Lamp Hsg., except Sta. Wgn., D except D-H	71	—	—	—	—	—	—	1	—	—	—	—	3478 786

CARLINES J - Challenger, B - Barracuda, V - Valiant, L - Dart, R - Belvedere - Satellite, W - Coronet - Charger, P - Plymouth, D - Dodge, C - Chrysler, Y - Imperial

AR Indicates use as required.

Numerals in parentheses ( ) refer to notes.

# Indicates parts not listed in any previous parts book.

★ Indicates change or addition.

Printed in U.S.A. January 1972

8-55-0 TAIL, STOP AND TURN SIGNAL LAMP Cont'd.

CODE	PART NAME	ENG. TYPE OR CU.IN.	V 1-2	B J 1-2	L 1-2	R 1-2	W 1-2	P 1-2	D 1-2	C 1	C 2	C 3	Y 1	PART NUMBER
8-55-137	LETTERS Cont'd.													
	LETTER G, Tail Lamp Hsg., except Sta. Wgn., D except D-H	71	—	—	—	—	—	—	1	—	—	—	—	3478 784
	LETTER E, Tail Lamp Hsg., except Sta. Wgn., D except D-H	71	—	—	—	—	—	—	1	—	—	—	—	3478 785
8-55-140	WELT, Lamp Outer Bezel, B		—	2	—	—	—	—	—	—	—	—	—	3403 175
8-55-154	FILLER, Tail Lamp Opening Lwr. Reinf., Charger and Charger R/T	Inner 70	—	—	—	—	1	—	—	—	—	—	—	3445 902-3
		Outer 70	—	—	—	—	2	—	—	—	—	—	—	3445 904
8-55-158	BEZEL, B	Inner 70	—	1	—	—	—	—	—	—	—	—	—	3403 058-9
	B	Outer 70	—	1	—	—	—	—	—	—	—	—	—	3403 236-7
	B	Inner 71	—	1	—	—	—	—	—	—	—	—	—	3478 638-9
	B	Outer 71	—	1	—	—	—	—	—	—	—	—	—	3478 838-9
	J	70	—	1	—	—	—	—	—	—	—	—	—	3403 038-9
	R-M	70	—	—	—	1	—	—	—	—	—	—	—	3403 890-1
	except Sta. Wgn., R-P, R-S	70	—	—	—	1	—	—	—	—	—	—	—	3403 344-5
	2D.H.T., R-P, R-S	71	—	—	—	1	—	—	—	—	—	—	—	3478 562-3
	except Sta. Wgn., R-K, R-T, R-L, R-H	70	—	—	—	1	—	—	—	—	—	—	—	3403 744-5
	2 D., 2 D.H.T., and 4 D., W except W-P and W-S	70	—	—	—	—	1	—	—	—	—	—	—	3403 198-9
	w/Side Marker Lp., Sta. Wgn.	70	—	—	—	1	—	—	—	—	—	—	—	3403 360-1
	Sta. Wgn.	70	—	—	—	—	1	—	—	—	—	—	—	3403 548-9
	w/Charger Colored Bumper, 2 D.H.T., W-M, W-H, W-P, W-S	71	—	—	—	—	1	—	—	—	—	—	—	3478 862-3
	T/Gate, Tail, Stop and Turn Signal Lp., Sta. Wgn., P-K, P-M		—	—	—	—	—	1	—	—	—	—	—	2930 168-9
	Sta. Wgn., P-H		—	—	—	—	—	1	—	—	—	—	—	3403 512-3
	Sta. Wgn.		—	—	—	—	—	—	1	—	—	—	—	2930 186-7
	w/SIDE Marker Lp., Sta. Wgn.		—	—	—	—	—	1	—	—	—	—	—	2930 994-5
	except Sta. Wgn., P-M, P-H, P-P	71	—	—	—	—	—	1	—	—	—	—	—	3478 736-7
	Sta. Wgn.		—	—	—	—	—	—	1	—	—	—	—	2930 200-1
	except Sta. Wgn., D-H, D-P	70	—	—	—	—	—	—	1	—	—	—	—	3403 300-1
	w/Side Marker Lp., Sta. Wgn.		—	—	—	—	—	—	—	1	—	—	—	3403 494-5
	C-L		—	—	—	—	—	—	—	1	—	—	—	3403 112-3
		71	—	—	—	—	—	—	—	—	1	—	—	3479 330-1
			—	—	—	—	—	—	—	—	—	—	1	3403 144-5
	Tailgate, Sta. Wgn., P-K, P-M		—	—	—	—	—	1	—	—	—	—	—	2930 168-9
	Tailgate, Sta. Wgn., P-H		—	—	—	—	—	1	—	—	—	—	—	3403 512-3
	Tailgate, Sta. Wgn.		—	—	—	—	—	—	1	—	—	—	—	2930 186-7
8-55-159	SCREW, Tailgate Lamp Bezel Mtg., Sta. Wgn., P-K, P-M, P-H	70	—	—	—	—	—	8	12	—	—	—	—	6027 475
	SCREW, Bezel to Hsg. Att., except Sta. Wgn., D-H, D-P	70	—	—	—	—	—	—	16	—	—	—	—	6028 690
	SCREW, Bezel Att.	70	—	—	—	—	—	—	—	—	—	—	12	6028 072
8-55-161	CAP NUT, Bezel Mtg., except Sta. Wgn., R-M, R-P, R-S	70	—	—	—	12	—	—	—	—	—	—	—	6027 466
	NUT, Hsg. Mtg., Top, Sta. Wgn.	70	—	—	—	—	—	—	—	2	—	—	—	6023 111
	J/NUT, Tailgate Lamp Hsg. Mtg., Sta. Wgn., P-K, P-M, P-H	70	—	—	—	—	—	8	10	—	—	—	—	6014 023
8-55-194	LENS and GASKET PACKAGE, 4D.	70	1	—	—	—	—	—	—	—	—	—	—	3420 616-7
	4D.	71	1	—	—	—	—	—	—	—	—	—	—	3579 154-5
	2 D.H.T.		1	—	—	—	—	—	—	—	—	—	—	3420 784-5
	Fastback		1	—	—	—	—	—	—	—	—	—	—	3420 818-9
	B	70	—	1	—	—	—	—	—	—	—	—	—	3420 836-7
	B	71	—	1	—	—	—	—	—	—	—	—	—	3514 364-5
	J	70	—	1	—	—	—	—	—	—	—	—	—	3420 556-7
	J	71	—	1	—	—	—	—	—	—	—	—	—	3514 392-3
		70	—	—	1	—	—	—	—	—	—	—	—	3420 784-5
	Fastback	71	—	—	1	—	—	—	—	—	—	—	—	3514 352-3

CARLINES J - Challenger, B - Barracuda, V - Valiant, L - Dart, R - Belvedere - Satellite, W - Coronet - Charger, P - Plymouth, D - Dodge, C - Chrysler, Y - Imperial

AR Indicates use as required.

Numerals in parentheses ( ) refer to notes.

# Indicates parts not listed in any previous parts book.

★ Indicates change or addition.

Printed in U.S.A. January 1972

8-55-0 TAIL, STOP AND TURN SIGNAL LAMP Cont'd.

CODE	PART NAME	ENG. TYPE OR CU.IN.	V 1-2	B J 1-2	L 1-2	R 1-2	W 1-2	P 1-2	D 1-2	C 1	C 2	C 3	Y 1	PART NUMBER
8-55-194	LENS and GASKET PACKAGE Cont'd.													
	except Fastback	71	—	—	1	—	—	—	—	—	—	—	—	3514 356-7
	except Sta. Wgn., R-M, R-P, R-S	70	—	—	—	1	—	—	—	—	—	—	—	3420 620-1
	Sta. Wgn.	70	—	—	—	1	—	—	—	—	—	—	—	3420 716-7
	4D., R-K, R-T, R-L	71	—	—	—	1	—	—	—	—	—	—	—	3514 268-9
	2D.H.T., R-M, R-H	71	—	—	—	1	—	—	—	—	—	—	—	3514 366-7
	4D., R-H, R-P	71	—	—	—	1	—	—	—	—	—	—	—	3514 270-1
	2D.H.T., R-P, R-S	71	—	—	—	1	—	—	—	—	—	—	—	3514 368-9
	Sta. Wgn.	71	—	—	—	1	—	—	—	—	—	—	—	3514 410-1
	Sta. Wgn.	70	—	—	—	—	1	—	—	—	—	—	—	3420 738-9
	Sta. Wgn.	71	—	—	—	—	1	—	—	—	—	—	—	3514 420-1
	2 D., 2 D.H.T. and 4 D., W-K, W-T, W-L, W-M, W-H	70	—	—	—	—	1	—	—	—	—	—	—	3420 622-3
	2D.H.T., Cv. Cp. and 4D., W-P, W-S	70	—	—	—	—	1	—	—	—	—	—	—	3420 718-9
	W-P Charger, w/o Argent Paint, W-S Charger R/T, up to approx. Jan. 1, 1970	70	—	—	—	—	1	—	—	—	—	—	—	3420 586-7
	after approx. Jan. 1, 1970	70	—	—	—	—	1	—	—	—	—	—	—	3514 258-9
	W-P Charger, w/Argent Paint, up to approx. Jan. 1, 1970	70	—	—	—	—	1	—	—	—	—	—	—	2932 824-5
	after approx. Jan. 1, 1970	70	—	—	—	—	1	—	—	—	—	—	—	3514 260-1
	4D.	71	—	—	—	—	1	—	—	—	—	—	—	3514 322-3
	2D.H.T., W-M, W-H Inner	71	—	—	—	—	1	—	—	—	—	—	—	3514 316-7
	Fastback Inner	71	—	—	—	—	1	—	—	—	—	—	—	3514 316-7
	2D.H.T., W-M, W-H Outer	71	—	—	—	—	1	—	—	—	—	—	—	3514 318-9
	Fastback Outer	71	—	—	—	—	1	—	—	—	—	—	—	3514 318-9
	w/Charger Colored Bumper, 2 D.H.T., W-M, W-H, W-P, W-S	71	—	—	—	—	1	—	—	—	—	—	—	3514 358-9
	Sta. Wgn.		—	—	—	—	—	1	—	—	—	—	—	2932 738-9
	2 D., w/Fury Spring Valve, P-L	70	—	—	—	—	—	1	—	—	—	—	—	3420 860-1
	2 D. w/o Fury Spring Valve, 2 D.H.T. and 4 D.	70	—	—	—	—	—	1	—	—	—	—	—	3420 856-7
	except Sta. Wgn., P-M, P-H	70	—	—	—	—	—	1	—	—	—	—	—	3420 860-1
	except Sta. Wgn., P-K, P-T, P-E, P-L	71	—	—	—	—	—	1	—	—	—	—	—	3514 340-1
	except Sta. Wgn., P-M, P-H, P-P	71	—	—	—	—	—	1	—	—	—	—	—	3514 362-3
	Sta. Wgn.		—	—	—	—	—	—	1	—	—	—	—	2932 746-7
	except Sta. Wgn., D-K, D-T, D-L, D-M	70	—	—	—	—	—	—	1	—	—	—	—	3420 720-1
	except Sta. Wgn., D-H, D-P	70	—	—	—	—	—	—	1	—	—	—	—	3420 626-7
	except Sta. Wgn., D-K, D-T, D-E, D-L, D-M, D-S	71	—	—	—	—	—	—	1	—	—	—	—	3514 374-5
	except Sta. Wgn., D-H	71	—	—	—	—	—	—	1	—	—	—	—	3514 370-1
	Sta. Wgn.		—	—	—	—	—	—	—	1	—	—	—	2932 792-3
	C-E		—	—	—	—	—	—	—	1	—	—	—	3420 592-3
	C-L up to approx. May, 1970	70	—	—	—	—	—	—	—	1	—	—	—	3420 706-7
	C-L, after approx. May, 1970		—	—	—	—	—	—	—	1	—	—	—	3579 210-1
		70	—	—	—	—	—	—	—	—	1	—	—	3420 590-1
		71	—	—	—	—	—	—	—	—	1	—	—	3579 246-7
		70	—	—	—	—	—	—	—	—	—	1	—	3420 588-9
		71	—	—	—	—	—	—	—	—	—	1	—	3579 230-1
			—	—	—	—	—	—	—	—	—	—	1	3420 596-7
	Tailgate, Sta. Wgn., P-K, P-M, P-H		—	—	—	—	—	1	—	—	—	—	—	2932 742-3
	Tailgate, Sta. Wgn.		—	—	—	—	—	—	1	—	—	—	—	2932 752-3
8-55-195	LENS, Lamp, except Sta. Wgn., R-K, R-T, R-L, R-H	70	—	—	—	1	—	—	—	—	—	—	—	3403 544-5
8-55-209	SCREW, Lens Att.	70	—	—	8	—	—	—	—	—	—	—	—	6028 334
	SCREW, Lens Mtg., except Sta. Wgn., D-K, D-T, D-L, D-M	70	—	—	—	—	—	—	16	—	16	—	—	6028 070
	SCREW, Lens Att., C-E	70	—	—	—	—	—	—	—	8	—	—	—	6027 418
	SCREW, Lens Att.	70	—	—	—	—	—	—	—	—	—	12	—	6028 073
	SCREW, Lens to Hsg. Att.	70	—	—	—	—	—	—	—	—	—	—	4	6028 110

CARLINES J - Challenger, B - Barracuda, V - Valiant, L - Dart, R - Belvedere - Satellite, W - Coronet - Charger, P - Plymouth, D - Dodge, C - Chrysler, Y - Imperial

AR Indicates use as required.

# Indicates parts not listed in any previous parts book.

Numerals in parentheses ( ) refer to notes.

★ Indicates change or addition.

Printed in U.S.A. January 1972

CODE	PART NAME	ENG. TYPE OR CU.IN.	V 1-2	B J 1-2	L 1-2	R 1-2	W 1-2	P 1-2	D 1-2	C 1	C 2	C 3	Y 1	PART NUMBER
8-55-0	**TAIL, STOP AND TURN SIGNAL LAMP Cont'd.**													
8-55-214	GASKET, Lens	70	—	—	2	—	—	—	—	—	—	—	—	# 3403 590
	except Fastback	71	—	—	2	—	—	—	—	—	—	—	—	3478 746
	Sta. Wgn.	71	—	—	—	2	—	—	—	—	—	—	—	3478 962
	4D.	71	—	—	—	2	—	—	—	—	—	—	—	3478 501
	w/Charger Colored Bumper, 2 D.H.T., W-M, W-H, W-P, W-S	71	—	—	—	—	2	—	—	—	—	—	—	3478 864
	Sta. Wgn.	71	—	—	—	—	2	—	—	—	—	—	—	3478 974
	except Sta. Wgn., P-K, P-T, P-E, P-L	71	—	—	—	—	—	2	—	—	—	—	—	3478 515
	except Sta. Wgn., P-H, P-P	71	—	—	—	—	—	2	—	—	—	—	—	3478 532
	except Sta. Wgn., D-K, D-T, D-E, D-L, D-M, D-S	71	—	—	—	—	—	—	2	—	—	—	—	3478 782
	except Sta. Wgn., D-H	71	—	—	—	—	—	—	2	—	—	—	—	3478 832
	C-E, C-L		—	—	—	—	—	—	—	2	—	—	—	3403 126
8-55-300	CONTACT, Socket		AR	AR	AR	AR	AR	AR	AR	AR	AR	AR	AR	2256 966
8-56-0	**BACK-UP LAMP**													
8-56-1	LAMP, 4D.		1	—	—	—	—	—	—	—	—	—	—	3403 306-7
	J	70	—	1	—	—	—	—	—	—	—	—	—	3403 042
	LAMP PACKAGE, except Sta. Wgn.	70	—	—	—	1	—	—	—	—	—	—	—	3514 254-5
	LAMP, Sta. Wgn.	70	—	—	—	2	2	—	—	—	—	—	—	3403 860
	Charger and Charger R/T	70	—	—	—	—	2	—	—	—	—	—	—	3403 860
	Sta. Wgn.	71	—	—	—	2	2	—	—	—	—	—	—	3478 802
	Sta. Wgn.		—	—	—	—	—	2	2	2	—	—	—	3403 862
	except Sta. Wgn., D-H, D-P	70	—	—	—	—	—	—	1	—	—	—	—	3403 314-5
			—	—	—	—	—	—	—	—	—	—	1	3403 201
8-56-2	SWITCH, B/Up Lamp, w/Manual Trans.	70	1	1	1	1	1	1	1	1	—	—	—	2258 404
	Trans. B/Up Lamp, w/Manual Trans.	71	1	1	1	1	1	1	1	1	—	—	—	3488 270
	NOTE: (Switch w/Auto. Trans. See Part Type Code 21-113-24)													
8-56-4	NUT and WASHER, Lamp Att., J	70	—	4	—	—	—	—	—	—	—	—	—	6025 001
	Mtg., except Sta. Wgn., D-H	70	—	—	—	—	—	—	6	—	—	—	—	6023 202
	Mtg.	70	—	—	—	—	—	—	—	—	—	—	2	6023 205
8-56-8	LENS and GASKET PACKAGE, 4D.		1	—	—	—	—	—	—	—	—	—	—	3420 728-9
	J	70	—	1	—	—	—	—	—	—	—	—	—	3420 581
	except Fastback	71	—	—	1	—	—	—	—	—	—	—	—	3514 354-5
	except Sta. Wgn.	70	—	—	—	1	—	—	—	—	—	—	—	3420 582-3
	Sta. Wgn.	70	—	—	—	2	2	—	—	—	—	—	—	2932 954
	Sta. Wgn.	71	—	—	—	2	2	—	—	—	—	—	—	3579 186
	Charger and Charger R/T	70	—	—	—	—	2	—	—	—	—	—	—	2932 954
	Fastback	71	—	—	—	—	1	—	—	—	—	—	—	3514 320-1
	2D.H.T., W-M, W-H	71	—	—	—	—	1	—	—	—	—	—	—	3514 320-1
	Sta. Wgn.		—	—	—	—	—	2	2	2	—	—	—	2932 993
	except Sta. Wgn., D-H, D-P	70	—	—	—	—	—	—	1	—	—	—	—	3420 594-5
			—	—	—	—	—	—	—	—	—	—	1	3420 642
8-56-11	RETAINER, Lamp Mtg., Sta. Wgn.	70	—	—	—	2	2	—	—	—	—	—	—	2853 440
	Sta. Wgn.		—	—	—	—	—	2	2	2	—	—	—	2853 440
	Lamp Lens, Sta. Wgn.	70	—	—	—	2	2	—	—	—	—	—	—	2853 439
	Charger and Charger R/T	70	—	—	—	—	2	—	—	—	—	—	—	2853 439
	Sta. Wgn.		—	—	—	—	—	2	2	2	—	—	—	2853 439
8-56-23	GASKET, Lamp Lens, except Fastback	71	—	—	2	—	—	—	—	—	—	—	—	3478 853
	except Sta. Wgn.	70	—	—	—	2	—	—	—	—	—	—	—	3403 174
	Sta. Wgn.	70	—	—	—	2	2	—	—	—	—	—	—	2853 437
	Charger and Charger R/T	70	—	—	—	—	2	—	—	—	—	—	—	2853 437
	Sta. Wgn.		—	—	—	—	—	2	2	2	—	—	—	2853 437
8-56-27	CONTACT, INSULATOR and SPRING PACKAGE, Socket, B		AR	AR	AR	AR	AR	AR	AR	AR	AR	AR	AR	2584 972
	J	70	—	1	—	—	—	—	—	—	—	—	—	2584 972
	J	70	—	1	—	—	—	—	—	—	—	—	—	2497 980
	Fastback	71	—	—	2	—	—	—	—	—	—	—	—	2497 980

CARLINES: J - Challenger, B - Barracuda, V - Valiant, L - Dart, R - Belvedere - Satellite, W - Coronet - Charger, P - Plymouth, D - Dodge, C - Chrysler, Y - Imperial

AR Indicates use as required.

Numerals in parentheses ( ) refer to notes.

# Indicates parts not listed in any previous parts book.

★ Indicates change or addition.

Printed in U.S.A. January 1972

CODE	PART NAME	ENG. TYPE OR CU.IN.	V 1-2	B J 1-2	L 1-2	R 1-2	W 1-2	P 1-2	D 1-2	C 1	C 2	C 3	Y 1	PART NUMBER
8-56-0	**BACK-UP LAMP Cont'd.**													
8-56-34	SOCKET, V Sp. 2D.H.T., W except Charger, Charger R/T and Sta. Wgn., D-H except Sta. Wgn., D-P	70	2	2	—	—	2	—	2	—	—	—	—	2926 848
	except 2 D.H.T.	71	2	—	—	—	—	—	—	—	—	—	—	3513 162
	B	71	—	2	—	—	—	—	—	—	—	—	—	2983 538
	J	71	—	2	—	—	—	—	—	—	—	—	—	3513 162
	w/BOOT, V 2 D.H.T., L except Fastback	71	2	—	2	2	2	2	2	2	2	2	2	2983 279
	Fastback	71	—	—	2	—	—	—	—	—	—	—	—	3579 190
	w/BOOT, W Charger and Charger R/T	70	—	—	2	2	2	—	—	—	—	—	—	2983 279
	w/BOOT, Sta. Wgn.	70	—	—	—	—	2	2	2	2	—	—	—	2983 279
	w/BOOT, except Sta. Wgn., D-K, D-T, D-L, D-M, C-E	70	—	—	—	—	—	2	2	2	—	—	—	2983 279
8-56-36	BEZEL, Lamp, J	70	—	1	—	—	—	—	—	—	—	—	—	3403 048
			—	—	—	—	—	—	—	—	—	—	1	3403 206
8-56-40	GASKET, Lamp Body Seal, J	70	—	1	—	—	—	—	—	—	—	—	—	3403 046
	Sta. Wgn.	71	—	—	—	2	2	—	—	—	—	—	—	3478 818
8-56-41	SCREW, Lamp Mtg., Sta. Wgn.	70	—	—	—	4	4	4	4	4	—	—	—	6024 403
	STUD, Mtg.	70	—	—	—	—	—	—	—	—	—	—	2	6024 588
	SCREW, Lens to Hsg.	70	—	—	—	—	—	—	—	—	—	—	2	6028 308
	SCREW, Bezel Att.	70	—	—	—	—	—	—	—	—	—	—	2	6028 072
8-56-46	GASKET, Switch Mtg., w/Manual Trans., C-E, C-L		1	1	1	1	1	1	1	1	—	—	—	1302 807
8-57-0	**LICENSE LAMP**													
8-57-10	LAMP	70	1	—	—	—	—	—	—	—	—	—	—	2606 200
	except 2 D.H.T.	71	1	—	—	—	—	—	—	—	—	—	—	2606 200
	2 D.H.T.	71	1	—	—	—	—	—	—	—	—	—	—	2575 059
	B		—	1	—	—	—	—	—	—	—	—	—	3403 830
	J	70	—	1	1	—	—	—	—	—	—	—	—	2575 059
	w/Colored Bumper, J	71	—	1	—	—	—	—	—	—	—	—	—	3479 400
	J, L except Fastback	71	—	1	1	—	—	—	—	—	—	—	—	2575 059
	Fastback	71	—	—	1	—	—	—	—	—	—	—	—	2606 200
	Sta. Wgn.	70	—	—	—	1	1	1	1	1	—	—	—	2930 916
	Sta. Wgn.	71	—	—	—	1	1	—	—	—	—	—	—	3479 333
	except Sta. Wgn., up to approx. Aug. 1, 1969	70	—	—	—	1	—	1	1	1	1	1	—	2853 756
	after approx. Aug. 1, 1969	70	—	—	—	1	—	1	1	1	1	1	—	= 3403 941
	except Sta. Wgn.	71	—	—	—	1	1	1	—	—	—	—	—	3479 304
	2D., 2D.H.T., Cv. Cp. and 4D.	70	—	—	—	—	1	—	—	—	—	—	—	2575 059
	Charger and Charger R/T	70	—	—	—	—	1	—	—	—	—	—	—	2853 561
	Sta. Wgn.	71	—	—	—	—	—	1	1	1	—	—	—	2930 916
	except Sta. Wgn.	71	—	—	—	—	—	—	1	—	—	—	—	3479 333
	except Sta. Wgn.	71	—	—	—	—	—	—	—	1	1	1	—	= 3403 941
			—	—	—	—	—	—	—	—	—	—	1	2853 466
8-57-11	SCREW and WASHER, Mtg.	70	2	—	—	—	—	—	—	—	—	—	—	6028 006
8-57-16	FILLER, Lamp, 2D.H.T.	71	—	—	—	AR	—	—	—	—	—	—	—	1242 974
8-57-54	LENS and GASKET PACKAGE, C-E, C-L	70	1	—	—	—	—	—	—	1	1	1	1	2585 174
	V except 2 D.H.T., L Fastback	71	1	—	1	—	—	—	—	—	—	—	—	2585 174
			—	1	—	—	—	—	—	—	—	—	—	3420 839
	except Sta. Wgn.	70	—	—	—	1	1	1	1	—	—	—	—	2585 174
	Sta. Wgn.	71	—	—	—	1	1	—	—	—	—	—	—	2585 174
	except Sta. Wgn.	71	—	—	—	1	1	1	—	—	—	—	—	3620 734
	except Sta. Wgn.	71	—	—	—	—	—	—	1	1	1	1	1	2585 174
8-57-58	COVER, w/Filler, 2 D.H.T., up to Feb. 1971		—	—	—	1	—	—	—	—	—	—	—	3615 104
	w/STUD, 2 D.H.T., after Feb. 1971		—	—	—	1	—	—	—	—	—	—	—	= 3615 576
	w/STUD, 2D.H.T. and Fastback	71	—	—	—	—	1	—	—	—	—	—	—	3615 103

CARLINES: J - Challenger, B - Barracuda, V - Valiant, L - Dart, R - Belvedere - Satellite, W - Coronet - Charger, P - Plymouth, D - Dodge, C - Chrysler, Y - Imperial

AR Indicates use as required.

# Indicates parts not listed in any previous parts book.

Numerals in parentheses ( ) refer to notes.

★ Indicates change or addition.

Printed in U.S.A. January 1972

CODE	PART NAME		ENG. TYPE OR CU.IN.	V 1-2	B J 1-2	L 1-2	R 1-2	W 1-2	P 1-2	D 1-2	C 1	C 2	C 3	Y 1	PART NUMBER
8-57-0	**LICENSE LAMP Cont'd.**														
8-57-79	SOCKET, B			—	1	—	—	—	—	—	—	—	—	—	2983 679
8-57-89	CONTACT, INSULATOR and SPRING PACKAGE, Socket			AR	AR	AR	AR	AR	AR	AR	AR	AR	AR	AR	2584 972
8-58-0	**STOP LAMP**														
8-58-60	SWITCH, Heavy Duty			1	1	1	1	1	—	—	—	—	—	—	2809 033
	Medium Duty			1	1	1	1	1	—	—	—	—	—	—	2822 322
	Medium Duty			—	—	—	—	—	1	1	1	1	1	1	2926 275
	Heavy Duty			—	—	—	—	—	1	1	1	1	1	1	2926 270
	w/SPEED CONTROL			—	1	—	1	1	1	1	1	1	1	1	2947 798
	SCREW and WASHER, Mtg.			—	1	—	1	1	1	1	1	1	1	1	6023 541
8-58-66	ACTUATOR, Switch, w/Power Brake Booster, w/426 Eng.	70	8	—	—	—	1	1	—	—	—	—	—	—	2944 386
8-58-79	BRACKET, Switch Mtg.			1	—	1	—	—	—	—	—	—	—	—	2771 857
				—	1	—	—	—	—	—	—	—	—	—	2947 532
		71		—	—	—	1	1	—	—	—	—	—	—	3488 490
		70		—	—	—	1	1	—	—	—	—	—	—	2947 533
				—	—	—	—	—	1	1	1	1	1	1	2926 241

NOTES

CARLINES J - Challenger, B - Barracuda, V - Valiant, L - Dart, R - Belvedere - Satellite, W - Coronet - Charger, P - Plymouth, D - Dodge, C - Chrysler, Y - Imperial

AR Indicates use as required.

Numerals in parentheses ( ) refer to notes.

# Indicates parts not listed in any previous parts book.

★ Indicates change or addition.

Printed in U.S.A. January 1972

GROUP 9 - ENGINE
SIX CYLINDER

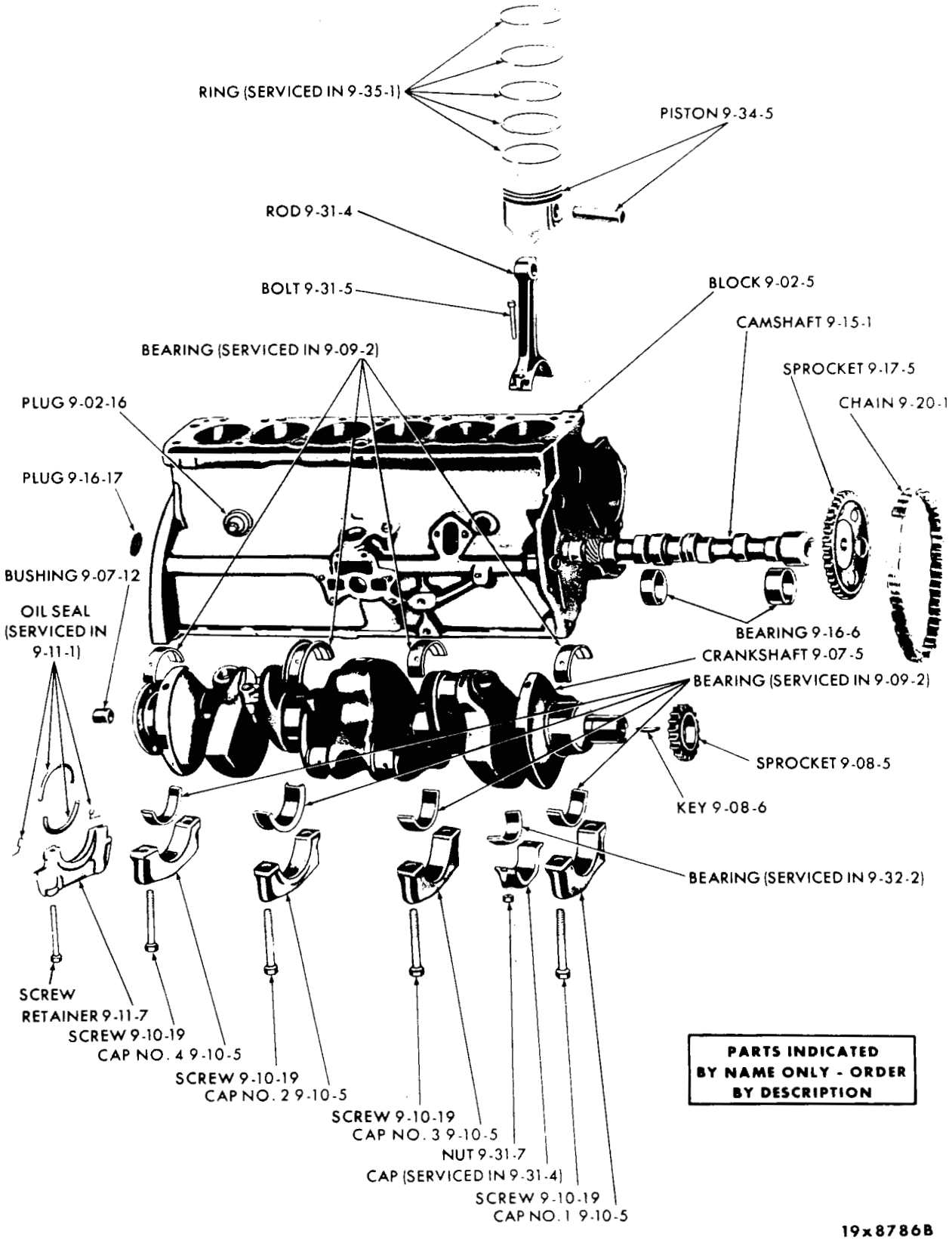

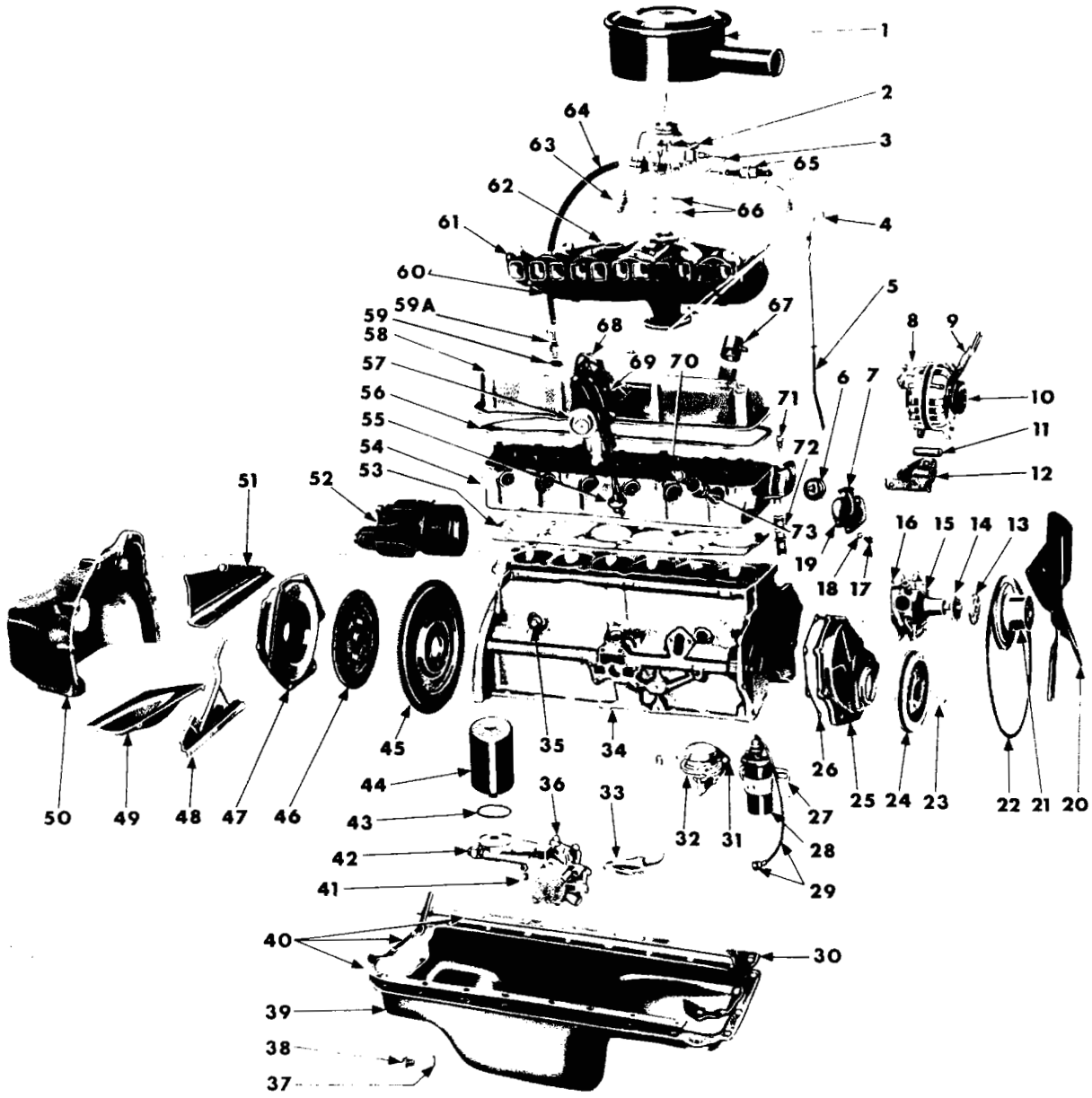

EXTERNAL - 198 AND 225 6 CYLINDER ENGINE

EXTERNAL - 198 AND 225 6 CYLINDER ENGINE

Ref. No.	Name	Part Type Code
1	Air Cleaner	14-29-2
2	Carburetor	14-30-1
3	Tube	14-89-2
4	Indicator	10-03-4
5	Tube	10-03-7
6	Thermostat	7-41-4
7	Elbow	9-05-5
8	Alternator	8-28-3
9	Strap	8-28-15
10	Pulley	8-28-297
11	Spacer	Not Serviced
12	Bracket	8-28-36
13	Spacer	7-02-16
14	Hub	7-05-1
15	Pump Package	7-42-1
16	Gasket	7-44-4
17	Screw	
18	Washer	
19	Gasket	9-05-6
20	Fan	7-02-1
21	Pulley	7-06-14
22	Belt	7-03-1
23	Key	9-08-5
24	Damper	9-13-5
25	Cover	9-23-5
26	Gasket	9-23-17
27	Bracket	8-35-41
28	Coil	8-35-4
29	Cable	8-36-49
30	Gasket	10-24-1
31	Gasket	14-74-1
32	Pump Package	14-73-1
33	Strainer, w/Pipe	10-23-7
34	Block	9-02-5
35	Plug	
36	Gasket	10-07-11
37	Gasket	10-24-38
38	Plug	10-24-37
39	Pan	10-24-4
40	Gasket (Serviced in 10-24-1)	
41	Pump	10-07-6
42	Cap	10-22-40
43	Gasket (Serviced in 10-26-6)	
44	Filter	10-26-6
45	Flywheel	9-45-1
46	Disc	6-13-1
47	Cover, w/Plate	6-14-1
48	Seal	6-10-10
49	Pan	6-10-2
50	Housing	6-09-1
51	Strut	6-09-11
52	Starter	8-52-4
53	Gasket	9-03-5
54	Head	9-03-4
55	Cover	8-36-117
56	Gasket	9-03-29
57	Distributor	8-27-1
58	Cover	9-03-28
59	Grommet	10-02-61
59A	Valve	10-02-62
60	Manifold	9-48-6
61	Gasket (Serviced in 9-50-1)	
62	Manifold	9-48-7
63	Choke	14-39-45
64	Hose	10-02-53
65	Fuel Filter	14-67-1
66	Gasket	14-30-2
67	Air Cleaner	10-01-21
68	Cable Set	8-36-1
69	Cap	8-27-71
70	Spark Plug	8-36-114
71	Sending Unit	8-37-155
72	Hose, Water Pump By-Pass	7-14-9
73	Tube	8-36-136

PARTS INDICATED BY NAME ONLY - ORDER BY DESCRIPTION

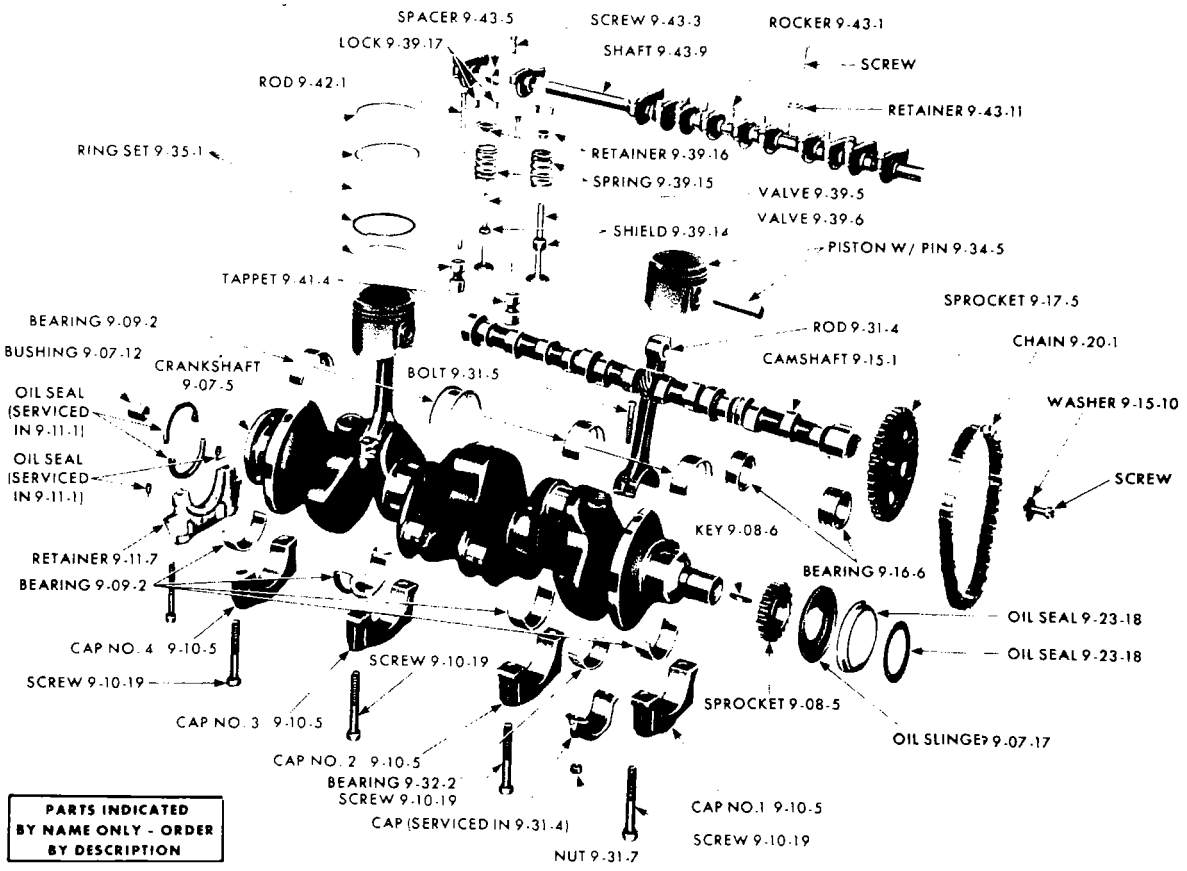

19x8750C

INTERNAL ENGINE - 6 CYLINDER

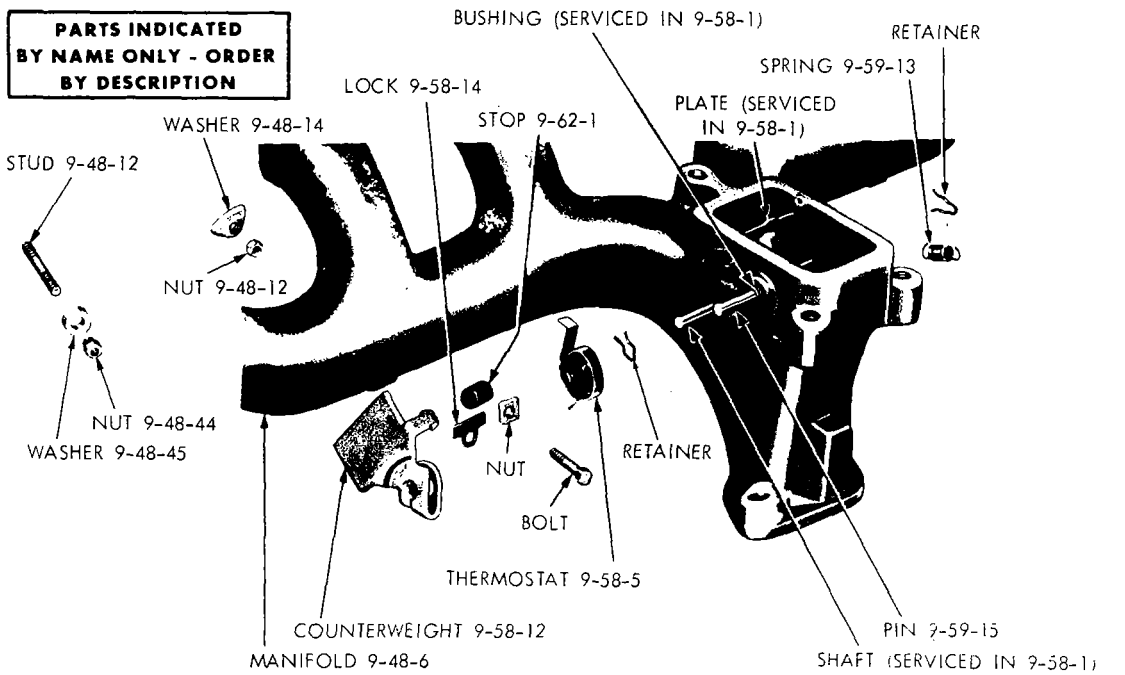

19a0315 **D**

EXHAUST MANIFOLD AND HEAT CONTROL - 6 CYLINDER ENGINES

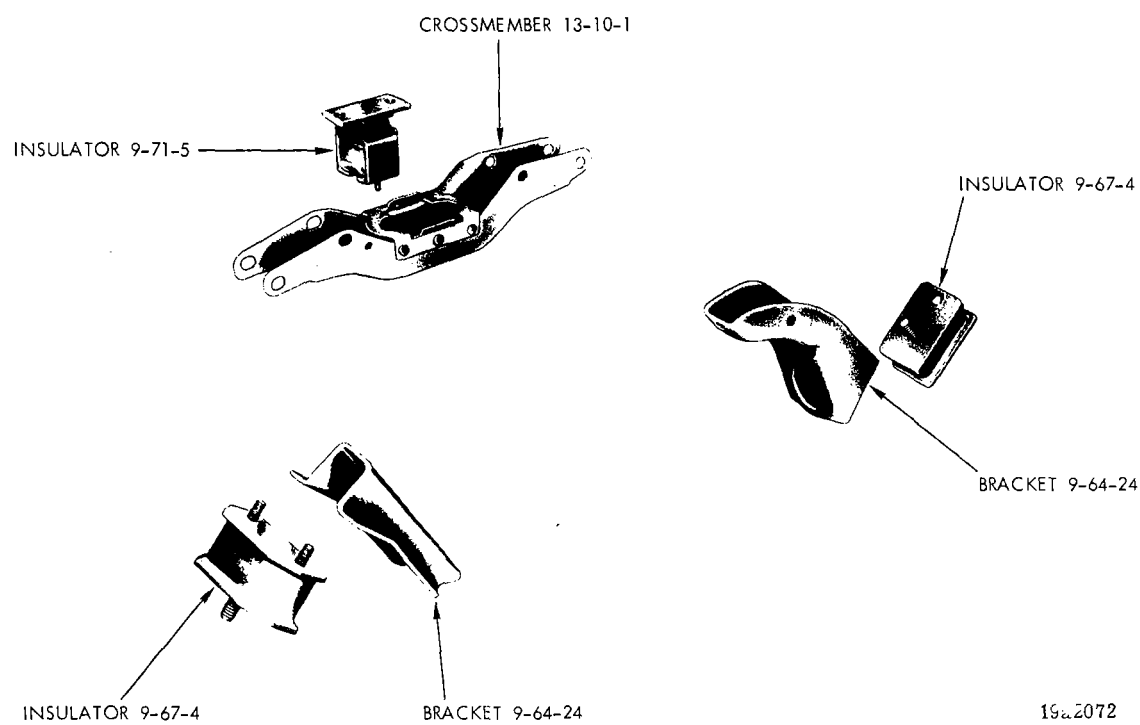

19a2072

ENGINE MOUNTINGS - VALIANT AND DART (6 CYLINDER ENGINES)

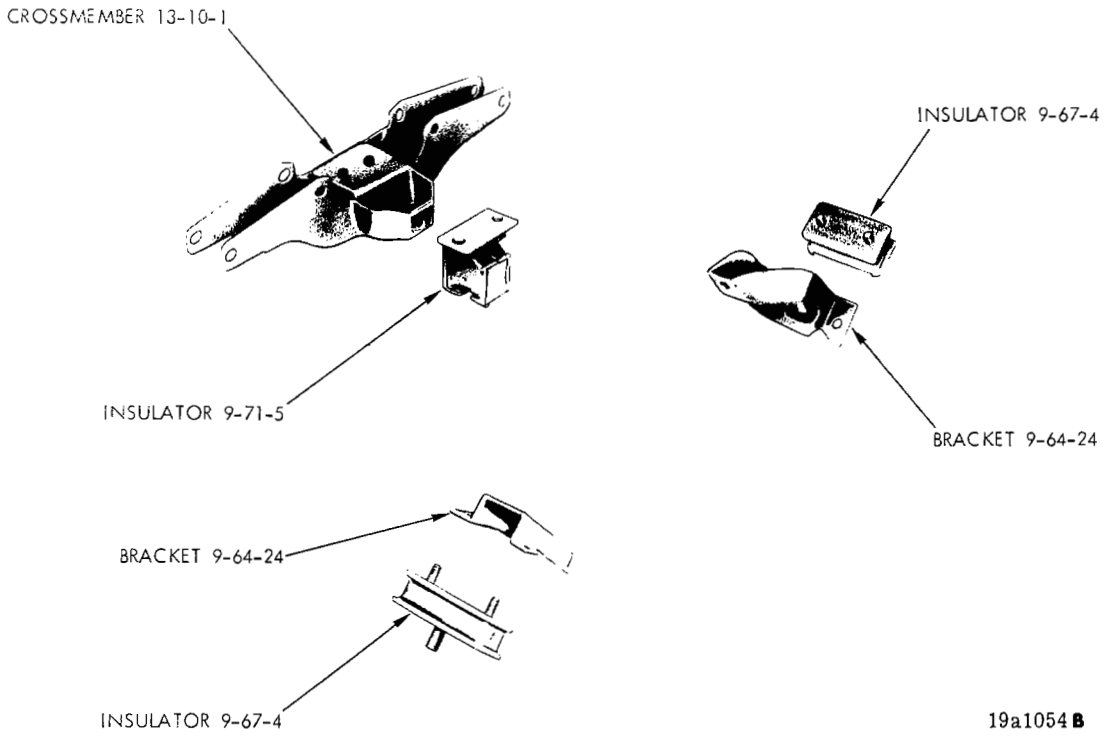

ENGINE MOUNTINGS - BELVEDERE, CORONET AND CHARGER (6 CYLINDER ENGINES)

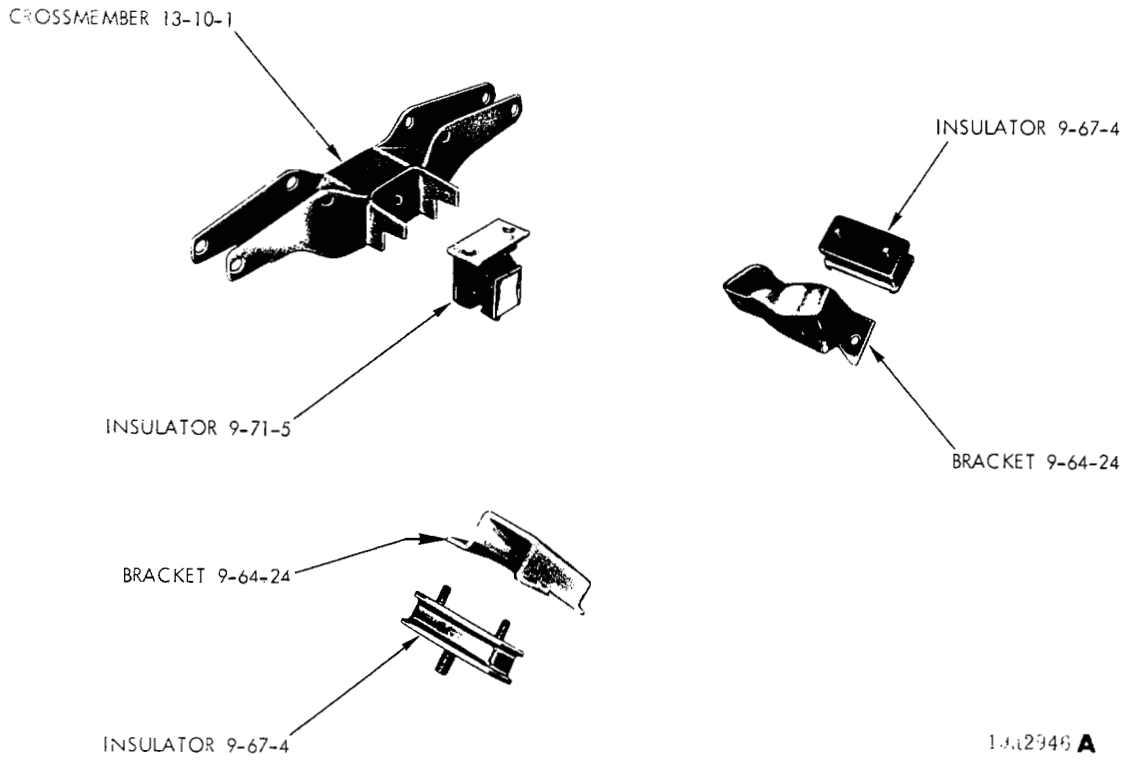

ENGINE MOUNTINGS - BARRACUDA AND CHALLENGER (6 AND 8 CYLINDER)

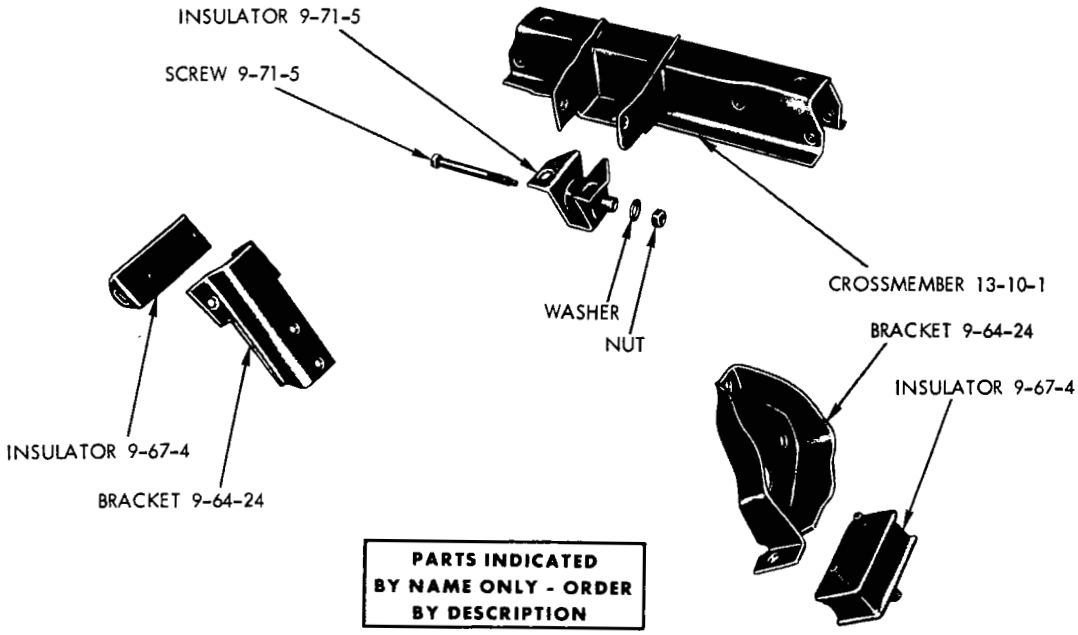

ENGINE MOUNTINGS - PLYMOUTH AND DODGE (6 CYLINDER ENGINES)

NOTES

NOTES

IMPORTANT

SIX CYLINDER ENGINES

NOTE: The following symbols are used in connection with engine numbers. Engine numbers without symbols indicate "Standard Cylinders and Crankshaft Bearings"

The Letter "A" immediately following the engine identification number indicates Bore .020" (.508 MM) Larger than Standard.

The Letter "B" immediately following the engine identification number indicates Main and Connecting Rod Bearings .010" (.245 MM) Smaller than Standard.

The Letters "AB" immediately following the engine identification number indicates Cylinder Bore .020" (.508 MM.) Larger than Standard. Main and Connecting Rod Bearings .010" (.254 MM.) Smaller than Standard.

The Letters in the circular pads at either end of the engine number are for the use of factory inspectors only and should not be connected with engine number.

Always mention Serial Numbers when ordering major assemblies.

CODE	PART NAME AND DESCRIPTION		PER CAR	CU. IN. DISPLACEMENT & PISTON BORE SIZE	
				198	225
				3.40	3.40
	SIX CYLINDER ENGINES				
9-01-0	**ENGINE ASSEMBLY**				
9-01-5	GASKET SET, Engine		1	3004 839	3004 839
	w/170 Cubic Inch Eng., Export		1	3004 839	———
9-01-24	SHORT ENGINE				
	NOTE: Short Engine Assemblies Consist of: The Cylinder Block with Pistons and Rings, Crankshaft and Bearings, Connecting Rods and Bearings.				
	w/Std. Compression,		1	3462 601	———
	w/Low Compression, V, L, Export		1	3462 603	———
	w/Std. Compression,		1	———	3462 605
	w/Low Compression, Export		1	———	3462 607
	w/170 Cubic Inch Eng., Export		1	3462 625	———
9-02-0	**CYLINDER BLOCK**				
9-02-5	BLOCK, w/Pistons and Rings		1	2951 694	2951 694
	w/Low Compression, Export		1	2951 693	2951 693
	w/170 Cubic Inch Eng. Export		1	2463 395	———
9-02-7	DOWEL, Cylinder Block to Clutch Housing or Torque Converter		2	1122 532	1122 532
	Eccentric, .007" Over Center		AR	1736 347	1736 347
	Eccentric, .014" Over Center		AR	1736 348	1736 348
	Eccentric, .021" Over Center		AR	1736 353	1736 353
9-02-16	PLUG, Cylinder Block Water Jacket Drain 3/8" Pipe		1	1859 127	1859 127
	PLUG, Cylinder Block Water Hole		AR	2406 356	2406 356
	.065 O/S		*	2406 575	2406 575
	w/170 Cubic Inch Eng., Export		3	2406 356	———
	PLUG, Cylinder Block Oil Gallery 3/8" pipe		1	6028 668	6028 668
9-02-37	COVER, Cylinder Block Starter Opening				
	w/3 Speed Man. Trans. R, W, P, D		1	———	2536 649
9-02-50	HEATER, Engine Jacket		1	2863 477	2863 477
	Seal, "O" Ring		*	6027 513	6027 513
9-02-62	CORD, Engine Jacket Heater Used Until Feb, 1971		1	3418 328	3418 328
	Used after Feb. 1971	71	1	= 3614 282	= 3614 282
	CORD Extension		1	3418 403	3418 403
9-02-77	CLIP, Heater Cord to Oil Pan Bolt		1	1302 783	1302 783

CARLINES J - Challenger, B - Barracuda, V - Valiant, L - Dart, R Belvedere - Satellite, W - Coronet - Charger, P - Plymouth, D - Dodge, C - Chrysler, Y - Imperial

AR Indicates use as required.

\# Indicates parts not listed in any previous parts book.

Numerals in parentheses ( ) refer to notes.

★ Indicates change or addition.

Printed in U.S.A. January 1972

CODE	PART NAME AND DESCRIPTION		PER CAR	CU. IN. DISPLACEMENT & PISTON BORE SIZE	
				198	225
				3.40	3.40
	SIX CYLINDER ENGINES				
9-03-0	**CYLINDER HEAD**				
9-03-4	HEAD, Cylinder		1	3614 952	3614 952
9-03-5	GASKET, Cylinder Head		1	2843 182	2843 182
9-03-10	BOLT, Cylinder Head		14	1947 687	1947 687
9-03-28	COVER, Cylinder Head		1	2806 579	2806 579
9-03-29	GASKET, Cylinder Head Cover		1	2899 250	2899 250
9-05-0	**CYLINDER HEAD WATER OUTLET ELBOW or CONNECTOR**				
9-05-5	ELBOW, Cylinder Water Outlet		1	2121 524	2121 524
9-05-6	GASKET, Cylinder Water Outlet Elbow		1	1947 671	1947 671
9-07-0	**CRANKSHAFT**				
9-07-5	CRANKSHAFT		1	2951 979	2899 582
	w/170 Cubic Inch Eng., Export		1	2843 941	———
9-07-12	BUSHING, Crankshaft Trans. Drive Pinion Pilot		1	53 298	53 298
9-07-17	OIL SLINGER, Crankshaft		1	2899 530	2899 530
9-08-0	**CRANKSHAFT SPROCKET**				
9-08-5	SPROCKET, Crankshaft		1	2128 912	2128 912
9-09-0	**CRANKSHAFT BEARING PACKAGE**				
	NOTE: When .001 thicker wall Crankshaft Main Bearings are used for Engines in Production a Maltese Cross is stamped on the Model Part of the Cylinder Block				
	NOTE: Crankshaft Bearing Package Consist of one upper and one lower Bearing.				
9-09-2	BEARING PACKAGE, No. 1 Std.		1	2240 368	2240 368
	Nos. 2 and 4 Std.		2	2240 376	2240 376
	No. 3 Std.		1	2240 372	2240 372
	No. 1 .001 U/S		1	2240 369	2240 369
	Nos. 2 and 4 .001 U/S		2	2240 377	2240 377
	No. 3 .001 U/S		1	2240 373	2240 373
	No. 1 .002 U/S		1	2240 370	2240 370
	Nos. 2 and 4 .002 U/S		2	2240 378	2240 378
	No. 3 .002 U/S		1	2240 374	2240 374
	No. 1 .003 U/S		1	2275 381	2275 381
	Nos. 2 and 4 .003 U/S		2	2275 383	2275 383
	No. 3 .003 U/S		1	2275 385	2275 385
	No. 1 .010 U/S		1	2240 371	2240 371
	Nos. 2 and 4 .010 U/S		2	2240 379	2240 379
	No. 3 .010 U/S		1	2240 375	2240 375
	No. 1 .012 U/S		1	2275 382	2275 382
	Nos. 2 and 4 .012 U/S		2	2275 384	2275 384
	No. 3 .012 U/S		1	2275 386	2275 386
9-10-0	**CRANKSHAFT BEARING CAP**				
9-10-5	CAP, Crankshaft Bearing, Nos. 1 and 2		2	2084 403	2084 403
	No. 3		1	2084 405	2084 405
	No. 4		1	2084 404	2084 404
9-10-19	SCREW, Crankshaft Bearing Cap		8	1618 695	1618 695
9-11-0	**CRANKSHAFT REAR BEARING OIL SEAL**				
9-11-1	OIL SEAL PACKAGE, Crankshaft Rear Bearing	70	1	2084 411	2084 411
		71	1	3549 393	3549 393
9-11-7	RETAINER, Crankshaft Bearing Oil Seal Lower		1	1947 557	1947 557
	Screw		2	9418 004	9418 004

CODE	PART NAME AND DESCRIPTION		PER CAR	CU. IN. DISPLACEMENT & PISTON BORE SIZE	
				198	225
				3.40	3.40
	SIX CYLINDER ENGINES				
9-13-0	**CRANKSHAFT VIBRATION DAMPER**				
9-13-5	DAMPER, Vibration		1	2806 211	2806 211
9-15-0	**CAMSHAFT**				
9-15-1	CAMSHAFT	70	1	2465 852	2465 852
	w/2 bbl Carb., Export	70	1	———	2843 563
		71	1	3512 639	3512 639
	w/170 Cubic Inch Eng., Export	71	1	2465 852	———
9-16-0	**CAMSHAFT BEARING**				
9-16-6	BEARING, Camshaft				
	No. 1		1	2121 725	2121 725
	No. 2		1	1821 772	1821 772
	No. 3		1	2121 726	2121 726
	No. 4		1	2121 727	2121 727
	No. 1 .010 O/S		1	2205 510	2205 510
	No. 2 .010 O/S		1	2205 512	2205 512
	No. 3 .010 O/S		1	2205 514	2205 514
	No. 4 .010 O/S		1	2205 516	2205 516
9-16-17	PLUG, Camshaft Rear Bearing		1	2402 905	2402 905
	Oversize		AR	2463 041	2463 041
9-17-0	**CAMSHAFT SPROCKET**				
9-17-5	SPROCKET, Camshaft		1	2806 945	2806 945
	Washer, Retainer Screw		1	6023 053	6023 053
9-20-0	**TIMING CHAIN**				
9-20-1	CHAIN, Timing		1	2202 499	2202 499
		71	1	3514 866	3514 866
9-23-0	**CHAIN CASE COVER**				
9-23-5	COVER, w/Timing Indicator, Chain Case		1	2863 126	2863 126
	Screw, w/Washer		1	6024 246	6024 246
9-23-17	GASKET, Chain Case Cover		1	1947 554	1947 554
9-23-18	OIL SEAL, Chain Case Cover		1	2899 531	2899 531
9-31-0	**CONNECTING ROD**				
	NOTE: Connecting Rod Includes Bearing Cap, Bolt, Nut, Lockwasher and Bushing, but does not include Bearing.				
9-31-4	ROD, Connecting		6	2951 262	2406 657
	w/170 Cubic Inch Eng., Export		6	1947 165	———
9-31-5	BOLT, Connecting Rod Bearing Cap		12	1944 865	1944 865
9-31-7	NUT, Connecting Rod Bearing		12	1737 695	1737 695
9-32-0	**CONNECTING ROD BEARING PACKAGES**				
	NOTE: When .001 thicker wall Connecting Rod Bearings are used for Engines in Production, A Maltese Cross is stamped on the model part of the Cylinder Block				
	NOTE: Connecting Rod Bearing Packages Consist of one Upper and one Lower Bearing.				
9-32-2	BEARING PACKAGE,				
	Std.		6	2421 356	2421 356
	.001 U/S.		6	2421 357	2421 357
	.002 U/S		6	2421 358	2421 358
	.003 U/S		6	2421 359	2421 359
	.010 U/S		6	2421 360	2421 360
	.012 U/S		6	2421 361	2421 361

CARLINES J - Challenger, B - Barracuda, V - Valiant, L - Dart, R - Belvedere - Satellite, W - Coronet - Charger, P - Plymouth, D - Dodge, C - Chrysler, Y - Imperial

AR Indicates use as required.
# Indicates parts not listed in any previous parts book.
Numerals in parentheses ( ) refer to notes.
★ Indicates change or addition.

Printed in U.S.A.
January 1972

CODE	PART NAME AND DESCRIPTION	PER CAR	CU. IN. DISPLACEMENT & PISTON BORE SIZE	
			198	225
			3.40	3.40
	SIX CYLINDER ENGINES			
9-34-0	**PISTON, W/PIN**			
	NOTE: The following Pistons include Pin and Retaining Rings			
9-34-5	PISTON			
	Std.	6	2084 384	2084 384
	.005 O/S	6	2084 385	2084 385
	.020 O/S	6	2084 386	2084 386
	.040 O/S	6	2084 387	2084 387
	.060 O/S	6	2298 546	2298 546
	Std., Low Compression, Export	6	2084 388	2084 388
	.005 O/S, Low Compression, Export	6	2084 389	2084 389
	.020 O/S, Low Compression, Export	6	2084 390	2084 390
9-35-0	**PISTON RING SETS**			
9-35-1	RING SET, Piston			
	Std. to .009 O/S	1	2448 735	2448 735
	.020 to .029 O/S	1	2275 440	2275 440
	.040 to .049 O/S	1	2275 441	2275 441
	Std. to .009 O/S, w/170 Cubic Inch Eng., Export	1	2448 735	———
	.020 to .029 O/S, w/170 Cubic Inch Eng., Export	1	2275 440	———
	.040 to .049 O/S, w/170 Cubic Inch Eng., Export	1	2275 441	———
9-39-0	**VALVE**			
9-39-1	GASKET SET Engine Valve Grinding	1	3004 840	3004 840
	w/170 Cubic Inch Eng., Export	1	3004 840	———
9-39-5	VALVE, Intake			
	Std.	6	1947 623	1947 623
	.005 O/S	6	2121 578	2121 578
	.015 O/S	6	2121 579	2121 579
	.030 O/S	6	2121 580	2121 580
9-39-6	VALVE, Exhaust			
	Std.	6	1947 624	1947 624
	.005 O/S	6	2121 581	2121 581
	.015 O/S	6	2121 582	2121 582
	.030 O/S	6	2121 583	2121 583
9-39-14	SHIELD, Intake Valve Stem Oil	6	2205 958	2205 958
	Exhaust Valve Stem Oil	6	2205 959	2205 959
9-39-15	SPRING, Valve	12	1739 534	1739 534
9-39-16	RETAINER, Valve Spring	12	2402 045	2402 045
9-39-17	LOCK, Intake Valve Spring Retainer	12	381 875	381 875
	Exhaust Valve Spring Retainer	12	1614 666	1614 666
9-39-21	SPACER, Valve Spring	AR	1859 144	1859 144
9-41-0	**VALVE TAPPET**			
9-41-4	TAPPET, Valve			
	Std.	12	2469 501	2469 501
	.001 O/S	12	2469 502	2469 502
	.008 O/S	12	2469 503	2469 503
	.030 O/S	12	2469 504	2469 504
9-42-0	**VALVE PUSH ROD**			
9-42-1	ROD, Valve Push	12	2120 514	2120 514
	w/170 Cubic Inch Eng., Export	12	1947 704	———
9-43-0	**VALVE ROCKER**			
9-43-1	ROCKER, Valve	12	1947 594	1947 594
9-43-3	SCREW, Valve Rocker Adjusting	12	1855 238	1855 238

CARLINES J - Challenger, B - Barracuda, V - Valiant, L - Dart, R - Belvedere - Satellite, W - Coronet - Charger, P - Plymouth, D - Dodge, C - Chrysler, Y - Imperial

AR Indicates use as required.
# Indicates parts not listed in any previous parts book.
Numerals in parentheses ( ) refer to notes.
★ Indicates change or addition.

Printed in U.S.A.
January 1972

CODE	PART NAME AND DESCRIPTION		PER CAR	CU. IN. DISPLACEMENT & PISTON BORE SIZE 198 3.40	225 3.40
	SIX CYLINDER ENGINES				
9-43-0	**VALVE ROCKER Cont'd.**				
9-43-5	SPACER, Valve Rocker		6	2120 694	2120 694
9-43-9	SHAFT, Valve Rocker		1	1947 614	1947 614
9-43-11	RETAINER, Valve Rocker Shaft, End and Intermediate		6	1947 616	1947 616
	Center		1	1947 617	1947 617
9-43-17	PLUG, Valve Rocker Shaft		2	1324 268	1324 268
9-45-0	**FLYWHEEL**				
9-45-1	FLYWHEEL, w/Ring Gear		1	2863 402	2863 402
	w/Heavy Duty Eng., R, W, P, D		1	———	2863 405
9-45-2	GEAR, Flywheel Ring, Starter		1	2121 196	2121 196
	w/Heavy Duty Eng. R, W, P, D		1	———	1673 646
	GEAR, Torque Converter Starter Ring	70	1	2863 495	2863 495
		71	1	2121 196	2121 196
	w/Heavy Duty Eng., R, W, P, D	70	1	———	2863 497
	w/Heavy Duty Eng., R, W, P, D	71	1	———	1941 648
9-46-0	**TORQUE CONVERTER**				
9-46-4	TORQUE CONVERTER		1	2801 762	2801 762
	w/Heavy Duty Eng., R, W, P, D		1	———	2843 586
9-46-8	PLATE, Torque Converter Drive		1	2801 745	2801 745
	w/Heavy Duty Eng., R, W, P, D		1	———	2204 719
9-46-21	SCREW, Torque Converter Drive Plate to Crankshaft		6	1949 424	1949 424
	SCREW, Drive Plate to Torque Converter		4	1949 765	1949 765
9-46-31	COOLER, Radiator Core Oil				
		Maximum Igh. O/Dia			
		7.37" x 1.00"	AR	2998 999	2998 999
		7.37" x 1.25"	AR	2998 998	2998 998
		11.37" x 1.00"	AR	2998 997	2998 997
		13.37" x 1.25"	AR	2998 996	2998 996
		16.37" x 1.25"	AR	2998 995	2998 995
		13.37" x 1.50"	AR	2998 994	2998 994
		11.37" x 1.50"	AR	2998 993	2998 993
9-46-33	BRACKET, Trans. Oil Cooler Tube, V, L	70	1	1949 176	1949 176
	V, L	71	1	3577 169	3577 169
	B, J, R, W, P, D	70	1	———	2464 999
	B, J, R, W, P, D	71	1	———	3577 170
9-46-43	NUT, Trans. Oil Cooler Tube (Trans. End)		2	1941 667	1941 667
	(Radiator End)		2	1941 667	1941 667
9-46-130	SEAL, Trans. Torque Converter Impeller Hub w&904 Trans.		1	2124 705	2124 705
	w/Heavy Duty 727 Trans.		1	———	1942 020
9-46-228	ROLLER, Torque Converter Overrunning Clutch		8	670 776	670 776
9-46-229	SPRING, Torque Converter Overrunning Clutch Roller		8	1942 187	1942 187
9-48-0	**MANIFOLD**				
9-48-6	MANIFOLD, Exhaust		1	2951 841	2951 841
	w/2 Bbl. Carb., Export	70	1	———	2658 349
	w/2 Bbl. Carb., Export	71	1	———	= 3512 908
	w/170 Cubic Inch Eng., Export	70	1	3462 890	———
	w/170 Cubic Inch Eng., Export	71	1	2658 349	———
	Stud		2	6024 380	6024 380
9-48-7	MANIFOLD, Intake		1	2899 960	2899 960
	w/2 bbl Carb., Export		1	———	2806 816

CARLINES J - Challenger, B - Barracuda, V - Valiant, L - Dart, R - Belvedere - Satellite, W - Coronet - Charger, P - Plymouth, D - Dodge, C - Chrysler, Y - Imperial

AR Indicates use as required.
\# Indicates parts not listed in any previous parts book.
Numerals in parentheses ( ) refer to notes.
★ Indicates change or addition.

Printed in U.S.A.
January 1972

CODE	PART NAME AND DESCRIPTION		PER CAR	CU. IN. DISPLACEMENT & PISTON BORE SIZE	
				198	225
				3.40	3.40
	SIX CYLINDER ENGINES				
9-48-0	**MANIFOLD Cont'd.**				
9-48-7	MANIFOLD Cont'd.				
	BOLT, Intake to Exhaust Manifold		2	6024 085	6024 085
	Washer, Intake to Exhaust Manifold Bolt		AR	6022 185	6022 185
9-48-8	CONNECTOR, Intake Manifold Vacuum				
	Control	O.D. .127" Tube	AR	1858 955	1858 955
		O.D. .125" Tube	AR	———	2863 486
	V, L, R, W	O.D. .028 Tube 71	1	2658 625	2658 625
9-48-9	PLUG, Intake Manifold Vacuum Control Hole		1	1859 127	1859 127
9-48-12	STUD, Intake and Exhaust Manifold		AR	2121 585	2121 585
9-48-14	WASHER, Intake and Exhaust Manifold Stud		3	2121 223	2121 223
			10	2206 416	2206 416
9-48-44	NUT, Exhaust Manifold Stud Upper Ends		2	1947 753	1947 753
9-48-45	WASHER, Exhaust Manifold Stud Upper Ends		2	1947 752	1947 752
9-48-125	COVER, Exhaust Manifold Heat Tube to Carb. Tube, w/170 Cubic Inch Eng.			1484 356	———
9-48-126	TUBE, Exhaust Manifold Heat, w/2 bbl				
	Carb., Export	70	1	———	2536 774
		71	1	———	3512 722
	w/170 Cubic Inch Eng., Export		1	2536 774	———
9-50-0	**MANIFOLD GASKETS**				
9-50-1	GASKET SET, Intake and Exhaust Manifold		1	3004 663	3004 663
	w/170 Cubic Inch Eng., Export		1	3004 663	———
9-50-3	GASKET, Intake to Exhaust Manifold		1	2843 279	2843 279
9-58-0	**MANIFOLD HEAT CONTROL VALVE THERMOSTAT**				
9-58-1	HEAT CONTROL VALVE PACKAGE, Manifold		1	3420 047	3420 047
	w/2 Bbl. Carb., Export		1	———	3004 664
	w/170 Cubic Inch Eng., Export		1	3004 664	———
9-58-5	THERMOSTAT, Exhaust Manifold Heat Control				
	Valve, w/2 bbl. Carb. Export		1	———	2899 951
	w/170 Cubic Inch Eng.		1	2899 951	———
9-58-12	RETAINER, Exhaust Manifold Heat Control Valve Shaft				
	w/2 Bbl. Carb. Export		1	———	2468 307
	w/170 Cubic Inch Eng. Export		1	2468 307	———
9-58-13	BOLT, Exhaust Manifold Heat Control Valve				
	Counterweight, w/2 bbl Carb., Export		1	———	862 830
	w/170 Cubic Inch Eng.		1	862 830	———
9-58-14	LOCK, Exhaust Manifold Heat Control				
	Valve Counterweight, w/2 Bbl. Carb., Export		1	———	1409 594
	w/170 Cubic Inch Eng., Export		1	1409 594	———
9-59-0	**MANIFOLD HEAT CONTROL VALVE**				
9-59-13	SPRING, Exhaust Manifold Heat Control				
	Valve Shaft		1	3462 514	3462 514
	w/170 Cubic Inch Eng., Export		1	1558 897	———
	w/2 Bbl. Carb. Export			———	1558 897
9-59-15	PIN, Exhaust Heat Control Valve Shaft				
	Spring		1	1639 597	1639 597
9-62-0	**MANIFOLD HEAT CONTROL VALVE STOP**				
9-62-1	STOP, Exhaust Manifold Heat Control Valve		1	2946 107	2946 107
	w/170 Cubic Inch Eng., Export		1	2465 203	———
	w/2 Bbl. Carb., Export		1	———	2465 203
9-62-2	PIN, Exhaust Manifold Heat Control Valve				
	Stop, w/2 bbl. Carb., Export		1	———	2129 146
	w/170 Cubic Inch Eng. Export		1	2129 146	———

CODE	PART NAME AND DESCRIPTION		PER CAR	CU. IN. DISPLACEMENT & PISTON BORE SIZE	
				198	225
				3.40	3.40
	SIX CYLINDER ENGINES				
9-64-0	**ENGINE FRONT SUPPORT**				
9-64-18	WASHER, Engine Front Support Insulator				
	To Frame Bolt except P1, D1	70	2	2128 774	2128 774
	Left, P1,D1	70	1	———	2128 774
9-64-24	BRACKET, Engine Front Support Insulator				
	Right, V, L, P, D		1	2532 278	2532 278
	Right, B, J, R, W		1	2806 479	2806 479
	Left V, L		1	2806 841	2806 841
	Left, B, J, R, W		1	2532 277	2532 277
	Left, P, D		1	———	2532 299
	SCREW, Bracket to Cylinder Block		2	9417 471	9417 471
9-67-0	**ENGINE FRONT SUPPORT INSULATOR**				
9-67-4	INSULATOR, Engine Front Support				
	Right, V, L		1	2806 844	2806 844
	Right, B, J, R, W		1	2806 476	2806 476
	Right, P, D		1	———	2658 784
	Left, V, L		1	2806 842	2806 842
	Left, B, J, R, W, P, D		1	2658 283	2658 283
	SCREW, w/Washer, Insulator to Frame,				
	Right, P, D		2	———	6024 023
	NUT, Insulator to Frame Bolt		AR	6023 353	6023 353
	WASHER, Insulator to Bracket Bolt		AR	6022 190	6022 190
	WASHER, Insulator to Bracket Bolt,				
	Left, V, L		1	6023 054	6023 054
9-67-19	RESTRICTOR, Engine Front Support Insulator R, W, w/Police & Taxi		1	———	3466 521
9-67-20	BUMPER, Engine Front Support Insulator Restrictor, R, W, w/Police & Taxi		1	———	3466 522
9-69-0	**ENGINE REAR SUPPORT INSULATOR BRACKET**				
9-69-12	SPACER, Engine Rear Support Insulator Bracket, B, J, P, D, R, W		2	3410 700	3410 700
9-71-0	**ENGINE REAR SUPPORT INSULATOR**				
9-71-5	INSULATOR, Engine Rear Support, V, L, R, W	70	1	2533 145	2533 145
	B, J, P, D	70	1	———	2892 471
	V, L	71		2533 145	2533 145
	BJ, R, W, P, D	71		2892 471	2892 471
	SCREW		2	9417 471	9417 471
	NUT		1	6025 804	6025 804

NOTES

CARLINES J - Challenger V - Valiant R - Belvedere - Satellite P - Plymouth C - Chrysler
B - Barracuda L - Dart W - Coronet - Charger D - Dodge Y - Imperial

AR Indicates use as required.
\# Indicates parts not listed in any previous parts book.
Numerals in parentheses ( ) refer to notes.
★ Indicates change or addition.

Printed in U.S.A.
January 1972

NOTES

GROUP 9 - ENGINE
EIGHT CYLINDER

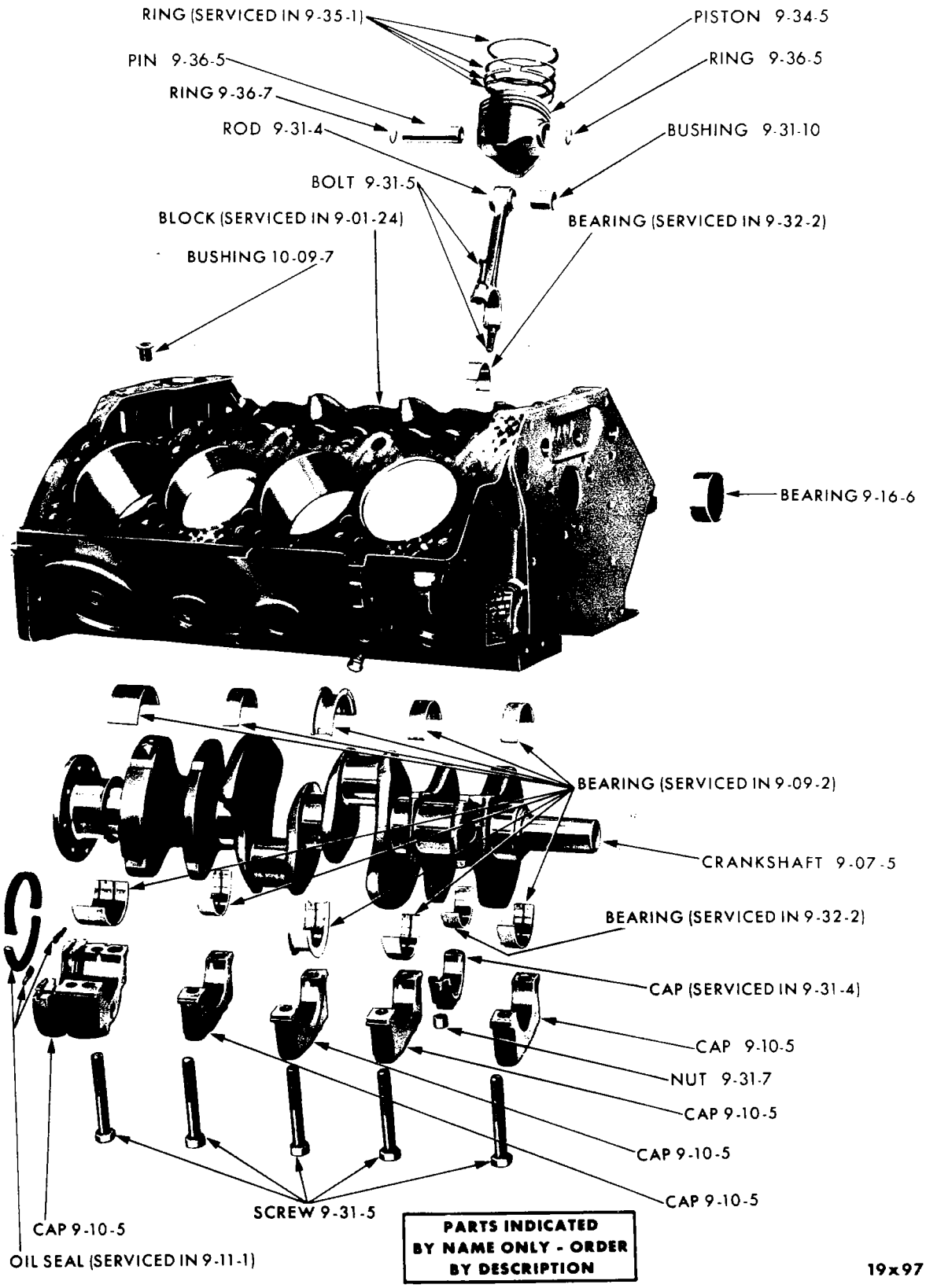

PARTS INDICATED BY NAME ONLY - ORDER BY DESCRIPTION

19x9791

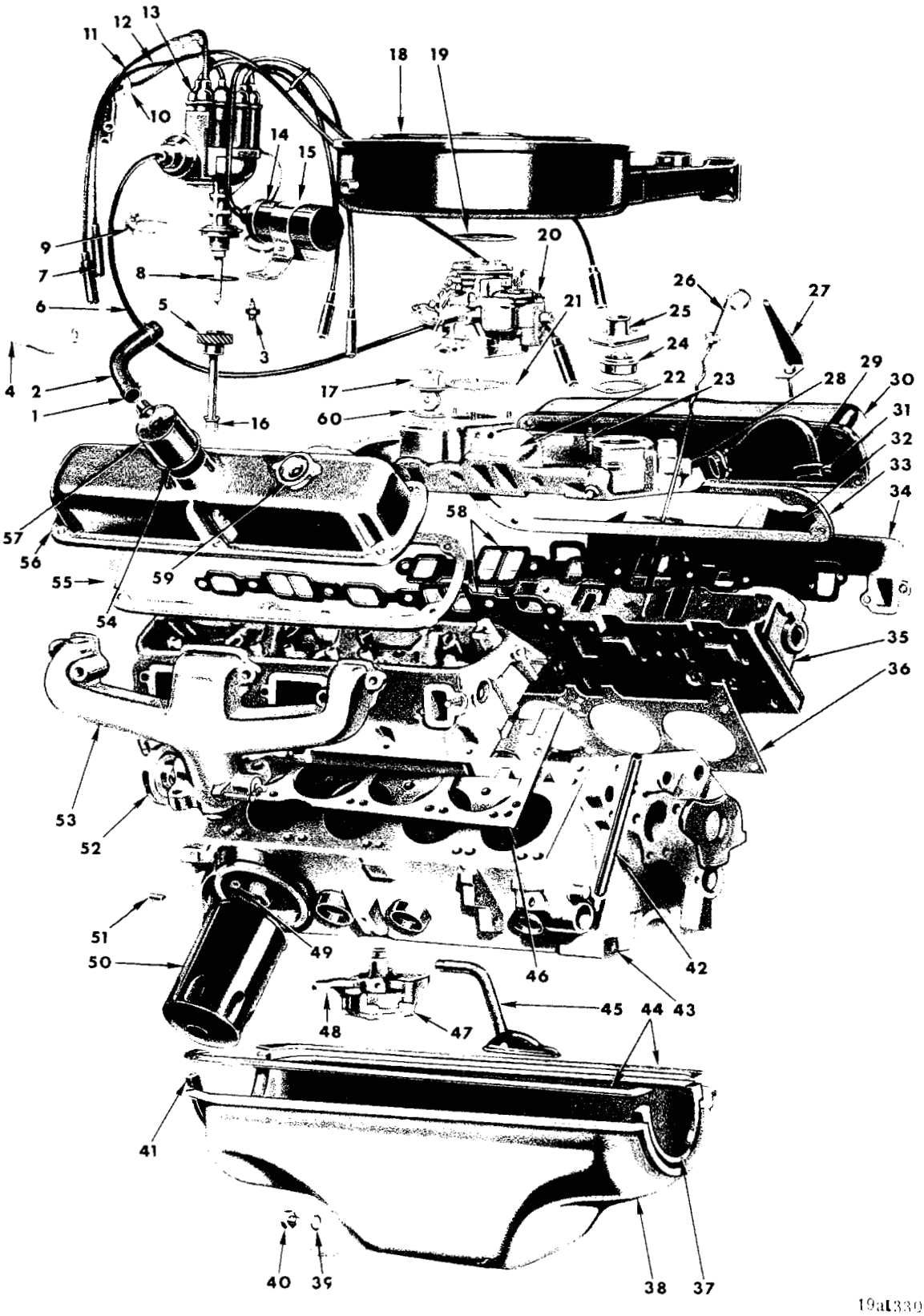

EXTERNAL PARTS - 318, 340 AND 360 8 CYLINDER ENGINE

EXTERNAL PARTS - 318, 340 AND 360 8 CYLINDER ENGINE

Ref. No.	Name	Part Type Code	Ref. No.	Name	Part Type Code
1	Clamp	10-01-40	31	Clamp	
2	Hose	10-02-53	32	Gasket	9-50-5
3	Valve	10-02-62	33	Gasket	9-03-29
4	Cable	Not Serviced	34	Manifold	9-48-6
5	Shaft	10-09-1	35	Head	9-03-4
6	Tube	8-37-320	36	Gasket	9-03-5
7	Nipple	8-36-96	37	Gasket	10-24-1
8	Gasket	8-27-4	38	Pan	10-24-4
9	Clamp	8-27-26	39	Gasket	10-24-38
10	Grommet	8-36-92	40	Plug	10-24-37
11	Cable Set	8-36-1	41	Gasket	10-24-1
12	Bracket	8-36-4	42	Tube	10-03-7
13	Distributor	8-27-1	43	Block (Serviced in 9-01-24)	
14	Coil	8-35-4	44	Gasket	10-24-1
15	Bracket	8-35-41	45	Strainer w/Pipe	10-23-7
16	Bushing	10-09-7	46	Gasket	9-03-5
17	Choke	14-39-45	47	Cover	10-07-7
18	Air Cleaner	14-29-2	48	Pump	10-07-6
19	Gasket	14-29-5	49	Plug	9-02-17
20	Carburetor	14-30-1	50	Filter	10-26-6
21	Gasket	14-30-2	51	Dowel	9-02-7
22	Manifold	9-48-7	52	Counterweight	9-58-12
23	Sending Unit	8-37-155	53	Manifold	9-48-6
24			54	Grommet	10-01-23
25	Elbow	9-05-5	55	Gasket	9-03-29
26	Indicator	10-03-4	56	Cover	9-03-28
27	Bracket	14-06-10	57	Air Cleaner	10-01-21
28	Nipple	7-48-22	58	Gasket (Serviced in 9-50-1)	
29	By-Pass Hose	7-14-9	59	Cap	10-01-54
30	Cover	9-03-28	60	Gasket, Choke Well	14-65-5

PARTS INDICATED BY NAME ONLY - ORDER BY DESCRIPTION

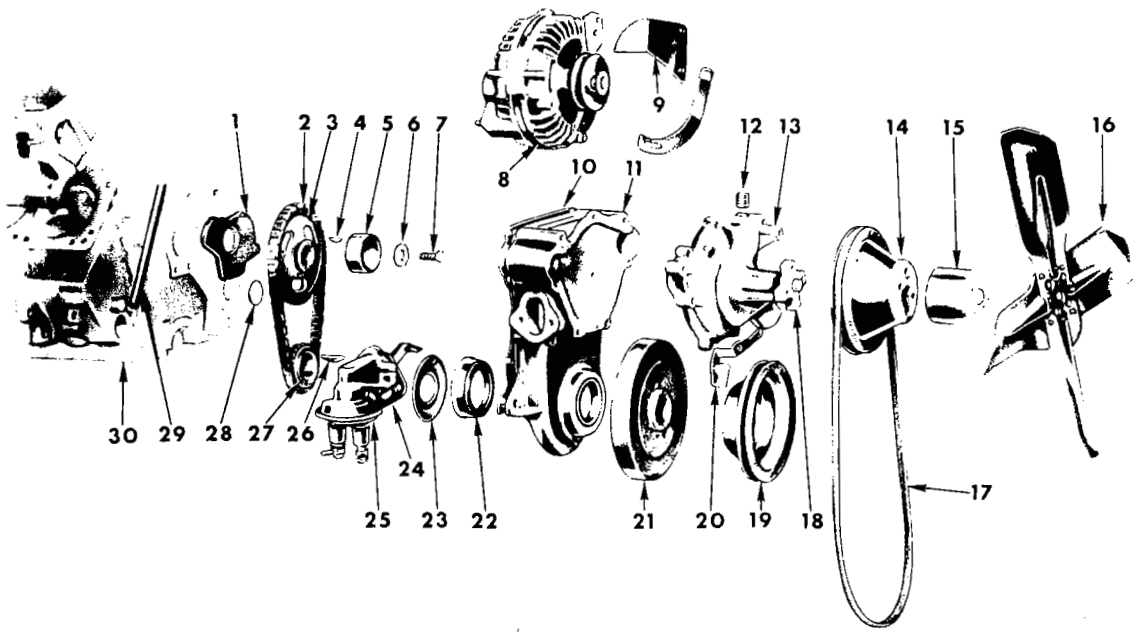

19a13307

EXTERNAL PARTS - FRONT - 318, 340 AND 360 8 CYLINDER ENGINE

Ref. No.	Name	Part Type Code
1	Block (Serviced in 9-01-24)	
2	Chain	9-20-1
3	Sprocket	9-17-5
4	Key	9-17-5
5	Eccentric	9-15-2
6	Washer	9-15-10
7	Screw	
8	Alternator	8-28-3
9		
10	Gasket	9-23-17
11	Cover	9-23-5
12	Nipple	7-48-22
13	Pump	7-42-1
14	Pulley	7-06-14
15	Spacer	7-02-16
16	Fan	7-02-1
17	Belt	7-03-1
18	Hub	7-05-1
19	Pulley	7-06-1
20	Indicator	9-23-40
21	Damper	9-13-5
22	Oil Seal	9-23-18
23	Oil Slinger	9-07-17
24	Gasket	14-74-1
25	Pump	14-73-1
26	Key	9-08-5
27	Sprocket	9-08-5
28	Plug	9-02-16
29	Tube	10-03-7
30	Block (Serviced in 9-01-24)	

PARTS INDICATED BY NAME ONLY - ORDER BY DESCRIPTION

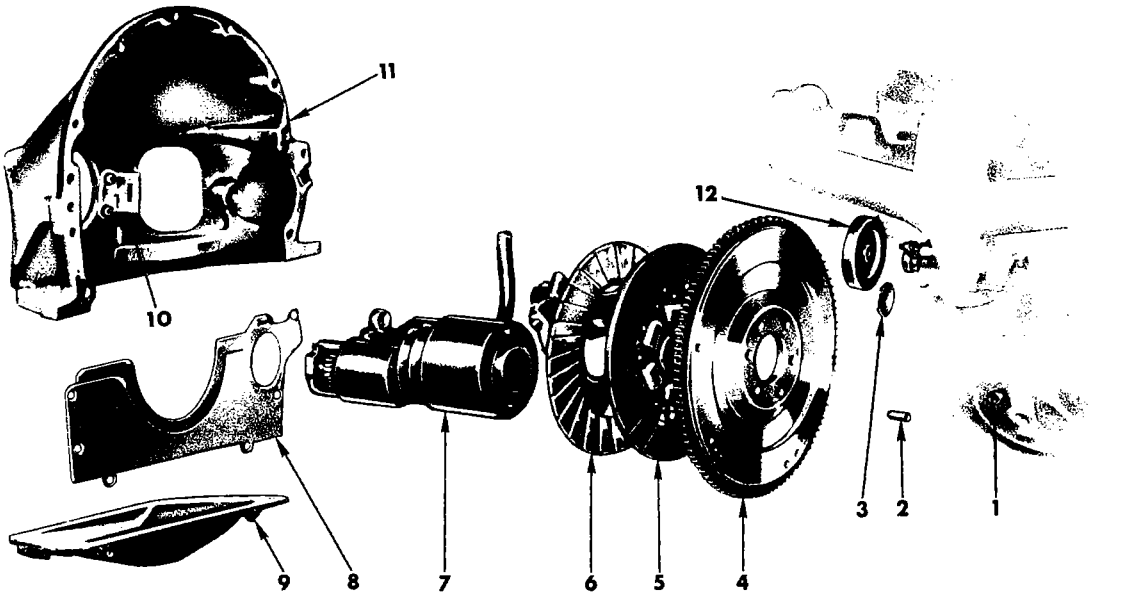

19al3308

EXTERNAL PARTS - REAR - 318, 340 AND 360 8 CYLINDER ENGINE
WITH MANUAL TRANSMISSION

Ref. No.	Name	Part Type Code	Ref. No.	Name	Part Type Code
1	Plug	9-02-17	7	Starting Motor	8-52-4
2	Dowel	9-02-7	8	Seal	6-10-10
3	Plug	9-16-17	9	Pan	6-10-2
4	Flywheel	9-45-1	10	Pivot	6-22-15
5	Disc	6-13-1	11	Housing	6-09-1
6	Plate	6-14-1	12	Counterweight (Serviced in Valve Pkg. 9-58-1)	

PARTS INDICATED BY NAME ONLY - ORDER BY DESCRIPTION

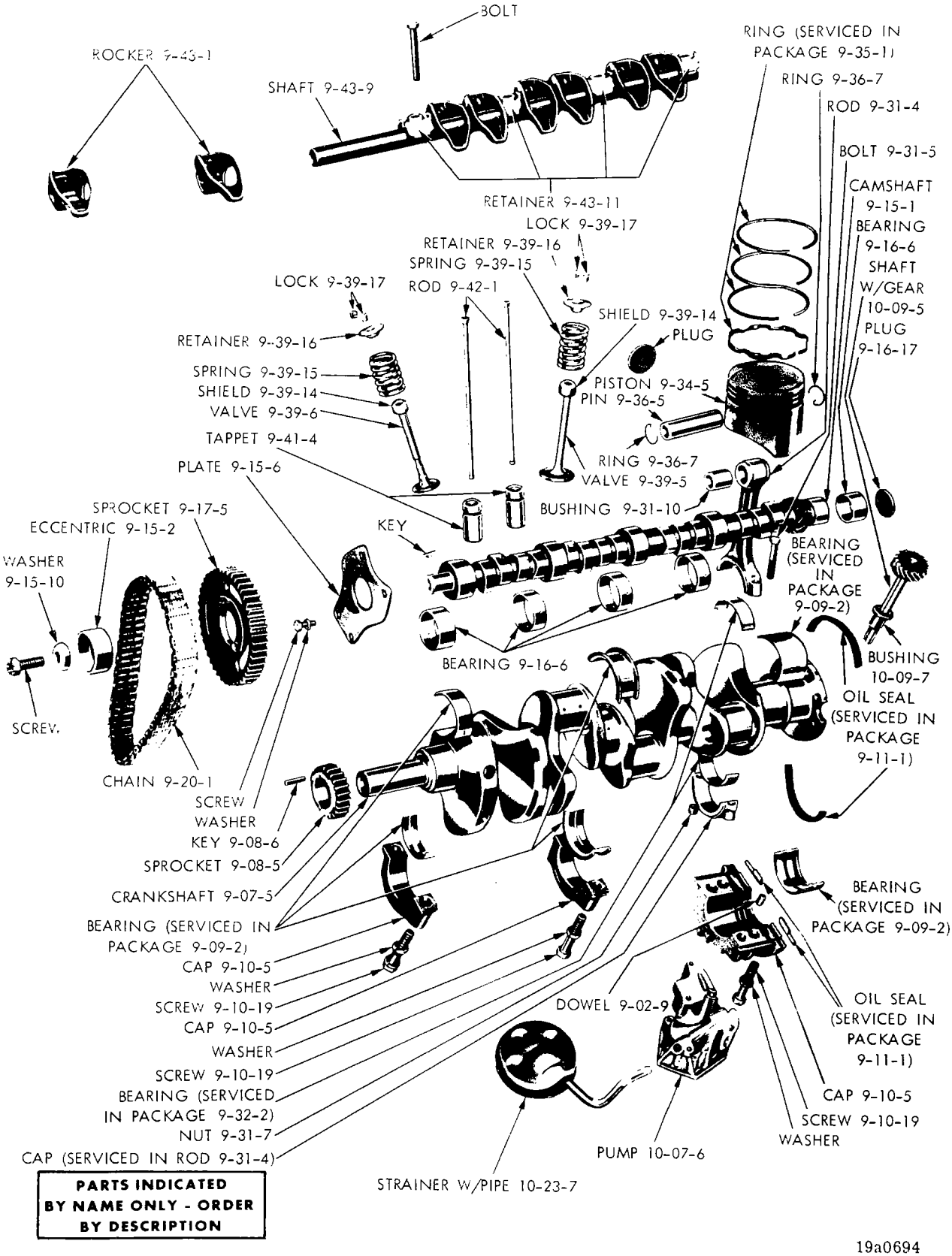

INTERNAL ENGINE - 318, 340 AND 360 ENGINES

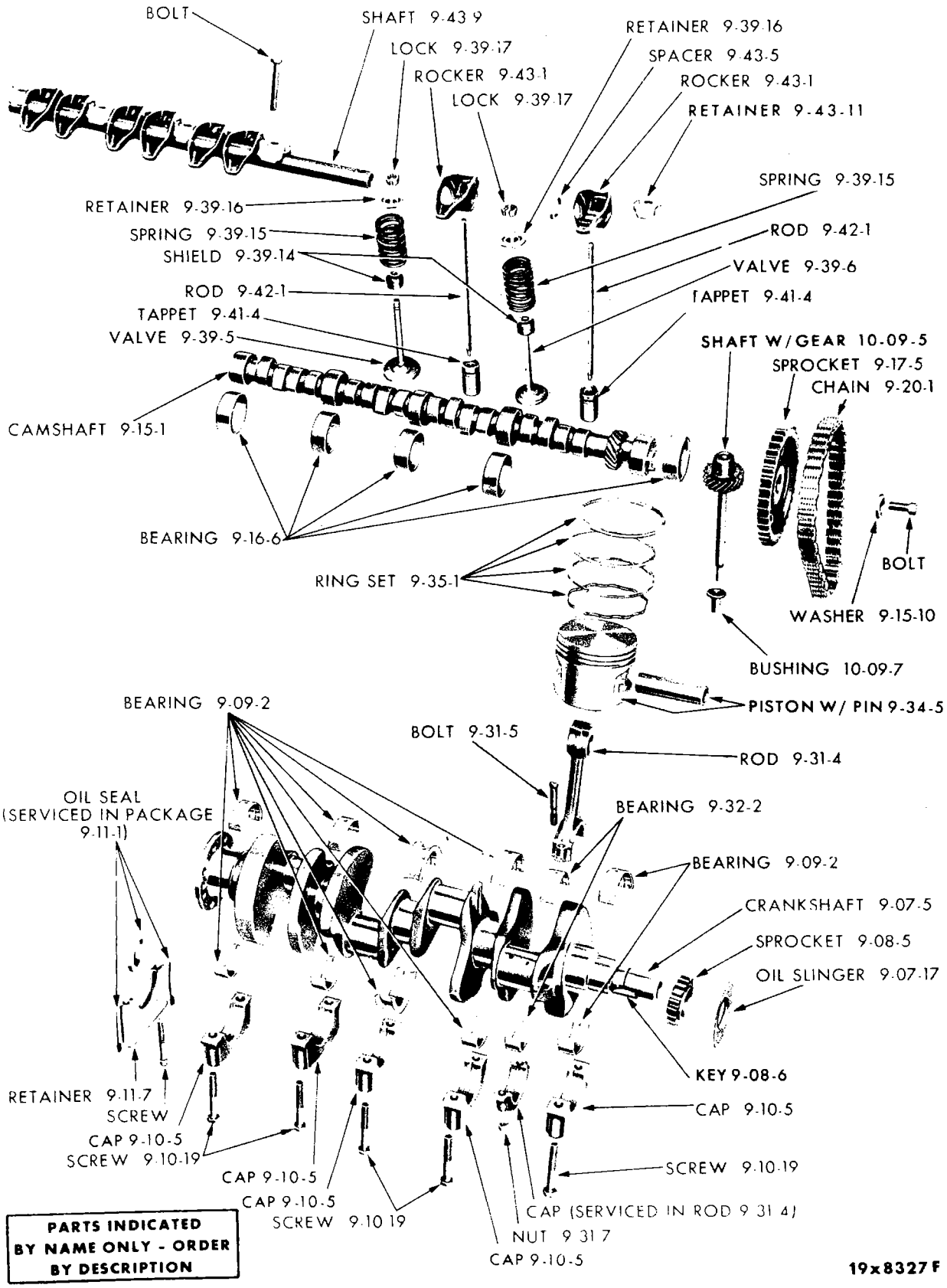

INTERNAL ENGINE - 383 AND 440 ENGINES

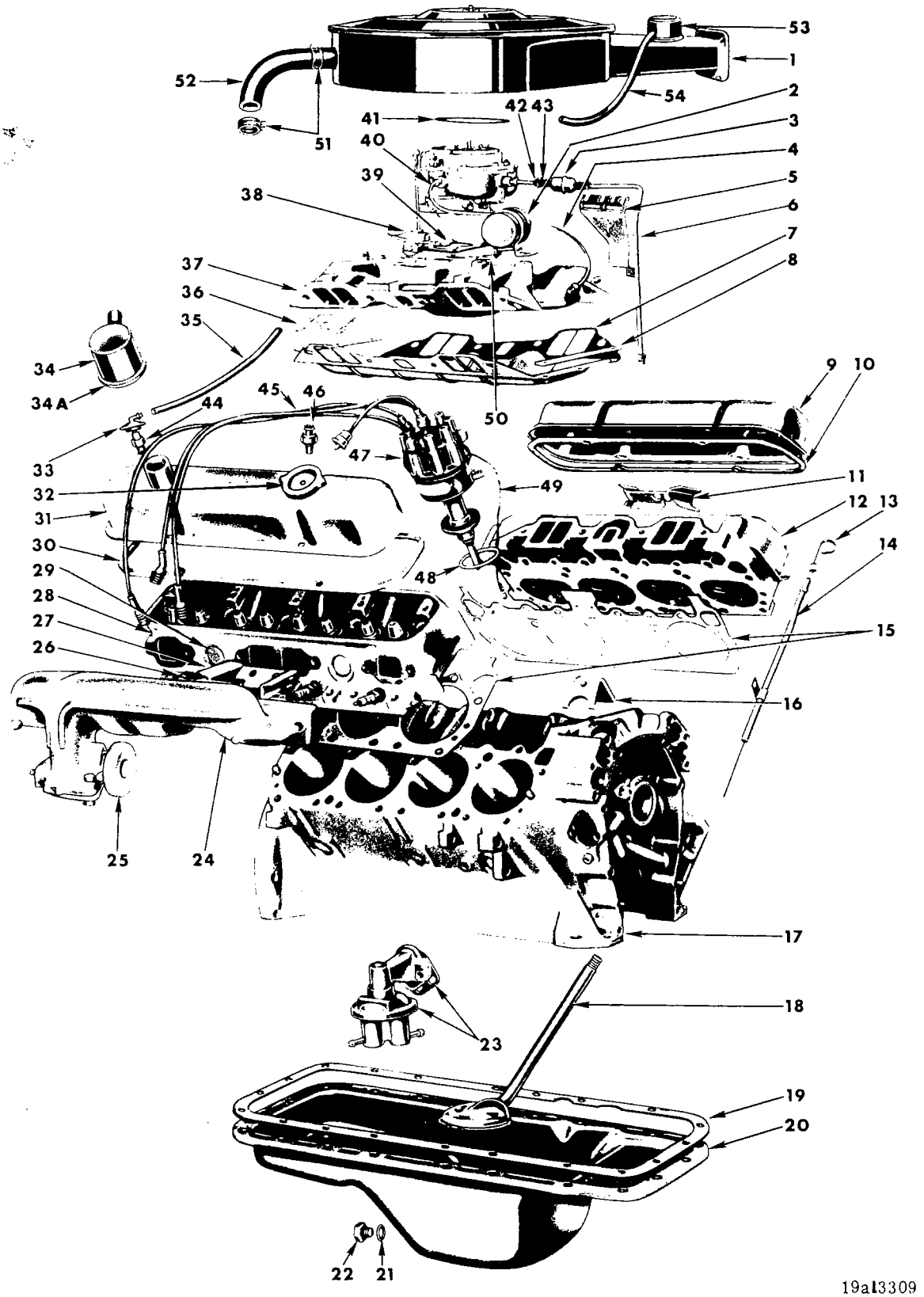

EXTERNAL PARTS - 383 AND 440 8 CYLINDER ENGINE

EXTERNAL PARTS - 383 AND 440 8 CYLINDER ENGINE

Ref. No.	Name	Part Type Code
1	Air Cleaner (Also see Codes 14-29-7 and 14-29-9)	14-29-2
2	Coil	8-35-4
3	Filter	14-67-1
4	Cable	8-36-49
5	Bracket	8-36-4
6	Tube	14-89-2
7	Gasket	9-50-6
8	Reinforcement	9-48-27
9	Cover	9-03-28
10	Gasket	9-03-29
11	Shield	8-36-124
12	Head	9-03-4
13	Indicator	10-03-4
14	Tube	10-03-7
15	Gasket	9-03-5
16	Clamp	8-27-26
17	Block (Serviced in Short Engine 9-01-24)	
18	Strainer w/Pipe	10-23-7
19	Gasket	10-24-8
20	Pan	10-24-4
21	Gasket	10-24-38
22	Plug	10-24-37
23	Pump Package, Fuel	14-73-1
24	Manifold	9-48-6
25	Valve Package	9-58-1
26	Spark Plug	8-36-114
27	Shield	8-36-124
28	Head	9-03-4
29	Plug	9-03-18
30	Gasket	9-03-29
31	Cover	9-03-28
32	Cap	10-01-54
33	Grommet	10-02-61
34	Cleaner	10-01-21
34A	Grommet	10-01-23
35	Hose	10-02-53
36	Silencer Package	9-41-1
37	Manifold	9-48-7
38	Choke	14-39-45
39	Gasket	14-30-2
40	Carburetor	14-30-1
41	Gasket	14-29-5
42	Clamp	
43	Hose	14-67-2
44	Valve	10-02-62
45	Cable Set	8-36-1
46	Switch	8-53-327
47	Distributor	8-27-1
48	Gasket	8-27-4
49	Lead	8-27-205
50	Bracket	8-35-41
51	Clamp	10-01-40
52	Hose	10-01-62
53	Sensor	14-29-53
54	Hose	14-29-24

PARTS INDICATED BY NAME ONLY - ORDER BY DESCRIPTION

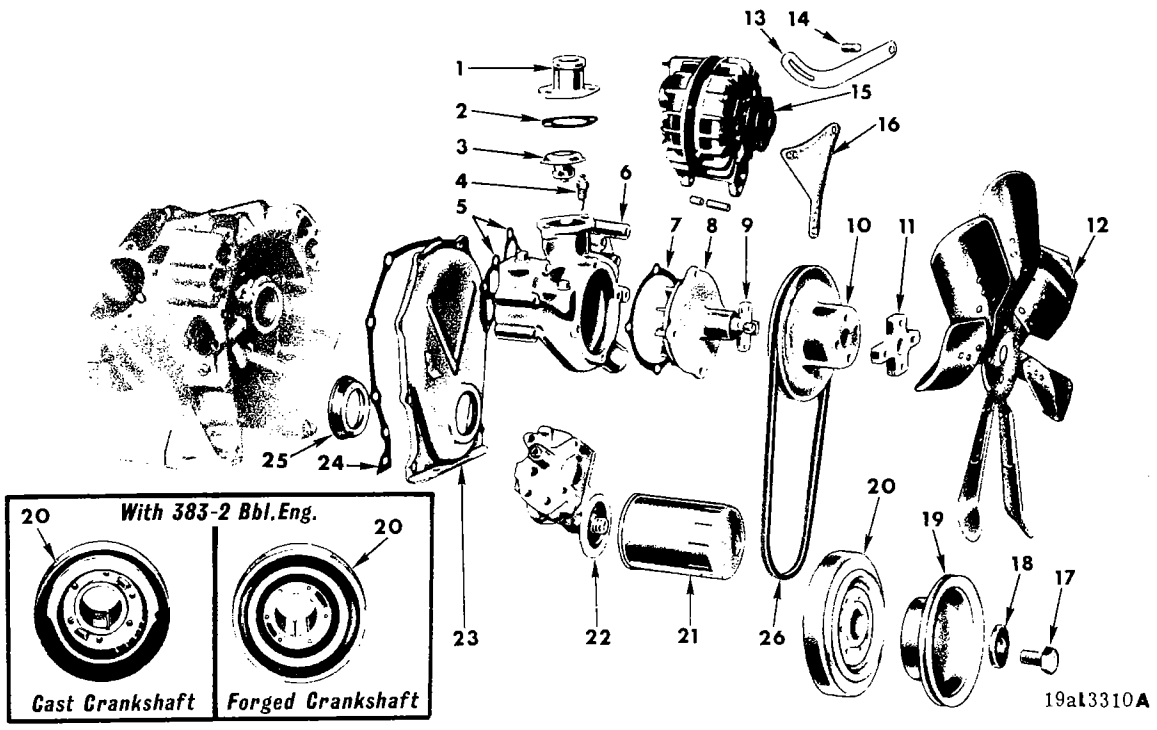

EXTERNAL PARTS - FRONT - 383 AND 440 8 CYLINDER ENGINES

Ref. No.	Name	Part Type Code	Ref. No.	Name	Part Type Code
1	Connector	9-05-5	14	Spacer	8-28-292
2	Gasket	9-05-6	15	Alternator	8-28-3
3	Thermostat	7-41-4	16	Bracket	
4	Sending Unit	8-37-155	17	Screw	9-07-8
5	Gasket	7-44-4	18	Washer	9-07-22
6	Housing	7-43-1	19	Pulley	7-06-1
7	Gasket	7-44-3	20	Damper	9-13-5
8	Pump	7-42-1	21	Filter	10-26-6
9	Hub	7-05-1	22	Pump	10-07-6
10	Pulley	7-06-14	23	Cover	9-23-5
11	Hub	7-05-1	24	Gasket	9-23-17
12	Fan	7-02-1	25	Oil Seal	9-23-18
13	Strap	8-28-15	26	Belt	7-03-1

PARTS INDICATED BY NAME ONLY - ORDER BY DESCRIPTION

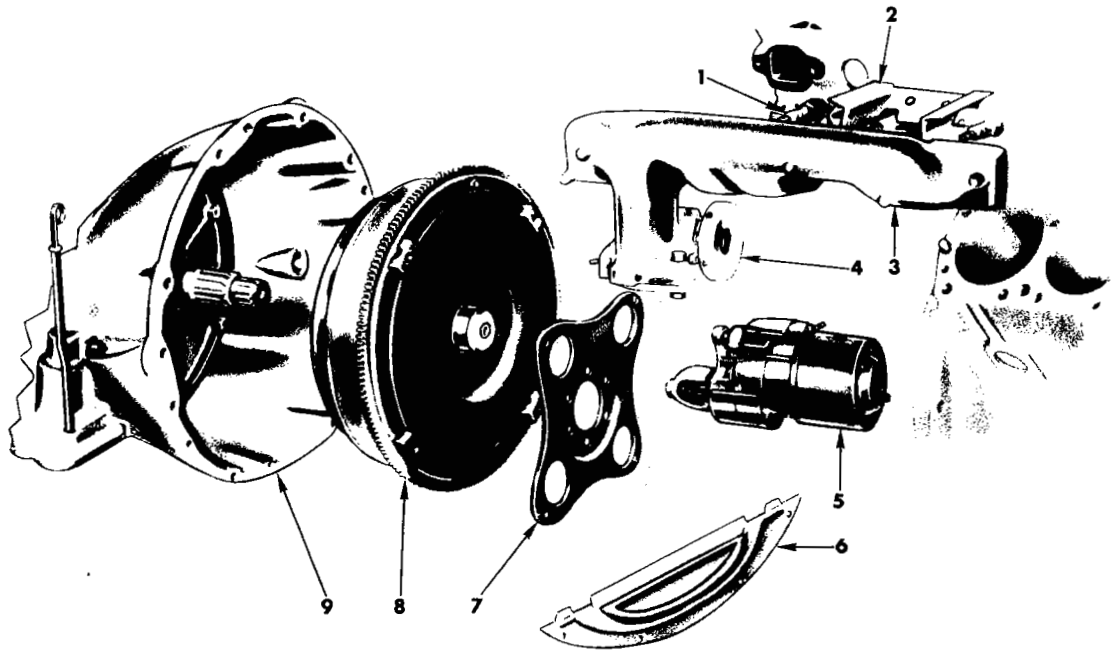

19al3311

EXTERNAL PARTS - REAR - 383 AND 440 8 CYLINDER ENGINE

Ref. No.	Name	Part Type Code	Ref. No.	Name	Part Type Code
1	Spark Plug	8-36-114	6	Cover	21-03-6
2	Shield	8-36-124	7	Plate	9-46-8
3	Manifold	9-48-6	8	Torque Converter	9-46-4
4			9	Case, Transmission	21-03-1
5	Starter	8-52-4			

PARTS INDICATED BY NAME ONLY - ORDER BY DESCRIPTION

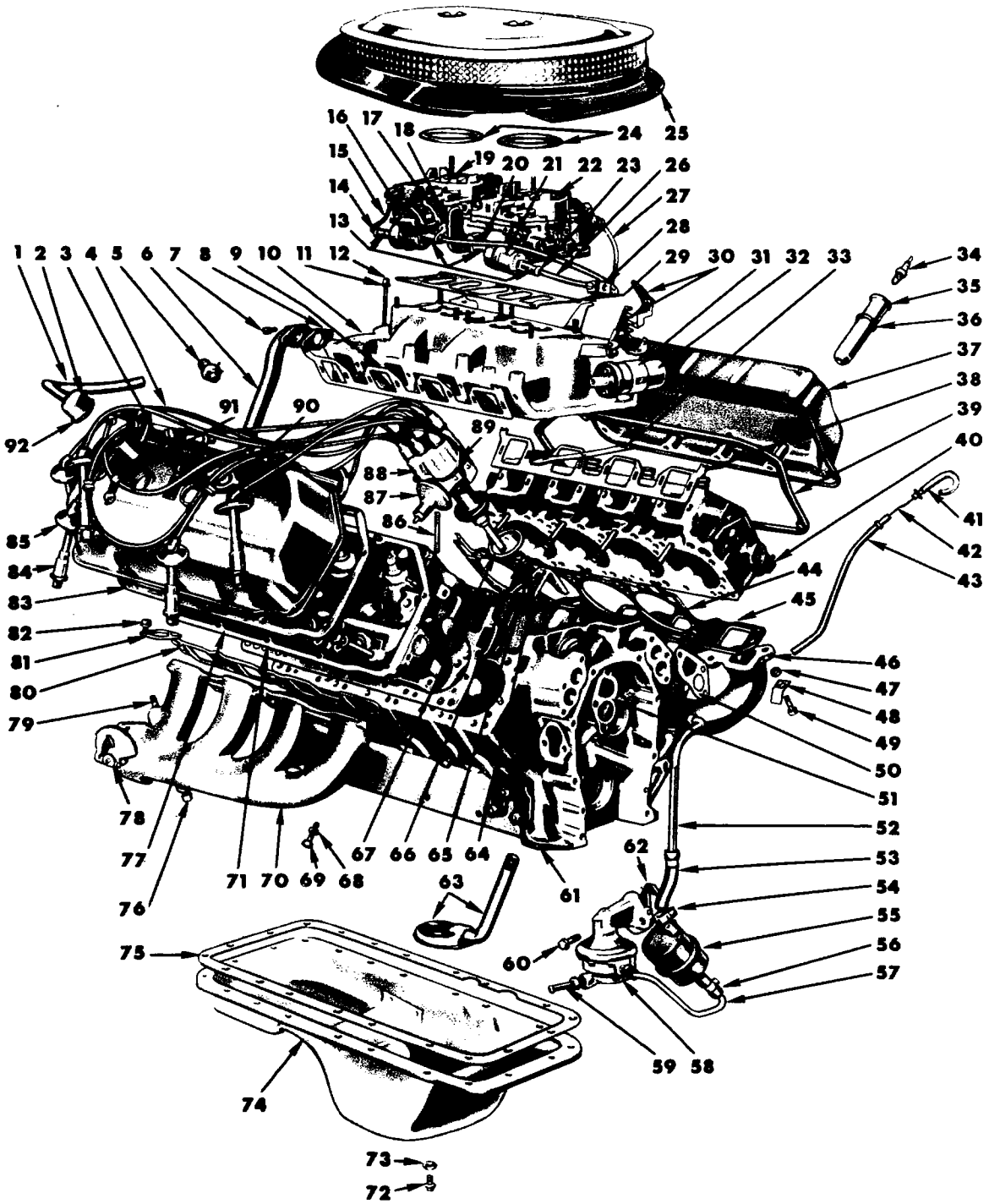

19at3312

December 1971.

Printed in U.S.A.

EXTERNAL ENGINE - 426

Ref. No.	Name	Part Type Code
1	Hose	10-02-53
2	Cleaner	10-01-21
3	Cover	9-03-28
4	Cable Set	8-36-1
5	Valve	8-27-335
6	Tube	9-48-26
7	Screw, w/Washer	
8	Gasket	9-50-18
9	Gasket	9-50-1
10	Manifold	9-48-7
11	Washer	
12	Bolt	
13	Hose	14-67-2
14	Tube	14-89-2
15	Elbow	
16	Choke	14-39-45
17	Gasket	14-30-2
18	Tube	14-89-2
19	Carburetor	14-30-1
20	Fitting	
21	Filter	14-67-1
22	Carburetor	14-30-1
23	Gasket	14-30-2
24	Gasket	
25	Air Cleaner	
26	Tube	14-89-2
27	Spring	14-06-01
28	Tee	14-85-31
29	Bracket	14-06-10
30	Bracket	8-36-4
31	Bracket	8-35-41
32	Coil	8-35-4
33	Gasket	9-50-1
34	Plug	8-36-114
35	Tube	8-36-136
36	Seal	8-36-137
37	Cover	9-03-28
38	Gasket	9-50-1
39	Gasket	9-03-29
40	Head	9-03-4
41	Insulator	10-03-14
42	Indicator	10-03-4
43	Tube	10-03-7
44	Gasket	9-03-5
45	Gasket	9-50-5
46	Manifold	9-48-6
47	Washer	9-48-45
48	Clip	9-48-140
49	Bolt	
50	Gasket	7-44-4
51	Gasket	7-44-4
52		
53		
54	Clamp	
55	Filter	14-67-1
56	Hose	14-67-2
57	Tube	14-89-2
58	Pump	14-73-1
59	Stem	14-89-58
60	Bolt	
61	Block (Serviced in 9-01-24)	
62	Gasket	14-74-1
63	Strainer w/Pipe	10-23-7
64	Clamp	8-27-26
65	Screw	
66	Washer	
67	Gasket	8-27-4
68	Washer	9-48-45
69	Bolt	9-48-6
70	Manifold	9-48-6
71	Gasket	9-03-5
72	Plug	10-24-37
73	Gasket	10-24-38
74	Pan	10-24-4
75	Gasket	10-24-8
76	Connector	
77	Head	9-03-4
78	Counterweight	9-58-12
79	Tube	9-48-126
80	Gasket	9-50-5
81	Gasket	9-50-18
82	Bolt	
83	Gasket	9-03-29
84	Nipple	8-36-96
85	Grommet	8-36-92
86	Stud	
87	Control	8-27-308
88	Distributor	8-27-1
89	Tube	8-27-320
90	Cap	10-01-54
91	Grommet	8-36-92
92	Grommet	10-01-23

PARTS INDICATED BY NAME ONLY - ORDER BY DESCRIPTION

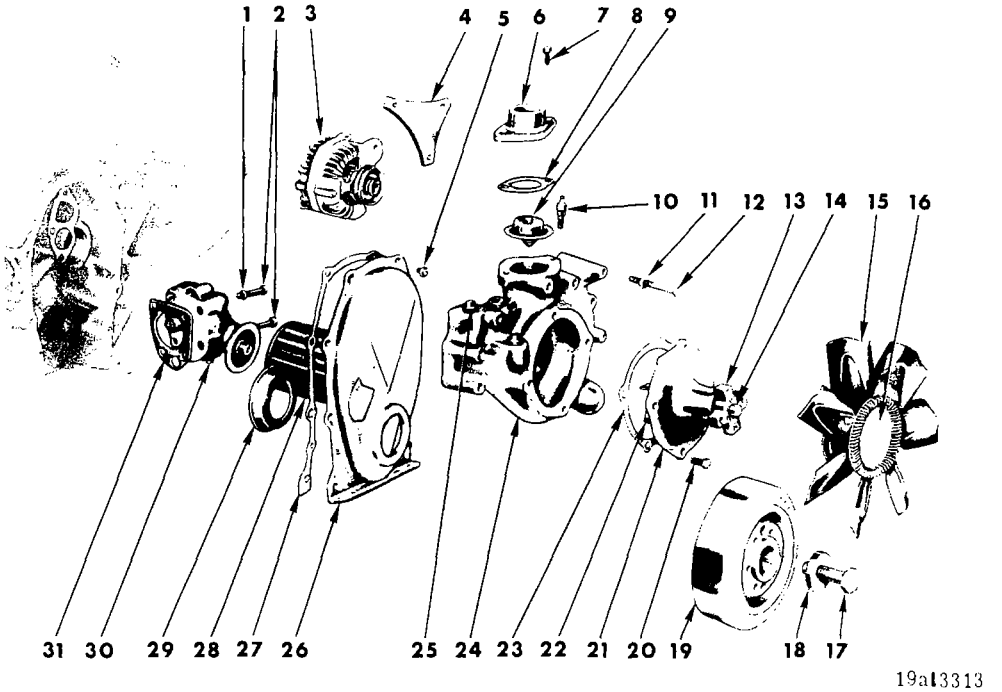

EXTERNAL ENGINE - FRONT - 426

Ref. No.	Name	Part Type Code
1	Washer	
2	Bolt	
3	Alternator	
4	Bracket	
5	Screw, w/Washer	
6	Connector	9-05-5
7	Screw	
8	Gasket	9-05-6
9	Thermostat	7-41-4
10	Sending Unit	8-37-155
11	Washer	
12	Bolt	
13	Hub	7-05-1
14	Shaft and Bearing (Serviced in 7-42-4)	
15		
16		
17	Screw	9-07-8
18	Washer	9-07-22
19	Damper	9-13-5
20	Bolt	
21	Body (Serviced in 7-42-1)	
22	Impeller	7-45-31
23	Gasket	7-44-3
24	Housing	7-43-1
25	Plug	
26	Cover	9-23-5
27	Gasket	9-23-17
28	Filter	10-26-6
29	Oil Seal	9-23-18
30	Pump	10-07-6
31	Gasket	10-07-8

PARTS INDICATED BY NAME ONLY - ORDER BY DESCRIPTION

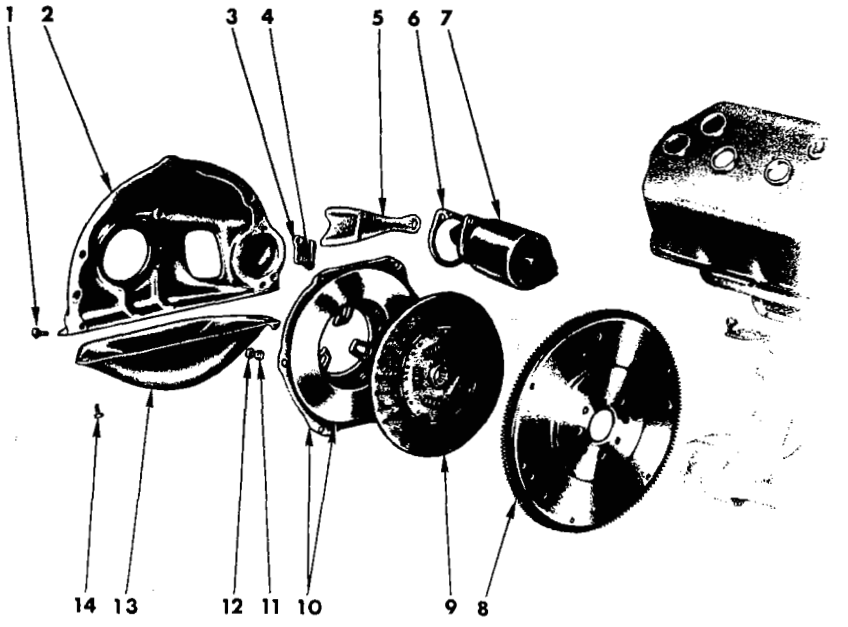

19al3314

EXTERNAL ENGINE - REAR - 426

Ref. No.	Name	Part Type Code	Ref. No.	Name	Part Type Code
1	Bolt		8	Flywheel	9-45-1
2	Housing	6-09-1	9	Disc	6-13-1
3	Pivot	6-22-15	10	Cover and Plate	6-14-1
4	Bolt		11	Washer	
5	Fork	6-22-1	12	Bolt	
6	Seal	8-52-39	13	Pan	6-10-2
7	Starter	8-52-4	14	Screw w/ Washer	6-10-3

PARTS INDICATED BY NAME ONLY - ORDER BY DESCRIPTION

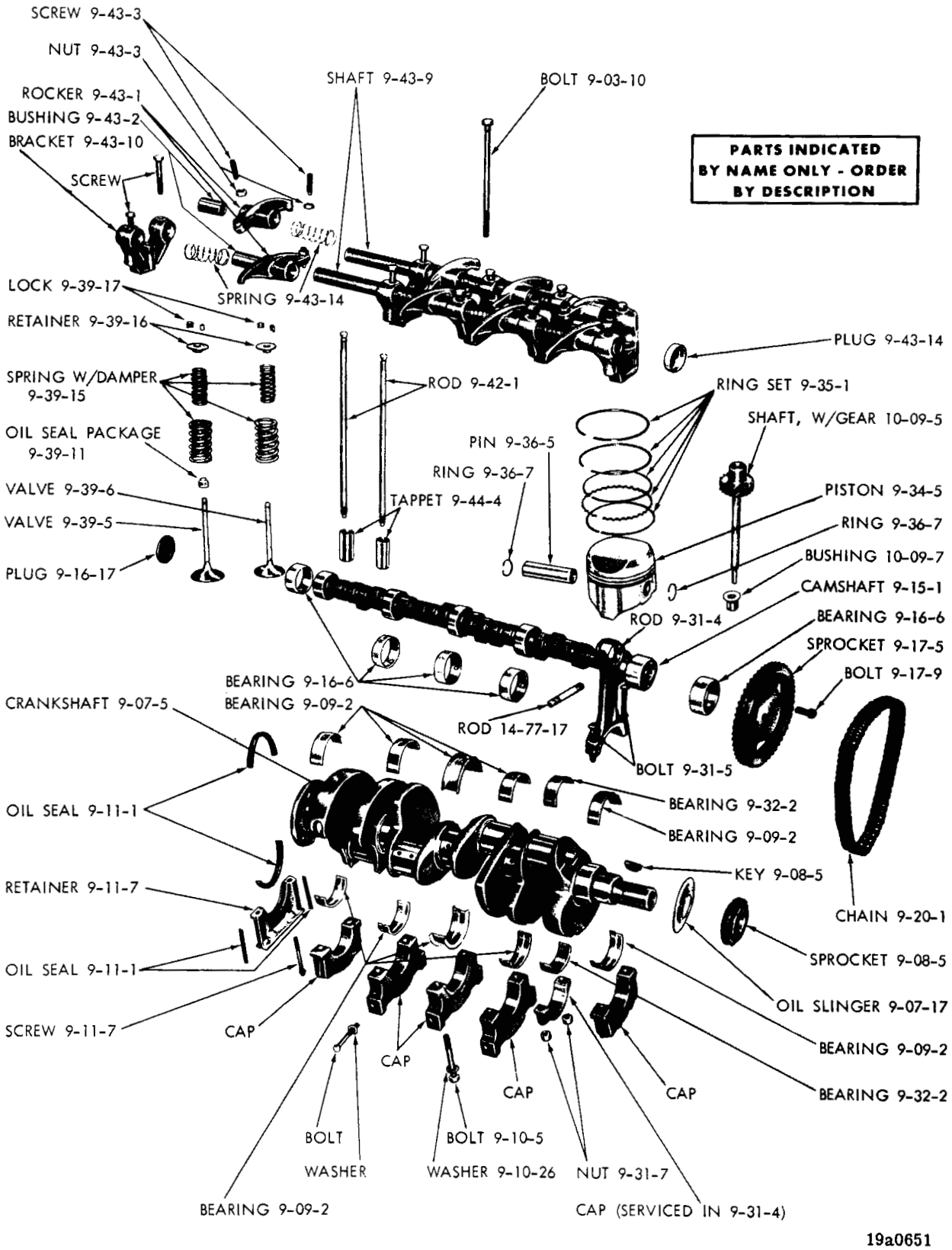

INTERNAL ENGINE - 426 ENGINE

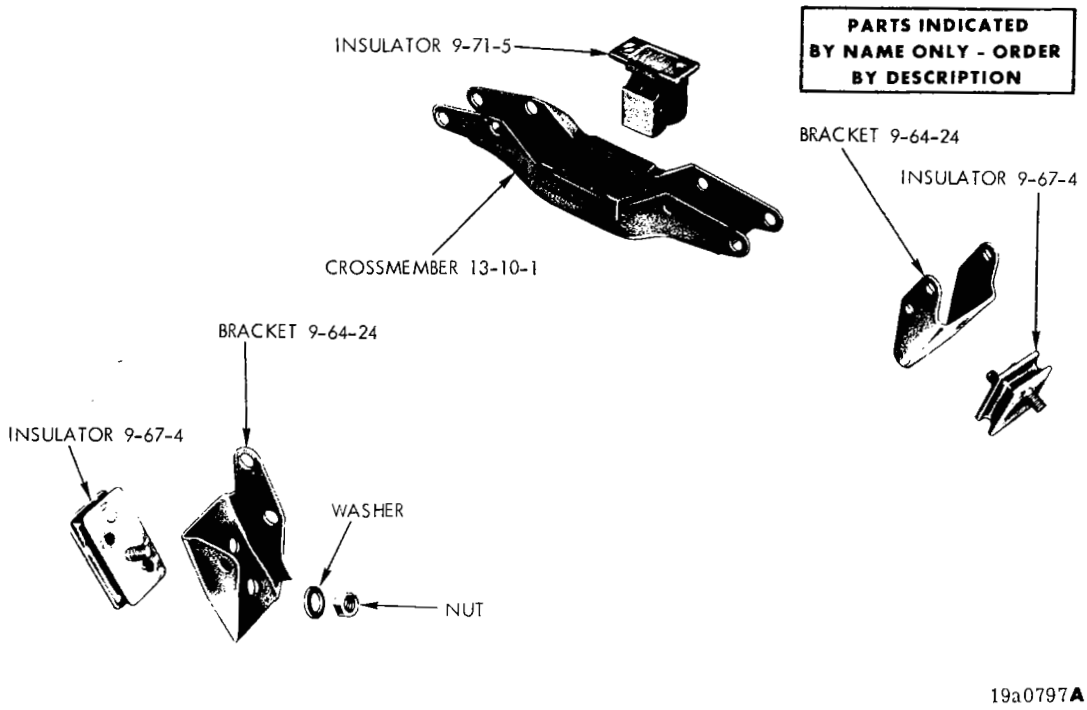

ENGINE MOUNTINGS - VALIANT AND DART (8 CYLINDER ENGINES)

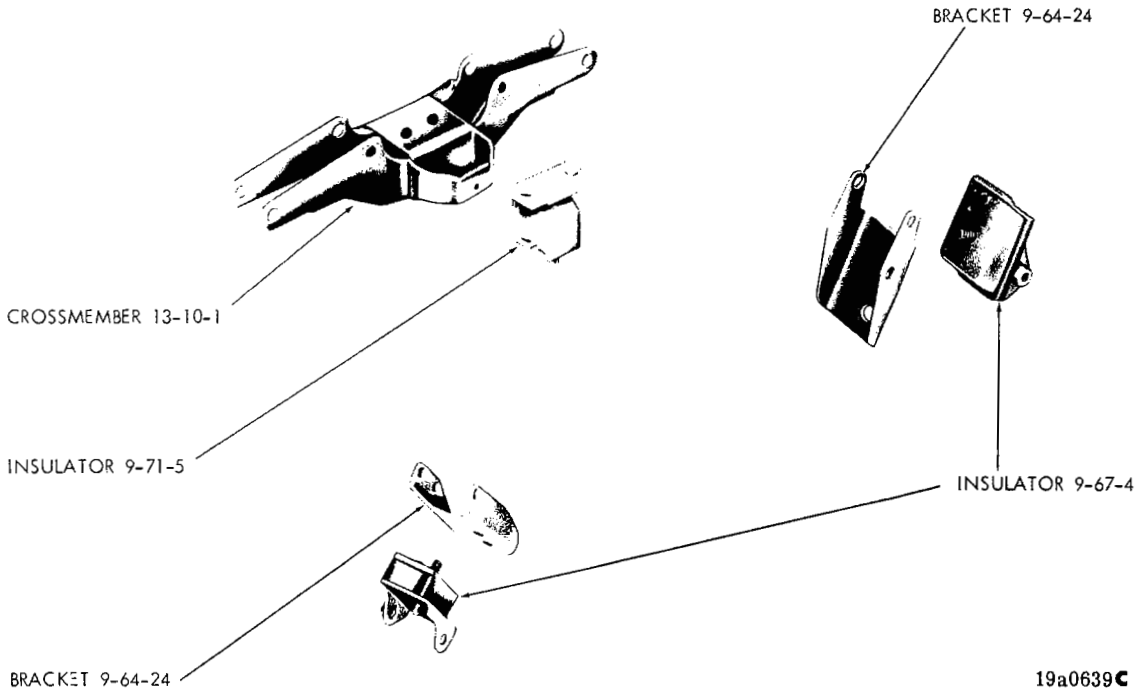

ENGINE MOUNTINGS - BELVEDERE, CORONET AND CHARGER (8 CYLINDER ENGINES)

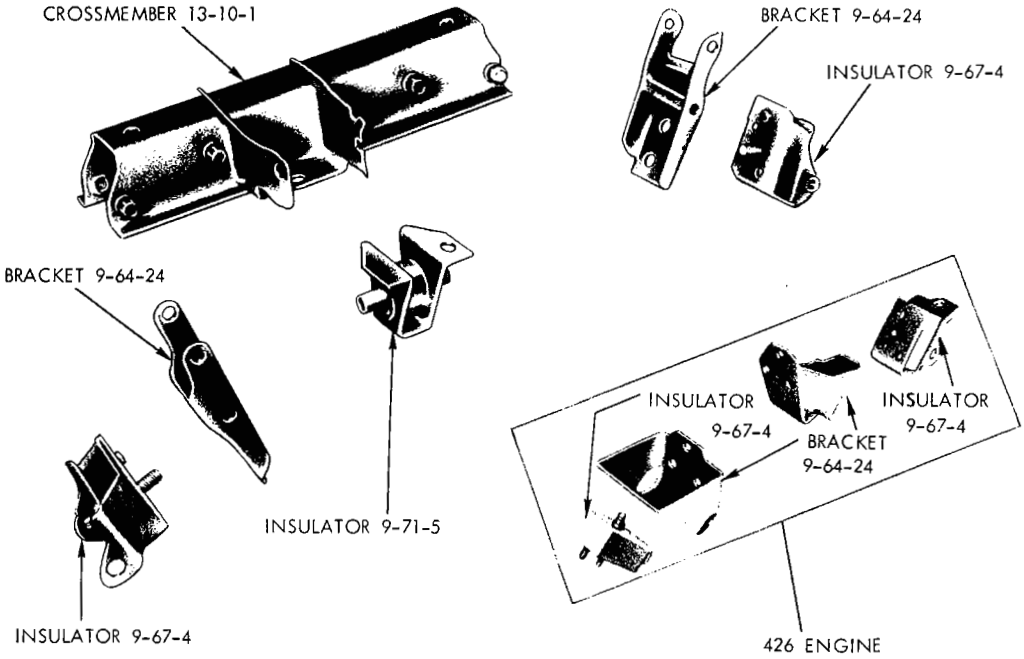

ENGINE MOUNTINGS - 383, 426 AND 440 8 CYLINDER ENGINES

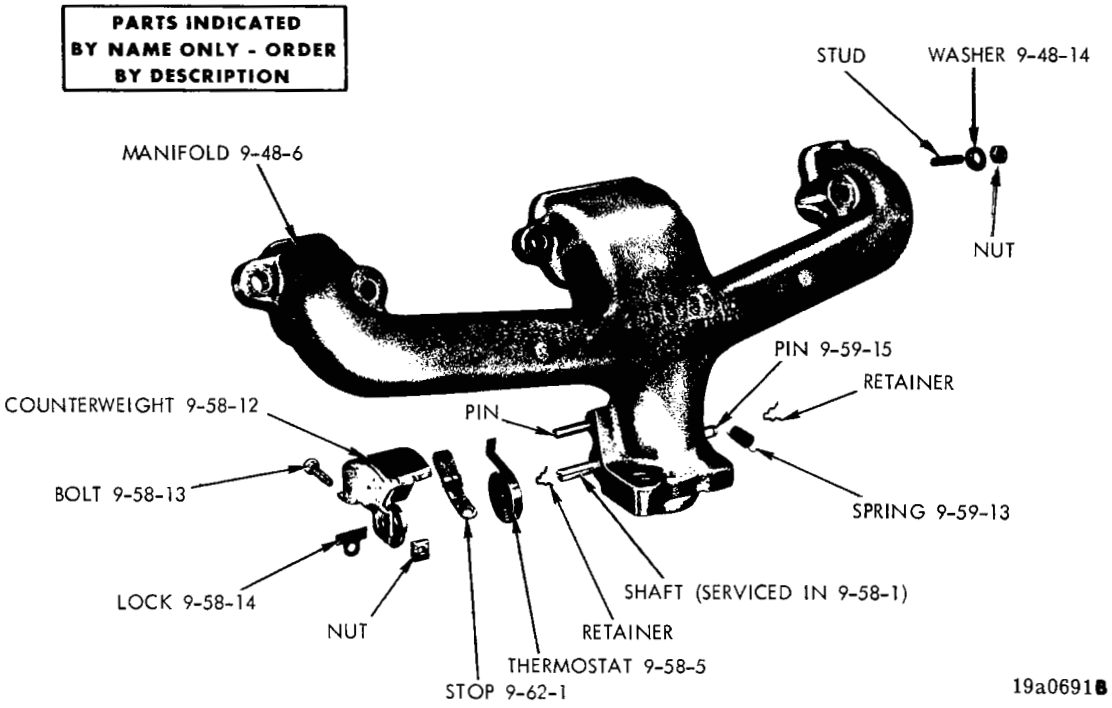

EXHAUST MANIFOLD AND HEAT CONTROLS - FOR 318 AND 360 ENGINE

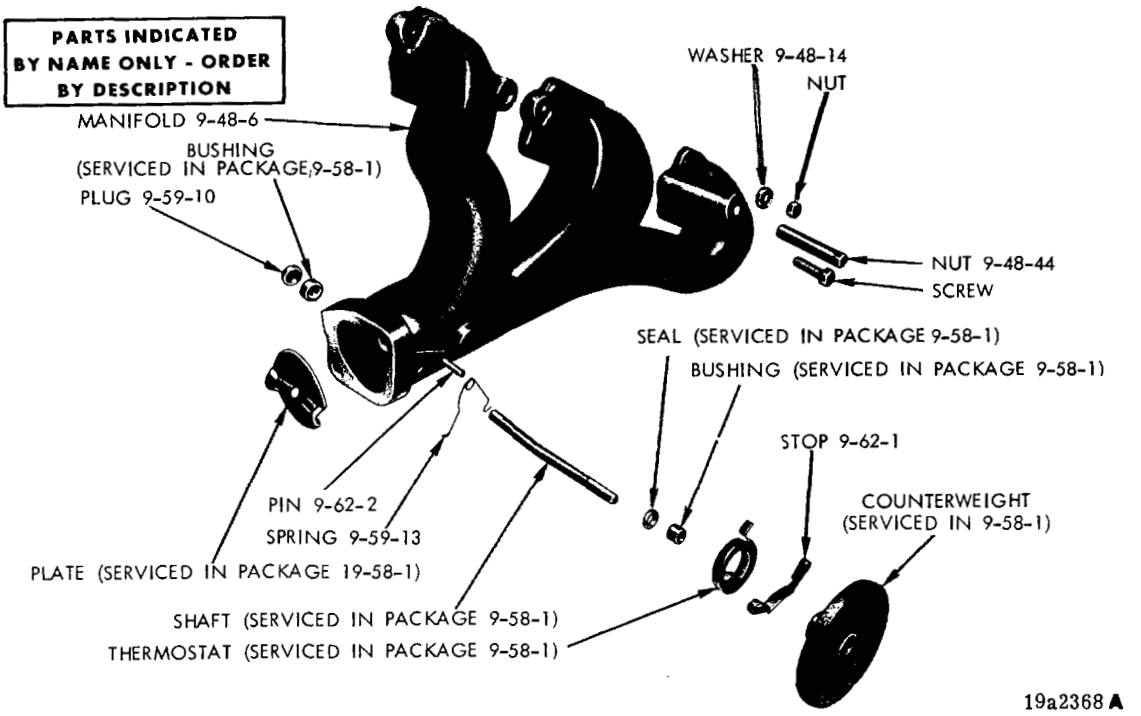

EXHAUST MANIFOLD AND HEAT CONTROLS - FOR 340 ENGINE

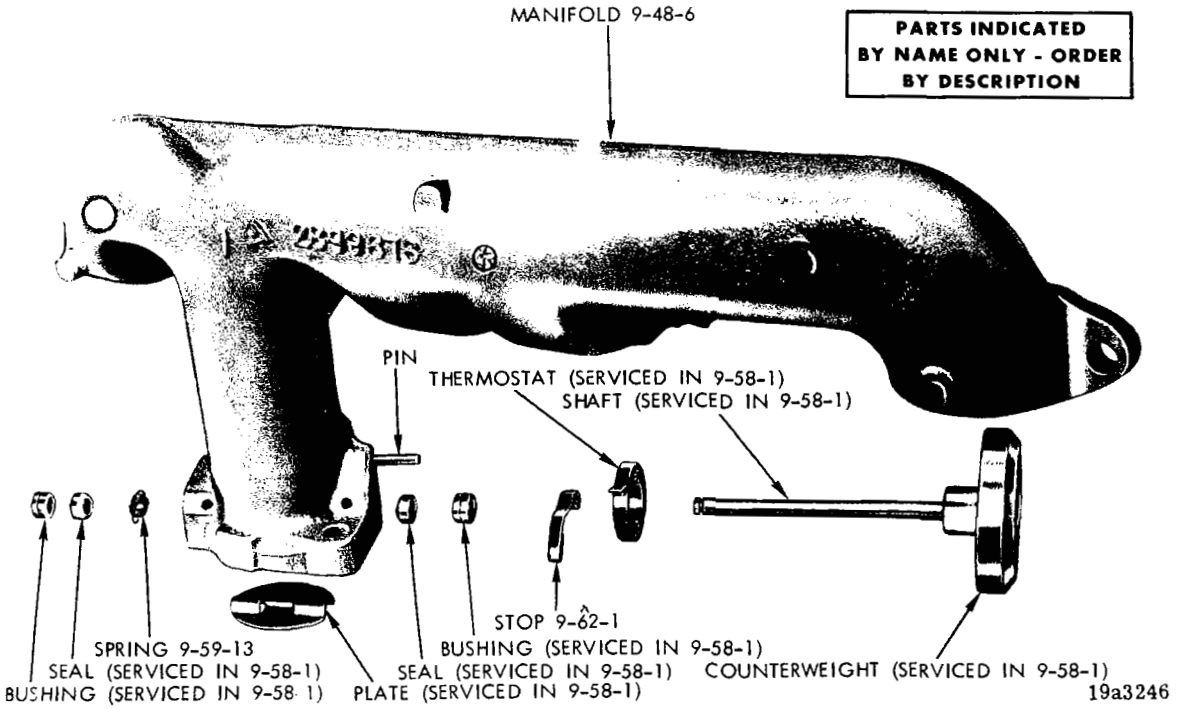

EXHAUST MANIFOLD AND HEAT CONTROLS - FOR 383 AND 440 ENGINE

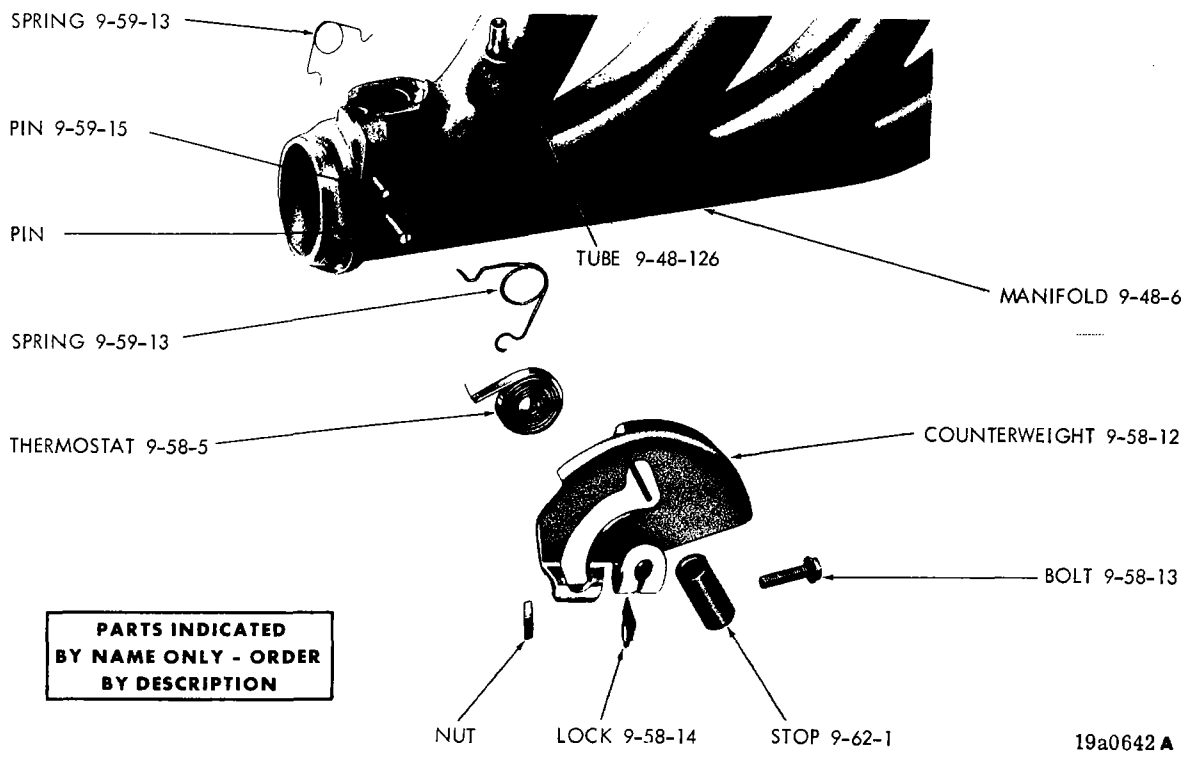

EXHAUST MANIFOLD AND HEAT CONTROLS - FOR 426 ENGINE

NOTES

EIGHT CYLINDER ENGINES

NOTE: The following symbols are used in connection with engine numbers:
ENGINE numbers without symbols indicate "Standard Cylinders and Crankshaft Bearings". The Letter "A" immediately following the engine number indicates Bore .020" (.508 MM.) Larger than Standard.
The Letter "B" immediately following the engine identification number indicates Main and Connecting Rod Bearings .010" (.245 MM.) Smaller than Standard.
The Letters "AB" immediately following the engine identification number indicates Cylinder Bore .020" (.508 MM.) Larger than Standard. Main and Connecting Rod Bearings .010" (.245 MM.) Smaller than Standard.
The Letters in the circular pads at either end of the engine number are for the use of factory inspectors only and should not be connected with the engine number. Always mention Serial Numbers when ordering major assemblies.

CODE	PART NAME AND DESCRIPTION		PER CAR	CU. IN. DISPLACEMENT & PISTON BORE SIZE					
				318	340	360	383	426	440
				3.91	4.04	4.00	4.25	4.26	4.32
	EIGHT CYLINDER ENGINES								
9-01-0	**ENGINE ASSEMBLY**								
9-01-5	GASKET SET, Engine								
	W/Oil Pan Stamped 394,								
	V,L,B,	70	1	3420 241	———	———	———	———	———
	J,R,W,P,D,	70	1	3420 029	———	———	———	———	———
	W/Oil Pan Stamped 294,								
	V,L,B,	70	1	3514 158	———	———	———	———	———
	J,R,W,P,D,	70	1	3514 159	———	———	———	———	———
		71	1	3549 592	———	———	———	———	———
		70	1	———	3514 160	———	———	———	———
		71	1	———	3549 594	3549 596	———	———	———
			1	———	———	———	3420 231	3004 615	3514 166

NOTE 1: Short Engine Assemblies Consist of the Cylinder Block with Pistons and Rings, Crankshaft and Bearings, Connecting Rods and Bearings.

NOTE 2: A383 Cubic inch engine with a two barrel carburetor may be built with a cast or forged crankshaft. The cast crankshaft type is identified by a stamped letter E located on a pad on the upper right side of the front of the cylinder block. The vibration damper has on eliptical weight in front of the main member also a cut slot in the weight. Identification must be conformed before ordering a replacement SHORT ENGINE, CRANKSHAFT, DAMPER or TORQUE CONVERTER.

9-01-24	SHORT ENGINE								
	w/Std. Compn.		1	3462 609	———	———	———	———	———
	w/Low Compn. Export		1	3462 611	———	———	———	———	———
	w/4 Bbl. Carb.		1	———	2951 521	———	———	———	———
		70		———	———	———	3462 621	———	———
		71		———	———	———	3614 209	———	———
	w/3-2 Bbl. Carbs.		1	———	3577 613	———	———	———	———
		71	1	———	———	3577 615	———	———	———
	w/2 Bbl. Carb., w/Std. Compn., w/o Cast Crankshaft		1	———	———	———	3462 613	———	———
	w/2 Bbl. Carb., w/Std. Compn., w/Cast Crankshaft (See Note 2)		1	———	———	———	3577 617	———	———
	w/2 Bbl. Carb., w/Low Compn., Export		1	———	———	———	2951 526	———	———
			1	———	———	———	———	2951 623	———
	w/4 Bbl. Carb. w/O. H/Perf. P,D,C,Y	70	1	———	———	———	———	———	3462 615
		71	1	———	———	———	———	———	3614 208
	w/4 Bbl. Carb., w/H/Perf. B,J,R,W,P,D,C		1	———	———	———	———	———	3462 617
	w/3-2 Bbl. Carbs.		1	———	———	———	———	———	3462 619
	w/4 Bbl. Carb., w/Low Compn., Export, C, Y		1	———	———	———	———	———	3418 289

CARLINES J - Challenger, B - Barracuda, V - Valiant, L - Dart, R - Belvedere - Satellite, W - Coronet - Charger, P - Plymouth, D - Dodge, C - Chrysler, Y - Imperial

AR Indicates use as required.
# Indicates parts not listed in any previous parts book.
Numerals in parentheses ( ) refer to notes.
★ Indicates change or addition.

Printed in U.S.A. January 1972

CODE	PART NAME AND DESCRIPTION		PER CAR	CU. IN. DISPLACEMENT & PISTON BORE SIZE					
				318	340	360	383	426	440
				3.91	4.04	4.00	4.25	4.26	4.32
	EIGHT CYLINDER ENGINES								
9-02-0	**CYLINDER BLOCK**								
9-02-7	DOWEL, Cylinder Block to Clutch Housing or Torque Converter		2	1122 532	1122 532	1122 532	1122 532	1122 532	1122 532
	Eccentric								
	.007" Over Center		AR	1736 347	1736 347	1736 347	1736 347	1736 347	1736 347
	.014" Over Center		AR	1736 348	1736 348	1736 348	1736 348	1736 348	1736 348
	.021" Over Center		AR	1736 353	1736 353	1736 353	1736 353	1736 353	1736 353
9-02-16	PLUG, Cylinder Block Core Hole, 1.635"		AR	2406 356	2406 356	2406 356	2406 356	2406 356	2406 356
	1.695"		AR	2406 575	2406 575	2406 575	2406 575	2406 575	2406 575
	1.2585"		1	2406 387	2406 387	2406 387	———	———	———
9-02-17	PLUG, Cylinder Block Oil Line	70	1	1324 464	1324 464	———	———	———	———
		71	1	3462 871	3462 871	3462 871	———	———	———
	Plug, 3/8 Pipe		2	———	———	———	6028 668	6025 726	6028 668
9-02-50	HEATER, Engine Jacket		2	2863 477	2863 477	2863 477	2863 477	2863 477	2863 477
	SEAL, "O" Ring		AR	6027 513	6027 513	6027 513	6027 513	6027 513	6027 513
9-02-62	CORD, Engine Jacket Heater, Used until Jan. 1971		2	2951 303	2951 303	2951 303	2951 303	2951 303	2951 303
	Used after Jan. 1971		2	3614 314	3614 314	3614 314	3614 314	3614 314	3614 314
	CORD, Extension		1	3418 403	3418 403	3418 403	3418 403	3418 403	3418 403
9-03-0	**CYLINDER HEAD**								
9-03-4	HEAD, Cylinder		2	2843 674	———	———	———	———	———
	w/4 Bbl. Carb.		2	———	2531 902	———	———	———	———
	w/3-2 Bbl. Carb's.		2	———	3577 053	———	———	———	———
		71	2	———	———	3418 432	———	———	———
		70	2	———	———	———	2843 904	———	2843 904
		71	2	———	———	———	3462 344	———	3462 344
			2	———	———	———	———	2780 557	———
9-03-5	GASKET, Cylinder Head		2	2806 984	2863 493	———	———	———	———
		71	2	———	———	3512 520	———	———	———
			2	———	———	———	2863 225	———	———
			2	———	———	———	———	2468 010	———
			2	———	———	———	———	———	3512 260
9-03-10	BOLT, Cylinder Head 1/2" x 1 7/8"		10	2463 258	2463 258	2463 258	———	———	———
	1/2" x 3 5/8"		8	2463 259	2463 259	2463 259	———	———	———
	1/2" x 4 5/8"		2	2463 260	2463 260	2463 260	———	———	———
	7/16" x 1 27/32"		24	———	———	———	1739 605	———	1739 605
	7/16" x 3 7/8		10	———	———	———	1739 606	———	1739 606
	7/16" x 4 5/8"		16	———	———	———	———	1851 613	———
	7/16" x 6 1/8"		10	———	———	———	———	6026 798	———
	STUD, Cylinder Head		8	———	———	———	———	6026 794	———
	Washer, Stud		8	———	———	———	———	6026 141	———
	Washer, Bolt		16	———	———	———	———	6026 140	———
	Washer, Bolt		10	———	———	———	———	6026 141	———
9-03-11	NUT, Cylinder Head Stud		8	———	———	———	———	2658 882	———
9-03-18	PLUG, Cylinder Head Core Hole, 1.2605"		4	2406 387	2406 387	2406 387	2406 387	2406 387	2406 387
	1.3280"		AR	———	———	———	2463 042	2463 042	2463 042
	1.012"		AR	———	———	———	2806 018	———	2806 018
	1.074"		AR	———	———	———	2899 097	———	2899 097
9-03-28	COVER, Cylinder Head Right	70	1	2946 008	———	———	———	———	———
	Right	71	1	3577 636	———	3577 636	———	———	———
	Left		1	2946 011	———	2946 011	———	———	———

CODE	PART NAME AND DESCRIPTION		PER CAR	CU. IN. DISPLACEMENT & PISTON BORE SIZE					
				318	340	360	383	426	440
				3.91	4.04	4.00	4.25	4.26	4.32
EIGHT CYLINDER ENGINES									
9-03-0	**CYLINDER HEAD Cont'd.**								
9-03-28	COVER Cont'd.								
	Right, w/4 Bbl. Carb	70	1	———	3462 684	———	———	———	———
	Right, w/4 Bbl. Carb	71	1	———	3577 636	———	———	———	———
	Left, w/4 Bbl. Carb	70	1	———	3462 913	———	———	———	———
	Left, w/4 Bbl. Carb	71	1	———	3577 807	———	———	———	———
	Right, w/3-2 Bbl. Carb's.	70	1	———	3577 222	———	———	———	———
	Left, w/3-2 Bbl. Carb's.	70	1	———	3577 223	———	———	———	———
	Carb's	71		———	3577 253	———	———	———	———
	Left, w/3-2 Bbl. Carbs	71		———	3577 807	———	———	———	———
	Right		1	———	———	———	2946 057	2946 072	2946 057
	Left		1	———	———	———	2946 070	2946 075	2946 070
	Left Complete, P,D,C,Y		1	———	———	———	2946 063	———	2946 063
	Bolt		10	180 021	180 021	180 021	———	———	———
	Stud		4	———	———	———	6024 845	———	6024 845
	Stud		20	———	———	———	———	6024 845	———
	Nut, w/Washer		AR	———	———	———	6022 582	6022 582	6022 582
9-03-29	GASKET, Cylinder Head Cover	70	2	2463 290	2463 290	———	———	———	———
		71	2	2951 267	2951 267	2951 267	———	———	———
			2	———	———	———	2658 646	———	2658 646
			2	———	———	———	———	2780 566	———
9-05-0	**CYLINDER HEAD WATER OUTLET ELBOW OR CONNECTOR**								
9-05-5	CONNECTOR, Cylinder Water Outlet		1	2780 970	2780 970	2780 970	———	2780 970	2780 970
	All except C, w/Auto. Trans. W/O Air Cond.		1	———	———	———	2780 970	———	———
	C W/Auto. Trans. W/O Air Cond.		1	———	———	———	3614 013	———	———
9-05-6	GASKET, Cylinder Water Outlet Connector		1	50 082	50 082	50 082	50 082	50 082	50 082
9-07-0	**CRANKSHAFT**								
9-07-5	CRANKSHAFT		1	2843 699	2843 868	———	———	2780 533	———
	Canada Built		1	2532 198	———	———	———	———	———
		71	1	———	———	3418 995	———	———	———
	Except Cast Type		1	———	———	———	2268 114	———	———
	w/Cast Type, w/Auto. Trans. w/2 Bbl. Carb. (See Note 2: Page 1)		1	———	———	———	3462 922	———	———
	w/4 Bbl. Carb.		1	———	———	———	———	———	2536 983
	w/3-2 Bbl. Carb's.		1	———	———	———	———	———	3512 036
9-07-8	SCREW, Crankshaft		1	1821 414	1821 414	1821 414	1731 525	1821 414	1731 525
9-07-12	BUSHING, Crankshaft Trans. Drive Pinion Pilot		1	53 298	53 298	53 298	53 298	53 298	53 298
9-07-17	OIL SLINGER, Crankshaft		1	2899 530	2899 530	2899 530	2899 530	2899 530	2899 530
9-07-22	WASHER, Crankshaft Screw		1	1855 561	1855 561	1855 561	1855 561	2463 649	1855 561
9-08-0	**CRANKSHAFT SPROCKET**								
9-08-5	SPROCKET, Crankshaft		1	2463 385	1637 657	2463 385	2532 491	2205 568	———
	Except 3-2 Bbl. Carb's.		1	———	———	———	———	———	2532 491
	w/3-2 Bbl. Carb's.		1	———	———	———	———	———	2205 568

CARLINES J - Challenger, B - Barracuda, V - Valiant, L - Dart, R - Belvedere - Satellite, W - Coronet - Charger, P - Plymouth, D - Dodge, C - Chrysler, Y - Imperial

AR Indicates use as required.
# Indicates parts not listed in any previous parts book.
Numerals in parentheses ( ) refer to notes.
★ Indicates change or addition.

Printed in U.S.A.
January 1972

EIGHT CYLINDER ENGINES

9-09-0 CRANKSHAFT BEARING PACKAGE

NOTE: When .001 thicker wall Crankshaft Main Bearings are used for Engines in Production, a Maltese Cross is stamped on the model pad of the Cylinder Block

NOTE: Crankshaft Bearing Packages Consists of one upper and one lower Bearing

CODE	PART NAME AND DESCRIPTION	PER CAR	CU. IN. DISPLACEMENT & PISTON BORE SIZE					
			318	340	360	383	426	440
			3.91	4.04	4.00	4.25	4.26	4.32
9-09-2	BEARING PACKAGE, Nos. 1, 2, 4							
	Std.	3	2084 005	3004 665	3549 370	———	———	———
	.001 U/S.	3	2084 006	3004 666	3549 371	———	———	———
	.002 U/S.	3	2084 007	3004 667	3549 372	———	———	———
	.003 U/S.	3	2275 387	3004 668	3549 373	———	———	———
	.010 U/S.	3	2084 008	3004 669	3549 374	———	———	———
	.012 U/S.	3	2275 388	3004 670	3549 375	———	———	———
	BEARING PACKAGE, No. 1 Std.	1	———	———	———	2084 810	2448 379	———
	.001 U/S.	1	———	———	———	2084 811	2808 235	———
	.002 U/S.	1	———	———	———	2084 812	2808 236	———
	.003 U/S.	1	———	———	———	2275 391	2808 237	———
	.010 U/S.	1	———	———	———	2084 813	2808 238	———
	.011 U/S.		———	———	———	———	2808 343	———
	.012 U/S.	1	———	———	———	2275 392	2808 239	———
	BEARING PACKAGE, No. 1 4 Bbl. Carb. w/O. H/Perf. Std.		———	———	———	———	———	2084 814
	.001 U/S.	1	———	———	———	———	———	2084 815
	.002 U/S.	1	———	———	———	———	———	2084 816
	.003 U/S.	1	———	———	———	———	———	2275 395
	.010 U/S.	1	———	———	———	———	———	2084 817
	.012 U/S.	1	———	———	———	———	———	2275 396
	BEARING PACKAGE, No. 1 4 Bbl. and 3-2 Bbl. Carb's. w/H/Perf. Eng. Painted Orange Std.	1	———	———	———	———	———	3420 003
	.001 U/S.	1	———	———	———	———	———	3420 004
	.002 U/S.	1	———	———	———	———	———	3420 005
	.003 U/S.	1	———	———	———	———	———	3420 006
	.010 U/S.	1	———	———	———	———	———	3420 007
	.012 U/S.	1	———	———	———	———	———	3420 008
	BEARING PACKAGE, Nos. 2, 4, 5 Std.	3	———	———	———	2084 833	2448 380	———
	.001 U/S.	3	———	———	———	2084 834	2808 240	———
	.002 U/S.	3	———	———	———	2084 835	2808 241	———
	.003 U/S.	3	———	———	———	2275 393	2808 242	———
	.010 U/S.	3	———	———	———	2084 836	2808 243	———
	.011 U/S.	3	———	———	———	———	2808 344	———
	.012 U/S.	3	———	———	———	2276 394	2808 244	———
	BEARING PACKAGE, Nos. 2,4,5 4 Bbl. Carb. w/O/H/Perf. Std.	3	———	———	———	———	———	2084 829
	.001 U/S.	3	———	———	———	———	———	2084 830
	.002 U/S.	3	———	———	———	———	———	2084 831
	.003 U/S.	3	———	———	———	———	———	2275 397
	.010 U/S.	3	———	———	———	———	———	2084 832
	.012 U/S.	3	———	———	———	———	———	2275 398
	BEARING PACKAGE, Nos. 2, 4, 5 4 Bbl. and 3-2 Bbl. Carb's. w/H/Perf. Eng. Painted Orange Std.	3	———	———	———	———	———	3420 009
	.001 U/S.	3	———	———	———	———	———	3420 010
	.002 U/S.	3	———	———	———	———	———	3420 011
	.003 U/S.	3	———	———	———	———	———	3420 012
	.010 U/S.	3	———	———	———	———	———	3420 013

CARLINES J - Challenger V - Valiant R - Belvedere - Satellite P - Plymouth C - Chrysler
B - Barracuda L - Dart W - Coronet - Charger D - Dodge Y - Imperial

AR Indicates use as required.
# Indicates parts not listed in any previous parts book.
Numerals in parentheses ( ) refer to notes.
★ Indicates change or addition.

Printed in U.S.A.
January 1972

CODE	PART NAME AND DESCRIPTION		PER CAR	CU. IN. DISPLACEMENT & PISTON BORE SIZE					
				318	340	360	383	426	440
				3.91	4.04	4.00	4.25	4.26	4.32
EIGHT CYLINDER ENGINES									
9-09-0	**CRANKSHAFT BEARING PACKAGE Cont'd.**								
9-09-2	BEARING PACKAGE Cont'd.								
	.012 U/S.		3	———	———	———	———	———	3420 014
	BEARING PACKAGE No. 3 Std.		1	1879 627	3004 894	3549 376	1818 524	2448 381	3004 944
	.001 U/S.		1	1879 628	3004 895	3549 377	1818 525	2808 245	3004 945
	.002 U/S.		1	1879 629	3004 896	3549 378	1818 526	2808 246	3004 946
	.003 U/S.		1	2275 389	3004 897	3549 379	1818 527	2808 247	3004 947
	.010 U/S.		1	1879 630	3004 898	3549 380	1818 528	2808 248	3004 948
	.011 U/S.			———	———	———	———	2808 345	———
	.012 U/S.		1	2275 390	3004 899	3549 381	1818 529	2808 249	3004 949
	BEARING PACKAGE No. 5 Std.		1	3514 151	3514 151	3549 382	———	———	———
	.001 U/S.		1	3514 152	3514 152	3549 383	———	———	———
	.002 U/S.		1	3514 153	3514 153	3549 384	———	———	———
	.003 U/S.		1	3514 154	3514 154	3549 385	———	———	———
	.010 U/S.		1	3514 155	3514 155	3549 386	———	———	———
	.012 U/S.		1	3514 156	3514 156	3549 387	———	———	———
9-10-0	**CRANKSHAFT BEARING CAP**								
9-10-2	OIL SEAL PACKAGE, Crankshaft Bearing Cap No. 5		1	1326 091	1326 091	1326 091	———	———	———
9-10-5	CAP, Crankshaft Bearing Nos. 1, 2 and 4		3	2863 854	2863 854	3614 232	2206 315	———	1852 910
	No. 3		1	2463 582	2863 855	3614 233	1852 915	———	1852 911
	No. 5		1	3004 639	3004 639	3614 234	2206 315	———	2206 316
9-10-19	SCREW, Crankshaft Bearing Cap		10	1618 695	———	———	1408 867	———	1408 867
	Nos. 1, 3, 5		6	———	6027 264	———	———	———	———
	Nos. 2, 4		4	———	6027 335	———	———	———	———
		71	10	———	———	6027 264	1408 867	———	1408 867
			6	———	———	———	———	9423 811	———
			4	———	———	———	———	454 993	———
	Cap Side		6	———	———	———	———	9420 892	———
9-10-26	WASHER, Crank Shaft Bearing Cap Bolt		10	———	———	———	———	2468 135	———
	Cap Bolt Side		6	———	———	———	———	1536 242	———
9-11-0	**CRANKSHAFT REAR BEARING OIL SEAL**								
9-11-1	OIL SEAL PACKAGE	70	1	1326 093	1326 093	———	2275 365	2275 365	2275 365
		71	1	3549 392	3549 392	3549 395	3549 394	3549 394	3549 394
9-11-7	RETAINER, Crankshaft Bearing Oil Seal		1	———	———	———	1945 473	1945 473	1945 473
	Screw		2	———	———	———	9418 005	9418 005	9418 005
9-13-0	**CRANKSHAFT VIBRATION DAMPER**								
9-13-5	DAMPER, Vibration		1	2951 673	2951 673	———	———	2658 871	———
		71	1	———	———	3512 972	———	———	———
	Except Cast Type Crankshaft		1	———	———	———	2658 457	———	———
	w/Cast Type Crankshaft w/Auto. Trans., w/2 Bbl. Carb. (See Note 2: Page 1)		1	———	———	———	3577 180	———	———
	w/O. H/Perf. Eng. Painted Blue		1	———	———	———	———	———	2658 457
	w/H/Perf. Eng. Painted Orange		1	———	———	———	———	———	3512 017

CARLINES J - Challenger, B - Barracuda, V - Valiant, L - Dart, R - Belvedere - Satellite, W - Coronet - Charger, P - Plymouth, D - Dodge, C - Chrysler, Y - Imperial

AR Indicates use as required.
\# Indicates parts not listed in any previous parts book.
Numerals in parentheses ( ) refer to notes.
★ Indicates change or addition.

Printed in U.S.A.
January 1972

CODE	PART NAME AND DESCRIPTION		PER CAR	CU. IN. DISPLACEMENT & PISTON BORE SIZE					
				318	340	360	383	426	440
				3.91	4.04	4.00	4.25	4.26	4.32
EIGHT CYLINDER ENGINES									
9-15-0	**CAMSHAFT**								
9-15-1	CAMSHAFT	70	1	2899 144	———	———	———	———	———
		71	1	3512 635	———	———	———	———	———
			1	———	2899 206	———	———	3462 355	———
		71	1	———	———	3512 589	———	———	———
	w/2 Bbl. Carb.	70		———	———	———	2532 190	———	———
	w/4 Bbl. Carb. w/.05 Raised Ring	70	1	———	———	———	2532 190	———	———
	w/4 Bbl. Carb. w/O. Raised Ring	70	1	———	———	———	2843 564	———	———
	w/2 Bbl. Carb.	71	1	———	———	———	3577 181	———	———
	w/4 Bbl. Carb.	71	1	———	———	———	3512 907	———	———
	w/4 Bbl. Carb. w/O. H/Perf.	70	1	———	———	———	———	———	2532 190
	w/4 Bbl. Carb., w/H/Perf.	70	1	———	———	———	———	———	2843 564
	w/3-2 Bbl. Carb's.	70	1	———	———	———	———	———	3512 033
	w/4 Bbl. Carb., w/O. H/Perf.	71	1	———	———	———	———	———	3577 181
	w/H/Perf.		1	———	———	———	———	———	3512 907
	w/3-2 Bbl. Carb's.	71	1	———	———	———	———	———	3512 903
9-15-2	ECCENTRIC, Camshaft		1	2843 661	2843 661	2843 661	———	———	———
9-15-6	PLATE, Camshaft Sprocket Thrust		1	1618 670	1618 670	1618 670	———	———	———
	"Oiler Bolt" Screw, Upper Right		1	6028 098	6028 098	6028 098	———	———	———
9-15-10	WASHER, Camshaft Sprocket Retainer Screw		1	1618 732	1618 732	1618 732	6023 053	———	———
	Except 3-2 Bbl. Carb.		1	———	———	———	———	———	6023 053
9-16-0	**CAMSHAFT BEARING**								
9-16-6	BEARING, Camshaft No. 1		1	1632 522	1632 522	1632 522	1821 771	1821 771	1821 771
	No. 2		1	1632 523	1632 523	1632 523	1821 772	1821 772	1821 772
	No. 3		1	1632 524	1632 524	1632 524	1821 773	1821 773	1821 773
	No. 4		1	1632 525	1632 525	1632 525	1821 774	1821 774	1821 774
	No. 5		1	1632 526	1632 526	1632 526	1821 775	1821 775	1821 775
9-16-17	PLUG, Camshaft Rear Bearing		1	1821 722	1821 722	1821 722	2402 905	2402 905	2402 905
	Oversize		AR	———	———	———	2463 041	2463 041	2463 041
9-17-0	**CAMSHAFT SPROCKET**								
9-17-5	SPROCKET, Camshaft		1	2843 610	2899 556	2843 610	2532 490	2780 572	———
	w/4 Bbl. Carb.		1	———	———	———	———	———	2532 490
	w/3-2 Bbl. Carb's.		1	———	———	———	———	———	2780 572
9-17-9	SCREW, Camshaft Sprocket Retainer		1	180 147	180 147	180 147	———	———	———
			3	———	———	———	———	2120 930	———
	w/3-2 Bbl. Carb's.		3	———	———	———	———	———	2120 930
9-20-0	**TIMING CHAIN**								
9-20-1	CHAIN, Timing		1	2463 384	1327 319	2463 384	2532 492	2205 569	———
	w/4 Bbl. Carb.		1	———	———	———	———	———	2532 492
	w/3-2 Bbl. Carb's.		1	———	———	———	———	———	2205 569
9-23-0	**CHAIN CASE COVER**								
9-23-5	COVER, Chain Case		1	2951 671	2951 671	2951 671	2658 454	2658 454	2658 454
9-23-10	BOLT, Chain Case Cover w/Engine Jacket Heater Canada Built		2	———	———	———	2121 588	2121 588	2121 588

CARLINES J - Challenger, B - Barracuda, V - Valiant, L - Dart, R - Belvedere - Satellite, W - Coronet - Charger, P - Plymouth, D - Dodge, C - Chrysler, Y - Imperial

AR Indicates use as required.
\# Indicates parts not listed in any previous parts book.
Numerals in parentheses ( ) refer to notes.
★ Indicates change or addition.

Printed in U.S.A.
January 1972

CODE	PART NAME AND DESCRIPTION	PER CAR	CU. IN. DISPLACEMENT & PISTON BORE SIZE					
			318	340	360	383	426	440
			3.91	4.04	4.00	4.25	4.26	4.32
	EIGHT CYLINDER ENGINES							
9-23-0	**CHAIN CASE COVER Cont'd.**							
9-23-17	GASKET, Chain Case Cover	1	2129 012	2129 012	2129 012	———	———	———
	Also use 2 of 1737761 Water Pump Housing Gasket	1	———	———	———	2264 794	2264 794	2264 794
9-23-18	OIL SEAL, Chain Case Cover	1	2899 532	2899 532	2899 532	2536 481	2536 481	2536 481
9-31-0	**CONNECTING ROD**							
	NOTE: Connecting Rod includes Bearing Cap, Bolt, Nut, Lockwasher and Bushing But does not include Bearing.							
9-31-4	ROD, Connecting	8	2406 785	2899 495	———	———	———	———
	71	8	———	———	2899 061	———	———	———
		8	———	———	———	2406 766	2780 531	———
	w/O. H/Perf. Eng. Painted Blue	8	———	———	———	———	———	2406 770
	w/H/Perf. Eng. Painted Orange	8	———	———	———	———	———	2951 906
9-31-5	BOLT, Connecting Rod Bearing Cap	16	1944 865	1944 865	1944 865	1737 694	2468 005	1737 694
9-31-7	NUT, Connecting Rod Bearing Cap	16	1737 695	1737 695	1737 695	1737 695	2468 006	1737 695
9-31-10	BUSHING, Connecting Rod	8	1618 701	1618 701	———	———	———	———
9-32-0	**CONNECTING ROD BEARING PACKAGES**							
	NOTE: When .001 thicker wall Connecting Rod Bearings are used for Engines in Production, A Maltese Cross is stamped on the model Pad of the Cylinder Block.							
	NOTE: Connecting Rod Bearing Packages Consists of one upper and one lower Bearing.							
9-32-2	BEARING PACKAGE, Std.	8	1879 617	2421 305	1879 617	———	2525 484	1881 794
	.001 U/S.	8	1879 618	2421 306	1879 618	———	2808 219	1881 795
	.002 U/S.	8	1879 619	2421 307	1879 619	———	2808 220	1881 796
	.003 U/S.	8	1879 620	2421 308	1879 620	———	2808 221	2275 413
	.010 U/S.	8	1879 621	2421 309	1879 621	———	2808 222	1881 797
	.011 U/S.	8	———	———	———	———	2808 324	———
	.012 U/S.	8	1879 622	2421 310	1879 622	———	2808 223	2275 414
	w/2 Bbl. Carb. Std.	8	———	———	———	1818 698	———	———
	.001 U/S.	8	———	———	———	1818 699	———	———
	.002 U/S.	8	———	———	———	1818 700	———	———
	.003 U/S.	8	———	———	———	1818 701	———	———
	.010 U/S.	8	———	———	———	1818 702	———	———
	.012 U/S.	8	———	———	———	1818 703	———	———
	w/4 Bbl. Carb. Std.	8	———	———	———	1881 794	———	———
	.001 U/S.	8	———	———	———	1881 795	———	———
	.002 U/S.	8	———	———	———	1881 796	———	———
	.003 U/S.	8	———	———	———	2275 413	———	———
	.010 U/S.	8	———	———	———	1881 797	———	———
	.012 U/S.	8	———	———	———	2275 414	———	———
9-34-0	**PISTON, W/PIN**							
	NOTE: The following Pistons include Pins and Pin Retaining Rings.							
9-34-5	PISTON, Std.	8	3420 222	———	———	———	———	———
	.020 O/S	8	3420 220	———	———	———	———	———
	Std. w/2 Bbl. Carb. 70	8	———	———	———	3420 206	———	———
	.020 O/S 70	8	———	———	———	3420 204	———	———
	Std. w/4 Bbl. Carb. 70	8	———	———	———	3420 210	———	———
	Std. 71	8	———	———	3549 366	———	———	———
	.020 O/S 71	8	———	———	3549 368	———	———	———
	Std. 71	8	———	———	———	3420 206	———	———
	.020 O/S 71	8	———	———	———	3420 204	———	———

CODE	PART NAME AND DESCRIPTION		PER CAR	CU. IN. DISPLACEMENT & PISTON BORE SIZE					
				318	340	360	383	426	440
				3.91	4.04	4.00	4.25	4.26	4.32
	EIGHT CYLINDER ENGINES								
9-34-0	**PISTON, W/PIN Cont'd.**								
9-34-5	PISTON Cont'd.								
	Piston, Nos. 1, 3, 5, 7 Std.		4	———	3004 516	———	———	2808 227	———
	.005 O/S.		4	———	3004 518	———	———	2808 229	———
	.020 O/S.		4	———	3004 520	———	———	2808 231	———
	.040 O/S.		4	———	3004 522	———	———	2808 233	———
	Piston, Nos. 2, 4, 6, 8 Std.		4	———	3004 517	———	———	2808 228	———
	.005 O/S.		4	———	3004 519	———	———	2808 230	———
	.020 O/S.		4	———	3004 521	———	———	2808 232	———
	.040 O/S.		4	———	3004 523	———	———	2808 234	———
	Piston, w/4 Bbl. Carb., w/O. H/Perf. Std.	70	8	———	———	———	———	———	3420 214
	.020 O/S	70	8	———	———	———	———	———	3420 212
	Piston, w/4 Bbl. Carb. w/H/Perf. Std.	70	8	———	———	———	———	———	3549 426
	.020 O/S	70	8	———	———	———	———	———	3549 424
	Piston, w/3-2 Bbl. Carb's. Std.		8	———	———	———	———	———	3420 218
	.020 O/S		8	———	———	———	———	———	3420 216
	Piston, w/4 Bbl. Carb., w/O. H/Perf., Std.	71	8	———	———	———	———	———	3549 528
	.020 O/S	71	8	———	———	———	———	———	3549 530
	Piston, w/4 Bbl. Carb., w/H/Perf. Std.	71	8	———	———	———	———	———	3420 214
	.020 O/S	71	8	———	———	———	———	———	3420 212
	Piston, w/Low Compression, Export Std.		8	3004 513	———	———	3004 528	———	3004 539
	.005 O/S.		8	3004 514	———	———	3004 529	———	3004 540
	.020 O/S.		8	3004 515	———	———	3004 530	———	3004 541
9-35-0	**PISTON RING SET**								
9-35-1	RING SET, Piston Std. to .009 O/S.		1	2808 550	3004 571	———	2808 453	2808 477	———
	.020 to .029 O/S.		1	2808 551	3004 572	———	2808 454	2808 478	———
	.040 to .049 O/S.		1	2808 552	3004 573	———	2808 455	2808 479	———
	Std. to .009 O/S.	71	1	———	———	3549 588	———	———	———
	.020 to .029 O/S.	71	1	———	———	3549 589	———	———	———
	.040 to .049 O/S.	71	1	———	———	3549 590	———	———	———
	w/4 Bbl. Carb. Std. to .009 O/S.		1	———	———	———	———	———	2808 474
	.020 to .029 O/S.		1	———	———	———	———	———	2808 475
	.040 to .049 O/S.		1	———	———	———	———	———	2808 476
	w/3-2 Bbl. Carb's Std. to .009 O/S.		1	———	———	———	———	———	3420 228
	.020 to .029 O/S.		1	———	———	———	———	———	3420 229
	.040 to .049 O/S.		1	———	———	———	———	———	3420 230
9-36-0	**PISTON PIN**								
9-36-5	PIN, Piston Std.		8	2658 878	2658 878	———	———	2780 524	———
	.003 O/S.		8	2658 879	2658 879	———	———	2780 525	———
	.008 O/S.		8	2658 880	2658 880	———	———	2780 526	———
9-36-7	RING, Piston Pin Retaining		16	1324 470	6027 336	———	———	6025 031	———
9-39-0	**VALVE**								
9-39-1	GASKET SET, Engine Valve Grinding, V,L,B	70	1	3420 242	———	———	———	———	———
	J,R,W,P,D	70	1	3420 030	———	———	———	———	———
		71	1	3549 593	———	———	———	———	———

CARLINES J - Challenger V - Valiant R - Belvedere - Satellite P - Plymouth C - Chrysler
B - Barracuda L - Dart W - Coronet - Charger D - Dodge Y - Imperial

AR Indicates use as required.
# Indicates parts not listed in any previous parts book.
Numerals in parentheses ( ) refer to notes.
★ Indicates change or addition.

Printed in U.S.A.
January 1972

EIGHT CYLINDER ENGINES

9-39-0 VALVE Cont'd.

CODE	PART NAME AND DESCRIPTION		PER CAR	CU. IN. DISPLACEMENT & PISTON BORE SIZE					
				318	340	360	383	426	440
				3.91	4.04	4.00	4.25	4.26	4.32
9-39-1	VALVE Cont'd.								
		70	1	———	3004 726	———	———	———	———
		71	1	———	3549 595	3549 597	———	———	———
			1	———	———	———	3420 232	3004 616	3514 167
9-39-5	VALVE, Intake Std.		8	2465 335	2863 520	———	———	2468 096	———
	.005 O/S.		8	2465 336	2863 530	———	———	2468 097	———
	.015 O/S.		8	2465 337	2863 531	———	———	2468 098	———
	.030 O/S.		8	2465 338	2863 532	———	———	2468 099	———
	Std. with single Grove Lock	71	8	———	———	3418 688	———	———	———
	.005 O/S with single Grove Lock	71	8	———	———	3418 689	———	———	———
	VALVE PACKAGE, Intake, w/Lock w/Double Grove								
	Std.	71	8	———	———	= 3549 971	———	———	———
	.005 O/S.	71	8	———	———	= 3549 972	———	———	———
	.015 O/S	71	8	———	———	= 3549 973	———	———	———
	.030 O/S	71	8	———	———	= 3549 974	———	———	———
	w/2 Bbl. Carb., B,J,R,W								
	Std.	70	8	———	———	———	3418 469	———	———
	.005 O/S.	70	8	———	———	———	3418 470	———	———
	.015 O/S.	70	8	———	———	———	3418 471	———	———
	.030 O/S.	70	8	———	———	———	3418 472	———	———
	w/4 Bbl. Carb., B,J,R,W								
	Std.	70	8	———	———	———	3512 090	———	———
	.005 O/S.	70	8	———	———	———	3512 091	———	———
	.015 O/S	70	8	———	———	———	3512 092	———	———
	.030 O/S.	70	8	———	———	———	3512 093	———	———
	w/2 and 4 Bbl. Carb. P,D, C Std.	70	8	———	———	———	3418 469	———	———
	.005 O/S	70	8	———	———	———	3418 470	———	———
	.015 O/S.	70	8	———	———	———	3418 471	———	———
	.030 O/S.	70	8	———	———	———	3418 472	———	———
	w/2 Bbl. Carb. With single Grove Lock Std.	71	8	———	———	———	3418 469	———	———
	.005 O/S.	71	8	———	———	———	3418 470	———	———
	.015 O/S	71	8	———	———	———	3418 471	———	———
	.030 o/s.	71	8	———	———	———	3418 472	———	———
	VALVE PACKAGE, Intake, w/Double Grove Lock, w/2 Bbl. Carb.								
	Std.	71	8	———	———	———	= 3549 979	———	———
	.005 o/s	71	8	———	———	———	= 3549 980	———	———
	.015 o/s	71	8	———	———	———	= 3549 981	———	———
	.030 o/s	71	8	———	———	———	= 3549 982	———	———
	w/4 Bbl. Carb. With single Grove Lock Std.	71	8	———	———	———	3512 090	———	———
	.005 o/s	71	8	———	———	———	3512 091	———	———
	.015 o/s	71	8	———	———	———	3512 092	———	———
	.030 o/s	71	8	———	———	———	3512 093	———	———
	VALVE PACKAGE, Intake w/Double Grove Lock, w/4 Bbl. Carb.								
	Std.	71	8	———	———	———	= 3549 975	———	———
	.005 o/s	71	8	———	———	———	= 3549 976	———	———
	.015 o/s	71	8	———	———	———	= 3549 977	———	———

CARLINES J - Challenger, B - Barracuda, V - Valiant, L - Dart, R - Belvedere - Satellite, W - Coronet - Charger, P - Plymouth, D - Dodge, C - Chrysler, Y - Imperial

AR Indicates use as required.
\# Indicates parts not listed in any previous parts book.
Numerals in parentheses ( ) refer to notes.
★ Indicates change or addition.

Printed in U.S.A.
January 1972

CODE	PART NAME AND DESCRIPTION		PER CAR	CU. IN. DISPLACEMENT & PISTON BORE SIZE					
				318	340	360	383	426	440
				3.91	4.04	4.00	4.25	4.26	4.32
	EIGHT CYLINDER ENGINES								
9-39-0	**VALVE Cont'd.**								
9-39-5	VALVE Cont'd.								
	.030 o/s	71	8	———	———	———	= 3549 978	———	———
	w/4 Bbl. Carb. w/o H/Perf. w/Single Grove Lock P,D,C, Y								
	Std.		8	———	———	———	———	———	3418 469
	.005 o/s		8	———	———	———	———	———	3418 470
	.015 o/s		8	———	———	———	———	———	3418 471
	.030 o/s		8	———	———	———	———	———	3418 472
	VALVE PACKAGE, Intake w/o H/Perf., w/Double Grove Lock								
	P,D,C,Y Std.	71	8	———	———	———	———	———	= 3549 979
	.005 O/S	71	8	———	———	———	———	———	= 3549 980
	.015 o/s	71	8	———	———	———	———	———	= 3549 981
	.030 o/s	71	8	———	———	———	———	———	= 3549 982
	w/4 Blb. Carb. w/H/Perf. w/Single Grove Lock B, J, R, W, P, D,C								
	Std.		8	———	———	———	———	———	3512 090
	.005 o/s		8	———	———	———	———	———	3512 091
	.015 o/s		8	———	———	———	———	———	3512 092
	.030 o/s		8	———	———	———	———	———	3512 093
	VALVE PACKAGE, Intake, w/H/Perf. w/Double Grove Lock B,J,R, W								
	P,D,C Std.	71	8	———	———	———	———	———	= 3549 975
	.005 o/s	71	8	———	———	———	———	———	= 3549 976
	.015 o/s	71	8	———	———	———	———	———	= 3549 977
	.030 o/s	71	8	———	———	———	———	———	= 3549 978
	w/3-2 Bbl. Carb's. w/Single Grove Lock Std.		8	———	———	———	———	———	3418 475
	.005 o/s		8	———	———	———	———	———	3418 476
	.015 O/S		8	———	———	———	———	———	3418 477
	.030 o/s		8	———	———	———	———	———	3418 478
	VALVE PACKAGE, Intake, w/3-2 Bbl. Carb's. w/Double Grove Lock								
	Std.	71	8	———	———	———	———	———	= 3549 983
	.005 o/s	71	8	———	———	———	———	———	= 3549 984
	.015 o/s	71	8	———	———	———	———	———	= 3549 985
	.030 o/s	71	8	———	———	———	———	———	= 3549 986
9-39-6	VALVE, Exhaust Std.		8	2465 339	2863 521	2863 521	———	2468 146	———
	.005 O/S.		8	2465 340	2863 533	2863 533	———	2468 147	———
	.015 O/S.		8	2465 341	2863 534	2863 534	———	2468 148	———
	.030 O/S.		8	2465 342	2863 535	2863 535	———	2468 149	———
	w/2 Bbl. Carb., B,J,R,W								
	Std.	70	8	———	———	———	2899 036	———	———
	.005 O/S.	70	8	———	———	———	3512 096	———	———
	.015 O/S.	70	8	———	———	———	2899 038	———	———
	.030 O/S.	70	8	———	———	———	2899 039	———	———
	w/4 Bbl. Carb. B,J,R,W								
	Std.	70	8	———	———	———	3512 095	———	———
	.005 O/S.	70	8	———	———	———	3512 096	———	———
	.015 O/S.	70	8	———	———	———	3512 097	———	———
	.030 O/S.	70	8	———	———	———	3512 098	———	———
	w/2 and 4 Bbl. Carb., P, D,C Std.	70	8	———	———	———	2899 036	———	———

CARLINES J - Challenger V - Valiant R - Belvedere - Satellite P - Plymouth C - Chrysler
B - Barracuda L - Dart W - Coronet - Charger D - Dodge Y - Imperial

AR Indicates use as required.
# Indicates parts not listed in any previous parts book.
Numerals in parentheses ( ) refer to notes.
★ Indicates change or addition.

Printed in U.S.A.
January 1972

CODE	PART NAME AND DESCRIPTION		PER CAR	CU. IN. DISPLACEMENT & PISTON BORE SIZE					
				318	340	360	383	426	440
				3.91	4.04	4.00	4.25	4.26	4.32
	EIGHT CYLINDER ENGINES								
	9-39-0 VALVE Cont'd.								
9-39-6	VALVE Cont'd.								
	.005 O/S.	70	8	———	———	———	3512 096	———	———
	.015 O/S.	70	8	———	———	———	2899 038	———	———
	.030 O/S.	70	8	———	———	———	2899 039	———	———
	w/2 Bbl. Carb. Std.	71	8	———	———	———	2899 036	———	———
	.005 O/S.	71	8	———	———	———	3512 096	———	———
	.015 O/S.	71	8	———	———	———	3512 097	———	———
	.030 O/S.	71	8	———	———	———	2899 039	———	———
	w/4 Bbl. Carb. Std.	71	8	———	———	———	3512 095	———	———
	.005 O/S	71	8	———	———	———	3512 096	———	———
	.015 O/S.	71	8	———	———	———	3512 097	———	———
	.030 O/S.	71	8	———	———	———	3512 098	———	———
	w/4 Bbl. Carb. w/O. H/Perf. P,D,C,Y Std.		8	———	———	———	———	———	2899 036
	.005 O/S.		8	———	———	———	———	———	3512 096
	.015 O/S.		8	———	———	———	———	———	3512 097
	.030 O/S.		8	———	———	———	———	———	2899 039
	w/4 Bbl. Carb., w/H/Perf., B,J,R,W,P,D,C Std.		8	———	———	———	———	———	3512 095
	.005 O/S.		8	———	———	———	———	———	3512 096
	.015 O/S.		8	———	———	———	———	———	3512 097
	.030 O/S.		8	———	———	———	———	———	3512 098
	w/3-2 Bbl. Carb's. Std.		8	———	———	———	———	———	3418 479
	.005 O/S.		8	———	———	———	———	———	3418 480
	.015 O/S.		8	———	———	———	———	———	3418 481
	.030 O/S.		8	———	———	———	———	———	3418 482
9-39-14	SHIELD, Valve Stem Oil		16	2205 958	2205 958	2205 958	2121 686	———	2121 686
	Intake Valve		8	———	———	———	———	2899 547	———
	Exhaust Valve		8	———	———	———	———	2899 548	———
9-39-15	SPRING, Valve, w/o Exhaust Valve Damper		16	1739 534	———	1739 534	———	———	———
	w/Intake Valve, w/Exhaust Valve Damper		8	1739 534	———	1739 534	———	———	———
	w/Exhaust Valve w/Damper		8	= 3671 136	———	= 3671 136	———	———	———
	SPRING, Valve		16	———	2863 439	———	———	3418 491	———
	w/2 Bbl. Carb., B,J,R, W	70	16	———	———	———	2658 471	———	———
	w/4 Bbl. Carb., B,J,R, W	70	16	———	———	———	2658 204	———	———
	w/2 and 4 Bbl. Carb., P, D,C	70	16	———	———	———	2658 471	———	———
	w/2 Bbl. Carb.	71	16	———	———	———	2658 471	———	———
	w/4 Bbl. Carb.	71	16	———	———	———	2658 204	———	———
	w/4 Bbl. Carb., w/o H/Perf., P,D,C,Y		16	———	———	———	———	———	2658 471
	w/4 Bbl. Carb., w/H/Perf. B,J,R,W,P,D,C		16	———	———	———	———	———	2658 204
	w/3-2 Bbl. Carb's.		16	———	———	———	———	———	3418 491
9-39-16	RETAINER, Valve Spring		16	2402 045	2402 045	2402 045	2402 045	2531 332	2402 045
9-39-17	LOCK, Intake Valve Spring Retainer		16	381 875	———	———	———	———	———
	w/Single Grove		16	———	———	2402 312	2402 312	———	2402 312
	w/Double Grove	71	16	———	———	381 875	381 875	———	381 875
	Exhaust Valve Spring Retainer		16	1614 666	———	———	1614 666	———	1614 666
	Valve Spring Retainer		32	———	1614 666	———	———	2264 658	———
	Exhaust Valve Spring Retainer	71	16	———	———	1614 666	———	———	———

CARLINES J - Challenger B - Barracuda V - Valiant L - Dart R - Belvedere - Satellite W - Coronet - Charger P - Plymouth D - Dodge C - Chrysler Y - Imperial

AR Indicates use as required.
\# Indicates parts not listed in any previous parts book.
Numerals in parentheses ( ) refer to notes.
★ Indicates change or addition.

Printed in U.S.A.
January 1972

EIGHT CYLINDER ENGINES

CODE	PART NAME AND DESCRIPTION	PER CAR	CU. IN. DISPLACEMENT & PISTON BORE SIZE					
			318	340	360	383	426	440
			3.91	4.04	4.00	4.25	4.26	4.32
9-39-0	**VALVE Cont'd.**							
9-39-21	SPACER, Valve Spring	AR	1859 144	1859 144	1859 144	1859 144	1859 144	1859 144
9-41-0	**VALVE TAPPET**							
9-41-1	SILENCER PACKAGE, Tappet Chamber	1	———	———	———	1879 747	———	———
	w/4 Bbl. Carb. w/O. H/Perf.	1	———	———	———	———	———	1879 747
9-41-4	TAPPET, Valve .0005 U/S.	AR	———	———	———	———	3418 238	———
	Std.	16	3004 643	———	3004 643	3004 647	3418 239	———
	.001 O/S.	16	3004 644	———	3004 644	3004 648	3418 240	———
	.008 O/S.	16	3004 645	———	3004 645	3004 649	3418 241	———
	.030 O/S.	16	3004 646	———	3004 646	3004 650	3418 242	———
	w/4 Bbl. Carb. Std.	16	———	3004 643	———	———	———	3004 647
	.001 O/S.	16	———	3004 644	———	———	———	3004 648
	.008 O/S.	16	———	3004 645	———	———	———	3004 649
	.030 O/S.	16	———	3004 646	———	———	———	3004 650
	w/3-2 Bbl. Carb's. Std.	16	———	3577 092	———	———	———	3420 039
	.0005 O/S	16	———	3577 093	———	———	———	———
	.001 O/S.	16	———	3577 094	———	———	———	3420 040
	.008 O/S.	16	———	3577 095	———	———	———	3420 041
	.030 O/S.	16	———	3477 096	———	———	———	3420 042
9-42-0	**VALVE PUSH ROD**							
9-42-1	ROD, Valve Push	16	2899 561	———	———	2899 594	———	2899 595
	w/4 Bbl. Carb.	16	———	2899 567	———	———	———	———
	w/3-2 Bbl. Carb's.	16	———	3577 121	———	———	———	———
	71	16	———	———	2899 567	———	———	———
	Intake Valve	8	———	———	———	———	3418 359	———
	Exhaust Valve	8	———	———	———	———	3418 360	———
9-43-0	**VALVE ROCKER**							
9-43-1	ROCKER, Valve Right	8	3004 716	———	3004 716	3004 718	———	3004 718
	Left	8	3004 717	———	3004 717	3004 719	———	3004 719
	w/4 Bbl. Carb., Rt.	8	———	3418 425	———	———	———	———
	w/4 Bbl. Carb., Lt.	8	———	3418 424	———	———	———	———
	w/3-2 Bbl. Carb's. Intake,							
	w/3-2 Bbl. Carb's. Intake, Rt.	4	———	3577 076	———	———	———	———
	w/3-2 Bbl. Carb's. Intake Lt.	4	———	3577 077	———	———	———	———
	w/3-2 Bbl. Carb's. Exhaust	8	———	3577 078	———	———	———	———
	Intake Valve	8	———	———	———	———	2468 173	———
	Exhaust Valve	8	———	———	———	———	2468 174	———
9-43-2	BUSHING, Intake Valve Rocker	8	———	———	———	———	2468 898	———
	Exhaust Valve Rocker	8	———	———	———	———	2468 132	———
9-43-3	SCREW, Valve Rocker Adjusting, w/3-2 Bbl. Carb's. 70	16	———	2402 525	———	———	———	———
		16	———	———	———	———	2402 525	———
	Nut	16	———	6023 587	———	———	6023 587	———
9-43-5	SPACER, Valve Rocker		———	———	———	1737 756	———	1737 756
9-43-9	SHAFT, Valve Rocker	2	2532 149	———	2532 149	2465 850	———	2465 850
	w/4 Bbl. Carb.	2	———	2532 149	———	———	———	———
	w/3-2 Bbl. Carb's.	2	———	3577 086	———	———	———	———
	Intake Valve Rocker	2	———	———	———	———	2468 124	———
	Exhaust Valve Rocker	2	———	———	———	———	2468 126	———

CARLINES J - Challenger, B - Barracuda, V - Valiant, L - Dart, R - Belvedere - Satellite, W - Coronet - Charger, P - Plymouth, D - Dodge, C - Chrysler, Y - Imperial

AR Indicates use as required.
\# Indicates parts not listed in any previous parts book.
Numerals in parentheses ( ) refer to notes.
★ Indicates change or addition.

Printed in U.S.A.
January 1972

EIGHT CYLINDER ENGINES

CODE	PART NAME AND DESCRIPTION	PER CAR	CU. IN. DISPLACEMENT & PISTON BORE SIZE					
			318	340	360	383	426	440
			3.91	4.04	4.00	4.25	4.26	4.32
9-43-0	**VALVE ROCKER Cont'd.**							
9-43-10	BRACKET, Valve Rocker Shaft Support	4	———	———	———	———	2468 089	———
	Intermediate	4	———	———	———	———	2468 088	———
	Right Front and Left Rear Offset	2	———	———	———	———	2468 091	———
9-43-11	RETAINER, Valve Rocker Shaft, End and Center	6	2463 322	2463 322	2463 322	2463 282	———	2463 282
	Intermediate	4	2463 323	2463 323	2463 323	2463 283	———	2463 283
9-43-14	SPRING, Valve Rocker Shaft	14	———	———	———	———	2468 128	———
		2	———	———	———	———	1632 106	———
9-43-19	PLUG, Valve Rocker Shaft	AR	1324 268	1324 268	1324 268	1324 268	1324 268	1324 268
9-45-0	**FLYWHEEL**							
9-45-1	FLYWHEEL, w/Ring Gear	1	2264 597	2264 597	———	2264 597	———	———
	71	1	———	———	3410 916	———	———	———
	w/4 Speed Man. Trans.	1	———	———	———	———	3410 258	3410 837
	Bolt	6	192 356	192 356	192 356	192 356	———	192 356
		8	———	———	———	———	9411 259	———
9-45-2	GEAR, Flywheel Ring	1	1941 648	1941 648	1941 648	1941 648	1941 648	1941 648
	GEAR, Torque Converter Starter Ring w/A904 Auto. Trans.	1	2121 196	———	———	———	———	———
	w/A727 Auto. Trans.	1	1941 648	1941 648	3515 203	1941 648	1941 648	1941 648
9-46-0	**TORQUE CONVERTER**							
9-46-4	TORQUE CONVERTER w/A904 Trans.	1	2801 762	———	———	———	———	———
	w/A727 Trans.	1	2801 764	———	———	———	———	———
	w/A727 H/Duty Trans.	1	2843 586	———	———	———	———	———
		1	———	2801 764	———	———	2801 766	———
	71	1	———	———	3410 918	———	———	———
	w/2 Bbl. Carb., w/O. Cast Crankshaft	1	———	———	———	2843 586	———	———
	w/2 Bbl. Carb., w/Cast Crankshaft (See Note 2 Page 1)	1	———	———	———	3515 282	———	———
	w/4 Bbl. Carb.	1	———	———	———	2801 764	———	———
	w/O. H/Perf. P,D,C,Y	1	———	———	———	———	———	2843 586
	w/H/Perf. w/4 Bbl. and 3-2 Bbl. Carb's.	1	———	———	———	———	———	3410 839
9-46-8	PLATE, Torque Converter Drive	1	2400 885	2400 885	2400 885	———	2466 715	2204 768
	w/Heavy Duty A727 Trans.	1	2204 768	———	———	———	———	———
	w/2 Bbl. Carb.	1	———	———	———	2204 768	———	———
	w/4 Bbl. Carb.	1	———	———	———	2400 885	———	———
9-46-21	SCREW, Torque Converter Drive Plate to Crankshaft	6	1949 424	1949 424	1949 424	1949 424	———	1949 424
		8	———	———	———	———	6025 528	———
	SCREW, Drive Plate to Torque Converter	4	1949 765	1949 765	1949 765	1949 765	6024 318	1949 765
9-46-31	COOLER, Radiator Core Oil Lgh. Wide							
	7.37" x 1.00"	AR	2998 999	2998 999	2998 999	2998 999	2998 999	2998 999
	7.37" x 1.25"	AR	2998 998	2998 998	2998 998	2998 998	2998 998	2998 998
	11.37 x 1.00"	AR	2998 997	2998 997	2998 997	2998 997	2998 997	2998 997
	13.37 x 1.25"	AR	2998 996	2998 996	2998 996	2998 996	2998 996	2998 996
	16.37 x 1.25"	AR	2998 995	2998 995	2998 995	2998 995	2998 995	2998 995
	13.37 x 1.50"	AR	2998 994	2998 994	2998 994	2998 994	2998 994	2998 994
	11.37 x 1.50"	AR	2998 993	2998 993	2998 993	2998 993	2998 993	2998 993

CARLINES J - Challenger, B - Barracuda, V - Valiant, L - Dart, R - Belvedere - Satellite, W - Coronet - Charger, P - Plymouth, D - Dodge, C - Chrysler, Y - Imperial

AR Indicates use as required.
\# Indicates parts not listed in any previous parts book.
Numerals in parentheses ( ) refer to notes.
★ Indicates change or addition.

Printed in U.S.A.
January 1972

CODE	PART NAME AND DESCRIPTION		PER CAR	CU. IN. DISPLACEMENT & PISTON BORE SIZE					
				318	340	360	383	426	440
				3.91	4.04	4.00	4.25	4.26	4.32
EIGHT CYLINDER ENGINES									
9-46-0	**TORQUE CONVERTER Cont'd.**								
9-46-31	COOLER Cont'd.								
	COOLER, Trans. Oil Auxiliary B, J	70	1	———	———	———	———	3410 307	———
	R,W	70	1	———	———	———	———	3410 531	———
	B,J,R,W	71	1	———	———	———	———	3410 307	———
	P,D,C		1	———	———	2892 470	2892 470	———	2892 470
	Y		1	———	———	———	———	———	2801 854
9-46-33	BRACKET, Trans. Oil Cooler Tube, V,L,B,J,R,W	70	1	1949 176	1949 176	———	1949 176	———	1949 176
	P,D	70	1	1949 176	———	———	———	———	———
	P,D,C,Y	70	1	———	———	———	2951 334	———	2951 334
	R,W	70	1	———	———	———	———	3410 532	———
	w/O. Heavy Duty A727 Trans.	71	1	3577 172	———	———	———	———	———
	w/Heavy Duty A727 Trans.	71		3577 306	———	———	———	———	———
	V,L	71	1	———	3577 172	———	———	———	———
	B,J,R,W,	71	1	———	3577 306	———	———	———	———
		71	1	———	———	3577 306	———	———	———
		71	1	———	———	———	3577 171	3577 171	3577 171
	J-Nut, Bracket		AR	———	———	6023 168	6023 168	6023 168	6023 168
	Screw, Tube Clip, P,D,C,Y		2	———	———	9415 910	9415 910	———	9415 910
9-46-43	NUT, Trans. Oil Cooler Tube, Trans. End		2	1941 667	1941 667	1941 667	1941 667	1941 667	1941 667
	Radiator End		2	1941 667	1941 667	1941 667	1941 667	1941 667	1941 667
9-46-44	CONNECTOR, Trans. Oil Cooler Radiator End		2	118 749	118 749	118 749	118 749	118 749	118 749
	w/Auxilary Cooler		2	———	———	2801 853	2801 853	2801 853	2801 853
9-46-130	SEAL, Trans. Torque Converter Impeller Hub, w/A904 Trans.		1	2124 705	———	———	———	———	———
	w/Heavy Duty A727 Trans.		1	1942 020	1942 020	1942 020	1942 020	1942 020	1942 020
9-46-228	ROLLER, Torque Converter Overrunning Clutch		8	670 776	670 776	670 776	670 776	670 776	670 776
9-46-229	SPRING, Torque Converter Overrunning Clutch Roller		8	1942 187	1942 187	1942 187	1942 187	1942 187	1942 187
9-48-0	**MANIFOLD**								
9-48-6	MANIFOLD, Exhaust Right		1	2946 084	———	———	———	———	———
	Left V,L		1	2951 124	———	———	———	———	———
	Left, B,J,R,W,P,D	70	1	2951 915	———	———	———	———	———
	Left, B,J,R,W,P,D	71	1	3512 076	———	———	———	———	———
	Right	70	1	———	2863 545	———	———	———	———
	Right	71	1	———	3418 624	———	———	———	———
	Left	70	1	———	2863 552	———	———	———	———
	Left, V,L	71	1	———	2863 552	———	———	———	———
	Left, B,J,R.W	71	1	———	3418 620	———	———	———	———
	Right	71	1	———	———	3418 624	———	———	———
	Left	71	1	———	———	3418 620	———	———	———
	Right, w/2 Bbl. Carb.		1	———	———	———	2899 954	———	———
	Left, w/2 Bbl. Carb. B, J,R,W		1	———	———	———	2951 864	———	———
	Left, w/2 Bbl. Carb. P, D,C		1	———	———	———	2951 860	———	———
	Right, w/4 Bbl. Carb.		1	———	———	———	2899 968	———	———
	Left, w/4 Bbl. Carb., B, J,R,W		1	———	———	———	2951 864	———	———

CARLINES J - Challenger V - Valiant R - Belvedere - Satellite P - Plymouth C - Chrysler
B - Barracuda L - Dart W - Coronet - Charger D - Dodge Y - Imperial

AR Indicates use as required.
# Indicates parts not listed in any previous parts book.
Numerals in parentheses ( ) refer to notes.
★ Indicates change or addition.

Printed in U.S.A.
January 1972

CODE	PART NAME AND DESCRIPTION	PER CAR	CU. IN. DISPLACEMENT & PISTON BORE SIZE					
			318	340	360	383	426	440
			3.91	4.04	4.00	4.25	4.26	4.32
	EIGHT CYLINDER ENGINES							
	9-48-0 MANIFOLD Cont'd.							
9-48-6	MANIFOLD Cont'd.							
	Left, w/4 Bbl. Carb., P, D,C	1	———	———	———	2951 217	———	———
	Right 70	1	———	———	———	———	2780 506	———
	Right 71	1	———	———	———	———	3577 282	———
	Left	1	———	———	———	———	3418 452	———
	Right, w/4 Bbl. Carb. w/O. H/Perf., P,D,C,Y	1	———	———	———	———	———	2899 954
	Left, w/4 Bbl. Carb. w/O. H/Perf., P,D,C,Y	1	———	———	———	———	———	2951 860
	Right, w/4 Bbl. Carb. w/H/Perf., B,J,R,W,P,D,C	1	———	———	———	———	———	2899 968
	Left, w/4 Bbl. Carb. w/H/Perf., B,J,R,W	1	———	———	———	———	———	2951 864
	Left, w/4 Bbl. Carb. w/H/Perf., P,D,C	1	———	———	———	———	———	3418 352
	Right, w/3-2 Bbl. Carb's.,B,J,R,W	1	———	———	———	———	———	2899 968
	Left, w/3-2 Bbl. Carb's., B,J,R,W	1	———	———	———	———	———	2951 864
	Screw, Exhaust Manifold Long 5/18" x 2 1/8"	AR	9421 360	9421 360	9421 360	———	———	———
	Stud, Exhaust Manifold	12	———	———	———	6028 023	6028 023	6028 023
	Screw, Exhaust Manifold Left, V, L	1	6028 356	———	———	———	———	———
	Stud, Exhaust Manifold, Left, B, J, R, W, P, D	1	6028 355	———	———	———	———	———
	P, D, C	1	———	———	6028 355	———	———	———
9-48-7	MANIFOLD, Intake	1	2951 184	———	———	———	2780 542	———
	w/4 Bbl. Carb. 70	1	———	3462 847	———	———	———	———
	w/4 Bbl. Carb. 71	1	———	3512 099	———	———	———	———
	w/3-2 Bbl. Carb's.	1	———	3418 681	———	———	———	———
	except, C 71	1	———	———	3418 434	———	———	———
	C 71	1	———	———	= 3614 344	———	———	———
	w/2 Bbl. Carb.	1	———	———	———	2951 669	———	———
	w/4 Bbl. Carb.	1	———	———	———	2951 665	———	———
	w/4 Bbl. Carb. 70	1	———	———	———	———	———	2951 737
	w/4 Bbl. Carb. except Y 71	1	———	———	———	———	———	3512 502
	w/4 Bbl. Carb., Y 71	1	———	———	———	———	———	3577 164
	w/3-2 Bbl. Carb's.	1	———	———	———	———	———	2946 275
	Bolt, 3/8" x 1 5/8"	8	9417 050	9417 050	———	———	———	———
	Bolt, 3/8" x 1 1/2"	AR	———	9421 218	———	9421 218	———	9421 218
	Washer, Ground Cable	1	———	———	———	6026 273	———	6026 273
	Screw, w/Washer 1/4 x 2.44	7	———	———	———	———	6025 700	———
	Screw, w/Washer 1/4" x 3.00"	3	———	———	———	———	6025 701	———
	Stud, Left Rear 1/4" x 3.75"	1	———	———	———	———	6026 429	———
	Stud, Right, Front, Rear	2	———	———	———	———	6027 207	———
	Stud, Left, Front	1	———	———	———	———	6026 994	———
	Nut, w/Washer Stud	6	———	———	———	———	6023 118	———
	Stud, Center, Right, Left	2	———	———	———	———	6026 994	———
9-48-8	CONNECTOR, Intake Manifold Vacuum Control O.D.							
	.127" Tube	AR	1858 955	1858 955	1858 955	1858 955	1858 955	1858 955
	O.D. .125" Tube	AR	2863 486	2863 486	———	2863 486	2863 486	2863 486
	O.D. .252" Tube	AR	2658 625	———	———	———	———	———
	O.D. 1875 Side Tube	AR	———	———	———	3614 059	———	3614 059

CARLINES J - Challenger, B - Barracuda, V - Valiant, L - Dart, R - Belvedere - Satellite, W - Coronet - Charger, P - Plymouth, D - Dodge, C - Chrysler, Y - Imperial

AR Indicates use as required.
# Indicates parts not listed in any previous parts book.
Numerals in parentheses ( ) refer to notes.
★ Indicates change or addition.

Printed in U.S.A.
January 1972

1970-71 PASSENGER CAR PARTS CATALOG

EIGHT CYLINDER ENGINES

CODE	PART NAME AND DESCRIPTION		PER CAR	CU. IN. DISPLACEMENT & PISTON BORE SIZE					
				318	340	360	383	426	440
				3.91	4.04	4.00	4.25	4.26	4.32
9-48-0	**MANIFOLD Cont'd.**								
9-48-8	CONNECTOR Cont'd.								
	O.D. .125 and .1875								
	Side Tube		AR	———	———	———	3614 063	———	3614 063
9-48-9	PLUG, Intake Manifold Vacuum								
	Control Hole		1	1859 127	1859 127	1859 127	1859 127	1859 127	1859 127
	Plug, Intake Manifold		1	———	———	———	———	1392 371	———
9-48-14	WASHER, Exhaust Manifold End								
	Stud Nut		4	2121 223	2121 223	2121 223	———	———	———
	Exhaust Manifold Left Long								
	Screw	70	AR	2121 223	2121 223	———	———	———	———
9-48-26	TUBE, Exhaust Manifold To								
	Intake Manifold Heat		1	———	———	———	———	2780 613	———
9-48-27	REINFORCEMENT, Intake								
	Manifold Gasket End		2	———	———	———	1859 332	———	1851 665
9-48-44	NUT, Exhaust Manifold Stud								
	Long	70	AR	———	———	———	2268 282	———	2268 282
		71	AR	———	———	———	3614 292	———	3614 292
	Stud Medium		AR	———	———	———	2806 982	———	2806 982
9-48-45	WASHER, Exhaust Manifold								
	Attaching Bolt		11	———	———	———	———	2780 643	———
9-48-56	SHIELD, Intake Manifold Heat		1	3418 917	———	———	———	2468 218	———
	w/4 Bbl. Carb.		1	———	3418 916	———	———	———	———
	w/3-2 Bbl. Carb's.		1	———	3577 199	———	———	———	———
		71	1	———	———	3418 916	———	———	———
9-48-125	COVER, Exhaust Manifold Heat								
	Tube To Carburetor Tube		AR	———	———	———	———	1484 356	———
9-48-126	TUBE, Exhaust Manifold Heat	70	1	———	———	———	———	1325 850	———
9-48-140	CLIP, Exhaust Manifold Heat								
	Tube to Carb. Tube	70	1	———	———	———	———	2780 654	———
9-50-0	**MANIFOLD GASKETS**								
9-50-1	GASKET SET, Intake Manifold		1	3420 027	———	———	———	———	———
	w/4 Bbl. Carb.		1	———	2808 689	———	———	———	———
	w/3-2 Bbl. Carb's.		1	———	3514 187	———	———	———	———
		71	1	———	———	2808 689	———	———	———
			1	———	———	———	———	2808 306	———
	w/3-2 Bbl. Carb's.		1	———	———	———	———	———	3514 186
9-50-5	GASKET, Exhaust Manifold Left,								
	w/Heat, V,L		1	2951 285	———	———	———	———	———
			1	———	2946 105	———	———	———	———
	GASKET, Exhaust Manifold		2	———	———	———	———	2780 534	———
9-50-6	GASKET, Intake Manifold		1	———	———	———	2899 299	———	1851 664
	GASKET, Intake Manifold Plug		1	———	———	———	———	2780 680	———
9-50-18	GASKET, Heat Tube		2	———	———	———	———	2780 614	———
9-58-0	**MANIFOLD HEAT CONTROL VALVE THERMOSTAT**								
9-58-1	HEAT CONTROL VALVE								
	PACKAGE, Manifold		1	3004 709	———	———	———	2808 393	———
	Canada	70	1	3420 227	———	———	———	———	———
		70	1	———	3004 574	———	———	———	———
		71	1	———	3549 398	3549 398	———	———	———
	w/2 Bbl. Carb.		1	———	———	———	3420 045	———	———
	w/4 Bbl. Carb.		1	———	———	———	3420 046	———	———
	w/4 Bbl. Carb. w/O.								
	H/Perf.		1	———	———	———	———	———	3420 045
	w/4 Bbl. Carb. and 3-2								
	Bbl. Carb's., w/H/Perf.		1	———	———	———	———	———	3420 046

CARLINES J - Challenger, B - Barracuda, V - Valiant, L - Dart, R - Belvedere - Satellite, W - Coronet - Charger, P - Plymouth, D - Dodge, C - Chrysler, Y - Imperial

AR Indicates use as required.
\# Indicates parts not listed in any previous parts book.
Numerals in parentheses ( ) refer to notes.
★ Indicates change or addition.

Printed in U.S.A.
January 1972

CODE	PART NAME AND DESCRIPTION		PER CAR	CU. IN. DISPLACEMENT & PISTON BORE SIZE					
				318	340	360	383	426	440
				3.91	4.04	4.00	4.25	4.26	4.32
EIGHT CYLINDER ENGINES									
9-58-0	**MANIFOLD HEAT CONTROL VALVE THERMOSTAT Cont'd.**								
9-58-5	THERMOSTAT, Exhaust Manifold Heat Control		1	———	———	———	———	2843 685	———
9-58-12	COUNTERWEIGHT, Exhaust Manifold Heat Control Valve		1	———	———	———	———	2780 615	———
9-58-14	LOCK, Exhaust Manifold Heat Control Valve Counterweight		1	———	———	———	———	2806 151	———
9-59-0	**MANIFOLD HEAT CONTROL VALVE**								
9-59-10	PLUG, Exhaust Manifold Heat Control Valve Shaft Hole	70	1	———	2843 957	———	———	———	———
9-59-13	SPRING, Exhaust Manifold Heat Control Valve Shaft		1	2951 626	———	———	———	———	———
		70	1	———	2863 388	———	———	———	———
		71	1	———	2951 626	2951 626	———	———	———
			1	———	———	———	2951 870	———	2951 870
	Anti-Rattle		2	———	———	———	———	2806 387	———
9-59-15	PIN, Exhaust Manifold Heat Control Valve Shaft Spring		1	2951 627	2951 627	2951 627	1639 597	2806 150	1639 597
9-62-0	**MANIFOLD HEAT CONTROL VALVE STOP**								
9-62-1	STOP, Exhaust Manifold Heat Control Valve Counterweight		1	2946 083	2946 083	2946 083	2946 083	———	2946 083
			2	———	———	———	———	2465 203	———
9-62-2	PIN, Exhaust Manifold Heat Control Valve Stop		1	———	———	———	———	2843 022	———
9-64-0	**ENGINE FRONT SUPPORT**								
9-64-18	WASHER, Engine Front Support Insulator To Frame Bolt V, L	70	2	2128 774	2128 774	———	———	———	———
9-64-24	BRACKET, ENGINE FRONT SUPPORT Insulator Right, V,L		1	2863 443	2863 443	———	———	———	———
	Left, V,L		1	2843 223	2863 445	———	———	———	———
	Right, B,J,R,W,P,D	70	1	2536 125	———	———	———	———	———
	Left, B,J,R,W,P,D	70	1	2806 025	———	———	———	———	———
	Right, B,J,R,W		1	———	3418 394	———	———	———	———
	Left, B,J		1	———	3418 400	———	———	———	———
	Right, except V,L	71	1	3418 394	———	3418 394	———	———	———
	Left, except V,L	71	1	2806 025	———	———	———	———	———
	Left, P,D	71	1	———	———	3418 400	———	———	———
	Right		1	———	———	———	2536 132	———	2536 132
	Left		1	———	———	———	2863 751	———	2863 751
	Right, B,J	70	1	———	———	———	———	2951 601	———
	Right, R,W	70	1	———	———	———	———	2780 672	———
	Left, B,J	70	1	———	———	———	———	3418 305	———
	Left, R,W	70	1	———	———	———	———	2780 673	———
	Right, B,J,R,W	71	1	———	———	———	———	2951 601	———
	Left, B,J,R,W	71	1	———	———	———	———	3418 305	———
	Bolt, Bracket to Block, B,J,R,W		1	———	———	———	9427 473	———	9427 473
	P,D,C,Y		1	———	———	———	433 146	———	433 146
	Nut, Bracket To Block Bolt		6	6026 750	6026 750	6026 750	6026 750	———	6026 750

CARLINES J - Challenger, B - Barracuda, V - Valiant, L - Dart, R - Belvedere - Satellite, W - Coronet - Charger, P - Plymouth, D - Dodge, C - Chrysler, Y - Imperial

AR Indicates use as required.
\# Indicates parts not listed in any previous parts book.
Numerals in parentheses ( ) refer to notes.
★ Indicates change or addition.

Printed in U.S.A.
January 1972

CODE	PART NAME AND DESCRIPTION		PER CAR	CU. IN. DISPLACEMENT & PISTON BORE SIZE					
				318	340	360	383	426	440
				3.91	4.04	4.00	4.25	4.26	4.32
9-67-0	**ENGINE FRONT SUPPORT INSULATOR**								
9-67-4	INSULATOR, Engine Front Support, V,L		2	2806 779	2806 779	———	———	———	———
	B,J		2	2536 121	2536 121	———	2863 735	———	2863 735
	P,D,C,Y		2	2536 121	———	2536 121	2536 121	———	2536 121
	Except Station Wag., R,W		2	2536 121	———	———	2536 121	———	2536 121
	w/Station Wag., R,W		2	2863 735	———	———	2863 735	———	———
	Right		1	———	———	———	———	2532 708	———
	Left, B,J	70	1	———	———	———	———	2951 599	———
	Left, R,W	70	1	———	———	———	———	2468 184	———
	Left	71	1	———	———	———	———	2951 599	———
	Bolt, Insulator to Frame Bolt, B,J,R,W	71	1	———	———	———	———	6026 968	———
	Nut, Insulator To Frame Bolt, V,L		2	6023 353	———	———	———	———	———
	Washer, Insulator To Frame		AR	6025 705	6025 705	6025 705	6025 705	6025 705	6025 705
	Washer, Insulator To Bracket		2	6023 054	6023 054	6023 054	6023 054	———	6023 054
9-69-0	**ENGINE REAR SUPPORT INSULATOR BRACKET**								
9-69-12	SPACER, Engine Rear Support Insulator Bracket								
	B,J,P,D,C,Y	70	2	3410 700	3410 700	———	3410 700	3410 700	3410 700
	B,J,R,W,P,D,C,Y	71	2	3410 700	3410 700	3410 700	3410 700	3410 700	3410 700
9-71-0	**ENGINE REAR SUPPORT INSULATOR**								
9-71-5	INSULATOR, Engine Rear Support, V,L,R,W	70	1	2533 145	———	———	2533 145	———	2533 145
	B,J,P,D,C,Y	70	1	2892 471	2892 471	———	2892 471	———	2892 471
	B,J	70	1	———	———	———	———	3410 310	———
	R,W	70	1	———	———	———	———	2660 673	———
	V,L	71	1	2533 145	2533 145	———	———	———	———
	Except V,L	71	1	2892 471	2892 471	2892 471	2892 471	———	2892 471
	B,J,R,W	71	1	———	———	———	———	3410 310	———
	Screw, V,L,B,J,R,W	70	2	9417 471	9417 471	———	9417 471	9417 471	9417 471
	Nut, Plate Bolt, V,L,R,W		1	6025 804	———	———	6025 804	6025 804	6025 804
	Nut, Insulator To Crossmember Mounting Bolt, B,J,P,D,C,Y		1	6023 353	6023 353	6023 353	6023 353	6023 353	6023 353
	Bolt, Insulator To Crossmember B,J,P,D,C,Y		1	6028 237	6028 237	6028 237	6028 237	———	6028 237
	Stud, Insulator to Extension, P,D,C,Y		2	6028 262	———	6028 262	6028 262	———	6028 262
	Nut, Insulator to Extension Stud P,D,C,Y		2	6026 789	———	6026 789	6026 789	———	6026 789

NOTES

CARLINES: J - Challenger, B - Barracuda, V - Valiant, L - Dart, R - Belvedere - Satellite, W - Coronet - Charger, P - Plymouth, D - Dodge, C - Chrysler, Y - Imperial

AR Indicates use as required.

# Indicates parts not listed in any previous parts book.

Numerals in parentheses ( ) refer to notes.

★ Indicates change or addition.

Printed in U.S.A.
January 1972

GROUP 10 - ENGINE OILING

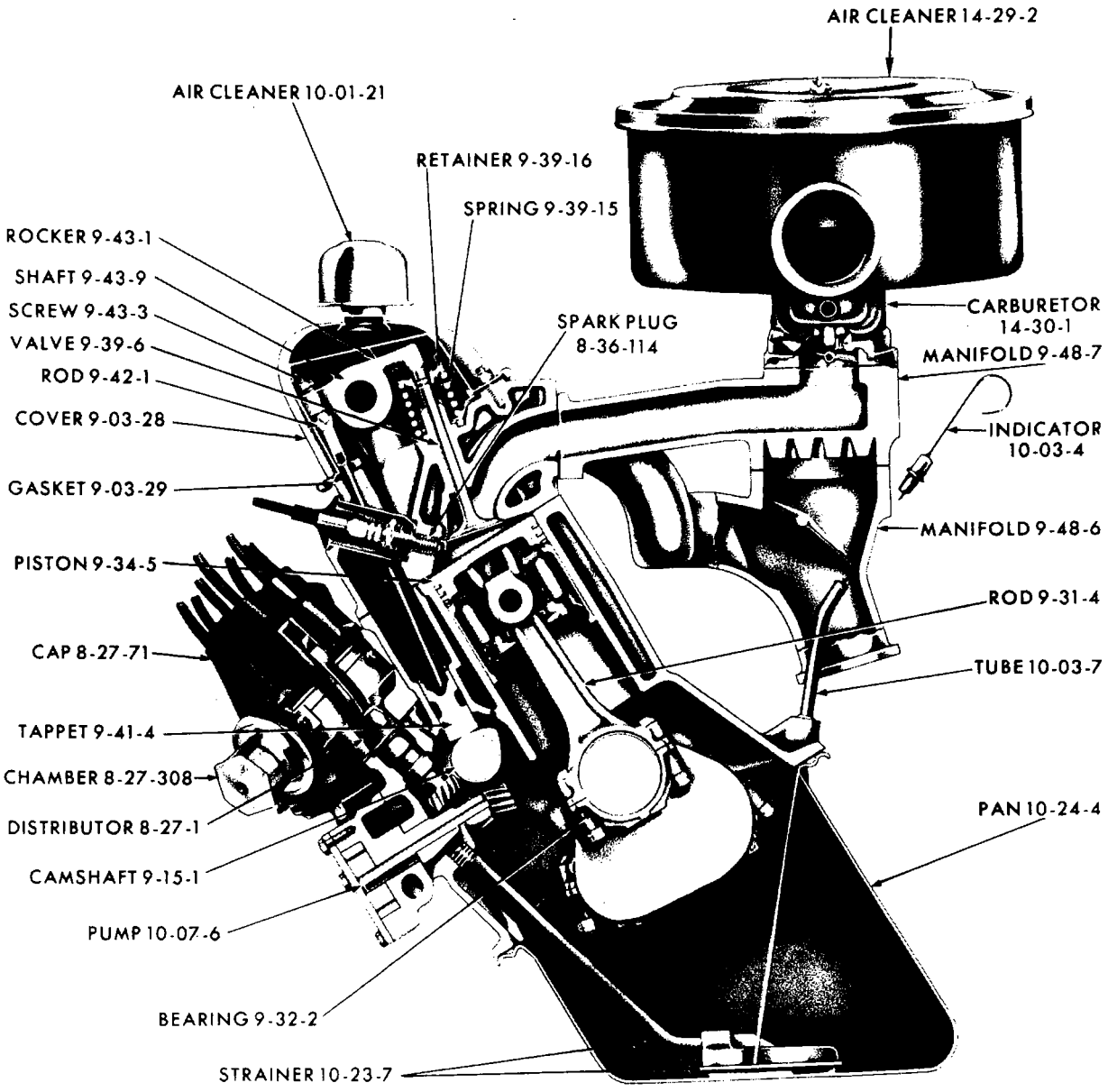

19x8778

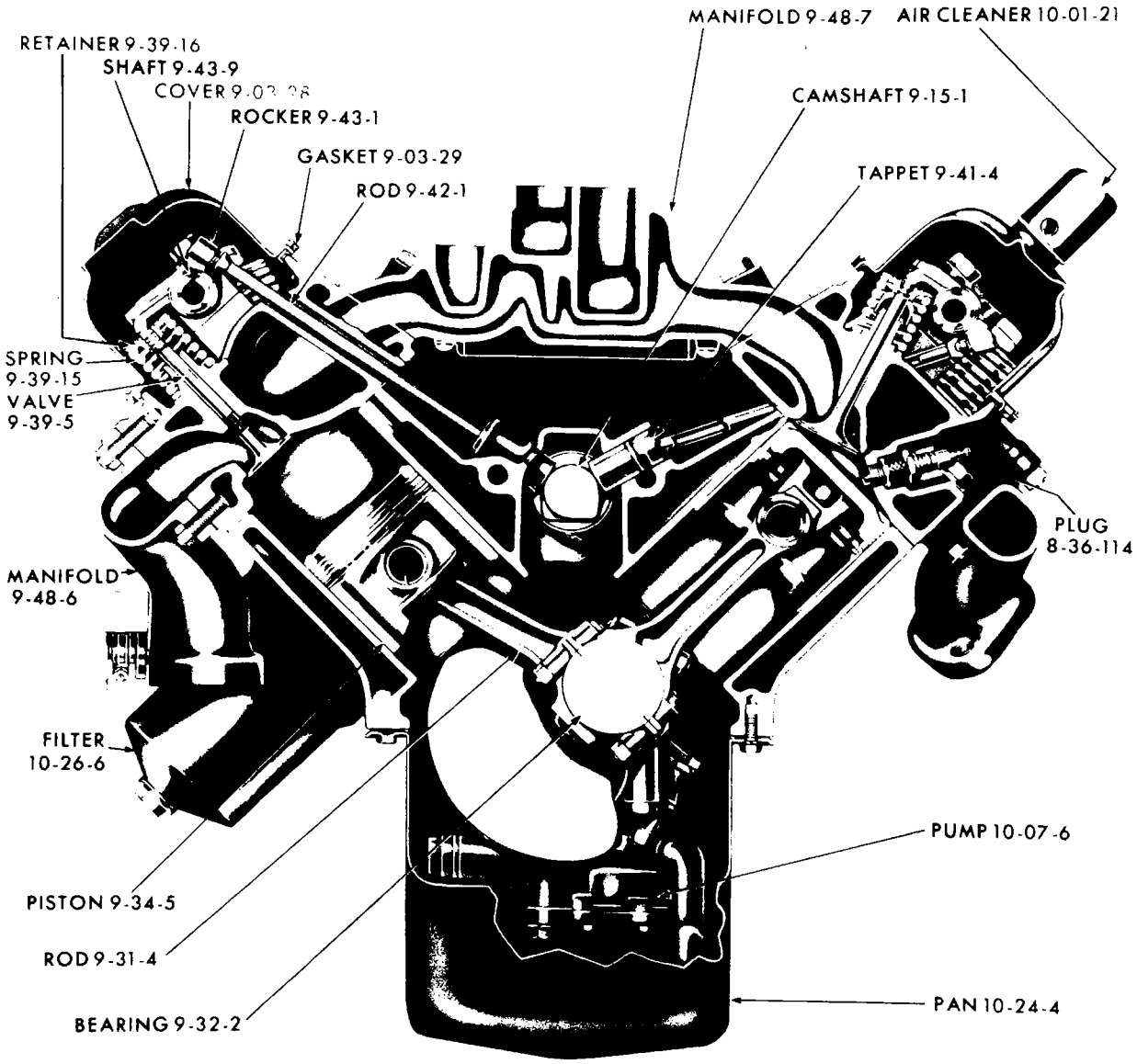

19x8777B

ENGINE OILING - 8 CYLINDER

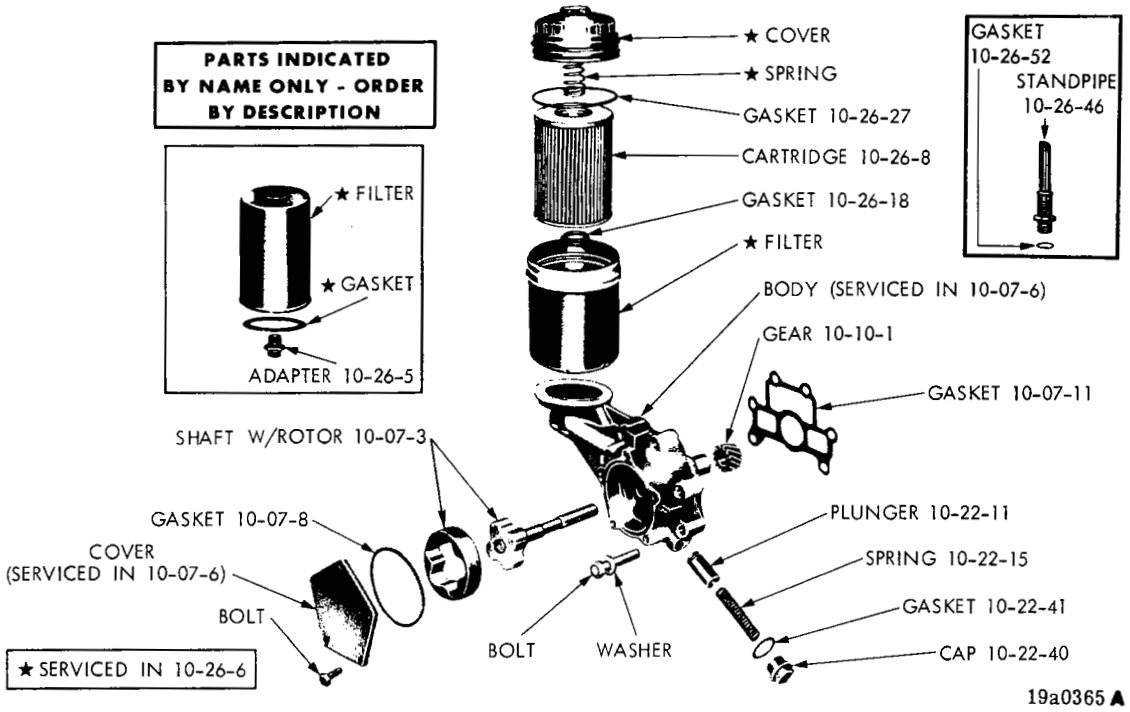

OIL PUMP AND FILTER - 6 CYLINDER

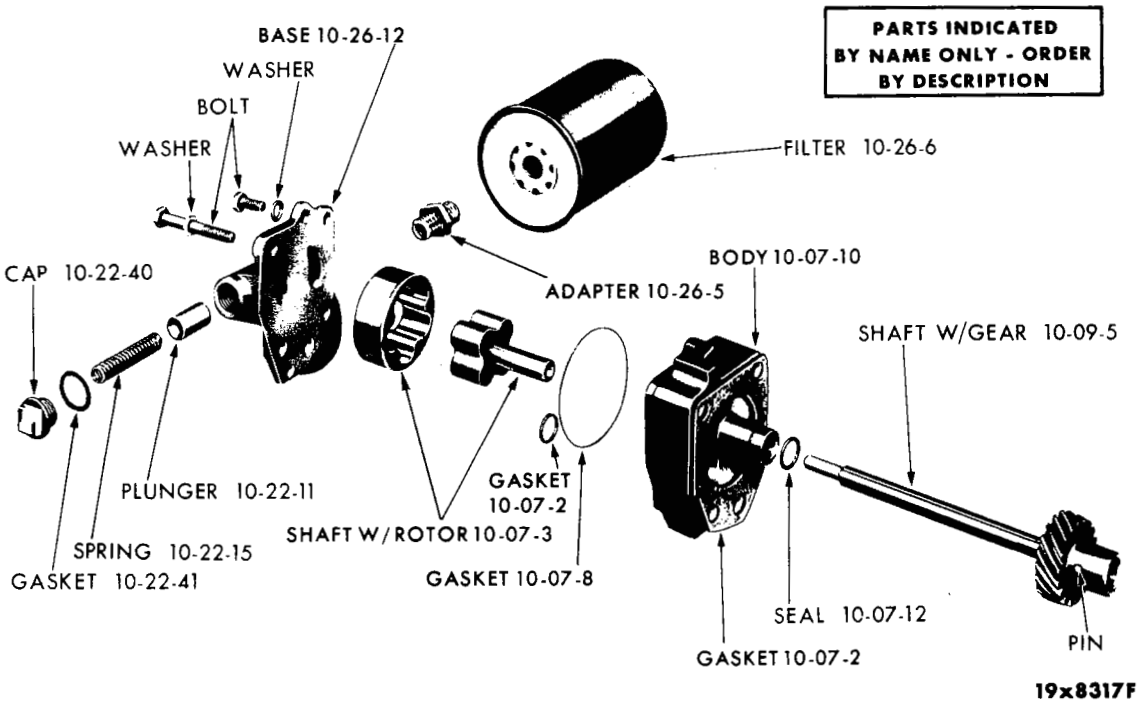

OIL PUMP AND FILTER - 383, 426 AND 440 ENGINE

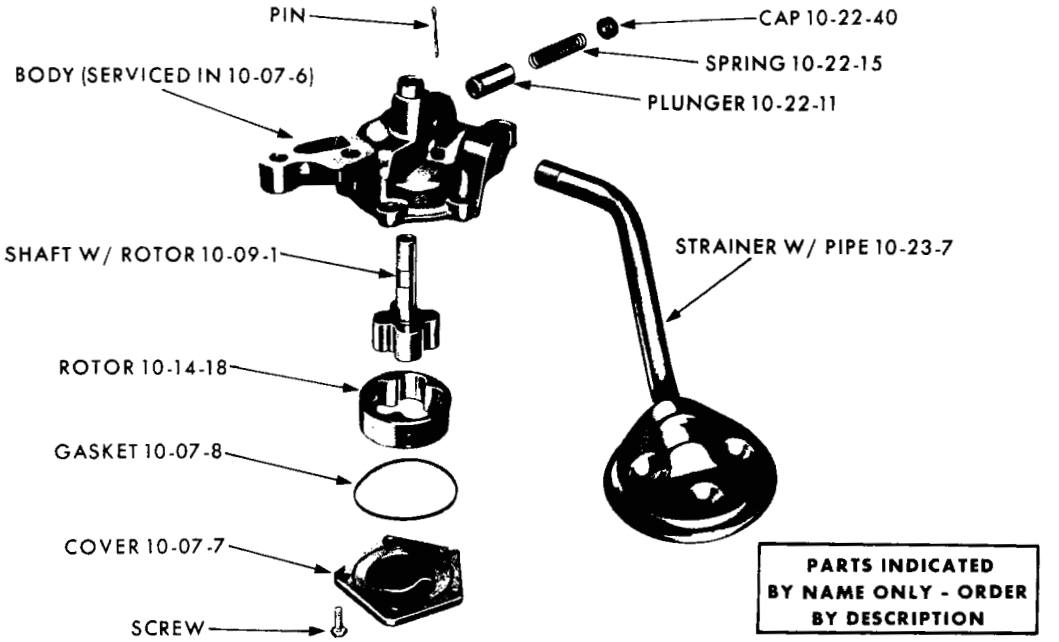

OIL PUMP - 318 AND 340 ENGINE

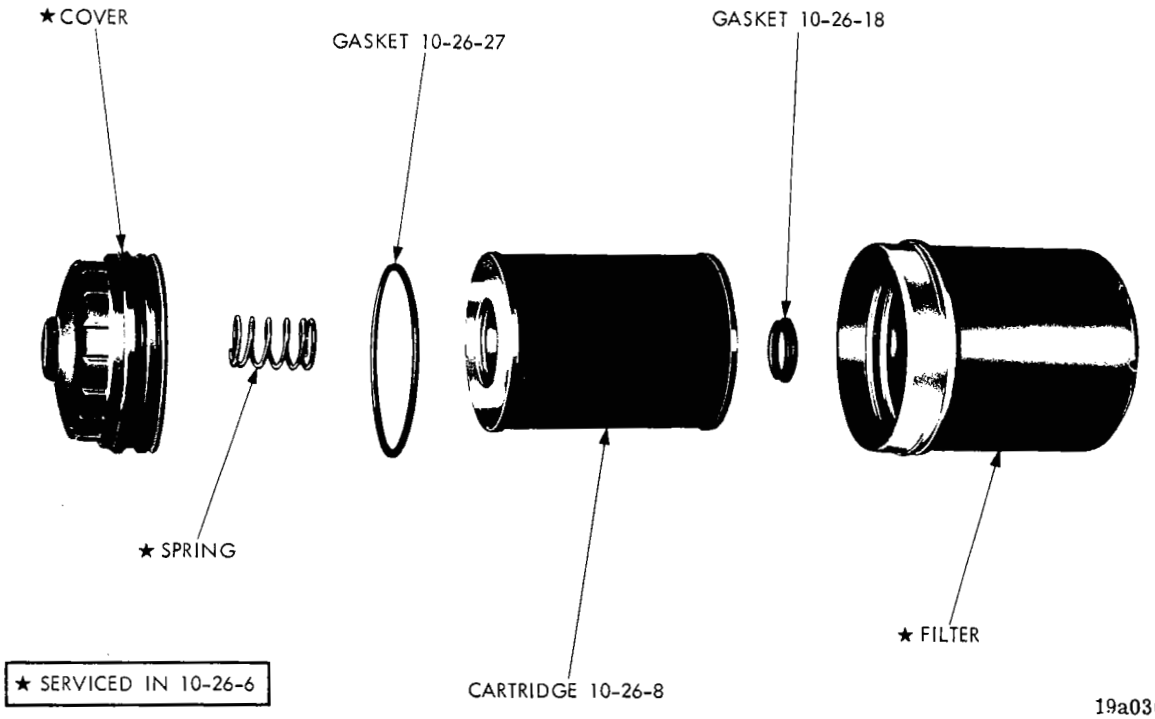

OIL FILTER (REPLACEABLE CARTRIDGE TYPE) - 198, 225, 318 AND 340 ENGINES

Printed in U.S.A.

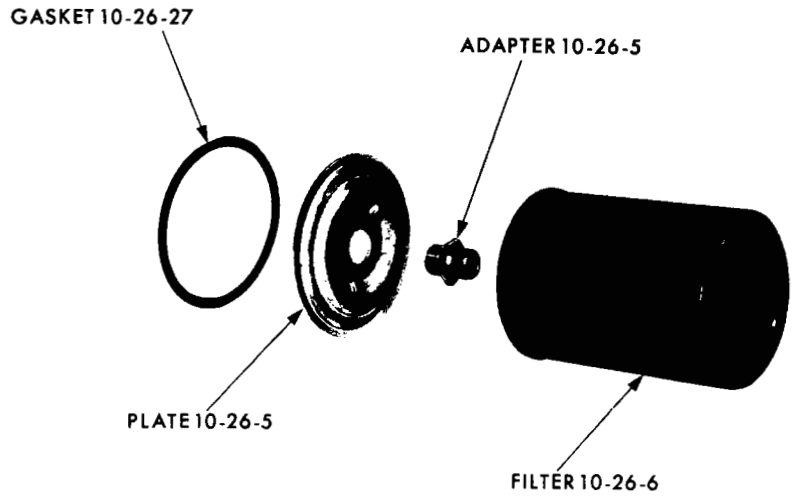

19x9489

OIL FILTER (SEALED CAN TYPE) - 318 ENGINE

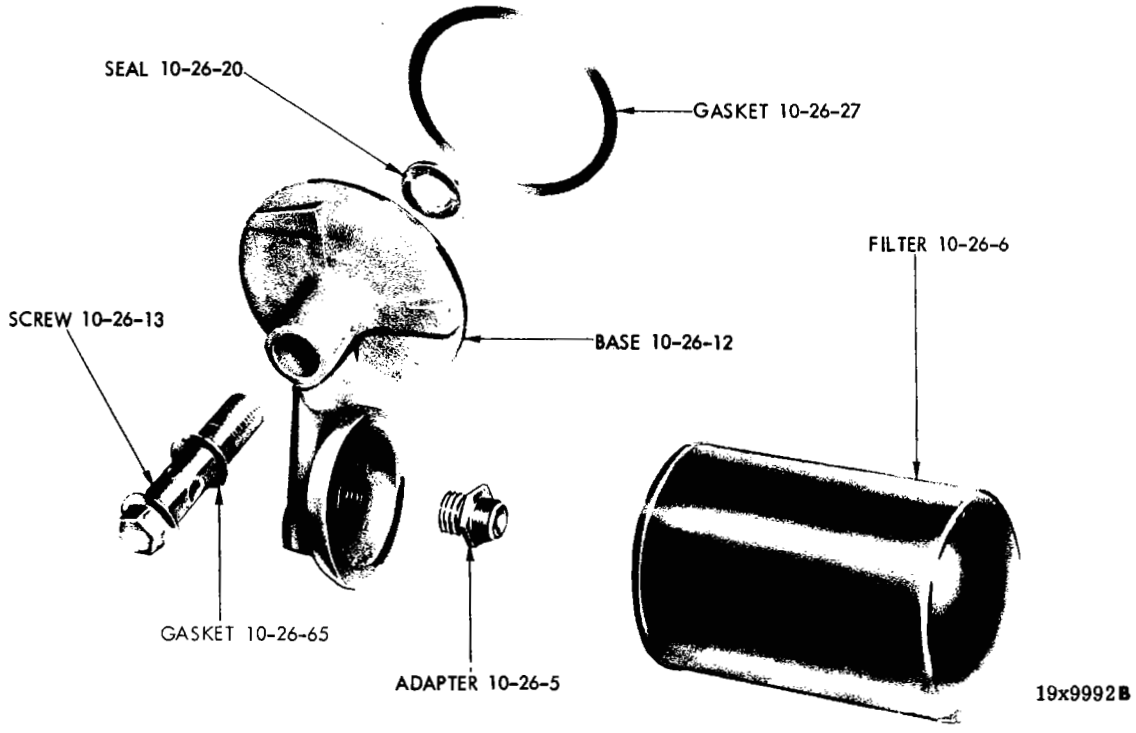

19x9992B

OIL FILTER (SEALED CAN TYPE) - 318 AND 340 ENGINES

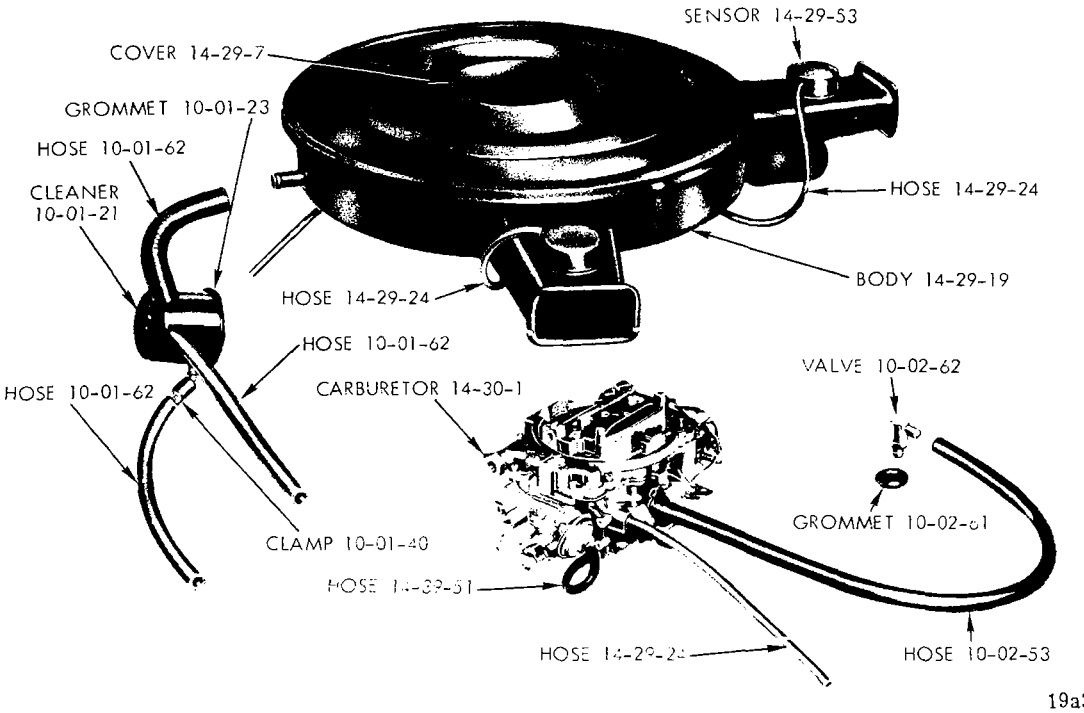

CLOSED CRANKCASE VENT SYSTEM

NOTES

CODE	PART NAME	ENG. TYPE OR CU.IN.	V 1-2	B J 1-2	L 1-2	R 1-2	W 1-2	P 1-2	D 1-2	C 1	C 2	C 3	Y 1	PART NUMBER
10-01-0	**CRANKCASE VENT INLET AIR CLEANER AND OIL FILLER**													
10-01-21	CLEANER, w/o ECS	70	1	1	1	1	1	1	1	1	1	1	1	3462 094
	Export Only	71	1	1	1	1	1	1	1	—	—	—	—	3462 094
	w/ECS	70 6	1	1	1	1	1	1	1	—	—	—	—	3462 095
	All	71 6	1	1	1	1	1	1	1	—	—	—	—	3462 095
		70 8	1	1	1	1	1	1	1	1	1	1	1	3462 096
	All	71 8	1	1	1	1	1	1	1	1	1	1	1	3462 096
	3-2 bbl. Carb.	70 8	—	1	—	—	—	—	—	—	—	—	—	3462 096
	w/Carb. Fresh Air Pkg., Fiberglass Hood 426 Eng., J	70 8	—	1	—	—	—	—	—	—	—	—	—	3462 096
10-01-23	GROMMET, Cleaner		1	1	1	1	1	1	1	1	1	1	1	2946 079
10-01-40	CLAMP, Inlet Air Cleaner to Air Cleaner Hose		2	2	2	2	2	2	2	2	2	2	2	870 469
10-01-54	CAP, Oil Filler, Clear		1	1	1	1	1	1	1	1	1	1	1	2946 051
	Chrome		—	1	—	1	1	1	1	1	1	1	—	2946 052
10-01-62	HOSE, Inlet Air Cleaner To Air Cleaner 55" LGH.		1	1	1	1	1	1	1	—	—	—	—	2825 417
	Molded Type 3 x 5 1/2"	8	1	1	1	1	1	1	1	1	1	1	1	2951 378
	Molded Type, 3 x 9 1/2", use w/Carb. Fresh Air Package, 340 Eng.	8	—	1	—	1	1	—	—	—	—	—	—	3512 778
	Molded Type, 3 x 7 3/4" use w/340 Eng., 3-2 Bbl. Carb.	71 8	—	1	—	—	—	—	—	—	—	—	—	3462 679
	Inlet Air Cleaner To Fuel Tank Vapor Tube, use w/ECS., 24" Lgh., 198, 225, 318, 340 Eng.	70	1	1	1	1	1	1	1	—	—	—	—	1739 243
	Inlet Air Cleaner To Fuel Tank Vapor Tube, 24" Lgh., 198, 225, 318, 340 and 360 Eng.	71	1	1	1	1	1	1	1	—	—	—	—	1739 243
	12" Lgh., 383, 426, 440 Eng.	8	—	1	—	1	1	1	1	1	1	1	1	1739 230
10-02-0	**CLOSED CRANKCASE VENT VALVE**													
10-02-53	HOSE, Vent Valve To Carb. (Sold By The Inch)		AR	AR	AR	AR	AR	AR	AR	AR	AR	AR	AR	883 031
10-02-61	GROMMET, Vent Valve		1	1	1	1	1	1	1	1	1	1	1	2536 926
10-02-62	VALVE, VENT, 170, 225 Eng., Export Only	70 6	1	1	1	—	—	—	—	—	—	—	—	3420 223
	198 Eng.	70 6	1	—	1	—	—	—	—	—	—	—	—	3420 223
	225 Eng.	70 6	1	1	1	1	1	1	1	—	—	—	—	3420 224
	All	70 8	1	1	1	1	1	1	1	1	1	1	1	3420 224
	All	71	1	1	1	1	1	1	1	1	1	1	1	3577 098
10-03-0	**OIL LEVEL INDICATOR**													
10-03-4	INDICATOR	6	1	1	1	1	1	—	—	—	—	—	—	3418 421
		6	—	—	—	—	—	1	1	—	—	—	—	3418 422
	318, 340 Eng.	70 8	1	1	1	1	1	1	1	—	—	—	—	3462 049
	318, 340, 360 Eng.	71 8	1	1	1	1	1	1	1	1	—	—	—	3462 049
	383 Eng., 2 Bbl. Carb.	8	—	1	—	1	1	—	—	—	—	—	—	2899 246
	383 Eng. 4 Bbl. Carb., 440 Eng.	70 8	—	1	—	1	1	—	—	—	—	—	—	3512 078
	383 Eng., 4 Bbl. Carb., 440 Eng.	71 8	—	1	—	1	1	—	—	—	—	—	—	3577 245
	383, 440 Eng.	70 8	—	—	—	—	—	1	1	1	1	1	1	2899 924
	383, 440 Eng.	71 8	—	—	—	—	—	1	1	1	1	1	1	3577 241
	W/Insulator, 426 Eng.	70 8	—	1	—	1	1	—	—	—	—	—	—	3418 343
	w/Insulator, 426 Eng.	71 8	—	1	—	1	1	—	—	—	—	—	—	= 3614 982
10-03-7	TUBE	6	1	1	1	1	1	1	1	—	—	—	—	3418 423
	318, 340 Eng.	70 8	1	1	1	1	1	1	1	—	—	—	—	3418 933
	318, 340, 360 Eng.	71 8	1	1	1	1	1	1	1	1	—	—	—	3418 933
	426 Eng.	8	—	1	—	1	1	—	—	—	—	—	—	2806 243

CARLINES J - Challenger, B - Barracuda, V - Valiant, L - Dart, R - Belvedere - Satellite, W - Coronet - Charger, P - Plymouth, D - Dodge, C - Chrysler, Y - Imperial

AR Indicates use as required.

Numerals in parentheses ( ) refer to notes.

# Indicates parts not listed in any previous parts book.

★ Indicates change or addition.

Printed in U.S.A. January 1972

CODE	PART NAME		ENG. TYPE OR CU.IN.	V 1-2	B J 1-2	L 1-2	R 1-2	W 1-2	P 1-2	D 1-2	C 1	C 2	C 3	Y 1	PART NUMBER
10-03-0	**OIL LEVEL INDICATOR Cont'd.**														
10-03-7	TUBE Cont'd.														
	w/Clip, 383 Eng., 2Bbl. Carb., 440 Eng., w/o H/Perf.		8	—	—	—	—	—	1	1	1	1	1	1	3462 416
	383 Eng., 4 Bbl. Carb., 440 Eng., W/H/Perf.		8	—	—	—	—	—	1	1	1	1	1	—	3462 415
	383, 440 Eng.		8	—	1	—	1	1	—	—	—	—	—	—	3462 415
10-03-10	CLIP, Tube, 426 Eng.		8	—	1	—	1	1	—	—	—	—	—	—	2806 244
10-03-13	SEALER, Tube		6	AR	AR	AR	AR	AR	AR	AR	—	—	—	—	1057 794
10-03-14	INSULATOR, Handle, 426 Eng.		8	—	1	—	1	1	—	—	—	—	—	—	2806 239
	Tube, 426 Eng.		8	—	1	—	1	1	—	—	—	—	—	—	2806 242
10-07-0	**OIL PUMP**														
10-07-2	GASKET and SEAL PACKAGE, 383, 426, 440 Eng.		8	—	1	—	1	1	1	1	1	1	1	1	2084 355
10-07-3	SHAFT and ROTOR PACKAGE		6	1	1	1	1	1	1	1	—	—	—	—	2084 415
	383, 426, 440 Eng.		8	—	1	—	1	1	1	1	1	1	1	1	2084 354
10-07-6	PUMP, 318, 340 Eng.	70	8	1	1	1	1	1	1	1	—	—	—	—	2806 270
	318, 340, 360 Eng.	71		1	1	1	1	1	1	1	1	—	—	—	2806 270
	PUMP PACKAGE		6	1	1	1	1	1	1	1	—	—	—	—	2808 507
	383, 440 Eng.	70	8	—	1	—	1	1	1	1	1	1	1	1	2808 509
	383, 440 Eng.	71	8	—	1	—	1	1	1	1	1	1	1	1	2808 510
	426 Eng., 440 Eng., w/3-2 Bbl. Carb.		8	—	1	—	1	1	1	—	—	—	—	—	2808 510
10-07-7	COVER, Pump, 318, 340 Eng.		8	1	1	1	1	1	1	1	—	—	—	—	2206 095
	318, 340, 360 Eng.	71	8	1	1	1	1	1	1	1	1	—	—	—	2206 095
10-07-8	GASKET, Cover			1	1	1	1	1	1	1	1	1	1	1	2268 921
10-07-10	BODY, 383, 440 Eng.	70	8	—	1	—	1	1	1	1	1	1	1	1	1737 718
	426 Eng., and 440 Eng., w/3-2 Bbl. Carb.	70	8	—	1	—	1	1	—	—	—	—	—	—	2780 639
	383, 426, 440 Eng., All	71		—	1	—	1	1	1	1	1	1	1	1	2780 639
10-07-11	GASKET, Pump Body		6	1	1	1	1	1	1	1	—	—	—	—	2121 404
10-07-12	SEAL, Pump Body, 383, 426, 440 Eng.		8	—	1	—	1	1	1	1	1	1	1	1	1855 328
10-07-14	SHIELD, Pump Body Splash		6	1	1	1	1	1	1	1	—	—	—	—	2468 645
10-09-0	**OIL PUMP DRIVE SHAFT**														
10-09-1	SHAFT, w/ROTOR, 318, 340 Eng.	70	8	1	1	1	1	1	1	1	—	—	—	—	2121 530
	318, 340, 360 Eng.	71	8	1	1	1	1	1	1	1	1	—	—	—	2121 530
10-09-5	SHAFT and DISTRIBUTOR DRIVE, w/GEAR, 318, 340 Eng.	70	8	1	1	1	1	1	1	1	—	—	—	—	2121 535
	318, 340, 360 Eng.	71	8	1	1	1	1	1	1	1	1	—	—	—	2121 535
	318, 340 Eng., Canada Built	70	8	1	1	1	—	—	1	1	—	—	—	—	2402 136
	318, 340, 360 Eng., Canada Built	71	8	1	1	1	1	1	1	1	1	—	—	—	2402 136
	383, 426, 440 Eng.		8	—	1	—	1	1	1	1	1	1	1	1	1739 604
10-09-7	BUSHING, Shaft		8	1	1	1	1	1	1	1	1	1	1	1	2863 584
10-10-0	**OIL PUMP DRIVE GEAR**														
10-10-1	GEAR		6	1	1	1	1	1	1	1	—	—	—	—	1947 225
10-14-0	**OIL PUMP ROTOR**														
10-14-18	ROTOR, Outer, 318, 340 Eng.	70	8	1	1	1	1	1	1	1	—	—	—	—	2121 531
	318, 340, 360 Eng.	71	8	1	1	1	1	1	1	1	1	—	—	—	2121 531
10-22-0	**OIL PRESSURE RELIEF VALVE**														
10-22-11	PLUNGER		6	1	1	1	1	1	1	1	—	—	—	—	2406 580
	318, 340 Eng.	70	8	1	1	1	1	1	1	1	—	—	—	—	2843 208

CARLINES: J - Challenger, B - Barracuda, V - Valiant, L - Dart, R - Belvedere - Satellite, W - Coronet - Charger, P - Plymouth, D - Dodge, C - Chrysler, Y - Imperial

AR Indicates use as required.

Numerals in parentheses ( ) refer to notes.

# Indicates parts not listed in any previous parts book.

★ Indicates change or addition.

Printed in U.S.A. January 1972

CODE	PART NAME		ENG. TYPE OR CU.IN.	V 1-2	B J 1-2	L 1-2	R 1-2	W 1-2	P 1-2	D 1-2	C 1	C 2	C 3	Y 1	PART NUMBER
10-22-0	**OIL PRESSURE RELIEF VALVE Cont'd.**														
10-22-11	PLUNGER Cont'd.														
	318, 340, 360 Eng.	71	8	1	1	1	1	1	1	1	1	—	—	—	2843 208
	383, 426, 440 Eng.		8	—	1	—	1	1	1	1	1	1	1	1	2463 541
10-22-15	SPRING		6	1	1	1	1	1	1	1	—	—	—	—	1737 742
	318, 340 Eng.	70	8	1	1	1	1	1	1	1	—	—	—	—	2264 587
	318, 340, 360 Eng.	71	8	1	1	1	1	1	1	1	1	—	—	—	2264 587
	383, 440 Eng.	70	8	—	1	—	1	1	1	1	1	1	1	1	1737 742
	426 Eng., and 440 Eng., w/3-2 Bbl. Carb.	70	8	—	1	—	1	1	—	—	—	—	—	—	2406 677
	383, 426, 440 Eng., All	71	8	—	1	—	1	1	1	1	1	1	1	1	2406 677
10-22-40	CAP		6	1	1	1	1	1	1	1	—	—	—	—	618 621
	318, 340 Eng.	70	8	1	1	1	1	1	1	1	—	—	—	—	2806 273
	318, 340, 360 Eng.	71	8	1	1	1	1	1	1	1	1	—	—	—	2806 273
	383, 426, 440 Eng.		8	—	1	—	1	1	1	1	1	1	1	1	618 621
10-22-41	GASKET			1	1	1	1	1	1	1	1	1	1	1	618 622
10-23-0	**OIL STRAINER**														
10-23-7	STRAINER, w/PIPE	70	6	1	—	1	—	—	—	—	—	—	—	—	2780 999
	All	70	6	—	1	—	1	1	—	—	—	—	—	—	2658 696
	All	71	6	1	1	1	1	1	—	—	—	—	—	—	2780 999
	All		6	—	—	—	—	—	1	1	—	—	—	—	2463 606
	318, 340 Eng.	70	8	1	1	1	1	1	1	1	—	—	—	—	2468 849
	318, 340, 360 Eng.	71	8	1	1	1	1	1	1	1	1	—	—	—	2468 849
	383 Eng.		8	—	1	—	1	1	—	—	—	—	—	—	2899 807
	440 Eng.		8	—	1	—	1	1	—	—	—	—	—	—	3512 251
	383 Eng. and 440 Eng., w/o H/Perf.	70	8	—	—	—	—	—	1	1	1	1	1	—	2532 264
	440 Eng., w/H/Perf.	70	8	—	—	—	—	—	1	1	1	1	1	—	2899 808
	440 Eng.	70	8	—	—	—	—	—	—	—	—	—	—	1	2532 264
	383, 440 Eng.	71	8	—	—	—	—	—	1	1	1	1	1	1	2899 808
	426 Eng.		8	—	1	—	1	1	—	—	—	—	—	—	2951 569
10-24-0	**OIL PAN**														
10-24-1	GASKET SET		6	1	1	1	1	1	1	1	—	—	—	—	2240 647
	318, 340 Eng.		8	1	1	1	1	1	1	1	—	—	—	—	3514 157
	360 Eng.	71	8	—	—	—	—	—	1	1	1	—	—	—	3549 388
10-24-4	PAN, w/o Drain Plug	70	6	1	—	1	—	—	—	—	—	—	—	—	2780 904
	All	70	6	—	1	—	1	1	—	—	—	—	—	—	2532 284
	All	71	6	1	1	1	1	1	—	—	—	—	—	—	3462 086
	All		6	—	—	—	—	—	1	1	—	—	—	—	2463 594
	318, 340 Eng.		8	1	1	1	1	1	1	1	—	—	—	—	3418 293
	360 Eng.	71	8	—	—	—	—	—	1	1	1	—	—	—	3418 437
	383 Eng.		8	—	1	—	1	1	—	—	—	—	—	—	2532 401
	383 Eng. and 440 Eng. w/o H/Perf.		8	—	—	—	—	—	1	1	1	1	1	1	2532 186
	440 Eng. w/H/Perf. and 440 Eng., w/3-2 bbl. Carb.		8	—	—	—	—	—	1	1	1	1	1	—	2951 314
	426, 440 Eng.		8	—	1	—	1	1	—	—	—	—	—	—	2951 564
10-24-8	GASKET, 383, 426, 440 Eng.		8	—	AR	—	AR	AR	AR	AR	AR	AR	AR	AR	2658 685
10-24-23	SCREW, w/WASHER, Pan Attaching, 5/16"-18 x 9/16"			AR	AR	AR	AR	AR	AR	AR	AR	AR	AR	AR	2121 573
	5/16"-18 x 11/16", except 318, 340 Eng.			AR	AR	AR	AR	AR	AR	AR	AR	AR	AR	AR	6028 581
	5/16" - 18 x 13/16", 318, 340, 360 Eng.		8	16	16	16	16	16	16	16	16	—	—	—	1947 953
	5/16" - 18 x 1", 318, 340, 360 Eng.		8	2	2	2	2	2	2	2	2	—	—	—	6025 926
10-24-30	BAFFLE, C/SHAFT OIL SCRAPPER, 340 Eng.		8	1	1	1	1	1	—	—	—	—	—	—	2531 945
	383, 426, 440 Eng.		8	—	1	—	1	1	1	1	1	1	1	—	2863 983
	SCREW, w/WASHER, Baffle Attaching		8	4	4	4	4	4	—	—	—	—	—	—	6023 092
10-24-37	PLUG, Drain			1	1	1	1	1	1	1	1	1	1	1	2125 890
10-24-38	GASKET, Drain Plug			1	1	1	1	1	1	1	1	1	1	1	2268 513

CARLINES: J - Challenger, B - Barracuda, V - Valiant, L - Dart, R - Belvedere - Satellite, W - Coronet - Charger, P - Plymouth, D - Dodge, C - Chrysler, Y - Imperial

AR Indicates use as required.

Numerals in parentheses ( ) refer to notes.

# Indicates parts not listed in any previous parts book.

★ Indicates change or addition.

Printed in U.S.A. January 1972

CODE	PART NAME	ENG. TYPE OR CU.IN.	V 1-2	B J 1-2	L 1-2	R 1-2	W 1-2	P 1-2	D 1-2	C 1	C 2	C 3	Y 1	PART NUMBER
10-26-0	**OIL FILTER**													
10-26-5	ADAPTER, Base To Filter, 318, 340 Eng.	8	1	1	1	1	1	—	—	—	—	—	—	2206 372
	Cover To Filter, 383, 426, 440 Eng.	8	—	1	—	1	1	1	1	1	1	1	1	1739 619
	Filter To Cylinder Block, 318 Eng. 70	8	—	1	—	1	1	1	1	—	—	—	—	2206 372
	Filter To Cyl. Block, 318, 340, 360 Eng. 71	8	—	1	—	1	1	1	1	1	—	—	—	2206 372
	PLATE, Filter Adapter, 318 Eng. 70	8	—	1	—	1	1	1	1	—	—	—	—	2402 103
	Filter Adapter, 318, 340, 360 Eng. 71		—	1	—	1	1	1	1	1	—	—	—	2402 103
10-26-6	FILTER, Sealed Can Type, w/Built In Gasket		1	1	1	1	1	1	1	1	1	1	1	1851 658
	Competition Type, for all High-Speed Competitive Events		1	1	1	1	1	1	1	1	1	1	—	2536 186
	Replaceable Cartridge Type, Includes Cartridge	6	1	1	1	1	1	1	1	—	—	—	—	2532 756
	318, 340 Eng. 70	8	1	1	1	1	1	1	1	—	—	—	—	2532 756
	318, 340, 360 Eng. 71		1	1	1	1	1	1	1	1	—	—	—	2532 756
10-26-8	CARTRIDGE	6	1	1	1	1	1	1	1	—	—	—	—	2532 752
	318, 340 Eng. 70	8	1	1	1	1	1	1	1	—	—	—	—	2532 752
	318, 340, 360 Eng. 71		1	1	1	1	1	1	1	1	—	—	—	2532 752
10-26-12	BASE, Filter, 318, 340 Eng.	8	1	1	1	—	—	—	—	—	—	—	—	2951 996
	Cover, Filter Base, 383, 440 Eng. 70	8	—	1	—	1	1	1	1	1	1	1	1	2465 090
	426 Eng., and 440 Eng., w/3-2 Bbl. Carb. 70	8	—	1	—	1	1	—	—	—	—	—	—	2465 091
	383, 426, 440 Eng., All 71	8	—	1	—	1	1	1	1	1	1	1	1	2465 091
10-26-13	SCREW, Filter Base, 318, 340 Eng.		1	1	1	—	—	—	—	—	—	—	—	2468 593
10-26-18	GASKET, Filter Body	6	1	1	1	1	1	1	1	—	—	—	—	2532 753
	318 Eng.	8	1	1	1	1	1	1	1	—	—	—	—	2532 753
10-26-20	SEAL, Filter Base Screw, 318, 340 Eng.		1	1	1	—	—	—	—	—	—	—	—	2463 512
10-26-26	COVERand DECAL	6	1	1	1	1	1	1	1	—	—	—	—	2806 671
	318 Eng.	8	1	1	1	1	1	1	1	—	—	—	—	2806 671
10-26-27	GASKET, Filter Cover	6	1	1	1	1	1	1	1	—	—	—	—	2532 754
	318 Eng.	8	1	1	1	1	1	1	1	—	—	—	—	2532 754
	Adapter Plate, 318, 340, 360 Eng.	8	1	1	1	1	1	1	1	1	—	—	—	1557 575
	340 Eng. 71		1	—	1	—	—	—	—	—	—	—	—	3577 674
10-26-46	STANDPIPE, w/VALVE 70	6	1	1	1	1	1	1	1	—	—	—	—	2402 607
	All 71	6	1	1	1	1	1	1	1	—	—	—	—	3577 848
10-26-52	GASKET, Standpipe Adapter	6	1	1	1	1	1	1	1	—	—	—	—	2120 017
10-26-65	GASKET, Filter Base Screw, 318, 340 Eng.	8	1	1	1	—	—	—	—	—	—	—	—	1557 581

NOTES

CARLINES J - Challenger, B - Barracuda, V - Valiant, L - Dart, R - Belvedere - Satellite, W - Coronet - Charger, P - Plymouth, D - Dodge, C - Chrysler, Y - Imperial

AR Indicates use as required.

# Indicates parts not listed in any previous parts book.

Numerals in parentheses ( ) refer to notes.

★ Indicates change or addition.

Printed in U.S.A.
January 1972

GROUP 11 - EXHAUST

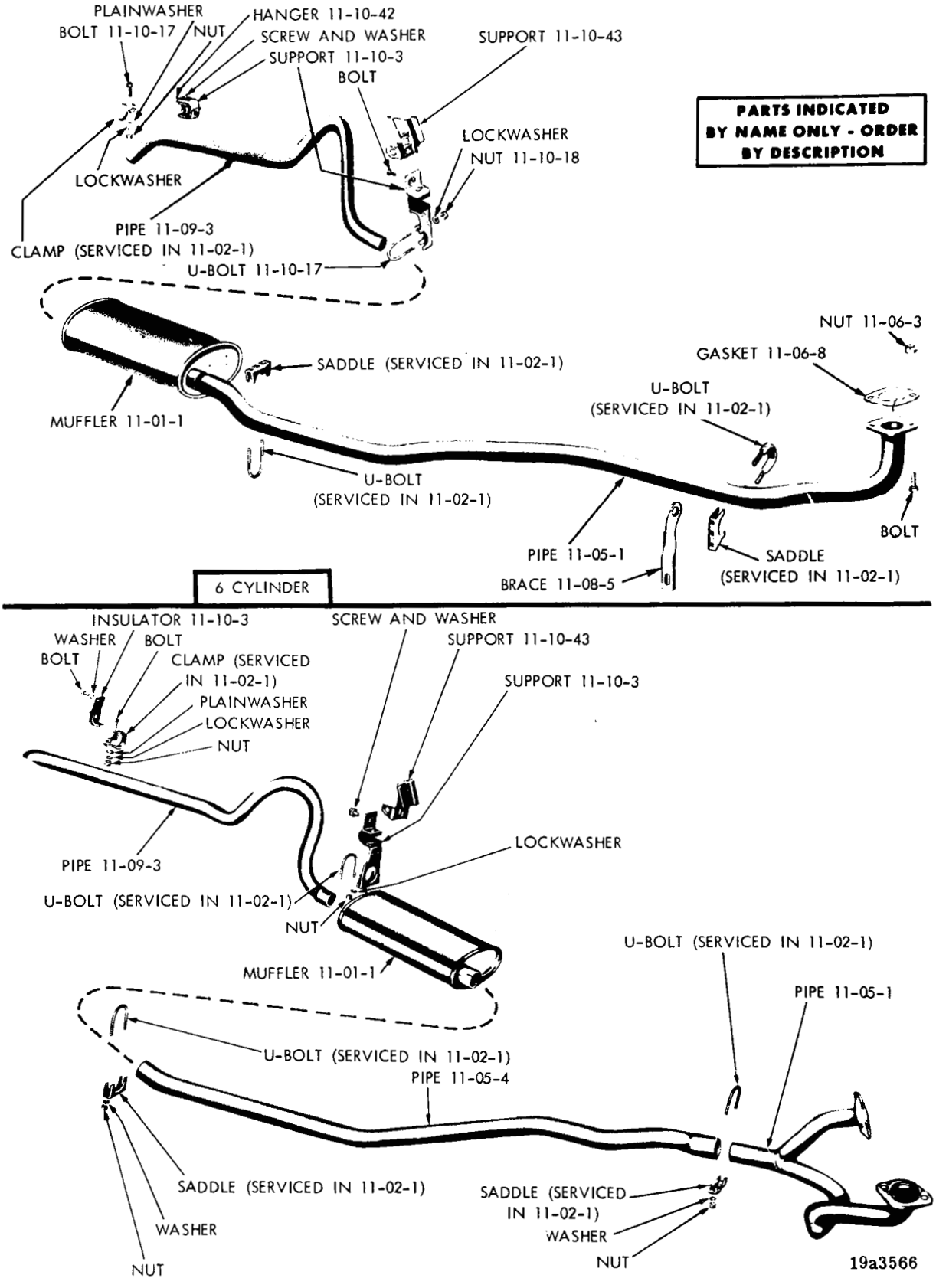

EXHAUST SYSTEM - VALIANT AND DART (6 AND 8 CYLINDER)

NOTES

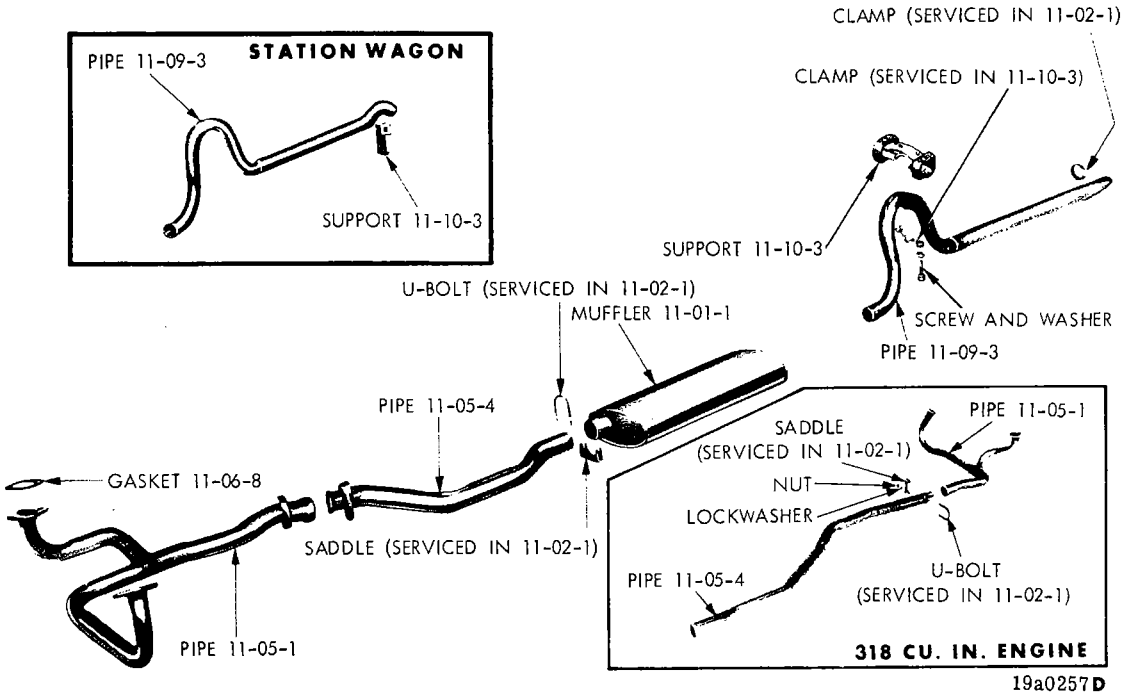

SINGLE EXHAUST - 318 AND 383 ENGINE (EXCEPT VALIANT AND DART)

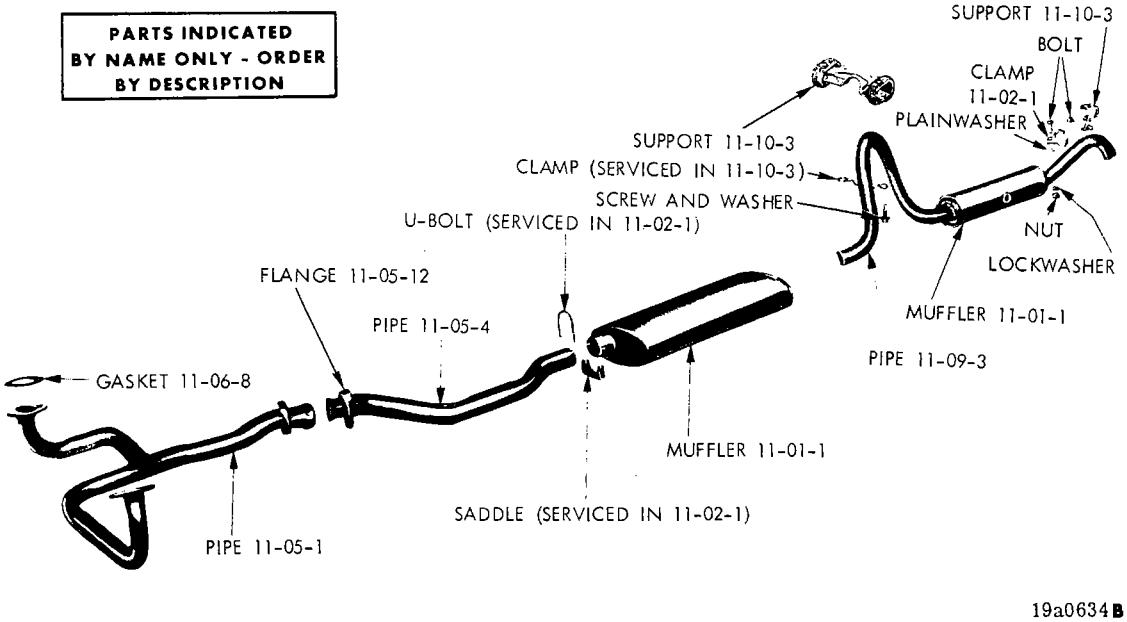

SINGLE EXHAUST - 440 ENGINE

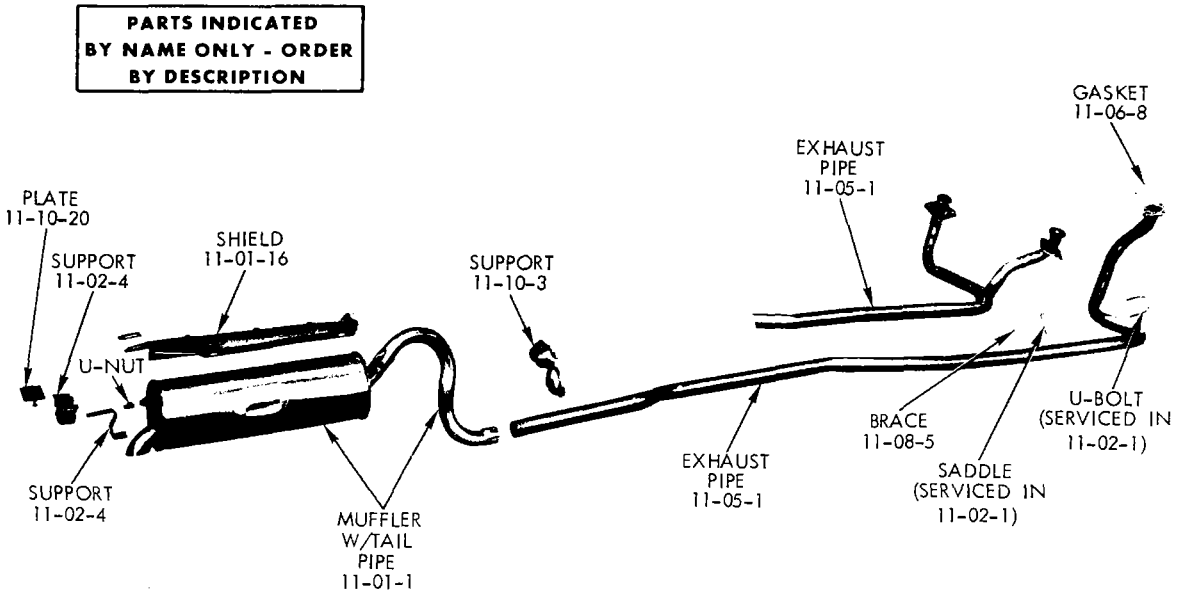

SINGLE EXHAUST - BARRACUDA AND CHALLENGER (6 AND 8 CYLINDER)

NOTES

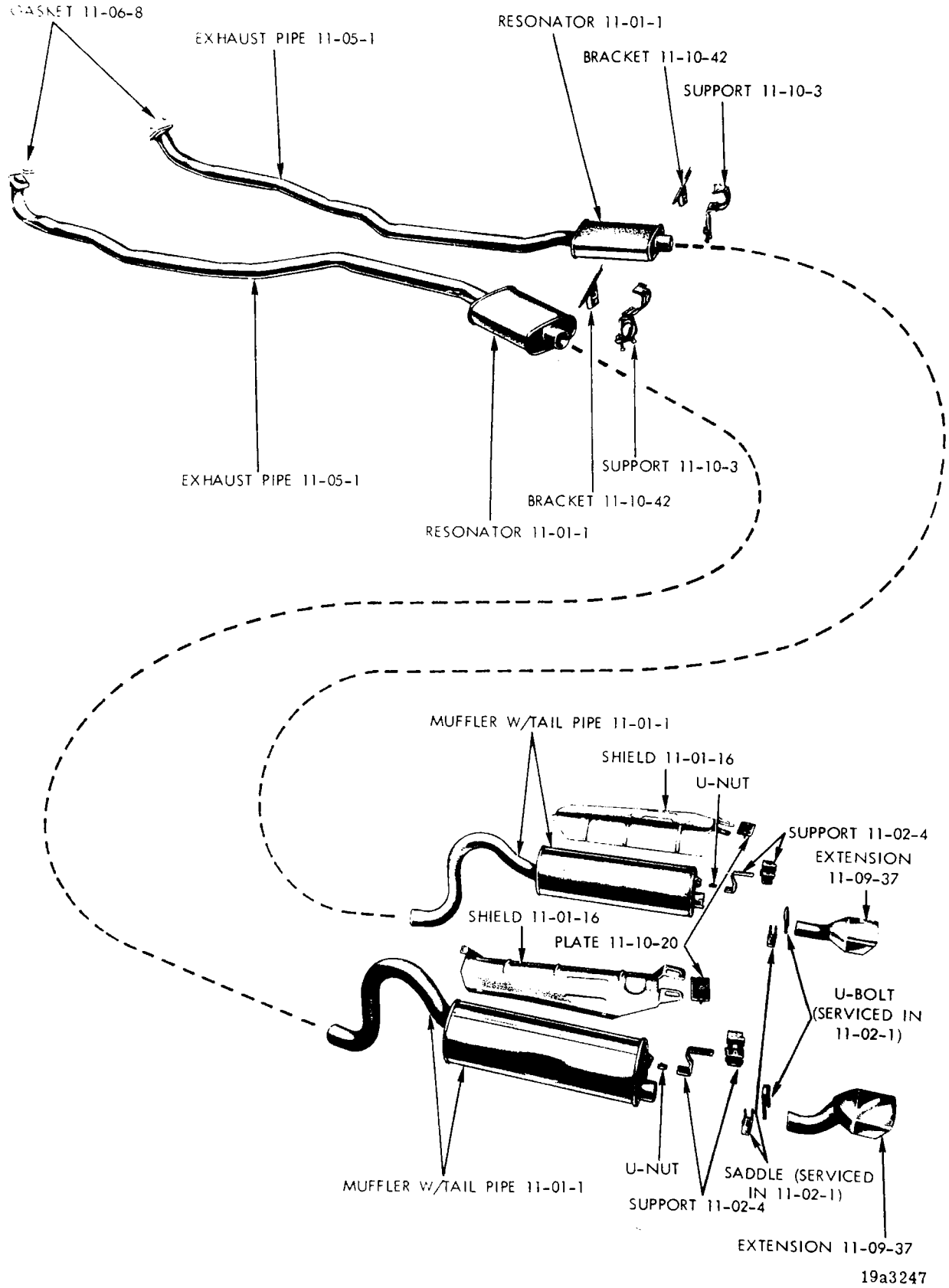
GASKET 11-06-8
EXHAUST PIPE 11-05-1
RESONATOR 11-01-1
BRACKET 11-10-42
SUPPORT 11-10-3
EXHAUST PIPE 11-05-1
SUPPORT 11-10-3
BRACKET 11-10-42
RESONATOR 11-01-1
MUFFLER W/TAIL PIPE 11-01-1
SHIELD 11-01-16
U-NUT
SUPPORT 11-02-4
EXTENSION 11-09-37
SHIELD 11-01-16
PLATE 11-10-20
U-BOLT (SERVICED IN 11-02-1)
MUFFLER W/TAIL PIPE 11-01-1
U-NUT
SADDLE (SERVICED IN 11-02-1)
SUPPORT 11-02-4
EXTENSION 11-09-37
19a3247

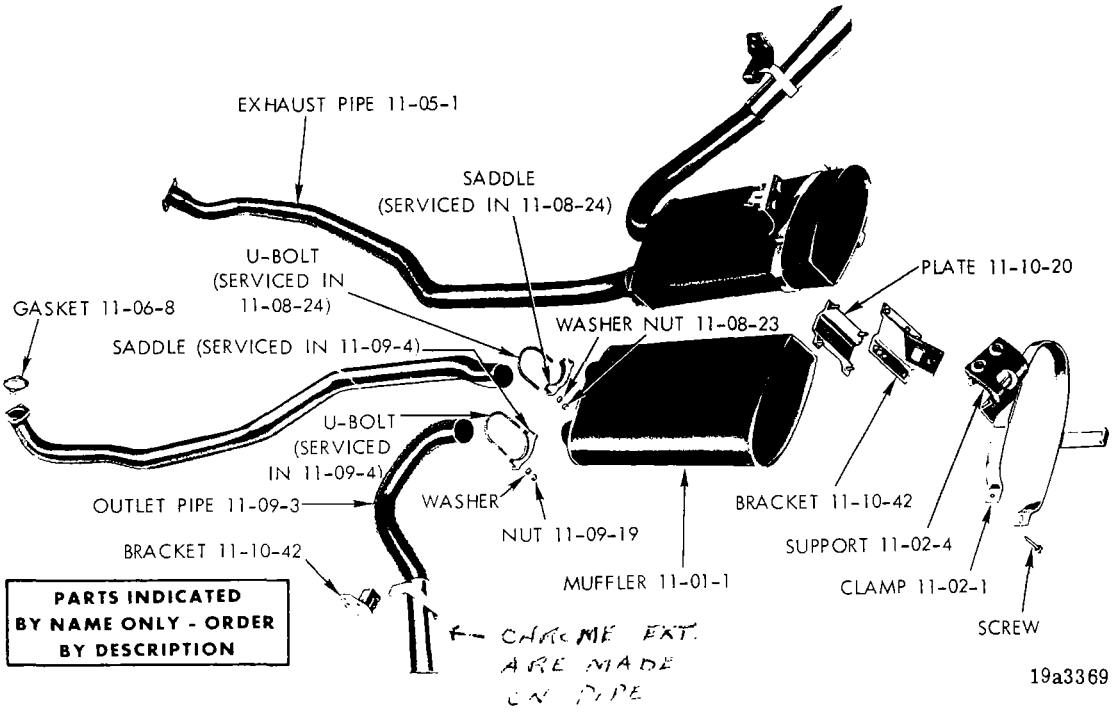

DUAL EXHAUST - BARRACUDA AND CHALLENGER AAR-TRANS-AM

NOTES

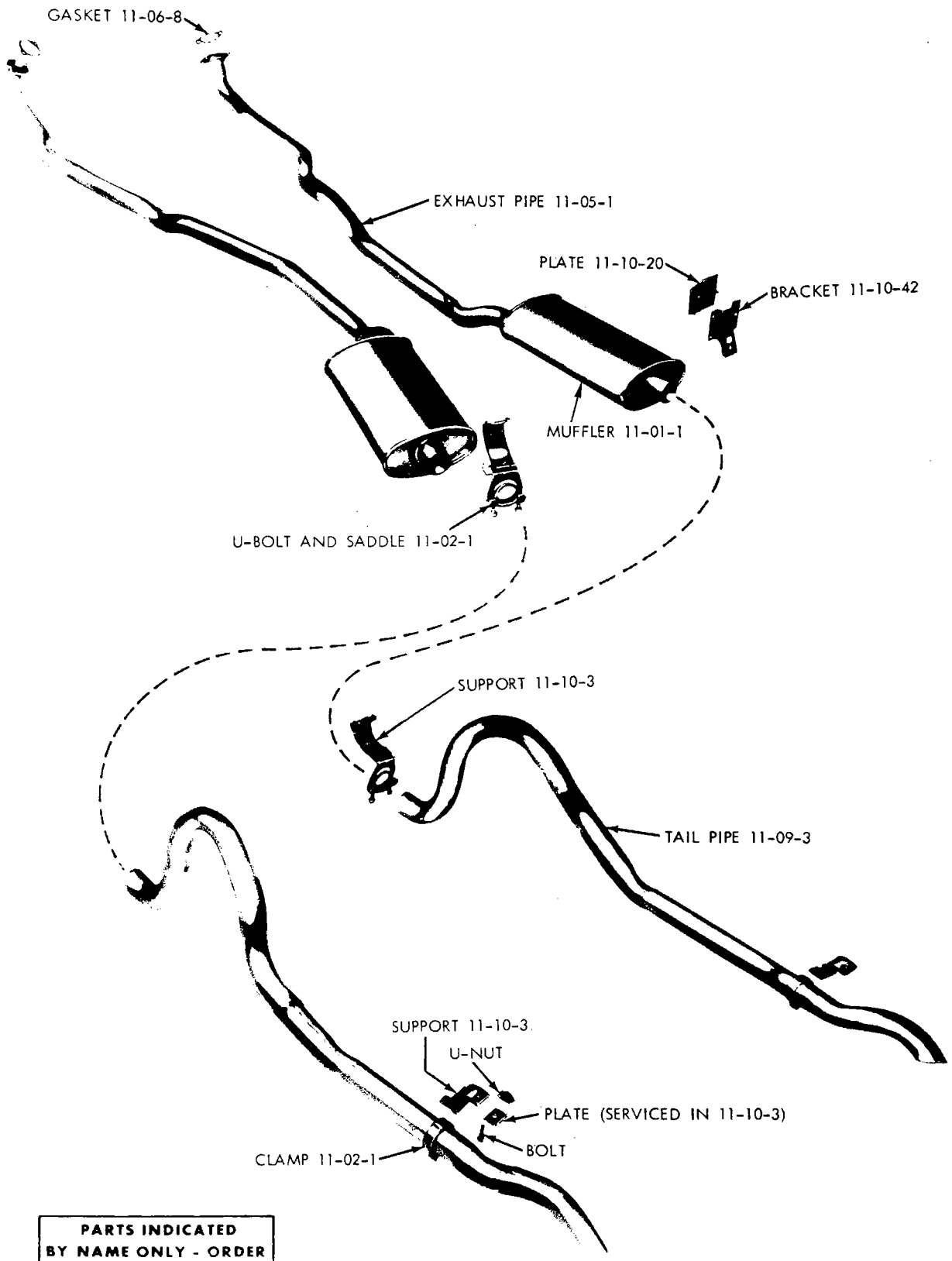

PARTS INDICATED BY NAME ONLY - ORDER BY DESCRIPTION

19a3254

DUAL EXHAUST - VALIANT AND DART (340 CU. IN. ENGINE)

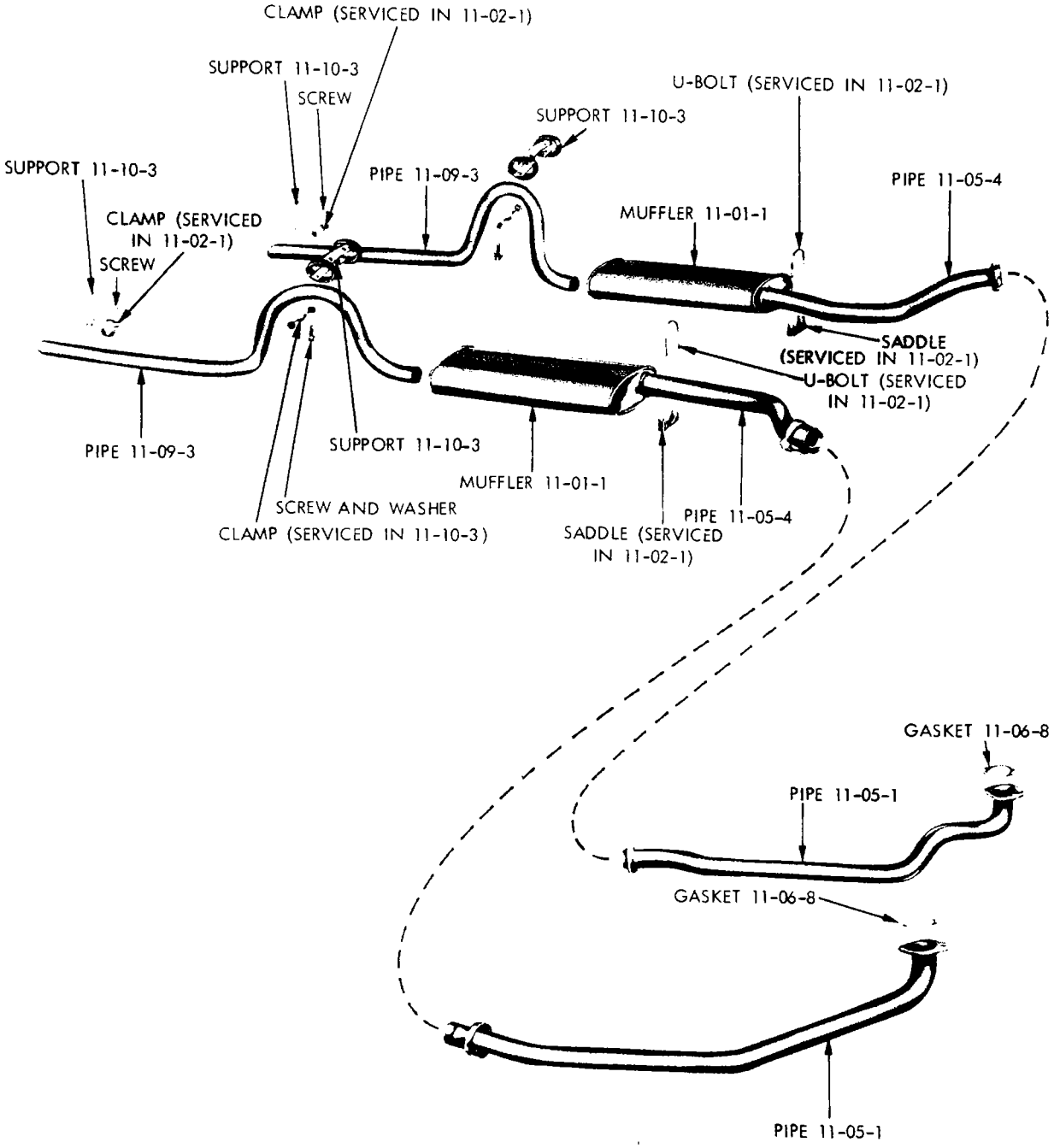

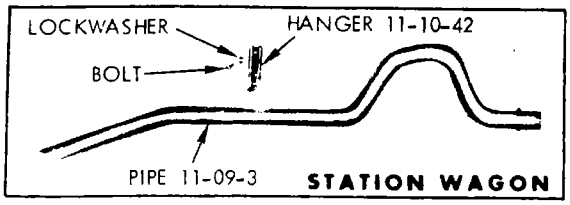

PARTS INDICATED BY NAME ONLY - ORDER BY DESCRIPTION

19a0159B

DUAL EXHAUST (383 AND 440 ENGINE) - PLYMOUTH FURY, DODGE (EXCEPT CORONET, CHARGER AND CHARGER R/T) AND CHRYSLER

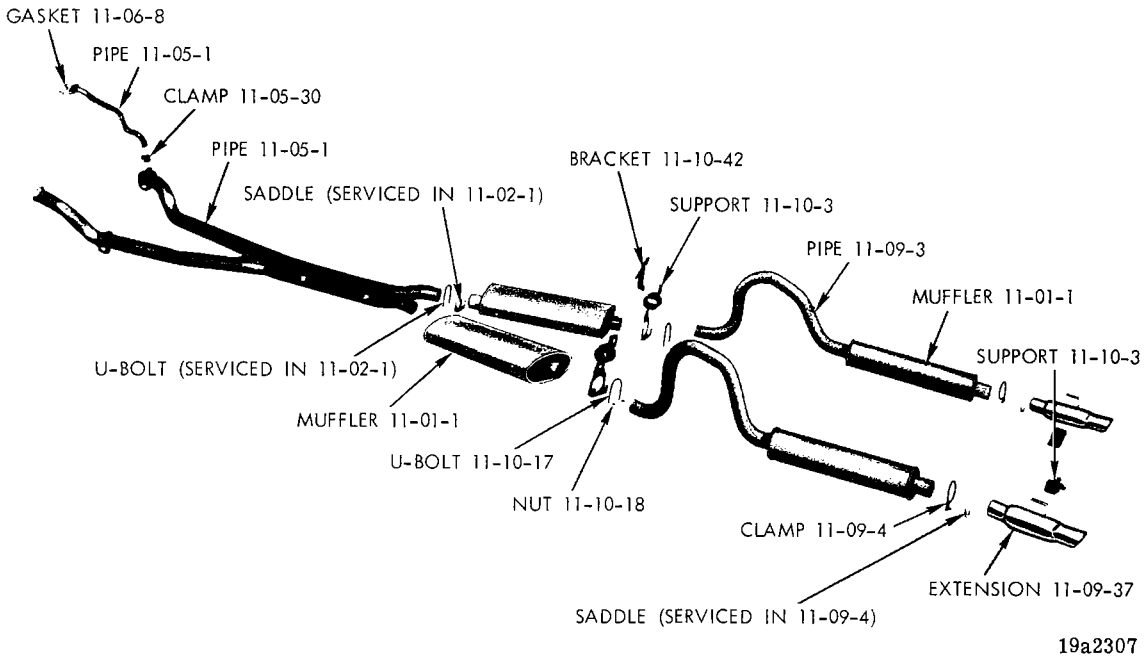

DUAL EXHAUST - 426 ENGINE

NOTES

NOTES

CODE	PART NAME		ENG. TYPE OR CU.IN.	V 1-2	B J 1-2	L 1-2	R 1-2	W 1-2	P 1-2	D 1-2	C 1	C 2	C 3	Y 1	PART NUMBER
11-01-0	**MUFFLER**														
	SINGLE EXHAUST														
11-01-1	MUFFLER	Aluminized	6	1	—	1	—	—	—	—	—	—	—	—	2856 236
		Zinc Coated	6	1	—	1	—	—	—	—	—	—	—	—	2856 237
	w/318 Eng.		8	1	—	1	—	—	—	—	—	—	—	—	2460 824
	w/TAIL PIPE	71	6	—	1	—	—	—	—	—	—	—	—	—	3404 257
	w/TAIL PIPE, w/318 Eng.		8	—	1	—	—	—	—	—	—	—	—	—	3404 266
	w/TAILPIPE, w/383 Eng., w/2 Bbl. Carb.	70	8	—	1	—	—	—	—	—	—	—	—	—	3404 277
		Aluminized	6	—	—	—	1	1	—	—	—	—	—	—	2781 263
		Zinc Coated	6	—	—	—	1	1	—	—	—	—	—	—	2781 264
	w/318 Eng.	Aluminized	8	—	—	—	1	1	—	—	—	—	—	—	2781 265
		Zinc Coated	8	—	—	—	1	1	—	—	—	—	—	—	2781 266
	w/383 Eng., w/2 Bbl. Carb.	Aluminized	8	—	—	—	1	1	—	—	—	—	—	—	2925 771
		Zinc Coated	8	—	—	—	1	1	—	—	—	—	—	—	2883 912
		Aluminized	6	—	—	—	—	—	1	1	—	—	—	—	2534 430
		Zinc Coated	6	—	—	—	—	—	1	1	—	—	—	—	2534 440
	w/318 Eng.	Aluminized	8	—	—	—	—	—	1	1	—	—	—	—	2534 431
		Zinc Coated	8	—	—	—	—	—	1	1	—	—	—	—	2534 441
	w/360 Eng.	Aluminized 71	8	—	—	—	—	—	1	1	1	—	—	—	3466 965
		Zinc Coated 71	8	—	—	—	—	—	1	1	1	—	—	—	3466 966
	Carb.	Aluminized 70	8	—	—	—	—	—	1	1	1	—	—	—	2925 658
		Zinc Coated 70	8	—	—	—	—	—	1	1	1	—	—	—	2925 659
	w/383 Eng., w/2 Bbl. Carb., P Sta. Wag.	Aluminized 71	8	—	—	—	—	—	1	1	1	—	—	—	2925 658
		Zinc Coated 71	8	—	—	—	—	—	1	1	1	—	—	—	2925 659
	w/383 Eng., w/2 Bbl. Carb., except Sta. Wgn.	Aluminized 71	8	—	—	—	—	—	1	—	—	—	—	—	3466 957
		Zinc Coated 71	8	—	—	—	—	—	1	—	—	—	—	—	3466 958
	w/383 and 440 Std., Eng., w/1-4 Bbl. Carb., Sta. Wgn.	Aluminized 71	8	—	—	—	—	—	1	1	1	—	—	—	3466 644
		Zinc Coated 71	8	—	—	—	—	—	1	1	1	—	—	—	3466 645
	w/440 Eng., Std., except Sta. Wgn.	Aluminized 70	8	—	—	—	—	—	—	1	—	1	1	1	2660 518
		Zinc Coated 70	8	—	—	—	—	—	—	1	—	1	1	1	2660 529
	w/440 Eng., Std., except Sta. Wgn.	Aluminized 71	8	—	—	—	—	—	—	1	—	1	1	—	2660 518
		Zinc Coated 71	8	—	—	—	—	—	—	1	—	1	1	—	2660 525
		Aluminized 71	8	—	—	—	—	—	—	—	—	—	—	1	3466 644
		Zinc Coated 71	8	—	—	—	—	—	—	—	—	—	—	1	3466 645
	RESONATOR, w/383 Eng., w/2 Bbl. Carb.	71	8	—	1	—	—	—	—	—	—	—	—	—	3466 926
	RESONATOR, w/TAIL PIPE, w/383 Eng., w/2 Bbl. Carb., except Sta. Wgn.	70	8	—	—	—	—	—	—	1	1	—	—	—	3404 886
	RESONATOR, w/TAIL PIPE, w/383 Eng., w/2 Bbl. Carb., Sta. Wgn.		8	—	—	—	—	—	1	1	1	—	—	—	3466 290
	RESONATOR, w/440 Eng., Std., except Sta. Wgn.	70	8	—	—	—	—	—	—	1	—	—	—	—	3466 069
	RESONATOR, w/TAILPIPE, w/383 and 440 Std. Eng., except Sta. Wgn.	71	8	—	—	—	—	—	—	1	1	1	1	—	3466 292
	RESONATOR, w/383 w/2 Bbl. Carb., 440 Std. Eng., except Sta. Wgn.	71	8	—	—	—	—	—	—	1	1	1	1	—	3466 180
	RESONATOR, w/TAIL PIPE, w/383 and 440 Std., Eng., Sta. Wgn., w/1-4 Bbl. Carb.	71	8	—	—	—	—	—	1	1	1	—	—	—	3466 664
	RESONATOR, w/440 Eng., Std.	70	8	—	—	—	—	—	—	—	—	1	1	1	3404 270
	RESONATOR, w/TAIL PIPE	71	8	—	—	—	—	—	—	—	—	—	—	1	3466 640
	DUAL EXHAUST														
	w/340 Eng.	Rt. Aluminized 70	8	1	—	1	—	—	—	—	—	—	—	—	3466 243
		Lt. Aluminized 70	8	1	—	1	—	—	—	—	—	—	—	—	3466 242

CARLINES J - Challenger, B - Barracuda, V - Valiant, L - Dart, R - Belvedere - Satellite, W - Coronet - Charger, P - Plymouth, D - Dodge, C - Chrysler, Y - Imperial

AR Indicates use as required.

Numerals in parentheses ( ) refer to notes.

# Indicates parts not listed in any previous parts book.

★ Indicates change or addition.

Printed in U.S.A. January 1972

CODE	PART NAME	ENG. TYPE OR CU.IN.	V 1-2	B J 1-2	L 1-2	R 1-2	W 1-2	P 1-2	D 1-2	C 1	C 2	C 3	Y 1	PART NUMBER
11-01-0	**MUFFLER Cont'd.**													
11-01-1	MUFFLER Cont'd.													
	Zinc Coated	70	8	2	—	2	—	—	—	—	—	—	—	3466 244
	w/340 Eng. Rt. Aluminized	71	8	1	—	1	—	—	—	—	—	—	—	3466 960
	Lt. Aluminized	71	8	1	—	1	—	—	—	—	—	—	—	3466 959
	Zinc Coated	71	8	2	—	2	—	—	—	—	—	—	—	3466 961
	w/340 Eng., w/3-2 Bbl. Carb.	70	8	—	2	—	—	—	—	—	—	—	—	3466 913
	w/TAIL PIPE, w/340 and 440 Eng., w/1-4 Bbl. Carb.	70	8	—	1	—	—	—	—	—	—	—	—	3404 557-8
	w/TAIL PIPE, w/340 Eng., w/1-4 Bbl. Carb.	71	8	—	1	—	—	—	—	—	—	—	—	3404 557-8
	w/TAIL PIPE, w/o Noise Red. Pkg., w/440 Eng., w/3-2 Bbl. Carb.	70	8	—	1	—	—	—	—	—	—	—	—	3404 557-8
	w/TAIL PIPE, w/383 Eng., w/1-4 Bbl. Carb., B-H, B-P, J-H		8	—	1	—	—	—	—	—	—	—	—	3404 288-9
	w/TAIL PIPE, w/383 Eng., w/1-4 Bbl. Carb., B-S, J-S	70	8	—	1	—	—	—	—	—	—	—	—	3404 557-8
	w/TAIL PIPE, w/o Noise Red. Pkg., w/426 Eng. Rt.		8	—	1	—	—	—	—	—	—	—	—	3404 557
	Lt.		8	—	1	—	—	—	—	—	—	—	—	3466 608
	w/TAIL PIPE, w/426 and 440 w/3-2 Bbl. Carb., w/Noise Red. Pkg. Rt.		8	—	1	—	—	—	—	—	—	—	—	3466 610
	Lt.		8	—	1	—	—	—	—	—	—	—	—	3466 609
	w/340 Eng. Aluminized	71		—	—	—	1	1	—	—	—	—	—	2883 910-1
	w/340 Eng. Zinc Coated	71		—	—	—	2	2	—	—	—	—	—	2883 912
	w/383 Eng., w/1-4 Bbl. Carb., w/Noise Red. Pkg. Rt. Aluminized		8	—	—	—	1	1	—	—	—	—	—	3466 298
	Lt. Aluminized		8	—	—	—	1	1	—	—	—	—	—	3466 297
	Zinc Coated		8	—	—	—	2	2	—	—	—	—	—	3466 299
	w/383 Eng., w/1-4 Bbl. Carb., w/o Noise Red. Pkg. Aluminized		8	—	—	—	1	1	—	—	—	—	—	2883 910-1
	Zinc Coated		8	—	—	—	2	2	—	—	—	—	—	2883 912
	w/426 Eng.			—	—	—	2	2	—	—	—	—	—	# 3404 839
	w/440 Eng.	70	8	—	—	—	2	2	—	—	—	—	—	2781 300
	w/440 Eng. Aluminized	71	8	—	—	—	1	1	—	—	—	—	—	2883 910-1
	Zinc Coated		8	—	—	—	2	2	—	—	—	—	—	2883 912
	w/383 Eng., w/1-4 Bbl. Carb., except Sta. Wgn. Aluminized	71	8	—	—	—	—	—	1	1	1	—	—	2925 824-5
	Zinc Coated	71	8	—	—	—	—	—	2	2	2	—	—	2925 797
	w/383 and 440 Eng., w/1-4 Bbl. Carb. Aluminized	70	8	—	—	—	—	—	1	1	1	1	1	2925 824-5
	Zinc Coated	70	8	—	—	—	—	—	2	2	2	2	2	2925 797
	w/440 Eng., except Sta. Wgn. Aluminized	71	8	—	—	—	—	—	1	1	—	—	—	2925 824-5
	Zinc Coated	71	8	—	—	—	—	—	2	2	—	—	—	2925 797
	w/440 Eng., w/3-2 Bbl. Carb. Rt. Aluminized	70	8	—	—	—	—	—	1	—	—	—	—	3466 606
	Lt. Aluminized	70	8	—	—	—	—	—	1	—	—	—	—	3466 605
	w/440 Eng., w/H/Perf. Aluminized	71	8	—	—	—	—	—	—	—	1	1	1	2925 824-5
	Zinc Coated	71		—	—	—	—	—	—	—	2	2	2	2925 797
	RESONATOR, w/340 w/1-4 Bbl. Carb., 383 w/1-4 Bbl. Carb., 426 and 440 Eng.		8	—	2	—	—	—	—	—	—	—	—	3404 572
	RESONATOR, w/426 Eng.	70	8	—	—	—	2	2	—	—	—	—	—	2883 923
	RESONATOR, w/TAIL PIPE, w/426 Eng.	71	8	—	—	—	1	1	—	—	—	—	—	3466 120-1
	RESONATOR, w/440 Eng., w/3-2 Bbl. Carb., w/Noise Red. Pkg.	70	8	—	—	—	2	2	—	—	—	—	—	2883 923
	RESONATOR, w/440 Eng., w/3-2 Bbl. Carb., w/Noise Red. Pkg.	71	8	—	—	—	1	1	—	—	—	—	—	3466 120-1

CODE	PART NAME	ENG. TYPE OR CU.IN.	V 1-2	B J 1-2	L 1-2	R 1-2	W 1-2	P 1-2	D 1-2	C 1	C 2	C 3	Y 1	PART NUMBER
11-01-0	**MUFFLER Cont'd.**													
11-01-16	HEAT SHIELD, Muffler	6	—	1	—	—	—	—	—	—	—	—	—	3404 595
	w/318 and 383 w/2 Bbl. Carb. Eng.	8	—	1	—	—	—	—	—	—	—	—	—	3404 595
	w/340, 383, w/1-4 Bbl. Carb., 426 and 440 Eng.	8	—	1	—	—	—	—	—	—	—	—	—	3404 595-6
11-02-0	**MUFFLER SUPPORT**													
	SINGLE EXHAUST													
11-02-1	CLAMP PACKAGE, Exhaust Pipe Brace	6	1	1	1	1	1	—	—	—	—	—	—	1843 010
		6	—	—	—	—	—	1	1	—	—	—	—	1843 008
	Muffler Exhaust Pipe	6	1	1	1	1	1	—	—	—	—	—	—	1843 010
		6	—	—	—	—	—	1	1	—	—	—	—	1843 008
	Muffler Exhaust Ext. Pipe, w/318 Eng.	8	1	—	1	1	1	—	—	—	—	—	—	1843 008
	w/383 Eng., w/2 Bbl. Carb.	8	—	—	—	1	1	1	1	1	—	—	—	1603 364
	w/318 and 360 Eng.	8	—	—	—	—	—	1	1	1	—	—	—	1603 364
	w/440 Eng., Std.	8	—	—	—	—	—	1	1	1	1	1	1	1603 364
	Muffler Tail Pipe	6	—	—	—	—	—	1	1	—	—	—	—	1843 010
	w/318 and 360 Eng.	8	—	—	—	—	—	1	1	1	—	—	—	1843 008
	w/383 w/2 Bbl. Carb. and 440 Std. Eng.	8	—	—	—	—	—	1	1	1	1	1	1	1603 364
	Tail Pipe Rr. Support	6	1	—	1	1	1	—	—	—	—	—	—	2240 311
	w/318 Eng.	8	1	—	1	1	1	—	—	—	—	—	—	2279 897
	w/383 Eng., w/2 Bbl. Carb., Sta. Wgn.	8	—	—	—	1	1	1	1	1	—	—	—	2585 698
	w/383 Eng., w/2 Bbl. Carb., except Sta. Wgn.	8	—	—	—	1	1	1	1	1	—	—	—	2240 312
		6	—	—	—	—	—	1	1	—	—	—	—	2240 312
	w/318 Eng.,	8	—	—	—	—	—	1	1	—	—	—	—	2240 312
	w/360 Eng. 71		—	—	—	—	—	1	1	1	—	—	—	2585 698
	w/440 Eng., Std.	8	—	—	—	—	—	1	1	1	1	1	1	2585 698
	DUAL EXHAUST													
	Muffler Exhaust Pipe, w/340 Eng.	8	2	—	2	—	—	—	—	—	—	—	—	1603 364
	w/383 Eng., w/1-4 Bbl. Carb.	8	—	—	—	2	2	—	—	—	—	—	—	1603 364
	Tail Pipe Resonator, w/426 and 440 Eng.	8	—	—	—	2	2	—	—	—	—	—	—	1603 364
	Muffler Tail Pipe, w/383 and 440 Eng.	8	—	—	—	—	—	2	2	2	2	2	—	1843 008
	Muffler Exh. Ext., w/383 and 440 Eng.	8	—	—	—	—	—	2	2	2	2	2	—	1603 364
	Tail Pipe Rr. Support, w/340 Eng.	8	2	—	2	2	2	—	—	—	—	—	—	2240 312
	w/383 and 440 Eng.	8	—	—	—	2	2	2	2	2	2	2	—	2240 312
11-02-4	SUPPORT, Muffler, Rr. 70	6	—	1	—	—	—	—	—	—	—	—	—	3404 835
	w/318 and 383 w/2 Bbl. Carb. Eng. 70	8	—	1	—	—	—	—	—	—	—	—	—	3404 835
	w/383 Eng., w/1-4 Bbl. Carb., B-S, J-S	8	—	2	—	—	—	—	—	—	—	—	—	3404 835
	w/340 w/1-4 Bbl. Carb., 426 and 440 Eng.	8	—	2	—	—	—	—	—	—	—	—	—	3404 835
	Muffler Rr. Brkt. and Insulator 70	6	—	1	—	—	—	—	—	—	—	—	—	3404 836
	71	6	—	1	—	—	—	—	—	—	—	—	—	3466 181
	w/318 and 383 w/2 Bbl. Carb. Eng. 70	8	—	1	—	—	—	—	—	—	—	—	—	3404 836
	71	8	—	1	—	—	—	—	—	—	—	—	—	3466 181
	w/340 w/1-4 Bbl. Carb., 426 and 440 Eng.	8	—	2	—	—	—	—	—	—	—	—	—	3404 836
	w/383 Eng., w/1-4 Bbl. Carb., B-H B-P, J-H 70	8	—	2	—	—	—	—	—	—	—	—	—	3404 836
	71	8	—	2	—	—	—	—	—	—	—	—	—	3466 181
	w/383 Eng., w/1-4 Bbl. Carb. B-S, J-S	8	—	2	—	—	—	—	—	—	—	—	—	3404 836
	SUPPORT, Muffler, w/340 Eng., w/3-2 Bbl. Carb.	8	—	1	—	—	—	—	—	—	—	—	—	3466 931-2
11-02-13	BRACKET, Muffler Rr. Support, w/225, 318 and 383 w/2 Bbl. Carb. Eng. 71		—	1	—	—	—	—	—	—	—	—	—	3466 182
	w/340 Eng., w/1-4 Bbl. Carb., B-H, B-P, J-H 70	8	—	2	—	—	—	—	—	—	—	—	—	3466 182

CARLINES J - Challenger, B - Barracuda, V - Valiant, L - Dart, R - Belvedere - Satellite, W - Coronet - Charger, P - Plymouth, D - Dodge, C - Chrysler, Y - Imperial

AR Indicates use as required.

Numerals in parentheses ( ) refer to notes.

# Indicates parts not listed in any previous parts book.

★ Indicates change or addition.

Printed in U.S.A. January 1972

11-02-0 MUFFLER SUPPORT Cont'd.

CODE	PART NAME	ENG. TYPE OR CU.IN.	V 1-2	B J 1-2	L 1-2	R 1-2	W 1-2	P 1-2	D 1-2	C 1	C 2	C 3	Y 1	PART NUMBER
11-02-14	w/3-2 Bbl. Carb.	70 Rt. 8	—	1	—	—	—	—	—	—	—	—	—	3466 939
		70 Lt. 8	—	1	—	—	—	—	—	—	—	—	—	3466 967

11-05-0 EXHAUST PIPE

SINGLE EXHAUST

11-05-1	EXHAUST PIPE	70	6	1	—	—	—	—	—	—	—	—	—	3404 893
	w/225 Eng., Export		6	1	—	—	—	—	—	—	—	—	—	2856 011
	V Fastback and 4 D., L. Fastback	71	6	1	—	1	—	—	—	—	—	—	—	3404 893
	V 2 D.H.T., L. 2 D.H.T. and 4 D.	71	6	1	—	1	—	—	—	—	—	—	—	3404 895
	w/318 Eng.		8	1	—	1	—	—	—	—	—	—	—	2856 242
	B	70	6	—	1	—	—	—	—	—	—	—	—	3404 255
	B	71	6	—	1	—	—	—	—	—	—	—	—	3404 255
	Exp., B	70	6	—	1	—	—	—	—	—	—	—	—	3404 947
	w/318 Eng., B		8	—	1	—	—	—	—	—	—	—	—	3404 262
	w/383 Eng., w/2 Bbl. Carb., B	70	8	—	1	—	—	—	—	—	—	—	—	3404 273
	w/383 Eng., w/2 Bbl. Carb., B	71	8	—	1	—	—	—	—	—	—	—	—	3466 921
	J		6	—	1	—	—	—	—	—	—	—	—	3404 260
	Exp., J	70	6	—	1	—	—	—	—	—	—	—	—	3404 949
	w/318 Eng., J		8	—	1	—	—	—	—	—	—	—	—	3404 269
	w/383 Eng., w/2 Bbl. Carb., J	70	8	—	1	—	—	—	—	—	—	—	—	3404 280
	w/383 Eng., w/2 Bbl. Carb., J	71	8	—	1	—	—	—	—	—	—	—	—	3466 922
		70	6	—	—	1	—	—	—	—	—	—	—	3404 895
	w/225 Eng., Exp.	70	6	—	—	1	—	—	—	—	—	—	—	2856 201
	Std.	70	6	—	—	—	1	1	—	—	—	—	—	3404 897
	Heavy Duty, w/Auto. Trans.	70	6	—	—	—	1	1	—	—	—	—	—	3404 897
	Heavy Duty, w/Manual Trans.	70	6	—	—	—	1	1	—	—	—	—	—	3404 899
	Std., 2 D.H.T.	71	6	—	—	—	1	1	—	—	—	—	—	3466 071
	Std., 4 D. and Sta. Wgn.	71	6	—	—	—	1	1	—	—	—	—	—	3404 911
	Heavy Duty, w/Auto. Trans., 2 D.H.T.	71	6	—	—	—	1	1	—	—	—	—	—	3466 071
	Heavy Duty, w/Auto. Trans., 4 D. and Sta. Wgn.	71	6	—	—	—	1	1	—	—	—	—	—	3404 911
	Heavy Duty, w/Manual Trans., 4 D. and Sta. Wgn.	71	6	—	—	—	1	1	—	—	—	—	—	3466 075
	Heavy Duty, w/Manual Trans., 2 D.H.T.	71	6	—	—	—	1	1	—	—	—	—	—	3466 078
	Heavy Duty, w/Manual Trans., Exp., 2 D.H.T.	71	6	—	—	—	1	1	—	—	—	—	—	3466 071
	Heavy Duty, w/Manual Trans., Exp., 4 D. and Sta. Wgn.	71	6	—	—	—	1	1	—	—	—	—	—	3404 911
	w/318 Eng.	70	8	—	—	—	1	1	—	—	—	—	—	2643 506
	w/318 Eng.	71	8	—	—	—	1	1	—	—	—	—	—	3404 914
	w/383 Eng., w/2 Bbl. Carb.	70	8	—	—	—	1	1	—	—	—	—	—	3404 807
	w/383 Eng., w/2 Bbl. Carb.	71	8	—	—	—	1	1	—	—	—	—	—	3466 084
	Std., except Sta. Wgn.	70	6	—	—	—	—	—	1	—	—	—	—	3404 901
	Std., P Sta. Wgn.	70	6	—	—	—	—	—	1	1	—	—	—	3404 903
	Heavy Duty, w/Auto. Trans., except Sta. Wgn.	70	6	—	—	—	—	—	1	—	—	—	—	3404 901
	Heavy Duty, w/Auto. Trans., P Sta. Wgn.	70	6	—	—	—	—	—	1	1	—	—	—	3404 903
	Heavy Duty, w/Manual Trans., except Sta. Wgn.	70	6	—	—	—	—	—	1	—	—	—	—	3404 905
	Heavy Duty, w/Manual Trans., P Sta. Wgn.	70	6	—	—	—	—	—	1	1	—	—	—	3404 907
	Std.	71	6	—	—	—	—	—	1	—	—	—	—	3404 901
	Heavy Duty, w/Auto. Trans.	71	6	—	—	—	—	—	1	—	—	—	—	3404 901
	Heavy Duty, w/Manual Trans.	71	6	—	—	—	—	—	1	—	—	—	—	3404 905

CARLINES J - Challenger, B - Barracuda, V - Valiant, L - Dart, R - Belvedere - Satellite, W - Coronet - Charger, P - Plymouth, D - Dodge, C - Chrysler, Y - Imperial

AR Indicates use as required.

Numerals in parentheses ( ) refer to notes.

# Indicates parts not listed in any previous parts book.

★ Indicates change or addition.

Printed in U.S.A. January 1972

11-05-0 EXHAUST PIPE Cont'd.

CODE	PART NAME		ENG. TYPE OR CU.IN.	V 1-2	B J 1-2	L 1-2	R 1-2	W 1-2	P 1-2	D 1-2	C 1	C 2	C 3	Y 1	PART NUMBER
11-05-1	EXHAUST PIPE Cont'd.														
	Std.	71	6	—	—	—	—	—	—	1	—	—	—	—	3404 903
	Heavy Duty, w/Auto. Trans.	71	6	—	—	—	—	—	—	1	—	—	—	—	3404 903
	Heavy Duty, w/Manual Trans.	71	6	—	—	—	—	—	—	1	—	—	—	—	3404 907
	w/318 Eng.		8	—	—	—	—	—	1	1	—	—	—	—	2823 490
	w/383 Eng., w/2 Bbl. Carb.	70	8	—	—	—	—	—	1	1	1	—	—	—	3404 821
	w/360 Eng.	71	8	—	—	—	—	—	1	1	1	—	—	—	3466 254
	w/383 Eng., w/2 Bbl. Carb.	71	8	—	—	—	—	—	1	1	1	—	—	—	3466 668
	w/383 Eng., w/1-4 Bbl. Carb., Sta. Wgn.	71	8	—	—	—	—	—	1	1	1	—	—	—	3466 659
	w/440 Eng., Std., Sta. Wgn.	71	8	—	—	—	—	—	1	1	1	—	—	—	3466 633
	w/440 Eng., Std., except Sta. Wgn.	70	8	—	—	—	—	—	—	1	—	1	1	1	3404 822
		71	8	—	—	—	—	—	—	1	—	1	1	—	3404 822
		71	8	—	—	—	—	—	—	—	—	—	—	1	3466 633
	DUAL EXHAUST														
	w/340 Eng.	Rt. 70	8	1	—	—	—	—	—	—	—	—	—	—	2925 779
		Lt. 70	8	1	—	—	—	—	—	—	—	—	—	—	2925 776
	w/340 Eng., J	70	8	—	1	—	—	—	—	—	—	—	—	—	# 3466 280-1
	w/340 Eng.	Rt. 71	8	1	—	1	—	—	—	—	—	—	—	—	3466 219
		Lt. 71	8	1	—	1	—	—	—	—	—	—	—	—	2925 776
	w/340 Eng., w/1-4 Bbl. Carb., B	70		—	1	—	—	—	—	—	—	—	—	—	# 3466 286-7
	w/340 Eng., w/3-2 Bbl. Carb., B	Rt. 70	8	—	1	—	—	—	—	—	—	—	—	—	3466 907
		Lt. 70	8	—	1	—	—	—	—	—	—	—	—	—	3466 910
	w/RESONATOR, w/340 Eng., w/1-4 Bbl. Carb., B	70	8	—	1	—	—	—	—	—	—	—	—	—	3466 284-5
	w/340 Eng., w/1-4 Bbl. Carb., B	Rt. 71	8	—	1	—	—	—	—	—	—	—	—	—	3466 273
		Lt. 71	8	—	1	—	—	—	—	—	—	—	—	—	3466 267
	w/RESONATOR, w/383 Eng., w/1-4 Bbl. Carb., B	Rt. 70	8	—	1	—	—	—	—	—	—	—	—	—	3404 284
		Lt. 70	8	—	1	—	—	—	—	—	—	—	—	—	3404 286
	w/383 Eng., w/1-4 Bbl. Carb., B	Rt. 70	8	—	1	—	—	—	—	—	—	—	—	—	# 3404 876
		Lt. 70	8	—	1	—	—	—	—	—	—	—	—	—	# 3404 878
	w/RESONATOR, w/383 Eng., w/1-4 Bbl. Carb., B	Rt. 71	8	—	1	—	—	—	—	—	—	—	—	—	3404 284
		Lt. 71	8	—	1	—	—	—	—	—	—	—	—	—	3466 629
	w/440 Eng., B	Rt. 70	8	—	1	—	—	—	—	—	—	—	—	—	# 3404 880
		Lt. 70	8	—	1	—	—	—	—	—	—	—	—	—	# 3404 882
	w/426 Eng., B		8	—	1	—	—	—	—	—	—	—	—	—	3404 567
	Intake Manifold, w/426 Eng.		8	—	1	—	1	1	—	—	—	—	—	—	2781 278
	w/RESONATOR, w/440 Eng., B	Rt. 70	8	—	1	—	—	—	—	—	—	—	—	—	3404 551
		Lt. 70	8	—	1	—	—	—	—	—	—	—	—	—	3404 554
	w/RESONATOR, w/440 Eng., B	Rt. 71	8	—	1	—	—	—	—	—	—	—	—	—	3404 551
		Lt. 71	8	—	1	—	—	—	—	—	—	—	—	—	3466 623
	w/340 Eng., w/3-2 Bbl. Carb., J	Rt. 70	8	—	1	—	—	—	—	—	—	—	—	—	3466 908
		Lt. 70	8	—	1	—	—	—	—	—	—	—	—	—	3466 917
	w/RESONATOR, w/340 Eng., w/1-4 Bbl. Carb., J	70	8	—	1	—	—	—	—	—	—	—	—	—	3466 278-9
	w/340 Eng., w/1-4 Bbl. Carb., J	Rt. 71	8	—	1	—	—	—	—	—	—	—	—	—	3466 276
		Lt. 71	8	—	1	—	—	—	—	—	—	—	—	—	3466 270
	w/RESONATOR, w/383 Eng., w/1-4 Bbl. Carb., J	Rt. 70	8	—	1	—	—	—	—	—	—	—	—	—	3404 293
		Lt. 70	8	—	1	—	—	—	—	—	—	—	—	—	3404 295
	w/383 Eng., w/1-4 Bbl. Carb., J	Rt. 70	8	—	1	—	—	—	—	—	—	—	—	—	# 3404 877
		Lt. 70	8	—	1	—	—	—	—	—	—	—	—	—	# 3404 879
	w/RESONATOR, w/383 Eng., w/1-4 Bbl. Carb., J	Rt. 71	8	—	1	—	—	—	—	—	—	—	—	—	3404 293
		Lt. 71	8	—	1	—	—	—	—	—	—	—	—	—	3466 626

CARLINES J - Challenger, B - Barracuda, V - Valiant, L - Dart, R - Belvedere - Satellite, W - Coronet - Charger, P - Plymouth, D - Dodge, C - Chrysler, Y - Imperial

AR Indicates use as required.

Numerals in parentheses ( ) refer to notes.

# Indicates parts not listed in any previous parts book.

★ Indicates change or addition.

Printed in U.S.A. January 1972

CODE	PART NAME		ENG. TYPE OR CU.IN.	V 1-2	B J 1-2	L 1-2	R 1-2	W 1-2	P 1-2	D 1-2	C 1	C 2	C 3	Y 1	PART NUMBER
11-05-0	**EXHAUST PIPE Cont'd.**														
11-05-1	EXHAUST PIPE Cont'd.			1											
	w/440 Eng., J	Rt. 70	8	—	1	—	—	—	—	—	—	—	—	—	# 3404 881
		Lt. 70	8	—	1	—	—	—	—	—	—	—	—	—	# 3404 883
	w/426 Eng., J		8	—	1	—	—	—	—	—	—	—	—	—	3404 579
	w/RESONATOR, w/440 Eng., J	Rt. 70	8	—	1	—	—	—	—	—	—	—	—	—	3404 563
		Lt. 70	8	—	1	—	—	—	—	—	—	—	—	—	3404 565
	w/RESONATOR, w/440 Eng., J	Rt. 71	8	—	1	—	—	—	—	—	—	—	—	—	3404 563
		Lt. 71	8	—	1	—	—	—	—	—	—	—	—	—	3466 620
	w/340 Eng.	Rt. 70	8	—	—	1	—	—	—	—	—	—	—	—	2925 783
		Lt. 70	8	—	—	1	—	—	—	—	—	—	—	—	2925 781
	w/340 Eng.	Rt. 71		—	—	—	1	1	—	—	—	—	—	—	# 3583 654
		Lt. 71		—	—	—	1	1	—	—	—	—	—	—	# 3583 725
	w/383 Eng., w/1-4 Bbl. Carb.	Rt. 70	8	—	—	—	1	1	—	—	—	—	—	—	3404 825
		Lt. 70	8	—	—	—	1	1	—	—	—	—	—	—	2883 855
	w/383 Eng., w/1-4 Bbl. Carb., 4 D. and Sta. Wgn.	71	8	—	—	—	1	1	—	—	—	—	—	—	3404 923-4
	w/383 Eng., w/1-4 Bbl. Carb., R 2 D.H.T. and Fastback	Rt. 71	8	—	—	—	1	1	—	—	—	—	—	—	3466 095
		Lt. 71	8	—	—	—	1	1	—	—	—	—	—	—	3466 098
	w/426 Eng.	70	8	—	—	—	1	1	—	—	—	—	—	—	2781 270
	w/426 Eng.	71	8	—	—	—	1	1	—	—	—	—	—	—	3466 116
	w/440 Eng.	70	8	—	—	—	1	1	—	—	—	—	—	—	3404 802
	w/440 Eng.	71	8	—	—	—	1	1	—	—	—	—	—	—	3466 994-5
	w/383 Eng., w/1-4 Bbl. Carb.	Rt. 70	8	—	—	—	—	—	1	1	1	—	—	—	3404 823
		Lt. 70	8	—	—	—	—	—	1	1	1	—	—	—	3404 826
	w/383 Eng., w/1-4 Bbl. Carb., except Sta. Wgn.	Rt. 71	8	—	—	—	—	—	1	1	1	—	—	—	3404 823
		Lt. 71	8	—	—	—	—	—	1	1	1	—	—	—	3404 826
	w/440 Eng., Std., C-P	Rt. 70	8	—	—	—	—	—	1	1	1	—	—	—	3404 824
		Lt. 70	8	—	—	—	—	—	1	1	1	—	—	—	3404 874
	w/440 Eng., Std., except Sta. Wgn.	Rt. 71	8	—	—	—	—	—	1	1	—	—	—	—	3404 824
		Lt. 71	8	—	—	—	—	—	1	1	—	—	—	—	3404 874
	w/440 Eng., w/H/Perf.	Rt.	8	—	—	—	—	—	1	—	—	—	—	—	3466 208
		Lt.	8	—	—	—	—	—	1	—	—	—	—	—	3466 207
	w/440 Eng., w/H/Perf.	Rt.	8	—	—	—	—	—	—	1	—	—	—	—	3466 214
		Lt.	8	—	—	—	—	—	—	1	—	—	—	—	3466 213
	w/440 Eng., w/H/Perf.	Rt.	8	—	—	—	—	—	—	—	1	1	1	—	3404 864
		Lt.	8	—	—	—	—	—	—	—	1	1	1	—	3404 872
	SINGLE EXHAUST														
11-05-4	EXHAUST EXTENSION PIPE, w/318 Eng.	70	8	1	—	—	—	—	—	—	—	—	—	—	2925 819
	w/318 Eng., V except 2D.H.T., L Fastback	71	8	1	—	1	—	—	—	—	—	—	—	—	2925 819
	w/318 Eng., V 2D.H.T., L except Fastback	71	8	1	—	1	—	—	—	—	—	—	—	—	2925 817
	w/318 Eng.	70	8	—	—	1	—	—	—	—	—	—	—	—	2925 817
	w/318 Eng.	70	8	—	—	—	1	1	—	—	—	—	—	—	2925 643
	w/318 Eng., 4 D. and Sta. Wgn.	71	8	—	—	—	1	1	—	—	—	—	—	—	3404 919
	w/318 Eng., R 2 D.H.T., W 2 D.H.T. and Fastback	71	8	—	—	—	1	1	—	—	—	—	—	—	3466 082
	w/383 Eng., w/2 Bbl. Carb.	70	8	—	—	—	1	1	—	—	—	—	—	—	2925 768
	w/383 Eng., w/2 Bbl. Carb., 4 D. and Sta. Wgn.	71	8	—	—	—	1	1	—	—	—	—	—	—	3466 089
	w/383 Eng., w/2 Bbl. Carb., R 2 D.H.T., W 2 D.H.T. and Fastback	71	8	—	—	—	1	1	—	—	—	—	—	—	3466 091
	w/318 Eng., except Sta. Wgn.		8	—	—	—	—	—	1	—	—	—	—	—	2925 645
	w/318 Eng., Sta. Wgn.		8	—	—	—	—	—	1	—	—	—	—	—	2925 646
	w/360 Eng., except Sta. Wgn.	71	8	—	—	—	—	—	1	—	—	—	—	—	3466 962

CARLINES: J - Challenger, B - Barracuda, V - Valiant, L - Dart, R - Belvedere - Satellite, W - Coronet - Charger, P - Plymouth, D - Dodge, C - Chrysler, Y - Imperial

AR Indicates use as required.

Numerals in parentheses ( ) refer to notes.

# Indicates parts not listed in any previous parts book.

★ Indicates change or addition.

Printed in U.S.A. January 1972

CODE	PART NAME		ENG. TYPE OR CU.IN.	V 1-2	B J 1-2	L 1-2	R 1-2	W 1-2	P 1-2	D 1-2	C 1	C 2	C 3	Y 1	PART NUMBER
11-05-0	**EXHAUST PIPE Cont'd.**														
11-05-4	EXHAUST EXTENSION PIPE Cont'd.			1											
	w/360 Eng., P Sta. Wgn.	71	8	—	—	—	—	—	1	1	1	—	—	—	3466 963
	w/383 Eng., w/2 Bbl. Carb., except Sta. Wgn.	70	8	—	—	—	—	—	1	—	—	—	—	—	2660 511
	w/383 Eng., w/2 Bbl. Carb., except Sta. Wgn.	71	8	—	—	—	—	—	1	—	—	—	—	—	3466 955
	w/383 Eng., w/2 Bbl. Carb., Sta. Wgn.		8	—	—	—	—	—	1	—	1	—	—	—	2643 550
	w/383 and 400 Std., Eng., w/1-4 Bbl. Carb., Sta. Wgn.	71		—	—	—	—	—	1	1	1	—	—	—	3466 252
	w/318 Eng.		8	—	—	—	—	—	—	1	—	—	—	—	2925 646
	w/383 Eng., w/2 Bbl. Carb.		8	—	—	—	—	—	—	1	—	—	—	—	2643 550
	w/440 Eng., Std., except Sta. Wgn.		8	—	—	—	—	—	—	1	—	—	—	—	2643 550
	w/360 Eng.	71		—	—	—	—	—	—	—	1	—	—	—	= 3466 998
	w/383 Eng., w/2 Bbl. Carb., C-E, C-L		8	—	—	—	—	—	—	—	1	—	—	—	2643 548
	w/440 Eng., Std.		8	—	—	—	—	—	—	—	—	1	1	—	2643 548
		70	8	—	—	—	—	—	—	—	—	—	—	1	2643 548
		71	8	—	—	—	—	—	—	—	—	—	—	1	3466 638
	DUAL EXHAUST														
	w/383 and 440 Std. Eng., w/1-4 Bbl. Carb., except Sta. Wgn.	Rt.	8	—	—	—	—	—	1	—	—	—	—	—	2643 542
		Lt.	8	—	—	—	—	—	1	—	—	—	—	—	2925 610
	w/383 and 440 Std. Eng., w/1-4 Bbl. Carb., Sta. Wgn.	Rt. 70	8	—	—	—	—	—	1	—	1	—	—	—	2643 544
		Lt. 70	8	—	—	—	—	—	1	—	1	—	—	—	2925 611
	w/383 and 440 Std. Eng., w/1-4 Bbl. Carb.	Rt. 70	8	—	—	—	—	—	—	1	—	—	—	—	2643 544
		Lt. 70	8	—	—	—	—	—	—	1	—	—	—	—	2925 611
	w/383 and 440 Std. Eng., w/1-4 Bbl. Carb., except Sta. Wgn.	Rt. 71	8	—	—	—	—	—	—	1	—	—	—	—	2643 544
		Lt. 71	8	—	—	—	—	—	—	1	—	—	—	—	2925 611
	w/383 Eng., w/1-4 Bbl. Carb., Except Sta. Wgn.	Rt.	8	—	—	—	—	—	—	—	1	—	—	—	2643 546
		Lt.	8	—	—	—	—	—	—	—	1	—	—	—	2925 612
	w/440 Eng., w/H/Perf., C-E, C-L	Rt.	8	—	—	—	—	—	—	—	1	1	1	—	2643 548
		Lt.	8	—	—	—	—	—	—	—	1	1	1	—	2925 620
11-05-12	FLANGE, Exhaust Pipe Ball Joint, w/340 Eng.	71	8	1	2	1	2	2	—	—	—	—	—	—	3466 230
	w/360 Eng.	71	8	—	—	—	—	—	2	2	2	—	—	—	3466 230
	Exhaust Extension Pipe Ball Joint, w/383 Eng. w/2 Bbl. Carb.		8	—	—	—	—	—	1	1	1	—	—	—	1946 639
	w/383 Eng., w/1-4 Bbl. Carb.		8	—	—	—	—	—	2	2	2	—	—	—	1946 638
	w/440 Eng., Std., C-P	70	8	—	—	—	—	—	2	2	2	—	—	—	1946 638
	w/440 Eng., Std., except Sta. Wgn.		8	—	—	—	—	—	—	1	—	1	1	1	1946 639
	w/440 Eng., Std., except Sta. Wgn.	71	8	—	—	—	—	—	2	2	—	—	—	—	1946 638
	w/440 Eng., w/H/Perf., except Sta. Wgn.		8	—	—	—	—	—	2	2	2	—	—	—	1946 639
11-05-30	CLAMP, Intake Manifold Exhaust Pipe, w/426 Eng.		8	—	1	—	1	1	—	—	—	—	—	—	2781 273
11-06-0	**EXHAUST PIPE FLANGE GASKET AND STUD**														
11-06-3	NUT, Exhaust Pipe Flange	70	6	2	2	2	2	2	2	2	—	—	—	—	6024 343
	Exhaust Ext. Pipe Clamp	70	8	2	2	2	2	2	2	2	—	—	—	—	6027 299
	Exhaust Pipe Clamp, w/426 Eng.	70	8	—	4	—	4	4	—	—	—	—	—	—	6027 299
	Muffler Exh. Ext. Pipe Ball Joint Flange		8	—	—	—	—	—	AR	AR	AR	AR	AR	AR	1946 648
11-06-8	GASKET, Exh. Pipe Flange		6	1	1	1	1	1	1	1	—	—	—	—	3462 399
	w/225 Eng., Exp.		6	1	1	1	—	—	—	—	—	—	—	—	2465 391
	w/383 Eng., w/2 Bbl. Carb.	Rt.	8	—	1	—	1	1	—	—	—	—	—	—	2465 391
		Lt.	8	—	1	—	1	1	—	—	—	—	—	—	2856 029

CARLINES J - Challenger, B - Barracuda, V - Valiant, L - Dart, R - Belvedere - Satellite, W - Coronet - Charger, P - Plymouth, D - Dodge, C - Chrysler, Y - Imperial

AR Indicates use as required.

Numerals in parentheses ( ) refer to notes.

# Indicates parts not listed in any previous parts book.

★ Indicates change or addition.

Printed in U.S.A. January 1972

CODE	PART NAME		ENG. TYPE OR CU.IN.	V 1-2	B J 1-2	L 1-2	R 1-2	W 1-2	P 1-2	D 1-2	C 1	C 2	C 3	Y 1	PART NUMBER
11-06-0	**EXHAUST PIPE FLANGE GASKET AND STUD Cont'd.**														
11-06-8	GASKET Cont'd.														
	w/340 Eng.		8	2	2	2	—	—	—	—	—	—	—	—	2856 029
	w/383 Eng., w/1-4 Bbl. Carb.		8	—	2	—	2	2	2	2	2	—	—	—	2856 029
	Intake Manifold Exh. Pipe, w/426 Eng.		8	—	1	—	1	1	—	—	—	—	—	—	2780 614
	w/440 Eng., w/H/Perf., C-E, C-L		8	—	2	—	2	2	2	2	2	2	2	—	2856 029
	w/383 Eng., w/2 Bbl. Carb.		8	—	—	—	—	—	2	2	2	—	—	—	2465 391
	w/440 Eng., Std., C-P			—	—	—	—	—	2	2	2	2	2	2	2465 391
11-06-14	RETAINER, Exhaust Pipe Flange Manifold Bolt, w/318 Eng.		8	4	4	4	4	4	4	4	—	—	—	—	3404 043
	w/340 Eng.	71	8	2	4	2	—	—	—	—	—	—	—	—	3404 043
	w/360 Eng.	71	8	—	—	—	—	—	4	4	4	—	—	—	3404 043
11-08-0	**EXHAUST PIPE SUPPORT AND CLAMP**														
11-08-5	BRACE, Exhaust Pipe		6	1	—	1	—	—	—	—	—	—	—	—	2883 908
			6	—	1	—	—	—	—	—	—	—	—	—	3404 598
	Heavy Duty		6	—	—	—	1	1	—	—	—	—	—	—	3404 598
	Heavy Duty		6	—	—	—	—	—	1	1	—	—	—	—	2530 790
11-08-23	NUT, Exhaust Pipe Brace Saddle Clamp	70	6	2	—	2	—	—	—	—	—	—	—	—	6025 804
	Exh. Ext. Pipe Clamp	70	8	2	—	2	2	2	2	2	—	—	—	—	6027 299
	Resonator Exh. Pipe Clamp		8	—	4	4	4	4	4	4	—	—	—	—	2073 205
	Muffler Exh. Pipe Clamp		8	—	4	—	4	4	—	—	—	—	—	—	2073 205
11-08-24	CLAMP, Exh. Ext. Pipe Saddle w/318 Eng.		8	1	—	1	1	1	—	—	—	—	—	—	2883 916
	w/383 Eng., w/2 Bbl. Carb.		8	—	—	—	1	1	—	—	—	—	—	—	2883 919
	w/318 and 360 Eng.		8	—	—	—	—	—	1	1	1	—	—	—	2883 919
	Resonator Exh. Pipe Saddle, w/340 w/1-4 Bbl. Carb., 383, 426 and 440 Eng.		8	—	2	—	—	—	—	—	—	—	—	—	2823 913
	Muffler Exhaust Pipe Saddle, w/340 Eng., w/3-2 Bbl. Carb.		8	—	2	—	—	—	—	—	—	—	—	—	2823 913
	Muffler Exhaust Pipe Saddle, w/426 and 440 Eng.		8	—	—	—	2	2	—	—	—	—	—	—	2823 913
11-09-0	**TAIL PIPE**														
	SINGLE EXHAUST														
11-09-3	TAIL PIPE		6	1	—	1	—	—	—	—	—	—	—	—	3404 300
	w/318 Eng.		8	1	—	1	—	—	—	—	—	—	—	—	3404 805
	except Sta. Wgn.	70	6	—	—	—	1	1	—	—	—	—	—	—	3404 582
	Sta. Wgn.	70	6	—	—	—	1	1	—	—	—	—	—	—	2643 597
	2 D.H.T. and 4 D.	71	6	—	—	—	1	1	—	—	—	—	—	—	3404 913
	Sta. Wgn.	71	6	—	—	—	1	1	—	—	—	—	—	—	3583 404
	w/318 Eng., except Sta. Wgn.	70	8	—	—	—	1	1	—	—	—	—	—	—	3404 583
	w/318 Eng., except Sta. Wgn.	71	8	—	—	—	1	1	—	—	—	—	—	—	3404 920
	w/318 Eng., Sta. Wgn.	70	8	—	—	—	1	1	—	—	—	—	—	—	2643 607
	w/318 Eng., Sta. Wgn.	71	8	—	—	—	1	1	—	—	—	—	—	—	3583 406
	w/383 Eng., w/2 Bbl. Carb., except Sta. Wgn.	70	8	—	—	—	1	1	—	—	—	—	—	—	3404 810
	w/383 Eng., w/2 Bbl. Carb., Sta. Wgn.	70	8	—	—	—	1	1	—	—	—	—	—	—	3404 042
	w/383 Eng., w/2 Bbl. Carb., except Sta. Wgn.	71	8	—	—	—	1	1	—	—	—	—	—	—	3466 092
	w/383 Eng., w/2 Bbl. Carb., Sta. Wgn.	71	8	—	—	—	1	1	—	—	—	—	—	—	3583 412
	Sta. Wgn.	70	6	—	—	—	—	—	1	—	—	—	—	—	2823 499
	P except Sta. Wgn.	70	6	—	—	—	—	—	1	1	—	—	—	—	3404 832
		71	6	—	—	—	—	—	1	1	—	—	—	—	3404 832
	w/318 Eng., except Sta. Wgn.		8	—	—	—	—	—	1	1	—	—	—	—	3404 847
	w/318 Eng., Sta. Wgn.	70	8	—	—	—	—	—	1	1	—	—	—	—	2856 005

11-09-0 TAIL PIPE Cont'd.

CODE	PART NAME		ENG. TYPE OR CU.IN.	V 1-2	B J 1-2	L 1-2	R 1-2	W 1-2	P 1-2	D 1-2	C 1	C 2	C 3	Y 1	PART NUMBER
11-09-3	TAIL PIPE Cont'd.														
	w/318 Eng., Sta. Wgn.	71	8	—	—	—	—	—	1	1	—	—	—	—	3466 672
	w/383 Eng., w/2 Bbl. Carb., except Sta. Wgn.	70	8	—	—	—	—	—	1	—	—	—	—	—	3404 808
	w/383 Eng., w/2 Bbl. Carb., except Sta. Wgn.	71	8	—	—	—	—	—	1	—	—	—	—	—	3466 956
	w/360 Eng., except Sta. Wgn.	71	8	—	—	—	—	—	1	1	1	—	—	—	3466 956
	w/360 Eng., Sta. Wgn.	71	8	—	—	—	—	—	1	1	—	—	—	—	3466 964
	w/383 Eng., w/2 Bbl. Carb., Sta. Wgn.	70	8	—	—	—	—	—	1	1	1	—	—	—	2856 360
	w/440 Eng., Std., except Sta. Wgn.		8	—	—	—	—	—	—	1	—	1	1	—	2781 339
		70	8	—	—	—	—	—	—	—	—	—	—	1	2781 339
	DUAL EXHAUST														
	w/340 Eng., V, L w/Noise Red. Pkg.	Rt. 70	8	1	—	1	—	—	—	—	—	—	—	—	3466 052
		Lt. 70	8	1	—	1	—	—	—	—	—	—	—	—	3466 051
	w/340 Eng.	Rt. 71	8	1	—	1	—	—	—	—	—	—	—	—	2925 671
		Lt. 71	8	1	—	1	—	—	—	—	—	—	—	—	2925 670
	w/340 Eng., w/o Noise Red. Pkg.	Rt. 70	8	—	—	1	—	—	—	—	—	—	—	—	2925 671
		Lt. 70	8	—	—	1	—	—	—	—	—	—	—	—	2925 670
	w/340 Eng., w/3-2 Bbl. Carb.	70	8	—	1	—	—	—	—	—	—	—	—	—	3466 915-6
	w/383 Eng., w/1-4 Bbl. Carb., Sta. Wgn.	Rt. 70		—	—	—	1	1	—	—	—	—	—	—	3404 002
		Lt. 70	8	—	—	—	1	1	—	—	—	—	—	—	3404 004
	w/340 Eng., w/o Decor Tail Pipe Tips	71	8	—	—	—	1	1	—	—	—	—	—	—	3466 092-3
	w/340 Eng., w/Decor Tail Pipe Tips	71	8	—	—	—	1	1	—	—	—	—	—	—	3466 102-3
	w/383 Eng., w/1-4 Bbl. Carb., Sta. Wgn.	Rt. 71	8	—	—	—	1	1	—	—	—	—	—	—	3583 414
		Lt. 71	8	—	—	—	1	1	—	—	—	—	—	—	3583 405
	w/383 Eng., w/1-4 Bbl. Carb., except Sta. Wgn., R-K, R-L, R-H, R-P, W-K, W-L, W-H, W-P	Rt. 70	8	—	—	—	1	1	—	—	—	—	—	—	3404 810
		Lt. 70	8	—	—	—	1	1	—	—	—	—	—	—	8404 003
	w/383 Eng., w/1-4 Bbl. Carb., w/o Decor. Tail Pipe Tips, R-M, W-M	Rt. 70	8	—	—	—	1	1	—	—	—	—	—	—	3404 810
		Lt. 70	8	—	—	—	1	1	—	—	—	—	—	—	3404 003
	w/383 Eng., w/1-4 Bbl. Carb., except Sta. Wgn., R-K, R-L, R-H, R-P, W-K, W-L, W-H, W-P	71	8	—	—	—	1	1	—	—	—	—	—	—	3466 092-3
	w/383 Eng., w/1-4 Bbl. Carb., w/o Decor. Tail Pipe Tips, R-M, W-M	71	8	—	—	—	1	1	—	—	—	—	—	—	3466 092-3
	w/383 Eng., w/1-4 Bbl. Carb., w/Decor. Tail Pipe Tips, R-M, W-M	70	8	—	—	—	1	1	—	—	—	—	—	—	3404 013-4
	w/383 Eng., w/1-4 Bbl. Carb., w/Decor. Tail Pipe Tips, R-M, W-M	71	8	—	—	—	1	1	—	—	—	—	—	—	3466 102-3
	w/426 Eng.	70	8	—	—	—	1	1	—	—	—	—	—	—	3404 011-2
	w/440 Eng., w/1-4 Bbl. Carb., w/Noise Red. Pkg.	Rt. 70	8	—	—	—	1	1	—	—	—	—	—	—	3404 810
		Lt. 70	8	—	—	—	1	1	—	—	—	—	—	—	3404 003
	w/440 Eng., w/3-2 Bbl. Carb., w/Noise Red. Pkg.	70	8	—	—	—	1	1	—	—	—	—	—	—	3404 011-2
	w/440 Eng.	71	8	—	—	—	1	1	—	—	—	—	—	—	3466 102-3
	w/440 Eng., w/3-2 Bbl. Carb., w/o Noise Red. Pkg., w/o Decor. Tail Pipe Tips, R-M	Rt. 70	8	—	—	—	1	1	—	—	—	—	—	—	3404 810
		Lt. 70	8	—	—	—	1	1	—	—	—	—	—	—	3404 003

CARLINES: J - Challenger, B - Barracuda, V - Valiant, L - Dart, R - Belvedere - Satellite, W - Coronet - Charger, P - Plymouth, D - Dodge, C - Chrysler, Y - Imperial

AR Indicates use as required.

# Indicates parts not listed in any previous parts book.

Numerals in parentheses ( ) refer to notes.

★ Indicates change or addition.

Printed in U.S.A. January 1972

11-09-0 TAIL PIPE Cont'd.

CODE	PART NAME		ENG. TYPE OR CU.IN.	V 1-2	B J 1-2	L 1-2	R 1-2	W 1-2	P 1-2	D 1-2	C 1	C 2	C 3	Y 1	PART NUMBER
11-09-3	TAIL PIPE Cont'd.														
	w/440 Eng., w/o Noise Red. Pkg., R-S	70	8	—	—	—	1	—	—	—	—	—	—	—	3404 013-4
	w/440 Eng., w/Decor Tail Pipe Tips, R-M	70	8	—	—	—	1	1	—	—	—	—	—	—	3404 013-4
	w/383 Eng., w/1-4 Bbl. Carb., except Sta. Wgn.	70		—	—	—	—	—	1	1	1	—	—	—	3404 036-7
	w/383 Eng., w/1-4 Bbl. Carb., except Sta. Wgn.	Rt. 71	8	—	—	—	—	—	1	1	1	—	—	—	3466 054
		Lt. 71	8	—	—	—	—	—	1	1	1	—	—	—	3466 053
	w/383 Eng., w/1-4 Bbl. Carb., Sta. Wgn.	70	8	—	—	—	—	—	1	1	1	—	—	—	2856 005-6
	w/440 Eng., Std., except Sta. Wgn., P except P-H	70	8	—	—	—	—	—	1	1	—	—	—	—	3404 036-7
	w/440 Eng., Std., except 2 D.H.T. and Sta. Wgn., P-H	70	8	—	—	—	—	—	1	—	—	—	—	—	3404 036-7
	w/440 Eng., Std., 2 D.H.T., P-H	70	8	—	—	—	—	—	1	—	—	—	—	—	3466 124-5
	w/440 Eng., Std., Sta. Wgn.	70	8	—	—	—	—	—	1	1	1	—	—	—	2856 005-6
	w/440 Eng., Std., except Sta. Wgn.	Rt. 71	8	—	—	—	—	—	1	1	—	—	—	—	3466 054
		Lt. 71	8	—	—	—	—	—	1	1	—	—	—	—	3466 053
	w/440 Eng., w/H/Perf., w/1-4 Bbl. Carb., C-E, C-L	70	8	—	—	—	—	—	1	1	1	1	1	—	3404 036-7
	w/440 Eng., w/3-2 Bbl. Carb.	70	8	—	—	—	—	—	1	—	—	—	—	—	3466 124-5
	w/440 Eng., w/H/Perf.	Rt. 71	8	—	—	—	—	—	1	1	1	1	1	—	3466 054
		Lt. 71	8	—	—	—	—	—	1	1	1	1	1	—	3466 053
11-09-4	CLAMP, Tail Pipe Rr. Support, w/340 Eng.		8	2	—	2	—	—	—	—	—	—	—	—	870 469
	w/383 and 440 Std., Eng., w/1-4 Bbl. Carb., Sta. Wgn.		8	—	—	—	—	—	1	1	1	—	—	—	3466 652
		71	8	—	—	—	—	—	—	—	—	—	—	1	3466 652
	Tail Pipe Frt. Support, w/340, 383 w/1-4 Bbl. Carb., 426 and 440 Eng.	Rt. 71		—	—	—	1	1	—	—	—	—	—	—	3466 987
	w/383 w/1-4 Bbl. Carb. and 440 Std. Eng., Sta. Wgn.	71	8	—	—	—	—	—	1	1	1	—	—	—	3466 649
		71	8	—	—	—	—	—	—	—	—	—	—	1	3466 649
	Tail Pipe Extension, w/340 Eng.		8	2	2	2	—	—	—	—	—	—	—	—	2460 762
	w/383 Eng., w/1-4 Bbl. Carb., B-S, J-S		8	—	2	—	—	—	—	—	—	—	—	—	2460 762
	w/426 and 440 Eng.		8	—	2	—	—	—	—	—	—	—	—	—	2460 762
	Outlet Pipe, w/340 Eng., w/3-2 Bbl. Carb.	70	8	—	2	—	—	—	—	—	—	—	—	—	2823 913
	w/Decor. Tail Pipe Tips, R-M, W-M	70	8	—	—	—	2	2	—	—	—	—	—	—	3404 299
	w/340 Eng., w/Decor Tail Pipe Tips	71		—	—	—	2	2	—	—	—	—	—	—	3466 613
	w/383 Eng., w/1-4 Bbl. Carb., w/Decor. Tail Pipe Tips, R-M, W-M	71		—	—	—	2	2	—	—	—	—	—	—	3466 613
	w/426 and 440 Eng.		8	—	—	—	2	2	—	—	—	—	—	—	2823 913
	w/440 Eng.		8	—	—	—	—	—	2	—	—	—	—	—	2460 762
11-09-19	NUT, Tail Pipe Ext. Clamp		8	AR	AR	AR	AR	AR	AR	—	—	—	—	—	2073 205
	Outlet Pipe, w/340 Eng., w/3-2 Bbl. Carb.	70	8	—	4	—	—	—	—	—	—	—	—	—	2073 205
11-09-37	EXTENSION, Tail Pipe, w/340 Eng.	71	8	2	—	2	—	—	—	—	—	—	—	—	2883 838
	w/340 w/1-4 Bbl. Carb., 426 and 440 Eng., B		8	—	1	—	—	—	—	—	—	—	—	—	3404 593-4
	w/383 Eng., w/1-4 Bbl. Carb., B-S		8	—	1	—	—	—	—	—	—	—	—	—	3404 593-4
	w/340 w/1-4 Bbl. Carb., 426 and 440 Eng., J		8	—	1	—	—	—	—	—	—	—	—	—	3404 591-2
	w/383 Eng., w/1-4 Bbl. Carb., J-S		8	—	1	—	—	—	—	—	—	—	—	—	3404 591-2

CARLINES: J - Challenger, B - Barracuda, V - Valiant, L - Dart, R - Belvedere - Satellite, W - Coronet - Charger, P - Plymouth, D - Dodge, C - Chrysler, Y - Imperial

AR Indicates use as required.

Numerals in parentheses ( ) refer to notes.

# Indicates parts not listed in any previous parts book.

★ Indicates change or addition.

Printed in U.S.A. January 1972

CODE	PART NAME	ENG. TYPE OR CU.IN.	V 1-2	B J 1-2	L 1-2	R 1-2	W 1-2	P 1-2	D 1-2	C 1	C 2	C 3	Y 1	PART NUMBER
11-09-0	**TAIL PIPE Cont'd.**													
11-09-37	EXTENSION Cont'd.													
	w/340 Eng., w/o Noise Red. Pkg.	70 8	—	—	2	—	—	—	—	—	—	—	—	3466 066
	w/383 Eng., w/1-4 Bbl. Carb., w/Decor. Tail Pipe Tips, R-M	70 8	—	—	—	2	—	—	—	—	—	—	—	2883 826
	w/340 Eng., w/Decor Tail Pipe Tips	71 8	—	—	—	2	—	—	—	—	—	—	—	3466 122
	w/383 Eng., w/1-4 Bbl. Carb., w/Decor. Tail Pipe Tips, R-M	71 8	—	—	—	2	—	—	—	—	—	—	—	3466 122
	w/426 Eng.	70 8	—	—	—	2	—	—	—	—	—	—	—	2883 826
	w/426 Eng.	71 8	—	—	—	2	—	—	—	—	—	—	—	3466 110
	w/440 Eng., w/o Noise Red. Pkg.	70 8	—	—	—	2	—	—	—	—	—	—	—	2883 826
	w/440 Eng., w/o Noise Red. Pkg. R-S	71 8	—	—	—	2	—	—	—	—	—	—	—	3466 122
	w/440 Eng., w/3-2 Bbl. Carb., w/Decor. Tail Pipe Tips, R-M	71 8	—	—	—	2	—	—	—	—	—	—	—	3466 122
	w/440 Eng., w/3-2 Bbl. Carb., w/Noise Red. Pkg.	71 8	—	—	—	2	—	—	—	—	—	—	—	3466 110
	w/383 Eng., w/1-4 Bbl. Carb., w/Decor. Tail Pipe Tips, W-M	70 8	—	—	—	—	2	—	—	—	—	—	—	2883 829
	w/340 Eng., w/Decor Tail Pipe Tips	71	—	—	—	—	2	—	—	—	—	—	—	3466 123
	w/383 Eng., w/1-4 Bbl. Carb., w/Decor. Tail Pipe Tips, W-M	71 8	—	—	—	—	2	—	—	—	—	—	—	3466 123
	w/426 Eng., except Charger and Charger R/T	70 8	—	—	—	—	2	—	—	—	—	—	—	2883 829
	w/426 Eng., Charger and Charger R/T	70 8	—	—	—	—	2	—	—	—	—	—	—	2883 832
	w/426 Eng.	71 8	—	—	—	—	2	—	—	—	—	—	—	3466 113
	w/440 Eng., w/o Noise Red. Pkg., w/Decor. Tail Pipe Tips, except Charger, Charger R/T and Sta. Wgn.	70 8	—	—	—	—	2	—	—	—	—	—	—	2883 829
	w/440 Eng., w/o Noise Red. Pkg. w/Decor. Tail Pipe Tips, Charger and Charger R/T	70 8	—	—	—	—	2	—	—	—	—	—	—	2883 832
	w/440 Eng., w/Decor. Tail Pipe Tips	71 8	—	—	—	—	2	—	—	—	—	—	—	3466 123
	w/440 Eng., w/3-2 Bbl. Carb., w/Noise Red. Pkg.	71 8	—	—	—	—	2	—	—	—	—	—	—	3466 113
	w/440 Eng., Std., 2 D.H.T., P-H	Rt. 70 8	—	—	—	—	—	1	—	—	—	—	—	3466 065
		Lt. 70 8	—	—	—	—	—	1	—	—	—	—	—	3466 064
	w/440 Eng., w/3-2 Bbl. Carb.	Rt. 70 8	—	—	—	—	—	1	—	—	—	—	—	3466 065
		Lt. 70 8	—	—	—	—	—	1	—	—	—	—	—	3466 064
11-10-0	**TAIL PIPE SUPPORT**													
	SINGLE EXHAUST-FRONT													
11-10-3	SUPPORT and INSULATOR	6	1	—	1	—	—	—	—	—	—	—	—	2823 497
	w/318 Eng.	8	1	—	1	—	—	—	—	—	—	—	—	2823 456
		6	—	1	—	—	—	—	—	—	—	—	—	3404 930
	w/318 Eng.	8	—	1	—	—	—	—	—	—	—	—	—	3404 931
	w/383 Eng., w/2 Bbl. Carb.	8	—	1	—	—	—	—	—	—	—	—	—	3404 932
		70 6	—	—	—	1	1	—	—	—	—	—	—	2823 452
		71 6	—	—	—	1	1	—	—	—	—	—	—	3466 984
	w/318 Eng.	70 8	—	—	—	1	1	—	—	—	—	—	—	2823 458
	w/318 and 383 w/2 Bbl. Carb. Eng.	71 8	—	—	—	1	1	—	—	—	—	—	—	3466 984
	w/383 Eng., w/2 Bbl. Carb.	70 8	—	—	—	1	1	—	—	—	—	—	—	2883 873
		6	—	—	—	—	—	1	1	—	—	—	—	2823 927
	w/318 Eng.	8	—	—	—	—	—	1	1	—	—	—	—	2823 929
	w/383 Eng., w/2 Bbl. Carb.	8	—	—	—	—	—	1	1	—	—	—	—	2823 933

CARLINES J - Challenger, B - Barracuda, V - Valiant, L - Dart, R - Belvedere - Satellite, W - Coronet - Charger, P - Plymouth, D - Dodge, C - Chrysler, Y - Imperial

AR Indicates use as required.

Numerals in parentheses ( ) refer to notes.

 # Indicates parts not listed in any previous parts book.

★ Indicates change or addition.

Printed in U.S.A. January 1972

11-10-0 TAIL PIPE SUPPORT Cont'd.

CODE	PART NAME		ENG. TYPE OR CU.IN.	V 1-2	B J 1-2	L 1-2	R 1-2	W 1-2	P 1-2	D 1-2	C 1	C 2	C 3	Y 1	PART NUMBER
11-10-3	SUPPORT and INSULATOR Cont'd.														
	w/360 Eng.	71	8	—	—	—	—	—	1	1	1	—	—	—	2823 933
	w/383 and 440 Std., Eng., w/1-4 Bbl. Carb., Sta. Wgn.	71	8	—	—	—	—	—	1	1	1	—	—	—	3466 646
	w/440 Eng., Std., except Sta. Wgn.	70	8	—	—	—	—	—	—	1	—	1	1	1	2823 933
	w/440 Eng., Std., except Sta. Wgn.	71	8	—	—	—	—	—	—	1	—	1	1	—	2823 933
		71	8	—	—	—	—	—	—	—	—	—	—	1	3466 646
	U-NUT, to Body		8	—	—	—	—	—	2	2	2	2	2	2	6025 508
	SINGLE EXHAUST-REAR														
			6	1	—	1	—	—	—	—	—	—	—	—	2073 794
	w/318 Eng.		8	1	—	1	—	—	—	—	—	—	—	—	2073 794
	except Sta. Wgn.	70	6	—	—	—	1	1	—	—	—	—	—	—	3404 846
	Sta. Wgn.	70	6	—	—	—	1	1	—	—	—	—	—	—	3404 860
	except Sta. Wgn.	71	6	—	—	—	1	1	—	—	—	—	—	—	3404 943
	Sta. Wgn.,	71	6	—	—	—	1	1	—	—	—	—	—	—	3583 442
	w/318 Eng., except Sta. Wgn.	70	8	—	—	—	1	1	—	—	—	—	—	—	3404 846
	w/318 Eng., Sta. Wgn.	70	8	—	—	—	1	1	—	—	—	—	—	—	3404 860
	w/318 Eng., except Sta. Wgn.	71	8	—	—	—	1	1	—	—	—	—	—	—	3404 943
	w/318 and 383 w/2 Bbl. Carb., Sta. Wgn.	71	8	—	—	—	1	1	—	—	—	—	—	—	3583 442
	w/383 Eng., w/2 Bbl. Carb., except Sta. Wgn.	70	8	—	—	—	1	1	—	—	—	—	—	—	3404 846
	w/383 Eng., w/2 Bbl. Carb., Sta. Wgn.	70	8	—	—	—	1	1	—	—	—	—	—	—	3404 860
	w/383 Eng., w/2 Bbl. Carb., except Sta. Wgn.	71	8	—	—	—	1	1	—	—	—	—	—	—	3404 943
	except Sta. Wgn.		6	—	—	—	—	—	1	1	—	—	—	—	3404 844
	Sta. Wgn.		6	—	—	—	—	—	1	1	—	—	—	—	3404 852
	w/318 Eng., except Sta. Wgn.	70	8	—	—	—	—	—	1	1	—	—	—	—	3404 844
	w/318 and 360 Eng., except Sta. Wgn.,	71	8	—	—	—	—	—	1	1	1	—	—	—	3404 844
	w/318 Eng., Sta. Wgn.	70	8	—	—	—	—	—	1	1	—	—	—	—	3404 852
	w/318 and 360 Eng., Sta. Wgn.	71	8	—	—	—	—	—	1	1	—	—	—	—	3404 852
	w/383 Eng., w/2 Bbl. Carb., except Sta. Wgn.		8	—	—	—	—	—	1	1	1	—	—	—	3404 844
	w/383 Eng., w/2 Bbl. Carb., Sta. Wgn.		8	—	—	—	—	—	1	1	1	—	—	—	3404 852
	w/440 Eng., Std., except Sta. Wgn.		8	—	—	—	—	—	—	1	—	1	1	1	3404 844
	w/440 Eng., Std., Sta. Wgn.	71	8	—	—	—	—	—	1	1	1	—	—	—	3404 852
	DUAL EXHAUST-FRONT														
	w/340 Eng.		8	1	—	1	—	—	—	—	—	—	—	—	2823 462
	w/340 and 383 Eng., w/1-4 Bbl. Carb.		8	—	2	—	—	—	—	—	—	—	—	—	3404 932
	w/426 and 440 Eng.		8	—	2	—	—	—	—	—	—	—	—	—	3404 932
	w/383 w/1-4 Bbl. Carb., 426 and 440 Eng.	70	8	—	—	—	2	2	—	—	—	—	—	—	2883 873
	w/340, 383 w/1-4 Bbl. Carb., 426 and 440 Eng.	Rt. 71	8	—	—	—	1	1	—	—	—	—	—	—	3466 984
		Lt. 71	8	—	—	—	1	1	—	—	—	—	—	—	3466 191
	w/383 Eng., w/1-4 Bbl. Carb.	Rt. 70	8	—	—	—	—	—	1	1	1	—	—	—	2823 929
		Lt. 70	8	—	—	—	—	—	1	1	1	—	—	—	2856 238
	w/383 w/1-4 Bbl. Carb. and 440 Eng., except Sta. Wgn.	Rt. 71	8	—	—	—	—	—	1	1	1	1	1	—	2823 929
		Lt. 71	8	—	—	—	—	—	1	1	1	1	1	—	2856 238
	U-NUT, to Body	70	8	—	—	—	—	—	4	4	4	4	4	—	6025 508
	DUAL EXHAUST-REAR														
	w/340 Eng.	70	8	2	—	2	—	—	—	—	—	—	—	—	2073 794
	w/340 Eng.	Rt. 71	8	—	—	—	1	1	—	—	—	—	—	—	3404 943
		Lt. 71	8	—	—	—	1	1	—	—	—	—	—	—	3466 060

CODE	PART NAME	ENG. TYPE OR CU.IN.	V 1-2	B J 1-2	L 1-2	R 1-2	W 1-2	P 1-2	D 1-2	C 1	C 2	C 3	Y 1	PART NUMBER
11-10-0	**TAIL PIPE SUPPORT Cont'd.**													
11-10-3	SUPPORT AND INSULATOR Cont'd.													
	w/383 Eng., w/1-4 Bbl. Carb., Sta. Wgn. 70	8	—	—	—	1	1	—	—	—	—	—	—	3404 860-1
	w/383 Eng., w/1-4 Bbl. Carb., Sta. Wgn., 71	8	—	—	—	1	1	—	—	—	—	—	—	3583 442-3
	w/383 Eng., w/1-4 Bbl. Carb., except Sta. Wgn. 70	8	—	—	—	2	2	—	—	—	—	—	—	3404 846
	w/383 Eng., w/1-4 Bbl. Carb., except Sta. Wgn. Rt. 71	8	—	—	—	1	1	—	—	—	—	—	—	3404 943
	Lt. 71	8	—	—	—	1	1	—	—	—	—	—	—	3466 060
	w/440 Eng. 70	8	—	—	—	2	2	—	—	—	—	—	—	3404 846
	w/440 Eng. Rt. 71	8	—	—	—	1	1	—	—	—	—	—	—	3404 943
	Lt. 71	8	—	—	—	1	1	—	—	—	—	—	—	3466 060
	w/383 and 440 Std. Eng., w/1-4 Bbl. Carb., Sta. Wgn.	8	—	—	—	—	—	1	1	1	—	—	—	3404 852-3
	w/INSULATOR BRKT., w/383 Eng., w/1-4 Bbl. Carb., except Sta. Wgn.	8	—	—	—	—	—	2	2	2	—	—	—	3404 038
	w/INSULATOR BRKT., w/440 Eng., except Sta. Wgn.	8	—	—	—	—	—	2	2	2	2	2	—	3404 038
	SUPPORT, w/383 w/1-4 Bbl. Carb. and 440 Eng., except Sta. Wgn. 71	8	—	—	—	—	—	2	2	2	2	2	—	3466 057
	INSULATOR, w/383 w/1-4 Bbl. Carb. and 440 Eng., except Sta. Wgn. 71	8	—	—	—	—	—	2	2	2	2	2	—	3466 058
	DUAL EXHAUST													
	Tail Pipe Extension, w/340 Eng.	8	2	—	2	—	—	—	—	—	—	—	—	2883 842
	w/383 Eng., w/1-4 Bbl. Carb., w/o Noise Red. Pkg., 2 D.H.T. and Cv. Cp., R-M 70	8	—	—	—	2	—	—	—	—	—	—	—	2883 845
	w/383 Eng., w/1-4 Bbl. Carb., w/Decor. Tail Pipe Tips, R-M, W-M 70	8	—	—	—	2	2	—	—	—	—	—	—	2883 845
	w/426 Eng., W 2 D., 2 D.H.T. and Cv. Cp. 70	8	—	—	—	2	2	—	—	—	—	—	—	2883 845
	w/426 Eng., Charger and Charger R/T 70	8	—	—	—	—	2	—	—	—	—	—	—	2883 914
	w/440 Eng., w/1-4 Bbl. Carb., R w/o Noise Red. Pkg., W 2 D.H.T. and Cv. Cp. w/Decor. Tail Pipe Tips 70	8	—	—	—	2	2	—	—	—	—	—	—	2883 845
	w/440 Eng., w/3-2 Bbl. Carb., w/o Noise Red. Pkg., w/Decor. Tail Pipe Tips, W 2 D.H.T. and Cv. Cp. 70	8	—	—	—	2	2	—	—	—	—	—	—	2883 845
	w/440 Eng., w/1-4 Bbl. Carb., w/Decor. Tail Pipe Tips, Charger and Charger R/T 70	8	—	—	—	—	2	—	—	—	—	—	—	2883 914
	w/440 Eng., w/3-2 Bbl. Carb., w/Decor. Tail Pipe Tips, w/o Noise Red. Pkg., Charger and Charger R/T 70	8	—	—	—	—	2	—	—	—	—	—	—	2883 914
	w/340, 383 w/1-4 Bbl. Carb., 426 and 440 Eng. 71	8	—	—	—	2	2	—	—	—	—	—	—	3466 199
	BOLT, to Body 70	8	—	—	—	2	2	—	—	—	—	—	—	6026 456
11-10-17	SCREW, Support Clamp		AR	AR	AR	AR	AR	AR	AR	AR	AR	AR	AR	6024 323
11-10-18	NUT, Support Clamp U-Bolt		AR	AR	AR	AR	AR	AR	AR	AR	AR	AR	AR	2073 205
11-10-20	PLATE, Tail Pipe Frt. Support Floor Pan, w/340 Eng. Rt.	8	1	—	1	—	—	—	—	—	—	—	—	2856 391
	w/340, 383 w/1-4 Bbl. Carb., 426 and 440 Eng. Lt.	8	—	1	—	—	—	—	—	—	—	—	—	3404 033
	Muffler Rr. Support Floor Pan	6	—	1	—	—	—	—	—	—	—	—	—	2962 163
	w/318 and 383 w/2 Bbl. Carb., Eng.	8	—	1	—	—	—	—	—	—	—	—	—	2962 163

CARLINES J - Challenger, B - Barracuda, V - Valiant, L - Dart, R - Belvedere - Satellite, W - Coronet - Charger, P - Plymouth, D - Dodge, C - Chrysler, Y - Imperial

AR Indicates use as required.

Numerals in parentheses ( ) refer to notes.

# Indicates parts not listed in any previous parts book.

★ Indicates change or addition.

Printed in U.S.A. January 1972

CODE	PART NAME	ENG. TYPE OR CU.IN.	V 1-2	B J 1-2	L 1-2	R 1-2	W 1-2	P 1-2	D 1-2	C 1	C 2	C 3	Y 1	PART NUMBER
11-10-0	**TAIL PIPE SUPPORT Cont'd.**													
11-10-20	PLATE Cont'd.													
	w/340, 383, w/1-4 Bbl. Carb., 426 and 440 Eng.	8	—	2	—	—	—	—	—	—	—	—	—	2962 163
11-10-34	REINFORCEMENT, Tail Pipe Rr. Support, w/1-4 Bbl. Carb., eff. w/Ser. No. 269584 70 Canada	8	—	—	—	—	—	1	1	—	—	—	—	3404 055
11-10-42	BRACKET, Tail Pipe Frt. Support Floor Pan, w/340 Eng. Rt.	8	1	—	1	—	—	—	—	—	—	—	—	2856 393
	w/340, 383 w/1-4 Bbl. Carb., 426 and 440 Eng. Lt.	8	—	1	—	—	—	—	—	—	—	—	—	3404 035
	Outlet Pipe, Rr., Side Mtg., w/340 Eng., w/3-2 Bbl. Carb.	8	—	1	—	—	—	—	—	—	—	—	—	3466 941-2
	Tail Pipe Frt. Support Floor Pan, w/383 w/1-4 Bbl. Carb., 426 and 440 Eng. Lt. 70	8	—	—	—	1	1	—	—	—	—	—	—	2643 623
	w/340, 383 w/1-4 Bbl. Carb., 426 and 440 Eng. Lt. 71	8	—	—	—	1	1	—	—	—	—	—	—	3466 061
	Tail Pipe Frt. Support to Body, w/383 w/1-4 Bbl. Carb. and 440 Eng. Lt.	8	—	—	—	—	—	1	1	1	1	1	—	2856 241
	Tail Pipe Rr. Support, w/383 w/1-4 Bbl. Carb. and 440 Eng., except Sta. Wgn. 71	8	—	—	—	—	—	2	2	2	2	2	—	3466 056
11-10-43	SUPPORT, Ctr. Floor Pan Tail Pipe Hanger Brkt. 70		1	—	1	—	—	—	—	—	—	—	—	3504 470
	w/440 Eng. 70	8	—	2	—	—	—	—	—	—	—	—	—	2883 913

NOTES

GROUP 12 - FENDERS AND SHEET METAL

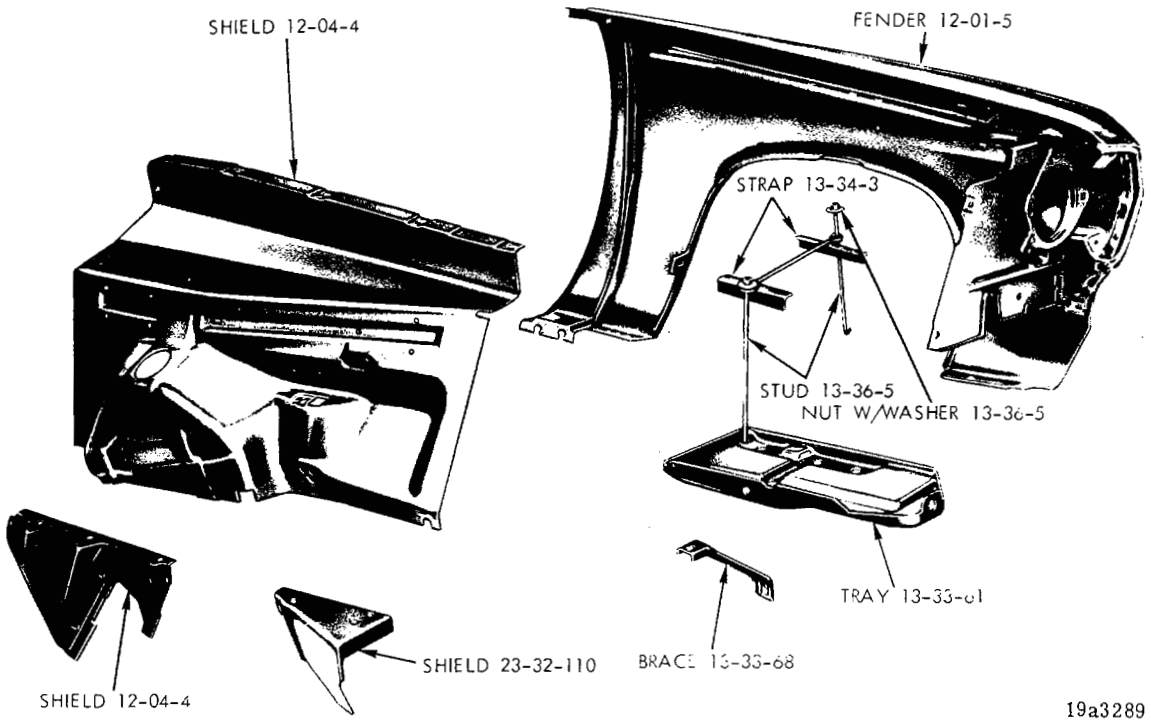

FENDER - VALIANT (TYPICAL OF DART)

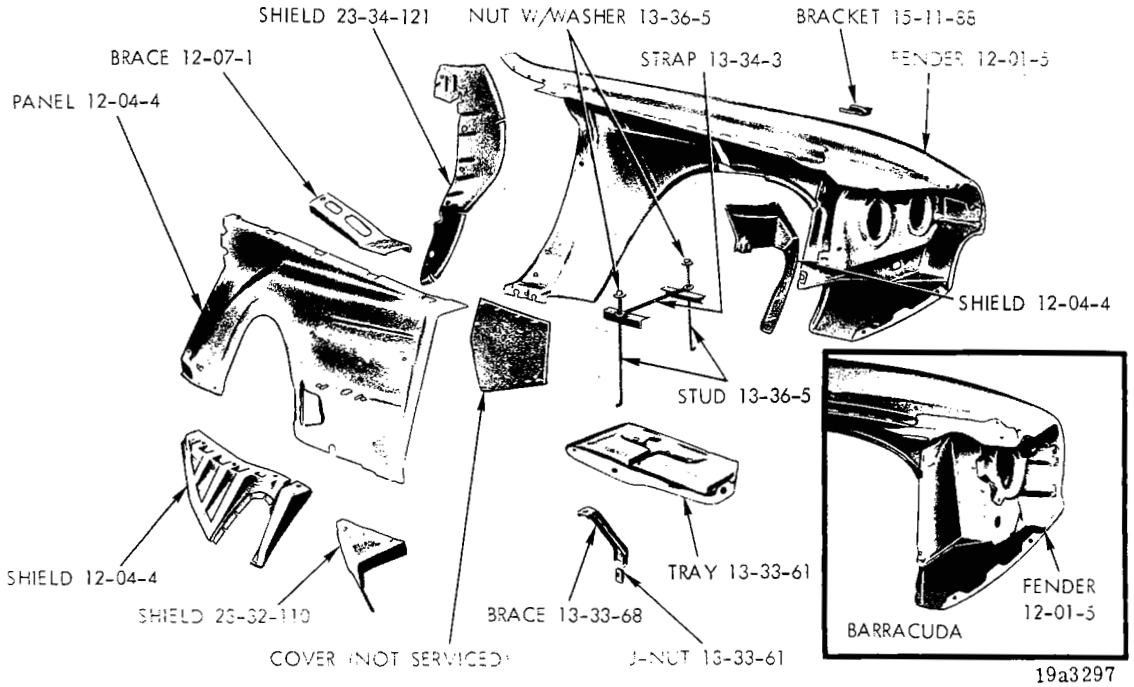

FENDER - BARRACUDA AND CHALLENGER

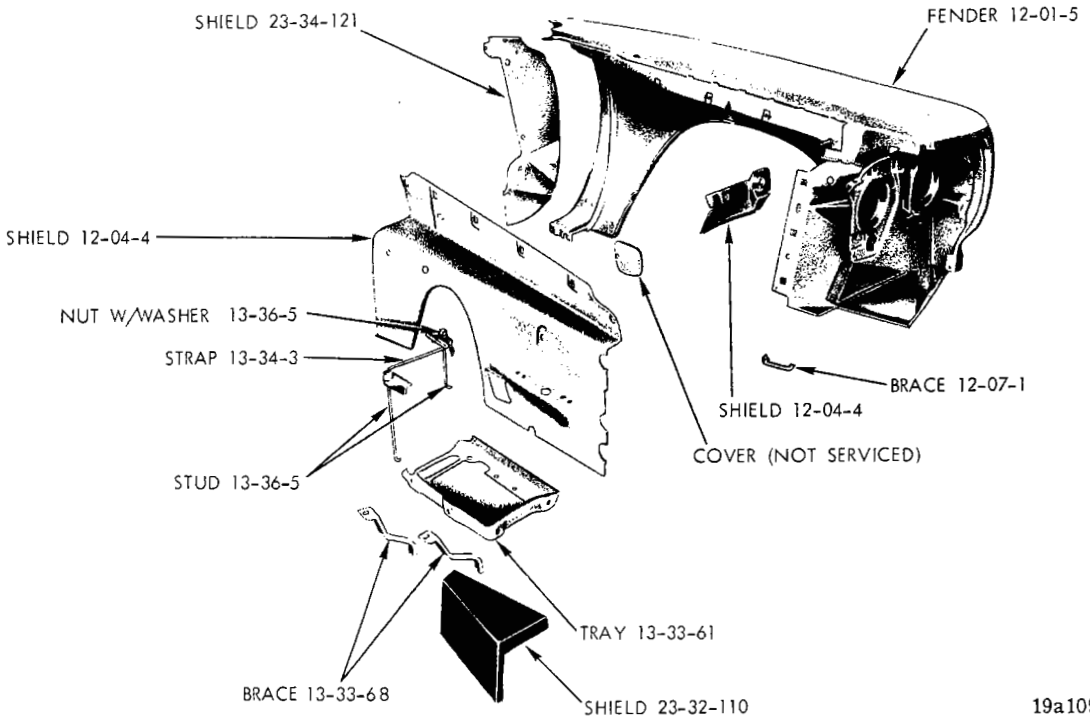

FENDER - BELVEDERE

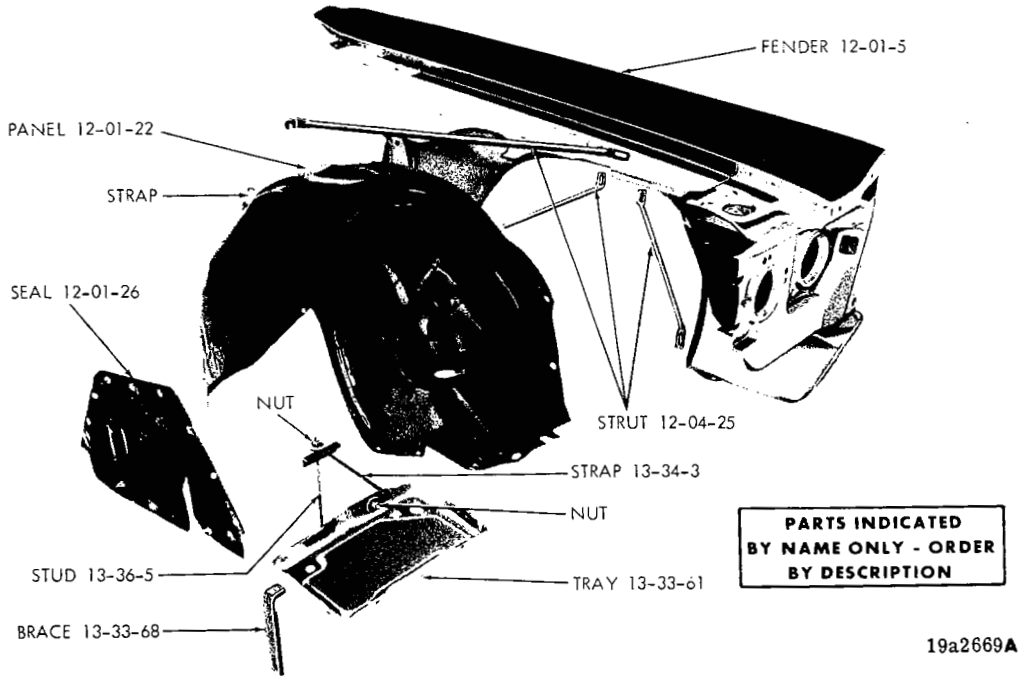

FENDER - PLYMOUTH

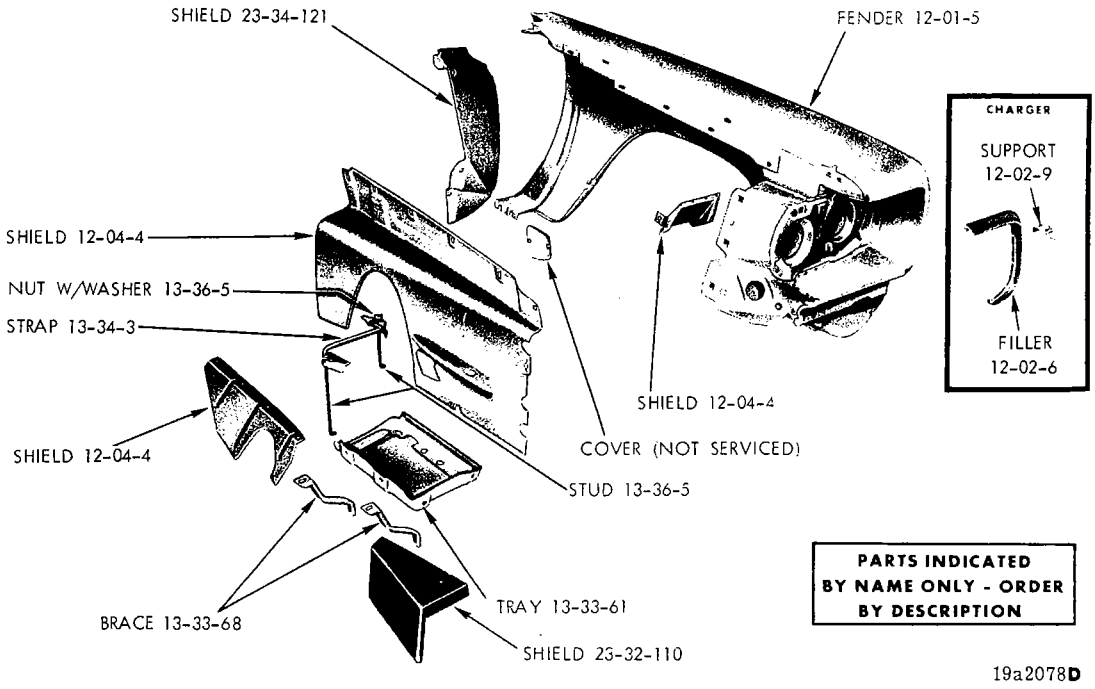

FENDER - CORONET

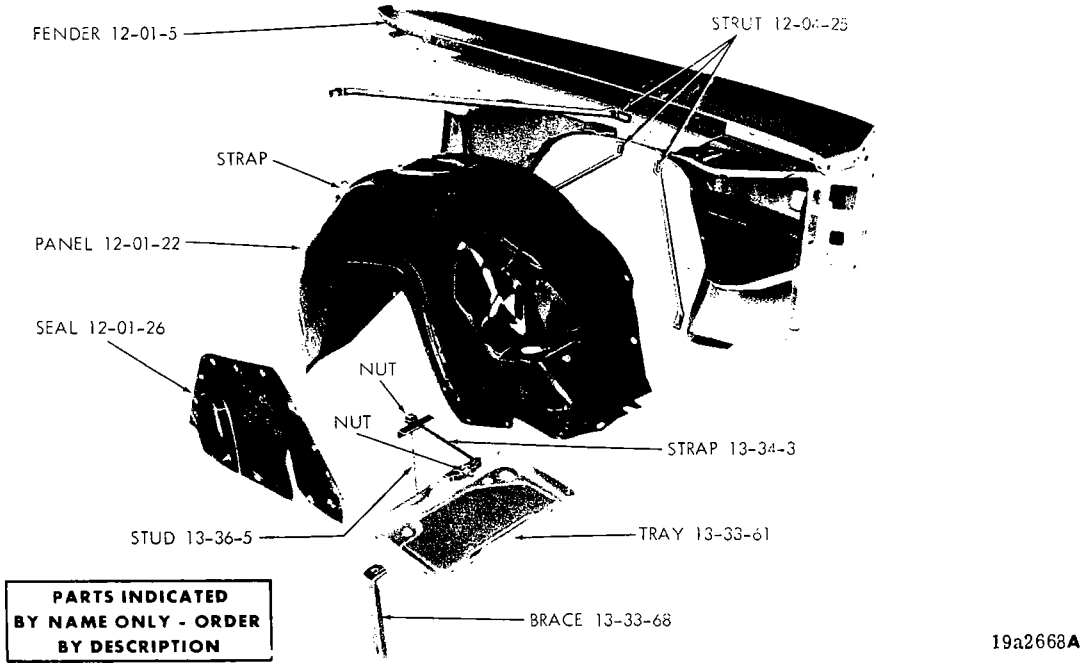

FENDER - DODGE

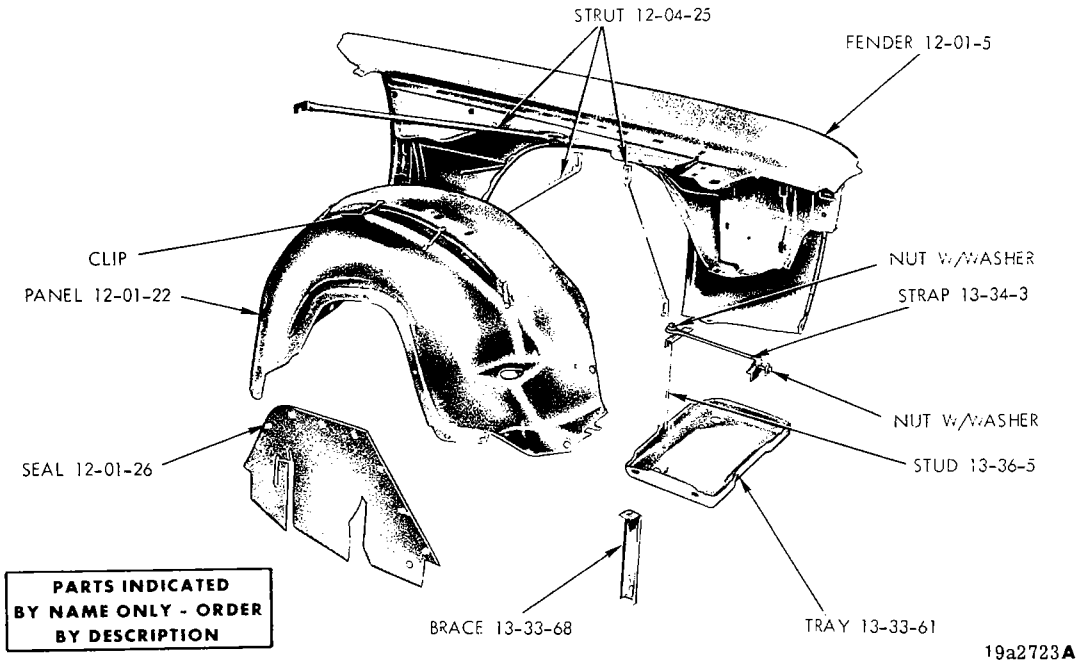

FENDER - CHRYSLER

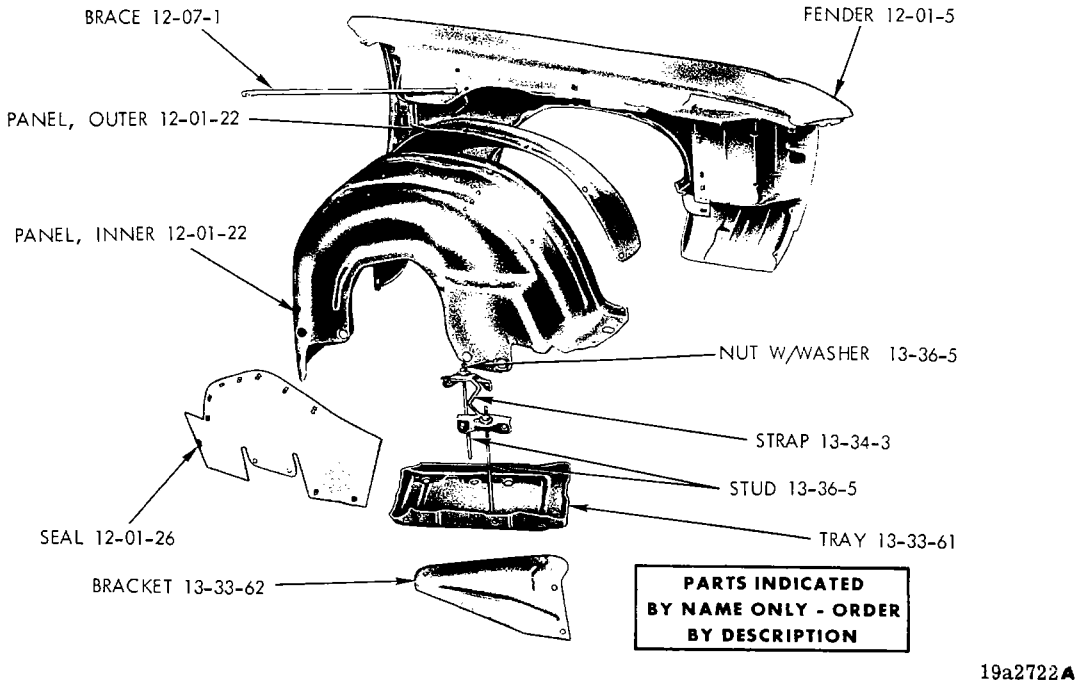

FENDER - IMPERIAL

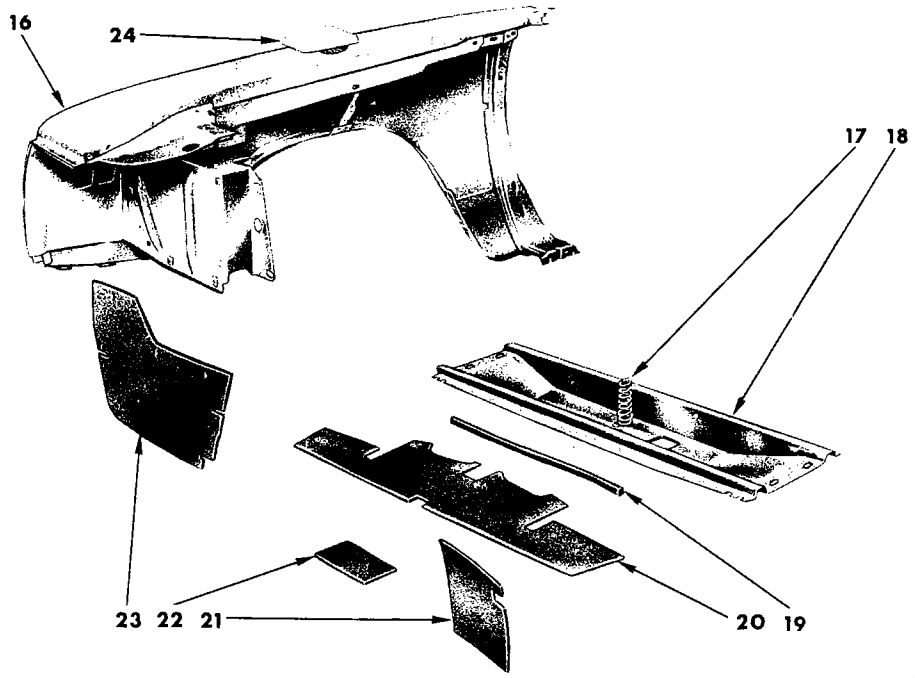

19a3318

FENDER - VALANCE - SCOOP - SUPERBIRD (1970)

REF. NO.	PART NUMBER	DESCRIPTION
16	3571 158-9	FENDER
17	2935 375	SPRING
18	2949 874	CROSSBAR
19	3571 187	SEAL
20	3412 686	SEAL
21	3412 692	SEAL
22	3412 691	SEAL
23	3571 164	SEAL
24	3571 132-3	AIR SCOOP

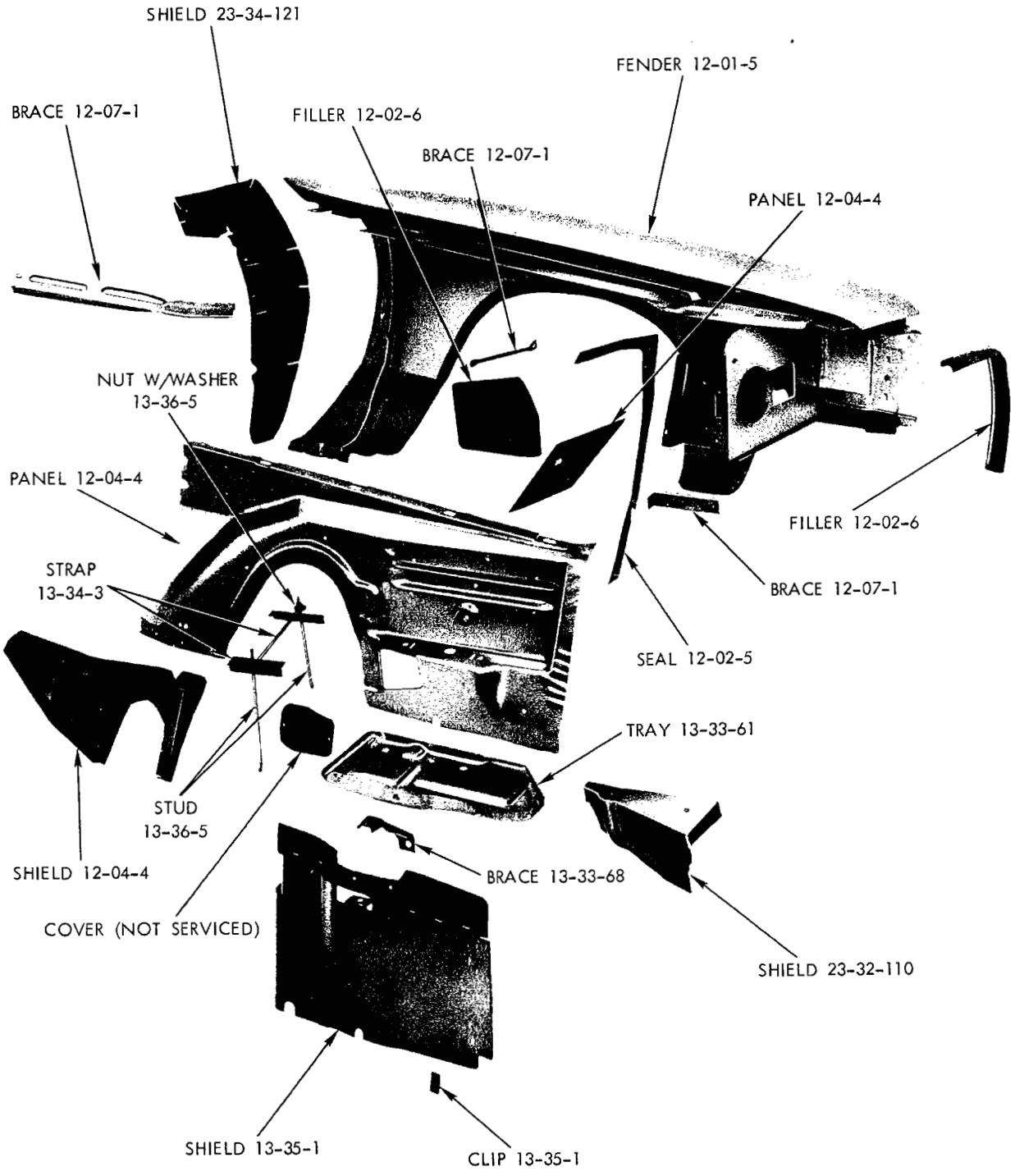

19a3773

1971
FENDER - CHARGER
(TYPICAL OF SATELLITE AND CORONET)

CODE	PART NAME	ENG. TYPE OR CU.IN.	V 1-2	B J 1-2	L 1-2	R 1-2	W 1-2	P 1-2	D 1-2	C 1	C 2	C 3	Y 1	PART NUMBER
12-01-0	**FENDERS**													
12-01-5	FENDER		1	—	—	—	—	—	—	—	—	—	—	3419 872-3
	B, Except F/60 x 15 Tires	70	—	1	—	—	—	—	—	—	—	—	—	3419 874-5
	B-H, B-P, except F60 x 15 Tires	71	—	1	—	—	—	—	—	—	—	—	—	3579 676-7
	B-H, B-P, use w/F60 x 15 Tires	71	—	1	—	—	—	—	—	—	—	—	—	3621 752-3
	B, W/F60 x 15 Tires	70	—	1	—	—	—	—	—	—	—	—	—	3579 378-9
	B-S	71	—	1	—	—	—	—	—	—	—	—	—	3579 678-9
	B-S, W/F60 x 15 Tires	71	—	1	—	—	—	—	—	—	—	—	—	3579 664-5
	J, Except F60 x 15" Tires	70	—	1	—	—	—	—	—	—	—	—	—	3419 878-9
	J, W/F 60 x 15" Tires	70	—	1	—	—	—	—	—	—	—	—	—	3579 380-1
	J, W/F 60 x 15" Tires	71	—	1	—	—	—	—	—	—	—	—	—	3579 380-1
	J, Trans. Am, w/F 60 x 14 Tires		—	1	—	—	—	—	—	—	—	—	—	3579 624-5
			—	—	1	—	—	—	—	—	—	—	—	3419 876-7
		70	—	—	—	1	—	—	—	—	—	—	—	3419 880-1
	2 D.H.T.	71	—	—	—	1	—	—	—	—	—	—	—	3579 680-1
	4 D., Sta. Wgn.	71	—	—	—	1	—	—	—	—	—	—	—	3579 682-3
	W, except Charger	70	—	—	—	—	1	—	—	—	—	—	—	3419 882-3
	W/Charger	70	—	—	—	—	1	—	—	—	—	—	—	3419 884-5
	2 D.H.T., FAST BACK	71	—	—	—	—	1	—	—	—	—	—	—	3579 684-5
	4 D., Sta. Wgn.	71	—	—	—	—	1	—	—	—	—	—	—	3579 686-7
	W/Small Cornering Lamp Holes	70	—	—	—	—	—	1	—	—	—	—	—	3419 886-7
	W/Large Cornering Lamp Hole, P-H, Except Sta. Wgn.	70	—	—	—	—	—	1	—	—	—	—	—	3549 654-5
		71	—	—	—	—	—	1	—	—	—	—	—	3579 690-1
	W/O Cornering Lamps	70	—	—	—	—	—	—	1	—	—	—	—	3419 888-9
	w/Cornering Lamps	70	—	—	—	—	—	—	1	—	—	—	—	3419 948-9
	W/Cornering Lamp Holes	71	—	—	—	—	—	—	1	—	—	—	—	3579 692-3
	W/O Cornering Lamp Holes	71	—	—	—	—	—	—	1	—	—	—	—	3579 694-5
	W/O Cornering Lamps	70 & 71	—	—	—	—	—	—	—	1	1	1	—	3419 890-1
	W/Cornering Lamps	70	—	—	—	—	—	—	—	1	1	1	—	3419 892-3
	W/Cornering Lamp Holes	71	—	—	—	—	—	—	—	1	1	1	—	3579 696-7
		70	—	—	—	—	—	—	—	—	—	—	1	3419 894-5
		71	—	—	—	—	—	—	—	—	—	—	1	3579 698-9
12-01-22	PANEL, Fender Headlamp, except Charger	70	—	—	—	—	2	—	—	—	—	—	—	3443 162
	Fender W/House	70	—	—	—	—	—	1	1	1	1	1	—	2925 326-7
	Fender W/House, 2 D.H.T., 4 D.H.T., 4 D.		—	—	—	—	—	1	1	1	1	1	—	3404 426-7
	Fender W/House, Cv. Cp. and Sta. Wgn.		—	—	—	—	—	—	—	1	1	1	—	2925 326-7
	Fender W/House, Inner		—	—	—	—	—	—	—	—	—	—	1	2925 330-1
	Plastic, Outer		—	—	—	—	—	—	—	—	—	—	1	2925 332-3
12-01-26	SEAL, Fender W/House Panel to Upper Control Arm, w/225 Eng.	70	—	—	—	—	—	1	1	—	—	—	—	2925 338-9
	Fender W/House Panel to Upper Control Arm, except 225 Eng., P, All, D, C, Cv. Cp. and Sta. Wgn.	70	—	—	—	—	—	2	2	2	2	2	—	2925 339
	Fender W/House Panel to Upper Control Arm		—	—	—	—	—	2	2	2	2	2	—	2925 338
	Fender W/House Inner Panel to Upper Control Arm,	Lt.	—	—	—	—	—	—	—	—	—	—	1	2534 812
		Rt.	—	—	—	—	—	—	—	—	—	—	1	2768 330
	Fender W/House Panel to Frame, Front		—	—	—	—	—	2	2	2	2	2	—	3404 450
	Fender W/House Panel to Frame, Rear		—	—	—	—	—	2	2	2	2	2	—	3404 421
12-01-105	EXTENSION, Fender Front		—	—	1	—	—	—	—	—	—	—	—	2998 376-7
	Prime, use after Jan. 1, 1971	71	—	—	1	—	—	—	—	—	—	—	—	3573 788-9
	Plastic		—	—	—	—	—	1	—	—	—	—	—	2949 414-5
	Die Cast	Prime 71	—	—	—	—	—	1	—	—	—	—	—	3443 802-3
	W/Periphery Mldgs.		—	—	—	—	—	—	1	—	—	—	—	2949 412-3
	W/O Periphery Mldgs.	71	—	—	—	—	—	—	1	—	—	—	—	3443 852-3

CARLINES: J - Challenger, B - Barracuda, V - Valiant, L - Dart, R - Belvedere - Satellite, W - Coronet - Charger, P - Plymouth, D - Dodge, C - Chrysler, Y - Imperial

AR Indicates use as required.

# Indicates parts not listed in any previous parts book.

Numerals in parentheses ( ) refer to notes.

★ Indicates change or addition.

Printed in U.S.A. January 1972

CODE	PART NAME	ENG. TYPE OR CU.IN.	V 1-2	B J 1-2	L 1-2	R 1-2	W 1-2	P 1-2	D 1-2	C 1	C 2	C 3	Y 1	PART NUMBER
12-02-0	**FENDER LINER, FILLER OR SEAL**													
12-02-5	SEAL, Fender H/Lamp Panel, 4 D., Sta. Wgn.	71	—	—	—	—	2	—	—	—	—	—	—	3442 206
	2 D.H.T., FAST BACK	71	—	—	—	—	2	—	—	—	—	—	—	3442 364
	4 D., Sta. Wgn.	71	—	—	—	—	2	—	—	—	—	—	—	3442 152
	SHIM, Fender Flange Reinf. to Dash Panel	71	—	—	—	—	—	AR	AR	AR	AR	AR	AR	3443 640
12-02-6	FILLER, Fender Bumper	70	—	—	—	—	—	—	—	1	1	1	—	2998 662-3
		71	—	—	—	—	—	—	—	1	1	1	—	2998 442-3
	FILLER, Fender Bumper, Charger		—	—	—	—	1	—	—	—	—	—	—	2998 698-9
			—	—	—	—	—	—	—	—	—	—	1	2998 736-7
	Fender Yoke Panel		—	—	—	—	—	—	—	2	2	2	—	2998 118
	FILLER, Fndr. H/Lamp Yoke Pnl. Bumper Support, 2 D.H.T.	71	—	—	—	2	—	—	—	—	—	—	—	3443 799
12-02-7	WEDGE, Fender Hood	70	—	2	—	—	—	2	2	2	2	2	2	2949 228
		71	—	2	—	2	2	2	2	2	2	2	2	2949 228
12-02-9	SUPPORT, Fender Bumper Filler, Charger	70	—	—	—	—	1	—	—	—	—	—	—	3443 336-7
12-02-10	RETAINER, Fender Bumper Filler, Upper	70	—	—	—	—	—	—	—	1	1	1	—	2998 660-1
	Upper		—	—	—	—	—	—	—	—	—	—	1	2898 970-1
	Intermediate		—	—	—	—	—	—	—	2	2	2	—	2898 781
	Lower		—	—	—	—	—	—	—	2	2	2	—	2898 754
	Lower		—	—	—	—	—	—	—	—	—	—	1	2898 972-3
	Upper, Charger	70	—	—	—	—	2	—	—	—	—	—	—	2998 523
	Side, Charger	70	—	—	—	—	2	—	—	—	—	—	—	2998 528
12-04-0	**FENDER SHIELD**													
12-04-4	SHIELD	Rt.	1	—	1	—	—	—	—	—	—	—	—	2768 362
		Lt.	1	—	1	—	—	—	—	—	—	—	—	3404 419
		Rt. 70	—	—	—	1	1	—	—	—	—	—	—	2530 984
		Lt. 70	—	—	—	1	1	—	—	—	—	—	—	3404 413
	Front Side Rail Lower Splash	Lt.	1	—	1	—	—	—	—	—	—	—	—	2925 321
	Front Side Rail Lower Splash	Lt.	—	1	—	—	—	—	—	—	—	—	—	3404 435
		Lt. 71	—	—	—	1	1	—	—	—	—	—	—	3404 435
	Fender H/Lamp Panel Splash (Plastic)	70	—	1	—	—	—	—	—	—	—	—	—	2998 046-7
	Fender H/Lamp Pnl., B	71	—	1	—	—	—	—	—	—	—	—	—	3443 444-5
	Fender H/Lamp Pnl. Splash, J	71	—	1	—	—	—	—	—	—	—	—	—	2998 046-7
	Front Side Rail Lower Splash	Lt. 70	—	—	—	1	1	—	—	—	—	—	—	2925 315
	Use W 340 Eng.	Lt.	—	1	—	—	—	—	—	—	—	—	—	2925 315
	Front Side Rail Lower Splash	Lt.	—	—	—	—	—	1	1	1	1	1	—	3404 434
	Front Sidemember Lower Splash	Lt.	—	—	—	—	—	—	—	—	—	—	1	2856 319
	Front C Member Splash	Rt. 70	—	—	—	—	—	—	—	—	—	—	1	2768 328
	PANEL, Fender Shield		—	1	—	—	—	—	—	—	—	—	—	3404 406-7
		71	—	—	—	1	1	—	—	—	—	—	—	3404 406-7
	Fender H Lamp Splash, Upper, except Charger	70	—	—	—	—	1	—	—	—	—	—	—	2998 484-5
	Fender H Lamp Splash, Lower, except Charger	70	—	—	—	—	1	—	—	—	—	—	—	2949 850-1
	Fender Splash, Lower, Charger	70	—	—	—	—	1	—	—	—	—	—	—	2998 256-7
	PANEL, Fender H/Lamp Splash, 2 D.H.T.	71	—	—	—	1	—	—	—	—	—	—	—	3443 198-9
	4 D., Sta. Wgn.	71	—	—	—	1	—	—	—	—	—	—	—	3442 940-1
	2 D.H.T., FAST BACK	71	—	—	—	—	1	—	—	—	—	—	—	3442 390-1
	4 D., Sta. Wgn.	71	—	—	—	—	1	—	—	—	—	—	—	3442 392-3
12-04-23	SEAL, Fender H/Lamp Splash Panel	70	—	—	—	2	—	—	—	—	—	—	—	2949 902
	Fender H/Lamp Pnl., 2 D.H.T.	71	—	—	—	2	—	—	—	—	—	—	—	3442 290
	Fender H/Lamp Upper Splash Panel Side, except Charger	70	—	—	—	—	2	—	—	—	—	—	—	2949 858
	Fender Splash Upper Panel, Charger	70	—	—	—	—	2	—	—	—	—	—	—	2998 090

CARLINES: J - Challenger, B - Barracuda, V - Valiant, L - Dart, R - Belvedere - Satellite, W - Coronet - Charger, P - Plymouth, D - Dodge, C - Chrysler, Y - Imperial

AR Indicates use as required.

Numerals in parentheses ( ) refer to notes.

# Indicates parts not listed in any previous parts book.

★ Indicates change or addition.

Printed in U.S.A. January 1972

CODE	PART NAME	ENG. TYPE OR CU.IN.	V 1-2	B J 1-2	L 1-2	R 1-2	W 1-2	P 1-2	D 1-2	C 1	C 2	C 3	Y 1	PART NUMBER
12-04-0	**FENDER SHIELD Cont'd.**													
12-04-23	SEAL Cont'd.													
	SEAL Frt. Side Rail Lwr. Splash Shield, Use W/340 Eng.		—	1	—	—	—	—	—	—	—	—	—	3583 004
12-04-24	CLIP, Fender Seal or Cover		AR	AR	AR	AR	AR	AR	AR	AR	AR	AR	AR	2405 049
12-04-25	STRUT, Fender Flange Reinforcement Dash		—	—	—	—	—	1	1	1	1	1	1	2898 556-7
	Fender Reinforcement Bracket Yoke Mtg.		—	—	—	—	—	1	1	1	1	1	—	2949 454-5
	Fender Reinforcement Bracket Dash Panel		—	—	—	—	—	1	1	1	1	1	—	2949 456-7
	Fender Flge. Reinf. Dash	Lt. 71	—	—	—	—	—	1	1	1	1	1	—	3442 415
12-06-0	**FENDER BRACKET**													
12-06-3	BRACKET, Cowl Side Fender Mtg., up to Type		—	1	—	—	—	—	—	—	—	—	—	2895 846-7
	After Type		—	1	—	—	—	—	—	—	—	—	—	3500 602-3
	BRACKET, Fndr. H/Lamp Pnl. Adapter, Upr., B	71	—	2	—	—	—	—	—	—	—	—	—	3443 319
	Lwr., B	71	—	2	—	—	—	—	—	—	—	—	—	3443 326
	Fender Yoke Bracket Bumper	70	—	—	—	—	2	—	—	—	—	—	—	2998 351
	Fender Grille Mtg. Panel		—	—	—	—	—	—	—	—	2	—	—	2898 798
	Fender Yoke Side Panel Bumper Adjusting		—	—	—	—	—	—	—	—	—	—	2	2949 102
	BRACKET, w/NUT, Dash Pnl. to Fndr. Brace		—	—	—	—	—	—	—	—	—	—	2	2895 355
	BRACKET, Fndr. Flge. Reinf. W/House	71	—	—	—	—	—	—	—	—	—	—	1	3443 764-5
	BRACKET, Fndr. Flge. Reinf. Dash	71	—	—	—	—	—	—	—	—	—	—	1	3443 766-7
12-07-0	**FENDER BRACE**													
12-07-1	BRACE, Fender Bumper Support		2	—	2	—	—	—	—	—	—	—	—	2579 904
	Fender Shield Panel to Cowl		—	1	—	1	1	—	—	—	—	—	—	2925 340-1
	Fender H/Lamp Adapter Yoke, J		—	1	—	—	—	—	—	—	—	—	—	2998 112-3
	Fender Bumper Support	70	—	—	—	2	—	—	—	—	—	—	—	2786 935
	Fender Dash Panel		—	—	—	—	—	—	—	—	—	—	2	2949 312
	BRACE, Fndr. H/Lamp Adapter Grill, J	71	—	2	—	—	—	—	—	—	—	—	—	3443 499
	BRACE, Fndr. Dash	Rt. 71	—	—	—	1	1	—	—	—	—	—	—	3443 544
		Lt. 71	—	—	—	1	1	—	—	—	—	—	—	3443 545
	Use After May 1, 1971	71	—	1	—	—	—	—	—	—	—	—	—	# 3573 952-3
	BRACE, Fndr. H/Lamp Pnl. Yoke 2 D.H.T., FAST BACK	71	—	—	—	2	2	—	—	—	—	—	—	3442 292
	4 D., Sta. Wgn.	71	—	—	—	2	—	—	—	—	—	—	—	3442 204
	4 D., Sta. Wgn.	71	—	—	—	—	2	—	—	—	—	—	—	3442 148
12-15-0	**FENDER MOULDINGS, NAME PLATES AND ORNAMENTS**													
12-15-8	RETAINER, Fender Hood Mldg. Extension, J	71	—	6	—	—	—	—	—	—	—	—	—	3443 668
	NOTE: See Exterior Moulding Illustrations in Illustration Catalog													
12-15-32	OVERLAY, Fender Side, R-P, Sta. Wgn.	70	—	—	—	AR	—	—	—	—	—	—	—	3444 813
	R-P, Sta. Wgn.	71	—	—	—	AR	—	—	—	—	—	—	—	3569 975
	W-P, Sta. Wgn.	70	—	—	—	—	AR	—	—	—	—	—	—	3444 834
	W-P, Sta. Wgn.	71	—	—	—	—	AR	—	—	—	—	—	—	3569 975
	P-H, Sta. Wgn.	70	—	—	—	—	—	AR	—	—	—	—	—	3444 846
	P-H, Sta. Wgn.	71	—	—	—	—	—	AR	—	—	—	—	—	3569 975
	D-H, Sta. Wgn.	70	—	—	—	—	—	—	AR	—	—	—	—	3444 860
	D-H, Sta. Wgn.	71	—	—	—	—	—	—	AR	—	—	—	—	3569 975
	C-P, Sta. Wgn.	70	—	—	—	—	—	—	—	—	—	AR	—	3444 874
	C-P, Sta. Wgn.	71	—	—	—	—	—	—	—	—	—	AR	—	3569 975

CARLINES J - Challenger, B - Barracuda, V - Valiant, L - Dart, R - Belvedere - Satellite, W - Coronet - Charger, P - Plymouth, D - Dodge, C - Chrysler, Y - Imperial

AR Indicates use as required.

Numerals in parentheses ( ) refer to notes.

# Indicates parts not listed in any previous parts book.

★ Indicates change or addition.

Printed in U.S.A. January 1972

CODE	PART NAME	ENG. TYPE OR CU.IN.	V	B J	L	R	W	P	D	C	C	C	Y	PART NUMBER
			1-2	1-2	1-2	1-2	1-2	1-2	1-2	1	2	3	1	
12-15-0	**FENDER MOULDINGS, NAME PLATES AND ORNAMENTS Cont'd.**													
12-15-32	OVERLAY Cont'd.													
	OVERLAY, Fender Extension, P-H, Sta.													
	Wgn.	70		—	—	—	—	—	1	—	—	—	—	3446 482-3
	P-H, Sta. Wgn.	71		—	—	—	—	—	1	—	—	—	—	3612 476-7
	D-H, Sta. Wgn.	70		—	—	—	—	—	—	1	—	—	—	3446 484-5
	D-H, Sta. Wgn.	71		—	—	—	—	—	—	1	—	—	—	3612 632-3

NOTES

GROUP 13 - FRAME

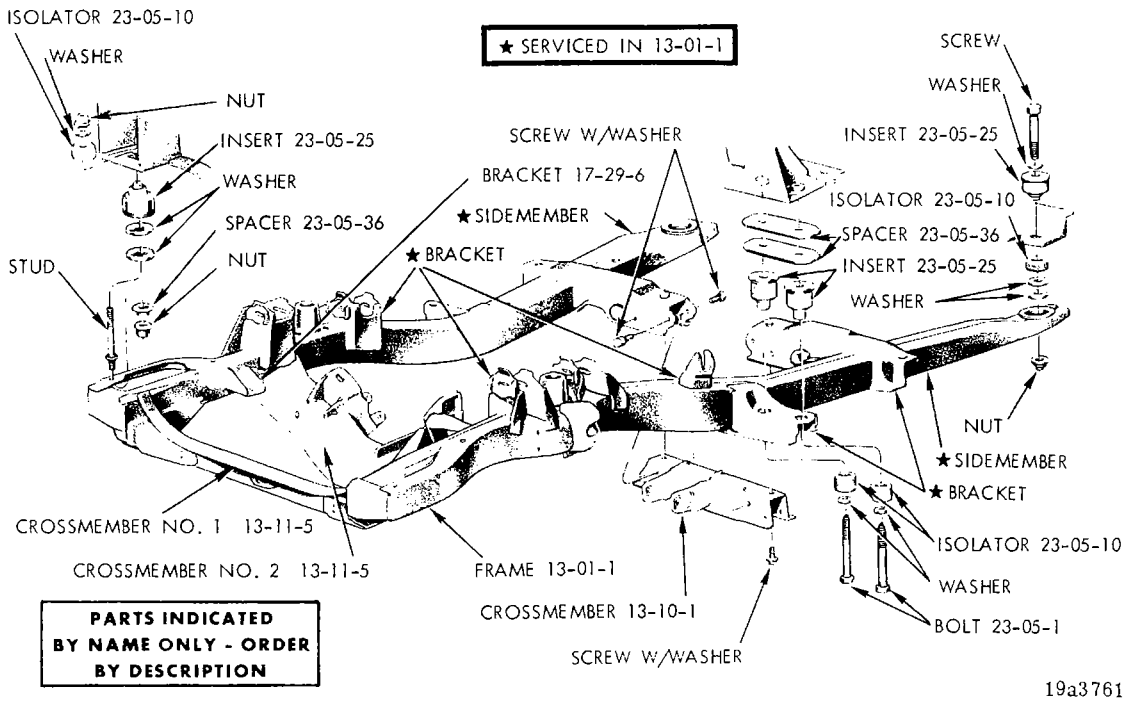

FRAME - PLYMOUTH, DODGE AND CHRYSLER

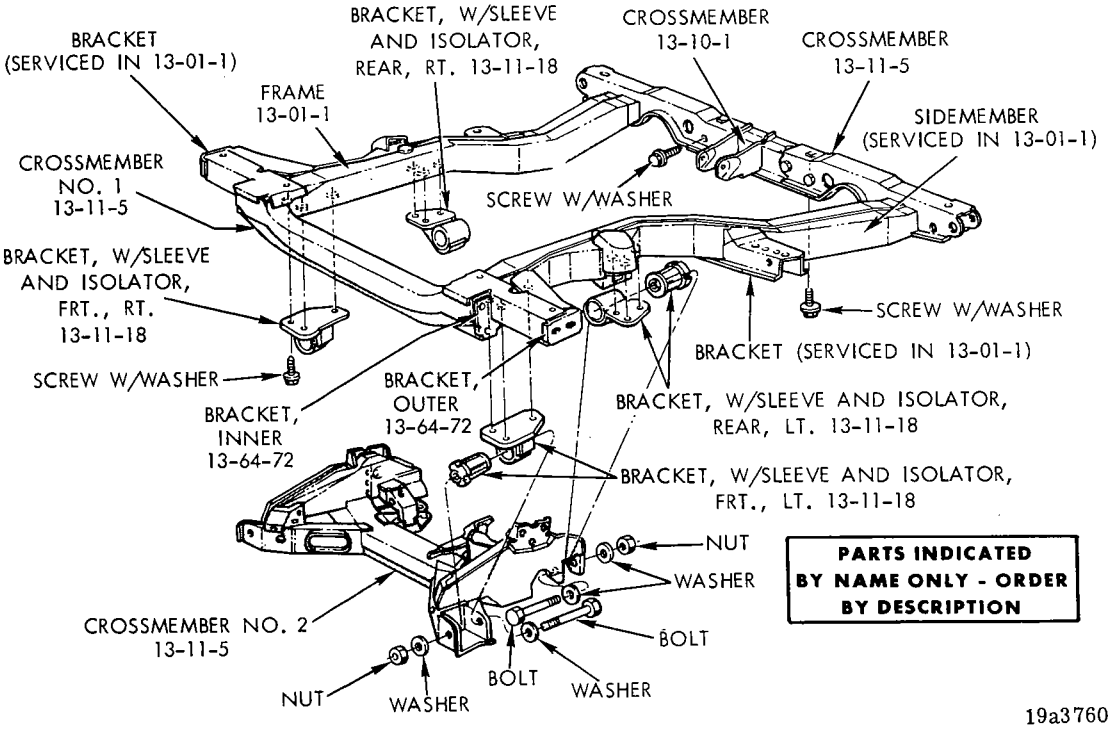

FRAME - IMPERIAL

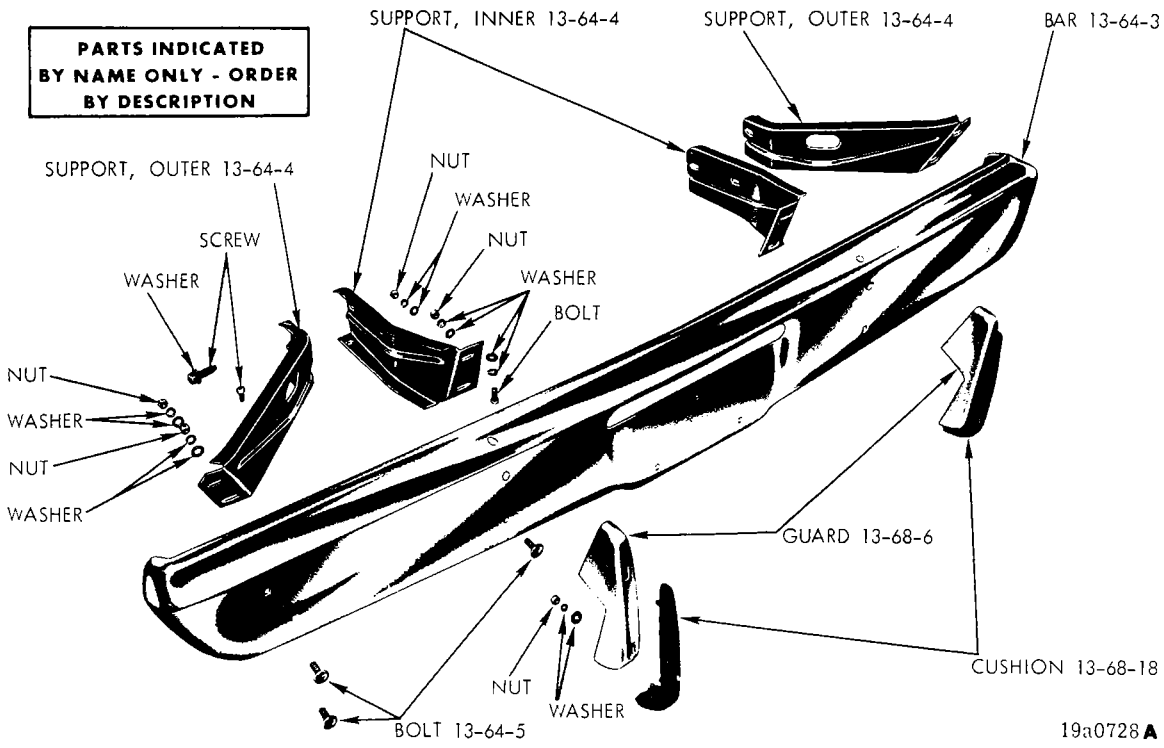

FRONT BUMPER - VALIANT

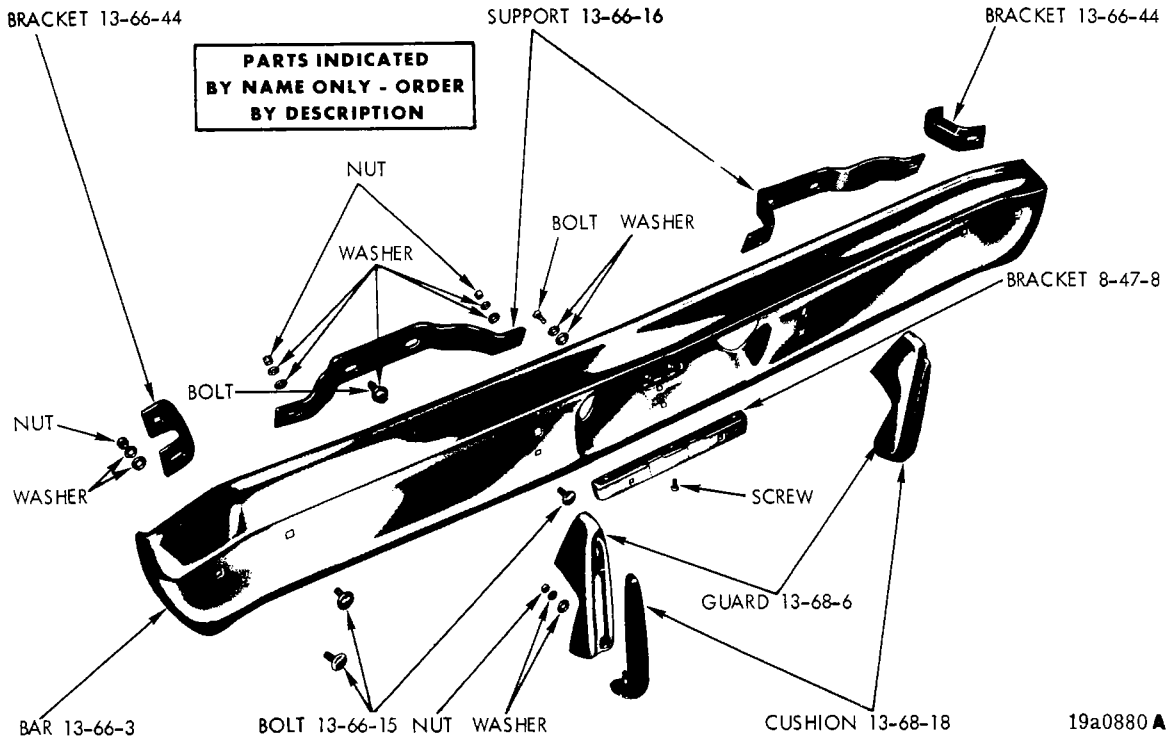

REAR BUMPER - VALIANT

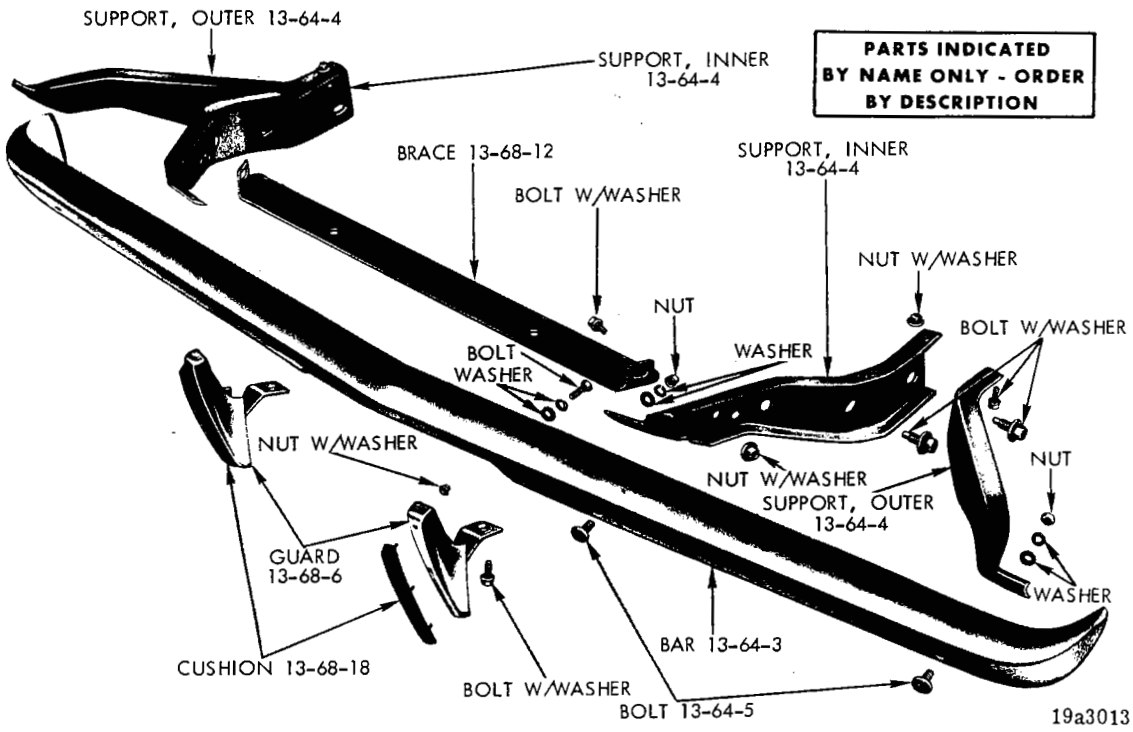

FRONT BUMPER - BARRACUDA

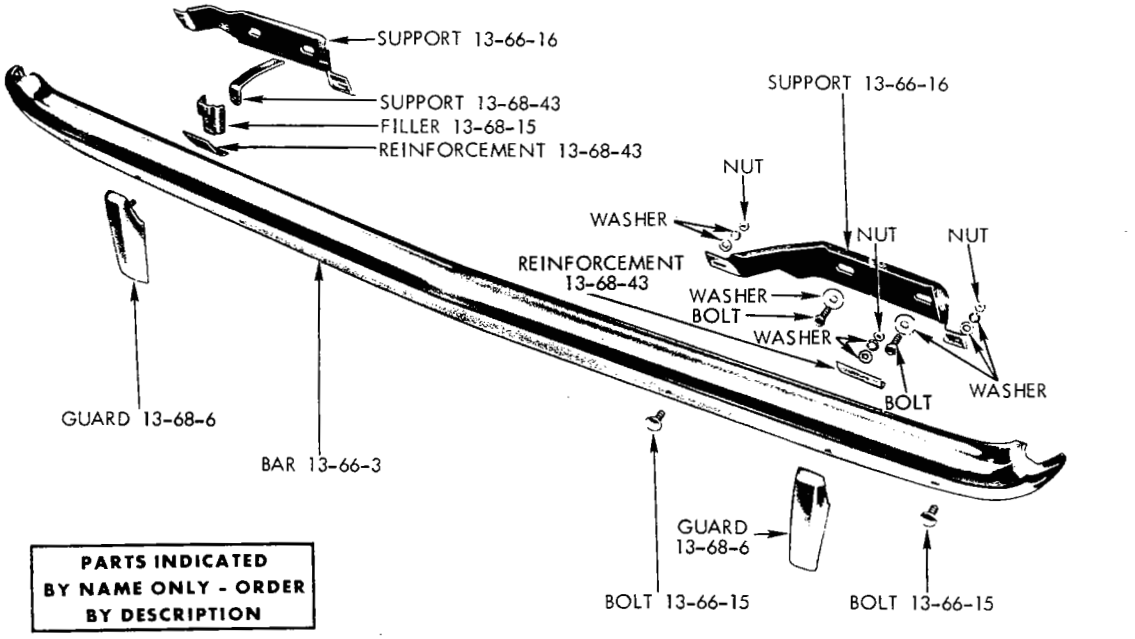

REAR BUMPER - BARRACUDA

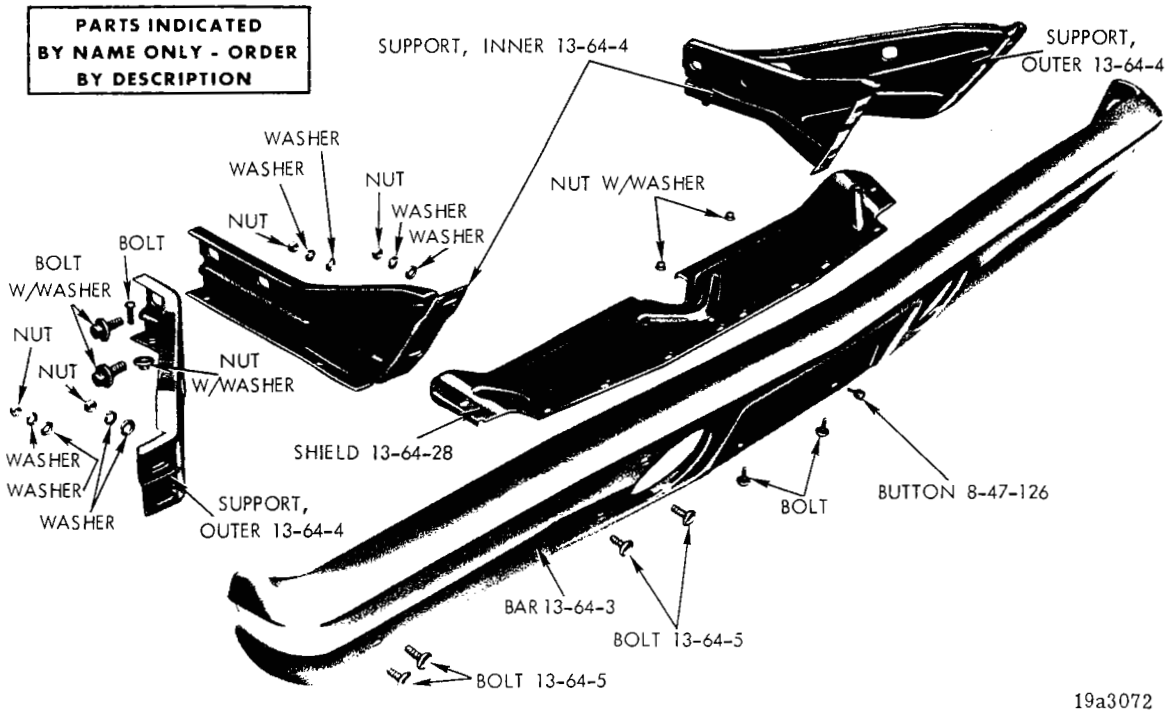

FRONT BUMPER - BELVEDERE

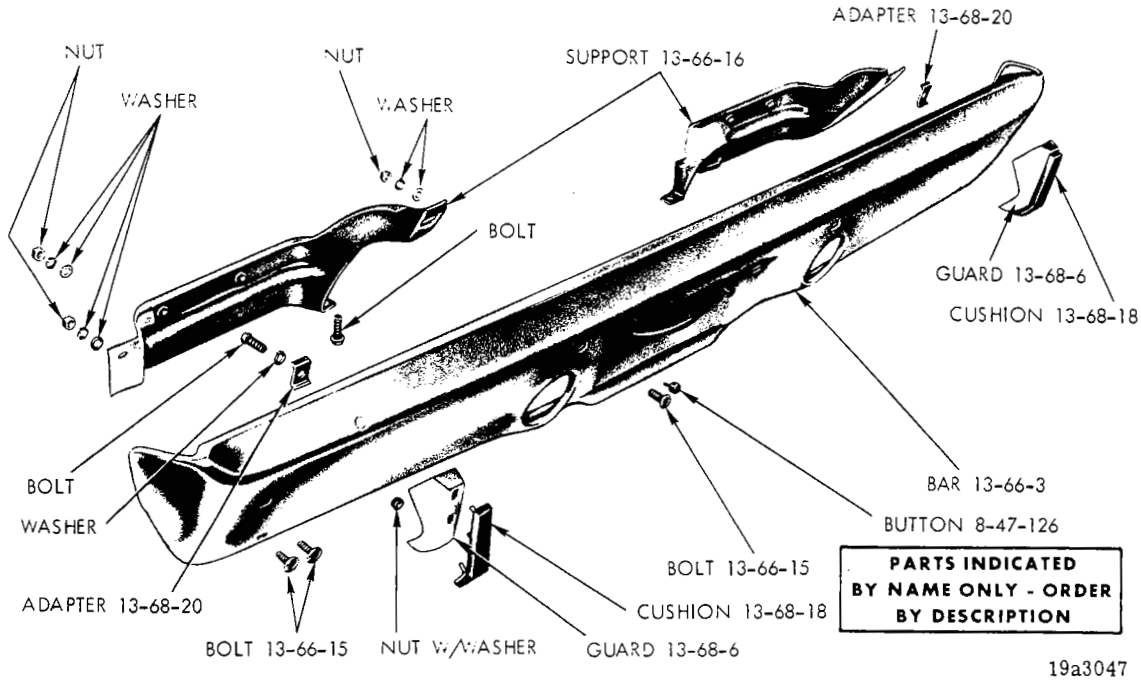

REAR BUMPER - BELVEDERE

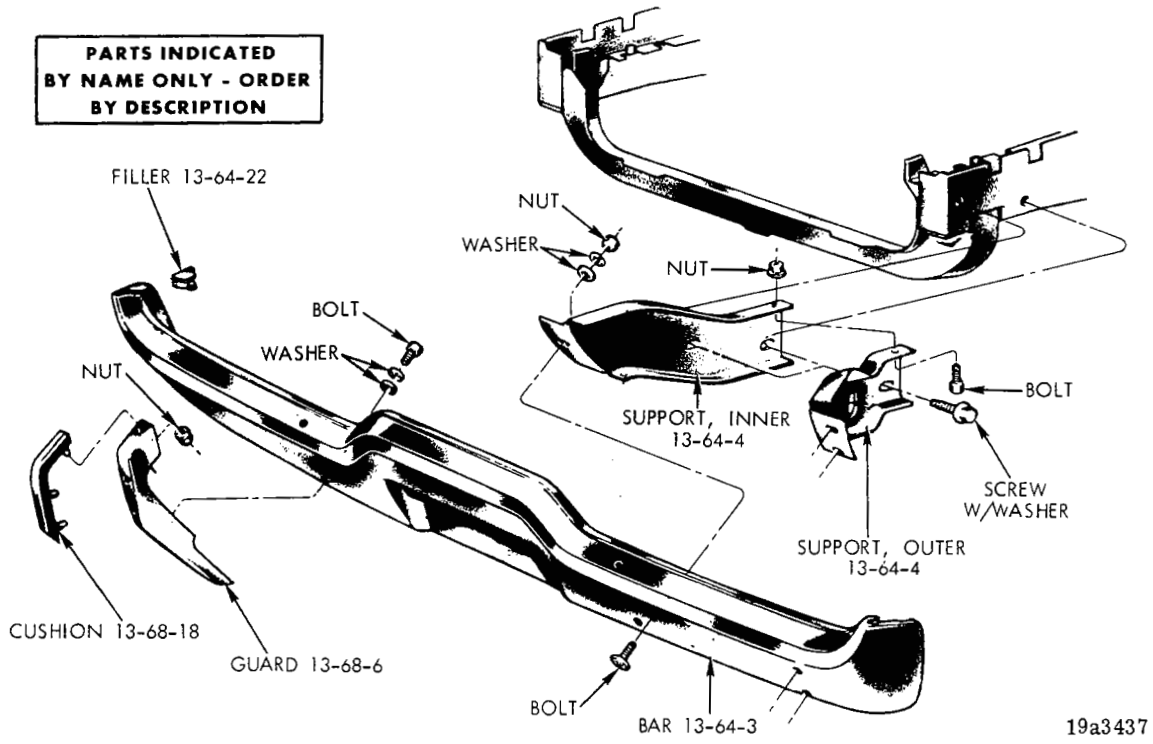

FRONT BUMPER - SATELLITE 4 DOOR AND STATION WAGON (1971)

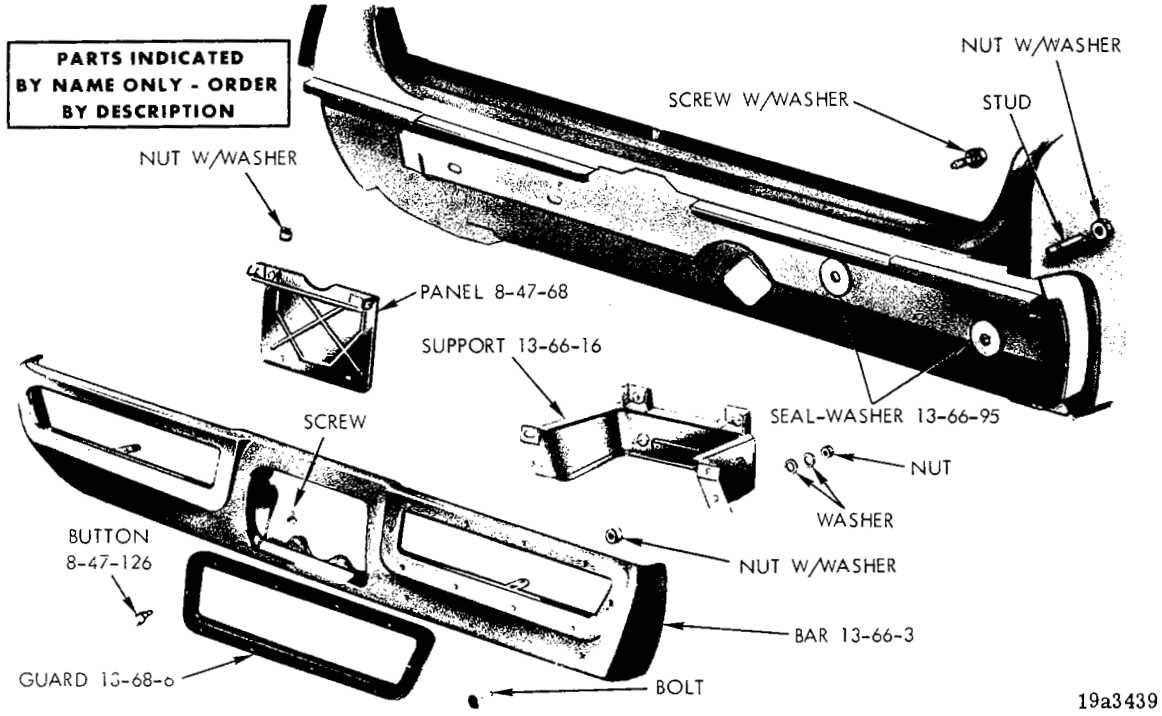

REAR BUMPER - SATELLITE 4 D. (1971)

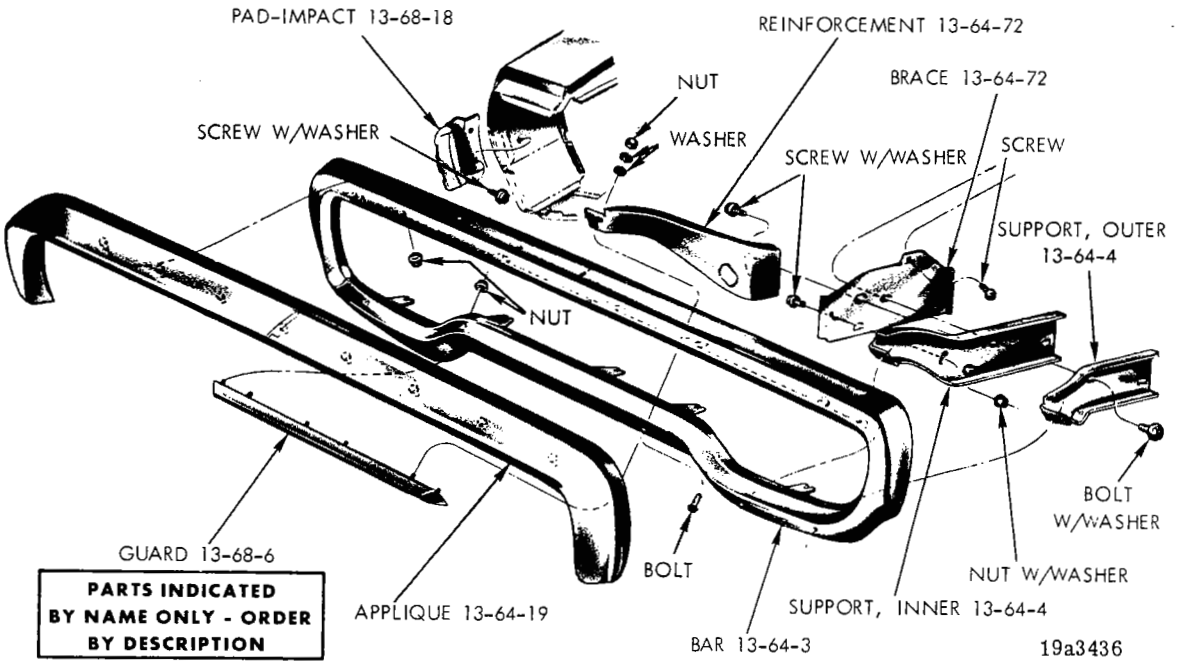

PARTS INDICATED BY NAME ONLY - ORDER BY DESCRIPTION

FRONT BUMPER - SATELLITE 2 D. HARDTOP (1971)

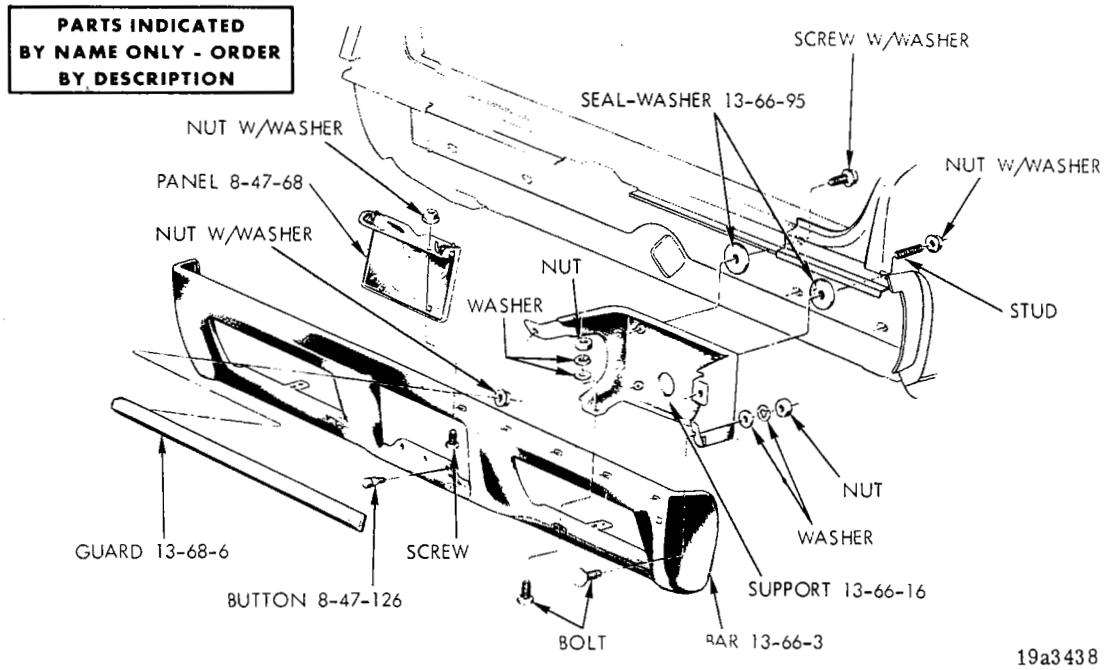

REAR BUMPER - SATELLITE 2 D. HARDTOP (1971)

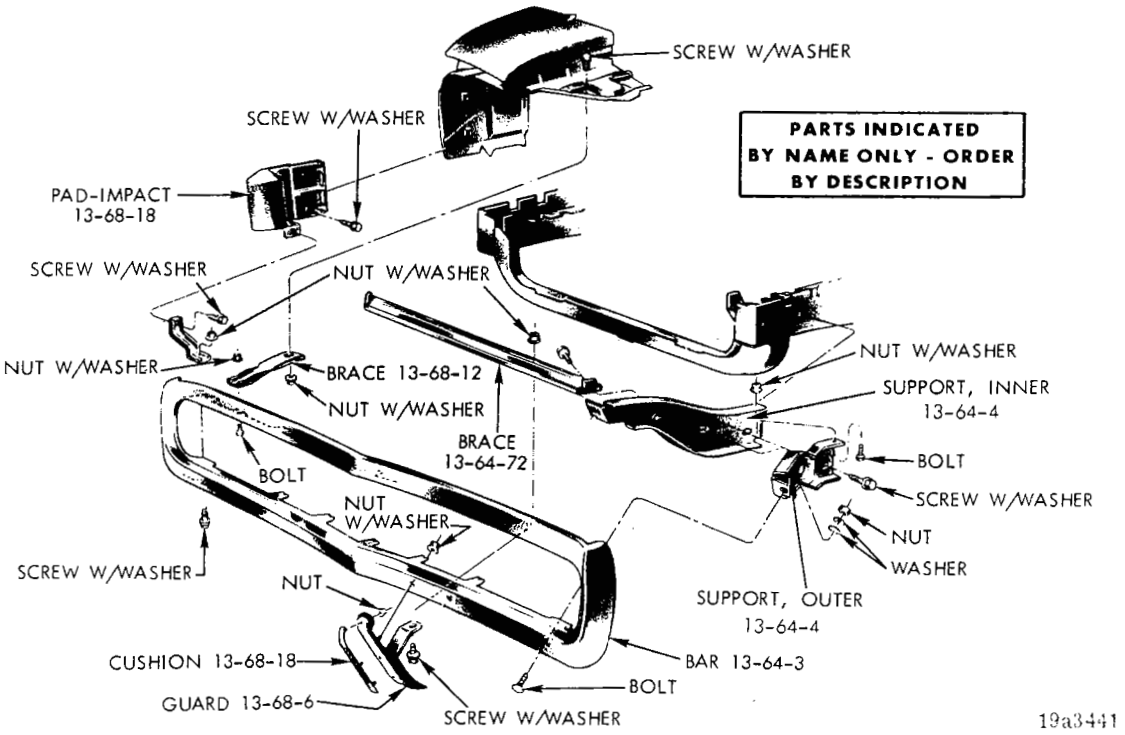

FRONT BUMPER - CORONET 4 D. AND STATION WAGON (1971)

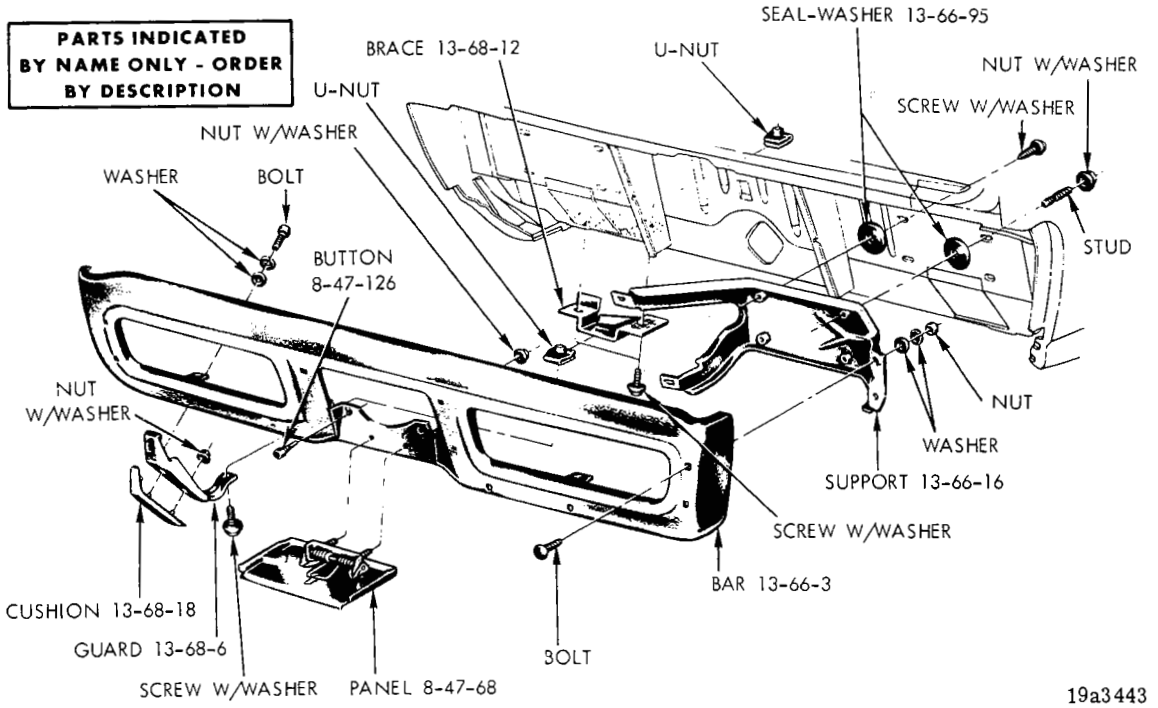

REAR BUMPER - CORONET 4 D. (1971)

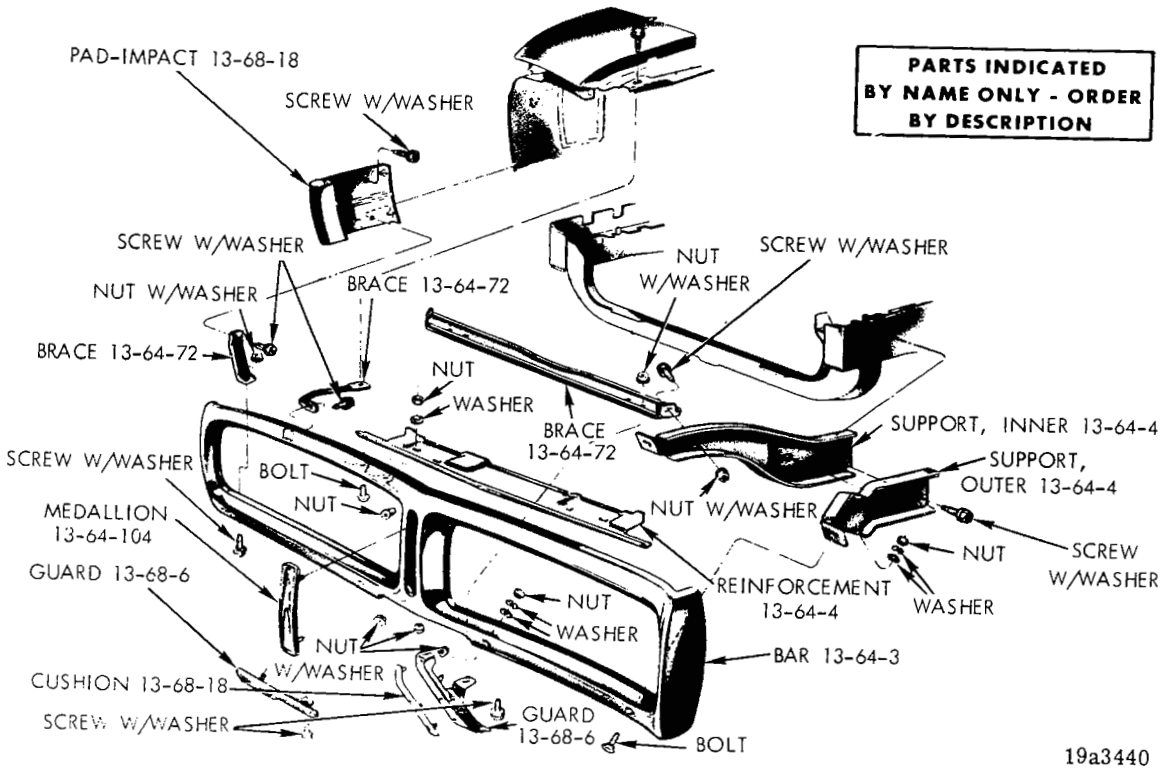

FRONT BUMPER - CORONET 2 D. HARDTOP, FASTBACK (1971)

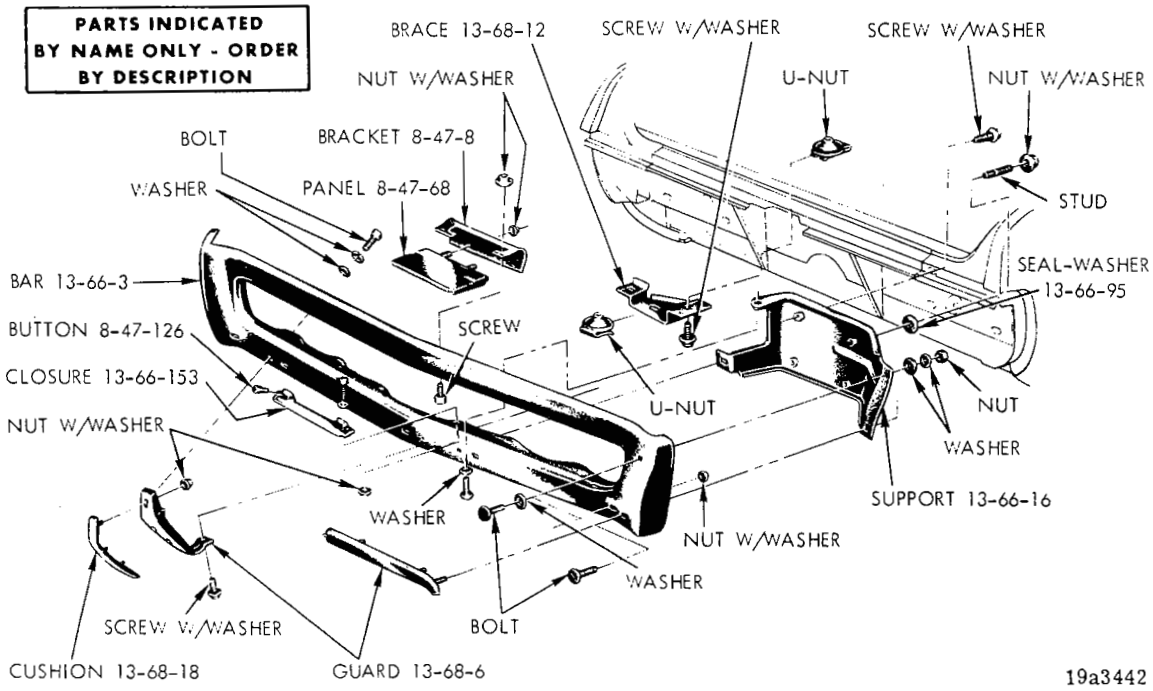

REAR BUMPER - CORONET 2 D. HARDTOP, FASTBACK (1971)

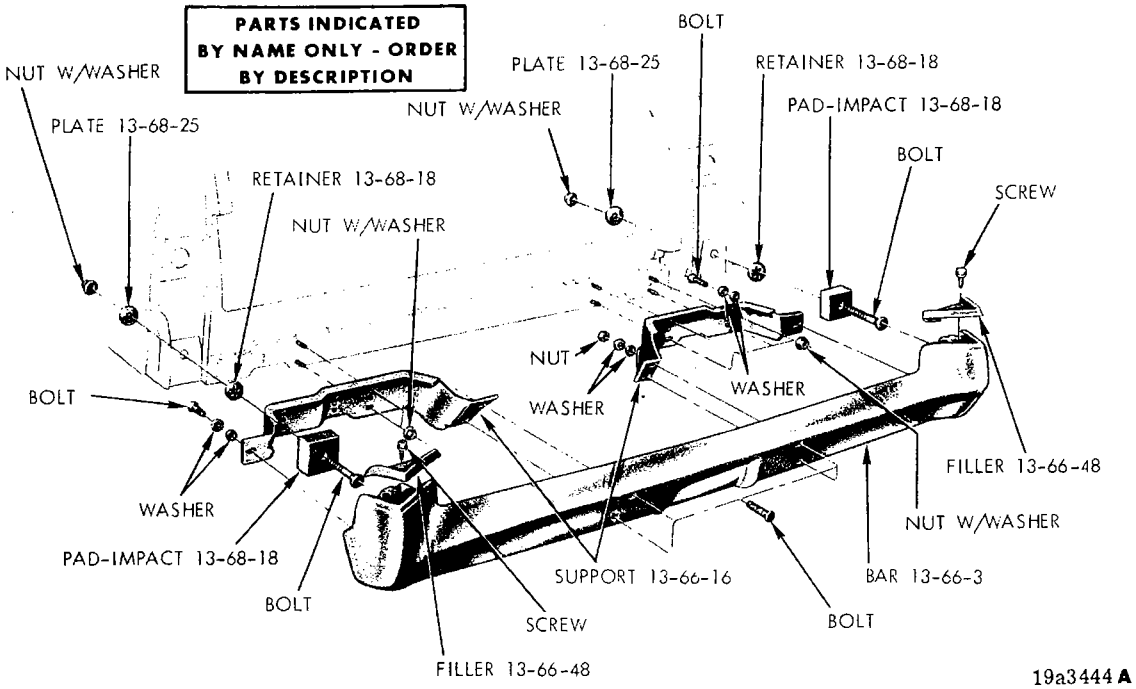

REAR BUMPER - CORONET AND SATELLITE (STATION WAGON) (1971)

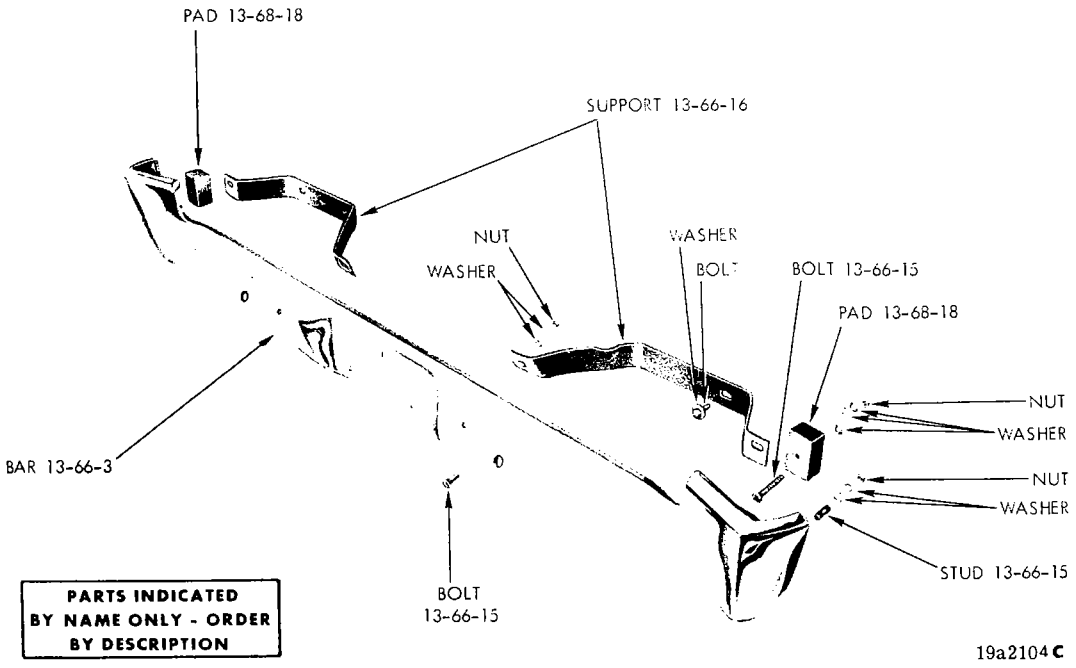

REAR BUMPER - BELVEDERE AND CORONET (STATION WAGON)

NOTES

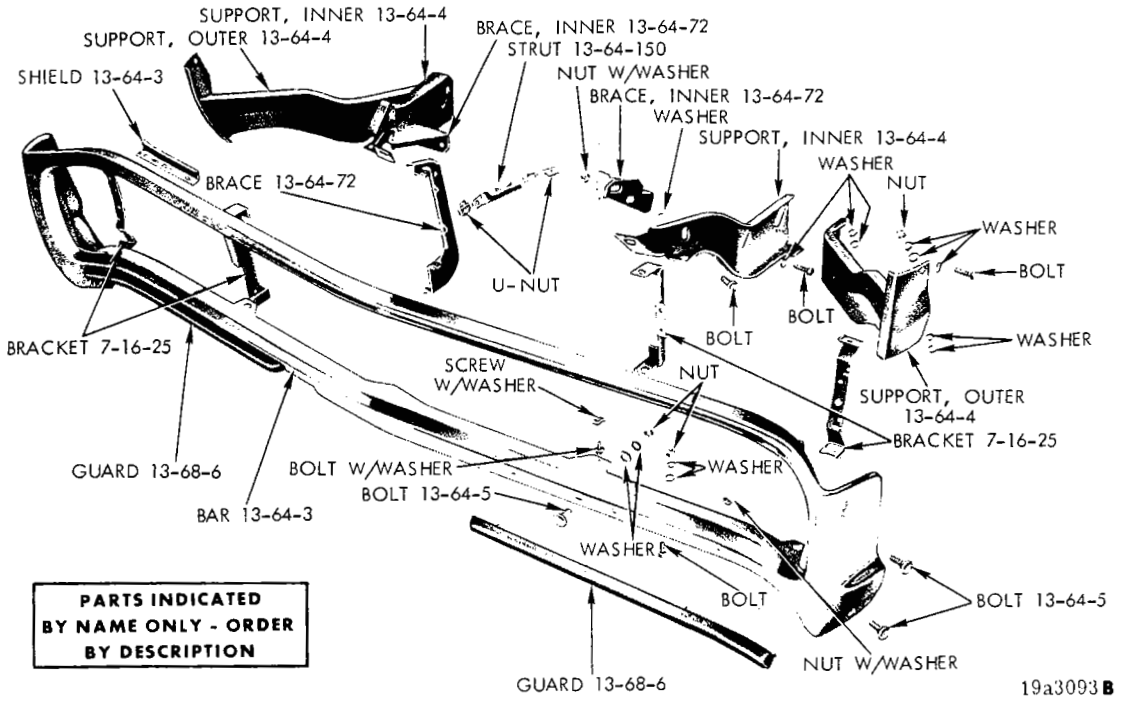

FRONT BUMPER - PLYMOUTH (1970-71)

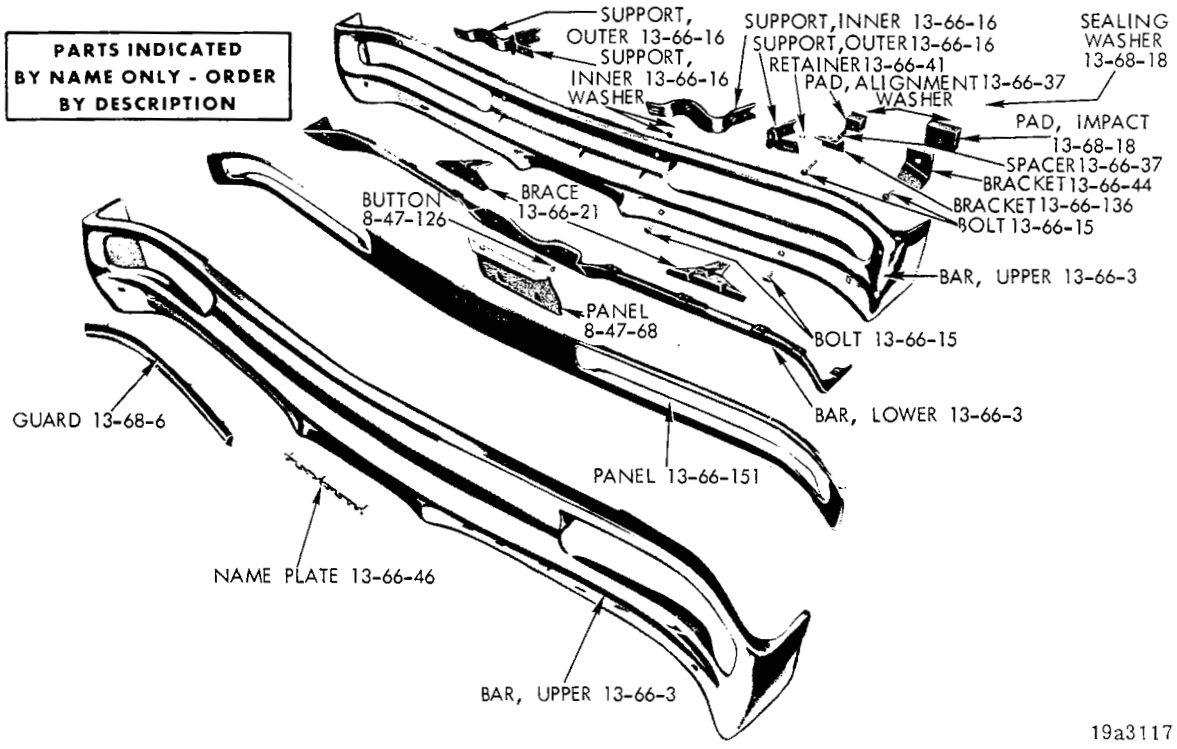

REAR BUMPER - PLYMOUTH (1970)

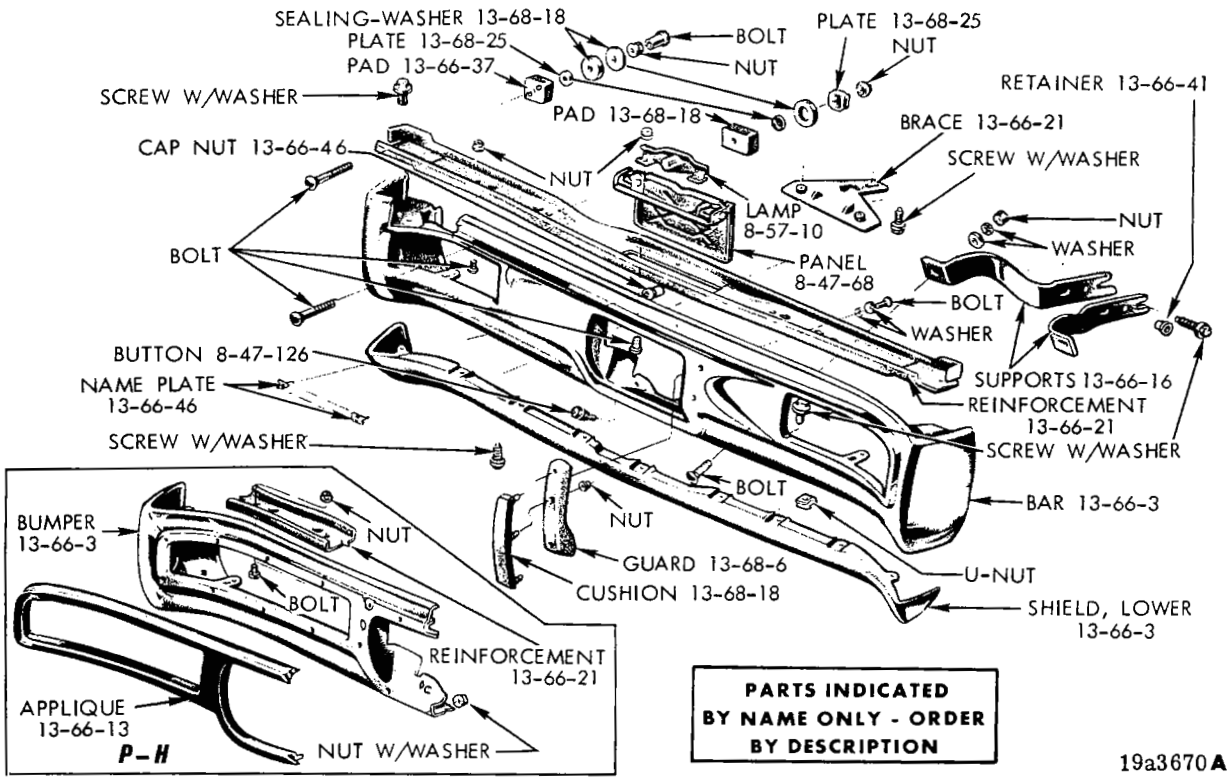

REAR BUMPER - PLYMOUTH (1971)

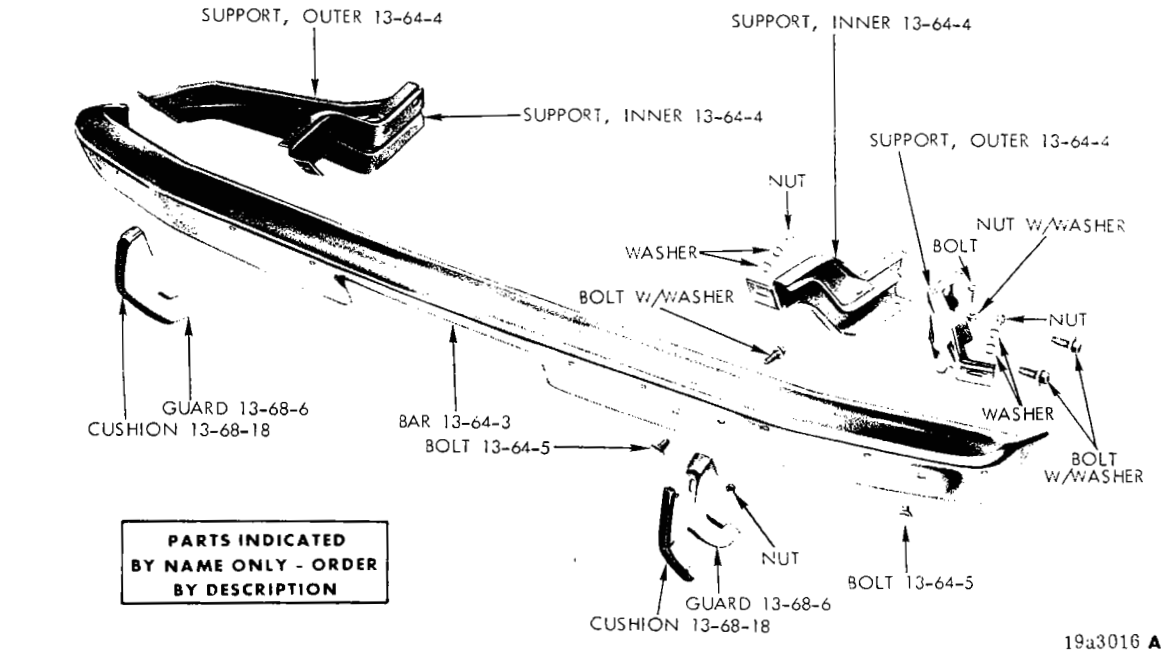

FRONT BUMPER - DART (1970-71)

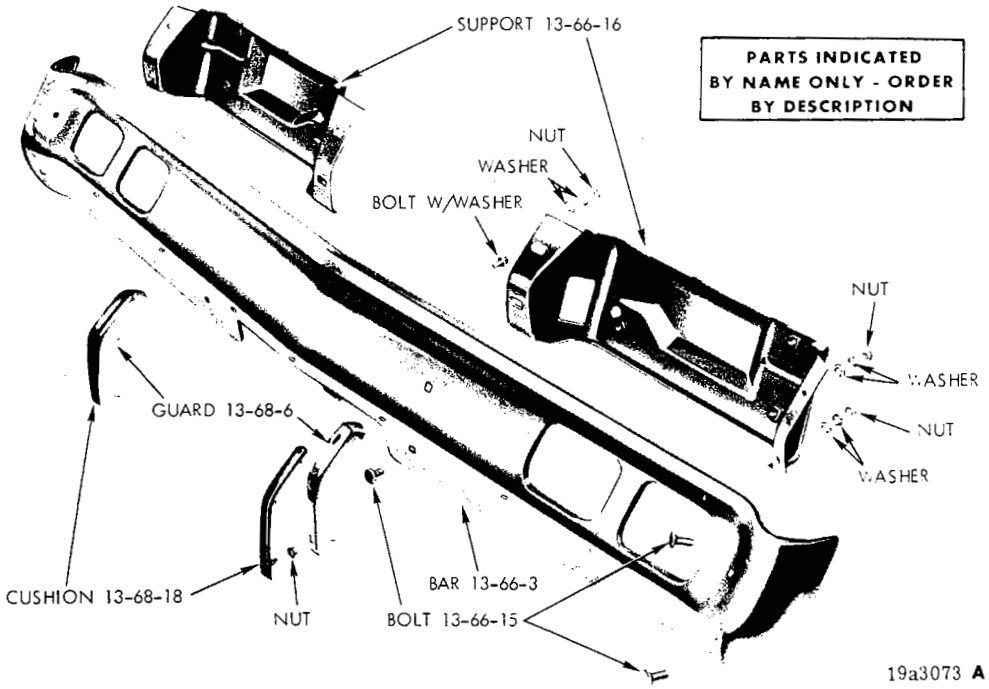

REAR BUMPER - DART 2 DOOR HARDTOP (1971)

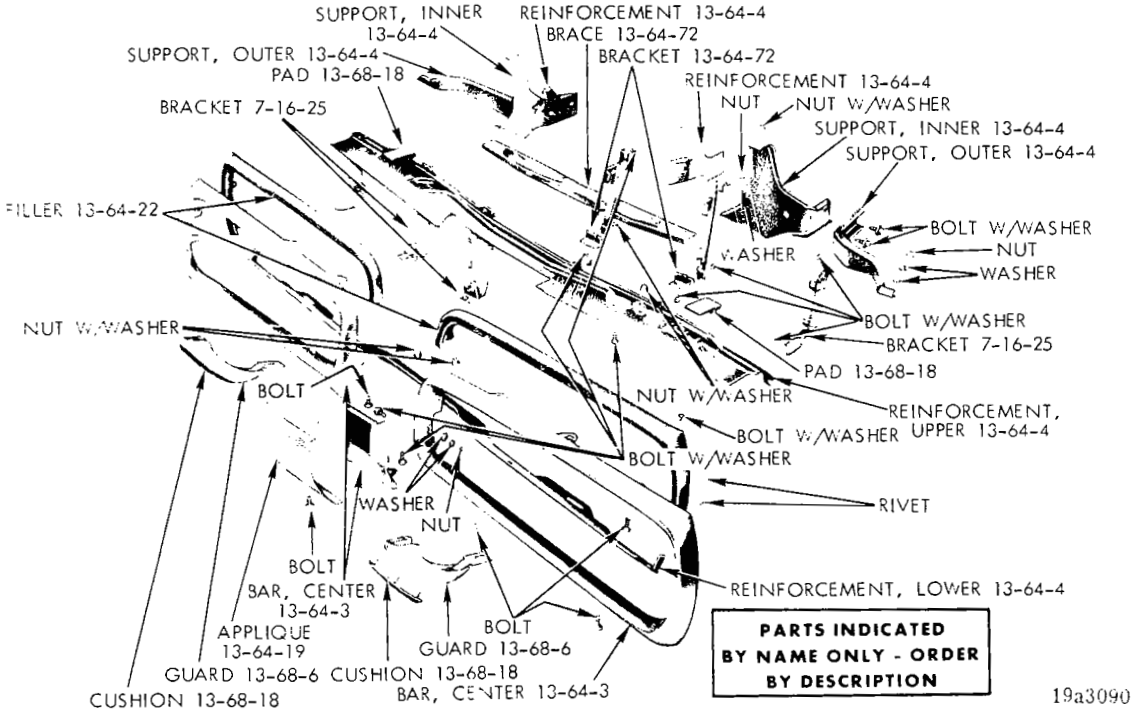

FRONT BUMPER - CORONET

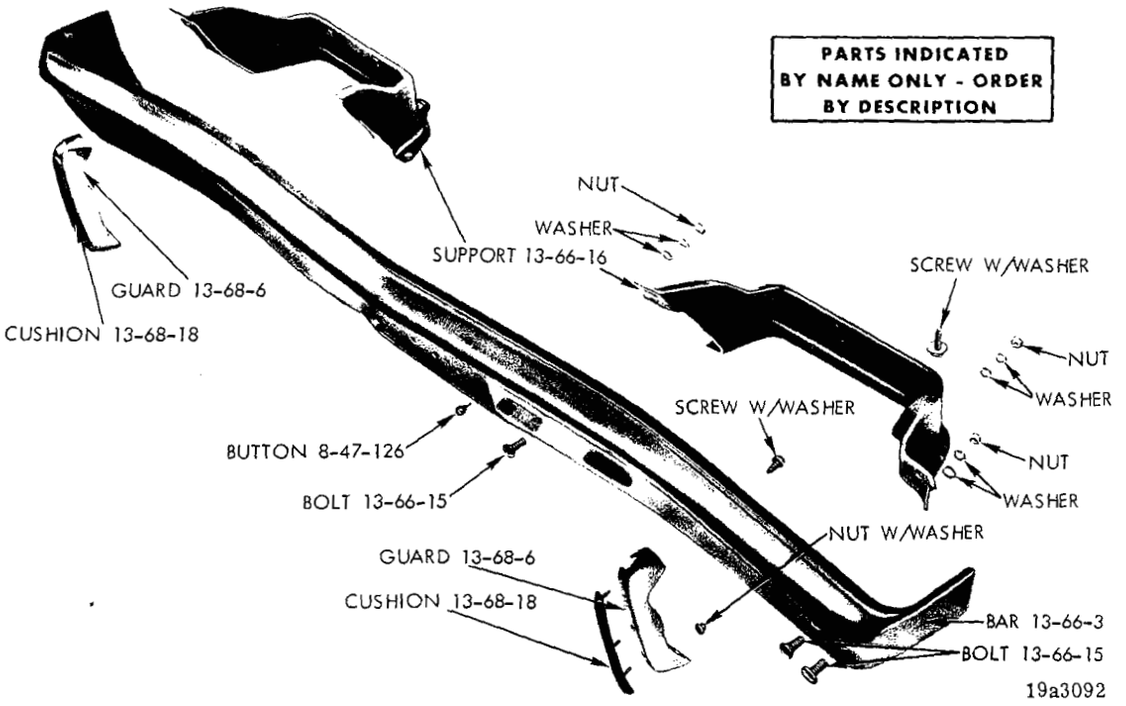

REAR BUMPER - CORONET (EXCEPT STATION WAGON AND CHARGER)

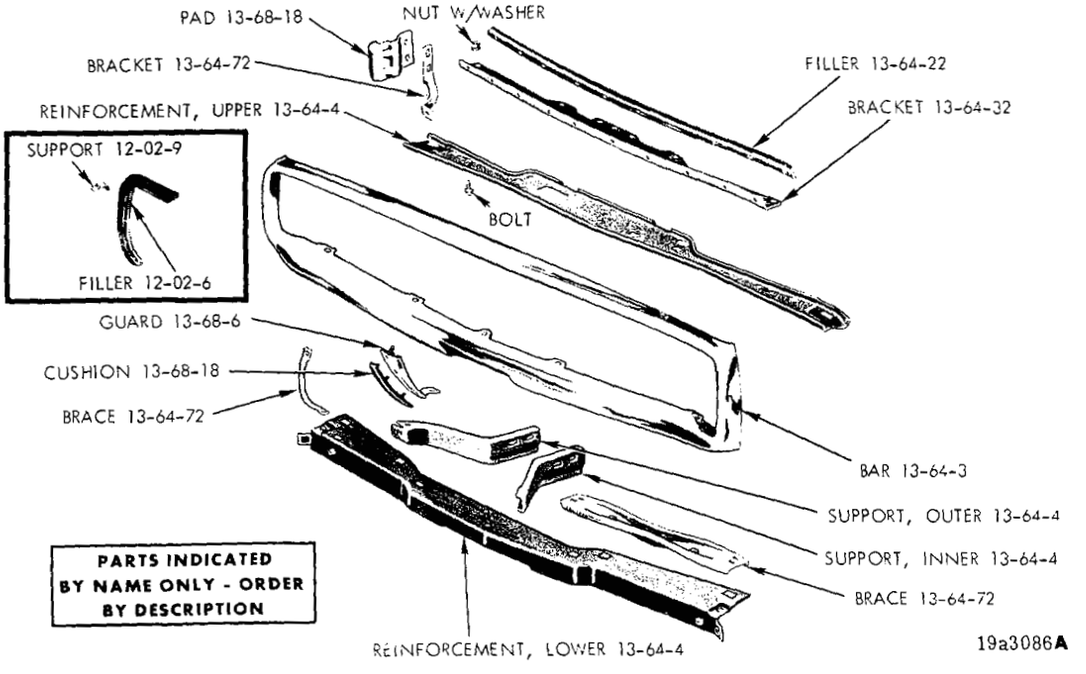

FRONT BUMPER - CHARGER (1970)

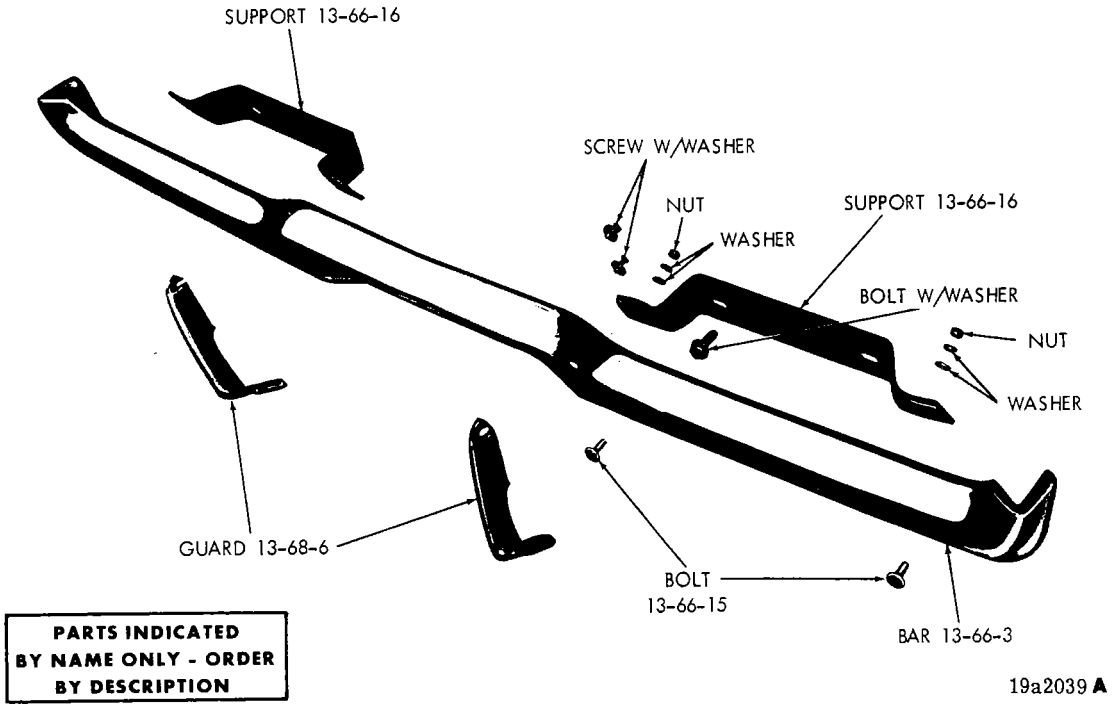

REAR BUMPER - CHARGER (1970)

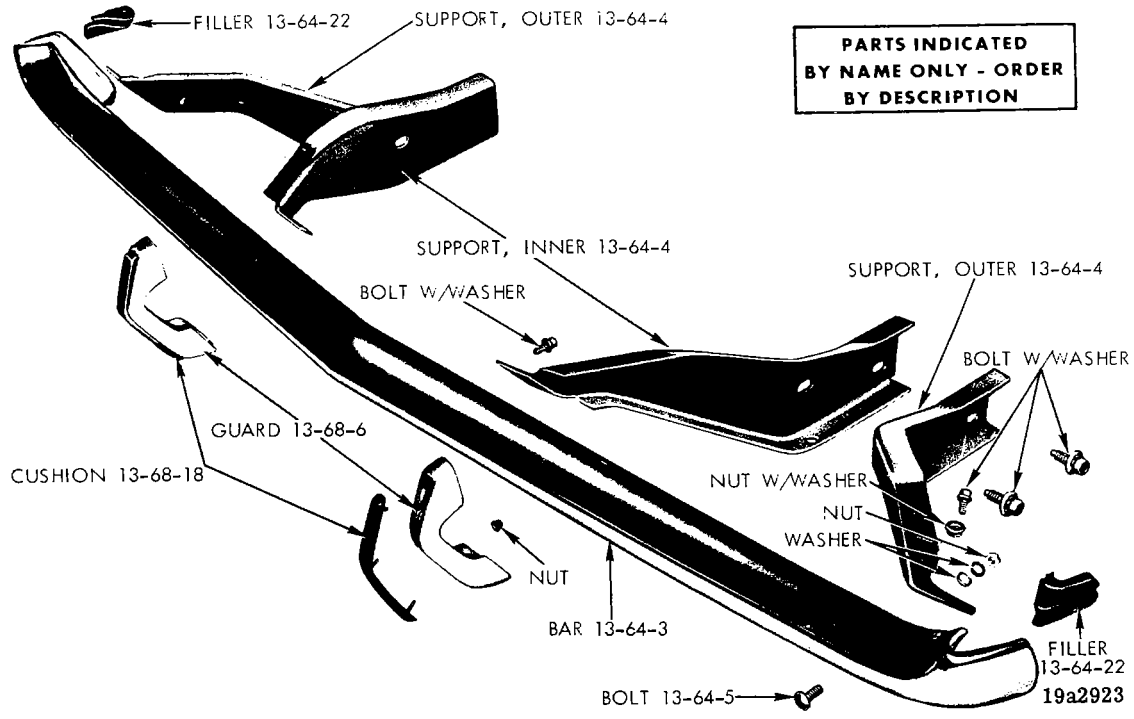

FRONT BUMPER - CHALLENGER (1970-71)

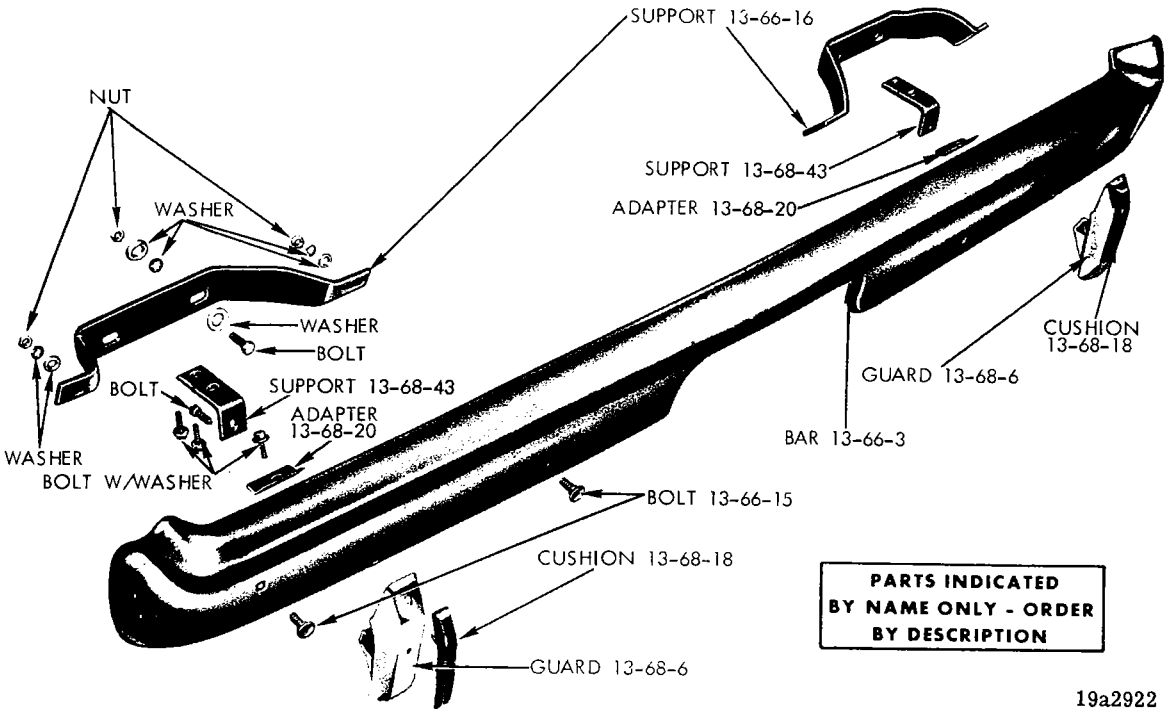

REAR BUMPER - CHALLENGER (1970-71)

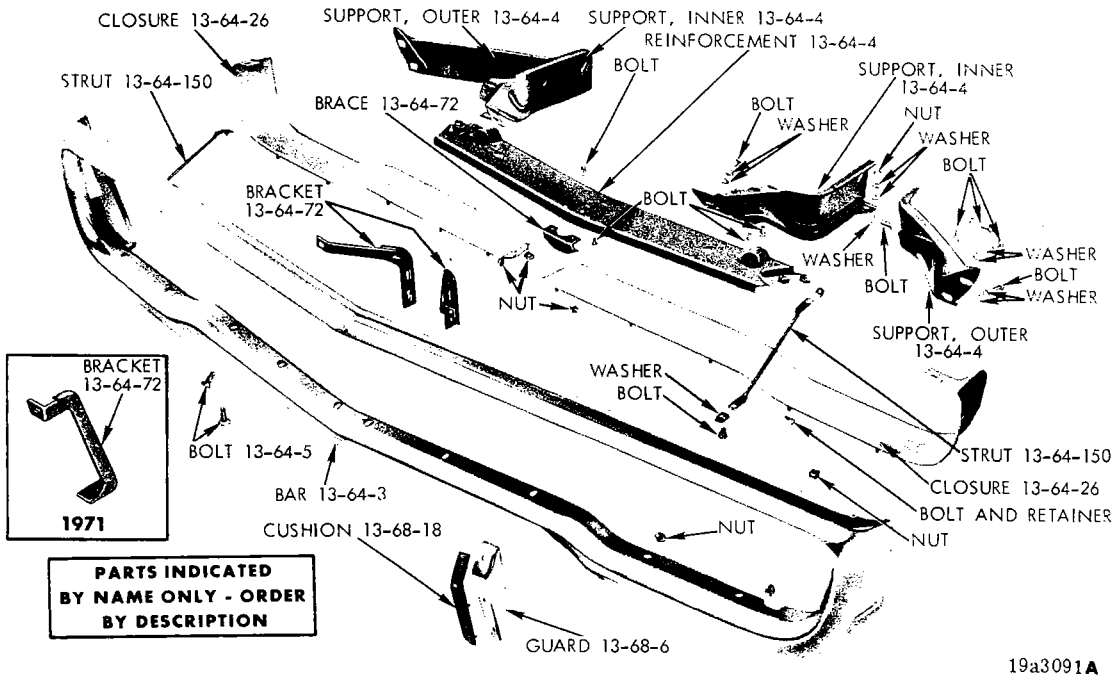

FRONT BUMPER - DODGE (1970-71)

Printed in U.S.A.

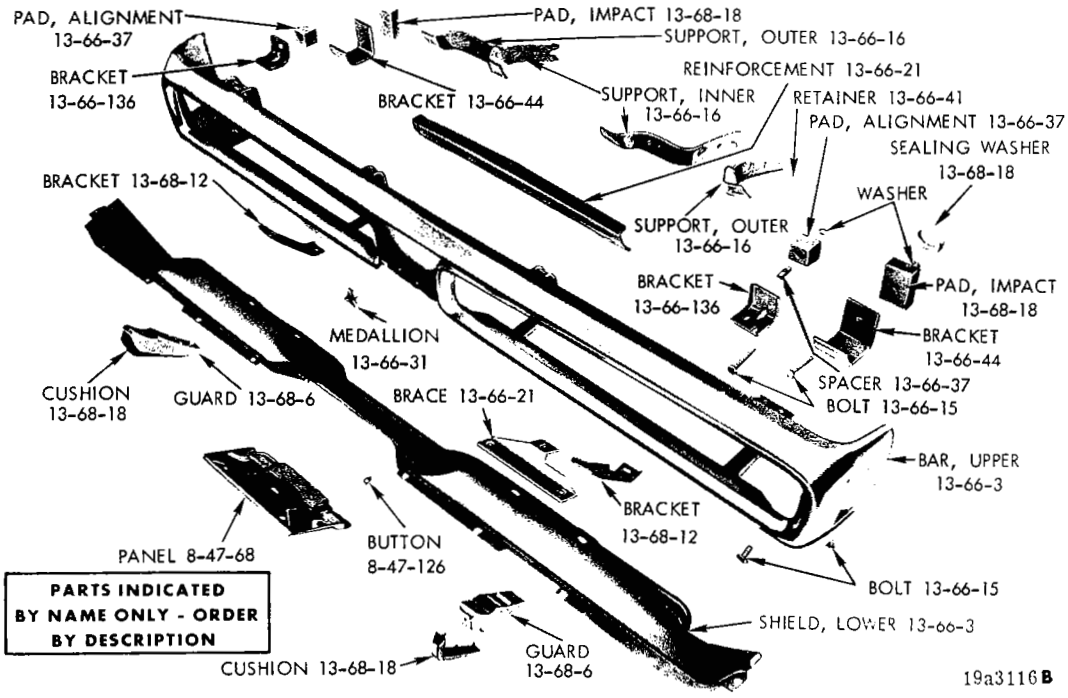

REAR BUMPER - DODGE (EXCEPT STATION WAGON) (1970-71)

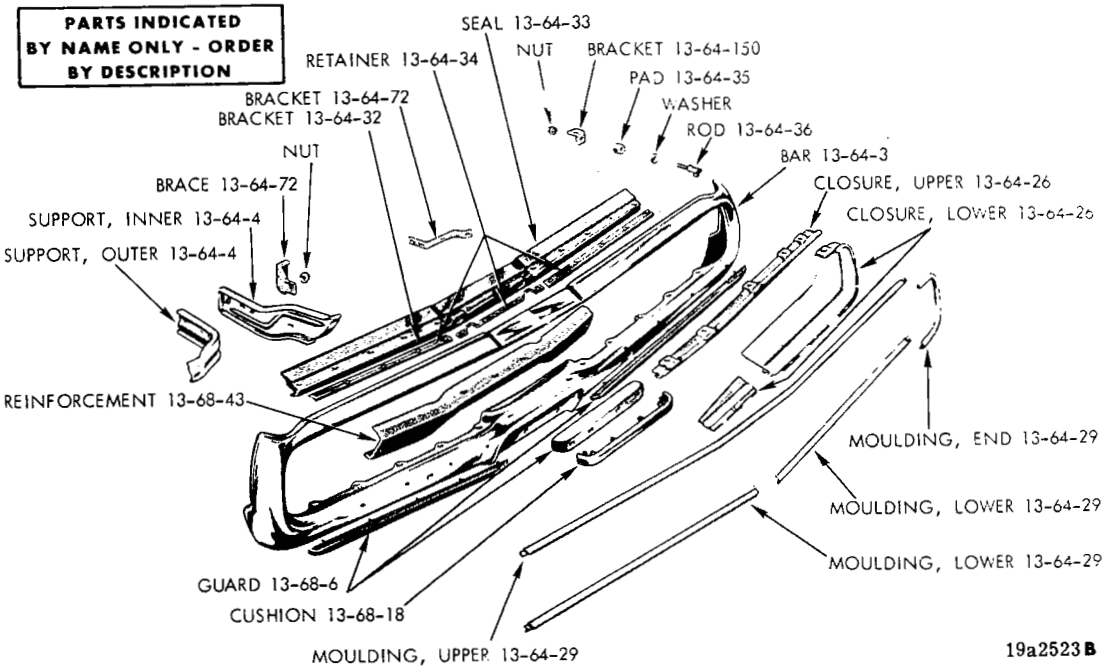

FRONT BUMPER - CHRYSLER (1970-71)

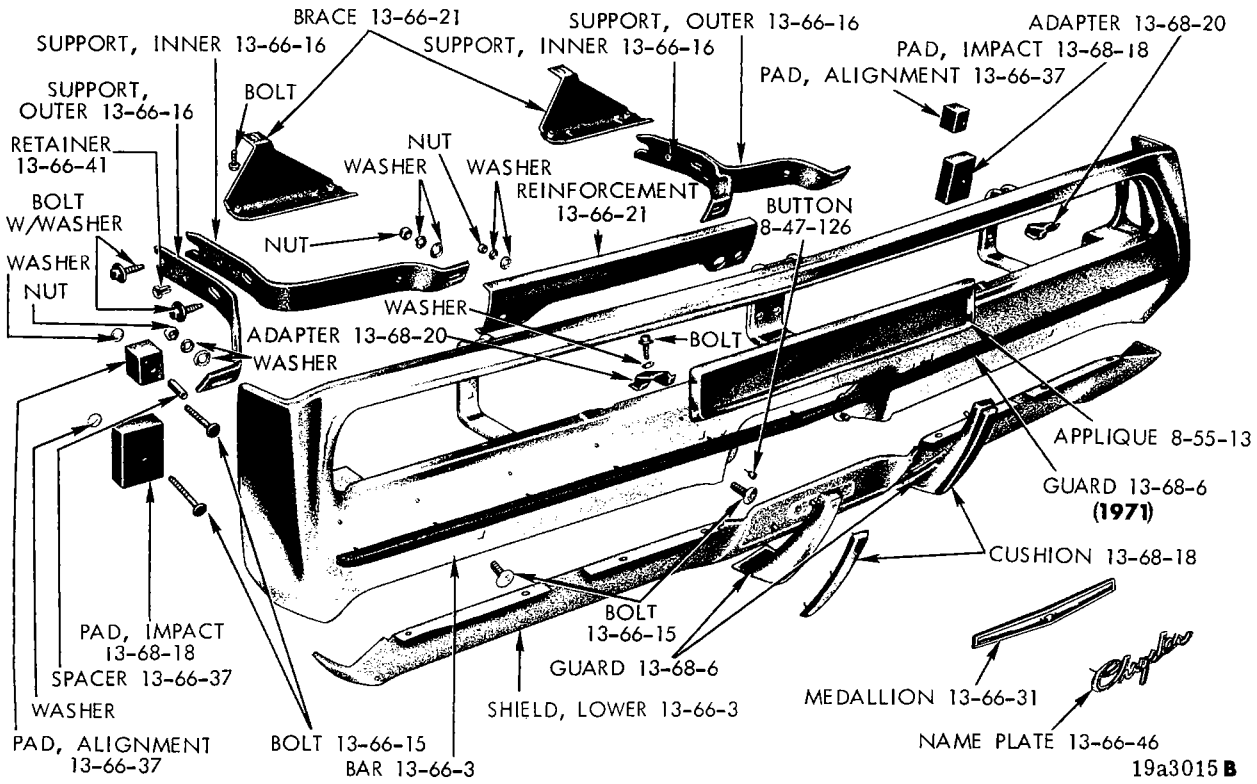

REAR BUMPER - CHRYSLER (1970-71)

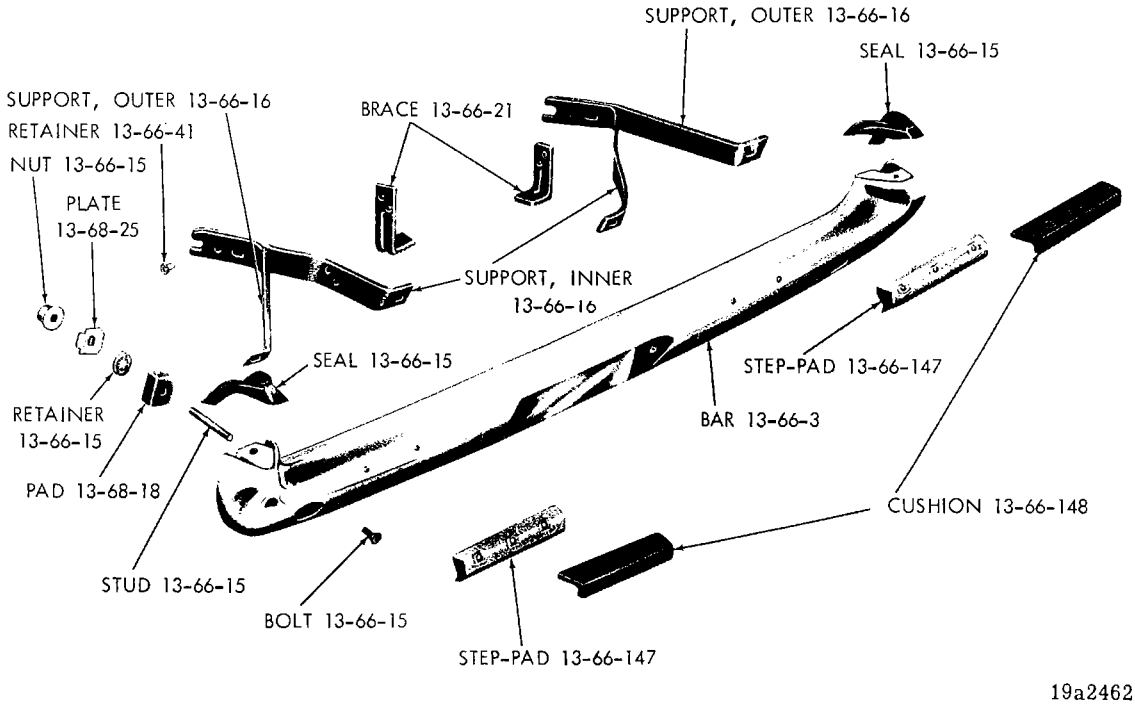

REAR BUMPER - PLYMOUTH, DODGE AND CHRYSLER STATION WAGON

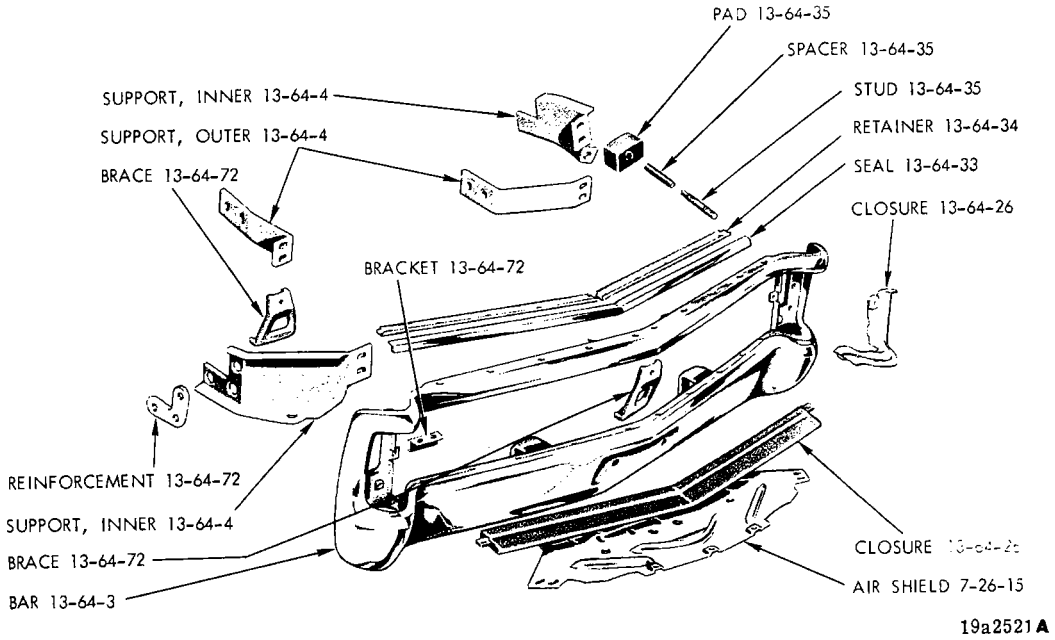

FRONT BUMPER - IMPERIAL (1970-71)

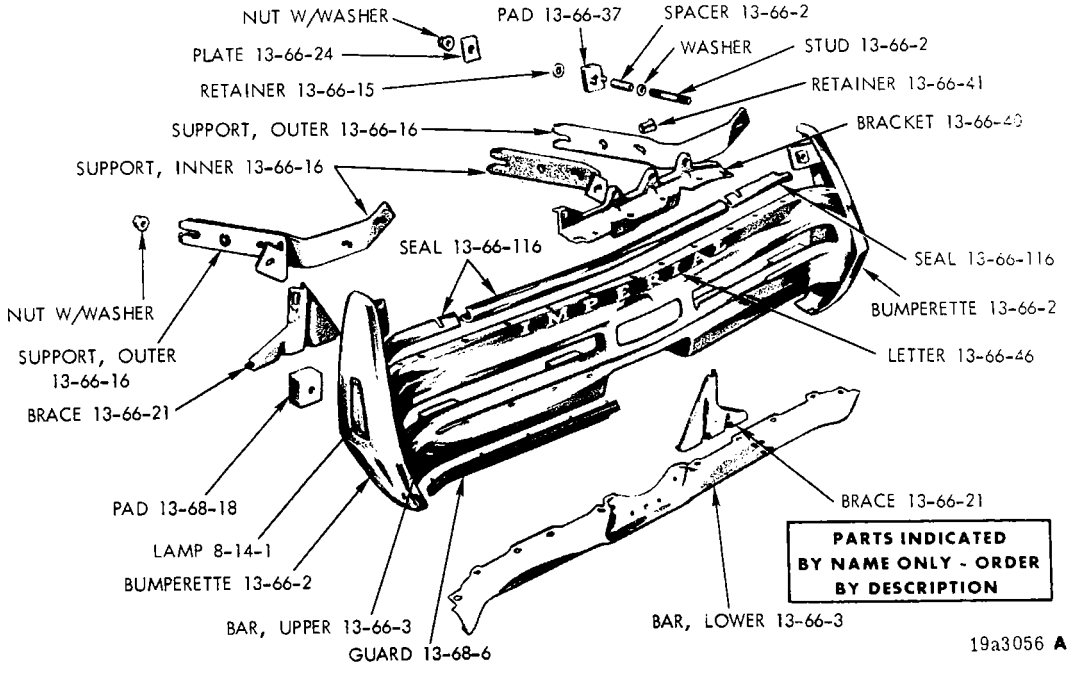

REAR BUMPER - IMPERIAL (1970-71)

NOTES

CODE	PART NAME	ENG. TYPE OR CU.IN.	V 1-2	B J 1-2	L 1-2	R 1-2	W 1-2	P 1-2	D 1-2	C 1	C 2	C 3	Y 1	PART NUMBER
13-01-0	**FRAME OR FRONT FRAME STRUCTURE**													
13-01-1	FRAME	70 6	—	—	—	—	—	1	—	—	—	—	—	3417 299
	Canada Only	70 6	—	—	—	—	—	—	1	—	—	—	—	3417 299
	All	70 8	—	—	—	—	—	1	—	—	—	—	—	3417 298
	Except CV. CP. and Sta. Wgn.	70	—	—	—	—	—	—	1	1	1	1	—	3417 199
	CV. CP. and Sta. Wgn.	70	—	—	—	—	—	—	1	1	1	1	—	3417 198
	Police Car	70	—	—	—	—	—	—	1	—	—	—	—	3417 198
		71 6	—	—	—	—	—	1	—	—	—	—	—	3482 825
	Canada Only	71 6	—	—	—	—	—	—	1	—	—	—	—	3482 825
	All	71 8	—	—	—	—	—	1	—	—	—	—	—	3482 824
	All	71	—	—	—	—	—	—	1	1	1	1	—	3417 199
	STRUCTURE	70 8	—	—	—	—	—	—	—	—	—	—	1	2926 000
	All	71 8	—	—	—	—	—	—	—	—	—	—	1	3466 550
13-01-6	BRACKET, No. 1 C/Member Control Arm Strut		—	—	—	—	—	1	1	1	1	1	—	2461 626-7
13-10-0	**FRAME ENGINE REAR SUPPORT AND TRANSMISSION CROSSMEMBER**													
13-10-1	C/MEMBER, Trans. Mounting		1	—	1	—	—	—	—	—	—	—	—	2925 943
	All	70	—	1	—	—	—	—	—	—	—	—	—	2962 074
	All, up to June	71	—	1	—	—	—	—	—	—	—	—	—	2962 074
	All, after June	71	—	1	—	—	—	—	—	—	—	—	—	= 3583 188
	All	70	—	—	—	1	1	—	—	—	—	—	—	29623 040
	All, up to June	71	—	—	—	1	1	—	—	—	—	—	—	2962 074
	All, after June	71	—	—	—	1	1	—	—	—	—	—	—	= 3583 188
	All		—	—	—	—	—	1	1	1	1	1	1	2925 299
	SCREW, C/Member Mtg.		4	4	4	4	4	—	—	—	—	—	—	6029 550
	Nut	70	4	—	4	4	4	—	—	—	—	—	—	6023 353
		70	—	4	—	—	—	—	—	—	—	—	—	6024 144
	Nut	71	4	4	4	4	4	—	—	—	—	—	—	6025 805
	Washer		4	4	4	4	4	—	—	—	—	—	—	1316 859
	SCREW, w/WASHER, Upper Mounting		—	—	—	—	—	2	2	2	2	2	2	6026 489
	Side Mounting		—	—	—	—	—	8	8	8	8	8	—	6026 489
		8	—	—	—	—	—	—	—	—	—	—	4	6026 489
13-10-12	BRACKET, Trans. Mounting C/Member		—	—	—	—	—	1	1	1	1	1	1	2925 297
13-11-0	**FRAME FRONT CROSSMEMBER**													
13-11-5	C/MEMBER Rear Anchor	8	—	—	—	—	—	—	—	—	—	—	1	2071 507
	No. 1		—	—	—	—	—	1	1	1	1	1	—	2493 925
			—	—	—	—	—	—	—	—	—	—	1	2534 056
	No. 2	6	—	—	—	—	—	1	1	—	—	—	—	2934 938
		8	—	—	—	—	—	1	1	1	1	1	—	2934 936
		8	—	—	—	—	—	—	—	—	—	—	1	2925 903
13-11-17	ISOLATOR, Rear Anchor C/Member	8	—	—	—	—	—	—	—	—	—	—	1	2071 514-5
	SCREW, w/WASHER, Isolator Bracket Sleeve	8	—	—	—	—	—	—	—	—	—	—	6	6025 558
	NUT, Isolator Plate Bolt	8	—	—	—	—	—	—	—	—	—	—	4	9417 668
13-11-18	BRACKET, Isolator, Front	8	—	—	—	—	—	—	—	—	—	—	1	2534 984-5
	Rear	8	—	—	—	—	—	—	—	—	—	—	1	2534 982-3
13-33-0	**BATTERY SUPPORT TRAY**													
13-33-61	TRAY		1	—	1	—	—	—	—	—	—	—	—	3404 432
	All		—	1	—	1	1	—	—	—	—	—	—	3404 436
	All		—	—	—	—	—	1	1	1	1	1	—	2461 791
	All	8	—	—	—	—	—	—	—	—	—	—	1	2530 994
	SCREW, w/WASHER, Tray Support Brace		1	—	1	—	—	—	—	—	—	—	—	6022 777
	Tray Support Brace To Battery Tray		—	2	—	2	2	—	—	—	—	—	—	6022 895
	Tray To Fender Shield		—	2	—	2	2	—	—	—	—	—	—	6022 895
	Support Tray To Fender Wheel House Panel	8	—	—	—	—	—	—	—	—	—	—	2	6026 822

CARLINES J - Challenger, B - Barracuda, V - Valiant, L - Dart, R - Belvedere - Satellite, W - Coronet - Charger, P - Plymouth, D - Dodge, C - Chrysler, Y - Imperial

AR Indicates use as required.

# Indicates parts not listed in any previous parts book.

Numerals in parentheses ( ) refer to notes.

★ Indicates change or addition.

Printed in U.S.A. January 1972

CODE	PART NAME	ENG. TYPE OR CU.IN.	V 1-2	B J 1-2	L 1-2	R 1-2	W 1-2	P 1-2	D 1-2	C 1	C 2	C 3	Y 1	PART NUMBER
13-33-0	**BATTERY SUPPORT TRAY Cont'd.**													
13-33-61	TRAY Cont'd.													
	Support Tray To Battery Tray Support Bracket	8	—	—	—	—	—	—	—	—	—	—	2	6026 822
	J-NUT, Tray To Support Brace		1	—	1	—	—	—	—	—	—	—	—	6023 171
	Fender Shield To Tray		1	—	1	—	—	—	—	—	—	—	—	6023 170
	Tray Support Brace To Battery Tray		—	AR	—	AR	AR	AR	AR	AR	AR	AR	—	6023 171
	Tray Support Brace To Frame		—	AR	—	AR	AR	—	—	—	—	—	—	6023 171
	Brace To C/Member		—	1	—	1	1	—	—	—	—	—	—	6023 169
	Fender Shield To Tray		—	—	—	2	2	—	—	—	—	—	—	6023 170
	Tray To Fender Shield Strut		—	—	—	1	1	—	—	—	—	—	—	6023 171
	Wheelhouse Panel To Tray		—	—	—	—	—	1	1	1	1	1	—	6023 171
13-33-62	BRACKET, Tray Support	8	—	—	—	—	—	—	—	—	—	—	1	2534 806
13-33-68	BRACE, Tray Support		1	—	1	—	—	—	—	—	—	—	—	2768 364
	All		—	1	—	—	—	—	—	—	—	—	—	2530 992
	All 70		—	—	—	1	1	—	—	—	—	—	—	2800 647
	All 71		—	—	—	1	1	—	—	—	—	—	—	2530 992
	All 70		—	—	—	—	—	1	—	—	—	—	—	2461 790
	Except CV. CP., Sta. Wgn. 70	8	—	—	—	—	—	—	1	1	1	1	—	3404 423
	CV. CP., Sta. Wgn. 70	8	—	—	—	—	—	—	1	1	1	1	—	2461 790
	All 71		—	—	—	—	—	1	1	1	1	1	—	3404 423
13-34-0	**BATTERY HOLD-DOWN STRAP**													
13-34-3	STRAP		1	1	1	1	1	—	—	—	—	—	—	3404 404
	All		—	—	—	—	—	1	1	1	1	1	—	3404 405
	All	8	—	—	—	—	—	—	—	—	—	—	1	1828 352
13-35-0	**BATTERY HEAT SHIELD**													
13-35-1	SHIELD, Police and Taxi, Std. 70		—	—	—	1	1	—	—	—	—	—	—	3404 416
	w/70 Amp. Battery only 70		—	—	—	1	1	—	—	—	—	—	—	3404 416
	Police and Taxi, Std. 71		—	—	—	1	1	—	—	—	—	—	—	3404 440
	w/70 Amp. Battery Only 71		—	—	—	1	1	—	—	—	—	—	—	3404 440
	Police and Taxi, Std.		—	—	—	—	—	1	1	—	—	—	—	2530 975
	w/70 Amp. Battery Only		—	—	—	—	—	1	1	1	1	1	—	2530 975
	CLIP		—	—	—	2	2	—	—	—	—	—	—	6026 240
	J-NUT		—	—	—	—	—	2	2	2	2	2	—	6023 167
13-36-0	**BATTERY HOLD-DOWN STUD**													
13-36-5	STUD, Inner		1	1	1	1	1	1	1	1	1	1	1	2074 089
	Outer		1	1	1	1	1	—	—	—	—	—	1	2534 814
	NUT, w/WASHER		AR	AR	AR	AR	AR	AR	AR	AR	AR	AR	AR	120 375
13-54-0	**FRAME REAR SPRING HANGER**													
13-54-4	HANGER, Front		2	—	2	—	—	—	—	—	—	—	—	2539 489
	All		—	2	—	—	—	—	—	—	—	—	—	3400 858
	Except Sta. Wgn. 70		—	—	—	2	—	—	—	—	—	—	—	2834 740
	Sta. Wgn. 70		—	—	—	2	—	—	—	—	—	—	—	3400 865
	Except Sta. Wgn., Std. 70		—	—	—	—	2	—	—	—	—	—	—	2462 086
	Except Sta. Wgn., H.D. 70		—	—	—	—	2	—	—	—	—	—	—	2539 507
	Sta. Wgn. 70		—	—	—	—	2	—	—	—	—	—	—	3400 865
	426, 440 Eng. 70	8	—	—	—	—	2	—	—	—	—	—	—	2539 507
	Police, 2 D., 4 D. 70	8	—	—	—	—	2	—	—	—	—	—	—	2539 507
	Taxi 70	8	—	—	—	—	2	—	—	—	—	—	—	2462 086
	Except Sta. Wgn. 71		—	—	—	1	1	—	—	—	—	—	—	3402 102
	Sta. Wgn. 71		—	—	—	1	1	—	—	—	—	—	—	3400 967
	Except Sta. Wgn.		—	—	—	—	—	2	2	2	2	2	2	2403 798
	Sta. Wgn.		—	—	—	—	—	2	2	—	—	2	—	3400 867
	Taxi 71		—	—	—	—	—	2	2	—	—	—	—	2403 798

CARLINES: J - Challenger, B - Barracuda, V - Valiant, L - Dart, R - Belvedere - Satellite, W - Coronet - Charger, P - Plymouth, D - Dodge, C - Chrysler, Y - Imperial

AR Indicates use as required.

Numerals in parentheses ( ) refer to notes.

# Indicates parts not listed in any previous parts book.

★ Indicates change or addition.

Printed in U.S.A. January 1972

13-54-0 FRAME REAR SPRING HANGER Cont'd.

CODE	PART NAME		ENG. TYPE OR CU.IN.	V 1-2	B J 1-2	L 1-2	R 1-2	W 1-2	P 1-2	D 1-2	C 1	C 2	C 3	Y 1	PART NUMBER
13-54-4	HANGER Cont'd.														
	Police	71	6	—	—	—	—	—	2	—	—	—	—	—	2403 798
	Police	71	8	—	—	—	—	—	2	—	—	—	—	—	3400 867
	Police, All Except Sta. Wgn., Extreme Duty	71		—	—	—	—	—	—	2	—	—	—	—	3400 867
		71		—	—	—	—	—	2	2	—	—	—	—	3400 867
13-54-11	BOLT, Hanger			8	8	8	8	8	8	8	8	8	8	8	2403 247
13-54-15	HANGER, Rear			2	—	2	—	—	—	—	—	—	—	—	2071 764
	Sta. Wgn.	70		—	—	—	2	2	—	—	—	—	—	—	2462 360
	Sta. Wgn.	71		—	—	—	2	2	—	—	—	—	—	—	3400 968
	Except Sta. Wgn.			—	—	—	—	—	1	1	1	1	1	—	3400 942-3
	Sta. Wgn.			—	—	—	—	—	1	1	—	—	1	—	2948 090-1
	Taxi	71		—	—	—	—	—	1	1	—	—	—	—	3400 942-3
	Police	71	6	—	—	—	—	—	1	—	—	—	—	—	3400 942-3
	Police	71	8	—	—	—	—	—	1	—	—	—	—	—	2948 090-1
	Police, All Except Sta. Wgn., Extreme Duty	71		—	—	—	—	—	—	1	—	—	—	—	2948 090-1
		71		—	—	—	—	—	1	1	—	—	—	—	2948 090-1
	Std.		8	—	—	—	—	—	—	—	—	—	—	1	3400 964-5
	H.D.		8	—	—	—	—	—	—	—	—	—	—	1	3400 942-3

13-64-0 FRONT BUMPER FACE BAR

13-64-3	BAR, V, All, up to June, 71			1	—	—	—	—	—	—	—	—	—	—	2768 575
	V, all, after June, 71			1	—	—	—	—	—	—	—	—	—	—	3595 025
	L, all, up to June, 71			—	—	1	—	—	—	—	—	—	—	—	2962 400
	L, all, after June, 71			—	—	1	—	—	—	—	—	—	—	—	3595 032
	B, Chrome	70		—	1	—	—	—	—	—	—	—	—	—	2962 275
	B, Bright Blue Metallic	70		—	1	—	—	—	—	—	—	—	—	—	2962 375
	B, Light Bright Red	70		—	1	—	—	—	—	—	—	—	—	—	2962 376
	B, Medium Dark Green Metallic	70		—	1	—	—	—	—	—	—	—	—	—	2962 377
	B, Medium Burnt Orange Metallic	70		—	1	—	—	—	—	—	—	—	—	—	2962 378
	B, White	70		—	1	—	—	—	—	—	—	—	—	—	2962 380
	B, Black	70		—	1	—	—	—	—	—	—	—	—	—	2962 381
	B, Cadmium Yellow	70		—	1	—	—	—	—	—	—	—	—	—	2962 294
	B, Purple Metallic	70		—	1	—	—	—	—	—	—	—	—	—	2962 295
	B, Chrome up to June 71			—	1	—	—	—	—	—	—	—	—	—	3464 052
	B, Chrome, after June 71			—	1	—	—	—	—	—	—	—	—	—	3595 035
	B, Bright Blue Met.	71		—	1	—	—	—	—	—	—	—	—	—	3464 250
	B, Avocado	71		—	1	—	—	—	—	—	—	—	—	—	3464 875
	B, Citron Yella	71		—	1	—	—	—	—	—	—	—	—	—	3464 876
	B, Plum, Met.	71		—	1	—	—	—	—	—	—	—	—	—	3464 877
	B, Tor Red	71		—	1	—	—	—	—	—	—	—	—	—	3464 878
	B, Red	71		—	1	—	—	—	—	—	—	—	—	—	3464 879
	J, all, Chrome, up to Feb. 71			—	1	—	—	—	—	—	—	—	—	—	2962 348
	J, All, Chrome, from Feb. 71, To June 71			—	1	—	—	—	—	—	—	—	—	—	3595 062
	J, All, Chrome, after June 71			—	1	—	—	—	—	—	—	—	—	—	3595 032
	J, Bright Blue Met.	71		—	1	—	—	—	—	—	—	—	—	—	3464 077
	J, Citron Yella	71		—	1	—	—	—	—	—	—	—	—	—	3464 889
	J, Plum Crazy	71		—	1	—	—	—	—	—	—	—	—	—	3464 890
	J, Ceramic Red	71		—	1	—	—	—	—	—	—	—	—	—	3464 891
	R, All	70		—	—	—	1	—	—	—	—	—	—	—	2962 450
	R, 2 D.H.T., Chrome, up to June 71			—	—	—	1	—	—	—	—	—	—	—	3464 100
	R, 2 D.H.T., Chrome, after June 71			—	—	—	1	—	—	—	—	—	—	—	3595 100
	R, 4 D. and Sta. Wgn., Chrome, up to June 71			—	—	—	1	—	—	—	—	—	—	—	3464 104
	R, 4 D. and Sta. Wgn., Chrome, after June 71			—	—	—	1	—	—	—	—	—	—	—	3595 102
	R, 2 D.H.T., Ceramic Red	71		—	—	—	1	—	—	—	—	—	—	—	3464 143
	Avocado	71		—	—	—	1	—	—	—	—	—	—	—	3464 144

CARLINES J - Challenger, B - Barracuda, V - Valiant, L - Dart, R - Belvedere - Satellite, W - Coronet - Charger, P - Plymouth, D - Dodge, C - Chrysler, Y - Imperial

AR Indicates use as required.

Numerals in parentheses ( ) refer to notes.

# Indicates parts not listed in any previous parts book.

★ Indicates change or addition.

Printed in U.S.A. January 1972

13-64-0 FRONT BUMPER FACE BAR Cont'd.

CODE	PART NAME	ENG. TYPE OR CU.IN.	V 1-2	B J 1-2	L 1-2	R 1-2	W 1-2	P 1-2	D 1-2	C 1	C 2	C 3	Y 1	PART NUMBER
13-64-3	BAR Cont'd.													
	Medium Yellow Green Met. 71		—	—	—	1	—	—	—	—	—	—	—	3464 145
	Bright Blue Met. 71		—	—	—	1	—	—	—	—	—	—	—	3464 146
	Dark Gold Met. 71		—	—	—	1	—	—	—	—	—	—	—	3464 147
	Citron Yella 71		—	—	—	1	—	—	—	—	—	—	—	3464 148
	W, Center, Except Charger 70		—	—	—	—	1	—	—	—	—	—	—	2962 504
	W, Except Charger 70		—	—	—	—	1	—	—	—	—	—	—	2962 506-7
	Charger 70		—	—	—	—	1	—	—	—	—	—	—	2962 576
	W, 2 D.H.T., Fast-Back, Chrome, up to June 71		—	—	—	—	1	—	—	—	—	—	—	3464 325
	W, 2 D.H.T., Fast-Back, Chrome, after June 71		—	—	—	—	1	—	—	—	—	—	—	3595 107
	W, 4 D. and Sta. Wgn., Chrome, up to June 71		—	—	—	—	1	—	—	—	—	—	—	3464 300
	W, 4 D. and Sta. Wgn., Chrome, after June 71		—	—	—	—	1	—	—	—	—	—	—	3595 108
	W, 2 D.H.T., Ceramic Red 71		—	—	—	—	1	—	—	—	—	—	—	3464 379
	Avocado 71		—	—	—	—	1	—	—	—	—	—	—	3464 380
	Citron Yella 71		—	—	—	—	1	—	—	—	—	—	—	3464 381
	Bright Blue Met. 71		—	—	—	—	1	—	—	—	—	—	—	3464 382
	Plum Crazy 71		—	—	—	—	1	—	—	—	—	—	—	3464 383
	Medium Yellow Green Met. 71		—	—	—	—	1	—	—	—	—	—	—	3464 384
	P, w/o Guards		—	—	—	—	—	1	—	—	—	—	—	2962 650
	P, w/Guards		—	—	—	—	—	1	—	—	—	—	—	2962 651
	D, All 70		—	—	—	—	—	—	1	—	—	—	—	2962 750
	All 71		—	—	—	—	—	—	1	—	—	—	—	3464 860
	C-E, C-L, C-H, C-P, w/o Guards	8	—	—	—	—	—	—	—	1	—	1	—	2931 300
	C-E, C-L, C-H, C-P, w/Guards 70	8	—	—	—	—	—	—	—	1	—	1	—	2931 301
	C-E, C-L, C-H, C-P, Export 71	8	—	—	—	—	—	—	—	1	—	1	—	2931 301
	C-E, C-L, C-H, C-P, w/Guards 71	8	—	—	—	—	—	—	—	1	—	1	—	3464 702
	C-M, All 70	8	—	—	—	—	—	—	—	—	1	—	—	2962 850
	C-S, w/o Guards 71	8	—	—	—	—	—	—	—	—	1	—	—	3464 700
	C-S, w/Guards 71	8	—	—	—	—	—	—	—	—	1	—	—	3464 701
	Y	8	—	—	—	—	—	—	—	—	—	—	1	2962 925
	SHIELD, Bumper Front 71		—	—	—	—	—	1	—	—	—	—	—	3464 494-5
	All 71		—	—	—	—	—	—	—	1	1	1	—	3464 706-7
13-64-4	SUPPORT, Inner		1	—	—	—	—	—	—	—	—	—	—	2962 320-1
	Outer		1	—	—	—	—	—	—	—	—	—	—	2962 322-3
	Inner		—	—	1	—	—	—	—	—	—	—	—	2962 406-7
	Outer		—	—	1	—	—	—	—	—	—	—	—	2962 410-1
	Inner, B		—	1	—	—	—	—	—	—	—	—	—	2962 280-1
	Outer, B		—	1	—	—	—	—	—	—	—	—	—	2962 284-5
	Inner, B, use w/Body Colored Bumper		—	1	—	—	—	—	—	—	—	—	—	2962 442-3
	Outer, B, use w/Body Colored Bumper		—	1	—	—	—	—	—	—	—	—	—	2962 446-7
	Inner, J		—	1	—	—	—	—	—	—	—	—	—	2962 330-1
	Outer, J		—	1	—	—	—	—	—	—	—	—	—	2962 334-5
	Inner 70		—	—	—	1	—	—	—	—	—	—	—	2962 456-7
	Outer 70		—	—	—	1	—	—	—	—	—	—	—	2962 460-1
	Inner, R, 2 D.H.T. 71		—	—	—	1	—	—	—	—	—	—	—	3464 110-1
	Outer, R, 2 D.H.T. 71		—	—	—	1	—	—	—	—	—	—	—	3464 114-5
	Inner, R, 4 D., and Sta. Wgn. 71		—	—	—	1	—	—	—	—	—	—	—	3464 152-3
	Outer, R, 4 D., and Sta. Wgn. 71		—	—	—	1	—	—	—	—	—	—	—	3464 156-7
	Inner, except Charger 70		—	—	—	—	1	—	—	—	—	—	—	2962 510-1
	Outer, except Charger 70		—	—	—	—	1	—	—	—	—	—	—	2962 514-5
	Inner, Charger 70		—	—	—	—	1	—	—	—	—	—	—	2962 584-5
	Outer, Charger 70		—	—	—	—	1	—	—	—	—	—	—	2962 588-9
	Inner, W, 2 D.H.T., Fast-Back 71		—	—	—	—	1	—	—	—	—	—	—	3464 330-1
	Outer, W, 2 D.H.T., Fast-Back 71		—	—	—	—	1	—	—	—	—	—	—	3464 334-5
	Inner, W, 4 D. and Sta. Wgn. 71		—	—	—	—	1	—	—	—	—	—	—	3464 306-7

CARLINES J - Challenger, B - Barracuda, V - Valiant, L - Dart, R - Belvedere - Satellite, W - Coronet - Charger, P - Plymouth, D - Dodge, C - Chrysler, Y - Imperial

AR Indicates use as required.

# Indicates parts not listed in any previous parts book.

Numerals in parentheses ( ) refer to notes.

★ Indicates change or addition.

Printed in U.S.A. January 1972

13-64-0 FRONT BUMPER FACE BAR Cont'd.

CODE	PART NAME	ENG. TYPE OR CU.IN.	V 1-2	B J 1-2	L 1-2	R 1-2	W 1-2	P 1-2	D 1-2	C 1	C 2	C 3	Y 1	PART NUMBER
13-64-4	SUPPORT Cont'd.													
	Outer, W, 4 D. and Sta. Wgn.	71	—	—	—	—	1	—	—	—	—	—	—	3464 310-1
	Inner		—	—	—	—	—	1	—	—	—	—	—	2962 656-7
	Outer		—	—	—	—	—	1	—	—	—	—	—	2962 660-1
	Inner		—	—	—	—	—	—	1	—	—	—	—	2962 758-9
	Outer		—	—	—	—	—	—	1	—	—	—	—	2962 762-3
	Inner	8	—	—	—	—	—	—	—	1	1	1	—	2962 868-9
	Outer	8	—	—	—	—	—	—	—	1	1	1	—	2931 338-9
	Inner	8	—	—	—	—	—	—	—	—	—	—	1	2931 418-9
	Outer	8	—	—	—	—	—	—	—	—	—	—	1	2931 420-1
	Frame Front Bumper		—	1	—	1	1	—	—	—	—	—	—	2962 032-3
	All	71 8	—	—	—	—	—	—	—	—	—	—	1	2925 904-5
	REINFORCEMENT, Inner Support	70	—	—	—	—	1	—	—	—	—	—	—	2962 518-9
	Front Bumper, Upper	70	—	—	—	—	1	—	—	—	—	—	—	2962 521
	Front Bumper, Lower	70	—	—	—	—	1	—	—	—	—	—	—	2962 523
	Upper, Charger	70	—	—	—	—	1	—	—	—	—	—	—	2962 595
	Lower, Charger	70	—	—	—	—	1	—	—	—	—	—	—	2962 597
	Front Bumper, W, 2 D.H.T., Fast-Back	71	—	—	—	—	1	—	—	—	—	—	—	3464 365
	Front Bumper	70	—	—	—	—	—	—	1	—	—	—	—	2962 777
	Front Bumper	71	—	—	—	—	—	—	1	—	—	—	—	3464 863
13-64-5	BOLT, Bumper To Support		AR	AR	AR	AR	—	—	—	—	—	—	—	6026 723
			—	—	—	—	AR	AR	AR	—	—	—	—	6026 544
		8	—	—	—	—	—	—	—	AR	AR	AR	AR	6026 885
	Support To Reinforcement		—	—	—	—	AR	—	—	—	—	—	—	6028 249
	Upper Reinforcement To Bumper		—	—	—	—	AR	—	—	—	—	—	—	6028 249
	Lower Reinforcement To Center Bumper		—	—	—	—	AR	—	—	—	—	—	—	6028 249
	BOLT, Support to Bumper Front, use w/Body Colored Bumper,													
	Plum Crazy	71	—	—	—	4	4	—	—	—	—	—	—	= 6029 362
	Dark Gold Met.	71	—	—	—	4	4	—	—	—	—	—	—	= 6029 363
	Citron Yellow	71	—	—	—	4	4	—	—	—	—	—	—	= 6029 364
	Avocado	71	—	—	—	4	4	—	—	—	—	—	—	= 6029 365
	Bright Blue Met.	71	—	—	—	4	4	—	—	—	—	—	—	= 6029 366
	Medium Yellow Green Met.	71	—	—	—	4	4	—	—	—	—	—	—	= 6029 367
	Ceramic Red	71	—	—	—	4	4	—	—	—	—	—	—	= 6029 368
13-64-9	SPACER, Center Closure to Bumper, C-M	8	—	—	—	—	—	—	—	—	—	3	—	2529 110
13-64-19	APPLIQUE, Bumper Center	70	—	—	—	—	1	—	—	—	—	—	—	2962 539
	Bumper Front, 2 D.H.T., R-M, R-P, R-S, Bright Blue Met.	71	—	—	—	1	—	—	—	—	—	—	—	3464 128
	Medium Yellow Green Met.	71	—	—	—	1	—	—	—	—	—	—	—	3464 130
	Dark Gold Met.	71	—	—	—	1	—	—	—	—	—	—	—	3464 132
	Ceramic Red	71	—	—	—	1	—	—	—	—	—	—	—	3464 137
	Avocado	71	—	—	—	1	—	—	—	—	—	—	—	3464 138
	Citron Yella	71	—	—	—	1	—	—	—	—	—	—	—	3464 139
	Nut	71	—	—	—	11	—	—	—	—	—	—	—	6028 800
13-64-22	FILLER, Bumper Front, J, RT.	70	—	1	—	—	—	—	—	—	—	—	—	2962 347
	J, LT.	70	—	1	—	—	—	—	—	—	—	—	—	2962 346
	J Rt.	71	—	1	—	—	—	—	—	—	—	—	—	3464 065
	J Lt.	71	—	1	—	—	—	—	—	—	—	—	—	3464 064
	R, 4 D. and Sta. Wgn.	71	—	—	—	1	—	—	—	—	—	—	—	3464 164-5
	Except Charger	70	—	—	—	—	1	—	—	—	—	—	—	2962 544-5
	Charger	70	—	—	—	—	1	—	—	—	—	—	—	2962 624
	RETAINER, Bumper Filler	70	—	—	—	—	8	—	—	—	—	—	—	2898 909
13-64-26	CLOSURE, Bumper Front	70	—	—	—	—	—	—	1	—	—	—	—	2962 754-5
	Bumper Front, D-H	71	—	—	—	—	—	—	1	—	—	—	—	3464 850-1
	Bumper Upper, D-H	71	—	—	—	—	—	—	1	—	—	—	—	3464 852
	Upper, C-E, C-L	70 8	—	—	—	—	—	—	—	1	—	—	—	2962 864

CARLINES J - Challenger, B - Barracuda, V - Valiant, L - Dart, R - Belvedere - Satellite, W - Coronet - Charger, P - Plymouth, D - Dodge, C - Chrysler, Y - Imperial

AR Indicates use as required.

# Indicates parts not listed in any previous parts book.

Numerals in parentheses ( ) refer to notes.

★ Indicates change or addition.

Printed in U.S.A. January 1972

13-64-0 FRONT BUMPER FACE BAR Cont'd.

CODE	PART NAME		ENG. TYPE OR CU.IN.	V 1-2	B J 1-2	L 1-2	R 1-2	W 1-2	P 1-2	D 1-2	C 1	C 2	C 3	Y 1	PART NUMBER
13-64-26	CLOSURE Cont'd.														
	Lower, C-E, C-L	70	8	—	—	—	—	—	—	—	1	—	—	—	2931 328-9
	Bumper Front, C-M	70	8	—	—	—	—	—	—	—	—	1	—	—	2962 852-3
	Bumper Lower Center, C-M	70	8	—	—	—	—	—	—	—	—	1	—	—	2962 854
	Bumper Lower, C-H, C-P	70	8	—	—	—	—	—	—	—	—	—	1	—	2962 860-1
	Upper, C-E, C-L, C-H, C-P	71	8	—	—	—	—	—	—	—	1	—	1	—	2962 864
	Lower, C-E, C-L, C-H, C-P	71	8	—	—	—	—	—	—	—	1	—	1	—	2931 328-9
	Bumper Front, C-S	71	8	—	—	—	—	—	—	—	—	1	—	—	2962 852-3
	Bumper Center, C-S	71	8	—	—	—	—	—	—	—	—	1	—	—	2962 854
	Bumper Front		8	—	—	—	—	—	—	—	—	—	—	1	2962 930
	Bumper Front, P/T Lamp		8	—	—	—	—	—	—	—	—	—	—	1	2962 926-7
	BOLT, w/RETAINER		8	—	—	—	—	—	—	AR	—	—	—	AR	6028 548
	NUT, w/WASHER		8	—	—	—	—	—	—	—	—	—	—	AR	6023 204
	PLATE, Bumper Support Brace To Frame			—	—	—	—	—	2	—	2	2	2	—	2931 349
	BUTTON, Bumper Closure To Bumper		8	—	—	—	—	—	—	—	—	—	—	2	2931 444
13-64-27	SPACER, Center Closure to Front Bumper, C-S		8	—	—	—	—	—	—	—	—	3	—	—	2529 110
13-64-28	SHIELD, Bumper Front	70		—	—	—	1	—	—	—	—	—	—	—	2962 462
	Bumper Front H/L, P-H, and P-M Gran Coupe	71		—	—	—	—	—	1	—	—	—	—	—	3464 494-5
13-64-29	MOULDING PACKAGE, Bumper Closure, Upper, C-E, C-L	70	8	—	—	—	—	—	—	—	1	—	—	—	2933 657
	Lower, C-E, C-L	70	8	—	—	—	—	—	—	—	1	—	—	—	2933 684-5
	End, C-E, C-L	70	8	—	—	—	—	—	—	—	1	—	—	—	2933 686-7
	Bumper Closure, Upper, C-E, C-L, C-H, C-P	71	8	—	—	—	—	—	—	—	1	—	1	—	2933 657
	Lower, C-E, C-L, C-H, C-P	71	8	—	—	—	—	—	—	—	1	—	1	—	2933 684-5
	End, C-E, C-L, C-H, C-P	71	8	—	—	—	—	—	—	—	1	—	1	—	2933 686-7
	MOULDING, Bumper Closure, Upper, C-M, C-H, C-P	70	8	—	—	—	—	—	—	—	—	1	1	—	2962 866
	Lower, C-M, C-H, C-P	70	8	—	—	—	—	—	—	—	—	1	1	—	2931 344-5
	End, C-M, C-H, C-P	70	8	—	—	—	—	—	—	—	—	1	1	—	2931 346-7
	Bumper Closure, Upper, C-S	71	8	—	—	—	—	—	—	—	—	1	—	—	2962 866
	Lower, C-S	71	8	—	—	—	—	—	—	—	—	1	—	—	2931 344-5
	End, C-S	71	8	—	—	—	—	—	—	—	—	1	—	—	2931 346-7
	Clip		8	—	—	—	—	—	—	—	—	AR	AR	—	6002 706
13-64-32	BRACKET, Bumper Filler, Charger	70		—	—	—	—	1	—	—	—	—	—	—	2962 622
	Bumper Seal		8	—	—	—	—	—	—	—	1	1	1	—	2931 319
13-64-33	SEAL, Bumper To Hood		8	—	—	—	—	—	—	—	1	1	1	—	2931 318
	CLIP, Seal		8	—	—	—	—	—	—	—	14	14	14	—	6002 809
			8	—	—	—	—	—	—	—	—	—	—	1	2931 422
13-64-34	RETAINER, Bumper Seal End		8	—	—	—	—	—	—	—	2	2	2	—	2931 436
	Bumper Seal Center		8	—	—	—	—	—	—	—	1	1	1	—	2931 437
	Bumper Seal		8	—	—	—	—	—	—	—	—	—	—	2	2931 423
13-64-35	PAD, Bumper Alignment		8	—	—	—	—	—	—	—	2	2	2	—	2931 364
			8	—	—	—	—	—	—	—	—	—	—	2	2931 401
	SPACER, Alignment Pad		8	—	—	—	—	—	—	—	—	—	—	2	6028 169
	STUD, Alignment Pad		8	—	—	—	—	—	—	—	—	—	—	2	6027 624
13-64-36	ROD, Bumper Alignment		8	—	—	—	—	—	—	—	2	2	2	—	2931 320
13-64-72	BRACKET, Bumper Jacking, Charger	70		—	—	—	—	1	—	—	—	—	—	—	= 2962 794-5
	Bumper Center, RT.	70		—	—	—	—	—	—	1	—	—	—	—	2962 781
	Bumper Center, LT.	70		—	—	—	—	—	—	1	—	—	—	—	2962 783
	Bumper Grille	71		—	—	—	—	—	—	1	—	—	—	—	3464 854
	Bumper Closure	71		—	—	—	—	—	—	1	—	—	—	—	3464 856
	Bumper Center, Except C-M	70	8	—	—	—	—	—	—	—	1	—	1	—	2931 440-1
	Bumper Center, C-M	70	8	—	—	—	—	—	—	—	—	1	—	—	2962 858-9
	Bumper Center, C-E, C-L, C-H, C-P	71	8	—	—	—	—	—	—	—	1	—	1	—	2931 440-1
	Bumper Center, C-S	71	8	—	—	—	—	—	—	—	—	1	—	—	2962 858-9

CARLINES
J - Challenger, B - Barracuda, V - Valiant, L - Dart, R - Belvedere - Satellite, W - Coronet - Charger, P - Plymouth, D - Dodge, C - Chrysler, Y - Imperial

AR Indicates use as required.
# Indicates parts not listed in any previous parts book.
Numerals in parentheses ( ) refer to notes.
★ Indicates change or addition.

Printed in U.S.A.
January 1972

CODE	PART NAME	ENG. TYPE OR CU.IN.	V 1-2	B J 1-2	L 1-2	R 1-2	W 1-2	P 1-2	D 1-2	C 1	C 2	C 3	Y 1	PART NUMBER
13-64-0	**FRONT BUMPER FACE BAR Cont'd.**													
13-64-72	BRACKET Cont'd.													
	Bumper Support, Inner	8	—	—	—	—	—	—	—	—	—	—	1	2925 914-5
	Bumper Support, Outer	8	—	—	—	—	—	—	—	—	—	—	2	2534 061
	Bumper P/T Lamp	8	—	—	—	—	—	—	—	—	—	—	2	2962 929
	Bumper Guard 70		—	—	—	—	2	—	—	—	—	—	—	2962 546
	REINFORCEMENT, Bumper Inner Support	8	—	—	—	—	—	—	—	—	—	—	2	2931 430
	Bumper Inner Support, 2 D.H.T. 71		—	—	—	1	—	—	—	—	—	—	—	3464 118-9
	Bumper, Front 71		—	—	—	—	—	—	1	—	—	—	—	3464 863
	BRACE, Bumper Support, All 70		—	—	—	—	1	—	—	—	—	—	—	2962 614
	Bumper Lower to Upper Reinforcement, Charger 70		—	—	—	—	2	—	—	—	—	—	—	2962 602
	Bumper Grille 70		—	—	—	—	—	1	—	—	—	—	—	2962 675
	Bumper Inner Support 70		—	—	—	—	—	1	—	—	—	—	—	2962 664-5
	Bumper Alignment, 2D.H.T. 71		—	—	—	1	—	—	—	—	—	—	—	3464 141
	Bumper Inner Support, 2 D.H.T. 71		—	—	—	1	—	—	—	—	—	—	—	3464 122-3
	Bumper Guard, 2 D.H.T., Fast-Back 71		—	—	—	—	1	—	—	—	—	—	—	3464 343
	Bumper Alignment, 2 D.H.T., Fast-Back 71		—	—	—	—	1	—	—	—	—	—	—	3464 362-3
	Bumper Alignment, 4 D. and Sta. Wgn. 71		—	—	—	—	2	—	—	—	—	—	—	3464 319
	Bumper Jacking, 2 D.H.T., Fast-Back 71		—	—	—	—	1	—	—	—	—	—	—	3464 340-1
	Bumper Jacking, 4 D. and Sta. Wgn. 71		—	—	—	—	2	—	—	—	—	—	—	3464 316
	Bumper Inner Support 71		—	—	—	—	—	1	—	—	—	—	—	2962 664-5
	Bumper Grille 71		—	—	—	—	—	1	—	—	—	—	—	3464 491
	Bumper Reinforcement		—	—	—	—	—	—	1	—	—	—	—	2962 784
	Bumper Inner Support	8	—	—	—	—	—	—	—	1	1	1	—	2931 312-3
	Bumper Jacking, 2 D.H.T. 71		—	—	—	1	—	—	—	—	—	—	—	3464 290-1
	Bumper Jacking	8	—	—	—	—	—	—	—	—	—	—	1	2931 428-9
13-64-104	MEDALLION, Bumper Front, 2 D.H.T., Fast-Back 71		—	—	—	—	1	—	—	—	—	—	—	3464 348
13-64-150	STRUT, Bumper Front 70		—	—	—	—	—	1	—	—	—	—	—	2962 676
	All 71		—	—	—	—	—	1	—	—	—	—	—	3464 493
	Bumper Alignment, Charger 70		—	—	—	—	2	—	—	—	—	—	—	2962 633
			—	—	—	—	—	—	2	—	—	—	—	2962 787
	BRACKET, Bumper Alignment	8	—	—	—	—	—	—	—	1	1	1	—	2931 368-9
13-66-0	**REAR BUMPER FACE BAR**													
13-66-2	BUMPERETTE, 4D. H.T.	8	—	—	—	—	—	—	—	—	—	—	1	2962 936-7
	2D. H.T.	8	—	—	—	—	—	—	—	—	—	—	1	2962 938-9
	SPACER, Bumperette To Impact Pad	8	—	—	—	—	—	—	—	—	—	—	2	6027 973
	STUD, Bumperette To Impact Pad	8	—	—	—	—	—	—	—	—	—	—	2	6027 295
13-66-3	BAR, V, all, 4 D. w/o Guards, Up to June 71		1	—	—	—	—	—	—	—	—	—	—	2962 385
	V, all, 4 D. w/o Guard, After June 71		1	—	—	—	—	—	—	—	—	—	—	3595 030
	V, all, 4 D. w/Guards, up to June 71		1	—	—	—	—	—	—	—	—	—	—	2962 386
	V, all, 4 D. w/Guards, after June 71		1	—	—	—	—	—	—	—	—	—	—	3595 031
	V, all, Fast-Back, up to June 71		1	—	—	—	—	—	—	—	—	—	—	2768 600
	V, all, Fast-Back, after June 71		1	—	—	—	—	—	—	—	—	—	—	3595 028
	V, 2 D.H.T., up to June 71		1	—	—	—	—	—	—	—	—	—	—	2962 325
	V, 2 D.H.T., after June 71		1	—	—	—	—	—	—	—	—	—	—	3595 027
	V, Export		1	—	—	—	—	—	—	—	—	—	—	2962 387
	L, All 70		—	—	1	—	—	—	—	—	—	—	—	2962 425
	L, 2 D.H.T., 4 D., up to June 71		—	—	1	—	—	—	—	—	—	—	—	3464 050
	L, 2 D.H.T., 4 D., after June 71		—	—	1	—	—	—	—	—	—	—	—	3595 034
	L, Fast-Back, up to June 71		—	—	1	—	—	—	—	—	—	—	—	2768 600

CARLINES J - Challenger, B - Barracuda, V - Valiant, L - Dart, R - Belvedere - Satellite, W - Coronet - Charger, P - Plymouth, D - Dodge, C - Chrysler, Y - Imperial

AR Indicates use as required.

# Indicates parts not listed in any previous parts book.

Numerals in parentheses ( ) refer to notes.

★ Indicates change or addition.

Printed in U.S.A. January 1972

13-66-0 REAR BUMPER FACE BAR Cont'd.

CODE	PART NAME	ENG. TYPE OR CU.IN.	V 1-2	B J 1-2	L 1-2	R 1-2	W 1-2	P 1-2	D 1-2	C 1	C 2	C 3	Y 1	PART NUMBER
13-66-3	BAR Cont'd.													
	L, Fast-Back, after June 71		—	—	1	—	—	—	—	—	—	—	—	3595 028
	B, Chrome	70	—	1	—	—	—	—	—	—	—	—	—	2962 300
	B, Light Bright Red	70	—	1	—	—	—	—	—	—	—	—	—	2962 391
	B, Lemon Twist	70	—	1	—	—	—	—	—	—	—	—	—	2962 421
	B, Lime Light	70	—	1	—	—	—	—	—	—	—	—	—	2962 422
	B, Violet Metallic	70	—	1	—	—	—	—	—	—	—	—	—	2962 423
	B, Blue Fire Metallic	70	—	1	—	—	—	—	—	—	—	—	—	2962 390
	B, Ivey Green Metallic	70	—	1	—	—	—	—	—	—	—	—	—	2962 392
	B, Deep Burnt Orange Metallic	70	—	1	—	—	—	—	—	—	—	—	—	2962 393
	B, Alpine White	70	—	1	—	—	—	—	—	—	—	—	—	2962 395
	B, Black Velvet	70	—	1	—	—	—	—	—	—	—	—	—	2962 396
	B, Chrome, up to June 71		—	1	—	—	—	—	—	—	—	—	—	2962 300
	B, Chrome, after June 71		—	1	—	—	—	—	—	—	—	—	—	3595 037
	B, Red	71	—	1	—	—	—	—	—	—	—	—	—	2962 391
	B, Citron Yella	71	—	1	—	—	—	—	—	—	—	—	—	3464 883
	B, Plum Met.	71	—	1	—	—	—	—	—	—	—	—	—	3464 884
	B, Tor Red	71	—	1	—	—	—	—	—	—	—	—	—	3464 885
	J, All	70	—	1	—	—	—	—	—	—	—	—	—	2962 350
	J, Chrome, up to June 71		—	1	—	—	—	—	—	—	—	—	—	3464 073
	J, Chrome, after June 71		—	1	—	—	—	—	—	—	—	—	—	3595 038
	J, Bright Blue Met.	71	—	1	—	—	—	—	—	—	—	—	—	3464 092
	J, Citron Yella	71	—	1	—	—	—	—	—	—	—	—	—	3464 895
	J, Plum Crazy	71	—	1	—	—	—	—	—	—	—	—	—	3464 896
	J, Ceramic Red	71	—	1	—	—	—	—	—	—	—	—	—	3464 897
	R, Except Sta. Wgn.	70	—	—	—	1	—	—	—	—	—	—	—	2962 475
	R, Sta. Wgn.	70	—	—	—	1	—	—	—	—	—	—	—	2856 595
	R, 2 D.H.T., w/o Guards	71	—	—	—	1	—	—	—	—	—	—	—	3464 200
	R, 2 D.H.T., w/Guards	71	—	—	—	1	—	—	—	—	—	—	—	3464 201
	R, 4 D., w/o Guards, up to June 71		—	—	—	1	—	—	—	—	—	—	—	3464 204
	R, 4 D., w/o Guards, after June 71		—	—	—	1	—	—	—	—	—	—	—	3595 104
	R, 4 D., w/Guards, up to June 71		—	—	—	1	—	—	—	—	—	—	—	3464 205
	R, 4 D., w/Guards, after June 71		—	—	—	1	—	—	—	—	—	—	—	3595 105
	R, Sta. Wgn., up to June 71		—	—	—	1	—	—	—	—	—	—	—	3464 275
	R, Sta. Wgn., after June 71		—	—	—	1	—	—	—	—	—	—	—	3595 106
	R, 2 D.H.T., Ceramic Red	71	—	—	—	1	—	—	—	—	—	—	—	3464 168
	Avocado	71	—	—	—	1	—	—	—	—	—	—	—	3464 169
	Medium Yellow Green Met.	71	—	—	—	1	—	—	—	—	—	—	—	3464 170
	Bright Blue Met.	71	—	—	—	1	—	—	—	—	—	—	—	3464 171
	Dark Gold Met.	71	—	—	—	1	—	—	—	—	—	—	—	3464 172
	Citron Yella	71	—	—	—	1	—	—	—	—	—	—	—	3464 173
	W, Except Sta. Wgn., and Charger	70	—	—	—	—	1	—	—	—	—	—	—	2962 550
	W, Sta. Wgn.	70	—	—	—	—	1	—	—	—	—	—	—	2856 595
	W, Charger	70	—	—	—	—	1	—	—	—	—	—	—	2856 675
	W, 2 D.H.T., Fast-Back, up to June 71		—	—	—	1	1	—	—	—	—	—	—	3464 425
	W, 2 D.H.T., Fast-Back, after June 71		—	—	—	—	1	—	—	—	—	—	—	3595 189
	W, 4 D.	71	—	—	—	—	1	—	—	—	—	—	—	3464 400
	W, Sta. Wgn., up to June 71		—	—	—	—	1	—	—	—	—	—	—	3464 275
	W, Sta. Wgn., after June 71		—	—	—	—	1	—	—	—	—	—	—	3595 106
	W, Sta. Wgn., Export	71	—	—	—	—	1	—	—	—	—	—	—	3464 276
	W, 2 D.H.T., Ceramic Red	71	—	—	—	—	1	—	—	—	—	—	—	3464 466
	Avocado	71	—	—	—	—	1	—	—	—	—	—	—	3464 467
	Citron Yella	71	—	—	—	—	1	—	—	—	—	—	—	3464 468
	Bright Blue Met.	71	—	—	—	—	1	—	—	—	—	—	—	3464 469
	Plum Crazy	71	—	—	—	—	1	—	—	—	—	—	—	3464 470
	Medium Yellow Green Met.	71	—	—	—	—	1	—	—	—	—	—	—	3464 471
	Upper, P-M, P-H, Except Sta. Wgn.	70	—	—	—	—	—	1	—	—	—	—	—	2962 744

CARLINES J - Challenger, B - Barracuda, V - Valiant, L - Dart, R - Belvedere - Satellite, W - Coronet - Charger, P - Plymouth, D - Dodge, C - Chrysler, Y - Imperial

AR Indicates use as required.

Numerals in parentheses ( ) refer to notes.

# Indicates parts not listed in any previous parts book.

★ Indicates change or addition.

Printed in U.S.A. January 1972

13-66-0 REAR BUMPER FACE BAR Cont'd.

CODE	PART NAME	ENG. TYPE OR CU.IN.	V 1-2	B J 1-2	L 1-2	R 1-2	W 1-2	P 1-2	D 1-2	C 1	C 2	C 3	Y 1	PART NUMBER
13-66-3	BAR Cont'd.													
	Upper, P-E, P-L, Except Sta. Wgn.	70	—	—	—	—	—	1	—	—	—	—	—	2962 725
	Upper, P-L, Grand Coupe	70	—	—	—	—	—	1	—	—	—	—	—	2962 744
	Lower, All, Except Sta. Wgn.	70	—	—	—	—	—	1	—	—	—	—	—	2962 727
	P-E, P-L, Except Sta. Wgn.	71	—	—	—	—	—	1	—	—	—	—	—	3464 525
	P-M, Except Sta. Wgn., w/o Guards	71	—	—	—	—	—	1	—	—	—	—	—	3464 528
	P-M, Except Sta. Wgn., w/Guards	71	—	—	—	—	—	1	—	—	—	—	—	3464 530
	P-H, Except Sta. Wgn.	71	—	—	—	—	—	1	—	—	—	—	—	3464 529
	Upper, Except Sta. Wgn.	70	—	—	—	—	—	—	1	—	—	—	—	2962 800
	D, Except Sta. Wgn.	71	—	—	—	—	—	—	1	—	—	—	—	3464 900
	Upper, C-E, C-L	70	8	—	—	—	—	—	—	1	—	—	—	2962 875
	Upper, C-M, C-H, Except Sta. Wgn.	70	8	—	—	—	—	—	—	—	1	1	—	2962 885
	C-E, 360 Eng., only, w/o Guards	71	8	—	—	—	—	—	—	1	—	—	—	2962 875
	C-E, 360 Eng., only, w/Guards	71	8	—	—	—	—	—	—	1	—	—	—	= 3464 696
	C-E, C-L, w/o Guards	71	8	—	—	—	—	—	—	1	—	—	—	3464 690
	C-E, C-L, w/Guards	71	8	—	—	—	—	—	—	1	—	—	—	3464 691
	C-H, C-S, Except Sta. Wgn., w/o Guards	71	8	—	—	—	—	—	—	—	1	1	—	2962 885
	C-H, C-S, Except Sta. Wgn., w/Guards	71	8	—	—	—	—	—	—	—	1	1	—	3464 692
	Sta. Wgn., w/o Step-Pad			—	—	—	—	1	1	—	—	1	—	2931 244
	Sta. Wgn., w/Step-Pad			—	—	—	—	1	1	—	—	1	—	2931 245
	Sta. Wgn., w/Step-Pad, Export			—	—	—	—	1	1	—	- -	1	—	2962 846
	C-H, C-S, Export	71	8	—	—	—	—	—	—	—	1	1	—	3464 693
	Upper	70	8	—	—	—	—	—	—	—	—	—	1	2962 934
	Upper	71	8	—	—	—	—	—	—	—	—	—	1	3464 952
	Lower		8	—	—	—	—	—	—	—	—	—	1	2931 451
	SHIELD, Lower Except Sta. Wgn.	70		—	—	—	—	—	1	—	—	—	—	2962 804
	P, Except Sta. Wgn.	71		—	—	—	—	1	—	—	—	—	—	3464 540
	D, Except Sta. Wgn.	71		—	—	—	—	—	1	—	—	—	—	3464 906
			8	—	—	—	—	—	—	1	1	1	—	2962 878
13-66-13	APPLIQUE, P-H, Except Sta. Wgn., Medium Dark Blue Met.	71		—	—	—	—	1	—	—	—	—	—	3464 575
	Medium Dark Green Met.	71		—	—	—	—	1	—	—	—	—	—	3464 576
	Medium Gold Met.	71		—	—	—	—	1	—	—	—	—	—	3464 577
	Black	71		—	—	—	—	1	—	—	—	—	—	3464 579
	White	71		—	—	—	—	1	—	—	—	—	—	3464 580
13-66-15	SEAL, Bumper To Body, STA. Wgn.			—	—	—	—	—	1	1	—	—	1	—	2931 514-5
	Support To Frame, Charger			—	—	—	—	4	—	—	—	—	—	—	6026 579
	Impact Bracket To Sheetmetal			2	—	—	—	—	—	—	—	—	—	—	6026 579
	BOLT, Bumper To Support			AR	AR	AR	AR	AR	—	—	—	—	—	—	6026 723
	Support To Frame, Charger			—	—	—	—	4	—	—	—	—	—	—	6025 855
	Bumper To Support			—	—	—	—	—	AR	AR	AR	AR	AR	—	6026 724
	Impact Bracket To Bumper, Except Sta. Wgn.			—	—	—	—	—	2	2	—	—	—	—	6026 724
	Impact Bracket To Sheetmetal, Except Sta. Wgn.			—	—	—	—	—	2	2	—	—	—	—	6027 296
	RETAINER, Bumper Support To Frame			4	4	—	—	—	—	—	—	—	—	—	6026 647
	Bumper Support To Frame, Charger			—	—	—	—	4	—	—	—	—	—	—	6026 430
	Impact Bracket To Sheetmetal			—	—	—	—	—	2	2	—	—	—	—	6026 648
	BUMPERETTE Adjusting		8	—	—	—	—	—	—	—	—	—	—	2	6026 648
	Bracket To Impact Pad, Sta. Wgn.			—	—	—	—	—	2	2	—	—	2	—	6026 648
	STUD, Bracket To Impact Pad, Sta. Wgn.			—	—	—	—	—	2	2	—	—	2	—	6026 805
	NUT, w/WASHER, Bracket To Impact Pad, Sta. Wgn.			—	—	—	—	—	2	2	—	—	2	—	6025 012

CODE	PART NAME	ENG. TYPE OR CU.IN.	V 1-2	B J 1-2	L 1-2	R 1-2	W 1-2	P 1-2	D 1-2	C 1	C 2	C 3	Y 1	PART NUMBER
13-66-0	**REAR BUMPER FACE BAR Cont'd.**													
13-66-15	SEAL Cont'd.													
	Bolt, Support to Bumper Rear, use w/Body Colored Bumper,													
	Plum Crazy	71	—	—	—	8	8	—	—	—	—	—	—	= 6029 362
	Dark Gold Met.	71	—	—	—	8	8	—	—	—	—	—	—	= 6029 363
	Citron Yella	71	—	—	—	8	8	—	—	—	—	—	—	= 6029 364
	Avocado	71	—	—	—	8	8	—	—	—	—	—	—	= 6029 365
	Bright Blue Met.	71	—	—	—	8	8	—	—	—	—	—	—	= 6029 366
	Medium Yellow Green Met.	71	—	—	—	8	8	—	—	—	—	—	—	= 6029 367
	Ceramic Red	71	—	—	—	8	8	—	—	—	—	—	—	= 6029 368
13-66-16	SUPPORT,V	70	1	—	—	—	—	—	—	—	—	—	—	2768 604-5
	V, 2D.H.T.	71	1	—	—	—	—	—	—	—	—	—	—	2962 430-1
	V, Fast-Back, 4D.	71	1	—	—	—	—	—	—	—	—	—	—	2768 604-5
	L	70	—	—	1	—	—	—	—	—	—	—	—	2962 430-1
	L, 2 D.H.T., 4 D.	71	—	—	1	—	—	—	—	—	—	—	—	2962 430-1
	L, Fast-Back	71	—	—	1	—	—	—	—	—	—	—	—	2768 604-5
	B		—	1	—	—	—	—	—	—	—	—	—	2962 306-7
	J		—	1	—	—	—	—	—	—	—	—	—	2962 354-5
	R, Except Sta. Wgn.	70	—	—	—	1	—	—	—	—	—	—	—	2962 480-1
	R, 2 D.H.T.	71	—	—	—	1	—	—	—	—	—	—	—	3464 210-1
	R, 4 D.	71	—	—	—	1	—	—	—	—	—	—	—	3464 228-9
	W, Except Sta., and Charger	70	—	—	—	—	1	—	—	—	—	—	—	2962 556-7
	Charger	70	—	—	—	—	1	—	—	—	—	—	—	2856 680-1
	R, W, Sta. Wgn.	70	—	—	—	1	1	—	—	—	—	—	—	2856 582-3
	W, 2 D.H.T., Fast-Back	71	—	—	—	—	1	—	—	—	—	—	—	3464 430-1
	W, 4 D.	71	—	—	—	—	1	—	—	—	—	—	—	3464 408-9
	R, W, Sta. Wgn.	71	—	—	—	1	1	—	—	—	—	—	—	3464 282-3
	P, Inner, Except Sta. Wgn.	70	—	—	—	—	—	1	—	—	—	—	—	2962 734-5
	P, Outer, Except Sta. Wgn.	70	—	—	—	—	—	1	—	—	—	—	—	2962 736-7
	P, Inner, Except Sta. Wgn.	71	—	—	—	—	—	1	—	—	—	—	—	3464 536-7
	P, Outer, Except Sta. Wgn.	71	—	—	—	—	—	1	—	—	—	—	—	3464 538-9
	D, Inner, Except Sta. Wgn.	70	—	—	—	—	—	—	1	—	—	—	—	2962 812-3
	D, Outer, Except Sta. Wgn.	70	—	—	—	—	—	—	1	—	—	—	—	2962 814-5
	D, Inner, Except Sta. Wgn.	71	—	—	—	—	—	—	1	—	—	—	—	3464 914-5
	D, Outer, Except Sta. Wgn.	71	—	—	—	—	—	—	1	—	—	—	—	3464 916-7
	C, Inner, Except Sta. Wgn.	8	—	—	—	—	—	—	—	1	1	1	—	2962 908-9
	C, Outer, Except Sta. Wgn.	8	—	—	—	—	—	—	—	1	1	1	—	2962 912-3
	P, D, C, Inner, Sta. Wgn.		—	—	—	—	—	1	1	—	—	1	—	2931 240-1
	P, D, C, Outer, Sta. Wgn.		—	—	—	—	—	1	1	—	—	1	—	2931 242-3
	Y, Inner	8	—	—	—	—	—	—	—	—	—	—	1	2931 468-9
	Y, Outer	8	—	—	—	—	—	—	—	—	—	—	1	2931 472-3
13-66-21	BRACE, Bumper Jacking, Except Sta. Wgn.	70	—	—	—	—	—	2	—	—	—	—	—	2962 740
	Except Sta. Wgn.	70	—	—	—	—	—	—	2	—	—	—	—	2962 823
	P, Except Sta. Wgn.	71	—	—	—	—	—	2	—	—	—	—	—	3464 545
	D, Except Sta. Wgn.	71	—	—	—	—	—	—	2	—	—	—	—	3464 921
	Except Sta. Wgn.	8	—	—	—	—	—	—	—	2	2	2	—	2962 921
	Sta. Wgn.		—	—	—	—	—	1	1	—	—	1	—	2931 228-9
	All	8	—	—	—	—	—	—	—	—	—	—	1	2931 484-5
	REINFORCEMENT, Bumper Center, Except Sta. Wgn.	70	—	—	—	—	—	—	1	—	—	—	—	2962 830
	Except Sta. Wgn.	8	—	—	—	—	—	—	—	1	1	1	—	2962 881
	Bumper Rear, Except Sta. Wgn., Except P-H	71	—	—	—	—	—	1	—	—	—	—	—	# 3464 549
	Bumper Rear, PH, Except Sta. Wgn.	71	—	—	—	—	—	1	—	—	—	—	—	3464 572

13-66-0 REAR BUMPER FACE BAR Cont'd.

CODE	PART NAME	ENG. TYPE OR CU.IN.	V 1-2	B J 1-2	L 1-2	R 1-2	W 1-2	P 1-2	D 1-2	C 1	C 2	C 3	Y 1	PART NUMBER
13-66-24	PLATE, C/Member Bumper Mounting,													
	Sta. Wgn., RT.	70	—	—	—	1	1	—	—	—	—	—	—	2860 620
	LT.	70	—	—	—	1	1	—	—	—	—	—	—	2860 583
	Bumper Reinforcement	8	—	—	—	—	—	—	—	—	—	—	2	2931 525
13-66-31	MEDALLION, Except Sta. Wgn.	70	—	—	—	—	—	—	1	—	—	—	—	2962 809
	C-E	70 8	—	—	—	—	—	—	—	1	—	—	—	# 2962 940
	C-L	70 8	—	—	—	—	—	—	—	1	—	—	—	2962 955
	CAP-NUT, D	70	—	—	—	—	—	—	2	—	—	—	—	6026 156
	C-E, C-L	70 8	—	—	—	—	—	—	—	3	—	—	—	6027 352
13-66-37	PAD, Bumper Alignment, Except													
	Sta. Wgn.	70	—	—	—	—	—	2	2	2	2	2	—	2962 827
	Except Sta. Wgn.	71	—	—	—	—	—	2	2	—	—	—	—	2962 714
	All	71 8	—	—	—	—	—	—	—	2	2	2	—	2962 714
	Bumperette Adjusting	70 8	—	—	—	—	—	—	—	—	—	—	2	2931 478
	Bumper Alignment	71 8	—	—	—	—	—	—	—	—	—	—	2	2931 478
	SPACER, Alignment Pad to Bumper													
	Bracket Except Sta. Wgn.	70 8	—	—	—	—	—	—	—	2	2	2	—	6028 617
13-66-40	BRACKET, Bumper Light	8	—	—	—	—	—	—	—	—	—	—	1	2962 950-1
	Bumper End T/L Upper, 2 D.H.T.	71 8	—	—	—	—	—	—	—	—	—	—	2	3464 802
13-66-41	RETAINER, Bumper Inner Support, To													
	Outer Support		—	—	—	—	—	2	2	2	2	2	2	2768 923
13-66-44	BRACKET, Bumper Impact	70	1	—	—	—	—	—	—	—	—	—	—	2768 606-7
	Fast-Back, 4D.	71	1	—	—	—	—	—	—	—	—	—	—	2768 606-7
	L, Fast-Back	71	—	—	1	—	—	—	—	—	—	—	—	2768 606-7
	Except Sta. Wgn.	70	—	—	—	—	—	1	—	—	—	—	—	2962 738-9
		70	—	—	—	—	—	—	1	—	—	—	—	2962 816-7
13-66-46	LETTER, Bumper Name, "I"	70 8	—	—	—	—	—	—	—	—	—	—	2	2962 947
	"M"	70 8	—	—	—	—	—	—	—	—	—	—	1	2962 943
	"P"	70 8	—	—	—	—	—	—	—	—	—	—	1	2962 944
	"E"	70 8	—	—	—	—	—	—	—	—	—	—	1	2962 945
	"R"	70 8	—	—	—	—	—	—	—	—	—	—	1	2962 946
	"A"	70 8	—	—	—	—	—	—	—	—	—	—	1	2962 948
	"L"	70 8	—	—	—	—	—	—	—	—	—	—	1	2962 949
	NUT, w/WASHER	70 8	—	—	—	—	—	—	—	—	—	—	3	6023 204
	PLATE, Bumper Name, Except													
	Sta. Wgn., P-E, P-L	70	—	—	—	—	—	1	—	—	—	—	—	2998 870
	P, Except Sta. Wgn.	71	—	—	—	—	—	1	—	—	—	—	—	3464 582
	Cap-Nut	71	—	—	—	—	—	3	—	—	—	—	—	6027 466
	C-E	70 8	—	—	—	—	—	—	—	1	—	—	—	2962 900
	C-E, 360 Eng., only	71 8	—	—	—	—	—	—	—	1	—	—	—	2962 900
13-66-48	FILLER, Bumper Rear, Sta. Wgn.	71	—	—	—	1	1	—	—	—	—	—	—	3464 284-5
13-66-49	TAPE, Bumper Rear, BLACK,													
	R-M, R-S, 2 D.H.T.	71	—	—	—	1	—	—	—	—	—	—	—	3569 564-5
13-66-79	RETAINER, Seal To Bumper	70 8	—	—	—	—	—	—	—	—	—	—	16	2898 909
13-66-95	SEAL WASHER, Bumper Support To													
	Frame	70	—	—	6	—	—	—	—	—	—	—	—	2962 440
13-66-105	BRACKET, w/NUT, Rear Floor Pan													
	To Stone Deflector		—	—	1	—	—	—	—	—	—	—	—	3445 483
	V, 2D.H.T.	71	1	—	—	—	—	—	—	—	—	—	—	3445 483
	SUPPORT, w/Nut, Stone Deflector To													
	Rear C/Member, B	70	—	1	—	—	—	—	—	—	—	—	—	3444 162-3
	B	71	—	2	—	—	—	—	—	—	—	—	—	3570 890
	J	70	—	1	—	—	—	—	—	—	—	—	—	3444 148-9
	REINFORCEMENT, Stone Deflector To													
	Rear C/Member, B	70	—	4	—	—	—	—	—	—	—	—	—	3444 152
	J	70	—	2	—	—	—	—	—	—	—	—	—	3444 108-9
	Stone Shield Towing,													
	426 Eng., Std.	71 8	—	—	—	1	—	—	—	—	—	—	—	3466 669-70

CARLINES J - Challenger, B - Barracuda, V - Valiant, L - Dart, R - Belvedere - Satellite, W - Coronet - Charger, P - Plymouth, D - Dodge, C - Chrysler, Y - Imperial

AR Indicates use as required.

Numerals in parentheses ( ) refer to notes.

# Indicates parts not listed in any previous parts book.

★ Indicates change or addition.

Printed in U.S.A. January 1972

13-66-0 REAR BUMPER FACE BAR Cont'd.

CODE	PART NAME	ENG. TYPE OR CU.IN.	V 1-2	B J 1-2	L 1-2	R 1-2	W 1-2	P 1-2	D 1-2	C 1	C 2	C 3	Y 1	PART NUMBER
13-66-105	BRACKET Cont'd.													
	440 Eng., 3-2 Bbl. Carb., w/Noise Reduction Package	71 8	—	—	—	1	—	—	—	—	—	—	—	3466 669-70
13-66-106	DEFLECTOR, REAR, STONE	70	—	—	1	—	—	—	—	—	—	—	—	2964 510
	V, 2 D.H.T.	71	1	—	—	—	—	—	—	—	—	—	—	2964 510
	L, 2 D.H.T., 4 D.	71	—	—	1	—	—	—	—	—	—	—	—	2964 510
	198, 225, 318 Eng., and 383 Eng., 2 Bbl. Carb., B	70	—	1	—	—	—	—	—	—	—	—	—	2963 379
	340 Eng., 3-2 Bbl. Carb., B	70 8	—	1	—	—	—	—	—	—	—	—	—	2963 379
	340, 383 Eng., 4 Bbl. Carb., 426, 440 Eng., B	70 8	—	1	—	—	—	—	—	—	—	—	—	3444 171
	426 Eng. and 440 Eng. w/3-2 Bbl. Carb., w/Noise Reduction Package, B	70 8	—	1	—	—	—	—	—	—	—	—	—	2963 379
	198, 225, 318 Eng., and 383 Eng., 2 Bbl. Carb., J	70	—	1	—	—	—	—	—	—	—	—	—	2963 393
	340 Eng., 3-2 Bbl. Carb., J	70 8	—	1	—	—	—	—	—	—	—	—	—	2963 393
	340, 383 Eng., 4 Bbl. Carb., 426, 440 Eng., J	70	—	1	—	—	—	—	—	—	—	—	—	3445 936
	426 Eng., and 440 Eng. w/3-2 Bbl. Carb., w/Noise Reduction Package, J	70 8	—	1	—	—	—	—	—	—	—	—	—	2963 393
	SCREW, w/WASHER	70	—	AR	—	—	—	—	—	—	—	—	—	6024 848
	STUD	70	—	AR	—	—	—	—	—	—	—	—	—	6024 156
	B, 198, 225, 318 Eng.	71	—	1	—	—	—	—	—	—	—	—	—	3615 011
	B, 340 Eng., Std.	71	—	1	—	—	—	—	—	—	—	—	—	3615 031
	B, 340 Eng., 3-2 Bbl. Carb.	71	—	1	—	—	—	—	—	—	—	—	—	3615 011
	B, 383, 426, 440 Eng., Std.	71	—	1	—	—	—	—	—	—	—	—	—	3615 031
	B, 426, 440 Eng., w/Noise Reduction Package	71	—	1	—	—	—	—	—	—	—	—	—	3615 011
	J, 198, 225, 318 Eng., 383 Eng., 2 Bbl. Carb.	71	—	1	—	—	—	—	—	—	—	—	—	3570 461
	J, 340 Eng., 383 Eng., 4 Bbl. Carb.	71 8	—	1	—	—	—	—	—	—	—	—	—	3570 457
	J, 426, 440 Eng., Std.	71 8	—	1	—	—	—	—	—	—	—	—	—	3570 457
	J, 426, 440 Eng., w/Noise Reduction Pkg.	71 8	—	1	—	—	—	—	—	—	—	—	—	3570 461
	R-M, 383 Eng. 4 Bbl. Carb. and 440 Eng. 3-2 Bbl. Carb., Std.	71 8	—	—	—	1	—	—	—	—	—	—	—	3615 110
	R-M, 383 Eng. 4 Bbl. Carb. and 440 Eng. 3-2 Bbl. Carb., w/Decor. T/Pipe Tips	71 8	—	—	—	1	—	—	—	—	—	—	—	3615 113
	R-M, R-S, 426, 440 Eng.	71 8	—	—	—	1	—	—	—	—	—	—	—	3615 113
	R-H, R-P, 2 D.H.T.	71	—	—	—	1	—	—	—	—	—	—	—	3615 110
	R, 4 D.	71	—	—	—	1	—	—	—	—	—	—	—	3505 719
	Fast-Back, 383 Eng., 4 Bbl. Carb., Std.	71 8	—	—	—	—	1	—	—	—	—	—	—	3505 696
	2 D.H.T., 225, 318 Eng. and 383 Eng., Std.	71	—	—	—	—	1	—	—	—	—	—	—	3505 696
	426 Eng., Std.	71 8	—	—	—	—	1	—	—	—	—	—	—	3505 696
	W-M, 383 Eng., 4 Bbl. Carb., w/o Decor. Tail Pipe Tips, Std.	71 8	—	—	—	—	1	—	—	—	—	—	—	3505 696
	440 Eng., w/o Decor. Tail Pipe Tips, Std.	71 8	—	—	—	—	1	—	—	—	—	—	—	3505 696
	W-M, 383 Eng., 4 Bbl. Carb., w/Decor. Tail Pipe Tips	71 8	—	—	—	—	1	—	—	—	—	—	—	3570 080
	440 Eng., w/Decor. Tail Pipe Tips	71 8	—	—	—	—	1	—	—	—	—	—	—	3570 080
	4 D. All	71	—	—	—	—	1	—	—	—	—	—	—	3505 716

CODE	PART NAME	ENG. TYPE OR CU.IN.	V 1-2	B J 1-2	L 1-2	R 1-2	W 1-2	P 1-2	D 1-2	C 1	C 2	C 3	Y 1	PART NUMBER
13-66-0	**REAR BUMPER FACE BAR Cont'd.**													
13-66-106	DEFLECTOR Cont'd.													
	TAPE, Rear Stone Deflector,													
	BLACK, R-M, R-S, 2D.H.T.,													
	w/o Decor Tail Pipe Tips	71	—	—	—	1	—	—	—	—	—	—	—	3569 566-7
	w/Decor Tail Pipe Tips	71	—	—	—	1	—	—	—	—	—	—	—	3613 460-1
13-66-116	SEAL, Bumper To Deck Lid	8	—	—	—	—	—	—	—	—	—	—	1	2931 498
13-66-136	BRACKET, Bumper Alignment, Except													
	Sta. Wgn., P-E, P-L	70	—	—	—	—	—	2	—	—	—	—	—	2962 704
	P-M, P-H	70	—	—	—	—	—	2	—	—	—	—	—	2962 705
	Except Sta. Wgn., D	70	—	—	—	—	—	—	2	—	—	—	—	2962 826
	SPACER, Alignment Bracket To Sheetmetal,													
	Except Sta. Wgn.	70	—	—	—	—	—	—	2	—	—	—	—	6028 617
	RETAINER, Alignment Bracket To													
	Sheetmetal, Except Sta. Wgn.	70	—	—	—	—	—	—	2	—	—	—	—	6026 648
	BOLT, Alignment Bracket To Sheetmetal,													
	Except Sta. Wgn.	70	—	—	—	—	—	—	2	—	—	—	—	6026 720
13-66-141	SPACER, Bumperette, .054 Thk.	8	—	—	—	—	—	—	—	—	—	—	AR	2931 491
	.109 Thk	8	—	—	—	—	—	—	—	—	—	—	AR	2931 492
13-66-147	STEP-PAD, Sta. Wgn.		—	—	—	—	—	1	1	—	—	1	—	2931 510-1
13-66-148	CUSHION, Step-Pad, Sta. Wgn.		—	—	—	—	—	2	2	—	—	2	—	2931 512
13-66-151	PANEL, Bumper Texture, Except													
	Sta. Wgn., P-M	70	—	—	—	—	—	1	—	—	—	—	—	2962 746
	P-H	70	—	—	—	—	—	1	—	—	—	—	—	2962 748
	Export	70	—	—	—	—	—	1	—	—	—	—	—	# 2962 710
13-66-153	CLOSURE, Rear Bumper License													
	Plate, W-P, W-S, 2D.H.T.,													
	Fast-Back	71	—	—	—	—	1	—	—	—	—	—	—	3464 432
13-68-0	**BUMPER GUARDS**													
13-68-5	BUMPER GUARD PACKAGE, Front													
	V, All	71	1	—	—	—	—	—	—	—	—	—	—	2809 825
	B	70	—	1	—	—	—	—	—	—	—	—	—	3481 803
	B, All	71	—	1	—	—	—	—	—	—	—	—	—	3620 326
	J		—	1	—	—	—	—	—	—	—	—	—	3481 807
	L		—	—	1	—	—	—	—	—	—	—	—	3481 805
	R, 2 D.H.T.	71	—	—	—	1	—	—	—	—	—	—	—	3620 327
	R, 4 D. and Sta. Wgn.	71	—	—	—	1	—	—	—	—	—	—	—	3620 328
	W, Except Charger	70	—	—	—	—	1	—	—	—	—	—	—	3481 811
	W, Charger	70	—	—	—	—	1	—	—	—	—	—	—	3481 813
	W, 2 D.H.T., Fast-Back	71	—	—	—	—	1	—	—	—	—	—	—	3620 331
	W, 4 D. and Sta. Wgn.	71	—	—	—	—	1	—	—	—	—	—	—	3620 332
	P		—	—	—	—	—	1	—	—	—	—	—	3481 815
	D		—	—	—	—	—	—	1	—	—	—	—	3481 817
	C, All	71	—	—	—	—	—	—	—	1	1	1	—	3620 337
	BUMPER GUARD PACKAGE, Rear													
	V, All	71	1	—	—	—	—	—	—	—	—	—	—	2809 832
	L, Except Fast-Back		—	—	1	—	—	—	—	—	—	—	—	3481 804
	L, Fast-Back	71	—	—	1	—	—	—	—	—	—	—		2809 832
	R	70	—	—	—	1	—	—	—	—	—	—	—	3481 810
	R, 2 D.H.T.	71	—	—	—	1	—	—	—	—	—	—	—	3620 329
	R, 4 D.	71	—	—	—	1	—	—	—	—	—	—	—	3620 330
	W, Except Charger and Sta. Wgn.	70	—	—	—	—	1	—	—	—	—	—	—	3481 812
	W, 2 D.H.T., Fast-Back	71	—	—	—	—	1	—	—	—	—	—	—	3620 333
	W, 4 D.	71	—	—	—	—	1	—	—	—	—	—	—	3620 334
	P, Except Sta. Wgn.	70	—	—	—	—	—	1	—	—	—	—	—	3481 816
	P-E, P-L, P-M, Except Sta. Wgn.	71	—	—	—	—	—	1	—	—	—	—	—	3620 335
	D, Except Sta. Wgn.	70	—	—	—	—	—	—	1	—	—	—	—	3481 818
	D, Except Sta. Wgn.	71	—	—	—	—	—	—	1	—	—	—	—	3620 336

CARLINES J - Challenger, B - Barracuda, V - Valiant, L - Dart, R - Belvedere - Satellite, W - Coronet - Charger, P - Plymouth, D - Dodge, C - Chrysler, Y - Imperial

AR Indicates use as required.

# Indicates parts not listed in any previous parts book.

Numerals in parentheses ( ) refer to notes.

★ Indicates change or addition.

Printed in U.S.A. January 1972

13-68-0 BUMPER GUARDS Cont'd.

13-68-5 BUMPER GUARD PACKAGE Cont'd.

CODE	PART NAME	ENG. TYPE OR CU.IN.		V 1-2	B J 1-2	L 1-2	R 1-2	W 1-2	P 1-2	D 1-2	C 1	C 2	C 3	Y 1	PART NUMBER
	C, Except Sta. Wgn.	70	8	—	—	—	—	—	—	—	1	—	1	—	3481 819
	C, Except Sta. Wgn.	71	8	—	—	—	—	—	—	—	1	1	1	—	3620 338
13-68-6	GUARD, FRONT, V			2	—	—	—	—	—	—	—	—	—	—	2768 588
	L			—	—	1	—	—	—	—	—	—	—	—	2962 416-7
	B	70		—	1	—	—	—	—	—	—	—	—	—	2962 288-9
	B	71		—	1	—	—	—	—	—	—	—	—	—	3464 056-7
	J			—	1	—	—	—	—	—	—	—	—	—	2962 340-1
	R	70		—	—	—	1	—	—	—	—	—	—	—	2962 468-9
	R, 2 D.H.T.	71		—	—	—	1	—	—	—	—	—	—	—	3464 126
	R, 4 D. and Sta. Wgn.	71		—	—	—	2	—	—	—	—	—	—	—	3464 161
	W, Except Charger	70		—	—	—	—	2	—	—	—	—	—	—	2962 538
	Charger	70		—	—	—	—	1	—	—	—	—	—	—	2962 608-9
	W, 2 D.H.T., Fast-Back	71		—	—	—	—	2	—	—	—	—	—	—	3464 351
	W, 4 D. and Sta. Wgn.	71		—	—	—	—	2	—	—	—	—	—	—	3464 356
	P			—	—	—	—	—	1	—	—	—	—	—	2962 672-3
	D			—	—	—	—	—	—	1	—	—	—	—	2962 770-1
	C	70	8	—	—	—	—	—	—	—	1	1	1	—	2962 871
	C, All	71	8	—	—	—	—	—	—	—	2	2	2	—	3464 710
	GUARD, REAR, V	70		2	—	—	—	—	—	—	—	—	—	—	2768 616
	V, 2D.H.T.	71		1	—	—	—	—	—	—	—	—	—	—	2962 436-7
	V, Fast-Back, 4D.	71		2	—	—	—	—	—	—	—	—	—	—	2768 616
	L	70		—	—	1	—	—	—	—	—	—	—	—	2962 436-7
	L, 2D.H.T., 4D.	71		—	—	1	—	—	—	—	—	—	—	—	2962 436-7
	L, Fast-Back	71		—	—	2	—	—	—	—	—	—	—	—	2768 616
	B	70		—	2	—	—	—	—	—	—	—	—	—	2962 310
	B	71		—	2	—	—	—	—	—	—	—	—	—	3464 071
	J, use w/o Cushion			—	1	—	—	—	—	—	—	—	—	—	2962 366-7
	J, use w/Cushion			—	1	—	—	—	—	—	—	—	—	—	2962 358-9
	R, Except Sta. Wgn.	70		—	—	—	2	—	—	—	—	—	—	—	2962 483
	R, 2 D.H.T.	71		—	—	—	1	—	—	—	—	—	—	—	3464 218
	R, 4 D.	71		—	—	—	1	—	—	—	—	—	—	—	3464 230-1
	W, Except Sta. Wgn., and Charger	70		—	—	—	—	1	—	—	—	—	—	—	2962 564-5
	Charger	70		—	—	—	—	2	—	—	—	—	—	—	2856 682
	W, 2 D.H.T., Fast-Back	71		—	—	—	—	2	—	—	—	—	—	—	3464 438
	W, 4 D.	71		—	—	—	—	2	—	—	—	—	—	—	3464 412
	P, Except Sta. Wgn.	70		—	—	—	—	—	1	—	—	—	—	—	2962 708-9
	P, Except Sta. Wgn.	71		—	—	—	—	—	1	—	—	—	—	—	3464 562-3
	D, Except Sta. Wgn.	70		—	—	—	—	—	—	2	—	—	—	—	2962 819
	D, Except Sta. Wgn.	71		—	—	—	—	—	—	2	—	—	—	—	3464 919
	C, Except Sta. Wgn.	70	8	—	—	—	—	—	—	—	1	1	1	—	2962 896-7
	C, Except Sta. Wgn.	71	8	—	—	—	—	—	—	—	1	1	1	—	3464 694
	Y, All	71	8	—	—	—	—	—	—	—	—	—	—	1	3464 956-7
13-68-12	BRACKET, Rear Bumper Guard, Except Sta. Wgn., D, RT.	70		—	—	—	—	—	—	1	—	—	—	—	2962 836
	LT.	70		—	—	—	—	—	—	1	—	—	—	—	2962 843
	D, Except Sta. Wgn., w/Guards	71		—	—	—	—	—	—	2	—	—	—	—	3464 924
	BRACE, Front Bumper GUARD														
	B, All			—	1	—	—	—	—	—	—	—	—	—	2962 292
	W, Front Bumper Guard, 4 D. and Sta. Wgn.	71		—	—	—	—	1	—	—	—	—	—	—	2962 292
	W, Rear Bumper Guard, Except Sta. Wgn.	71		—	—	—	—	1	—	—	—	—	—	—	3464 462-3
	STRUT, Guard Rear, 4D.	71		—	—	—	—	2	—	—	—	—	—	—	3464 419
13-68-15	FILLER, Rear Bumper Guard, B			—	2	—	—	—	—	—	—	—	—	—	2962 316
13-68-18	CUSHION, GUARD, FRONT, V			2	—	—	—	—	—	—	—	—	—	—	2533 342
	L			—	—	2	—	—	—	—	—	—	—	—	2962 342
	B	70		—	2	—	—	—	—	—	—	—	—	—	2962 290
	B	71		—	2	—	—	—	—	—	—	—	—	—	3464 058

CARLINES: J - Challenger, B - Barracuda, V - Valiant, L - Dart, R - Belvedere - Satellite, W - Coronet - Charger, P - Plymouth, D - Dodge, C - Chrysler, Y - Imperial

AR Indicates use as required.

# Indicates parts not listed in any previous parts book.

Numerals in parentheses ( ) refer to notes.

★ Indicates change or addition.

Printed in U.S.A. January 1972

CODE	PART NAME		ENG. TYPE OR CU.IN.	V 1-2	B J 1-2	L 1-2	R 1-2	W 1-2	P 1-2	D 1-2	C 1	C 2	C 3	Y 1	PART NUMBER
13-68-0	**BUMPER GUARDS Cont'd.**														
13-68-18	CUSHION Cont'd.														
	J			—	2	—	—	—	—	—	—	—	—	—	2962 342
	R, 4 D. and Sta. Wgn.	71		—	—	—	2	—	—	—	—	—	—	—	3464 162
	W	70		—	—	—	—	2	—	—	—	—	—	—	2962 527
	W, 2 D.H.T., Fast-Back	71		—	—	—	—	2	—	—	—	—	—	—	3464 352
	W, 4 D. and Sta. Wgn.	71		—	—	—	—	2	—	—	—	—	—	—	3464 358
	D			—	—	—	—	—	—	2	—	—	—	—	2962 772
	C	70	8	—	—	—	—	—	—	—	1	1	1	—	2962 872
	CUSHION, GUARD, REAR, V	70		2	—	—	—	—	—	—	—	—	—	—	2533 342
	V, Fast-Back, 4D	71		2	—	—	—	—	—	—	—	—	—	—	2533 342
	V, 2D.H.T.	71		2	—	—	—	—	—	—	—	—	—	—	2962 342
	L	70		—	—	2	—	—	—	—	—	—	—	—	2962 342
	L, 2 D.H.T., 4D.	71		—	—	2	—	—	—	—	—	—	—	—	2962 342
	L, Fast-Back	71		—	—	2	—	—	—	—	—	—	—	—	2533 342
	B	71		—	2	—	—	—	—	—	—	—	—	—	3464 072
	J			—	2	—	—	—	—	—	—	—	—	—	2962 360
	R, Except Sta. Wgn.	70		—	—	—	2	—	—	—	—	—	—	—	2931 150
	W, Except Sta. Wgn., and Charger	70		—	—	—	—	2	—	—	—	—	—	—	2962 560
	W, 2 D.H.T., Fast-Back	71		—	—	—	—	2	—	—	—	—	—	—	3464 440
	W, 4 D.	71		—	—	—	—	2	—	—	—	—	—	—	3464 414
	P-E, P-L, P-M, Except Sta. Wgn.	71		—	—	—	—	—	1	—	—	—	—	—	3464 564-5
	D, Except Sta. Wgn.			—	—	—	—	—	—	2	—	—	—	—	2962 772
	C, Except Sta. Wgn.	70	8	—	—	—	—	—	—	—	2	2	2	—	2962 898
	PAD, Bumper Impact FRONT, Except Charger	70		—	—	—	—	2	—	—	—	—	—	—	2962 530
	Charger	70		—	—	—	—	2	—	—	—	—	—	—	2962 615
	R, 2 D.H.T.	71		—	—	—	2	—	—	—	—	—	—	—	3464 124
	W, 2 D.H.T., Fast-Back	71		—	—	—	—	1	—	—	—	—	—	—	3464 336-7
	W, 4 D. and Sta. Wgn.	71		—	—	—	—	1	—	—	—	—	—	—	3464 312-3
	PAD, Bumper Impact REAR, Sta. Wgn.			—	—	—	2	2	—	—	—	—	—	—	2856 588
	Except Sta. Wgn.			—	—	—	—	—	2	2	2	2	2	2	2931 526
	Sta. Wgn.			—	—	—	—	—	2	2	—	—	2	—	2856 588
	SEALING-WASHER, Impact Pad			—	—	—	—	—	2	2	—	—	—	—	2931 499
	C, Except Sta. Wgn.	71	8	—	—	—	—	—	—	—	2	2	2	—	2931 499
	Y, All	71	8	—	—	—	—	—	—	—	—	—	—	2	2931 499
13-68-20	ADAPTER, GUARD REAR, J			—	2	—	—	—	—	—	—	—	—	—	2962 362
	Except Sta. Wgn.	70		—	—	—	2	—	—	—	—	—	—	—	2962 484
★	Except Sta. Wgn.	70	8	—	—	—	—	—	—	—	1	1	1	—	2962 902-3
13-68-25	PLATE, Reinforcement, Rear Bumper Alignment Bracket To Sheetmetal, Except Sta. Wgn., Ablong Type w/Slot	70		—	—	—	—	—	2	2	—	—	—	—	2856 868
	Round Type w/Round Hole	70		—	—	—	—	—	2	—	—	—	—	—	2962 717
	Round Type w/Round Hole			—	—	—	—	—	2	2	—	—	—	—	2962 702
	Rear Bumper Bracket To Impact Pad, Sta. Wgn.,			—	—	—	—	—	2	2	—	—	2	—	2856 868
	Rear Bumper Impact Bracket To Sheetmetal Except Sta. Wgn.			—	—	—	—	—	2	2	—	—	—	—	2856 868
	Alignment Pad To Rear Bumper Bracket, Except Sta. Wgn., Ablong Type w/Slot Hole		8	—	—	—	—	—	—	—	2	2	2	—	2856 868
	Round Type w/Round Hole		8	—	—	—	—	—	—	—	2	2	2	—	2962 702
	Rear Bumper Impact Pad To Bumper Bracket, Except Sta. Wgn.		8	—	—	—	—	—	—	—	2	2	2	—	2856 868
	Impact Pad to Rear Bumper Bracket, Sta. Wgn.	71		—	—	—	2	2	—	—	—	—	—	—	2962 702
	Impact Pad To Rear Bumper		8	—	—	—	—	—	—	—	—	—	—	2	2856 868

CODE	PART NAME	ENG. TYPE OR CU.IN.		V	B J	L	R	W	P	D	C	C	C	Y	PART NUMBER
				1-2	1-2	1-2	1-2	1-2	1-2	1-2	1	2	3	1	
13-68-0	**BUMPER GUARDS Cont'd.**														
13-68-43	SUPPORT, Guard, Rear, B			—	2	—	—	—	—	—	—	—	—	—	2962 318
	J			—	2	—	—	—	—	—	—	—	—	—	2962 361
	REINFORCEMENT, Guard, REAR, B			—	2	—	—	—	—	—	—	—	—	—	2962 312
	FRONT	70	8	—	—	—	—	—	—	—	1	1	1	—	2931 353
13-72-0	**BUMPER JACK**														
13-72-1	JACK, w/HOOK, UNIVERSAL TYPE, Except Charger			1	1	1	1	1	1	1	1	1	1	1	= 3549 587
13-72-2	WRENCH or HANDLE	70		1	1	1	1	1	1	1	1	1	1	1	2201 009
	All	71		1	1	1	1	1	1	1	1	1	1	1	3464 978
13-72-3	HOOK, V	70		1	—	—	—	—	—	—	—	—	—	—	2533 424
	All	71		1	—	—	—	—	—	—	—	—	—	—	2931 157
	L	70		—	—	1	—	—	—	—	—	—	—	—	2931 100
	L, 2 D.H.T., 4 D.	71		—	—	1	—	—	—	—	—	—	—	—	2931 100
	L, Fast-Back	71		—	—	1	—	—	—	—	—	—	—	—	2931 157
	B			—	1	—	—	—	—	—	—	—	—	—	2931 100
	J			—	1	—	—	—	—	—	—	—	—	—	2931 102
	R	70		—	—	—	1	—	—	—	—	—	—	—	2931 103
	R, 2 D.H.T.	71		—	—	—	1	—	—	—	—	—	—	—	= 3464 960
	R, 4 D. and Sta. Wgn.	71		—	—	—	1	—	—	—	—	—	—	—	2962 689
	W, Except Charger	70		—	—	—	—	1	—	—	—	—	—	—	2931 104
	W, 2 D.H.T., Fast-Back	71		—	—	—	—	1	—	—	—	—	—	—	2962 690
	W, 4 D.	71		—	—	—	—	1	—	—	—	—	—	—	2962 691
	W, Sta. Wgn.	71		—	—	—	—	1	—	—	—	—	—	—	2962 689
	P, Except Sta. Wgn.	70		—	—	—	—	—	1	—	—	—	—	—	2931 159
	P, Sta. Wgn.	70		—	—	—	—	—	1	—	—	—	—	—	2931 160
	P, Except Sta. Wgn.	71		—	—	—	—	—	1	—	—	—	—	—	2962 996
	P, Sta. Wgn.	71		—	—	—	—	—	1	—	—	—	—	—	2962 492
	D, Sta. Wgn.	70		—	—	—	—	—	—	1	—	—	—	—	2931 158
	D, Except Sta. Wgn.			—	—	—	—	—	—	1	—	—	—	—	2962 997
	D, Sta. Wgn.	71		—	—	—	—	—	—	1	—	—	—	—	2962 698
	C, Except Sta. Wgn.	70	8	—	—	—	—	—	—	—	1	1	1	—	2931 160
	C, Sta. Wgn.	70	8	—	—	—	—	—	—	—	—	—	1	—	2931 162
	C, All	71	8	—	—	—	—	—	—	—	1	1	1	—	2962 492
	Y, All		8	—	—	—	—	—	—	—	—	—	—	1	2856 141
	HOOK, w/PAD, use w/Body Colored Bumper	71		—	—	—	1	—	—	—	—	—	—	—	2962 490
		71		—	—	—	—	1	—	—	—	—	—	—	2962 491
13-72-4	BAR and BASE PACKAGE, Except Charger	70		1	1	1	1	1	—	—	—	—	—	1	2808 641
	All	71		1	1	1	1	1	—	—	—	—	—	1	2808 641
	Except Sta. Wgn.			—	—	—	—	—	1	1	1	1	1	—	3419 940
	Sta. Wgn.			—	—	—	—	—	1	1	—	—	1	—	2808 641
	Charger, w/Hook	70		—	—	—	—	1	—	—	—	—	—	—	2932 519
13-72-6	BOLT, Jack Bar Retainer, Except Sta. Wgn.	70		—	—	—	1	1	—	—	—	—	—	—	2842 122
				—	—	—	—	—	1	1	1	1	1	—	2840 328
13-72-7	SPRING, Jack Stowage			1	1	1	—	—	—	—	—	—	—	—	2602 722
	Charger	70		—	—	—	—	1	—	—	—	—	—	—	2602 722
	Sta. Wgn.			—	—	—	—	—	1	1	—	—	1	—	2860 963
	Y, All			—	—	—	—	—	—	—	—	—	—	1	2963 999
13-72-8	RETAINER, Jack Bar, Except Sta. Wgn.	70		—	—	—	1	1	—	—	—	—	—	—	2842 120
	All			—	—	—	—	—	1	1	1	1	1	—	2839 018
13-72-10	CLAMP, Center Floor Pan Hold-Down Anchor Rod, Sta. Wgn.			—	—	—	1	1	—	—	—	—	—	—	2255 015
	BOLT	70		—	—	—	1	1	—	—	—	—	—	—	2861 924
13-72-12	TURN BUTTON, Jack Stowage Door		8	—	—	—	—	—	—	—	—	—	—	2	2656 004
	BOLT		8	—	—	—	—	—	—	—	—	—	—	4	9421 526

CARLINES: J - Challenger, B - Barracuda, V - Valiant, L - Dart, R - Belvedere - Satellite, W - Coronet - Charger, P - Plymouth, D - Dodge, C - Chrysler, Y - Imperial

AR Indicates use as required.

\# Indicates parts not listed in any previous parts book.

Numerals in parentheses ( ) refer to notes.

★ Indicates change or addition.

Printed in U.S.A. January 1972

GROUP 14 - FUEL

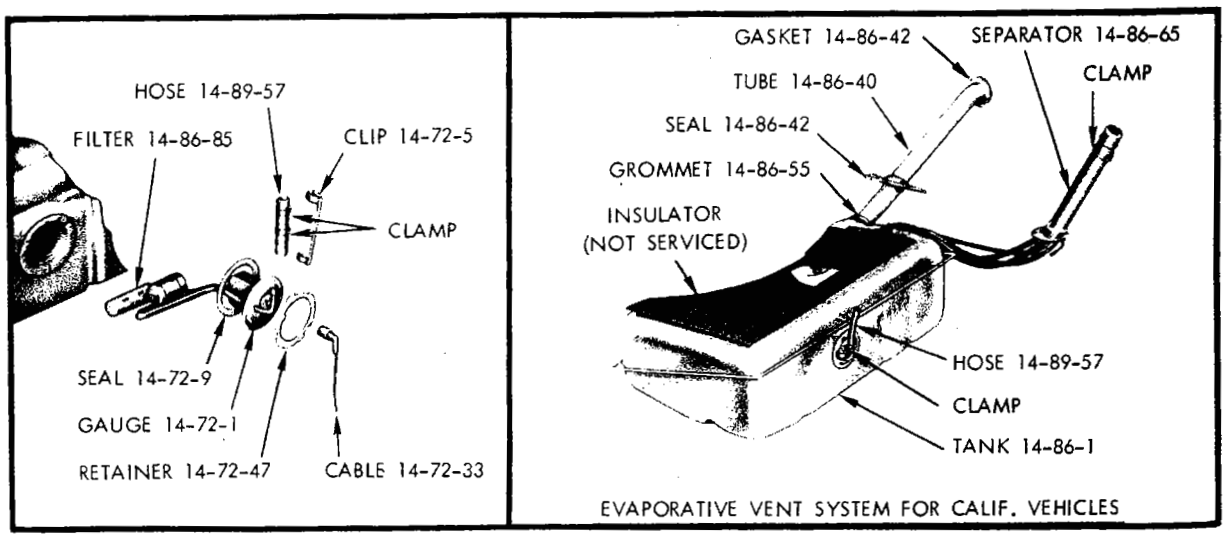

PARTS INDICATED BY NAME ONLY - ORDER BY DESCRIPTION

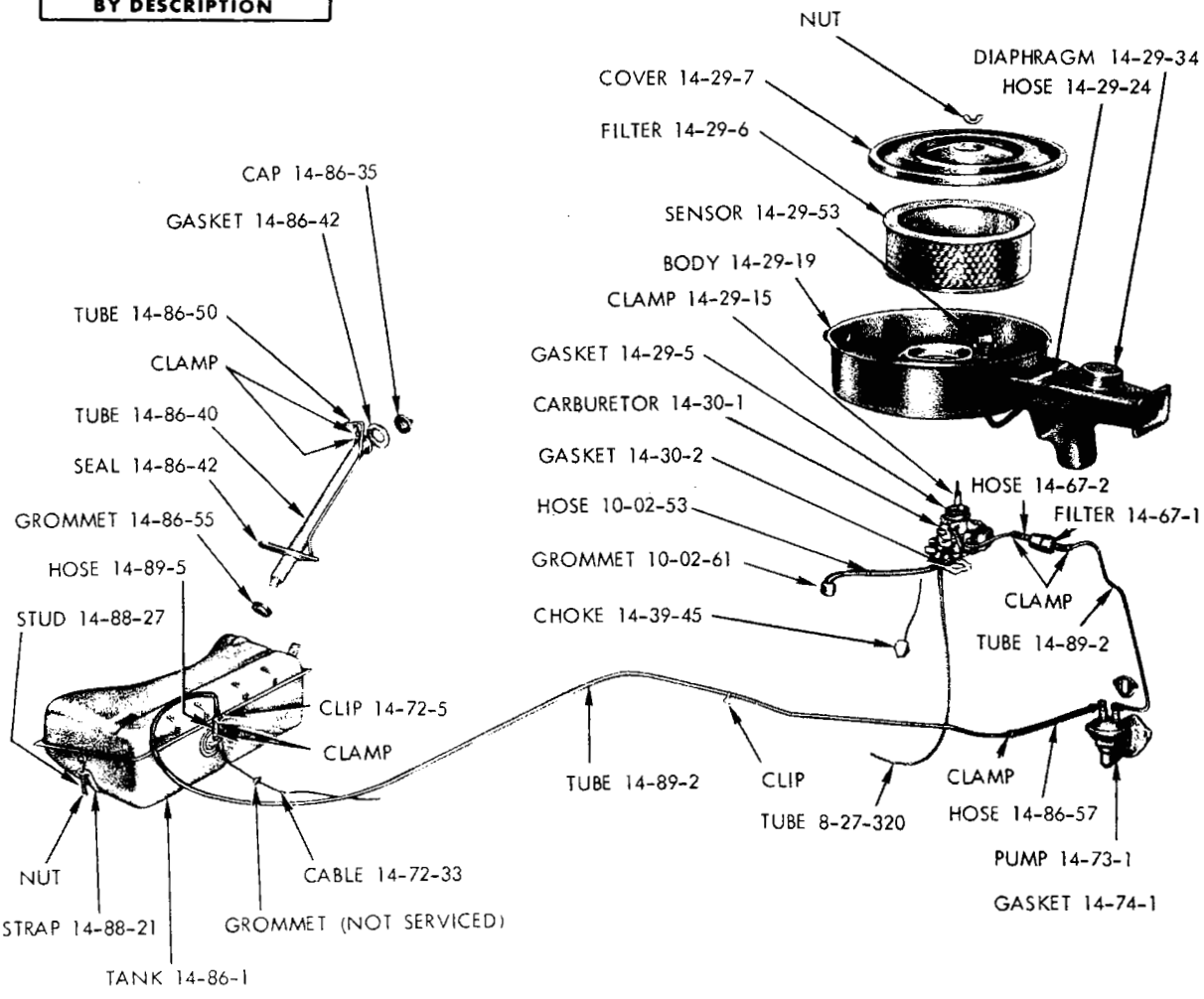

19a3341A

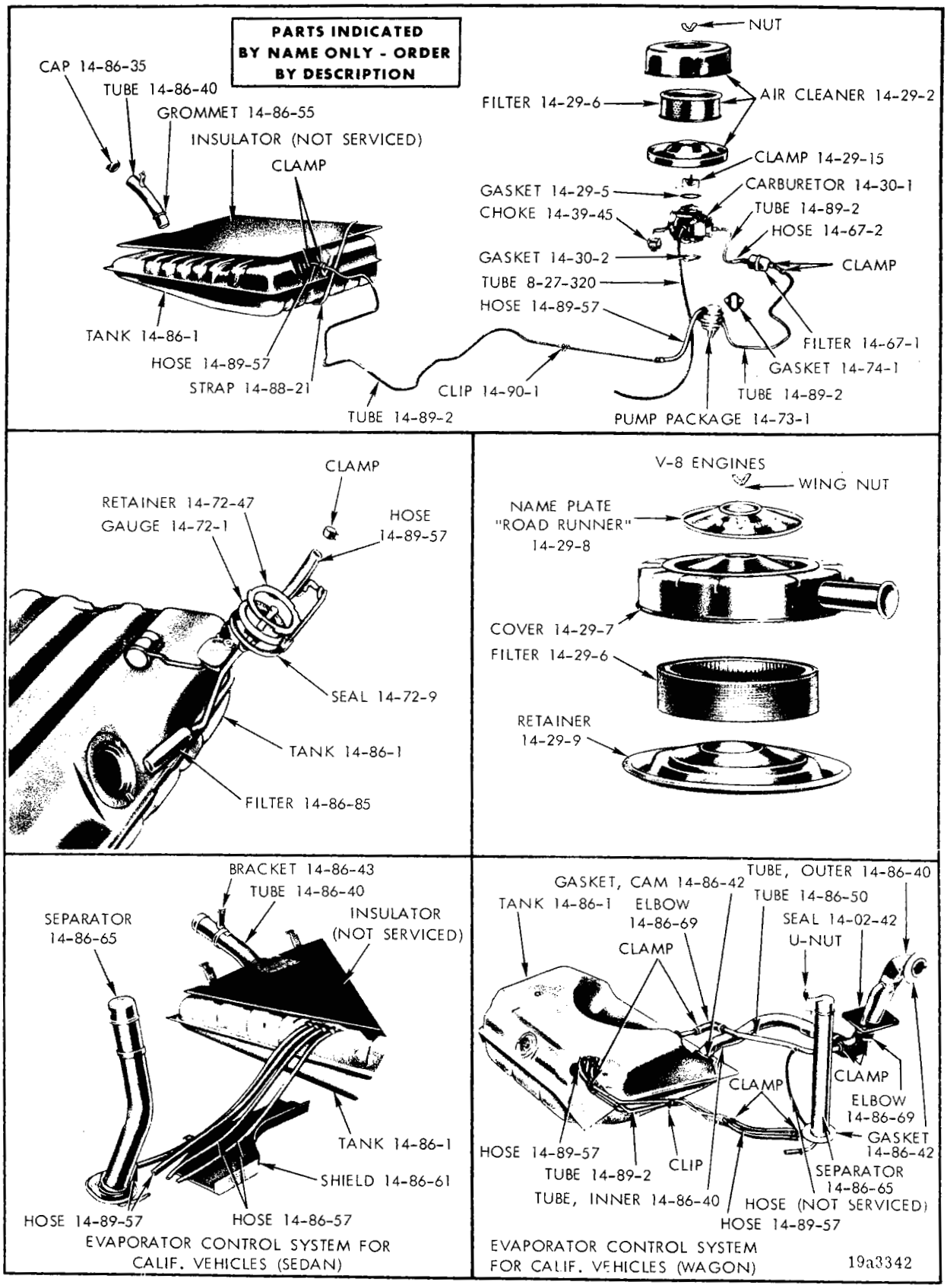

FUEL SYSTEM - BELVEDERE AND CORONET

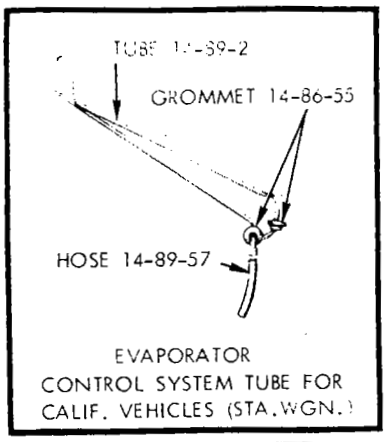

EVAPORATOR CONTROL SYSTEM TUBE FOR CALIF. VEHICLES (STA.WGN.)

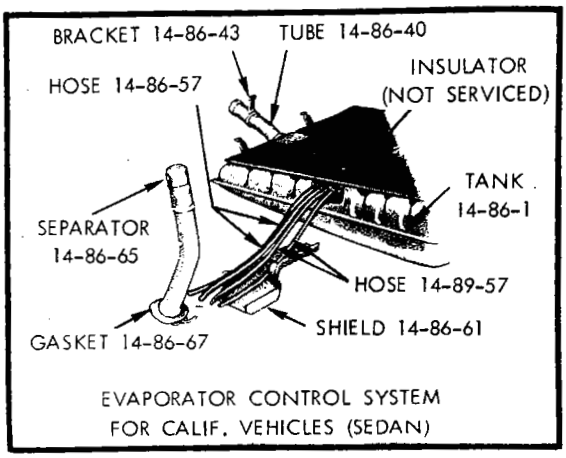

EVAPORATOR CONTROL SYSTEM FOR CALIF. VEHICLES (SEDAN)

PARTS INDICATED BY NAME ONLY - ORDER BY DESCRIPTION

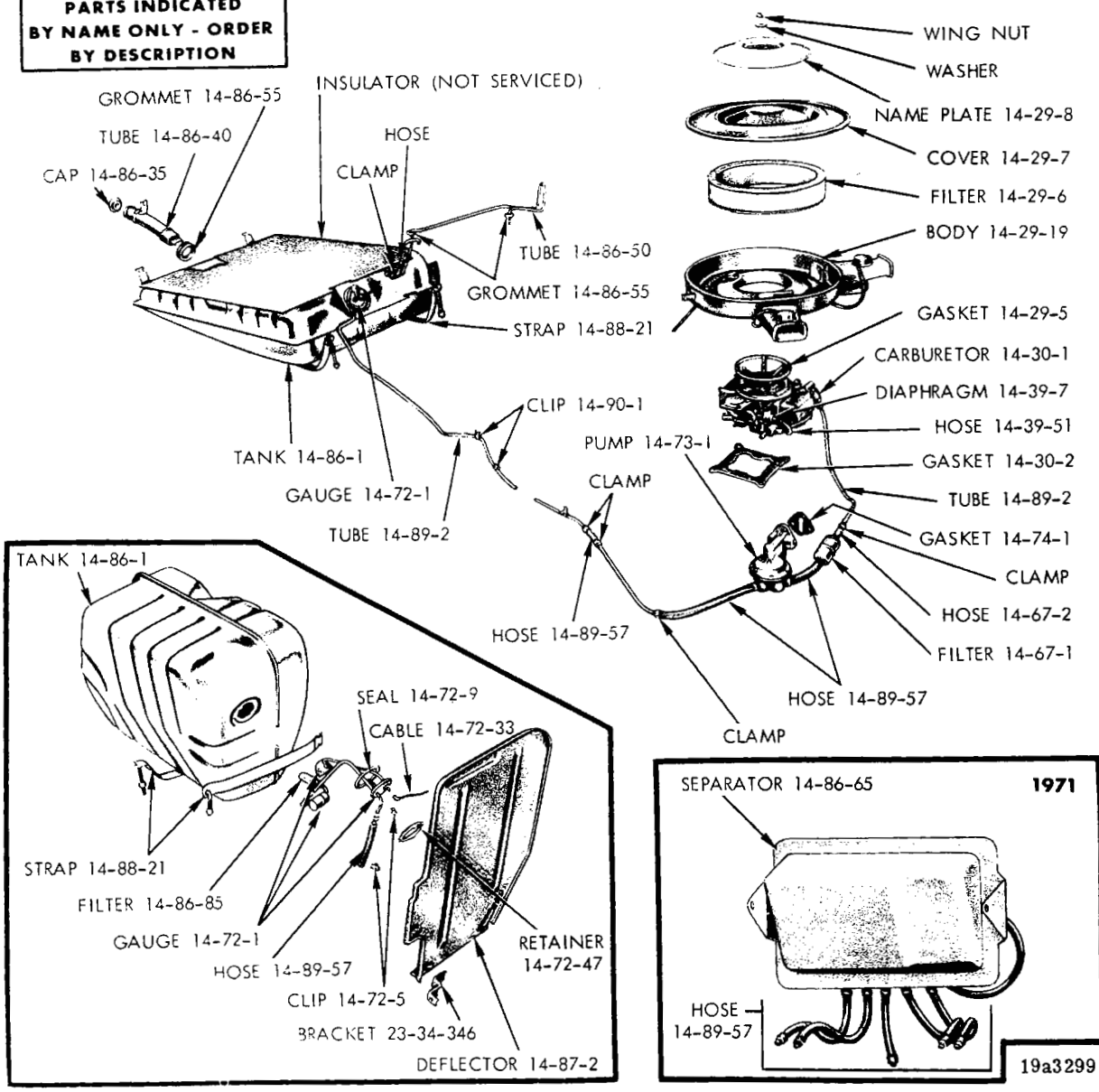

Printed in U.S.A. December 1971.

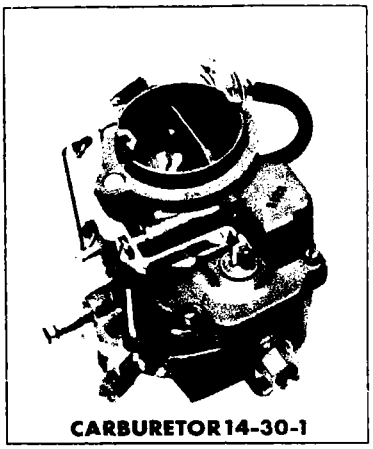
CARBURETOR 14-30-1

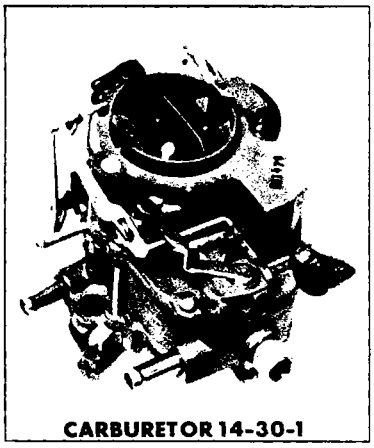
CARBURETOR 14-30-1

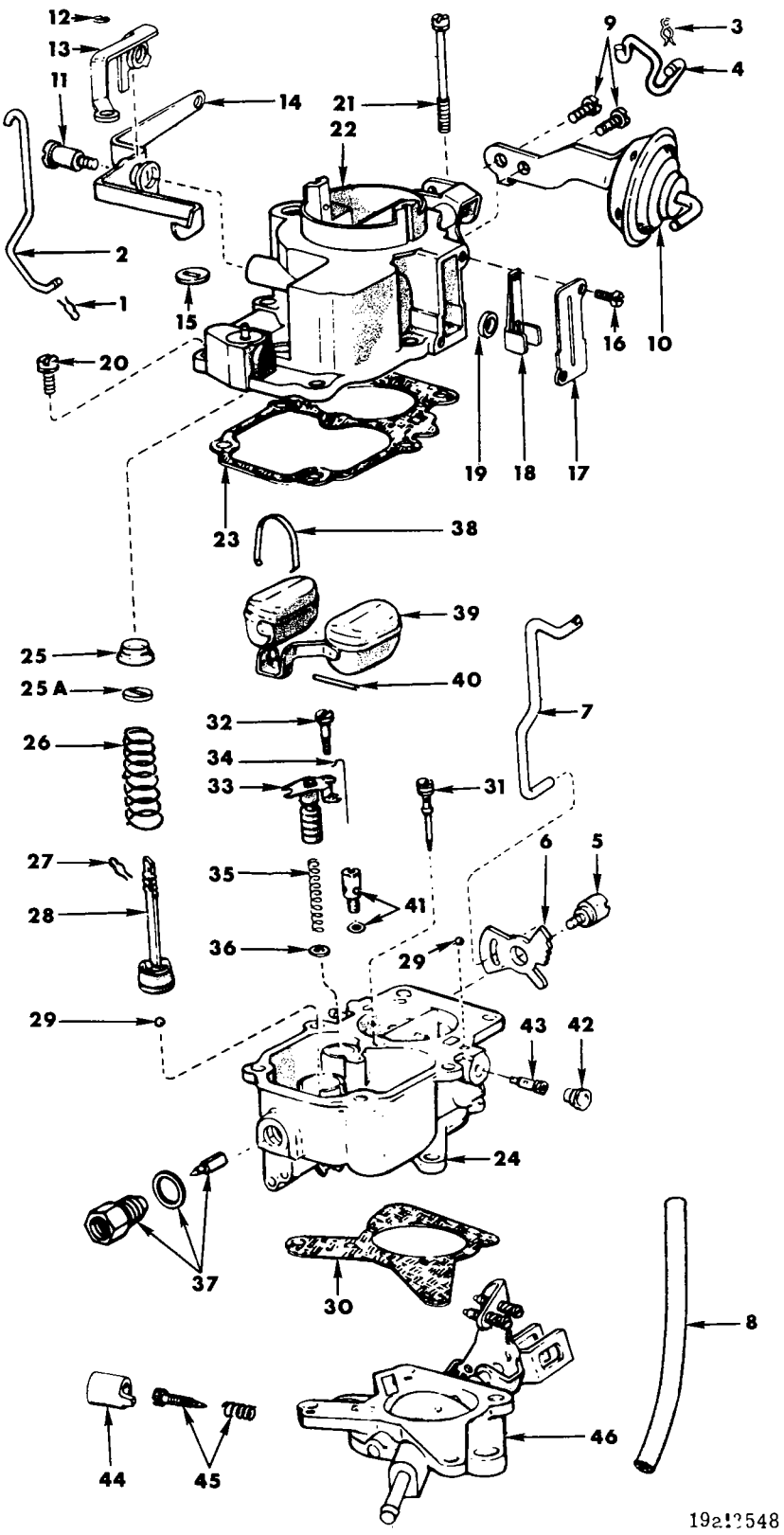

TYPICAL 1 BARREL CARBURETOR - CARTER (MODEL SERIES BBS)

TYPICAL 1 BARREL CARBURETOR - CARTER
(MODEL SERIES BBS)

Ref. No.	Name	Part Type Code	Ref. No.	Name	Part Type Code
1	Spring (Large)	14-38-20	25	Bushing	14-41-12
2	Rod	14-38-28	25A	Washer	14-54-42
3	Spring(Small)	14-39-57	26	Spring	14-41-11
4	Rod	14-39-28	27	Spring (Small)	14-41-11
5	Screw	14-45-25	28	Plunger Assembly	14-41-3
6	Cam	14-45-4	29	Ball (2)	14-37-29
7	Rod	14-39-28	30	Gasket	14-30-7
8	Hose	14-39-51	31	Jet	14-35-1
9	Screw (2)	14-39-9	32	Screw	14-54-148
10	Diaphragm and Bracket	14-39-7	33	Plate	14-43-4
11	Screw	14-54-47	34	Rod	14-43-5
12	Retainer	14-46-4	35	Spring	14-43-10
13	Lever	14-46-14	36	Gasket	
14	Lever	14-41-22	37	Needle and Seat Assembly	14-30-8
15	Valve	14-46-1	38	Retainer	14-40-5
16	Screw (2)	14-45-25	39	Float	14-40-1
17	Cover	14-45-15	40	Pin	14-40-4
18	Valve	14-45-17	41	Gasket	14-30-7
19	Gasket	14-45-19	42	Plug	14-37-15
20	Screw (2) Short	14-54-72	43	Jet	14-35-3
21	Screw (4) Long	14-54-72	44	Screw and Spring	14-36-1
22	Horn, Air	14-47-1	45	Cap	14-45-12
23	Gasket	14-47-13	46	Flange Assembly	14-33-1
24	Body	14-30-1			

PARTS INDICATED BY NAME ONLY - ORDER BY DESCRIPTION

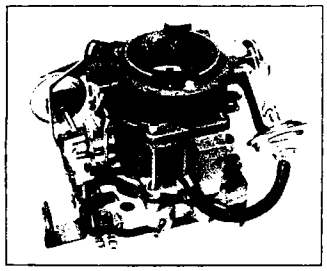

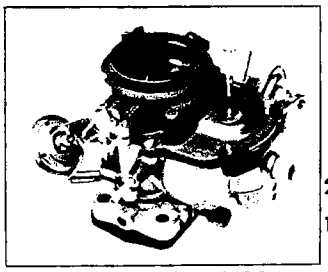

CARBURETOR 14-30-1

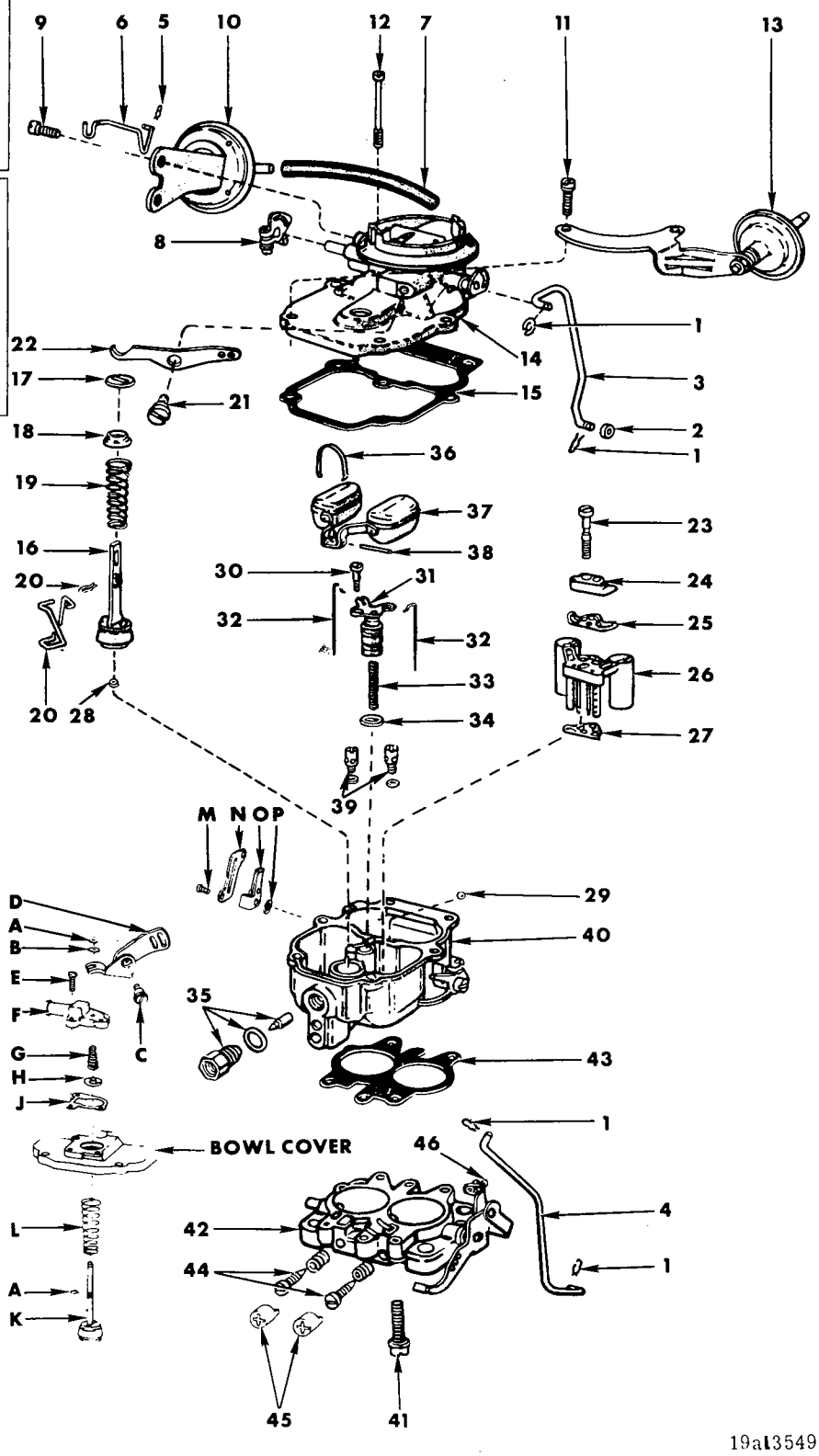

19a13549

TYPICAL 2 BARREL CARBURETOR - CARTER (MODEL SERIES BBD)

TYPICAL 2 BARREL CARBURETOR - CARTER
(MODEL SERIES BBD)

Ref. No.	Name	Part Type Code
1	Spring	14-39-56
2	Spacer	14-39-31
3	Rod	14-39-28
4	Rod	14-38-28
5	Spring (Small)	14-39-56
6	Link	14-41-8
7	Hose	14-39-51
8	Lever	14-39-10
9	Screw	
10	Diaphragm Assembly	14-39-7
11	Screw (Short)	14-54-72
12	Screw (Long)	14-54-72
13	Pot and Bracket Assembly, Dash	
14	Horn	14-47-1
15	Gasket	14-47-13
16	Plunger Assembly	14-41-3
17	Washer	14-54-42
18	Bushing	14-41-12
19	Spring	14-41-11
20	Spring (Plunger Rod)	14-39-57
21	Screw	14-54-47
22	Arm	14-41-9
23	Screw	14-54-152
24	Cover	14-35-42
25	Gasket	
26	Cluster Assembly	14-35-41
27	Gasket	
28	Ball	14-37-29
29	Ball	14-37-30
30	Screw	14-54-148
31	Plate	14-43-4
32	Rod	14-43-5
33	Spring	14-43-10
34	Gasket	
35	Needle and Seat Assembly	14-30-8
36	Retainer	14-40-5
37	Float and Lever Assembly	14-40-1
38	Pin	14-40-4
39	Jets	14-35-1
40	Casting	14-35-3
41	Screw	14-54-72
42	Flange	14-33-1
43	Gasket	
44	Screw and Spring	14-36-1
45	Screw	14-45-25
46	Retainer	14-39-27
A	Retainer (2)	
B	Washer	
C	Screw	14-54-47
D	Arm	14-41-9
E	Screw	14-54-148
F	Plate	
G	Spring	14-36-50
H	Valve	14-46-1
J	Gasket	
K	Plunger	14-41-03
L	Spring	14-36-15
M	Screw (2)	
N	Cover	14-45-15
O	Valve	14-45-17
P	Gasket	14-45-19

PARTS INDICATED BY NAME ONLY - ORDER BY DESCRIPTION

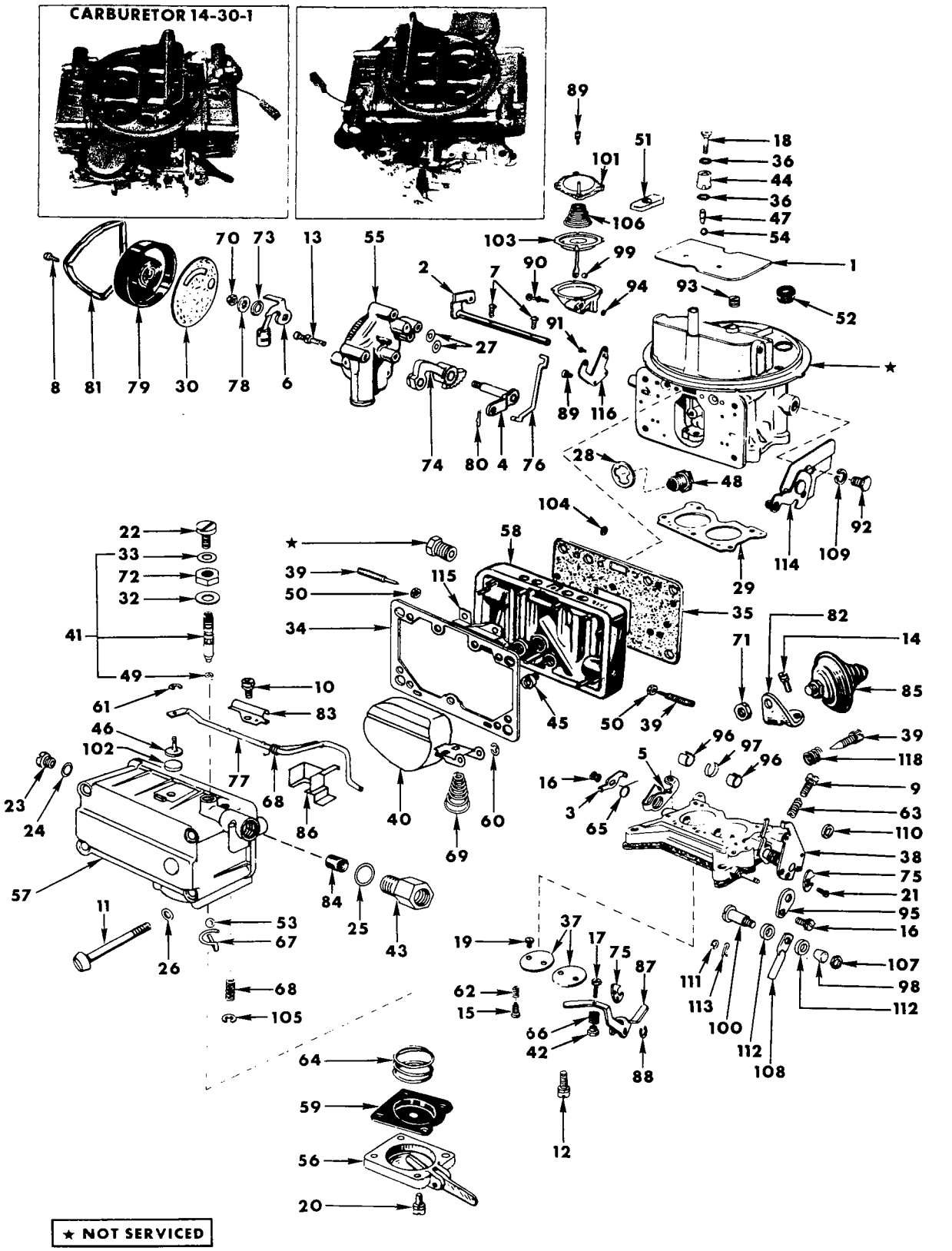

TYPICAL 2 BARREL CARBURETOR - HOLLEY (MODEL SERIES 2300)

TYPICAL 2 BARREL CARBURETOR - HOLLEY (MODEL SERIES 2300)

Ref. No.	
1	Choke Plate
2	Choke Shaft Assembly
3	Fast Idle Pick-Up Lever
4	Choke Hsg. Shaft and Lev. Assy.
5	Fast Idle Cam Lever
6	Choke Therm. Lev., Link & Piston Assembly
7	Choke Plate Screw
8	Therm. Hsg. Clamp Screw
9	Throttle Stop Screw
10	Air Vent Rod Clamp Scr. & L.W.
11	Fuel Bowl to Main Body Screw
12	Throttle Body Scr. & L.W.
13	Choke Hsg. Scr. & L.W.
14	Dashpot Brkt. Scr. & L.W.
15	Fast Idle Cam Lever Screw
16	Fast Idle Cam Lev. & Throt. Lev. Screw & L.W.
17	Pump Oper. Lev. Adj. Screw
18	Pump Discharge Nozzle Screw
19	Throttle Plate Screw
20	Fuel Pump Cov. Assy. Scr. & L.W.
21	Pump Cam Lock Scr. & L.W.
22	Fuel Valve Seat Lock Screw
23	Fuel Level Check Plug
24	Fuel Level Check Plug Gasket
25	Fuel Inlet Fitting Gasket
26	Fuel Bowl Screw Gasket
27	Choke Housing Gasket
28	Power Valve Body Gasket
29	Throttle Body Gasket
30	Choke Therm. Housing Gasket
31	Flange Gasket
32	Fuel Valve Seat Adj. Nut Gasket
33	Fuel Valve Seat Lock Scr. Gasket
34	Fuel Bowl Gasket
35	Metering Body Gasket
36	Pump Discharge Nozzle Gasket
37	Throttle Plate
38	Throt. Body and Shaft Assy.
39	Idle Adjusting Needle
40	Float and Hinge Assy.
41	Fuel Inlet Valve and Seat Assy.
42	Pump Oper. Lev. Adj. Scr. Fitting
43	Fuel Inlet Fitting
44	Pump Discharge Nozzle
45	Main Jet
46	Air Vent Valve
47	Pump Discharge Needle Valve or Check Ball Weight
48	Power Valve Assembly
49	Fuel Valve Seat O'Ring Seat or Gasket
50	Idle Needle Seal
51	Choke Rod Seal
52	Choke Cold Air Tube Grommet
53	Pump Inlet Check Ball
54	Pump Discharge Check Ball
55	Choke Hsg. and Plugs Assy.
56	Fuel Pump Cover Assy.
57	Fuel Bowl and Plugs Assy.
58	Main Metering Body and Plugs Assy.
59	Pump Diaphragm Assembly
60	Float Spring Retainer
61	Air Vent Retainer
62	Fast Idle Cam Lev. Scr. Spring
63	Throttle Stop Screw Spring
64	Pump Diaphragm Return Spring
65	Fast Idle Cam Lev. Spring
66	Pump Oper. Lev. Adj. Spring
67	Pump Inlet Check Ball Retainer
68	Air Vent Rod Spring
69	Float Spring
70	Choke Thermostat Shaft Nut
71	Dash Pot Screw Nut.
72	Fuel Valve Seat Adj. Nut
73	Choke Therm. Lever Spacer
74	Fast Idle Cam Assembly
75	Pump Cam
76	Choke Rod
77	Air Vent Rod
78	Choke Therm. Shaft Nut L.W.
79	Thermostat Housing Assembly
80	Choke Rod Retainer
81	Thermostat Housing Clamp
82	Dashpot Bracket
83	Air Vent Rod Clamp
84	Filter Screen Assembly
85	Dashpot Assembly
86	Baffle Plate
87	Pump Operating Lever
88	Pump Operating Lever Retainer
89	Adapter Mounting & Diaphragm Cover Assy. Screw
90	Throt. Diaphragm Hsg. Scr.
91	Adapter Passage Screw
92	Choke Bracket Screw
93	Air Adapter Hole Plug
94	Throt. Diaphragm Hsg. Gasket
95	Throttle Lever
96	Throttle Shaft Bearing
97	Throttle Shaft Bearing (Center)
98	Throttle Connector Pin Bushing
99	Diaphragm Check Ball
100	Throttle Connector Pin
101	Diaphragm Housing Cover
102	Air Vent Cap
103	Diaphragm Housing Assembly
104	Diaphragm Link Retainer
105	Air Vent Rod Spg. Retainer
106	Diaphragm Spring
107	Throttle Link Connector Pin Nut
108	Throttle Connector Bar
109	Choke Brkt. Scr. Lockwasher
110	Throt. Link Connector Pin Washer
111	Throt. Connector Pin Washer
112	Throttle Connector Pin Spacer
113	Throttle Connector Pin Retainer
114	Choke Control Lever Bracket
115	Metering Body Vent Baffle
116	Throt. Diaphragm Adapter
117	Diaphragm Housing
118	Idle Adj. Needle Spring
--	Vent Tube (Not Shown)
--	Heat Tube Nut (Not Shown)
--	Heat Tube Ferrule (Not Shown)
--	Fuel Tube Hose Clamp (Not Shown)
--	Retainer (Not Shown)
--	Air Cleaner Stud (Long) (Not Shown)
--	Air Cleaner Stud (Short) (Not Shown)
--	Choke Heat Tube (Not Shown)
--	Fuel Line Hose (Not Shown)
--	Fresh Air Hose (Not Shown)

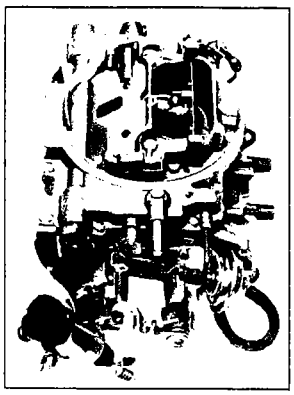

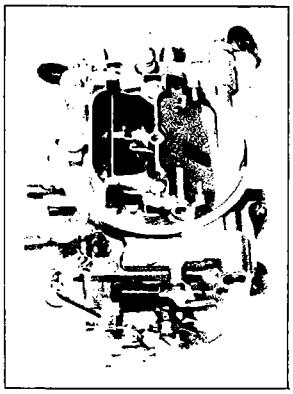

CARBURETOR 14-30-1

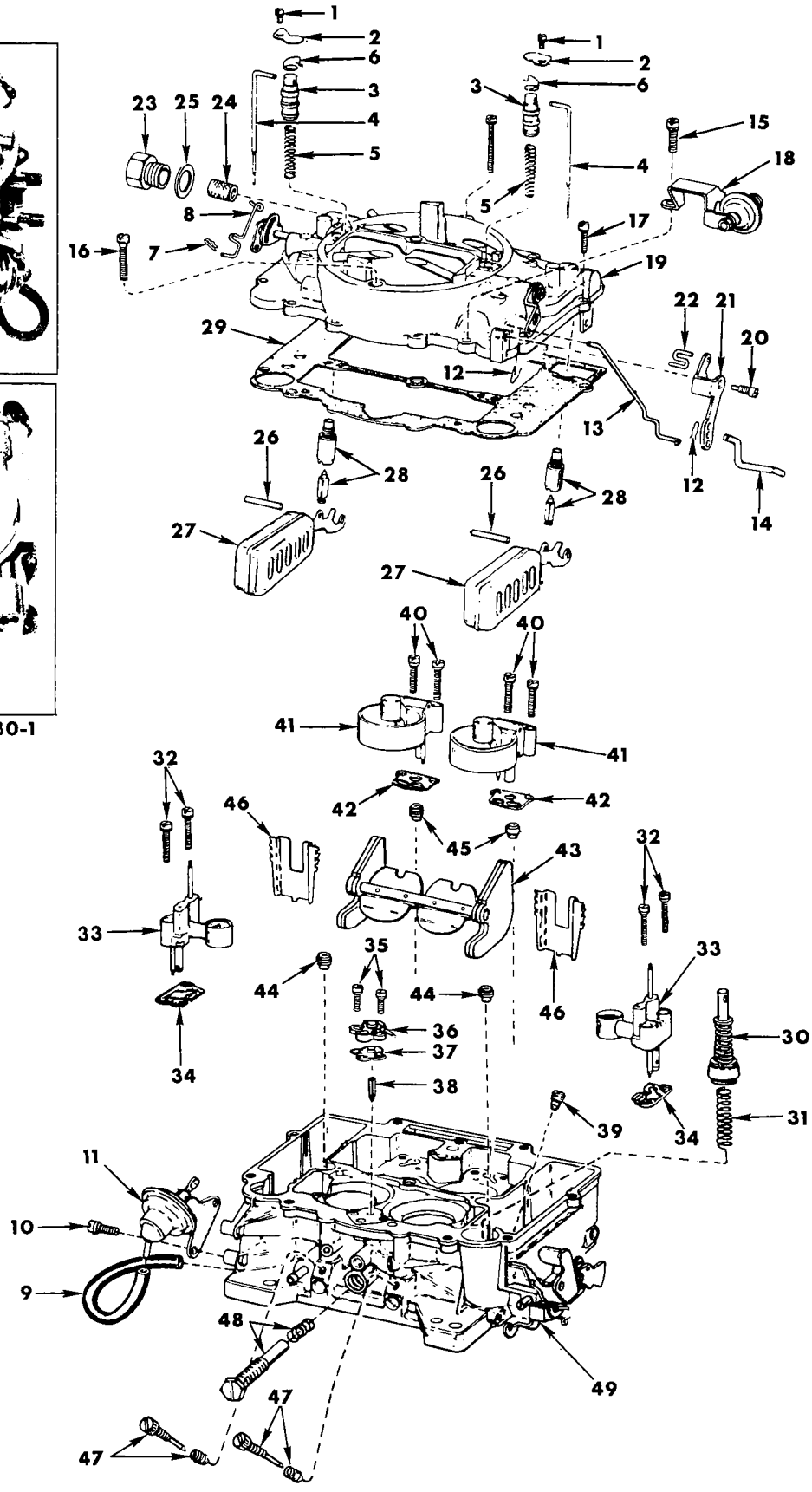

19a13550A

TYPICAL 4 BARREL CARBURETOR - CARTER (MODEL SERIES AFB)

TYPICAL 4 BARREL CARBURETOR - CARTER
(MODEL SERIES AFB)

Ref. No.	Name	Part Type Code
1	Screw (2)	14-54-148
2	Plate	14-43-4
3	Piston	14-43-3
4	Rods	14-43-5
5	Springs	14-43-10
6	Spring	14-43-10
7	Spring (Small)	14-41-11
8	Rod	14-39-28
9	Hose	14-39-51
10	Screws (2)	14-54-28
11	Diaphragm and Bracket Assembly	14-39-7
12	Spring (4)	14-39-57
13	Rod	14-39-28
14	Rod	14-38-28
15	Screw	14-54-34
16	Screw	14-54-34
17	Screw (8)	14-54-34
18	Dash Pot and Bracket Assembly	
19	Horn Assembly	14-47-1
20	Screw	14-54-47
21	Arm	14-41-9
22	Link	14-41-8
23	Fitting	14-30-30
24	Strainer	14-30-27
25	Gasket	
26	Pin (2)	14-40-4
27	Float and Lever Assembly (2)	14-40-1
28	Needle and Seat Assembly (2)	14-30-8
29	Gasket	14-47-13
30	Rod and Spring Assembly	14-41-3
31	Spring	14-36-15
32	Screws (4)	14-54-152
33	Clusters	14-35-41
34	Gasket (2)	
35	Screw	14-35-10
36	Housing	14-35-3
37	Gasket	
38	Needle	14-35-6
39	Check	
40	Screw (4)	14-54-152
41	Cluster (2)	14-54-152
42	Gasket (2)	
43	Valves and Weights	
44	Jets (2)	14-35-1
45	Jets (2)	14-35-1
46	Plates (2)	14-39-50
47	Screw and Spring (2)	14-36-1
48	Screw	14-54-15
49	Screw	14-45-25

PARTS INDICATED BY NAME ONLY - ORDER BY DESCRIPTION

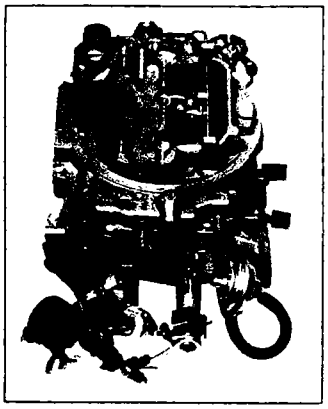

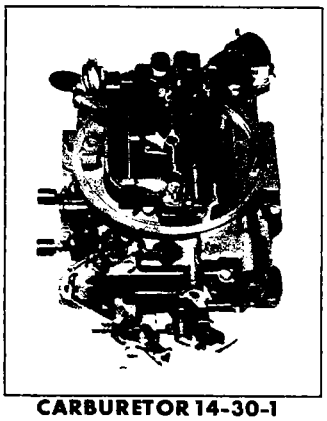

CARBURETOR 14-30-1

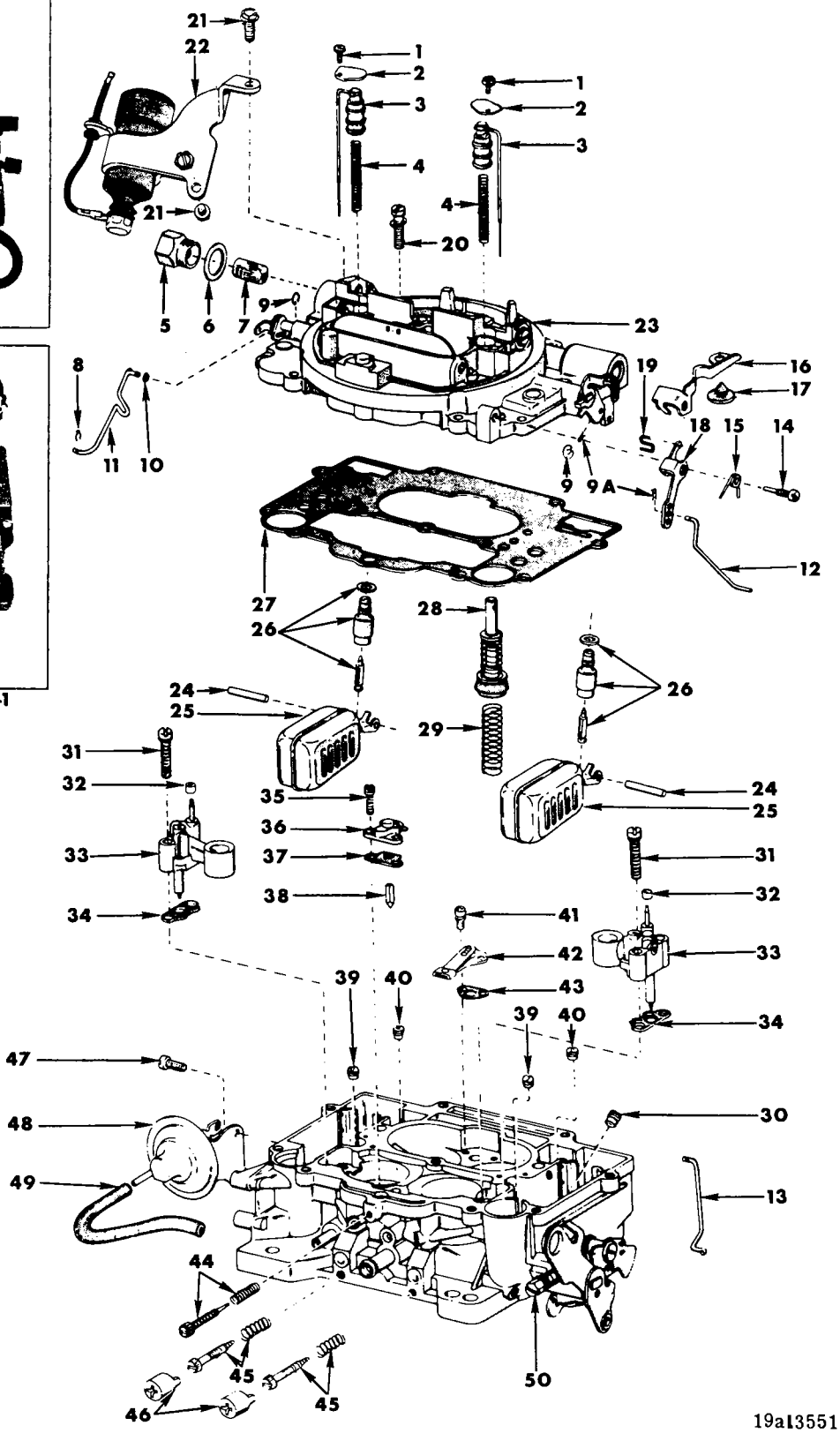

TYPICAL 4 BARREL CARBURETOR - CARTER (MODEL SERIES AVS)

TYPICAL 4 BARREL CARBURETOR - CARTER
(MODEL SERIES AVS)

Ref. No.	Name	Part Type Code
1	Screw (2)	14-54-148
2	Plate (2)	14-43-4
3	Piston and Rod Assembly (2)	14-43-5
4	Spring (2)	14-35-38
5	Fitting	14-30-30
6	Gasket	14-30-29
7	Screen	14-30-27
8	Spring (Small)	14-41-11
9	Retainer	14-41-23
9A	Spring (Large)	14-39-57
10	Washer	
11	Link	14-39-8
12	Rod	14-38-28
13	Rod	14-45-5
14	Screw	14-54-47
15	Spring	14-36-50
16	Arm	14-40-23
17	Valve	14-46-1
18	Arm	14-41-9
19	Link	14-41-7
20	Screw (8)	14-54-72
21	Screw	14-54-140
22	Solenoid and Bracket (2)	14-38-24
23	Horn Assembly	14-47-1
24	Pin (2)	14-40-4
25	Float (2)	14-40-1
26	Needle and Seat Assembly (2)	14-30-8
27	Gasket	14-47-13
28	Plunger	14-41-3
29	Spring	14-36-15
30	Ball	14-37-29
31	Screws (4)	14-54-152
32	Venturis (2)	14-30-3
33	Seal (2)	14-34-63
34	Gaskets (2)	
35	Screws (2)	14-35-10
36	Housing	14-35-3
37	Gasket	
38	Needle	14-35-6
39	Jets (Large Hole) (2)	14-35-1
40	Jets (Small Hole) (2)	14-35-1
41	Screw (2)	
42	Valve	14-45-17
43	Gasket	14-45-19
44	Screw and Spring (1968 Early 1969)	14-36-1
45	Screw and Spring (2)	14-36-1
46	Cap (2)	14-45-12
47	Screws (2)	14-39-9
48	Diaphragm and Bracket	14-39-7
49	Hose	14-39-51
50	Screw	14-45-25

PARTS INDICATED BY NAME ONLY - ORDER BY DESCRIPTION

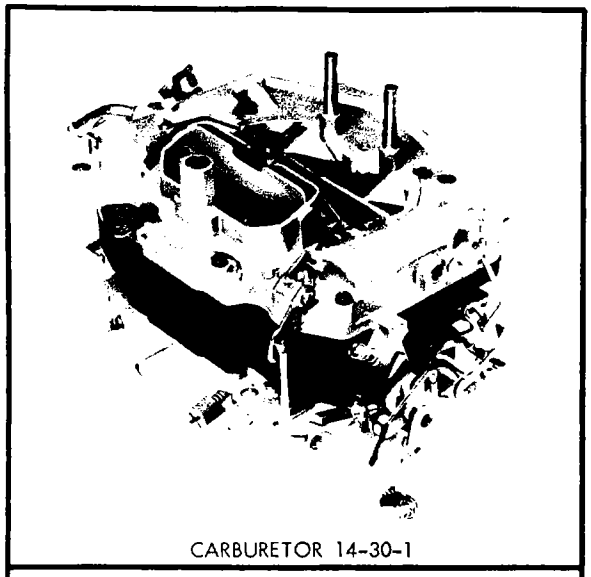

CARBURETOR 14-30-1

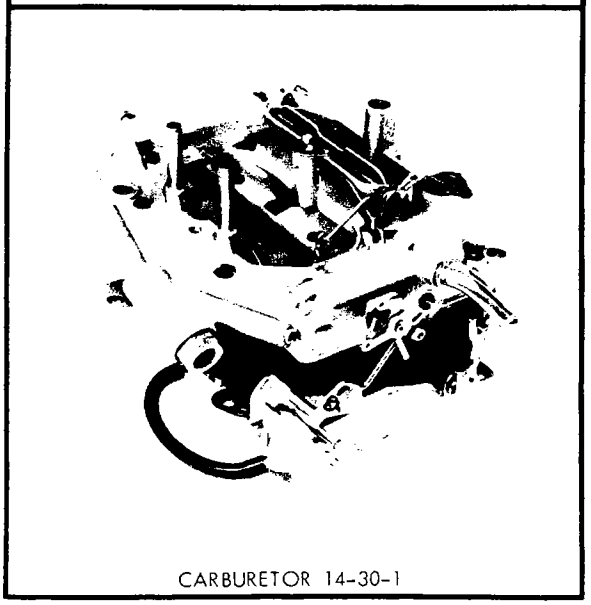

CARBURETOR 14-30-1

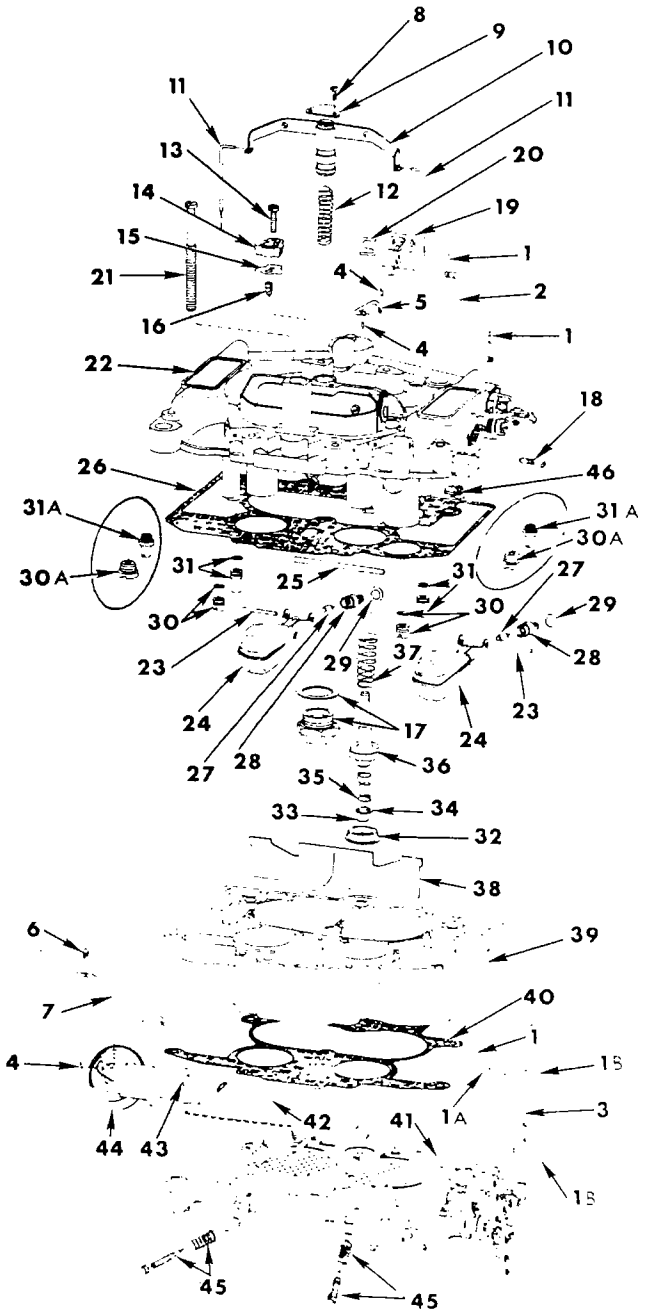

19a13699

4 BARREL CARBURETOR - CARTER
(THERMO-QUAD - 340 CU. IN. ENGINE)

4 BARREL CARBURETOR - CARTER
(THERMO-QUAD - 340 CU. IN. ENGINE)

Ref. No.	Name	Part Type Code
1	Spring (Large) (4)	14-39-56
1A	Washer	
1B	Pin (2)	14-40-4
2	Rod	14-38-28
3	Link	14-36-1
4	Spring (Small) (3)	14-39-56
5	Rod	14-39-28
6	Retainer	14-39-27
7	Rod	14-39-28
8	Screw	14-54-148
9	Cover	14-43-4
10	Piston and Link Assembly	14-43-3
11	Rod (2)	14-43-5
12	Spring	14-43-10
13	Screw	14-35-10
14	Jet	14-35-3
15	Gasket	
16	Needle	14-35-6
17	Fitting and Gasket	14-30-29
18	Screw	14-54-47
19	Arm	14-41-9
20	"S" Link	14-41-8
21	Screw (10)	14-54-34
22	Cover	14-41-34
23	Pin	14-40-4
24	Float	14-40-1
25	Tube	14-44-10
26	Gasket	
27	Needle (2)	14-30-8
28	Needle - Seat (2)	14-30-8
29	Needle - Seat Gasket (2)	
30	Jet and "O" Ring (Early) (2)	14-35-1
30A	Jet and "O" Ring (Late) (2)	14-35-1
31	Jet and "O" Ring (Early) (2)	14-35-1
31A	Jet and "O" Ring (Late) (2)	14-35-1
32	Seat	
33	Disc	
34	Retainer	
35	Spring (Lower)	14-36-1
36	Plunger	14-41-3
37	Spring (Upper)	14-36-1
38	Plate	14-39-50
39	Bowl	14-40-7
40	Gasket	
41	Body	14-33-1
42	Hose	14-39-51
43	Screw	14-39-9
44	Diaphragm and Bracket	14-39-25
45	Screw and Spring (2)	14-45-20
46	Screw	14-45-25

PARTS INDICATED BY NAME ONLY - ORDER BY DESCRIPTION

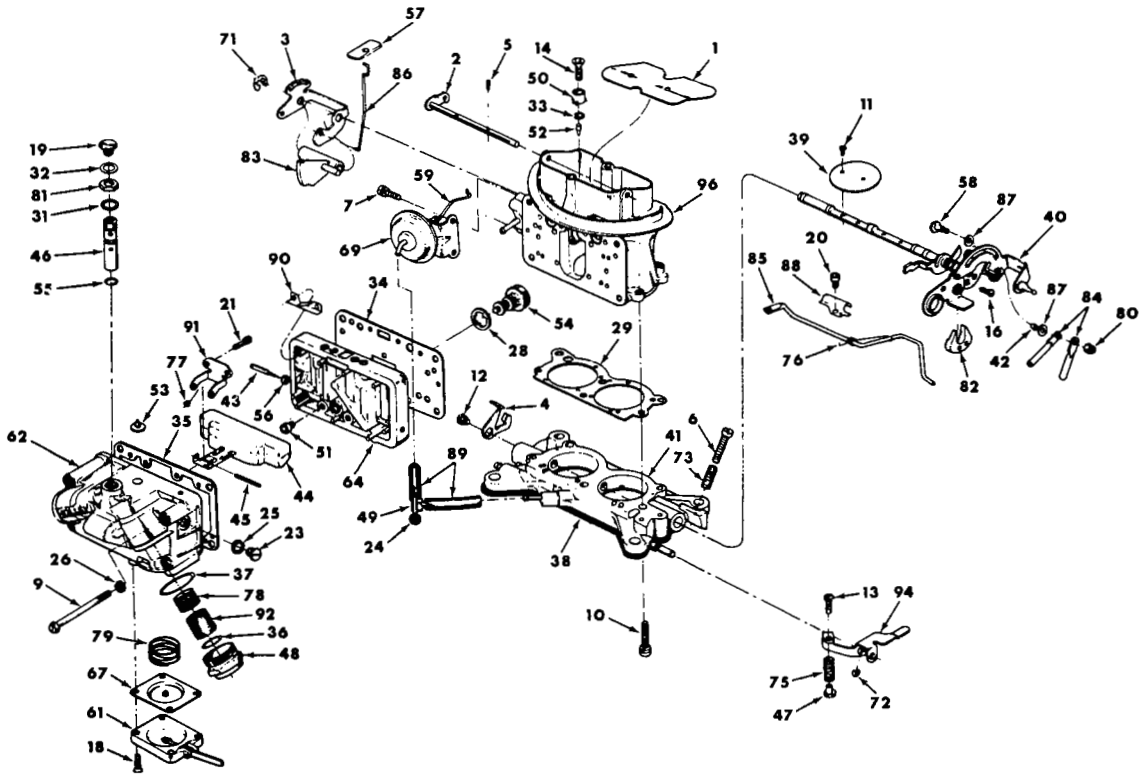

CENTER UNIT

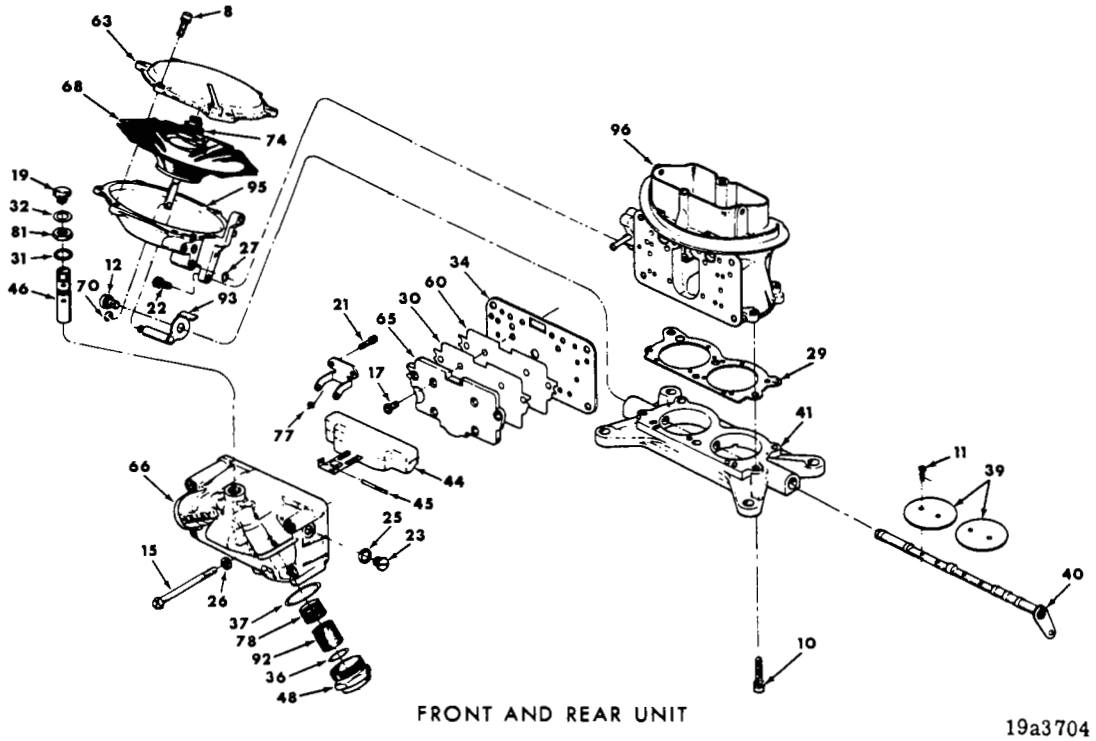

FRONT AND REAR UNIT

19a3704

TYPICAL TRI-CARBURETOR - HOLLEY (MODEL SERIES 2300-C)

TYPICAL TRI-CARBURETOR - HOLLEY
(MODEL SERIES 2300-C)

Ref. No.	Name
1	Choke Plate
2	Choke Shaft & Lever Assembly
3	Choke Control Lever
4	Fast Idle Cam Lever
5	Choke Plate Screw
6	Throttle Stop Screw
7	Choke Diaphragm Assy. Bracket Screw & Lock Washer
8	Diaph. Cover Assy. Scr. & L.W.
9	Fuel Bowl to Main Body Screw
10	Throttle Body Screw & L.W.
11	Throttle Plate Screw
12	Fast Idle Cam Lever Screw & L.W.
13	Pump Operating Lever Adj. Screw
14	Pump Discharge Nozzle Screw
15	Fuel Bowl to Main Body Scr. Sec.
16	Pump Cam Lock Screw
17	Metering Body Screw Sec.
18	Fuel Pump Cover Screw
19	Fuel Valve Seat Lock Screw
20	Air Vent Rod Clamp Screw
21	Float Shaft Bracket Scr. & L.W.
22	Diaphragm Mounting Scr. & L.W.
23	Fuel Lever Check Plug
24	Tee Connector Plug
25	Fuel Lever Check Plug Gasket
26	Fuel Bowl Screw Gasket
27	Diaphragm Housing Gasket Sec.
28	Power Valve Body Gasket
29	Throttle Body Gasket
30	Metering Body Plate Gasket Sec.
31	Fuel Inlet Adjusting Nut Gasket
32	Fuel Valve Seat Screw Gasket
33	Pump Discharge Nozzle Gasket
34	Metering Body Gasket
35	Fuel Bowl Gasket
36	Fuel Inlet Filter Gasket
37	Fuel Inlet Fitting Gasket
38	Flange Gasket
39	Throttle Plate
40	Throttle Lever & Shaft Assy.
41	Throttle Body & Shaft Assy.
42	Throttle Connector Pin Bushing
43	Idle Adjusting Needle
44	Float & Hinge Assy.
45	Float Lever Shaft
46	Fuel Inlet Valve & Seat Assy.
47	Pump Operating Lever Adj. Screw Fitting
48	Fuel Inlet Fitting
49	Tee Connector
50	Pump Discharge Nozzle
51	Main Metering Jet
52	Pump Discharge Needle Valve
53	Air Vent Valve
54	Power Valve Assy.
55	Fuel Valve Seat "O" Ring
56	Idle Adjusting Needle Seal
57	Choke Rod Seal
58	Throttle Connector Pin
59	Choke Diaphragm Assy. Link
60	Metering Body Plate
61	Fuel Pump Diaphragm Cover Assy.
62	Fuel Bowl & Plugs Assy.
63	Diaphragm Housing Cover Sec.
64	Metering Body & Plugs Assy.
65	Sec. Metering Body
66	Sec. Fuel Bowl
67	Pump Diaphragm Assy.
68	Sec. Diaphragm Assy.
69	Choke Diaphragm Assy. Complete
70	Sec. Diaphragm Link Retainer
71	Choke Control Lever Retainer
72	Pump Operating Lever Retainer
73	Throttle Stop Screw Spring
74	Diaphragm Spring Sec.
75	Pump Operating Lever Adj. Spring
76	Air Vent Rod Spring
77	Float Spring
78	Fuel Inlet Filter Spring
79	Diaphragm Return Spring
80	Throttle Connector Pin Nut
81	Fuel Valve Seat Adj. Lock Nut
82	Pump Cam
83	Fast Idle Cam
84	Throttle Connector Bar
85	Air Vent Rod
86	Choke Rod
87	Throttle Connector Pin Spacer
88	Air Vent Rod Clamp
89	Choke Vacuum Hose
90	Metering Body Vent Baffle
91	Float Shaft Retaining Bracket
92	Fuel Inlet Filter
93	Diaphragm Lever & Pin Assy.
94	Pump Operating Lever
95	Sec. Diaphragm Housing
96	Main Body

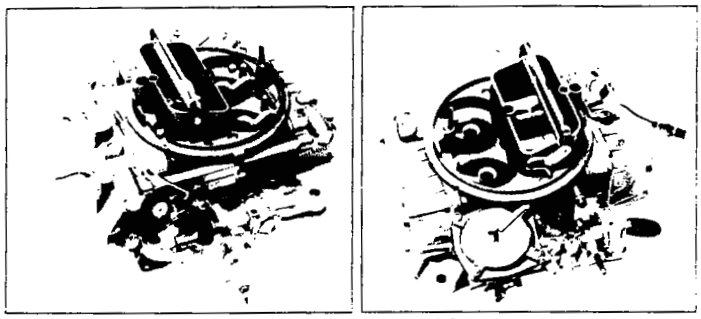

CARBURETOR 14-30-1

TYPICAL 4 BARREL CARBURETOR - HOLLEY (MODEL SERIES 4000)

TYPICAL 4 BARREL CARBURETOR - HOLLEY (MODEL SERIES 4000)

Ref. No.	
1	Choke Plate
2	Valve Plate
3	Valve Stem
4	Choke Plate Cover
5	Choke Shaft
6	Choke Rod Lev. & Bushing
7	Choke Control Lev. & Swivel
8	Fast Idle Cam Lever
9	Choke Plate Screw
10	Governor Throttle Lev. Scr.
11	Throttle Stop Screw
12	Pick-Up Lev. & Choke Control Swivel Screw
13	Pick-Up Lev., Choke Control & Gov. Body Cov. Brkt. Clamp Scr.
14	Throttle Lever Screw
15	Governor Body Cov. Scr. & L.W.
16	Back-Up Plate Scr. & L.W.
17	Pick-Up Lev. Brkt. Scr. & L.W.
18	Secondary Diaphragm Cover Screw & Lockwasher
19	Fuel Pump Cov. Assy. Scr. & L.W.
20	Gov. Diaph. Cov. Assy. Scr. & L.W.
21	Gov. Diaph. Cov. Assy. Scr. & L.W. (Drilled)
22	Pump Cam Lock Scr. & L.W.
23	Fuel Bowl to Main Body Screw
24	Diaph. Lev. Adj. Screw
25	Throt. Body Screw & L.W.
26	Secondary Diaph. Hsg. Screw & Lockwasher
27	Throt. Plate Scr.-Primary & Secondary
28	Diaph. Lev. & Driver Screw & Lockwasher
29	Pump Oper. Lev. Adj. Screw
30	Fast Idle Cam Plate Screw & Lockwasher
31	Gov. Hsg. Scr. & L.W.
32	Shaft Hsg. Screw & L.W.
33	Pump Discharge Nozzle Screw
34	Fast Idle Adj. Screw
35	Gov. Body Cov. Scr. & L.W.
36	Fast Idle Cam Lever Screw
37	Fuel Valve Seat Lock Screw
38	Main Body & Plugs Assy.
39	Fuel Level Check Plug
40	Fuel Level Check Plug Gasket
41	Anti-Backfire Valve Gasket
42	Fuel Inlet Fitting Gasket
43	Fuel Valve Seat Gasket or "O" Ring Seal
44	Fuel Bowl Screw Gasket
45	Secondary Diaph. Hsg. Gasket
46	Governor Body Gasket
47	Power & Control Valve Body Gasket
48	Throttle Body Gasket
49	Flange Gasket
50	Fuel Valve Seat Adj. Nut Gasket
51	Fuel Valve Seat Adj. Lock Scr. Gasket
52	Fuel Bowl Gasket
53	Metering Body Gasket
54	Pump Discharge Nozzle Gasket
55	Throttle Plate - Primary
56	Throttle Plate - Secondary
57	Throt. Oper. Shaft & Driver Assy.
58	Throt. Clutch & Shaft Assy.
59	Secondary Throt. Lev. & Shaft
60	Gov. Throt. Lev. & Ball Assy.
61	Throt. Lev. or Lev. & Shaft
62	Throt. Body & Shaft Assy.
63	Throt. Shaft Bushing - Primary & Secondary
64	Throt. Shaft Bearing - Primary
65	Throt. Shaft Bushing - Primary
66	Fuel Line Tube
67	Balance Tube
68	Idle Adjusting Needle
69	Float & Hinge Assembly
70	Fuel Inlet Valve & Seat Assy.
71	Fuel Inlet Fitting
72	Pump Oper. Lev. Fitting or Nut
73	Pump Discharge Nozzle.
74	Main Jet - Primary.
75	Main Jet - Seconary
76	Governor By-Pass Jet
77	Governor By-Pass Jet
78	Anti-Backfire Valve Assembly
79	Pump Discharge Needle Valve or Check Ball Weight.
80	Power Valve Assy.-Primary
81	Overrun Control Valve Assy.-Sec.
82	Governor Cover Wire Seal
83	Governor Cover Safety Wire
84	Fuel Line Tube "O" Ring Seal
85	Balance Tube "O" Ring Seal.
86	Idle Needle Seal.
87	Governor Body Seal.
88	Choke Rod Seal
89	Sec. Diaph. Hsg. Check Ball
90	Check Valve Ball
91	Pump Inlet Check Ball
92	Pump Discharge Check Ball
93	Gov. Spring Pin (Long)
94	Throt. Shaft Pin.
95	Fast Idle Pin
96	Throt. Lev. Pin, Gov. Lev. Pin
97	Sec. Diaph. Assy. Cover
98	Gov. Diaph. Assy. Cover
99	Throt. Oper. Shaft Hsg. Assy.
100	Gov. Body Cover & Bracket

CONTINUED ON NEXT PAGE

TYPICAL 4 BARREL CARBURETOR - HOLLEY (MODEL SERIES 4000) - Cont'd

Ref. No.	
101	Throt. Oper. Shaft Hsg. Back-Up Plate
102	Main Metering Body & Plugs - Primary
103	Main Metering Body & Plugs - Secondary
104	Fast Idle Cam Plate
105	Fuel Bowl & Plugs - Primary
106	Fuel Bowl & Plugs - Secondary
107	Fuel Pump Cover Assembly
108	Valve Plate Retainer Cover
109	Diaph. Assy. - Secondary
110	Governor Diaphragm
111	Pump Diaphragm
112	Secondary Diaph. Link Retainer
113	Governor Diaph. Link Retainer
114	Valve Plate Retainer
115	Cam Shaft Retainer
116	Check Valve Ball Retainer or Channel Plug
117	Float Retainer
118	Fast Idle Cam Plunger Spring
119	Fast Idle Cam Lever Spring
120	Throt. Stop Screw Spring
121	Valve Spring
122	Governor Spring
123	Diaphragm Spring - Secondary
124	Diaphragm Return Spring
125	Pump Operating Adj. Scr. Spring
126	Float Spring
127	Pump Inlet Check Ball Retainer
128	Choke Lever Spring
129	Choke Plate Cover Spring
130	Governor Diaphragm Spring
131	Pick-Up Lev., Choke Control Brkt. & Gov. Brkt. Assy. Clamp Nut
132	Choke Control Lever Nut
133	Governor Lever Nut
134	Fuel Valve Seat Adj. Nut
135	Choke Plate Screw Lock Nut
136	Throt. Connecting Rod Spacer
137	Choke Plate Screw Spacer
138	Pump Cam
139	Fast Idle Cam & Shaft Assy.
140	Throt. Connecting Rod or Assy.
141	Choke Rod
142	Gov. Lev. Nut Lockwasher
143	Throt. Connecting Rod Washer
144	Choke Control Lev. Lockwasher
145	Balance Tube Washer
146	Choke Rod Retainer
147	Throt. Connecting Rod Cotter Pin
148	Pick-Up Lev., Choke Control Brkt. & Gov. Brkt. Assy. Clamp
149	Pick-Up Lever Bracket
150	Choke Control Bracket
151	Fast Idle Cam Plunger
152	Filter Screen or Assembly
153	Baffle Plate R.H.
154	Baffle Plate L.H.
155	Pump Operating Lever
156	Governor Lever Assembly
157	Diaphragm Lever Assembly
158	Pick-Up Lever & Swivel Assembly
159	Cam Pick-Up Lever & Bushing Assy.
160	Throttle Shaft Driver
161	Choke Rod & Pump Operating Lever Retainer
162	Diaphragm Housing - Secondary
163	Governor Hsg. & Plugs Assy.
164	Vent Pick-Up Screw
165	Air Vent Rod Clamp Screw
166	Air Vent Valve
167	Throt. Oper. Shaft Retainer
168	Air Vent Rod Spring
169	Vent Pick-Up Screw Nut
170	Air Vent Rod
171	Air Vent Rod Clamp
172	Bleed Screen

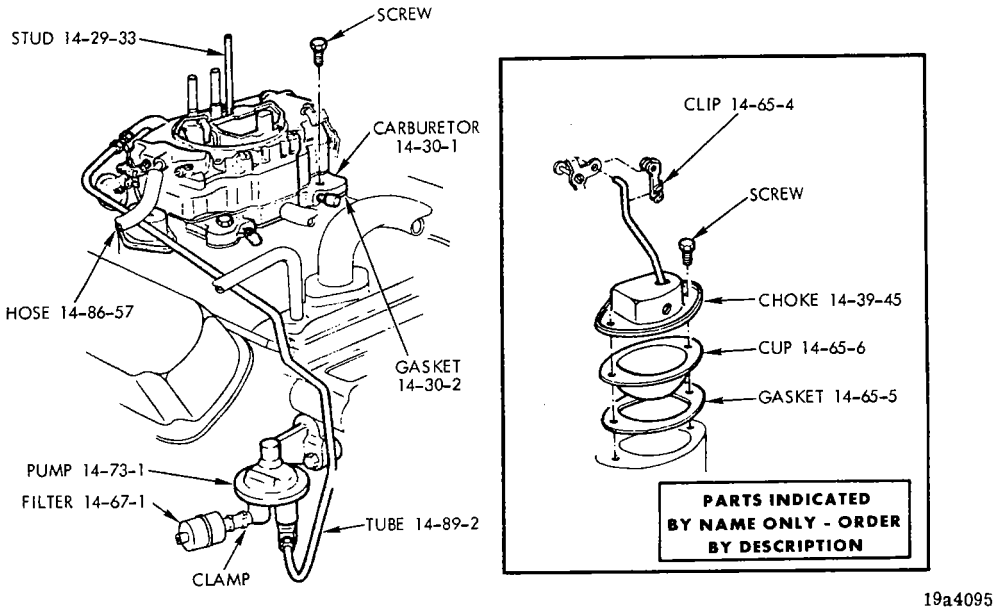

CARBURETOR, CHOKE ASSEMBLY AND FUEL LINES (340 ENGINE) - V, L, B, J, R, W

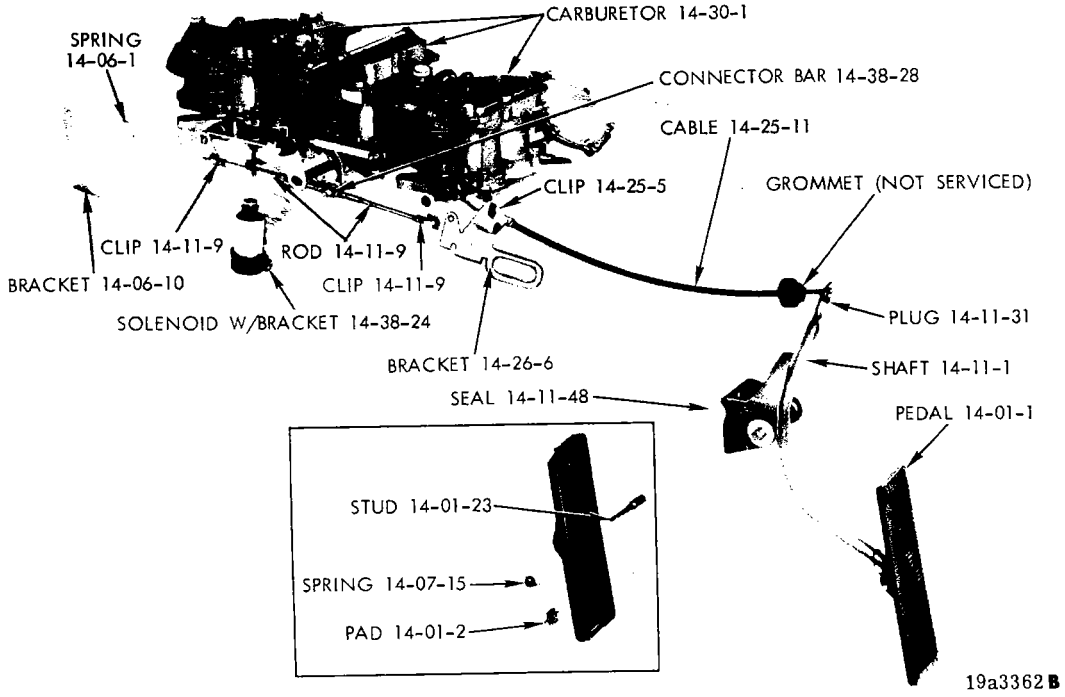

THROTTLE LINKAGE - 440 ENGINE WITH 3-2 BARREL CARBURETOR

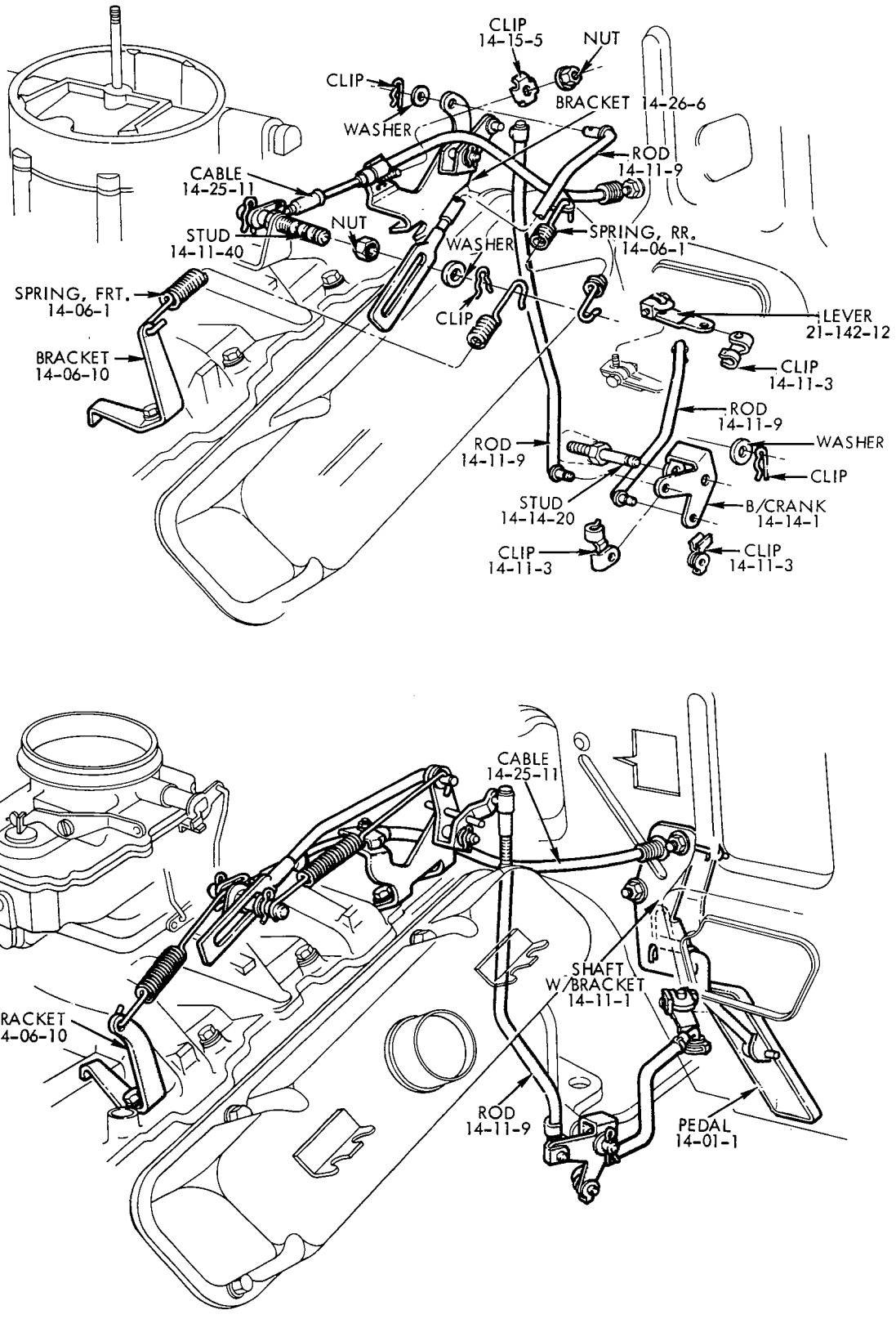

THROTTLE LINKAGE - 318 AND 340 ENGINE - V, L, B, J, R, W

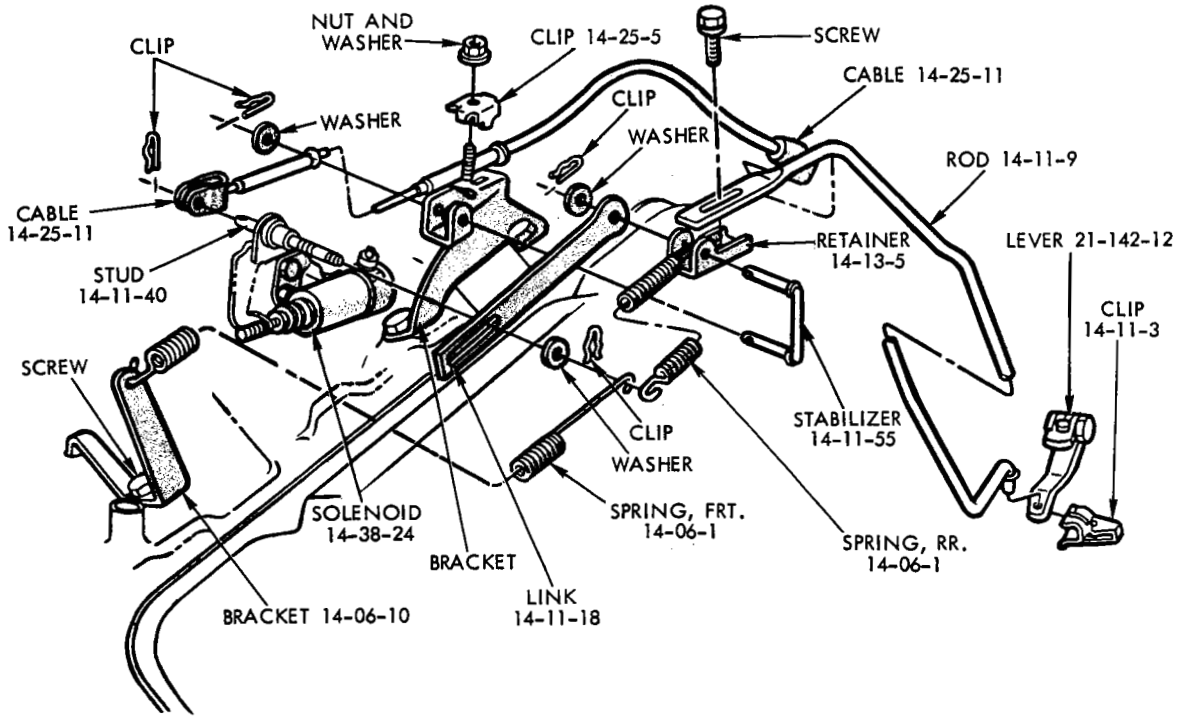

PARTS INDICATED BY NAME ONLY - ORDER BY DESCRIPTION

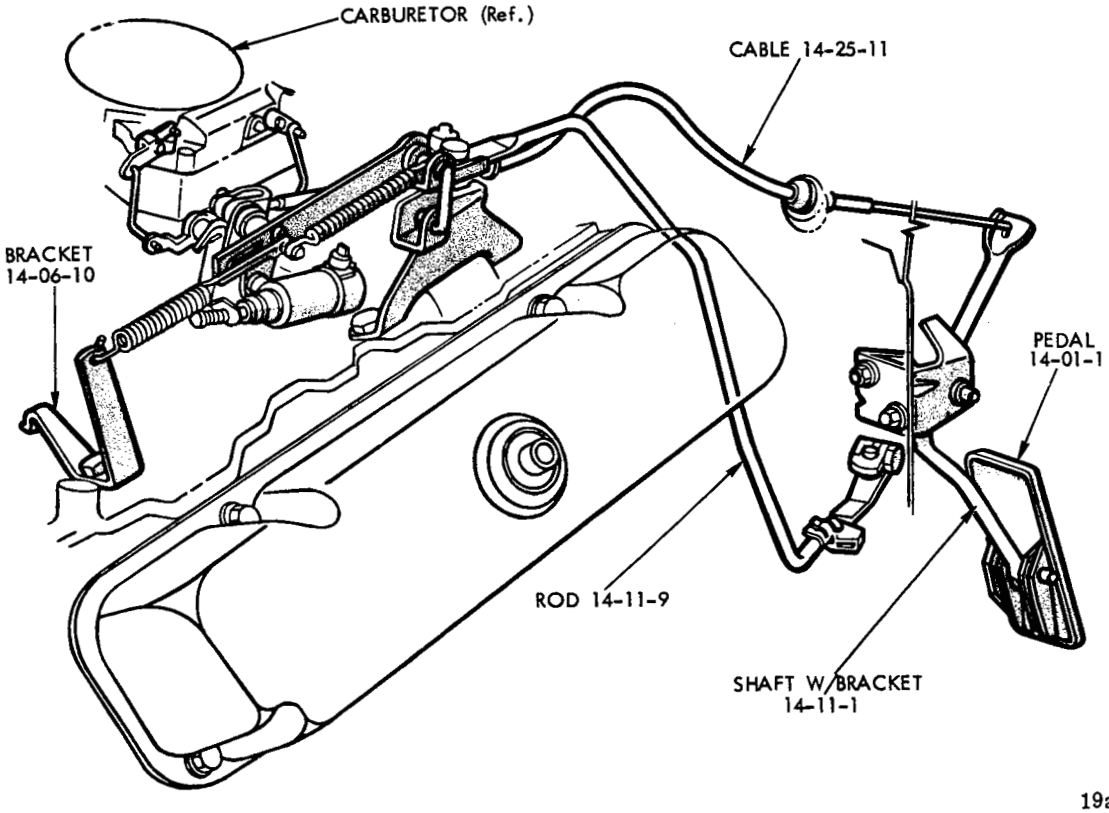

19a3727

THROTTLE LINKAGE - 340 ENGINE - MANUAL AND AUTOMATIC TRANSMISSION

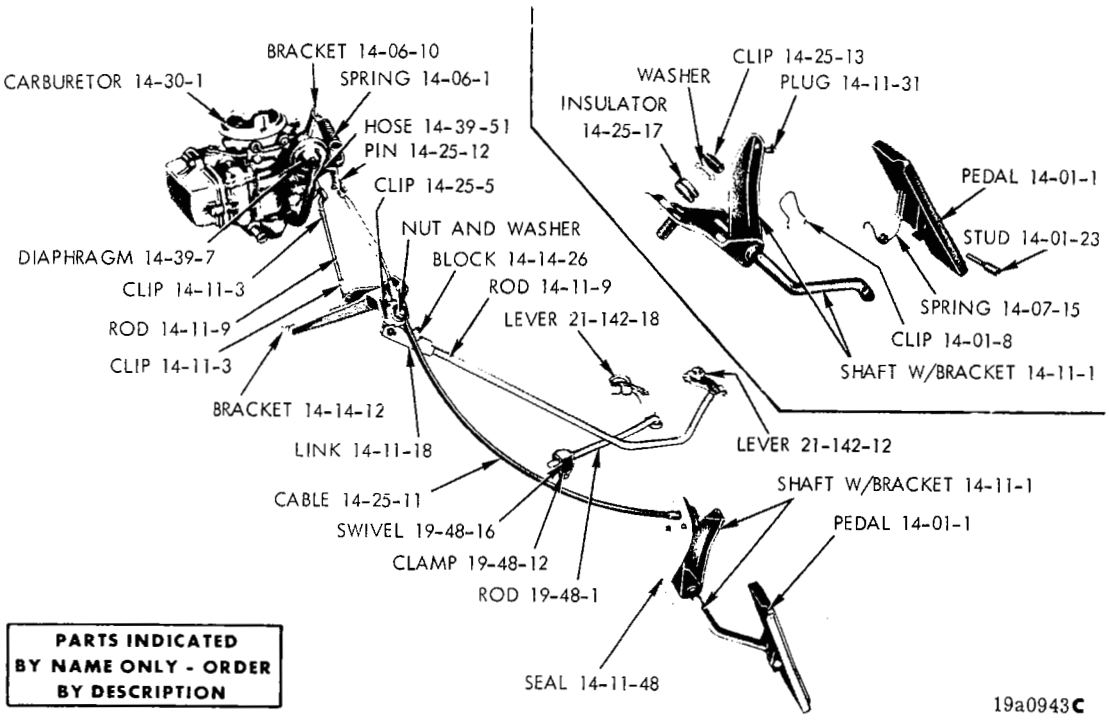

THROTTLE LINKAGE (AUTOMATIC TRANSMISSION) - VALIANT AND DART (6 CYLINDER)

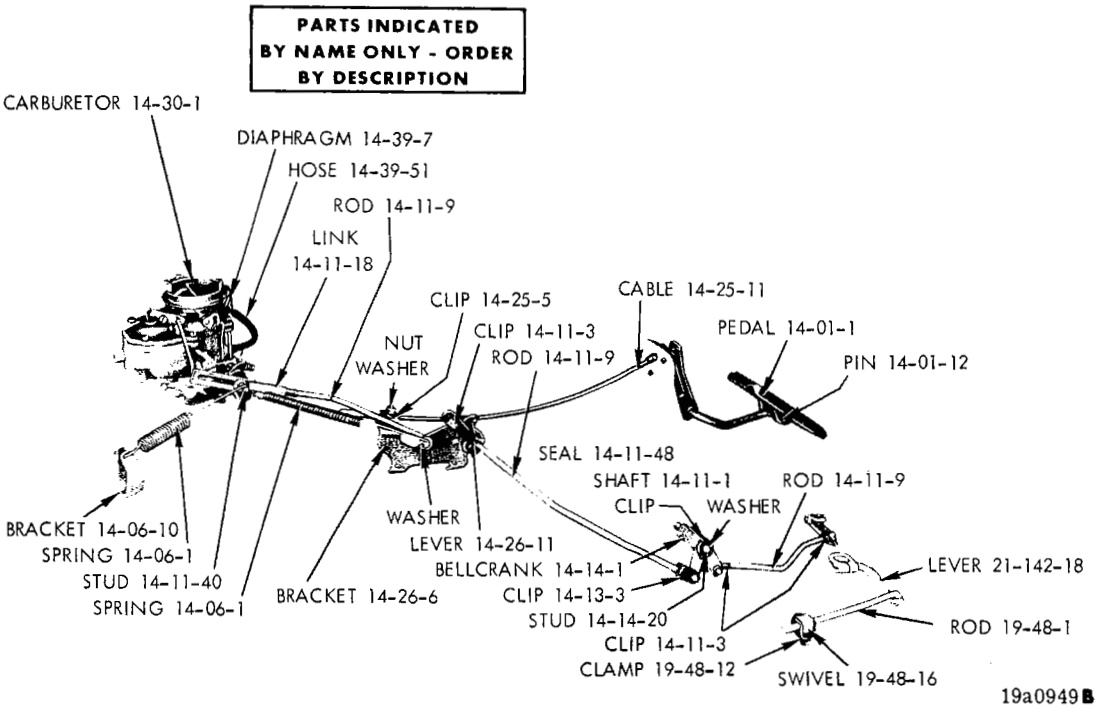

THROTTLE LINKAGE (WITH 318 ENGINE) - WITH AUTOMATIC TRANSMISSION - VALIANT AND DART

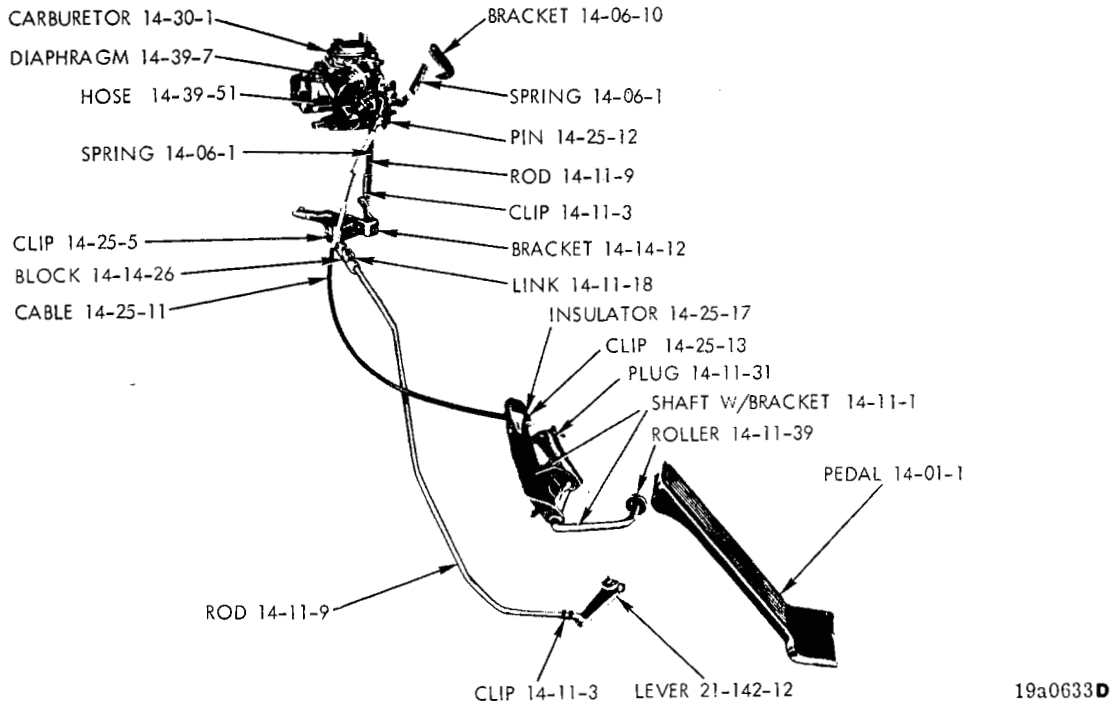

THROTTLE LINKAGE (AUTOMATIC TRANSMISSION) - BELVEDERE, CORONET AND CHARGER (6 CYLINDER)

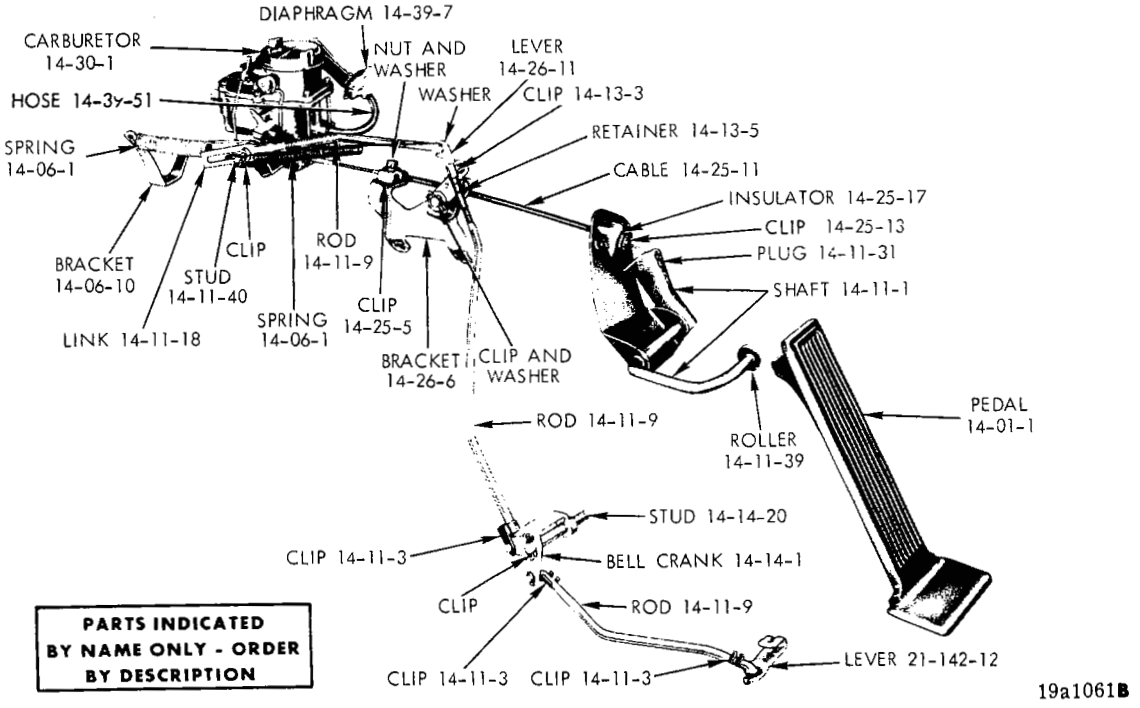

THROTTLE LINKAGE (8 CYLINDER) - BELVEDERE, CORONET AND CHARGER

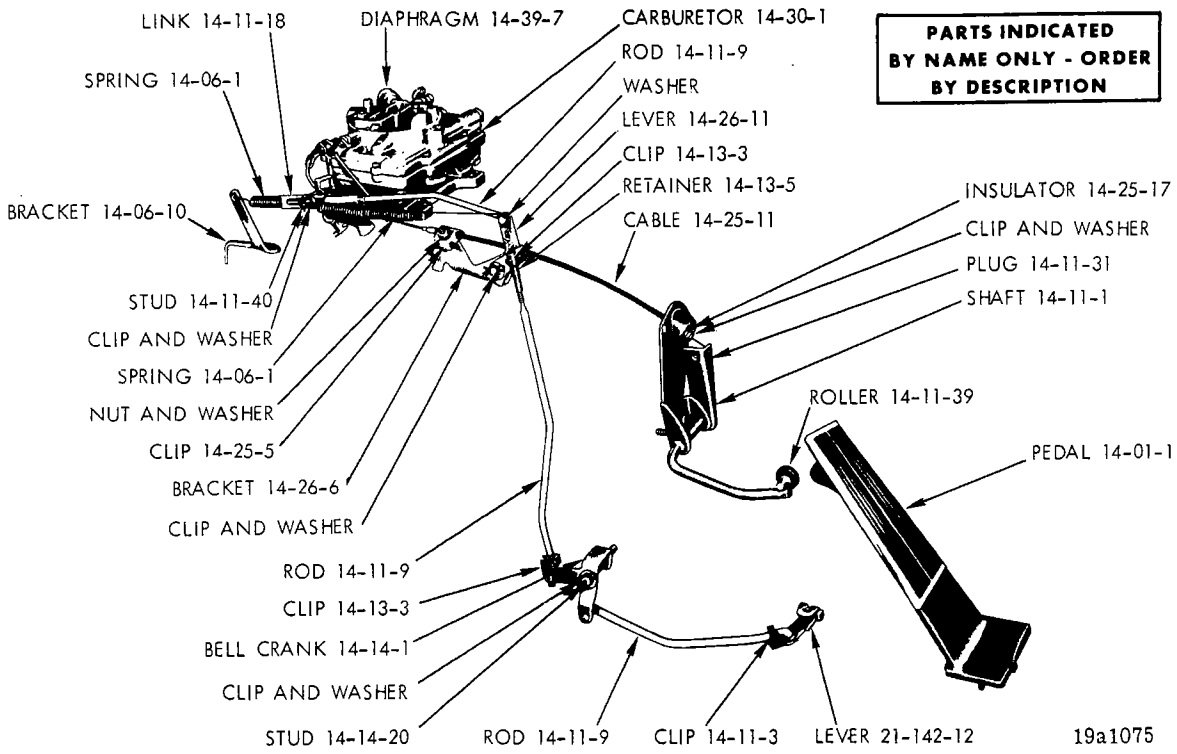

THROTTLE LINKAGE (AUTOMATIC TRANSMISSION-383 AND 440 ENGINE) - BELVEDERE, CORONET AND CHARGER

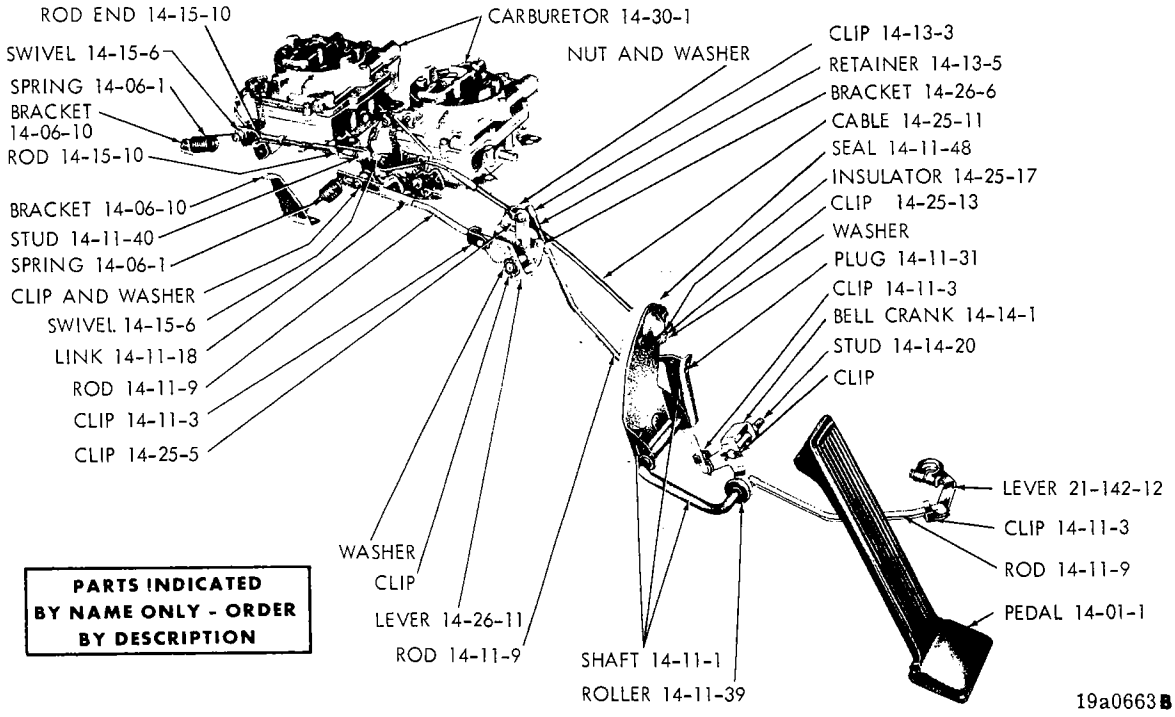

THROTTLE LINKAGE (AUTOMATIC TRANSMISSION-426 ENGINE) - BELVEDERE, CORONET AND CHARGER

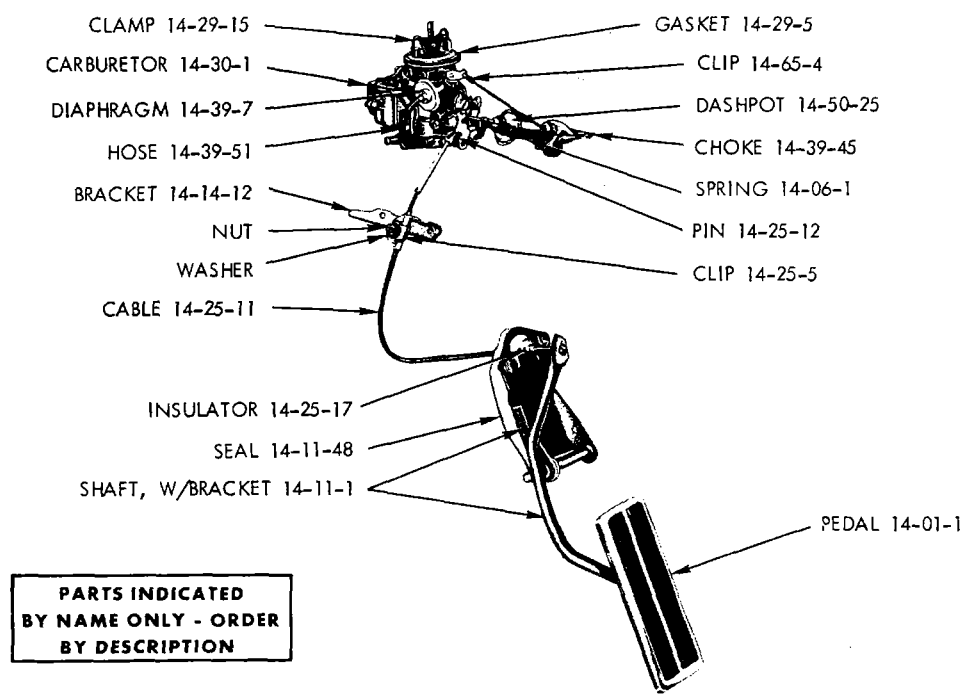

THROTTLE LINKAGE (STANDARD TRANSMISSION) - PLYMOUTH 6 CYLINDER

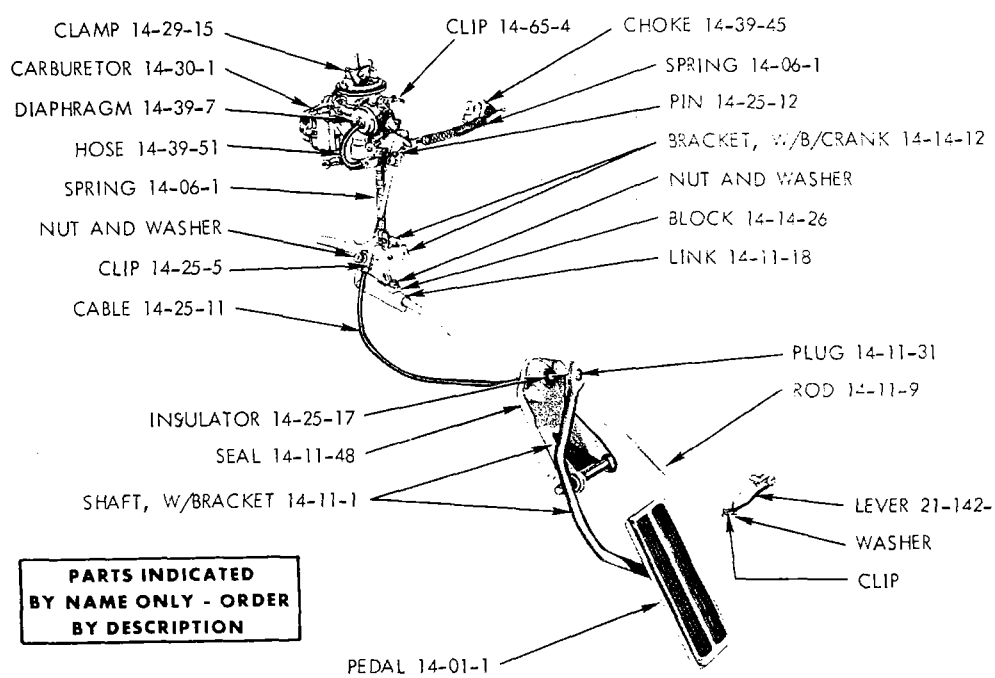

THROTTLE LINKAGE (AUTOMATIC TRANSMISSION) - PLYMOUTH 6 CYLINDER

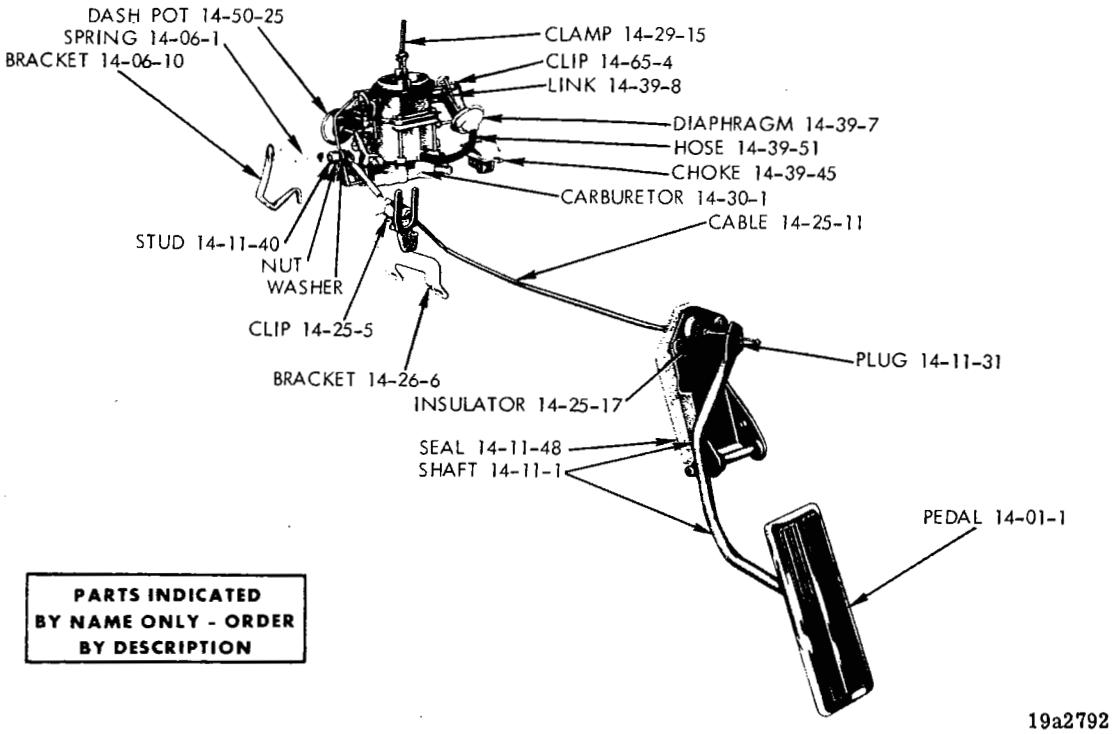

THROTTLE LINKAGE (MANUAL TRANSMISSION) - PLYMOUTH AND DODGE, WITH 318 ENGINE

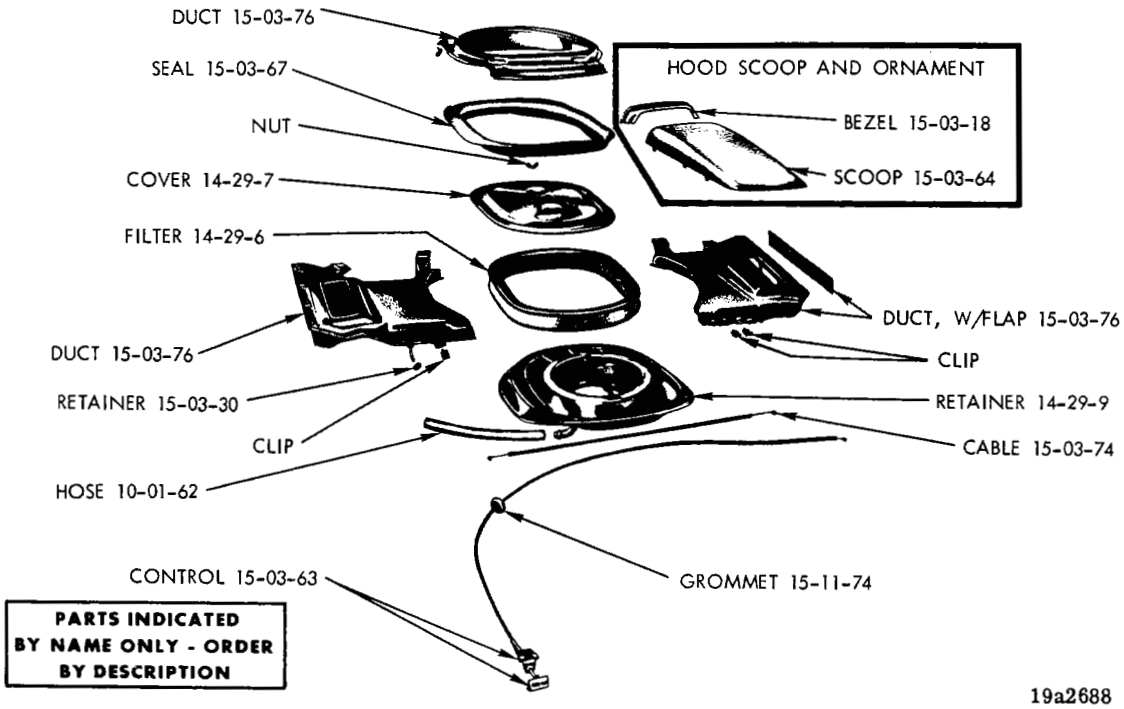

CARBURETOR FRESH AIR UNIT - BELVEDERE AND CORONET

Printed in U.S.A.

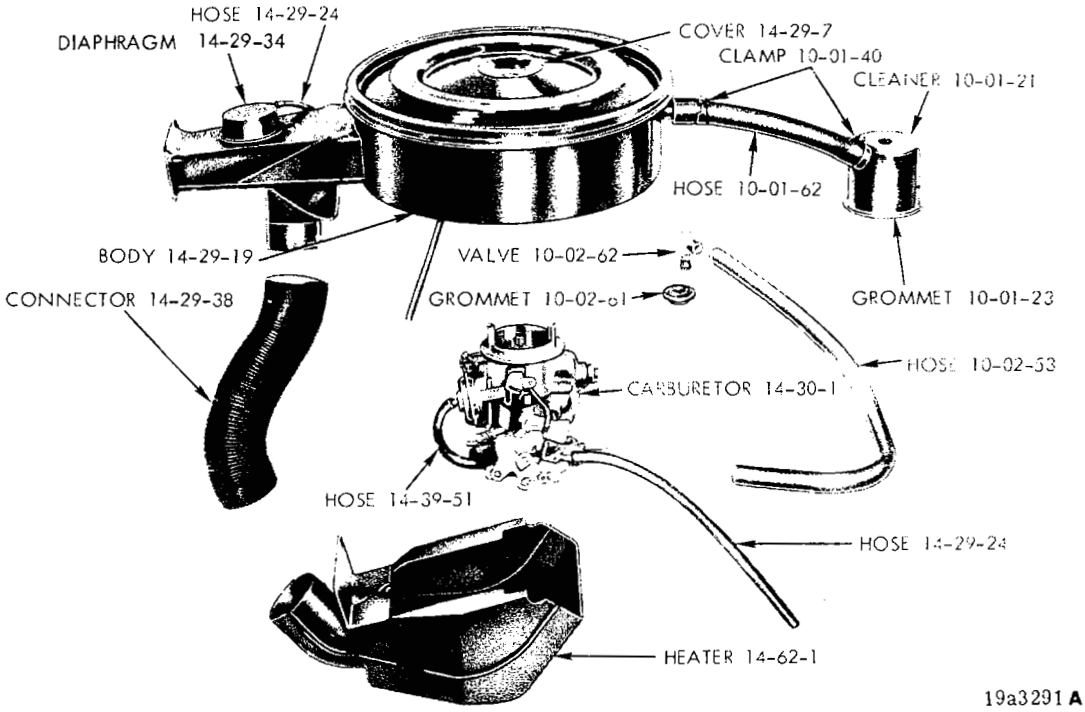

CARBURETOR AIR HEATER - 6 CYLINDER

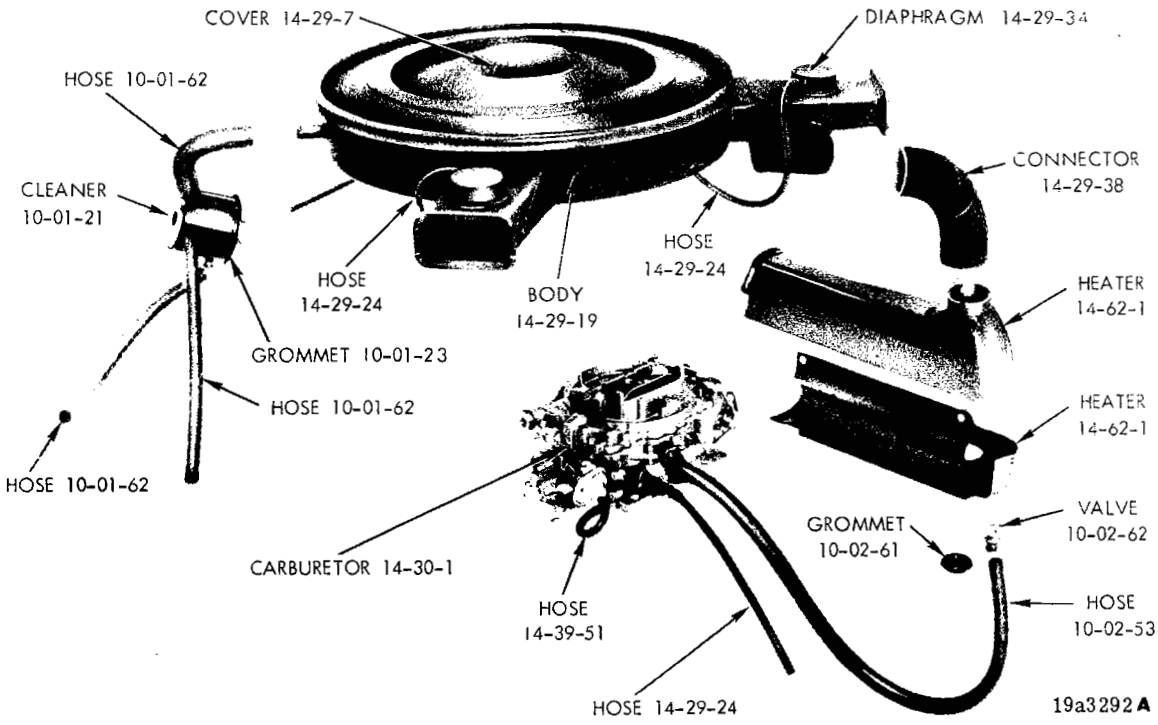

CARBURETOR AIR HEATER - V8 CYLINDER

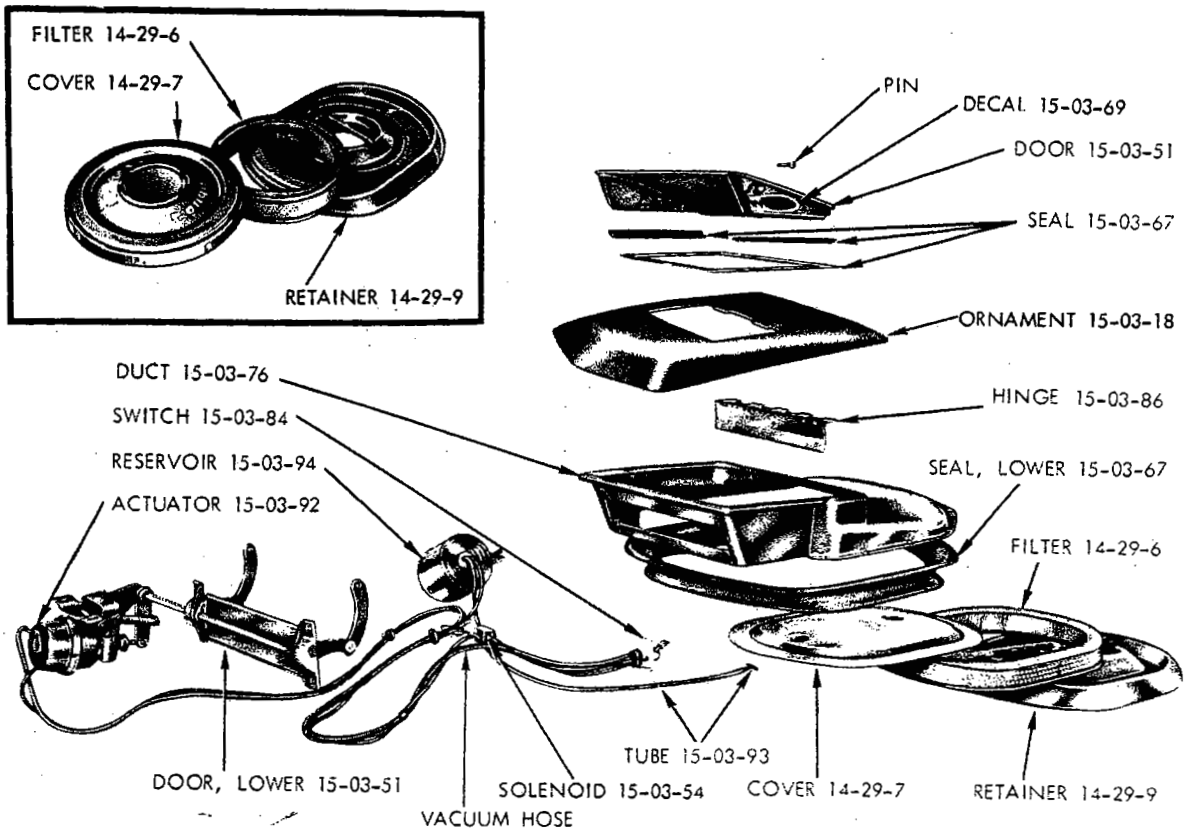

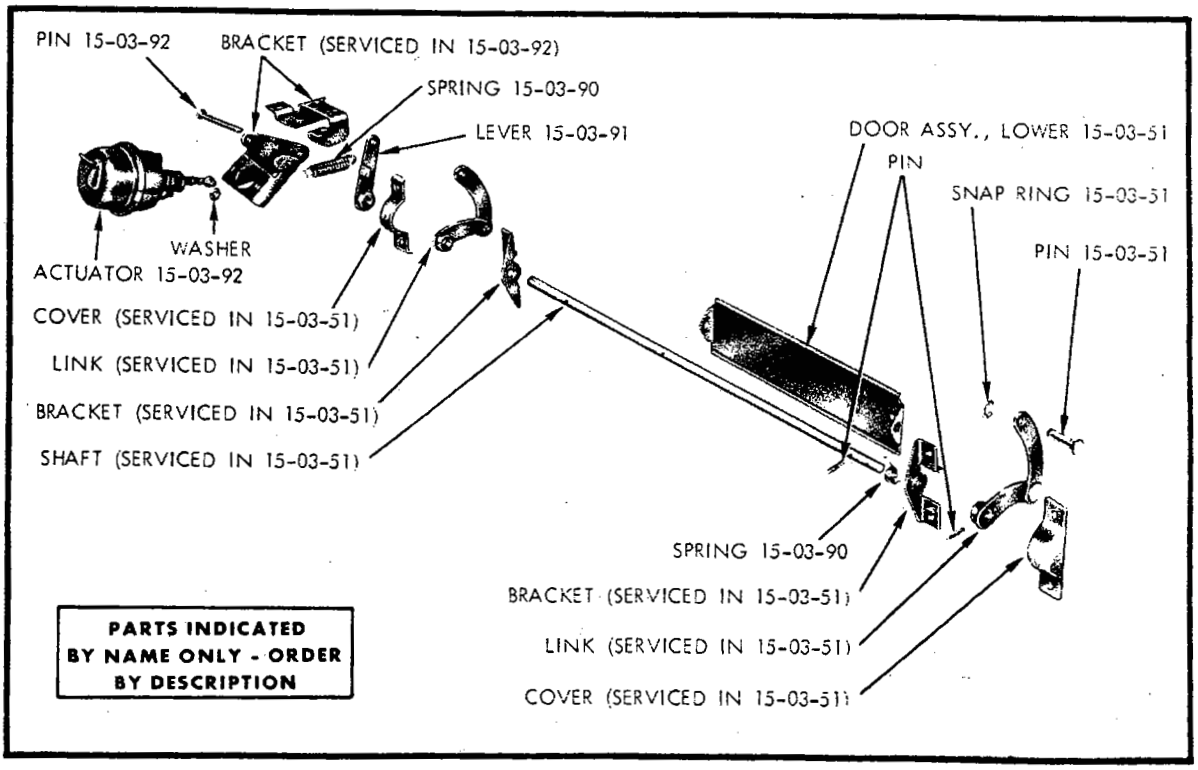

19a3358C

CARBURETOR FRESH AIR PACKAGE - BELVEDERE AND GTX (6 PACK)

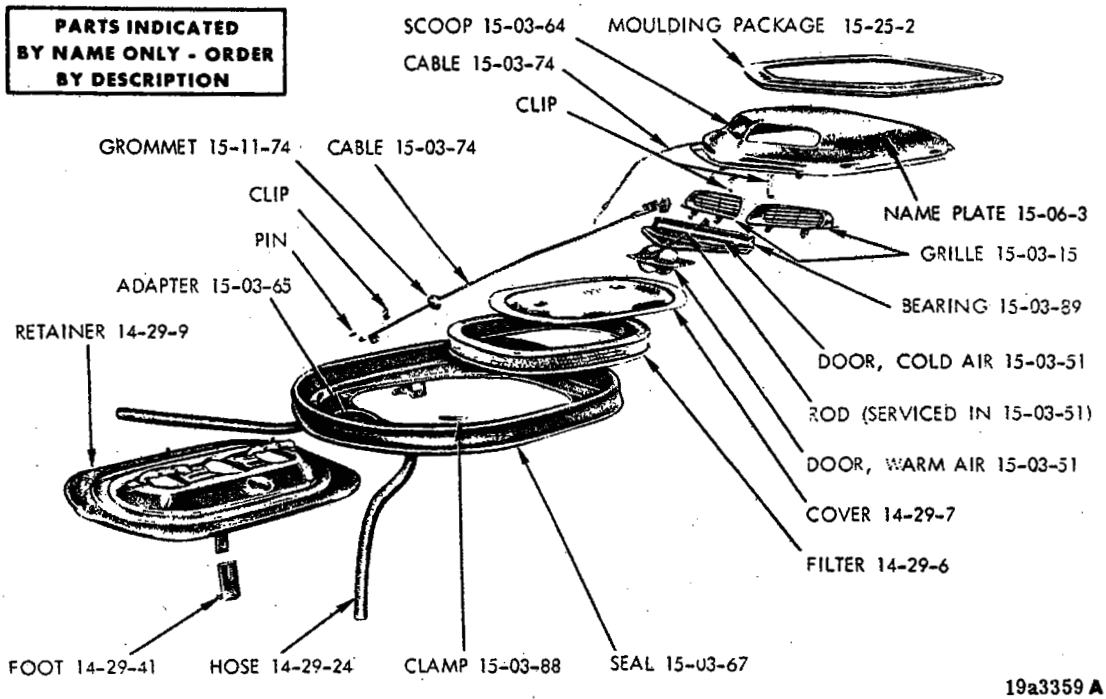

CARBURETOR FRESH AIR PACKAGE - 'CUDA 6 PACK (SHAKER)

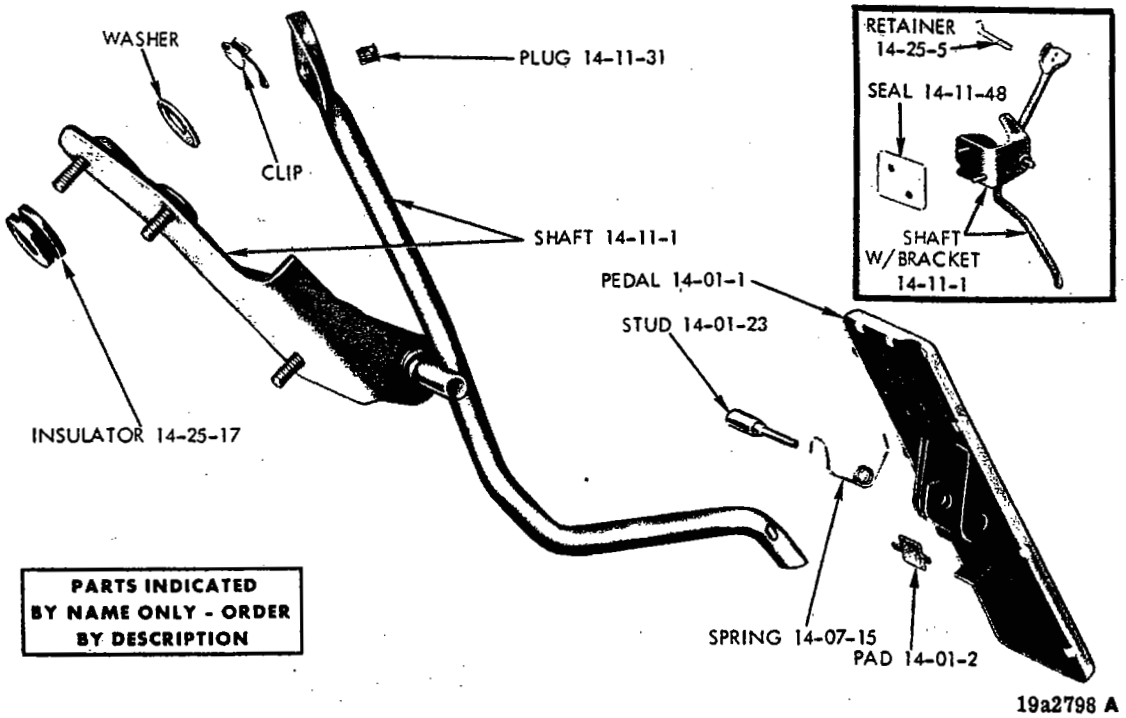

ACCELERATOR PEDAL AND SHAFT - PLYMOUTH, DODGE, CHRYSLER AND IMPERIAL

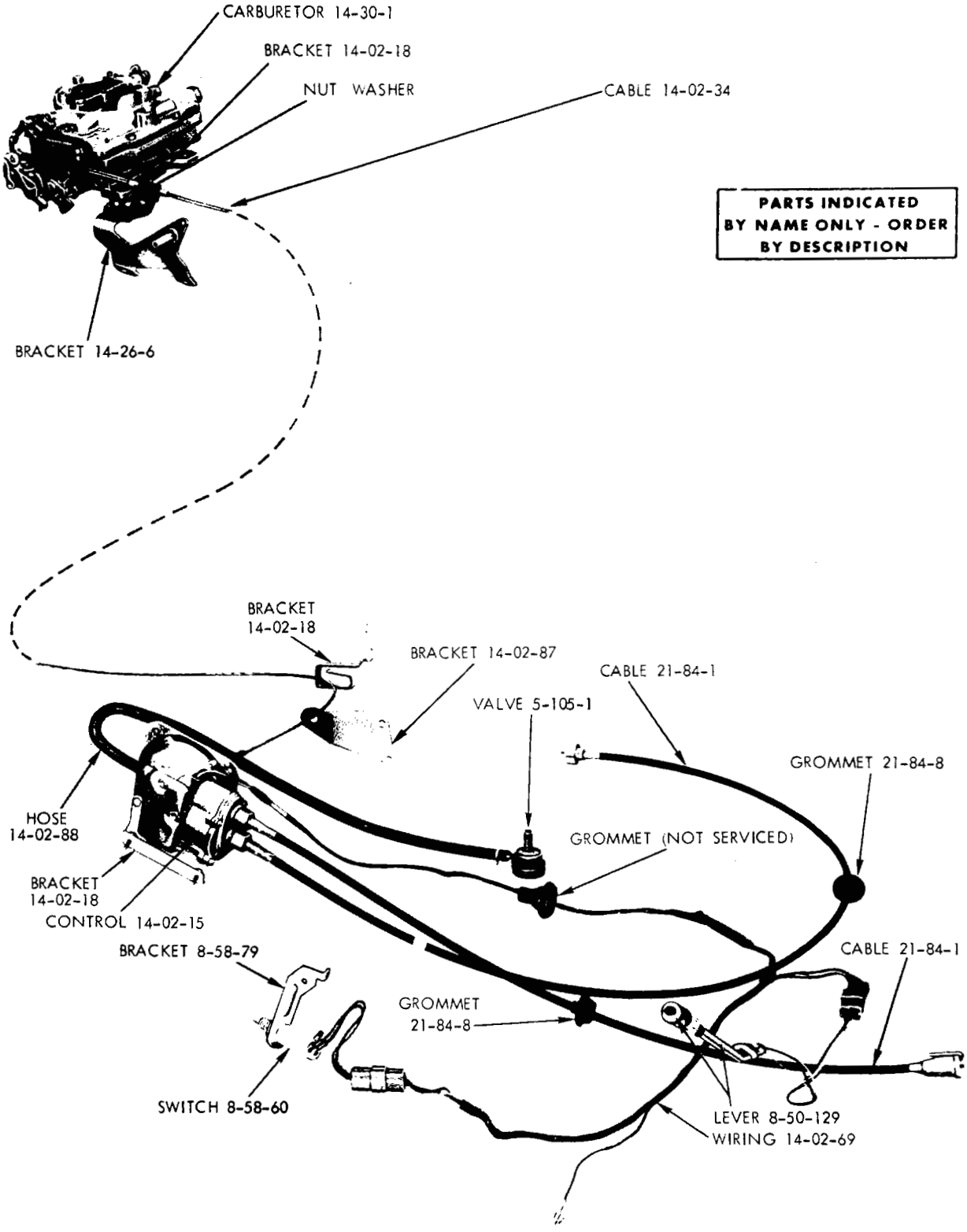

SPEED CONTROL

CODE	PART NAME	ENG. TYPE OR CU.IN.	V 1-2	B J 1-2	L 1-2	R 1-2	W 1-2	P 1-2	D 1-2	C 1	C 2	C 3	Y 1	PART NUMBER
14-01-0	**ACCELERATOR PEDAL**													
14-01-1	PEDAL, w/BEZEL, Stainless Steel	70	1	—	1	—	—	—	—	—	—	—	—	2946 676
	w/o BEZEL	70	1	—	1	—	—	—	—	—	—	—	—	3577 527
	w/BEZEL, Stainless Steel	70	—	1	—	—	—	—	—	—	—	—	—	3418 801
	w/o BEZEL	70	—	1	—	—	—	—	—	—	—	—	—	3577 527
	w/BEZEL, Stainless Steel	70	—	—	—	1	1	—	—	—	—	—	—	2658 703
	w/o BEZEL	70	—	—	—	1	1	—	—	—	—	—	—	2658 704
	w/BEZEL, Stainless Steel	70	—	—	—	—	—	1	1	1	1	1	1	2899 387
	w/0 BEZEL	71	1	1	1	1	1	1	1	1	1	1	1	3577 527
14-01-2	PAD, Pedal	70	1	1	1	—	—	1	1	1	1	1	1	2899 342
		71	1	1	1	1	1	1	1	1	1	1	1	2899 342
14-01-6	BEZEL, Pedal		1	1	1	1	1	1	1	1	1	1	1	# 3577 528
14-01-8	CLIP, Pedal		1	—	1	—	—	—	—	—	—	—	—	2863 055
	Pedal Bracket		1	—	1	—	—	—	—	—	—	—	—	2863 056
14-01-23	SCREW, Pedal		—	—	—	2	2	—	—	—	—	—	—	2202 583
	NUT	70	—	—	—	2	2	—	—	—	—	—	—	120 367
	STUD or PIN	70	1	1	1	—	—	1	1	1	1	1	1	2899 352
		71	1	1	1	1	1	1	1	1	1	1	1	2899 352
14-01-30	BUSHING, Pedal	70	—	—	—	2	2	—	—	—	—	—	—	2406 334
14-01-38	SWIVEL, Pedal Lever	70	—	—	—	1	1	—	—	—	—	—	—	2536 846
14-02-0	**AUTOMATIC SPEED CONTROL**													
14-02-1	ADAPTER Pkg. Speed Control w/318 Eng.		—	—	—	1	1	—	—	—	—	—	—	# 3420 941
	w/383-440 Eng.		—	—	—	1	1	—	—	—	—	—	—	# 3420 942
			—	—	—	—	—	1	1	1	1	1	1	# 3420 939
14-02-15	SERVO, Control		—	1	—	1	1	1	1	1	1	1	1	2946 550
	BASIC Pkg. Speed Control		—	—	—	—	—	1	1	1	1	1	1	# 3420 935
14-02-18	BRACKET, Cable Routing Brake Plate Mtg., w/318 Eng.	70	—	1	—	—	—	—	—	—	—	—	—	3418 566
	Cable Routing Dash Mtg.	70	—	—	—	1	1	—	—	—	—	—	—	2899 295
	Speed Control Cable Mtg., w/318 Eng.	70	—	1	—	1	1	1	1	—	—	—	—	2899 376
	Speed Control Cable Mtg., w/383 Eng., w/4 Bbl. Carb.	70	—	1	—	1	1	—	—	—	—	—	—	2899 378
	Speed Control Cable Mtg., w/383 Eng., w/2 Bbl. Carb.	70	—	1	—	1	1	1	1	—	—	—	—	2899 374
	Speed Control Cable Mtg., w/440 Eng.	70	—	1	—	1	1	1	1	1	1	1	1	2899 374
	Speed Control Servo Mtg.	70	—	1	—	—	—	—	—	—	—	—	—	2946 547
		70	—	—	—	1	1	—	—	—	—	—	—	2863 585
	Speed Control Cable Mtg., w/318 or 360 Eng.	71	—	—	—	1	1	1	1	—	—	—	—	2899 376
	Speed Control Cable Mtg., w/383 or 440 Eng.	71	—	—	—	1	1	1	1	1	1	1	1	2899 374
	Cable Routing Brake Plate Mtg., w/318 Eng.	71	—	—	—	1	1	—	—	—	—	—	—	3418 566
	Speed Control Servo Mtg.	71	—	—	—	1	1	—	—	—	—	—	—	2946 546
			—	—	—	—	—	1	1	1	1	1	1	2863 587
14-02-34	CABLE, Speed Control, w/318 Eng.	70	—	1	—	—	—	—	—	—	—	—	—	3462 370
	w/383 or 440 Eng.	70	—	1	—	—	—	—	—	—	—	—	—	3462 371
	w/318 Eng.	70	—	—	—	1	1	—	—	—	—	—	—	3462 369
	w/318 Eng.	70	—	—	—	—	—	1	1	—	—	—	—	3462 368
	w/383 or 440 Eng.	70	—	—	—	1	1	1	1	1	1	1	1	3462 367
	w/318 Eng.	71	—	—	—	1	1	—	—	—	—	—	—	3462 370
	w/340 Eng.	71	—	1	—	—	—	—	—	—	—	—	—	3512 806
	w/318 or 360 Eng.	71	—	—	—	—	—	1	1	1	1	—	—	3462 368
	w/383 or 440 Eng.	71	—	—	—	1	1	—	—	—	—	—	—	3462 371
	w/383 or 440 Eng.	71	—	—	—	—	—	1	1	1	1	1	1	3462 367

CODE	PART NAME	ENG. TYPE OR CU.IN.		V 1-2	B J 1-2	L 1-2	R 1-2	W 1-2	P 1-2	D 1-2	C 1	C 2	C 3	Y 1	PART NUMBER
14-02-0	**AUTOMATIC SPEED CONTROL Cont'd.**														
14-02-69	WIRING, Instrument Panel	70		—	—	—	1	1	—	—	—	—	—	—	2983 394
		71		—	—	—	1	1	—	—	—	—	—	—	3513 098
		71		—	—	—	—	—	1	1	—	—	—	—	2983 439
				—	—	—	—	—	—	—	1	1	1	—	2983 310
14-02-85	LINK, Speed Control Lost Motion, w/318 Eng.	70		—	—	—	—	—	1	1	—	—	—	—	3418 572
	P, D, w/383 or 440 Eng.	70		—	1	—	1	1	1	1	1	1	1	1	3418 571
		71		—	—	—	1	1	1	1	1	1	1	1	3418 571
14-02-86	PIN, Lost Motion Link Clevis	70		—	1	—	1	1	1	1	1	1	1	1	2863 598
14-02-86	RETAINER RING, Link			—	—	—	—	—	1	1	1	1	1	1	6026 098
14-02-87	BRACKET, Cable Routing Brake Mtg.	70		—	1	—	1	1	—	—	—	—	—	—	3418 574
				—	—	—	—	—	1	1	1	1	1	1	2899 540
		71		—	—	—	1	1	1	1	1	1	1	1	3418 574
14-02-88	HOSE, Servo to Eng. Manifold Vacuum Tee, w/318 Eng.	70		—	1	—	1	1	—	—	—	—	—	—	2899 539
	Servo to Power Brake Vacuum Fitting	70		—	1	—	1	1	1	1	1	1	1	1	2899 539
14-02-93	CLIP, Servo to Vacuum Source Hose Routing			—	—	—	1	1	—	—	—	—	—	—	2765 032
14-06-0	**ACCELERATOR PEDAL OR TRANSMISSION ROD RETURN SPRING**														
14-06-1	SPRING														
	PEDAL RETURN														
	16 Coils, Painted Orange	70		—	1	—	1	1	—	—	—	—	—	—	3462 704
	33 Coils, Painted Red	70		1	—	1	1	1	—	—	—	—	—	—	2946 696
	34 Coils, Painted Green, EXPORT	70		1	1	1	—	—	—	—	—	—	—	—	2951 471
	33 Coils, Painted Red	70		—	1	—	—	—	1	1	1	1	1	1	3462 753
	45 Coils, Painted Gray	70		—	1	—	1	1	1	1	—	—	—	—	3462 752
	38 Coils, Painted Yellow	70		1	1	1	1	1	1	1	—	—	—	—	2946 694
	34 Coils, Painted Blue	70		1	1	1	1	1	1	1	—	—	—	—	3418 815
	22 Coils, Painted Green, w/Blue Stripe, Front	70	426	—	1	—	1	1	—	—	—	—	—	—	2863 722
	18 Coils, Painted Red, w/White Stripe, Rear	70	426	—	1	—	1	1	—	—	—	—	—	—	2946 617
	Export w/225 Eng.			1	—	1	1	1	—	—	—	—	—	—	2806 499
	34 Coils, Painted Blue			1	1	1	1	1	1	1	—	—	—	—	3462 754
	34 Coils, Painted Green	71		1	1	1	—	—	—	—	—	—	—	—	2951 471
	38 Coils, Painted Yellow	71		1	—	1	—	—	—	—	—	—	—	—	3462 750
	33 Coils, Painted Red	71		1	1	1	1	1	1	1	—	—	—	—	3462 751
	45 Coils, w/318 Eng.	71		—	1	—	1	1	1	1	—	—	—	—	3462 752
	w/340 Eng.	71		1	1	1	1	1	—	—	—	—	—	—	= 3462 735
	w/360 Eng.	71		—	—	—	—	—	1	1	1	1	1	—	= 3577 522
	33 Coils, Painted Green	71		—	1	—	1	1	1	1	1	1	1	1	3462 753
	16 Coils, Painted Orange			—	1	—	1	1	1	—	—	—	—	—	3462 755
	Front	71	426	—	1	—	1	1	—	—	—	—	—	—	3462 748
	Rear	71	426	—	1	—	1	1	—	—	—	—	—	—	3462 749
	TRANSMISSION ROD RETURN														
	75 Coils, Painted Red, w/Black Stripe	70		1	—	1	1	1	—	—	—	—	—	—	2806 463
	75 Coils, Painted Yellow, w/Red Stripe	70		—	1	—	1	1	—	—	—	—	—	—	2806 464
	75 Coils, Painted White	70		—	1	—	1	1	—	—	—	—	—	—	2951 450
	20 Coils, Painted Green	70		—	1	—	—	—	1	1	1	1	1	1	3418 817
	36 Coils, Painted Green	70		1	1	1	1	1	1	1	—	—	—	—	2946 637
	75 Coils, Painted Black, w/Red Stripe	71		1	—	1	—	—	—	—	—	—	—	—	2806 463
	19 Coils, Painted Black			—	1	—	1	1	—	—	—	—	—	—	2536 453
	36 Coils, Painted Green	71		1	1	1	1	1	1	1	1	1	1	1	2946 637

CARLINES J - Challenger, B - Barracuda, V - Valiant, L - Dart, R - Belvedere - Satellite, W - Coronet - Charger, P - Plymouth, D - Dodge, C - Chrysler, Y - Imperial

AR Indicates use as required.

Numerals in parentheses ( ) refer to notes.

# Indicates parts not listed in any previous parts book.

★ Indicates change or addition.

Printed in U.S.A. January 1972

CODE	PART NAME		ENG. TYPE OR CU.IN.	V 1-2	B J 1-2	L 1-2	R 1-2	W 1-2	P 1-2	D 1-2	C 1	C 2	C 3	Y 1	PART NUMBER
14-06-0	**ACCELERATOR PEDAL OR TRANSMISSION ROD RETURN SPRING Cont'd.**														
14-06-10	BRACKET, Pedal Return Spring	70	6	1	1	1	1	1	1	1	—	—	—	—	3418 816
	w/318 Eng.	70		1	1	1	1	1	1	1	—	—	—	—	2806 465
	w/383 Eng., w/2 bbl. Carb.	70		—	1	—	1	1	1	1	1	1	1	—	2806 445
	w/440 Eng., w/3-2 bbl. Carb.	70		—	1	—	1	1	—	—	—	—	—	—	2951 484
	w/426 Eng., w/2-4 bbl. Carb.	70		—	1	—	1	1	—	—	—	—	—	—	2780 586
	w/383 or 440 Eng., w/A/Cond.	70		—	1	—	1	1	1	1	1	1	1	1	2899 962
	w/426 Eng., Trans. Rod Return Spring	70		—	1	—	1	1	—	—	—	—	—	—	2780 587
		71	6	1	1	1	1	1	1	1	—	—	—	—	3418 816
	w/225 Eng., Export	71	6	1	—	—	—	—	—	—	—	—	—	—	2946 638
	w/318 or 360 Eng.	71		1	1	1	1	1	1	1	—	—	—	—	2806 465
	w/340 Eng. Pedal Return Spring	71		1	1	1	1	1	—	—	—	—	—	—	≈ 3462 736
	w/340 Eng. Cable Mtg.	71		1	1	1	—	—	—	—	—	—	—	—	≈ 3462 748
	w/340 Eng., 3-2 bbl. Carb.	71		—	1	—	—	—	—	—	—	—	—	—	3577 508
	w/383 Eng., w/2 bbl. Carb.	71		—	1	—	1	1	1	1	1	1	1	—	2806 445
	w/383 or 440 Eng., w/4 bbl. Carb.	71		—	1	—	1	1	1	1	1	1	1	1	3418 835
	w/440 Eng., w/3-2 bbl. Carb.	71		—	1	—	1	1	1	—	—	—	—	—	2951 484
	w/426 Eng., w/2-4 bbl. Carb.	71		—	1	—	1	1	—	—	—	—	—	—	2780 586
	w/426 Eng., Trans. Rod Return Spring	71		—	1	—	1	1	—	—	—	—	—	—	2780 587
14-07-0	**ACCELERATOR PEDAL TO ACCELERATOR SHAFT ROD SPRING**														
14-07-15	SPRING			1	1	1	—	—	1	1	1	1	1	1	2899 354
14-11-0	**ACCELERATOR SHAFT**														
14-11-1	SHAFT, w/BRACKET			1	—	1	—	—	—	—	—	—	—	—	2946 684
		70		—	1	—	—	—	—	—	—	—	—	—	2951 477
		70		—	—	—	1	1	—	—	—	—	—	—	2780 843
		71		—	1	—	1	1	—	—	—	—	—	—	3577 532
				—	—	—	—	—	1	1	1	1	1	1	2946 688
14-11-3	CLIP, B/Crank to Carb. Rod			1	1	1	1	1	1	1	—	—	—	—	2946 640
	Carb. Lever to Trans. Rod			1	—	1	1	1	—	—	—	—	—	—	2899 360
	B/Crank to Trans. Rod	71	340	1	1	1	1	1	—	—	—	—	—	—	2899 360
			426	—	1	—	1	1	—	—	—	—	—	—	2899 360
	Lever to B/Crank Rod	71	426	—	1	—	1	1	—	—	—	—	—	—	2899 361
	Rod End, w/318 & 340 Eng.	71		1	1	1	1	1	—	—	—	—	—	—	2899 361
	B/Crank to Trans. Rod		318	—	—	—	1	1	—	—	—	—	—	—	2899 360
	Carb. Lever to B/Crank Rod		426	—	1	—	1	1	—	—	—	—	—	—	2899 361
	Carb. to Cable Mtg. Brkt. Lever Rod		426	—	1	—	1	1	—	—	—	—	—	—	2899 360
	Trans. B/Crank to Trans. Rod, w/383, 426, 440, Eng.			—	1	—	1	1	—	—	—	—	—	—	2899 360
14-11-9	ROD, Eng. B/Crank to Carb.		6	1	1	1	1	1	1	1	—	—	—	—	3418 828
	Eng. B/Crank to Carb., EXPORT	71	6	1	1	1	—	—	—	—	—	—	—	—	2946 639
	ROD, Carb. Front, w/3-2 bbl. Carb.		340, 440	—	1	—	1	1	—	—	—	—	—	—	2951 486
	Rear, w/3-2 bbl. Carb.		340, 440	—	1	—	1	1	—	—	—	—	—	—	2951 487
	CLIP, Rod Front			—	1	—	1	1	—	—	—	—	—	—	6008 145
	CLIP, Rod Rear			—	1	—	1	1	—	—	—	—	—	—	6008 144
	Carb. to Trans., w/3-2 bbl. Carb., Carb. to Trans. w/340 Eng.			—	1	1	1	—	—	—	—	—	—	—	3577 529
	ENGINE BELL CRANK TO TRANSMISSION ROD														
	w/198 or 225 Eng., w/A904 Trans.		6	1	—	1	—	—	—	—	—	—	—	—	2946 663
	w/170 Eng., w/A904 Trans., EXPORT	70	6	—	1	—	—	—	—	—	—	—	—	—	3462 712

CARLINES J - Challenger, B - Barracuda, V - Valiant, L - Dart, R - Belvedere - Satellite, W - Coronet - Charger, P - Plymouth, D - Dodge, C - Chrysler, Y - Imperial

AR Indicates use as required.

Numerals in parentheses ( ) refer to notes.

# Indicates parts not listed in any previous parts book.

★ Indicates change or addition.

Printed in U.S.A. January 1972

CODE	PART NAME		ENG. TYPE OR CU.IN.	V 1-2	B J 1-2	L 1-2	R 1-2	W 1-2	P 1-2	D 1-2	C 1	C 2	C 3	Y 1	PART NUMBER
14-11-0	**ACCELERATOR SHAFT Cont'd.**														
14-11-9	ROD Cont'd.														
	w/225 Eng., w/A904 Trans., EXPORT	71		1	—	1	—	—	—	—	—	—	—	—	2946 661
	w/225 Eng., w/A904 Trans., EXPORT	71		—	1	—	—	—	—	—	—	—	—	—	3462 712
	w/225 Eng., w/A904 Trans.	70	6	—	1	—	—	—	—	—	—	—	—	—	3418 814
	w/198 or 225 Eng., w/A904 Trans.	71		—	1	—	1	1	—	—	—	—	—	—	3418 814
	w/225 Eng., w/A904 Trans.	70	6	—	—	—	1	1	—	—	—	—	—	—	2946 665
	w/225 Eng., w/A727 Trans.		6	—	—	—	1	1	—	—	—	—	—	—	2946 667
	w/225 Eng., w/A904 Trans.		6	—	—	—	—	—	1	1	—	—	—	—	2946 669
	w/318 Eng., w/A904 Trans.	71	8	1	—	1	—	—	—	—	—	—	—	—	2806 467
	TRANSMISSION BELL CRANK TO TRANSMISSION ROD														
	w/318 Eng., w/A727 Trans.	70	8	—	—	—	1	1	—	—	—	—	—	—	2946 624
	w/318 Eng., w/A904 Trans.	70	8	1	—	1	1	1	—	—	—	—	—	—	2806 467
	w/340 Eng. w/Auto.		8	1	1	1	1	1	—	—	—	—	—	—	2863 719
	w/383 Eng., w/727 Trans., w/2 or 4 bbl. Carb.	70	8	—	1	—	1	1	—	—	—	—	—	—	2899 330
	w/440 Eng., w/A727 Trans.	70	8	—	1	—	1	1	—	—	—	—	—	—	2899 330
	w/426 Eng.		8	—	1	—	1	1	—	—	—	—	—	—	2899 330
	CARBURETOR TO TRANSMISSION ROD														
	w/318 Eng., w/A904 Trans.		8	—	1	—	1	1	—	—	—	—	—	—	3462 760
	w/383 Eng., w/2 bbl. Carb., w/A727 Trans.		8	—	1	—	1	1	—	—	—	—	—	—	3462 760
	w/318 Eng., w/727 or 904 Trans.		8	—	—	—	—	—	1	1	—	—	—	—	3462 759
	w/383 Eng., w/2bbl. Carb., w/A727 Trans.		8	—	—	—	—	—	1	1	1	1	1	—	3462 759
	w/383 Eng., w/4 bbl. Carb., w/A727 Trans.		8	—	—	—	—	—	1	1	1	1	1	—	3462 763
	CLIP, Rod Carb. to Trans. (Order w/3462 763)														6029 009
	w/440 Eng. w/Auto. Trans.	71	8	—	1	—	1	1	—	—	—	—	—	—	= 3462 758
	w/360 Eng.	71	8	—	—	—	—	—	1	1	1	1	1	—	= 3462 764
	w/440 Eng., w/3-2 bbl. Carb., w/A727 Trans.			—	1	—	1	1	—	—	—	—	—	—	3577 529
	w/440 Eng., Sta. Wgn. and Y, All		8	—	—	—	—	—	—	—	—	—	1	1	3462 761
	CARBURETOR TO CABLE MOUNTING BRACKET LEVER ROD														
	w/318 Eng., w/A904 Trans.		8	1	—	1	—	—	—	—	—	—	—	—	2806 459
	w/318 Eng., w/A727, A904 Trans.		8	—	—	—	1	1	—	—	—	—	—	—	2806 459
	w/383 Eng., w/2 bbl. Carb., w/A727 Trans.		8	—	—	—	1	1	—	—	—	—	—	—	2899 356
	w/383 or 440 Eng., w/4 bbl. Carb., w/A727 Trans.		8	—	1	—	1	1	—	—	—	—	—	—	2899 358
	w/426 Eng., w/A727 Trans.		8	—	1	—	1	1	—	—	—	—	—	—	2780 599
	w/440 Eng., w/3-2 bbl. Carb., w/A727 Trans.		8	—	1	—	1	1	—	—	—	—	—	—	2951 493
	CABLE MOUNTING BRACKET TO TRANSMISSION BELL CRANK														
	w/318 Eng., w/A904 Trans.		8	1	—	1	—	—	—	—	—	—	—	—	2780 838
	w/318 Eng., w/A727 Trans.		8	—	—	—	1	1	—	—	—	—	—	—	2863 744
	w/318 Eng., w/A904 Trans.		8	—	—	—	1	1	—	—	—	—	—	—	2843 740
	w/340 Eng., w/Auto. Trans.		8	1	1	1	1	1	—	—	—	—	—	—	= 3462 738
	w/383 Eng., w/4 bbl. Carb., w/A727 Trans.		8	—	1	—	—	—	—	—	—	—	—	—	2843 797
	w/383 Eng., w/2 or 4 bbl. Carb., w/A727 Trans.		8	—	—	—	1	1	—	—	—	—	—	—	2843 797
	w/426 Eng., All Trans.		8	—	1	—	1	1	—	—	—	—	—	—	2899 332

CODE	PART NAME		ENG. TYPE OR CU.IN.	V 1-2	B J 1-2	L 1-2	R 1-2	W 1-2	P 1-2	D 1-2	C 1	C 2	C 3	Y 1	PART NUMBER
14-11-0	**ACCELERATOR SHAFT Cont'd.**														
14-11-9	ROD Cont'd.														
	w/440 Eng., w/4 bbl. Carb., w/Auto. Trans.		8	—	1	—	1	1	—	—	—	—	—	—	2843 793
	w/440 Eng., w/3-2 bbl. Carb., w/Auto. Trans.		8	—	1	—	1	1	—	—	—	—	—	—	2951 495
14-11-18	LINK, Eng. B/Crank to Carb. Rod Adjusting		6	1	1	1	1	1	1	1	—	—	—	—	2946 648
	Carb. to Cable Mtg. Brkt. Lever Rod Adjusting, Except 426 Eng.		8	1	1	1	1	1	—	—	—	—	—	—	2806 442
	Carb. to Cable Mtg. Brkt. Lever Rod Adjusting, w/318 or 340 Eng.	71		1	1	1	1	1	—	—	—	—	—	—	2843 776
	Carb. to Cable Mtg. Brkt. Lever Rod Adjusting, w/426 Eng.		8	—	1	—	1	1	—	—	—	—	—	—	2468 744
	Carb. to Trans. Rod Adjusting, Except 426 Eng.	70	8	—	1	—	—	—	1	1	1	1	1	1	3418 809
		71		—	1	—	1	1	1	1	1	1	1	1	= 3512 695
14-11-20	BRACKET, Accelerator Shaft	70		—	1	—	—	—	—	—	—	—	—	—	2951 477
		71		—	1	—	1	1	—	—	—	—	—	—	2951 477
	Solenoid Mtg. w/426			—	1	—	1	1	—	—	—	—	—	—	3418 804
14-11-29	BUSHING, Shaft Brkt.	70		—	2	—	—	—	2	2	2	2	2	2	2899 351
		71		—	2	—	2	2	2	2	2	2	2	2	2899 351
14-11-31	PLUG, Shaft			1	1	1	1	1	1	1	1	1	1	1	3418 847
14-11-39	ROLLER, Shaft	70		—	—	—	1	1	—	—	—	—	—	—	2780 808
	CLIP	70		—	—	—	1	1	—	—	—	—	—	—	6023 285
	WASHER	70		—	—	—	1	1	—	—	—	—	—	—	120 392
14-11-40	STUD, Carb. Lever, w/3-2 bbl. Carb.		440	—	1	—	1	1	1	—	—	—	—	—	2951 485
	w/340 Eng.	71		1	1	1	1	1	1	—	—	—	—	—	2951 485
	CLIP		440	—	1	—	1	1	1	—	—	—	—	—	6023 285
	NUT		440	—	1	—	1	1	1	—	—	—	—	—	6028 699
	WASHER		440	—	1	—	1	1	1	—	—	—	—	—	6025 050
	STUD, Carb. Lever		426	—	1	—	1	1	—	—	—	—	—	—	3462 701
	CLIP		426	—	2	—	2	2	—	—	—	—	—	—	6023 285
	NUT		426	—	1	—	1	1	—	—	—	—	—	—	6028 699
	WASHER		426	—	1	—	1	1	—	—	—	—	—	—	6025 050
	STUD, CARB. Lever, w/Man. Trans., Except 426 Eng.		8	1	1	1	1	1	1	1	1	1	1	—	3418 899
	STUD, Carb. Lever, w/Auto Trans., Except 426 Eng.		8	1	1	1	1	1	1	1	1	1	1	1	3418 900
	CLIP		8	1	1	1	1	1	1	1	1	1	1	1	6023 285
	NUT		8	1	1	1	1	1	1	1	1	1	1	1	6028 699
	WASHER		8	1	1	1	1	1	1	1	1	1	1	1	6025 050
14-11-48	SEAL, Shaft Bracket			1	—	1	—	—	—	—	—	—	—	—	2806 408
				—	AR	—	—	—	—	—	—	—	—	—	1242 974
		70		—	—	—	1	1	—	—	—	—	—	—	2780 849
				—	—	—	—	—	1	1	1	1	1	1	2899 353
14-11-55	STABILIZER, Carb. to Trans. Rod			—	1	—	1	1	1	1	1	1	1	1	3418 807
14-13-0	**THROTTLE LINKAGE BALL STUD**														
14-13-1	BALL STUD, Carb. Lever		6	1	—	1	1	1	—	—	—	—	—	—	2268 420
14-13-3	CLIP, Throttle Linkage Rod			AR	AR	AR	AR	AR	—	—	—	—	—	—	2121 571
14-13-5	RETAINER, Throttle Linkage B/Joint			1	1	1	1	1	—	—	—	—	—	—	1945 197
	Carb. to Trans. Rod		8	—	1	—	1	1	1	1	1	1	1	1	3418 808
14-14-0	**THROTTLE CONTROL BELL CRANK**														
14-14-1	BELL CRANK, w/318 Eng., w/A904 Trans.		8	1	—	1	—	—	—	—	—	—	—	—	2806 466
	w/318 Eng., w/A727 or A904 Trans.	70	8	—	—	—	1	1	—	—	—	—	—	—	2806 466
	w/340 Eng.			1	1	1	—	—	—	—	—	—	—	—	2863 718
	w/383 Eng., w/4 bbl. Carb., w/A727 Trans.		8	—	1	—	—	—	—	—	—	—	—	—	2951 496

CARLINES: J - Challenger, B - Barracuda, V - Valiant, L - Dart, R - Belvedere - Satellite, W - Coronet - Charger, P - Plymouth, D - Dodge, C - Chrysler, Y - Imperial

AR Indicates use as required.

Numerals in parentheses ( ) refer to notes.

# Indicates parts not listed in any previous parts book.

★ Indicates change or addition.

Printed in U.S.A. January 1972

CODE	PART NAME		ENG. TYPE OR CU.IN.	V 1-2	B J 1-2	L 1-2	R 1-2	W 1-2	P 1-2	D 1-2	C 1	C 2	C 3	Y 1	PART NUMBER
14-14-0	**THROTTLE CONTROL BELL CRANK Cont'd.**														
14-14-1	BELL CRANK Cont'd.														
	w/440 Eng., w/3-2 bbl. Carb., w/Auto. Trans.		8	—	1	—	—	—	—	—	—	—	—	—	2951 496
	w/383 or 440 Eng., w/A727 Trans.		8	—	—	—	1	1	—	—	—	—	—	—	2843 794
	w/426 Eng., w/A727 Trans.	70	8	—	—	—	1	1	—	—	—	—	—	—	2536 266
	w/426 Eng.	71		—	1	—	1	1	—	—	—	—	—	—	2536 266
14-14-12	BRACKET, w/B/Crank	Partial	6	1	1	1	1	1	1	1	—	—	—	—	3418 843
		Complete	6	1	1	1	1	1	1	1	—	—	—	—	3418 842
14-14-20	STUD, Trans. B/Crank	70	8	1	1	1	1	1	—	—	—	—	—	—	2658 286
	B/Crank	71		1	1	1	1	1	—	—	—	—	—	—	≠3462 745
	CLIP	70	8	1	1	1	1	1	—	—	—	—	—	—	6027 983
	WASHER	70	8	1	1	1	1	1	—	—	—	—	—	—	120 394
14-14-26	BLOCK, Eng. B/Crank to Trans. Rod Adjusting Link Retainer		6	1	1	1	1	1	1	1	—	—	—	—	2899 316
14-15-0	**CARBURETOR INTERCONNECTING ROD**														
14-15-3	ROD, w/426 Eng.		8	—	1	—	1	1	—	—	—	—	—	—	1825 924
	NUT		8	—	1	—	1	1	—	—	—	—	—	—	120 367
14-15-6	SWIVEL, Front		8	—	1	—	1	1	—	—	—	—	—	—	2899 396
	Rear		8	—	1	—	1	1	—	—	—	—	—	—	3418 806
	NUT		8	—	1	—	1	1	—	—	—	—	—	—	120 375
14-15-10	ROD END, Front		8	—	1	—	1	1	—	—	—	—	—	—	1634 876
	Rear		8	—	1	—	1	1	—	—	—	—	—	—	3418 848
14-24-0	**FAST IDLE CABLE**														
14-24-1	CABLE	71		—	—	—	1	1	—	—	—	—	—	—	3577 516
		70		—	—	—	1	1	—	—	—	—	—	—	2899 393
				—	—	—	—	—	1	1	—	—	—	—	2946 621
	NUT			—	—	—	1	1	1	1	—	—	—	—	124 930
	WASHER			—	—	—	1	1	1	1	—	—	—	—	138 498
14-24-4	COLLAR, Cable			—	—	—	1	1	1	1	—	—	—	—	2536 847
14-24-6	BRACKET, Cable Mtg.	71		—	—	—	1	1	—	—	—	—	—	—	3577 518
		70		—	—	—	1	1	—	—	—	—	—	—	2899 395
				—	—	—	—	—	1	1	—	—	—	—	2946 619
	SCREW			—	—	—	2	2	2	2	—	—	—	—	9414 598
14-24-13	CABLE Assy. & Stop	70		—	1	—	1	1	1	1	1	1	—	—	≠3549 321
14-24-17	LEVER, Fast Idle Adjusting			—	—	—	—	—	1	1	—	—	—	—	2946 620
				—	—	—	1	1	—	—	—	—	—	—	3577 517
14-25-0	**THROTTLE CONTROL CABLE**														
14-25-5	CLIP, Cable Mtg., on Mtg. Brkt.			1	1	1	1	1	1	1	1	1	1	1	2402 210
	at Fire Wall			—	1	—	1	1	—	—	—	—	—	—	3462 725
	NUT			1	1	1	1	1	1	1	1	1	1	1	120 375
14-25-11	CABLE, w/198 or 225 Eng.		6	1	—	1	—	—	—	—	—	—	—	—	2899 335
	w/225 Eng.		6	—	1	—	1	1	—	—	—	—	—	—	3418 836
	w/225 Eng.		6	—	—	—	1	1	—	—	—	—	—	—	2843 748
	w/225 Eng., EXPORT		6	—	—	—	1	1	—	—	—	—	—	—	2843 771
	w/225 Eng.		6	—	—	—	—	—	1	1	—	—	—	—	2946 700
	w/318, 340 Eng.		8	1	—	1	—	—	—	—	—	—	—	—	2899 336
	w/225 & 318 Eng.	71		1	—	1	—	—	—	—	—	—	—	—	2899 336
	w/318 Eng.	70	8	—	1	—	—	—	—	—	—	—	—	—	3418 837
	w/318 Eng., 225	71		—	1	—	1	1	—	—	—	—	—	—	3418 837
	w/318 Eng.	70	8	—	—	—	1	1	—	—	—	—	—	—	2843 749
	w/318 Eng.		8	—	—	—	—	—	1	1	—	—	—	—	2951 455
	w/340 Eng.			—	1	—	—	—	—	—	—	—	—	—	3462 719
	w/340 or 440 Eng., w/6 Pack			—	1	—	—	—	—	—	—	—	—	—	3418 840
	w/340 Eng.	71		1	—	1	—	—	—	—	—	—	—	—	3577 523
	w/340 Eng.	71		—	1	—	1	1	—	—	—	—	—	—	3577 525

CARLINES: J - Challenger, B - Barracuda, V - Valiant, L - Dart, R - Belvedere - Satellite, W - Coronet - Charger, P - Plymouth, D - Dodge, C - Chrysler, Y - Imperial

AR Indicates use as required.

Numerals in parentheses ( ) refer to notes.

≠ Indicates parts not listed in any previous parts book.

★ Indicates change or addition.

Printed in U.S.A. January 1972

CODE	PART NAME		ENG. TYPE OR CU.IN.	V 1-2	B J 1-2	L 1-2	R 1-2	W 1-2	P 1-2	D 1-2	C 1	C 2	C 3	Y 1	PART NUMBER
14-25-0	**THROTTLE CONTROL CABLE Cont'd.**														
14-25-11	CABLE Cont'd.														
	w/383 Eng., w/2 or 4 bbl. Carb.	70	8	—	1	—	—	—	—	—	—	—	—	—	3418 839
	w/383 or 440 Eng.			—	1	—	1	1	—	—	—	—	—	—	3418 839
	w/440 Eng., w/3-2 bbl. Carb.	70	8	—	1	—	—	—	—	—	—	—	—	—	3418 840
	w/426 Eng., w/2-4 bbl. Carb.	70	8	—	1	—	—	—	—	—	—	—	—	—	3418 841
	w/383 Eng., w/2 bbl. Carb.	70	8	—	—	—	1	1	—	—	—	—	—	—	2899 338
	w/383 or 440 Eng., w/4 bbl. Carb.	70	8	—	—	—	1	1	—	—	—	—	—	—	2899 339
	w/440 Eng., w/3-2 bbl. Carb.	70	8	—	—	—	1	1	—	—	—	—	—	—	3418 846
	w/340 or 440 Eng., w/3-2 bbl. Carb.	71		—	1	—	1	1	—	—	—	—	—	—	3418 840
	w/360 Eng.	71		—	—	—	—	—	1	1	—	—	—	—	3577 524
	w/426 Eng., w/2-4 bbl. Carb.	70	8	—	—	—	1	1	—	—	—	—	—	—	2843 751
	w/426 Eng., w/2-4 bbl. Carb.	71		—	1	—	1	1	—	—	—	—	—	—	3418 841
	w/383 Eng., w/2 or 4 Bbl. Carb.		8	—	—	—	—	—	1	1	1	1	1	—	2951 459
	w/440 Eng., w/4 bbl. Carb.		8	—	—	—	—	—	1	1	1	1	1	1	2951 459
14-25-12	PIN, Cable		6	1	1	1	1	1	1	1	—	—	—	—	2264 706
	WASHER, Throttle Ctrl. Cable			1	—	1	1	1	1	1	1	1	1	1	1551 030
14-25-13	CLIP, Cable Retainer			1	1	1	1	1	1	1	1	1	1	1	6027 155
14-25-17	INSULATOR, Cable Sound			1	—	1	1	1	1	1	1	1	1	1	2465 486
14-26-0	**THROTTLE CONTROL CABLE MOUNTING BRACKET**														
14-26-6	BRACKET, w/318 Eng.			1	—	1	—	—	—	—	—	—	—	—	3462 770
	w/318 Eng., w/Man. Trans.	70		—	—	—	1	1	—	—	—	—	—	—	3418 829
	w/318 Eng., w/Man. or Auto. Trans.	71		—	1	—	1	1	1	1	—	—	—	—	3418 829
	w/318 Eng., w/Auto. Trans.	70		—	—	—	1	1	—	—	—	—	—	—	2780 832
	w/318 Eng., w/Man. or Auto. Trans.	70		—	1	—	—	—	1	1	—	—	—	—	3418 829
	w/340 Eng., All Trans.			1	1	1	1	1	—	—	—	—	—	—	#3462 741
	w/360 Eng., All Trans.			—	—	—	—	—	1	1	1	—	—	—	3462 766
	w/340 Eng., w/3-2 bbl. Carb.	71		—	1	—	—	—	—	—	—	—	—	—	3577 506
	w/383 Eng., w/2 bbl. Carb., w/Man. or Auto. Trans.			—	1	—	1	1	1	1	1	1	1	—	3418 810
	w/383 Eng., w/2 bbl. Carb., w/Auto. Trans.	70		—	—	—	1	1	—	—	—	—	—	—	3418 820
	w/383 Eng., w/4 bbl. Carb., w/Man. Trans.	70		—	1	—	1	1	—	—	—	—	—	—	2863 704
	w/383 Eng., w/4 bbl. Carb., w/Auto. Trans.	70		—	1	—	1	1	—	—	—	—	—	—	2863 703
	w/440 Eng., w, 4 bbl. Carb., w/Man. or Auto. Trans.	70		—	1	—	1	1	—	—	—	—	—	—	2780 876
	w/440 Eng., w/4 bbl. Carb., w/Auto. Trans.	71		—	—	—	1	1	1	1	1	1	1	1	3418 826
	w/440 Eng., w/3-2 bbl. Carb.	71		—	1	—	1	1	—	—	—	—	—	—	3462 705
	w/440 Eng., w/3-2 bbl. Carb., w/Auto. Trans.			—	1	—	1	1	—	—	—	—	—	—	2951 489
	w/426 Eng., w/Man. or Auto. Trans.			—	1	—	1	1	—	—	—	—	—	—	3577 514
	Cable Mtg. w/426 Eng.			—	1	—	1	1	—	—	—	—	—	—	2780 589
	w/440 Eng., w/3-2 bbl. Carb., w/Auto. Trans.	70		—	—	—	—	—	1	—	—	—	—	—	3462 705
	w/383 Eng., w/4 bbl. Carb., w/Auto. Trans.			—	1	—	1	1	1	1	1	1	1	—	3418 824
	w/440 Eng., w/4 bbl. Carb., w/Auto. Trans.	70		—	—	—	—	—	1	1	1	1	1	1	3418 826
14-26-11	LEVER, Cable Mtg. Brkt., w/318 Eng.	70		1	—	1	—	—	—	—	—	—	—	—	2780 835
	w/318 or 340 Eng.	71		1	1	1	1	1	—	—	—	—	—	—	2780 835
	w/318, 383, 440, Eng.			—	1	—	1	1	—	—	—	—	—	—	2465 413
	w/426 Eng.			—	1	—	1	1	—	—	—	—	—	—	2899 334

CARLINES J - Challenger, B - Barracuda, V - Valiant, L - Dart, R - Belvedere - Satellite, W - Coronet - Charger, P - Plymouth, D - Dodge, C - Chrysler, I - Imperial

AR Indicates use as required.

Numerals in parentheses ( ) refer to notes.

# Indicates parts not listed in any previous parts book.

★ Indicates change or addition.

Printed in U.S.A. January 1972

CODE	PART NAME		ENG. TYPE OR CU.IN.	V 1-2	B J 1-2	L 1-2	R 1-2	W 1-2	P 1-2	D 1-2	C 1	C 2	C 3	Y 1	PART NUMBER
14-29-0	**CARBURETOR AIR CLEANER**														
14-29-2	AIR CLEANER, Dry Type, Domestic		318	1	1	1	1	1	1	1	—	—	—	—	2951 675
	Dry Type, Export		318	1	—	1	—	—	—	—	—	—	—	—	2951 391
	Oil Bath, Export		318	—	—	—	1	1	1	1	—	—	—	—	2946 104
	Oil Bath, Export		225	1	—	1	1	1	1	—	—	—	—	—	2658 375
	440 Eng. w/F/Air			—	—	—	1	1	—	—	—	—	—	—	3418 722
	383 Eng. w/F/Air			—	—	—	1	1	—	—	—	—	—	—	3418 723
14-29-4	GASKET, A/Cleaner Cover, w/198														
	or 225 Eng.		6	1	1	1	1	1	1	1	—	—	—	—	2951 790
	w/318 Eng.		8	1	1	1	1	1	1	1	—	—	—	—	2402 129
	w/383 or 440 Eng.	70	8	—	1	—	1	1	1	1	1	1	1	1	2536 016
	w/340, 360, 383, 440 Eng.	71		1	1	1	1	1	1	1	1	1	1	1	2536 016
14-29-5	GASKET, A/Cleaner to Carb.		6	1	1	1	1	1	1	1	—	—	—	—	1947 797
	w/318 or 340 Eng.	70	8	1	1	1	1	1	1	1	—	—	—	—	2536 626
	w/318 Eng.	71		1	1	1	1	1	1	1	—	—	—	—	2536 626
	w/360, 383 Eng., w/2 bbl. Carb.	71		—	1	—	1	1	1	1	1	1	1	—	1821 170
	w/383 Eng., w/2 bbl. Carb.	70	8	—	1	—	1	1	1	1	1	1	1	—	1821 170
	w/383 or 440 Eng. w/4 bbl. Carb.	70	8	—	1	—	1	1	1	1	1	1	1	1	2843 071
	w/340, 383, 440 Eng., w/4 bbl. Carb.	71		1	1	1	1	1	1	1	1	1	1	1	2843 071
	w/426 Eng.		8	—	1	—	1	1	—	—	—	—	—	—	1821 170
	w/440 Eng., w/3-2 bbl. Carb.	70	8	—	1	—	1	1	1	—	—	—	—	1	3462 205
	w/340 or 440 Eng., w/3-2 bbl. Carb.	71		—	1	—	1	1	1	—	—	—	—	—	3462 205
14-29-6	FILTER		6	1	1	1	1	1	1	1	—	—	—	—	2206 376
	w/198, 225 Eng., Export		6	—	—	1	—	—	—	—	—	—	—	—	1851 493
	w/318 Eng.		8	1	1	1	1	1	1	1	—	—	—	—	1739 547
	w/340 Eng. w/6 bbl. Carb.			—	1	—	1	1	—	—	—	—	—	—	2946 186
	w/4 bbl. Carb.			—	1	—	1	1	—	—	—	—	—	—	2863 349
	w/383 & 360 Eng.			—	1	—	1	1	1	1	1	1	1	—	2863 349
	w/426 Eng.			—	1	—	1	1	—	—	—	—	—	—	2946 186
	w/440 Eng. w/S/Snorkel			—	—	—	—	—	1	1	1	1	1	1	2402 677
	w/D/Snorkel			—	—	—	1	1	1	1	1	1	1	1	2863 349
	w/6 bbl. Carb.			—	1	—	1	1	—	—	—	—	—	—	2946 186
14-29-7	COVER, Air Cleaner, Domestic		6	1	1	1	1	1	1	1	—	—	—	—	2951 789
	Export		6	1	1	—	1	1	1	—	—	—	—	—	2463 932
	Export	71	6	—	—	1	—	—	—	—	—	—	—	—	2843 088
	w/340, 383 Eng., w/2 or 4 bbl. Carb.	70	8	1	1	1	1	1	1	1	—	—	—	—	2951 757
	w/340, 360, 383, 440 Eng., w/2 or 4 bbl. Carb.	71		1	1	1	1	1	1	1	1	1	1	1	2951 757
	w/426 Eng.		8	—	1	-	1	1	—	—	—	—	—	—	2946 188
	w/440 Eng., w/3-2 bbl. Carb.	70	8	—	1	—	1	1	—	—	—	—	—	—	2946 393
	w/340 or 440 Eng., w/3-2 bbl. Carb.	71		—	1	—	1	1	1	—	—	—	—	—	2946 393
	w/340, 383, 440 Eng., w/4 bbl. Carb., w/Fresh Air	70	8	1	—	1	1	1	—	—	—	—	—	—	3418 707
	w/3-2 Bbl. Carb., w/340 or 440 Eng.	70		—	1	—	1	1	1	—	—	—	—	—	2946 393
	w/340, 383, 440 Eng., w/4 bbl. Carb.	71		—	1	—	1	1	—	—	—	—	—	—	3418 707
	w/440 Eng.	70	8	—	—	—	—	—	—	—	1	1	1	1	2951 757
	Chrome w/426 Eng., Decal			—	1	—	1	1	—	—	—	—	—	—	2658 852
	w/Fiber Glass Hood, J	71		—	1	—	—	—	—	—	—	—	—	—	3577 396
	w/340 or 440 Eng., w/3-2 bbl. Carb., w/Fiber Glass Hood	71		—	1	—	—	—	—	—	—	—	—	—	3577 395
14-29-8	NAMEPLATE, A/Cleaner, 383 Road Runner			—	—	—	1	—	—	—	—	—	—	—	2946 174
	383 - 4 Barrel	70		—	1	—	1	1	1	1	1	1	1	—	2863 346
	440 Super-Commando, w/Flags			—	1	—	1	—	1	—	—	—	—	—	2843 768

CARLINES J - Challenger V - Valiant R - Belvedere - Satellite P - Plymouth C - Chrysler
B - Barracuda L - Dart W - Coronet - Charger D - Dodge Y - Imperial

AR Indicates use as required. Numerals in parentheses ( ) refer to notes.

# Indicates parts not listed in any previous parts book. ★ Indicates change or addition.

Printed in U.S.A.
January 1972

14-29-0 CARBURETOR AIR CLEANER Cont'd.

CODE	PART NAME		ENG. TYPE OR CU.IN.	V 1-2	B J 1-2	L 1-2	R 1-2	W 1-2	P 1-2	D 1-2	C 1	C 2	C 3	Y 1	PART NUMBER
14-29-8	NAME PLATE Cont'd.														
	440 - Magnum			—	1	—	—	1	—	1	—	—	—	—	2843 767
	Imperial	70		—	—	—	—	—	—	—	—	—	—	1	2843 769
	340 - 4 Barrel			1	1	1	1	1	—	—	—	—	—	—	2863 339
	383 Super Commando														2863 343
	Chrysler 440 TNT			—	—	—	—	—	—	—	1	1	1	—	2899 091
	383 Magnum			—	1	—	1	1	1	1	1	1	1	—	2951 767
	DECAL, A/Cleaner Instruction, 383, 426, 440, Eng.		8	—	1	—	1	1	1	—	—	—	—	—	2951 355
14-29-9	RETAINER, B	70	426	—	1	—	—	—	—	—	—	—	—	—	3418 652
	w/Non-Functional Air Scoop, J	70	426	—	1	—	—	1	—	—	—	—	—	—	3418 715
	w/Functional Air Scoop	70	426	—	—	—	1	1	—	—	—	—	—	—	3418 686
	w/Non-Functional Air Scoop, w/3-2 bbl. Carb.	70	440	—	1	—	1	1	1	—	—	—	—	—	3418 717
	w/Functional Air Scoop, w/3-2 bbl. Carb., B	70	440	—	1	—	—	—	—	—	—	—	—	—	2946 394
	w/Functional Air Scoop, w/3-2 bbl. Carb.	70	440	—	—	—	1	—	—	—	—	—	—	—	2946 389
	w/3-2 Bbl. Carb., w/340 or 440 Eng.	70		—	1	—	1	1	1	—	—	—	—	—	3418 717
	4 Bbl. Carb. w/F/Air	70		—	1	—	1	1	—	—	—	—	—	—	3512 765
	w/E.C.S.	71	340	—	1	—	—	—	—	—	—	—	—	—	3512 764
	w/3-2 bbl. Carb., w/340 or 440 Eng., w/Fiber Glass Hood, J	71		—	1	—	—	—	—	—	—	—	—	—	3577 385
	w/4 bbl. Carb., w/Fresh Air	71	383	—	1	—	—	—	—	—	—	—	—	—	3462 485
	w/2-4 bbl. Carb., w/o Fiber Glass Hood	71	426	—	1	—	—	—	—	—	—	—	—	—	3577 354
	w/2-4 bbl. Carb., w/Non-Functional, Air Scoop, J		426	—	1	—	—	—	—	—	—	—	—	—	3577 464
	w/2-4 bbl. Carb., w/Fiber Glass Hood, J	71	426	—	1	—	—	—	—	—	—	—	—	—	3577 394
	w/4 bbl. Carb., w/o Fiber Glass Hood	71	440	—	1	—	—	—	—	—	—	—	—	—	3462 484
	w/3-2 Carb., w/o Fiber Glass Hood, w/Functional Air Scoop	71	440	—	1	—	—	—	—	—	—	—	—	—	2946 394
	w/2-4 bbl. Carb.	71	426	—	—	—	1	1	—	—	—	—	—	—	3577 357
	w/4 bbl. Carb., w/Fresh Air	71	440	—	—	—	1	1	—	—	—	—	—		3418 709
	w/3-2 bbl. Carb., w/Functional Air Scoop	71	440	—	—	—	1	1	—	—	—	—	—	—	2946 389
	w/3-2 bbl. Carb., w/Non-Functional Air Scoop, w/340 or 440 Eng., J	71		—	1	—	—	—	—	—	—	—	—	—	3418 717
	w/3-2 bbl. Carb., w/Non-Functional Air Scoop, B	71	440	—	1	—	1	1	1	—	—	—	—	—	3418 717
14-29-11	CAP, A/Cleaner Nipple, w/225 or 318 Eng. Export			1	—	1	1	1	—	—	—	—	—	—	2465 764
14-29-12	SUPPORT, Filter Retainer, w/Fresh Air	71	383	—	1	—	—	—	—	—	—	—	—	—	3512 788
		71	440	—	1	—	—	—	—	—	—	—	—	—	3512 789
14-29-15	CLAMP, w/198 or 225 Eng.			1	1	1	1	1	1	1	—	—	—	—	2951 394
	w/318 Eng.			1	1	1	1	1	1	1	—	—	—	—	2951 393
	w/198 or 225 Eng., Export			1	—	1	—	1	—	—	—	—	—	—	2264 116
	w/318 Eng., Export	70		1	1	1	1	1	1	1	—	—	—	—	2658 387
14-29-19	BODY, A/Cleaner, w/198 or 225 Eng.	71		1	1	1	1	1	1	1	—	—	—	—	3512 796
	NOTE: For Field Instal. Pwr. Br. Booster 6 cyl., use A/Clnr. Body 3614 932 Val. & Dart all models.														
	Body w/Sensor		6	1	1	1	1	1	1	1	—	—	—	—	2951 786
	w/383 Eng., w/2 bbl. Carb., Export	70		—	1	—	1	1	1	1	1	1	1	—	2951 390
	w/383 Eng., w/2 bbl. Carb.	70		—	1	—	1	1	1	1	1	1	1	—	2951 761
	w/383 or 440 Eng., w/4 bbl. Carb.	70		—	1	—	1	1	1	1	—	—	—	—	2951 765
	w/440 Eng., Except Sta. Wgn.	70		—	—	—	—	—	—	—	1	1	1	1	2951 755

CARLINES: J - Challenger, B - Barracuda, V - Valiant, L - Dart, R - Belvedere - Satellite, W - Coronet - Charger, P - Plymouth, D - Dodge, C - Chrysler, Y - Imperial

AR Indicates use as required.

Numerals in parentheses ( ) refer to notes.

# Indicates parts not listed in any previous parts book.

★ Indicates change or addition.

Printed in U.S.A. January 1972

CODE	PART NAME	ENG. TYPE OR CU.IN.	V 1-2	B J 1-2	L 1-2	R 1-2	W 1-2	P 1-2	D 1-2	C 1	C 2	C 3	Y 1	PART NUMBER
14-29-0	**CARBURETOR AIR CLEANER Cont'd.**													
14-29-19	BODY Cont'd.													
	w/383 or 440 Eng., w/4 bbl. Carb.													
	Sta. Wgn. 70		—	—	—	—	—	—	—	—	—	1	—	2951 765
	w/198 or 225 Eng. (w/out													
	Sensor) 71		1	1	1	1	1	1	1	—	—	—	—	3512 774
	w/340 Eng.,		1	1	1	1	1	—	—	—	—	—	—	3462 467
	w/340 Eng. w/F/Glass Hood J		—	1	—	—	—	—	—	—	—	—	—	3577 457
	w/383 Eng. w/F/Glass Hood J		—	1	—	—	—	—	—	—	—	—	—	3577 458
	w/360, 383 Eng., w/2 bbl. Carb. 71		—	1	—	1	1	1	1	1	1	1	—	3577 470
	w/383 Eng., w/2 bbl. Carb.,													
	Export 71		—	1	—	1	1	1	1	1	1	1	—	3512 792
	w/383 or 440 Eng., w/4 bbl.													
	Carb. 71		—	1	—	1	1	1	1	1	1	1	—	3577 467
	w/440 Eng., w/4 bbl. Carb., w/Std.													
	Cam 71		—	—	—	—	—	—	—	1	1	1	1	3577 376
14-29-24	HOSE, Filter Retainer Drain, w/Fresh													
	Air, w/383 or 440 Eng.		—	—	—	AR	AR	—	—	—	—	—	—	1671 650
	Crankcase Vent to													
	A/Clnr. 9" lg. Export	6	1	—	1	—	1	—	—	—	—	—	—	2825 417
	HOSE, Temp. Sensor or Vacuum Tee		AR	AR	AR	AR	AR	AR	AR	AR	AR	AR	AR	2951 800
14-29-26	CLIP, A/Cleaner to Exhaust Manifold													
	Heat Tube	426	—	1	—	1	1	—	—	—	—	—	—	2780 653
	Vacuum Hose Routing		—	1	—	1	1	1	1	1	1	1	1	2951 371
14-29-28	PLATE, Filter Support, w/225 & 198 Eng.,													
	Export	6	1	—	1	—	1	—	—	—	—	—	—	2264 115
14-29-33	STUD, A/Cleaner to Carb.	8	1	1	1	1	1	1	1	1	1	1	1	1826 286
14-29-34	DIAPHRAGM, A/Cleaner Snorkel													
	Vacuum		1	1	1	1	1	1	1	1	1	1	1	2951 781
14-29-38	CONNECTOR, Carb. Air Heater to													
	A/Cleaner Snorkel	6&8	1	1	1	1	1	1	1	1	1	1	1	3462 462
	w/6 cyl. Eng., w/Pwr. Brakes 71	6	1	—	1	—	—	—	—	—	—	—	—	= 3577 808
	w/6 cyl. Eng., w/Pwr. Brakes													
	w/Std. Trans. 71	6	—	—	—	—	—	1	1	—	—	—	—	= 3577 808
	CLIP, A/Clnr. to Exh. Manif. Heat													
	Tube (Canada)		—	—	1	—	—	—	—	—	—	—	—	2658 238
14-29-41	STRAP, A/Cleaner Retainer to													
	Carb. Ground, w/426 or 440 Eng.,													
	w/Fresh Air 71	8	—	1	—	—	—	—	—	—	—	—	—	3512 531
	Warm Air Door Mtg. Plate to Adapter													
	Ground, w/Fresh Air 71	8	—	1	—	—	—	—	—	—	—	—	—	3512 532
	Fresh Air Door Mtg. Plate to													
	Warm Air Door Mtg. Plate Ground,													
	w/Fresh Air 71	8	—	1	—	—	—	—	—	—	—	—	—	3512 533
14-29-42	FOOT, A/Clnr. Filter Ret. Supt. Brkt. 3" lg.		—	1	—	—	—	—	—	—	—	—	—	3418 693
	1 1/2" lg.		—	1	—	—	—	—	—	—	—	—	—	3418 694
	Filter Retainer to Cyl. Hd.	340	—	1	—	—	—	—	—	—	—	—	—	3512 756
14-29-43	TEE, Vacuum	8	—	1	—	1	1	1	1	1	1	1	—	2857 908
14-29-46	NUT, A/Cleaner Temp. Sensor		2	2	2	2	2	2	2	2	2	2	2	2197 678
14-29-47	SEAL, A/Clnr. to Hood J. w/F/A		—	1	—	—	—	—	—	—	—	—	—	= 3577 461
	w/3-2 bbl. Carb.		—	1	—	—	—	—	—	—	—	—	—	= 3577 462
14-29-53	SENSOR, A/Cleaner Temp.		1	1	1	1	1	1	1	1	1	1	1	3514 168
14-29-64	PLATE, Cover w/F/Air J		—	1	—	—	—	—	—	—	—	—	—	3577 459
	PLATE ASSY., Cover w/F/Air		—	1	—	—	—	—	—	—	—	—	—	3577 387

14-30-0 CARBURETOR

NOTE: The entire line of carburetors for 1970 Chrysler Corporation passenger vehicles is listed on the following chart by vendor number.

Complete replacement assemblies for each vendor identified carburetor are listed in the "Chrysler Carburetor" Column.

Components of carburetors, which are available for service are charted on the following pages, beginning with Code 14-30-2. For quick reference, both the carburetor assemblies and their component listings are identified with the same "Component Chart Reference Number". (see below and on the following pages).

1970 MODELS

14-30-1 CARBURETOR ASSEMBLIES

Models	Eng. (cu. in.)	Trans.	Bbl.	Carburetor Type Mfg.	Mfg. No.	Comp. Chart Ref. No.	Service Carburetor No.
V, L, w/o E. C. S.	198	Man.	1	Carter	4715 S	1	3418 503
V, L, w/o E. C. S.	198	Auto.	1	Carter	4716 S	2	3418 504
V, L, w/E. C. S.	198	Man.	1	Carter	4717 S	3	3418 505
V, L, w/E. C. S.	198	Auto.	1	Carter	4718 S	4	3418 506
V, L, Export	198	Man.	1	Carter	4719 S	5	3418 507
V, L, Export	198	Auto.	1	Carter	4720 S	6	3418 508
V, L, B, J, R, W, P, D, w/o E. C. S.	225	Man.	1	Holley	R4351A	7	3418 511
V, L, B, J, R, W, P, D, w/o E. C. S.	225	Auto.	1	Holley	R4352A	8	3418 512
V, L, B, J, R, W, P, w/E. C. S.	225	Man.	1	Holley	R4353A	9	3418 513
V, L, B, J, R, W, P, w/E. C. S.	225	Auto.	1	Holley	R4354A	10	3418 514
V, L, B, J, R, W, P, Export	225	Man.	1	Holley	R4361A	11	3418 521
V, L, B, J, R, W, P, Export	225	Auto.	1	Holley	R4362A	12	3418 522
R, W, P, Taxi, w/o E. C. S.	225	All	1	Holley	R4355A	13	3418 509
R, W, P, Taxi, w/E. C. S.	225	All	1	Holley	R4363A	14	3418 510
V, L, R, W, Export	225	Man.	2	Carter	4300S	15	2843 101
V, L, R, W, Export	225	Auto.	2	Carter	4301S	16	2843 102
V, L, B, J, R, W, P, D, w/o E. C. S.	318	Man.	2	Carter	4721S	17	3418 515
V, L, B, J, R, W, P, D, w/o E. C. S.	318	Auto.	2	Carter	4722S	18	3418 516
V, L, B, J, R, W, P, D, w/E. C. S.	318	Man.	2	Carter	4723S	19	3418 517
V, L, B, J, R, W, P, D, w/E. C. S.	318	Auto.	2	Carter	4724S	20	3418 518
V, L, B, J, R, W, P, D, Export	318	Man.	2	Carter	4749S	21	3418 539
V, L, B, J, R, W, P, D, Export	318	Auto.	2	Carter	4750S	22	3418 556
V, L, B, J, w/o E. C. S.	340	Man.	4	Carter	4933S	23	3462 968
V, L, B, J, w/o E. C. S.	340	Auto.	4	Carter	4934S	24	3462 969
V, L, B, J, w/o E. C. S., w/A/Cond.	340	Auto.	4	Carter	4935S	25	3462 970
V, L, B, J, w/E. C. S.	340	Man.	4	Carter	4936S	26	3462 971
V, L, B, J, w/E. C. S.	340	Auto.	4	Carter	4937S	27	3462 972
B,J, Front	340	All	2	Holley	R4789A	64	3577 184
B,J, Center	340	Man.	2	Holley	R4791A	65	3577 182
B,J, Center	340	Auto.	2	Holley	4792A	66	3577 183
B,J, Rear	340	All	2	Holley	R4790A	67	3577 185
B,J,R,W,w/o E.C.S., w/Fresh Air	383	Man.	4	Holley	R4736-1A	68	3512 964
B,J,R,W, w/E.C.S., w/Fresh Air	383	Man.	4	Holley	R4738-1A	69	3512 974
B,J,R,W, w/E.C.S., w/Fresh Air	383	Auto.	4	Holley	R4739-1A	70	3512 975
V,L,B,J,R,W,P,D, w/o E.C.S., w/A/COND.	318	Auto.	2	Carter	4895S	71	3462 834
B,J,R,W,P,D,C w/o E.C.S., w/A/Cond.	383	Auto.	2	Carter	4894S	72	3462 835
P, D, C, w/o E. C. S.	383	Man.	2	Carter	4726S	31	3418 527
P, D, C, w/o E. C. S.	383	Man.	2	Carter	4725S	29	3418 526
P, D, C, w/E. C. S.	383	Man.	2	Holley	R4372A	32	3418 532
P, D, C, w/E. C. S.	383	Man.	2	Carter	4727S	33	3418 528
B, J, R, W, P, D, C, w/o E.C.S., w/o A/Cond.	383	Auto.	2	Holley	R4371A	34	3418 531
B, J, R, W, P, D, C, w/A/Cond., w/or w/o E. C.S.	383	Auto.	2	Carter	4728S	35	3418 529
P, D, C	383	Man.	2	Carter	4729S	36	3549 532
B, J, R, W, P, D, C, Export	383	Auto.	2	Carter	4730S	37	3418 560
B, J, R, W, w/o E. C. S.	383	Man.	4	Holley	R4367A	38	3418 536
B, J, R, W, w/E. C. S.	383	Man.	4	Holley	R4217A	39	3418 537
B, J, R, W, P, D, C, w/o A/Cond., w/o E. C. S.	383	Auto.	4	Carter	4736S	40	3418 538
B, J, R, W, P, D, C, w/A/Cond., w/o E. C. S.	383	Auto.	4	Carter	4732S	41	3418 540
B, J, R, W, P, D, C, w/E. C. S.	383	Auto.	4	Carter	4734S	42	3418 541
B, J, R, W, w/o A/Cond., w/o E. C. S.	383	Auto.	4	Holley	R4368A	43	3418 542

CARLINES J - Challenger B - Barracuda V - Valiant L - Dart R - Belvedere - Satallite W - Coronet - Charger P - Plymouth D - Dodge C - Chrysler Y - Imperial

AR Indicates use as required.

Numerals in parentheses ( ) refer to notes.

# Indicates parts not listed in any previous parts book.

★ Indicates change or addition.

Printed in U.S.A. January 1970

14-30-0 CARBURETOR Cont'd.

1970 MODELS Cont'd.

14-30-1 CARBURETOR ASSEMBLIES

Models	Eng. (cu. in.)	Trans.	Bbl.	Carburetor Type Mfg.	Mfg. No.	Comp. Chart Ref. No.	Service Carburetor No.
B,J,R,W, w/o E.C.S., w/o A/Cond. w/F/Air	383	Auto.	4	Holley	R4737-1A	30	3512 965
B, J, R, W, w/E. C. S.	383	Auto.	4	Holley	R4218A	44	3418 543
B, J, R, W, w/A/Cond., w/o E. C. S.	383	Auto.	4	Holley	R4369A	45	3418 562
B, J, R, W, w/o E. C. S.	440	Man.	4	Carter	4737S	46	3418 553
B, J, R, W, w/E. C. S.	440	Man.	4	Carter	4739S	47	3418 555
B, J, R, W, P, Front, w/o E. C. S.	440	All	2	Holley	R4382A	48	3462 845
B, J, R, W, P, Front, w/E. C. S.	440	All	2	Holley	R4175A	49	3418 544
B, J, R, W, P, Center, w/o E. C. S.	440	Man.	2	Holley	R4375A	50	3418 547
B, J, R, W, P, Center, w/E. C. S.	440	Man.	2	Holley	R4374A	51	3418 549
B, J, R, W, P, Center, w/o E. C. S.	440	Auto.	2	Holley	R4376A	52	3418 548
B, J, R, W, P, Center, w/E. C. S.	440	Auto.	2	Holley	R4144A	53	3418 550
B, J, R, W, P, Rear, w/o E. C. S.	440	All	2	Holley	R4383A	54	3462 846
B, J, R, W, P, Rear, w/E. C. S.	440	All	2	Holley	R4365A	55	3462 373
B, J, R, W, Front	426	All	4	Carter	4742S	56	3418 525
B, J, R, W, Rear, w/E. C. S.	426	Man.	4	Carter	4745S	57	3418 523
B, J, R, W, Rear, w/E. C. S.	426	Auto.	4	Carter	4746S	58	3418 524
B, J, R, W, P, D, C, w/o A/Cond., w/o E. C. S.	440	Auto.	4	Carter	4738S	59	3418 554
B, J, R, W, P, D, C, w/A/Cond., w/o E. C. S.	440	Auto.	4	Carter	4741S	60	3418 557
B, J, R, W, P, D, C, w/E. C. S.	440	Auto.	4	Carter	4740S	61	3418 558
P, D, C, Y, w/o E. C. S.	440	Auto.	4	Holley	R4366A	62	3418 551
P, , C, Y, w/E. C. S.	440	Auto.	4	Holley	R4360A	63	3418 552
P,D,C w/o/E.C.S., w/out/A/Cond.	383	Man.	2	Holley	R4370	115	3418 530

1971 MODELS

V, L, B, J	198	Man.	1	Carter	4955S	73	3512 803
V, L, B, J	198	Auto.	1	Carter	4956S	74	3512 804
V,L,B,J,R,W,P,D	225	Man.	1	Holley	R4655A	75	3512 805
V,L,B,J,R,W,P,D	225	Auto.	1	Holley	R4656A	76	3512 807
V,L,B,J,R,W, Export	225	Man.	1	Holley	R4657A	77	3512 811
V,L,B,J,R,W, Export	225	Auto.	1	Holley	R4658A	78	3512 812
R, W, P, D, Taxi	225	All	1	Holley	R4659A	79	3512 813
V Export	225	Man.	1	Carter	4929S	80	3462 977
V Export	225	Auto.	1	Carter	4930S	81	3462 978
V,L,B,J,R,W,P,D	318	Man.	2	Carter	4957S	82	3512 816
V,L,W, Export - Exc. Spain	225	Man.	2	Carter	4992S	112	3462 776
V, L, W	225	Auto.	2	Carter	4993S	113	3462 779
V,L,B,J,R,W,P,D	318	Auto.	2	Carter	4958S	83	3512 817
V,L,B,J,R,W,P,D, Export	318	Man.	2	Carter	4959S	84	3512 818
V, L, W, D, Export	318	Auto.	2	Carter	4960S	85	3512 819
V, L, W, D	318	Auto.	2	Roch.	7041180	86	3512 815
V, L, B, J, R, W	340	Man.	4	Carter	4972S	87	3512 820
V, L, B, J, R, W	340	Auto.	4	Carter	4973S	88	3512 821
P,D	360	Man.	2	Holley	R4665A	89	3549 566
P, D, C	360	Auto.	2	Holley	R4666A	90	3512 823
B,J, Front	340	All	2	Holley	R4789A	91	3577 185
B,J, Center	340	Man.	2	Holley	R4791A	92	3577 182
B,J, Center	340	Auto.	2	Holley	R4792A	93	3577 183
B,J, Rear	340	All	2	Holley	R4790A	94	3577 185
P,D	383	Man.	2	Carter	4961S	95	3549 568
B,J,R,W,P,D,C	383	Auto.	2	Carter	4962S	96	3512 825
D, Export	383	Auto.	2	Carter	4964S	97	3512 827
B,J,R,W, w/o Fresh Air	383	Man.	4	Holley	R4667A	98	3512 848
B,J,R,W, w/o Fresh Air	383	Auto.	4	Holley	R4668A	99	3512 830
B,J,R,W, w/Fresh Air	383	Man.	4	Holley	R4734A	100	3512 849
B,J,R,W, w/Fresh Air	383	Auto.	4	Holley	R4735A	101	3512 842

CARLINES J - Challenger, B - Barracuda, V - Valiant, L - Dart, R - Belvedere - Satallite, W - Coronet - Charger, P - Plymouth, D - Dodge, C - Chrysler, Y - Imperial

AR Indicates use as required.

**Indicates** parts not listed in any previous parts book.

Numerals in parentheses ( ) refer to notes.

★ Indicates change or addition.

Printed in U.S.A.
January 1972

14-30-0 CARBURETOR Cont'd.

1971 MODELS Cont'd.

14-30-1 CARBURETOR ASSEMBLIES

Models	Eng. (cu. in.)	Trans.	Bbl.	Carburetor Type Mfg.	Mfg. No.	Comp. Chart Ref. No.	Service Carburetor No.
P, D, C	383	Auto.	4	Carter	6125S	114	3512 844
P,D,C,Y	440	Auto.	4	Carter	4966S	102	3512 831
B,J,R,W	440	Man.	4	Carter	4967S	103	3512 832
B,J,R,W,P,D,C	440	Auto.	4	Carter	4968S	104	3512 833
B,J,R,W, Front	426	All	4	Carter	4971S	105	3512 840
B,J,R,W, Rear	426	Man.	4	Carter	4969S	106	3512 838
B,J,R,W, Rear	426	Auto.	4	Carter	4970S	107	3512 839
B,J,R,W,P, Front	440	All	2	Holley	R4671A	108	3512 836
B,J,R,W,P, Center	440	Man.	2	Holley	R4669A	109	3512 834
B,J,R,W,P, Center	440	Auto.	2	Holley	R4670A	110	3512 835
B,J,R,W,P, Rear	440	All	2	Holley	R4672A	111	3512 837

NOTES

CODE	COMPONENT CHART REFERENCE NO. / MFG. NO.	1 4715S	2 4716S	3 4717S	4 4718S	5 4719S	6 4720S	7 R4351A
14-30-2	GASKET, Flange	2946 542	2946 542	2946 542	2946 542	2951 889	2951 889	2946 542
14-30-4	ZIP KIT	3621 401	3621 401	3621 401	3621 401	3514 464	3514 464	———
	MINOR REPAIR KIT	———	———	———	———	———	———	3481 677
14-30-7	GASKET KIT	3514 475	3514 475	3514 475	3514 475	3514 475	3514 475	3481 678
14-30-8	NEEDLE, w/Seat, Float	2809 395	2809 395	2809 395	2809 395	2809 395	2809 395	2299 042
14-30-29	GASKET, Needle Seat	———	———	———	———	———	———	3419 663
14-30-31	BAFFLE, Fuel Inlet	———	———	———	———	———	———	3419 688
14-34-10	GASKET, Economiser Body	———	———	———	———	———	———	3419 662
14-35-1	JET, Main Metering	3419 616	3514 490	3514 490	3514 490	3514 490	3514 490	2299 245
14-35-3	JET, Pump	3481 233	3481 233	3481 233	3481 233	3481 233	3481 233	———
14-35-33	STEM, Economiser	———	———	———	———	———	———	3419 623
14-35-39	WELL, Main	———	———	———	———	———	———	3481 676
14-35-43	SCREW, Economizer Body	———	———	———	———	———	———	3419 657
	SCREW, Main Well, Long	———	———	———	———	———	———	3419 652
	Short	———	———	———	———	———	———	3419 651
14-35-45	COVER, Economiser Body	———	———	———	———	———	———	3419 670
14-36-1	SPRING, Idle Speed Screw	3481 205	3481 205	3481 205	3481 205	3481 205	3481 205	———
	SPRING, Fast Idle Speed Screw	3481 205	3481 205	3481 205	3481 205	3481 205	3481 205	———
	SPRING, Idle Mixture Screw	3481 558	3481 558	3481 558	3481 558	3418 558	3418 558	———
	SPRING, Idle Adjustment Screw	———	———	———	———	———	———	3419 674
	SPRING, Fast Idle Screw	———	———	———	———	———	———	3419 677
14-36-2	SPRING, Step-Up Piston	3514 477	3481 234	3514 477	3514 477	3514 477	3514 477	———
14-36-15	SPRING, Pump	3481 235	3481 235	3481 235	3481 235	3481 235	3481 235	3419 679
	PIN SPRING, Pump Plunger	3481 227	3481 227	———	———	3481 227	3481 227	———
14-36-29	SPRING, Throttle Stop Screw	———	———	———	———	———	———	3419 675
14-36-50	SPRING, Mechanical Vent	———	———	———	———	———	———	3481 675
14-37-6	PLUG, Pump Jet	3481 193	3481 193	3481 193	3481 193	3481 193	3481 193	———
14-37-15	PLUG, Rivet	3481 155	3481 155	3481 155	3481 155	3481 155	3481 155	———
	PLUG, Rivet	3420 404	3420 404	3420 404	3420 404	3420 404	3420 404	———
	PLUG, Rivet	3481 195	3481 195	3481 195	3481 195	3481 195	3481 195	———
14-37-25	PLUG, High Speed Passage	3481 194	3481 194	3481 194	3481 194	3481 194	3481 194	———
14-37-29	BALL, Pump Intake Check	3481 220	3481 220	3481 220	3481 220	3481 220	3481 220	———
14-37-30	BALL, Pump Discharge Check	3481 220	3481 220	3481 220	3481 220	3481 220	3481 220	———
14-38-4	VALVE or PLATE, Throttle	3481 232	3481 232	3481 232	3481 232	3481 232	3481 232	3419 665
14-38-5	SCREW, Throttle Valve or Plate	3420 450	3420 450	3420 450	3420 450	3420 450	3420 450	3419 654
14-38-12	SHAFT, w/Lever, Throttle	3481 191	3481 191	3481 191	3481 191	3481 191	3481 191	3419 666
14-38-20	PIN SPRING, Throttle Connector Rod	3420 476	3420 476	3420 476	3420 476	3420 476	3420 476	———
14-38-28	ROD, Throttle Connector	3481 231	3481 231	3481 231	3481 231	3481 231	3481 231	———
14-39-1	VALVE or PLATE, Choke	3481 192	3481 192	3481 192	3481 192	3481 192	3481 192	3419 649
14-39-6	SHAFT, w/Lever, Choke	3514 476	3514 476	3514 476	3514 476	3514 476	3514 476	3419 650
14-39-7	DIAPHRAGM, Choke	2933 182	2933 182	2933 182	2933 182	2933 182	2933 182	3419 508
14-39-8	LINK, Choke Diaphragm	———	———	———	———	———	———	3481 674
14-39-28	ROD, Choke Connector	3481 218	3481 218	3481 218	3481 218	3481 218	3481 218	———
	ROD, Choke Diaphragm Connector	3481 219	3481 219	3481 219	3481 219	3481 219	3481 219	———
14-39-45	CHOKE	2946 548	2946 548	2946 548	2946 548	3418 501	3418 501	2946 549
	SCREW	6024 560	6024 560	6024 560	6024 560	6024 560	6024 560	6024 560
14-39-51	HOSE, Choke Diaphragm	3481 226	3481 226	3481 226	3481 226	3481 226	3481 226	3419 687
14-39-57	PIN SPRING, Choke Diaphragm Connector Rod	3420 477	3420 477	3420 477	3420 477	3420 477	3420 477	———
14-40-1	FLOAT, w/Lever	3481 200	3481 200	3481 200	3481 200	3481 200	3481 200	3419 668
14-40-4	PIN, Float Lever	3481 201	3481 201	3481 201	3481 201	3481 201	3481 201	———
14-40-5	RETAINER, Float Lever Pin	3481 209	3481 209	3481 209	3481 209	3481 209	3481 209	———
	RETAINER, Float	———	———	———	———	———	———	3419 673
14-40-7	BOWL, Float	———	———	———	———	———	———	3419 672
14-40-8	GASKET, Float Bowl	———	———	———	———	———	———	3419 664
14-40-18	SPRING, Float	———	———	———	———	———	———	3419 676
14-40-23	ARM, Bowl Vent	———	———	3514 478	3514 478	———	———	———
14-41-3	PLUNGER, w/Rod, Pump	2196 214	2196 214	3514 479	3514 479	2196 214	2196 214	2525 782
14-41-7	LINK, Pump Operating	———	———	———	———	———	———	2808 062
14-41-9	ARM, Pump	3481 204	3481 204	3481 204	3481 204	3481 204	3481 204	———

CARLINES J - Challenger, B - Barracuda, V - Valiant, L - Dart, R - Belvedere - Satallite, W - Coronet - Charger, P - Plymouth, D - Dodge, C - Chrysler, Y - Imperial

AR Indicates use as required.

# Indicates parts not listed in any previous parts book.

Numerals in parentheses ( ) refer to notes.

★ Indicates change or addition.

Printed in U.S.A.
January 1972

CODE	COMPONENT CHART REFERENCE NO. / MFG. NO.	1 4715S	2 4716S	3 4717S	4 4718S	5 4719S	6 4720S	7 R4351A
14-41-12	BUSHING, Pump Plunger	3481 202	3481 202	———	———	———	3481 202	———
14-41-14	PLATE, Cover	———	———	3514 488	3514 488	———	———	———
14-41-16	RETAINER, Pump Spring	———	———	3514 487	3514 487	———	———	———
14-41-22	LEVER, Pump Operating	———	———	———	———	———	———	2808 061
14-41-23	RETAINER, Pump Operating Lever	———	———	———	———	———	———	2808 059
14-43-3	PISTON, w/Plate, Step-Up	3481 228	3481 228	3481 228	3481 228	3481 228	3481 228	———
14-43-5	ROD, Step-Up	3514 489	3419 615	3514 489	3514 480	3514 489	3514 480	———
14-44-1	TUBE, Idle	3514 491	3481 237	3514 491	3514 483	3514 491	3514 483	———
14-44-3	TUBE, Main Vent	3481 238	3481 238	3481 238	3481 238	3481 238	3481 238	———
14-45-1	SCREW, Fast Idle Cam	3481 216	3481 216	3481 216	3481 216	3481 216	3481 216	3419 658
	SCREW, Fast Idle	———	———	———	———	———	———	3419 655
	NEEDLE, Idle Adjustment	———	———	———	———	———	———	3419 667
14-45-4	CAM, Fast Idle	3514 485	3514 485	3514 485	3514 485	3514 485	3514 485	3419 681
14-45-5	ROD, Fast Idle	———	———	———	———	———	———	3419 682
14-45-12	LIMITER, Idle Mixture Screw	3420 436	3420 436	3420 436	3420 436	———	———	3419 689
14-45-20	SCREW, Idle Mixture	3481 643	3481 643	3481 643	3481 643	3481 643	3481 643	———
14-45-25	SCREW, Idle Speed	3481 210	3481 210	3481 210	3481 210	3481 210	3481 210	———
	SCREW, Fast Idle Speed	3481 215	3481 215	3481 215	3481 215	3481 215	3481 215	———
14-46-1	VALVE, Mechanical Vent	———	———	———	———	———	———	3419 669
14-46-2	ROD, Mechanical Vent	———	———	———	———	———	———	3419 683
14-46-13	CLAMP, Bowl Vent Tube	———	———	3514 492	———	———	———	———
14-46-15	HOSE, Bowl Vent	———	———	3514 484	3514 484	———	———	———
14-46-16	RETAINER, Bowl Vent Valve	———	———	3414 486	3414 486	———	———	———
14-50-6	SCREW, Dashpot Bracket	———	———	———	———	———	———	3419 660
14-50-8	NUT, Dashpot Lock	3420 455	———	3420 455	———	———	———	3419 680
14-50-13	BRACKET, Dashpot	2933 183	———	2933 183	———	———	———	3481 673
14-50-25	DASHPOT	2585 784	———	2585 784	———	———	———	2809 243
14-54-3	SCREW, Throttle Stop	———	———	———	———	———	———	3418 511
14-54-15	SCREW, Choke Valve or Plate	3420 450	3420 450	3420 450	3420 450	3420 450	3420 450	3419 654
14-54-28	SCREW, Choke Bracket	3481 217	3481 217	3481 217	3481 217	3481 217	3481 217	———
14-54-34	SCREW, Bowl Cover	3481 211	3481 211	3481 211	3481 211	3481 211	3481 211	———
14-54-37	WASHER, Mechanical Vent	———	———	———	———	———	———	3419 685
14-54-42	WASHER, Pump Plunger	3481 224	3481 224	3481 224	3481 224	3481 224	3481 224	———
14-54-47	SCREW, Pump Arm	3481 212	3481 212	3481 212	3481 212	3481 212	3481 212	———
14-54-72	SCREW, Air Horn	3481 213	3481 213	3481 213	3481 213	3481 213	3481 213	———
14-54-78	SCREW, Float Bowl	———	———	———	———	———	———	3419 653
14-54-140	SCREW, Dashpot Bracket	3481 230	———	———	———	———	———	3419 659
14-54-148	SCREW, Step-Up Piston Plate Guide	3481 214	3481 214	3481 214	3481 214	3481 214	3481 214	———
	SCREW, Step-Up Piston Cover Plate	———	———	3420 451	3420 451	———	———	———

CODE	COMPONENT CHART REFERENCE NO. / MFG. NO.	8 R4352A	9 R4353A	10 R4354A	11 R4361A	12 R4362A	13 R4355A	14 R4363A
14-30-2	GASKET, Flange	2946 542	2946 542	2946 549	2951 889	2951 889	2946 542	2946 542
14-30-4	REPAIR KIT	3481 677	3481 670	3481 670	3481 681	3481 677	3481 685	3481 685
14-30-7	GASKET KIT	3481 678	3481 671	3481 671	2585 463	2585 463	3481 678	3481 671
14-30-8	NEEDLE, w/Seat, Float	2299 042	2299 042	2299 042	2299 042	2299 042	2299 042	2299 042
14-30-29	GASKET, Needle Seat	3419 663	3419 663	3419 663	3419 663	3419 663	3419 663	3419 663
14-30-31	BAFFLE, Fuel Inlet	3419 688	3419 688	3419 688	3419 688	3419 688	3419 688	3419 688
14-34-10	GASKET, Economiser Body	3419 662	3419 662	3419 662	3419 662	3419 662	3419 662	3419 662
14-35-1	JET, Main Metering	2299 248	2299 245	2299 248	2299 245	2299 245	2809 224	2809 224
14-35-33	STEM, Economiser	3419 623	3419 623	3419 623	3419 623	3419 623	2299 040	2299 040
14-35-39	WELL, Main	3481 679	3419 507	3419 510	3481 680	3481 682	3514 832	3514 832
14-35-43	SCREW, Economiser Body	3419 657	3419 657	3419 657	3419 657	3419 657	3419 657	3419 657
	SCREW, Main Well, Long	3419 652	3419 652	3419 652	3419 652	3419 652	3419 652	3419 652
	Short	3419 651	3419 651	3419 651	3419 651	3419 651	3419 651	3419 651
14-35-45	COVER, Economiser Body	3419 670	3419 670	3419 670	3419 670	3419 670	3419 670	3419 670

CARLINES — J - Challenger, B - Barracuda; V - Valiant, L - Dart; R - Belvedere - Satallite, W - Coronet - Charger; P - Plymouth, D - Dodge; C - Chrysler, Y - Imperial

AR Indicates use as required.

= Indicates parts not listed in any previous parts book.

Numerals in parentheses ( ) refer to notes.

★ Indicates change or addition.

Printed in U.S.A.
January 1972

CODE	COMPONENT CHART REFERENCE NO. / MFG. NO.	8 R4352A	9 R4353A	10 R4354A	11 R4361A	12 R4362A	13 R4355A	14 R4363A
14-36-1	SPRING, Idle Adjusting Needle	3419 674	3419 674	3419 674	3419 674	3419 674	3419 674	3419 674
	SPRING, Fast Idle Screw	3419 677	3419 677	3419 677	3419 677	3419 677	3419 677	3419 677
14-36-15	SPRING, Pump	3419 679	3419 679	3419 679	3419 679	3419 679	3419 679	3419 679
14-36-29	SPRING, Throttle Stop Screw	3419 675	3419 675	3419 675	3419 675	3419 675	3419 675	3419 675
14-36-50	SPRING, Mechanical Vent	3481 675	3481 665	3481 665	3419 678	3419 678	3419 678	3481 665
14-38-4	VALVE or PLATE, Throttle	3419 665	3419 665	3419 665	3419 665	3419 665	3419 693	3419 693
14-38-5	SCREW, Throttle Plate	3419 654	3419 654	3419 654	3419 654	3419 654	3419 654	3419 654
14-38-12	SHAFT, w/Lever, Throttle	3419 666	3419 666	3419 666	3419 666	3419 666	3419 666	3419 666
14-39-1	PLATE, Choke	3419 649	3419 649	3419 649	3419 649	3419 649	3419 649	3419 649
14-39-6	SHAFT, Choke	3419 650	3419 650	3419 650	3419 650	3419 650	3419 650	3419 650
14-39-7	DIAPHRAGM, Choke	3419 511	3419 508	3419 511	3419 508	3419 511	3419 508	3419 508
14-39-8	LINK, Choke Diaphragm	3419 671	3419 671	3419 671	3419 671	3419 671	3419 671	3419 671
14-39-11	PIN, Choke Diaphragm Link	———	———	———	3481 674	———	———	———
14-39-45	CHOKE	2946 549	2946 549	2946 549	3418 502	———	2946 549	2946 549
	SCREW	6024 560	6024 560	6024 560	6024 560	6024 560	6024 560	6024 560
14-39-51	HOSE, Choke Vacuum	3419 687	3419 687	3419 687	3419 687	3419 687	3419 687	3419 687
14-40-1	FLOAT, w/Lever	3419 668	3419 668	3419 668	3419 668	3419 668	3419 668	3419 668
14-40-5	RETAINER, Float	3419 673	3419 673	3419 673	3419 673	3419 673	3419 673	3419 673
14-40-7	BOWL, Float	3419 672	3419 672	3419 672	3419 672	3419 672	3419 672	3419 672
14-40-8	GASKET, Float Bowl	3419 664	3419 664	3419 664	3419 664	3419 664	3419 664	3419 664
14-40-18	SPRING, Float	3419 676	3419 676	3419 676	3419 676	3419 676	3419 676	3419 676
14-41-3	PLUNGER, w/Rod, Pump	2525 782	2525 782	2525 782	2525 782	2525 782	3514 833	3514 833
14-41-7	LINK, Pump Operating	2808 062	2808 062	2808 062	2808 062	2808 062	2808 062	2808 062
14-41-22	LEVER, Pump Operating	2808 061	2808 161	2808 061	2808 061	2808 061	2808 061	2808 061
14-41-23	RETAINER, Pump Operating Lever	2808 059	2808 059	2808 059	2808 059	2808 059	2808 059	2808 059
14-41-40	RETAINER, Pump Operating Link	3481 338	3481 338	3481 338	3481 338	3481 338	3481 338	3481 338
14-45-1	FAST, Idle Adjusting Cam Screw	3419 658	3419 658	3419 658	3419 658	3419 658	3419 658	3419 658
	SCREW, Fast Idle	3419 656	3419 655	3419 656	3419 655	3419 655	3419 655	3419 655
14-45-4	CAM, Fast Idle	3419 681	3419 681	3419 681	3419 681	3419 681	3419 681	3419 681
14-45-5	ROD, Fast Idle	3419 682	3419 682	3419 682	3419 682	3419 682	3419 682	3419 682
14-45-8	SCREW, Fast Idle Cam	3419 658	3419 658	3419 658	3419 658	3419 658	3419 658	3419 658
14-45-12	LIMITER, Idle Adjusting Screw	3419 689	3419 689	3419 689	3419 689	3419 689	3419 689	3419 689
14-46-1	VALVE, Mechanical Vent	3419 669	3481 660	3481 660	3419 669	3419 669	3419 669	3481 660
14-46-2	ROD, Mechanical Vent	3419 683	3481 672	3481 672	3419 683	3419 683	3419 683	3481 672
14-46-8	SEAL, Vent Valve	———	3481 659	———	———	———	———	———
14-50-6	SCREW, Dashpot Bracket	———	3419 660	———	———	———	———	———
14-50-8	NUT, Dashpot Lock	———	3419 680	———	———	———	———	———
14-50-13	BRACKET, Dashpot	———	3481 673	———	———	———	———	———
14-50-25	DASHPOT	———	2809 243	———	———	———	———	———
14-54-3	SCREW, Throttle Stop	3419 661	3419 661	3419 661	3419 661	3419 661	3419 661	3419 661
14-54-15	SCREW, Choke Plate	3419 654	3419 654	3419 654	3419 654	3419 654	3419 654	3419 654
14-54-37	WASHER, Mechanical Vent Pick-Up	3419 685	3419 685	3419 685	3419 685	3419 685	3419 685	3419 685
14-54-78	SCREW, Float Bowl	3419 653	3419 653	3419 653	3419 653	3419 653	3419 653	3419 653
14-54-140	SCREW, Dashpot Bracket	———	3419 659	———	———	———	———	———

CODE	COMPONENT CHART REFERENCE NO. / MFG. NO.	15 4300S	16 4301S	17 4721S	18 4722S	19 4723S	20 4724S	21 4749S
14-30-2	GASKET, Flange	2468 818	2468 818	2946 541	2946 541	2946 541	2946 541	2468 818
14-30-4	ZIP KIT	2933 043	2933 043	3514 466	3514 466	3514 467	3514 467	3514 466
14-30-7	GASKET PACKAGE	2808 023	2808 023	3549 295	3549 295	3549 295	3549 295	3549 294
14-30-8	NEEDLE, w/Seat	2933 042	2933 042	2933 042	2933 042	2933 042	2933 042	2933 042
14-34-4	GASKET, Body	1631 520	1631 520	———	———	———	———	———
14-34-55	GASKET, Choke Housing	———	1330 873	———	———	———	———	———

CARLINES J - Challenger, B - Barracuda, V - Valiant, L - Dart, R - Belvedere - Satallite, W - Coronet - Charger, P - Plymouth, D - Dodge, C - Chrysler, Y - Imperial

AR Indicates use as required.

# Indicates parts not listed in any previous parts book.

Numerals in parentheses ( ) refer to notes.

★ Indicates change or addition.

Printed in U.S.A.
January 1972

	COMPONENT CHART REFERENCE NO.	15	16	17	18	19	20	21
CODE	MFG. NO.	4300S	4301S	4721S	4722S	4723S	4724S	4749S
14-35-1	JET, Main Metering	2585 787	2585 787	2585 408	2585 408	2585 408	2585 792	2585 792
14-35-42	COVER, Venturi	3481 540	3481 540	3481 290	3481 290	3481 290	3481 290	3481 290
14-36-1	SPRING, Idle Speed Screw	3481 205	3481 205	3481 205	3481 205	3481 205	3481 205	3481 205
	SPRING, Idle Mixture Screw	3481 535	3481 535	———	———	3481 558	3481 558	———
14-36-2	SPRING, Step-Up Piston	3481 234	3481 234	3481 234	3481 234	3481 234	3481 234	3481 234
14-36-15	SPRING, Pump	3481 207	3481 207	3481 207	3481 207	3481 207	3481 207	3481 207
14-36-50	SPRING, Bowl Vent	———	———	———	———	3514 548	3514 548	———
14-37-27	LEAD SHOT	3481 284	3481 284	3481 284	3481 284	3481 284	3481 284	3481 284
	LEAD SHOT	3481 538	3481 538	3481 538	3481 538	3481 538	3481 538	3481 538
	LEAD SHOT	3420 453	3420 453	3420 453	3420 453	3420 453	3420 453	3420 453
14-37-29	BALL, Pump Intake Check	3481 289	3481 289	3481 289	3481 289	3481 289	3481 289	3481 289
14-37-30	BALL, Pump Discharge Check	3481 220	3481 220	3481 220	3481 220	3481 220	3481 220	3481 220
14-38-4	VALVE, Throttle	3481 529	3481 529	3481 269	3481 269	3481 269	3481 269	3481 269
14-38-5	SCREW, Throttle Valve	3420 445	3420 445	3420 445	3420 445	3420 445	3420 445	3420 445
14-38-12	SHAFT, w/Lever, Throttle	3481 530	3481 530	3481 301	3481 304	3481 301	3481 304	3481 304
14-38-28	ROD, Throttle Connector	3481 299	3481 299	3481 299	3481 299	3514 550	3514 550	3481 299
14-39-1	VALVE, Choke	3481 271	3481 271	3481 271	3481 271	3481 271	3481 271	3481 271
14-39-3	LINK, w/Shaft, Choke Piston Lever	3481 533	3481 545	———	———	———	———	———
14-39-6	SHAFT, Choke	———	———	3481 272	3481 272	3481 272	3481 272	3481 272
	LEVER, Choke Loose	———	———	———	———	3481 273	3481 273	———
14-39-7	DIAPHRAGM, Choke	———	———	2933 185	2933 185	2933 185	2933 185	2933 185
14-39-9	SCREW, Choke Diaphragm	———	———	3420 447	3420 447	3420 447	3420 447	3420 447
14-39-10	LEVER, Choke	3481 532	———	3481 273	3481 273	———	———	3481 273
	LEVER, w/Collar, Choke	3481 531	3481 531	———	———	———	———	———
14-39-27	RETAINER, Choke Connector Rod	———	———	3420 433	———	———	3420 433	3420 433
14-39-28	ROD, Choke Connector	3481 539	3481 539	3481 288	———	———	———	3481 288
	ROD, Choke Diaphragm Connector	———	———	3481 287	3481 287	3481 287	3481 287	3481 287
14-39-31	SPACER, Choke Connector Rod	———	———	3481 285	3481 285	———	3481 285	3481 285
14-39-45	CHOKE	2809 826	2809 826	2951 651	2951 651	2951 651	2951 651	2946 535
	SCREW	6024 560	6024 560	6024 560	6024 560	6024 560	6024 560	6024 560
14-39-47	RETAINER, Coil Housing	———	3481 171	———	———	———	———	———
14-39-50	PLATE, Choke Baffle	3481 544	3481 544	———	———	———	———	———
14-39-51	HOSE, Choke Diaphragm	———	———	3481 294	3481 294	3481 294	3481 294	3481 294
14-39-56	PIN SPRING	3420 476	3420 476	3420 476	3420 476	3420 476	3420 476	3420 476
14-39-57	PIN SPRING, Diaphragm Connector Rod	———	———	3420 477	3420 477	3420 477	3420 477	3420 477
14-39-84	CAP, Choke Heat Tube	3481 187	3481 187	———	———	———	———	———
14-40-1	FLOAT, w/Lever	3481 534	3481 534	3481 274	3481 274	3481 274	3481 274	3481 274
14-40-4	PIN, Float Lever	3481 201	3481 201	3481 201	3481 201	3481 201	3418 201	3418 201
14-40-5	RETAINER, Float Lever Pin	3481 209	3481 209	3514 541	3514 541	3514 541	3514 541	3514 541
14-40-35	BAFFLE, Fuel Bowl	———	———	———	———	3481 610	3481 610	3481 610
14-41-3	PLUNGER, w/Rod Pump	2299 217	2299 217	2933 001	2933 001	3549 257	3549 257	2933 001
14-41-9	ARM, Pump	3481 275	3481 275	3481 275	3481 275	3514 547	3514 547	3481 275
14-41-13	RETAINER, Pump Plunger	———	———	3481 278	3481 278	3514 486	3514 486	3481 278
14-41-14	PLATE, Cover	———	———	———	———	3514 488	3514 488	———
14-43-3	PISTON, w/Plate, Step-Up	3481 295	3481 295	3514 542	3514 542	3514 542	3514 542	3514 542
14-43-5	ROD, Step-Up	2809 273	2585 702	2585 790	3514 549	2585 790	3514 549	2585 790
14-45-4	CAM, Fast Idle	3481 541	3481 541	3481 296	3481 300	3481 296	3481 300	3481 296
14-45-5	ROD, Fast Idle Connector	———	———	———	3481 288	3481 288	———	———
14-45-8	SCREW, Fast Idle Cam	3481 537	3481 537	3481 282	3481 282	3481 282	3481 282	3481 282
14-45-12	LIMITER, Idle Adjusting Screw	———	———	3420 436	3420 436	3420 436	3420 436	———
14-45-20	SCREW, Idle Mixture	———	———	3481 630	3481 630	3481 630	3481 630	3481 630
14-45-25	SCREW, Idle Speed	3481 210	3481 210	3514 495	3514 495	3514 495	3514 495	3514 495
	SCREW, Fast Idle Speed	3481 536	3481 536	3481 281	3481 281	3481 281	3481 281	3481 281

CARLINES — J - Challenger, B - Barracuda, V - Valiant, L - Dart, R - Belvedere - Satallite, W - Coronet - Charger, P - Plymouth, D - Dodge, C - Chrysler, Y - Imperial

AR Indicates use as required.

Numerals in parentheses ( ) refer to notes.

= Indicates parts not listed in any previous parts book.

★ Indicates change or addition.

Printed in U.S.A.
January 1972

	COMPONENT CHART REFERENCE NO.	15	16	17	18	19	20	21
CODE	MFG. NO.	4300S	4301S	4721S	4722S	4723S	4724S	4749S
14-46-18	PLATE, Bowl Vent Cover	———	———	———	———	———	3549 256	———
14-46-19	VALVE, Bowl Vent	———	———	———	———	———	3549 258	———
14-50-8	NUT, Dashpot Lock	———	———	3420 455	———	3420 455	———	———
14-50-13	BRACKET, Dashpot	———	———	2933 186	———	2933 186	———	———
14-50-25	DASHPOT	———	———	2808 101	———	2808 101	———	———
14-54-15	SCREW, Choke Valve	3420 450	3420 450	3420 450	3420 450	3420 450	3420 450	3420 450
14-54-19	WASHER, Choke Shaft	3481 542	3481 542	———	———	———	———	———
14-54-34	SCREW, Bowl Vent Cover Plate	———	———	———	———	3549 259	3514 259	———
14-54-42	WASHER, Pump Plunger	3481 224	3481 224	3481 224	3481 224	3549 255	3549 255	3481 224
14-54-47	SCREW, Pump Arm	3481 279	3481 279	3481 279	3481 279	3481 212	3481 212	3481 279
14-54-72	SCREW, Air Horn	3481 211	3481 211	3481 211	3481 211	3481 211	3481 211	3481 211
		———	———	3420 443	———	3420 443	———	———
14-54-78	SCREW, Body Flange	3481 280	3481 280	3481 280	3481 280	3481 280	3481 280	3481 280
		———	———	3481 230	———	3481 230	3481 230	3481 230
14-54-148	SCREW, Step-Up Piston Plate Guide	3481 214	3481 214	3481 214	3481 214	3481 214	3481 214	3481 214
14-54-152	SCREW, Venturi Cluster	———	———	3481 302	———	3481 298	3481 298	3481 302

	COMPONENT CHART REFERENCE NO.	22	23	24	25	26	27	
CODE	MFG. NO.	4750S	4933S	4934S	4935S	4936S	4937S	
14-30-2	GASKET, Flange	2468 818	3462 833	3462 833	3462 833	3462 833	3462 833	
14-30-3	VENTURI, Primary							
	Pump Side	———	3514 891	3514 889	3514 889	3514 891	3514 889	
	Opposite Pump	———	3514 890	3514 888	3514 889	3514 890	3514 888	
14-30-4	ZIP KIT	3514 466	3621 400	3621 400	3621 400	3621 400	3621 400	
14-30-7	GASKET KIT	3549 294	2933 197	2933 197	2933 197	2933 197	2933 197	
14-30-8	NEEDLE, w/Seat	2933 042	2933 105	2933 105	2933 105	2933 105	2933 105	
14-30-27	STRAINER, Fuel Inlet	———	1826 864	1826 864	1826 864	1826 864	1826 864	
14-30-28	NUT, Strainer	———	1826 863	1826 863	1826 863	1826 863	1826 863	
14-30-29	GASKET, Strainer Nut	———	3420 413	3420 413	3420 413	3420 413	3420 413	
14-30-35	PLATE, Baffle	3481 610	———	———	———	———	———	
14-32-15	SCREW, Venturi	———	3420 448	3420 448	3420 448	3420 448	3420 448	
14-34-2	GASKET, Body Flange							
14-34-5	GASKET, Body							
14-34-21	GASKET, Needle Seat	———	———	3420 414	3420 414	3420 414	3420 414	
14-34-63	SEAL, Grommet	———	3420 480	3420 480	3420 480	3420 480	3420 480	
14-34-71	GASKET, Venturi Cover							
14-35-1	JET, Main Metering	2585 792	———	———	———	———	———	
	Primary	———	2809 254	2809 254	2809 254	2809 254	2809 254	
	Secondary	———	2933 195	3481 652	3481 652	2933 195	3481 652	
14-35-3	JET, Pump	———	3420 418	3420 418	3420 418	3420 418	3420 418	
14-35-10	SCREW, Pump Jet	———	3420 440	3420 440	3420 440	3420 440	3420 440	
14-35-38	SPRING, Vacuum Piston	———	3420 428	3420 428	3420 428	3420 428	3420 428	
14-35-42	COVER, Venturi	3481 290	———	———	———	———	———	
14-36-1	SPRING, Idle Speed Screw	3481 205	3420 425	3420 425	3420 425	3420 425	3420 425	
	SPRING, Fast Idle Screw	———	———	———	———	3481 558	———	
	SPRING, Idle Mixture Screw	———	———	———	———	3481 558	———	
14-36-2	SPRING, Step-Up Piston	3481 234	———	———	———	———	———	
14-36-15	SPRING, Pump	3481 207	3420 424	3420 424	3420 424	3420 424	3420 424	
14-36-22	SPRING, Secondary Throttle Return	———	3420 432	3420 432	3420 432	3420 432	3420 432	
14-36-50	SPRING, Air Valve	———	3420 430	3420 430	3420 430	3420 430	3420 430	
	SPRING, Bowl Vent Arm	———	———	3420 431	3420 431	3514 525	3514 525	
14-37-4	PLUG, Passage	———	3420 405	3420 405	3420 405	3420 405	3420 405	
14-37-15	PLUG, Idle Port Rivet	———	3481 553	3481 553	3481 553	3481 553	3481 553	
	PLUG, Rivet	———	3420 404	3420 404	3420 404	3420 404	3420 404	
14-37-25	PLUG, Bowl Vent							
14-37-27	LEAD SHOT (.180)	3420 453	3420 453	3420 453	3420 453	3420 453	3420 453	
	LEAD SHOT (.200)	3481 284	3420 454	3420 454	3420 454	3420 454	3420 454	
	LEAD SHOT	3481 238	———	———	———	———	———	
14-37-29	BALL, Pump Intake Check	3481 289	3420 470	3420 470	3420 470	3420 470	3420 470	

CARLINES J - Challenger, B - Barracuda, V - Valiant, L - Dart, R - Belvedere - Satallite, W - Coronet - Charger, P - Plymouth, D - Dodge, C - Chrysler, Y - Imperial

AR Indicates use as required.

# Indicates parts not listed in any previous parts book.

Numerals in parentheses ( ) refer to notes.

★ Indicates change or addition.

Printed in U.S.A.
January 1972

CODE	COMPONENT CHART REFERENCE NO. / MFG. NO.	22 4750S	23 4933S	24 4934S	25 4935S	26 4936S	27 4937S
14-37-30	BALL, Pump Discharge Check	3481 220	———	———	———	———	———
14-38-4	VALVE, Throttle	3481 269	———	———	———	———	———
	Primary	———	3420 398	3420 398	3420 398	3420 398	3420 398
	Secondary	———	3420 397	3420 397	3420 397	3420 397	3420 397
	VALVE, Air	———	3514 507	3514 507	3514 507	3514 507	3514 507
14-38-5	SCREWS, Throttle Valve	3420 445	———	———	———	———	———
	Primary	———	3420 446	3420 446	3420 446	3420 446	3420 446
	Secondary	———	3420 445	3420 445	3420 445	3420 445	3420 445
14-38-12	SHAFT, w/Lever, Throttle	3481 304	———	———	———	———	———
	Primary	———	3481 559	3481 559	3481 559	3481 559	3481 559
	Secondary	———	3420 399	3420 399	3420 399	3420 399	3420 399
14-38-13	ARM, Primary Throttle Shaft, Inner	———	3420 460	3420 460	3420 460	3420 460	3420 460
	Outer	———	3420 458	3420 458	3420 458	3420 458	3420 458
14-38-14	DOG, Throttle Shaft	———	3420 401	3420 401	3420 401	3514 524	3514 524
	DOG, Lockout	———	3420 421	3420 421	3420 421	3420 421	3420 421
14-38-20	SPRING, Throttle Lever	———	3420 429	3420 429	3420 429	3420 429	3420 429
14-38-23	LEVER, Idle Solenoid	———	———	———	———	3514 518	3514 518
14-38-24	Solenoid, Idle	———	———	———	———	3514 892	3514 892
14-38-27	BEARING, Air Valve Shaft	———	3481 648	3481 648	3481 648	3481 648	3481 648
14-38-28	ROD, Throttle Connector	3481 299	3420 462	3420 462	3420 642	3420 462	3420 462
14-38-29	BRACKET, Idle Solenoid	———	———	———	———	3549 317	3549 317
14-38-50	ROD, Throttle Operating	———	3420 461	3420 461	3420 461	3420 461	3420 461
14-38-53	LEVER, Secondary Throttle Operating	———	3420 420	3420 420	3420 420	3420 420	3420 420
14-39-1	VALVE, Choke	3481 271	3420 402	3420 402	3420 402	3420 402	3420 402
	VALVE, Counter Shaft Lever to Choke	———	3420 410	3420 410	3420 410	3420 410	3420 410
14-39-6	SHAFT, w/Lever, Choke	3481 657	———	3481 657	3481 657	3481 657	3481 657
	LEVER, Choke Loose						
14-39-7	DIAPHRAGM, Choke	2933 185	2933 199	2933 199	2933 199	2933 199	2933 199
14-39-8	LINK, Choke Valve	———	3420 466	3420 466	3420 466	3420 466	3420 466
14-39-9	SCREW, Diaphragm Bracket	3420 447	3420 447	3420 447	3420 447	3420 447	3420 447
14-39-10	LEVER, Choke	3481 273	3481 656	3481 656	3481 656	3481 656	3481 656
	LEVER, Choke Shaft	———	3420 409	3420 409	3420 409	3420 409	3420 409
14-39-15	SCREW, Choke Shaft LEVER	———	3420 437	3420 437	3420 437	3420 437	3420 437
	SCREW, Countershaft Lever	———	3420 442	3420 442	3420 442	3420 442	3420 442
14-39-27	RETAINER, Choke Connector Rod	3420 433	3420 433	3420 433	3420 433	3420 433	3420 433
14-39-28	ROD, Choke Diaphragm Connector	3481 287	3420 463	3420 463	3420 463	3420 463	3420 463
	ROD, Choke Connector	3481 288	———	———	———	———	———
14-39-30	SHAFT, Choke	3481 272	3420 408	3420 408	3420 408	3420 408	3420 408
14-39-31	SPACER, Choke Connector Rod	3481 285	———	———	———	———	———
	WASHER, Diaphragm Connector Rod	———	———	3420 471	3420 471	3420 471	3420 471
14-39-45	CHOKE	2946 535	3462 927	3462 927	3462 927	3462 927	3462 927
	SCREW	6024 560	6024 560	6024 560	6024 560	6024 560	6024 560
14-39-51	HOSE, Choke Diaphragm	3481 294	3420 475	3420 475	3420 475	3420 475	3420 475
14-39-56	PIN SPRING	3420 476	———	651 222	———	651 222	———
14-39-57	PIN SPRING, Diaphragm Connector Rod	3420 477	3420 477	3420 477	3420 477	3420 477	3420 477
14-39-60	SCREW, Thermostatic Valve	———	———	———	3481 052	3481 052	3481 052
14-40-1	FLOAT, w/Lever	3481 274	3420 415	3420 415	3420 415	3420 415	3420 415
14-40-4	PIN, Float Lever	3481 201	3420 416	3420 416	3420 416	3420 416	3420 416
14-40-5	RETAINER, Float Lever Pin	3514 541	———	———	———	———	———
14-40-23	ARM, Bowl, Vent	———	3420 419	3420 419	3420 419	3514 509	3514 509
14-40-35	BAFFLE, Fuel Bowl	———	3420 482	3420 482	3420 482	3420 482	3420 482
14-41-3	PLUNGER, w/Rod, Pump	2933 001	2933 193	2933 193	2933 193	2933 193	2933 193
14-41-5	ARM, w/Countershaft, Pump						
14-41-8	LINK, Pump Connector	———	3420 465	3420 465	3420 465	3420 465	3420 465
14-41-9	ARM, Pump	3481 275	3420 456	3420 456	3420 456	3420 456	3420 456
	ARM, Loose Lever						

CARLINES — J - Challenger, B - Barracuda; V - Valiant, L - Dart; R - Belvedere - Satallite, W - Coronet - Charger; P - Plymouth, D - Dodge; C - Chrysler, Y - Imperial

AR Indicates use as required.

= Indicates parts not listed in any previous parts book.

Numerals in parentheses ( ) refer to notes.

★ Indicates change or addition.

Printed in U.S.A.
January 1972

CODE	COMPONENT CHART REFERENCE NO. / MFG. NO.	22 4750S	23 4933S	24 4934S	25 4935S	26 4936S	27 4937S	
14-41-13	RETAINER, Pump Plunger	3481 278	———	———	———	———	———	
14-41-40	NEEDLE, Pump Discharge Check	———	———	3420 412	3420 412	3420 412	3420 412	
14-43-3	PISTON, Step-Up	3514 542	3420 478	3420 478	3420 478	3420 478	3420 478	
14-43-4	PLATE, Step-Up Piston Cover, Pump Side	———	3420 435	3420 435	3420 435	3420 435	3420 435	
	Opposite Pump	———	3420 434	3420 434	3420 434	3420 434	3420 434	
14-43-5	ROD, Step-Up	2585 790	2933 017	2933 017	2933 017	2933 017	2933 017	
14-43-10	SPRING, Step-Up Rod Retaining	———	3420 427	3420 427	3420 427	3420 427	3420 427	
14-45-4	CAM, Fast Idle	3481 300	3481 069	3514 522	3514 522	3481 069	3514 522	
14-45-5	ROD, Fast Idle Connector	———	———	3420 464	3420 464	3420 464	3420 464	
14-45-8	SCREW, Fast Idle Cam	3481 282	3420 441	3420 441	3420 441	3420 441	3420 441	
14-45-12	LIMITER, Idle Screw	———	———	———	———	3420 436	3420 436	
14-45-20	SCREW, Idle Mixture	3481 630	———	3481 554	3481 554	3481 554	3481 554	
14-45-25	SCREW, Fast Idle Speed	3514 495	3481 555	3481 555	3481 555	3481 555	3481 555	
	SCREW, Idle Speed	3481 281	3420 449	3420 449	3420 449	3420 449	3420 449	
14-45-27	WASHER, Idle Speed Screw	———	3420 473	3420 473	3420 473	3420 473	3420 473	
14-46-17	ROD, Bowl Vent Connector	———	———	———	———	———	3514 527	
14-48-2	VALVE, Thermostatic	———	———	3514 881	3514 881	3514 881	3514 881	
14-54-5	SCREW, Throttle Shaft Lever	———	3420 438	3420 438	3420 438	3420 438	3420 438	
14-54-6	WASHER, Secondary Throttle Shaft	———	3420 472	3420 472	3420 472	3420 472	———	
	WASHER, Primary Throttle Shaft	———	———	3481 051	———	3481 051	———	
14-54-11	NUT, Solenoid Clamp	———	———	———	———	3514 316	3514 316	
14-54-15	SCREW, Choke Valve	3420 450	3420 450	3420 450	3420 450	3420 450	3420 450	
	SCREW, Air Valve	———	———	3420 450	3420 450	3420 450	3420 450	
14-54-42	WASHER, Pump Plunger	3481 224	———	———	———	———	———	
14-54-47	SCREW, Pump Arm	3481 279	3420 452	3420 452	3420 452	3481 093	3481 093	
14-54-51	WASHER, Choke Lever Retainer	———	3420 474	3420 474	3420 474	3420 474	3420 474	
14-54-72	SCREW, Air Horn	3481 211	3420 443	3420 443	3420 443	3420 443	3420 443	
14-54-78	SCREW, Body Flange	3481 280	———	———	———	———	———	
14-54-98	WASHER, Solenoid Lock	———	———	———	———	3549 314	———	
14-54-140	SCREW, Idle Solenoid Bracket	———	———	———	———	3514 517	———	
14-54-148	SCREW, Step-Up Piston Plate	3481 214	———	———	———	———	———	
	SCREW, Step-Up Piston Cover Plate	———	3420 451	3420 451	3420 451	3420 451	3420 451	
	SCREW, Air Valve Retainer	———	———	3420 451	3420 451	3420 451	3420 451	
14-54-152	SCREW, Venturi Cluster	3481 302	———	———	———	———	———	

CODE	COMPONENT CHART REFERENCE NO. / MFG. NO.	29 4725S	31 4726S	32 R4372A	33 4727S	34 R4371A	35 4728S
14-30-2	GASKET, Flange	2946 540	2946 540	3514 722	2946 540	3514 722	2946 540
14-30-4	ZIP KIT	3621 286	———	3621 286	3514 468	———	3514 468
	REPAIR KIT	———	3514 895	3514 711	———	3514 756	———
14-30-7	GASKET KIT	3549 296	3549 296	3514 710	3549 296	3514 755	2933 191
14-30-8	NEEDLE, w/Seat	2933 042	2933 042	3514 730	2933 042	3514 730	2933 042
14-30-15	CLIP, Cable	———	3549 267	3420 318	———	3420 318	———
14-30-30	FITTING, Fuel Inlet	———	———	3514 731	———	3514 731	———
14-33-1	BODY, w/Shaft, Throttle	———	———	———	———	3514 727	———
14-34-63	SEAL, Grommet	———	3481 331	———	———	———	———
14-35-1	JET, Main Metering	3419 619	3549 303	2809 253	3419 619	2809 253	3419 619
	JET, Main Metering (Throttle Side) (Choke Side)						
14-35-6	VALVE, Power	———	———	3419 647	———	3549 436	———
	VALVE, w/Stem, Power	———	———	———	———	———	———
	PUMP CUP	———	———	3419 639	———	3419 639	———
14-35-35	RETAINER, Pwr. Valve Piston	———	———	———	———	3549 435	———
14-35-42	COVER, Venturi	3481 318	3481 318	———	3481 318	———	3481 318
14-36-1	SPRING, Idle Speed Screw	3481 205	3481 205	———	3481 205	———	3481 205
	SPRING, Idle Mixture Screw	3481 558	3481 558	———	3481 558	———	3481 558
	SPRING, Idle Needle	———	———	3481 395	———	3481 395	———

CARLINES: J - Challenger, B - Barracuda, V - Valiant, L - Dart, R - Belvedere - Satallite, W - Coronet - Charger, P - Plymouth, D - Dodge, C - Chrysler, Y - Imperial

AR Indicates use as required.

**Indicates** parts not listed in any previous parts book.

Numerals in parentheses ( ) refer to notes.

★ Indicates change or addition.

Printed in U.S.A.
January 1972

	COMPONENT CHART REFERENCE NO.	29	31	32	33	34	35
CODE	MFG. NO.	4725S	4726S	R4372A	4727S	R4371A	4728S
14-36-2	SPRING, Step-Up Piston	3481 248	3481 248	———	3481 248	———	3481 248
14-36-15	SPRING, Pump	3481 313	3481 313	3549 415	3481 313	3514 742	3481 313
14-36-29	SPRING, Throttle Stop Screw	———	———	3419 675	———	3419 675	———
14-36-50	SPRING, Vent Valve Lever	———	———	3514 743	———	3514 743	———
	SPRING, Vent Valve	———	———	3481 665	———	———	———
14-37-27	LEAD SHOT (.180)	3420 453	3420 453	———	3420 453	———	3420 453
	LEAD SHOT	3481 538	3481 538	———	3481 538	———	3481 538
	LEAD SHOT	———	3481 284	———	3481 284	———	3481 284
14-37-29	BALL, Pump Intake Check	3481 289	3481 289	———	3481 289	———	3481 289
14-37-30	BALL, Pump Discharge Check	3481 220	3481 220	———	3481 220	———	3481 220
14-38-4	VALVE or PLATE, Throttle	3481 307	3481 307	3514 726	3481 307	3514 726	3481 307
14-38-5	SCREW, Throttle Valve or PLATE	3420 445	3420 445	3514 834	3420 445	3514 834	3420 445
14-38-12	SHAFT, w/Lever, Throttle	3549 260	3549 260	3419 666	3549 260	3419 666	3549 260
14-38-20	SPRING, Throttle Lever	———	———	3514 744	———	3514 744	———
14-38-28	ROD, Throttle Connector	3481 316	3481 316	———	3481 316	———	3481 316
14-39-1	VALVE or PLATE, Choke	3481 309	3481 309	3549 323	3481 309	3514 712	3481 309
14-39-6	SHAFT, w/Lever, Choke	3549 261	3549 261	3549 324	3549 261	3549 324	3549 261
	PLATE, w/Lever, Choke	———	———	3549 419	———	3514 713	———
14-39-7	DIAPHRAGM, Choke	2933 190	2933 190	3419 508	2933 190	3419 621	2933 190
14-39-8	LINK, Choke Diaphragm	———	———	3514 739	———	3514 739	———
	PIN, Choke Diaphragm	———	———	3481 674	———	3481 674	———
14-39-9	SCREW, Diaphragm Bracket	3420 447	3420 447	———	3420 447	———	3420 447
14-39-10	LEVER, Choke	3481 273	3481 273	———	3481 273	———	3481 273
14-39-11	PIN, Diaphragm Link						
14-39-27	RETAINER, Choke Diaphragm Connector Rod	3420 433	3420 433	———	3420 433	———	3420 433
14-39-28	ROD, Diaphragm Connector	3481 317	3481 317	———	3481 317	———	3481 317
14-39-45	CHOKE	2951 652	2951 652	2951 652	2951 652	2951 652	2951 652
	SCREW	6024 560	6024 560	———	6024 560	———	6024 560
14-39-46	GSKT. Cup Choke	———	———	2951 545	———	2951 545	———
14-39-48	CUP, Choke	———	———	2951 544	———	2951 544	———
	SCREW	6024 560	6024 560	———	6024 560	———	6024 560
14-39-51	HOSE, Diaphragm	3481 294	3481 294	3419 687	3481 294	3419 687	3481 294
14-39-56	PIN SPRING, Choke	3420 476	3420 476	———	3420 476	———	3420 476
14-39-57	PIN SPRING, Diaphragm Connector Rod	3420 477	3420 477	———	3420 477	———	3420 477
14-40-1	FLOAT, w/Lever	3481 311	3481 311	3514 707	3481 311	3514 707	3481 311
14-40-4	PIN, Float Lever	3481 201	3481 201	3514 734	3481 201	3514 734	3481 201
	PIN, Float Hinge	———	———	3514 735	———	3514 735	———
14-40-5	RETAINER, Float Lever Pin	3481 277	3481 277	———	3481 277	———	3481 277
14-40-35	BAFFLE, Fuel Bowl	———	———	3514 749	———	3514 749	———
14-41-3	PLUNGER, w/Rod, Pump	3621 446	3621 446	3514 736	3621 446	3549 413	3621 446
		———	———	3514 733	———	3514 733	———
		———	———	3514 737	———	3549 414	———
	PISTON, Power Valve	———	———	———	———	3514 733	———
	STEM, Pump	———	———	———	———	3514 737	———
14-41-5	ARM, w/Countershaft Pump	3481 326	3481 326	———	3549 270	———	3549 270
14-41-8	LINK, Pump	———	———	3514 738	———	3514 738	———
14-41-9	ARM, Pump	3481 312	3481 312	———	3481 312	———	3481 312
	ARM, Loose Lever	3481 328	3481 328	———	3549 269	———	3549 269
14-41-14	PLATE, Cover	———	———	———	3514 488	———	3514 488
	PLATE, Cover	———	———	———	3549 271	———	3549 271
14-41-18	VALVE, Pump Discharge	———	———	3514 732	———	3514 732	———
14-41-21	SHAFT, Pump Lever	———	———	3514 751	———	3514 751	———
14-41-22	LEVER, Pump	———	———	3514 750	———	3514 750	———
14-43-3	PISTON, w/Plate, Step-Up	3481 323	3481 323	———	3481 323	———	3481 323
14-43-5	ROD, Step-Up	2585 422	2808 016	———	2585 458	———	2808 016
14-45-1	NEEDLE, Idle Adjusting	———	———	3514 728	———	3514 728	———

CARLINES	J - Challenger B - Barracuda	V - Valiant L - Dart	R - Belvedere - Satellite W - Coronet - Charger	P - Plymouth D - Dodge	C - Chrysler Y - Imperial

AR Indicates use as required.

≠ Indicates parts not listed in any previous parts book.

Numerals in parentheses ( ) refer to notes.

★ Indicates change or addition.

Printed in U.S.A.
January 1972

	COMPONENT CHART REFERENCE NO.	29		31	32	33	34	35
CODE	MFG. NO.	4725S		4726S	R4372A	4727S	R4371A	4728S
14-45-4	CAM, Fast Idle	3549 265		3549 265	3549 322	3549 265	3549 322	3549 265
14-45-5	ROD, Fast Idle Connector	3549 266		3549 266	3514 746	3549 266	3514 746	3549 266
14-45-7	LEVER, Fast Idle	———		———	3514 714	———	3514 714	———
14-45-8	SCREW, Fast Idle Cam	3481 282		3481 282	3514 715	3481 282	3514 715	3481 282
14-45-9	NUT, Fast Idle Lever	———		———	3481 397	———	3418 397	———
14-45-10	RETAINER, Fast Idle Cam	———		———	3514 741	———	3514 741	———
14-45-12	LIMITER, Idle Mixture Screw	3481 644		3420 436	3514 740	———	3514 740	———
	LIMITER, Idle Adjusting Needle							
	LIMITER, Idle Screw	———		———	———	3420 436	———	3420 436
14-45-15	COVER, Hot Idle	———		———	3481 663	———	———	———
14-45-17	COMPENSATOR, Hot Idle	———		———	3481 666	———	———	———
14-45-19	SEAL, Hot Idle Compensator	———		———	3481 661	———	———	———
14-45-20	SCREW, Idle Mixture	3549 262		3549 262	———	3549 262	———	3549 262
14-45-25	SCREW, Fast Idle Speed	3481 281		3481 281	———	3481 281	———	3481 281
	SCREW, Idle Speed	3481 210		3481 210	———	3481 210	———	3481 210
14-46-1	VALVE, Air Vent	———		———	———	———	3549 417	———
14-46-6	CLAMP, Vent Valve	———		———	3418 667	———	———	———
14-46-7	SCREW, Cover							
14-46-8	SEAL, Vent Valve	———		———	3481 659	———	———	———
14-46-9	BODY, Vent Valve	———		———	3514 661	———	———	———
14-46-10	CLAMP, Vent Valve							
14-46-14	LEVER, Vent Valve	———		———	———	———	3514 708	———
14-47-1	AIR HORN PKG. (For Air Leak)	3579 031		3579 031	———	3579 031	———	3579 031
14-49-1	BODY, w/Plugs, Main	———		———	3514 706	———	———	———
14-54-6	WASHER, Throttle Shaft	3549 272		3549 272	———	3549 272	———	3549 272
14-54-14	WIRE and CONNECTOR	———		———	3549 321	———	3549 321	———
14-54-15	SCREW, Choke Valve or Plate	3420 450		3420 450	3420 255	3420 450	———	3420 450
	SCREW	———		———	3514 716	———	3514 716	———
14-54-16	SCREW & WASHER, Cover	———		———	3481 658	———	———	———
14-54-19	L/WASHER	———		———	3481 601	———	3481 601	———
14-54-42	L/WASHER	———		———	3481 507	———	———	———
14-54-45	WASHER	———		———	3549 416	———	———	———
14-54-47	SCREW, Pump Arm	3481 314		3481 314	———	3481 314	———	3481 314
14-54-51	WASHER, Pump Spring Retainer	3481 330		3481 330	———	3481 330	———	3481 330
14-54-72	SCREW, Air Horn (1)	3481 211		3481 211	3514 719	3481 211	3514 719	3481 211
	(7)	———		———	3514 720	———	3514 720	———
14-54-78	SCREW, Body Flange	3420 443		3420 443	3514 717	3420 443	3514 717	3420 443
	SCREW, Throttle Body	———		———	3514 718	———	3514 718	———
	SCREW, Fuel Bowl Baffle							
14-54-148	SCREW, Step-Up Piston	———		3481 315	———	3481 315	———	3481 315
	SCREW, Step-Up Piston Cover Plate	———		———	———	3420 451	———	3420 451
14-54-152	SCREW, Venturi Cluster	3481 298		3481 633	———	3481 298	———	———

	COMPONENT CHART REFERENCE NO.	36	37	38	39	40	41	42
CODE	MFG. NO.	4729S	4730S	R4367A	R4217A	4736S	4732S	4734S
14-30-2	GASKET, Flange	2264 193	2264 193	2946 543	2946 543	2946 543	2964 543	2946 543
14-30-3	VENTURI, Primary (Pump Side)	———	———	———	———	3514 523	3514 523	3514 521
	(Opposite Pump)	———	———	———	———	3514 521	3514 521	3514 523
14-30-4	ZIP KIT	3621 286	3621 286	3514 816	3514 824	3514 469	3514 469	3514 469
14-30-7	GASKET KIT	3549 296	3549 296	3514 817	3514 825	3549 297	3549 297	3549 297
14-30-8	NEEDLE, w/Seat	2933 042	2933 042	2809 335	2809 335	2933 106	2933 106	2933 106
14-30-16	PLATE, Fuel Bowl Baffle	———	———	3420 324	3420 324	———	———	———
14-30-27	STRAINER, Fuel Inlet	———	———	———	———	1826 864	1826 864	1826 864
14-30-28	NUT, Strainer	———	———	———	———	1826 863	1826 863	1826 863
14-30-29	GASKET, Strainer Nut	———	———	———	———	3420 413	3420 413	3420 413
14-30-30	FITTING, Fuel Inlet	———	———	2809 248	3514 830	———	———	———
14-30-31	BAFFLE, Fuel Inlet	———	———	3420 389	3420 389	———	———	———
14-32-15	SCREW, Venturi	———	———	———	———	3420 448	3420 448	3420 448

CARLINES J - Challenger, B - Barracuda; V - Valiant, L - Dart; R - Belvedere - Satallite, W - Coronet - Charger; P - Plymouth, D - Dodge; C - Chrysler, Y - Imperial

AR Indicates use as required.

 # Indicates parts not listed in any previous parts book.

Numerals in parentheses ( ) refer to notes.

★ Indicates change or addition.

Printed in U.S.A.
January 1972

	COMPONENT CHART REFERENCE NO.	36	37	38	39	40	41	42
CODE	MFG. NO.	4729S	4730S	R4367A	R4217A	4736S	4732S	4734S
14-33-1	BODY, w/Shaft, Throttle	———	———	3514 812	3514 812	———	———	———
14-34-10	GASKET, Secondary Metering Body	———	———	3514 851	———	———	———	———
14-34-21	GASKET, Needle Seat	———	3481 199	———	———	3420 414	3420 414	3420 414
14-34-63	SEAL, Grommet	———	———	———	———	3420 480	3420 480	3549 406
14-35-1	JET, Main Metering	3419 619	3419 619	2196 240	2196 240	———	———	———
	Primary	———	———	———	———	2809 254	2809 254	2809 254
	Secondary	———	———	———	———	3481 652	3481 652	3481 652
14-35-3	NOZZLE, Pump Discharge	———	———	3420 366	3420 366	———	———	———
	JET, Pump	———	———	———	———	3420 418	3420 418	3420 418
14-35-6	VALVE, Power	———	———	2084 715	2084 715	———	———	———
	VALVE, Pump Discharge Needle	———	———	3514 684	3514 684	———	———	———
14-35-9	DIAPHRAGM, Secondary	———	———	2809 252	2809 252	———	———	———
14-35-10	SCREW, Pump Jet	———	———	———	———	3420 440	3420 440	3420 440
14-35-18	SCREW, Secondary Diaphragm Housing	———	———	3420 343	3420 343	———	———	———
14-35-19	SCREW, Pump Discharge Nozzle	———	———	3420 346	3420 346	———	———	———
14-35-25	HOUSING, Diaphragm	———	———	3420 392	3420 392	———	———	———
14-35-26	LEVER, Diaphragm	———	———	3420 391	3420 391	———	———	———
14-35-38	SPRING, *Vacuum Piston*	———	———	———	———	3420 428	3420 428	3420 428
14-35-39	BODY, w/Plugs, Primary Metering	———	———	3514 813	3514 813	———	———	———
	BODY, Secondary Metering	———	———	3514 854	3514 854	———	———	———
14-35-42	COVER, Venturi	3481 318	3481 318	———	———	———	———	———
14-35-43	SCREW, Secondary Metering Body	———	———	3420 349	3420 349	———	———	———
14-36-1	SPRING, Fast Idle Screw	3481 205	3481 205	———	———	———	———	———
	SPRING, Idle Speed Screw	3481 205	3481 205	———	———	3420 425	3420 425	3420 425
	SPRING, Idle Mixture Screw	3481 558	3481 558	———	———	3481 558	3481 558	3481 558
	SPRING, Pump Lever Adjusting Screw	———	———	3420 378	3420 378	———	———	———
14-36-2	SPRING, Step-Up Piston	3481 248	3481 248	———	———	3420 427	3420 427	———
14-36-15	SPRING, Pump	3481 313	3481 313	———	———	3420 424	3420 424	3420 424
14-36-22	SPRING, Secondary Throttle Return	———	———	———	———	3420 432	3420 432	3420 432
14-36-29	SPRING, Throttle Stop Screw	———	———	3419 675	3419 675	———	———	———
14-36-50	SPRING, Vent Rod	———	———	———	3514 699	———	———	———
	SPRING, Air Vent Valve	———	———	———	3481 665	———	———	———
	SPRING, Air Valve	———	———	———	———	3420 430	3420 430	3420 430
	SPRING, Bowl Vent Arm	———	———	———	———	3420 431	3420 431	3514 525
	SPRING, Throttle Lever	———	———	———	———	———	3420 429	———
14-36-53	SPRING, Diaphragm Return	———	———	3420 376	3420 376	———	———	———
	SPRING, Secondary Diaphragm	———	———	3514 806	3514 806	———	———	———
14-37-4	PLUG, Passage	———	———	———	———	3420 405	3420 405	3420 405
14-37-15	PLUG, Rivet	———	———	———	———	3420 404	3420 404	3420 404
	PLUG, Idle Port Rivet	———	———	———	———	3481 553	3481 553	3481 553
14-37-27	LEAD SHOT	3481 538	3481 538	———	———	———	———	———
	LEAD SHOT	3481 284	3481 284	———	———	———	———	———
	LEAD SHOT	3420 453	3420 453	———	———	3420 453	3420 453	3420 453
	LEAD SHOT	———	———	———	———	3420 454	3420 454	3420 454
14-37-29	BALL, Pump Intake Check	3481 289	3481 289	———	———	3420 470	3420 470	3420 470
14-37-30	BALL, Pump Discharge Check	3481 220	3481 220	———	———	———	———	———
14-38-3	SCREW, Throttle Body	———	———	———	3420 342	———	———	———
14-38-30	TERM. & INSUL. PKG., Idle Sol.	———	———	———	———	———	———	3685 656
14-38-4	VALVE, Throttle	3481 307	3481 307	———	———	———	———	———
	Primary	———	———	3420 353	3420 353	3420 398	3420 398	3420 398
	Secondary	———	———	3481 691	3481 691	3420 397	3420 397	3420 397
	VALVE, Air	———	———	———	———	3514 507	3514 507	3514 507

CARLINES	J - Challenger B - Barracuda	V - Valiant L - Dart	R - Belvedere - Satallite W - Coronet - Charger	P - Plymouth D - Dodge	C - Chrysler Y - Imperial

AR Indicates use as required.

Numerals in parentheses ( ) refer to notes.

≠ Indicates parts not listed in any previous parts book.

★ Indicates change or addition.

Printed in U.S.A.
January 1972

CODE	COMPONENT CHART REFERENCE NO. / MFG. NO.	36 4729S	37 4730S	38 R4367A	39 R4217A	40 4736S	41 4732S	42 4734S
14-38-5	SCREW, Throttle Valve	3420 445	3420 445	———	———	———	———	———
	Primary Valve	———	———	3420 261	3420 261	3420 446	3420 446	3420 446
	Secondary Valve	———	———	3420 347	3420 347	3420 445	3420 445	3420 445
14-38-12	SHAFT, w/Lever, Throttle	3549 260	3549 260	———	———	———	———	———
	SHAFT, w/Lever and Dog, Primary	———	———	———	———	3481 552	3481 552	3481 552
	SHAFT, w/Dog, Secondary	———	———	———	———	3420 399	3420 399	3420 399
	SHAFT, Air Valve	———	———	———	———	3420 407	3420 407	3420 407
14-38-13	ARM, Primary Throttle Shaft, Inner	———	———	———	———	3420 460	3420 460	3420 460
	Outer	———	———	———	———	3420 458	3420 458	3420 458
14-38-14	DOG, Throttle Shaft	———	———	———	———	3420 401	3420 401	3514 524
	DOG, Lockout	———	———	———	———	3420 421	3420 421	3420 421
14-38-20	SPRING, Throttle Lever	———	———	———	———	3420 429	3420 429	3420 429
14-38-27	BEARING, Air Valve, to Adjust Spring Tension	———	———	———	———	3481 648	3481 648	3481 648
14-38-28	ROD, Throttle Connector	3481 316	3481 316	3420 384	3420 384	3420 462	3420 462	3420 462
14-38-30	TERM. & INSUL. PKG., Idle Sol.	3685 656	———	———	———	———	———	3685 657
14-38-36	RETAINER, Throttle Connector ROD	———	———	3420 386	3420 386	———	———	———
14-38-50	ROD, Throttle Operating	———	———	———	———	3420 461	3420 461	3420 461
14-38-53	LEVER, Secondary Throttle Operating	———	———	———	———	3420 420	3420 420	3420 420
14-39-1	VALVE or PLATE, Choke	3481 309	3481 309	3420 336	3420 336	3420 410	3420 410	3420 410
	CHOKE, Valve Assy.	———	———	———	———	———	———	3420 402
14-39-6	SHAFT, w/Lever, Choke	3549 261	3549 261	———	———	3481 657	3481 657	3481 657
14-39-7	DIAPHRAGM, Choke	2933 190	3419 584	3419 515	3419 515	2933 199	2933 199	2933 199
14-39-8	LINK, Choke Diaphragm	———	———	3514 804	3514 804	———	———	———
	LINK, Choke Valve	———	———	———	———	3420 466	3420 466	3420 466
14-39-9	SCREW, Diaphragm Bracket	3420 447	3420 447	3420 339	3420 339	3420447	3420 447	3420 447
14-39-10	LEVER, Choke	3481 273	3481 273	3514 797	3514 797	3481 656	3481 656	3481 656
	LEVER, Choke Shaft	———	———	———	———	———	3420 409	3420 409
14-39-15	SCREW, Choke Shaft Lever	———	———	———	———	3420 437	3420 437	3420 437
	SCREW, Countershaft Lever	———	———	———	———	3420 442	3420 442	3420 442
14-39-27	RETAINER, Diaphragm Connector Rod	———	———	———	———	3420 443	3420 443	3420 443
14-39-28	ROD, Choke Diaphragm Connector	3481 317	3481 317	———	———	3420 463	3420 463	3420 463
	ROD, Choke Connector	———	———	3420 383	3420 383	———	———	———
14-39-29	SEAL, Choke Rod	———	———	3420 301	3420 301	———	———	———
14-39-30	SHAFT, Choke	———	———	3420 311	3420 311	3420 408	3420 408	3420 408
14-39-31	WASHER, Diaphragm Connector Rod	———	———	———	———	3420 471	3420 471	3420 471
14-39-45	CHOKE	2946 536	2946 536	2946 539	2946 539	2951 653	2951 653	2951 653
14-39-51	HOSE, Diaphragm	3481 294	3481 294	3419 c37	3419.687	3420 475	3420 475	3420 475
14-39-56	PIN SPRING	3420 476	3420 476	3420 368	3420 368	3420 433	3420 433	3420 433
	PIN, Spring	———	———	———	———	———	———	651 222
14-39-57	PIN SPRING, Diaphragm Connector Rod	3420 477	3420 477	———	———	3420 477	3420 477	3420 477
14-39-60	SCREW ASSY. Thermostatic Valve	———	———	———	———	———	———	3481 052
14-40-1	FLOAT, w/Lever	3481 311	3481 311	3420 364	3420 364	3549 307	3549 307	3549 307
14-40-4	PIN, Float Lever	3481 201	3481 201	———	———	3420 416	3420 416	3420 416
14-40-5	RETAINER, Float Lever Pin	3481 277	3481 277	———	———	3481 277	3481 277	———
	RETAINER, Float	———	———	3419 673	3419 673	———	———	———
14-40-7	BOWL, w/Plugs, Fuel, Primary	———	———	3420 372	3514 831	———	———	———
	Secondary	———	———	3420 373	3420 373	———	———	———
14-40-18	SPRING, Float	———	———	3420 317	3420 317	———	———	———
14-40-23	ARM, Bowl Vent	———	———	———	———	3420 419	3420 419	3514 509
14-40-35	BAFFLE, Bowl Vent	———	———	———	———	3420 482	3420 482	3420 482
14-41-3	PLUNGER, w/Rod, Pump	3621 446	3621 446	2196 234	2196 234	2933 193	2933 193	2933 193
14-41-5	ARM, w/Countershaft, Pump	3481 326	3481 326	———	———	———	———	———
14-41-8	LINK, Pump Connector	———	———	———	———	3420 465	3420 465	3420 465
14-41-9	ARM, Pump	3481 312	3481 312	———	———	3420 456	3420 456	3420 456

CARLINES J - Challenger, B - Barracuda, V - Valiant, L - Dart, R - Belvedere - Satallite, W - Coronet - Charger, P - Plymouth, D - Dodge, C - Chrysler, Y - Imperial

AR Indicates use as required.

# Indicates parts not listed in any previous parts book.

Numerals in parentheses ( ) refer to notes.

★ Indicates change or addition.

Printed in U.S.A.
January 1972

	COMPONENT CHART REFERENCE NO.	36	37	38	39	40	41	42
CODE	MFG. NO.	4729S	4730S	R4367A	R4217A	4736S	4732S	4734S
14-41-10	CAM, Pump	———	———	3420 321	3420 321	———	———	———
14-41-22	LEVER, Pump Operating	———	———	3514 680	3514 680	———	———	———
14-41-23	RETAINER, Pump Operating Lever	———	———	3514 681	3514 681	———	———	———
14-41-25	FITTING, Pump Lever Adjusting Screw	———	———	3420 365	3420 365	———	———	———
14-41-35	SCREW, Pump and Diaphragm Cover	———	———	———	3420 259	———	———	———
14-41-40	NEEDLE, Pump Discharge Check	———	———	———	———	3420 412	3420 412	3420 412
14-43-3	PISTON, Step-Up	3481 323	3481 323	———	———	3420 478	3420 478	3420 478
14-43-4	PLATE, Step-Up Piston Cover, Pump Side	———	———	———	———	3420 435	3420 435	3420 435
	Opposite Pump	———	———	———	———	3420 434	3420 434	3420 434
14-43-5	ROD, Step-Up	2585 458	2585 458	———	———	2933 017	2933 017	2933 158
14-43-10	SPRING, Step-Up Rod Retaining	———	———	———	———	3420 427	3420 427	3420 427
14-44-10	TUBE, Balance	———	———	3420 361	3420 361	———	———	———
14-44-11	WASHER, Balance Tube	———	———	3420 385	3420 385	———	———	———
14-44-12	"O"RING, Balance Tube	———	———	3420 367	3420 367	———	———	———
14-45-1	NEEDLE, Idle Adjusting	———	———	3514 799	3514 799	———	———	———
14-45-3	LEVER, Fast Idle Cam	———	———	3420 338	3420 338	———	———	———
14-45-4	CAM, Fast Idle	3549 265	3549 265	3514 689	3514 689	3514 522	3514 522	3514 522
14-45-5	ROD, Fast Idle Connector	3549 266	3549 266	———	———	3420 454	3420 454	3420 454
14-45-8	SCREW, Fast Idle Cam	3481 282	3481 282	3420 344	3420 344	3420 411	3420 441	3420 441
14-45-12	LIMITER, Idle Needle	———	———	3420 393	3420 393	3481 644	3481 644	3481 644
14-45-15	COVER, Hot Idle Compensator	———	———	———	3481 663	———	———	———
14-45-17	COMPENSATOR, Hot Idle	———	———	———	3481 666	———	———	———
14-45-19	SEAL, Hot Idle Compensator	———	———	———	3481 661	———	———	———
14-45-20	SCREW, Idle Mixture	3549 262	3549 262	———	———	3481 554	3481 554	3481 554
14-45-25	SCREW, Fast Idle Speed	3481 281	3481 281	———	———	3481 555	3481 555	———
	SCREW, Idle Speed	3481 210	3481 210	———	———	3514 526	3514 526	3514 526
14-45-27	WASHER, Idle Speed Screw	———	———	———	———	3420 473	3420 473	3420 473
14-45-32	BRACKET, Retard Wire	———	———	———	3514 809	———	———	———
14-45-33	CABLE, Retard	———	———	———	3514 810	———	———	———
14-46-1	VALVE, Air Vent	———	———	3419 669	———	———	———	———
14-46-3	PLATE, Secondary Metering Body	———	———	3420 370	3420 370	———	———	———
14-46-4	RETAINER, "E" Ring	———	———	3420 375	3420 375	———	———	———
14-46-5	ROD, Air Vent	———	———	3514 807	3514 700	———	———	———
14-46-6	CLAMP, Air Vent Rod	———	———	3420 387	3420 387	———	———	———
14-46-7	BAFFLE, Metering Body Vent	———	———	3420 388	3420 388	———	———	———
14-46-8	SEAL, Vent Valve	———	———	———	3481 659	———	———	———
14-46-9	BODY, Vent Valve	———	———	———	3481 660	———	———	———
14-46-10	CLAMP, Vent Valve	———	———	———	3481 667	———	———	———
14-46-17	VENT, Bowl Connector Rod	———	———	———	———	———	———	3514 527
14-47-1	AIR HORN PKG. (For Air Leak)	3579 031	3579 031	———	———	———	———	———
14-48-2	VALVE, Thermostatic	———	———	———	———	———	2933 165	3514 881
14-54-3	SCREW, Throttle Stop	———	———	3420 256	3420 256	———	———	———
14-54-5	SCREW, Throttle Shaft Lever	———	———	———	———	3420 438	3420 438	3420 438
14-54-6	WASHER, Primary Throttle Shaft	———	———	———	———	3481 051	3481 051	3481 051
	WASHER, Secondary Throttle Shaft	———	———	———	———	3420 472	3420 472	3420 472
	WASHER, Throttle Shaft Spring	———	———	———	———	———	———	3514 519
14-54-15	SCREW, Choke Valve	3420 450	3420 450	3420 255	3420 255	3420 450	3420 450	———
	SCREW, Air Valve	———	———	———	———	3420 450	3420 450	3420 450
14-54-16	SCREW, Vent Valve	———	———	———	3481 658	———	———	———
14-54-36	SCREW, Air Vent Rod Clamp	———	———	3420 340	3420 340	———	———	———
14-54-42	WASHER, Pump Spring Retainer	3481 330	3481 330	———	———	———	———	———
14-54-43	SCREW, Pump Lever Adjusting	———	———	3420 345	3420 345	———	———	———
14-54-47	SCREW, Pump Arm	3481 314	3481 314	———	———	3420 452	3420 452	3481 093
14-54-50	SCREW, Pump Cam Lock	———	———	3420 265	3420 265	———	———	———
14-54-51	WASHER, Choke Lever Retainer	———	———	———	———	3420 474	3420 474	3420 474
14-54-72	SCREW, Air Horn	3481 211	3481 211	———	———	3420 443	3420 443	3420 443
14-54-78	SCREW, Body Flange	3420 443	3420 443	———	———	———	———	———
	SCREW, Fuel Bowl	———	———	3420 341	3420 341	———	———	———
	SCREW, Secondary Fuel Bowl	———	———	3420 348	3420 348	———	———	———

CARLINES — J - Challenger, B - Barracuda, V - Valiant, L - Dart, R - Belvedere - Satellite, W - Coronet - Charger, P - Plymouth, D - Dodge, C - Chrysler, Y - Imperial

AR Indicates use as required.

Numerals in parentheses ( ) refer to notes.

≠ Indicates parts not listed in any previous parts book.

★ Indicates change or addition.

Printed in U.S.A.
January 1972

	COMPONENT CHART REFERENCE NO.	36	37	38	39	40	41	42
CODE	MFG. NO.	4729S	4730S	R4367A	R4217A	4736S	4732S	4734S
14-54-148	SCREW, Step-Up Piston Plate	3481 315	3481 315	———	———	3420 451	3420 451	———
	SCREW, Air Valve Retainer	———	———	———	———	3420 451	3420 451	3420 451
14-54-152	SCREW, Venturi Cluster	3481 298	3481 298	———	———	———	———	———
	COMPONENT CHART REFERENCE NO.	43	44	45	46	47	48	49
CODE	MFG. NO.	R4368A	R4218A	R4369A	4737S	4739S	R4382A	R4175A
14-30-2	GASKET, Flange	2946 543	2946 543	2946 543	2946 543	2946 543	2946 531	2946 531
14-30-3	VENTURI, Primary (Pump Side)	———	———	———	3514 515	3514 515	———	———
14-30-4	REPAIR Kit	3514 816	3514 824	3514 819	3549 274	3549 274	3514 651	3514 651
14-30-7	GASKET KIT	3514 817	3514 825	3514 818	3549 273	3549 273	3514 652	3514 652
14-30-8	NEEDLE, w/Seat	2809 335	2809 335	2809 335	2933 106	2933 106	3514 669	3514 669
14-30-14	NUT, Fuel Valve Seat Adjusting	———	———	———	———	———	3420 318	———
14-30-16	PLATE, Fuel Bowl Baffle	3420 324	3420 324	3420 324	———	———	———	———
14-30-27	STRAINER, Fuel Inlet	———	———	———	1826 864	1826 864	———	———
14-30-28	NUT, Strainer	———	———	———	1826 863	1826 863	———	———
14-30-29	GASKET, Strainer Nut	———	———	———	3420 413	3420 413	———	———
14-30-30	FITTING, Fuel Inlet	2809 248	3514 731	2809 248	———	2808 248	2809 248	———
14-30-31	BAFFLE, Fuel Inlet	3420 389	3420 389	3420 389	———	———	———	———
14-32-15	SCREW, Venturi	———	———	———	3420 448	3420 448	———	———
14-33-1	BODY, w/Shaft, Throttle	3514 812	3514 812	3514 812	———	———	3514 792	3514 792
14-34-10	GASKET, Secondary Metering Body	3514 851	———	3514 851	———	———	———	———
14-34-17	GASKET, Diaphragm Housing	———	———	———	———	———	3420 350	———
14-34-21	GASKET, Needle Seat	3420 353	———	———	3420 414	———	———	———
14-34-63	SEAL, Grommet	———	———	———	3420 480	3420 480	———	———
	SEAL, Venturi Vent	———	———	———	3420 479	———	———	———
14-35-1	JET, Main Metering	2196 240	2196 240	2196 240	———	———	———	———
	PRIMARY	———	———	———	2933 020	2933 020	———	———
	SECONDARY	———	———	———	2933 195	2933 195	———	———
14-35-3	NOZZLE, Pump Discharge	3420 366	3420 366	3420 366	———	———	———	———
	JET, Pump	———	———	———	3420 418	3420 418	———	———
14-35-6	VALVE, Power	2084 715	2084 715	2084 715	———	———	3420 299	———
	VALVE, Pump Discharge Needle	3514 684	3514 684	3514 684	———	———	———	———
14-35-9	DIAPHRAGM, Secondary	2809 252	2809 252	2809 252	———	———	3514 794	3514 794
14-35-10	SCREW, Pump Jet	———	———	———	3420 440	3420 440	———	———
14-35-18	SCREW, Secondary Diaphragm Housing	3420 343	3420 343	3420 343	———	———	———	———
14-35-19	SCREW, Pump Discharge Nozzle	3420 346	3420 346	3420 346	———	———	———	———
14-35-25	HOUSING, Diaphragm	3420 392	3420 392	3420 392	———	———	3514 657	3514 657
14-35-26	LEVER, Diaphragm	3420 391	3420 391	3420 391	———	———	3514 655	3514 655
14-35-38	SPRING, Vacuum Piston	———	———	———	3420 428	3420 428	———	———
14-35-39	BODY, w/Plugs, Primary Metering	3549 309	3514 813	3549 309	———	———	———	———
	BODY, w/Plugs, Metering	———	———	———	———	———	3514 846	3514 846
14-35-43	SCREW, Secondary Metering Body	3420 349	3420 349	3420 349	———	———	3420 349	3420 349
14-35-45	COVER, Diaphragm	———	———	———	———	———	3514 653	3514 653
14-36-1	SPRING, Pump Lever Adjusting	3420 378	3420 378	3420 378	———	———	———	———
	SPRING, Idle Speed Screw	———	———	———	3420 425	3420 425	———	———
	SPRING, Idle Mixture Screw	———	———	———	3514 516	———	———	———
14-36-15	SPRING, Pump	———	———	———	3420 424	3420 424	———	———
14-36-22	SPRING, Secondary Throttle Return	———	———	———	3420 432	3420 432	———	———
14-36-29	SPRING, Throttle Stop Screw	3419 675	3419 675	3419 675	———	———	———	———
14-36-50	SPRING, Air Vent Valve	3420 377	3481 665	3420 377	———	———	———	———
	SPRING, Vent Rod	———	3514 699	———	———	———	———	———
	SPRING, Air Valve	———	———	———	3420 430	3420 430	———	———
	SPRING, Throttle Lever	———	———	———	3420 429	3420 429	———	———
	SPRING, Bowl Vent Arm	———	———	———	3420 431	3420 431	———	———
14-36-53	SPRING, Secondary Diaphragm	3514 808	3514 806	3514 806	———	———	———	———
	SPRING, Diaphragm Return	3420 376	3420 376	3420 376	———	———	3514 806	3514 806
14-37-4	PLUG, Passage	———	———	———	3420 405	3420 405	———	———
14-37-14	PLUG, Fuel Level Check	———	———	———	———	———	3420 275	3420 275

CARLINES J - Challenger, B - Barracuda, V - Valiant, L - Dart, R - Belvedere - Satallite, W - Coronet - Charger, P - Plymouth, D - Dodge, C - Chrysler, Y - Imperial

AR Indicates use as required.

# Indicates parts not listed in any previous parts book.

Numerals in parentheses ( ) refer to notes.

★ Indicates change or addition.

Printed in U.S.A.
January 1972

CODE	COMPONENT CHART REFERENCE NO. / MFG. NO.	43 R4368A	44 R4218A	45 R4369A	46 4737S	47 4739S	48 R4382A	49 R4175A
14-37-15	RIVET, Plug	———	———	———	3420 404	3420 404	———	———
	RIVET PLUG, Idle Port	———	———	———	3514 508	3514 508	———	———
14-37-24	PLUG, Idle Limiter Needle	———	———	———	———	———	3481 697	3481 697
14-37-27	LEAD SHOT (.180)	———	———	———	3420 453	3420 453	———	———
	LEAD SHOT (.200)	———	———	———	3420 454	3420 454	———	———
14-37-29	BALL, Pump Intake Check	———	———	———	3420 470	3420 470	———	———
14-38-3	SCREW, Throttle Body	3420 342	3420 342	3420 342	———	———	3420 342	3420 342
14-38-4	VALVE or PLATE, Throttle	———	———	———	———	———	3514 791	3514 791
	Primary	3420 353	3420 353	3420 353	3481 062	3514 528	———	———
	Secondary	3481 691	3481 691	3481 691	———	3420 397	3420 397	———
	VALVE, Air	———	———	———	3514 507	3514 507	———	———
14-38-5	PLATE or VALVE, Throttle	———	———	———	———	———	3420 261	3420 261
	Primary	3420 261	3420 261	3420 261	3420 446	3420 446	———	———
	Secondary	3420 347	3420 347	3420 347	3420 445	3420 445	———	———
14-38-12	SHAFT, w/Lever and Dog, Primary Throttle	———	———	———	3481 552	3481 552	———	———
	SHAFT, w/Dog, Secondary Throttle	———	———	———	3420 399	3420 399	———	———
	SHAFT, Air Valve	———	———	———	3420 407	3420 407	———	———
14-38-13	ARM, Primary Throttle Shaft, Inner	———	———	———	3420 460	3420 460	———	———
	Outer	———	———	3420 458	3420 458	———	———	———
14-38-14	DOG, Throttle Shaft	———	———	———	3420 401	3514 524	———	———
	DOG, Lockout	———	———	———	3420 421	3420 421	———	———
14-38-20	SPRING, Throttle Lever	———	———	———	3420 429	3420 429	———	———
14-38-24	SOLENOID, Idle	———	———	———	3549 318	3549 318	2875 975	2875 975
14-38-25	WIRE, Solenoid Lead	———	———	———	3549 313	3549 313	———	———
14-38-26	JUMPER, Idle Stop	———	———	———	———	———	3438 371	3438 371
14-38-27	BEARING, Air Valve Shaft	———	———	———	3481 648	3481 648	———	———
14-38-28	ROD, Throttle Connector	3420 384	3420 384	3420 384	3420 462	3420 462	———	———
14-38-36	RETAINER, Throttle Connector Rod	3420 386	3420 386	3420 386	———	———	———	———
14-38-50	ROD, Throttle Operating	———	———	———	3420 461	3420 461	———	———
14-38-53	LEVER, Secondary Throttle Operating	———	———	———	3420 420	3420 420	———	———
14-39-1	VALVE or PLATE, Choke	3420 336	3420 336	3420 336	3420 402	3420 402	———	———
	VALVE, Countershaft Lever to Choke	———	———	———	3420 410	———	———	———
14-39-6	SHAFT, w/Lever, Choke	———	———	———	3481 657	3481 657	———	———
14-39-7	DIAPHRAGM, Choke	3419 620	3419 620	3419 620	2933 196	2933 196	3514 654	3514 654
14-39-8	LINK, Choke Diaphragm	3514 804	———	3514 804	———	———	3481 662	3481 662
	LINK, Choke Valve	———	———	———	———	3420 466	———	———
14-39-9	SCREW, Choke Diaphragm Bracket	3420 339	342 339	3420 339	3420 447	3420 447	3481 700	3481 700
14-39-10	LEVER, Choke Control	3514 797	3514 797	3514 797	3481 656	3481 656	———	———
	LEVER, Choke Shaft	———	———	———	3420 409	3420 409	———	———
14-39-15	SCREW, Choke Shaft Lever	———	———	———	3420 437	3420 437	———	———
	SCREW, Counter Shaft Lever	———	———	———	3420 442	3420 442	———	———
14-39-27	RETAINER, Diaphragm Connector Rod	———	———	———	3420 433	3420 433	———	———
14-39-28	ROD, Choke Connector	3420 383	3420 383	3420 383	3420 463	3420 463	———	———
14-39-29	SEAL, Choke Rod	3420 301	3420 301	3420 301	———	———	———	———
14-39-30	SHAFT, Choke	3420 311	3420 311	3420 311	———	3420 408	3420 408	———
14-39-31	WASHER, Choke Diaphragm Connector Rod	———	———	———	3420 471	3420 471	———	———
14-39-45	CHOKE	2946 539	2946 539	2946 539	2951 653	2951 653	2946 532	2946 532
14-39-51	HOSE, Choke Diaphragm	3419 687	3419 687	3419 687	3420 475	3420 475	———	———
14-39-56	PIN, Choke Clevis	3420 368	3420 368	3420 368	———	———	———	———
	PIN SPRING, Choke	———	———	———	———	3420 476	———	———
14-39-57	PIN SPRING, Choke Diaphragm Connector Rod	———	———	———	3420 477	3420 477	———	———
14-39-60	SCREW, Thermostatic Valve	———	———	———	3481 052	———	———	———
14-40-1	FLOAT, w/Lever	3420 364	3420 364	3420 364	3420 415	3420 415	3481 693	3481 693

CARLINES: J - Challenger, B - Barracuda, V - Valiant, L - Dart, R - Belvedere - Satallite, W - Coronet - Charger, P - Plymouth, D - Dodge, C - Chrysler, Y - Imperial

AR Indicates use as required.

Numerals in parentheses ( ) refer to notes.

= Indicates parts not listed in any previous parts book.

★ Indicates change or addition.

Printed in U.S.A.
January 1972

CODE	COMPONENT CHART REFERENCE NO. / MFG. NO.	43 R4368A	44 R4218A	45 R4369A	46 4737S	47 4739S	48 R4382A	49 R4175A
14-40-4	PIN, Float Lever	———	———	———	3420 416	3420 416	———	———
14-40-5	RETAINER, Float	3419 673	3419 673	3419 673	———	———	———	———
14-40-6	SHAFT, Float	———	———	———	———	———	3481 683	3481 683
14-40-7	BOWL, w/Plugs, Fuel, Primary	3420 372	3514 831	3420 372	———	———	———	———
	Secondary	3420 373	3420 373	3420 373	———	———	———	———
	BOWL, w/Plugs, Fuel	———	———	———	———	———	3481 695	3481 695
14-40-18	SPRING, Float	3420 317	3420 317	3420 317	———	———	3481 698	3481 698
14-40-23	ARM, Bowl Vent	———	———	———	3514 509	3514 509	———	———
14-40-35	BAFFLE, Fuel Bowl	———	———	———	3420 482	3420 482	———	———
14-41-3	PLUNGER or Diaphragm, w/Rod, Pump	2196 234	2196 234	2196 234	2933 193	2933 193	———	———
14-41-8	LINK, Pump Connector	———	———	———	3420 465	3420 465	———	———
14-41-9	ARM, Pump	———	———	———	3420 456	3420 456	———	———
14-41-10	CAM, Pump	3420 321	3420 321	3420 321	———	———	———	———
14-41-22	LEVER, Pump Operating	3514 680	3514 680	3514 680	———	———	———	———
14-41-23	RETAINER, Pump Operating Lever	3514 681	3514 681	3514 681	———	———	———	———
14-41-25	FITTING, Pump Lever Adjusting Screw	3420 365	3420 365	3420 365	———	———	———	———
14-41-30	NEEDLE, Pump Discharge Check	———	———	———	3420 412	3420 412	———	———
14-41-34	COVER, Pump	3420 306	3420 306	3420 306	———	———	———	———
	NOTE: 3420 306; Also use 4 of 3420 258.							
14-41-35	SCREW, Pump Cover	3420 259	3420 259	3420 259	———	———	———	———
	SCREW, Diaphragm Cover	———	———	3420 259	———	———	———	———
14-43-3	PISTON, Step-Up	———	———	———	3514 512	3514 512	———	———
14-43-4	PLATE, Step-Up Piston Cover, Opposite Pump	———	———	———	3420 434	3420 434	———	———
	Pump Side	———	———	———	3420 435	3420 435	———	———
14-43-5	ROD, Step-Up	———	———	———	3514 513	3514 530	———	———
14-43-10	SPRING, Step-Up Rod Retaining	———	———	———	3420 427	3420 427	———	———
14-44-10	TUBE, Balance	3420 361	3420 361	3420 361	———	———	———	———
14-44-11	WASHER, Balance Tube	3420 385	3420 385	3420 385	———	———	———	———
14-44-12	"O"RING, Balance Tube	3420 367	3420 367	3420 367	———	———	———	———
14-45-1	NEEDLE, Idle Adjusting	3514 799	3514 799	3514 799	———	———	———	———
	NEEDLE, Idle Limiter	———	———	———	———	———	3420 363	3420 363
14-45-3	LEVER, Fast Idle Cam	3420 338	3420 338	3420 338	———	———	———	———
14-45-4	CAM, Fast Idle	3514 689	3514 689	3514 689	3481 069	3418 069	———	———
14-45-5	ROD, Fast Idle Connector	———	———	———	3420 454	3420 454	———	———
14-45-8	SCREW, Fast Idle Cam	3420 344	3420 344	3420 344	3420 441	3420 441	———	———
14-45-12	LIMITER, Idle Needle	3420 393	3420 393	3420 393	3481 644	3420 436	———	———
14-45-15	COVER, Hot Idle Compensator	———	3481 663	3481 663	———	———	———	———
14-45-17	COMPENSATOR, Hot Idle	———	3481 666	3481 666	———	———	———	———
14-45-19	SEAL, Hot Idle Compensator	———	3481 661	3481 661	———	———	———	———
14-45-20	SCREW, Idle Mixture	———	———	———	———	3514 529	———	———
14-45-25	SCREW, Fast Idle Speed	———	———	———	3481 555	3481 555	———	———
	SCREW, Idle Speed	———	———	———	3420 449	3420 449	———	———
14-45-27	WASHER, Idle Speed Screw	———	———	———	3420 473	3420 473	———	———
14-45-32	BRACKET, Retard Wire	———	3514 809	3514 809	———	———	———	———
14-45-33	CABLE, Compensator	———	3514 810	3514 810	———	———	———	———
14-46-1	VALVE, Air Vent	3419 669	———	3419 669	———	———	———	———
14-46-3	PLATE, Metering Body	3420 370	3420 370	3420 370	———	———	———	3420 370
14-46-4	RETAINER, "E"Ring	3420 375	3420 375	3420 375	———	———	———	———
14-46-5	ROD, Air Vent	3549 326	3514 700	3514 807	———	———	———	———
14-46-6	CLAMP, Air Vent Rod	3420 387	3420 387	3420 387	———	———	———	———
	CLAMP, Vent Valve	———	3481 667	———	———	———	———	———
14-46-7	BAFFLE, Metering Body Vent	3420 388	3420 388	3420 388	———	———	———	———
14-46-8	SEAL, Vent Valve	———	3481 659	———	———	———	———	———
14-46-9	BODY, Vent Valve	———	3481 660	———	———	———	———	———
14-46-17	ROD, Bowl Vent Connector	———	———	———	———	3514 527	———	———
14-48-2	VALVE, Thermostatic	———	———	———	———	2933 165	———	———
14-54-3	SCREW, Throttle Stop	3549 325	3420 256	3420 256	———	———	———	———
14-54-4	SCREW, Fuel Valve Seat Lock	———	———	———	———	———	3420 273	3420 273
14-54-5	SCREW, Throttle Shaft Lever	———	———	———	3420 438	3420 438	———	———

CARLINES J - Challenger, B - Barracuda; V - Valiant, L - Dart; R - Belvedere - Satallite, W - Coronet - Charger; P - Plymouth, D - Dodge; C - Chrysler, Y - Imperial

AR Indicates use as required.

# Indicates parts not listed in any previous parts book.

Numerals in parentheses ( ) refer to notes.

★ Indicates change or addition.

Printed in U.S.A.
January 1972

	COMPONENT CHART REFERENCE NO.	43	44	45	46	47	48	49
CODE	MFG. NO.	R4368A	R4218A	R4369A	4737S	4739S	R4382A	R4175A
14-54-6	WASHER, Throttle Shaft	———	———	———	3514 519	3514 519	———	———
	WASHER, Secondary Throttle Shaft	———	———	———	3420 472	3420 472	———	———
14-54-15	SCREW, Choke Valve or Plate	3420 255	3420 255	3420 255	3420 450	3420 450	———	———
	SCREW, Air Valve	———	———	———	3420 450	3420 450	———	———
14-54-29	SCREW, Float Shaft Bracket	———	———	———	———	———	3481 699	3481 699
14-54-36	SCREW, Air Vent Rod Clamp	3420 340	3420 340	3420 340	———	———	———	———
14-54-43	SCREW, Pump Lever Adjusting	3420 345	3420 345	3420 345	———	———	———	———
14-54-47	SCREW, Pump Arm	———	———	———	3420 452	3481 093	———	———
14-54-50	SCREW, Pump Cam Lock	3420 265	3420 265	3420 265	———	———	———	———
14-54-51	WASHER, Choke Lever Retainer	———	———	———	3420 474	3420 474	———	———
14-54-72	SCREW, Air Horn	———	———	———	3420 443	3420 443	———	———
14-54-78	SCREW, Fuel Bowl	3420 341	3420 341	3420 341	———	———	———	———
	SCREW, Secondary Fuel Bowl	3420 348	3420 348	3420 348	———	———	———	———
	SCREW, Diaphragm Mounting	———	———	———	———	———	3419 653	———
	SCREW, Fuel Bowl to Main Bowl	———	———	———	———	———	———	3420 348
14-54-148	SCREW, Step-Up Piston Cover Plate	———	———	———	3420 451	3420 451	———	———
	SCREW, Air Valve Retainer	———	———	———	3420 451	3420 451	———	———

	COMPONENT CHART REFERENCE NO.	50	51	52	53	54	55	56
CODE	MFG. NO.	R4375A	R4374A	R4376A	R4144A	R4383A	R4365A	4742S
14-30-2	GASKET, Flange	2946 531	2946 531	2946 531	2946 531	2946 531	2946 531	2780 629
14-30-3	VENTURI, Primary, Opposite Pump	———	———	———	———	———	———	3549 276
	Pump Side	———	———	———	———	———	———	3549 275
	VENTURI, Secondary, Opposite Pump	———	———	———	———	———	———	3481 087
	Pump Side	———	———	———	———	———	———	3481 086
14-30-4	MINOR REPAIR KIT	3514 671	3514 695	3514 671	3514 695	3514 651	3514 651	———
	ZIP KIT	———	———	———	———	———	———	3419 503
14-30-7	GASKET KIT	3514 672	3514 696	3514 672	3514 696	3514 652	3514 652	———
14-30-8	VALVE, w/Seat	3514 669	3514 669	3514 669	3514 669	3514 669	3481 694	2809 397
14-30-14	NUT, Fuel Valve Seat Adjusting	3420 319	3420 319	3420 319	3420 319	3420 319	3420 319	———
14-30-27	STRAINER, Fuel Inlet	———	———	———	———	———	———	1826 864
14-30-28	NUT, Strainer	———	———	———	———	———	———	1826 863
14-30-29	GASKET, Strainer Nut	———	———	———	———	———	———	3420 413
14-30-30	FITTING, Fuel Inlet	3514 820	2809 248	3514 820	3514 820	3514 820	3514 820	———
14-32-15	SCREW, Venturi, Primary	———	———	———	———	———	———	3420 448
	Secondary	———	———	———	———	———	———	3481 092
14-33-1	BODY, w, Shaft, Throttle	3514 667	3514 667	3514 667	3514 667	3514 792	3481 692	———
14-34-5	GASKET, Air Horn	———	———	———	———	———	———	2299 140
14-34-15	GASKET, Power Valve	———	———	———	———	3420 350	3420 350	———
14-34-17	GASKET, Diaphragm Housing	———	———	———	———	———	———	———
14-34-21	"O" RING, Fuel Valve Seat	3420 299	3420 299	3420 299	3420 299	———	———	———
14-35-1	JET, Main Metering	2809 377	2809 377	3420 332	3420 332	———	———	———
	Primary	———	———	———	———	———	———	2809 305
	Secondary	———	———	———	———	———	———	2809 305
14-35-3	NOZZLE, Pump Discharge	3420 295	3420 295	3420 295	3420 295	———	———	———
	JET, Pump	———	———	———	———	———	———	3481 082
14-35-6	VALVE, Pump Discharge	3420 296	3420 296	3420 296	3420 296	———	———	———
	VALVE, Power	2084 715	2084 715	2084 715	2084 715	3420 299	———	———
14-35-9	DIAPHRAGM, Secondary	———	———	———	———	3514 857	3514 857	———
14-35-10	SCREW, Pump Jet Housing	———	———	———	———	———	———	3420 440
14-35-19	SCREW, Pump Discharge Nozzle	3420 346	3420 346	3420 346	3420 346	———	———	———
14-35-25	HOUSING, Diaphragm	———	———	———	———	3514 657	3514 657	———
14-35-26	LEVER, Diaphragm	———	———	———	———	3514 655	3514 655	———
14-35-38	SPRING, Vacuum Piston	———	———	———	———	———	———	3420 428
14-35-39	BODY, w/Plugs Metering	3514 702	3514 702	3514 702	3514 702	3514 845	3514 845	———
	BODY, w/Plugs, Main	———	———	3514 704	———	———	———	———
14-35-43	SCREW, Pump Cover	3420 349	3420 349	3420 349	3420 349	3420 349	3420 349	———
14-35-45	COVER, Diaphragm	———	———	———	———	3514 653	3514 653	———

CARLINES	J - Challenger B - Barracuda	V - Valiant L - Dart	R - Belvedere - Satallite W - Coronet - Charger	P - Plymouth D - Dodge	C - Chrysler Y - Imperial

AR Indicates use as required.

= Indicates parts not listed in any previous parts book.

Numerals in parentheses ( ) refer to notes.

★ Indicates change or addition.

Printed in U.S.A.
January 1972

CODE	COMPONENT CHART REFERENCE NO. / MFG. NO.	50 R4375A	51 R4374A	52 R4376A	53 R4144A	54 R4383A	55 R4365A	56 4742S
14-36-1	SPRING, Pump Operating Adjusting Screw	3420 378	3420 378	3420 378	3420 378	———	———	———
	SPRING, Idle Speed Screw	———	———	———	———	———	———	3420 425
14-36-15	SPRING, Pump	———	———	———	———	———	———	3481 088
14-36-22	SPRING, Secondary Throttle Return	———	———	———	———	———	———	3481 089
14-36-29	SPRING, Throttle Stop Screw	3419 675	3419 675	3419 675	3419 675	———	———	———
14-36-50	SPRING, Air Vent Valve	3420 377	3481 665	3420 377	3481 665	———	———	———
	SPRING, Bowl Vent Lever	———	———	———	———	———	———	3514 525
14-36-53	SPRING, Diaphragm Return	———	———	———	———	3514 806	3514 806	———
14-37-4	PLUG, Bowl Vent Passage	———	———	———	———	———	———	3549 287
	PLUG, Secondary Passage	———	———	———	———	———	———	3481 077
14-37-9	PLUG, Primary Venturi	———	———	———	———	———	———	3481 078
14-37-14	PLUG, Fuel Level Check	3420 275	3420 275	3420 275	3420 275	3420 275	3420 275	———
14-37-15	PLUG, Idle Port Rivet	———	———	———	———	———	———	3481 075
	PLUG, Idle Needle Limiter	———	———	———	———	3481 697	3481 697	———
	RIVET PLUG	———	———	———	———	———	———	3420 404
	RIVET PLUG	———	———	———	———	———	———	3481 155
14-37-21	PLUG, Nozzle Well	———	———	———	———	———	———	3481 076
14-37-27	LEAD SHOT (.180)	———	———	———	———	———	———	3420 453
	LEAD SHOT (.200)	———	———	———	———	———	———	3420 454
14-37-29	BALL, Pump Intake Check	———	———	———	———	———	———	3481 100
14-37-30	BALL, Pump Check	———	3418 485	3418 485	———	———	———	———
14-37-49	PLUG, Venturi Welsh	———	———	———	———	———	———	3481 081
	PLUG, Spark Port Welsh	———	———	———	———	———	———	3481 080
14-38-3	SCREW, Throttle Body	3420 342	3420 342	3420 342	3420 342	3420 342	3420 342	———
14-38-4	PLATE or Valve, Throttle	3514 665	3514 665	3514 665	3514 665	3514 791	3481 691	———
	Primary	———	———	———	———	———	———	3420 398
	Secondary	———	———	———	———	———	———	3420 397
14-38-5	SCREW, Throttle Plate or Valve	3420 347	3420 347	3420 347	3420 347	3420 261	3420 261	———
	Primary Valve	———	———	———	———	———	———	3420 446
	Secondary Valve	———	———	———	———	———	———	3420 445
14-38-12	SHAFT, w/Lever Primary Throttle	———	———	———	———	———	———	3481 072
	SHAFT, Secondary Throttle	———	———	———	———	———	———	3481 070
	SHAFT, w/Valve and Weight, Auxiliary Throttle	———	———	———	———	———	———	3481 071
14-38-13	ARM, Primary Throttle Shaft, Inner	———	———	———	———	———	———	3481 097
	Outer	———	———	———	———	———	———	3481 096
14-38-14	DOG, Primary Throttle Shaft	———	———	———	———	———	———	3481 073
14-38-20	SPRING, Throttle Lever	———	———	———	———	———	———	3420 429
14-38-28	ROD, Throttle Connector	———	———	———	———	———	———	3420 462
	BAR, Throttle Connector	———	3514 840	3514 840	3514 840	———	———	———
14-38-39	SLEEVE, Throttle Connector	3514 841	3514 841	3514 841	3514 841	———	———	———
14-38-40	PIN, Throttle Connector	3514 843	3514 843	3514 843	3514 843	———	———	———
14-38-50	ROD, Throttle Operating	———	———	———	———	———	———	3420 461
14-38-24	SOLENOID, Idle	2875 975	2875 975	3438 338	3438 338	3438 338	3438 338	3438 338
14-38-26	JUMPER, Idle Stop	3438 371	3438 371	3438 371	3438 371	3438 371	3438 371	3438 371
14-38-53	LEVER, Secondary Throttle Operating	———	———	———	———	———	———	3481 083
14-39-1	VALVE or PLATE, Choke	3514 658	3514 658	3514 658	3514 658	———	———	———
14-39-7	DIAPHRAGM, Choke	3419 515	3419 515	3419 620	3419620	3514 654	3514 654	———
14-39-8	LINK, Choke Diaphragm	3420 369	3420 369	3420 369	3420 369	3481 662	3481 662	———
14-39-9	SCREW, Diaphragm Bracket	3420 339	3420 339	3420 339	3420 339	3481 700	3481 700	———
14-39-10	LEVER, Choke Control	3514 659	3514 659	3514 659	3514 659	———	———	———
14-39-25	BRACKET, Diaphragm	3514 693	———	3514 693	———	———	———	———
14-39-28	ROD, Choke	3514 677	3514 677	3514 677	3514 677	———	———	———
14-39-29	SEAL, Choke Rod	3420 301	3420 301	3420 301	3420 301	———	———	———
14-39-30	SHAFT, Choke	3420 311	3420 311	3420 311	3420 311	———	———	———
14-39-45	CHOKE	2946 532	2946 532	2946 532	2946 532	2946 532	———	———
14-39-51	HOSE, Choke Vacuum	3419 687	3419 687	3419 687	3419 687	———	———	———
14-40-1	FLOAT, w/Hinge or Lever	3514 668	3514 668	3514 668	3514 668	3481 693	2481 693	3481 079
14-40-4	PIN, Float Lever	———	———	———	———	———	———	3420 416

CARLINES J - Challenger, B - Barracuda, V - Valiant, L - Dart, R - Belvedere - Satallite, W - Coronet - Charger, P - Plymouth, D - Dodge, C - Chrysler, Y - Imperial

AR Indicates use as required.

**Indicates** parts not listed in any previous parts book.

Numerals in parentheses ( ) refer to notes.

★ Indicates change or addition.

Printed in U.S.A.
January 1972

CODE	COMPONENT CHART REFERENCE NO. / MFG. NO.	50 R4375A	51 R4374A	52 R4376A	53 R4144A	54 R4383A	55 R4365A	56 4742S
14-40-5	RETAINER, Float	3549 331	———	———	3549 331	———	———	———
14-40-6	SHAFT, Float	3481 683	3481 683	3481 683	3481 683	3481 683	3481 683	———
14-40-7	BOWL, w Plugs, Fuel	3514 837	3514 697	3514 837	3514 697	3481 695	3481 695	———
14-40-18	SPRING, Float	3481 698	———	3481 698	———	3481 698	3481 698	———
14-40-35	BAFFLE, Fuel Bowl	———	———	———	———	———	———	3420 482
14-41-3	DIAPHRAGM or PLUNGER, Pump	2196 234	2196 234	2196 234	2196 234	———	———	1826 369
14-41-8	LINK, Pump Connector	———	———	———	———	———	———	3420 465
14-41-9	ARM, Pump	———	———	———	———	———	———	3420 456
14-41-10	CAM, Pump	3420 321	3420 321	3420 321	3420 321	———	———	———
14-41-13	RETAINER, Pump Check Valve	———	———	3514 686	———	———	———	———
14-41-22	LEVER, Pump Operating	3514 680	3514 680	3514 680	3514 679	———	———	———
14-41-23	RETAINER, Pump Operating Lever	3514 681	3514 681	3514 681	3514 681	———	———	———
14-41-34	COVER, Pump	3514 673	3514 673	3514 673	3514 673	———	———	———
14-41-40	NEEDLE, Pump Discharge Check	———	———	———	———	———	———	3420 412
14-43-3	PISTON, Step-Up	———	———	———	———	———	———	3420 478
14-43-4	PLATE, Step-Up Piston Cover	———	———	———	———	———	———	3481 090
14-43-5	ROD, Step-Up	———	———	———	———	———	———	3419 588
14-43-10	SPRING, Step-Up Rod Retaining	———	———	———	———	———	———	3420 427
14-45-1	NEEDLE, Idle Adjusting	3420 362	3420 362	3420 362	3420 362	———	———	———
	NEEDLE, Idle Limiter	———	———	———	———	3420 363	3420 363	———
14-45-2	SEAL, Adjusting Needle	———	———	———	———	2084 719	2084 719	———
14-45-3	LEVER, Fast Idle Cam	3420 338	3420 338	3420 338	3420 338	———	———	———
14-45-4	CAM, Fast Idle	3514 689	3514 689	3514 689	3514 689	———	———	———
14-45-8	SCREW, Fast Idle Cam Lever	3420 344	3420 344	2320 344	3420 344	———	———	———
14-45-12	LIMITER, Idle Needle	3420 393	3420 393	3420 393	———	———	———	———
14-45-15	COVER, Hot Idle Compensator	———	3481 663	———	3481 663	———	———	———
14-45-17	COMPENSATOR, Hot Idle	———	3481 666	———	3481 666	———	———	———
14-45-19	SEAL, Hot Idle Compensator	———	3481 661	———	3481 661	———	———	———
14-45-20	SCREW, Idle Adjusting	3514 683	3514 683	3514 683	3514 683	———	———	———
14-45-25	SCREW, Idle Speed	———	———	———	———	———	———	3420 449
14-45-27	WASHER, Idle Speed Screw	———	———	———	———	———	———	3420 473
14-46-1	VALVE, Air Vent	3419 669	———	3419 669	———	———	———	———
14-46-2	ROD, Vent Valve	———	———	———	3549 335	———	———	———
14-46-3	PLATE, Metering Body	———	———	———	———	3420 370	3420 370	———
14-46-4	RETAINER, "E" Ring	3420 375	3420 375	3420 375	3420 375	———	———	———
14-46-5	ROD, Air Vent	3549 333	———	3514 691	———	———	———	———
14-46-6	CLAMP, Air Vent Rod	3420 387	———	3420 387	———	———	———	———
14-46-7	BAFFLE, Metering Body Vent	3420 388	3420 388	3420 388	3420 388	———	———	———
14-46-8	SEAL, Vent Valve	———	3481 659	———	3481 659	———	———	———
14-46-9	BODY, Vent Valve	———	3481 660	———	3514 661	———	———	———
14-46-10	CLAMP, Vent Valve	———	3481 667	———	3481 667	———	———	———
14-46-11	ROD, Vent Valve	———	3514 700	———	3514 700	———	———	———
14-46-12	CLIP, Screw Lock	3514 688	3514 688	3514 688	3514 688	———	———	———
14-46-13	HOSE, Clamp	———	3481 668	———	3481 668	———	———	———
14-54-3	SCREW, Throttle Stop	3420 256	3420 256	3420 256	3420 256	———	———	———
14-54-4	SCREW, Fuel Valve Seat Lock	3420 273	3420 273	3420 273	3420 273	3420 273	3420 273	———
14-54-5	SCREW, Throttle Shaft Lever	———	———	———	———	———	———	3420 438
14-54-6	WASHER, Primary Throttle Shaft	———	———	———	———	———	———	3481 051
	WASHER, Secondary Throttle Shaft	———	———	———	———	———	———	3420 472
	SPACER, Secondary Throttle Shaft	———	———	———	———	———	———	3481 095
14-54-15	SCREW, Choke Plate	3420 255	3420 255	3420 255	3420 255	———	———	———
14-54-29	SCREW, Float Shaft Bracket	3481 699	3481 699	3481 699	3481 699	3481 699	3481 699	———
14-54-36	SCREW, Air Vent Rod Clamp	3514 682	3514 682	3514 682	3514 682	———	———	———
14-54-43	SCREW, Pump Lever Adjusting	3420 345	3420 345	3420 345	3420 345	———	———	———
14-54-47	SCREW, Pump Arm	———	———	———	———	———	———	3481 093
14-54-72	SCREW, Air Horn	———	———	———	———	———	———	3481 091
	SCREW, Air Horn	———	———	———	———	———	———	3481 094
	SCREW, Air Horn	———	———	———	———	———	———	3420 443
14-54-78	SCREW, Fuel Bowl	3420 341	3420 341	3420 341	3420 341	3420 348	3420 348	———
14-54-148	SCREW, Step-Up Piston Cover Plate	———	———	———	———	———	———	3420 451

CARLINES: J - Challenger, B - Barracuda; V - Valiant, L - Dart; R - Belvedere - Satallite, W - Coronet - Charger; P - Plymouth, D - Dodge; C - Chrysler, Y - Imperial

AR Indicates use as required.

≠ Indicates parts not listed in any previous parts book.

Numerals in parentheses ( ) refer to notes.

★ Indicates change or addition.

Printed in U.S.A.
January 1972

CODE	COMPONENT CHART REFERENCE NO. / MFG. NO.	57	58	59	60	61	62	63
		4745S	4746S	4738S	4741S	4740S	R4366A	R4360A
14-30-2	GASKET, Flange	2780 629	2780 629	2780 629	2946 543	2946 543	2946 543	2946 543
14-30-3	VENTURI, Primary, Pump Side	3549 283	3549 283	3514 511	3514 511	3514 511	———	———
	Opposite Pump	3549 284	3549 284	3514 510	3514 510	3514 510	———	———
	VENTURI, Secondary Pump Side	3481 167	3481 167	———	———	———	———	———
	Opposite Pump	3549 285	3549 285	———	———	———	———	———
14-30-4	ZIP KIT	3419 503	3419 503	3549 274	3621 400	3549 274	———	———
	MINOR REPAIR KIT	———	———	———	———	———	3514 801	3514 822
14-30-7	GASKET KIT	3549 343	3549 343	3549 273	3549 297	3549 273	3514 802	3514 823
14-30-8	NEEDLE, w/Seat	2809 397	2809 397	2933 106	2933 106	2933 106	2809 335	2809 335
14-30-16	PLATE, Fuel Bowl Baffle	———	———	———	———	———	3420 324	3420 324
14-30-27	STRAINER, Fuel Inlet	1826 864	1826 864	1826 864	1826 864	1826 864	———	———
14-30-28	NUT, Strainer	1826 863	1826 863	1826 863	1826 863	1826 863	———	———
14-30-29	GASKET, Strainer Nut	3420 413	3420 413	3420 413	3420 413	3420 413	———	———
14-30-30	FITTING, Fuel Inlet	2495 953	2495 953	———	———	———	2809 248	3514 830
14-30-31	BAFFLE, Fuel Inlet	———	———	———	———	———	3420 389	3420 389
14-32-15	SCREW, Venturi	———	———	3420 448	3420 448	3420 448	———	———
	Primary	3420 448	3420 448	———	———	———	———	———
	Secondary	3481 092	3481 092	———	———	———	———	———
14-33-1	BODY, w/Shaft, Throttle	———	———	———	———	———	3514 798	3514 798
14-34-5	GASKET, Air Horn	2299 140	2299 140	———	———	———	———	———
14-34-15	GASKET, Power Valve							
14-34-17	GASKET, Secondary Diaphragm Housing	———	———	———	———	———	3420 350	3420 350
14-34-55	GASKET, Coil Housing	1330 873	1330 873	———	———	———	———	———
14-34-63	SEAL, Venturi Vent	———	———	3420 479	3420 479	3420 479	———	———
	SEAL, Grommet	3420 480	3420 480	3420 480	3420 480	3420 480	———	———
14-35-1	JET, Main Metering	———	———	———	———	———	3420 332	2196 240
	Primary	2809 305	2809 305	2933 020	2933 020	2933 020	———	———
	Secondary (Pump Side)	2933 023	2933 023	———	———	———	———	———
	Secondary (Opposite Pump)	2809 283	2809 283	———	———	———	———	———
	Secondary	———	———	2933 195	2933 195	2933 195	———	———
14-35-3	JET, Pump	3481 162	3481 162	3420 418	3420 418	3420 418	———	———
	NOZZLE, Pump Discharge	———	———	———	———	———	3420 366	3420 366
14-35-6	VALVE, Power	———	———	———	———	———	2084 715	2084 715
14-35-9	DIAPHRAGM, Secondary	———	———	———	———	———	2809 252	2809 252
14-35-10	SCREW, Pump Jet	3420 440	3420 440	3420 440	3420 440	3420 440	———	———
14-35-18	SCREW, Secondary Diaphragm Housing	———	———	———	———	———	3420 343	3420 343
14-35-19	SCREW, Pump Discharge Nozzle	———	———	———	———	———	3420 346	3420 346
14-35-25	HOUSING, Diaphragm	———	———	———	———	———	3420 392	3420 392
14-35-26	LEVER, Diaphragm	———	———	———	———	———	3420 391	3420 391
14-35-38	SPRING, Vacuum Piston	3420 428	3420 428	3420 428	3420 428	3420 428	———	———
14-35-39	BODY, w/Plugs, Primary Metering	———	———	———	———	———	3514 805	3514 805
	BODY, Secondary Metering	———	———	———	———	———	3514 855	3514 855
14-35-43	SCREW, Secondary Metering Body	———	———	———	———	———	3420 349	3420 349
14-36-1	SPRING, Idle Speed Screw	3420 425	3420 425	3420 425	3420 425	3420 425	———	———
	SPRING, Idle Mixture Screw	3514 516	3514 516	———	———	3481 558	———	———
	SPRING, Pump Lever Adjusting Screw	———	———	———	———	———	3420 378	3420 378
14-36-15	SPRING, Pump	3481 088	3481 088	3420 424	3420 424	3420 424	———	———
14-36-22	SPRING, Secondary Throttle Return	3481 089	3481 089	3420 432	3420 432	3420 432	———	———
14-36-29	SPRING, Throttle Stop Screw	———	———	———	———	———	3419 675	3419 675
14-36-50	SPRING, Bowl Vent Lever	3514 525	3514 525	———	———	———	———	———
	SPRING, Bowl Vent Arm	———	———	3420 431	3420 431	3514 425	———	———
	SPRING, Air Valve	———	———	3420 430	3420 430	3420 430	———	———
	SPRING, Air Vent Valve	———	———	———	———	———	3420 377	3481 665
	SPRING, Vent Rod	———	———	———	———	———	———	3514 699
14-36-53	SPRING, Diaphragm Return	———	———	———	———	———	3420 376	3420 376
	SPRING, Secondary Diaphragm	———	———	———	———	———	3514 806	3514 806

CARLINES J - Challenger, B - Barracuda, V - Valiant, L - Dart, R - Belvedere - Satallite, W - Coronet - Charger, P - Plymouth, D - Dodge, C - Chrysler, Y - Imperial

AR Indicates use as required.

Numerals in parentheses ( ) refer to notes.

Printed in U.S.A.
January 1972

# Indicates parts not listed in any previous parts book.

★ Indicates change or addition.

CODE	COMPONENT CHART REFERENCE NO. / MFG. NO.	57 4745S	58 4746S	59 4738S	60 4741S	61 4740S	62 4366A	63 R4360A
	SPRING, Secondary Diaphragm Return	———	———	———	———	———	———	3420 394
14-37-4	PLUG, Bowl Vent Passage	3549 287	3549 287	———	———	———	———	———
	PLUG, Secondary Passage	3481 077	3481 077	———	———	———	———	———
	PLUG, Passage	———	———	3420 405	3420 405	3420 405	———	———
	PLUG, Primary Venturi	3481 078	3481 078	———	———	———	———	———
14-37-15	PLUG, Idle Port Rivet	3481 075	3481 075	3514 508	3514 508	3514 508	———	———
	PLUG, Rivet	3481 074	3481 074	———	———	———	———	———
	PLUG, Rivet	3420 404	3420 404	3420 404	3420 404	3420 404	———	———
14-37-19	PLUG, Venturi Welsh	3481 081	3481 081	———	———	———	———	———
14-37-21	PLUG, Nozzle Well	3481 076	3481 076	———	———	———	———	———
14-37-25	PLUG, Bowl Vent Passage	3481 194	3481 194	———	———	———	———	———
14-37-27	LEAD SHOT (.180)	3420 453	3420 453	3420 453	3420 453	3420 453	———	———
	LEAD SHOT (.200)	3420 454	3420 454	3420 454	3420 454	3420 454	———	———
14-37-29	BALL, Pump Intake Check	3481 100	3481 100	3420 470	3420 470	3420 470	———	———
14-37-49	PLUG, Spark Port Welsh	3481 080	3481 080	———	———	———	———	———
	PLUG, Piston Housing Welsh	3481 161	3481 161	———	———	———	———	———
14-38-3	SCREW, Throttle Body	———	———	———	———	———	3420 342	3420 342
14-38-4	VALVE, Primary Throttle	3420 398	3420 398	3481 062	3481 062	3481 062	3420 358	3420 358
	VALVE, Secondary Throttle	3420 397	3420 397	3420 397	3420 397	3420 397	3420 357	3420 357
	VALVE, Air	———	———	3514 507	3514 507	3514 507	———	———
14-38-5	SCREW, Throttle Valve, Primary	3420 446	3420 446	3420 446	3420 446	3420 446	3420 261	3420 261
	Secondary	3420 445	3420 445	3420 445	3420 445	3420 445	3420 347	3420 347
14-38-8	SCREW, Solenoid Clamp	———	———	———	3549 315	3549 315	———	———
14-38-12	SHAFT, w/Lever Primary Throttle	3481 153	3481 153	3481 552	3481 552	3481 552	———	———
	SHAFT, w/Dog, Secondary	3481 151	3481 151	3420 399	3420 399	3420 399	———	———
	SHAFT, w/Weight, Auxiliary	3481 152	3481 152	———	———	———	———	———
	SHAFT, Air Valve	———	———	3420 407	3420 407	3420 407	———	———
14-38-13	ARM, Primary Throttle Shaft, Inner	3481 097	3481 097	3420 460	3420 460	3420 460	———	———
	Outer	3481 096	3481 096	3481 458	3481 458	3481 458	———	———
	ARM, w/Collar, Lockout	3481 163	3481 163	———	———	———	———	———
14-38-14	DOG, Throttle Shaft	———	———	3420 401	3420 401	3514 524	———	———
	DOG, Primary Shaft	3549 280	3549 280	———	———	———	———	———
	DOG, Lockout	———	———	3420 421	3420 421	3420 421	———	———
14-38-20	SPRING, Throttle Lever	3420 429	3420 429	3420 429	3420 429	3420 429	———	———
14-38-23	LEVER, Solenoid	———	———	———	———	3514 518	———	———
14-38-24	SOLENOID, Idle	———	———	3438 303	3549 318	3549 318	———	———
14-38-25	WIRE, Solenoid Lead	———	———	———	3549 313	3549 313	———	———
14-38-27	BEARING, Air Valve Shaft	———	———	3481 648	3481 648	3481 648	———	———
14-38-28	ROD, Throttle Connector	3420 462	3420 462	3420 462	3420 462	3420 462	3420 384	3420 384
14-38-29	BRACKET, Solenoid	———	———	———	3549 317	3549 317	———	———
14-38-36	RETAINER, Throttle Connector Rod	———	———	———	———	———	3420 386	3420 386
14-38-50	ROD, Throttle Operating	3420 461	3420 461	3420 461	3420 461	3420 461	———	———
14-38-53	LEVER, Secondary Throttle Operating	3481 083	3481 083	3420 420	3420 420	3420 420	———	———
14-39-1	VALVE, Choke	3481 154	3481 154	3420 402	3420 402	3420 402	3420 336	3420 336
	VALVE, Counter Shaft Lever to Choke	———	———	3420 410	3420 410	3420 410	———	———
14-39-6	SHAFT, w/Lever, Choke	3549 282	3549 282	3481 657	3481 657	3481 657	———	———
	SHAFT, w/Lever, Piston Housing Choke	3549 281	3549 281	———	———	———	———	———
14-39-7	DIAPHRAGM, Choke	———	———	2933 196	3514 865	3514 865	3419 515	3419 515
14-39-8	LINK, Choke Valve	———	———	3420 466	3420 466	3420 466	———	———
	LINK, Choke, Diaphragm	———	———	———	———	———	3514 804	3514 804
14-39-9	SCREW, Diaphragm Bracket	———	———	3420 447	3420 447	3420 447	3420 339	3420 339
14-39-10	LEVER, Choke	———	———	3481 656	3481 656	3481 656	———	———
	LEVER, Choke Control	———	———	———	———	———	3514 797	3514 797
	LEVER, Choke Shaft	———	———	3420 409	3420 409	———	———	———
	LEVER, Choke Shaft, Inner	3481 157	3481 157	———	———	———	———	———
	Outer	3481 156	3481156	———	———	———	———	———

CARLINES — J - Challenger, B - Barracuda; V - Valiant, L - Dart; R - Belvedere - Satallite, W - Coronet - Charger; P - Plymouth, D - Dodge; C - Chrysler, Y - Imperial

AR Indicates use as required.

≠ Indicates parts not listed in any previous parts book.

Numerals in parentheses ( ) refer to notes.

★ Indicates change or addition.

Printed in U.S.A.
January 1972

	COMPONENT CHART REFERENCE NO.	57	58	59	60	61	62	63
CODE	MFG. NO.	4745S	4746S	4738S	4741S	4740S	R4366A	R4360A
14-39-15	SCREW, Choke Shaft Lever	3420 437	3420 437	3420 437	3420 437	3420 437	———	———
	SCREW, Countershaft Lever	———	———	3420 442	3420 442	3420 442	———	———
14-39-27	RETAINER, Diaphragm Connector Rod	———	———	3420 433	3420 433	3420 433	———	———
14-39-28	ROD, Choke Connector	3549 289	3549 289	———	———	———	3420 383	3420 385
	ROD, Diaphragm Connector	———	———	3420 463	3420 463	3520 463	———	———
14-39-29	SEAL, Choke Rod	———	———	———	———	———	3420 301	3420 301
14-39-30	SHAFT, Choke	———	———	3420 408	3420 408	3420 408	3420 311	3420 311
14-39-31	WASHER, Diaphragm Connector Rod	———	———	3420 471	3420 471	3420 471	———	———
14-39-45	CHOKE	1826 847	1826 847	2951 653	2951 653	2951 653	2946 539	2946 539
14-39-47	RETAINER, Choke	3481 171	3481 171	———	———	———	———	———
14-39-50	PLATE, Choke Baffle	3481 188	3481 188	———	———	———	———	———
14-39-51	HOSE, Diaphragm	———	———	3420 475	3420 475	3420 475	3419 687	3419 687
14-39-52	RING, Delayer Plate Retainer	3481 170	3481 170	———	———	———	———	———
14-39-54	PISTON, Choke	3549 291	3549 293	———	———	———	———	———
14-39-56	PIN, Choke Piston	3481 183	3481 183	———	———	———	———	———
	PIN, Choke Clevis	———	———	———	———	———	3420 368	3420 368
14-39-57	Pin, Diaphragm Connector Rod Spring	———	———	3420 477	3420 477	3420 477	———	———
14-39-58	HOUSING, w/Plug, Piston	3549 292	3549 292	———	———	———	———	———
14-39-60	SCREW, Thermostatic Valve	3481 052	3481 052	3481 052	3481 052	3481 052	———	———
	SCREW, Piston Housing	3481 173	3481 173	———	———	———	———	———
	SCREW, Coil Housing	3481 172	3481 172	———	———	———	———	———
14-39-68	LEVER, w/Link Choke Piston	3481 158	3481 158	———	———	———	———	———
14-39-84	CAP, Choke Heat Tube	3481 187	3481 187	———	———	———	———	———
14-40-1	FLOAT, w/Lever	3481 079	3481 079	3420 415	3420 415	3420 415	3420 364	3420 369
14-40-4	PIN, Float Lever	3420 416	3420 416	3420 416	3420 416	3420 416	———	———
14-40-5	RETAINER, Float	———	———	———	———	———	3419 673	3420 673
14-40-7	BOWL, w/Plugs, Fuel, Primary	———	———	———	———	———	3420 372	3514 831
	Secondary	———	———	———	———	———	3420 373	3420 373
14-40-18	SPRING, Float	———	———	———	———	———	3420 317	3420 317
14-40-23	ARM, Bowl Vent	3514 509	3514 509	———	3514 509	———	———	———
14-40-34	WASHER, Insulator	———	———	———	———	———	3514 808	3514 808
14-40-35	BAFFLE, Fuel Bowl	3420 482	3420 482	3420 482	3420 482	3420 482	———	———
14-41-3	PLUNGER, w/Rod, Pump	1826 369	1826 369	2933 193	2933 193	2933 193	2196 234	2196 234
14-41-8	LINK, Pump Connector	3420 465	3420 465	3420 465	3420 465	3420 465	———	———
14-41-9	ARM, Pump	3420 456	3420 456	3420 456	3420 456	3420 456	———	———
14-41-10	CAM, Pump	———	———	———	———	———	3420 321	3420 321
14-41-22	LEVER, Pump Operating	———	———	———	———	———	3514 680	3514 680
14-41-23	RETAINER, Pump Operating Lever	———	———	———	———	———	3514 681	3514 681
14-41-25	FITTING, Pump Lever Adjusting Screw	———	———	———	———	———	3420 365	3420 365
14-41-30	NOZZLE, Pump Discharge Check	3420 412	3420 412	3420 412	3420 412	3420 412	———	———
	VALVE, Pump Discharge Needle	———	———	———	———	———	3514 684	3514 684
14-43-3	PISTON, Step-Up	3420 478	3420 478	3514 512	3420 478	3420 478	———	———
14-43-4	PLATE, Step-Up Piston Cover	3481 090	3481 090	———	———	———	———	———
	Pump Side	———	———	3420 435	3420 435	3420 435	———	———
	Opposite Pump	———	———	3420 434	3420 434	3420 434	———	———
14-43-5	ROD, Step-Up	———	———	3481 557	3481 557	3481 557	———	———
	Pump Side	2933 022	2933 022	———	———	———	———	———
	Opposite Pump	3419 504	3419 504	———	———	———	———	———
14-43-10	SPRING, Step-Up Rod Retaining	3420 427	3420 427	3420 427	3420 427	3420 427	———	———
14-44-10	TUBE, Balance	———	———	———	———	———	3420 361	3420 361
14-44-11	WASHER, Balance Tube	———	———	———	———	———	3420 385	3420 385
14-44-12	"O" RING, Balance Tube	———	———	———	———	———	3420 367	3420 367
14-45-1	NEEDLE, Curb Idle Adjusting	———	———	———	———	———	3514 799	3514 799
14-45-3	LEVER, Fast Idle Cam	———	———	———	———	———	3420 338	3420 338
14-45-4	CAM, Fast Idle	3621 444	3621 444	3481 069	3481 069	3481 069	3514 689	3514 689
14-45-5	ROD, Fast Idle Connector	3481 179	3481 179	3420 454	3420 454	3420 454	———	———
14-45-8	SCREW, Fast Idle Cam	3420 441	3420 441	3420 441	3420 441	3420 441	———	———
	SCREW, Fast Idle Cam Lever	———	———	———	———	———	3420 344	3420 344

CARLINES	J - Challenger B - Barracuda	V - Valiant L - Dart	R - Belvedere - Satellite W - Coronet - Charger	P - Plymouth D - Dodge	C - Chrysler Y - Imperial

AR Indicates use as required.

**Indicates** parts not listed in any previous parts book.

Numerals in parentheses ( ) refer to notes.

★ Indicates change or addition.

Printed in U.S.A.
January 1972

	COMPONENT CHART REFERENCE NO.	57	58	59	60	61	62	63
CODE	MFG. NO.	4745S	4746S	4738S	4741S	4740S	R4366A	R4360A
14-45-12	LIMITER, Idle Screw	3420 436	3420 436	3420 436	3420 436	3420 436	3420 393	3420 393
14-45-15	COVER, Hot Idle Compensator	———	———	———	———	———	3481 663	3481 663
14-45-17	COMPENSATOR, Hot Idle	———	———	———	———	———	3481 666	3481 666
14-45-19	SEAL, Hot Idle Compensator	———	———	———	———	———	3514 800	3481 661
14-45-20	SCREW, Idle Mixture	3549 288	3549 288	———	———	3514 529	———	———
14-45-25	SCREW, Fast Idle Speed	3481 175	3481 175	3481 555	3481 555	3481 555	———	———
	SCREW, Idle Speed	3420 449	3420 449	3420 449	3420 449	3420 449	———	———
14-45-27	WASHER, Idle Speed Screw	3420 473	3420 473	3420 473	3420 473	3420 473	———	———
14-45-32	BRACKET, Retard Wire	———	———	———	———	———	3514 809	3514 809
14-45-33	CABLE, Compensator	———	———	———	———	———	3514 810	3514 810
14-46-1	VALVE, Air Vent	———	———	———	———	———	3419 669	———
14-46-3	PLATE, Secondary Metering Body	———	———	———	———	———	3420 370	3420 370
14-46-4	RETAINER, "E" Ring	———	———	———	———	———	3420 375	3420 375
14-46-5	ROD, Air Vent	———	———	———	———	3514 807	3514 700	———
14-46-6	CLAMP, Air Vent Rod	———	———	———	———	———	3420 387	3420 387
14-46-7	BAFFLE, Metering Body Vent	———	———	———	———	———	3420 388	3420 388
14-46-8	SEAL, Vent Valve	———	———	———	———	———	———	3481 659
14-46-9	BODY, Vent Valve	———	———	———	———	———	———	3481 660
14-46-10	CLAMP, Vent Valve	———	———	———	———	———	———	3481 667
14-46-11	ROD, Air Vent	———	———	———	———	———	———	3514 700
14-48-2	VALVE, Thermostatic	2933 165	2933 165	———	2933 165	———	———	———
14-54-3	SCREW, Throttle Stop	———	———	———	———	———	3420 256	3420 256
14-54-5	SCREW, Throttle Shaft Lever	3420 438	3420 438	3420 438	3420 438	3420 438	———	———
14-54-6	WASHER, Primary Throttle Shaft	3481 051	3481 051	———	———	———	———	———
	WASHER, Secondary Throttle Shaft	3420 472	3420 472	3420 472	3420 472	3420 472	———	———
	WASHER, Throttle Shaft Spring	———	———	———	———	3514 519	———	———
	SPACER, Secondary Throttle Shaft	3481 095	3481 095	———	———	———	———	———
	SCREW, Solenoid Clamp	———	———	———	3549 315	———	———	———
14-54-11	NUT, Solenoid Clamp	———	———	———	3549 316	3549 316	———	———
14-54-15	SCREW, Choke Valve	3420 450	3420 450	3420 450	3420 450	3420 450	3420 255	3420 255
14-54-36	SCREW, Air Vent Rod Clamp	———	———	———	———	———	3420 340	3420 340
	SCREW, Pump Lever Adjusting	———	———	———	———	———	3420 345	3420 345
14-54-47	SCREW, Pump Arm	3481 093	3481 093	3420 452	3420 452	3481 093	———	———
14-54-50	SCREW, Pump Cam Lock	———	———	———	———	———	3420 265	3420 265
14-54-51	WASHER, Pump Lever Retaining	3481 182	3481 182	3420 474	3420 474	3420 474	———	———
14-54-72	SCREW, Air Horn	3420 443	3420 443	3420 443	3420 443	3420 443	———	———
	SCREW, Air Horn	3481 091	3481 091	———	———	———	———	———
	SCREW, Air Horn	3481 094	3481 094	———	———	———	———	———
14-54-78	SCREW, Fuel Bowl	———	———	———	———	———	3420 341	3420 341
	SCREW, Secondary Fuel Bowl	———	———	———	———	———	3420 348	3420 348
14-54-98	WASHER, Solenoid Lock	———	———	———	3549 314	3549 314	———	———
	NUT, Solenoid Clamp	———	———	———	3549 316	———	———	———
14-54-140	SCREW, Solenoid Bracket	———	———	———	3514 517	3514 517	———	———
14-54-148	SCREW, Step-Up Piston Cover Plate	3420 451	3420 451	3420 451	3420 451	3420 451	———	———
	SCREW, Air Valve Retainer	———	———	3420 451	3420 451	3420 451	———	———

	COMPONENT CHART REFERENCE NO.	64	65	66	67	68	69	70
CODE	MFG. NO.	R4789A	R4791A	R4792A	R4790A	R4736-1A	R4738-1A	R4739-1A
14-30-2	GASKET, Flange	2946 531	2946 531	2946 531	2946 531	3462 833	3462 833	3462 833
14-30-4	REPAIR KIT, Minor	3514 651	3514 695	3514 695	3514 651	3514 816	3514 824	3514 824
14-30-7	GASKET KIT	3514 652	3514 696	3514 696	3514 652	3514 817	3514 825	3514 825
14-30-8	NEEDLE, w/Seat	3514 669	3514 669	3514 669	3481 694	2809 335	2809 335	2809 335
14-30-14	NUT, Valve Seat Adjusting	3420 319	———	3420 319	3420 319	———	———	———
14-30-16	PLATE, Fuel Bowl Baffle	———	———	———	———	3420 324	———	3420 324
14-30-30	FITTING, Fuel Inlet	2809 248	2809 248	3514 820	3514 820	2809 248	3514 731	3514 731
14-30-31	BAFFLE, Fuel Inlet	———	———	———	———	3420 389	———	3420 389
14-33-1	BODY, w/Shaft, Throttle	3514 792	3514 667	3514 667	3481 692	3514 873	3514 873	3514 873
14-34-15	GASKET, Power Valve							

CARLINES					
	J - Challenger B - Barracuda	V - Valiant L - Dart	R - Belvedere - Satallite W - Coronet - Charger	P - Plymouth D - Dodge	C - Chrysler Y - Imperial

AR Indicates use as required.

≠ Indicates parts not listed in any previous parts book.

Numerals in parentheses ( ) refer to notes.

★ Indicates change or addition.

Printed in U.S.A.
January 1972

CODE	COMPONENT CHART REFERENCE NO / MFG. NO.	64 R4789A	65 R4791A	66 R4792A	67 R4790A	68 R4736-1A	69 R4738-1A	70 R4739-1A
14-34-17	GASKET, Secondary Diaphragm Housing	———	———	———	———	———	3420 350	3420 315
14-34-21	"O" RING, Fuel Valve Seat	3420 299	3420 299	3420 299	———	———	———	———
14-35-1	JET, Main Metering	———	2809 377	3420 332	———	2196 240	2196 240	2196 240
14-35-3	NOZZLE, Pump Discharge	———	3420 295	3420 295	———	3420 366	3420 366	3420 366
14-35-6	VALVE, Power	———	2084 715	2084 715	———	2084 715	2084 715	2084 715
	VALVE, Pump Discharge Needle	———	———	———	———	———	3514 686	3514 686
	NEDDLE, Pump Check	———	3514 684	3420 296	———	———	———	———
14-35-9	DIAPHRAGM, Secondary	3514 876	———	———	3514 857	3514 900	3514 876	3514 900
14-35-18	SCREW, Secondary Housing	———	———	———	———	3420 343	3420 343	3420 343
14-35-19	SCREW, Pump Discharge Nozzle	———	3420 346	3420 346	———	3420 346	3420 346	3420 346
14-35-25	HOUSING, Diaphragm	3514 657	———	———	3514 657	3420 392	3420 392	3420 392
14-35-26	LEVER, Diaphragm	3514 655	———	———	3514 655	3514 875	3514 875	3514 875
14-35-39	BODY, w/Plugs, Metering	3514 846	3514 702	3514 702	3514 845	———	———	———
	Primary	———	———	———	———	3514 899	3514 899	3514 899
	Secondary	———	———	———	———	3549 360	3549 360	3514 898
14-35-43	SCREW, Metering Body	3420 349	3420 349	3420 349	3420 349	3420 349	3420 349	3420 349
14-35-45	COVER, Diaphragm	3514 653	———	———	3514 653	———	———	———
14-36-1	SPRING, Pump Lever Adjusting	———	3420 378	3420 378	———	3420 378	———	3420 378
14-36-29	SPRING, Throttle Stop Screw	———	———	3419 675	———	3419 675	3419 675	3419 675
14-36-50	SPRING, Vent Valve	———	3481 665	———	———	3549 365	3481 665	3481 665
	SPRING, Vent Rod	———	———	———	———	———	3514 699	3514 699
14-36-53	SPRING, Diaphragm Return	3514 806	———	———	3514 806	3420 376	3420 376	3420 376
	SPRING, Secondary Diaphragm	———	———	———	———	3514 806	3514 806	3514 806
14-37-14	PLUG, Fuel Level Check	3420 275	3420 275	———	3420 275	———	———	———
14-38-3	SCREW, Throttle Body	3420 342	3420 342	3420 342	3420 342	3420 342	3420 342	3420 342
14-38-4	PLATE, Throttle	3514 791	3514 665	3514 665	3481 691	———	———	———
	Primary	———	———	———	———	3420 358	3420 358	3420 358
	Secondary	———	———	———	———	3481 691	3481 691	3481 691
14-38-5	SCREW, Throttle Plate	3420 261	3420 347	3420 347	3420 261	———	———	———
	Primary	———	———	———	———	3420 261	3420 261	3420 261
	Secondary	———	———	———	———	3420 347	3420 347	3420 347
14-38-27	BUSHING, Throttle Connector Pin	———	3514 678	3514 678	———	———	———	———
14-38-28	BAR or ROD, Throttle Connector	———	3514 840	3514 840	———	3420 384	3420 384	3420 384
14-38-36	RETAINER, Throttle Connector Rod	———	———	———	———	3420 386	3420 386	3420 386
14-38-40	PIN, Throttle Connector	———	3514 843	3514 843	———	———	———	———
14-39-1	PLATE, Choke	———	3514 658	3514 658	———	3420 336	3420 336	3420 336
14-39-7	DIAPHRAGM, Choke	3514 654	3419 515	3419 620	3514 654	3419 515	3419 515	3419 620
14-39-8	LINK, Choke Diaphragm	———	———	3420 369	3481 662	3514 804	3514 804	3514 804
14-39-9	SCREW, Diaphragm Bracket	3481 700	3420 339	3420 339	3481 700	3420 339	3420 339	3420 339
14-39-10	LEVER, Choke Control	———	3514 659	3514 659	———	3514 797	3514 797	3514 797
14-39-27	RETAINER, Diaphragm Link	———	———	———	———	3481 337	3481 337	3481 337
14-39-28	ROD, Choke	———	3514 677	3514 677	———	3420 383	3420 383	3420 383
14-39-29	SEAL, Choke Rod	———	3420 301	3420 301	———	3420 301	3420 301	3420 301
14-39-30	SHAFT, Choke	———	3420 311	3420 311	———	3420 311	3420 311	3420 311
14-39-45	CHOKE	———	3512 843	3512 843	3512 843	3512 869	3512 867	3512 867
14-39-51	HOSE, Choke Vacuum	———	3419 687	3419 687	———	3419 687	3419 687	3419 687
14-39-56	PIN, Choke Clevis	———	———	———	———	3420 368	3420 368	3420 368
14-40-1	FLOAT, w/Lever	3481 693	3514 668	3514 668	3481 693	3420 364	3420 364	3420 364
14-40-5	RETAINER, Float	3549 331	3549 331	3549 331	3549 331	3419 673	3419 673	3419 673
14-40-6	SHAFT, Float	3481 683	———	3481 683	3481 683	———	———	———
14-40-7	BODY, w/Plugs, Fuel	3481 695	———	———	———	———	———	———
	Primary	———	———	———	———	3420 372	3514 831	3514 831
	Secondary	———	———	———	———	3420 373	3420 373	3420 373
14-40-18	SPRING, Float	3481 698	———	———	3481 698	3420 317	3420 317	3420 317
14-41-3	PLUNGER, w/Rod, Pump	———	2196 234	2196 234	———	2196 234	2196 234	2196 234
14-41-10	CAM, Pump	———	3420 321	3420 321	———	3420 321	3420 321	3420 321
14-41-13	VALVE, Pump Discharge Needle	———	———	———	———	3514 686	———	———
14-41-22	LEVER, Pump Operating	———	3514 680	3514 680	———	3514 680	3514 680	3514 680
14-41-23	RETAINER, Pump Operating Lever	———	3514 681	3514 681	———	3514 681	3541 681	3514 614

CARLINES J - Challenger, B - Barracuda, V - Valiant, L - Dart, R - Belvedere - Satallite, W - Coronet - Charger, P - Plymouth, D - Dodge, C - Chrysler, Y - Imperial

AR Indicates use as required.

**Indicates** parts not listed in any previous parts book.

Numerals in parentheses ( ) refer to notes.

★ Indicates change or addition.

Printed in U.S.A.
January 1972

	COMPONENT CHART REFERENCE NO.	64	65	66	67	68	69	70
CODE	MFG. NO.	R4789A	R4791A	R4792A	R4790A	R4736-1A	R4738-1A	R4739-1A
14-41-25	FITTING, Pump Lever Adjusting Screw	———	———	———	———	3420 365	3420 365	3420 365
14-41-34	COVER, Pump	———	3514 673	3514 673	———	3420 306	3420 306	3420 306
14-41-35	SCREW, Pump and Diaphragm Cover	———	———	———	———	3420 259	3420 259	3420 259
14-44-10	TUBE, Balance	———	———	———	———	3420 361	3420 361	3420 361
14-44-11	WASHER, Balance Tube	———	———	———	———	3420 385	3420 385	3420 385
14-44-12	"O" RING, Balance Tube	———	———	———	———	3420 367	3420 367	3420 367
14-45-1	NEEDLE, Idle Limiter	3420 363	———	———	3420 363	———	———	———
	NEEDLE, Idle Adjusting	———	3420 362	3420 362	———	3514 799	3514 799	3514 799
14-45-3	LEVER, Fast Idle Cam	———	3420 338	3420 338	———	3420 338	3420 338	3420 338
14-45-4	CAM, Fast Idle	———	3514 689	3514 689	———	3514 689	3514 689	3514 689
14-45-8	SCREW, Fast Idle Cam	———	3420 344	3420 344	———	3420 344	3420 344	3420 344
14-45-12	LIMITER, Idle Needle	———	3420 393	———	3481 697	3420 393	3420 393	3420 393
14-45-15	COVER, Hot Idle Compensator	———	3481 663	3481 663	———	———	3481 663	3481 663
14-45-17	COMPENSATOR, Hot Idle	———	3581 666	3581 666	———	———	3549 329	3549 329
14-45-19	SEAL, Compensator	———	3481 661	3481 661	———	———	3514 897	3514 897
14-45-20	SCREW, Idle Adjusting	———	———	3514 683	———	———	———	———
14-45-21	INSULATOR, Idle Screw	———	———	———	———	3549 327	3549 327	3549 327
14-45-32	BRACKET, Retard Wire	———	———	———	———	3514 809	3514 809	3514 809
14-45-33	CABLE, Retard	———	———	———	———	3514 810	3514 810	3514 810
14-46-1	VALVE, Vent	———	———	———	———	3419 669	———	———
14-46-2	ROD, Vent Valve	———	3549 335	3549 335	———	3549 335	———	———
14-46-3	PLATE, Metering Body	3420 370	———	———	3420 370	3420 370	3420 370	3420 370
14-46-4	RETAINER, "E" Ring	———	———	———	———	3420 375	3420 375	3420 375
14-46-5	ROD, Air Vent	———	———	———	———	3549 326	3514 700	3514 700
14-46-6	CLAMP, Vent Rod	———	3549 328	———	———	3420 387	3420 387	3420 387
14-46-7	BAFFLE, Metering Body Vent	———	———	———	———	3420 388	3420 388	3420 388
14-46-8	SEAL, Vent Valve	———	3481 659	3481 659	———	———	3481 659	3481 659
14-46-9	BODY, Vent Valve	———	3481 660	3514 661	———	———	3481 660	3481 660
14-46-10	CLAMP, Vent Valve	———	3481 667	3481 667	———	———	3481 667	3481 667
14-49-1	BOWL, w/Plugs, Fuel	———	3549 334	3549 334	3481 695	———	———	———
14-54-3	SCREW, Throttle Stop	———	3420 256	3420 256	———	3549 325	———	3549 325
14-54-4	SCREW, Fuel Valve Seat Lock	———	3420 273	3420 273	3420 273	———	———	———
14-54-15	SCREW, Choke Plate	———	3420 255	3420 255	———	3420 255	3420 255	3420 255
14-54-16	SCREW, Vent Valve Cover	———	3481 658	3481 658	———	———	———	3481 658
14-54-29	SCREW, Float Shaft Bracket	3481 699	3481 699	3481 699	3481 699	———	———	———
14-54-36	SCREW, Vent Rod Clamp	———	———	3414 682	———	3420 340	3420 340	3420 340
14-54-43	SCREW, Pump Lever Adjusting	———	3420 345	3420 345	———	3420 345	3420 345	3420 345
14-54-50	SCREW, Pump Cam Lock	———	———	———	———	3420 265	3420 265	3420 265
14-54-78	SCREW, Fuel Bowl to Main Body	———	3420 341	———	3420 348	3420 341	3420 341	3420 341
	SCREW, Secondary Fuel Bowl	———	———	———	———	3420 348	3420 348	3420 348

	COMPONENT CHART REFERENCE NO.	71	72
CODE	MFG. NO.	4895S	4894S
14-30-2	GASKET, Flange	2946 541	2946 540
14-30-4	ZIP KIT	3514 466	3621 286
14-30-7	GASKET KIT	3549 295	3549 296
14-30-8	NEEDLE, w/Seat	2933 042	2933 042
14-35-1	JET, Main Metering	2585 792	3549 303
14-35-42	COVER, Venturi	3481 290	3481 318
14-36-1	SPRING, Idle Speed Screw	3481 205	3481 205
	SPRING, Fast Idle Speed Screw	———	3481 205
	SPRING, Idle Mixture Screw	———	3481 558
14-36-2	SPRING, Step-Up Piston	3481 234	3481 248
14-36-15	SPRING, Pump	3481 207	3481 313
14-37-27	LEAD SHOT	3481 284	3481 538
	LEAD SHOT	3481 238	3420 453
14-37-29	BALL, Pump Intake Check	3481 289	3481 289
14-37-30	BALL, Pump Discharge Check	3481 220	3481 220
14-38-4	VALVE, Throttle	3481 269	3481 307
14-38-5	SCREW, Throttle Valve	3420 445	3420 445

CARLINES — J - Challenger, B - Barracuda, V - Valiant, L - Dart, R - Belvedere - Satallite, W - Coronet - Charger, P - Plymouth, D - Dodge, C - Chrysler, Y - Imperial

AR Indicates use as required.

≠ Indicates parts not listed in any previous parts book.

Numerals in parentheses ( ) refer to notes.

★ Indicates change or addition.

Printed in U.S.A.
January 1972

CODE	COMPONENT CHART REFERENCE NO. / MFG. NO.	71 4895S	72 4894S					
14-38-12	SHAFT, w/Lever, Throttle	3481 304	3549 260					
14-38-28	ROD, Throttle Connector	3481 299	3481 316					
14-39-1	VALVE, Choke	3481 271	3481 309					
14-39-6	SHAFT, Choke	3481 272	3549 261					
14-39-7	DIAPHRAGM, Choke	2933 185	2933 190					
14-39-9	SCREW, Diaphragm Bracket	3420 447	3420 447					
14-39-10	LEVER, Choke	3481 273	3481 273					
14-39-28	ROD, Choke Diaphragm Connector	3481 287	3481 317					
14-39-31	SPACER, Choke Connector Rod	3481 285	———					
14-39-45	CHOKE	2951 651	2951 652					
14-39-51	HOSE, Choke Diaphragm	3481 294	3481 294					
14-39-57	PIN SPRING, Diaphragm Connector Rod	3420 477	3420 477					
14-40-1	FLOAT, w/Lever	3481 274	3481 311					
14-40-4	PIN, Float Lever	3481 201	3481 201					
14-40-5	RETAINER, Float Lever Pin	3514 541	3481 277					
14-41-3	PLUNGER, w/Rod, Pump	2933 001	1826 607					
14-41-5	ARM, w/Countershaft, Pump	———	3481 326					
14-41-9	ARM, Pump	3481 275	3481 312					
	ARM, Loose Lever	———	3481 328					
14-43-3	PISTON, w/PLATE, Step-Up	3514 542	3481 323					
14-43-5	ROD, Step-Up	3514 549	2808 016					
14-45-4	CAM, Fast Idle	3514 880	3549 265					
14-45-5	ROD, Fast Idle Connector	———	3549 266					
14-45-8	SCREW, Fast Idle Cam	3481 282	3481 282					
14-45-20	SCREW, Idle Mixture	3481 630	3549 262					
14-45-25	SCREW, Fast Idle Speed	3481 281	3481 281					
	SCREW, Idle Speed	3514 495	3481 210					
14-48-8	VALVE, Thermostatic	3549 407	3549 407					
14-54-6	WASHER, Throttle Shaft	———	3549 272					
14-54-15	SCREW, Choke Valve	3420 450	3420 450					
14-54-42	WASHER, Pump Plunger	3481 224	———					
14-54-47	SCREW, Pump Arm	3481 279	3481 314					
14-54-51	WASHER, Pump Spring RETAINER	———	3481 330					
14-54-72	SCREW, Air Horn	3481 211	3481 211					
14-54-78	SCREW, Body Flange	3481 280	3420 443					
14-54-148	SCREW, Step-Up Piston Plate	3481 214	3481 315					
	SCREW, Step-Up Piston Cover Plate	———	3420 451					
14-54-152	SCREW, Venturi Cluster	3481 302	3481 633					
CODE	COMPONENT CHART REFERENCE NO. / MFG. NO.	73 4955S	74 4956S	75 R4655A	76 R4656A	77 R4657A	78 R4658A	79 R4659A
14-30-2	GASKET, Flange	2946 542	2946 542	2946 542	2946 542	2951 889	2951 889	2946 542
14-30-4	ZIP KIT or REPAIR KIT	3514 465	3514 465	3481 670	3481 670	3481 688	3481 688	3481 687
14-30-7	GASKET KIT	3514 475	3514 475	3481 671	3481 671	2585 463	2585 463	3418 671
14-30-8	NEEDLE, w/Seat	2809 395	2809 395	2299 042	2299 042	2299 042	2299 042	2299 042
14-30-29	GASKET, Needle Seat	———	———	3419 663	3419 663	3419 663	3419 663	3419 663
14-30-31	BAFFLE, Fuel Inlet	———	———	3419 688	3419 688	3419 688	3419 688	3419 688
14-35-1	JET, Main Metering	3514 490	3514 490	2299 245	2299 248	2299 248	2299 248	2809 387
14-35-3	JET, Pump	3481 233	3481 233	———	———	———	———	———
14-35-33	STEM, Economiser	———	———	3419 623	3419 623	3419 623	3419 623	2299 040
14-35-39	WELL, Main	———	———	3481 679	3419 510	3549 320	3549 319	3514 832
14-35-43	SCREW, Economiser Body	———	———	3419 657	3419 657	3419 657	3419 657	3419 657
	SCREW, Main Well, Long	———	———	3419 652	3419 652	3419 652	3419 652	3419 652
	Short	———	———	3419 651	3419 651	3419 651	3419 651	3419 651
14-35-45	COVER, Economiser Body	———	———	3419 670	3419 670	3419 670	3419 670	3419 670

CARLINES: J - Challenger, B - Barracuda, V - Valiant, L - Dart, R - Belvedere - Satallite, W - Coronet - Charger, P - Plymouth, D - Dodge, C - Chrysler, Y - Imperial

AR Indicates use as required.

# Indicates parts not listed in any previous parts book.

Numerals in parentheses ( ) refer to notes.

★ Indicates change or addition.

Printed in U.S.A.
January 1972

	COMPONENT CHART REFERENCE NO.	73	74	75	76	77	78	79
CODE	MFG. NO.	4935S	4956S	R4655A	4656A	R4657A	R4658A	R4659A
14-36-1	SPRING, Idle Speed Screw	3481 205	3481 205	———	———	———	———	———
	SPRING, Fast Idle Speed Screw	3481 205	3481 205	———	———	———	———	———
	SPRING, Idle Mixture Screw	3481 558	3481 558	———	———	———	———	———
	SPRING, Idle Adjusting Screw	———	———	3419 674	3419 674	3419 674	3419 674	3419 674
	SPRING, Fast Idle Screw	———	———	3419 677	3419 677	3419 677	3419 677	3419 677
14-36-2	SPRING, Step-Up Piston	3549 534	3514 477	———	———	———	———	———
14-36-15	SPRING, Pump	3481 235	3481 235	3419 679	3419 679	3419 679	3419 679	3419 679
14-36-29	SPRING, Throttle Stop Screw	———	———	3419 675	3419 675	3419 675	3419 675	3419 675
14-36-36	SPRING, Vent Rod	———	———	———	———	———	———	3481 664
14-36-50	SPRING, Mechanical Vent	———	———	3481 665	3481 665	3419 678	3419 678	3481 665
	SPRING, Vent Rod	———	———	3481 664	3481 664	———	———	3481 664
14-37-6	PLUG, Pump Jet	3481 193	3481 193	———	———	———	———	———
14-37-15	PLUG, Rivet	3481 155	3481 155	———	———	———	———	———
	PLUG, Rivet	3420 404	3420 404	———	———	———	———	———
14-37-25	PLUG, High Speed Passage	3481 194	3481 194	———	———	———	———	———
14-37-29	BALL, Pump Intake Check	3481 220	3481 220	———	———	———	———	———
14-37-30	BALL, Pump Discharge Check	3481 220	3481 220	———	———	———	———	———
14-38-4	VALVE or PLATE, Throttle	3481 232	3481 232	3419 665	3419 665	3419 699	3419 699	3419 695
14-38-5	SCREW, Throttle Valve or Plate	3549 456	3549 456	3419 654	3419 654	3419 654	3419 654	3419 654
14-38-12	SHAFT, w/Lever, Throttle	3481 191	3481 191	3419 666	3419 666	3419 666	3419 666	3419 666
14-38-20	PIN SPRING, Throttle Connector Rod	3420 476	3420 476	———	———	———	———	———
14-38-28	ROD, Throttle Connector	3481 231	3481 231	———	———	———	———	———
14-39-1	VALVE or PLATE, Choke	3481 192	3481 192	3419 649	3419 649	3419 649	3419 649	3419 649
14-39-6	SHAFT, Choke	3514 476	3514 476	3419 650	3419 650	3419 650	3419 650	3419 650
14-39-7	DIAPHRAGM, Choke	2933 182	2933 182	3419 508	3419 511	3419 508	3419 621	3419 508
14-39-8	LINK, Choke Diaphragm	———	———	3419 671	3419 671	3419 671	3419 671	3419 671
14-39-11	PIN, Choke Diaphragm Link	———	———	3481 674	3481 674	3481 674	3481 674	3481 674
14-39-28	ROD, Choke Connector	3481 218	3481 218	———	———	———	———	———
	ROD, Choke Diaphragm Connector	3481 219	3481 219	———	———	———	———	———
14-39-45	CHOKE	2946 548	2946 548	2946 549	2946 549	3418 502	3418 502	2946 549
	SCREW	6024 560	6024 560	6024 560	6024 560	6024 560	6024 560	6024 560
14-39-51	HOSE, Choke Diaphragm	3481 226	3481 226	3419 687	3419 687	3419 687	3419 687	3419 687
14-39-57	PIN SPRING, Choke Diaphragm Connector Rod	3420 477	3420 477	———	———	———	———	———
14-40-1	FLOAT, w/Lever	3481 200	3481 200	3419 668	3419 668	3419 668	3419 668	3419 668
14-40-4	PIN, Float Lever	3481 201	3481 201	———	———	———	———	———
14-40-5	RETAINER, Float	3481 209	3481 209	3419 673	3419 673	3419 673	3419 673	3419 673
14-40-7	BOWL, Float	———	———	3419 672	3419 672	3419 672	3419 672	3419 672
14-40-8	GASKET, Float Bowl	———	———	3419 664	3419 664	3419 664	3419 664	3419 664
14-40-18	SPRING, Float	———	———	3419 676	3419 676	3419 676	3419 676	3419 676
14-40-23	ARM, Bowl Vent	3514 478	3514 478	———	———	———	———	———
14-41-3	PLUNGER, w/Rod, Pump	3514 479	3514 479	2525 782	2525 782	2525 782	2525 782	3514 833
14-41-7	LINK, Pump Operating	———	———	2808 062	2808 062	2808 062	2808 062	2808 062
14-41-9	ARM, Pump	3481 204	3481 204	———	———	———	———	———
14-41-14	PLATE, Pump Cover	3514 488	3514 488	———	———	———	———	———
14-41-16	RETAINER, Pump Spring	3514 487	3514 487	———	———	———	———	———
14-41-22	LEVER, Pump Operating	———	———	2808 061	2808 061	2808 061	2808 061	2808 061
14-41-23	RETAINER, Pump Operating Lever	———	———	2808 059	2808 059	2808 059	2808 059	2808 059
14-41-40	RETAINER, Pump Operating Link	———	———	3481 338	3481 338	3481 338	3481 338	3481 338
14-43-3	PISTON, w/Plate, Step-Up	3481 228	3481 228	———	———	———	———	———
14-43-5	ROD, Step-Up	3514 489	3549 302	———	———	———	———	———
14-44-1	TUBE, Idle	3514 491	3514 483	———	———	———	———	———
14-44-3	TUBE, Main Vent	3481 238	3481 238	———	———	———	———	———

CARLINES — J - Challenger, B - Barracuda; V - Valiant, L - Dart; R - Belvedere - Satellite, W - Coronet - Charger; P - Plymouth, D - Dodge; C - Chrysler, Y - Imperial

AR Indicates use as required.

= Indicates parts not listed in any previous parts book.

Numerals in parentheses ( ) refer to notes.

★ Indicates change or addition.

Printed in U.S.A.
January 1972

CODE	COMPONENT CHART REFERENCE NO. / MFG. NO.	73 4955S	74 4956S	75 R4655A	76 R4656A	77 R4657A	78 R4658A	79 R4659A
14-45-1	SCREW, Fast Idle Cam	3481 216	3481 216	———	———	———	———	3419 658
	SCREW, Fast Idle	———	———	3419 656	3419 656	3419 656	3419 656	3419 656
	NEEDLE, Idle Adjusting	———	———	3419 667	3419 667	3419 667	3419 667	3419 667
14-45-4	CAM, Fast Idle	3514 485	3514 485	3419 681	3419 655	3419 681	3419 655	3419 655
14-45-5	ROD, Fast Idle	———	———	3419 682	3419 682	3419 682	3419 682	3419 682
14-45-12	LIMITER, Idle Adjusting Screw	———	———	3419 689	3419 689	3419 689	3419 689	3419 689
14-45-15	COVER, Hot Idle Compensator	———	———	3481 663	3481 663	———	———	3481 663
14-45-17	COMPENSATOR, Hot Idle	———	———	3481 666	3481 666	———	———	3481 666
14-45-19	SEAL, Compensator	———	———	3481 661	3481 661	———	———	3481 661
14-45-20	SCREW, Idle Mixture	3481 643	3481 643	———	———	———	———	———
14-45-25	SCREW, Idle Speed	3481 210	3481 210	———	———	———	———	———
	SCREW, Fast Idle Speed	3514 495	3514 495	———	———	———	———	———
14-46-1	VALVE, Mechanical Vent	———	———	3481 660	3481 660	3419 669	3419 669	3481 660
14-46-2	ROD, Mechanical Vent	———	———	3481 672	3481 672	3419 683	3419 683	3481 672
14-46-8	SEAL, Vent Valve	———	———	3481 659	3481 659	———	———	3481 659
14-46-10	CLAMP, Vent Valve	———	———	3481 667	3481 667	———	———	3481 667
14-46-13	CLAMP, Bowl Vent Tube	3514 492	3514 492	———	———	———	———	———
14-46-15	HOSE, Bowl Vent	3514 484	3514 484	———	———	———	———	———
14-46-16	RETAINER, Bowl Vent Valve	3514 486	3514 486	———	———	———	———	———
14-48-2	VALVE, Thermostatic	3549 407	3549 407	———	———	———	———	———
14-54-3	SCREW, Throttle Stop	———	———	3419 661	3419 661	3419 661	3419 661	3419 661
14-54-15	SCREW, Choke Valve or Plate	3420 450	3481 217	3419 654	3419 654	3419 654	3419 654	3419 654
14-54-28	SCREW, Choke Bracket	3418 217	3418 217	———	———	———	———	———
14-54-34	SCREW, Bowl Cover	3481 211	3481 211	———	———	———	———	———
14-54-37	WASHER, Mechanical Vent Pick-Up	———	———	3419 685	3419 685	3419 685	3419 685	3419 685
14-54-47	SCREW, Pump Arm	3481 212	3481 212	———	———	———	———	———
14-54-72	SCREW, Air Horn	3481 213	3481 213	———	———	———	———	———
14-54-78	SCREW, Float Bowl	———	———	3419 653	3419 653	3419 653	3419 653	3419 653
14-54-148	SCREW, Step-Up Piston Plate Guide	3481 214	3481 214	———	———	———	———	———
	SCREW, Step-Up Piston Cover Plate	3420 451	3420 451	———	———	———	———	———
14-82-2	VALVE, Thermostatic	3549 407	3549 407	———	———	———	———	———

CODE	COMPONENT CHART REFERENCE NO. / MFG. NO.	80 4929S	81 4930S	82 4957S	83 4958S	84 4959S	85 4960S	86 7041180
14-30-2	GASKET, Flange	2951 889	2951 889	2946 541	2946 541	2468 818	2468 818	2946 541
14-30-4	ZIP KIT	3514 464	3514 464	3514 467	3514 467	3621 260	3621 260	———
	POWER KIT	———	———	———	———	———	———	3549 461
14-30-7	GASKET KIT	2933 179	2933 179	354º 295	3549 295	3621 245	3621 245	3549 462
14-30-8	NEEDLE, w/Seat	2809 395	2809 395	293ᴗ 042	2933 042	2933 042	2933 042	3549 480
14-30-27	STRAINER, Fuel	———	———	———	———	———	———	3549 482
14-30-28	NUT, Fuel Inlet	———	———	———	———	———	———	3621 043
14-30-29	GASKET, Needle Seat	3481 199	3481 199	———	———	———	———	———
14-33-1	BODY, Throttle	———	———	———	———	———	———	3549 524
14-34-4	GASKET, Body	3481 222	3481 222	———	———	———	———	———
14-35-1	JET, Main Metering	2585 792	3419 616	2585 792	2585 792	2585 792	2585 792	3579 036
14-35-3	JET, Pump	3481 203	3481 233	———	———	———	———	———
14-35-6	VALVE, Power	———	———	———	———	———	———	3549 511
14-35-41	CLUSTER, Venturi	———	———	———	———	———	———	3549 504
14-35-42	COVER, Venturi	———	———	3481 290	3481 290	3481 290	3481 290	———
14-35-46	INSERT, Main Well	———	———	———	———	———	———	3549 509
14-36-1	SPRING, Idle Speed Screw	3481 205	3481 205	3481 205	3481 205	3481 205	3481 205	———
	SPRING, Fast Idle Speed Screw	3481 205	3481 205	———	———	3481 205	3481 205	———
	SPRING, Idle Mixture Screw	3514 516	3514 516	3481 558	3481 558	3481 558	3481 551	———
	SPRING, Idle Stop Screw	———	———	———	———	———	———	3549 519
14-36-2	SPRING, Step-Up Piston	3481 206	3481 234	3481 234	3481 234	3481 234	3481 234	———

CARLINES J - Challenger, B - Barracuda, V - Valiant, L - Dart, R - Belvedere - Satallite, W - Coronet - Charger, P - Plymouth, D - Dodge, C - Chrysler, Y - Imperial

AR Indicates use as required.

# Indicates parts not listed in any previous parts book.

Numerals in parentheses ( ) refer to notes.

★ Indicates change or addition.

Printed in U.S.A.
January 1972

	COMPONENT CHART REFERENCE NO.	80	81	82	83	84	85	86
CODE	MFG. NO.	4929S	4930S	4957S	4958S	4959S	4960S	7041180
14-36-15	SPRING, Pump	3481 207	3481 235	3481 207	3481 207	3481 207	3481 207	3549 498
	SPRING, Pump Discharge	———	———	———	———	———	———	3549 500
14-36-50	SPRING, Bowl Vent	———	———	3514 548	3514 548	———	———	———
	SPRING, Vent Valve	———	———	———	———	———	———	3549 476
14-37-6	PLUG, Pump Jet	———	3481 193	———	———	———	———	———
14-37-15	PLUG, Rivet	3420 404	3420 404	———	———	———	———	———
	PLUG, Rivet	3481 155	3481 155	———	———	———	———	———
	PLUG, Rivet	3481 195	3481 195	———	———	———	———	———
14-37-25	PLUG, High Speed Passage	3481 194	3481 194	———	———	———	———	———
14-37-27	LEAD SHOT	———	———	3481 284	3481 284	3481 284	3481 284	———
	LEAD SHOT	———	———	3481 238	3481 238	3481 238	3481 238	———
	LEAD SHOT	———	———	3420 453	3420 453	3420 453	342 453	———
14-37-29	BALL, Pump Intake Check	3481 220	3481 220	3481 289	3481 289	3481 289	3481 289	3549 496
14-37-30	BALL, Pump Discharge Check	3481 220	3481 220	3481 220	3481 220	3481 220	3481 220	3549 501
14-38-4	VALVE, Throttle	3481 190	3481 232	3481 269	3481 269	3481 269	3481 269	———
14-38-5	SCREW, Throttle Valve	3549 456	3549 456	3420 445	3420 445	3420 445	3420 445	———
14-38-12	SHAFT, Lever, Throttle	3481 191	3481 191	3481 301	3481 304	3481 304	3481 304	———
14-38-20	PIN SPRING, Throttle Connector Rod	3420 476	3420 476	———	———	———	———	———
14-38-28	ROD, Throttle Connector	3481 231	3481 231	3481 286	3481 286	3481 299	3481 299	———
14-39-1	VALVE, Choke	3481 192	3481 192	3481 271	3481 271	3481 271	3481 271	3549 493
14-39-6	SHAFT, w/Lever, Choke	3514 476	3514 476	3481 272	3481 272	3481 272	3481 272	3549 495
	LEVER, Choke Loose	———	———	3481 273	3481 273	3481 273	3481 273	———
14-39-7	DIAPHRAGM, Choke	2933 182	3419 617	2933 185	2933 185	2933 185	2933 185	———
14-39-9	SCREW, Choke Diaphragm	———	———	3420 447	3420 447	3420 447	3420 447	———
14-39-10	LEVER, Choke	———	———	———	———	———	3481 273	3549 491
14-39-27	RETAINER, Choke Connector Rod	———	———	———	———	———	3420 433	———
14-39-28	ROD, Choke Connector	3481 218	3481 218	———	———	———	———	3549 512
	ROD, Choke Diaphragm Connector	3481 219	3481 219	3481 287	3481 287	3481 287	3481 287	———
14-39-31	SPACER, Choke Connector Rod	———	———	3481 285	3481 285	3481 285	3481 285	———
14-39-45	CHOKE	2946 522	2946 522	2951 651	2951 651	2946 535	2946 535	3512 871
14-39-51	HOSE, Choke Diaphragm	3481 226	3481 226	3481 294	3481 294	3481 294	3481 294	———
	HOSE, Choke Vacuum	———	———	———	———	———	———	3549 488
14-39-56	PIN SPRING	———	———	3420 476	3420 476	3420 476	3420 476	———
14-39-57	PIN SPRING, Diaphragm Connector Rod	3420 477	3420 477	3420 477	3420 477	3420 477	3420 477	———
14-40-1	FLOAT, w/Lever	3481 200	3481 200	3481 274	3481 274	3481 274	3481 274	3549 478
14-40-4	PIN, Float Lever	3481 201	3481 201	3481 201	3481 201	3481 201	3481 201	3549 479
14-40-5	RETAINER, Float Lever Pin	3481 209	3481 209	3514 541	3514 541	3514 541	3514 541	———
	PULL CLIP, Float	———	———	———	———	———	———	3549 483
14-40-7	BOWL, Float	———	———	———	———	———	———	3549 502
14-40-35	BAFFLE, Fuel Bowl	———	3481 610	3481 610	3481 610	3481 610	———	———
14-41-3	PLUNGER, w/Rod, Pump	2196 214	2196 214	3549 257	3549 257	2933 001	2933 001	———
	PUMP	———	———	———	———	———	———	3549 470
	PISTON, Power	———	———	———	———	———	———	3549 484
14-41-8	ROD, Pump	———	———	———	———	———	———	3549 523
14-41-9	ARM, Pump	3481 204	3481 204	3514 547	3514 547	3481 275	3481 275	———
	LEVER, Pump	———	———	———	———	———	———	3549 466
14-41-12	BUSHING, Pump Plunger	———	3481 202	———	———	———	———	———
14-41-13	RETAINER, Pump Plunger	———	———	3514 486	3514 486	3481 278	3481 278	———
14-41-14	PLATE, Cover	———	———	3514 488	3514 488	———	———	———
14-41-19	GUIDE, Pump Discharge	———	———	———	———	———	———	3549 499
14-41-20	STRAINER, Pump Inlet	———	———	———	———	———	———	3549 497
14-41-21	SHAFT, w/Lever, Pump	———	———	———	———	———	———	3549 467
14-41-31	CONTROL, w/Bracket, Vacuum Break Choke	———	———	———	———	———	———	3549 485
	CONTROL, Vacuum Break Choke	———	———	———	———	———	———	3549 486
14-41-32	LINK, Vacuum Break	———	———	———	———	———	———	3549 487

CARLINES J - Challenger, B - Barracuda; V - Valiant, L - Dart; R - Belvedere - Satallite, W - Coronet - Charger; P - Plymouth, D - Dodge; C - Chrysler, Y - Imperial

AR Indicates use as required.

Numerals in parentheses ( ) refer to notes.

≠ Indicates parts not listed in any previous parts book.

★ Indicates change or addition.

Printed in U.S.A.
January 1972

	COMPONENT CHART REFERENCE NO.	80	81	82	83	84	85	86
CODE	MFG. NO.	4929S	4930S	4957S	4958S	4959S	4960S	7041180
14-41-45	CLIP, Pump Rod	———	———	———	———	———	———	3549 533
14-43-3	PISTON, Step-Up	3481 228	3481 228	3514 542	3514 542	3514 542	3514 542	———
14-43-5	ROD, Step-Up	2933 157	3419 615	3514 549	3549 460	2585 790	2585 790	———
14-44-1	TUBE, Idle	———	3481 237	———	———	———	———	———
14-44-3	TUBE, Main Vent	———	3481 238	———	———	———	———	———
14-45-1	NEEDLE, Idle Adjusting	———	———	———	———	———	———	3549 525
14-45-4	CAM, Fast Idle	3481 229	3481 229	3481 296	3514 880	3481 296	3514 880	3549 513
14-45-5	ROD, Fast Idle Connector	———	———	3481 288	3481 288	3481 288	3481 288	———
14-45-8	SCREW, Fast Idle Cam	3481 216	3481 216	3481 282	3481 282	3481 282	3481 282	3549 514
14-45-11	SPRING, Idle Needle	———	———	———	———	———	———	3549 526
14-45-12	LIMITER, Idle Needle	———	———	———	———	———	———	3549 527
14-45-15	COVER, Idle Compensator	———	———	———	———	———	———	3549 516
14-45-17	COMPENSATOR, Idle	———	———	———	———	———	———	3549 515
14-45-19	GASKET, Idle Compensator	———	———	———	———	———	———	3549 518
14-45-20	SCREW, Idle Mixture	3481 643	3481 643	3481 630	3481 630	3481 630	3481 630	———
14-45-22	SCREW, Idle Compensator	———	———	———	———	———	———	3549 517
14-45-25	SCREW, Fast Idle Speed	3514 495	3514 492	3481 210	3481 210	3481 210	3481 210	———
14-46-7	SCREW, Vent Valve Cover	———	———	———	———	———	———	3549 475
14-46-8	GASKET, Vent Valve	———	———	———	———	———	———	3549 473
14-46-18	PLATE, Bowl Vent Cover	———	———	3549 256	3549 256	———	———	———
14-46-19	VALVE, Bowl Vent	———	———	3549 258	3549 258	———	———	———
	VALVE, Idle Vent	———	———	———	———	———	———	3549 472
14-46-20	COVER, Vent Valve	———	———	———	———	———	———	3549 474
14-47-1	AIR HORN	———	———	———	———	———	———	3549 477
14-47-13	GASKET, Air Horn	———	———	———	———	———	———	3549 463
14-48-2	VALVE, Thermostatic	———	———	———	3514 882	———	———	———
14-50-8	NUT, Dashpot Lock	———	———	3420 455	———	———	———	———
14-50-13	BRACKET, Dashpot	———	———	2933 186	———	———	———	———
14-50-25	DASHPOT	———	———	2808 101	———	———	———	———
14-54-12	SCREW, Choke Lever	———	———	———	———	———	———	3549 490
14-54-15	SCREW, Choke Valve	3420 450	3420 450	3420 450	3420 450	3420 450	3420 450	3549 494
14-54-28	SCREW, Choke Brkt.	———	3481 217	———	———	———	———	———
14-54-34	SCREW, Bowl Cover	———	3481 211	3549 259	———	———	———	———
	SCREW, Bowl Vent Cover Plate	———	———	———	3549 259	———	———	———
14-54-42	WASHER, Pump Plunger	3481 224	3481 224	3549 455	3549 455	3481 224	3481 224	———
	WASHER, Pump Lever	———	———	———	———	———	———	3549 469
14-54-47	SCREW, Pump Arm	3481 212	3481 212	3481 212	3481 212	3481 279	3481 279	———
	SCREW, Pump Lever	———	———	———	———	———	———	3549 468
14-54-72	SCREW, Air Horn	3481 213	3481 213	3481 211	3481 211	3481 211	3481 211	———
	Long	———	———	———	———	———	———	3549 464
	Short	———	———	———	———	———	———	3549 465
14-54-78	SCREW, Body Flange	———	———	3481 280	3481 280	3481 280	3481 280	———
		———	3481 230	———	348 123	———	———	———
14-54-98	SCREW, Throttle Body	———	———	———	———	———	———	3549 522
14-54-148	SCREW, Step-Up Piston Guide Plate	3481 214	3481 214	3481 214	3481 214	3481 214	3481 214	———
14-54-152	SCREW, Venturi Cluster	———	———	3481 302	3481 302	3418 779	3481 779	———
	Outer	———	———	———	———	———	———	3549 505
	Center	———	———	———	———	———	———	3549 506
14-82-2	VALVE, Thermostatic	———	———	3514 882	———	———	———	———

	COMPONENT CHART REFERENCE NO.	87	88	89	90	91	92	93
CODE	MFG. NO.	4972S	4973S	R4665A	R4666A	R4789A	R4791A	R4792A
14-30-2	GASKET, Flange	3512 868	3512 868	2946 540	2946 540	2946 531	2946 531	2946 531
14-30-2	GSKT., Flange (Asbestos)	3512 869	3512 869	———	———	———	———	———
	SPACER, Flange (Aluminum)	3512 870	3512 870	———	———	———	———	———
14-30-4	ZIP KIT or REPAIR KIT	3621 225	3621 225	3514 711	3514 711	3514 651	3514 695	3514 695
14-30-7	GASKET KIT	3621 246	3621 246	3514 199	3514 199	3514 652	3514 696	3514 696
14-30-8	NEEDLE, w/Seat	3621 161	3621 161	3514 730	3514 730	3514 669	3514 669	3514 669
14-30-14	NUT, Fuel Valve Seat	———	———	———	———	———	3420 319	3420 319
14-30-30	FITTING, Fuel Inlet	3621 152	3621 152	3514 731	3514 731	2809 248	3514 820	3514 820

CARLINES J - Challenger, B - Barracuda; V - Valiant, L - Dart; R - Belvedere - Satallite, W - Coronet - Charger; P - Plymouth, D - Dodge; C - Chrysler, Y - Imperial

AR Indicates use as required.

# Indicates parts not listed in any previous parts book.

Numerals in parentheses ( ) refer to notes.

★ Indicates change or addition.

Printed in U.S.A.
January 1972

CODE	COMPONENT CHART REFERENCE NO. / MFG. NO.	87 4972S	88 4973S	89 R4665A	90 R4666A	91 R4789A	92 R4791A	93 R4792A
14-33-1	BODY, w Shaft, Throttle	———	———	3549 449	3549 449	3514 792	3514 667	3514 667
14-34-15	GASKET, Power Valve							
14-34-21	"O" RING, Fuel Valve Seat	———	———	———	———	———	3420 299	3420 299
14-34-63	GROMMET SEAL	3549 406	3549 406	———	———	———	———	———
14-35-1	JET, Main Metering	———	———	2196 240	3420 332	———	3420 332	3420 332
	Primary	3621 197	3621 197	———	———	———	———	———
	Secondary	3621 198	3621 198	———	———	———	———	———
14-35-3	JET, w Housing, Pump	3621 163	3621 163	———	———	———	———	———
	NOZZLE, Pump Discharge	———	———	———	———	———	3420 295	3420 295
14-35-6	VALVE, Power	———	———	3514 796	3514 796	———	2084 715	2084 715
	NEEDLE, Pump Check	———	———	———	———	———	3514 684	3514 684
14-35-9	DIAPHRAGM, Secondary	———	———	———	———	3514 857	———	———
14-35-10	SCREW, Pump Jet Housing	3621 183	3621 183	———	———	———	———	———
14-35-19	SCREW, Pump Discharge Nozzle	———	———	———	———	———	3420 346	3420 346
14-35-25	HOUSING, Diaphragm	———	———	———	———	3514 657	———	———
14-35-26	LEVER, Diaphragm	———	———	———	———	3514 655	———	———
14-35-39	BODY, w/Plugs, Metering	———	———	———	———	3514 846	3514 702	3514 702
14-35-43	SCREW, Metering Body	———	———	———	———	3420 349	———	———
14-35-45	COVER, Diaphragm	———	———	———	———	3514 653	———	———
14-36-1	SPRING, Fast Idle Speed Screw	3481 535	3481 535	———	———	———	———	———
	SPRING, Idle Speed Screw	3481 535	3481 535	———	———	———	———	———
	SPRING, Idle Mixture Screw	3481 558	3481 558	———	———	———	———	———
	SPRING, Solenoid Speed Screw	3481 558	3481 558	———	———	———	———	———
	SPRING, Idle Needle	———	———	3481 395	3481 395	———	———	———
	SPRING, Pump Lever Adjusting	———	———	———	———	———	3420 378	3420 378
14-36-15	SPRING, Pump Upper	3481 235	3481 235	———	———	———	———	———
	Lower	3621 436	3621 436	———	———	———	———	———
	SPRING, Pump	———	———	3549 415	3549 415	———	———	———
14-36-19	SPRING, Choke Lever	3481 208	3481 208	———	———	———	———	———
14-36-29	SPRING, Throttle Stop Screw	———	———	3419 675	———	———	3419 675	3419 675
14-36-37	SPRING, Vacuum Piston	3621 172	3621 172	———	———	———	———	———
14-36-50	SPRING, Air Valve	3621 169	3621 169	———	———	———	———	———
	SPRING, Bowl Vent Arm	3621 171	3621 171	———	———	———	———	———
	SPRING, Vent Valve Lever	———	———	3514 743	3514 743	———	———	———
	SPRING, Vent Valve	———	———	3481 665	3481 665	———	3481 665	3481 665
	SPRING, Vent Rod	———	———	———	———	———	3514 699	3514 699
14-36-53	SPRING, Diaphragm Return	———	———	———	———	3514 806	———	3420 376
14-37-14	PLUG, Fuel Level Check	———	———	———	———	———	3420 275	3420 275
14-38-3	SCREW, Throttle Body	———	———	———	———	3420 342	3420 342	3420 342
14-38-4	VALVE or PLATE, Throttle	———	———	3514 726	3514 726	3514 791	3514 665	3514 665
	Primary	3549 541	3549 541	———	———	———	———	———
	Secondary	3549 542	3549 542	———	———	———	———	———
	VALVE, Air	3549 546	3549 546	———	———	———	———	———
14-38-5	SCREW, Throttle Valve or Plate	———	———	3514 834	3514 834	3420 261	3420 347	3420 347
	Primary	3549 456	3549 456	———	———	———	———	———
	Secondary	3621 188	3621 188	———	———	———	———	———
14-38-12	SHAFT, w Lever and Dog, Primary Throttle	3621 433	3621 433	———	———	———	———	———
	SHAFT, w Dog, Secondary Throttle	3549 544	3549 544	———	———	———	———	———
	SHAFT, w Lever, Air Valve	3549 550	3549 550	———	———	———	———	———
14-38-24	SOLENOID, Idle	3438 333	3438 333	———	———	2875 975	2875 975	2875 975
14-38-26	CABLE, Sol.	3438 779	———	———	———	———	———	———
14-38-27	BUSHING, Throttle Connector Pin	———	———	———	———	———	3514 678	3514 678
14-38-28	ROD or BAR, Throttle Connector	3621 195	3621 195	———	———	———	3514 840	3514 840

CARLINES — J - Challenger, B - Barracuda, V - Valiant, L - Dart, R - Belvedere - Satallite, W - Coronet - Charger, P - Plymouth, D - Dodge, C - Chrysler, Y - Imperial

AR Indicates use as required.

= Indicates parts not listed in any previous parts book.

Numerals in parentheses ( ) refer to notes.

★ Indicates change or addition.

Printed in U.S.A.
January 1972

CODE	COMPONENT CHART REFERENCE NO. / MFG. NO.	87 4972S	88 4973S	89 R4665A	90 R4666A	91 R4789A	92 R4791A	93 R4792A
14-38-29	BRACKET, Solenoid	———	———	———	———	3577 536	3577 536	3577 536
14-38-40	PIN, Throttle Connector	———	———	———	———	———	3514 843	3514 843
14-38-50	ROD, Throttle Operating	3621 192	3621 192	———	———	———	———	———
14-39-1	VALVE or PLATE, Choke	3549 545	3549 545	3549 318	3549 418	———	3514 658	3514 658
14-39-6	SHAFT, w/Lever, Choke	3549 549	3549 549	3549 419	3549 419	———	———	———
14-39-7	DIAPHRAGM, Choke	3621 209	3621 210	3549 450	3549 450	3514 654	3419 515	3419 620
14-39-8	LINK, Diaphragm	———	———	3514 739	3514 739	———	3420 369	3420 369
14-39-9	SCREW, Diaphragm Bracket	3621 179	3621 179	———	———	———	3420 339	3420 339
14-39-10	LEVER, Choke Adjusting	3621 150	3621 150	———	———	———	———	———
	LEVER, Choke Countershaft	3621 151	3621 151	———	———	———	———	———
	LEVER, Choke Control	———	———	———	———	———	3514 659	3514 659
14-39-11	PIN, Choke Diaphragm Link	———	———	3481 764	3481 764	———	———	———
14-39-27	RETAINER, Choke Connector Rod	3420 443	3420 433	———	———	———	———	———
14-39-28	ROD, Choke Connector	3621 193	3621 193	———	———	———	———	———
	ROD, Choke Diaphragm Connector	3621 435	3621 435	———	———	———	———	———
	ROD, Choke	———	———	———	———	———	3514 677	3514 677
14-39-29	SEAL, Choke Rod	———	———	———	———	———	3420 301	3420 301
14-39-30	SHAFT, Choke	———	———	———	———	———	3420 311	3420 311
14-39-31	WASHER, Choke Diaphragm Connector Rod	3621 202	3621 202	———	———	———	———	———
14-39-45	CHOKE	3512 875	3512 875	3512 872	3512 872	3512 843	3512 843	3512 843
	SCREW	6024 560	6024 560	6024 560	6024 560	6024 560	6024 560	6024 560
14-39-50	PLATE, Choke Baffle	3621 208	3621 208	———	———	———	———	———
14-39-51	HOSE, Choke Diaphragm	3420 475	3420 475	3419 687	3419 687	———	3419 687	3419 687
14-39-57	PIN SPRING	3420 477	3420 477	———	———	———	———	———
14-40-1	FLOAT, w/Lever	3621 159	3621 159	3514 707	3514 707	3481 693	3514 668	3514 668
14-40-4	PIN, Float Lever	3621 160	3621 160	3514 735	3514 735	———	———	———
14-40-5	RETAINER, Float	———	———	———	———	3549 331	3549 331	3549 331
14-40-6	SHAFT, Choke	———	———	———	———	3481 683	3481 683	3481 683
14-40-18	SPRING, Float	———	———	———	———	3481 698	3481 698	3481 698
14-40-23	ARM, Bowl Vent Operating	3621 168	3621 168	———	———	———	———	———
	ARM, Bowl Vent	3621 166	3621 166	———	———	———	———	———
	LEVER, Bowl Vent Operating	3621 167	3621 167	———	———	———	———	———
14-40-35	BAFFLE, Fuel Bowl	———	———	3514 749	3514 749	———	———	———
14-41-3	PLUNGER, w/Rod, Pump	3621 175	3621 175	3549 413	3549 413	———	2196 234	2196 234
	PISTON, Power Valve	———	———	3514 733	3514 7. 3	———	———	———
14-41-8	LINK, Pump	———	———	3514 738	3514 738	———	———	———
14-41-9	ARM, Pump	3420 456	3420 456	———	———	———	———	———
14-41-10	CAM, Pump	———	———	———	———	———	3420 321	3420 321
14-41-18	VALVE, Pump Intake Check	3621 205	3621 205	———	———	———	———	———
	VALVE, Pump Discharge	———	———	3514 732	3514 732	———	———	———
14-41-21	SHAFT, Pump Lever	———	———	———	3514 751	———	———	———
14-41-22	LEVER, Pump	3621 164	3621 164	3514 750	3514 750	———	3514 680	3514 679
14-41-23	RETAINER, Pump Lever	———	———	———	———	———	3514 681	3514 681
14-41-25	FITTING, Pump Lever Screw	———	———	———	———	———	———	3420 365
14-41-34	COVER, Pump	———	———	———	———	———	3514 673	3514 673
14-41-35	SCREW, Pump Cover	———	———	———	———	———	3420 349	3420 349
14-41-40	NEEDLE, Pump Discharge Check	3621 155	3621 155	———	———	———	———	———
14-43-3	PISTON, w/Link, Step-Up	3621 204	3621 204	———	———	———	———	———
14-43-4	PLATE, Step-Up Piston Cover	3621 176	3621 176	———	———	———	———	———
14-43-5	ROD, Step-Up	3621 154	3621 153	———	———	———	———	———
14-45-1	NEEDLE, Idle Adjusting	———	———	3514 728	3514 728	———	3420 362	3420 362
	NEEDLE, Idle Limiter	———	———	———	———	3420 363	———	———
14-45-3	LEVER, Fast Idle Cam	———	———	———	———	———	3420 338	3420 338
14-45-4	CAM, Fast Idle	———	———	3549 322	3549 322	———	3420 381	3420 381
14-45-5	ROD, Fast Idle Connector	3621 196	3621 196	3514 746	3514 746	———	———	———
14-45-7	LEVER, Fast Idle	3621 165	3621 165	3514 714	3514 714	———	———	———
14-45-8	SCREW, Fast Idle Cam	3621 178	———	———	3514 715	———	3420 344	3420 344

CARLINES J - Challenger, B - Barracuda, V - Valiant, L - Dart, R - Belvedere - Satallite, W - Coronet - Charger, P - Plymouth, D - Dodge, C - Chrysler, Y - Imperial

AR Indicates use as required.

Numerals in parentheses ( ) refer to notes.

Indicates parts not listed in any previous parts book.

★ Indicates change or addition.

Printed in U.S.A.
January 1972

	COMPONENT CHART REFERENCE NO.	87	88	89	90	91	92	93
CODE	MFG. NO.	4972S	4973S	R4665A	R4666A	R4789A	R4791A	R4792A
14-45-9	NUT, Fast Idle Lever	———	———	———	3481 397	———	———	———
14-45-10	RETAINER, Fast Idle Cam	———	———	3514 741	3514 741	———	———	———
14-45-12	LIMITER, Idle Mixture Screw	———	3420 436	———	———	———	———	———
	LIMITER, Idle Adjusting Needle	———	———	3514 740	3514 740	———	3420 393	3420 393
14-45-15	COVER, Hot Idle Compensator	———	———	3481 663	3481 663	———	3481 663	3481 663
14-45-17	COMPENSATOR, Hot Idle	———	———	3549 329	3549 329	———	3481 666	3481 666
14-45-19	SEAL, Hot Idle Compensator	———	———	3514 897	3514 897	———	3481 661	3481 661
14-45-20	SCREW, Idle Mixture	3621 162	3621 162	———	———	———	———	———
	SCREW, Idle Adjusting	———	———	———	———	———	3514 683	3514 683
14-45-25	SCREW, Idle Speed	3621 177	3621 177	———	———	———	———	———
14-46-1	VALVE, Vent	———	———	———	———	———	3481 665	3481 665
14-46-2	ROD, Vent Valve	———	———	———	———	———	3549 335	3549 335
14-46-3	PLATE, Metering Body	———	———	———	———	3420 370	———	———
14-46-4	RETAINER, "E" Ring	———	———	———	———	———	3420 375	3420 375
14-46-6	CLAMP, Vent Rod	———	———	———	———	———	3549 328	3549 328
14-46-7	BAFFLE, Metering Body Vent	———	———	———	———	———	3420 388	3420 388
14-46-8	SEAL, Vent Valve	———	———	3481 659	3481 659	———	3481 659	3481 659
14-46-9	BODY, Vent Valve	———	———	3481 660	3481 660	———	3481 660	3514 661
14-46-10	CLAMP, Vent Valve	———	———	3481 667	3481 667	———	3481 667	3481 667
14-46-14	LEVER, Vent Valve	———	———	3514 709	3514 709	———	———	———
14-46-17	ROD, Bowl Vent Connector	3621 194	3621 194	———	———	———	———	———
14-48-2	VALVE, Thermostatic	3621 206	3621 206	———	———	———	———	———
14-49-1	BODY, w/Plugs, Fuel	———	———	———	———	3481 695	3549 334	3549 334
14-54-3	SCREW, Throttle Stop	———	———	———	———	———	3420 256	3420 256
14-54-4	SCREW, Fuel Valve Seat	———	———	———	———	3420 273	3420 273	3420 273
14-54-6	WASHER, Throttle Shaft Spring	3514 519	3514 519	———	———	———	———	———
14-54-15	SCREW, Choke Valve or Plate	3621 180	3621 180	3549 418	3420 255	———	3420 255	3420 255
	SCREW, Air Valve	3621 180	3621 180	———	———	———	———	———
14-54-16	SCREW, Vent Valve Cover	———	———	———	———	———	3481 658	3481 658
14-54-29	SCREW, Float Shaft Bracket	———	———	———	———	———	3481 699	3481 699
14-54-34	SCREW, Bowl Cover	3621 181	3621 181	———	———	———	———	———
14-54-36	SCREW, Vent Rod Clamp	———	———	———	———	———	3514 682	3514 682
14-54-43	SCREW, Pump Lever Adjusting	———	———	———	———	———	3420 345	3420 345
14-54-45	WASHER, Pump	———	———	———	3549 416	———	———	———
14-54-47	SCREW, Pump Arm	3481 093	3481 093	———	———	———	———	———
14-54-50	SCREW, Pump Cam	———	———	———	———	———	3420 682	3420 682
14-54-72	SCREW, Air Horn	———	———	3514 719	3514 719	———	———	———
		———	———	3514 720	3514 720	———	———	———
14-54-78	SCREW, Throttle Body	———	———	3514 718	3514 718	———	———	———
	SCREW, Fuel Bowl	———	———	———	———	3420 348	3420 341	3420 341
	SCREW, Fuel Bowl Baffle	———	———	3514 717	3514 717	———	———	———
14-54-148	SCREW, Step-Up Piston Cover Plate	3621 182	3621 182	———	———	———	———	———

	COMPONENT CHART REFERENCE NO.	94	95	96	97	98	99	100
CODE	MFG. NO.	R4790A	4961S	4962S	4964S	R4667A	R4668A	R4734A
14-30-2	GASKET, Flange	2946 531	2946 540	2946 540	2264 193	2946 543	2946 543	3462 831
14-30-4	REPAIR KIT or ZIP KIT	3514 651	3621 286	3621 286	3621 286	3514 824	3514 824	3514 824
14-30-7	GASKET KIT	3514 652	3549 296	3549 296	3549 296	3514 825	3514 825	3514 825
14-30-8	NEEDLE, w/Seat	3481 694	2933 042	2933 042	2933 042	2809 335	2809 335	2809 335
14-30-14	NUT, Valve Seat Adjusting	3420 319	———	———	———	———	———	3621 282
14-30-16	PLATE, Fuel Bowl Baffle	———	———	———	———	3420 389	3420 324	3420 324
14-30-30	FITTING, Fuel Inlet	3514 820	———	———	———	3514 731	3514 731	3514 731
14-30-31	BAFFLE, Fuel Inlet	———	———	———	———	———	3420 389	3420 389

CARLINES — J - Challenger, B - Barracuda, V - Valiant, L - Dart, R - Belvedere - Satallite, W - Coronet - Charger, P - Plymouth, D - Dodge, C - Chrysler, Y - Imperial

AR Indicates use as required.

Numerals in parentheses ( ) refer to notes.

≠ Indicates parts not listed in any previous parts book.

★ Indicates change or addition.

Printed in U.S.A.
January 1972

CODE	COMPONENT CHART REFERENCE NO. / MFG. NO.	94 R4790A	95 4961S	96 4962S	97 4964S	98 R4667A	99 R4668A	100 R4734A
14-31-27	CLAMP, Cable	———	———	———	———	3621 385	———	———
14-32-15	SCREW, Venturi Cover Plate	———	3420 448	3520 448	———	———	———	———
14-33-1	BODY, w/Shaft, Throttle	3481 692	———	———	———	3514 812	3514 812	3514 873
14-34-10	GASKET, Secondary Metering Body	———	———	———	———	3514 851	3514 851	3514 851
14-34-21	GASKET, Fuel Valve	———	———	———	———	———	3420 354	———
14-34-63	GROMMET SEAL	———	3481 331	3481 331	3481 331	———	———	———
14-35-1	JET, Main Metering	———	3549 303	3549 303	3549 303	2196 240	2196 240	2196 240
14-35-3	NOZZLE, Pump Discharge	———	———	———	———	3420 366	3420 366	3420 366
14-35-6	VALVE, Pump Discharge Needle	———	———	———	———	3514 684	3514 684	3514 686
	VALVE, Power	———	———	———	———	2084 715	2084 715	2084 715
14-35-9	DIAPHRAGM, Secondary	3514 857	———	———	———	2809 252	2809 252	3514 876
14-35-18	SCREW, Secondary Diaphragm Housing	———	———	———	———	3420 343	3420 343	3420 343
14-35-19	SCREW, Pump Discharge Nozzle	———	———	———	———	3420 346	3420 346	3420 346
14-35-25	HOUSING, Diaphragm	3514 657	———	———	———	3420 392	3420 392	3420 392
14-35-26	LEVER, Diaphragm	3514 655	———	———	———	3420 391	3514 875	3514 875
14-35-39	BODY, w/Plugs, Metering	3514 845	———	———	———	———	———	———
	Primary	———	———	———	———	3549 309	3549 309	3514 899
	Secondary	———	———	———	———	3514 898	3514 898	3549 360
14-35-42	COVER, Venturi	———	3481 318	3481 318	3481 318	———	———	———
14-35-43	SCREW, Metering Body	3420 349	———	———	———	3420 349	3420 349	3420 349
14-35-45	COVER, Diaphragm	3514 653	———	———	———	3420 305	3420 305	3420 305
14-36-1	SPRING, Fast Idle Speed Screw	———	3481 205	3481 205	3481 205	———	———	———
	SPRING, Idle Speed Screw	———	———	———	3481 335	———	———	———
	SPRING, Pump Lever Adjusting Screw	— ———	———	———	———	3420 378	3420 378	———
14-36-2	SPRING, Step-Up Piston	———	3549 534	3481 248	3549 534	———	———	———
14-36-15	SPRING, Pump	———	3481 313	3481 313	3481 313	———	———	———
14-36-29	SPRING, Idle Mixture Screw	———	3481 558	3481 558	3481 558	———	———	———
	SPRING, Throttle Stop Screw	———	———	———	———	3419 675	3419 675	3419 675
14-36-50	SPRING, Air Vent Valve	———	———	———	———	3481 665	3481 665	3481 665
	SPRING, Vent Rod	———	———	———	———	———	3514 699	3514 699
14-36-53	SPRING, Diaphragm Return	3514 806	———	———	———	3420 376	3420 376	3420 376
	SPRING, Secondary Diaphragm	———	———	———	———	3514 806	3514 806	3514 806
14-37-14	PLUG, Fuel Level Check	3420 275	———	———	———	———	———	———
14-37-27	LEAD SHOT	———	3481 284	3481 284	3481 284	———	———	———
	LEAD SHOT	———	3481 538	3481 538	3481 538	———	———	———
	LEAD SHOT	———	3420 453	3420 453	3420 453	———	———	———
14-37-29	BALL, Pump Intake Check	———	3481 289	3481 289	3481 289	———	———	———
14-37-30	BALL, Pump Discharge Check	———	3481 220	3481 220	3481 220	———	———	———
14-38-3	SCREW, Throttle Body	3420 342	———	———	———	3420 342	3420 342	3420 342
14-38-4	VALVE or PLATE, Throttle	3481 691	3481 307	3481 307	3481 307	———	———	———
	Primary	———	———	———	———	3420 353	3420 353	3420 358
	Secondary	———	———	———	———	3481 691	3481 691	3481 691
14-38-5	SCREW, Throttle Valve or Plate	3420 261	3420 445	3420 445	3420 445	———	———	———
	Primary	———	———	———	———	3420 261	3420 261	3420 261
	Secondary	———	———	———	———	3420 347	3420 347	3420 347
14-38-12	SHAFT, w/Lever, Throttle	———	3549 260	3549 260	3549 540	———	———	———
14-38-24	SOLENOID, Idle	2875 975	———	———	———	3438 777	———	3438 777
		———	———	———	———	———	———	3438 777
14-38-25	CABLE, Idle Throttle	———	———	———	———	3438 778	———	3438 778
	WIRING, Idle Solenoid	———	———	———	———	3513 685	———	3513 685
14-38-28	ROD, Throttle Connector	———	———	3481 316	3481 316	3420 384	3420 384	3420 384
14-38-36	RETAINER, Throttle							

CARLINES J - Challenger, B - Barracuda; V - Valiant, L - Dart; R - Belvedere - Satellite, W - Coronet - Charger; P - Plymouth, D - Dodge; C - Chrysler, Y - Imperial

AR Indicates use as required.

# Indicates parts not listed in any previous parts book.

Numerals in parentheses ( ) refer to notes.

★ Indicates change or addition.

Printed in U.S.A.
January 1972

	COMPONENT CHART REFERENCE NO.	94	95	96	97	98	99	100
CODE	MFG. NO.	R4790A	4961S	4962S	4964S	R4667A	R4668A	R4734A
14-38-29	BRACKET, Solenoid	3577 536	———	———	———	———	———	3621 283
	Connector Rod	———	———	———	———	3420 386	3420 386	3420 386
14-38-30	TERM. & INSUL. PKG., Idle Sol.	———	3585 656	3585 656	———	———	———	———
14-39-1	VALVE or PLATE, Choke	———	3481 309	3481 309	3481 309	3420 336	3420 336	3420 336
14-39-6	SHAFT, w/Lever, Choke	———	3549 261	3549 261	3549 261	———	———	———
	LEVER, Choke	———	3481 273	3481 273	3481 273	———	———	———
14-39-7	DIAPHRAGM, Choke	3514 654	2933 190	2933 190	2933 190	3419 515	3419 620	3419 515
14-39-8	LINK, Choke Diaphragm	3481 662	———	———	———	3514 804	3514 804	———
14-39-9	SCREW, Diaphragm Bracket	3481 700	3420 447	3420 447	3420 447	3420 339	3420 339	3420 339
14-39-10	LEVER, Choke Control	———	———	———	———	3514 797	3514 797	3514 797
14-39-27	RETAINER, Fast Idle Connector Rod	———	3420 433	3420 433	3420 433	———	———	———
14-39-28	ROD, Diaphragm Connector	———	3481 317	3481 317	3481 317	———	———	———
	ROD, Choke Connector	———	———	———	———	3420 383	3420 383	3420 383
14-39-29	SEAL, Choke Rod	———	———	———	———	3420 301	3420 301	3420 301
14-39-30	SHAFT, Choke	———	———	———	———	3420 311	3420 311	3420 311
14-39-45	CHOKE	2946 532	2951 652	2951 652	2946 536	3512 867	3512 867	3512 867
14-39-51	HOSE, Choke Diaphragm	———	3481 294	3481 294	3481 294	3419 687	3419 687	3419 687
14-39-57	PIN SPRING, Diaphragm Connector Rod	———	3420 477	3420 477	3420 477	———	———	———
14-40-1	FLOAT, w/Lever	3481 693	3481 311	3481 311	3481 311	3420 364	3420 364	3420 364
14-40-4	PIN, Float Lever	———	3481 201	3481 201	3481 201	———	———	———
14-40-5	RETAINER, Float	3549 331	3481 277	3481 277	3481 277	3419 673	3419 673	3419 673
14-40-6	SHAFT, Float	3481 683	———	———	———	———	———	———
14-40-7	BOWL, w/Plugs, Fuel Primary	———	———	———	———	3549 330	3549 330	3514 831
	Secondary	———	———	———	———	3420 373	3420 373	3420 373
14-40-18	SPRING, Float	3481 698	———	———	———	3420 317	3420 317	3420 317
14-41-3	PLUNGER, w/Rod, Pump	———	3621 446	3621 446	3621 446	2196 234	2196 234	2196 234
14-41-5	ARM, w/Countershaft, Pump	———	———	———	3481 326	———	———	———
14-41-9	ARM, Pump	———	———	———	3481 312	———	———	———
	ARM, Loose Lever	———	———	———	3481 328	———	———	———
14-41-10	CAM, Pump	———	———	———	———	3420 321	3420 321	3420 321
14-41-22	LEVER, Pump Operating	———	———	———	———	3514 680	3514 680	3514 680
14-41-23	RETAINER, Pump Operating Lever	———	———	———	———	3514 681	3514 681	3514 681
14-41-25	FITTING, Pump Lever Adjusting Screw	———	———	———	———	3420 365	3420 365	3420 365
14-41-34	COVER, Pump	———	———	———	———	3420 305	3420 306	3420 306
	NOTE: 3420 306; Also use 4 of 3420 258.							
14-41-35	SCREW, Pump Cover	———	———	———	———	3420 259	3420 259	3420 259
	SCREW, Secondary Diaphragm Cover	———	———	———	———	3420 259	3420 259	3420 259
14-43-3	PISTON, w/PLATE, Step-Up	———	3481 323	3481 323	3481 323	———	———	———
14-43-5	ROD, Step-Up	———	3514 480	3549 302	3514 480	———	———	———
14-44-10	TUBE, Balance	———	———	———	———	3420 361	3420 361	3420 361
14-44-11	WASHER, Balance Tube	———	———	———	———	3420 385	3420 385	3420 385
14-44-12	"O" RING, Balance Tube	———	———	———	———	3420 367	3420 367	3420 367
14-45-1	NEEDLE, Idle Limiter	3420 363	———	———	———	———	———	———
	NEEDLE, Idle Adjusting	———	———	———	———	3514 799	3514 799	3514 799
14-45-3	LEVER, Fast Idle Cam	———	———	———	———	3420 338	3420 338	3420 338
14-45-4	CAM, Fast Idle	———	3549 265	3549 265	3549 265	3514 689	3514 689	3514 689
14-45-5	ROD, Fast Idle Connector	———	3549 266	3549 266	3549 266	———	———	———
14-45-8	SCREW, Fast Idle Cam	———	3481 282	3481 282	3481 282	3420 344	3420 344	3420 344
14-45-12	LIMITER, Idle Needle	3481 697	3481 644	3481 644	3481 644	3420 393	3420 393	3420 393
14-45-15	COVER, Hot Idle Compensator	———	———	———	———	3481 663	3481 663	3481 663
14-45-17	COMPENSATOR, Hot Idle	———	———	———	———	3549 329	3549 329	3549 329
14-45-19	SEAL, Hot Idle Compensator	———	———	———	———	3514 897	3514 897	3514 897
14-45-20	SCREW, Idle Mixture	———	3549 262	3549 262	3549 262	———	———	———

CARLINES — J - Challenger, B - Barracuda, V - Valiant, L - Dart, R - Belvedere - Satallite, W - Coronet - Charger, P - Plymouth, D - Dodge, C - Chrysler, Y - Imperial

AR Indicates use as required.

Numerals in parentheses ( ) refer to notes.

= Indicates parts not listed in any previous parts book.

★ Indicates change or addition.

Printed in U.S.A.
January 1972

	COMPONENT CHART REFERENCE NO.	94	95	96	97	98	99	100
CODE	MFG. NO.	R4790A	4961S	4962S	4964S	R4667A	R4668A	R4734A
14-45-25	SCREW, Idle Speed	———	3481 281	3481 281	3481 281	———	———	———
	SCREW, Fast Idle Speed	———	3481 210	3481 210	3481 210	———	———	———
14-45-32	BRACKET, Retard Wire	———	———	———	———	3514 809	3514 809	3514 809
14-45-33	CABLE, Compensator	———	———	———	———	3514 810	3514 810	3514 810
14-46-3	PLATE, Metering Body	3420 370	———	———	———	3420 370	3420 370	3420 370
14-46-4	RETAINER, "E" Ring	———	———	———	———	3420 375	3420 375	3420 375
14-46-5	ROD, Air Vent	———	———	———	———	3549 335	3549 335	3514 700
14-46-6	CLAMP, Air Vent Rod	———	———	———	———	3549 328	3549 328	3420 387
	CLAMP, Vent Valve	———	———	———	———	3481 667	3481 667	3481 667
14-46-7	BAFFLE, Metering Body Vent	———	———	———	———	3420 388	3420 388	3420 388
14-46-8	SEAL, Vent Valve	———	———	———	———	3481 659	3481 659	3481 659
14-46-9	BODY, Vent Valve	———	———	———	———	3481 660	3481 660	3481 660
14-47-1	HORN Pkg., AIR	———	3579 031	3579 031	3579 031	———	———	———
14-48-2	VALVE, Thermostatic	———	3514 882	3514 882	———	———	———	———
14-49-1	BOWL, w/Plugs, Fuel	3481 695	———	———	———	———	———	———
14-54-2	SCREW & L/WASHER	———	———	———	———	3621 278	———	———
14-54-3	SCREW, Throttle Stop	———	———	———	———	3549 325	3549 325	———
14-54-4	SCREW, Fuel Valve Seat Lock	3420 273	———	———	———	———	———	———
14-54-6	WASHER, Throttle Shaft Spring	———	3549 272	3549 272	———	———	———	———
14-54-15	SCREW, Choke Valve	———	3420 450	3420 450	3420 450	3420 255	3420 255	3420 255
14-54-29	SCREW, Float Shaft Bracket	3481 699	———	———	———	———	———	———
14-54-34	SCREW, Air Horn	———	3481 211	3481 211	3481 211	———	———	———
14-54-36	SCREW, Air Vent Rod Clamp	———	———	———	———	3420 340	3420 340	3420 340
14-54-43	SCREW, Pump Lever Adjusting	———	———	———	———	3420 345	3420 345	3420 345
14-54-47	SCREW, Pump Arm	———	———	———	3481 314	———	———	———
14-54-50	SCREW, Pump Cam Lock	———	———	———	———	3420 265	3420 265	3420 265
14-54-72	SCREW, Body Flange	———	3420 443	3420 443	3420 443	———	———	———
14-54-78	SCREW, Fuel Bowl to Main Body	3420 348	———	———	———	3420 341	3420 341	3420 341
	SCREW, Secondary Fuel Bowl	———	———	———	———	———	———	———
14-54-148	SCREW, Step-Up Piston Plate	———	3481 315	3481 315	3481 315	———	———	———
	SCREW, Step-Up Piston Cover Plate	———	3420 451	3420 451	3420 451	———	———	———
14-54-152	SCREW, Venturi Cluster	———	3481 298	3481 283	3481 298	———	———	———

	COMPONENT CHART REFERENCE NO.	101	102	103	104	105	106	107
CODE	MFG. NO.	R4735A	4966S	4967S	4968S	4971S	4969S	4970S
14-30-2	GASKET, Flange	3462 833	2946 543	2964 543	3462 831	2780 929	2780 929	2780 929
14-30-3	VENTURI, Primary Pump Side	———	3621 438	3514 515	3514 511	3549 275	3549 283	3549 283
	Opposite Pump	———	3621 437	3514 514	3514 510	3549 276	3549 284	3549 284
	VENTURI, Secondary Pump Side	———	———	———	———	3481 086	3481 167	3481 167
	Opposite Pump	———	———	———	———	3481 087	3549 285	3549 285
14-30-4	ZIP KIT	3514 824	3621 224	3621 224	3621 224	3419 503	3419 503	3419 503
14-30-7	GASKET KIT	3514 825	3621 244	3621 244	3621 244	3549 343	3549 343	3549 343
14-30-8	NEEDLE, w/Seat	2809 335	2933 106	2933 106	2933 106	2809 397	2809 397	2809 397
14-30-16	PLATE, Fuel Bowl Baffle	3420 324	———	———	———	———	———	———
14-30-27	STRAINER, Fuel Inlet	———	1826 864	1826 864	1826 864	1826 864	1826 864	1826 864
14-30-28	NUT, Strainer	———	———	———	———	3621 152	3621 218	3621 218
14-30-29	GASKET, Strainer Nut	———	———	———	———	3621 157	3621 157	3621 157
14-30-30	FITTING, Fuel Inlet	3514 731	3621 152	3621 152	3621 152	———	———	———
14-30-31	BAFFLE, Fuel Inlet	3420 389	———	———	———	———	———	———

CARLINES J - Challenger, B - Barracuda, V - Valiant, L - Dart, R - Belvedere - Satallite, W - Coronet - Charger, P - Plymouth, D - Dodge, C - Chrysler, Y - Imperial

AR Indicates use as required.

# Indicates parts not listed in any previous parts book.

Numerals in parentheses ( ) refer to notes.

★ Indicates change or addition.

Printed in U.S.A.
January 1972

CODE	COMPONENT CHART REFERENCE NO.	101	102	103	104	105	106	107
	MFG. NO.	R4735A	4966S	4967S	4968S	4971S	4969S	4970S
14-32-15	SCREW, Venturi	———	3420 448	3420 448	3420 448	———	———	———
	Primary	———	———	———	———	3420 448	3420 448	3420 448
	Secondary	———	———	———	———	3481 092	3481 092	3481 092
14-33-1	BODY, w/Shaft, Throttle	3514 873	———	———	———	———	———	———
14-34-10	GASKET, Secondary Metering Body							
14-34-15	GASKET, Power Valve							
14-34-17	GASKET, Secondary Diaphragm Housing	3420 350	———	———	———	———	———	———
14-34-63	SEAL, Venturi Vent	———	———	3420 479	3420 479	———	———	———
	SEAL, Grommet	———	3549 406	3549 406	3549 406	———	———	———
14-35-1	JET, Main Metering	2196 240	———	———	———	———	———	———
	Primary	———	2809 254	2933 020	2933 020	2809 305	2809 305	2809 305
	Secondary	———	2933 195	2933 195	2933 195	2809 305	———	———
	Secondary, Pump Side	———	———	———	———	———	2933 023	2933 023
	Opposite Pump	———	———	———	———	———	2809 283	2809 283
14-35-3	NOZZLE, Pump Discharge	3420 366	———	———	———	———	———	———
	JET, Pump	———	3420 418	3420 418	3420 418	3481 082	3481 162	3481 162
14-35-6	VALVE, Power	2084 715	———	———	———	———	———	———
	VALVE, Pump Discharge Needle	3514 686	———	———	———	———	———	———
14-35-10	SCREW, Pump Jet	———	3420 440	3420 440	3420 440	3420 440	3420 440	3420 440
14-35-19	SCREW, Pump Discharge Nozzle	3420 346	———	———	———	———	———	———
14-35-25	HOUSING, Diaphragm	3420 392	———	———	———	———	———	———
14-35-26	LEVER, Diaphragm	3514 875	———	———	———	———	———	———
14-35-38	SPRING, Vacuum Piston	———	3420 428	3420 428	3420 428	3420 428	3420 428	3420 428
14-35-39	BODY, w/Plugs, Primary Metering	3514 899	———	———	———	———	———	———
	BODY, Secondary Metering	3514 898	———	———	———	———	———	———
14-35-43	SCREW, Secondary Metering Body	3420 349	———	———	———	———	———	———
14-36-1	SPRING, Pump Lever Adjusting	3420 378	———	———	———	———	———	———
	SPRING, Idle Speed Screw	———	3420 425	3420 425	3420 425	3420 425	3420 425	3420 425
	SPRING, Idle Mixture Screw	———	3481 558	———	3481 558	———	———	3481 558
14-36-15	SPRING, Pump	———	3420 424	3420 424	3420 424	3481 088	3481 088	3481 088
14-36-22	SPRING, Secondary Throttle Return	———	3420 432	3420 432	3420 432	3481 089	3481 089	3481 089
14-36-29	SPRING, Throttle Stop Screw	3419 675	———	———	———	———	———	———
14-36-50	SPRING, Vent Rod	3514 699	———	———	———	———	———	———
	SPRING, Air Vent Rod	3481 665	———	———	———	———	———	———
	SPRING, Bowl Vent Arm	———	3514 525	3514 525	3514 525	3514 525	3514 525	3514 525
	SPRING, Air Valve	———	3420 430	3420 430	3420 430	———	———	———
14-36-53	SPRING, Secondary Diaphragm	3514 806	———	———	———	———	———	———
	SPRING, Diaphragm Return	3420 376	———	———	———	———	———	———
14-37-4	PLUG, Passage	———	3420 405	3420 405	3420 405	———	———	———
	PLUG, Secondary Passage	———	———	———	———	3481 077	3481 077	3481 077
14-37-9	PLUG, Primary Venturi	———	———	———	———	3481 078	3481 078	3481 078
14-37-15	PLUG, Idle Port Rivet	———	3481 553	3514 508	3514 508	3481 075	3481 075	3481 075
	PLUG, Rivet	———	3420 404	3420 404	3420 404	3481 074	3420 404	3420 404
14-37-21	PLUG, Nozzle Well	———	———	———	———	3481 076	3481 076	3481 076
14-37-27	LEAD SHOT (.180)	———	3420 453	3420 453	3420 453	3420 453	3420 453	3420 453
	LEAD SHOT (.200)	———	3420 454	3420 454	3420 454	3420 454	3420 454	3420 454
14-37-29	BALL, Pump Intake Check	———	3420 470	3420 470	3420 470	3481 100	3481 100	3481 100
14-37-49	PLUG, Spark Port Welsh	———	———	———	———	3481 080	3481 080	3481 080
	PLUG, Venturi Welsh	———	———	———	———	3481 081	3481 081	3481 081

CARLINES — J - Challenger, B - Barracuda, V - Valiant, L - Dart, R - Belvedere - Satallite, W - Coronet - Charger, P - Plymouth, D - Dodge, C - Chrysler, Y - Imperial

AR Indicates use as required.

Numerals in parentheses ( ) refer to notes.

≠ Indicates parts not listed in any previous parts book.

★ Indicates change or addition.

Printed in U.S.A.
January 1972

CODE	COMPONENT CHART REFERENCE NO. / MFG. NO.	101 R4735A	102 4966S	103 4967S	104 4968S	105 4971S	106 4969S	107 4970S
14-38-3	SCREW, Throttle Body	3420 342	———	———	———	———	———	———
14-38-4	VALVE or PLATE, Throttle							
	Primary	3420 358	3420 398	3481 062	3481 062	3420 398	3420 398	3420 398
	Secondary	3481 691	3420 397	3420 397	3420 397	3420 397	3420 397	3420 397
	VALVE, Air	———	3420 403	3420 403	3420 403	———	———	———
14-38-5	SCREW, Throttle Valve							
	Primary	3420 261	3420 446	3420 446	3420 446	3420 446	3420 446	3420 446
	Secondary	3420 347	3420 445	3420 445	3420 445	3420 445	3420 445	3420 445
14-38-8	SCREW, Solenoid Clamp	———	———	3549 315	3549 315	———	———	———
14-38-12	SHAFT, w/Lever, Primary Throttle	———	3481 552	3481 552	3481 552	3481 072	3481 153	3481 153
	SHAFT, w/Dog, Secondary Throttle	———	3420 399	3420 399	3420 399	3481 070	3481 151	3481 151
	SHAFT, w/Weight, Auxiliary Throttle	———	———	———	———	3481 071	3481 152	3481 152
	SHAFT, Air Valve	———	3420 407	3420 407	3420 407	———	———	———
14-38-13	ARM, Primary Throttle Shaft, Inner	———	3420 460	3420 460	3420 460	3481 097	3481 097	3481 097
	Outer	———	3621 216	3612 216	3612 216	3621 221	3621 221	3621 221
	ARM, w/Collar, Lockout	———	———	———	———	3481 163	3481 163	———
14-38-14	DOG, Throttle Shaft	———	3514 524	3514 524	3514 524	———	———	———
	DOG, Primary Shaft	———	———	———	———	3481 073	3549 280	3549 280
	DOG, Lockout	———	3420 421	3420 421	3420 421	———	———	———
14-38-20	SPRING, Throttle Lever	———	3420 429	3420 429	3420 429	3420 429	3420 429	3420 429
14-38-23	LEVER, Solenoid	———	———	3514 518	3514 518	———	———	———
14-38-24	SOLENOID, Idle	———	———	3549 318	3438 303	2875 975	2875 975	2875 975
14-38-25	WIRE, Solenoid	———	———	3549 313	3549 313	———	———	———
14-38-27	BEARING, Air Valve Shaft	———	3481 648	3481 648	3481 648	———	———	———
14-38-28	ROD, Throttle Connector	3420 384	3420 462	3420 462	3420 462	3420 462	3420 462	3420 462
14-38-29	BRACKET, Solenoid	———	———	3549 317	3549 317	———	———	———
14-38-30	TERM. & INSUL. PKG., Idle Sol.	———	3685 657	3685 657	———	———	———	———
14-38-36	RETAINER, Throttle Connector Rod	3420 386	———	———	———	———	———	———
14-38-50	ROD, Throttle Operating	———	3420 461	3420 461	3420 461	3420 461	3420 461	3420 461
14-38-53	LEVER, Secondary Throttle Operating	———	3420 420	3420 420	3420 420	3481 083	3481 083	3481 083
14-39-1	VALVE or PLATE, Choke	3420 336	3420 402	3420 402	3420 402	———	3481 154	3481 154
	VALVE, Counter Shaft Lever to Choke	———	3420 410	3420 410	3420 410	———	———	———
14-39-6	SHAFT, w/Lever, Choke	———	3481 657	3481 657	3481 657	———	3549 282	3549 282
14-39-7	DIAPHRAGM, Choke	3419 620	2933 196	3514 865	3514 865	———	———	———
14-39-8	LINK, Choke Diaphragm	3514 804	3420 466	3420 466	3420 466	———	———	———
14-39-9	SCREW, Diaphragm Brkt.	3420 339	3420 447	3420 447	3420 447	———	———	———
14-39-10	LEVER, Choke	3514 797	3481 656	3481 656	3481 656	———	———	———
	LEVER, Choke Shaft	———	3420 409	3420 409	3420 409	———	———	———
	Inner	———	———	———	———	———	3481 157	3481 157
	Outer	———	———	———	———	———	3481 156	3481 156
14-39-15	SCREW, Choke Shaft Lever	———	3420 437	3420 437	3420 437	3420 437	———	3420 437
	SCREW, Counter Shaft Lever	———	3420 442	3420 442	3420 442	———	———	———
14-39-27	RETAINER, Diaphragm Connector Rod	———	3420 433	3420 433	3420 433	———	———	———
14-39-28	ROD, Choke Connector	3420 383	———	———	———	———	3549 289	3549 289
	ROD, Diaphragm Connector	———	3420 463	3420 463	3420 463	———	———	———
14-39-29	SEAL, Choke Rod	3420 301	———	———	———	———	———	———
14-39-30	SHAFT, Choke	3420 311	3420 408	3420 408	3420 408	———	———	———
14-39-31	WASHER, Diaphragm Connector Rod	———	3420 471	3420 471	3420 471	———	———	———
14-39-45	CHOKE	3512 867	2951 653	2951 653	2951 653	———	———	———
14-39-51	HOSE, Diaphragm	3419 687	3420 475	3420 475	3420 475	———	———	———
14-39-57	PIN SPRING, Diaphragm Connector Rod	———	3420 477	3420 477	3420 477	———	———	———

CARLINES: J - Challenger, B - Barracuda, V - Valiant, L - Dart, R - Belvedere - Satellite, W - Coronet - Charger, P - Plymouth, D - Dodge, C - Chrysler, Y - Imperial

AR Indicates use as required.

# Indicates parts not listed in any previous parts book.

Numerals in parentheses ( ) refer to notes.

★ Indicates change or addition.

Printed in U.S.A.
January 1972

CODE	COMPONENT CHART REFERENCE NO. / MFG. NO.	101 R4735A	102 4966S	103 4967S	104 4968S	105 4971S	106 4969S	107 4970S
14-39-60	SCREW, Thermostatic Valve	———	3481 052	3481 052	3481 052	———	———	———
14-40-1	FLOAT, w/Lever	3420 364	3420 415	3420 415	3420 415	3481 079	3481 079	3481 079
14-40-4	PIN, Float Lever	———	3420 416	3420 416	3420 416	3420 416	3420 416	3420 416
14-40-5	RETAINER, Float	3419 673	———	———	———	———	———	———
14-40-7	BOWL, w/Plugs, Fuel, Primary	3514 831	———	———	———	———	———	———
	Secondary	3420 373	———	———	———	———	———	———
14-40-18	SPRING, Float	3420 317	———	———	———	———	———	———
14-40-23	ARM, Bowl Vent	———	3514 509	3514 509	3420 420	———	———	3514 509
14-40-35	BAFFLE, Fuel Bowl	———	3420 482	3420 482	3420 482	3420 482	3420 482	3420 482
14-41-3	PLUNGER, w/Rod, Pump	2196 234	3621 214	3621 214	3621 214	1826 369	1826 369	1826 369
14-41-8	LINK, Pump Connector	———	3420 465	3420 465	3420 465	3420 465	3420 465	3420 465
14-41-9	ARM, Pump	———	3420 456	3420 456	3420 456	3420 456	3420 456	3420 456
14-41-10	CAM, Pump	3420 321	———	———	———	———	———	———
14-41-22	LEVER, Pump Operating	3514 680	———	———	———	———	———	———
14-41-23	RETAINER, Pump Operating Lever	3514 681	———	———	———	———	———	———
14-41-25	FITTING, Pump Lever Adjusting Screw	3420 365	———	———	———	———	———	———
14-41-30	NOZZLE, Pump Discharge Check	———	3420 412	3420 412	3420 412	3420 412	3420 412	3420 412
14-41-35	SCREW, Secondary Diaphragm Cover	3420 259	———	———	———	———	———	———
	SCREW, Pump Cover	3420 259	———	———	———	———	———	———
14-43-3	PISTON, Step-Up	———	3420 478	3514 502	3514 512	3420 478	3420 478	3420 478
14-43-4	PLATE, Step-Up Piston Cover	———	———	———	———	3481 090	3481 090	3481 090
	Pump Side	———	3420 435	3420 435	3420 435	———	———	———
	Opposite Pump	———	3420 434	3420 434	3420 434	———	———	———
14-43-5	ROD, Step-Up	———	2585 404	3514 513	2933 017	3419 588	———	———
	Pump Side	———	———	———	———	———	2933 022	2933 022
	Opposite Pump	———	———	———	———	———	3419 504	3419 504
14-43-10	SPRING, Step-Up Rod Retaining	———	3420 427	3420 427	3420 427	3420 427	3549 285	3420 427
14-44-10	TUBE, Balance	3420 361	———	———	———	———	———	———
14-44-11	WASHER, Balance Tube	3420 385	———	———	———	———	———	———
14-44-12	"O" RING, Balance Tube	3420 367	———	———	———	———	———	———
14-45-1	NEEDLE, Idle Adjusting	3514 799	———	———	———	———	———	———
14-45-3	LEVER, Fast Idle Cam	3420 338	———	———	———	———	———	———
14-45-4	CAM, Fast Idle	3514 689	3514 522	3481 069	3481 069	———	3621 223	3621 223
14-45-5	ROD, Fast Idle Connector	———	3420 464	3420 464	3420 464	———	3481 179	3481 179
14-45-8	SCREW, Fast Idle Cam	3420 344	3420 441	3420 441	3420 441	———	3420 441	3420 441
14-45-12	LIMITER, Idle Screw	3420 393	3420 436	3420 436	3420 436	———	3420 436	3420 436
14-45-15	COVER, Hot Idle Compensator	3481 663	———	———	———	———	———	———
14-45-17	COMPENSATOR, Hot Idle	3549 329	———	———	———	———	———	———
14-45-19	SEAL, Hot Idle Compensator	3514 897	———	———	———	———	———	———
14-45-20	SCREW, Idle Mixture	———	3481 554	3514 529	3514 529	———	3549 288	3549 288
14-45-25	SCREW, Fast Idle Speed	———	3481 555	3481 555	3481 555	———	3481 175	———
	SCREW, Idle Speed	———	3514 526	3621 215	3621 215	3420 449	3420 449	3420 449
14-45-27	WASHER, Idle Speed Screw	———	3420 473	3420 473	3420 473	3420 473	3420 473	3420 473
14-45-32	BRACKET, Retard Wire	3514 809	———	———	———	———	———	———
14-45-33	CABLE, Retard	3514 810	———	———	———	———	———	———
14-46-3	PLATE, Secondary Metering Body	3420 370	———	———	———	———	———	———
14-46-4	RETAINER, "E" Ring	3420 375	———	———	———	———	———	———
14-46-5	ROD, Vent Valve	3514 700	———	———	———	———	———	———
14-46-6	CLAMP, Vent Rod	3420 387	———	———	———	———	———	———
14-46-7	BAFFLE, Metering Body Vent	3420 388	———	———	———	———	———	———
14-46-8	SEAL, Vent Valve	3481 659	———	———	———	———	———	———
14-46-9	BODY, Vent Valve	3481 660	———	———	———	———	———	———
14-46-10	CLAMP, Vent Valve	3481 667	———	———	———	———	———	———
14-48-2	VALVE, Thermostatic	———	3514 881	———	3514 881	———	2933 165	2933 165

CARLINES — J - Challenger, B - Barracuda; V - Valiant, L - Dart; R - Belvedere · Satellite, W - Coronet - Charger; P - Plymouth, D - Dodge; C - Chrysler, Y - Imperial

AR Indicates use as required.

= Indicates parts not listed in any previous parts book.

Numerals in parentheses ( ) refer to notes.

★ Indicates change or addition.

Printed in U.S.A.
January 1972

	COMPONENT CHART REFERENCE NO.	101	102	103	104	105	106	107
CODE	MFG. NO.	R4735A	4966S	4967S	4968S	4971S	4969S	4970S
14-54-3	SCREW, Throttle Stop	3549 525	———	———	———	———	———	———
14-54-5	SCREW, Throttle Shaft Lever	———	3420 438	3420 438	3420 438	3420 438	3420 438	3420 438
14-54-6	WASHER, Throttle Shaft Primary	———	3481 051	———	———	3481 051	3481 051	3481 051
	Secondary	———	3420 472	3420 472	3420 472	3420 472	3420 472	3420 472
	WASHER, Throttle Shaft Spring	———	3514 519	———	3514 519	———	———	———
	SPACER, Secondary Throttle Shaft	———	———	———	———	3481 095	3481 095	3481 095
14-54-11	NUT, Solenoid Clamp	———	———	3549 316	3549 316	———	———	———
14-54-15	SCREW, Choke Valve	3420 255	3420 450	3420 450	3420 450	———	3420 450	3420 450
	SCREW, Air Valve	———	3420 450	———	———	———	———	———
14-54-16	SCREW, Vent Valve	3481 658	———	———	———	———	———	———
14-54-36	SCREW, Air Vent Rod Clamp	3420 340	———	———	———	———	———	———
14-54-47	SCREW, Pump Arm	———	3481 093	3481 093	3481 093	3481 093	3481 093	3481 093
14-54-50	SCREW, Pump Cam Lock	3420 265	———	———	———	———	———	———
14-54-72	SCREW, Air Horn	———	3420 443	3420 443	3420 443	3420 443	3420 443	3420 443
	SCREW, Air Horn	———	———	———	———	3481 094	3481 094	3481 094
	SCREW, Air Horn	———	———	———	———	3481 091	3481 091	3481 091
14-54-78	SCREW, Fuel Bowl	3420 341	———	———	———	———	———	———
	SCREW, Secondary Fuel Bowl	3420 348	———	———	———	———	———	———
14-54-98	WASHER, Solenoid Lock	———	———	3549 314	3549 314	———	———	———
14-54-140	SCREW, Solenoid Bracket	———	———	3514 517	3514 517	———	———	———
14-54-148	SCREW, Step-Up Piston Cover Plate	———	3420 451	3420 451	3420 451	3420 451	3420 451	3420 451
	SCREW, Air Valve Retainer	———	———	3420 451	3420 451	———	———	———

	COMPONENT CHART REFERENCE NO.	108	109	110	111	112	113	114
CODE	MFG. NO.	R4671A	R4669A	R4670A	R4672A	4992S	4993S	6125S
14-30-2	GASKET, Flange	2946 531	2946 531	2946 531	2946 531	———	———	———
14-30-3	VENTURI, Primary (Pump Side)	———	———	———	———	———	———	3621 288
	VENTURI, Primary (Opposite Pump)	———	———	———	———	———	———	3621 287
14-30-4	REPAIR KIT	3514 651	3514 695	3514 695	3514 651	2933 043	2933 043	3621 224
14-30-7	GASKET KIT	3514 652	3514 696	3514 696	3514 652	2808 023	2808 023	3621 244
14-30-8	VALVE, w/Seat	3514 669	3514 669	3514 669	3481 694	2933 042	2933 042	2933 106
14-30-14	NUT, Fuel Valve	3420 319	3420 319	3420 319	3420 319	———	———	———
14-30-27	STRAINER, Fuel Inlet	———	———	———	———	———	———	1826 864
14-30-30	FITTING, Fuel Inlet	2809 248	2809 248	3514 820	3514 820	———	———	3621 152
14-32-15	SCREW ASSY. Venturi	———	———	———	———	———	———	3420 448
14-33-1	BODY, w/Shaft, Throttle	3514 792	3514 667	3514 667	3481 692	———	———	———
14-34-5	GASKET, Body	———	———	———	———	1631 520	1631 520	———
14-34-15	GASKET, Power Valve							
14-34-17	GASKET, Diaphragm Housing	———	———	———	3420 350	———	———	———
14-34-21	"O" RING, Fuel Valve Seat	3420 299	3420 299	3420 299	3420 299	———	———	———
14-34-55	GASKET, Coil Hsg.	———	———	———	———	1330 873	1330 873	———
14-34-63	SEAL, Grommet	———	———	———	———	———	———	3549 406
14-35-1	JET, Main Metering	———	2809 377	3420 332	———	2585 787	2585 787	———
	JET, Metering Primary	———	———	———	———	———	———	2809 254
	JET, Metering Secondary	———	———	———	———	———	———	2809 305
14-35-3	NOZZLE, Pump Discharge	———	3420 295	3420 295	———	———	———	3420 418
14-35-6	VALVE, Power	———	———	2084 715	———	———	———	———
14-35-9	DIAPHRAGM, Secondary	3514 857	———	———	3549 308	———	———	———
14-35-10	SCREW ASSY. Pump Jet Nozzle	———	3420 346	3420 346	———	———	———	3420 440
14-35-19	SCREW, Pump Discharge							

CARLINES J - Challenger, B - Barracuda, V - Valiant, L - Dart, R - Belvedere - Satallite, W - Coronet - Charger, P - Plymouth, D - Dodge, C - Chrysler, Y - Imperial

AR Indicates use as required.

 # Indicates parts not listed in any previous parts book.

Numerals in parentheses ( ) refer to notes.

★ Indicates change or addition.

Printed in U.S.A.
January 1972

CODE	COMPONENT CHART REFERENCE NO. / MFG. NO.	108 R4671A	109 R4669A	110 R4670A	111 R4672A	112 4992S	113 4993S	114 6125S
14-35-25	HOUSING, Diaphragm	3514 657	———	———	3514 657	———	———	———
14-35-26	LEVER, Diaphragm	3514 655	———	———	3514 655	———	———	———
14-35-38	SPRING, Vacuum Piston	———	———	———	———	———	———	3420 428
14-35-39	BODY, w/Plugs, Metering	3514 846	3514 702	3514 702	3514 845	———	———	———
14-35-42	JET ASSY. Main Metering	———	———	———	———	3481 540	3481 540	———
14-35-43	SCREW, Pump Cover	———	———	3420 349	———	———	———	———
14-35-45	COVER, Diaphragm	3514 653	———	———	3514 653	———	———	———
14-36-1	SPRING, Pump Operating Adjusting Screw	———	3420 378	3420 378	———	———	———	———
	SPRING, Idle Mixture Screw	———	———	———	———	3418 535	3481 535	3420 425
		———	———	———	———	3481 205	3481 205	———
14-36-2	SPRING, Piston Step Up	———	———	———	———	3481 234	3481 234	———
14-36-15	SPRING, Pump	———	———	———	———	3481 207	3481 207	3420 424
14-36-22	SPRING, Return Secondary Throttle	———	———	———	———	———	———	3420 432
14-36-29	SPRING, Throttle Stop Screw	———	3419 675	3419 675	———	———	———	3481 558
14-36-50	SPRING, Vent Valve	———	3481 665	3481 665	———	———	———	3420 430
	SPRING, Bowl Vent Arm	———	———	———	———	———	———	3514 525
14-36-53	SPRING, Diaphragm Return	3514 806	———	———	3514 806	———	———	———
14-37-4	PLUG, Passage	———	———	———	———	———	———	3420 405
14-37-14	PLUG, Fuel Level Check	3420 275	3420 275	3420 275	3420 275	———	———	———
14-37-15	PLUG, Rivet	———	———	———	———	———	———	3420 404
	PLUG, Rivet Idle Port	———	———	———	———	———	———	3481 553
14-37-27	LEAD SHOT	———	———	———	———	3481 284	3481 284	———
	LEAD SHOT	———	———	———	———	3481 538	3481 538	———
	LEAD SHOT, (.108")	———	———	———	———	3420 453	3420 453	3420 453
	LEAD SHOT, (.200")	———	———	———	———	———	———	3420 454
14-37-29	BALL, Check Pump Intake	———	———	———	———	3481 289	3481 289	3420 470
14-37-30	BALL, Check Pump Discharge	———	———	———	———	3481 220	3481 220	———
14-37-49	PLUG, Welsh Choke	———	———	———	———	3481 161	3481 161	———
14-38-3	SCREW, Throttle Body	3420 342	3420 342	3420 342	3420 342	———	———	———
14-38-4	PLATE, Throttle	3514 791	3514 665	3514 665	3481 691	———	———	———
	VALVE, Throttle	———	———	———	———	3481 529	3481 529	———
	VALVE, Air	———	———	———	———	———	———	3514 507
	VALVE, Throttle Primary	———	———	———	———	———	———	3420 398
	VALVE, Throttle Secondary	———	———	———	———	———	———	3420 397
14-38-5	SCREW, Throttle Plate	3420 261	3420 347	3420 347	3420 261	———	———	———
	SCREW, Throttle Valve Primary	———	———	———	———	———	———	3420 446
	SCREW, Throttle Valve Secondary	———	———	———	———	3420 445	3420 445	3420 445
14-38-12	SHAFT & LEVER Assy. Throttle	———	———	———	———	3481 530	3481 530	———
	DOG, Throttle Shaft	———	———	———	———	———	———	3514 524
	LEVER & DOG, Throttle Shaft Primary	———	———	———	———	———	———	3481 552
	LEVER & DOG, Throttle Shaft Secondary	———	———	———	———	———	———	3420 399
14-38-13	ARM, Shaft Throttle Primary (inner)	———	———	———	———	———	———	3420 460
	ARM, Shaft Throttle Primary (outer)	———	———	———	———	———	———	3621 216
14-38-14	DOG, Lockout	———	———	———	———	———	———	3420 421
14-38-20	SPRING, Throttle Lever	———	———	———	———	———	———	3420 429
14-38-24	SOLENOID, Idle	3438 338	3438 338	3438 338	3438 338	———	———	———
14-38-26	JUMPER, Idle Solenoid	3438 371	3438 371	3438 371	3438 371	———	———	———
14-38-27	BEARING, Air Valve Shaft (For Adjusting Spring Tension)	———	———	———	———	———	———	3481 648
14-38-28	BAR, Throttle Connector	———	3514 840	3514 840	———	———	———	———
	ROD, Connector Throttle	———	———	———	———	3481 299	3481 299	3420 462
14-38-39	SLEEVE, Throttle Connector	———	3514 841	3514 841	———	———	———	———
14-38-40	PIN, Throttle Connector	———	3514 843	3514 843	———	———	———	———
14-38-50	ROD, Operating Throttle	———	———	———	———	———	———	3420 461

CARLINES — J - Challenger, B - Barracuda, V - Valiant, L - Dart, R - Belvedere - Satellite, W - Coronet - Charger, P - Plymouth, D - Dodge, C - Chrysler, Y - Imperial

AR Indicates use as required.

Numerals in parentheses ( ) refer to notes.

≠ Indicates parts not listed in any previous parts book.

★ Indicates change or addition.

Printed in U.S.A.
January 1972

CODE	COMPONENT CHART REFERENCE NO. / MFG. NO.	108 R4671A	109 R4669A	110 R4670A	111 R4672A	112 4992S	113 4993S	114 6125S
14-38-53	LEVER, Operating Throttle Secondary	———	———	———	———	———	———	3420 420
14-39-1	PLATE, Choke	———	3514 658	3514 658	———	3481 271	3481 271	3420 402
	PLATE, Choke Baffle	———	———	———	———	3481 544	3481 544	———
	LEVER, Countershaft Choke Valve	———	———	———	———	———	———	3420 410
14-39-3	LINK & SHAFT, Piston Choke Lever	———	———	———	———	3481 544	3481 545	———
14-39-6	SHAFT & LEVER, Choke	———	———	———	———	———	———	3481 657
14-39-7	DIAPHRAGM, Choke	3514 654	3621 274	3621 274	3514 654	———	———	2933 196
14-39-8	LINK, Choke Diaphragm	———	3420 369	3420 369	3481 662	———	———	———
14-39-9	SCREW, Diaphragm Brkt.	3481 700	3420 339	3420 339	3481 700	———	———	3420 447
14-39-10	LEVER, Choke Control	———	3549 659	3549 659	———	———	———	3481 656
	LEVER & COLLAR, Choke	———	———	———	———	3481 531	3481 531	3420 409
	LEVER, Shaft Choke	———	———	———	———	3481 532	3481 532	———
14-39-15	SCREW, Countershaft Lever	———	———	———	———	———	———	3420 437
	SCREW, Choke Shaft Lever	———	———	———	———	———	———	3420 442
14-39-27	RETAINER, Choke Diaphragm Connector Rod	———	———	———	———	———	———	3420 433
14-39-28	ROD, Choke	———	3514 677	3514 677	———	3481 539	3481 539	3420 463
14-39-29	SEAL, Choke Rod	———	3420 301	3420 301	———	———	———	———
14-39-30	SHAFT, Choke	———	3420 311	3420 311	———	———	———	3420 408
	WASHER, Throttle Shaft Primary	———	———	———	———	———	———	3420 471
14-39-45	CHOKE	———	3420 255	2946 532	———	2809 286	2809 286	2951 653
14-39-47	RETAINER, Coil Housing	———	———	———	———	3481 533	3481 171	———
14-39-51	HOSE, Choke Vacuum	———	3419 687	3621 273	———	———	———	3420 475
14-39-56	SPRING, Pin	———	———	———	———	3420 476	3420 476	———
14-39-57	SPRING, Pin Choke Diaphragm Connector Rod	———	———	———	———	———	———	3420 477
14-39-60	SCREW ASSY. Thermostatic Valve	———	———	———	———	3481 172	3481 172	3481 052
14-39-84	CAP, Heat Tube	———	———	———	———	3481 187	3481 187	———
14-40-1	FLOAT, w/Hinge	3481 693	3514 668	3514 668	3481 693	3481 534	3481 534	3481 068
	PIN, Float Lever	———	———	———	———	3481 201	3481 201	3420 416
14-40-5	RETAINER, Float	3549 331	3549 331	3549 331	3549 331	3481 209	3481 209	———
14-40-6	SHAFT, Float	3481 683	3481 683	3481 683	3481 683	———	———	———
14-40-7	BOWL, w/Plugs, Fuel	3481 695	3549 334	3549 334	3481 695	———	———	———
14-40-18	SPRING, Float	3481 698	———	———	3481 698	———	———	———
14-40-23	ARM, Bowl Vent	———	———	———	———	———	———	3514 509
14-40-35	BAFFLE, Fuel Bowl	———	———	———	———	———	———	3420 482
14-41-3	PLUNGER, w/Rod, Pump	———	2196 234	2196 234	———	3481 635	3481 635	3621 214
14-41-8	LINK, Pump Connector	———	———	———	———	———	———	3420 465
14-41-9	ARM, Pump	———	———	———	———	3481 275	3481 275	3420 456
14-41-10	CAM, Pump	———	3420 321	3420 321	———	———	———	———
14-41-12	BUSHING, Pump Plunger	———	———	———	———	3481 202	3481 202	———
14-41-22	LEVER, Pump Operating	———	3549 680	3514 679	———	———	———	———
14-41-23	RETAINER, Pump Operating Lever	———	3514 681	3514 681	———	———	———	———
14-41-30	NEEDLE, Check Pump Discharge	———	———	———	———	———	———	3420 412
14-41-34	COVER, Pump	———	3514 673	3514 673	———	———	———	———
14-43-3	PISTON, Step-Up	———	———	———	———	3481 295	3481 295	3420 478
14-43-4	COVER PLATE, Step-Up Piston (Pump Side)	———	———	———	———	———	———	3420 435
	COVER PLATE, Step-Up Piston Opposite Side	———	———	———	———	———	———	3420 434
14-43-5	ROD, Step-Up	———	———	———	———	2809 273	2585 702	3685 663
14-43-10	SPRING, Step-Up Rod Retaining	———	———	———	———	———	———	3420 427
14-45-1	NEEDLE, Idle Limiter	3420 363	———	———	3420 363	———	———	———
	NEEDLE, Idle Adjusting	———	3420 362	3620 362	———	———	———	———
14-45-2	SEAL, Adjusting Needle	2084 719	———	———	2084 719	———	———	———
14-45-3	LEVER, Fast Idle Cam	———	3420 338	3420 338	———	———	———	———
14-45-4	CAM, Fast Idle	———	3514 689	3514 689	3481 541	3481 541	3514 522	———
14-45-8	SCREW, Fast Idle Cam Lever	———	3420 344	3420 344	———	———	———	3420 441

CARLINES: J - Challenger, B - Barracuda, V - Valiant, L - Dart, R - Belvedere - Satallite, W - Coronet - Charger, P - Plymouth, D - Dodge, C - Chrysler, Y - Imperial

AR Indicates use as required.

# Indicates parts not listed in any previous parts book.

Numerals in parentheses ( ) refer to notes.

★ Indicates change or addition.

Printed in U.S.A.
January 1972

	COMPONENT CHART REFERENCE NO.	108	109	110	111	112	113	114
CODE	MFG. NO.	R4671A	R4669A	R4670A	R4672A	4992S	4993S	6125S
14-45-12	LIMITER, Idle Needle	———	3420 393	———	———	———	———	3685 661
14-45-15	COVER, Hot Idle Compensator	———	3481 663	3481 663	———	———	———	———
14-45-17	COMPENSATOR, Hot Idle	———	3481 666	3481 666	———	———	———	———
14-45-19	SEAL, Hot Idle Compensator	———	3481 661	3481 661	———	———	———	———
14-45-20	SCREW, Idle Adjusting	———	3514 683	3514 683	———	3481 536	3481 536	3481 554
	SCREW, Idle Cam	———	———	———	———	3481 537	3481 537	———
	SCREW, Idle Mixture	———	———	———	———	3481 634	———	———
14-45-25	SCREW, Idle Speed	———	———	———	———	3481 210	3481 210	3481 555
14-46-2	ROD, Vent Valve	———	3549 335	3549 335	———	———	———	———
14-46-3	PLATE, Metering Body	3420 370	———	———	3420 370	———	———	———
14-46-4	RETAINER, "E" Ring	3481 337	3420 375	3420 375	3481 337	———	———	———
14-46-7	BAFFLE, Metering Body Vent	———	3420 388	3420 388	———	———	———	———
14-46-8	SEAL, Vent Valve	———	3481 659	3481 659	———	———	———	———
14-46-9	BODY, Vent Valve	———	3514 661	3514 661	———	———	———	———
14-46-10	CLAMP, Vent Valve	———	3481 667	3481 667	———	———	———	———
14-46-11	ROD, Vent Valve	———	3549 335	3549 335	———	———	———	———
14-46-12	CLIP, Screw Lock	———	3514 688	3514 688	———	———	———	———
14-46-13	HOSE, Clamp	———	3481 668	3481 668	———	———	———	———
14-46-17	ROD, Connector Bowl Vent	———	———	———	———	———	———	3514 527
14-48-2	VALVE ASSY. Thermostatic	———	———	———	———	———	———	3514 881
14-54-3	SCREW, Throttle Stop	———	3420 256	3420 256	———	———	———	———
14-54-4	SCREW, Fuel Valve Seat Lock	3420 273	3420 273	3420 273	3420 273	———	———	———
14-54-5	SCREW Lever Throttle Shaft	———	———	———	———	———	———	3420 438
14-54-6	WASHER, Spring Throttle Shaft	———	———	———	———	———	———	3514 519
	WASHER, Throttle Shaft-Primary	———	———	———	———	———	———	3481 051
	WASHER, Throttle Shaft-Secondary	———	———	———	———	———	———	3420 472
14-54-15	SCREW, Choke Plate	———	3420 255	3420 255	———	3420 450	3420 450	3420 450
	SCREW, Choke Valve (Use w/ Brass Shaft)	———	———	———	———	3481 525	3481 525	———
14-54-19	WASHER, Choke Shaft	———	———	———	———	3481 542	3481 542	———
14-54-29	SCREW, Float Shaft Bracket	3481 699	3481 699	3481 699	3481 699	———	———	———
14-54-34	SCREW ASSY. Air Horn	———	———	———	———	3481 211	3481 211	———
14-54-36	SCREW, Air Vent Rod Clamp	———	3514 682	3514 682	———	———	———	———
14-54-42	WASHER, Pump Plunger	———	———	———	———	3481 224	3481 224	———
14-54-43	SCREW, Pump Lever Adjusting	———	3420 345	3420 345	———	———	———	———
14-54-47	SCREW, Pump Arm	———	———	———	———	3481 279	3481 279	3481 093
14-54-51	WASHER, Retainer Choke Lever	———	———	———	———	———	———	3420 474
14-54-72	SCREW ASSY. Air Horn	———	———	———	———	———	———	3420 443
14-54-78	SCREW, Fuel Bowl	3420 348	3420 341	3420 341	3420 348	3481 280	3481 280	———
	SCREW, Step-Up Piston Plate	———	———	———	———	3481 214	3481 214	3420 451
14-54-140	SCREW ASSY. Body	———	———	———	———	3481 230	3481 230	3420 451

	COMPONENT CHART REFERENCE NO.	115
CODE	MFG. NO.	R4370
14-30-2	GASKET, Flange Main Body Gasket	2946 540 3514 722
14-30-4	ZIP KIT	3514 756
14-30-7	GASKET KIT	3514 755
14-30-8	NEEDLE & SEAT	3514 730
14-30-14	PUMP LEVER NUT	3420 318
14-30-30	FITTING - Fuel Inlet	3514 731
14-33-1	THROTTLE BODY - w/Shaft	3514 727
14-35-1	MAIN METERING JET - Throttle Side Choke Side	2809 253 2809 377

CARLINES					
	J - Challenger B - Barracuda	V - Valiant L - Dart	R - Belvedere - Satallite W - Coronet - Charger	P - Plymouth D - Dodge	C - Chrysler Y - Imperial

AR Indicates use as required.

= Indicates parts not listed in any previous parts book.

Numerals in parentheses ( ) refer to notes.

★ Indicates change or addition.

Printed in U.S.A.
January 1972

	COMPONENT CHART REFERENCE NO.	115
CODE	MFG. NO.	R4370
14-35-6	POWER VALVE	3549 436
	Pump Cup	3419 639
14-35-35	POWER VALVE PISTON RETAINER	3549 435
14-36-1	IDLE NEEDLE SPRING	3481 395
14-36-15	PUMP DRIVE SPRING	3549 415
14-36-29	SPRING	3419 675
14-36-50	VENT VALVE LEVER SPRING	3514 743
14-38-4	THROTTLE PLATE	3514 726
14-38-5	THROTTLE PLATE SCREW & WA.	3514 834
14-38-20	VENT VALVE LEVER SPRING	3514 743
	Throttle Lever Spring	3514 744
14-39-1	CHOKE PLATE	3549 418
14-39-6	CHOKE SHAFT & LEVER	3549 419
14-39-7	CHOKE DIAPHRAGM - Complete	3419 621
14-39-8	CHOKE DIAPHRAGM LINK	3514 739
14-39-11	CHOKE DIAPHRAGM LINK PIN	3481 674
14-39-45	CHOKE	2946 537
	Choke Screw	6024 560
14-39-51	CHOKE DIAPHRAGM HOSE	3419 687
14-40-1	FLOAT & LEVER	3514 707
14-40-4	FLOAT LEVER PIN	3514 735
	Hair Pin	3514 734
14-40-35	FUEL BOWL BAFFLE	3514 749
14-41-3	PUMP PLUNGER	3549 413
	Power Valve Piston	3514 733
	Pump Stem	3549 414
14-41-8	PUMP LINK	3514 738
14-41-18	PUMP DISCHARGE VALVE	3514 732
14-41-21	PUMP LEVER SHAFT	3514 751
14-41-22	PUMP LEVER	3514 750
14-45-1	IDLE ADJ. NEEDLE	3514 728
14-45-4	FAST IDLE CAM	3549 322
14-45-5	FAST IDLE ROD	3514 746
14-45-7	FAST IDLE LEVER	3514 714
14-45-8	SCREW	3514 715
14-45-9	FAST IDLE LEVER NUT	3481 397
14-45-10	FAST IDLE CAM RETAINER	3514 741
14-45-12	IDLE ADJ. NEEDLE LIMITER	3514 740
14-46-1	AIR VENT VALVE	3549 417
14-46-14	VENT VALVE LEVER	3514 708
14-54-15	CHOKE PLATE SCREW	3420 255
14-54-72	AIR HORN TO MAIN BODY SCREW (1)	3514 719
	(7)	3514 720
14-54-78	THROTTLE BODY TO MAIN BODY SCREW	3514 718
	GASKET, Retainer Screw	3419 666

	COMPONENT CHART REFERENCE NO.	30
CODE	MFG. NO.	R-4737-1A
14-30-2	GSKT., Flange	3462 833
14-30-4	ZIP KIT	3514 816
14-30-7	GSKT. KIT	3514 817
14-30-8	NEEDLE & SEAT	2809 335
14-30-12	"O" RING, Fuel Line Tubing	2084 718
14-30-16	PLATE, Baffle	3420 324
14-30-30	FITTING, Fuel Inlet	2809 248
14-30-31	BAFFLE	3420 389
14-33-1	BODY, w/Shaft Assy.	3514 873
14-34-15	GSKT., Pwr. Valve	3420 351
14-35-1	JET, (Primary) Std.	2196 240
14-35-3	NOZZLE, (Machine) Pump Disch.	3420 366

CARLINES J - Challenger, B - Barracuda, V - Valiant, L - Dart, R - Belvedere - Satallite, W - Coronet - Charger, P - Plymouth, D - Dodge, C - Chrysler, Y - Imperial

AR Indicates use as required.

# Indicates parts not listed in any previous parts book.

Numerals in parentheses ( ) refer to notes.

★ Indicates change or addition.

Printed in U.S.A.
January 1972

CODE	COMPONENT CHART REFERENCE NO. / MFG. NO.	30 R-4737-1A
14-35-6	NEEDLE VALVE, Pump Disch.	3420 296
14-35-6	PWR. VALVE ASSY.	2084 715
14-35-9	DIAPHRAGM ASSY. (Secondary)	2585 471
14-35-18	SCREW, Sec. Diaph.	3420 343
14-35-19	SCREW, Pump Disch. Nozzle	3420 346
14-35-25	HSG. DIAPHRAGM (Machine)	3420 392
14-35-26	DIAPHRAGM LEVER ASSY.	3514 875
14-35-39	BODY, Metering (Sec.) Mach.	3549 360
14-35-39	BODY & PLUGS ASSY. Primary Metering	3514 899
14-35-43	SCREW, Sec. Metering Body	3420 349
14-36-1	SPRG. Pump Lvr. Adj. Sc.	3420 378
14-36-29	SPRG. Throt. Stop Sc.	3419 675
14-36-50	SPRG. Air Vent Valve	3420 377
14-36-53	SPRG. Return Diaph.	3420 376
14-36-53	SPRG. Sec. Diaph.	3514 806
14-38-3	SC. & WA. Throt. Body	3420 342
14-38-4	PLATE, Throttle (Primary)	3420 358
14-38-4	PLATE, Throttle (Secondary)	3481 691
14-38-5	SCREW, Throttle Plate (Prim.)	3420 261
14-38-5	SCREW, Throttle Plate (Sec.)	3420 347
14-38-28	ROD, Throttle Conn.	3420 384
14-38-36	RETAINER, Throt. Rod Conn.	3420 386
14-39-1	PLATE, Choke	3420 336
14-39-7	CHOKE DIAPHRAGM ASSY.	3419 620
14-39-8	PIN, Choke Diaph.	3514 804
14-39-9	SCREW, Choke Diaph. Brkt.	3420 339
14-39-10	LEVER, Choke Control	3514 797
14-39-27	RETAINER, Link Sec. Diaph.	3481 337
14-39-28	ROD, Choke	3420 383
14-39-29	SEAL, Choke Rod	3420 301
14-39-30	SHAFT ASSY., Choke	3420 311
14-39-51	HOSE, Choke Vacuum	3419 687
14-39-56	PIN, Choke Clevis	3420 368
14-40-1	FLOAT & HGE. ASSY.	3420 364
14-40-5	RETAINER, Float	3419 673
14-40-7	FUEL BOWL & PLUGS ASSY. (Prim.)	3420 372
14-40-7	FUEL BOWL & PLUGS ASSY. (Sec.)	3420 373
14-40-18	SPRG., Float	3420 317
14-40-34	WASHER, Insulator	3514 808
14-41-3	DIAPHRAGM ASSY.	2196 234
14-41-10	CAM, Pump	3420 321
14-41-22	LEVER, Pump Oper.	3514 680
14-41-23	RETAINER, Lvr. Pump Oper.	3514 681
14-41-25	FITTING, Sc. Adj. Pump Lvr.	3420 365
14-41-34	COVER ASSY., Fuel Pump	3420 306
14-41-35	SC. & WA., Cvr. Fuel Pump	3420 259
	SC. & WA., Cvr. Assy. Sec. Diaph.	3420 259
14-44-10	BALANCE TUBE	3420 361
14-44-11	WASHER, Balance Tube	3420 385
14-44-12	"O" RING, Balance Tube	3420 367
14-45-1	NEEDLE, Idle Adj.	3514 799
14-45-3	LEVER, Fast Idle Cam	3420 338
14-45-4	CAM, Fast Idle	3514 689
14-45-8	SC. & WA., Lvr. Fast Idle Cam	3420 344
	SC. & WA., Lever Diaph.	3420 344
14-45-14	NEEDLE, Idle Limiter	3420 393
14-45-19	SEAL, Hot Idle Comp.	3514 897
14-45-21	INSULATOR, Idle Screw	3549 327
14-45-32	BRKT., Retard Wire	3514 809

CARLINES — J - Challenger, B - Barracuda, V - Valiant, L - Dart, R - Belvedere - Satallite, W - Coronet - Charger, P - Plymouth, D - Dodge, C - Chrysler, Y - Imperial

AR Indicates use as required.

# Indicates parts not listed in any previous parts book.

Numerals in parentheses ( ) refer to notes.

★ Indicates change or addition.

Printed in U.S.A.
January 1972

	COMPONENT CHART REFERENCE NO.	30
CODE	MFG. NO.	R-4737-1A
14-45-33	CABLE ASSY., Sol.	3514 810
14-46-1	VALVE, Air Vent	3419 669
14-46-2	ROD, Air Vent	3549 326
14-46-3	BODY PLATE, Metering Sec.	3420 370
14-46-4	"E" RING, Retainer	3420 375
14-46-6	CLAMP, Air Vent Rod	3420 387
14-46-7	BAFFLE, Metering Body Vent	3420 388
14-54-3	SCREW, Throttle Stop	3549 325
14-54-15	SCREW, Choke Plate	3420 255
14-54-36	SC. & WA., Air Vent Rod Clamp	3420 340
14-54-43	SCREW, Pump Lvr. Adj.	3420 345
14-54-50	SCREW, Pump Cam Lock	3420 265
14-54-78	SCREW, Fuel Bowl	3420 341
14-54-78	SCREW, Sec. Fuel Bowl	3420 348
14-68-36	COVER, Diaph. (Machine)	3420 305
14-89-57	TUBING, Fuel Line	3420 360

NOTES

CODE	PART NAME	ENG. TYPE OR CU.IN.	V 1-2	B J 1-2	L 1-2	R 1-2	W 1-2	P 1-2	D 1-2	C 1	C 2	C 3	Y 1	PART NUMBER
14-62-0	**CARBURETOR AIR HEATER**													
14-62-1	Heater, w/198 or 225 Eng.		1	1	1	1	1	1	1	—	—	—	—	3671 589
	w/318 Eng.	70	1	—	1	—	—	—	—	—	—	—	—	3418 462
	w/318, 340, Eng.	71	1	—	1	—	—	—	—	—	—	—	—	3418 462
	w/318, 340, 360 Eng.		—	1	—	1	1	1	1	—	—	—	—	3418 626
	w/383 or 440 Eng., Upper		—	1	—	1	1	—	—	—	—	—	—	2951 914
	w/383 or 440 Eng., Lower		—	1	—	1	1	—	—	—	—	—	—	2951 913
	w/383 or 440 Eng., Upper		—	—	—	—	—	1	1	1	1	1	1	2951 873
	w/383 or 440 Eng., Lower		—	—	—	—	—	1	1	1	1	1	1	2951 871
	w/383 or 440 Eng., w/4 bbl. Carb.		—	—	—	—	—	1	1	1	1	1	—	2951 242
	Connector		1	1	1	1	1	1	1	1	1	1	—	3462 452
14-63-0	**MANUAL CHOKE**													
14-63-01	CABLE, Hand Choke w/Knob	426	—	1	—	1	1	—	—	—	—	—	—	= 3577 519
14-63-02	KNOB & WIRE PKG., Control Cable		AR	AR	AR	AR	AR	AR	AR	AR	AR	AR	AR	= 3621 621
14-63-10	PLATE, Cable Hand Choke w/Knob	426	—	1	—	1	1	—	—	—	—	—	—	= 3577 521
14-63-11	GROMMET, Choke Cable	426	—	1	—	1	1	—	—	—	—	—	—	2216 552
14-65-0	**AUTOMATIC CHOKE TO CARBURETOR ROD CLIP**													
14-65-4	CLIP, Stamped D-R, Rt.		1	1	1	1	1	1	1	1	1	1	1	2465 560
	Stamped D-L, Lt.		1	1	1	1	1	1	1	1	1	1	1	2465 561
14-65-5	GASKET, Choke Well, w/198, 225 Eng.		1	1	1	1	1	1	1	—	—	—	—	2946 530
	except 198, 225, Eng.		1	1	1	1	1	1	1	1	1	1	1	2951 545
14-65-6	CUP, Choke Well, w/198, 225 Eng.		1	1	1	1	1	1	1	—	—	—	—	2946 529
	except 198, 225 Eng.		1	1	1	1	1	1	1	1	1	1	1	2951 544
14-67-0	**FUEL FILTER**													
14-67-1	FILTER		1	1	1	1	1	1	1	1	1	1	1	2525 254
14-67-2	HOSE, Filter		AR	AR	AR	AR	AR	AR	AR	AR	AR	AR	AR	1739 230
14-67-29	TUBE, Filter Hose to Tee	340	—	1	—	—	—	—	—	—	—	—	—	3577 160
14-72-0	**FUEL TANK GAUGE**													
14-72-1	GAUGE		1	—	1	—	—	—	—	—	—	—	—	2932 960
	Except 426 or 440 Eng.		—	1	—	—	—	—	—	—	—	—	—	3420 844
	w/426 or 440 Eng.		—	1	—	—	—	—	—	—	—	—	—	3420 845
	Except 426, 440 Eng. and Sta. Wgn.	70	—	—	—	1	1	—	—	—	—	—	—	3420 848
	Except 426, 440 Eng. and Sta. Wgn.	71	—	—	—	1	1	—	—	—	—	—	—	3514 446
	w/426 or 440 Eng., Except Sta. Wgn.	70	—	—	—	1	1	—	—	—	—	—	—	3420 847
	w/426 or 440 Eng., except Sta. Wgn.	71	—	—	—	1	1	—	—	—	—	—	—	3514 443
	Sta. Wgn.	70	—	—	—	1	1	—	—	—	—	—	—	3420 846
	Sta. Wgn.	71	—	—	—	1	1	—	—	—	—	—	—	3514 447
	Except Sta. Wgn.		—	—	—	—	—	1	1	1	1	1	1	3420 849
	Sta. Wgn.		—	—	—	—	—	1	1	1	—	—	—	3420 850
14-72-5	CLIP, Gauge Grounding		1	1	1	1	1	1	1	1	1	1	1	2258 862
14-72-9	SEAL, Gauge		1	1	1	1	1	1	1	1	1	1	1	1948 757
14-72-33	CABLE, w/Terminal and Insulator, Gauge		1	1	1	1	1	1	1	1	1	1	1	2257 444
14-72-47	RETAINER, Gauge		1	1	1	1	1	1	1	1	1	1	1	1730 095
14-73-0	**FUEL PUMP**													
14-73-1	PUMP PACKAGE, w/198 or 225 Eng.	70 6	1	1	1	1	1	1	1	—	—	—	—	2932 798
	w/190 or 225 Eng., w/E.C.S.	70 6	1	1	1	1	1	1	—	—	—	—	—	3420 834
	w/198 or 225 Eng.	71	1	1	1	1	1	1	1	—	—	—	—	3420 834
	w/225 Eng., Export	71	1	1	1	1	1	—	—	—	—	—	—	2932 798

CARLINES: J - Challenger, B - Barracuda, V - Valiant, L - Dart, R - Belvedere - Satellite, W - Coronet - Charger, P - Plymouth, D - Dodge, C - Chrysler, Y - Imperial

AR Indicates use as required.

Numerals in parentheses ( ) refer to notes.

# Indicates parts not listed in any previous parts book.

★ Indicates change or addition.

Printed in U.S.A. January 1972

CODE	PART NAME		ENG. TYPE OR CU.IN.	V 1-2	B J 1-2	L 1-2	R 1-2	W 1-2	P 1-2	D 1-2	C 1	C 2	C 3	Y 1	PART NUMBER
14-73-0	**FUEL PUMP Cont'd.**														
14-73-1	PUMP PACKAGE Cont'd.														
	w/318, 340, 360 Eng.	71		1	1	1	1	1	1	1	1	1	1	—	3620 795
	w/383 or 440 Eng.	71		—	1	—	1	1	1	1	1	1	1	1	# 3621 675
	w/383 or 440 Eng.		8	—	1	—	1	1	1	1	1	1	1	1	2932 799
	w/426 Eng.		8	—	1	—	1	1	—	—	—	—	—	—	2585 118
	w/440 Eng.		8	—	1	—	1	1	—	—	—	—	—	—	3420 835
	PUMP, Fuel Electric	70		AR	AR	AR	AR	AR	AR	AR	AR	AR	AR	AR	3549 873
14-73-2	SEPARATOR, Fuel Vapor, w/426, 440 Eng. (Optional w/3577 867)			—	1	—	1	1	—	—	—	—	—	—	2951 192
14-73-11	HOSE, Carburetor Vapor Hose														
	3/8" I.D. & 5/8" O.D.	24 1/2" lg.		AR	AR	AR	AR	AR	AR	AR	AR	AR	AR	AR	3404 646
		26 1/2" lg.		AR	AR	AR	AR	AR	AR	AR	AR	AR	AR	AR	3466 403
	5/16" I.D. & 9/16 O.D.	12" lg.		AR	AR	AR	AR	AR	AR	AR	AR	AR	AR	AR	1739 230
		24" lg.		AR	AR	AR	AR	AR	AR	AR	AR	AR	AR	AR	1739 243
14-74-0	**FUEL PUMP MOUNTING GASKET**														
14-74-1	GASKET (Optional w/3577 870)			1	1	1	1	1	1	1	1	1	1	1	2843 770
14-77-0	**FUEL PUMP PUSH ROD**														
14-77-17	ROD, w/383 or 440 Eng.			—	1	—	1	1	1	1	1	1	1	1	1737 745
	w/426 Eng.			—	1	—	1	1	—	—	—	—	—	—	2463 921
14-86-0	**FUEL TANK**														
14-86-1	TANK, w/o E.C.S.			1	—	1	—	—	—	—	—	—	—	—	3404 474
	w/E.C.S. (Optional w/3583 522)			1	—	1	—	—	—	—	—	—	—	—	3404 220
	w/o E.C.S., B	70		—	1	—	—	—	—	—	—	—	—	—	3404 509
	w/E.C.S., B (Optional w/3583 569)			—	1	—	—	—	—	—	—	—	—	—	3404 493
	w/o E.C.S., J	70		—	1	—	—	—	—	—	—	—	—	—	3404 510
	w/E.C.S., J (Optional w/3583 569)			—	1	—	—	—	—	—	—	—	—	—	3404 494
	w/o E.C.S., Except Charger and Sta. Wgn.	70		—	—	—	1	1	—	—	—	—	—	—	3404 491
	w/E.C.S., Except Charger and Sta. Wgn.	70		—	—	—	1	1	—	—	—	—	—	—	3404 392
	w/o E.C.S., Charger	70		—	—	—	—	1	—	—	—	—	—	—	3404 492
	w/E.C.S., Charger	70		—	—	—	—	1	—	—	—	—	—	—	3404 393
	Export	71		—	—	—	—	1	—	—	—	—	—	—	3466 801
	w/o E.C.S., Sta. Wgn.	70		—	—	—	1	1	—	—	—	—	—	—	3404 497
	w/E.C.S., Sta. Wgn.	70		—	—	—	1	1	—	—	—	—	—	—	3404 394
	R,W, except Sta. Wgn.	71		—	—	—	1	1	—	—	—	—	—	—	3404 951
	R,W, Sta. Wgn.	71		—	—	—	1	1	—	—	—	—	—	—	3466 153
	w/E.C.S., except Sta. Wgn.	70		—	—	—	—	—	1	1	1	1	1	1	3404 219
	w/o E.C.S., except Sta. Wgn.	70		—	—	—	—	—	1	1	1	1	1	1	3404 475
	w/o E.C.S., Sta. Wgn.	70		—	—	—	—	—	1	1	1	—	—	—	2925 748
	All, except Sta. Wgn.	71		—	—	—	—	—	1	1	1	1	1	1	3466 887
	Sta. Wgn.	71		—	—	—	—	—	1	1	1	1	1	—	3404 225
	V,L, Export	71		1	—	1	—	—	—	—	—	—	—	—	3404 474
	B, Export	71		—	1	—	—	—	—	—	—	—	—	—	3404 509
	D, except Sta. Wgn., Export	71		—	—	—	—	—	—	1	—	—	—	—	3404 475
	P,D, Sta. Wgn., Export	71		—	—	—	—	—	1	1	—	—	—	—	2925 748
14-86-13	PLUG, Fuel Tank			1	1	1	1	1	1	1	1	1	1	1	3404 496
14-86-27	BRACKET, Fuel Tank Side Restraint, Charger			—	—	—	—	1	—	—	—	—	—	—	3404 697
14-86-32	BEZEL, Filler Tube Cap, R-P, W-P, Sta. Wgn.	70		—	—	—	1	1	—	—	—	—	—	—	3406 408
	BEZEL, (After May '71) Qtr. Pnl. Fuel Filter Opng. Vinyl in white - sta. Wgn.	71		—	—	—	—	1	—	—	—	—	—	—	# 3674 155
14-86-38	RING, F/Tank Filler Cap Ornament, Charger	70		—	—	—	—	1	—	—	—	—	—	—	2880 430
	J			—	1	—	—	—	—	—	—	—	—	—	3404 666

CARLINES J - Challenger, B - Barracuda, V - Valiant, L - Dart, R - Belvedere - Satellite, W - Coronet - Charger, P - Plymouth, D - Dodge, C - Chrysler, Y - Imperial

AR Indicates use as required.

# Indicates parts not listed in any previous parts book.

Numerals in parentheses ( ) refer to notes.

★ Indicates change or addition.

Printed in U.S.A. January 1972

* Insert this page in the 1970-71 Passenger Car Catalog dated January 1972 between Text Pages 14-60 and 14-61.

CODE	PART NAME	ENG. TYPE OR CU.IN.	V 1-2	B J 1-2	L 1-2	R 1-2	W 1-2	P 1-2	D 1-2	C 1	C 2	C 3	Y 1	PART NUMBER
14-86-35														
	CAP, Gas Filler Tube,													
	WITHOUT VAPOR SEPARATOR													
	Export		1	—	1	—	—	—	—	—	—	—	—	2823 328
	Chrome		1	—	1	—	—	—	—	—	—	—	—	3549 077
	Barracuda	70	—	1	—	—	—	—	—	—	—	—	—	3404 498
	Chrome-Flip Top-													
	Challenger	70	—	1	—	—	—	—	—	—	—	—	—	3404 657
	Chrome-Flip Top-													
	Challenger	71	—	1	—	—	—	—	—	—	—	—	—	3466 435
	Chrome-Flip Top-													
	Charger	70	—	—	—	—	1	—	—	—	—	—	—	2925 878
	Except Charger and													
	Sta. Wgn.	70	—	—	—	1	1	—	—	—	—	—	—	2925 697
	Wood Grain Sta. Wgn.	70	—	—	—	1	1	—	—	—	—	—	—	3466 410
	Chrome, Sta. Wgn.	70	—	—	—	1	1	—	—	—	—	—	—	2643 998
		70	—	—	—	—	—	1	1	1	1	1	1	2660 856
	CAP, Gas Filler Tube,													
	WITH VAPOR SEPARATOR													
	Chrome		1	—	1	—	—	—	—	—	—	—	—	2925 730
	Chrome, Barracuda		—	1	—	—	—	—	—	—	—	—	—	3466 826
	Chrome, Challenger		—	1	—	—	—	—	—	—	—	—	—	3404 528
	Chrome, Flip Top,													
	Charger	70	—	—	—	—	1	—	—	—	—	—	—	2925 745
	Except Charger and													
	Sta. Wgn.	70	—	—	—	1	1	—	—	—	—	—	—	3466 825
	All	71	—	—	—	1	1	—	—	—	—	—	—	3466 825
	Wood Grain Sta. Wgn.	70	—	—	—	1	1	—	—	—	—	—	—	2925 737
	Chrome, Sta. Wgn.	70	—	—	—	1	1	—	—	—	—	—	—	2925 735
	Sta. Wgn.	71	—	—	—	—	—	1	1	—	—	1	—	3466 825
	Sta. Wgn. Export	71	—	—	—	—	—	—	1	—	—	—	—	2208 538
	Except Sta. Wgn.	70	—	—	—	—	—	1	1	1	1	1	1	3466 825
	Except Sta. Wgn.	71	—	—	—	—	—	1	1	1	1	1	1	3549 086
	CAP, Filler Tube (Locking Type)													
	UP TO June 1971													
	(w/2 Keys)		1	—	1	—	—	—	—	—	—	—	—	3404 661
	AFTER June 1971													
	(w/2 Keys)		1	—	1	—	—	—	—	—	—	—	—	3583 547
	AFTER June 1971													
	(w/3 Keys)		1	—	1	—	—	—	—	—	—	—	—	3683 954
	(w/2 Keys) Barracuda		—	1	—	—	—	—	—	—	—	—	—	3583 561
	(w/3 Keys) Barracuda		—	1	—	—	—	—	—	—	—	—	—	3683 951
	Challenger		—	1	—	—	—	—	—	—	—	—	—	3404 668
	Challenger-Export		—	1	—	—	—	—	—	—	—	—	—	3404 683
	Sta. Wgn.		—	—	—	1	1	—	—	—	—	—	—	3404 651
	Sta. Wgn.		—	—	—	—	—	1	1	—	—	1	—	2409 393
	Imperial		—	—	—	—	—	—	—	—	—	—	1	3404 651
	Except Sta. Wgn. (w/2 Keys)													
	UP TO May 1971		—	—	—	—	—	1	1	1	1	1	—	3404 651
	Except Sta. Wgn. (w/2 Keys)													
	AFTER May 1971		—	—	—	—	—	1	1	1	1	1	—	3583 561
	Except Sta. Wgn. (w/3 Keys)													
	AFTER May 1971		—	—	—	—	—	1	1	1	1	1	—	3683 951

CARLINES J - Challenger, B - Barracuda, V - Valiant, L - Dart, R - Belvedere - Satellite, W - Coronet - Charger, P - Plymouth, D - Dodge, C - Chrysler, Y - Imperial

AR Indicates use as required.

# Indicates parts not listed in any previous parts book.

Numerals in parentheses ( ) refer to notes.

★ Indicates change or addition.

Printed in U.S.A. January 1972

14-86-0 FUEL TANK Cont'd.

CODE	PART NAME	ENG. TYPE OR CU.IN.	V 1-2	B J 1-2	L 1-2	R 1-2	W 1-2	P 1-2	D 1-2	C 1	C 2	C 3	Y 1	PART NUMBER
14-86-40	TUBE, F/Tank Filler, w/o E.C.S., V, 4 D., L, All	70	1	—	1	—	—	—	—	—	—	—	—	3404 478
	w/E.C.S., V, 4 D., L, All	70	1	—	1	—	—	—	—	—	—	—	—	3404 180
	Up to May '71	71	1	—	1	—	—	—	—	—	—	—	—	3404 180
	After May '71	71	1	—	1	—	—	—	—	—	—	—	—	= 3642 004
	Fastback, Up to May '71	71	1	—	1	—	—	—	—	—	—	—	—	3404 529
	Fastback, After May '71	71	1	—	1	—	—	—	—	—	—	—	—	= 3642 007
	w/o E.C.S., Fastback	70	1	—	—	—	—	—	—	—	—	—	—	3404 534
	w/E.C.S., Fastback	70	1	—	—	—	—	—	—	—	—	—	—	3404 529
	B		—	1	—	—	—	—	—	—	—	—	—	2962 213
	After June '71 B	71	—	1	—	—	—	—	—	—	—	—	—	= 3583 573
	w/o E.C.S., J	70	—	1	—	—	—	—	—	—	—	—	—	3404 677
	w/E. C. S., J		—	1	—	—	—	—	—	—	—	—	—	3404 531
	After June '71 J	71	—	1	—	—	—	—	—	—	—	—	—	= 3583 575
	w/o E.C.S., except Charger and Sta. Wgn.	70	—	—	—	1	1	—	—	—	—	—	—	2856 332
	w/E.C.S., except Charger and Sta. Wgn.	70	—	—	—	1	1	—	—	—	—	—	—	3404 382
	w/o E.C.S., Charger	70	—	—	—	—	1	—	—	—	—	—	—	2925 689
	w/E.C.S., Charger	70	—	—	—	—	1	—	—	—	—	—	—	3404 202
	w/or w/o E.C.S., Inner, Sta. Wgn.	70	—	—	—	1	1	—	—	—	—	—	—	3404 162
	w/o E.C.S., Outer, Sta. Wgn.	70	—	—	—	1	1	—	—	—	—	—	—	2880 454
	w/E.C.S., Outer, Sta. Wgn.	70	—	—	—	1	1	—	—	—	—	—	—	3404 231
	2 D.H.T.	71	—	—	—	—	1	—	—	—	—	—	—	3466 330
	2 D.H.T.	71	—	—	—	1	1	—	—	—	—	—	—	3466 426
	4 D.	71	—	—	—	1	1	—	—	—	—	—	—	3404 958
	w/o E.C.S., except Sta. Wgn.	70	—	—	—	—	—	1	—	—	—	—	—	2925 826
	w/E.C.S., except Sta. Wgn.	70	—	—	—	—	—	1	—	—	—	—	—	3404 363
	except Sta. Wgn.	71	—	—	—	—	—	1	—	—	—	—	—	3466 856
	After June '71	71	—	—	—	—	—	1	—	—	—	—	—	= 3583 524
	w/o E.C.S., except Sta. Wgn.	70	—	—	—	—	—	—	1	—	—	—	—	3404 469
	w/E.C.S., except Sta. Wgn.	70	—	—	—	—	—	—	1	—	—	—	—	3404 386
	except Sta. Wgn.	71	—	—	—	—	—	—	1	—	—	—	—	3466 449
	w/o E.C.S., except Sta. Wgn.	70	—	—	—	—	—	—	—	1	1	1	—	3404 468
	w/E. C. S., except Sta. Wgn.		—	—	—	—	—	—	—	1	1	1	—	3404 378
	After June '71	71	—	—	—	—	—	—	—	1	1	1	—	= 3583 530
	w/o E.C.S.	70	—	—	—	—	—	—	—	—	—	—	1	2925 838
	w/E. C. S.		—	—	—	—	—	—	—	—	—	—	1	3404 250
	After June '71	71	—	—	—	—	—	—	—	—	—	—	1	= 3583 533
	V, 4 D., L, 2 D.H.T. and 4 D., Export	71	1	—	1	—	—	—	—	—	—	—	—	3404 478
	V, Duster, L, Swinger	71	1	—	1	—	—	—	—	—	—	—	—	3404 534
	J, Export	71	—	1	—	—	—	—	—	—	—	—	—	3404 677
14-86-42	GASKET, Filler Tube Cam, B (Optional w/3642 075)		1	1	1	—	—	—	—	—	—	—	—	2643 956
	J		—	1	—	—	—	—	—	—	—	—	—	3404 524
	R, Sta. Wgn., W, Charger and Sta. Wgn.		—	—	—	1	1	—	—	—	—	—	—	2643 956
	GASKET, Fuel Vapor Separator, Sta. Wgn.		—	—	—	1	1	—	—	—	—	—	—	2643 956
	SEAL, Filler Tube to Floor Pan, w/o E.C.S.	70	1	—	1	—	—	—	—	—	—	—	—	3404 470
	w/E.C.S.	70	1	—	1	—	—	—	—	—	—	—	—	3404 179
		71	1	—	1	—	—	—	—	—	—	—	—	3466 307
		70	—	1	—	—	—	—	—	—	—	—	—	3404 385
		71	—	1	—	—	—	—	—	—	—	—	—	3466 151
	Export	71	1	—	1	—	—	—	—	—	—	—	—	3466 158
	Charger	70	—	—	—	—	1	—	—	—	—	—	—	3404 539
	Sta. Wgn., w/o E.C.S.	70	—	—	—	1	1	—	—	—	—	—	—	2660 843
	Sta. Wgn., w/E.C.S.	70	—	—	—	1	1	—	—	—	—	—	—	3404 239

CARLINES J - Challenger, B - Barracuda, V - Valiant, L - Dart, R - Belvedere - Satellite, W - Coronet - Charger, P - Plymouth, D - Dodge, C - Chrysler, Y - Imperial

AR Indicates use as required.

Numerals in parentheses ( ) refer to notes.

# Indicates parts not listed in any previous parts book.

★ Indicates change or addition.

Printed in U.S.A. January 1972

CODE	PART NAME	ENG. TYPE OR CU.IN.	V 1-2	B J 1-2	L 1-2	R 1-2	W 1-2	P 1-2	D 1-2	C 1	C 2	C 3	Y 1	PART NUMBER
14-86-0	**FUEL TANK Cont'd.**													
14-86-43	BRACKET, Filler Tube		—	1	—	—	—	—	—	—	—	—	—	3404 075
	Except Charger and Sta. Wgn.	70	—	—	—	1	1	—	—	—	—	—	—	2856 334
	Exc. Sta. Wgn.	71	—	—	—	1	1	—	—	—	—	—	—	3642 058
	Retainer, Rt.	71	—	—	—	1	1	—	—	—	—	—	—	= 3466 385
	except Sta. Wgn.	70	—	—	—	—	—	1	—	—	—	—	—	3404 364
	Exc. Sta. Wgn.	71	—	—	—	—	—	1	—	—	—	—	—	= 3466 859
	Exc. Sta. Wgn.	71	—	—	—	—	—	—	1	—	—	—	—	= 3466 444
	Except Sta. Wgn.	70	—	—	—	—	—	—	1	—	—	—	—	3404 388
	Except Sta. Wgn.		—	—	—	—	—	—	—	1	1	1	—	3404 381
		71	—	—	—	—	—	—	—	—	—	—	1	= 3466 805
14-86-47	COVER, Filler Tube Cap, w/Locking Cap, w/o E.C.S., J	70	—	1	—	—	—	—	—	—	—	—	—	3404 670
	w/Locking Cap, w/E.C.S., J		—	1	—	—	—	—	—	—	—	—	—	3404 667
14-86-49	CLAMP, Fuel Line Hose		AR	AR	AR	AR	AR	AR	AR	AR	AR	AR	AR	2448 761
	Fuel Tank Vapor Sep.		—	1	—	—	—	1	1	1	1	1	1	2448 764
14-86-50	TUBE, Filler Vent Inter., w/o E. C. S., Sta. Wgn.	70	—	—	—	1	1	—	—	—	—	—	—	2643 858
	w/E.C.S., Sta. Wgn.	70	—	—	—	1	1	—	—	—	—	—	—	3404 240
	Filler Vent Extension, B	71	—	1	—	—	—	—	—	—	—	—	—	3404 501
14-86-55	GROMMET, Vent Tube		—	AR	—	AR	AR	AR	AR	AR	AR	AR	—	2216 552
	Fuel Tank Filler Tube, R, W, except Sta. Wgn.	70	—	1	—	1	1	—	—	—	—	—	—	3404 182
	B	71	—	1	—	1	1	—	—	—	—	—	—	3404 182
	R, W, Sta. Wgn.	70	—	—	—	1	1	—	—	—	—	—	—	2880 481
	P, D, C, except Sta. Wgn.	70	1	—	1	—	—	1	1	1	1	1	1	2880 481
	except Sta. Wgn.	71	1	—	1	1	1	1	1	1	1	1	1	2880 481
14-86-57	HOSE, Filler Vent Tube, Charger		1	1	1	—	1	—	—	—	—	—	—	1828 456
	Filler Vent Tube, except Charger and Sta. Wgn.		—	—	—	1	1	1	1	1	1	1	1	2600 702
	Fuel Tank to Vapor Separator		1	1	1	1	1	1	1	1	1	1	1	2600 702
	Fuel Vapor Tube Front		1	1	1	1	1	1	1	1	1	1	1	1739 230
	After May '71		1	—	1	—	—	—	—	—	—	—	—	3583 539
14-86-58	CLIP, Vent Tube Extension, B	71	—	1	—	—	—	—	—	—	—	—	—	3404 519
14-86-59	BUMPER, Filler Tube Cap Cover, w/Locking Cap, w/o E.C.S., J	70	—	1	—	—	—	—	—	—	—	—	—	3404 671
	w/E.C.S., J	70	—	1	—	—	—	—	—	—	—	—	—	3404 669
14-86-61	SHIELD, Vapor Separator Tube		1	—	1	—	—	—	—	—	—	—	—	3466 126
		70	—	1	—	—	—	—	—	—	—	—	—	3466 130
	except Sta. Wgn.	70	—	—	—	1	1	—	—	—	—	—	—	3466 127
	except Sta. Wgn.	70	—	—	—	—	—	1	1	1	1	1	1	3466 128
		71	—	1	—	—	—	—	—	—	—	—	—	3466 822
		71	—	—	—	1	1	—	—	—	—	—	—	3466 430
		71	—	—	—	—	—	1	1	1	1	1	1	3466 170
	SHIELD, Vapor Separator	71	—	—	—	1	1	—	—	—	—	—	—	3466 391
	SHIELD, Vapor Separator Hose	70	—	1	—	—	—	—	—	—	—	—	—	3466 129
14-86-65	SEPARATOR, Fuel Vapor		1	—	1	—	—	—	—	—	—	—	—	3404 351
			—	1	—	—	—	—	—	—	—	—	—	3404 183
	except Charger and Sta. Wgn.	70	—	—	—	1	1	—	—	—	—	—	—	3404 373
	Charger	70	—	—	—	—	1	—	—	—	—	—	—	3404 365
	Sta. Wgn.	70	—	—	—	1	1	—	—	—	—	—	—	3404 164
	except Sta. Wgn.	71	—	—	—	1	1	—	—	—	—	—	—	3466 389
	After Jan. 1, 1971	71	—	—	—	1	1	—	—	—	—	—	—	= 3466 835
	except Sta. Wgn.		—	—	—	—	—	1	1	1	1	1	1	3466 836
14-86-67	GASKET, Vapor Separator		1	1	1	1	1	1	1	1	1	1	1	3404 191
14-86-69	ELBOW, Filler Tube, Sta. Wgn.		—	—	—	1	1	—	—	—	—	—	—	2643 859
	Vent Tube, Sta. Wgn.		—	—	—	2	2	—	—	—	—	—	—	2643 860
14-86-71	BRACKET, Belt Bar Reinforcement F/Tank Vapor Separator, CV. Cp.		—	1	—	—	—	—	—	—	—	—	—	3444 496

CARLINES: J - Challenger, B - Barracuda, V - Valiant, L - Dart, R - Belvedere - Satellite, W - Coronet - Charger, P - Plymouth, D - Dodge, C - Chrysler, Y - Imperial

AR Indicates use as required.

\# Indicates parts not listed in any previous parts book.

Numerals in parentheses ( ) refer to notes.

★ Indicates change or addition.

Printed in U.S.A. January 1972

CODE	PART NAME	ENG. TYPE OR CU.IN.	V 1-2	B J 1-2	L 1-2	R 1-2	W 1-2	P 1-2	D 1-2	C 1	C 2	C 3	Y 1	PART NUMBER
14-86-0	**FUEL TANK Cont'd.**													
14-86-71	BRACKET Cont'd.													
	BRACKET, W/House Inner Emission Tank Support, except Sta. Wgn.	71	—	—	—	1	1	—	—	—	—	—	—	3504 850
	W/House Outer Emission Tank Support, except Sta. Wgn.	71	—	—	—	1	1	—	—	—	—	—	—	3504 851
14-86-85	FILTER, Inside of Tank, w/426 and 440 Eng.		—	1	—	1	1	—	—	—	—	—	—	2534 111
	All others		1	1	1	1	1	1	1	1	1	1	1	1670 694
14-87-0	**FUEL TANK STONE DEFLECTOR**													
14-87-2	DEFLECTOR, Sta. Wgn.		—	—	—	—	—	1	1	1	—	—	—	2894 903
	SHIELD, Sta. Wgn.	71	—	—	—	1	1	—	—	—	—	—	—	3499 626
14-88-0	**FUEL TANK SUPPORT**													
14-88-8	BRACKET, Recovery Tank Supt.	71	—	—	—	—	—	1	1	1	1	1	—	= 3412 884
14-88-21	STRAP		2	—	2	—	—	—	—	—	—	—	—	3404 679
		70	—	2	—	—	—	—	—	—	—	—	—	3462 431
		71	—	2	—	—	—	—	—	—	—	—	—	3466 431
	except Sta. Wgn.	70	—	—	—	2	2	—	—	—	—	—	—	2856 349
	except Sta. Wgn.	71	—	—	—	2	2	—	—	—	—	—	—	3466 333
	except Sta. Wgn.		—	—	—	—	—	2	2	2	2	2	2	2880 429
	Sta. Wgn.	70	—	—	—	2	2	—	—	—	—	—	—	2880 474
	Sta. Wgn., Front	71	—	—	—	1	1	—	—	—	—	—	—	3404 973
	Sta. Wgn., Rear	71	—	—	—	1	1	—	—	—	—	—	—	3404 972
	Sta. Wgn., Front		—	—	—	—	—	1	1	1	—	—	—	3404 681
	Sta. Wgn., Rear		—	—	—	—	—	1	1	1	—	—	—	2925 750
14-88-27	STUD, Support Strap	70	—	2	—	—	—	—	—	—	—	—	—	2962 212
	except, P, D, C, Sta. Wgn.		2	2	2	2	2	2	2	2	2	2	2	2643 824
	Front, Sta. Wgn.		—	—	—	—	—	1	1	1	—	—	—	1671 610
	Rear, Sta. Wgn.		—	—	—	—	—	1	1	1	—	—	—	2643 824
14-88-28	BRACKET, w/Nut, Rr. Flr. Pan F/Tank Support Strap, Front	70	—	—	—	1	1	—	—	—	—	—	—	3439 328-9
	Rear, Sta. Wgn.	70	—	—	—	2	2	—	—	—	—	—	—	2860 786
	w/Hse. Supt.	71	—	—	—	1	1	—	—	—	—	—	—	3504 850
	Floor Pan Ret.	71	—	—	—	—	—	1	1	1	1	1	1	= 3615 086
14-88-32	STRAINER, Flr. Pan Fuel Tank, except Sta. Wgn.	71	—	—	—	2	2	—	—	—	—	—	—	3445 039
	STRAINER, Rear Flr. Pan Fuel Tank, except Sta. Wgn.	71	—	—	—	1	1	—	—	—	—	—	—	3482 256
	STRAINER, w/Reinforcement, Rr. Flr. Pan	71	—	1	—	—	—	—	—	—	—	—	—	2934 840
14-88-36	REINFORCEMENT, Rr. Flr. Pan Fuel Tank Frt. or Rear, Except Sta. Wgn.		—	—	—	—	—	1	1	1	1	1	1	2481 381
	REINFORCEMENT, Fuel Tank Strap Rr., except Sta. Wgn.	71	—	2	—	2	2	—	—	—	—	—	—	3506 065
14-88-42	BRACE, F/Tank Protector and Bumper Guard Rt., Charger	70	—	—	—	—	1	—	—	—	—	—	—	2883 962
	Lt., Charger	70	—	—	—	—	1	—	—	—	—	—	—	2883 961
14-89-0	**FUEL LINE TUBE**													
14-89-2	TUBING, 25 Ft. Roll, 5/16" O. D.		AR	AR	AR	AR	AR	AR	AR	AR	AR	AR	AR	1843 253
	Tee, Inlet Fuel to Carb. 3/2 Bbl.		AR	AR	AR	AR	AR	AR	AR	AR	AR	AR	AR	173 182
14-89-57	HOSE, Fuel Line Tubes, 3/8" I.D. & 5/8" O.D.	24 1/2 lg.	AR	AR	AR	AR	AR	AR	AR	AR	AR	AR	AR	3404 646
		26 1/2" lg.	AR	AR	AR	AR	AR	AR	AR	AR	AR	AR	AR	3466 403
	5/16" I.D. & 9/16" O.D.	12" lg.	AR	AR	AR	AR	AR	AR	AR	AR	AR	AR	AR	1739 230
		24" lg.	AR	AR	AR	AR	AR	AR	AR	AR	AR	AR	AR	1739 243
14-89-58	STEM, Fuel Pump Hose, w/426 Eng.		—	1	—	1	1	—	—	—	—	—	—	2532 191

CARLINES: J - Challenger, B - Barracuda, V - Valiant, L - Dart, R - Belvedere - Satellite, W - Coronet - Charger, P - Plymouth, D - Dodge, C - Chrysler, Y - Imperial

AR Indicates use as required.

# Indicates parts not listed in any previous parts book.

Numerals in parentheses ( ) refer to notes.

★ Indicates change or addition.

Printed in U.S.A. January 1972

CODE	PART NAME	ENG. TYPE OR CU.IN.	V 1-2	B J 1-2	L 1-2	R 1-2	W 1-2	P 1-2	D 1-2	C 1	C 2	C 3	Y 1	PART NUMBER
14-90-0	**FUEL LINE TUBE CLIP**													
14-90-1	CLIP,		AR	AR	AR	AR	AR	AR	AR	AR	AR	AR	AR	2123 341
	At Sill		—	—	—	—	—	AR	AR	AR	AR	AR	AR	#3583 599
	At Sill		AR	—	AR	—	—	—	—	—	—	—	—	2207 933
	Tube Flange		—	—	—	—	—	AR	AR	AR	AR	AR	AR	2781 518
	At Sill		—	—	—	AR	AR	—	—	AR	AR	AR	—	3404 625
	w/426 or 440, Eng.	70	—	AR	—	AR	AR	—	—	—	—	—	—	2534 113
	w/426 & 440 Eng.	71	—	AR	—	AR	AR	—	—	—	—	—	—	#3583 483
	Tube Front		AR	—	AR	—	—	—	—	—	—	—	—	2883 929
	"S" Type		AR	AR	AR	AR	AR	—	—	—	—	—	—	2925 705
	Fuel Return Tube, w/426 or 440 Eng.		—	AR	—	AR	AR	—	—	—	—	—	—	2530 700
	Fuel Vapor Tube		AR	AR	AR	AR	AR	—	—	—	—	—	—	2123 341
	Fuel Vapor Tube		—	—	—	—	—	AR	AR	AR	AR	AR	AR	2883 929
14-90-4	BRACKET, Tube Retainer, Lt.		1	—	—	—	—	—	—	—	—	—	—	3404 074
	Fuel Line Support, w/426 Eng.		—	1	—	1	1	—	—	—	—	—	—	2780 535

CARLINES J - Challenger, B - Barracuda, V - Valiant, L - Dart, R - Belvedere - Satellite, W - Coronet - Charger, P - Plymouth, D - Dodge, C - Chrysler, Y - Imperial

AR Indicates use as required.

# Indicates parts not listed in any previous parts book.

Numerals in parentheses ( ) refer to notes.

★ Indicates change or addition.

Printed in U.S.A.
January 1972

GROUP 15 - HOOD

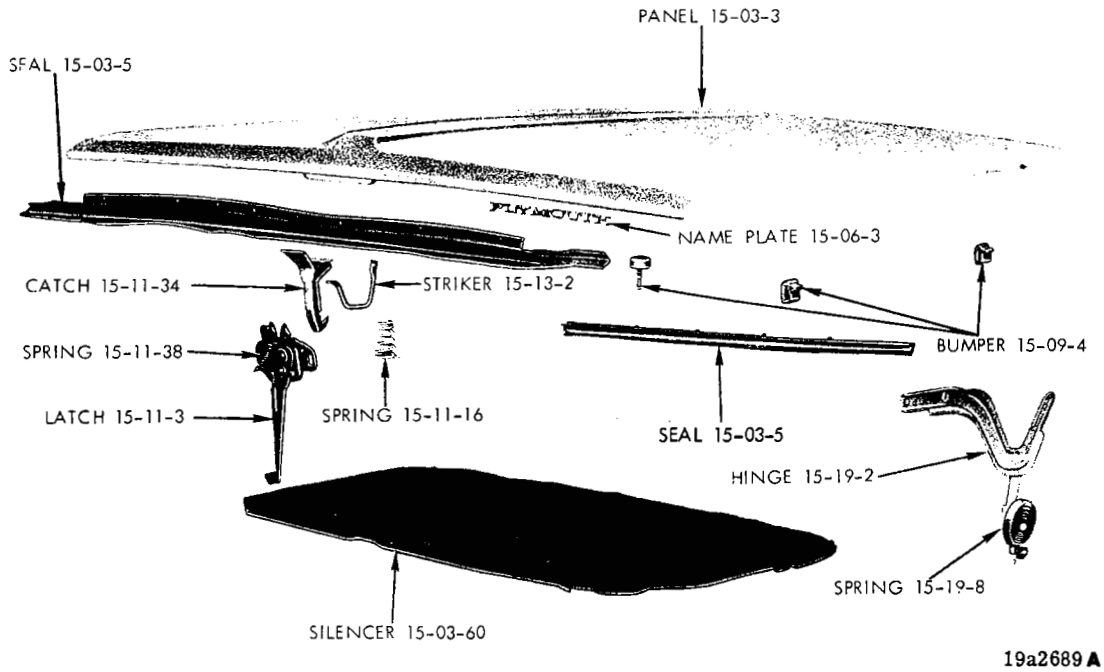

HOOD - VALIANT

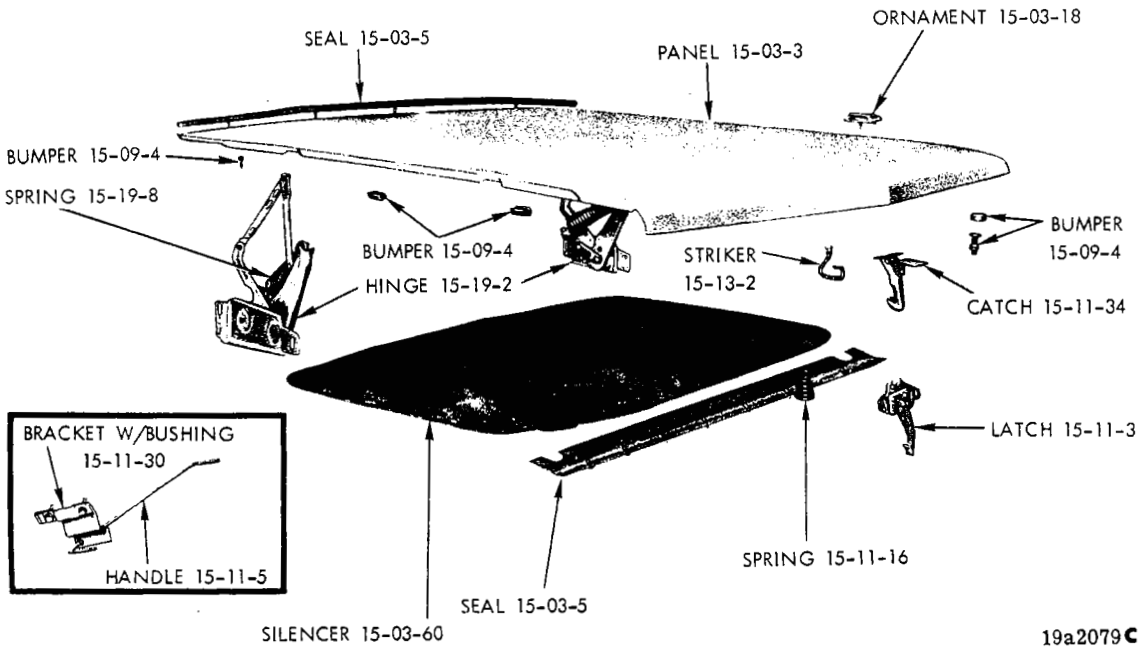

HOOD - BELVEDERE

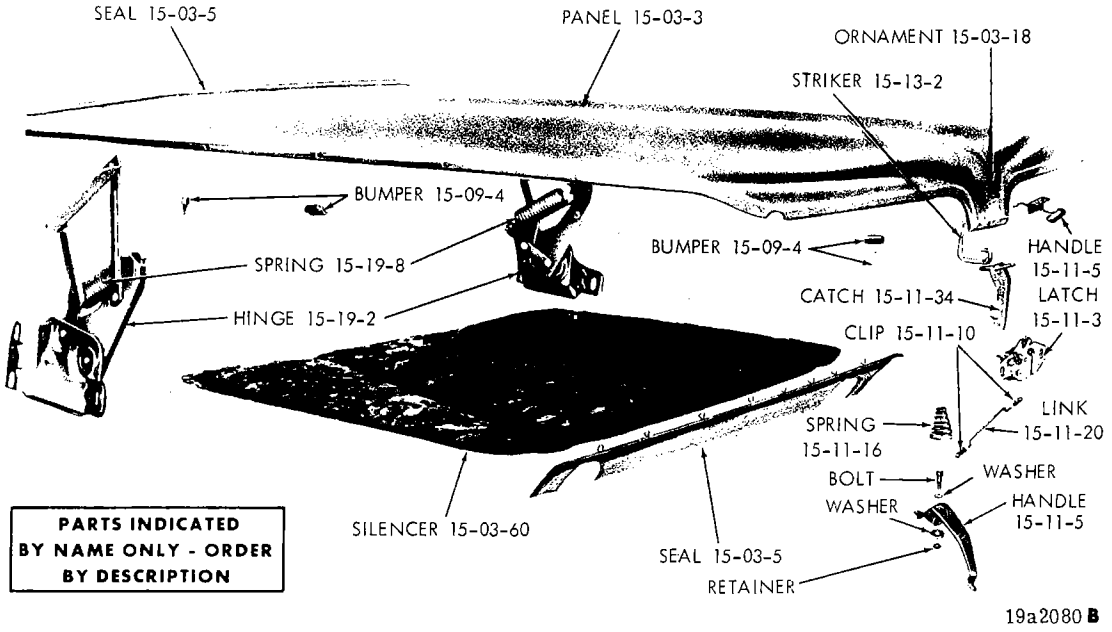

HOOD - CORONET

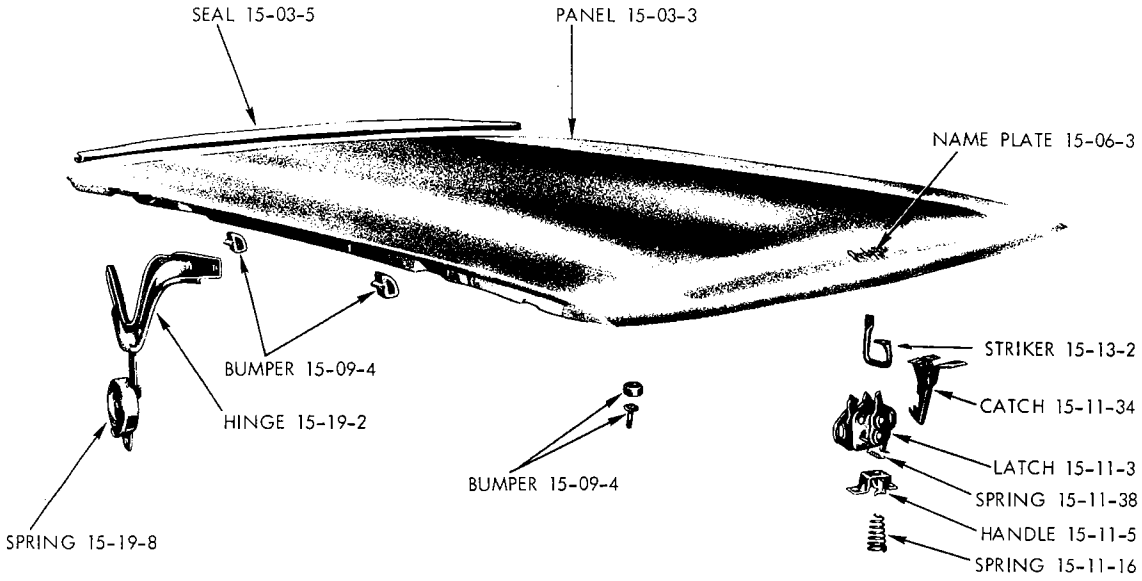

HOOD - DART

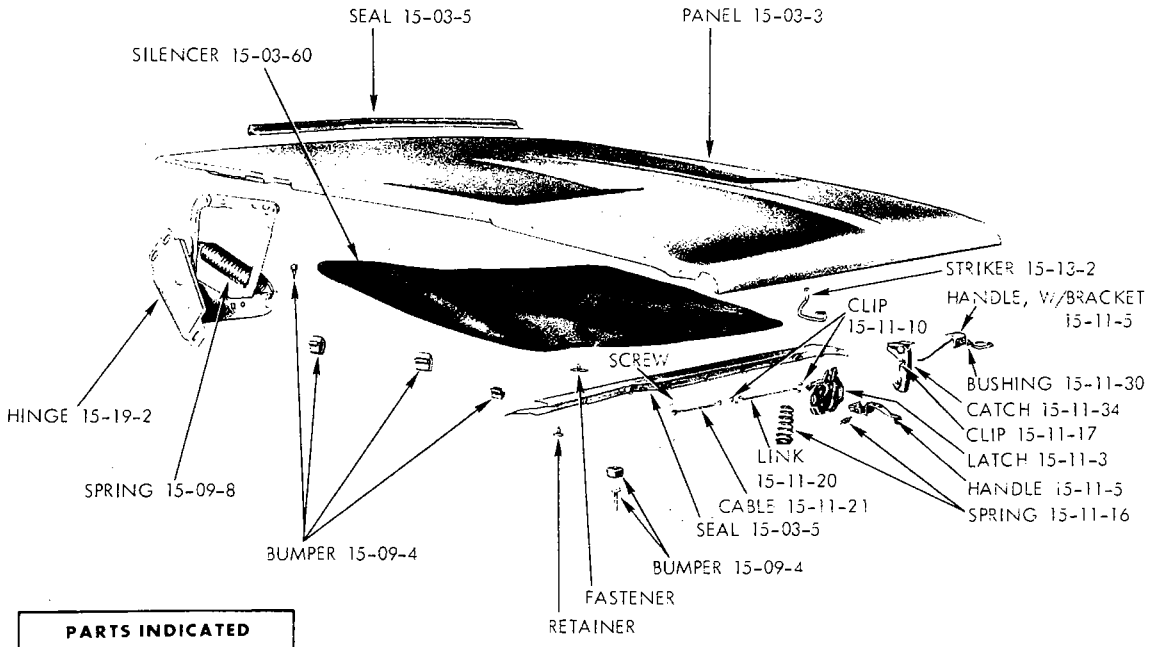

HOOD - CHARGER (1970)

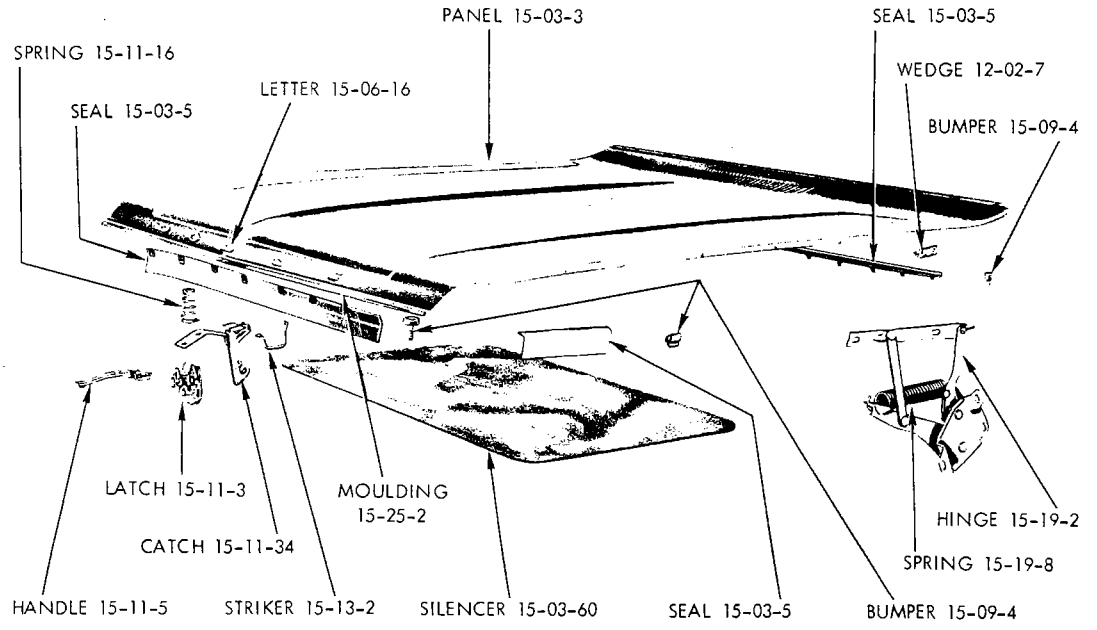

HOOD - DODGE

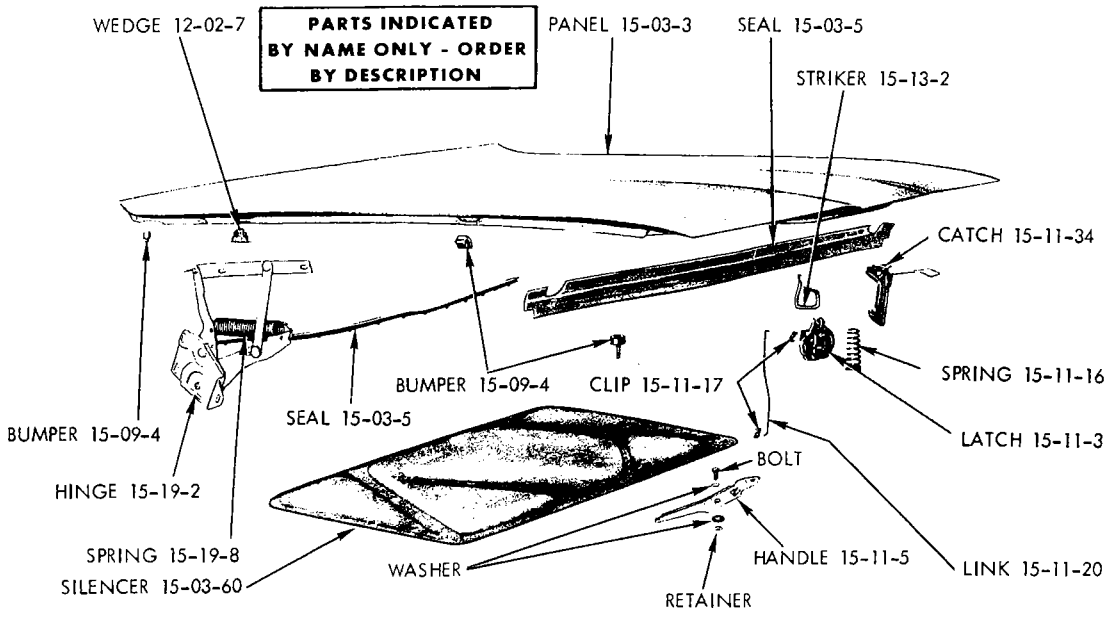

HOOD - CHRYSLER

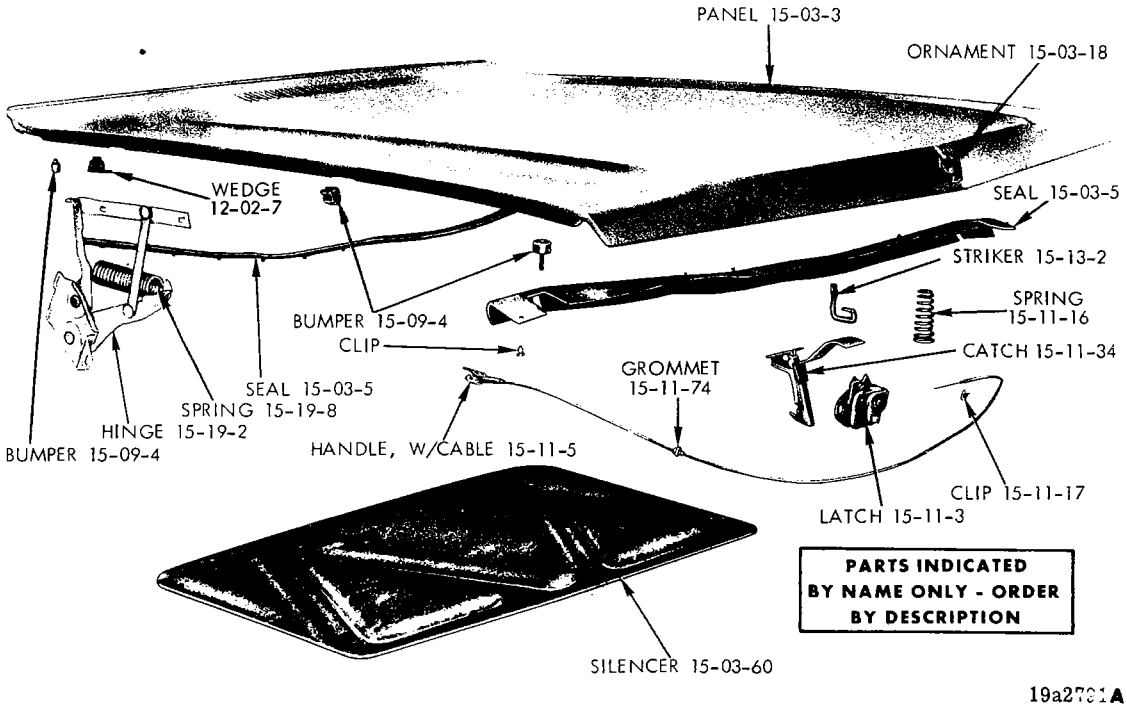

HOOD - IMPERIAL

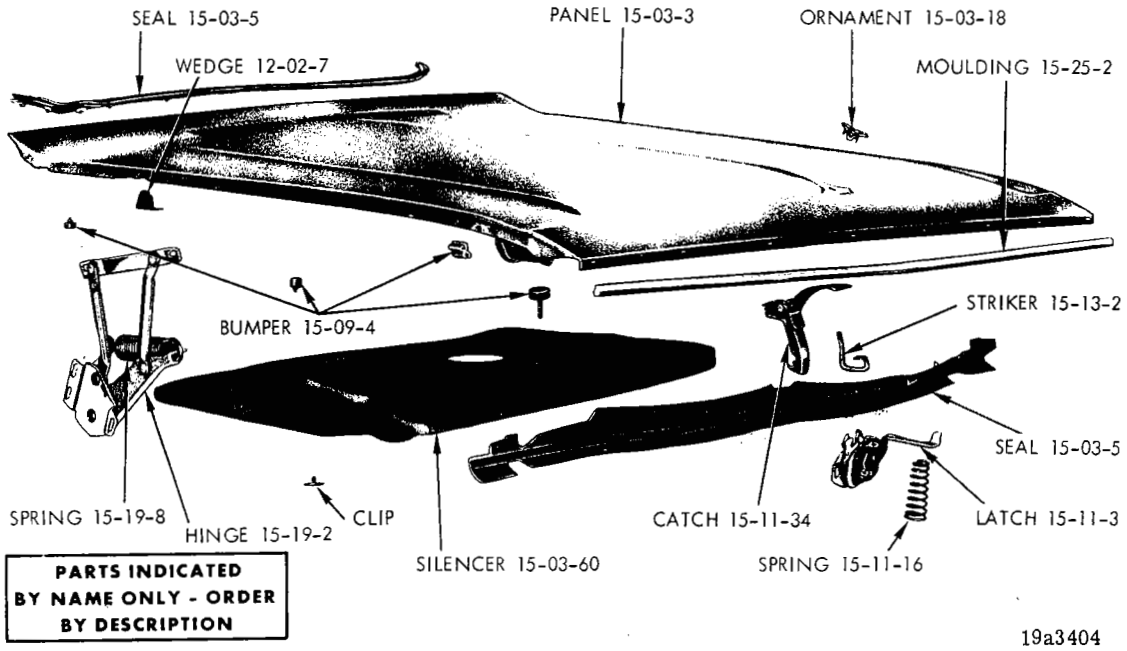

STANDARD HOOD - BARRACUDA AND CHALLENGER

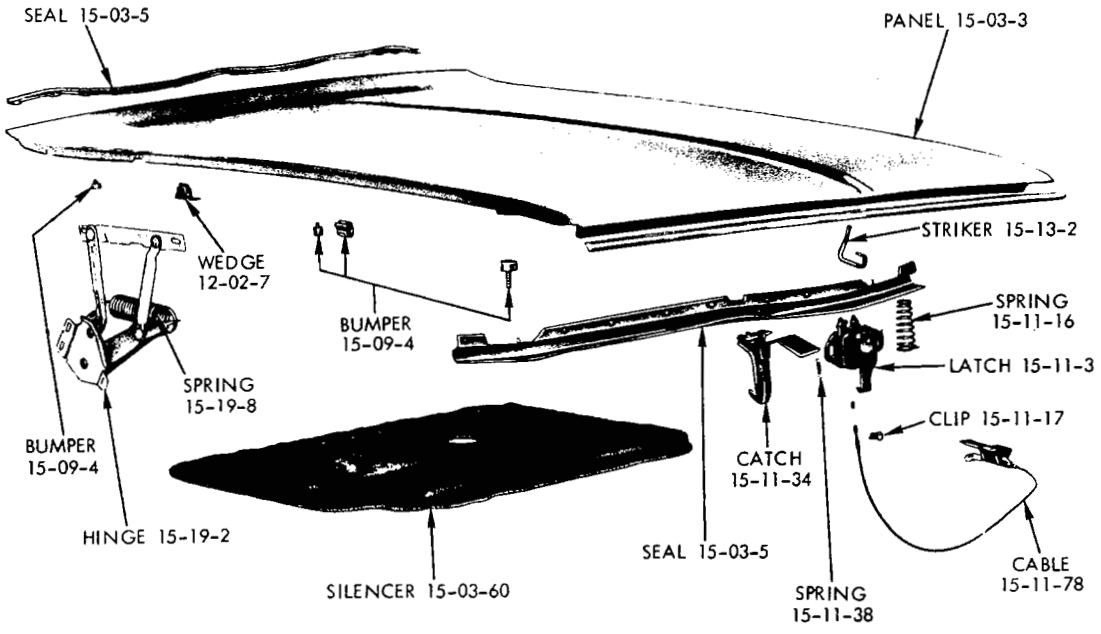

HOOD - CORONET AND CHARGER (TYPICAL OF SATELLITE) - 1971

NOTES

15-03-0 HOOD PANEL

CODE	PART NAME	ENG. TYPE OR CU.IN.	V 1-2	B J 1-2	L 1-2	R 1-2	W 1-2	P 1-2	D 1-2	C 1	C 2	C 3	Y 1	PART NUMBER
15-03-3	PANEL (Optional w/1-3482 862 & 1-3579 671)	70	1	—	—	—	—	—	—	—	—	—	—	2934 072
		71	1	—	—	—	—	—	—	—	—	—	—	3482 862
	V, Export	71	1	—	—	—	—	—	—	—	—	—	—	3482 864
	L, All (Optional w/3417 926 or 3482 898)		—	—	1	—	—	—	—	—	—	—	—	3417 088
	B-H, B-P, Std.	70	—	1	—	—	—	—	—	—	—	—	—	2934 856
	B-S, w/383 or 440 Eng. (Optional w/3417 997)		—	1	—	—	—	—	—	—	—	—	—	3417 069
	B-S, w/426 or 440 Eng., w/Fresh Air, Shaker	70	—	1	—	—	—	—	—	—	—	—	—	2998 805
	B-H, B-P	71	—	1	—	—	—	—	—	—	—	—	—	3417 996
	B, w/Cold Air	71	—	1	—	—	—	—	—	—	—	—	—	3443 797
	B-S, w/Cold Air, Fiber Glass		—	1	—	—	—	—	—	—	—	—	—	3443 686
	J-H, Challenger	70	—	1	—	—	—	—	—	—	—	—	—	2934 850
	J-S, Challenger R/T, Std.	70	—	1	—	—	—	—	—	—	—	—	—	3417 066
	J-S, w/Cold Air Pack, Shaker	70	—	1	—	—	—	—	—	—	—	—	—	3443 271
	J-H, J-S, Steel w/Hi Perf.	71	—	1	—	—	—	—	—	—	—	—	—	3482 618
	Jh, Std.	71	—	1	—	—	—	—	—	—	—	—	—	3482 614
	Complete Assy., J, H	71	—	1	—	—	—	—	—	—	—	—	—	3611 342
	J, Fiber Glass		—	1	—	—	—	—	—	—	—	—	—	3443 685
	J-H, J-S, w/Fresh Air, Shaker	71	—	1	—	—	—	—	—	—	—	—	—	3443 880
	R, except R-M and R-S	70	—	—	—	1	—	—	—	—	—	—	—	2934 886
	R-M, R-S, w/o Fresh Air	70	—	—	—	1	—	—	—	—	—	—	—	3417 040
	R-M, R-S, w/Fresh Air	70	—	—	—	1	—	—	—	—	—	—	—	3417 444
	R, 4 D. and Sta. Wgn.	71	—	—	—	1	—	—	—	—	—	—	—	3482 021
	R-H, R-P 2 Dr. H.T.	71	—	—	—	1	—	—	—	—	—	—	—	3482 024
	R-M, R-S, 2Dr. H.T. w/o Fresh Air	71	—	—	—	1	—	—	—	—	—	—	—	3482 468
	R-M, R-S, 2 Dr. H.T. w/Fresh Air	71	—	—	—	1	—	—	—	—	—	—	—	3482 497
	W, except W-M, W-S and Charger	70	—	—	—	—	1	—	—	—	—	—	—	3417 037
	W-M, W-S, 2 D., 2 D.H.T. and Cv. Cp.	70	—	—	—	—	1	—	—	—	—	—	—	3417 051
	W, Charger (Also Used on 1969 Daytona)	70	—	—	—	—	1	—	—	—	—	—	—	3417 057
	W-M, W-S, w/Cold Air Pack	70	—	—	—	—	1	—	—	—	—	—	—	3417 779
	W, 4 D. and Sta. Wgn.	71	—	—	—	—	1	—	—	—	—	—	—	3482 006
	W-H, 2 D.H.T., W-P, 2 D.H.T. and Fast Back, Std.	71	—	—	—	—	1	—	—	—	—	—	—	3482 018
	W-M, W-S, 2 D.H.T., w/426 or 440 Eng.	71	—	—	—	—	1	—	—	—	—	—	—	3482 535
	W-M, W-S, 2 Dr. H.T. w/F/Air	71	—	—	—	—	1	—	—	—	—	—	—	3482 471
		71	—	—	—	—	—	1	—	—	—	—	—	3482 140
		71	—	—	—	—	—	—	1	—	—	—	—	3482 548
	P, w/o Turn Signal	70	—	—	—	—	—	1	—	—	—	—	—	3417 017
	P, w/Turn Signal	70	—	—	—	—	—	1	—	—	—	—	—	3417 077
	D	70	—	—	—	—	—	—	1	—	—	—	—	3417 012
	C-M 300 H	70	—	—	—	—	—	—	—	—	1	—	—	3571 232
	C (Optional w/1-3482 867 & 1-3579 482)	70	—	—	—	—	—	—	—	1	1	1	—	2859 766
	(Optional w/1-3482 867 & 1-3579 482) C	71	—	—	—	—	—	—	—	1	1	1	—	3482 867
	Y (Optional w/3611 427)	70	—	—	—	—	—	—	—	—	—	—	1	2934 022
	Y	71	—	—	—	—	—	—	—	—	—	—	1	3482 928
15-03-5	SEAL, Hood to Cowl		1	—	1	—	—	—	—	—	—	—	—	2785 695
	Hood to Cowl	70	—	1	—	—	—	—	—	—	—	—	—	3440 865
	Hood to Cowl	71	—	1	—	1	1	—	—	—	—	—	—	3440 865
	Hood to Cowl	70	—	—	—	1	1	—	—	—	—	—	—	2582 705
	Hood to Cowl		—	—	—	—	—	1	1	1	1	1	1	3499 208
	Hood to Yoke		1	—	—	—	—	—	—	—	—	—	—	2582 134

CARLINES J - Challenger, B - Barracuda, V - Valiant, L - Dart, R - Belvedere - Satellite, W - Coronet - Charger, P - Plymouth, D - Dodge, C - Chrysler, Y - Imperial

AR Indicates use as required.

# Indicates parts not listed in any previous parts book.

Numerals in parentheses ( ) refer to notes.

★ Indicates change or addition.

Printed in U.S.A. January 1972

CODE	PART NAME		ENG. TYPE OR CU.IN.	V 1-2	B J 1-2	L 1-2	R 1-2	W 1-2	P 1-2	D 1-2	C 1	C 2	C 3	Y 1	PART NUMBER
15-03-0	**HOOD PANEL Cont'd.**														
15-03-5	SEAL Cont'd.														
	Hood to Yoke			—	1	—	—	—	—	—	—	—	—	—	2949 608
	Hood to Cowl Top	71		—	1	—	—	—	—	—	—	—	—	—	2895 783
	Hood to Yoke	70		—	—	1	—	—	—	—	—	—	—	—	2998 124
	Hood to Yoke	70		—	—	—	1	1	—	—	—	—	—	—	2786 182
	Hood to Yoke	71		—	—	—	1	1	—	—	—	—	—	—	3442 118
	Hood to Yoke	70		—	—	—	—	—	1	1	1	1	1	—	2898 206
	Hood to Yoke	71		—	—	—	—	—	1	1	—	—	—	—	2898 206
	Hood to Yoke	71		—	—	—	—	—	—	—	1	1	1	—	3442 975
	Hood to Yoke	71		—	—	—	—	—	—	—	—	—	—	1	3442 548
	Hood to Yoke Bracket			—	—	—	—	—	—	—	—	—	—	1	2898 451
15-03-8	CLIP, Hood to Cowl Seal			6	12	6	6	6	14	14	14	14	14	14	2480 904
	Hood to Cowl Seal, Outboard			—	6	—	—	—	—	—	—	—	—	—	2217 508
	Hood to Cowl Seal, Center			—	6	—	—	—	—	—	—	—	—	—	2217 508
	GRILLE, Carb. A/Scoop			—	1	—	—	—	—	—	—	—	—	—	3418 660-1
15-03-18	ORNAMENT, Hood														
	NOTE: Refer to vehicle exterior illustrations in body group 23 for hood ornamentation														
	DECAL, Hood Inner Pnl. "Shaker", B	70		—	1	—	—	—	—	—	—	—	—	—	2998 817
	DECAL, Hood Air Scoop Side (Teeth) R	70		—	—	—	1	—	—	—	—	—	—	—	3443 630-1
	BEZEL, Hood Orn.			1	—	1	1	1	—	—	—	—	—	—	3443 130-1
15-03-47	WELl, Hood Top Ornament, B-S	70		—	1	—	—	—	—	—	—	—	—	—	2998 036-7
	SEAL, Hood Top Ornament, w/Fresh Air, R-M, R-S, 2 D.H.T.	71		—	—	—	1	—	—	—	—	—	—	—	3443 386
	SEAL, Hood Top Ornament Cold Air Door Front, R-M, R-S, 2 D.H.T.	71		—	—	—	1	—	—	—	—	—	—	—	3443 385
15-03-51	DOOR, Hood Cold Air Intake, w/Fresh Air, R-M, R-S	70		—	—	—	1	—	—	—	—	—	—	—	2949 449
	Hood F/Air Intake Lower R-M, R-S	70		—	—	—	1	—	—	—	—	—	—	—	3508 177
		71		—	—	—	1	—	—	—	—	—	—	—	3443 517
	PIN			—	—	—	2	—	—	—	—	—	—	—	6028 781
	RING			—	—	—	2	—	—	—	—	—	—	—	6028 780
	Carburetor Air Scoop Fresh Air, w/426 or 440 Eng., B,J	70		—	1	—	—	—	—	—	—	—	—	—	3418 692
	Carburetor Air Scoop Warm Air, w/426 or 440 Eng., B	70		—	1	—	—	—	—	—	—	—	—	—	3418 670
	Carburetor Air Scoop Warm Air	71		—	1	—	—	—	—	—	—	—	—	—	3418 670
	Carburetor Air Scoop Fresh Air	71		—	1	—	—	—	—	—	—	—	—	—	3418 692
	Carburetor Air Scoop Fresh Air	71		—	1	—	—	—	—	—	—	—	—	—	3418 692
	Hood Fresh Air Intake Lower, R-M, R-S, W-M, W-S	71		—	—	—	1	1	—	—	—	—	—	—	3508 177
	Hood Cold Air Intake, R-M, R-S, 2 D.H.T.	71		—	—	—	1	—	—	—	—	—	—	—	3443 518
	Hood Cold Air Intake, W-M, W-S	71		—	—	—	—	1	—	—	—	—	—	—	2949 449
	Hood Cold Air Intake Black	71		—	—	—	—	1	—	—	—	—	—		=3573 691
15-03-52	BAFFLE, Hood Air Intake Scoop, B, w/426 or 440 Eng., W-M, W-S, All	70		—	1	—	—	1	—	—	—	—	—	—	2998 396-7
	Hood Air Scoop Water, L-M, 2 D.H.T., w/340 Eng.			—	—	1	—	—	—	—	—	—	—	—	2998 881
	Hood Air Scoop Water, L, Duster and Duster 340	71		—	—	2	—	—	—	—	—	—	—	—	2998 881
	Deflector or Seal, Hood Turn Signal			—	—	—	—	—	1	—	—	—	—	—	=3443 501
	Clips			—	—	—	—	—	4	—	—	—	—	—	=6002 326
15-03-53	ROD, Carb. Air Scoop Door, w/Fresh Air, B,J	71		—	1	—	—	—	—	—	—	—	—	—	3418 666
15-03-54	SOLENOID, Hood Fresh Air Intake, R-M, R-S	70		—	—	—	1	—	—	—	—	—	—	—	3508 464
	Hood Fresh Air Intake Door, R-M, R-S, W-M, W-S	71		—	—	—	1	1	—	—	—	—	—	—	3586 056

CARLINES: J - Challenger, B - Barracuda, V - Valiant, L - Dart, R - Belvedere - Satellite, W - Coronet - Charger, P - Plymouth, D - Dodge, C - Chrysler, Y - Imperial

AR Indicates use as required.

# Indicates parts not listed in any previous parts book.

Numerals in parentheses ( ) refer to notes.

★ Indicates change or addition.

Printed in U.S.A. January 1972

15-03-0 HOOD PANEL Cont'd.

CODE	PART NAME	ENG. TYPE OR CU.IN.	V 1-2	B J 1-2	L 1-2	R 1-2	W 1-2	P 1-2	D 1-2	C 1	C 2	C 3	Y 1	PART NUMBER
15-03-57	PIN, Carb. Air Scoop Door Control Cable B/Crank		—	2	—	—	—	—	—	—	—	—	—	3462 726
15-03-60	SILENCER, Hood		1	—	1	—	—	—	—	—	—	—	—	2582 136
		70	—	1	—	—	—	—	—	—	—	—	—	2949 609
		70	—	—	—	1	1	—	—	—	—	—	—	2949 831
	R, 2 D.H.T.	71	—	—	—	1	—	—	—	—	—	—	—	3442 995
	R, 4 D. and Sta. Wgn., W, All	71	—	1	—	1	1	—	—	—	—	—	—	3443 230
		71	—	—	—	—	—	1	1	1	1	1	1	2898 207
	Fastener		AR	AR	AR	AR	AR	AR	AR	AR	AR	AR	AR	6001 798
15-03-63	CONTROL, Hood Carburetor Air Intake, W-M, W-S		—	—	—	—	1	—	—	—	—	—	—	2949 222
15-03-64	SCOOP, Carburetor Air, w/426 or 440 Eng., B	70	—	1	—	—	—	—	—	—	—	—	—	3462 249
	Hood Air Black		—	1	—	—	—	—	—	—	—	—	—	3577 472
	Screw, Scoop to Base		—	7	—	—	—	—	—	—	—	—	—	6024 069
	Carburetor Air, L-M, 2 D.H.T.		1	—	1	—	—	—	—	—	—	—	—	3443 130-1
	Hood Air Intake, W-M, W-S	70	—	—	—	—	1	—	—	—	—	—	—	2949 476-7
	Hood Air, W-M, W-S	70	—	—	—	—	1	—	—	—	—	—	—	2949 194-5
15-03-65	COVER, Hood Air Intake Scoop, W-M, W-S	70	—	—	—	—	1	—	—	—	—	—	—	2949 478-9
	ADAPTER, Carburetor Air Scoop,		—	1	—	—	—	—	—	—	—	—	—	3418 673
15-03-67	SEAL, Carburetor Air Scoop Hood, w/426 or 440 Eng., w/Fresh Air, B	70	—	1	—	—	—	—	—	—	—	—	—	3418 658
	Hood Air Scoop	71	—	1	—	—	—	—	—	—	—	—	—	3418 658
	Hood Cold Air Intake Duct, w/Fresh Air, R-M, R-S	70	—	—	—	1	—	—	—	—	—	—	—	2949 472
	Hood Cold Air Intake Duct, Lower, w/Fresh Air, R-M, R-S	70	—	—	—	1	—	—	—	—	—	—	—	2949 233
	Hood Cold Air Intake Door to Hood, R-M, R-S	70	—	—	—	1	—	—	—	—	—	—	—	2998 652
	HOOD, Rear Directional Indicators w/Engine N/Plate RM-RS	70	—	—	—	1	—	—	—	—	—	—	—	2998 577
	R-M, R-S	70	—	—	—	1	—	—	—	—	—	—	—	2998 577
	Hood Air Intake Scoop, W-M, W-S	70	—	—	—	—	1	—	—	—	—	—	—	2949 498-9
	Hood Air Intake Center Duct, W-M, W-S	70	—	—	—	—	1	—	—	—	—	—	—	2998 458
	Hood Air Intake Outer Upper Duct, W-M, W-S	70	—	—	—	—	2	—	—	—	—	—	—	2949 153
	Hood Air Intake Lower Duct, W-M, W-S, R-M, R-S		—	—	—	1	1	—	—	—	—	—	—	2949 233
	Hood Cold Air Intake Door to Door, R-M, R-S, 2 D.H. Top, W-M, W-S, All		—	—	—	1	1	—	—	—	—	—	—	2998 654-5
	Hood Cold Air Intake Door to Hood, W-M, W-S, All	71	—	—	—	—	1	—	—	—	—	—	—	2998 652
	Carb. F/Air Door 44" lg. 3/8" wd.	71	—	1	—	1	1	—	—	—	—	—	—	3443 386
	36" lg. 3/8" wd.	71	—	1	—	1	1	—	—	—	—	—	—	3443 385
15-03-69	TAPE, Hood													
	NOTE: Refer to Vehicle Exterior Illust. in Body Group 23 for Hood Tape.													
15-03-70	RETAINER, Hood Carburetor Air Control Cable Mtg., W-M, W-S	70	—	—	—	—	2	—	—	—	—	—	—	2197 678
15-03-73	SCREEN, Hood Cowl Fresh Air Intake, J	71	—	1	—	—	—	—	—	—	—	—	—	3443 974-5
15-03-74	CABLE, Hood Duct Air Control Doors, W-M, W-S	70	—	—	—	—	1	—	—	—	—	—	—	2949 229
	Dash to Carburetor Air Scoop Door Control, w/426 or 440 Eng., B	70	—	1	—	—	—	—	—	—	—	—	—	3462 264
	Carburetor Air Scoop Door Control, w/426 or 440 Eng., B	70	—	1	—	—	—	—	—	—	—	—	—	3462 247

CARLINES J - Challenger, B - Barracuda, V - Valiant, L - Dart, R - Belvedere - Satellite, W - Coronet - Charger, P - Plymouth, D - Dodge, C - Chrysler, Y - Imperial

AR Indicates use as required.

Numerals in parentheses ( ) refer to notes.

# Indicates parts not listed in any previous parts book.

★ Indicates change or addition.

Printed in U.S.A. January 1972

15-03-0 HOOD PANEL Cont'd.

CODE	PART NAME	ENG. TYPE OR CU.IN.	V 1-2	B J 1-2	L 1-2	R 1-2	W 1-2	P 1-2	D 1-2	C 1	C 2	C 3	Y 1	PART NUMBER
15-03-74	CABLE Cont'd.													
	CABLE, Dash to Carb. Air Scoop Door Control	71	—	1	—	—	—	—	—	—	—	—	—	3462 264
	Carb. to Air Scoop Door	71	—	1	—	—	—	—	—	—	—	—	—	3462 247
15-03-76	DUCT, Hood Cold Air Intake, R-M, R-S	70	—	—	—	1	—	—	—	—	—	—	—	2949 471
	Hood Air Intake	71	—	—	—	—	1	—	—	—	—	—	—	2949 471
	Hood Air Intake Outer, W-M, W-S		—	—	—	—	1	—	—	—	—	—	—	2998 452-3
	Hood Air Intake Center, W-M, W-S	70	—	—	—	—	1	—	—	—	—	—	—	2998 461
	Hood Air Intake Outer, Lt., w/426 Eng., W-M, W-S	70	—	—	—	—	1	—	—	—	—	—	—	2998 457
	Hood Cold Air Intake, w/Fresh Air, R-M, R-S, W-M, W-S, 2 D.H.T.	71	—	—	—	1	1	—	—	—	—	—	—	3442 614
	BRACE, Hood Inr. Pnl. Duct Mtg. (In White) w/F/Air		—	—	—	—	1	—	—	—	—	—	—	3573 929
15-03-77	GROMMET, Hood Air Intake Door Control Cable		—	—	—	1	1	—	—	—	—	—	—	1886 101
15-03-79	TEXTURE, Hood Top Ornament, Panel Closure B		—	1	—	—	—	—	—	—	—	—	—	2998 212-3
15-03-82	CLIP, Carburetor Air Scoop Door Rod, B		—	2	—	—	—	—	—	—	—	—	—	629 792
15-03-83	PANEL, Hood Top Orn. Closure, J		—	1	—	—	—	—	—	—	—	—	—	2998 180-1
15-03-84	SWITCH, Air Grabber Vacuum, w/Fresh Air, R-M, R-S	70	—	—	—	1	—	—	—	—	—	—	—	2947 776
	Air Grabber, w/Fresh Air	70	—	—	—	1	1	—	—	—	—	—	—	3488 238
		71	—	—	—	1	1	—	—	—	—	—	—	3488 521
15-03-85	BEZEL, Air Grabber Switch, w/Fresh Air, R-M, R-S	70	—	—	—	1	—	—	—	—	—	—	—	2947 777
	Air Grabber	71	—	—	—	1	1	—	—	—	—	—	—	3488 527
15-03-86	HINGE, Hood Cold Air Intake Door, w/Fresh Air, R-M, R-S	70	—	—	—	1	—	—	—	—	—	—	—	2949 468
	Hood Cold Air Door, R-M, R-S, 2 D.H.T.	71	—	—	—	1	—	—	—	—	—	—	—	3443 384
	W-M, W-S	71	—	—	—	—	1	—	—	—	—	—	—	2948 468
15-03-87	LOUVER, Hood Outer Panel Rear, w/Turn Indicator Signal, R-M, R-S	70	—	—	—	1	—	—	—	—	—	—	—	2998 043
	Hood Outer Panel Rear, w/o Turn Signal Indicator, R-M, R-S	70	—	—	—	1	—	—	—	—	—	—	—	3442 976
15-03-88	CLAMP, Carburetor Air Scoop Adapter, w/426 or 440 Eng., w/Fresh Air, B		—	7	—	—	—	—	—	—	—	—	—	3418 672
15-03-89	BEARING, Carburetor Air Scoop Door Flange, w/426 or 440 Eng., w/Fresh Air		—	2	—	—	—	—	—	—	—	—	—	3418 683
15-03-90	SPRING, Hood Fresh Air Intake Door Tension, Lt., R-M, R-S		—	—	—	1	—	—	—	—	—	—	—	3508 181
	Hood Fresh Air Intake Door and Linkage Actuator Assist, Rt., R-M, R-S		—	—	—	1	—	—	—	—	—	—	—	3508 186
	Hood Fresh Air Intake Door and Linkage Actuator Assist, Rt., R-M, R-S, W-M, W-S	71	—	—	—	1	1	—	—	—	—	—	—	3508 186
	Hood Fresh Air Door Tension, Lt., R-M, R-S, W-M, W-S	71	—	—	—	1	1	—	—	—	—	—	—	3508 181
15-03-91	LEVER, Hood Fresh Air Intake Door Drive, Rt., R-M, R-S		—	—	—	1	—	—	—	—	—	—	—	3418 665
15-03-92	ACTUATOR, w/Brackets, Hood Fresh Air Intake Door, Rt., R-M, R-S		—	—	—	1	1	—	—	—	—	—	—	3508 178
15-03-93	TUBE, Hood Fresh Air Intake Door, R-M, R-S	70	—	—	—	1	—	—	—	—	—	—	—	3508 455
	Hood Fresh Air Intake Door Actuator Reservoir Tank to Eng., R-M, R-S	70	—	—	—	1	—	—	—	—	—	—	—	3508 447

CARLINES J - Challenger, B - Barracuda, V - Valiant, L - Dart, R - Belvedere - Satellite, W - Coronet - Charger, P - Plymouth, D - Dodge, C - Chrysler, Y - Imperial

AR Indicates use as required.

# Indicates parts not listed in any previous parts book.

Numerals in parentheses ( ) refer to notes.

★ Indicates change or addition.

Printed in U.S.A. January 1972

CODE	PART NAME	ENG. TYPE OR CU.IN.	V 1-2	B J 1-2	L 1-2	R 1-2	W 1-2	P 1-2	D 1-2	C 1	C 2	C 3	Y 1	PART NUMBER
15-03-0	**HOOD PANEL Cont'd.**													
15-03-93	TUBE Cont'd.													
	Hood Fresh Air Door Vacuum, R-M, R-S, W-M, W-S	71	—	—	—	1	1	—	—	—	—	—	—	3508 426
	TEE, Vacuum Tube		—	1	—	1	1	—	—	—	—	—	—	2857 908
	REPAIR KIT, Hood Fresh Air Intake		—	—	—	—	—	—	—	—	—	—	—	
	Door Vacuum Tube, R-M, R-S		—	—	—	1	—	—	—	—	—	—	—	2275 215
15-03-94	RESERVOIR, Hood Fresh Air Intake													
	Actuator, R-M, R-S	70	—	—	—	1	—	—	—	—	—	—	—	3420 851
	R-M, R-S, W-M, W-S	71	—	—	—	1	1	—	—	—	—	—	—	3420 851
15-03-100	STRAP, Hood F/Air Intake Tube to Brkt. Att.		—	—	—	1	1	—	—	—	—	—	—	2945 704
15-06-0	**HOOD NAME PLATE, MEDALLION AND LETTERS**													
	NOTE: Refer to vehicle exterior illustrations in body group 23 for hood name plates, medallions and letters													
15-06-23	TUBE, Hood Top Ornament Drain, W-S, 2 D.H.T.	71	—	—	—	—	1	—	—	—	—	—	—	3443 383
15-09-0	**HOOD BUMPER**													
15-09-4	BUMPER, Fender Hood Side		4	—	4	—	—	—	—	—	—	—	—	2949 250
	After Sept. 1971	71	4	—	4	—	—	—	—	—	—	—	—	3443 894
	Fender Hood Side Front, B		—	2	—	—	—	—	—	—	—	—	—	2949 617
	Hood Rear Leveling		—	3	—	—	—	—	—	—	—	—	—	2900 266
	Hood Leveling Rear Outer, J		—	2	—	—	—	—	—	—	—	—	—	2784 714
	Fender Hood Leveling, J		—	2	—	—	—	—	—	—	—	—	—	2949 658
	Fender Hood Side		—	—	—	4	4	—	—	—	—	—	—	2786 236
	Fender Hood Side Front, Charger and Charger R/T		—	—	—	—	2	—	—	—	—	—	—	2786 597
	Fender Yoke Bracket to Hood		—	—	—	2	2	—	—	—	—	—	—	2276 804
	Fender Cowl Bracket Hood		—	—	—	2	2	—	—	—	—	—	—	2276 749
	Fender Flange Reinforcement Front Extension Hood		2	2	2	—	—	2	2	2	2	2	2	2276 804
	Fender Hood Side		—	—	—	—	—	2	2	2	2	2	2	2898 588
	Fender Cowl Bracket Hood		—	—	—	—	—	2	2	2	2	2	2	2898 762
	Hood Leveling Rear, J	71	—	1	—	—	—	—	—	—	—	—	—	3443 698
	Hood Leveling Rear Outer, B		—	2	—	—	—	—	—	—	—	—	—	3443 833
	Fender Hood Side Front	71	—	—	—	—	2	—	—	—	—	—	—	2949 658
	Hood Leveling Center	71	—	—	—	1	1	—	—	—	—	—	—	2900 266
	Hood Leveling Corner	71	—	—	—	2	—	—	—	—	—	—	—	3443 645
	Hood Leveling Corner	71	—	—	—	—	2	—	—	—	—	—	—	2784 714
	Battery Tray Supt.		—	—	—	—	—	—	—	—	—	—	1	2276 749
	SCREW, Adjusting, Fender Yoke Brkt. To Hood Bumper		—	—	—	2	2	—	—	—	—	—	—	6023 531
	SCREW, Adjusting, Frt. Ext. Hood Bumper		2	2	2	—	—	2	2	2	2	2	2	6023 531
15-09-19	REINFORCEMENT, Hood Inner Panel Bumper		—	—	—	—	2	—	—	—	—	—	—	2949 273
	Reinf. Pkg.	70	1	—	—	—	—	—	—	—	—	—	—	3579 671
15-11-0	**HOOD LATCH**													
15-11-3	LATCH		1	—	—	—	—	—	—	—	—	—	—	2935 351
	B	70	—	1	—	—	—	—	—	—	—	—	—	2999 067
	J	70	—	1	—	—	—	—	—	—	—	—	—	2999 081
			—	—	1	—	—	—	—	—	—	—	—	2583 206
		70	—	—	—	1	—	—	—	—	—	—	—	3508 578
			—	—	—	—	1	—	—	—	—	—	—	2999 216
		71	—	1	—	—	—	—	—	—	—	—	—	2935 373
	2 D.H.T.	71	—	—	—	1	—	—	—	—	—	—	—	3508 325
	4 D. and Sta. Wgn.	71	—	—	—	1	1	—	—	—	—	—	—	2583 352
	All, w/Instrument Panel Release	71	—	—	—	1	1	1	1	1	1	1	—	3548 805
	At Hood Frt.		—	—	—	—	—	1	—	—	—	—	—	2999 152
			—	—	—	—	—	—	—	—	—	—	1	2486 022

CARLINES: J - Challenger, B - Barracuda, V - Valiant, L - Dart, R - Belvedere - Satellite, W - Coronet - Charger, P - Plymouth, D - Dodge, C - Chrysler, Y - Imperial

AR Indicates use as required.

# Indicates parts not listed in any previous parts book.

Numerals in parentheses ( ) refer to notes.

★ Indicates change or addition.

Printed in U.S.A. January 1972

15-11-0 HOOD LATCH Cont'd.

CODE	PART NAME	ENG. TYPE OR CU.IN.	V 1-2	B J 1-2	L 1-2	R 1-2	W 1-2	P 1-2	D 1-2	C 1	C 2	C 3	Y 1	PART NUMBER
15-11-5	HANDLE, Hood Latch Release, B	70	—	1	—	—	—	—	—	—	—	—	—	2999 077
	B	71	—	1	—	—	—	—	—	—	—	—	—	3508 318
			—	—	1	—	—	—	—	—	—	—	—	2999 741
	W, except Charger and Charger R/T	70	—	—	—	—	1	—	—	—	—	—	—	2999 736
	W, Charger and Charger R/T	70	—	—	—	—	1	—	—	—	—	—	—	3454 225
		70	—	—	—	—	—	1	—	—	—	—	—	3454 144
		70	—	—	—	—	—	—	—	1	1	1	—	2999 747
		71	—	—	—	—	—	—	—	1	1	1	—	3548 252
	Complete	71	—	—	—	—	—	—	—	1	1	1	—	3586 124
		70	—	—	—	—	—	—	1	—	—	—	—	2999 161
	w/Bezel and Cable, on Instrument Panel (Chrome Hdle.)	70	—	—	—	—	—	—	—	—	—	—	1	2935 363
	HANDLE, w/Bracket, Safety Catch Release, except Charger and Charger R/T	70	—	—	—	—	1	—	—	—	—	—	—	3454 331
	BOLT, w/Shoulder, Hood Latch Rel. Handle	70	—	—	—	—	1	—	—	—	—	—	—	6028 427
			—	—	—	—	—	—	—	1	1	1	—	6029 167
	WASHER, Hood Latch Rel. Handle	70	—	—	—	—	1	—	—	—	—	—	—	6026 910
	J	71	—	1	—	—	—	—	—	—	—	—	—	3508 321
	HANDLE, Hood Catch Release, J	71	—	1	—	—	—	—	—	—	—	—	—	3548 509
	R, 2 D.H.T.	71	—	—	—	1	—	—	—	—	—	—	—	3548 615
	R, 4 D. and Sta. Wgn.	71	—	—	—	1	—	—	—	—	—	—	—	3508 327
	W, 2 D.H.T.	71	—	—	—	—	1	—	—	—	—	—	—	3508 330
	W, 4 D. and Sta. Wgn.	71	—	—	—	—	1	—	—	—	—	—	—	3508 335
	P-E, P-L, P-M	71	—	—	—	—	—	1	—	—	—	—	—	3508 338
	P-H, P-P	71	—	—	—	—	—	1	—	—	—	—	—	3508 339
	Except D-H Complete	71	—	—	—	—	—	—	1	—	—	—	—	3508 342
	Except D-H	71	—	—	—	—	—	—	1	—	—	—	—	3548 209
	D-H	71	—	—	—	—	—	—	1	—	—	—	—	3548 860
	RELEASE, I/Pnl. Hood Latch	71	—	—	—	1	1	—	—	—	—	—	—	3586 981
			—	—	—	—	—	1	—	—	—	—	—	=3670 258
		71	—	—	—	—	—	1	1	1	1	1	—	3670 216
			—	1	—	—	—	—	—	—	—	—	—	=3670 693
			—	—	—	—	—	—	—	—	—	—	1	3586 987
	w/Bezel and Cable, on Instrument Panel	71	—	—	—	—	—	—	—	—	—	—	1	2935 363
	LEVER, Hood Latch Release	71	—	—	—	1	1	—	—	—	—	—	—	3586 037
15-11-7	BRACE, Hood Lock Plate Yoke		—	—	—	—	—	—	1	1	1	1	—	2998 482
		70	—	—	—	—	—	1	—	—	—	—	—	2962 676
15-11-10	CLIP, Latch Release Handle Link to Latch, Charger and Charger R/T	70	—	—	1	—	1	—	1	1	1	1	—	2583 195
	Latch Release Handle Link to Handle, Charger and Charger R/T	70	—	—	—	—	1	—	—	—	—	—	—	2583 195
		71	—	—	—	—	1	—	1	1	1	1	—	2583 195
15-11-12	PLATE, Hood Lock		—	—	—	—	—	—	—	—	—	—	1	2898 813
15-11-16	SPRING, Hood Release Pop-Up		1	—	1	—	—	—	—	—	—	—	—	2802 974
		70	—	—	—	1	—	—	—	—	—	—	1	2862 433
	W, except Charger and Charger R/T	70	—	—	—	—	1	—	—	—	—	—	—	2999 730
	W, Charger and Charger R/T	70	—	1	—	—	1	—	1	1	1	1	—	2935 375
	P, All		—	—	—	—	—	1	—	—	—	—	—	2999 724
		71	—	1	—	1	1	—	1	1	1	1	—	2935 375
		71	—	—	—	—	—	—	—	—	—	—	1	2863 433
15-11-17	CLIP, Safety Catch Release Bracket and Handle, W, except Charger and Charger R/T	70	—	—	—	—	1	—	—	—	—	—	—	3454 332
	Latch Release Cable	71	—	—	—	1	1	1	1	1	1	1	—	3586 033

CARLINES
J - Challenger V - Valiant
B - Barracuda L - Dart
R - Belvedere - Satellite
W - Coronet - Charger
P - Plymouth
D - Dodge
C - Chrysler
Y - Imperial

AR Indicates use as required.
# Indicates parts not listed in any previous parts book.
Numerals in parentheses ( ) refer to notes.
★ Indicates change or addition.

Printed in U.S.A.
January 1972

15-11-0 HOOD LATCH Cont'd.

CODE	PART NAME	ENG. TYPE OR CU.IN.	V 1-2	B J 1-2	L 1-2	R 1-2	W 1-2	P 1-2	D 1-2	C 1	C 2	C 3	Y 1	PART NUMBER
15-11-17	CLIP Cont'd.													
	Latch Release Handle Cable	70	—	—	—	—	—	—	—	—	—	—	1	2935 559
15-11-20	LINK, Latch Release		—	—	1	—	—	—	—	—	—	—	—	2999 744
	W, except Charger and Charger R/T	70	—	—	—	—	1	—	—	—	—	—	—	3454 333
	2 D.H.T.	71	—	—	—	—	1	—	—	—	—	—	—	3508 332
			—	—	—	—	—	—	1	1	1	1	—	2999 749
15-11-21	CABLE, Hood Release Link	70	—	—	—	—	1	—	—	—	—	—	—	2927 281
	Handle, W, Charger and Charger R/T	70	—	—	—	—	1	—	—	—	—	—	—	3454 227
15-11-30	BUSHING, Safety Catch Release Handle Mounting Bracket, W, except Charger and Charger R/T	70	—	—	—	—	1	—	—	—	—	—	—	2583 429
	BSHG., Hood Latch Release Mtg.		—	—	—	1	—	—	—	—	—	—	—	2467 571
	J, w/Fresh Air, w/Fiber Glass Hood	71	—	1	—	—	—	—	—	—	—	—	—	2583 429
	BRACKET, w/Bsg. Latch Rel. Handle 2 D. H. T.	71	—	—	—	1	—	—	—	—	—	—	—	3548 662
15-11-34	CATCH, w/Handle, Hood Safety		1	—	—	—	—	—	—	—	—	—	—	2999 091
	B		—	1	—	—	—	—	—	—	—	—	—	2945 845
	J	70	—	1	—	—	—	—	—	—	—	—	—	2999 078
	J	71	—	1	—	—	—	—	—	—	—	—	—	3508 320
			—	—	1	—	—	—	—	—	—	—	—	2999 180
		70	—	—	—	1	—	—	—	—	—	—	—	2999 164
	R, 2 D.H.T.	71	—	—	—	1	—	—	—	—	—	—	—	3508 322
	R, 4 D. and Sta. Wgn.	71	—	—	—	1	—	—	—	—	—	—	—	3508 326
	W, except Charger and Charger R/T	70	—	—	—	—	1	—	—	—	—	—	—	2999 171
	W, Charger and Charger R/T	70	—	—	—	—	1	—	—	—	—	—	—	2999 213
		71	—	—	—	—	1	1	—	—	—	—	—	2999 149
		70	—	—	—	—	—	1	—	—	—	—	—	2999 149
		70	—	—	—	—	—	—	1	—	—	—	—	3454 950
		71	—	—	—	—	—	—	1	—	—	—	—	2999 155
			—	—	—	—	—	—	—	1	1	1	—	2935 370
			—	—	—	—	—	—	—	—	—	—	1	2935 371
15-11-38	SPRING, Latch to Pawl		1	1	1	1	1	1	1	1	1	1	1	2428 125
	Hood Latch, B	70	—	1	—	1	1	—	—	—	—	—	—	2802 836
	W, 2 D.H.T.	71	—	—	—	—	1	—	—	—	—	—	—	2802 836
	Latch Release Handle Return, 4 D. and Sta. Wgn.	71	—	—	—	1	1	—	—	—	—	—	—	2862 989
15-11-46	SUPPORT, Hood Lock Vertical		1	—	—	—	—	—	—	—	—	—	—	2786 430
		70	—	1	—	—	—	—	—	—	—	—	—	2949 584
	B, J, All, R, 2 D.H.T.	71	—	1	—	1	—	—	—	—	—	—	—	2949 584
			—	—	1	—	—	—	—	—	—	—	—	2949 554
		70	—	—	—	1	—	—	—	—	—	—	—	2949 875
	R, 4 D. and Sta. Wgn.	71	—	—	—	1	—	—	—	—	—	—	—	3442 162
	W, 2 D.H.T. and Charger	71	—	—	—	—	1	—	—	—	—	—	—	3442 323
	W, 4 D. and Sta. Wgn.	71	—	—	—	—	1	—	—	—	—	—	—	3442 983
			—	—	—	—	—	1	—	—	—	—	—	2998 617
			—	—	—	—	—	—	1	1	1	1	—	2898 192
			—	—	—	—	—	—	—	—	—	—	1	2898 532
15-11-50	BRACKET, Hood Lock Vertical Support to C/Member, P, D, All, C, Cv. Cp. and Sta. Wgn.		—	—	—	—	—	1	1	1	1	1	—	2445 726
15-11-58	PLATE, w/Vertical Lock Support,		—	—	—	—	—	—	—	—	—	—	—	
	except Charger and Charger R/T	70	—	—	—	—	1	—	—	—	—	—	—	2998 470
	PLATE, w/Vertical Lock Support, Charger and Charger R/T	70	—	—	—	—	1	—	—	—	—	—	—	2998 475
	W, 2 D.H.T. and Charger	71	—	—	—	—	1	—	—	—	—	—	—	3442 320
	W, 4 D. and Sta. Wgn.	71	—	—	—	—	1	—	—	—	—	—	—	3442 107

CARLINES J - Challenger, B - Barracuda, V - Valiant, L - Dart, R - Belvedere - Satellite, W - Coronet - Charger, P - Plymouth, D - Dodge, C - Chrysler, Y - Imperial

AR Indicates use as required.

# Indicates parts not listed in any previous parts book.

Numerals in parentheses ( ) refer to notes.

★ Indicates change or addition.

Printed in U.S.A. January 1972

CODE	PART NAME	ENG. TYPE OR CU.IN.	V 1-2	B J 1-2	L 1-2	R 1-2	W 1-2	P 1-2	D 1-2	C 1	C 2	C 3	Y 1	PART NUMBER
15-11-0	**HOOD LATCH Cont'd.**													
15-11-58	PLATE Cont'd.													
	PLATE, Lock Vertical Support Yoke		—	—	—	—	—	1	—	—	—	—	—	3573 801
		71	—	—	—	—	—	—	1	—	—	—	—	2998 405
	PLATE, Lock Vertical Support Yoke		—	—	—	—	—	—	1	1	1	1	—	2998 405
15-11-74	GROMMET, Dash to Carburetor Air Scoop Door Control Cable, w/426 or 440 Eng., w/Fresh Air, B	70	—	1	—	—	—	—	—	—	—	—	—	2216 552
	Hood Latch Release Handle	70	—	—	—	—	—	—	—	—	—	—	1	2935 376
	GROMMET, Hood Latch Release Handle	71	—	—	—	—	1	—	—	—	—	—	1	2765 578
15-11-78	CABLE & SPRG. PIN PKG., Hood Corner Stud 26" lg.	71	—	—	—	1	1	—	—	—	—	—	—	3579 673
	18" lg.	71	—	1	1	—	—	—	—	—	—	—	—	3579 674
15-11-83	RELEASE Pkg, Hood Latch	71	—	—	—	1	1	—	—	—	—	—	—	3579 700
15-11-88	BRACKET, Hood Corner Pin Support, B	70	—	1	1	1	1	—	—	—	—	—	—	3508 570-1
	B	71	—	1	—	—	—	—	—	—	—	—	—	3508 570-1
15-11-89	STUD and Spring Pkg., Hood	71	1	—	—	—	—	—	—	—	—	—	—	3579 667
	B,J,L-M	71	—	1	1	1	1	—	—	—	—	—	—	3549 611
	J, w/Fiber Glass Hood		—	1	—	—	—	—	—	—	—	—	—	3586 156
	PIN and Bezel Pkg.	71	—	1	—	—	—	—	—	—	—	—	—	3579 670
	R-M, R-S, 2 D.H.T., W-M, W-S, 2 D.H.T. and Charger	71	—	—	—	1	1	—	—	—	—	—	—	3579 622
15-11-92	FASTENER, Hood Lock, 300H	70	—	—	—	—	—	—	—	—	2	—	—	3571 233
15-11-93	BRACKET, Hood Lock Fastener Yoke, 300H	70	—	—	—	—	—	—	—	—	2	—	—	3571 216
15-13-0	**HOOD LATCH STRIKER**													
15-13-2	STRIKER		1	—	—	—	—	—	—	—	—	—	1	2765 743
		70	—	1	1	1	1	1	—	—	—	—	—	2486 697
		71	—	1	1	1	1	—	—	—	—	—	—	2486 697
		71	—	—	—	—	—	1	—	—	—	—	—	2862 430
			—	—	—	—	—	—	1	1	1	1	—	2935 376
15-19-0	**HOOD HINGE**													
15-19-2	HINGE		1	—	1	—	—	—	—	—	—	—	—	2802 120-1
		70	—	1	—	—	—	—	—	—	—	—	—	2945 842-3
		70	—	—	—	1	1	—	—	—	—	—	—	3454 154-5
		70	—	—	—	—	—	1	1	1	1	1	1	2999 808-9
		71	—	1	—	—	—	—	—	—	—	—	—	3548 890-1
		71	—	—	—	1	1	—	—	—	—	—	—	= 3582 536-7
		71	—	—	—	—	—	1	1	1	1	1	1	= 3582 448-9
	HINGE ASSY.	71	—	—	—	—	—	—	—	—	—	—	1	= 3548 918-9
	HINGE ASSY.,	71	—	1	—	—	—	—	—	—	—	—	—	= 3582 518-9
15-19-8	SPRING, Hinge		2	—	2	—	—	—	—	—	—	—	—	2802 991
	B		—	1	—	—	—	—	—	—	—	—	—	3586 088
	SPRING, w/F/Air, B	71	—	2	—	—	—	—	—	—	—	—	—	3586 092
	J, RM-RS w/F/Air		—	2	—	2	—	—	—	—	—	—	—	3586 092
	R-M, R-S w/Fresh Air R-H, R-P, 2 D. H. T. w/o Fresh Air		—	—	—	1	—	—	—	—	—	—	—	3586 088
	R-W 4 Dr., Sta. Wag.		—	—	—	1	1	—	—	—	—	—	—	3586 093
	W-H, W-P, w/o Fresh Air		—	—	—	—	1	—	—	—	—	—	—	3586 092
	W-P, Fast Back		—	—	—	—	1	—	—	—	—	—	—	3586 092
	2 D.H.T.		—	—	—	—	1	—	—	—	—	—	—	3586 094
	21 3/4 Coils, w/Yellow Paint		—	—	—	2	—	—	—	—	—	—	—	2999 448
	25 1/4 Coils, w/Red Paint		—	—	—	2	2	—	—	—	—	—	—	2862 050
	29 1/4 Coils, w/Aluminum Paint		—	—	—	—	—	2	—	—	—	—	—	2935 222
	27 1/4 Coils, w/Green Paint (Optional w/3548 414)		—	—	—	—	—	2	2	2	2	2	—	2935 560

CARLINES J - Challenger, B - Barracuda, V - Valiant, L - Dart, R - Belvedere - Satellite, W - Coronet - Charger, P - Plymouth, D - Dodge, C - Chrysler, Y - Imperial

AR Indicates use as required.

Numerals in parentheses ( ) refer to notes.

# Indicates parts not listed in any previous parts book.

★ Indicates change or addition.

Printed in U.S.A. January 1972

CODE	PART NAME	ENG. TYPE OR CU.IN.	V 1-2	B J 1-2	L 1-2	R 1-2	W 1-2	P 1-2	D 1-2	C 1	C 2	C 3	Y 1	PART NUMBER
15-19-0	**HINGE Cont'd.**													
15-19-8	SPRING Cont'd.													
	27 1/4 Coils, w/Blue Paint (Optional w/2935 560 and 3548 414)		—	—	—	—	—	—	—	2	2	2	—	2945 300
	24 3/4 Coils, w/Orange Paint		—	—	—	—	—	—	—	—	—	—	2	2999 344
	B, w/Fresh Air, w/Fiber Glass Hood		—	2	—	—	—	—	—	—	—	—	—	3586 215
	J, w/Fresh Air, w/Fiber Glass Hood		—	2	—	—	—	—	—	—	—	—	—	3586 214
15-25-0	**HOOD MOULDING**													
	NOTE: See Exterior Illustration in Illustration Catalog													

NOTES

GROUP 16 - PROPELLER SHAFT AND UNIVERSAL JOINT

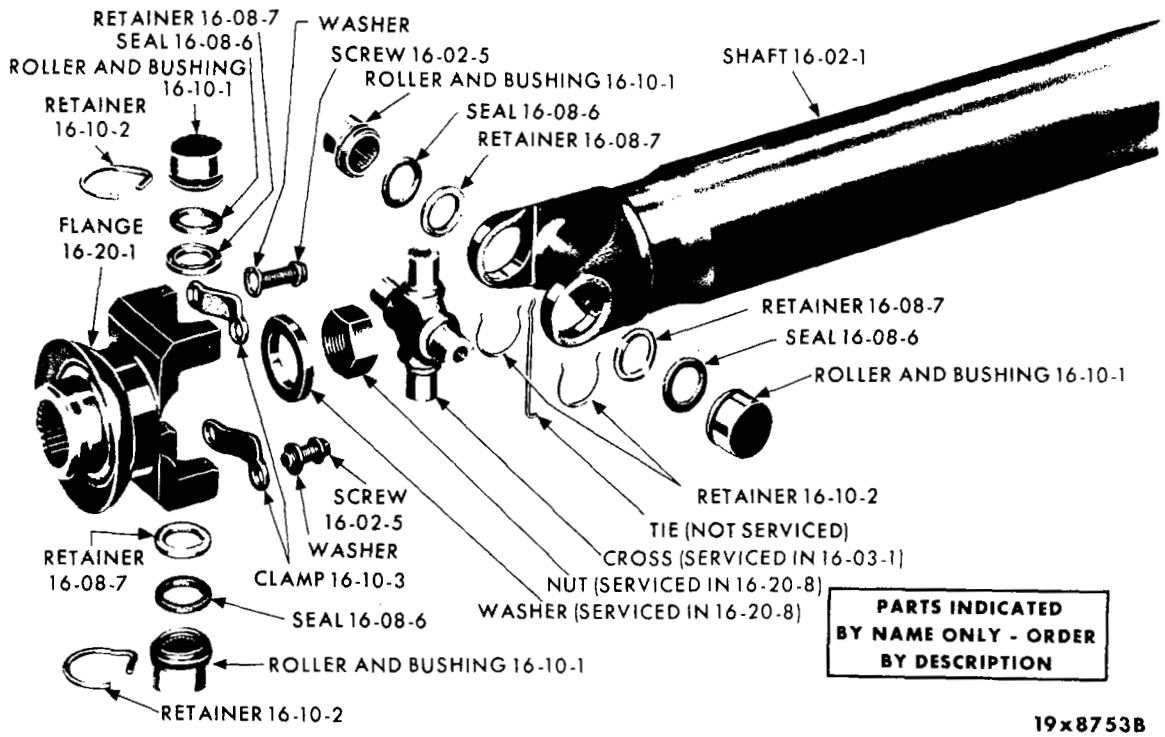

PROPELLER SHAFT - AXLE END

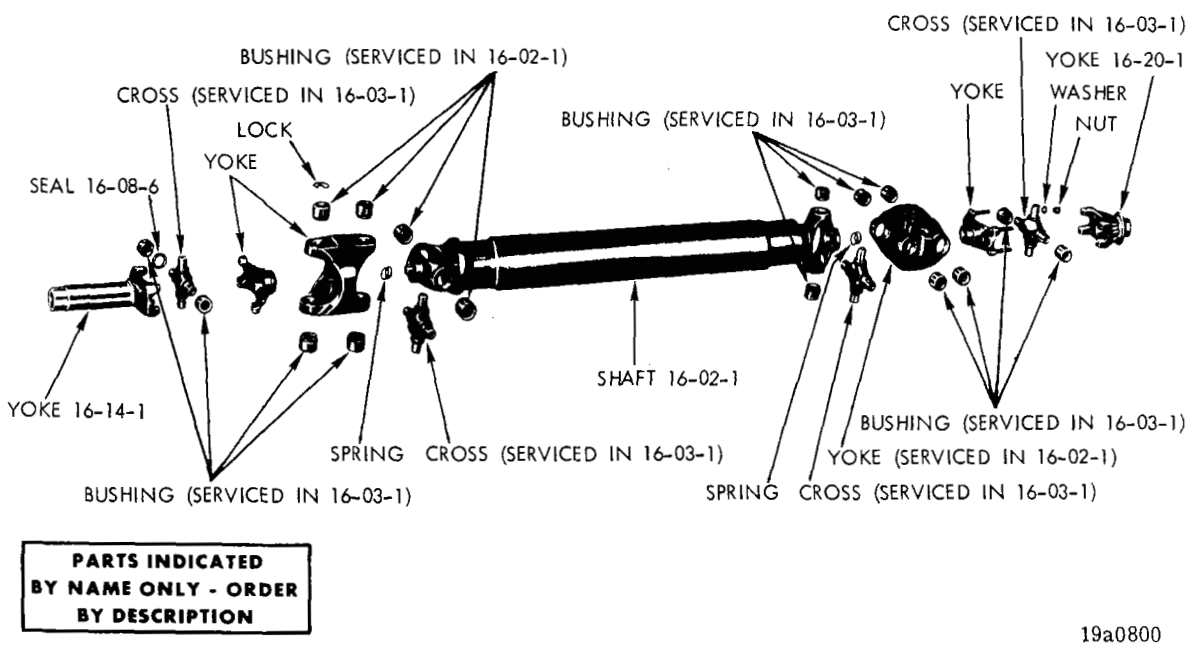

PROPELLER SHAFT - IMPERIAL

PROPELLER SHAFT TYPE IDENTIFICATION CAN BE DETERMINED BY INSIDE MEASUREMENT OF YOKE AREA AS FOLLOWS:

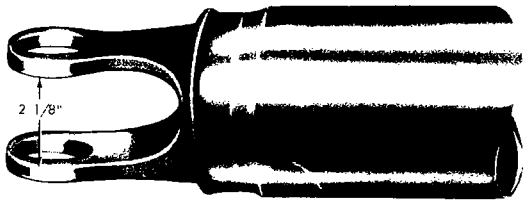

TYPE 7260
2 1/8" INSIDE YOKE

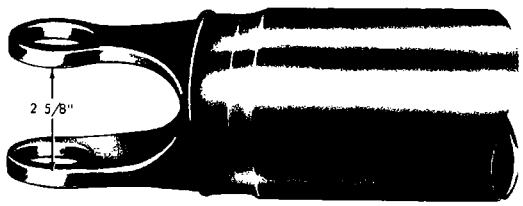

TYPE 7290
2 5/8" INSIDE YOKE

19a2306

PROPELLER SHAFT IDENTIFICATION

NOTES

Printed in U.S.A.

16-02-0 PROPELLER SHAFT

NOTE: Length Measurement of Shafts is from Center of Bearing Hole Trans. End to Center of Bearing Hole Axle End. For Axle Information See Note in Axle Code 3-01-0. Propeller Shaft includes Universal Slip Spline Yoke and Universal Joints. When it becomes necessary to replace the Slip Spline Yoke on vehicles with 426 Hemi. Eng. and ALL V/8 Police Cars it is recommended that the complete Propeller Shaft be replaced.

CODE	MODEL		TYPE	CU. IN. ENG.	TRANSMISSION	LENGTH	DIA.	PART NO.
16-02-1	SHAFT—WITH 7 1/4" Axle							
	V-L		7260	198,225,318	A903-904-230	51.43"	2 3/4"	2883 754
	V-L		7260	198,225	A903,904	51.43"	3"	2883 754
	V-H		7260	198,225	A903,904	54.36"	3"	2883 755
	V-H		7260	225	A833	54.05"	3"	2883 798
	L		7260	198,225	A903,904	54.36"	3"	2883 755
	L		7260	198,225	A903,904	51.43"	3"	2883 754
	L Export		7260	225	A833	54.05"	3"	2883 798
	V, L, Export		7260	225	833	51.12	2 3/4"	2883 757
	B	70	7260	225,318	A904	50.18"	3 1/4"	2883 766
	B	71	7260	198,225,318	A904,A94-1	49.89"	3 1/4"	2996 146
	B	70	7260	225	A230,833	46.06"	3 1/4"	2883 772
	B	71	7260	225	A230,833	46.06"	3 1/4"	3578 772
	J	70	7260	225	A230,833	48.06"	3 1/4"	2883 763
	J	71	7260	198,225	A230,833	48.06"	3 1/4"	3578 763
	J		7260	225,318	A904,A94-1	52.03"	3 1/4"	3578 778
	R-W Except Sta. Wag.	70	7260	225	A903,904	57.65"	3 1/4"	2883 790
	R-W 2 Dr. H.T.	71	7260	225	A903,904	57.10"	3"	2996 216
	R-W 4 Dr. Sedan	71	7260	225	A903,904	59.60"	3"	2996 228
	WITH 8 1/4 and 8 3/4" Axle							
	V		7260	198,225,318	A903,904			——
				340	230,A94-1	49.27"	2 3/4"	2883 752
	V, L		7260	198, 225, 318	903, 904, 94-1	48.89	3"	≠2883 739
	V		7260	340	A904,A727	44.99"	3"	2883 690
	V Export		7260	198,225,318	A833	48.96"	2 3/4"	2883 760
	V		7260	340	A833	48.96"	2 3/4"	2883 760
	V-H		7260	198,225	903,904	49.27"	2 3/4"	2883 752
	V-H		7260	318	230,A94-1	49.27"	2 3/4"	2883 752
	V-H		7260	340	230	49.27"	2 3/4"	2883 752
	V-H		7260	198,225,318		52.27"	3"	2883 778
	V, L		7260	198, 225, 318	903, 904, 94-1	51.89	3"	≠2996 203
	V-H		7260	225,318	A833	51.96"	3"	2883 758
	L	70	7260	198,225,318	A903,904			——
				340	230,A727	52.27"	3"	2883 778
	L	71	7260	198,225,318	A903,230			——
				340	A904,A94-1	52.27"	3"	2883 778
			7260	225,318,340	A833	48.96"	2 3/4"	2883 760
	L	70	7260	340	A904,A727	47.99"	3 1/4"	2883 693
	L	71	7260	340	A727	47.99"	3 1/4"	2883 693
	L	71	7260	340	A904,A727	44.99"	3"	2883 690
	L Export		7260	225,318	A833	51.96"	3"	2883 758
	L		7260	340	A833	51.96"	3"	2883 758
	L	71	7260	198,225,318	A903,904			
				340	230,A94-1	49.27"	2 3/4"	2883 752
	B	70	7260	318	A904,A727	47.95"	3 1/4"	2883 768
	B	71	7260	318	A94-1	47.95"	3 1/4"	2883 768
	B		7260	198,225,318	727,904,A94-1	47.89"	3 1/4"	2996 138
	B	70	7290	318	A230,833	43.85"	3 1/4"	2883 769
	B w/2 Bbl. Carb.	70	7290	340,383	All	43.85"	3 1/4"	2883 769
	B	71	7260	Exc. 426, 440	A230,833,A727	43.79"	3 1/4"	2996 134
	B w/4 Bbl. Carb.	70	7290	383	A230,833,727	43.60"	3 1/4"	2883 636
	B	70	7290	426,440	A727	43.60"	3 1/4"	2883 636
	B		7290	318,340,383	A230,833			
				426,440	A727	43.60"	3 1/4"	2883 636
	J	70	7290	318	A904,727	49.95"	3 1/4"	2883 779
	J	71	7260	225,318	A904,A94-1	49.89"	3 1/4"	2996 146
	J	71	7290	318	A94-1	49.95"	3 1/4"	2883 779
	J	70	7290	318	A230,727,833	45.85"	3 1/4"	2883 782

CARLINES: J - Challenger, B - Barracuda, V - Valiant, L - Dart, R - Belvedere - Satallite, W - Coronet - Charger, P - Plymouth, D - Dodge, C - Chrysler, Y - Imperial

AR Indicates use as required.

≠ Indicates parts not listed in any previous parts book.

Numerals in parentheses ( ) refer to notes.

★ Indicates change or addition.

Printed in U.S.A.
January 1972

16-02-0 PROPELLER SHAFT Cont'd.

CODE	MODEL		TYPE	CU. IN. ENG.	TRANSMISSION	LENGTH	DIA.	PART NO.
16-02-1	SHAFT Cont'd.							
	J w/2 Bbl. Carb.	70	7290	340,383	All	45.85"	3 1/4"	2883 782
	J		7260	198,225,318	833,A230	45.79"	3 1/4"	2996 142
	J		7260	340	A230-833,727	45.79"	3 1/4"	2996 142
	J		7260	383,340	A727	45.79"	3 1/4"	2996 142
	J		7290	426,440	A727	45.60"	3 1/4"	2883 656
	J	70	7290	383	A230,727,833	45.60"	3 1/4"	2883 656
	J	71	7290	318	A230	45.60"	3 1/4"	2883 656
	J	71	7290	340	A230,727,833	45.60"	3 1/4"	2883 656
	J w/2 Bbl. Carb.	71	7290	383	A727	45.60"	3 1/4"	2883 656
	J w/4 Bbl. Carb.	71	7290	383	A230,833	45.60"	3 1/4"	2883 656
	R, Exc. Sta. Wag., Pol. Taxi	70	7260	225,318	A903,904	55.47"	3 1/4"	2883 791
	R, Exc. Sta. Wag., Pol. Taxi	70	7260	225,318	A230,727	51.44"	3 1/4"	2883 788
	R, w/2 Bbl. Carb. Exc. Sta. Wag., Pol., Taxi	70	7260	383	A727	51.44"	3 1/4"	2883 788
	R, Pol., Taxi	70	7260	225,318	A230,727	51.44"	3 1/4"	2883 788
	R, Sta. Wag.	70	7260	225,318	A903,904	56.17"	3 1/4"	2883 792
	R, Sta. Wag.	71	7260	225,318	A904,A94-1	57.42"	3"	2883 735
	R	71	7260	225,318	A904,A94-1	54.92"	3"	2996 201
	R	71	7260	225,318	A904,A94-1	54.86"	3 1/4"	2996 201
	R w/Power Lock	71	7260	225,318	A903,904,A94-1	54.92"	3 1/4"	2996 207
	R	71	7260	318	727,A230	50.80"	3 1/4"	2996 109
	R	71	7260	225	727,230	50.80"	3 1/4"	2996 109
	R	71	7260	383	727	50.80"	3 1/4"	2996 109
	R, w/Small Spline	71	7260	225	A903,904	57.42"	3 1/4"	2996 211
	R, w/Small Spline	71	7260	318	A94-1	57.42"	3 1/4"	2996 211
	R	71	7260	383	A727	50.80"	3"	2991 130
	R	71	7260	225,318	A230,727	50.80"	3"	2996 130
	R, Sta. Wag. & Taxi	70	7260	225,318	A904,230,727	52.03"	3 1/4"	2883 789
	R, w/3.21 & 3.55 Ratio	71	7260	225	230,A727	53.24"	3 1/4"	2996 117
	R w/2.71, 2.94, 3.21 and 3.55 Ratio	71	7260	318	A230-727	53.24"	3 1/4"	2996 117
	R, w/2.45 and 2.94 Ratio	71	7260	383	A727	53.24"	3 1/4"	2996 117
	R, w/2.76 & 3.23 Ratio	71	7260	225	A230-727	53.30"	3 1/4"	2996 113
	R, w/2.76 & 3.23 Ratio	71	7260	318	A230-727	53.30"	3 1/4"	2996 113
	R, w/2.76 & 3.23 Ratio	71	7260	383	A727	53.30"	3 1/4"	2996 113
	R	71	7260	225	A230,904,727	53.30"	3"	2996 186
	R	71	7260	318	A230,727	53.30"	3"	2996 186
	R	71	7260	383	A727	53.30"	3"	2996 186
	R, w/2 Bbl. Carb. exc. Sta. Wag.	70	7290	383	A727	51.50"	3 1/4"	2996 161
	R, w/4 Bbl. Carb. exc. Sta. Wag.	70	7290	383	A230,727,833	51.50"	3 1/4"	2996 161
	R	70	7290	426,440	A727	51.50"	3 1/4"	2996 161
	R, Pol. & Taxi	70	7290	225,318	A230,727	51.50"	3 1/4"	2996 161
	R, w/2 Bbl. Carb.	71	7290	383	A727	50.68"	3 1/4"	2996 101
	R, w/4 Bbl. Carb.	71	7290	340,383	A230,727,833	50.68"	3 1/4"	2996 101
	R	71	7290	426,440	A727	50.68"	3 1/4"	2996 101
	R	71	7290	225,318	A230,727	50.68"	3 1/4"	2996 101
	R, Sta. Wag. 2 & 4 Bbl. Carb.	70	7290	383	A230,727,833	52.07"	3 1/4"	2996 162
	R, Pol. Sta. Wag.	70	7290	225,318	A230,727	52.07"	3 1/4"	2996 162
	R	71	7290	383	A230,727,833	53.18"	3 1/4"	2883 696
	R-W	71	7260	225	A903	57.36"	3 1/4"	2883 735
	R-W	71	7260	318	A94-1	57.36"	3 1/4"	2883 735
	R-W, Sta. Wagon	71	7260	225	A903,904	57.36"	3 1/4"	2883 735
	R-W, Sta. Wagon Exc. Tr. Tow	71	7260	318	A94-1	57.36"	3 1/4"	2883 735
	R, W	71	7260	225,318	903,904,A-94-1	57.42"	3"	2996 121
	W	70	7260	225,318	A903,904	56.17"	3 1/4"	2883 792
	W	71	7260	225,318	A904,A94-1	54.92"	3"	2996 201
	W, Exc. Pol. & Taxi	70	7260	225,318	A904,230,727	52.03"	3 1/4"	2883 789
	W, Pol. Sta. Wag.	70	7260	225,318	A230,727	52.03"	3 1/4"	2883 789
	W, Pol. & Taxi		7260	225,318	A230,727	52.03"	3 1/4"	2883 789

16-02-0 PROPELLER SHAFT Cont'd.

CODE	MODEL	TYPE	CU. IN. ENG.	TRANSMISSION	LENGTH	DIA.	PART NO.
16-02-1	SHAFT Cont'd.						
	W, w/2 Bbl. Carb. Exc. Sta. Wag.	70	7260	383	A727	52.03"	3 1/4" 2883 789
	W	71	7260	225,318	A904,A94-1	54.86"	3 1/4" 2996 201
	W, w/Power Lock	71	7260	225,318	A903,904,94-1	54.92"	3 1/4" 2996 207
	W	71	7260	318	727,A230	50.80"	3 1/4" 2996 109
	W	71	7260	225	727,230	50.80"	3 1/4" 2996 109
	W	71	7260	383	727	50.80"	3 1/4" 2996 109
	W, Sta. Wag.	71	7260	225,318	A904,94-1	57.42"	3" 2883 735
	W, w/Small Spline	71	7260	225	A903,904	57.42"	3 1/4" 2996 211
	W, w/Small Spline	71	7260	318	A94-1	57.42"	3 1/4" 2996 211
	W	71	7260	225,318	A230,727	50.80"	3" 2996 130
	W	71	7260	383	A727	50.80"	3" 2996 130
	W, w/3.21 and 3.55 Ratio	71	7260	225	230,A727	53.24"	3 1/4" 2996 117
	W, w/3.21 and 3.55 Ratio	71	7260	318	A230,727	53.24"	3 1/4" 2996 117
	W, w/2.45 and 2.94 Ratio	71	7260	383	A727	53.24"	3 1/4" 2996 117
	W, w/2.76 & 3.23 Ratio	71	7260	225	A230,A727	53.30"	3 1/4" 2996 113
	W, w/2.76 & 3.23 Ratio	71	7260	318	A230,727	53.30"	3 1/4" 2996 113
	W, w/2.76 & 3.23 Ratio	71	7260	383	A727	53.30"	3 1/4" 2996 113
	W	71	7260	225	A230,904,727	53.30"	3" 2996 186
	W	71	7260	318	A230,727	53.30"	3" 2996 186
	W	71	7260	383	A727	53.30"	3" 2996 186
	W, w/2 Bbl. Carb.		7290	383	A727	50.68"	3 1/4" 2996 101
	W, w/4 Bbl. Carb.	71	7290	340,383	A230,727,833	50.68"	3 1/4" 2996 101
	W	71	7290	426,440	A727	50.68"	3 1/4" 2996 101
	W	71	7290	225,318	A230,727	50.68"	3 1/4" 2996 101
	W, w/2 Bbl. Carb. exc. Sta. Wag.	70	7290	383	A727	52.07"	3 1/4" 2996 162
	W, w/4 Bbl. Carb. exc. Sta. Wag.	70	7290	383	A230,727,833	52.07"	3 1/4" 2996 162
	W, Pol. & Taxi	70	7290	318	A230,727	52.07"	3 1/4" 2996 162
	W	70	7290	426,440	A727	52.07"	3 1/4" 2996 162
	W, Pol. & Taxi	70	7290	225	A230,727	52.07"	3 1/4" 2996 162
	W	71	7290	383	A230,727,833	53.18"	3 1/4" 2883 696
	P-D-C, 2 Bbl. Carb. Sta. Wag.	70	7260	383	A727	52.03"	3 1/4" 2883 789
	P, Exc. Sta. Wag.	70	7260	225	A904	58.17"	2 3/4" 2883 796
	P-D-C, Sta. Wag.	70	7260	318	A904	58-17"	3 1/4" 2883 796
	P, Exc. Sta. Wag., Police, Taxi, and TR-Tow	70	7260	318	A904	58.17"	3 1/4" 2883 796
	P, Exc. Sta. Wag., TR. Tow	71	7260	318	A94-1	58.17"	3 1/4" 3578 796
	P, Exc. TR. Tow	71	7260	225,318	A904,94-1	58.17"	3 1/4" 2883 796
	P, Exc. Sta. Wag.	71	7260	225,318	A903,904,94-1	57.42"	3 1/4" 2996 211
	P, Sta. Wag.	70	7260	225	A904	60.16"	3" 2883 794
	D, Exc. Sta. Wag.	70	7260	225	A904	60.16"	3" 2883 794
	P-D, Exc. Pol., TR. Tow	70	7260	318	A904	60.16"	3 1/4" 2883 797
	P	71	7260	318	A904,94-1	60.10"	3 1/4" 3578 797
	D	71	7260	225,318	A904,94-1	60.10"	3 1/4" 3578 797
	P	70	7260	225	A230	54.05"	3" 2883 798
	P, Exc. Sta. Wag., Pol., Taxi and TR. Tow	70	7260	318	A230	54.05"	3" 2883 798
	P, Exc. Sta. Wag., Pol., Taxi and TR. Tow	70	7260	255,318	A727	54.13"	3 1/4" 2883 798
	P, Exc. Sta. Wag.	70	7260	383	A230,727	54.13"	3 1/4" 2883 798
	P, Exc. Sta. Wag.	71	7260	225,318	A230	54.13"	3" 2883 798
	P, Police	71	7260	318,360	A230	54.13"	3" 2883 798
	P	71	7260	225,318	A727	54.13"	3 1/4" 3578 798
	P	71	7260	360,383	A230,727	54.13"	3 1/4" 3578 798
	P-D	70	7260	225,318	A230,727	56.17"	3 1/4" 2883 795
	P-D, w/2 Bbl. Carb.	70	7260	383	A727,230	56.17"	3 1/4" 2883 795
	C, Sta. Wag.	70	7260	383	A727,230	56.17"	3 1/4" 2883 795
	P-C, Sta. Wag.	71	7260	318,360,383	A230,727	55.81"	3 1/4" 3578 795

16-02-0 PROPELLER SHAFT Cont'd.

CODE	MODEL	TYPE	CU. IN. ENG.	TRANSMISSION	LENGTH	DIA.	PART NO.
16-02-1	SHAFT Cont'd.						
	D	71	7260	225,318, 360,383	A230,727	55.81"	3 1/4"	3578 795
	P-D, w/Small Spline	70	7260	225,318	A904	60.16"	3 1/4"	2883 800
	P-D, w/Small Spline	71	7260	225,318	A904,94-1	60.16"	3 1/4"	2883 800
	P, 4 Bbl. Carb.	70	7290	383,440	A727	53.64"	3 1/4"	2996 195
	P	71	7290	225	A727	53.64"	3 1/4"	2996 195
	P	71	7290	318	A230,727	53.64"	3 1/4"	2996 195
	P, 2 Bbl.	71	7290	360,383	A230,727	53.64"	3 1/4"	2996 195
	P, 4 Bbl.	71	7290	383,440	A727	53.64"	3 1/4"	2996 195
	P-D		7290	225,318	A230,727	55.68"	3 1/4"	2996 227
	P-D-C	70	7290	383	A230	55.68"	3 1/4"	2996 227
	D	71	7290	225	A727	55.68"	3 1/4"	2996 227
	P-D-C, Sta. Wag. Exc. TR. Tow	71	7290	318,383	A230,727	55.68"	3 1/4"	2996 227
	P-D-C	71	7290	383,440	A727	55.68"	3 1/4"	2996 227
	P-D	71	7290	360	A230	55.68"	3 1/4"	2996 227
	C, 4 Bbl. Carb. - Exc. Sta. Wag.	70	7290	383,440	A727	57.93"	3 1/4"	2996 222
	C	71	7290	383,440	A230,727	57.61"	3 1/4"	3578 222
	C, 2 Bbl. Carb. Exc. Sta. Wag.	70	7260	383	A230,727	58.17"	3 1/4"	2883 799
	C	71	7260	383	A230,727	57.86"	3 1/4"	3578 799
	Y			440	A727	52.57"	3 1/4"	2852 118
	WITH 9 3/4" Axle							——
	B		7290	426,440	A727,833	42.60"	3 1/4"	2883 775
	J		7290	426,440	A727,833	44.60"	3 1/4"	2883 667
	W	70	7290	426,440	A727,833	50.96"	3 1/4"	2996 581
	R-W	70	7290	426,440	A727,833	50.39"	3 1/4"	2996 560
	R-W	71	7290	426,440	A727,833	49.50"	3 1/4"	2996 105

NOTES

CODE	PART NAME	ENG. TYPE OR CU.IN.	V 1-2	B J 1-2	L 1-2	R 1-2	W 1-2	P 1-2	D 1-2	C 1	C 2	C 3	Y 1	PART NUMBER
16-02-0	**PROPELLER SHAFT Cont'd.**													
16-02-5	SCREW, Propeller Shaft Axle End, 1/4"-28 x 5/8"	All	4	4	4	4	4	4	4	4	4	4	4	2460 883
	SCREW and Washer, Propeller Shaft Axle End, 1/4"-28 x 5/8"	All	4	4	4	4	4	4	4	4	4	4	—	#6029 562
16-2-9	CAP, Prop. Shaft Inertia Tube Elastic Member 71		—	—	—	1	1	1	—	—	—	—	—	#2883 737
16-03-0	**UNIVERSAL JOINT**													
16-03-1	CROSS and ROLLER PACKAGE, For 7260 U-Joint		2	2	2	2	2	2	2	2	2	2	—	1752 624
	CROSS and BUSHING KIT, For 7290 U-Joint		AR	AR	AR	AR	AR	AR	AR	AR	AR	AR	AR	2852 175
	CROSS and NEEDLE BEARING KIT, FOR 1330 U-JOINT 70		—	—	—	—	—	—	—	—	—	—	AR	2533 202
16-8-0	**UNIVERSAL JOINT CROSS**													
16-8-6	SEAL, CROSS ROLLER DUST, For 7260 U-JOINT		AR	AR	AR	AR	AR	AR	AR	AR	AR	AR	AR	857 999
	For 7290 U-JOINT		—	AR	—	AR	AR	AR	AR	AR	AR	AR	—	2781 947
16-8-7	RETAINER, Roller Dust Seal		AR	AR	AR	AR	AR	AR	AR	AR	AR	AR	—	1739 912
16-10-0	**UNIVERSAL JOINT CROSS ROLLER AND BUSHING**													
16-10-1	ROLLER and BUSHING, Except A727 and A833 Trans.		AR	AR	AR	AR	AR	AR	AR	AR	AR	AR	—	1739 913
	A727 and A833 Trans. Only		AR	AR	AR	AR	AR	AR	AR	AR	AR	AR	—	2781 944
16-10-2	RETAINER, Roller Bushing, For 7260 U-JOINT		AR	AR	AR	AR	AR	AR	AR	AR	AR	AR	—	858 006
	For 7290 U-Joint		—	AR	—	AR	AR	AR	AR	AR	AR	AR	—	2781 923
			—	—	—	—	—	—	—	—	—	—	AR	604 593
16-10-3	CLAMP, Use w/2781944 Roller and Bushing		2	2	2	2	2	2	2	2	2	2	—	1828 824
	Use W/1739913 Roller and Bushing		2	2	2	2	2	2	2	2	2	2	—	2781 904
16-14-0	**UNIVERSAL JOINT SLIP SPLINE YOKE**													
16-14-1	YOKE, U-Joint Slip Spline W/Large Sldg. Spl. W/7260		1	1	1	1	1	1	1	1	1	1	—	2883 575
	W/Small Sldg. Spl. W/7260		1	1	1	1	1	1	1	—	—	—	—	2852 323
	W/7290 U-Joint		—	1	—	1	1	1	1	1	1	1	—	2781 932
	W/Gasket and Plug		—	—	—	—	—	—	—	—	—	—	1	2781 901
	W/O Gasket and Plug		—	—	—	—	—	—	—	—	—	—	1	2460 929
	YOKE, U-Joint Slip Spline w/Large Sldg. Spl. w/7260		1	1	1	1	1	1	1	1	1	1	—	2883 575
16-16-7	CENTERING KIT, C/V 71		—	—	—	—	—	—	—	—	—	—	1	#2533 203
16-20-0	**PROPELLER SHAFT YOKE OR FLANGE**													
16-20-1	YOKE PACKAGE, Axle Drive Pinion, W/Manual Trans. 70	426	—	1	—	1	1	—	—	—	—	—	—	3004 604
	w/Manual Trans.	All	—	1	—	1	1	—	—	—	—	—	—	3004 604
	W/2 Bbl. Carb. 318, 360, 383		—	—	—	1	1	1	1	—	—	—	—	3432 495
	YOKE PACKAGE, Axle Drive Pinion W/7290 U-JOINT W/Out Sure Grip Axle	All	—	—	—	—	—	1	1	—	—	—	—	3004 605
	YOKE, Axle Dr. Pinion, w/7 1/4 Axle		1	1	1	1	1	1	1	1	1	1	—	3004 878
	YOKE, Axle Dr. Pinion, w/8 3/4" Axle 10 Tooth Spline - 7260 Series		1	1	1	1	1	1	1	1	1	1	—	3004 872
	29 Tooth Spline - 7260 Series		1	1	1	1	1	1	1	1	1	1	—	3432 485
	Yoke Package W/8 3/4" Axle 10 Tooth Spline 7260 Series		1	1	1	1	1	1	1	—	—	—	—	#2808 365

CARLINES: J - Challenger, B - Barracuda, V - Valiant, L - Dart, R - Belvedere - Satellite, W - Coronet - Charger, P - Plymouth, D - Dodge, C - Chrysler, Y - Imperial

AR Indicates use as required.

# Indicates parts not listed in any previous parts book.

Numerals in parentheses ( ) refer to notes.

★ Indicates change or addition.

Printed in U.S.A.
January 1972

CODE	PART NAME	ENG. TYPE OR CU.IN.	V 1-2	B J 1-2	L 1-2	R 1-2	W 1-2	P 1-2	D 1-2	C 1	C 2	C 3	Y 1	PART NUMBER
16-20-0	**PROPELLER SHAFT YOKE OR FLANGE Cont'd.**													
16-20-1	YOKE Cont'd.													
	YOKE, Axle Dr. Pinion, w/8 3/4" Axle													
	10 Tooth Spline - 7290 Series	70	—	1	—	1	1	1	1	1	1	1	—	3004 873
	29 Tooth Spline - 7290 Series		—	1	—	1	1	1	1	1	1	1	—	3432 487
	YOKE, Axle Dr. Pinion, 10 Spline	70	—	—	—	—	—	—	—	—	—	—	1	2931 813
	YOKE, Axle Dr. Pinion, 29 Spline		—	—	—	—	—	—	—	—	—	—	1	3432 489
16-20-2	WASHER, Flange 3/16" THK. 13/16" I.D. Concave		1	1	1	1	1	1	1	1	1	1	1	1556 556
	Axle. Drv. Pinion Flange 3/16" THK. 15/16" I.D. Concave		—	1	—	1	1	1	1	1	1	1	1	2070 117
	Axle, Drv. Pinion Yoke 3/32" THK. Flat		—	1	—	1	1	—	—	—	—	—	—	1795 175
16-20-3	NUT, 1 1/4" Hex, Axle Drive Pinion Yoke		—	1	—	1	1	—	—	—	—	—	—	1795 173
	3/4"-16 Hex		1	1	1	1	1	1	1	—	—	—	—	6027 323
	7/8"-14 Hex		1	1	1	1	1	1	1	1	1	1	1	6028 041
16-20-7	SHIM, Rr. Axle Drv. Pinion Yoke w/10 Tooth Spline		1	1	1	1	1	1	1	1	1	1	1	2931 803
	w/29 Tooth Spline		1	1	1	1	1	1	1	1	1	1	1	3507 273

NOTES

CARLINES J - Challenger, B - Barracuda, V - Valiant, L - Dart, R - Belvedere - Satellite, W - Coronet - Charger, P - Plymouth, D - Dodge, C - Chrysler, Y - Imperial

AR Indicates use as required.

# Indicates parts not listed in any previous parts book.

Numerals in parentheses ( ) refer to notes.

★ Indicates change or addition.

Printed in U.S.A. January 1972

GROUP 17 - SPRINGS

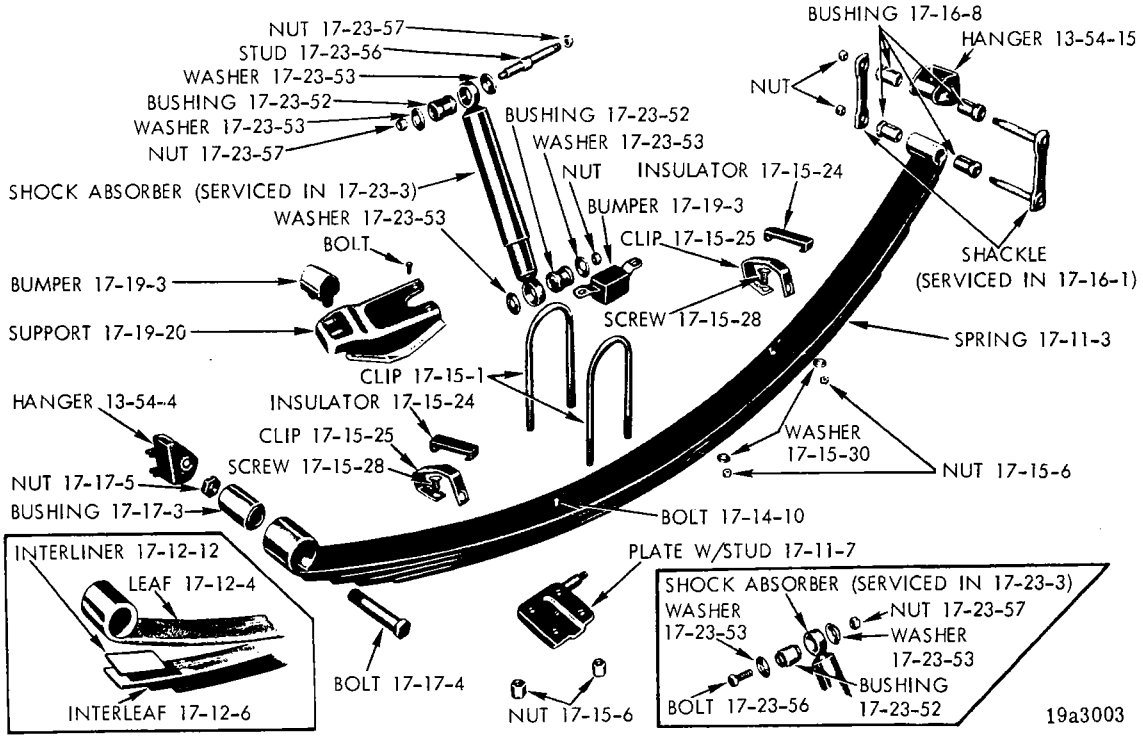

REAR SPRING - VALIANT, DART, BARRACUDA, CHALLENGER, BELVEDERE AND CORONET

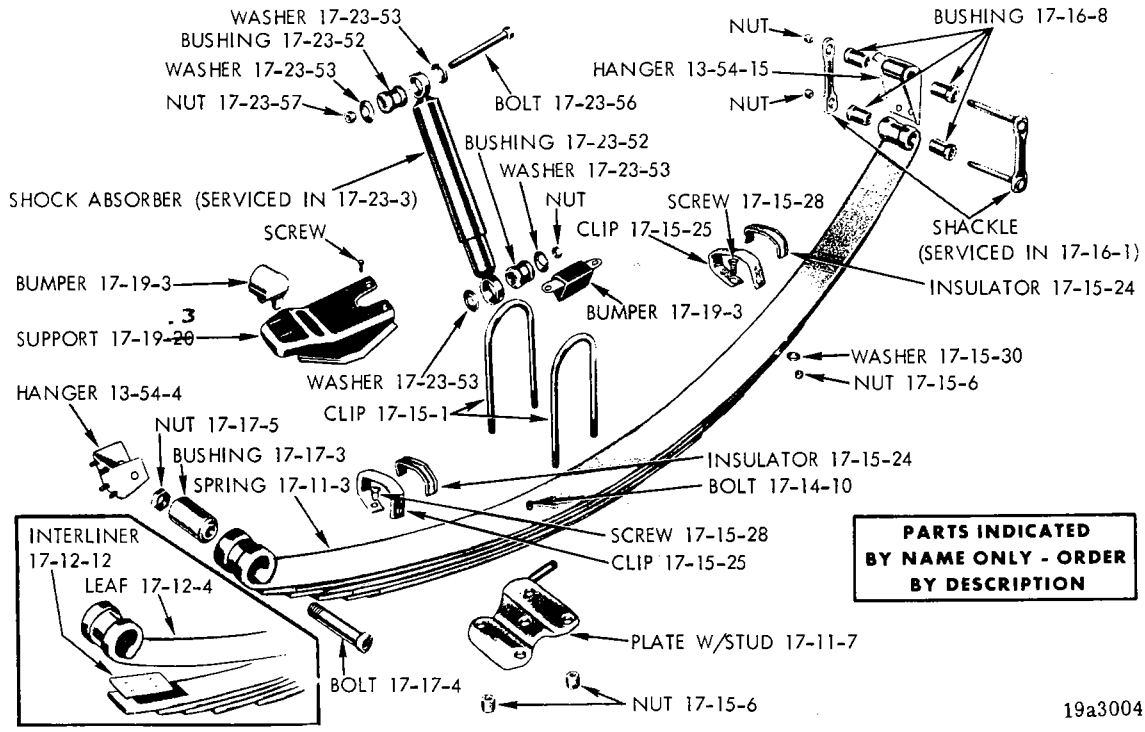

REAR SPRING - PLYMOUTH AND DODGE

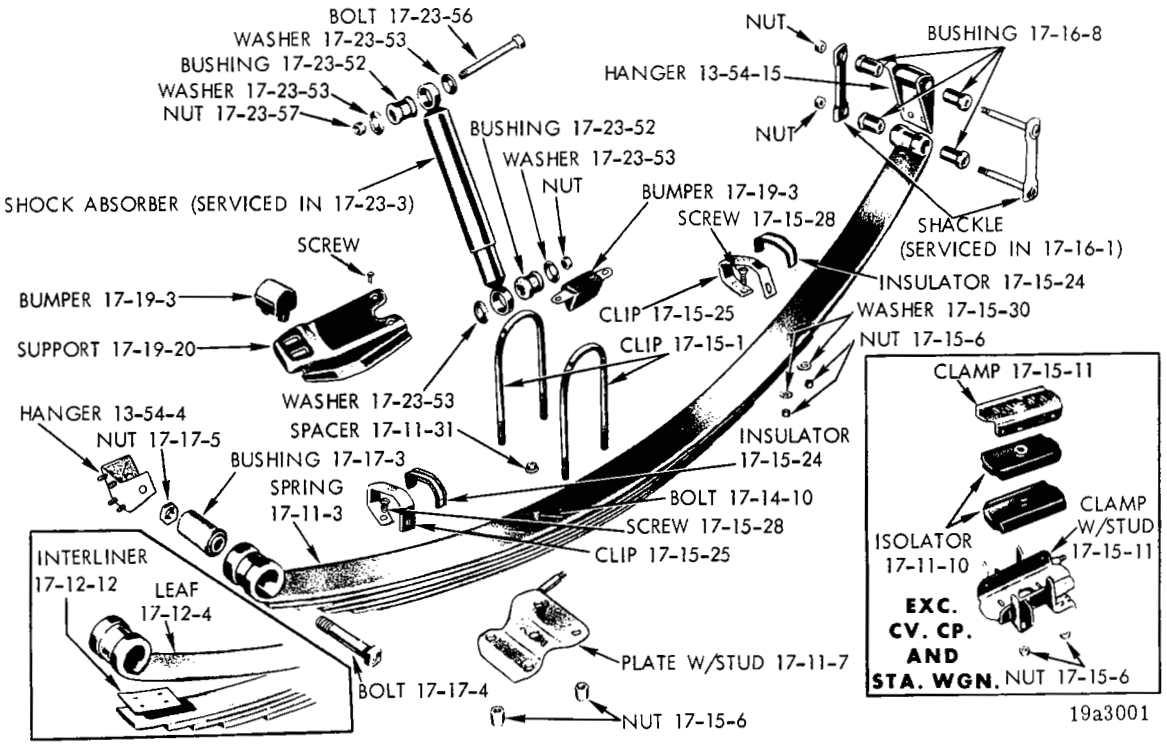

REAR SPRING - CHRYSLER

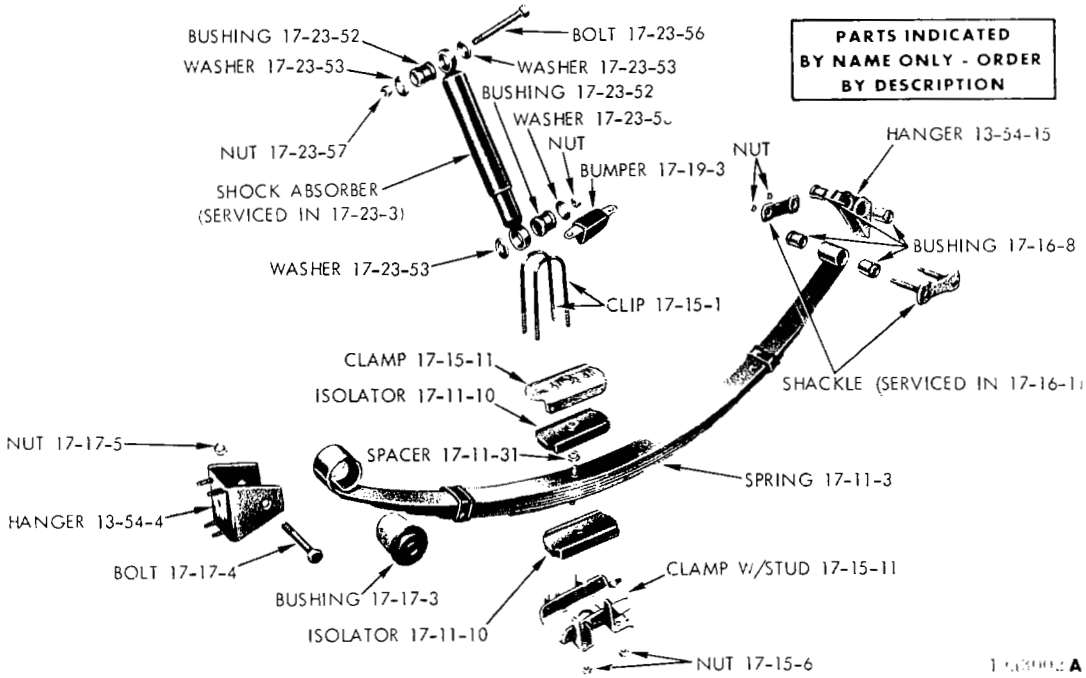

REAR SPRING - IMPERIAL

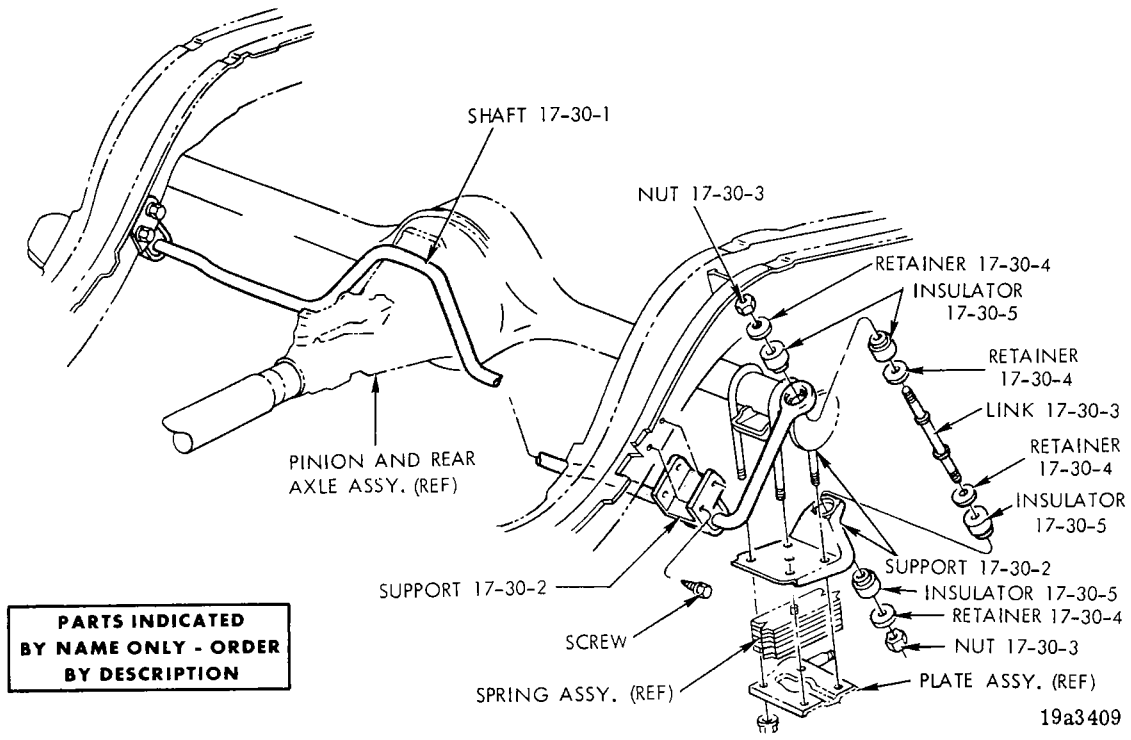

SWAY BAR - REAR SUSPENSION - BARRACUDA AND CHALLENGER

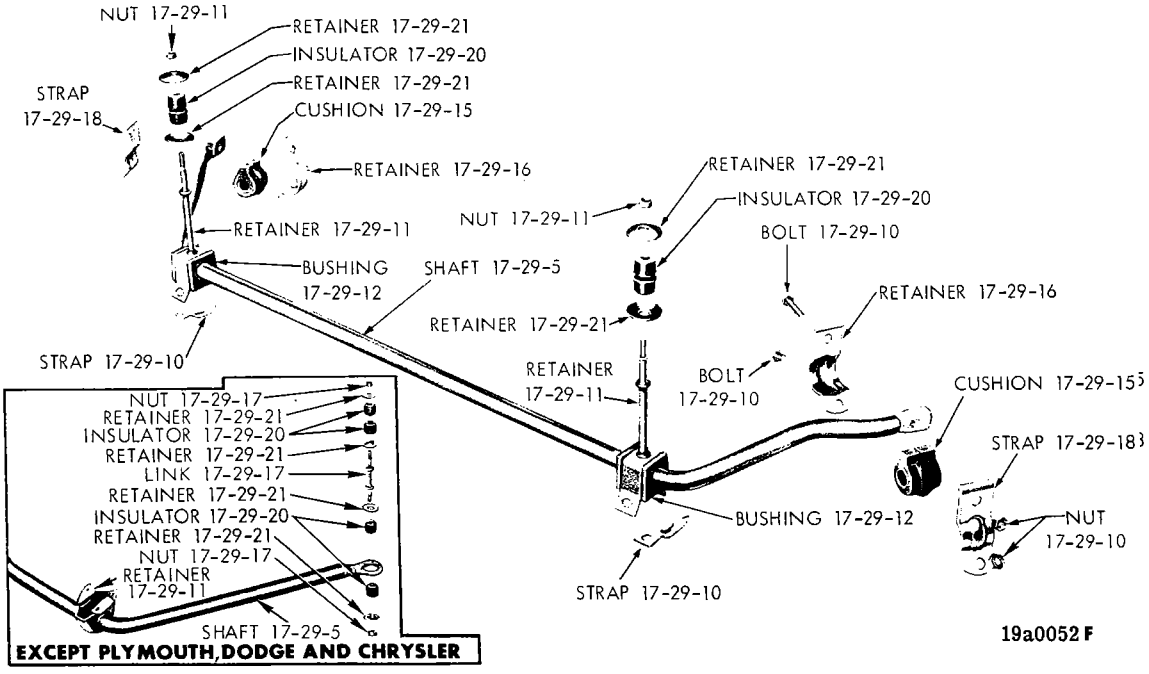

SWAY BAR - FRONT SUSPENSION - PLYMOUTH, DODGE AND CHRYSLER

NOTES

Printed in U.S.A.

17-11-0 REAR SPRING

CODE	PART NAME	ENG. TYPE OR CU.IN.	V 1-2	B J 1-2	L 1-2	R 1-2	W 1-2	P 1-2	D 1-2	C 1	C 2	C 3	Y 1	PART NUMBER
	STANDARD													
17-11-3	SPRING, w/BUSHING, 4D.	70	2	—	2	—	—	—	—	—	—	—	—	3514 985
	Fast-Back, 2D.H.T., Except 340 Eng.	70	2	—	2	—	—	—	—	—	—	—	—	3420 181
	Fast-Back 2D.H.T., w/340 Eng.	70 8	2	—	2	—	—	—	—	—	—	—	—	3420 183
	2D.H.T., Fast-Back, 198 Eng.	71 6	2	—	2	—	—	—	—	—	—	—	—	3549 945
	4D., 198 Eng.	71 6	2	—	2	—	—	—	—	—	—	—	—	3549 946
	2D.H.T., Fast-Back, 225, 318 Eng.	71	2	—	2	—	—	—	—	—	—	—	—	3420 181
	4D., 225, 318 Eng.	71	2	—	2	—	—	—	—	—	—	—	—	3514 985
	340 Eng., All	71 8	2	—	2	—	—	—	—	—	—	—	—	3420 183
	2 D.H.T., Fast-Back	70 6	—	2	—	—	—	—	—	—	—	—	—	3420 173
	2 D.H.T.	71 6	—	2	—	—	—	—	—	—	—	—	—	3579 296
	CV. CP.	70 6	—	2	—	—	—	—	—	—	—	—	—	3420 174
	Cv. Cp.	71 6	—	2	—	—	—	—	—	—	—	—	—	3579 297
	2 D.H.T., Fast-Back, 318 Eng., and 383 Eng., w/o H/Perf.	70 8	—	2	—	—	—	—	—	—	—	—	—	3420 174
	2 D.H.T., 318 Eng. and 383 Eng., w/2 Bbl. Carb.	71 8	—	2	—	—	—	—	—	—	—	—	—	3579 297
	CV. CP., 318 Eng., and 383 Eng., w/o H/Perf.	70 8	—	2	—	—	—	—	—	—	—	—	—	3420 175
	Cv. Cp., 318 Eng. and 383 Eng., 2 Bbl. Carb.	71 8	—	2	—	—	—	—	—	—	—	—	—	3579 298
	2 D.H.T., Fast-Back, 340 Eng. and 383 Eng., w/H/Perf.	70 8	—	2	—	—	—	—	—	—	—	—	—	3420 179
	2 D.H.T., 340 Eng. and 383 Eng., 4 Bbl. Carb.	71 8	—	2	—	—	—	—	—	—	—	—	—	3420 180
	CV. CP., 340 Eng. and 383 Eng., w/H/Perf.	70 8	—	2	—	—	—	—	—	—	—	—	—	3420 180
	340 Eng., 3-2 Bbl. Carb.		—	2	—	—	—	—	—	—	—	—	—	3579 511
	CV, CP. 340, 383 4 Bbl., Carb.	71 8	—	2	—	—	—	—	—	—	—	—	—	3514 244
	426, 440 Eng.	70 8	—	1	—	—	—	—	—	—	—	—	—	3420 176-7
	426, 440 Eng.	71 8	—	2	—	—	—	—	—	—	—	—	—	3549 059
	2 D., 2 D.H.T.	70 6	—	—	—	2	2	—	—	—	—	—	—	3420 165
	CV. CP.	70 6	—	—	—	2	—	—	—	—	—	—	—	3004 766
	4 D.	70 6	—	—	—	2	2	—	—	—	—	—	—	3004 651
	Police and Taxi, 2 D., 4 D.	70 6	—	—	—	2	2	—	—	—	—	—	—	3004 655
	Police 2 D., 4 D.	70 8	—	—	—	2	2	—	—	—	—	—	—	3004 767
	Taxi	70 8	—	—	—	2	2	—	—	—	—	—	—	2585 641
	Charger, 225, 318, 383 Eng.	70	—	—	—	—	2	—	—	—	—	—	—	3579 502
	Charger, w/Soft Rate Suspension, 318, 383 Eng.	70 8	—	—	—	—	2	—	—	—	—	—	—	3004 653
	2 D., 2 D.H.T., 318, 383 Eng.	70 8	—	—	—	2	2	—	—	—	—	—	—	3004 766
	CV. CP., 4 D., 318, 383 Eng.	70 8	—	—	—	2	2	—	—	—	—	—	—	3004 652
	R-M, 2 D., 2 D.H.T., 383 Eng., 4 Bbl. Carb.	70 8	—	—	—	2	—	—	—	—	—	—	—	2585 640
	R-M, CV. CP., 383 Eng., 4 Bbl. Carb.	70 8	—	—	—	2	—	—	—	—	—	—	—	2585 641
	W-M, 383 Eng., 4 Bbl. Carb.	70 8	—	—	—	—	2	—	—	—	—	—	—	2585 640
	426, 440 Eng., Rt.	70 8	—	—	—	1	1	—	—	—	—	—	—	3004 768
	426, 440 Eng., Lt.	70 8	—	—	—	1	1	—	—	—	—	—	—	3004 767
	Police, Sta. Wgn.	70	—	—	—	2	2	—	—	—	—	—	—	3514 965
	Sta. Wgn., 2 Seat	70	—	—	—	2	2	—	—	—	—	—	—	3514 967
	Sta. Wgn., 3 Seat	70	—	—	—	2	2	—	—	—	—	—	—	3514 968
	4 D.	71 6	—	—	—	2	2	—	—	—	—	—	—	3004 766
	Police and Taxi, 4 D.	71 6	—	—	—	2	2	—	—	—	—	—	—	3004 655
	Police, 4 D.	71 8	—	—	—	2	2	—	—	—	—	—	—	3004 767
	Taxi	71 8	—	—	—	2	2	—	—	—	—	—	—	2585 640
	4 D., 318 Eng.	71 8	—	—	—	2	2	—	—	—	—	—	—	3004 653
	4 D., 383 Eng.	71 8	—	—	—	2	2	—	—	—	—	—	—	3004 652
	2D.H.T., Fast-Back, 225, 318 Eng.	71 8	—	—	—	2	2	—	—	—	—	—	—	3004 651

CARLINES J - Challenger, B - Barracuda, V - Valiant, L - Dart, R - Belvedere - Satellite, W - Coronet - Charger, P - Plymouth, D - Dodge, C - Chrysler, Y - Imperial

AR Indicates use as required.

# Indicates parts not listed in any previous parts book.

Numerals in parentheses ( ) refer to notes.

★ Indicates change or addition.

Printed in U.S.A. January 1972

17-11-0 REAR SPRING Cont'd.

CODE	PART NAME	ENG. TYPE OR CU.IN.	V 1-2	B J 1-2	L 1-2	R 1-2	W 1-2	P 1-2	D 1-2	C 1	C 2	C 3	Y 1	PART NUMBER
17-11-3	SPRING w/BUSHING Cont'd.													
	2D.H.T., Fast-Back, 340, 383 Eng.	71 8	—	—	—	2	2	—	—	—	—	—	—	3004 766
	R-M, W-M, 2 D.H.T., 340, 383 Eng., w/o Trailer Tow Pkg.	71 8	—	—	—	2	2	—	—	—	—	—	—	3004 655
	R-M, W-M, 2 D.H.T., 340, 383 Eng., w/Trailer Tow Pkg.	71 8	—	—	—	2	2	—	—	—	—	—	—	2585 640
	426, 440 Eng., Rt.	71 8	—	—	—	1	1	—	—	—	—	—	—	3004 768
	426, 440 Eng., Lt.	71 8	—	—	—	1	1	—	—	—	—	—	—	3004 767
	Police Sta. Wgn.	71	—	—	—	2	2	—	—	—	—	—	—	3514 965
	Sta. Wgn., 2 Seat, Up to Oct. 1, 1970	71	—	—	—	2	2	—	—	—	—	—	—	3514 246
	Sta. Wgn., 2 Seat, After Oct. 1, 1970	71	—	—	—	2	2	—	—	—	—	—	—	3514 245
	Sta. Wgn., 3 Seat, Up to Oct. 1, 1970	71	—	—	—	2	2	—	—	—	—	—	—	3514 245
	Sta. Wgn., 3 Seat, After Oct. 1, 1970	71	—	—	—	2	2	—	—	—	—	—	—	3549 064
	CV. CP., 4 D.H.T., 225 Eng.	70 6	—	—	—	—	—	2	—	—	—	—	—	3004 656
	2 D., 2 D.H.T., 4 D., 225 Eng., P-E, P-L, P-M	70 6	—	—	—	—	—	2	—	—	—	—	—	3420 159
	Except Sta. Wgn., 318, 383 Eng.	70 8	—	—	—	—	—	2	—	—	—	—	—	3004 656
	Police, 2 D., 4 D.	70 6	—	—	—	—	—	2	—	—	—	—	—	3004 846
	Police, 2 D., 4 D.	70 8	—	—	—	—	—	2	—	—	—	—	—	3579 508
	Police Sta. Wgn., Up to June	70	—	—	—	—	—	1	—	—	—	—	—	3514 970-1
	After June	70	—	—	—	—	—	1	—	—	—	—	—	3514 242-3
	Taxi	70	—	—	—	—	—	2	—	—	—	—	—	3004 846
	440 Eng.	70 8	—	—	—	—	—	2	—	—	—	—	—	3004 846
	Sta. Wgn., 2 Seat, RT., Up to June	70	—	—	—	—	—	1	—	—	—	—	—	3514 984
	LT., Up to June	70	—	—	—	—	—	1	—	—	—	—	—	3514 972
	Sta. Wgn., 2 Seat, After June	70	—	—	—	—	—	1	—	—	—	—	—	3514 224-5
	Sta. Wgn., 3 Seat, RT., Up to June	70	—	—	—	—	—	1	—	—	—	—	—	3514 972
	LT., Up to June	70	—	—	—	—	—	1	—	—	—	—	—	3514 969
	Sta. Wgn., 3 Seat, RT., After June	70	—	—	—	—	—	1	—	—	—	—	—	3514 225
	LT., After June	70	—	—	—	—	—	1	—	—	—	—	—	3514 969
	Except Sta. Wgn.	71 6	—	—	—	—	—	2	—	—	—	—	—	3514 631
	Police, 4 D., w/o Isolator	71 6	—	—	—	—	—	2	—	—	—	—	—	2585 240
	Taxi, 225, 318 Eng., w/o Isolator	71	—	—	—	—	—	—	—	—	—	—	—	
	Police, 4 D.	71 8	—	—	—	—	—	2	—	—	—	—	—	2585 240
	Except 4 D. and Sta. Wgn., 318, 360, 383 Eng.	71 8	—	—	—	—	—	—	—	—	—	—	—	3514 247
	4 D., 4 D.H.T., 318, 360, 383 Eng.	71 8	—	—	—	—	—	2	—	—	—	—	—	3514 631
	440 Eng., w/o H/Perf.	71 8	—	—	—	—	—	2	—	—	—	—	—	3514 632
	440 Eng., w/H/Perf.	71 8	—	—	—	—	—	2	—	—	—	—	—	3420 188
	Sta. Wgn., 2 Seat, Up to Oct. 1, 1970	71	—	—	—	—	—	2	—	—	—	—	—	3514 629
	Sta. Wgn., 2 Seat from Oct. 1970 to May	71	—	—	—	—	—	1	—	—	—	—	—	3514 248-9
	after May	71	—	—	—	—	—	1	—	—	—	—	—	3514 249-50
	Sta. Wgn., 3 Seat, Up to Oct. 1, 1970	71	—	—	—	—	—	1	—	—	—	—	—	= 3549 097-8
	Sta. Wgn., 3 Seat from Oct. 1970 to May, Rt.	71	—	—	—	—	—	1	—	—	—	—	—	3514 249-50
		Lt. 71	—	—	—	—	—	1	—	—	—	—	—	3514 250
	After May	71	—	—	—	—	—	1	—	—	—	—	—	3549 065
														= 3549 098-9

CARLINES: J - Challenger, B - Barracuda, V - Valiant, L - Dart, R - Belvedere - Satellite, W - Coronet - Charger, P - Plymouth, D - Dodge, C - Chrysler, Y - Imperial

AR Indicates use as required.

# Indicates parts not listed in any previous parts book.

Numerals in parentheses ( ) refer to notes.

★ Indicates change or addition.

Printed in U.S.A. January 1972

17-11-0 REAR SPRING Cont'd.

CODE	PART NAME	ENG. TYPE OR CU.IN.	V 1-2	B J 1-2	L 1-2	R 1-2	W 1-2	P 1-2	D 1-2	C 1	C 2	C 3	Y 1	PART NUMBER
17-11-3	SPRING w/BUSHING Cont'd.													
	Police Sta. Wgn., Up to Oct. 1, 1970 71		—	—	—	—	—	1	—	—	—	—	—	3514 626-7
	Police Sta. Wgn., After Oct. 1, 1970, RT. 71		—	—	—	—	—	1	—	—	—	—	—	3514 627
	LT. 71		—	—	—	—	—	1	—	—	—	—	—	3549 066
	All 70	6	—	—	—	—	—	—	2	—	—	—	—	3420 114
	2D.H.T., 318, 383 Eng., Up to May 1, 70	8	—	—	—	—	—	—	2	—	—	—	—	3514 990
	After May 1, 70	8	—	—	—	—	—	—	2	—	—	—	—	3420 185
	2D.H.T., 440 Eng., w/o H/Perf., Up to May 1, 70	8	—	—	—	—	—	—	2	—	—	—	—	3514 991
	After May 1, 70	8	—	—	—	—	—	—	2	—	—	—	—	3579 503
	4D., 318, 383 Eng., Up to May 1, 70	8	—	—	—	—	—	—	2	—	—	—	—	3420 186
	After May 1, 70	8	—	—	—	—	—	—	2	—	—	—	—	3420 185
	4D.H.T., 318, 383 Eng., Up to May 1, 70	8	—	—	—	—	—	—	2	—	—	—	—	3420 185
	After May 1, 70	8	—	—	—	—	—	—	2	—	—	—	—	3579 293
	4D., 440 Eng., w/o H/Perf., Up to May 1, 70	8	—	—	—	—	—	—	2	—	—	—	—	3514 991
	After May 1, 70	8	—	—	—	—	—	—	2	—	—	—	—	3420 188
	4D.H.T., 440 Eng., w/o H/Perf., Up to May 1, 70	8	—	—	—	—	—	—	2	—	—	—	—	3420 187
	After May 1, 70	8	—	—	—	—	—	—	2	—	—	—	—	3420 188
	CV. CP., 318, 383 Eng. 70	8	—	—	—	—	—	—	2	—	—	—	—	3420 114
	CV. CP., 440 Eng., w/o H/Perf. 70	8	—	—	—	—	—	—	2	—	—	—	—	3514 964
	440 Eng., w/H/Perf., All 70	8	—	—	—	—	—	—	2	—	—	—	—	3420 189
	Police, 2 D., 4 D. 70		—	—	—	—	—	—	2	—	—	—	—	3420 169
	Taxi 70		—	—	—	—	—	—	2	—	—	—	—	2585 239
	Sta. Wgn., 2 Seat, RT., Up to June 70		—	—	—	—	—	—	1	—	—	—	—	3514 984
	LT. Up to June 70		—	—	—	—	—	—	1	—	—	—	—	3514 972
	Sta. Wgn., 2 Seat, After June 70		—	—	—	—	—	—	1	—	—	—	—	3514 224-5
	Sta. Wgn., 3 Seat, RT., Up to June 70		—	—	—	—	—	—	1	—	—	—	—	3514 972
	LT., Up to June 70		—	—	—	—	—	—	1	—	—	—	—	3514 969
	Sta. Wgn., 3 Seat, RT., After June 70		—	—	—	—	—	—	1	—	—	—	—	3514 225
	LT., After June 70		—	—	—	—	—	—	1	—	—	—	—	3514 969
	D-L, 4 D., 383 Eng., 2 Bbl. Carb., w/o Isolator 71	8	—	—	—	—	—	—	2	—	—	—	—	3420 115
	Police, 4 D., w/o Isolator 71		—	—	—	—	—	—	2	—	—	—	—	3514 247
	Taxi, w/o Isolator 71		—	—	—	—	—	—	2	—	—	—	—	2585 240
	2 D.H.T. 71	6	—	—	—	—	—	—	2	—	—	—	—	3514 631
	2 D.H.T., 318, 360, 383 Eng. 71		—	—	—	—	—	—	2	—	—	—	—	3514 631
	4 D., 4 D.H.T. 71	6	—	—	—	—	—	—	2	—	—	—	—	3514 632
	4 D., 4 D.H.T., 318, 360, 383 Eng. 71	8	—	—	—	—	—	—	2	—	—	—	—	3514 632
	Except Sta. Wgn., 440 Eng., w/o H/Perf. 71	8	—	—	—	—	—	—	2	—	—	—	—	3420 188
	Except Sta. Wgn., 440 Eng., w/H/Perf. 71	8	—	—	—	—	—	—	2	—	—	—	—	3514 629
	Sta. Wgn., 2 Seat, Up to Oct. 1, 1970 71		—	—	—	—	—	—	1	—	—	—	—	3514 248-9
	Sta. Wgn., 2 Seat from Oct. 1970 to May 71		—	—	—	—	—	—	1	—	—	—	—	3514 249-50
	After May 71		—	—	—	—	—	—	1	—	—	—	—	# 3549 097-8
	Sta. Wgn., 3 Seat, Up to Oct. 1, 1970 71		—	—	—	—	—	—	1	—	—	—	—	3514 249-50

17-11-0 REAR SPRING Cont'd.

17-11-3 SPRING w/BUSHING Cont'd.

CODE	PART NAME	ENG. TYPE OR CU.IN.	V 1-2	B J 1-2	L 1-2	R 1-2	W 1-2	P 1-2	D 1-2	C 1	C 2	C 3	Y 1	PART NUMBER
	Sta. Wgn., 3 Seat From Oct. 1970 to May, Rt. 71		—	—	—	—	—	—	1	—	—	—	—	3514 250
	Lt. 71		—	—	—	—	—	—	1	—	—	—	—	3549 065
	After May 71		—	—	—	—	—	—	1	—	—	—	—	= 3549 098-9
	Police Sta. Wgn., Up to Oct. 1, 1970 71		—	—	—	—	—	—	1	—	—	—	—	3514 626-7
	Police Sta. Wgn., After Oct. 1, 1970, RT. 71		—	—	—	—	—	—	1	—	—	—	—	3514 627
	LT. 71		—	—	—	—	—	—	1	—	—	—	—	3549 066
	2D.H.T., 383 Eng. 70	8	—	—	—	—	—	—	—	2	2	2	—	3420 185
	4D.H.T., 383 Eng., Up to May 1, 70	8	—	—	—	—	—	—	—	2	2	2	—	3420 185
	After May 1, 70	8	—	—	—	—	—	—	—	2	2	2	—	3579 293
	4D., 383 Eng., Up to May 1, 70	8	—	—	—	—	—	—	—	2	2	2	—	3420 186
	After May 1, 70	8	—	—	—	—	—	—	—	2	2	2	—	3420 185
	2D.H.T., 4D., 440 Eng., w/o H/Perf., C-E 70	8	—	—	—	—	—	—	—	2	—	—	—	3579 503
	4D., 4D.H.T., 440 Eng., w/o H/Perf., C-H 70	8	—	—	—	—	—	—	—	—	—	2	—	3420 188
	4D.H.T., 440 Eng., w/o H/Perf., C-E, C-M 70	8	—	—	—	—	—	—	—	2	2	—	—	3420 187
	2D.H.T., 440 Eng., w/o H/Perf., C-M, C-H 70	8	—	—	—	—	—	—	—	—	2	2	—	3420 187
	CV. CP., 383 Eng. 70	8	—	—	—	—	—	—	—	2	2	—	—	3420 186
	Except CV. CP., 440 Eng., w/ H/Perf. 70	8	—	—	—	—	—	—	—	2	2	2	—	3420 190
	CV. CP., 440 Eng., w/o H/Perf. 70	8	—	—	—	—	—	—	—	2	2	—	—	3420 112
	CV. CP., 440 Eng., w/H/Perf. 70	8	—	—	—	—	—	—	—	2	2	—	—	2585 239
	Sta. Wgn., 2 Seat, RT., Up to June 70	8	—	—	—	—	—	—	—	—	—	1	—	3514 984
	LT., Up to June 70	8	—	—	—	—	—	—	—	—	—	1	—	3514 972
	Sta. Wgn., 2 Seat, After June 70	8	—	—	—	—	—	—	—	—	—	1	—	3514 224-5
	Sta. Wgn., 3 Seat, RT., Up to June 70	8	—	—	—	—	—	—	—	—	—	1	—	3514 972
	LT., Up to June 70	8	—	—	—	—	—	—	—	—	—	1	—	3514 969
	Sta. Wgn., 3 Seat, RT., After June 70	8	—	—	—	—	—	—	—	—	—	1	—	3514 225
	LT., After June 70	8	—	—	—	—	—	—	—	—	—	1	—	3514 969
	2D.H.T., 360, 383 Eng. 71	8	—	—	—	—	—	—	—	2	2	2	—	3420 186
	2 D.H.T., C-H, C-S, 440 Eng., w/o H/Perf. 71	8	—	—	—	—	—	—	—	—	2	2	—	3420 188
	2 D.H.T., C-H, C-S, 440 Eng. w/H/Perf. 71	8	—	—	—	—	—	—	—	—	2	2	—	3514 629
	4D., 4D.H.T., 360, 383 Eng. 71	8	—	—	—	—	—	—	—	2	2	2	—	3579 293
	2 D.H.T., 4 D., 4 D.H.T., C-E, C-L, 440 Eng., w/H/Perf. 71	8	—	—	—	—	—	—	—	2	—	—	—	3514 629
	C-H. 4 D., C-S. 4 D.H.T., 440 Eng., w/o H/Perf. 71	8	—	—	—	—	—	—	—	—	2	2	—	3549 941
	C-H. 4 D.H.T., 440 Eng., w/o H/Perf. 71	8	—	—	—	—	—	—	—	—	—	2	—	= 3549 070
	C-H. 4D., C-S. 4 D.H.T., 440 Eng., w/H/Perf. 71	8	—	—	—	—	—	—	—	—	2	2	—	3514 628
	C-H. 4 D.H.T., 440 Eng., w/H/Perf. 71	8	—	—	—	—	—	—	—	—	—	2	—	= 3549 071
	Sta. Wgn., 2 Seat, Up to Oct. 1, 1970 71	8	—	—	—	—	—	—	—	—	—	1	—	3514 248-9
	Sta. Wgn., 2 Seat from Oct. 1970 to May 71	8	—	—	—	—	—	—	—	—	—	1	—	3514 249-50

CARLINES: J - Challenger, B - Barracuda, V - Valiant, L - Dart, R - Belvedere - Satellite, W - Coronet - Charger, P - Plymouth, D - Dodge, C - Chrysler, Y - Imperial

AR Indicates use as required.

# Indicates parts not listed in any previous parts book.

Numerals in parentheses ( ) refer to notes.

★ Indicates change or addition.

Printed in U.S.A. January 1972

17-11-0 REAR SPRING Cont'd.

17-11-3 SPRING w/BUSHING Cont'd.

CODE	PART NAME	ENG. TYPE OR CU.IN.	V 1-2	B J 1-2	L 1-2	R 1-2	W 1-2	P 1-2	D 1-2	C 1	C 2	C 3	Y 1	PART NUMBER
	After May	71 8	—	—	—	—	—	—	—	—	—	1	—	= 3549 097-8
	Sta. Wgn., 3 Seat, Up to Oct. 1, 1970	71 8	—	—	—	—	—	—	—	—	—	1	—	3514 249-50
	Sta. Wgn., 3 Seat from Oct. 1970 to May 1971, Rt.	8	—	—	—	—	—	—	—	—	—	1	—	3514 250
		Lt. 8	—	—	—	—	—	—	—	—	—	1	—	3549 065
	After May	71 8	—	—	—	—	—	—	—	—	—	1	—	= 3549 098-9
	2 D.H.T., Use up to Jan. 1	70 8	—	—	—	—	—	—	—	—	—	—	2	3420 170
	2 D.H.T., Use after Jan. 1, 1970, Rt.	70 8	—	—	—	—	—	—	—	—	—	—	1	3420 171
	2 D.H.T., Use after Jan. 1, 1970, Lt.	70 8	—	—	—	—	—	—	—	—	—	—	1	3579 501
	4 D.H.T., Use up to Jan. 1	70 8	—	—	—	—	—	—	—	—	—	—	2	3420 171
	4 D.H.T., Use after Jan. 1, Rt.	70 8	—	—	—	—	—	—	—	—	—	—	1	3579 501
	4 D.H.T., Use after Jan. 1, Lt.	70 8	—	—	—	—	—	—	—	—	—	—	1	3515 000
	2 D.H.T., Rt.	71 8	—	—	—	—	—	—	—	—	—	—	1	3579 300
	2 D.H.T., Lt.	71 8	—	—	—	—	—	—	—	—	—	—	1	3549 924
	4 D.H.T.	71 8	—	—	—	—	—	—	—	—	—	—	1	3549 924-5
	HEAVY DUTY													
	4D.	70	2	—	2	—	—	—	—	—	—	—	—	3420 184
	Fast-Back, 2D.H.T.	70	2	—	2	—	—	—	—	—	—	—	—	3420 183
	All	71	2	—	2	—	—	—	—	—	—	—	—	3420 183
	CV. CP.	70 6	—	2	—	—	—	—	—	—	—	—	—	3420 179
	Cv. Cp.	71 6	—	2	—	—	—	—	—	—	—	—	—	3420 180
	2 D.H.T., Fast-Back	70 6	—	2	—	—	—	—	—	—	—	—	—	3420 178
	2 D.H.T.	71 6	—	2	—	—	—	—	—	—	—	—	—	3420 180
	2 D.H.T., Fast-Back, 318 Eng., and 383 Eng. 2 Bbl. Carb.	70 8	—	2	—	—	—	—	—	—	—	—	—	3420 179
	2 D.H.T., 318 Eng. and 383 Eng., 2 Bbl. Carb.	71 8	—	2	—	—	—	—	—	—	—	—	—	3420 180
	CV. CP., 318 Eng. and 383 Eng., 2 Bbl. Carb.	70 8	—	2	—	—	—	—	—	—	—	—	—	3420 180
	Cv. Cp., 318 Eng. and 383 Eng., 2 Bbl. Carb.	71 8	—	2	—	—	—	—	—	—	—	—	—	3514 244
	340 Eng. and 383 Eng., w/H/Perf., Extreme Duty	8	—	1	—	—	—	—	—	—	—	—	—	3420 176-7
	2 D., 2 D.H.T., 4 D.	70 6	—	—	—	2	2	—	—	—	—	—	—	3004 655
	CV. CP.	70 6	—	—	—	2	—	—	—	—	—	—	—	2585 640
	CV. CP., 318, 383 Eng.	70 8	—	—	—	2	2	—	—	—	—	—	—	2585 642
	2 D., 2 D.H.T., 4 D., 318, 383 Eng.	70 8	—	—	—	2	2	—	—	—	—	—	—	2585 641
	Extreme Duty, 318 Eng. and 383 Eng., 2 Bbl. Carb.	70 8	—	—	—	2	2	—	—	—	—	—	—	3004 767
	Extreme Duty, 318 Eng. and 383 Eng., 4 Bbl. Carb. Rt.	70 8	—	—	—	1	1	—	—	—	—	—	—	3004 768
	Extreme Duty, 318 Eng. and 383 Eng., 4 Bbl. Carb. Lt.	70 8	—	—	—	1	1	—	—	—	—	—	—	3004 767
	Sta. Wgn., 2 Seat	70	—	—	—	2	2	—	—	—	—	—	—	3514 965
	Sta. Wgn., 3 Seat	70	—	—	—	2	2	—	—	—	—	—	—	3514 966
	2 D.H.T., 4 D.	71 6	—	—	—	2	2	—	—	—	—	—	—	3004 655
	2 D.H.T., Fast-Back, 4 D., 318, 340, 383 Eng.	71 8	—	—	—	2	2	—	—	—	—	—	—	2585 640
	Extra Duty, 318 Eng. and 383 Eng., 2 Bbl. Carb.	71 8	—	—	—	2	2	—	—	—	—	—	—	3004 767
	Extra Duty, 383 Eng. 4 Bbl. Carb., 426, 440 Eng., Rt.	71 8	—	—	—	1	1	—	—	—	—	—	—	= 3549 073
		Lt. 71 8	—	—	—	1	1	—	—	—	—	—	—	= 3549 072
	Sta. Wgn., 2 Seat	71	—	—	—	2	2	—	—	—	—	—	—	3514 965
	Sta. Wgn., 3 Seat	71	—	—	—	2	2	—	—	—	—	—	—	3514 966
	Except Sta. Wgn., 225, 318, 383 Eng.	70	—	—	—	—	—	2	—	—	—	—	—	3004 846

CARLINES: J - Challenger, B - Barracuda, V - Valiant, L - Dart, R - Belvedere - Satellite, W - Coronet - Charger, P - Plymouth, D - Dodge, C - Chrysler, Y - Imperial

AR Indicates use as required.

# Indicates parts not listed in any previous parts book.

Numerals in parentheses ( ) refer to notes.

★ Indicates change or addition.

Printed in U.S.A. January 1972

CODE	PART NAME	ENG. TYPE OR CU.IN.	V 1-2	B J 1-2	L 1-2	R 1-2	W 1-2	P 1-2	D 1-2	C 1	C 2	C 3	Y 1	PART NUMBER
17-11-0	**REAR SPRING Cont'd.**													
17-11-3	SPRING w/BUSHING Cont'd.													
	Extreme Duty, Except Sta. Wgn., 318, 383, 440 Eng.	70 8	—	—	—	—	—	2	—	—	—	—	—	3420 168
	Except Sta. Wgn., use w/Police Handling Package	70 8	—	—	—	—	—	2	—	—	—	—	—	3579 508
	Sta. Wgn., Up to June	70	—	—	—	—	—	1	—	—	—	—	—	3514 970-1
	After June	70	—	—	—	—	—	1	—	—	—	—	—	3514 242-3
	All	71	—	—	—	—	—	2	—	—	—	—	—	3514 629
	Extreme Duty	71	—	—	—	—	—	2	—	—	—	—	—	3514 247
	Sta. Wgn., Up to Oct. 1, 1970	71	—	—	—	—	—	1	—	—	—	—	—	3514 626-7
	Sta. Wgn., After Oct. 1, 1970, RT.	71	—	—	—	—	—	1	—	—	—	—	—	3514 627
	LT.	71	—	—	—	—	—	1	—	—	—	—	—	3549 066
	2 D.H.T., 4D., 4 D.H.T., 318, 383 Eng. and 440 Eng., w/o H/Perf.	70 8	—	—	—	—	—	—	2	—	—	—	—	3420 189
	Except Sta. Wgn., Extreme Duty	70 8	—	—	—	—	—	—	2	—	—	—	—	3420 169
	Sta. Wgn., Up to June	70	—	—	—	—	—	—	1	—	—	—	—	3514 970-1
	After June	70	—	—	—	—	—	—	1	—	—	—	—	3514 242-3
	D-L, 4 D., 383 Eng., 2 Bbl. Carb., w/o Isolator	71 8	—	—	—	—	—	—	2	—	—	—	—	2585 239
	Extreme Duty, w/o Isolator	71	—	—	—	—	—	—	2	—	—	—	—	3514 247
	All, w/Isolator	71	—	—	—	—	—	—	2	—	—	—	—	3514 629
	Sta. Wgn., Up to Oct. 1, 1970	71	—	—	—	—	—	—	1	—	—	—	—	3514 626-7
	Sta. Wgn., After Oct. 1, 1970, RT.	71	—	—	—	—	—	—	1	—	—	—	—	3514 627
	LT.	71	—	—	—	—	—	—	1	—	—	—	—	3549 066
	2 D.H.T., 4 D., 4 D.H.T., 383 Eng. and 440 Eng., w/o H/Perf.	70 8	—	—	—	—	—	—	—	2	2	2	—	3420 189
	CV. CP. 383, 440 Eng.	70 8	—	—	—	—	—	—	—	2	2	—	—	2585 239
	Sta. Wgn., Up to June	70 8	—	—	—	—	—	—	—	—	—	1	—	3514 970-1
	After June	70 8	—	—	—	—	—	—	—	—	—	1	—	3514 242-3
	2 D.H.T., 4 D., 4 D.H.T., 360, 383 Eng.	71 8	—	—	—	—	—	—	—	2	—	—	—	3514 629
	C-H. 2 D.H.T. 4 D., C-S. 4 D.H.T., 440 Eng., w/o H/Perf.	71 8	—	—	—	—	—	—	—	—	2	2	—	3514 628
	C-H. 4 D.H.T., 440 Eng., w/o H/Perf.	71 8	—	—	—	—	—	—	—	—	—	2	—	# 3549 071
	Sta. Wgn., Up to Oct. 1, 1970	71 8	—	—	—	—	—	—	—	—	—	1	—	3514 626-7
	Sta. Wgn., After Oct. 1, 1970, RT.	71 8	—	—	—	—	—	—	—	—	—	1	—	3514 627
	LT.	71 8	—	—	—	—	—	—	—	—	—	1	—	3549 066
	Y	70 8	—	—	—	—	—	—	—	—	—	—	2	3420 172
	Y, All	71 8	—	—	—	—	—	—	—	—	—	—	2	3579 299
17-11-5	PLATE, Spring Seat Angle, 1 degree	8	—	—	—	—	—	AR	AR	AR	AR	AR	AR	3400 861
	2 degrees	8	—	—	—	—	—	AR	AR	AR	AR	AR	AR	3400 862
	3 degrees	8	—	—	—	—	—	AR	AR	AR	AR	AR	AR	3400 863
17-11-7	PLATE, w/o STUD, 7 1/4" Axle	71	1	1	1	1	1	—	—	—	—	—	—	2071 768-9
	PLATE, w/STUD, 7 1/4" Axle		1	1	1	1	1	—	—	—	—	—	—	2071 766-7
	8 1/4", 8 3/4", and 9 3/4" Axle		1	1	1	1	1	—	—	—	—	—	—	1856 346-7
	7 1/4" Axle	70	—	1	—	—	—	—	—	—	—	—	—	3400 834-5
	8 3/4" and 9 3/4" Axle	70	—	1	—	—	—	—	—	—	—	—	—	3400 836-7
	All, w/o Isolator Clamp		—	—	—	—	—	1	1	1	1	1	—	1856 346-7
	Std., w/o Isolator Clamp		—	—	—	—	—	1	1	1	1	1	—	1856 346-7
	Extreme Duty	71 8	—	—	—	—	—	1	1	—	—	—	—	3400 836-7

CARLINES J - Challenger, B - Barracuda, V - Valiant, L - Dart, R - Belvedere - Satellite, W - Coronet - Charger, P - Plymouth, D - Dodge, C - Chrysler, Y - Imperial

AR Indicates use as required.

Numerals in parentheses ( ) refer to notes.

# Indicates parts not listed in any previous parts book.

★ Indicates change or addition.

Printed in U.S.A. January 1972

CODE	PART NAME		ENG. TYPE OR CU.IN.	V 1-2	B J 1-2	L 1-2	R 1-2	W 1-2	P 1-2	D 1-2	C 1	C 2	C 3	Y 1	PART NUMBER
17-11-0	**REAR SPRING Cont'd.**														
17-11-7	PLATE Cont'd.														
	Police and Taxi	71		—	—	—	—	—	1	1	—	—	—	—	3400 836-7
	Heavy Duty		8	—	—	—	—	—	—	—	—	—	—	1	1856 346-7
17-11-10	ISOLATOR, Except CV. CP., Sta. Wgn.	70	8	—	—	—	—	—	—	4	4	4	4	—	3400 543
	All	71		—	—	—	—	—	4	4	4	4	4	4	3400 543
17-11-28	PLATE, Spring Shackle			—	2	—	—	—	—	—	—	—	—	—	2834 853
17-11-31	SPACER, Spring Center Bolt, Except														
	CV. CP. and Sta. Wgn.	70	8	—	—	—	—	—	—	4	4	4	4	—	3400 602
	All	71		—	—	—	—	—	AR	AR	AR	AR	AR	—	3400 602
	All		8	—	—	—	—	—	—	—	—	—	—	4	3400 602
17-11-40	PLATE, Front Bracket Support Front, 318														
	Eng.	70	8	—	—	1	—	—	—	—	—	—	—	—	2841 578-9
	Front Bracket Support Rear, 318														
	Eng.	70	8	—	—	2	—	—	—	—	—	—	—	—	2841 442
	Front Bracket Support Rear, 426, 440														
	Eng.		8	—	2	—	—	—	—	—	—	—	—	—	2963 048
17-12-0	**REAR SPRING LEAF**														
	STANDARD														
17-12-4	LEAF, w/BUSHING, *Main Except 340*														
	Eng.	70		2	—	2	—	—	—	—	—	—	—	—	3400 892
	340 Eng.	70	8	2	—	2	—	—	—	—	—	—	—	—	3400 894
	198 Eng.	71	6	2	—	2	—	—	—	—	—	—	—	—	3004 589
	225, 318 Eng.	71		2	—	2	—	—	—	—	—	—	—	—	3400 892
	340 Eng.	71	8	2	—	2	—	—	—	—	—	—	—	—	3400 894
	198, 225, 318, and 383 Eng. w/o														
	H/Perf.			—	2	—	—	—	—	—	—	—	—	—	3400 886
	340 Eng. and 383 Eng., w/H/Perf.	70		—	2	—	—	—	—	—	—	—	—	—	3400 890
	340 Eng., 383 Eng. w/H/Perf.	71	8	—	2	—	—	—	—	—	—	—	—	—	3643 576
	426, 440 Eng.	70	8	—	2	—	—	—	—	—	—	—	—	—	3400 888
	426, 440 Eng.	71		—	2	—	—	—	—	—	—	—	—	—	3643 576
	Except 426, 440 Eng.			—	—	—	2	2	—	—	—	—	—	—	3400 876
	Charger, w/Soft Rate Suspension	70	8	—	—	—	—	2	—	—	—	—	—	—	3400 876
	Police, 2D. 4D.		6	—	—	—	2	2	—	—	—	—	—	—	3400 872
	Police, 2D. 4D.		8	—	—	—	2	2	—	—	—	—	—	—	3400 874
	Police, Sta. Wgn.			—	—	—	2	2	—	—	—	—	—	—	3400 949
	Taxi			—	—	—	2	2	—	—	—	—	—	—	3400 872
	R-M, W-M		8	—	—	—	2	2	—	—	—	—	—	—	3400 872
	CHARGER	70		—	—	—	—	2	—	—	—	—	—	—	3400 872
	426, 440 Eng.		8	—	—	—	2	2	—	—	—	—	—	—	3400 874
	Sta. Wgn.			—	—	—	2	2	—	—	—	—	—	—	3400 951
	Police, Sta. Wgn.			—	—	—	2	2	—	—	—	—	—	—	3400 949
	Except Sta. Wgn.	70		—	—	—	—	—	2	—	—	—	—	—	3400 878
	Sta. Wgn.	70		—	—	—	—	—	2	—	—	—	—	—	3402 006
	Police, 2 D., 4 D.	70	6	—	—	—	—	—	2	—	—	—	—	—	3400 878
	Police, 2 D., 4 D.	70	8	—	—	—	—	—	2	—	—	—	—	—	3402 147
	Taxi	70		—	—	—	—	—	2	—	—	—	—	—	3400 878
	Police, Sta. Wgn.	70		—	—	—	—	—	2	—	—	—	—	—	3402 004
	Except Sta. Wgn., Except														
	440 Eng.	71		—	—	—	—	—	2	—	—	—	—	—	3402 149
	Except Sta. Wgn., 440 Eng.,														
	w/o H/Perf.	71	8	—	—	—	—	—	2	—	—	—	—	—	2585 651
	440 Eng., w/H/Perf.	71	8	—	—	—	—	—	2	—	—	—	—	—	3400 896
	Police Car and Taxi	71		—	—	—	—	—	2	—	—	—	—	—	3400 617
	Police Sta. Wgn.	71		—	—	—	—	—	2	—	—	—	—	—	= 3402 174
	Sta. Wgn.	71		—	—	—	—	—	2	—	—	—	—	—	3402 156
	P-L, 4 D., 383 Eng., 2 Bbl.														
	Carb., w/o Isolator	71	8	—	—	—	—	—	2	—	—	—	—	—	3400 882

CARLINES J - Challenger, B - Barracuda, V - Valiant, L - Dart, R - Belvedere - Satellite, W - Coronet - Charger, P - Plymouth, D - Dodge, C - Chrysler, Y - Imperial

AR Indicates use as required.

\# Indicates parts not listed in any previous parts book.

Numerals in parentheses ( ) refer to notes.

★ Indicates change or addition.

Printed in U.S.A. January 1972

17-12-0 REAR SPRING LEAF Cont'd.

CODE	PART NAME	ENG. TYPE OR CU.IN.	V 1-2	B J 1-2	L 1-2	R 1-2	W 1-2	P 1-2	D 1-2	C 1	C 2	C 3	Y 1	PART NUMBER
17-12-4	LEAF w/BUSHING Cont'd.													
	Except Sta. Wgn., 225, 318, 383 Eng.	70		—	—	—	—	—	—	2	—	—	—	—	3400 882
	Except Sta. Wgn., 440 Eng., w/o H/Perf.	70	8	—	—	—	—	—	—	2	—	—	—	—	2586 651
	Except Sta. Wgn., 440 Eng., w/H/Perf.	70	8	—	—	—	—	—	—	2	—	—	—	—	3400 870
	Sta. Wgn.	70		—	—	—	—	—	—	2	—	—	—	—	3402 006
	Police	70		—	—	—	—	—	—	2	—	—	—	—	3400 898
	Taxi	70		—	—	—	—	—	—	2	—	—	—	—	3400 870
	2 D.H.T., 4 D., 4 D.H.T., Except 440 Eng.	71		—	—	—	—	—	—	2	—	—	—	—	3402 149
	2 D.H.T., 4 D., 4 D.H.T., 440 Eng., w/o H/Perf.	71	8	—	—	—	—	—	—	2	—	—	—	—	2585 651
	2 D.H.T., 4 D., 4 D.H.T., 440 Eng., w/H/Perf.	71	8	—	—	—	—	—	—	2	—	—	—	—	3400 896
	Police Car, Taxi	71		—	—	—	—	—	—	2	—	—	—	—	3400 617
	Sta. Wgn., All	71		—	—	—	—	—	—	2	—	—	—	—	3402 156
	D-L, 4 D., 383 Eng., 2 Bbl. Carb., w/o Isolator	71	8	—	—	—	—	—	—	2	—	—	—	—	3400 882
	Except Sta. Wgn., 383 Eng.	70	8	—	—	—	—	—	—	—	2	2	2	—	3400 882
	Except Sta. Wgn., 440 Eng., w/o H/Perf.	70	8	—	—	—	—	—	—	—	2	2	2	—	2585 651
	Sta. Wgn.	70	8	—	—	—	—	—	—	—	—	—	2	—	3402 006
	2D.H.T., 4D., 4D.H.T., 440 Eng., w/H/Perf.	70	8	—	—	—	—	—	—	—	2	2	2	—	3400 896
	CV. CP., 440 Eng., w/H/Perf.	70	8	—	—	—	—	—	—	—	2	2	—	—	3400 870
	2 D.H.T., 4 D., 4 D.H.T., 360, 383 Eng.	71	8	—	—	—	—	—	—	—	2	2	2	—	3400 882
	2 D.H.T., 4 D., 4 D.H.T., 440 Eng., w/o H/Perf.	71	8	—	—	—	—	—	—	—	2	2	2	—	2585 651
	2 D.H.T., 4 D., 4 D.H.T., 440 Eng., w/H/Perf.	71	8	—	—	—	—	—	—	—	2	2	2	—	3400 896
	Sta. Wgn., All	71	8	—	—	—	—	—	—	—	—	—	2	—	3402 156
	Y		8	—	—	—	—	—	—	—	—	—	—	2	3400 884
	HEAVY DUTY														
	All			2	—	2	—	—	—	—	—	—	—	—	3400 894
	198, 225, 318 Eng.	70		—	2	—	—	—	—	—	—	—	—	—	3400 890
	383 Eng., w/2-bbl. Carb.	70	8	—	2	—	—	—	—	—	—	—	—	—	3400 890
	340 Eng., 383 Eng., 4 Bbl. Carb.	70	8	—	2	—	—	—	—	—	—	—	—	—	3400 888
	All	71		—	2	—	—	—	—	—	—	—	—	—	3643 576
	Except 426, 440 Eng.			—	—	—	2	2	—	—	—	—	—	—	3400 872
	426, 440 Eng.		8	—	—	—	2	2	—	—	—	—	—	—	3400 874
	Sta. Wgn.			—	—	—	2	2	—	—	—	—	—	—	3400 949
	Extreme Duty, 318, 340, 383 Eng.		8	—	—	—	2	2	—	—	—	—	—	—	3400 874
	Except Sta. Wgn.	70		—	—	—	—	—	2	—	—	—	—	—	3400 880
	Except Sta. Wgn., use w/Police Handling Package	70	8	—	—	—	—	—	2	—	—	—	—	—	3402 147
	Sta. Wgn.	70		—	—	—	—	—	2	—	—	—	—	—	3402 004
	Except 440 Eng., w/H/Perf., and 440 Eng., w/3-2 Bbl. Carb.	71		—	—	—	—	—	2	—	—	—	—	—	3400 896
	P-E, P-L, P-M, P-H, P-P, Extra Duty	71		—	—	—	—	—	2	—	—	—	—	—	3400 617
	Sta. Wgn., All	71		—	—	—	—	—	2	—	—	—	—	—	# 3402 174
	P-L, 4 D., 383 Eng., 2 Bbl. Carb., w/o Isolator	71	8	—	—	—	—	—	2	—	—	—	—	—	3400 870
	Except Sta. Wgn.	70		—	—	—	—	—	—	2	—	—	—	—	3400 870

CARLINES
J - Challenger, B - Barracuda, V - Valiant, L - Dart, R - Belvedere - Satellite, W - Coronet - Charger, P - Plymouth, D - Dodge, C - Chrysler, Y - Imperial

AR Indicates use as required.
Numerals in parentheses ( ) refer to notes.
# Indicates parts not listed in any previous parts book.
★ Indicates change or addition.

Printed in U.S.A. January 1972

CODE	PART NAME	ENG. TYPE OR CU.IN.	V 1-2	B J 1-2	L 1-2	R 1-2	W 1-2	P 1-2	D 1-2	C 1	C 2	C 3	Y 1	PART NUMBER
17-12-0	**REAR SPRING LEAF Cont'd.**													
17-12-4	LEAF w/BUSHING Cont'd.													
	Sta. Wgn.	70	—	—	—	—	—	—	2	—	—	—	—	3402 004
	Extreme Duty	70 8	—	—	—	—	—	—	2	—	—	—	—	3400 898
	Except 440 Eng., w/H/Perf., and 440 Eng., 3-2 Bbl. Carb.	71	—	—	—	—	—	—	2	—	—	—	—	3400 896
	Extra Duty, All	71	—	—	—	—	—	—	2	—	—	—	—	3400 617
	Sta. Wgn., All	71	—	—	—	—	—	—	2	—	—	—	—	= 3402 174
	D-L, 383 Eng., 2 Bbl. Carb., w/o Isolator	71 8	—	—	—	—	—	—	2	—	—	—	—	3400 870
	Except CV. CP., and Sta. Wgn.	70 8	—	—	—	—	—	—	—	2	2	2	—	3400 896
	CV. CP.	70 8	—	—	—	—	—	—	—	2	2	—	—	3400 870
	Sta. Wgn.	70 8	—	—	—	—	—	—	—	—	—	2	—	3402 004
	2 D.H.T., 4 D., 4 D.H.T., 383 Eng. and 440 Eng., w/o H/Perf.	71 8	—	—	—	—	—	—	—	2	2	2	—	3400 896
	Sta. Wgn., All	71 8	—	—	—	—	—	—	—	—	—	2	—	= 3402 174
	Y	70 8	—	—	—	—	—	—	—	—	—	—	2	3400 870
	Y	71 8	—	—	—	—	—	—	—	—	—	—	2	3400 896
17-12-6	INTERLEAF		AR	AR	AR	AR	AR	AR	AR	AR	AR	AR	AR	2539 512
17-12-12	INTERLINER		AR	AR	AR	AR	AR	AR	AR	AR	AR	AR	AR	1948 396
17-14-0	**REAR SPRING CENTER BOLT**													
17-14-10	BOLT	70	AR	AR	AR	AR	AR	AR	AR	—	—	—	—	1944 361
	Except CV. CP. and Sta. Wgn.	70 8	—	—	—	—	—	—	AR	AR	AR	AR	—	3400 618
	CV. CP. and Sta. Wgn.	70 8	—	—	—	—	—	—	AR	AR	AR	AR	—	1944 361
	Std.	70 8	—	—	—	—	—	—	—	—	—	—	AR	3400 618
	Heavy Duty	70 8	—	—	—	—	—	—	—	—	—	—	AR	1944 361
	All	71	AR	AR	AR	AR	AR	—	—	—	—	—	—	1944 361
	Except Sta. Wgn.	71	—	—	—	—	—	AR	AR	—	—	—	—	1944 361
	Sta. Wgn.	71	—	—	—	—	—	AR	AR	—	—	—	—	3400 618
	Extra Duty	71	—	—	—	—	—	AR	AR	—	—	—	—	1944 361
	All	71 8	—	—	—	—	—	—	—	AR	AR	AR	AR	3400 618
17-15-0	**REAR SPRING CLIP**													
17-15-1	CLIP, 5 3/4" lgh.		4	4	4	4	4	—	—	—	—	—	—	2834 928
	7" lgh.		4	4	4	4	4	4	4	4	4	4	4	3491 296
	7 7/64" lgh.		—	—	—	4	4	4	4	—	—	—	—	1489 747
	8" lgh.		—	—	—	—	—	4	4	4	4	4	—	1948 335
	8 1/2" lgh.		—	—	—	—	—	4	4	4	4	4	4	2539 764
	8 5/8" Lgh.		—	—	—	—	—	4	4	4	4	4	4	= 3402 180
17-15-6	NUT, Clip 7/16"-20		8	8	8	8	8	8	8	8	8	8	8	6023 018
	1/2"-20		8	8	8	8	8	8	8	8	8	8	8	6023 019
17-15-11	CLAMP, w/STUD, Rear Spring Isolator, Upper, Except CV. CP. and Sta. Wgn., 318, 383 Eng.	70 8	—	—	—	—	—	—	2	2	2	2	—	3400 986
	440 Eng., w/o H/Perf.	70 8	—	—	—	—	—	—	2	2	2	2	—	3400 987
	440 Eng., w/H/Perf.	70 8	—	—	—	—	—	—	2	2	2	2	—	3400 989
	383 Eng. and 440 Eng., w/o H/Perf., H.D.	70 8	—	—	—	—	—	—	2	2	2	2	—	3400 989
	Y, All	70 8	—	—	—	—	—	—	—	—	—	—	2	3400 988
	Except Sta. Wgn., Except 440 Eng., Std.	71	—	—	—	—	—	2	—	—	—	—	—	3400 708
	H.D.	71	—	—	—	—	—	2	—	—	—	—	—	3400 989
	Except Sta. Wgn., 440 Eng., w/o H/Perf., Std.	71 8	—	—	—	—	—	2	—	—	—	—	—	3400 987
	H.D.	71 8	—	—	—	—	—	2	—	—	—	—	—	3400 989
	Except Sta. Wgn., 440 Eng., w/H/Perf., All	71 8	—	—	—	—	—	2	—	—	—	—	—	3400 989

CARLINES: J - Challenger, B - Barracuda, V - Valiant, L - Dart, R - Belvedere - Satellite, W - Coronet - Charger, P - Plymouth, D - Dodge, C - Chrysler, Y - Imperial

AR Indicates use as required.

Numerals in parentheses ( ) refer to notes.

# Indicates parts not listed in any previous parts book.

★ Indicates change or addition.

Printed in U.S.A. January 1972

CODE	PART NAME	ENG. TYPE OR CU.IN.	V 1-2	B J 1-2	L 1-2	R 1-2	W 1-2	P 1-2	D 1-2	C 1	C 2	C 3	Y 1	PART NUMBER
17-15-0	**REAR SPRING CLIP Cont'd.**													
17-15-11	CLAMP w/STUD Cont'd.													
	Police Car, Taxi 71		—	—	—	—	—	2	—	—	—	—	—	3400 989
	Except Sta. Wgn., Except 440 Eng., Std. 71		—	—	—	—	—	—	2	—	—	—	—	3400 708
	H.D. 71		—	—	—	—	—	—	2	—	—	—	—	3400 989
	Except Sta. Wgn., 440 Eng., w/o H/Perf., Std. 71	8	—	—	—	—	—	—	2	—	—	—	—	3400 986
	H.D. 71	8	—	—	—	—	—	—	2	—	—	—	—	3400 989
	Except Sta. Wgn., 440 Eng., w/H/Perf., All 71	8	—	—	—	—	—	—	2	—	—	—	—	3400 989
	Police Car, Taxi 71		—	—	—	—	—	—	2	—	—	—	—	3400 989
	Except Sta. Wgn., Except 440 Eng., Std. 71	8	—	—	—	—	—	—	—	2	2	2	—	3400 986
	H.D. 71	8	—	—	—	—	—	—	—	2	2	2	—	3400 989
	Except Sta. Wgn., 440 Eng., w/o H/Perf., Std. 71	8	—	—	—	—	—	—	—	2	2	2	—	3400 987
	H.D. 71	8	—	—	—	—	—	—	—	2	2	2	—	3400 989
	Except Sta. Wgn., 440 Eng., w/H/Perf., All 71	8	—	—	—	—	—	—	—	2	2	2	—	3400 989
	Police Sta. Wgn. 71		—	—	—	—	—	2	2	—	—	—	—	3400 710
	Sta. Wgn., Std., up to April 71		—	—	—	—	—	2	2	—	—	2	—	3400 989
	Std., After April 71		—	—	—	—	—	2	2	—	—	2	—	= 3402 183
	H.D. 71		—	—	—	—	—	2	2	—	—	2	—	3400 710
	Y, w/o Skid Control, Std. 71	8	—	—	—	—	—	—	—	—	—	—	2	3400 988
	H.D. 71	8	—	—	—	—	—	—	—	—	—	—	2	3400 989
	Y, w/Skid Control, Std. 71	8	—	—	—	—	—	—	—	—	—	—	2	3402 177
	H.D. 71	8	—	—	—	—	—	—	—	—	—	—	2	3402 179
	CLAMP, w/STUD, Rear Spring Isolator Lower, Except CV. CP. and Sta. Wgn., RT. 70	8	—	—	—	—	—	—	1	1	1	1	—	3400 547
	LT. 70	8	—	—	—	—	—	—	1	1	1	1	—	3400 546
	Y, All Rt. 70	8	—	—	—	—	—	—	—	—	—	—	1	3400 547
	Y, All Lt. 70	8	—	—	—	—	—	—	—	—	—	—	1	3400 546
	Lower, Rt. 71		—	—	—	—	—	1	1	1	1	1	1	3400 547
	Lt. 71		—	—	—	—	—	1	1	1	1	1	1	3400 546
17-15-24	INSULATOR, alignment Clip		AR	AR	AR	AR	AR	AR	AR	AR	AR	AR	AR	1829 929
17-15-25	CLIP and CLAMP PACKAGE		AR	AR	AR	AR	AR	AR	AR	AR	AR	AR	AR	2808 399
17-15-28	SCREW, Alignment Clip		—	—	—	—	—	4	4	4	4	4	4	1485 510
17-15-30	WASHER, Alignment Clip Screw		—	—	—	—	—	4	4	4	4	4	4	1530 398
17-16-0	**REAR SPRING SHACKLE**													
17-16-1	SHACKLE and BUSHING PACKAGE		2	—	2	—	—	—	—	—	—	—	—	3004 822
	All		—	2	—	—	—	—	—	—	—	—	—	3420 118
	Except Sta. Wgn.		—	—	—	2	2	—	—	—	—	—	—	3004 823
	Sta. Wgn., up to June, 71		—	—	—	2	2	—	—	—	—	—	—	3004 824
	after June, 71		—	—	—	2	2	—	—	—	—	—	—	3514 978
	Police, 2 D., 4 D.		—	—	—	—	—	2	—	—	—	—	—	3514 978
	Except Sta. Wgn., St.		—	—	—	—	—	2	2	2	2	2	—	3514 979
	Except Sta. Wgn. Extreme Duty		—	—	—	—	—	2	2	2	2	2	—	3514 978
	Sta. Wgn.		—	—	—	—	—	2	2	—	—	2	—	3514 978
	Std.	8	—	—	—	—	—	—	—	—	—	—	2	3514 980
	H.D.	8	—	—	—	—	—	—	—	—	—	—	2	3514 979
17-16-3	SHACKLE, w/Pin, Except Sta. Wgn.		—	—	—	—	—	2	2	2	2	2	—	3402 136
	Std.	8	—	—	—	—	—	—	—	—	—	—	2	3402 138
	H.D.	8	—	—	—	—	—	—	—	—	—	—	2	3402 136

CARLINES: J - Challenger, B - Barracuda, V - Valiant, L - Dart, R - Belvedere - Satellite, W - Coronet - Charger, P - Plymouth, D - Dodge, C - Chrysler, Y - Imperial

AR Indicates use as required.

Numerals in parentheses ( ) refer to notes.

# Indicates parts not listed in any previous parts book.

★ Indicates change or addition.

Printed in U.S.A. January 1972

CODE	PART NAME	ENG. TYPE OR CU.IN.	V 1-2	B J 1-2	L 1-2	R 1-2	W 1-2	P 1-2	D 1-2	C 1	C 2	C 3	Y 1	PART NUMBER
17-16-0	**REAR SPRING SHACKLE Cont'd.**													
17-16-8	BUSHING, Shackle Pivot		8	—	8	—	—	—	—	—	—	—	—	1940 725
	All		—	8	—	8	8	8	8	8	8	8	—	1400 269
	Std.	8	—	—	—	—	—	—	—	—	—	—	8	2403 154
	H.D.	8	—	—	—	—	—	—	—	—	—	—	8	1400 269
17-17-0	**REAR SPRING SILENT BLOCK**													
17-17-3	BUSHING, Front, Pivot		2	—	2	—	—	—	—	—	—	—	—	2539 127
	Except 426, 440 Eng.		—	2	—	2	2	—	—	—	—	—	—	1948 869
	426, 440 Eng.	8	—	2	—	2	2	—	—	—	—	—	—	2403 245
	All		—	—	—	—	—	2	2	2	2	2	2	1948 869
	Police	6	—	—	—	2	2	2	—	—	—	—	—	1948 869
	Police	8	—	—	—	2	2	2	2	—	—	—	—	2403 245
	Taxi		—	—	—	2	2	2	2	—	—	—	—	1948 869
	Extreme Duty	8	—	2	—	2	2	2	2	—	—	—	—	2403 245
17-17-4	BOLT, Pivot Bushing		2	—	2	—	—	—	—	—	—	—	—	192 202
			—	2	—	2	2	2	2	2	2	2	2	1948 876
17-17-5	NUT, Pivot Bushing		2	—	2	—	—	—	—	—	—	—	—	6023 019
			—	2	—	2	2	2	2	2	2	2	2	1948 877
17-19-0	**REAR SPRING BUMPER**													
17-19-3	BUMPER, Rear Axle Pinion Carrier,													
	w/o Support		1	1	1	1	1	1	1	1	1	1	1	2403 906
	w/Support, use w/8 1/4" Axle		—	—	—	1	1	1	1	—	—	—	—	3400 684
	w/Support, use w/8 3/4" Axle		1	1	1	1	1	1	1	1	1	1	1	3400 568
	w/Support, use w/9 3/4" Axle	8	—	1	—	1	1	—	—	—	—	—	—	3400 570
	BUMPER, Side Rail Rear Axle, All	70	2	—	2	—	—	—	—	—	—	—	—	2834 929
	All	71	2	—	2	—	—	—	—	—	—	—	—	2834 915
	All	70	—	2	—	—	—	—	—	—	—	—	—	3400 843
	Except 340 Eng., 3-2 Bbl. Carb.	71	—	2	—	—	—	—	—	—	—	—	—	3400 843
	340 Eng., 3-2 Bbl. Carb.	71	—	2	—	—	—	—	—	—	—	—	—	3400 841
	426, 440 Eng., w/4 Speed Trans.	8	—	2	—	2	2	—	—	—	—	—	—	3400 841
	Except CV. CP.	70	—	—	—	2	2	—	—	—	—	—	—	2834 933
	CV. CP.	70	—	—	—	2	2	—	—	—	—	—	—	2834 932
	426, 440 Eng., w/4 Speed Trans.	70	—	—	—	2	2	—	—	—	—	—	—	2834 934
	426,440 Eng. w/4 Speed Trans.	71	8	—	—	—	2	2	—	—	—	—	—	3400 841
	All	71	—	2	—	2	2	—	—	—	—	—	—	3400 843
	Except Sta. Wgn.	70	—	—	—	—	—	2	2	2	2	2	—	2834 936
	w/o Plate, Except Sta. Wgn.	71	—	—	—	—	—	2	2	2	2	2	—	2834 767
	w/Plate, Except Sta. Wgn.	71	—	—	—	—	—	2	2	2	2	2	—	2834 937
	Y, All	8	—	—	—	—	—	—	—	—	—	—	2	2834 936
	Sta. Wgn.	70	—	—	—	—	—	2	2	—	—	2	—	2403 796
	Sta. Wgn., w/o Support	71	—	—	—	—	—	2	2	—	—	2	—	2403 796
	Sta. Wgn., w/Support	71	—	—	—	—	—	2	2	—	—	2	—	2834 966
17-19-4	BRACKET, Center Floor Pan Carrier Bumper		1	—	1	—	—	—	—	—	—	—	—	2784 470
17-19-20	REINFORCEMENT, Center Floor Pan Pinion Carrier Bumper		—	1	—	—	—	—	—	—	—	—	—	3444 611
		70	—	—	—	1	1	—	—	—	—	—	—	3444 559
	All	71	—	—	—	1	1	—	—	—	—	—	—	3445 017
			—	—	—	—	—	1	1	1	1	1	1	3444 167
	SUPPORT, Pinion Carrier Bumper		1	—	1	—	—	—	—	—	—	—	—	2403 901
		6	—	1	—	1	1	—	—	—	—	—	—	2462 101
	318 Eng.	8	—	1	—	—	—	—	—	—	—	—	—	2462 101
17-19-21	PLATE, Center Floor Pan Pinion Carrier Bumper, 426 Eng.		—	1	—	—	—	—	—	—	—	—	—	2963 973
		70	—	—	—	1	1	—	—	—	—	—	—	2841 264
	426, 440 Eng.	71 8	—	—	—	1	1	—	—	—	—	—	—	3445 491

CARLINES: J - Challenger, B - Barracuda, V - Valiant, L - Dart, R - Belvedere - Satellite, W - Coronet - Charger, P - Plymouth, D - Dodge, C - Chrysler, Y - Imperial

AR Indicates use as required.

# Indicates parts not listed in any previous parts book.

Numerals in parentheses ( ) refer to notes.

★ Indicates change or addition.

Printed in U.S.A. January 1972

CODE	PART NAME	ENG. TYPE OR CU.IN.	V 1-2	B J 1-2	L 1-2	R 1-2	W 1-2	P 1-2	D 1-2	C 1	C 2	C 3	Y 1	PART NUMBER
17-23-0	**SHOCK ABSORBER**													
17-23-2	LOAD LEVELER, Rear		2	—	2	—	—	—	—	—	—	—	—	2421 075
	All	70	—	2	—	2	2	2	2	—	—	—	—	2462 179
	Except CV. CP. and Sta. Wgn.	70 8	—	—	—	—	—	—	—	2	2	2	—	3400 962
	CV. CP. and Sta. Wgn.	70 8	—	—	—	—	—	—	—	2	2	2	—	2462 179
	All	71	—	2	—	2	2	—	—	—	—	—	—	3402 275
	All	71	—	—	—	—	—	2	2	2	2	2	—	3400 962
	STANDARD													
17-23-3	ABSORBER PACKAGE, FRONT, Except 340 Eng.		2	—	2	—	—	—	—	—	—	—	—	3004 958
	340 Eng.	8	2	—	2	—	—	—	—	—	—	—	—	3004 959
	198, 225, 318, 383 Eng.	70	—	2	—	2	2	—	—	—	—	—	—	3004 961
	340, 426, 440 Eng.	70 8	—	2	—	2	2	—	—	—	—	—	—	3004 960
	R-M, W-M	70 8	—	—	—	2	2	—	—	—	—	—	—	3004 960
	Police and Taxi	70	—	—	—	2	2	—	—	—	—	—	—	3004 960
	Except 426, 440 Eng.	71	—	2	—	—	—	—	—	—	—	—	—	3402 417
	426, 440 Eng.	71 8	—	2	—	—	—	—	—	—	—	—	—	3004 960
	Except 426, 440 Eng.	71	—	—	—	2	2	—	—	—	—	—	—	3004 961
	426, 440 Eng.	71 8	—	—	—	2	2	—	—	—	—	—	—	3004 960
	R-M, W-M	71 8	—	—	—	2	2	—	—	—	—	—	—	3004 960
	Police and Taxi	71	—	—	—	2	2	—	—	—	—	—	—	3004 960
	Except CV. CP. and Sta. Wgn., 225, 318, 360, 383 Eng.		—	—	—	—	—	2	2	—	—	—	—	3004 777
	CV. CP. and Sta. Wgn., All	70	—	—	—	—	—	2	2	—	—	—	—	2525 460
	Except Sta. Wgn., Except 440 Eng.	71	—	—	—	—	—	2	2	—	—	—	—	3004 777
	Sta. Wgn.	71	—	—	—	—	—	2	2	—	—	—	—	2525 460
	440 Eng.	8	—	—	—	—	—	2	2	—	—	—	—	2525 460
	Police and Taxi	70	—	—	—	—	—	2	2	—	—	—	—	2525 461
	Police	71	—	—	—	—	—	2	2	—	—	—	—	3402 142
	Taxi	71	—	—	—	—	—	2	2	—	—	—	—	2525 461
	Except CV. CP and Sta. Wgn., 360, 383													
	Eng., and 440 Eng., w/o H/Perf.	70 8	—	—	—	—	—	—	—	2	2	2	—	3004 777
	CV. CP., Sta. Wgn., All	70 8	—	—	—	—	—	—	—	2	2	2	—	2525 460
	Except Sta. Wgn., 360, 383 Eng. and 440 Eng., w/o H/Perf.	71 8	—	—	—	—	—	—	—	2	2	2	—	3004 777
	Sta. Wgn., All	71 8	—	—	—	—	—	—	—	—	—	2	—	2525 460
	440 Eng., w/H/Perf.	8	—	—	—	—	—	—	—	2	2	2	—	2525 460
	Y, All	70 8	—	—	—	—	—	—	—	—	—	—	2	2808 378
	Y, All	71 8	—	—	—	—	—	—	—	—	—	—	2	3402 172
	Absorber Package, Rear, Except 340 Eng.		2	—	2	—	—	—	—	—	—	—	—	3400 593
	340 Eng.	8	2	—	2	—	—	—	—	—	—	—	—	2298 912
	225, 318, 383 Eng.	70	—	2	—	—	—	—	—	—	—	—	—	3400 849
	340, 426, 440 Eng.	70 8	—	2	—	—	—	—	—	—	—	—	—	3400 854
	198, 225, 318 Eng. and 383 Eng., 2 Bbl. Carb.	71	—	2	—	—	—	—	—	—	—	—	—	3402 411
	340 Eng. and 383 Eng., 4 Bbl. Carb.	71 8	—	2	—	—	—	—	—	—	—	—	—	3402 415
	340 Eng., 3-2 Bbl. Carb.	71 8	—	2	—	—	—	—	—	—	—	—	—	3402 419
	426, 440 Eng.	71 8	—	2	—	—	—	—	—	—	—	—	—	3402 415
	Except 426, 440 Eng.	70	—	—	—	2	2	—	—	—	—	—	—	2585 617
	426, 440 Eng.	70 8	—	—	—	2	2	—	—	—	—	—	—	2585 618
	R-M, W-M	70 8	—	—	—	2	2	—	—	—	—	—	—	2585 618
	Police and Taxi	70	—	—	—	2	2	—	—	—	—	—	—	2585 618
	Except 426, 440 Eng.	71	—	—	—	2	2	—	—	—	—	—	—	3402 261
	426, 440 Eng.	71 8	—	—	—	2	2	—	—	—	—	—	—	3402 262
	Police and Taxi	71	—	—	—	2	2	—	—	—	—	—	—	3402 262
	R-M, W-M	71 8	—	—	—	2	2	—	—	—	—	—	—	3402 262

CARLINES J - Challenger, B - Barracuda, V - Valiant, L - Dart, R - Belvedere · Satellite, W - Coronet · Charger, P - Plymouth, D - Dodge, C - Chrysler, Y - Imperial

AR Indicates use as required.

# Indicates parts not listed in any previous parts book.

Numerals in parentheses ( ) refer to notes.

★ Indicates change or addition.

Printed in U.S.A. January 1972

CODE	PART NAME	ENG. TYPE OR CU.IN.	V 1-2	B J 1-2	L 1-2	R 1-2	W 1-2	P 1-2	D 1-2	C 1	C 2	C 3	Y 1	PART NUMBER
17-23-0	**SHOCK ABSORBER Cont'd.**													
17-23-3	ABSORBER PACKAGE Cont'd.													
	Except CV. CP. and Sta. Wgn., 225, 318, 383 Eng.	70		—	—	—	—	—	2	2	—	—	—	—	3400 620
	CV, CP. and Sta. Wgn., All	70		—	—	—	—	—	2	2	—	—	—	—	3400 586
	440 Eng.	70	8	—	—	—	—	—	2	2	—	—	—	—	3400 586
	Police and Taxi	70		—	—	—	—	—	2	2	—	—	—	—	3400 587
	Except CV. CP. and Sta. Wgn., 383 Eng. and 440 Eng., w/o H/Perf.	70	8	—	—	—	—	—	—	—	2	2	2	—	3402 017
	440 Eng., w/H/Perf.	70	8	—	—	—	—	—	—	—	2	2	2	—	3402 026
	CV. CP. and Sta. Wgn., All	70	8	—	—	—	—	—	—	—	2	2	2	—	3400 586
	Y, All	70	8	—	—	—	—	—	—	—	—	—	—	2	3402 022
	Except Sta. Wgn., Except 440 Eng.	71		—	—	—	—	—	2	—	—	—	—	—	3402 017
	Sta. Wgn.	71		—	—	—	—	—	2	—	—	—	—	—	3400 586
	440 Eng.	71		—	—	—	—	—	2	—	—	—	—	—	3402 026
	Taxi	71		—	—	—	—	—	2	—	—	—	—	—	3402 019
	Police Car	71	6	—	—	—	—	—	2	—	—	—	—	—	3402 019
	Police Car	71	8	—	—	—	—	—	2	—	—	—	—	—	3402 145
	Police, Sta. Wgn.	71		—	—	—	—	—	2	—	—	—	—	—	3402 019
	Except Sta. Wgn., Except 440 Eng.	71		—	—	—	—	—	—	2	—	—	—	—	3400 620
	Sta. Wgn., All	71		—	—	—	—	—	—	2	—	—	—	—	3400 586
	440 Eng.	71	8	—	—	—	—	—	—	2	—	—	—	—	3400 586
	Taxi	71		—	—	—	—	—	—	2	—	—	—	—	3402 019
	Police Car	71	8	—	—	—	—	—	—	2	—	—	—	—	3402 145
	Except Sta. Wgn., 360, 383 Eng., and 440 Eng., w/o H/Perf.	71	8	—	—	—	—	—	—	—	2	2	2	—	3402 017
	Sta. Wgn.	71	8	—	—	—	—	—	—	—	—	—	2	—	3402 026
	440 Eng., w/H/Perf.	71	8	—	—	—	—	—	—	—	2	2	2	—	3402 026
	Y, All	71	8	—	—	—	—	—	—	—	—	—	—	2	3402 168
	HEAVY DUTY														
	ABSORBER PACKAGE, FRONT, All			2	—	2	—	—	—	—	—	—	—	—	3004 959
	All			—	2	—	2	2	—	—	—	—	—	—	3004 960
	Super Duty, 2 3/8" Dia.			—	—	—	2	2	—	—	—	—	—	—	3402 130
	w/Sway Bar, 1" Dia.			—	—	—	—	—	2	2	2	2	2	—	2525 460
	Extra Duty, 1" Dia.			—	—	—	—	—	2	2	2	2	2	—	2525 461
	Super Duty, 1 3/4" Dia.			—	—	—	—	—	2	2	—	—	—	—	3402 131
	High Control, 1 3/4" Dia.	71		—	—	—	—	—	2	2	2	2	2	—	3402 142
	All		8	—	—	—	—	—	—	—	—	—	—	2	2808 379
	ABSORBER PACKAGE, REAR, All			2	—	2	—	—	—	—	—	—	—	—	3400 594
	All	70		—	2	—	—	—	—	—	—	—	—	—	3400 854
	198, 225, 318 Eng. and 383 Eng., 2 Bbl. Carb.	71		—	2	—	—	—	—	—	—	—	—	—	3402 415
	1" Dia.	70		—	—	—	2	2	—	—	—	—	—	—	2585 618
	1 3/8" Dia.	70		—	—	—	2	2	—	—	—	—	—	—	2948 077
	Super Duty, 2 3/8" Dia.	70		—	—	—	2	2	—	—	—	—	—	—	3402 132
	1" Dia.	71		—	—	—	2	2	—	—	—	—	—	—	3402 262
	1 3/8" Dia. Extra Duty	71		—	—	—	2	2	—	—	—	—	—	—	3402 273
	2 3/8" Dia., Super Duty	71		—	—	—	2	2	—	—	—	—	—	—	3402 274
	w/Sway Bar, 225, 318, 383 Eng., 1" Dia., High Control	70		—	—	—	—	—	2	2	—	—	—	—	3400 586
	Extra Duty, 1" Dia.	70		—	—	—	—	—	2	2	—	—	—	—	3400 587
	1 3/8" Dia.	70		—	—	—	—	—	2	2	—	—	—	—	3400 959
	Super Duty, 2 3/8" Dia.	70		—	—	—	—	—	2	2	—	—	—	—	3402 132
	Except CV. CP. and Sta. Wgn., 1" Dia.	70	8	—	—	—	—	—	—	—	2	2	2	—	3402 019
	Except CV. CP. and Sta. Wgn., 1 3/8" Dia.	70	8	—	—	—	—	—	—	—	2	2	2	—	3400 960
	CV. CP. and Sta. Wgn., 1" Dia.	70	8	—	—	—	—	—	—	—	2	2	2	—	3400 587

CARLINES J - Challenger, B - Barracuda, V - Valiant, L - Dart, R - Belvedere - Satellite, W - Coronet - Charger, P - Plymouth, D - Dodge, C - Chrysler, Y - Imperial

AR Indicates use as required.

# Indicates parts not listed in any previous parts book.

Numerals in parentheses ( ) refer to notes.

★ Indicates change or addition.

Printed in U.S.A. January 1972

CODE	PART NAME	ENG. TYPE OR CU.IN.	V 1-2	B J 1-2	L 1-2	R 1-2	W 1-2	P 1-2	D 1-2	C 1	C 2	C 3	Y 1	PART NUMBER
17-23-0	**SHOCK ABSORBER Cont'd.**													
17-23-3	ABSORBER PACKAGE Cont'd.													
	CV. CP. and Sta. Wgn., 1 3/8" Dia. 2 D.H.T., 4 D., 4 D.H.T., 383 and 440 Eng., w/o H/Perf., 1" Dia., High Control	70 8	—	—	—	—	—	—	—	2	2	2	—	3400 959
		70 8	—	—	—	—	—	—	—	2	2	2	—	3402 026
	All	70 8	—	—	—	—	—	—	—	—	—	—	2	3400 590
	1" Dia.	71	—	—	—	—	—	2	2	2	2	2	—	3402 019
	1" Dia., High Control	71	—	—	—	—	—	2	2	2	2	2	—	3402 026
	1 3/8" Dia.	71	—	—	—	—	—	2	2	2	2	2	—	3400 960
	2 3/8" Dia., Super Duty	71	—	—	—	—	—	2	2	—	—	—	—	3402 129
	2 3/8" Dia., Police	71	—	—	—	—	—	2	2	—	—	—	—	3402 145
17-23-52	BUSHING, Front Shock, Upper Mounting		2	2	2	2	2	2	2	2	2	2	2	2206 923
	Lower Mounting		2	2	2	2	2	—	—	—	—	—	—	1635 588
	Lower Mounting		—	—	—	—	—	2	2	2	2	2	—	2462 104
	Lower Mounting	8	—	—	—	—	—	—	—	—	—	—	2	2462 365
	Rear Shock, Upper Mounting		2	—	2	—	—	—	—	—	—	—	—	1319 902
	Upper Mounting	70	—	2	—	2	2	2	2	2	2	2	2	2201 554
	Upper Mounting	71	—	2	—	2	2	2	2	2	2	2	2	1319 902
	Lower Mounting		2	2	2	2	2	2	2	2	2	2	2	1319 902
17-23-53	WASHER, Rear Shock Pivot Bushing,	Inner	4	—	4	—	—	—	—	—	—	—	—	1319 555
		Inner	—	2	—	2	2	2	2	2	2	2	2	1319 555
	Load Leveler Only	Inner	2	—	2	—	—	—	—	—	—	—	—	2403 177
		Outer	4	—	4	—	—	—	—	—	—	—	—	1319 554
		Outer	—	2	—	2	2	2	2	2	2	2	2	1319 554
	RETAINER, Front Shock Upper Mounting Bushing		2	2	2	2	2	—	—	—	—	—	—	2206 925
			—	—	—	—	—	4	4	4	4	4	4	2206 925
17-23-56	STUD, Rear Shock Upper Mounting		2	—	2	—	—	—	—	—	—	—	—	2071 714
	BOLT, Rear Shock Upper Mounting		—	2	—	2	2	2	2	2	2	2	2	180 190
17-23-57	NUT, Front Shock Lower Mounting Bolt		2	2	2	2	2	2	2	2	2	2	2	6028 465
	Rear Shock Upper Mounting Stud		2	—	2	—	—	—	—	—	—	—	—	6024 657
	Rear Shock Upper Mounting Bolt		—	2	—	2	2	2	2	2	2	2	2	6028 466
	Rear Shock Mounting, Load Leveler Only		4	—	4	—	—	—	—	—	—	—	—	2403 178
17-24-0	**SHOCK ABSORBER SUPPORT**													
17-24-28	SUPPORT, Frame Front Shock Mounting		—	—	—	—	—	2	2	2	2	2	—	2925 279
	REINFORCEMENT, Rear Shock C/Member, Tail Pipe, Mounting	71	—	—	—	1	1	—	—	—	—	—	—	3615 108
17-26-0	**SHOCK ABSORBER COMPONENT PARTS**													
17-26-4	SHIELD, Front Shock Upper Dust	8	—	—	—	—	—	—	—	—	—	—	2	2539 404
17-29-0	**SWAY BAR SHAFT—FRONT SUSPENSION**													
17-29-5	SHAFT		1	—	1	—	—	—	—	—	—	—	—	2535 534
	340 Eng., 3-2 Bbl. Carb.	8	—	1	—	—	—	—	—	—	—	—	—	2948 723
			—	1	—	1	1	—	—	—	—	—	—	2835 862
			—	—	—	—	—	1	1	1	1	1	—	2462 602
			—	—	—	—	—	—	—	—	—	—	1	2535 170
17-29-6	BRACKET, Frame Shaft		—	—	—	—	—	2	2	2	2	2	—	2925 296
	SUPPORT, Shaft		—	2	—	2	2	—	—	—	—	—	—	2835 707
	Bolt, w/Washer		—	4	—	4	4	—	—	—	—	—	—	180 122
	Nut		—	4	—	4	4	—	—	—	—	—	—	9417 668
17-29-10	STRAP, Shaft Bushing		—	—	—	—	—	2	2	2	2	2	—	1673 065
	BOLT, Strap		—	—	—	—	—	2	2	2	2	2	—	180 122
	NUT, Bolt		—	—	—	—	—	2	2	2	2	2	—	9417 668

CARLINES J - Challenger, B - Barracuda, V - Valiant, L - Dart, R - Belvedere - Satellite, W - Coronet - Charger, P - Plymouth, D - Dodge, C - Chrysler, Y - Imperial

AR Indicates use as required.

# Indicates parts not listed in any previous parts book.

Numerals in parentheses ( ) refer to notes.

★ Indicates change or addition.

Printed in U.S.A. January 1972

CODE	PART NAME	ENG. TYPE OR CU.IN.	V 1-2	B J 1-2	L 1-2	R 1-2	W 1-2	P 1-2	D 1-2	C 1	C 2	C 3	Y 1	PART NUMBER
17-29-0	**SWAY BAR SHAFT—FRONT SUSPENSION Cont'd.**													
17-29-11	RETAINER, Shaft Bushing		—	—	—	—	—	2	2	2	2	2	—	2462 566
		8	—	—	—	—	—	—	—	—	—	—	2	2535 173
			—	2	—	2	2	—	—	—	—	—	—	2535 990
	Shaft Insulator		—	—	—	—	—	4	4	4	4	4	—	1558 352
	BOLT, Shaft Bushing Retainer		—	—	—	—	—	4	4	4	4	4	—	9421 218
	NUT, Shaft Bushing Retainer Bolt		—	—	—	—	—	4	4	4	4	4	—	9417 668
17-29-12	BUSHING, Shaft		—	—	—	—	—	2	2	2	2	2	—	2269 709
		8	—	—	—	—	—	—	—	—	—	—	2	2071 572
17-29-15	CUSHION, Shaft		—	—	—	—	—	2	2	2	2	2	—	2462 570
17-29-16	RETAINER, Shaft Cushion		—	—	—	—	—	2	2	2	2	2	—	2462 571
17-29-17	LINK, Shaft Insulator		2	—	2	—	—	—	—	—	—	—	2	2535 188
			—	2	—	2	2	—	—	—	—	—	—	2535 992
	Nut, Link		2	2	2	2	2	—	—	—	—	—	2	120 376
17-29-18	STRAP, Shaft Cushion		—	—	—	—	—	2	2	2	2	2	—	2462 572
17-29-19	SLEEVE, Shaft Insulator Link		—	2	—	2	2	—	—	—	—	—	—	2535 991
17-29-20	INSULATOR, Shaft Link		8	8	8	8	8	—	—	—	—	—	8	2071 604
			—	—	—	—	—	2	2	2	2	2	—	1734 315
17-29-21	RETAINER, Shaft Insulator		8	8	8	8	8	—	—	—	—	—	8	2071 611
17-30-0	**SWAY BAR SHAFT—REAR SUSPENSION**													
17-30-1	SHAFT, w/BUSHING		—	1	—	—	—	—	—	—	—	—	—	3402 049
17-30-2	SUPPORT, Shaft		—	2	—	—	—	—	—	—	—	—	—	3402 045
17-30-3	LINK, Shaft		—	2	—	—	—	—	—	—	—	—	—	2535 188
	Nut		—	4	—	—	—	—	—	—	—	—	—	120 376
17-30-4	RETAINER, Shaft Insulator		—	8	—	—	—	—	—	—	—	—	—	2071 611
17-30-5	INSULATOR, Shaft Link		—	8	—	—	—	—	—	—	—	—	—	2071 604

NOTES

NOTES

GROUP 18 - STANDARD PARTS

The Standard Parts listed herein are furnished only in carton quantities, and should be ordered in these quantities or multiples thereof.

BALL - STEEL



Plate 18-1

Diameter	Part No.	Ctn. Qty.	Diameter	Part No.	Ctn. Qty.
1/4	104 918	50	5/8	104 924	10
5/16	104 919	50	7/8	104 927	5
11/32	119 282	25			

BOLT - HEXAGON HEAD

National Coarse Thread

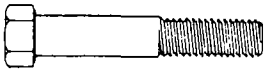

Plate 18-2

	Diameter & Thread									
	1/4-20		5/16-18		3/8-16		7/16-14		1/2-13	
Length	Part No.	Carton Qty.	Part No.	Carton Qty.	Part No.	Carton Qty.	Part No.	Carton Qty.	Part No.	Carton Qty.
1/2	180 016	50			180 116	25			180 166	25
5/8	180 018	100								
3/4	180 020	50	180 077	25						
1	180 022	50	180 079	25	180 122	25				
1-1/4	180 024	50	180 081	25	180 124	25			180 175	10
1-1/2	180 034	25			180 126	25	180 149	10		
1-3/4			181 094	25			180 151	10		
2					181 126	25			180 181	10
2-1/2	180 048	10					180 157	10		
3			180 113	10			180 160	10	180 190	10
3-3/4					186 284	10				
4			189 298	10	186 285	10	180 165	10		
5							272 406	50		

BOLT - HEXAGON HEAD

National Fine Thread

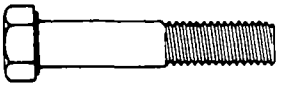

Plate 18-3

	Diameter & Thread											
	1/4-28		5/16-24		3/8-24		7/16-20		1/2-20		9/16-18	
Length	Part No.	Carton Qty.	Part No.	Carton Qty.	Part No.	Carton Qty.	Part No.	Carton Qty.	Part No.	Carton Qty.	Part No.	Carton Qty.
1/2	181 561	50			181 627	25			181 683	25		
5/8			181 593	25								
3/4			181 595	25								
1	181 568	50	181 608	25	181 637	25			181 696	25		
1-1/4			181 610	25	181 639	25	181 668	25	181 698	10		
1-1/2			181 614	25	181 643	25	181 670	10	181 700	10	181 727	10
1-3/4	181 577	25			181 646	25	181 672	10	660 378	10		
2	181 579	25	181 620	25			181 674	10	181 705	10	181 731	10
2-1/4											2228 700	10
2-1/2					181 650	10			181 709	10		
2-3/4			181 623	10								
3			182 703	10	181 652	10			181 711	10		
					186 310	10	181 680	10	182 788	10		
4							181 682	10			181 747	10
4-1/4							187 612	10				

BUSHING
Pipe Reducing

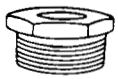

Plate 18-4

Ext. Thd.	Int. Thd.	Part No.	Carton Qty.
1/4	1/8	119 930	5
3/8	1/8	119 923	5
1/2	1/4	144 051	5
1/2	3/8	120 322	5

CONNECTOR
Flared Tube

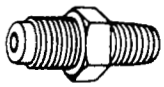

Plate 18-6

Diameter	Taper Thd.	Thread	Part No.	Carton Qty.
1/4	1/8	7/16-20	118 748	5
5/16	1/8	1/2-20	118 749	5
3/8	1/4	5/8-20	118 750	5
7/16	1/4	11/16-16	118 751	5
1/2	3/8	3/4-16	118 752	5

ELBOW
Ball, Sleeve Tubing



Plate 18-10

Diameter	Taper Thd.	Thread	Part No.	Carton Qty.
1/4	1/8	7/16-24	114 632	10
5/16	1/8	1/2-24	114 633	10
3/8	1/4	9/16-24	140 305	10

ELBOW
Inverted Flared Tube, 45 Degree

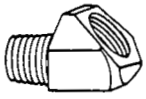

Plate 18-12

Diameter	Taper Thd.	Thread	Part No.	Carton Qty.
3/16	1/8	3/8-24	127 829	5
1/4	1/8	7/16-24	125 859	5
5/16	1/8	1/2-20	116 341	5
3/8	1/4	5/8-18	143 338	5

CONNECTOR
Ball Sleeve Tubing

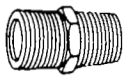

Plate 18-5

Tube Dia.	Taper Thd.	Thd. Size	Part No.	Carton Qty
5/16	1/8	1/2-24	114 629	10

CONNECTOR
Inverted Flared Tube

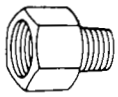

Plate 18-7

Diameter	Taper Thd.	Thread	Part No.	Carton Qty.
1/8	1/8	5/16-28	137 403	5
1/4	1/8	7/16-24	111 345	5
5/16	1/8	1/2-20	137 406	5
3/8	1/4	5/8-18	137 407	5
1/2	3/8	3/4-18	143 426	5

DRAIN COCK



Plate 18-9

Diameter	Part No.	Carton Qty.
1/4	103 647	5

ELBOW
Flared Tube



Plate 18-11

Diameter	Taper Thd.	Thread	Part No.	Carton Qty.
3/16	1/8	3/8-24	121 339	5

ELBOW
Inverted Flared Tube, 90 Degree



Plate 18-13

Diameter	Taper Thd.	Thread	Part No.	Carton Qty.
3/16	1/8	3/8-24	137 420	5
1/4	1/8	7/16-24	137 421	5
5/16	1/8	3/8-20	137 422	5
5/16	1/4	1/2-18	143 343	5
3/8	1/4	5/8-18	137 423	5
7/16	1/4	11/16-18	137 424	5
1/2	1/4		188 947	5

Printed in U.S.A.
January 1972

FITTING - LUBRICATING
Ball and Spring Type



Plate 18-17

Length	Diameter & Thread	Part No.	Carton Qty.
7/8	1/4-28	110 309	10
1	1/4-28	9411 030	10

FITTING - LUBRICATING
Straight Type

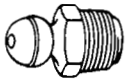

Plate 18-19

Thread & Length	Part No.	Carton Qty.
1/8 x 43/64	9411 010	10

FITTING - LUBRICATING
Straight Type C

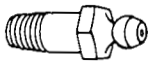

Plate 18-21

Length	Diameter & Thread	Part No.	Carton Qty.
1/2	1/4-20	9411 027	10
11/16	1/4-20	111 595	10
1-1/8	1/4-20	128 274	5

GASKET
ANNULAR, TYPE A

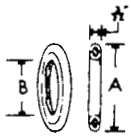

Plate 18-23

Dim. "A"	Dim. "B"	Part No.	Carton Qty.
1 1/8	.890	105 456	50

NIPPLE - PIPE

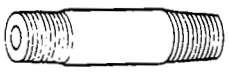

Plate 18-25

Diameter & Length	Part No.	Carton Qty.
1/4 x 1-1/2	144 596	5

FITTING - LUBRICATING



Plate 18-16

Thread & Length		Part No.	Carton Qty.
1/8 x 1-3/16	67-1/2°	109 365	5
1/8 x 1-13/16	90°	109 357	5

FITTING - LUBRICATING
Straight Drive Base

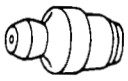

Plate 18-18

Diameter & Length	Part No.	Carton Qty.
.311 x 5/8	119 516	10

FITTING - LUBRICATING
Straight Type and Threaded Drive Type

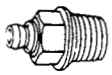

Plate 18-20

Diameter & Length	Part No.	Carton Qty.
1/8 x 23/32	9411 022	10

FITTING - LUBRICATING
Threaded Drive Type

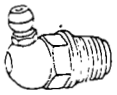

Plate 18-22

Length		Part No.	Carton Qty.
1	30°	9411 023	10
47/64	85°	9411 025	10
25/32	67-1/2°	9411 024	10

GASKET
ANNULAR, TYPE C



Plate 18-24

Dim. "A"	Dim. "B"	Part No.	Carton Qty.
25/32	.561	965 297	100

NUT
Flared Tube

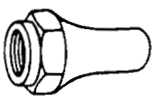

Plate 18-26

Tube Dia.	Thread	Part No.	Carton Qty.
5/16	1/2-20	118 538	5

NUT - HEXAGON



Plate 18-27

Diameter & Thread	Part No.	Carton Qty.
3/4-16	219 758	10

NUT - HEXAGON
Lock, Thin, Semi - Finished



Plate 18-29

Diameter & Thread	Part No.	Carton Qty.
5/8-18	145 013	10

NUT - HEXAGON
Ball Sleeve Tubing



Plate 18-31

Tube Dia.	Thread	Part No.	Carton Qty.
5/16	1/2-24	114 630	10
3/4	1-28	144 409	5

NUT - HEXAGON
Slotted, Standard Semi - Finished



Plate 18-33

Diameter & Thread	Part No.	Carton Qty.
3/8-24	125 233	50
7/16-20	128 014	50
9/16-18	128 178	25
5/8-18	128 027	25

NUT - HEXAGON
Standard, Semi-Finished National Fine Thread



Plate 18-35

Diameter & Thread	Part No.	Carton Qty.
1/4-28	120 367	50
5/16-24	120 368	50
3/8-24	114 547	25
3/8-24	120 369	50
7/16-20	271 506	50
1/2-20	120 371	50
9/16-18	124 634	25

NUT - HEXAGON

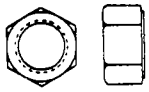

Plate 18-28

Diameter & Thread	Part No.	Carton Qty.
3/4-16	426 099	10

NUT - HEXAGON
Lock, Standard, Semi - Finished

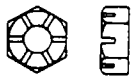

Plate 18-30

Diameter & Thread	Part No.	Carton Qty.
7/16-14	126 012	50

NUT - HEXAGON
Common



Plate 18-32

Thread & Length	Part No.	Carton Qty.
No. 8-32	120 622	100
No. 10-24	116 000	100
No. 12-24	121 743	100

NUT - HEXAGON
Standard, Semi-Finished National Coarse Thread



Plate 18-34

Diameter & Thread	Part No.	Carton Qty.
1/4-20	120 375	50
5/16-18	120 376	50
3/8-16	120 377	50
7/16-14	271 501	50
1/2-13	120 378	50
9/16-12	124 583	25
5/8-11	124 589	25

NUT
Inverted Flared Tube



Plate 18-36

Tube Dia.	Thread	Part No.	Carton Qty.
3/16	3/8-24	137 396	50
1/4	7/16-24	137 397	50
5/16	1/2-20	137 398	25
3/8	5/8-18	137 399	25

Printed in U.S.A.
January 1972

NUT - HEXAGON
Tri-Slot, Semi-Finished



Plate 18-37

Diameter & Thread	Part No.	Carton Qty.
3/4-16	128 180	5

PIN - DOWEL

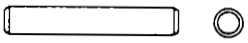

Plate 18-39

Diameter	Length	Part No.	Carton Qty.
1/4	2-1/4	141 210	10
5/16	2-1/4	141 232	10

PIN
Straight, Grooved



Plate 18-40

Diameter	Length	Part No.	Carton Qty.
1/4	1	142 520	10

PIN - COTTER
Split

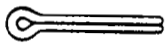

Plate 18-38

Length	Diameter	Part No.	Carton Qty.
3/4	3/32	103 373	100
1-1/8	3/32	108 636	100

PLUG - BUTTON

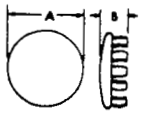

Plate 18-41

Dim. "A"	Dim. "B"	Part No.	Carton Qty.
1	19/64	142 093	10

PLUG - EXPANSION



Plate 18-42

Diameter	Part No.	Carton Qty.
5/8	103 891	25
3/4	103 892	25
13/16	105 602	25
7/8	103 893	25
15/16	117 919	25
1-1/16	117 920	10

Diameter	Part No.	Carton Qty.
1-3/16	140 690	10
1-3/16	117 921	10
1-1/4	179 380	10
1-3/8	117 923	10
1-1/2	103 896	10
1-5/8	117 924	10
1-5/8	140 802	10
1-3/4	103 897	10
1-7/8	114 564	10
2	140 089	10

PLUG - PIPE
Square Head, Hollow

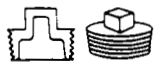

Plate 18-46

Diameter & Thread	Part No.	Carton Qty.
3/8-18	112 304	5
3/4-14	103 869	5

PLUG - PIPE
Slotted Headless



Plate 18-45

Diameter & Thread	Part No.	Carton Qty.
1/8-27	118 831	10

RIVET
Solid, Round Head

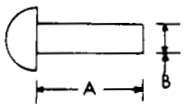

Plate 18-50

Dim. "A"	Dim. "B"	Part No.	Carton Qty.
5/8	3/16	108 682	100

RIVET - TUBULAR
Oval Head, Drilled

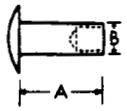

Plate 18-52

Dim. "A"	Dim. "B"	Part No.	Carton Qty.
9/64	1/4	118 140	100
3/16	3/32	131 284	100

SCREW - FILLISTER HEAD
Cross Recess, National Coarse Thread



Plate 18-54

Diameter & Thread	Length	Part No.	Carton Qty.
No. 10-24	7/16	153 241	100

SCREW
Fillister Head, Slotted



Plate 18-56

Diameter & Thread	Length	Part No.	Carton Qty.
1/4-20	2-1/2	132 300	100

PLUG - PIPE
Square Head, Solid



Plate 18-47

Diameter & Thread	Part No.	Carton Qty.
1/8-27	143 932	25
1/4-18	143 933	25

RIVET - TUBULAR
Flat Head, Countersunk

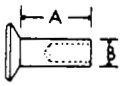

Plate 18-49

Dim. "A"	Dim. "B"	Part No.	Carton Qty.
9/32	9/64	121 573	100
13/32	3/16	114 518	100

RIVET
Split, Oval Head



Plate 18-51

Diameter	Length	Part No.	Carton Qty.
9/64	7/16	113 194	100

SCREW - TAPPING
Cross Recess, National Course Thread

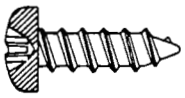

Plate 18-53

Diameter & Thread	Length	Part No.	Carton Qty.
No. 14-10	3/4	162 077	100

SCREW - FILLISTER HEAD
Cross Recess, National Fine Thread

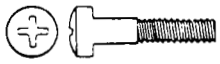

Plate 18-55

Diameter & Thread	Length	Part No.	Carton Qty.
No. 10-32	1-1/2	153 479	50

Printed in U.S.A.
January 1972

SCREW - FLAT HEAD

Cross Recess, National Coarse Thread



Plate 18-57

Length	Diameter & Thread									
	No. 6-32		No. 8-32		No. 10-24		No. 12-24		1/4-20	
	Part No.	Carton Qty.	Part No.	Carton Qty.	Part No.	Carton Qty.	Part No.	Carton Qty.	Part No.	Carton Qty.
3/16			155 868	100						
1/4	155 830	100								
1/2							156 094	100		
5/8									156 250	100
1					155 954	100				

SCREW - FLAT HEAD

Cross Recess, National Fine Thread



Plate 18-58

Length	Diameter & Thread			
	No. 10-32		5/16-24	
	Part No.	Carton Qty.	Part No.	Carton Qty.
1/2	156 009	100		
1	156 033	100	178 837	50

SCREW - OVAL HEAD

Cross Recess, National Coarse Thread



Plate 18-59

Length	Diameter & Thread									
	No. 8-32		No. 10-24		No. 12-24		1/4-20		5/16-18	
	Part No.	Carton Qty.	Part No.	Carton Qty.	Part No.	Carton Qty.	Part No.	Carton Qty.	Part No.	Carton Qty.
7/16			148 034	100						
1/2	156 771	50	156 963	100	157 277	100	157 391	100		
5/8	147 762	50	148 109	100						
3/4	186 575	100					443 869	100		
1-1/2	156 831	50								

SCREW - ROUND HEAD

Cross Recess, National Coarse Thread

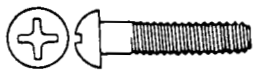

Plate 18-61

Length	Diameter & Thread											
	No. 4-40		No. 6-32		No. 8-32		No. 10-24		No. 12-24		1/4-20	
	Part No.	Carton Qty.	Part No.	Carton Qty.	Part No.	Carton Qty.	Part No.	Carton Qty.	Part No.	Carton Qty.	Part No.	Carton Qty.
1/4	154 921	100	154 959	100								
1/2			154 987	100	9415 921	100	456 867	100				
3/4									155 278	100	155 348	100
1					188 764	25						

SCREW - ROUND HEAD
Cross Recess, National Fine Thread

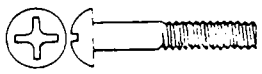

Plate 18-62

Diameter & Thread	Length	Part No.	Carton Qty.
No. 10-32	5/16	9416 993	100
No. 10-32	1/2	155 194	100

STUD



Plate 18-64

Stud End Dia. & Thread	Nut End Dia. & Thread	Length	Part No.	Ctn. Qty.
3/8-16	3/8-24	3-5/16	103 203	5
3/8-16	3/8-24	5-13/16	111 647	5

WASHER - LOCK



Plate 18-66

Bolt Size	Part No.	Carton Qty.
1/4	120 380	100
5/16	120 214	100
3/8	120 382	100
1/2	120 384	100
9/16	120 898	50
5/8	121 574	50

WASHER - LOCK
External Teeth



Plate 18-68

Bolt Size	Part No.	Carton Qty.
1/4	121 753	100
5/16	138 485	100
7/16	136 857	50
1/2	135 629	100
9/16	138 498	50
5/8	138 502	50

SLEEVE
Ball Sleeve Tubing



Plate 18-63

Diameter	Part No.	Carton Qty.
3/8	114 624	25
3/4	125 654	25

WASHER - LOCK
Countersunk, External Tooth

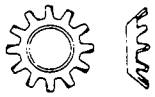

Plate 18-65

Bolt Size	I. D.	Part No.	Carton Qty.
3/8	.398	138 617	100

WASHER - LOCK
External and Internal Teeth



Plate 18-67

Bolt Size	Part No.	Carton Qty.
1/4	174 916	50
5/16	178 532	50
7/16	178 571	50
9/16	178 612	25

WASHER - PLAIN
Small



Plate 18-70

Bolt Size	Part No.	Carton Qty.
1/4	120 392	100
5/16	120 387	100
3/8	120 394	100
7/16	120 395	100
1/2	120 396	50
9/16	121 458	50
5/8	131 016	50

WASHER - PLAIN
Large

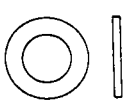

Plate 18-69

Bolt Size	Part No.	Carton Qty.
1/4	147 697	100
5/16	120 387	100
3/8	128 051	50
1/2	126 335	50

Printed in U.S.A.
January 1972

GROUP 19 - STEERING

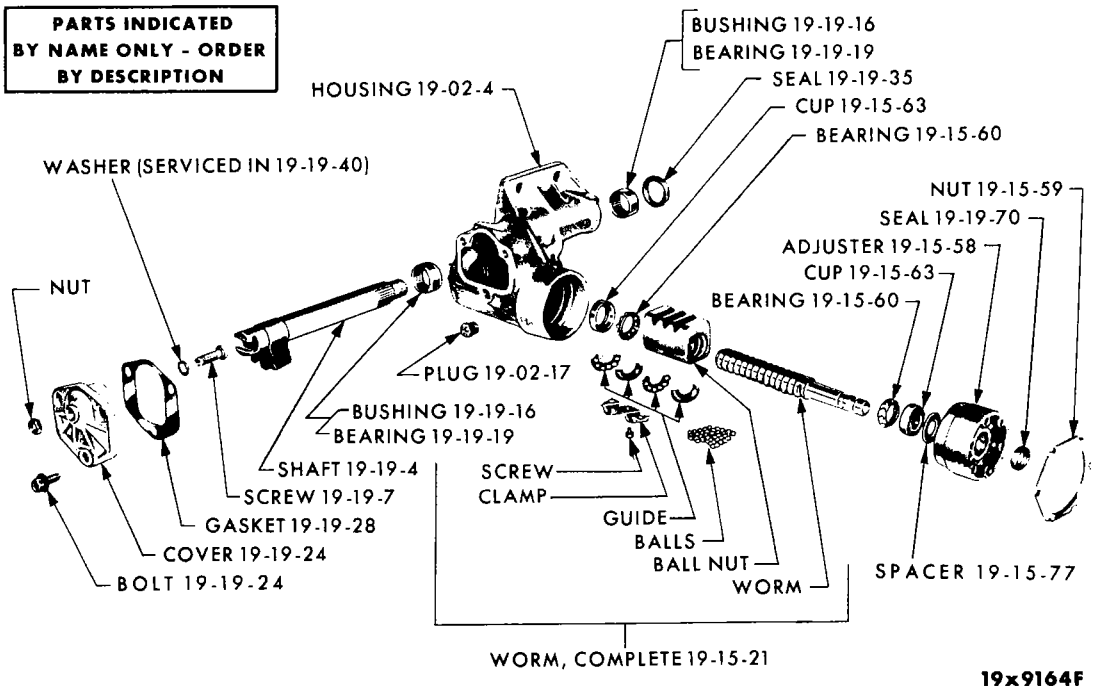

STANDARD STEERING GEAR ASSEMBLY

NOTES

NOTES

CODE	PART NAME	ENG. TYPE OR CU.IN.	V 1-2	B J 1-2	L 1-2	R 1-2	W 1-2	P 1-2	D 1-2	C 1	C 2	C 3	Y 1	PART NUMBER

STANDARD STEERING

NOTE: In the following Standard Steering Text for the Chrysler, Plymouth Fury and Dodge Polara-Monaco Models only, Chrysler built and Saginaw built Steering Column Component Parts are listed.

You may identify the Chrysler built Steering Column by a White Plastic Bearing Support mounted with two bolts at the lower end of the Steering Column Jacket. You may identify the Saginaw Built Steering Column by a Black Plastic Bearing Support mounted with a wire Clip at the lower end of the Steering Column Jacket.

19-01-0 STEERING GEAR ASSEMBLY

19-01-3	REPAIR PACKAGE, Strg. Gear	6	1	—	1	—	—	—	—	—	—	—	—	2808 419
	w/318 Eng.	8	1	—	1	—	—	—	—	—	—	—	—	2808 420
			—	1	—	1	1	—	—	—	—	—	—	2808 420
			—	—	—	—	—	1	1	1	1	—	—	2525 481
19-01-8	CHUCK, Strg. Gear	6	1	—	1	—	—	—	—	—	—	—	—	2537 727
	W/318 Eng. and 340	8	1	—	1	—	—	—	—	—	—	—	—	2537 726
			—	1	—	1	1	—	—	—	—	—	—	2537 726
			—	—	—	—	—	1	1	1	1	—	—	2267 550
	Bolt, Mounting		3	3	3	3	3	—	—	—	—	—	—	6028 193
	Bolt, Mounting-Inboard		—	—	—	—	—	2	2	2	2	—	—	6028 193
	Stud, Mounting		—	—	—	—	—	1	1	1	1	—	—	6028 191
	Washer		3	3	3	3	3	3	3	3	3	—	—	6028 762

19-02-0 STEERING GEAR HOUSING

19-02-4	HOUSING, Strg. Gear	6	1	—	1	—	—	—	—	—	—	—	—	2537 347
		8	1	—	1	—	—	—	—	—	—	—	—	2537 346
			—	1	—	1	1	—	—	—	—	—	—	2537 346
			—	—	—	—	—	1	1	1	1	1	—	2267 551
	Washer, Housing to Frame		AR	AR	AR	AR	AR	AR	AR	AR	AR	—	—	6027 224
19-02-17	PLUG, Strg. Gear Housing Oil Filler		1	1	1	1	1	1	1	1	1	—	—	1673 974

19-14-0 STEERING COLUMN JACKET

19-14-1	JACKET, Strg. Column												
	w/3 Speed Man. Trans. Col. Shift		1	—	1	—	—	—	—	—	—	—	—	2996 011
	Except 3 Speed Man. Trans. Col. Shift	70	1	—	1	—	—	—	—	—	—	—	—	2996 012
	Except 3 Speed Man. Trans. Col. Shift	71	1	—	1	1	1	—	—	—	—	—	—	3575 261
		70	—	1	—	—	—	—	—	—	—	—	—	2996 018
		71	—	1	—	—	—	—	—	—	—	—	—	3575 262
	w/3 Speed Man. Trans. Col. Shift w/225 and 318 Eng.	70	—	—	—	1	1	—	—	—	—	—	—	2996 013
	w/3 Speed Man. Trans. Col. Shift	71	—	—	—	1	1	—	—	—	—	—	—	3467 190
	Except 3 Speed Man. Trans. Col. Shift	70	—	—	—	1	1	—	—	—	—	—	—	2996 014
	W/3 Speed Man. Trans.		—	—	—	—	—	1	1	1	1	—	—	2996 015
	w/Auto. except Tilt Strg. w/Single Coupling	70	—	—	—	—	—	1	1	—	—	—	—	2996 016
	w/Auto. Trans. Except Tilt Strg. w/Double Coupling		—	—	—	—	—	1	1	—	—	—	—	3467 447
	w/Auto. Trans. Except Tilt-Telescopic Strg. w/Double Coupling	71	—	—	—	—	—	—	—	1	1	—	—	3467 351
19-14-4	BEARING, Strg. Column Shaft, except Tilt and Tilt - Telescopic Strg.	Upper	1	1	1	1	1	1	1	1	1	—	—	2265 656
	BEARING, W/Support, Strg. Column Shaft w/3 Speed Man. Trans.,	Lower 70	1	—	1	1	1	1	1	—	—	—	—	2883 543
	w/3 Speed Man. Trans., w/Single Coupling	70	—	—	—	—	—	—	1	—	—	—	—	2883 543

CARLINES J - Challenger, B - Barracuda, V - Valiant, L - Dart, R - Belvedere - Satellite, W - Coronet - Charger, P - Plymouth, D - Dodge, C - Chrysler, Y - Imperial

AR Indicates use as required.

Numerals in parentheses ( ) refer to notes.

# Indicates parts not listed in any previous parts book.

★ Indicates change or addition.

Printed in U.S.A. January 1972

CODE	PART NAME	ENG. TYPE OR CU.IN.	V 1-2	B J 1-2	L 1-2	R 1-2	W 1-2	P 1-2	D 1-2	C 1	C 2	C 3	Y 1	PART NUMBER
	STANDARD STEERING													
	19-14-0 STEERING COLUMN JACKET Cont'd.													
19-14-4	BEARING Cont'd.													
	w/3 Speed Man. Trans., w/Double Coupling	70	—	—	—	—	—	—	1	1	—	—	—	2950 963
	w/3 Speed Man. Trans.	71	1	—	1	1	1	—	—	—	—	—	—	2883 543
	w/3 Speed Man. Trans.	71	—	—	—	—	—	1	1	1	—	—	—	2950 963
	w/Auto. Trans. Except Tilt Strg., w/Double Coupling	70	—	—	—	—	—	—	1	—	—	—	—	3467 435
	Except 3 Speed Man. Trans.	71	—	—	—	—	—	1	1	—	—	—	—	3467 435
	Snap Ring, Bearing Upper		1	1	1	1	1	1	1	1	—	—	—	6024 333
	Snap Ring, Bearing Lower		1	1	1	1	1	1	1	1	—	—	—	6023 045
	Screw, Bearing Support, w/3 Speed Man. Trans.		3	—	3	3	3	3	3	3	—	—	—	6029 175
19-14-21	HOUSING, Strg. Column Shaft Bearing, w/Auto. Trans. Column Shift	70	1	1	1	1	1	—	—	—	—	—	—	2950 826
	w/Auto. Trans. Col. Shift	71	1	1	1	1	1	—	—	—	—	—	—	3575 234
	Except Auto. Trans. Column Shift	70	1	1	1	1	1	—	—	—	—	—	—	2950 817
	Except Auto. Trans. Col. Shift	71	1	1	1	1	1	—	—	—	—	—	—	3575 231
	Except Tilt and Tilt-Telescopic Strg.	70	—	—	—	—	—	1	1	1	1	—	—	2950 817
		71	—	—	—	—	—	1	1	1	1	—	—	3575 231
	Washer, Spring		1	1	1	1	1	1	1	1	1	—	—	6023 046
19-14-23	PLATE, Strg. Column Shaft Bearing Retainer Except Tilt and Tilt-Telescopic Strg.		1	1	1	1	1	1	1	1	1	—	—	2950 989
	PLATE, Strg. Column Jacket Support Complete		1	—	1	—	—	—	—	—	—	—	—	2883 204
			—	1	—	—	—	—	—	—	—	—	—	2950 601
		70	—	—	—	1	1	—	—	—	—	—	—	2925 397
		71	—	—	—	1	1	—	—	—	—	—	—	3467 196
	PLATE, Strg. Column Jacket Support "O" Ring	70	1	—	1	1	1	1	1	1	1	—	—	2883 210
		70	—	1	—	—	—	—	—	—	—	—	—	2950 814
		71	1	—	1	—	—	1	1	1	—	—	—	2883 210
		71	—	1	—	1	1	—	—	—	—	—	—	3575 015
	Screw, Retainer Plate		3	3	3	3	3	3	3	3	3	—	—	6023 088
	"O" RING, Strg. - Column Jacket Plate		1	1	1	1	1	1	1	1	1	—	—	6026 275
19-14-27	ADAPTER, w/Lower Bearing, Saginaw Built		—	—	—	—	—	—	—	1	1	—	—	2950 504
19-14-28	COVER, Strg. Column Jacket		1	1	1	1	1	1	1	1	1	—	—	2883 306
19-14-35	CLAMP, Instrument Panel Strg. Column		1	—	1	—	—	—	—	—	—	—	—	2950 952
		70	—	—	—	1	1	—	—	—	—	—	—	2950 954
	Stud, Clamp		2	2	2	2	2	—	—	—	—	—	—	6027 947
	Nut		2	—	2	2	2	—	—	—	—	—	—	6027 403
	Washer		2	—	2	2	2	—	—	—	—	—	—	6027 404
	Screw w/Washer, Clamp to Col.		4	—	4	4	4	—	—	—	—	—	—	6027 904
	Screw, Clamp to Support Bracket		1	—	1	1	1	—	—	—	—	—	—	6027 402
	Washer		1	—	1	1	1	—	—	—	—	—	—	6027 404
9-14-36	SPACER, Instrument Panel Strg. Column Clamp		3	—	3	3	3	—	—	—	—	—	—	2950 150
		71	—	—	—	—	—	3	3	3	—	—	—	2950 150
	SPACER, Strg. Column Support Bracket	70	—	—	—	—	—	3	3	3	3	—	—	2950 150
19-14-37	BRACKET, Strg. Column		—	1	—	—	—	—	—	—	—	—	—	2950 956
	Screw, w/Washer, to Strg. Column		—	4	—	—	—	—	—	—	—	—	—	6026 904
19-14-38	INSULATOR, Strg. Column Shaft Upper Bearing Except Tilt-Tilt-Telescopic Strg.		1	1	1	1	1	1	1	1	1	—	—	2925 491
	Lower Bearing, w/Double Coupling		—	—	—	—	—	—	1	1	—	—	—	2530 566
19-14-48	LEVER, Strg. Column Shaft Lock, Except Tilt, Tilt-Telescopic Strg.		1	1	1	1	1	1	1	1	1	—	—	2950 840

CARLINES: J - Challenger, B - Barracuda, V - Valiant, L - Dart, R - Belvedere - Satellite, W - Coronet - Charger, P - Plymouth, D - Dodge, C - Chrysler, Y - Imperial

AR Indicates use as required.

Numerals in parentheses ( ) refer to notes.

# Indicates parts not listed in any previous parts book.

★ Indicates change or addition.

Printed in U.S.A. January 1972

STANDARD STEERING

19-14-0 STEERING COLUMN JACKET Cont'd.

CODE	PART NAME	ENG. TYPE OR CU.IN.		V 1-2	B J 1-2	L 1-2	R 1-2	W 1-2	P 1-2	D 1-2	C 1	C 2	C 3	Y 1	PART NUMBER
19-14-49	TROUGH, Strg. Column Wiring, w/o Paint	70		1	—	1	1	1	—	—	—	—	—	—	2996 027
		70		—	1	—	—	—	—	—	—	—	—	—	2950 961
	Except Tilt, Tilt-Telescopic Strg.	70		—	—	—	—	—	1	1	1	1	—	—	2996 045
	Black	70		1	—	1	1	1	—	—	—	—	—	—	4333 FX9
	Burnt Orange	70		—	—	—	—	—	1	1	—	—	—	—	4334 FK5
	Black	70		—	—	—	—	—	1	1	—	—	—	—	4334 FX9
	Black	70		—	1	—	—	—	—	—	—	—	—	—	4335 FX9
	Blue	71		1	—	1	1	1	—	—	—	—	—	—	4333 GB7
	Green	71		1	—	1	1	1	—	—	—	—	—	—	4333 GF7
	Tan	71		1	—	1	1	1	—	—	—	—	—	—	4333 GT6
	Black	71		1	—	1	1	1	—	—	—	—	—	—	4333 FX9
	Gold	71		1	—	1	1	1	—	—	—	—	—	—	4333 GY6
	Indigo	71		—	—	—	1	1	—	—	—	—	—	—	4333 GC8
	Black	71		—	—	—	—	—	1	1	1	1	—	—	4334 FX9
	Screw			2	2	2	2	2	2	2	2	2	—	—	9423 520
19-14-50	BRACE, Instrument Panel Strg. Column Clamp To Pedal Bracket	70		—	—	—	1	1	—	—	—	—	—	—	2925 406
	Screw, w/Washer	70		—	—	—	AR	AR	—	—	—	—	—	—	6025 329
19-14-59	CAN, Strg. Column Energy Absorbing			—	1	—	—	—	—	—	—	—	—	—	2950 812
	NUT	70		—	3	—	—	—	—	—	—	—	—	—	6028 265
	Nut	71		—	3	—	—	—	—	—	—	—	—	—	6029 392
19-14-68	SEAL, Strg. Col. Jacket To Tube, w/Auto. Trans. Col. Shift, Except Tilt Strg.	71		1	1	1	1	1	—	—	—	—	—	—	3575 082
		71		—	—	—	—	—	1	1	—	—	—	—	3575 206
	w/Floor Shift, Except Tilt Strg.	71		1	1	1	1	1	—	—	—	—	—	—	3575 227
19-14-73	RETAINER, Strg. Column Jacket Seal, w/Floor Shift	71		1	1	1	1	1	—	—	—	—	—	—	3575 228
19-14-82	PLATE, Strg. Column Shaft Lock, Except Tilt, Tilt-Telescopic Strg.			1	1	1	1	1	1	1	1	1	—	—	2950 980
	PLATE, Strg. Column Lock Lower Guide, PLATE, Strg. Column Lock Lever Guide			1	1	1	1	1	1	1	1	1	—	—	2950 839
	Screw, Guide Plate			2	2	2	2	2	2	2	2	2	—	—	6028 499
	Pin, Lock Plate			1	1	1	1	1	1	1	1	1	—	—	9412 281
19-14-120	HOUSING, Strg. Column Lock, W/Auto Trans. Column Shift			1	1	1	1	1	—	—	—	—	—	—	2950 832
	Except Auto Trans. Column Shift			1	1	1	1	1	—	—	—	—	—	—	2950 823
	Except Tilt, Tilt-Telescopic Strg.			—	—	—	—	—	1	1	1	1	—	—	2950 823
	Screw			4	4	4	4	4	4	4	4	4	—	—	6028 665
19-14-121	SPRING, Strg. Column Lock, Except Tilt, Tilt-Telescopic Strg.			1	1	1	1	1	1	1	1	1	—	—	2996 858
	SPRING, Strg. Column Lock Lever Return, Except Tilt, Tilt-Telescopic Strg.	70		1	1	1	1	1	1	1	1	1	—	—	2950 843
19-14-123	SLEEVE, Strg. Column Shaft Lock Plate, Except Tilt, Tilt-Telescopic Strg.			1	1	1	1	1	1	1	1	1	—	—	3467 178

19-15-0 STEERING COLUMN SHAFT AND COUPLING

19-15-4	SHAFT, Strg. Column	40" .91 lgh.	70	1	—	1	—	—	—	—	—	—	—	—	2996 752
		43" .86 lgh.	70	—	1	—	—	—	—	—	—	—	—	—	2996 759
	Except Police Cars	44" .88 lgh.	70	—	—	—	1	1	—	—	—	—	—	—	2996 754
			71	1	—	1	—	—	—	—	—	—	—	—	3575 538
			71	—	1	—	—	—	—	—	—	—	—	—	3575 543
	Except Police Cars		71	—	—	—	1	1	—	—	—	—	—	—	3575 540
	Except Police Cars	46" .14 lgh.	70	—	—	—	—	—	1	—	—	—	—	—	2996 756
	Except Police Cars	46" .14 lgh.	70 6	—	—	—	—	—	—	1	—	—	—	—	2996 756

CARLINES J - Challenger, B - Barracuda, V - Valiant, L - Dart, R - Belvedere - Satellite, W - Coronet - Charger, P - Plymouth, D - Dodge, C - Chrysler, Y - Imperial

AR Indicates use as required.

Numerals in parentheses ( ) refer to notes.

# Indicates parts not listed in any previous parts book.

★ Indicates change or addition.

Printed in U.S.A. January 1972

STANDARD STEERING

19-15-0 STEERING COLUMN SHAFT AND COUPLING Cont'd.

CODE	PART NAME	ENG. TYPE OR CU.IN.	V 1-2	B J 1-2	L 1-2	R 1-2	W 1-2	P 1-2	D 1-2	C 1	C 2	C 3	Y 1	PART NUMBER
19-15-4	SHAFT Cont'd.													
	w/Co. and Sta. Wag. 46" .14 lgh. 70	8	—	—	—	—	—	—	1	—	—	—	—	2996 756
	w/Auto. Trans., w/2 D. and 4 D. Sed. 36" .62 lgh. 70	8	—	—	—	—	—	—	1	—	—	—	—	3467 439
	w/Rubber Coupling, Canada Built 45" .36 lgh. 70		—	—	—	—	—	1	1	—	—	—	—	2996 758
	w/Double Coupling 36" .68 lgh. 70		—	—	—	—	—	—	1	1	1	—	—	2996 825
	w/Man. Trans. 71		—	—	—	—	—	1	1	1	—	—	—	2996 825
	w/Auto. Trans. except Tilt Strg. 71		—	—	—	—	—	1	1	—	—	—	—	3467 439
	w/Auto. Trans. except Tilt-Telescopic Strg. 71		—	—	—	—	—	—	—	1	1	1	1	2996 825
	Lower 8" .02 lgh. w/Double Coupling		—	—	—	—	—	1	1	1	1	—	—	2996 777
19-15-17	COVER, Strg. Column Shaft Coupling Body		1	1	1	1	1	1	1	1	1	—	—	2530 538
19-15-20	SPRING, Strg. Column Shaft Coupling Ground, W/Rubber Coupling, Canada Built		—	—	—	—	—	1	1	—	—	—	—	2768 287
			—	—	—	—	—	—	—	1	1	—	—	2768 287
	71		—	—	—	—	—	1	1	—	—	—	—	2768 287
19-15-21	WORM, w/Ball Nut, Strg. Gear		1	1	1	1	1	1	1	1	1	—	—	2267 454
19-15-23	BODY, Strg. Column Shaft Coupling		1	1	1	1	1	1	1	1	1	—	—	2996 856
	COUPLING, Strg. Column Shaft, W/Rubber Coupling Canada Built		—	—	—	—	—	1	1	—	—	—	—	2530 541
	w/Rubber Coupling U.S. Built		—	—	—	—	—	1	1	1	1	—	—	2530 541
	Pin, Body		1	1	1	1	1	1	1	1	1	—	—	9431 620
	Pin, Spring Coupling		AR	AR	AR	AR	AR	AR	AR	AR	—	—	—	6028 750
	Bolt, Coupling		—	—	—	—	—	1	1	1	1	—	—	6026 435
19-15-24	PIN, Strg. Column Shaft Lower Coupling		1	1	1	1	1	1	1	1	1	—	—	2266 743
19-15-25	"O" RING, Strg. Column Shaft, w/Double Coupling, w/3 Speed Man. Trans.		—	—	—	—	—	1	1	1	1	—	—	1407 748
19-15-28	SEAL, Strg. Column Shaft Coupling Body		1	1	1	1	1	1	1	1	1	—	—	2800 741
	SEAL, Strg. Column Jacket To Tube, Except Tilt Strg. 70		AR	AR	AR	AR	AR	AR	AR	AR	—	—	—	2996 784
	w/Auto. Trans. Col. Shift, w/out Tilt Strg.		1	1	1	1	1	—	—	—	—	—	—	3575 082
			—	—	—	—	—	1	1	—	—	—	—	3575 206
19-15-35	SPRING, Strg. Column Shaft Coupling Body		1	1	1	1	1	1	1	1	1	—	—	2925 492
19-15-43	FLANGE, Strg. Column Shaft Coupling W/Rubber Strg. Column Coupling, Canada Built 70		—	—	—	—	—	1	1	—	—	—	—	2530 189
			—	—	—	—	—	1	1	1	1	—	—	2880 737
	w/Rubber Strg. Col. Coupling U.S. Built		—	—	—	—	—	1	—	—	—	—	—	2530 189
19-15-44	SHOE, Strg. Column Shaft Coupling Body		2	2	2	2	2	2	2	2	2	—	—	2800 738
19-15-58	ADJUSTER, Strg. Gear Worm Thrust Bearing		1	1	1	1	1	—	—	—	—	—	—	2127 146
			—	—	—	—	—	1	1	1	1	—	—	2267 492
19-15-59	NUT, Strg. Gear Warm Adjusting Lock		1	1	1	1	1	1	1	1	1	—	—	2267 192
19-15-60	BEARING, Strg. Gear Worm Thrust		2	2	2	2	2	2	2	2	2	—	—	2072 060
19-15-63	CUP, Strg. Gear Worm Thrust Bearing		2	2	2	2	2	2	2	2	2	—	—	2127 097
19-15-77	SPACER, Strg. Gear Thrust Bearing		—	—	—	—	—	1	1	1	1	—	—	2267 478
19-15-111	SHIELD, Strg. Column Shaft Coupling W/Rubber Coupling Canada Built		—	—	—	—	—	1	1	—	—	—	—	2852 470
			—	—	—	—	—	—	—	1	1	—	—	2852 470

CARLINES J - Challenger V - Valiant R - Belvedere - Satellite P - Plymouth C - Chrysler
B - Barracuda L - Dart W - Coronet - Charger D - Dodge Y - Imperial

AR Indicates use as required.

Numerals in parentheses ( ) refer to notes.

# Indicates parts not listed in any previous parts book.

★ Indicates change or addition.

Printed in U.S.A. January 1972

CODE	PART NAME	ENG. TYPE OR CU.IN.	V 1-2	B J 1-2	L 1-2	R 1-2	W 1-2	P 1-2	D 1-2	C 1	C 2	C 3	Y 1	PART NUMBER
	STANDARD STEERING													
19-19-0	**STEERING GEAR SHAFT**													
19-19-4	SHAFT, Strg. Gear		1	1	1	1	1	—	—	—	—	—	—	2127 104
			—	—	—	—	—	1	1	1	1	—	—	2267 487
19-19-7	SCREW, Strg. Gear Shaft Adjusting		1	1	1	1	1	1	1	1	1	—	—	2267 178
19-19-16	BUSHING, Strg. Gear Shaft	6	2	—	2	—	—	—	—	—	—	—	—	2267 128
19-19-19	BEARING, Strg. Gear Shaft	8	3	—	3	—	—	—	—	—	—	—	—	2948 801
			—	3	—	3	3	—	—	—	—	—	—	2948 801
			—	—	—	—	—	2	2	2	2	—	—	1734 078
19-19-24	COVER, Strg. Gear Shaft		1	1	1	1	1	—	—	—	—	—	—	2267 152
			—	—	—	—	—	1	1	1	1	—	—	2267 467
	Bolt, w/Washer		AR	AR	AR	AR	AR	AR	AR	AR	AR	—	—	6025 063
	Bolt, w/Washer		—	—	—	—	—	1	1	1	1	—	—	6024 487
19-19-28	GASKET, Strg. Gear Shaft Cover		1	1	1	1	1	—	—	—	—	—	—	2127 108
			—	—	—	—	—	1	1	1	1	—	—	2267 468
19-19-35	OIL SEAL, Strg. Gear Shaft		1	1	1	1	1	—	—	—	—	—	—	2127 154
			—	—	—	—	—	1	1	1	1	—	—	2537 153
19-19-40	WASHER PACKAGE, Strg. Gear Shaft Screw	70	1	1	1	1	1	1	1	1	1	—	—	2279 961
19-19-70	SEAL, Strg. Gear Worm Shaft		1	1	1	1	1	1	1	1	1	—	—	2267 156
19-27-0	**STEERING LINK GEAR ARM AND IDLER ARM**													
19-27-2	ARM PACKAGE, Strg. Link Gear		1	—	1	—	—	—	—	—	—	—	—	3004 807
		70	—	—	—	1	1	—	—	—	—	—	—	3004 811
		71	—	—	—	1	1	—	—	—	—	—	—	2835 880
			—	—	—	—	—	1	1	1	—	—	—	3004 810
	Arm, Strg. Link Gear Except 340-3-2 Bbl. Carbs.		—	1	—	—	—	—	—	—	—	—	—	2835 880
	w/340 3-2 Bbl. Carbs.	8	—	1	—	—	—	—	—	—	—	—	—	2948 713
19-27-8	NUT, Strg. Link Gear Arm		1	1	1	1	1	1	1	1	1	—	—	2207 359
	Nut, Strg. Link Gear Arm Stud End		1	1	1	1	1	—	—	—	—	—	1	9425 132
	Washer, Gear Arm Nut		1	1	1	1	1	1	1	1	1	—	—	6028 088
19-27-31	ARM, Strg. Link Idler	70	1	—	1	—	—	—	—	—	—	—	—	2835 826
		71	1	—	1	—	—	—	—	—	—	—	—	2948 624
		70	—	1	—	1	1	—	—	—	—	—	—	2835 834
		71	—	1	—	1	1	—	—	—	—	—	—	2535 886
			—	—	—	—	—	1	1	1	1	—	—	2835 842
	Nut, Stud		1	1	1	1	1	1	1	1	1	—	—	9425 132
19-27-33	BRACKET, Front Suspension Crossmember Strg. Linkage Idler Arm		1	—	1	—	—	—	—	—	—	—	—	2883 977
		70	—	—	—	1	1	—	—	—	—	—	—	2883 996
19-27-40	SEAL, Strg. Link Idler Arm End		1	1	1	1	1	—	—	—	—	—	—	2835 895
	SEAL, Strg. Link Idler Arm Small Socket		—	—	—	—	—	1	1	1	1	—	—	2535 461
	SEAL, Strg. Link Gear Arm Stud		—	—	—	—	—	1	1	1	1	—	—	2535 459
	SEAL, Strg. Link Gear Arm Stud End		1	1	1	1	1	—	—	—	—	—	—	2835 896
19-27-45	BOLT, Package Strg. Link Idler Arm Bracket End		1	1	1	1	1	—	—	—	—	—	—	3004 804
			—	—	—	—	—	1	1	1	1	—	—	3084 805
19-27-50	LINK, Strg. Link Center		1	—	1	—	—	—	—	—	—	—	—	2535 077
	★		—	1	—	—	—	—	—	—	—	—	—	2835 877
		70	—	—	—	1	1	—	—	—	—	—	—	1858 015
		71	—	—	—	1	1	—	—	—	—	—	—	2835 877
			—	—	—	—	—	1	1	1	1	—	—	2269 393
19-27-51	PLUG, Strg. Link Gear Arm Stud		1	—	1	—	—	1	1	1	1	1	—	1858 115
	Strg. Link Gear Arm End Cover		—	1	—	1	1	—	—	—	—	—	—	1858 115
	Strg. Link Tie Rod End Cover		4	4	4	4	4	4	4	4	4	—	—	1858 115

CARLINES J - Challenger, B - Barracuda, V - Valiant, L - Dart, R - Belvedere - Satellite, W - Coronet - Charger, P - Plymouth, D - Dodge, C - Chrysler, Y - Imperial

AR Indicates use as required.

Numerals in parentheses ( ) refer to notes.

# Indicates parts not listed in any previous parts book.

★ Indicates change or addition.

Printed in U.S.A. January 1972

CODE	PART NAME	ENG. TYPE OR CU.IN.	V 1-2	B J 1-2	L 1-2	R 1-2	W 1-2	P 1-2	D 1-2	C 1	C 2	C 3	Y 1	PART NUMBER
	STANDARD STEERING													
19-30-0	**STEERING WHEEL**													
19-30-4	WHEEL, Strg., W/Padded Horn Button,													
		Blue 70	1	—	1	1	1	—	—	—	—	—	—	4017 FB7
		Red 70	1	—	1	1	1	—	—	—	—	—	—	4017 FE5
		Green 70	1	—	1	1	1	—	—	—	—	—	—	4017 FF8
		Tan 70	1	—	1	1	1	—	—	—	—	—	—	4017 FT4
		Black 70	1	—	1	1	1	—	—	—	—	—	—	4017 FX9
		Blue 71	1	—	1	1	1	—	—	—	—	—	—	4054 GB7
		Green 71	1	—	1	—	—	—	—	—	—	—	—	4054 GF7
		Black 71	1	—	1	1	1	—	—	—	—	—	—	4054 GX9
		Gold 71	1	—	1	—	—	—	—	—	—	—	—	4054 GY6
		Tan 71	1	—	1	1	1	—	—	—	—	—	—	4054 GT6
		Black 70	—	1	—	—	—	—	—	—	—	—	—	4087 FX9
	W/Full or Partial Horn Ring, W/O. Grooved Rim	Blue 70	1	—	1	1	1	—	—	—	—	—	—	4008 FB7
		Green 70	1	—	1	1	1	—	—	—	—	—	—	4008 FF8
		Burnt Orange 70	—	—	—	1	1	—	—	—	—	—	—	4008 FK5
		Tan 70	1	—	1	1	1	—	—	—	—	—	—	4008 FT4
		Black 70	1	—	1	1	1	—	—	—	—	—	—	4008 FX9
		Gold 70	—	—	—	1	1	—	—	—	—	—	—	4008 FY4
		Red 70	1	—	1	—	—	—	—	—	—	—	—	4008 FE5
	w/3 Spoke Horn Buttons,	Blue 71	1	—	1	1	1	1	1	—	—	—	—	4025 GB7
		Green 71	1	—	1	1	1	1	1	—	—	—	—	4025 GF7
		Tan 71	1	—	1	1	1	1	1	—	—	—	—	4025 GT6
		Black 71	1	—	1	1	1	1	1	—	—	—	—	4025 GX9
		Gold 71	1	—	1	1	1	1	1	—	—	—	—	4025 GY6
		Russet 71	—	—	—	—	—	1	1	—	—	—	—	4025 GE9
		Gun Metal 71	4	4	4	4	4	4	4	4	4	—	—	4025 GA6
		Blue 71	—	—	—	—	—	—	1	1	1	—	—	4030 GB7
		Green 71	—	—	—	—	—	—	1	1	1	—	—	4030 GF7
		Tan 71	—	—	—	—	—	—	—	1	1	—	—	4030 GT6
		Black 71	—	—	—	—	—	—	1	1	1	—	—	4030 GX9
		Gold 71	—	—	—	—	—	—	1	1	1	—	—	4030 GY6
		Russet 71	—	—	—	—	—	—	—	1	1	—	—	4030 GE9
		Gun Metal 71	—	—	—	—	—	—	—	1	1	—	—	4030 GA6
	w/Horn Rim Switch	Blue 70	1	—	1	1	1	1	1	1	1	—	—	4010 FB7
		Green 70	1	—	1	1	1	1	1	1	1	—	—	4010 FF8
		Black	1	—	1	1	1	1	1	1	1	—	—	4010 FX9
		Burnt Orange 70	—	—	—	1	1	1	1	—	—	—	—	4010 FK5
		Tan-Med. 70	—	—	—	1	1	1	1	1	1	—	—	4010 FT5
		Gold-Med. 70	—	—	—	1	1	1	1	1	1	—	—	4010 FY4
		Gold-Dark 70	—	—	—	—	—	—	—	1	1	—	—	4010 FY8
		Teal-Peacock 70	—	—	—	—	—	—	—	1	1	—	—	4010 FP6
		Oxblood 70	—	—	—	—	—	—	—	—	1	1	—	4010 FR9
		Burgundy 70	—	—	—	—	—	—	—	1	1	—	—	4010 FM9
		Red 70	1	—	1	—	—	—	—	—	—	—	—	4010 FE4
		Tan-Med. 70	1	—	1	—	—	—	—	—	—	—	—	4010 FT4
		Tan and Black	—	1	—	—	—	—	—	—	—	—	—	4020 FTX
		Tan and Black 71	1	1	1	1	1	—	—	—	—	—	—	4020 FTX
		Blue 71	—	—	—	—	—	1	1	1	1	—	—	4010 GB7
		Russet 71	—	—	—	—	—	1	1	1	1	—	—	4010 GE9
		Green 71	—	—	—	—	—	1	1	1	1	—	—	4010 GF7
		Tan 71	—	—	—	—	—	1	1	1	1	—	—	4010 GT6
		Gold 71	—	—	—	—	—	1	1	1	1	—	—	4010 GY6
		Gun Metal 71	—	—	—	—	—	—	1	1	1	—	—	4010 GA6
	W/Horn Pad, W/ or W/O. Partial Horn Ring,	Blue 70	—	—	—	—	—	1	1	1	1	—	—	4054 FB7
		Green 70	—	—	—	—	—	1	1	1	1	—	—	4054 FF8
		Burnt Orange 70	—	—	—	—	—	1	1	1	1	—	—	4054 FK5

CARLINES J - Challenger, B - Barracuda, V - Valiant, L - Dart, R - Belvedere - Satellite, W - Coronet - Charger, P - Plymouth, D - Dodge, C - Chrysler, Y - Imperial

AR Indicates use as required.

Numerals in parentheses ( ) refer to notes.

# Indicates parts not listed in any previous parts book.

★ Indicates change or addition.

Printed in U.S.A. January 1972

CODE	PART NAME	ENG. TYPE OR CU.IN.	V 1-2	B J 1-2	L 1-2	R 1-2	W 1-2	P 1-2	D 1-2	C 1	C 2	C 3	Y 1	PART NUMBER
	STANDARD STEERING													
19-30-0	**STEERING WHEEL Cont'd.**													
19-30-4	WHEEL Cont'd.													
	Tan 70		—	—	—	—	—	1	1	1	1	—	—	4054 FT4
	Black 70		—	—	—	—	—	1	1	1	1	—	—	4054 FX9
	Gold-Med. 70		—	—	—	—	—	1	1	1	1	—	—	4054 FY4
	Gold-Dark 70		—	—	—	—	—	—	—	1	1	—	—	4054 FY8
	Teal-Peacock 70		—	—	—	—	—	—	—	1	1	—	—	4054 FP6
	Oxblood 70		—	—	—	—	—	—	—	1	1	—	—	4054 FR9
	w/Soft Rim Strg. Wheel		1	—	1	1	1	—	—	—	—	—	—	4039 FX9
	W/Wood Grain		—	—	—	1	1	1	1	—	—	—	—	4016 FTT
			—	1	—	—	—	—	—	—	—	—	—	4004 FTT
	w/Coachman Grain	71	—	1	—	—	—	—	—	—	—	—	—	4026 GX9
19-30-8	EXTENSION, Strg. Wheel Hub, w/Wood Grain Strg. Wheel	70	—	—	—	1	1	1	1	—	—	—	—	2996 788
19-30-10	SPACER, Strg. Wheel, w/Soft Rim And Horn Rim Blow Strg. Wheel		1	—	1	1	1	—	—	—	—	—	—	3467 186
	Nut		3	—	3	3	3	—	—	—	—	—	—	6029 392
19-30-18	NUT, Strg. Column Shaft Strg. Wheel, Except Tilt, Tilt-Telescopic Strg.		1	1	1	1	1	1	1	1	—	—	—	6028 050
	w/Tilt, Tilt-Telescopic Strg.		—	—	—	—	—	1	1	1	—	—	—	6028 051
	Washer, Except Tilt, Tilt-Telescopic Strg.		1	1	1	1	1	1	1	1	—	—	—	6025 671
19-30-43	COVER, Strg. Wheel Center, w/3 Spoke Horn Buttons, Blue	71	1	—	1	1	—	1	1	—	—	—	—	4033 GB7
	Green	71	1	—	1	1	—	1	1	—	—	—	—	4033 GF7
	Tan	71	1	—	1	1	—	1	1	—	—	—	—	4033 GT6
	Black	71	1	—	1	1	—	1	1	—	—	—	—	4033 GX9
	Gold	71	1	—	1	1	—	1	1	—	—	—	—	4033 GY6
	W/Name Plymouth Wood Grain	71	—	—	—	1	—	1	—	—	—	—	—	3575 016
	W/Name Dodge Wood Grain	71	—	—	—	—	1	—	1	—	—	—	—	3575 017
	Wood Grain	71	—	—	—	—	—	—	—	1	1	—	—	3575 056
	Clip	71	—	—	—	3	3	3	3	3	3	—	—	6029 173
	COVER, Strg. Wheel Spoke, w/3 Spoke Horn Buttons Strg. Wheel Blue	71	1	—	1	1	1	1	1	1	1	—	—	4037 GB7
	Green	71	1	—	1	1	1	1	1	1	1	—	—	4037 GF7
	Russet	71	—	—	—	—	—	1	1	1	1	—	—	4037 GE9
	Tan	71	1	—	1	1	1	1	1	1	1	—	—	4037 GT6
	Gold	71	1	—	1	1	1	1	1	1	1	—	—	4037 GY6
	Black	71	1	—	1	1	1	1	1	1	1	—	—	4037 GX9
	Gun Metal	71	—	—	—	—	—	—	1	1	1	—	—	4037 GA6
	Screw, Spoke Cover	71	3	—	3	3	3	3	3	3	3	—	—	9432 334
19-31-0	**STEERING COLUMN BRACKET OR SUPPORT**													
19-31-1	BRACKET, Instrument Panel Strg. Column Support		1	—	1	—	—	—	—	—	—	—	—	2857 737
		71	—	—	—	1	1	—	—	—	—	—	—	3575 273
			—	—	—	—	—	1	1	1	1	—	—	2950 838
	HANGER, Strg. Column Support Bracket		—	—	—	—	—	1	1	1	1	—	—	2925 456
		71	—	—	—	1	1	—	—	—	—	—	—	3575 272
	BRACKET, Strg. Column Hang Mounting		—	—	—	1	1	—	—	—	—	—	—	3467 512
	BRACKET, Instrument Panel Strg. Column Support to Dash		—	1	—	—	—	—	—	—	—	—	—	2984 757
	Screw w/Washer, Support Brkt. to Col.		—	—	—	—	—	—	—	—	—	—	—	6026 904
	Screw, Brkt. to Hanger		1	1	1	1	1	1	1	1	1	—	—	6027 402
	Stud Brkt. or Clamp		2	2	2	2	2	2	2	2	2	—	—	6027 947
	Nut		AR	AR	AR	AR	AR	AR	AR	AR	AR	—	—	6027 403
	Nut		1	—	1	1	1	—	—	—	—	—	—	6027 458
	Washer		AR	AR	AR	AR	AR	AR	AR	AR	AR	—	—	6027 404

CARLINES J - Challenger, B - Barracuda, V - Valiant, L - Dart, R - Belvedere - Satellite, W - Coronet - Charger, P - Plymouth, D - Dodge, C - Chrysler, Y - Imperial

AR Indicates use as required.

Numerals in parentheses ( ) refer to notes.

# Indicates parts not listed in any previous parts book.

★ Indicates change or addition.

Printed in U.S.A. January 1972

CODE	PART NAME	ENG. TYPE OR CU.IN.	V 1-2	B J 1-2	L 1-2	R 1-2	W 1-2	P 1-2	D 1-2	C 1	C 2	C 3	Y 1	PART NUMBER
	STANDARD STEERING													
	19-31-0 STEERING COLUMN BRACKET OR SUPPORT Cont'd.													
19-31-2	SUPPORT, w/Nut, Instrument Panel Strg. Column to Dash	70	—	—	—	1	1	—	—	—	—	—	—	2985 797
19-31-3	CLIP, Strg. Column Support Bracket Hanger		—	—	—	—	—	1	1	1	1	—	—	2925 495
19-31-7	BRACE, Instrument Panel Strg. Col. Support to Bracket	70	—	—	—	1	1	—	—	—	—	—	—	2927 123
	Brace, Instrument Panel Strg. Col. Brace to Cowl Plenum Bracket	70	—	—	—	1	1	—	—	—	—	—	—	2889 231
	Brace to Strg. Col. Support Bracket	70	—	—	—	1	1	—	—	—	—	—	—	2889 232
	19-46-0 STEERING COLUMN GEARSHIFT TUBE													
19-46-3	TUBE, Strg. Column Gearshift, w/Three Speed Man. Trans.		1	—	1	—	—	—	—	—	—	—	—	2996 032
	w/Three Speed Man. Trans. Floor Shift	70	1	—	1	—	—	—	—	—	—	—	—	2996 034
		71	1	—	1	—	—	—	—	—	—	—	—	3467 344
	w/Four Speed Man. Trans. Floor Shift	70	1	—	1	—	—	—	—	—	—	—	—	3467 489
		71	1	—	1	—	—	—	—	—	—	—	—	3467 345
	w/Auto. Trans.	70	1	—	1	—	—	—	—	—	—	—	—	2996 033
	w/Auto. Trans. Col. Shift	71	1	—	1	—	—	—	—	—	—	—	—	3467 343
		70	—	1	—	—	—	—	—	—	—	—	—	2996 039
		71	—	1	—	—	—	—	—	—	—	—	—	3467 346
	w/Three Speed Man. Trans.		—	—	—	1	1	—	—	—	—	—	—	2996 035
	Except Three Speed Man. Trans.	70	—	—	—	1	1	—	—	—	—	—	—	2996 033
		71	—	—	—	1	1	—	—	—	—	—	—	3467 192
	w/Three Speed Man. Trans.		—	—	—	—	—	1	1	1	1	—	—	2996 037
	w/Auto. Trans., except Console and Tilt Strg.	70	—	—	—	—	—	1	—	—	—	—	—	2996 036
	w/Auto. Trans., Except Console and Tilt, Tilt-Telescopic Strg. Cv. Cp., Sta. Wgn. Single Coupling	70	—	—	—	—	—	—	1	1	—	—	—	2996 036
	w/Console, Except Tilt Strg.	70	—	—	—	—	—	1	—	—	—	—	—	2996 031
	w/Console, Except Tilt Strg., Cv. Cp.	70	—	—	—	—	—	—	1	—	—	—	—	2996 031
	w/Console, w/2 Dr., 4 Dr. H. Top	70	—	—	—	—	—	—	1	—	—	—	—	3467 498
	Tube, Shift, Except Tilt-Telescopic Strg. Except Sta. Wgn. w/Double Coupling	70	—	—	—	—	—	—	—	1	1	—	—	3467 360
	w/Auto. Trans., Column Shift w/Double Coupling	70	—	—	—	—	—	—	1	—	—	—	—	3467 440
	w/Auto. Trans. Column Shift, Except Tilt Strg.	71	—	—	—	—	—	1	1	—	—	—	—	3467 193
	w/Auto. Trans. Floor Shift Except Tilt Strg.	71	—	—	—	—	—	1	1	—	—	—	—	3467 194
	w/Auto. Trans., Except Tilt-Telescopic Strg.	71	—	—	—	—	—	—	—	1	1	1	—	3575 010
19-46-8	HOUSING, Strg. Column Gearshift or Tube, W/3 Speed Man. Trans. Column Shift		1	—	1	1	1	1	1	1	1	—	—	2996 798
	w/Auto. Trans. Column Shift	70	1	1	1	1	1	—	—	—	—	—	—	2950 835
		71	1	1	1	1	1	—	—	—	—	—	—	3575 029
	w/Floor Shift	70	1	1	1	1	1	—	—	—	—	—	—	2950 829
	W/Auto. Trans. Except Tilt, Tilt-Telescopic Strg.	70	—	—	—	—	—	1	1	1	1	—	—	2950 820
	w/Auto. Trans. Floor Shift Except Tilt, Tilt-Telescopic Strg.	71	—	—	—	—	—	1	1	1	—	—	—	2950 829

CARLINES J - Challenger, B - Barracuda, V - Valiant, L - Dart, R - Belvedere - Satellite, W - Coronet - Charger, P - Plymouth, D - Dodge, C - Chrysler, Y - Imperial

AR Indicates use as required.

# Indicates parts not listed in any previous parts book.

Numerals in parentheses ( ) refer to notes.

★ Indicates change or addition.

Printed in U.S.A. January 1972

CODE	PART NAME	ENG. TYPE OR CU.IN.	V	B J	L	R	W	P	D	C	C	C	Y	PART NUMBER
			1-2	1-2	1-2	1-2	1-2	1-2	1-2	1	2	3	1	
	STANDARD STEERING													
	19-46-0 STEERING COLUMN GEARSHIFT TUBE Cont'd.													
19-46-8	HOUSING Cont'd. w/Auto. Trans. Col. Shift Except Tilt, Tilt-Telescopic Strg.	71	—	—	—	—	—	1	1	1	—	—	—	3575 028
	HOUSING, Strg. Column Lock Control w/Floor Shift	71	1	1	1	1	1	—	—	—	—	—	—	3575 208
	HOUSING, Gearshift Control Selector Lever Handle, w/Auto. Trans. Floor Shift	70	—	—	—	1	1	1	1	1	1	—	—	3467 045
	Washer, Spring		1	—	1	1	1	1	1	1	—	—	—	6023 046
	Screw, Set	70	—	—	—	—	—	1	1	1	—	—	—	125 735
19-46-10	SPRING, Strg. Column Lock Control Housing, w/Floor Shift	71	1	1	1	1	1	—	—	—	—	—	—	3575 256
19-46-12	SPACER, Strg. Column Gearshift Tube Lever w/3 Speed Man. Trans.		1	—	1	1	1	1	1	1	1	—	—	2883 357
	w/3 Speed Man. Trans.		2	—	2	2	2	2	2	2	2	—	—	2883 541
	BUMPER, Strg. Column Lock Control Housing, w/Floor Shift, Except Tilt Strg.	71	1	1	1	1	1	—	—	—	—	—	—	3575 257
19-46-13	GROMMET, Strg. Column Gearshift Tube Lever, except 3 Speed Man. Trans. Column Shift		1	1	1	1	1	1	1	1	1	—	—	1553 304
	GROMMET, Gearshift Control Upper Rod, W/Auto. Trans. Floor Shift		1	1	1	1	1	1	1	1	1	—	—	1553 304
19-46-14	BUSHING, Strg. Column Gearshift Tube Lever Grommet, w/Auto. Trans. Column Shift		1	1	1	1	1	1	1	1	1	—	—	1553 305
19-46-16	LEVER, Strg. Column Gearshift Tube, First and Reverse, w/Man. Trans. Column Shift		1	—	1	1	1	—	—	—	—	—	—	2996 928
			—	—	—	—	—	1	1	1	1	—	—	2880 920
	Second and Third, W/Man. Trans. Column Shift		1	—	1	1	1	—	—	—	—	—	—	2996 929
19-46-26	SEAL, Strg. Column Gearshift Tube To Shaft, except 3 Speed Man. Trans. Column Shift, w/o Tilt Strg.	70	1	1	1	1	1	1	1	—	—	—	—	2996 785
	SEAL, Strg. Column Shaft, w/Auto. Trans. Col. Shift	71	1	1	1	1	1	—	—	—	—	—	—	3575 081
19-46-29	LEVER, Strg. Column Gearshift Housing Lock, except Tilt, Tilt-Telescopic Strg.		1	1	1	1	1	1	1	1	1	—	—	2950 844
	Pin		1	1	1	1	1	1	1	1	1	—	—	9421 202
19-46-30	CLIP, Strg. Column Gearshift Tube Support, except 3 Speed Man. Trans. Column Shift, W/O. Tilt Strg.		1	1	1	1	1	1	1	—	—	—	—	2996 787
19-46-31	DECAL, Strg. Column Lock Control Housing	71	1	1	1	1	1	—	—	—	—	—	—	# 3575 258
19-46-41	WASHER, Gearshift Rod and Swivel, w/3 Speed Man. Trans.		4	—	4	4	4	4	4	4	—	—	—	631 217
19-46-55	SUPPORT, Strg. Column Gearshift Housing, W/Man. Trans. Column Shift Except Man. Trans. Column Shift also not used W/Tilt, Tilt-Telescopic Strg.		1	—	1	1	1	1	1	1	1	—	—	2996 799
			1	1	1	1	1	1	1	1	1	—	—	2996 800

STANDARD STEERING

19-48-0 GEARSHIFT CONTROL ROD

CODE	PART NAME	ENG. TYPE OR CU.IN.	V 1-2	B J 1-2	L 1-2	R 1-2	W 1-2	P 1-2	D 1-2	C 1	C 2	C 3	Y 1	PART NUMBER
19-48-1	ROD, Gearshift, First and Reverse,													
	W/A903-3 Speed Man. Trans. Col.													
	Shift	6	1	—	1	—	—	—	—	—	—	—	—	3467 101
	70	6	—	—	—	1	1	—	—	—	—	—	—	3467 103
	71	6	—	—	—	1	1	—	—	—	—	—	—	3467 201
	W/A230 - 3 Speed Man. Trans.													
	Col. Shift		1	—	1	—	—	—	—	—	—	—	—	3467 102
	70		—	—	—	1	1	—	—	—	—	—	—	3467 104
	71		—	—	—	1	1	—	—	—	—	—	—	3467 241
			—	—	—	—	—	1	1	1	—	—	—	3467 105
	Second and Third													
	W/A903-3 Speed Man. Trans. Col.													
	Shift	6	1	—	1	—	—	—	—	—	—	—	—	3467 110
	70	6	—	—	—	1	1	—	—	—	—	—	—	3467 112
	W/A230-3 Speed Man. Trans. Col.													
	Shift		1	—	1	—	—	—	—	—	—	—	—	3467 111
	70		—	—	—	1	1	—	—	—	—	—	—	3467 113
	71		—	—	—	1	1	—	—	—	—	—	—	3467 145
			—	—	—	—	—	1	1	1	—	—	—	3467 114
	ROD, Gearshift, W/Auto. Trans. Col. Shift,													
	Front	70	1	—	1	—	—	—	—	—	—	—	—	2781 431
		71	1	—	1	—	—	—	—	—	—	—	—	3467 674
	Front		—	1	—	—	—	—	—	—	—	—	—	2950 297
	Front	70	—	—	—	1	1	—	—	—	—	—	—	2467 934
		71	—	—	—	1	1	—	—	—	—	—	—	3467 657
	Front	70	—	—	—	—	—	1	1	1	1	—	—	2996 459
		71	—	—	—	—	—	1	1	1	1	—	—	3467 729
	Rear		1	—	1	—	—	—	—	—	—	—	—	2781 432
	Rear		—	1	—	—	—	—	—	—	—	—	—	2950 298
	Rear	70	—	—	—	1	1	—	—	—	—	—	—	2467 933
		71	—	—	—	1	1	—	—	—	—	—	—	2950 298
	Rear		—	—	—	—	—	1	1	1	1	—	—	2996 473
	ROD, Gearshift Control Col. Lock Rear,													
	w/A904 Auto. Trans. Floor Shift	70	1	—	1	—	—	—	—	—	—	—	—	3467 079
	w/A727 Auto. Trans. Floor Shift	70	1	—	1	—	—	—	—	—	—	—	—	3467 212
	w/Auto. Trans. Floor Shift	70	—	1	—	—	—	—	—	—	—	—	—	2996 431
		70	—	—	—	1	1	—	—	—	—	—	—	3467 080
			—	—	—	—	—	1	1	1	1	—	—	2996 433
	ROD, Gearshift Col. Lock Front,													
	w/Auto. Trans. Floor Shift	70	1	—	1	—	—	—	—	—	—	—	—	2781 431
		70	—	1	—	—	—	—	—	—	—	—	—	2950 297
		70	—	—	—	1	1	—	—	—	—	—	—	2467 934
		70	—	—	—	—	—	1	1	1	—	—	—	2996 459
		71	—	—	—	—	—	1	1	1	1	—	—	3467 729
	ROD, Gearshift Lock Col.,													
	w/3 Speed Man. Trans. Floor													
	Shift	70	1	—	1	—	—	—	—	—	—	—	—	2996 484
	w/4 Speed Man. Trans. Floor													
	Shift	70	1	—	1	—	—	—	—	—	—	—	—	3467 616
	w/3, 4 Speed Man. Trans. Floor													
	Shift	70	—	1	—	—	—	—	—	—	—	—	—	2996 413
		70	—	—	—	1	1	—	—	—	—	—	—	2467 934
	ROD, Gearshift Lock Trans.,													
	W/3 SPEED Man. Trans. Floor Shift		—	1	—	1	1	—	—	—	—	—	—	2996 309
	w/4 Speed Man. Trans. Floor													
	Shift	70	1	—	1	—	—	—	—	—	—	—	—	3467 617
			—	1	—	1	1	—	—	—	—	—	—	2996 414
	Washer		AR	AR	AR	AR	AR	AR	AR	AR	—	—	—	6027 467

CARLINES: J - Challenger, B - Barracuda, V - Valiant, L - Dart, R - Belvedere - Satellite, W - Coronet - Charger, P - Plymouth, D - Dodge, C - Chrysler, Y - Imperial

AR Indicates use as required.

Numerals in parentheses ( ) refer to notes.

# Indicates parts not listed in any previous parts book.

★ Indicates change or addition.

Printed in U.S.A. January 1972

STANDARD STEERING

19-48-0 GEARSHIFT CONTROL ROD Cont'd.

CODE	PART NAME	ENG. TYPE OR CU.IN.	V 1-2	B J 1-2	L 1-2	R 1-2	W 1-2	P 1-2	D 1-2	C 1	C 2	C 3	Y 1	PART NUMBER
19-48-1	ROD Cont'd.													
	Washer, Rear Rod		1	—	1	1	1	—	—	—	—	—	—	6017 029
19-48-2	ROD END, Gearshift Control Front, w/Auto. Trans. Column Shift	70	—	—	—	—	—	1	1	1	1	—	—	2996 460
		71	—	—	—	—	—	1	1	1	1	—	—	3467 672
	ROD END, Gearshift Col. Lock Front, w/Auto. Trans. Floor Shift	70	—	—	—	—	—	1	1	1	1	—	—	2996 460
		71	—	—	—	—	—	1	1	1	1	—	—	3467 672
	ROD END, Gearshift Control Lower, w/Auto. Trans. Floor Shift	70	—	1	—	—	—	—	—	—	—	—	—	3467 119
19-48-6	BUSHING, Gearshift Rod, w/3 Speed Man. Trans. Column Shift	70	—	—	—	2	2	2	2	2	—	—	—	2800 804
		71	2	—	2	2	2	2	2	2	—	—	—	2781 445
	BUSHING, Gearshift Control Upper Rod, w/Auto. Trans. Floor Shift	71	1	1	1	1	1	1	1	1	1	—	—	3467 245
19-48-7	SMALL PARTS PACKAGE, Gearshift Control, w/3 Speed Man. Trans. Col. Shift	70	1	—	1	—	—	—	—	—	—	—	—	2808 425
		70	—	—	—	1	1	—	—	—	—	—	—	2808 424
	w/o 383 Eng.	70	—	—	—	—	—	1	1	—	—	—	—	2808 426
	w/383 Eng.	70 8	—	—	—	—	—	1	1	1	—	—	—	2808 427
19-48-9	SPRING, Gearshift Control Linkage Retainer, w/Auto. Trans. Floor Shift	70	—	1	—	—	—	—	—	—	—	—	—	3367 648
		71	—	1	—	1	1	—	—	—	—	—	—	3467 648
19-48-12	CLAMP, Gearshift Lock Col. Rod, w/4 Speed Man. Trans.	70	1	—	1	—	—	—	—	—	—	—	—	2204 274
	CLAMP, Gearshift Front Rod, W/Auto. Trans. Col. Shift		—	1	—	—	—	—	—	—	—	—	—	2204 274
		71	—	—	—	1	1	—	—	—	—	—	—	2204 274
	CLAMP, Gearshift Rod Rear Swivel, W/Auto. Trans. Col. Shift		1	—	1	1	1	1	1	1	—	—	—	2204 274
	CLAMP, Gearshift Control Lower Rod Swivel, w/Auto. Trans. Floor Shift		1	1	1	1	1	1	1	1	—	—	—	2204 274
	CLAMP, Gearshift Rod Swivel, W/3 Speed Man. Trans. Col. Shift		2	—	2	2	2	2	2	2	—	—	—	2204 274
	CLAMP, Gearshift Col. Lock Rear Rod, W/Auto Trans. Floor Shift		1	—	1	1	1	—	—	—	—	—	—	2204 274
19-48-16	SWIVEL, Gearshift Rod, W/Auto. Trans. Col. Shift	Front 70	1	1	1	—	—	—	—	—	—	—	—	2467 935
		Rear 70	1	—	1	1	1	—	—	—	—	—	—	2467 935
	SWIVEL, Gearshift Lock Col. Rod w/4 Speed Man. Trans. Floor Shift	70	1	—	1	—	—	—	—	—	—	—	—	3467 237
	SWIVEL, Gearshift Col. Lock Rear Rod, w/Auto. Trans. Floor Shift	70	1	—	1	1	1	—	—	—	—	—	—	2467 935
		71	1	—	1	—	—	—	—	—	—	—	—	3467 665
	SWIVEL, Gearshift Col. Lock Front Rod, w/Auto. Trans. Floor Shift	70	—	1	—	—	—	—	—	—	—	—	—	2467 935
		71	—	1	—	1	1	—	—	—	—	—	—	3467 665
	SWIVEL, Gearshift Control Lower Rod W/Auto. Trans. Floor Shift		—	1	—	—	—	—	—	—	—	—	—	2467 935
		71	1	—	1	—	—	—	—	—	—	—	—	3467 665
		71	—	—	—	1	1	—	—	—	—	—	—	2467 935
19-48-23	CLIP, Gearshift Control Rod		AR	AR	AR	AR	AR	AR	AR	AR	AR	—	—	1137 669
	CLIP, Gearshift Lock Column Swivel, W/3 Speed Man. Trans. Floor Shift		1	—	1	—	—	—	—	—	—	—	—	1635 232

CARLINES J - Challenger, B - Barracuda, V - Valiant, L - Dart, R - Belvedere - Satellite, W - Coronet - Charger, P - Plymouth, D - Dodge, C - Chrysler, Y - Imperial

AR Indicates use as required.

Numerals in parentheses ( ) refer to notes.

# Indicates parts not listed in any previous parts book.

★ Indicates change or addition.

Printed in U.S.A. January 1972

STANDARD STEERING

19-48-0 GEARSHIFT CONTROL ROD Cont'd.

CODE	PART NAME	ENG. TYPE OR CU.IN.		V 1-2	B J 1-2	L 1-2	R 1-2	W 1-2	P 1-2	D 1-2	C 1	C 2	C 3	Y 1	PART NUMBER
19-48-23	CLIP Cont'd.														
	CLIP, Gearshift Lock Trans. Rod, W/4 Speed Man. Trans. Floor Shift			1	1	1	1	1	—	—	—	—	—	—	1635 232
	CLIP, Gearshift Rod Swivel, W/3, 4 Speed Man. Trans. Floor Shift			AR	AR	AR	AR	AR	—	—	—	—	—	—	1635 232
	CLIP, Gearshift Selector Lever Pin, W/230-3 Speed Man. Trans. Floor Shift			1	1	1	1	1	—	—	—	—	—	—	1137 669
19-48-44	BOOT, W/Gasket, Gearshift Control Torque Shift W/Auto. Trans. Floor Shift			1	1	1	1	1	1	1	1	1	—	—	2781 407
19-48-45	SHAFT, Gearshift Torque W/A904 Auto. Trans. Col. Shift			1	—	1	—	—	—	—	—	—	—	—	2781 425
	W/A727 Auto. TRANS. Col. Shift			1	—	1	—	—	—	—	—	—	—	—	2800 939
	w/Auto Trans. Col. Shift			—	1	—	—	—	—	—	—	—	—	—	3467 608
	w/A904 Auto. trans. Col. Shift	70		—	—	—	1	1	—	—	—	—	—	—	2800 972
	w/A727 Auto. Trans. Col. Shift	70		—	—	—	1	1	—	—	—	—	—	—	3467 605
	w/Auto. Trans. Column Shift	71		—	—	—	1	1	—	—	—	—	—	—	3467 608
	w/A 904 Auto. Trans. Col. Shift			—	—	—	—	—	1	1	—	—	—	—	3467 606
	w/A 727 Auto. Trans. Col. Shift			—	—	—	—	—	1	1	1	1	—	—	3467 607
	W/A230-3 Speed Man. Trans. Col. Shift			—	—	—	—	—	1	1	1	—	—	—	3467 106
	SHAFT, Gearshift Lock Torque, w/3 Speed Man. Trans. Floor Shift	70	6	—	1	—	—	—	—	—	—	—	—	—	3467 626
	w/3, 4 Speed Man. Trans. Floor Shift	70	8	—	1	—	—	—	—	—	—	—	—	—	3467 625
	w/3, 4 Speed Man. Trans. Floor Shift	70		—	—	—	1	1	—	—	—	—	—	—	3467 625
	w/4 Speed Man. Trans. Floor Shift	70		1	—	1	—	—	—	—	—	—	—	—	3467 612
	SHAFT, Gearshift Control Torque, W/Auto. Trans. Floor Shift			1	—	1	—	—	—	—	—	—	—	—	3467 064
		70		—	1	—	—	—	—	—	—	—	—	—	3467 065
		71		—	1	—	1	1	—	—	—	—	—	—	3467 721
		70		—	—	—	1	1	—	—	—	—	—	—	3467 062
		70		—	—	—	—	—	1	1	1	1	—	—	3467 063
		71		—	—	—	—	—	1	1	1	1	—	—	3467 720
	SHAFT, Gearshift Col. Lock Torque, w/A904 Auto. Trans. Floor Shift	70		1	—	1	—	—	—	—	—	—	—	—	2781 425
	w/A727 Auto. Trans. Floor Shift	70		1	—	1	—	—	—	—	—	—	—	—	2800 939
	w/Auto. Trans. Floor Shift	70		—	1	—	—	—	—	—	—	—	—	—	3467 608
	w/A727 Auto. Trans. Floor Shift	70		—	—	—	1	1	—	—	—	—	—	—	3467 605
	w/A 904 Auto. Trans. Floor Shift			—	—	—	—	—	1	1	—	—	—	—	3467 606
	w/A 727 Auto. Trans. Floor Shift			—	—	—	—	—	1	1	1	1	—	—	3467 607
	Washer			AR	AR	AR	AR	AR	AR	AR	AR	—	—	—	9417 098
	Washer, Spring			1	1	1	1	1	1	1	1	—	—	—	905 206
	Pin, Cotter			1	1	1	1	1	1	1	1	—	—	—	121 224
19-48-46	BRACKET, Gearshift Torque Shift Trans. w/904 Auto. Trans. Col. or Floor Shift			1	—	1	—	—	—	—	—	—	—	—	2781 429
	w/727 Auto. Trans. Col. or Floor Shift			1	—	1	—	—	—	—	—	—	—	—	2800 942
	w/Auto. Trans. Col. Shift, W/225, 318 Eng.	70		—	1	—	—	—	—	—	—	—	—	—	2950 909
	w/Auto. Trans. Col. Shift except 225, 318 Eng.	70		—	1	—	—	—	—	—	—	—	—	—	2950 910

CARLINES: J - Challenger, B - Barracuda, V - Valiant, L - Dart, R - Belvedere - Satellite, W - Coronet - Charger, P - Plymouth, D - Dodge, C - Chrysler, Y - Imperial

AR Indicates use as required.

Numerals in parentheses ( ) refer to notes.

# Indicates parts not listed in any previous parts book.

★ Indicates change or addition.

Printed in U.S.A. January 1972

STANDARD STEERING

19-48-0 GEARSHIFT CONTROL ROD Cont'd.

CODE	PART NAME	ENG. TYPE OR CU.IN.	V 1-2	B J 1-2	L 1-2	R 1-2	W 1-2	P 1-2	D 1-2	C 1	C 2	C 3	Y 1	PART NUMBER
19-48-46	BRACKET Cont'd.													
	w/904 Auto. Trans. Floor Shift	70	—	1	—	—	—	—	—	—	—	—	—	2950 909
	w/727 Auto. Trans. Floor Shift	70	—	1	—	—	—	—	—	—	—	—	—	2950 910
	w/904 Auto. Trans. Col. Shift	71	—	1	—	1	1	—	—	—	—	—	—	2950 909
	w/727 Auto. Trans. Col. Shift	71	—	1	—	1	1	—	—	—	—	—	—	2950 910
	w/904 Auto. Trans. Col. Shift	70	—	—	—	1	1	—	—	—	—	—	—	2800 970
	w/727 Auto. Trans. Col. or Floor Shift	70	—	—	—	1	1	—	—	—	—	—	—	2534 513
	W/904 Auto. Trans. Col. or Floor Shift		—	—	—	—	—	1	1	—	—	—	—	2950 044
	W/727 Auto. Trans. Col. or Floor Shift		—	—	—	—	—	1	1	1	1	—	—	2950 300
	BRACKET, Gearshift Torque Shaft Frame, w/Auto. Trans. Col. Shift, L.H.D.		1	—	1	—	—	—	—	—	—	—	—	2467 932
	w/Auto. Trans. Col. or Floor Shift	70	—	1	—	—	—	—	—	—	—	—	—	2950 920
	w/Auto. Trans. Col. Shift	71	—	1	—	1	1	—	—	—	—	—	—	2950 920
	w/3, 4 Speed Man. Trans. Floor Shift	70	—	1	—	1	1	—	—	—	—	—	—	3467 148
	w/Auto. Trans. Col. or Floor Shift	70	—	—	—	1	1	—	—	—	—	—	—	2534 423
	w/904 Auto. Trans. Col. Shift	70	—	—	—	—	—	1	1	—	—	—	—	2950 044
	w/727 Auto. Trans. Col. or Floor Shift	70	—	—	—	—	—	1	1	1	1	—	—	2950 043
	w/Auto. Trans. Col. or Floor Shift	71	—	—	—	—	—	1	1	1	1	—	—	2950 043
	w/4 Speed Man. Trans.	70	1	—	1	—	—	—	—	—	—	—	—	2467 932
	SCREW, Strg. Col. Gearshift Tube Bearing, w/Man. Trans. Col. Shift		2	—	2	2	2	2	2	2	—	—	—	9417 749
	BRACKET, Gearshift Control Torque Shaft Upper, W/Auto. Trans. Floor Shift		1	—	1	—	—	—	—	—	—	—	—	2781 419
		70	—	1	—	—	—	—	—	—	—	—	—	3467 078
		71	—	1	—	1	1	—	—	—	—	—	—	3467 078
		70	—	—	—	1	1	—	—	—	—	—	—	3467 076
			—	—	—	—	—	1	1	1	1	—	—	3467 077
	BRACKET, Gearshift Control Torque Shaft Lower, w/Auto. Trans. Floor Shift	70	1	1	1	1	1	1	1	1	1	—	—	2660 401
		71	1	—	1	—	—	—	—	—	—	—	—	2660 401
		71	—	1	—	1	1	1	1	1	1	—	—	3467 717
	BRACKET, Gearshift Lock Torque Shaft Engine, w/4 Speed Man. Trans. Floor Shift	70	1	—	1	—	—	—	—	—	—	—	—	3467 615
	w/3, 4 Speed Man. Trans. Floor Shift	70	—	—	—	1	1	—	—	—	—	—	—	2996 324
	w/318 Eng.	70 8	—	1	—	—	—	—	—	—	—	—	—	2996 325
	Except 318 Eng.	70	—	1	—	—	—	—	—	—	—	—	—	2996 324
	BRACKET, Gearshift Torque Shaft W/230-3 Speed Man. Trans. Col. Shift		—	—	—	—	—	1	1	1	—	—	—	3467 109
	BRACKET, Gearshift Torque Shaft To Floor Mounting, W/Auto. Trans. Floor Shift		—	1	—	—	—	—	—	—	—	—	—	3446 959
		71	—	—	—	1	1	—	—	—	—	—	—	3446 959
	Screw, Lower Brkt.		2	2	2	2	2	2	2	2	—	—	—	6026 059
	Nut, w/Washer		AR	AR	AR	AR	AR	AR	AR	AR	—	—	—	6028 114
	Washer, Eng. Brkt.		1	1	1	1	1	—	—	—	—	—	—	6024 691

STANDARD STEERING

19-48-0 GEARSHIFT CONTROL ROD Cont'd.

CODE	PART NAME	ENG. TYPE OR CU.IN.	V 1-2	B J 1-2	L 1-2	R 1-2	W 1-2	P 1-2	D 1-2	C 1	C 2	C 3	Y 1	PART NUMBER
19-48-48	PLATE, Gearshift Torque Shaft Mounting, w/230-3 Speed Man. Trans. Col. Shift		—											
			—	—	—	—	—	1	1	1	—	—	—	2467 946
19-48-49	GROMMET, Gearshift Rod, w/3 Speed Man. Trans. Col. Shift		2	—	2	2	2	2	2	—	—	—	—	2781 444
	GROMMET, Gearshift Torque Shaft Bracket, W/230-3 Speed Man. Trans. Col. Shift		—	—	—	—	—	1	1	1	—	—	—	2208 158
19-48-50	BUSHING, Gearshift Rod Grommet, w/3 Speed Man. Trans. Col. Shift		2	—	2	2	2	2	2	—	—	—	—	2781 445
	BUSHING, Gearshift Lock Torque Shaft, w/3, 4 Speed Man. Trans. Floor Shift	70	2	2	2	2	2	—	—	—	—	—	—	2781 420
	BUSHING, Gearshift Torque Shaft Bracket, w/Auto. Trans. Col. Shift		2	2	2	2	2	2	2	2	2	2	2	2781 420
	w/Auto. Trans. Floor Shift		AR	AR	AR	AR	AR	AR	AR	AR	AR	AR	—	2781 420
	BUSHING, Gearshift Torque Shaft Grommet, W/3 Speed Man. Trans. Col. Shift		—	—	—	—	—	1	1	1	—	—	—	2208 159
19-48-51	SPACER, Gearshift Torque Shaft, w/230-3 Speed Man. Trans. Col. Shift		—	—	—	—	—	2	2	2	—	—	—	2208 172
19-48-52	RETAINER, Gearshift Torque Shaft, w/A 230-3 Speed Man. Trans. Col. Shift		—	—	—	—	—	1	1	1	—	—	—	1671 569

NOTES

CARLINES J - Challenger, B - Barracuda, V - Valiant, L - Dart, R - Belvedere - Satellite, W - Coronet - Charger, P - Plymouth, D - Dodge, C - Chrysler, Y - Imperial

AR Indicates use as required.

Numerals in parentheses ( ) refer to notes.

# Indicates parts not listed in any previous parts book.

★ Indicates change or addition.

Printed in U.S.A. January 1972

GROUP 19 - STEERING

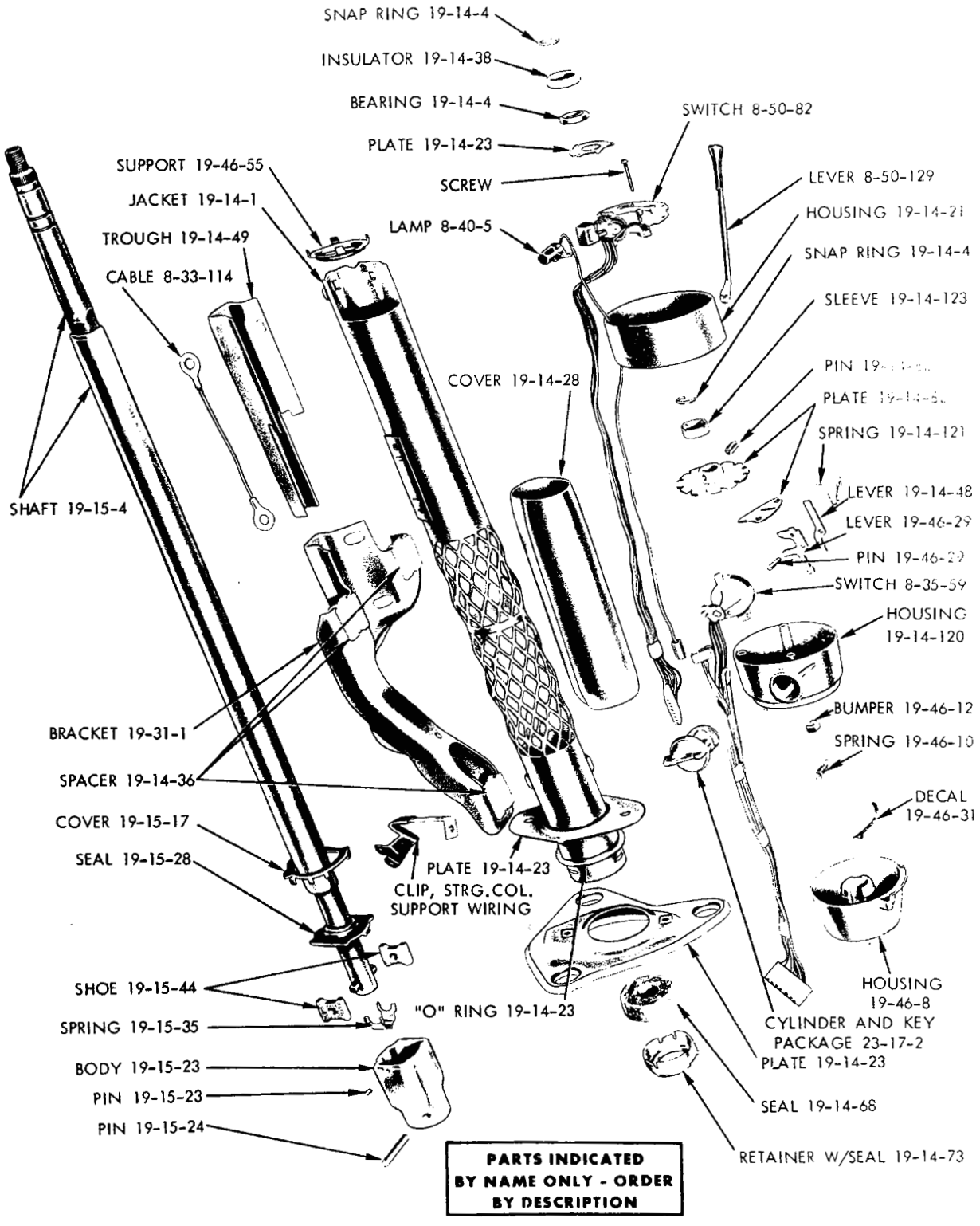

STEERING COLUMN ASSEMBLY - FLOOR SHIFT - STANDARD AND AUTOMATIC TRANSMISSION (1971)

GROUP 19 - STEERING

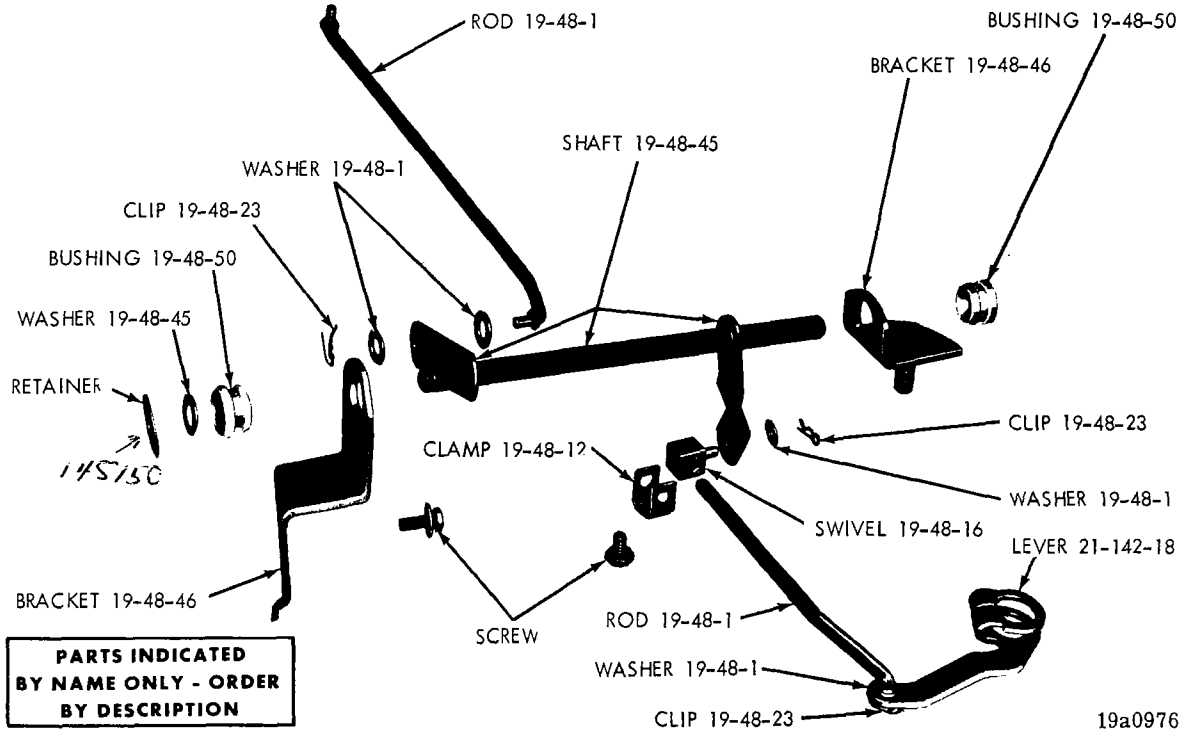

STEERING COLUMN GEARSHIFT CONTROLS (WITH AUTOMATIC TRANSMISSION)

NOTES

NOTES

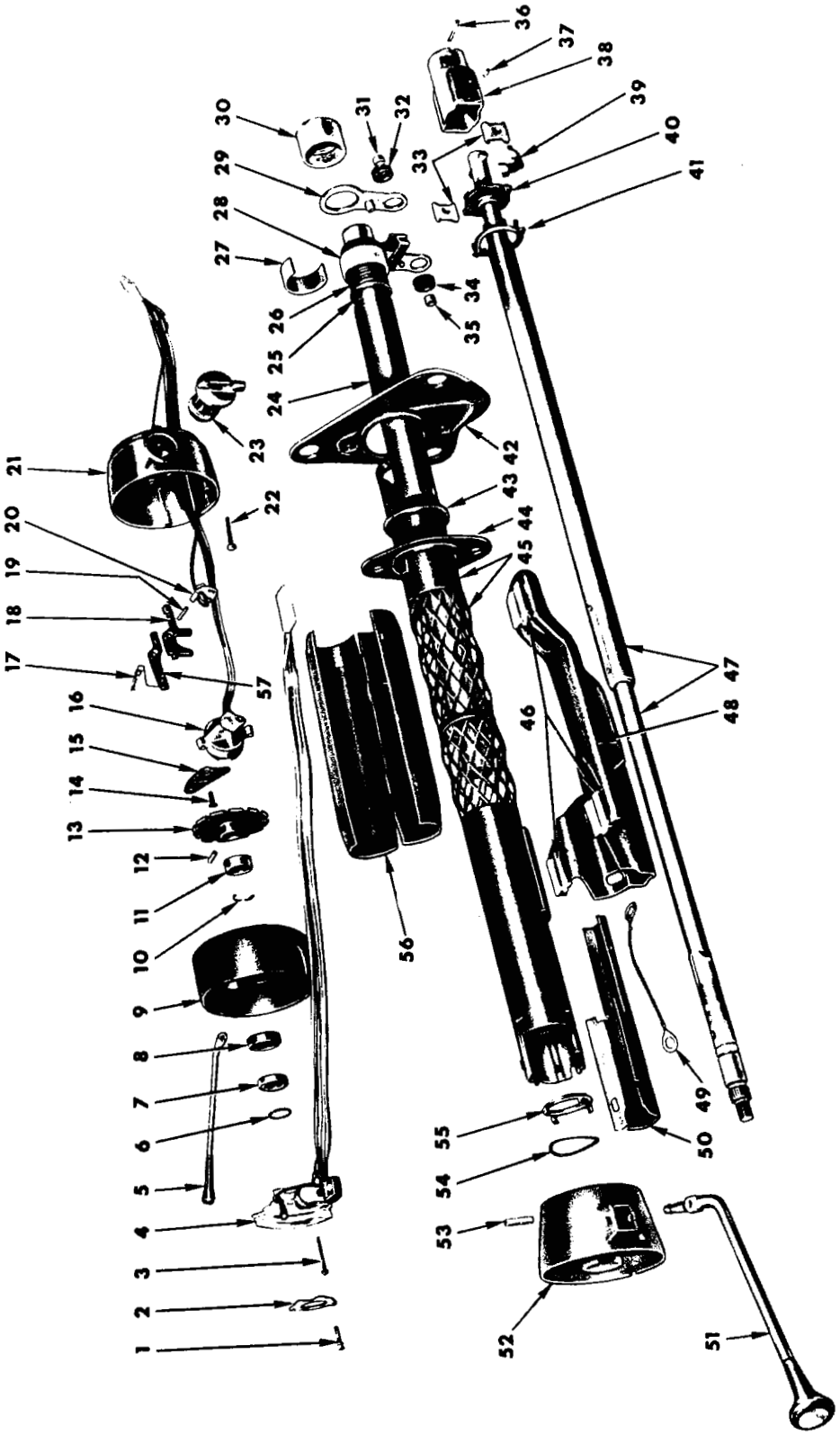

STEERING COLUMN (WITH MANUAL TRANSMISSION COLUMN SHIFT) - VALIANT, DART, BELVEDERE AND CORONET

STEERING COLUMN (WITH MANUAL TRANSMISSION COLUMN SHIFT) - VALIANT, DART, BELVEDERE AND CORONET

Ref. No.	Name	Part Type Code
1	Screw	19-14-23
2	Plate	19-14-23
3	Screw	8-50-82
4	Switch	8-50-82
5	Lever	8-50-129
6	Snap Ring	19-14-4
7	Bearing	19-14-4
8	Insulator	19-14-38
9	Housing	19-14-21
10	Snap Ring	19-14-4
11	Sleeve	19-14-123
12	Pin	19-14-82
13	Plate	19-14-82
14	Screw	19-14-82
15	Plate	19-14-82
16	Switch, Ignition	8-35-59
17	Spring	19-14-121
18	Lever	19-46-29
19	Pin	19-46-29
20	Switch, Buzzer	8-35-59
21	Housing	19-14-120
22	Screw	19-14-120
23	Cylinder and Key	23-17-2
24	Tube	19-46-3
25	Washer (Serviced in Tube 19-46-3)	
26	Spring (Serviced in Tube 19-46-3)	
27	Spacer	19-46-12
28	Bearing (Serviced in Tube 19-46-3)	
29	Lever	19-46-16
30	Bearing w/Support	19-14-4
31	Bushing	19-48-50
32	Grommet	19-48-49
33	Shoe	19-15-44
34	Grommet	19-48-49
35	Bushing	19-48-50
36	Pin	19-15-24
37	Pin	19-15-23
38	Body	19-15-23
39	Spring	19-15-35
40	Seal	19-15-28
41	Cover	19-15-17
42	Plate	19-14-23
43	"O" Ring	19-14-23
44	Plate	19-14-23
45	Jacket	19-14-1
46	Spacer	19-14-36
47	Shaft	19-15-4
48	Bracket	19-31-1
49	Cable	8-33-114
50	Trough	19-14-49
51	Lever	21-30-2
52	Housing	19-46-8
53	Pin	21-30-2
54	Washer	19-46-8
55	Support	19-46-55
56	Cover	19-14-28
57	Lever	19-14-48

PARTS INDICATED BY NAME ONLY - ORDER BY DESCRIPTION

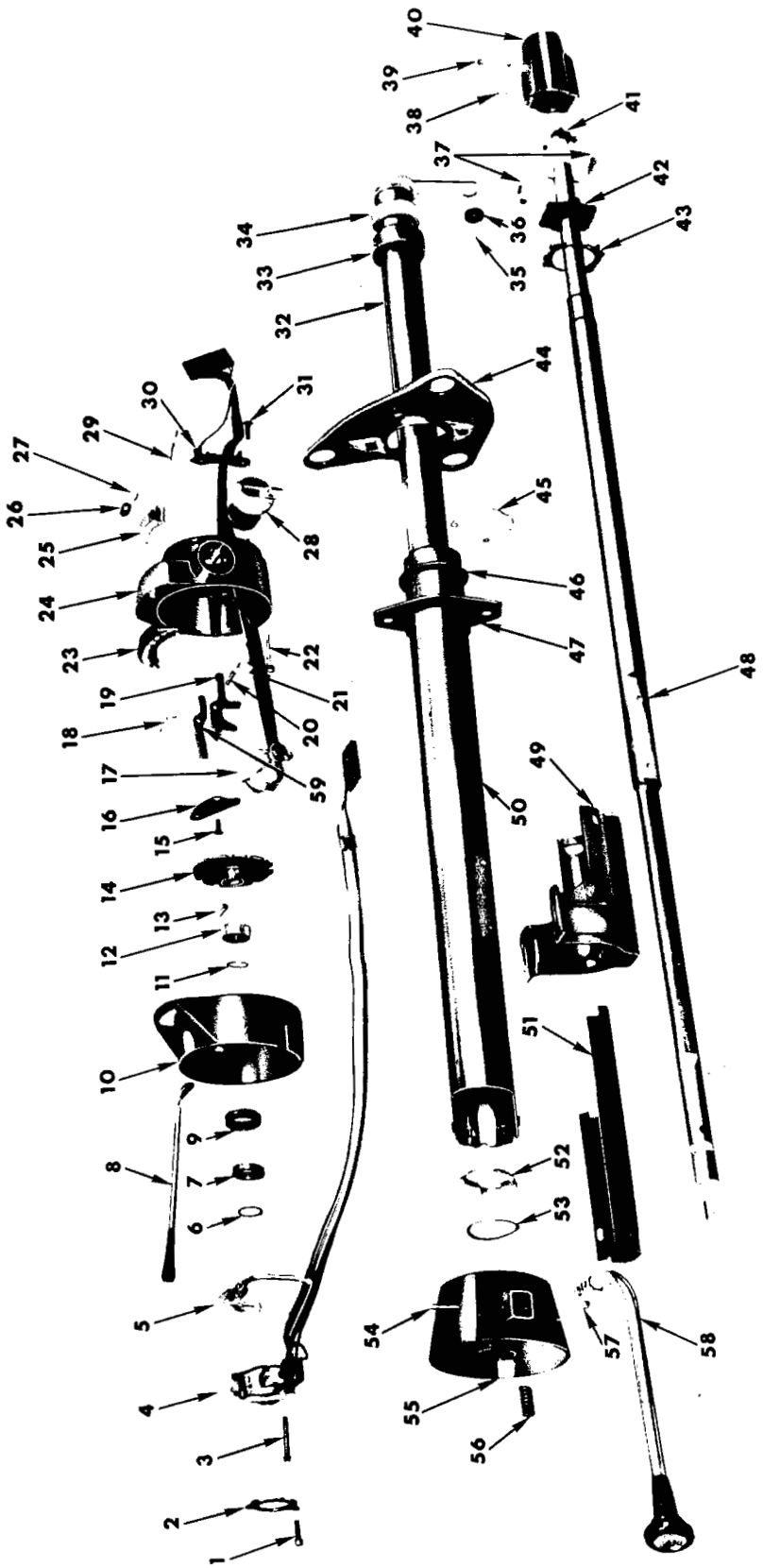

STEERING COLUMN - BARRACUDA AND CHALLENGER WITH AUTOMATIC TRANSMISSION

STEERING COLUMN - BARRACUDA AND CHALLENGER
(WITH AUTOMATIC TRANSMISSION)

Ref. No.	Name	Part Type Code
1	Screw	19-14-23
2	Plate	19-14-23
3	Screw	8-50-82
4	Switch	8-50-82
5	Lamp	8-40-5
6	Snap Ring	19-14-4
7	Bearing	19-14-4
8	Lever	8-50-129
9	Insulator	19-14-38
10	Housing	19-14-21
11	Snap Ring	19-14-4
12	Sleeve	19-14-123
13	Pin	19-14-82
14	Plate	19-14-82
15	Screw	19-14-82
16	Plate	19-14-82
17	Switch	8-35-59
18	Spring	19-14-121
19	Lever	19-46-29
20	Pin	19-46-29
21	Switch	8-35-59
22	Screw	19-14-120
23	Lens	21-30-21
24	Housing	19-14-120
25	Lamp	21-30-28
26	Diffuser (Serviced in 21-30-28)	
27	Bulb	8-44-1
28	Cylinder and Key	23-17-2
29	Pointer	21-30-23
30	Gate	21-30-11
31	Screw	21-30-11
32	Tube	19-46-3
33	Seal	19-15-28
34	Support (Serviced in Tube 19-46-3)	
35	Bushing	19-46-14
36	Grommet	19-46-13
37	Shoe	19-15-44
38	Pin	19-15-23
39	Pin	19-15-24
40	Body	19-15-23
41	Spring	19-15-35
42	Seal	19-15-28
43	Cover	19-15-17
44	Plate	19-14-23
45	Clip	19-46-30
46	"O" Ring	19-14-23
47	Plate	19-14-23
48	Shaft	19-15-4
49	Bracket	19-31-1
50	Jacket	19-14-1
51	Trough	19-14-49
52	Support	19-46-55
53	Washer	19-46-8
54	Pin	21-30-2
55	Housing	19-46-8
56	Spring	21-30-100
57	Screw	19-46-8
58	Lever	21-30-2
59	Lever	19-14-48

PARTS INDICATED BY NAME ONLY - ORDER BY DESCRIPTION

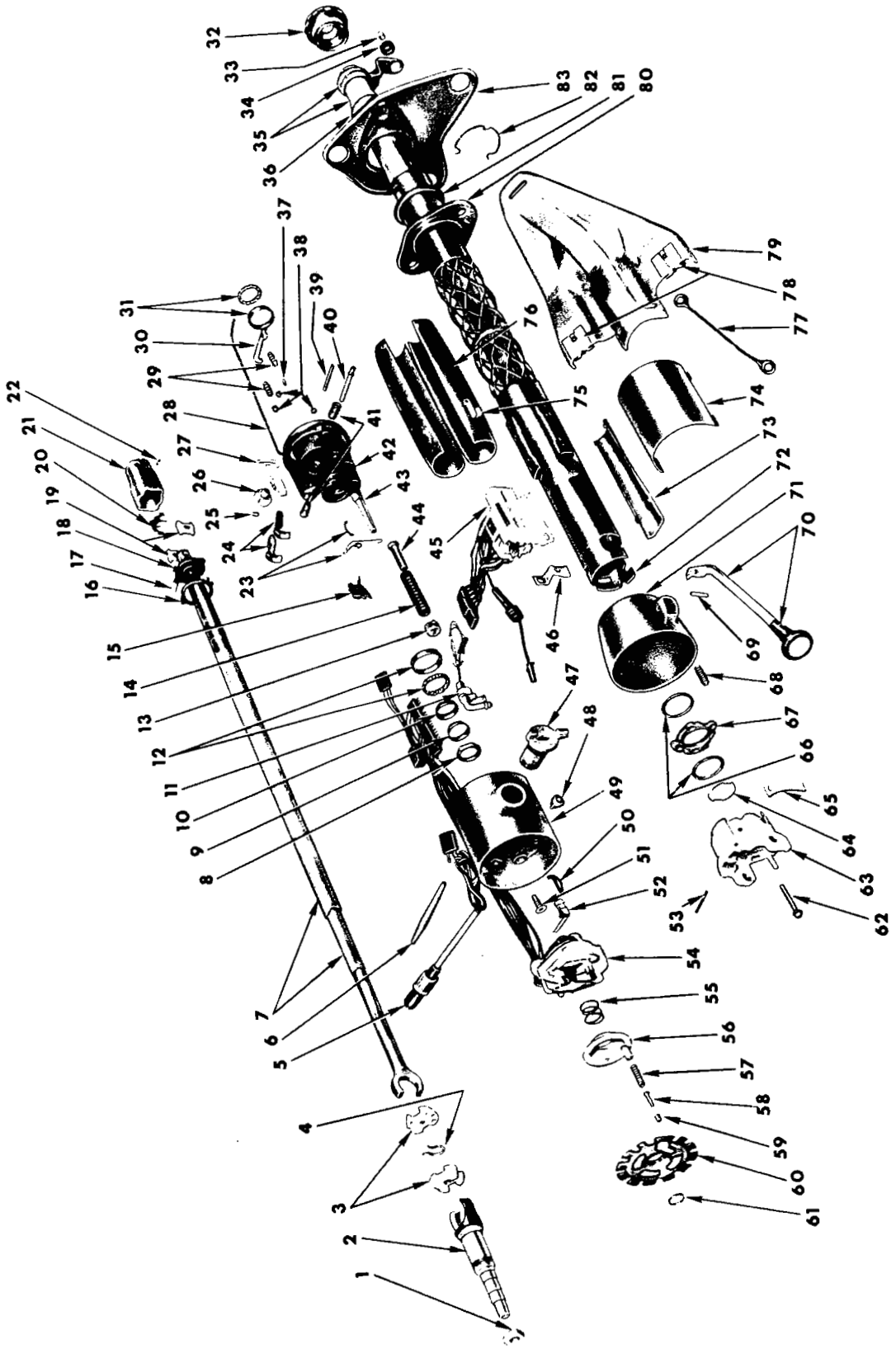

STEERING COLUMN - WITH TILT STEERING - SATELLITE, CORONET, PLYMOUTH AND DODGE

STEERING COLUMN - WITH TILT STEERING - SATELLITE, CORONET, PLYMOUTH AND DODGE

Ref. No.	Name	Part Type Code
1	Nut	19-30-18
2	Shaft	19-15-4
3	Sphere	19-14-103
4	Spring, Joint Preload	19-14-85
5	Lever	8-50-129
6	Lever	19-14-48
7	Shaft	19-15-4
8	Nut	19-15-65
9	Seat	19-14-11
10	Race	19-14-22
11	Lamp	8-40-5
12	Bearing	19-14-4
13	Retainer	19-14-108
14	Spring	19-14-85
15	Shield	19-14-118
16	Cover	19-15-17
17	Pin	19-15-24
18	Seal	19-15-28
19	Shoe	19-15-44
20	Spring	19-15-35
21	Body	19-15-23
22	Pin	19-15-23
23	Spring - Lock Bolt	19-14-85
	Spring	19-14-85
24	Shoe	19-14-84
25	Ring	19-46-64
26	Sector	19-46-61
27	Rack	19-46-58
28	Actuator	19-46-59
29	Spring - Shoe	19-14-85
30	Lever	19-14-48
31	Bearing	19-14-4
32	Adapter	19-14-27
33	Bushing	19-46-14
34	Grommet	19-46-13
35	Tube	19-46-3
36	Seal	19-15-28
37	Spring	19-14-85
38	Bumper	19-14-102
39	Lever	19-14-48
40	Shaft - Drive	19-15-4
41	Pin	19-14-92
42	Housing	19-14-21
43	Bolt	19-14-93
44	Guide	19-14-75
45	Ignition Switch	8-35-59
46	Bracket	21-30-24
47	Cylinder and Key	23-17-2
48	Knob - Flasher	
49	Cover	19-14-24
50	Clip	8-35-67
51	Screw	8-50-84
52	Switch	8-35-59
53	Pin	19-14-92
54	Switch	8-50-82
55	Spring	8-50-128
56	Cam	8-50-126
57	Spring	8-33-119
58	Eyelet	8-33-122
59	Retainer	8-33-128
60	Lock	19-15-31
61	Ring	19-14-91
62	Screw	19-14-93
63	Support	19-14-97
64	Ring - Shift Tube	19-46-50
65	Gate	21-30-11
66	Washer - Wave	19-14-89
	Washer	19-14-89
67	Plate	19-14-82
68	Spring	21-30-43
69	Pin	21-30-2
70	Lever	21-30-2
71	Bowl	19-46-8
72	Jacket	19-14-1
73	Cover	19-14-74
74	Cover	19-46-62
75	Support	19-46-55
76	Cover	19-14-28
77	Ground Cable	8-33-114
78	Spacer	19-14-36
79	Bracket	19-31-1
80	Plate	19-14-23
81	"O" Ring	19-14-23
82	Clip	19-14-51
83	Plate	19-14-23

PARTS INDICATED BY NAME ONLY - ORDER BY DESCRIPTION

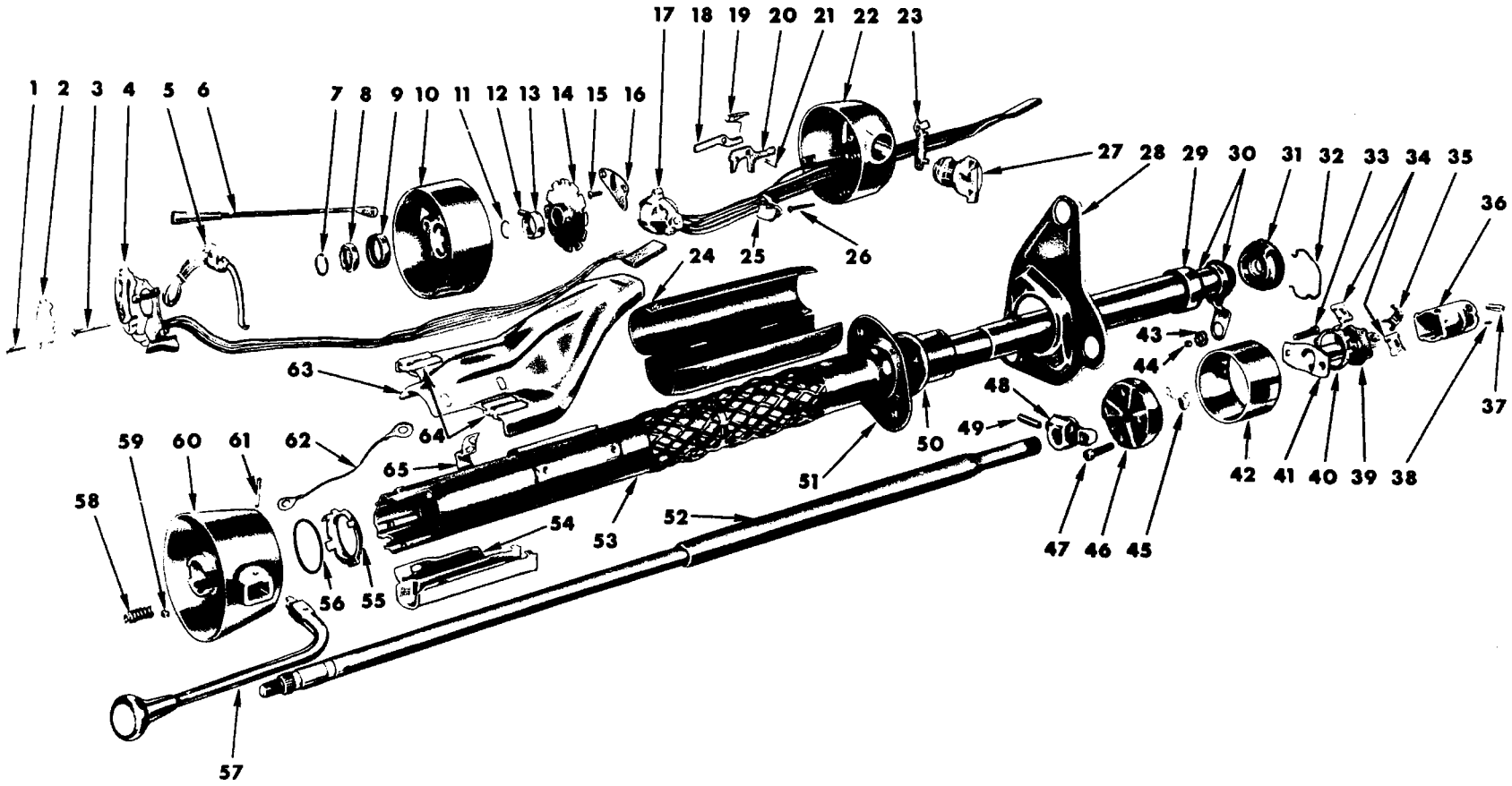

STEERING COLUMN (WITHOUT TILT - TILT-TELESCOPIC STEERING) - PLYMOUTH, DODGE, CHRYSLER AND IMPERIAL (WITH AUTOMATIC TRANSMISSION)

STEERING COLUMN (WITHOUT TILT - TILT-TELESCOPIC STEERING) - PLYMOUTH, DODGE, CHRYSLER AND IMPERIAL (WITH AUTOMATIC TRANSMISSION)

Ref. No.	Name	Part Type Code
1	Screw	19-14-23
2	Plate	19-14-23
3	Screw	8-50-82
4	Switch	8-50-82
5	Lamp	8-40-5
6	Lever	8-50-129
7	Snap Ring	19-14-4
8	Bearing	19-14-4
9	Insulator	19-14-38
10	Housing	19-14-21
11	Snap Ring	19-14-4
12	Pin	19-14-82
13	Sleeve	19-14-123
14	Plate	19-14-82
15	Screw	19-14-82
16	Plate	19-14-82
17	Switch	8-35-59
18	Lever	19-14-48
19	Spring	19-14-121
20	Lever	19-46-29
21	Pin	19-46-29
22	Housing	19-14-120
23	Gate	21-30-11
24	Cover	19-14-28
25	Switch	8-35-59
26	Screw	19-14-120
27	Cylinder and Key	23-17-2
28	Plate	19-14-23
29	Seal	19-15-28
30	Tube	19-46-3
31	Adapter	19-14-27
32	Clip	19-14-51
33	Bolt	19-15-23
34	Shoe	19-15-44
35	Spring	19-15-35
36	Body	19-15-23
37	Pin	19-15-24
38	Pin	19-15-23
39	Seal	19-15-28
40	Cover	19-15-17
41	Shaft, Lower	19-15-4
42	Shield	19-15-111
43	Grommet	19-46-13
44	Bushing	19-46-14
45	Spring	19-15-20
46	Coupling	19-15-23
47	Bolt	19-15-23
48	Flange	19-15-43
49	Pin	19-15-23
50	"O" Ring	19-14-23
51	Plate	19-14-23
52	Shaft	19-15-4
53	Jacket	19-14-1
54	Trough	19-14-49
55	Support	19-46-55
56	Washer	19-46-8
57	Lever	21-30-2
58	Spring	21-30-100
59	Screw	19-46-8
60	Housing	19-46-8
61	Pin	21-30-2
62	Cable	8-33-114
63	Bracket	19-31-1
64	Spacer	19-14-36
65	Bracket	21-30-24

PARTS INDICATED BY NAME ONLY - ORDER BY DESCRIPTION

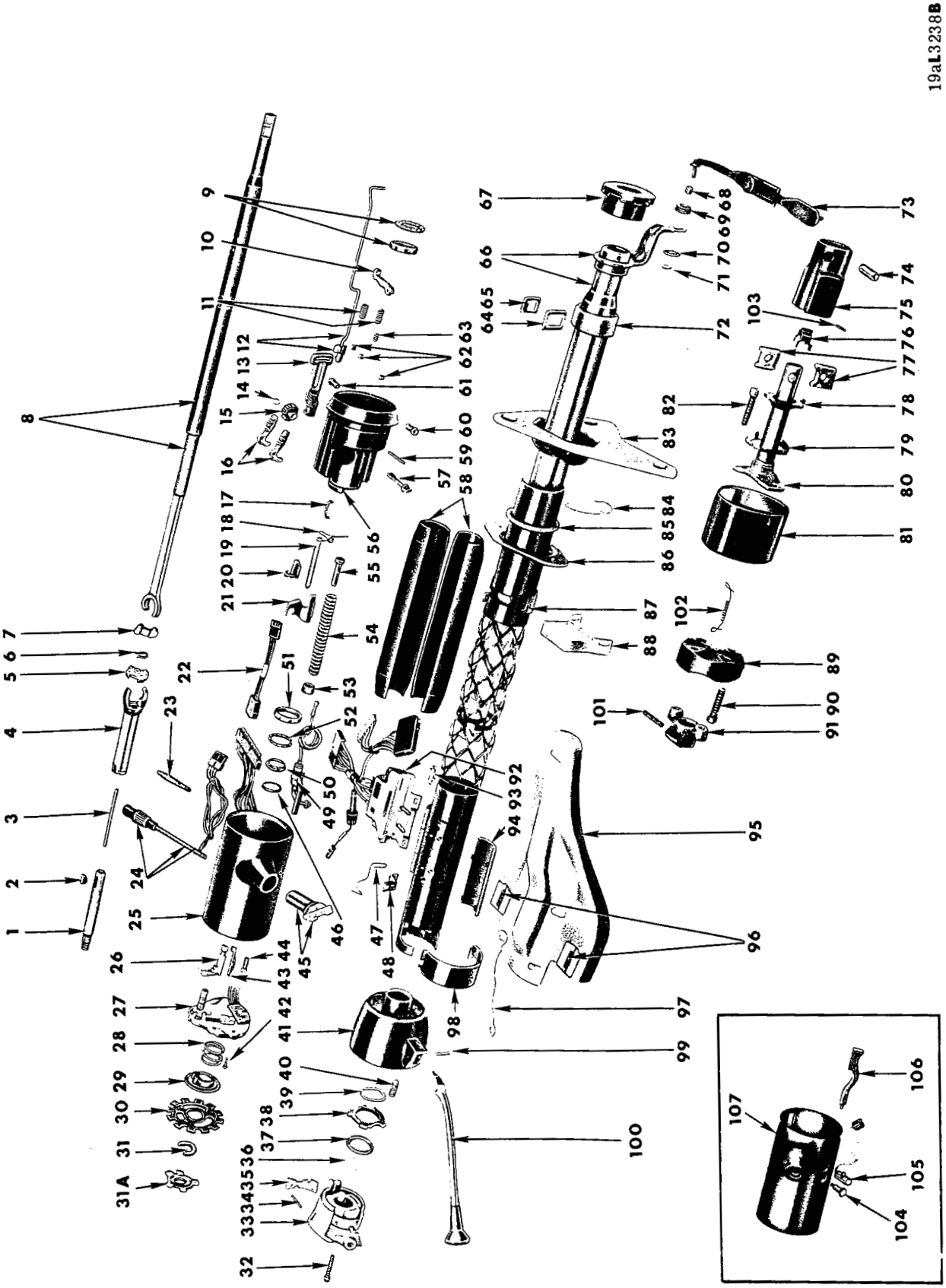
19aL3238B
STEERING COLUMN - TILT-TELESCOPIC - CHRYSLER AND IMPERIAL

STEERING COLUMN - TILT-TELESCOPIC - CHRYSLER AND IMPERIAL

Ref. No.	Name	Part Type Code
1	Upper Shaft	19-15-4
2	Wedge	19-14-80
3	Rod	19-14-81
4	Yoke	19-14-22
5	Sphere	19-14-103
6	Spring, Joint Preload	19-14-85
7	Sphere	19-14-103
8	Shaft	19-15-4
9	Bearing	19-14-4
10	Lever	19-14-48
11	Spring, Shoe	19-14-85
12	Actuator	19-46-59
13	Rack	19-46-58
14	Ring	19-46-64
15	Sector	19-46-61
16	Shoe	19-14-84
17	Spring - Rack Preload	19-14-85
18	Spring - Lock Bolt	19-14-85
19	Bolt	19-14-93
20	Shield - Turn Signal	19-14-118
21	Shield - Tilt Lever	19-14-118
22	Wiring	8-15-53
23	Lever	19-14-48
24	Lever	8-50-129
25	Cover	19-14-24
26	Switch	8-35-59
27	Switch	8-50-82
28	Spring, Upper Bearing	19-14-85
29	Carrier	19-14-98
30	Lock	19-15-31
31	Ring	19-14-91
31A	Retainer	19-14-108
32	Screw	19-14-93
33	Support	19-14-97
34	Pin - Release Lever	19-14-92
35	Gate	21-30-11
36	Ring - Shift Tube	19-46-50
37	Washer - Thrust	19-14-89
38	Plate	19-14-82
39	Washer - Wave	19-14-89
40	Spring	21-30-100
41	Bowl	19-46-8
42	Screw	8-50-84
43	Clip	8-35-67
44	Screw	8-50-84
45	Cylinder and Key Package	23-17-2
46	Seat	19-14-11
47	Pointer	21-30-23
48	Bracket	21-30-24
49	Lamp	8-40-5
50	Race	19-14-22
51	Bearing	19-14-4
52	Bearing	19-14-4
53	Retainer, Spring	19-14-108
54	Spring	19-14-85
55	Guide	19-14-75
56	Housing	19-14-21
57	Shaft - Drive	19-15-4
58	Cover	19-14-28
59	Pin - Dowel	19-14-92
60	Pin - Pivot	19-14-92
61	Pin - Pivot	19-14-92
62	Bumper	19-14-102
63	Spring, Release Lever	19-14-85
64	Spring	19-46-60
65	Actuator	19-46-59
66	Tube (Serviced in 19-14-1 Jacket w/Tube)	
67	Adapter	19-14-27
68	Bushing	19-46-14
69	Grommet	19-46-13
70	Washer	19-48-1
71	Clip	19-48-23
72	Seal	19-15-28
73	Rod	19-48-1
74	Pin	19-15-24
75	Body	19-15-23
76	Spring	19-15-35
77	Shoe	19-15-44
78	Seal	19-15-28
79	Cover	19-15-17
80	Shaft, Lower	19-15-4
81	Shield	19-15-111
82	Bolt	19-15-23
83	Plate	19-14-23
84	Clip	19-14-51
85	"O" Ring	19-14-23
86	Plate	19-14-23
87	Jacket, w/Shift Tube	19-14-1
88	Valve	4-25-20
89	Coupling	19-15-23
90	Bolt	19-15-23
91	Flange	19-15-43
92	Ignition Switch	8-35-59
93	Support	19-46-55
94	Guide	19-14-75
95	Bracket	19-31-1
96	Spacer	19-14-36
97	Ground Cable	8-33-114
98	Cover	19-46-62
99	Pin	21-30-2
100	Lever	21-30-2
101	Pin	19-15-23
102	Spring	19-15-20
103	Pin	19-15-23
104	Knob	8-50-95
105	Lamp	8-40-5
106	Lever	8-50-129
107	Cover	19-14-24

PARTS INDICATED BY NAME ONLY - ORDER BY DESCRIPTION

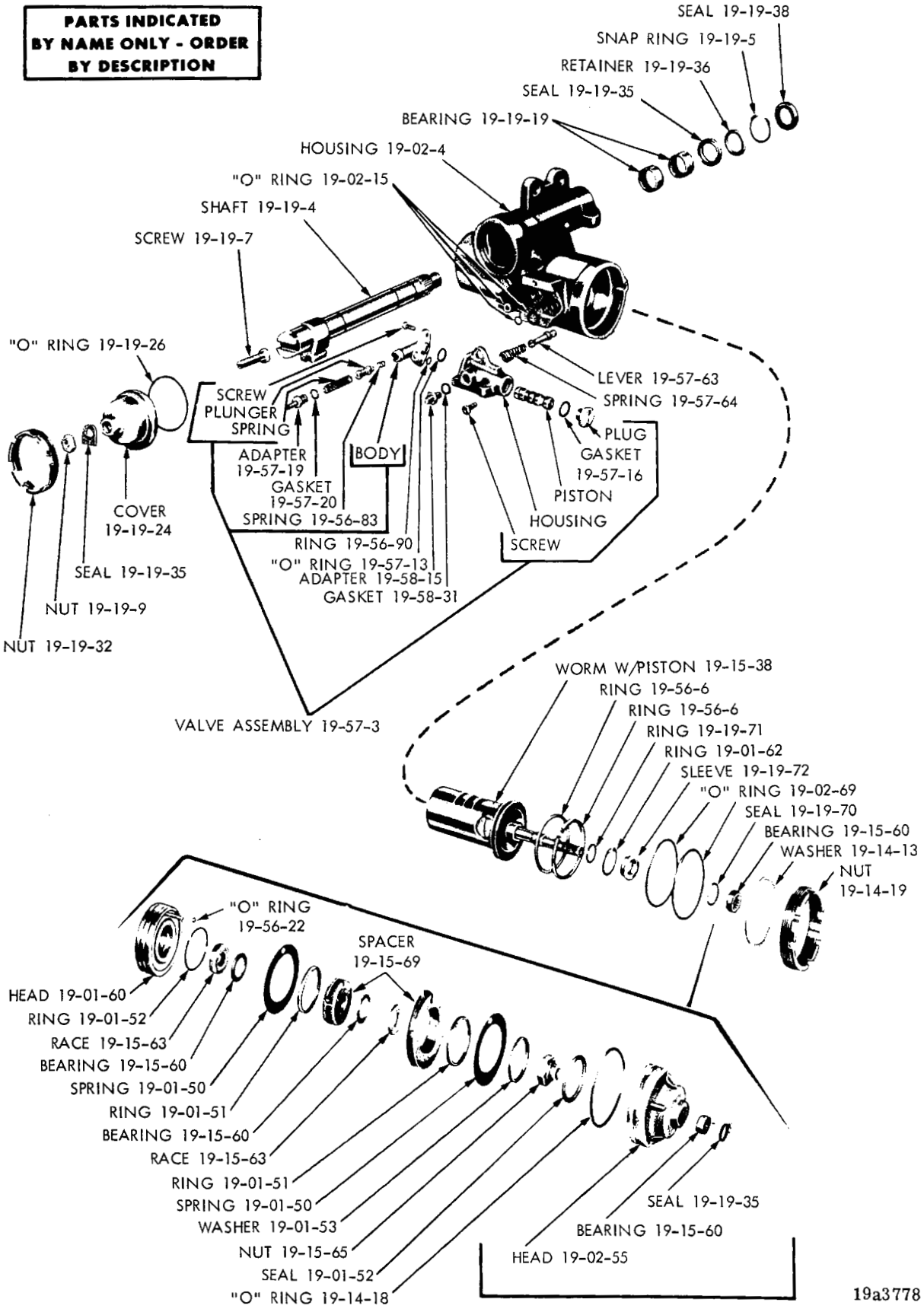

POWER STEERING GEAR ASSEMBLY

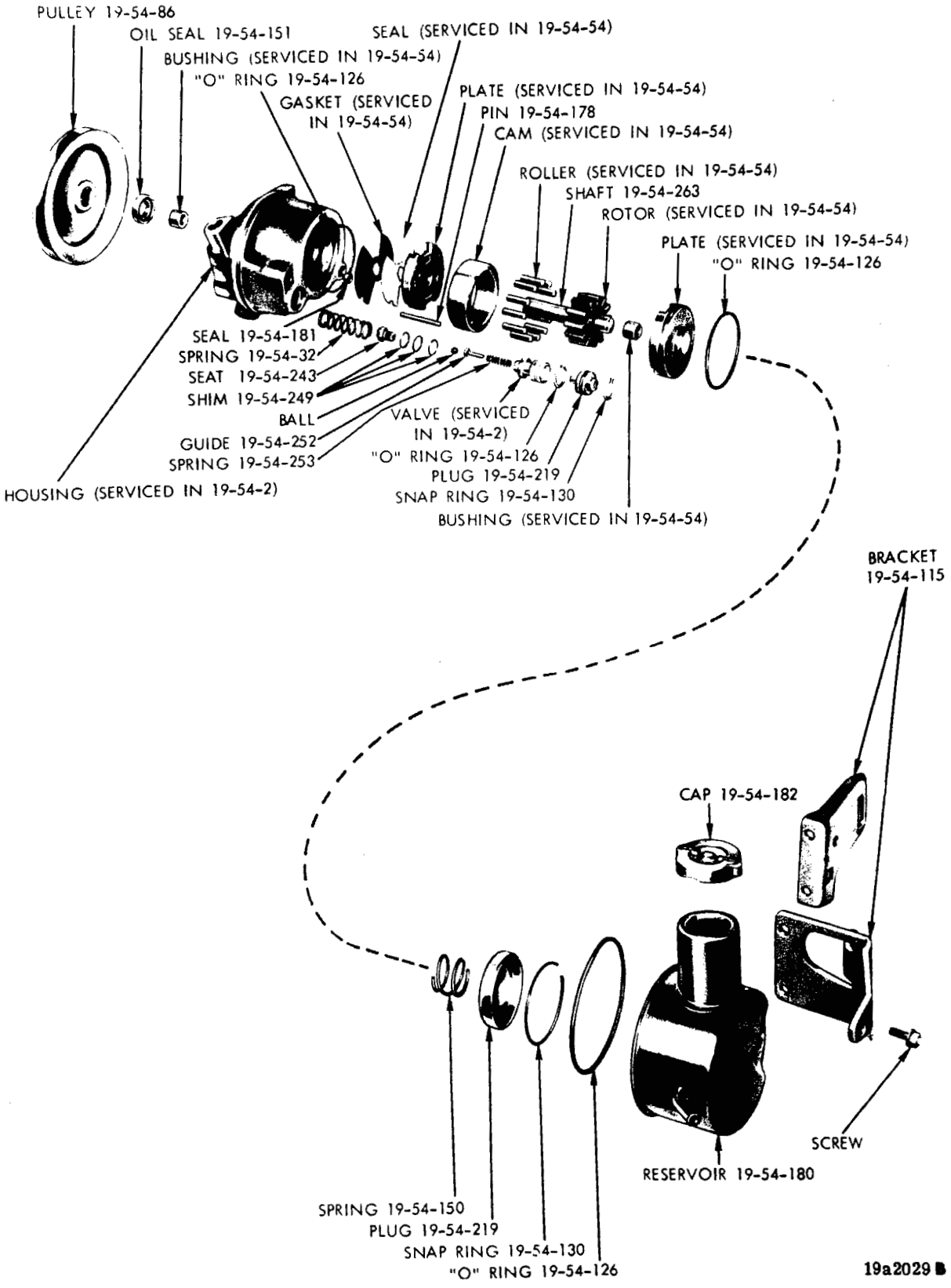

POWER STEERING 12 ROLLER OIL PUMP (WITH THREADED HOLE PUMP SHAFT)

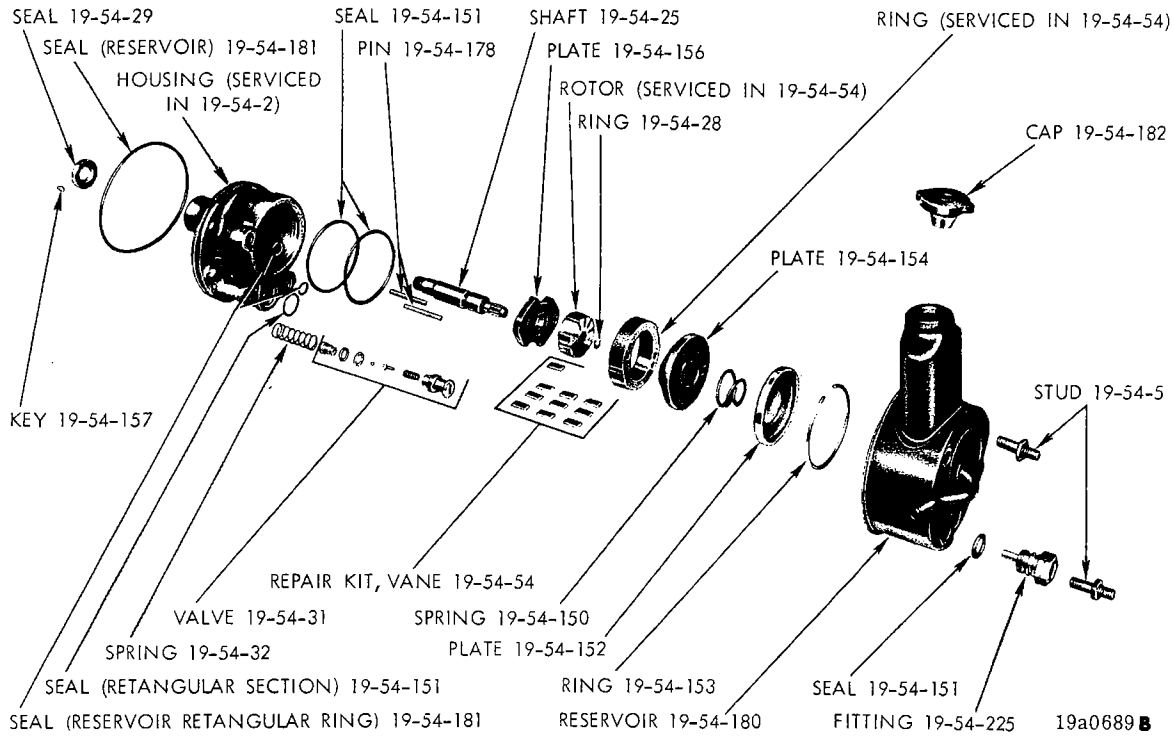

POWER STEERING PUMP (WITH KEY SLOTTED PUMP SHAFT)

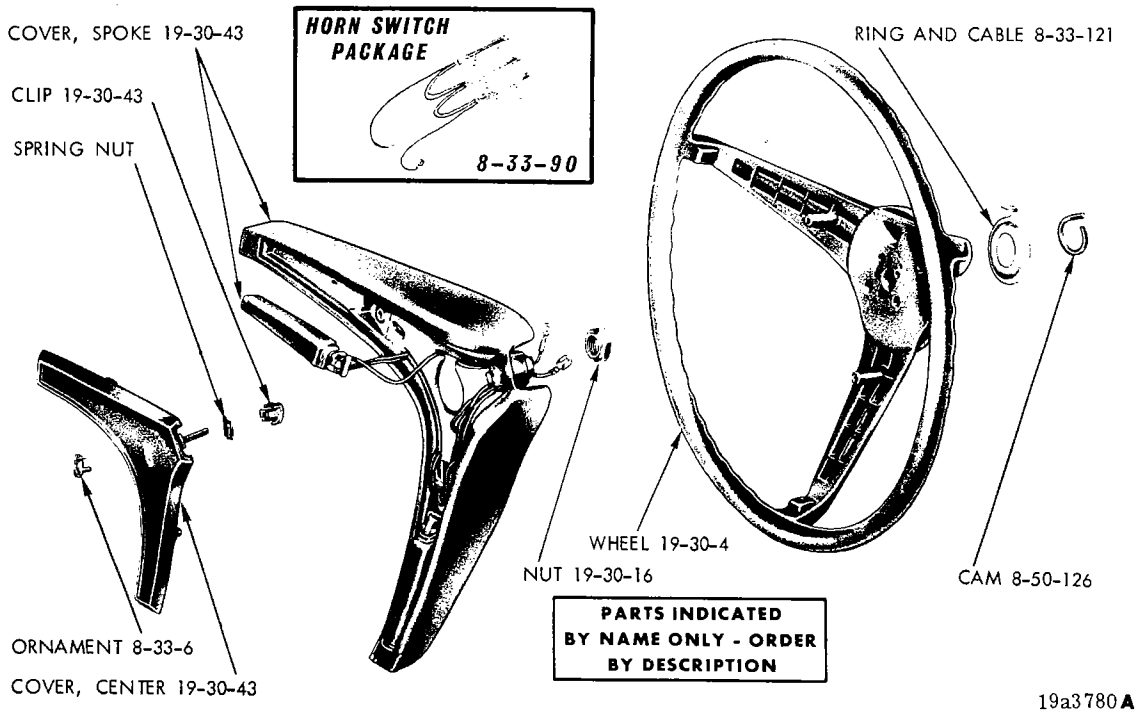

STEERING WHEEL WITH 3 SPOKE HORN BUTTONS (1971)

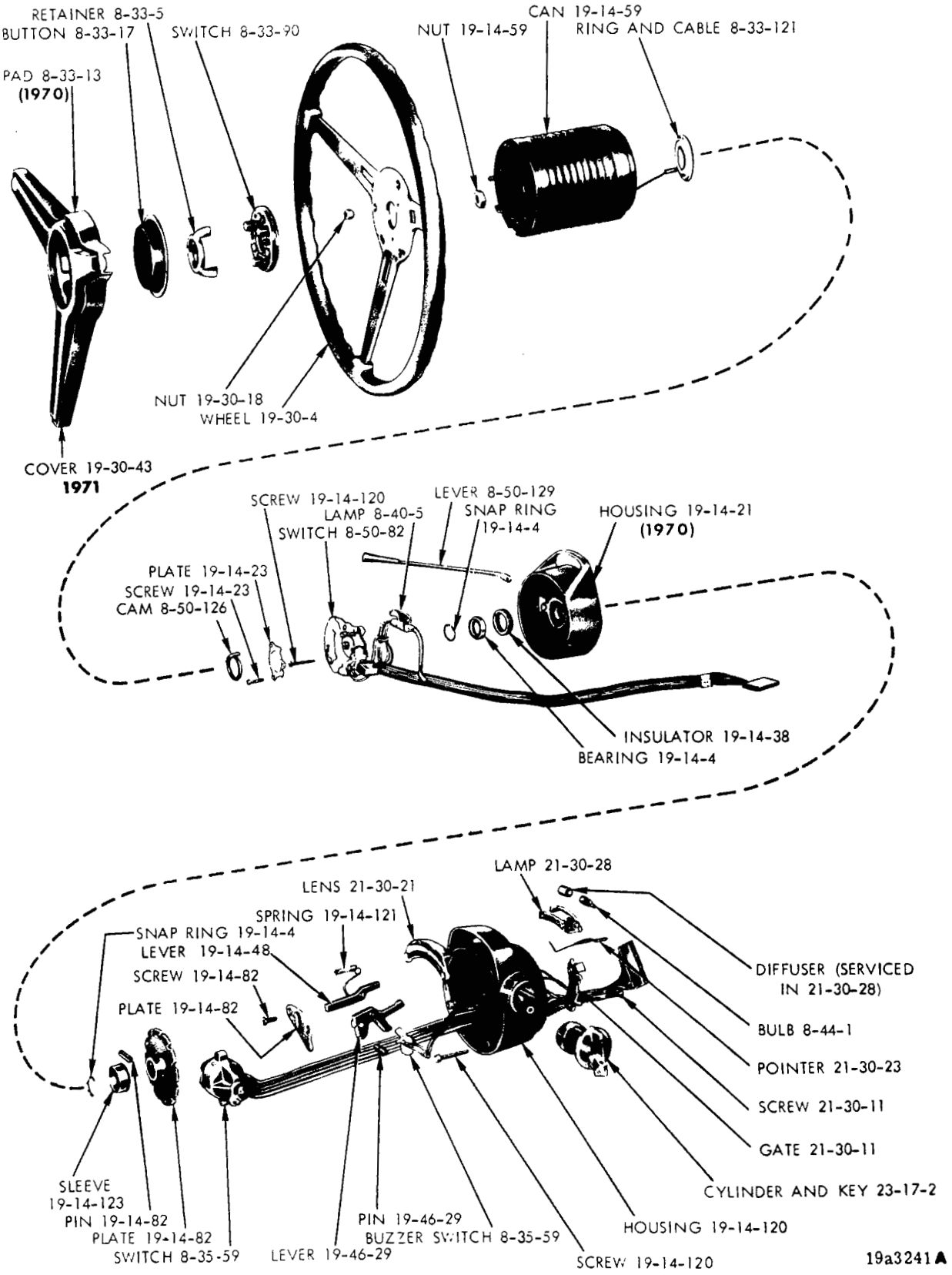

HORN AND TURN SIGNAL CONTROLS - BARRACUDA AND CHALLENGER

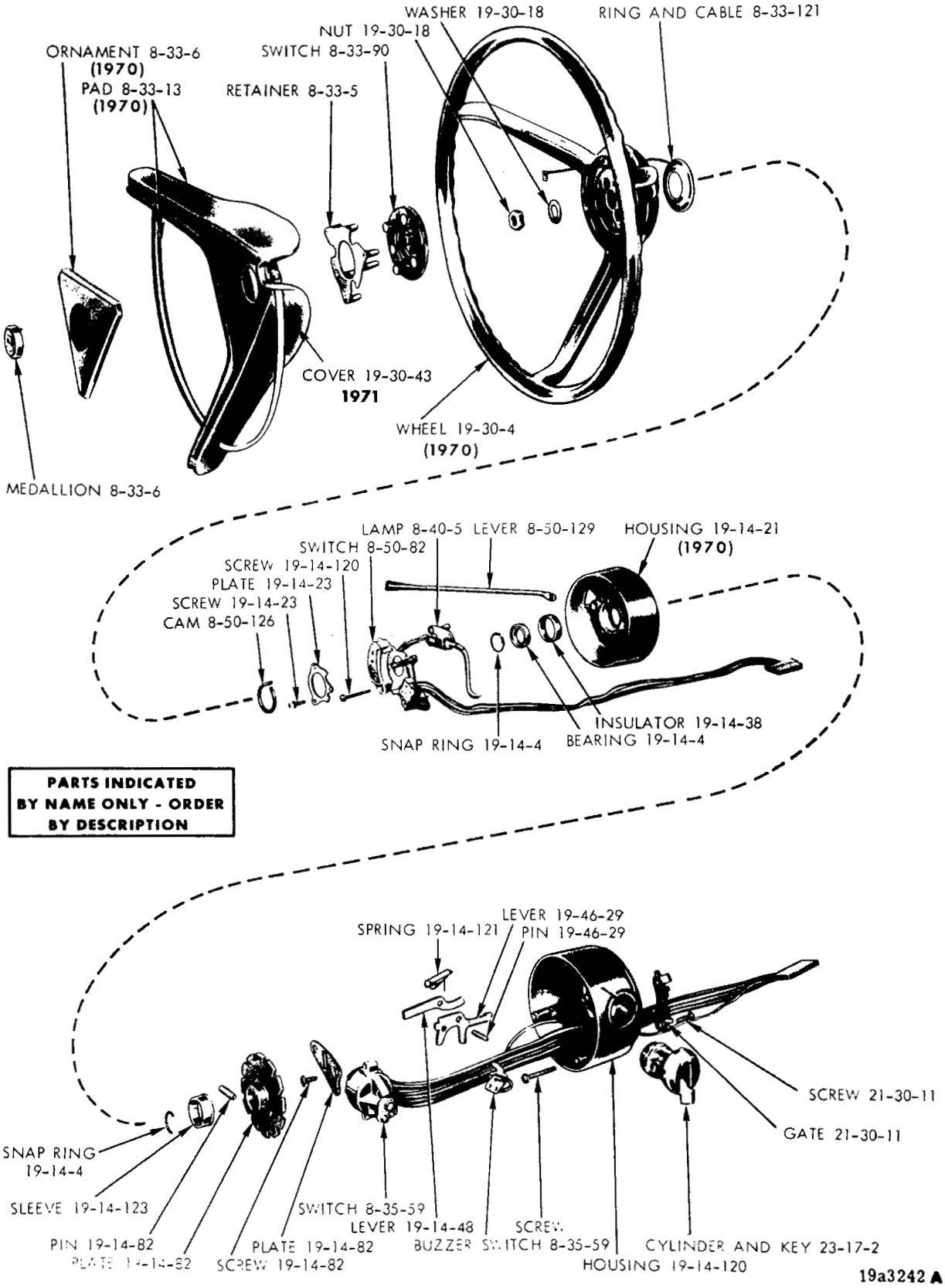

HORN AND TURN SIGNAL CONTROLS - WITHOUT TILT AND TILT-TELESCOPIC STEERING WHEEL - PLYMOUTH, DODGE, CHRYSLER AND IMPERIAL

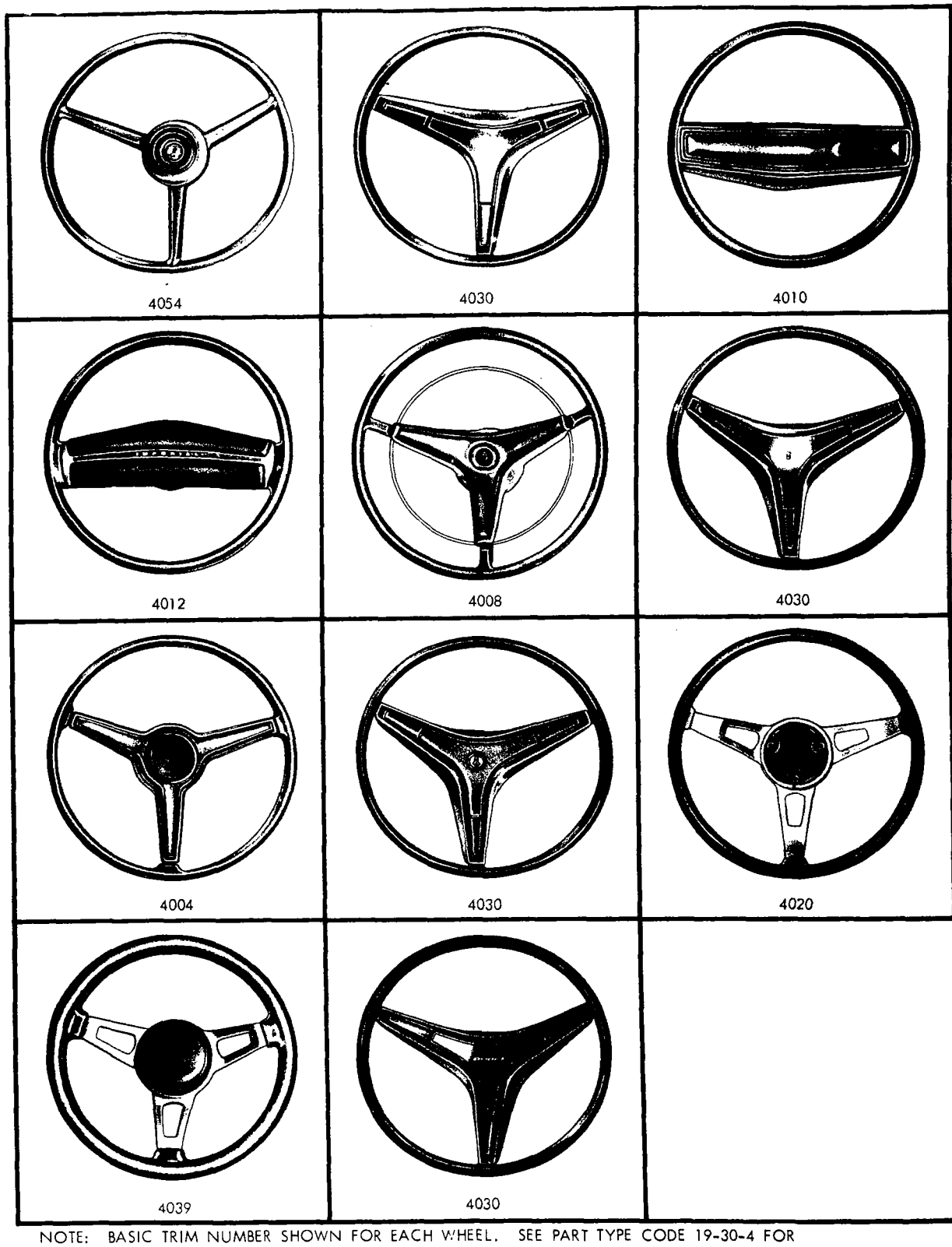

NOTE: BASIC TRIM NUMBER SHOWN FOR EACH WHEEL. SEE PART TYPE CODE 19-30-4 FOR PART NUMBER. ALSO SEE 8-33-13 AND 8-33-6 FOR PAD AND ORNAMENT. ALSO SEE 19-30-43 FOR CENTER AND SPOKE COVERS.

19a3545A

STEERING WHEEL CHART (1970-71)

NOTES

CODE	PART NAME	ENG. TYPE OR CU.IN.	V 1-2	B J 1-2	L 1-2	R 1-2	W 1-2	P 1-2	D 1-2	C 1	C 2	C 3	Y 1	PART NUMBER

POWER STEERING

NOTE: In the following Power Steering Text for the Chrysler, Plymouth Fury and Dodge Polara-Monaco Models only, Chrysler built and Saginaw built Steering Column Component Parts are listed.

You may identify the Chrysler built Steering Column by a White Plastic Bearing Support mounted with two bolts at the lower end of the Steering Column Jacket. You may identify the Saginaw Built Steering Column by a Black Plastic Bearing Support mounted with a wire Clip at the lower end of the Steering Column Jacket.

19-01-0 STEERING GEAR ASSEMBLY

19-01-4	"O" RING and SEAL PACKAGE, Strg. Gear		1	1	1	1	1	—	—	—	—	—	—	3004 998
			—	—	—	—	—	1	1	1	1	1	—	3004 996
			—	—	—	—	—	—	—	—	—	—	1	3004 997
19-01-8	CHUCK, Strg. Gear		1	—	1	—	—	—	—	—	—	—	—	2537 736
	Except 426 Eng. and 340-3-2 Carbs. Trans. Am, Fast Strg.		—	1	—	1	1	—	—	—	—	—	—	2537 736
	w/426 Eng.		—	1	—	1	1	—	—	—	—	—	—	2537 737
	w/340-3-2 Bbl. Carbs. Trans. Am, Fast Strg.	8	—	1	—	—	—	—	—	—	—	—	—	2537 749
			—	—	—	—	—	1	1	1	1	1	—	2537 738
			—	—	—	—	—	—	—	—	—	—	1	2537 739
	Bolt, Mounting		3	3	3	3	3	3	—	—	—	—	—	6028 193
	Bolt, Mounting-Inboard		—	—	—	—	—	—	2	2	2	2	2	6028 193
	Stud, Mounting		—	—	—	—	—	—	1	1	1	1	1	6028 191
	Washer		3	3	3	3	3	3	3	3	3	3	3	6028 087
19-01-50	SPRING, Strg. Gear Reaction		2	2	2	2	2	—	—	—	—	—	—	2537 178
			—	—	—	—	—	2	2	2	2	2	—	1822 134
			—	—	—	—	—	—	—	—	—	—	2	2267 532
19-01-51	RING, Strg. Gear Reaction		2	2	2	2	2	2	2	2	2	2	—	1822 150
			—	—	—	—	—	—	—	—	—	—	2	1733 791
19-01-52	SEAL, Strg. Gear Reaction,	Upper	1	1	1	1	1	1	1	1	1	1	—	1822 151
		Lower	1	1	1	1	1	1	1	1	1	1	—	1822 149
		Upper	—	—	—	—	—	—	—	—	—	—	1	1733 593
		Lower	—	—	—	—	—	—	—	—	—	—	1	1823 091
19-01-53	WASHER, Strg. Gear Reaction		1	1	1	1	1	1	1	1	1	1	1	1733 790
19-01-60	HEAD, Strg. Gear Cylinder		1	1	1	1	1	1	1	1	1	1	—	1823 157
			—	—	—	—	—	—	—	—	—	—	1	1823 161
	w/340-3-2 Bbl. Carb. Trans. Am Fast Strg.		—	1	—	—	—	—	—	—	—	—	—	2948 896
19-01-62	SNAP RING, Strg. Gear Cylinder Head		1	1	1	1	1	1	1	1	1	1	1	1822 321

19-02-0 STEERING GEAR HOUSING

19-02-4	HOUSING, Strg. Gear	70	1	—	1	1	1	—	—	—	—	—	—	2537 397
	Except Fast Strg.	70	—	1	—	—	—	—	—	—	—	—	—	2537 397
	w/Fast Strg. w/340-3-2 Bbl. Carb		—	1	—	—	—	—	—	—	—	—	—	2948 900
			—	—	—	—	—	1	1	1	1	1	1	2537 398
		71	1	—	1	1	1	—	—	—	—	—	—	2948 991
	Except Fast Strg.	71	—	1	—	—	—	—	—	—	—	—	—	2948 991
	WASHER, Housing to Frame		AR	AR	AR	AR	AR	AR	AR	AR	AR	—	—	6027 224
19-02-15	"O" RING, Strg. Gear Housing Port		2	2	2	2	2	2	2	2	2	2	2	1556 385
	"O" RING, Strg. Gear Housing to Valve		1	1	1	1	1	1	1	1	1	1	1	1823 150
19-02-55	HEAD, Strg. Gear Housing		1	1	1	1	1	1	1	1	1	1	—	2126 946
			—	—	—	—	—	—	—	—	—	—	1	2267 491
19-02-69	"O" RING, Strg. Gear Cylinder Head		2	2	2	2	2	2	2	2	2	2	2	1733 562

19-14-0 STEERING COLUMN JACKET

19-14-1	JACKET, Strg. Column w/3 Speed Man. Trans. Col. Shift		1	—	1	—	—	—	—	—	—	—	—	2996 011
	Except 3 Speed Man. Trans. Col. Shift	70	1	—	1	—	—	—	—	—	—	—	—	2996 012

CARLINES: J - Challenger, B - Barracuda, V - Valiant, L - Dart, R - Belvedere - Satellite, W - Coronet - Charger, P - Plymouth, D - Dodge, C - Chrysler, Y - Imperial

AR Indicates use as required.

# Indicates parts not listed in any previous parts book.

Numerals in parentheses ( ) refer to notes.

★ Indicates change or addition.

Printed in U.S.A. January 1972

POWER STEERING

19-14-0 STEERING COLUMN JACKET Cont'd.

CODE	PART NAME	ENG. TYPE OR CU.IN.	V 1-2	B J 1-2	L 1-2	R 1-2	W 1-2	P 1-2	D 1-2	C 1	C 2	C 3	Y 1	PART NUMBER
19-14-1	JACKET Cont'd.													
	Except 3 Speed Man. Trans. Col. Shift	71	1	—	1	1	1	—	—	—	—	—	—	3575 261
		70	—	1	—	—	—	—	—	—	—	—	—	2996 018
		71	—	1	—	—	—	—	—	—	—	—	—	3575 262
	w/3 Speed Man. Trans. Col. Shift w/225 and 318 Eng.	70	—	—	—	1	1	—	—	—	—	—	—	2996 013
	w/3 Speed Man. Trans. Col. Shift	71	—	—	—	1	1	—	—	—	—	—	—	3467 190
	Except 3 Speed Man. Trans. Col. Shift	70	—	—	—	1	1	—	—	—	—	—	—	2996 014
	w/3 Speed Man. Trans.		—	—	—	—	—	1	1	1	1	—	—	2996 015
	w/Auto. Trans. Except Tilt Strg. w/Single Coupling	70	—	—	—	—	—	1	1	1	1	—	—	2996 016
	w/Auto. Trans. Except Tilt Strg. w/Double Coupling		—	—	—	—	—	1	1	—	—	—	—	3467 447
	w/Auto. Trans. Except Tilt-Telescopic Strg., w/Double Coupling		—	—	—	—	—	—	—	1	1	1	—	3467 351
	w/Auto. Trans. Except Tilt-Telescopic Strg.		—	—	—	—	—	—	—	—	—	—	1	3467 352
	JACKET, w/Shift Tube, w/Col. Shift, w/Tilt Strg.	70	—	—	—	—	—	1	—	—	—	—	—	3467 830
	w/Cv. and Sta. Wgn.	70	—	—	—	—	—	—	1	—	—	—	—	3467 830
	w/2 D. and 4 D.	70	—	—	—	—	—	—	1	—	—	—	—	3467 828
	w/Floor Shift, w/Tilt Strg.	70	—	—	—	—	—	1	—	—	—	—	—	3467 831
	w/Cv. and Sta. Wgn.	70	—	—	—	—	—	—	1	—	—	—	—	3467 831
	w/2 D. and 4 D.	70	—	—	—	—	—	—	1	—	—	—	—	3467 829
	w/Col. Shift, w/Tilt-Telescopic Strg. w/Cv. and Sta. Wgn.	70	—	—	—	—	—	—	—	1	1	1	—	3467 826
	w/2 D. and 4 D.	70	—	—	—	—	—	—	—	1	1	1	—	3467 825
		70	—	—	—	—	—	—	—	—	—	—	1	3467 824
	w/Col. Shift, w/Tilt Strg.	71	—	—	—	1	1	—	—	—	—	—	—	3575 210
		71	—	—	—	—	—	1	1	—	—	—	—	3575 211
	w/Col. Shift, w/Tilt-Telescopic Strg.	71	—	—	—	—	—	—	—	1	1	1	—	3575 212
			—	—	—	—	—	—	—	—	—	—	1	3575 214
	w/Floor Shift, w/Tilt-Telescopic Strg.		—	—	—	—	—	—	—	1	1	1	—	3575 213
19-14-4	BEARING, Strg. Column Shaft, Except Tilt and Tilt-Telescopic Strg.	Upper	1	1	1	1	1	1	1	1	1	1	1	2265 656
	BEARING, W/Support, Strg. Column Shaft, w/3 Speed Man. Trans.,	Lower 70	1	—	1	1	1	1	1	—	—	—	—	2883 543
	w/3 Speed Man. Trans., w/Single Coupling	70	—	—	—	—	—	—	1	—	—	—	—	2883 543
	w/3 Speed Man. Trans., w/Double Coupling	70	—	—	—	—	—	—	1	1	—	—	—	2950 963
	w/3 Speed Man. Trans.	71	1	—	1	1	1	—	—	—	—	—	—	2883 543
	w/3 Speed Man. Trans.	71	—	—	—	—	—	1	1	1	—	—	—	2950 963
	w/Auto. Trans. Except Tilt Strg., w/Double Coupling	70	—	—	—	—	—	—	1	—	—	—	—	3467 435
	Except 3 Speed Man. Trans.	71	—	—	—	—	—	1	1	—	—	—	—	3467 435
	BEARING, w/Tilt, Tilt-Telescopic Strg.	70	—	—	—	—	—	2	2	2	2	2	2	2950 549
	BEARING, w/Tilt, Tilt-Telescopic Strg.	71	—	—	—	2	2	2	2	2	2	2	2	2950 549
	Snap Ring, Bearing Upper, Except Tilt, Tilt-Telescopic Strg.		1	1	1	1	1	1	1	1	1	1	1	6024 333
	Snap Ring, Bearing Lower, Except Tilt, Tilt-Telescopic Strg.		1	1	1	1	1	1	1	1	1	1	1	6023 045
	Screw, Bearing Support, w/3 Man. Trans		3	—	3	3	3	3	3	3	—	—	—	6029 175

CARLINES J - Challenger, B - Barracuda, V - Valiant, L - Dart, R - Belvedere - Satellite, W - Coronet - Charger, P - Plymouth, D - Dodge, C - Chrysler, Y - Imperial

AR Indicates use as required.

# Indicates parts not listed in any previous parts book.

Numerals in parentheses ( ) refer to notes.

★ Indicates change or addition.

Printed in U.S.A. January 1972

POWER STEERING

19-14-0 STEERING COLUMN JACKET Cont'd.

CODE	PART NAME	ENG. TYPE OR CU.IN.	V 1-2	B J 1-2	L 1-2	R 1-2	W 1-2	P 1-2	D 1-2	C 1	C 2	C 3	Y 1	PART NUMBER
19-14-11	SEAT, Inner Race, w/Tilt Strg.	70	—	—	—	—	—	1	1	—	—	—	—	3467 418
	SEAL, Upper Bearing Inner Race, w/Tilt Strg.	71	—	—	—	1	1	1	1	—	—	—	—	3575 241
	w/Tilt-Telescopic Strg. (Early Production)	70	—	—	—	—	—	—	—	1	1	1	1	2781 677
	w/Tilt-Telescopic Strg. (Late Production)		—	—	—	—	—	—	—	1	1	1	1	3467 418
19-14-13	WASHER, Strg. Gear Housing Head Nut		1	1	1	1	1	1	1	1	1	1	1	1733 588
19-14-18	"O" RING, Strg. Gear Housing Head		1	1	1	1	1	1	1	1	1	1	1	1733 602
19-14-19	NUT, Strg. Gear Housing Head		1	1	1	1	1	1	1	1	1	1	1	1733 625
19-14-21	HOUSING, Strg. Column Shaft Bearing													
	w/Auto. Trans. Column Shift	70	1	1	1	1	1	—	—	—	—	—	—	2950 826
	w/Auto. Trans. Col. Shift	71	1	1	1	1	1	—	—	—	—	—	—	3575 234
	Except Auto. Trans. Column Shift	70	1	1	1	1	1	—	—	—	—	—	—	2950 817
	Except Auto. Trans. Col. Shift	71	1	1	1	1	1	—	—	—	—	—	—	3575 231
	Except Tilt and Tilt-Telescopic Strg.	70	—	—	—	—	—	1	1	1	1	1	1	2950 817
		71	—	—	—	—	—	1	1	1	1	1	1	3575 231
	HOUSING, Strg. Column													
	w/Tilt Strg.	70	—	—	—	—	—	1	1	—	—	—	—	3467 380
	w/Tilt Strg.	71	—	—	—	1	1	—	—	—	—	—	—	3575 221
	w/Tilt Strg.	71	—	—	—	—	—	1	1	—	—	—	—	3575 222
	w/Tilt-Telescopic Strg.	70	—	—	—	—	—	—	—	1	1	1	1	3467 379
	w/Tilt-Telescopic Strg.	71	—	—	—	—	—	—	—	1	1	1	1	3467 815
	Washer, Spring		1	1	1	1	1	1	1	1	1	1	1	6023 046
19-14-22	RACE, Inner, w/Tilt, Tilt-Telescopic Strg.		—	—	—	1	1	1	1	1	1	1	1	2781 675
	YOKE, Race and Strg. Shaft Assy. w/Tilt-Telescopic Strg.		—	—	—	—	—	—	—	1	1	1	1	3467 396
19-14-23	PLATE, Strg. Column Shaft Bearing Retainer Except Tilt and Tilt-Telescopic Strg.		1	1	1	1	1	1	1	1	1	1	1	2950 989
	PLATE, Strg. Column Jacket Support Complete		1	—	1	—	—	—	—	—	—	—	—	2883 204
			—	1	—	—	—	—	—	—	—	—	—	2950 601
		70	—	—	—	1	1	—	—	—	—	—	—	2925 397
		71	—	—	—	1	1	—	—	—	—	—	—	3467 196
	w/Single Coupling	70	—	—	—	—	—	1	1	—	—	—	—	2950 171
	w/Double Coupling		—	—	—	—	—	1	1	1	1	1	1	2950 151
	w/Single Coupling	70	—	—	—	—	—	—	—	—	—	1	—	2950 171
	PLATE, Strg. Column Jacket Support "O" Ring	70	1	—	1	1	1	1	1	1	1	1	1	2883 210
		70	—	1	—	—	—	—	—	—	—	—	—	2950 814
		71	1	—	1	—	—	1	1	1	1	1	1	2883 210
		71	—	1	—	1	1	—	—	—	—	—	—	3575 015
	Screw, Retainer Plate		3	3	3	3	3	3	3	3	3	3	3	6023 088
	"O" RING, Strg. Column Jacket Support Plate		1	1	1	1	1	1	1	1	1	1	1	6026 275
19-14-24	COVER, Lock Housing													
	w/Tilt Strg.	70	—	—	—	—	—	1	1	—	—	—	—	3467 411
	w/Tilt-Telescopic Strg.	70	—	—	—	—	—	—	—	1	1	1	1	3467 410
	w/Tilt Strg.	71	—	—	—	1	1	—	—	—	—	—	—	3575 225
	w/Tilt Strg.	71	—	—	—	—	—	1	1	—	—	—	—	3575 244
	w/Tilt-Telescopic Strg.	71	—	—	—	—	—	—	—	1	1	1	1	3575 236

CARLINES J - Challenger, B - Barracuda, V - Valiant, L - Dart, R - Belvedere - Satellite, W - Coronet - Charger, P - Plymouth, D - Dodge, C - Chrysler, Y - Imperial

AR Indicates use as required.

# Indicates parts not listed in any previous parts book.

Numerals in parentheses ( ) refer to notes.

★ Indicates change or addition.

Printed in U.S.A. January 1972

POWER STEERING

19-14-0 STEERING COLUMN JACKET Cont'd.

CODE	PART NAME	ENG. TYPE OR CU.IN.	V 1-2	B J 1-2	L 1-2	R 1-2	W 1-2	P 1-2	D 1-2	C 1	C 2	C 3	Y 1	PART NUMBER
19-14-27	ADAPTER, Lower, w/Bearing, w/Tilt, Tilt-Telescopic Strg.													
	w/1" I.D. Bearing	70	—	—	—	—	—	1	1	1	1	1	—	2950 569
	w/ 3/4" I.D. Bearing		—	—	—	—	—	1	1	1	1	1	1	2950 570
	Except Tilt-Telescopic Strg.		—	—	—	—	—	—	—	1	1	1	1	2950 504
19-14-28	COVER, Strg. Column Jacket		1	1	1	1	1	1	1	1	1	1	1	2883 306
	SHROUD, Bowl, w/Floor Shift													
	w/Tilt, Tilt-Telescopic Strg.	70	—	—	—	—	—	1	1	1	1	—	—	3467 425
19-14-35	CLAMP, Instrument Panel Strg. Column		1	—	1	—	—	—	—	—	—	—	—	2950 952
		70	—	—	—	1	1	—	—	—	—	—	—	2950 954
	Stud, Clamp		2	2	2	2	2	—	—	—	—	—	—	6027 947
	Nut		2	—	2	2	2	—	—	—	—	—	—	6027 403
	Washer		2	—	2	2	2	—	—	—	—	—	—	6027 404
	Screw, w/Washer, Clamp to Col.		4	—	4	4	4	—	—	—	—	—	—	6026 904
	Screw, Clamp to Support Bracket		1	—	1	1	1	—	—	—	—	—	—	6027 402
	Washer		1	—	1	1	1	—	—	—	—	—	—	6027 404
19-14-36	SPACER, Instrument Panel Strg. Column Clamp		3	—	3	3	3	—	—	—	—	—	—	2950 150
		71	—	—	—	—	—	3	3	3	3	3	3	2950 150
	SPACER, Strg. Column Support Bracket	70	—	—	—	—	—	3	3	3	3	3	3	2950 150
19-14-37	BRACKET, Strg. Column		—	1	—	—	—	—	—	—	—	—	—	2950 956
	Screw, w/Washer, to Strg. Column		—	4	—	—	—	—	—	—	—	—	—	6026 904
19-14-38	INSULATOR, Strg. Column Shaft Upper Bearing													
	Except Tilt, Tilt-Telescopic Strg.		1	1	1	1	1	1	1	1	1	1	1	2925 491
	Lower Bearing, w/Double Coupling		—	—	—	—	—	1	1	1	—	—	—	2530 566
19-14-48	LEVER, Shoe Release,													
	w/Tilt, Tilt-Telescopic Strg.	70	—	—	—	—	—	1	1	1	1	1	1	3467 381
	w/Tilt Strg., Col. Shift	71	—	—	—	1	1	1	1	—	—	—	—	3575 220
	w/Tilt-Telescopic Strg., Col. Shift	71	—	—	—	—	—	—	—	1	1	1	1	3467 381
	LEVER, Strg. Column Shaft Lock, Except Tilt, Tilt-Telescopic Strg.		1	1	1	1	1	1	1	1	1	1	1	2950 840
	LEVER, Strg. Column Release													
	w/Tilt, Tilt-Telescopic Strg.	70	—	—	—	—	—	1	1	1	1	1	1	2533 934
	w/Tilt, Tilt-Telescopic Strg.,	71	—	—	—	1	1	1	1	1	1	1	1	3575 002
	LEVER, w/KNOB, Strg. Wheel Locking, w/o Strg. Wheel Horn Rim Switch, w/Tilt-Telescopic Strg.	70	—	—	—	—	—	—	—	1	1	1	1	2925 559
	LEVER, w/KNOB, Strg. Wheel Locking, w/Strg. Wheel Horn Rim Switch, w/Tilt-Telescopic Strg.		—	—	—	—	—	—	★	1	1	1	1	2996 860
19-14-49	TROUGH, Strg. Column Wiring, w/o Paint	70	1	—	1	1	1	—	—	—	—	—	—	2996 027
		70	—	1	—	—	—	—	—	—	—	—	—	2950 961
	Except Tilt, Tilt-Telescopic Strg.	70	—	—	—	—	—	1	1	1	1	1	1	2996 045
	Black	70	1	—	1	1	1	—	—	—	—	—	—	4333 FX9
	Burnt Orange	70	—	—	—	—	—	1	1	—	—	—	—	4334 FK5
	Black	70	—	—	—	—	—	1	1	—	—	—	—	4334 FX9
	Black	70-71	—	1	—	—	—	—	—	—	—	—	—	4335 FX9
	Blue	71	1	—	1	1	1	—	—	—	—	—	—	4333 GB7
	Green	71	1	—	1	1	1	—	—	—	—	—	—	4333 GF7
	Tan	71	1	—	1	1	1	—	—	—	—	—	—	4333 GT6
	Black	71	1	—	1	1	1	—	—	—	—	—	—	4333 FX9
	Gold	71	1	—	1	1	1	—	—	—	—	—	—	4333 GY6
	Indigo	71	—	—	—	1	1	—	—	—	—	—	—	4333 GC8
	Black	71	—	—	—	—	—	1	1	1	1	1	1	4334 FX9
	Gold	71	—	—	—	—	—	1	1	—	—	—	—	4334 GY6

CARLINES J - Challenger, B - Barracuda, V - Valiant, L - Dart, R - Belvedere - Satellite, W - Coronet - Charger, P - Plymouth, D - Dodge, C - Chrysler, Y - Imperial

AR Indicates use as required.

Numerals in parentheses ( ) refer to notes.

# Indicates parts not listed in any previous parts book.

★ Indicates change or addition.

Printed in U.S.A. January 1972

POWER STEERING

19-14-0 STEERING COLUMN JACKET Cont'd.

CODE	PART NAME	ENG. TYPE OR CU.IN.	V 1-2	B J 1-2	L 1-2	R 1-2	W 1-2	P 1-2	D 1-2	C 1	C 2	C 3	Y 1	PART NUMBER
19-14-49	TROUGH Cont'd.													
	Dark Blue	71	—	—	—	—	—	—	—	—	—	—	1	4334 GB9
	Burgundy	71	—	—	—	—	—	—	—	—	—	—	1	4334 GM9
	Screw		2	2	2	2	2	2	2	2	2	2	2	9423 520
19-14-50	BRACE, Instrument Panel Strg. Column Clamp to Pedal Bracket	70	—	—	—	1	1	—	—	—	—	—	—	2925 406
	Screw, w/Washer	70	—	—	—	AR	AR	—	—	—	—	—	—	6025 329
19-14-51	CLIP, Lower Bearing Adapter, w/Tilt, Tilt-Telescopic Strg.		—	—	—	1	1	1	1	1	1	1	1	2950 571
	Except Tilt-Telescopic Strg.		—	—	—	—	—	—	—	1	1	1	1	2880 325
19-14-59	CAN, Strg. Column Energy Absorbing		—	1	—	—	—	—	—	—	—	—	—	2950 812
	Nut	70	—	3	—	—	—	—	—	—	—	—	—	6028 265
	Nut	71	—	3	—	—	—	—	—	—	—	—	—	6029 392
19-14-68	SEAL, Strg. Col. Jacket To Tube, w/Auto Trans. Col. Shift, Except Tilt Strg.	71	1	1	1	1	1	—	—	—	—	—	—	3575 082
		71	—	—	—	—	—	1	1	—	—	—	—	3575 206
	w/Floor Shift, Except Tilt Strg.	71	1	1	1	1	1	—	—	—	—	—	—	3575 227
19-14-73	RETAINER, Strg. Column Jacket Seal, w/Floor Shift	71	1	1	1	1	1	—	—	—	—	—	—	3575 228
19-14-74	COVER, Wiring, w/Tilt Strg.		—	—	—	—	—	1	1	—	—	—	—	3467 428
19-14-75	GUIDE, Wire, w/Tilt-Telescopic Strg.		—	—	—	—	—	—	—	1	1	1	1	3467 412
	GUIDE, Spring, w/Tilt, Tilt-Telescopic Strg.		—	—	—	1	1	1	1	1	1	1	1	2880 361
19-14-80	WEDGE, Telescope Locking, W/Tilt-Telescopic Strg.	70	—	—	—	—	—	—	—	1	1	1	1	2781 672
			—	—	—	—	—	—	—	1	1	1	1	3467 822
19-14-81	ROD, Telescopic Locking, W/Tilt-Telescopic Strg.		—	—	—	—	—	—	—	1	1	1	1	2781 685
19-14-82	PLATE, Strg. Column Shaft Lock, Except Tilt, Tilt-Telescopic Strg.		1	1	1	1	1	1	1	1	1	1	1	2950 980
	PLATE, Strg. Column Lock Lever Guide, Except Tilt, Tilt-Telescopic Strg.		1	1	1	1	1	1	1	1	1	1	1	2950 839
	PLATE LOCK, w/Tilt, Tilt-Telescopic Strg.		—	—	—	1	1	1	1	1	1	1	1	3467 414
	Screw, Guide Plate		2	2	2	2	2	2	2	2	2	2	2	6028 499
	Pin, Lock Plate, Except Tilt, Tilt-Telescopic Strg.		1	1	1	1	1	1	1	1	1	1	1	9412 281
19-14-84	SHOE, Strg. Wheel Lock w/Tilt, Tilt-Telescopic Strg. 3-Position		—	—	—	1	1	1	1	1	1	1	1	3467 388
	4-Position		—	—	—	1	1	1	1	1	1	1	1	3467 389
19-14-85	SPRING, Upper Bearing, w/Tilt Strg.	71	—	—	—	1	1	1	1	—	—	—	—	# 3575 265
	w/Tilt-Telescopic Strg.		—	—	—	—	—	—	—	1	1	1	1	2781 679
	SPRING, Wheel Tilt, w/Tilt-Telescopic Strg.	70	—	—	—	—	—	—	—	1	1	1	1	3467 421
	w/Tilt-Telescopic Strg.	71	—	—	—	—	—	—	—	1	1	1	1	2925 524
	w/Tilt Strg.		—	—	—	1	1	1	1	—	—	—	—	3467 422
	SPRING, Lock Bolt, w/Tilt, Tilt-Telescopic Strg.		—	—	—	1	1	1	1	1	1	1	1	3467 390
	SPRING, Joint Preload, w/Tilt, Tilt-Telescopic Strg.		—	—	—	—	—	1	1	1	1	1	1	3467 398
	SPRING, Rack Preload, w/Tilt, Tilt-Telescopic Strg.		—	—	—	1	1	1	1	1	1	1	1	3467 391
	SPRING, Shoe, w/Tilt, Tilt-Telescopic Strg.		—	—	—	2	2	2	2	2	2	2	2	3467 392
	SPRING, Guide, w/Tilt, Tilt-Telescopic Strg.		—	—	—	1	1	1	1	1	1	1	1	2880 361
	SPRING, Release Lever, w/Tilt, Tilt-Telescopic Strg.		—	—	—	1	1	1	1	1	1	1	1	2880 262

CARLINES: J - Challenger, B - Barracuda, V - Valiant, L - Dart, R - Belvedere - Satellite, W - Coronet - Charger, P - Plymouth, D - Dodge, C - Chrysler, Y - Imperial

AR Indicates use as required.

# Indicates parts not listed in any previous parts book.

Numerals in parentheses ( ) refer to notes.

★ Indicates change or addition.

Printed in U.S.A. January 1972

CODE	PART NAME	ENG. TYPE OR CU.IN.	V 1-2	B J 1-2	L 1-2	R 1-2	W 1-2	P 1-2	D 1-2	C 1	C 2	C 3	Y 1	PART NUMBER
	POWER STEERING													
	19-14-0 STEERING COLUMN JACKET Cont'd.													
19-14-89	WASHER, Drive Shaft Shear, w/Tilt, Tilt-Telescopic Strg.	70	—	—	—	—	—	1	1	1	1	1	1	3467 393
	WASHER, Thrust, w/Tilt, Tilt-Telescopic Strg.		—	—	—	1	1	1	1	1	1	1	1	3467 423
	WASHER, Wave, w/Tilt, Tilt-Telescopic Strg.		—	—	—	1	1	1	1	1	1	1	1	3467 424
19-14-91	RING, Retaining, w/Tilt Strg.		—	—	—	1	1	1	1	—	—	—	—	2925 062
	w/Tilt-Telescopic Strg.		—	—	—	—	—	—	—	1	1	1	1	2781 676
19-14-92	PIN, Dowel, w/Tilt, Tilt-Telescopic Strg.		—	—	—	1	1	1	1	1	1	1	1	3467 382
	PIN, Pivot, w/Tilt, Tilt-Telescopic Strg.	70	—	—	—	—	—	2	2	2	2	2	2	3467 413
		71	—	—	—	2	2	2	2	2	2	2	2	3467 823
	PIN, Release Lever, w/Tilt, Tilt-Telescopic Strg.		—	—	—	1	1	1	1	1	1	1	1	2880 259
19-14-93	BOLT, Lock w/Tilt Strg.		—	—	—	1	1	1	1	—	—	—	—	3467 377
	w/Tilt-Telescopic Strg.		—	—	—	—	—	—	—	1	1	1	1	3467 376
	SCREW, Support, w/Tilt, Tilt-Telescopic Strg.		—	—	—	4	4	4	4	4	4	4	4	2880 371
19-14-97	SUPPORT, Bearing Housing, w/Floor Shift, w/Tilt, Tilt-Telescopic Strg.		—	—	—	—	—	1	1	1	1	1	—	3467 401
	w/Column Shift, w/Tilt, Tilt-Telescopic Strg.	70	—	—	—	—	—	1	1	1	1	1	1	3467 399
		71	—	—	—	1	1	1	1	1	1	1	1	3575 237
19-14-98	CARRIER, Assembly, w/Tilt-Telescopic Strg.		—	—	—	—	—	—	—	1	1	1	1	3467 370
19-14-102	BUMPER, Spring, w/Tilt-Telescopic Strg.	70	—	—	—	—	—	—	—	1	1	1	1	2781 684
	BUMPER, w/Tilt, Tilt-Telescopic Strg.		—	—	—	3	3	3	3	3	3	3	3	3467 378
19-14-103	SPHERE, Centering, w/Tilt, Tilt-Telescopic Strg.		—	—	—	—	—	2	2	2	2	2	2	3467 397
19-14-108	RETAINER, Carrier Snap Ring, w/Tilt-Telescopic Strg.		—	—	—	—	—	—	—	1	1	1	1	3467 432
	RETAINER, Spring, w/Tilt, Tilt-Telescopic Strg.		—	—	—	1	1	1	1	1	1	1	1	2880 367
19-14-118	SHIELD, Turn Signal Opening, w/Tilt-Telescopic Strg.		—	—	—	—	—	—	—	1	1	1	1	3467 420
	SHIELD, Tilt Lever Opening, w/Tilt, Tilt-Telescopic Strg.		—	—	—	1	1	1	1	1	1	1	1	3467 419
19-14-120	HOUSING, Strg. Column Lock, W/Auto. Trans. Column Shift		1	1	1	1	1	—	—	—	—	—	—	2950 832
	Except Auto. Trans. Column Shift		1	1	1	1	1	—	—	—	—	—	—	2950 823
	Except Tilt, Tilt-Telescopic Strg.		—	—	—	—	—	1	1	1	1	1	1	2950 823
	Screw		4	4	4	4	4	4	4	4	4	4	4	6028 665
19-14-121	SPRING, Strg. Column Lock, Except Tilt, Tilt-Telescopic Strg.		1	1	1	1	1	1	1	1	1	1	1	2996 858
	SPRING, Strg. Column Lock Lever Return, Except Tilt, Tilt-Telescopic Strg.	70	1	1	1	1	1	1	1	1	1	1	1	2950 843
19-14-123	SLEEVE, Strg. Column Shaft Lock Plate, Except Tilt, Tilt-Telescopic Strg.		1	1	1	1	1	1	1	1	1	1	1	3467 178
	19-15-0 STEERING COLUMN SHAFT AND COUPLING													
19-15-1	REPAIR KIT, Collapsible Strg. Column Shaft		1	1	1	1	1	1	1	1	1	1	1	3514 996
19-15-4	SHAFT, Strg. Column 37" .78 lgh.	70	1	—	1	—	—	—	—	—	—	—	—	2996 753
		71	1	—	1	—	—	—	—	—	—	—	—	3575 539
	40" .73 lgh.	70	—	1	—	—	—	—	—	—	—	—	—	2996 760
		71	—	1	—	—	—	—	—	—	—	—	—	3575 544
	41" .76 lgh.	70	—	—	—	1	1	—	—	—	—	—	—	2996 755
		71	—	—	—	1	1	—	—	—	—	—	—	3575 542
	43" .41 lgh.	70	—	—	—	—	—	1	—	—	—	—	—	2996 757

CARLINES: J - Challenger, B - Barracuda, V - Valiant, L - Dart, R - Belvedere - Satellite, W - Coronet - Charger, P - Plymouth, D - Dodge, C - Chrysler, Y - Imperial

AR Indicates use as required.

# Indicates parts not listed in any previous parts book.

Numerals in parentheses ( ) refer to notes.

★ Indicates change or addition.

Printed in U.S.A. January 1972

POWER STEERING

19-15-0 STEERING COLUMN SHAFT AND COUPLING Cont'd.

19-15-4 SHAFT Cont'd.

CODE	PART NAME		ENG. TYPE OR CU.IN.	V 1-2	B J 1-2	L 1-2	R 1-2	W 1-2	P 1-2	D 1-2	C 1	C 2	C 3	Y 1	PART NUMBER
	43" .41 lgh.	70	6	—	—	—	—	—	—	1	—	—	—	—	2996 757
	w/Cv. and Sta. Wgn. 43" .41 lgh.	70	8	—	—	—	—	—	—	1	—	—	—	—	2996 757
	w/2 D. and 4 D. w/Auto. Trans. 36" .62 lgh.	70	8	—	—	—	—	—	—	1	—	—	—	—	3467 439
	w/Cv. and Sta. Wgn., w/Single Coupling	70	8	—	—	—	—	—	—	—	1	1	—	—	2950 978
	36" .68 lgh., w/Double Coupling	70	8	—	—	—	—	—	—	—	1	1	1	1	2996 825
	Lower, 5". 30 lgh., w/Double Coupling		8	—	—	—	—	—	1	1	1	1	1	1	2823 748
	w/Man. Trans.	71		—	—	—	—	—	1	1	1	—	—	—	2996 825
	w/Auto. Trans. except Tilt Strg.	71		—	—	—	—	—	1	1	—	—	—	—	3467 439
	w/Auto. Trans. except Tilt-Telescopic Strg.	71		—	—	—	—	—	—	—	1	1	1	1	2996 825
	Upper, w/Tilt Strg.	70		—	—	—	—	—	1	1	—	—	—	—	3467 426
	Upper, w/Race, w/Tilt Strg.	71		—	—	—	1	1	1	1	—	—	—	—	3575 223
	Upper, w/Tilt-Telescopic Strg.			—	—	—	—	—	—	—	1	1	1	1	2880 266
	Lower, w/Tilt Strg.	70		—	—	—	—	—	1	—	—	—	—	—	3467 359
	Lower, w/Tilt Strg.	70	6	—	—	—	—	—	—	1	—	—	—	—	3467 359
	Lower, w/Tilt Strg., w/Co. and Sta. Wag.	70	8	—	—	—	—	—	—	7	—	—	—	—	3467 359
	Lower, w/Tilt Strg., w/2 D. and 4 D. Sed.	70	8	—	—	—	—	—	—	1	—	—	—	—	3467 356
	w/Tilt-Telescopic Strg. w/Cv. and Sta. Wag., w/o Console	70	8	—	—	—	—	—	—	—	1	1	—	—	3467 358
	w/Tilt-Telescopic Strg., w/Cv. w/Console also used w/2 D., 4 D. Sed.	70	8	—	—	—	—	—	—	—	1	1	1	—	3467 357
	w/Tilt-Telescopic Strg.	70		—	—	—	—	—	—	—	—	—	—	1	3467 357
	w/Tilt Strg.	71		—	—	—	1	1	—	—	—	—	—	—	3575 217
	w/Tilt Strg.	71		—	—	—	—	—	1	1	—	—	—	—	3575 218
	w/Tilt-Telescopic Strg.	71		—	—	—	—	—	—	—	1	1	1	1	3467 357
	SHAFT, Drive, w/Tilt, Tilt-Telescopic Strg.	70		—	—	—	—	—	1	1	1	1	1	1	3467 387
		71		—	—	—	1	1	1	1	1	1	1	1	3467 817
19-15-17	COVER, Strg. Column Shaft Coupling Body			1	1	1	1	1	1	1	1	1	1	1	2530 538
19-15-20	SPRING, Strg. Column Coupling Ground, W/Rubber Coupling,	Canada Built		—	—	—	—	—	1	1	—	—	—	—	2768 287
				—	—	—	—	—	—	—	1	1	1	1	2768 287
19-15-23	BODY, Strg. Column Shaft Coupling			1	1	1	1	1	1	1	1	1	1	1	2996 857
	COUPLING, Strg. Column Shaft, w/Rubber Coupling	Canada Built		—	—	—	—	—	1	1	—	—	—	—	2530 541
	w/Rubber Coupling	U.S. Built		—	—	—	—	—	1	1	1	1	1	1	2530 541
	Pin, Coupling Body			1	1	1	1	1	1	1	1	1	1	1	9431 620
	Pin, Spring, Coupling			AR	AR	AR	AR	AR	AR	AR	AR	AR	AR	AR	6028 750
	Bolt, Coupling			—	—	—	—	—	4	4	4	4	4	4	6026 435
19-15-24	PIN, Strg. Column Shaft Lower Coupling			1	1	1	1	1	1	1	1	1	1	1	2266 743
19-15-25	"O" RING, Strg. Column Shaft, w/Double Coupling, w/3 Speed Man. Trans.			—	—	—	—	—	1	1	1	1	—	—	1407 748
19-15-28	SEAL, Strg. Column Shaft Coupling Body			1	1	1	1	1	1	1	1	1	1	1	2800 741
	SEAL, Strg. Column Jacket to Tube, Except Tilt Strg.	70		AR	AR	AR	AR	AR	AR	AR	AR	—	—	—	2996 784
		71		1	1	1	1	1	—	—	—	—	—	—	3575 082
		71		—	—	—	—	—	1	1	—	—	—	—	3575 206

CARLINES: J - Challenger, B - Barracuda, V - Valiant, L - Dart, R - Belvedere - Satellite, W - Coronet - Charger, P - Plymouth, D - Dodge, C - Chrysler, Y - Imperial

AR Indicates use as required.

# Indicates parts not listed in any previous parts book.

Numerals in parentheses ( ) refer to notes.

★ Indicates change or addition.

Printed in U.S.A. January 1972

CODE	PART NAME	ENG. TYPE OR CU.IN.	V	B J	L	R	W	P	D	C	C	C	Y	PART NUMBER
			1-2	1-2	1-2	1-2	1-2	1-2	1-2	1	2	3	1	
	POWER STEERING													
19-15-0	**STEERING COLUMN SHAFT AND COUPLING Cont'd.**													
19-15-31	LOCK, Shaft, w/Tilt Strg.		—	—	—	1	1	1	1	—	—	—	—	3467 429
	w/Tilt-Telescopic Strg.		—	—	—	—	—	—	—	1	1	1	1	3467 395
19-15-33	GUIDE, Strg. Gear Recirculating Ball		2	2	2	2	2	2	2	2	2	2	2	2072 035
19-15-35	SPRING, Strg. Column Shaft Coupling Body		1	1	1	1	1	1	1	1	1	1	1	2925 492
19-15-38	WORM, w/Piston, Strg. Gear	70	1	1	1	1	1	1	1	1	1	1	1	2537 222
		71	1	1	1	1	1	1	1	1	1	1	1	2948 855
	WORM, w/Thrust Bearing, w/Fast Strg. w/340-3-2 Bbl. Carbs.	8	—	1	—	—	—	—	—	—	—	—	—	2948 897
19-15-39	SPRING PACKAGE Strg. Gear Recirculating Ball Guide		1	1	1	1	1	1	1	1	1	1	1	2084 215
19-15-40	COVER, Strg. Column Shaft Lock w/Tilt Strg.		—	—	—	1	1	1	1	—	—	—	—	3575 078
	Screw		—	—	—	3	3	3	3	—	—	—	—	6029 142
19-15-43	FLANGE, Strg. Column Shaft Coupling, w/Rubber Strg. Column Coupling, Canada Built	70	—	—	—	—	—	1	1	—	—	—	—	2530 189
	w/Rubber Strg. Col. Coupling U.S. Built		—	—	—	—	—	1	1	1	1	1	1	2880 737
19-15-44	SHOE, Strg. Column Shaft Coupling Body		2	2	2	2	2	2	2	2	2	2	2	2800 738
19-15-60	BEARING, Strg. Gear Worm		1	1	1	1	1	1	1	1	1	1	1	2537 796
	BEARING, Strg. Gear Thrust		2	2	2	2	2	2	2	2	2	2	2	1822 158
19-15-63	RACE, Strg. Gear Thrust Bearing, Inner		1	1	1	1	1	1	1	1	1	1	1	1856 292
	Outer		1	1	1	1	1	1	1	1	1	1	1	1822 156
19-15-65	NUT, Strg. Gear Thrust Bearing		1	1	1	1	1	1	1	1	1	1	1	1822 157
	NUT, Bearing Lock, w/Tilt Strg.	70	—	—	—	—	—	1	1	—	—	—	—	3467 430
19-15-69	SPACER, W/Center Race, Strg. Gear		1	1	1	1	1	1	1	1	1	1	1	1822 390
19-15-77	SPACER, Upper Strg. Shaft, W/Four Spoke Strg. Wheel, Partial Horn Ring w/Tilt-Telescopic Strg.	70	—	—	—	—	—	—	—	1	1	1	1	2996 922
19-15-81	RETAINER, Strg. Column Shaft Lock Cover Screw, w/Tilt Strg.	71	—	—	—	3	3	3	3	—	—	—	—	3575 080
19-15-111	SHIELD, Strg. Column Shaft Coupling, W/Rubber Coupling Canada Built		—	—	—	—	—	1	1	—	—	—	—	2852 470
			—	—	—	—	—	—	—	1	1	1	1	2852 470
19-19-0	**STEERING GEAR SHAFT**													
19-19-1	SEAL PACKAGE, Strg. Gear Shaft Cover		1	1	1	1	1	1	1	1	1	1	1	3004 995
19-19-4	SHAFT, Strg. Gear		1	—	1	1	1	—	—	—	—	—	—	2537 775
	Except Trans. Am w/340-3-2 Bbl. Carbs. w/Fast Strg.		—	1	—	—	—	—	—	—	—	—	—	2537 775
	w/Trans. Am w/340-3-2 Bbl. Carbs. w/Fast Strg.	8	—	1	—	—	—	—	—	—	—	—	—	2948 893
			—	—	—	—	—	1	1	1	1	1	1	2537 776
19-19-5	SNAP RING, Strg. Gear Shaft Seal		1	—	1	1	1	—	—	—	—	—	—	2126 966
			—	—	—	—	—	1	1	1	1	1	1	2127 049
	Except 340-3-2 Bbl. Carbs., Trans. Am, w/Fast Strg.		—	1	—	—	—	—	—	—	—	—	—	2126 966
	w/340-3-2 Bbl. Carbs. Trans. Am w/Fast Strg.		—	1	—	—	—	—	—	—	—	—	—	2127 049
19-19-7	SCREW, Strg. Gear Shaft Adjusting		1	1	1	1	1	1	1	1	1	1	1	2948 857
19-19-9	NUT, Strg. Gear Shaft Adjusting Screw	70	1	1	1	1	1	1	1	1	1	1	1	1822 204
		71	1	1	1	1	1	1	1	1	1	1	1	6028 983

CODE	PART NAME	ENG. TYPE OR CU.IN.	V 1-2	B J 1-2	L 1-2	R 1-2	W 1-2	P 1-2	D 1-2	C 1	C 2	C 3	Y 1	PART NUMBER
	POWER STEERING													
19-19-0	**STEERING GEAR SHAFT Cont'd.**													
19-19-19	BEARING, Strg. Gear Shaft		2	—	2	2	2	—	—	—	—	—	—	2126 890
	Except 340-3-2 Bbl. Carbs., Trans. Am w/Fast Strg.		—	2	—	—	—	—	—	—	—	—	—	2126 890
	w/Fast Strg.	70	—	2	—	—	—	—	—	—	—	—	—	1734 078
		70	—	—	—	—	—	2	2	2	2	2	2	1734 078
	w/340-3-2 Bbl. Carbs., Trans. Am, w/Fast Strg.	71	—	1	—	—	—	—	—	—	—	—	—	2948 971
		71	—	—	—	—	—	1	1	1	1	1	1	2948 971
19-19-24	COVER, Strg. Gear Shaft	70	1	1	1	1	1	1	1	1	1	1	1	2537 717
		71	1	1	1	1	1	1	1	1	1	1	1	2948 856
	COVER, Package	70	1	1	1	1	1	1	1	1	1	1	1	3579 510
19-19-26	"O" RING, Strg. Gear Shaft Cover	70	1	1	1	1	1	1	1	1	1	1	1	2537 716
	w/Out Lip Edge	71	1	1	1	1	1	1	1	1	1	1	1	2537 716
	w/Lip Edge	71	1	1	1	1	1	1	1	1	1	1	1	6029 338
19-19-32	NUT, Strg. Gear Shaft Cover		1	1	1	1	1	1	1	1	1	1	1	1733 627
19-19-35	SEAL, w/Date Tag Strg. Gear Shaft Adjusting Screw		1	1	1	1	1	1	1	1	1	1	1	2948 859
	SEAL, Strg. Gear Worm Shaft		1	1	1	1	1	1	1	1	1	1	1	2267 129
	OIL SEAL, Strg. Gear Shaft		1	—	1	1	1	—	—	—	—	—	—	2537 154
	Except Trans. Am w/Fast Strg.		—	1	—	—	—	—	—	—	—	—	—	2537 154
	w/Trans. Am. w/Fast Strg.		—	1	—	—	—	—	—	—	—	—	—	2537 153
			—	—	—	—	—	1	1	1	1	1	1	2537 153
19-19-36	RETAINER, Strg. Gear Shaft Seal		1	—	1	1	1	—	—	—	—	—	—	2126 965
	Except Trans. AM. w/Fast Strg.		—	1	—	—	—	—	—	—	—	—	—	2126 965
	w/Trans. AM. w/Fast Strg.		—	1	—	—	—	—	—	—	—	—	—	1670 356
			—	—	—	—	—	1	1	1	1	1	1	1670 356
19-19-38	DUST SEAL, Strg. Gear Shaft		1	—	1	1	1	—	—	—	—	—	—	2267 351
			—	—	—	—	—	1	1	1	1	1	1	2267 350
	Except Trans. Am, w/Fast Strg.		—	1	—	—	—	—	—	—	—	—	—	2267 351
	w/Trans. Am, w/Fast Strg.		—	1	—	—	—	—	—	—	—	—	—	2267 350
19-19-70	SEAL, Strg. Gear Worm Sleeve		1	1	1	1	1	1	1	1	1	1	1	1822 324
19-19-71	RING, Strg. Gear Worm Seal		1	1	1	1	1	1	1	1	1	1	1	1822 406
19-19-72	SLEEVE, Strg. Gear Worm		1	1	1	1	1	1	1	1	1	1	1	1822 320
19-27-0	**STEERING LINK GEAR ARM AND IDLER ARM**													
19-27-2	ARM PACKAGE, Strg. Link Gear		1	—	1	—	—	—	—	—	—	—	—	3004 807
		70	—	—	—	1	1	—	—	—	—	—	—	3004 811
		71	—	—	—	1	1	—	—	—	—	—	—	2835 880
			—	—	—	—	—	1	1	1	1	1	—	3004 812
			—	—	—	—	—	—	—	—	—	—	1	3004 813
	ARM, Strg. Link Gear Except 340-3-2 Bbl. Carbs.		—	1	—	—	—	—	—	—	—	—	—	2835 880
	w/340-3-2 Bbl. Carbs. w/Fast Strg.	8	—	1	—	—	—	—	—	—	—	—	—	2948 713
19-27-8	NUT, Strg. Link Gear Arm		1	1	1	1	1	1	1	1	1	1	1	2207 359
	Nut, Strg. Link Gear Arm Stud. End		1	1	1	1	1	1	—	—	—	—	1	9425 132
	Washer, Gear Arm Nut		1	1	1	1	1	1	1	1	1	1	1	6028 088
19-27-31	ARM, Strg. Link Idler	70	1	—	1	—	—	—	—	—	—	—	—	2835 826
		71	1	—	1	—	—	—	—	—	—	—	—	2948 624
		70	—	1	—	1	1	—	—	—	—	—	—	2835 834
		71	—	1	—	1	1	—	—	—	—	—	—	2535 886
			—	—	—	—	—	1	1	1	1	1	—	2835 842
			—	—	—	—	—	—	—	—	—	—	1	2835 853
	Nut, Stud		1	1	1	1	1	1	1	1	1	1	1	9425 132
19-27-33	BRACKET, Front Suspension Crossmember Strg. Linkage Idler Arm		1	—	1	—	—	—	—	—	—	—	—	2883 977
		70	—	—	—	1	1	—	—	—	—	—	—	2883 996

CARLINES	J - Challenger B - Barracuda	V - Valiant L - Dart	R - Belvedere - Satellite W - Coronet - Charger	P - Plymouth D - Dodge	C - Chrysler Y - Imperial

AR Indicates use as required.
# Indicates parts not listed in any previous parts book.
Numerals in parentheses ( ) refer to notes.
★ Indicates change or addition.

Printed in U.S.A.
January 1972

CODE	PART NAME	ENG. TYPE OR CU.IN.	V 1-2	B J 1-2	L 1-2	R 1-2	W 1-2	P 1-2	D 1-2	C 1	C 2	C 3	Y 1	PART NUMBER
	POWER STEERING													
	19-27-0 STEERING LINK GEAR ARM AND IDLER ARM Cont'd.													
19-27-40	SEAL, Strg. Link Idler Arm End		1	1	1	1	1	—	—	—	—	—	—	2835 895
	SEAL, Strg. Link Idler Arm Small Socket		—	—	—	—	—	1	1	1	1	1	1	2535 461
	SEAL, Strg. Link Gear Arm Stud		—	—	—	—	—	1	1	1	1	1	—	2535 459
	SEAL, Strg. Link Gear Arm Stud End		—	—	—	—	—	—	—	—	—	—	1	2535 458
			1	1	1	1	1	—	—	—	—	—	—	2835 896
19-27-45	BOLT PACKAGE, Strg. Link Idler Arm Bracket End		1	1	1	1	1	—	—	—	—	—	—	3004 804
			—	—	—	—	—	1	1	1	1	1	1	3004 805
19-27-50	LINK, Strg. Link Center		1	—	1	—	—	—	—	—	—	—	—	2535 077
			—	1	—	—	—	—	—	—	—	—	—	2835 877
		70	—	—	—	1	1	—	—	—	—	—	—	1858 015
		71	—	—	—	1	1	—	—	—	—	—	—	2835 877
			—	—	—	—	—	1	1	1	1	1	—	2269 393
			—	—	—	—	—	—	—	—	—	—	1	2071 861
19-27-51	PLUG, Strg. Link Gear Arm Stud		1	—	1	—	—	1	1	1	1	1	—	1858 115
	Strg. Link Gear Arm End Cover		—	1	—	1	1	—	—	—	—	—	—	1858 115
	Strg. Link Gear Arm End		—	—	—	—	—	—	—	—	—	—	1	1858 115
	Strg. Link Tie Rod End Cover		4	4	4	4	4	4	4	4	4	4	—	1858 115
	19-30-0 STEERING WHEEL													
19-30-4	WHEEL, Strg., W/Padded Horn Button,	Blue 70	1	—	1	1	1	—	—	—	—	—	—	4017 FB7
		Red 70	1	—	1	1	1	—	—	—	—	—	—	4017 FE5
		Green 70	1	—	1	1	1	—	—	—	—	—	—	4017 FF8
		Tan 70	1	—	1	1	1	—	—	—	—	—	—	4017 FT4
		Black 70	1	—	1	1	1	—	—	—	—	—	—	4017 FX9
		Gold 70	1	—	1	1	1	—	—	—	—	—	—	4018 FY4
		Blue 71	1	—	1	1	1	—	—	—	—	—	—	4054 GB7
		Green 71	1	—	1	—	—	—	—	—	—	—	—	4054 GF7
		Tan 71	1	—	1	1	1	—	—	—	—	—	—	4054 GT6
		Black 71	1	—	1	1	1	—	—	—	—	—	—	4054 GX9
		Gold 71	1	—	1	—	—	—	—	—	—	—	—	4054 GY6
		Black 70	—	1	—	—	—	—	—	—	—	—	—	4087 FX9
	W/Full or Partial Horn Ring, w/o. Grooved Rim	Blue 70	1	—	1	1	1	—	—	—	—	—	—	4008 FB7
		Green 70	1	—	1	1	1	—	—	—	—	—	—	4008 FF8
		Burnt Orange 70	—	—	—	1	1	—	—	—	—	—	—	4008 FK5
		Tan 70	1	—	1	1	1	—	—	—	—	—	—	4008 FT4
		Black 70	1	—	1	1	1	—	—	—	—	—	—	4008 FX9
		Gold 70	—	—	—	1	1	—	—	—	—	—	—	4008 FY4
	w/3 Spoke Horn Buttons,	Blue 71	1	—	1	1	1	1	1	—	—	—	—	4025 GB7
		Green 71	1	—	1	1	1	1	1	—	—	—	—	4025 GF7
		Tan 71	1	—	1	1	1	1	1	—	—	—	—	4025 GT6
		Black 71	1	—	1	1	1	1	1	—	—	—	—	4025 GX9
		Gold 71	1	—	1	1	1	1	1	—	—	—	—	4025 GY6
		Russet 71	—	—	—	—	—	1	1	—	—	—	—	4025 GE9
		Gun Metal 71	—	—	—	—	—	—	1	—	—	—	—	4025 GA6
		Blue 71	—	—	—	—	—	—	1	1	1	1	—	4030 GB7
		Green 71	—	—	—	—	—	—	1	1	1	1	—	4030 GF7
		Tan 71	—	—	—	—	—	—	—	1	1	1	—	4030 GT6
		Black 71	—	—	—	—	—	—	1	1	1	1	—	4030 GX9
		Gold 71	—	—	—	—	—	—	1	1	1	1	—	4030 GY6
		Russet 71	—	—	—	—	—	—	—	1	1	1	—	4030 GE9
		Gun Metal 71	—	—	—	—	—	—	—	1	1	1	—	4030 GA6
	w/Horn Rim Switch	Blue 70	1	—	1	1	1	1	1	1	1	1	1	4010 FB7

CARLINES: J - Challenger, B - Barracuda, V - Valiant, L - Dart, R - Belvedere - Satellite, W - Coronet - Charger, P - Plymouth, D - Dodge, C - Chrysler, Y - Imperial

AR Indicates use as required.

Numerals in parentheses ( ) refer to notes.

# Indicates parts not listed in any previous parts book.

★ Indicates change or addition.

Printed in U.S.A. January 1972

POWER STEERING

19-30-0 STEERING WHEEL Cont'd.

19-30-4 WHEEL Cont'd.

CODE	PART NAME	ENG. TYPE OR CU.IN.	V 1-2	B J 1-2	L 1-2	R 1-2	W 1-2	P 1-2	D 1-2	C 1	C 2	C 3	Y 1	PART NUMBER
	Green 70		1	—	1	1	1	1	1	1	1	1	1	4010 FF8
	Black		1	—	1	1	1	1	1	1	1	1	1	4010 FX9
	Burnt Orange 70		—	—	—	1	1	1	1	—	—	—	—	4010 FK5
	Tan-Med. 70		—	—	—	1	1	1	1	1	1	1	1	4010 FT5
	Gold-Med. 70		—	—	—	1	1	1	1	1	1	1	1	4010 FY4
	Gold-Dark 70		—	—	—	—	—	—	—	1	1	1	—	4010 FY8
	Teal-Peacock 70		—	—	—	—	—	—	—	1	1	1	1	4010 FP6
	Oxblood 70		—	—	—	—	—	—	—	1	1	1	—	4010 FR9
	Burgundy 70		—	—	—	—	—	—	—	—	—	—	1	4010 FM9
	Tan-Dark 70		—	—	—	—	—	—	—	—	—	—	1	4010 FT8
	Red 70		1	—	1	—	—	—	—	—	—	—	—	4010 FE4
	Tan-Med. 70		1	—	1	—	—	—	—	—	—	—	—	4010 FT4
	Tan and Black		—	1	—	—	—	—	—	—	—	—	—	4020 FTX
	Tan and Black 71		1	1	1	1	1	—	—	—	—	—	—	4020 FTX
	Blue 71		—	—	—	—	—	1	1	1	1	1	1	4010 GB7
	Dark Blue 71		—	—	—	—	—	—	—	—	—	—	1	4010 GB9
	Russet 71		—	—	—	—	—	1	1	1	1	1	1	4010 GE9
	Green 71		—	—	—	—	—	1	1	1	1	1	1	4010 GF7
	Tan 71		—	—	—	—	—	1	1	1	1	1	1	4010 GT6
	Gold 71		—	—	—	—	—	1	1	1	1	1	1	4010 GY6
	Gun Metal 71		—	—	—	—	—	—	1	1	1	1	1	4010 GA6
	Burgundy 71		—	—	—	—	—	—	—	—	—	—	1	4010 GM9
w/Horn Pad, w/or w/o Partial Horn Ring,	Blue 70		—	—	—	—	—	1	1	1	1	1	—	4054 FB7
	Green 70		—	—	—	—	—	1	1	1	1	1	—	4054 FF8
	Burnt Orange 70		—	—	—	—	—	1	1	1	1	1	—	4054 FK5
	Tan 70		—	—	—	—	—	1	1	1	1	1	—	4054 FT4
	Black 70		—	—	—	—	—	1	1	1	1	1	—	4054 FX9
	Gold-Med. 70		—	—	—	—	—	1	1	1	1	1	1	4054 FY4
	Gold-Dark 70		—	—	—	—	—	—	—	1	1	1	—	4054 FY8
	Teal-Peacock 70		—	—	—	—	—	—	—	1	1	1	—	4054 FP6
	Oxblood 70		—	—	—	—	—	—	—	1	1	1	1	4054 FR9
W/Wood Grain			—	—	—	1	1	1	1	—	—	—	—	4016 FTT
			—	1	—	—	—	—	—	—	—	—	—	4004 FTT
w/Coachman Grain 71			—	1	—	—	—	—	—	—	—	—	—	4026 GX9
w/Soft Rim Strg. Wheel			1	—	1	1	1	—	—	—	—	—	—	4039 FX9
W/Tilt-Telescopic Strg., W/Horn Rim Switch	Blue 70		—	—	—	—	—	1	1	1	1	1	1	4012 FB7
	Green 70		—	—	—	—	—	1	1	1	1	1	1	4012 FF8
	Black		—	—	—	—	—	1	1	1	1	1	1	4012 FX9
	Burgundy 70		—	—	—	—	—	—	—	—	—	—	1	4012 FM9
	Teal-Peacock 70		—	—	—	—	—	—	—	1	1	1	1	4012 FP6
	Oxblood 70		—	—	—	—	—	—	—	1	1	1	1	4012 FR9
	Tan-Med. 70		—	—	—	—	—	1	1	1	1	1	1	4012 FT4
	Tan-Dark 70		—	—	—	—	—	—	—	—	—	—	1	4012 FT8
	Gold-Med. 70		—	—	—	—	—	—	—	1	1	1	1	4012 FY4
	Gold-Dark 70		—	—	—	—	—	1	1	1	1	1	—	4012 FY8
	Burnt Orange 70		—	—	—	—	—	1	1	—	—	—	—	4012 FK5
	Blue 71		—	—	—	1	1	1	1	1	1	1	1	4012 GB7
	Green 71		—	—	—	1	1	1	1	1	1	1	1	4012 GF7
	Tan 71		—	—	—	1	1	—	1	1	1	1	1	4012 GT6
	Gold 71		—	—	—	1	1	1	1	1	1	1	1	4012 GY6
	Gun Metal 71		—	—	—	—	—	—	1	1	1	1	1	4012 GA6
	Russet 71		—	—	—	—	—	1	1	1	1	1	1	4012 GE9
	Dark Blue 71		—	—	—	—	—	—	—	—	—	—	1	4012 GB9
	Burgundy 71		—	—	—	—	—	—	—	—	—	—	1	4012 GM9

CARLINES J - Challenger, B - Barracuda, V - Valiant, L - Dart, R - Belvedere - Satellite, W - Coronet - Charger, P - Plymouth, D - Dodge, C - Chrysler, Y - Imperial

AR Indicates use as required.

# Indicates parts not listed in any previous parts book.

Numerals in parentheses ( ) refer to notes.

★ Indicates change or addition.

Printed in U.S.A. January 1972

CODE	PART NAME	ENG. TYPE OR CU.IN.	V 1-2	B J 1-2	L 1-2	R 1-2	W 1-2	P 1-2	D 1-2	C 1	C 2	C 3	Y 1	PART NUMBER
	POWER STEERING													
	19-30-0 STEERING WHEEL Cont'd.													
19-30-7	COVER, Strg. Wheel Hub, W/Tilt Strg.		—	—	—	1	1	1	1	—	—	—	—	2996 862
	w/Wood Grain Strg. Wheel	70	—	—	—	—	—	—	—	1	1	1	1	2996 863
	Screw		—	—	—	—	—	—	—	3	3	3	3	6025 243
19-30-8	EXTENSION, Strg. Wheel Hub, W/Wood Grain Strg. Wheel		—	—	—	1	1	1	1	—	—	—	—	2996 788
19-30-10	SPACER, Strg. Wheel, w/Soft Rim and Horn Rim Blow Strg. Wheel		1	—	1	1	1	—	—	—	—	—	—	3467 186
	Nut		3	—	3	3	3	—	—	—	—	—	—	6029 392
19-30-18	NUT, Strg. Column Shaft, Strg. Wheel, Except Tilt Tilt-Telescopic Strg.		1	1	1	1	1	1	1	1	1	1	1	6028 050
	w/Tilt, Tilt-Telescopic Strg.		—	—	—	1	1	1	1	1	1	1	1	6028 051
	Washer, Except Tilt, Tilt-Telescopic Strg.		1	1	1	1	1	1	1	1	1	—	—	6025 671
19-30-19	FLANGE, Strg. Wheel Locking, w/Tilt-Telescopic Strg.		—	—	—	—	—	—	—	1	1	1	1	2925 558
19-30-43	COVER, Strg. Wheel Center, w/3 Spoke Horn Buttons, Blue	71	1	—	1	1	—	1	1	—	—	—	—	4033 GB7
	Green	71	1	—	1	1	—	1	1	—	—	—	—	4033 GF7
	Tan	71	1	—	1	1	—	1	1	—	—	—	—	4033 GT6
	Black	71	1	—	1	1	—	1	1	—	—	—	—	4033 GX9
	Gold	71	1	—	1	1	—	1	1	—	—	—	—	4033 GY6
	w/Name Plymouth, Wood Grain	71	—	—	—	1	—	1	—	—	—	—	—	3575 016
	w/Name Dodge, Wood Grain	71	—	—	—	—	1	—	1	—	—	—	—	3575 017
	Wood Grain	71	—	—	—	—	—	—	—	1	1	1	—	3575 056
	Clip	71	—	—	—	3	3	3	3	3	3	3	—	6029 173
	COVER, Strg. Wheel Spoke, Includes Spoke Switch Button, w/3 Spoke Horn Button Strg. Wheel Blue	71	1	—	1	1	1	1	1	1	1	1	—	4037 GB7
	Green	71	1	—	1	1	1	1	1	1	1	1	—	4037 GF7
	Russet	71	—	—	—	—	—	1	1	1	1	1	—	4037 GE9
	Tan	71	1	—	1	1	1	1	1	1	1	1	—	4037 GT6
	Gold	71	1	—	1	1	1	1	1	1	1	1	—	4037 GY6
	Black	71	1	—	1	1	1	1	1	1	1	1	—	4037 GX9
	Gun Metal	71	—	—	—	—	—	—	1	1	1	1	—	4037 GA6
	Screw, Spoke Cover	71	3	—	3	3	3	3	3	3	3	3	—	9432 334
	19-31-0 STEERING COLUMN BRACKET OR SUPPORT													
19-31-1	BRACKET, Instrument Panel Strg. Column Support		1	—	1	—	—	—	—	—	—	—	—	2857 737
		71	—	—	—	1	1	—	—	—	—	—	—	3575 273
			—	—	—	—	—	1	1	1	1	1	1	2950 838
	HANGER, Strg. Column Support Bracket		—	—	—	—	—	1	1	1	1	1	1	2925 456
		71	—	—	—	1	1	—	—	—	—	—	—	3575 272
	BRACKET, Strg. Column Hang Mounting	71	—	—	—	1	1	—	—	—	—	—	—	3467 512
	BRACKET, Instrument Panel Strg. Column Support to Dash		—	1	—	—	—	—	—	—	—	—	—	2984 757
	Screw w/Washer , Support Bracket to Col.		4	4	4	4	4	4	4	4	4	4	4	6026 904
	Screw, Bracket to Hanger		—	—	—	—	—	1	1	1	1	1	1	6027 402
	Stud, Bracket		—	—	—	—	—	2	2	2	2	2	2	6027 947
	Nut		—	—	—	—	—	AR	AR	AR	AR	AR	AR	6027 403
	Nut		1	—	1	1	1	—	—	—	—	—	—	6027 458
	Washer		AR	AR	AR	AR	AR	AR	AR	AR	AR	AR	AR	6027 404
19-31-2	SUPPORT, w/Nut, Instrument Panel Strg. Column to Dash	70	—	—	—	1	1	—	—	—	—	—	—	2985 797

CARLINES: J - Challenger, B - Barracuda, V - Valiant, L - Dart, R - Belvedere - Satellite, W - Coronet - Charger, P - Plymouth, D - Dodge, C - Chrysler, Y - Imperial

AR Indicates use as required.

Numerals in parentheses ( ) refer to notes.

# Indicates parts not listed in any previous parts book.

★ Indicates change or addition.

Printed in U.S.A. January 1972

CODE	PART NAME	ENG. TYPE OR CU.IN.	V 1-2	B J 1-2	L 1-2	R 1-2	W 1-2	P 1-2	D 1-2	C 1	C 2	C 3	Y 1	PART NUMBER
	POWER STEERING													
	19-31-0 STEERING COLUMN BRACKET OR SUPPORT Cont'd.													
19-31-3	CLIP, Strg. Column Support Bracket Hanger		—	—	—	—	—	1	1	1	1	1	1	2925 495
19-31-7	BRACE, Instrument Panel Strg. Col. Support to Bracket	70	—	—	—	1	1	—	—	—	—	—	—	2927 123
	Brace, Instrument Panel Strg. Col. Brace, to Cowl Plenum Bracket	70	—	—	—	1	1	—	—	—	—	—	—	2889 231
	Brace, Instrument Panel Strg. Col. Brace to Strg. Col. Support Bracket	70	—	—	—	1	1	—	—	—	—	—	—	2889 232
	19-46-0 STEERING COLUMN GEARSHIFT TUBE													
19-46-3	TUBE, Strg. Column Gearshift, w/Three Speed Man. Trans.		1	—	1	—	—	—	—	—	—	—	—	2996 032
	w/Three Speed Man. Trans. Floor Shift	70	1	—	1	—	—	—	—	—	—	—	—	2996 034
		71	1	—	1	—	—	—	—	—	—	—	—	3467 344
	w/Four Speed Man. Trans. Floor Shift	70	1	—	1	—	—	—	—	—	—	—	—	3467 489
		71	1	—	1	—	—	—	—	—	—	—	—	3467 345
	w/Auto. Trans.	70	1	—	1	—	—	—	—	—	—	—	—	2996 033
	w/Auto. Trans. Col. Shift	71	1	—	1	—	—	—	—	—	—	—	—	3467 343
		70	—	1	—	—	—	—	—	—	—	—	—	2996 039
		71	—	1	—	—	—	—	—	—	—	—	—	3467 346
	w/Three Speed Man. Trans.		—	—	—	1	1	—	—	—	—	—	—	2996 035
	Except Three Speed Man. Trans.	70	—	—	—	1	1	—	—	—	—	—	—	2996 033
		71	—	—	—	1	1	—	—	—	—	—	—	3467 192
	w/Three Speed Man. Trans.		—	—	—	—	—	1	1	1	1	—	—	2996 037
	w/Auto. Trans., Except Console and Tilt Strg.	70	—	—	—	—	—	1	—	—	—	—	—	2996 036
	w/Auto. Trans. Except Console and Tilt, Tilt-Telescopic Strg. Cv., Sta. Wgn., Single Coupling	70	—	—	—	—	—	—	1	1	1	—	—	2996 036
	w/Console Except Tilt Strg.	70	—	—	—	—	—	1	—	—	—	—	—	2996 031
	w/Console Except Tilt Strg. Cv.	70	—	—	—	—	—	—	1	—	—	—	—	2996 031
	w/Console, w/2 and 4 Door H. Top	70	—	—	—	—	—	—	1	—	—	—	—	3467 498
	w/Auto. Trans. Column Shift w/Double Coupling	70	—	—	—	—	—	—	1	—	—	—	—	3467 440
	w/Auto. Trans. Except Tilt-Telescopic Strg. Except Sta. Wgn., w/Double Coupling	70	—	—	—	—	—	—	—	1	1	1	—	3467 360
		70	—	—	—	—	—	—	—	—	—	—	1	3467 361
	w/Auto. Trans. Except Tilt-Telescopic Strg.	71	—	—	—	—	—	—	—	1	1	1	—	3575 010
		71	—	—	—	—	—	—	—	—	—	—	1	3575 011
	w/Auto. Trans. Column Shift, except Tilt Strg.	71	—	—	—	—	—	1	1	—	—	—	—	3467 193
	w/Auto. Trans. Floor Shift, Except Tilt Strg.	71	—	—	—	—	—	1	1	—	—	—	—	3467 194
	w/Auto. Trans. Except Tilt-Telescopic Strg.	71	—	—	—	—	—	—	—	1	1	1	—	3575 010
	w/Auto. Trans. Except Tilt-Telescopic Strg.	71	—	—	—	—	—	—	—	—	—	—	1	3575 011
	Screw, Strg. Col. Gearshift Tube Bearing, w/Man. Trans. Col. Shift		2	—	2	2	2	2	2	2	—	—	—	6029 175
19-46-8	HOUSING, Strg. Column Gearshift or Tube, w/3 Speed Man. Trans. Column Shift		1	—	1	1	1	1	1	1	1	—	—	2996 798

CARLINES: J - Challenger, B - Barracuda, V - Valiant, L - Dart, R - Belvedere - Satellite, W - Coronet - Charger, P - Plymouth, D - Dodge, C - Chrysler, Y - Imperial

AR Indicates use as required.

# Indicates parts not listed in any previous parts book.

Numerals in parentheses ( ) refer to notes.

★ Indicates change or addition.

Printed in U.S.A. January 1972

POWER STEERING

19-46-0 STEERING COLUMN GEARSHIFT TUBE Cont'd.

CODE	PART NAME	ENG. TYPE OR CU.IN.	V 1-2	B J 1-2	L 1-2	R 1-2	W 1-2	P 1-2	D 1-2	C 1	C 2	C 3	Y 1	PART NUMBER
19-46-8	HOUSING Cont'd.													
	w/Auto. Trans. Column Shift	70	1	1	1	1	1	—	—	—	—	—	—	2950 835
		71	1	1	1	1	1	—	—	—	—	—	—	3575 029
	w/Floor Shift	70	1	1	1	1	1	—	—	—	—	—	—	2950 829
	W/Auto. Trans. except Tilt, Tilt-Telescopic Strg.	70	—	—	—	—	—	1	1	1	1	1	1	2950 820
	w/Auto. Trans. Floor Shift, Except Tilt, Tilt-Telescopic Strg.	71	—	—	—	—	—	1	1	1	1	1	—	2950 829
	w/Auto. Trans. Col. Shift, Except Tilt, Tilt-Telescopic Strg.	71	—	—	—	—	—	1	1	1	1	1	1	3575 028
	BOWL, w/Spring, Except Console, w/Tilt, Tilt-Telescopic Strg.		—	—	—	—	—	1	1	1	1	1	1	3467 369
	HOUSING, Strg. Column Lock Control, w/Floor Shift	71	1	1	1	1	1	—	—	—	—	—	—	3575 208
	HOUSING, Strg. Col., w/Tilt Strg.	71	—	—	—	1	1	—	—	—	—	—	—	3575 221
			—	—	—	—	—	1	1	—	—	—	—	3575 222
	Washer, Spring		1	1	1	1	1	1	1	1	1	1	1	6023 046
	Screw		1	1	1	1	1	1	1	1	1	1	1	125 735
19-46-10	SPRING, Strg. Column Lock Control Housing, w/Floor Shift	71	1	1	1	1	1	—	—	—	—	—	—	3575 256
19-46-12	SPACER, Strg. Column Gearshift Tube Lever													
	W/3 Speed Man. Trans.		1	—	1	1	1	1	1	1	1	—	—	2883 357
	W/3 Speed Man. Trans.		2	—	2	2	2	2	2	2	2	—	—	2883 541
	BUMPER, Strg. Column Lock Control Housing, w/Floor Shift Except Tilt Strg.	71	1	1	1	1	1	—	—	—	—	—	—	3575 257
19-46-13	GROMMET, Strg. Column Gearshift Tube Lever, except 3 Speed Man. Trans. Column Shift		1	1	1	1	1	1	1	1	1	1	1	1553 304
	GROMMET, Gearshift Control Upper Rod, W/Auto. Trans. Floor Shift		1	1	1	1	1	1	1	1	1	1	—	1553 304
19-46-14	BUSHING, Strg. Column Gearshift Tube Lever Grommet, w/Auto. Trans. Column Shift		1	1	1	1	1	1	1	1	1	1	1	1553 305
19-46-16	LEVER, Strg. Column Gearshift Tube, First and Reverse, W/Man. Trans. Column Shift		1	—	1	1	1	—	—	—	—	—	—	2996 928
			—	—	–	—	—	1	1	1	1	—	—	2880 920
	Second and Third, W/Man. Trans. Column Shift		1	—	1	1	1	—	—	—	—	—	—	2996 929
19-46-26	SEAL, Strg. Column Gearshift Tube To Shaft, except 3 Speed Man. Trans. Column Shift, w/o Tilt Strg. Except 3 Speed Man. Trans. Column Shift, W/O. Tilt Strg.	70	1	1	1	1	1	1	—	—	—	—	—	2996 785
	w/Single Coupling	70	—	—	—	—	—	—	1	1	—	—	—	2996 785
	SEAL, Strg. Column Shaft, w/Auto. Trans. Col. Shift	71	1	1	1	1	1	—	—	—	—	—	—	3575 081
19-46-29	LEVER, Strg. Column Gearshift Housing Lock, except Tilt, Tilt-Telescopic Strg.		1	1	1	1	1	1	1	1	1	1	1	2950 844
	Pin		1	1	1	1	1	1	1	1	1	1	1	9421 202
19-46-30	CLIP, Strg. Column Gearshift Tube Support, except 3 Speed Man. Trans. Column Shift, W/O. Tilt Strg.		1	1	1	1	1	1	—	—	—	—	—	2996 787

CODE	PART NAME	ENG. TYPE OR CU.IN.	V 1-2	B J 1-2	L 1-2	R 1-2	W 1-2	P 1-2	D 1-2	C 1	C 2	C 3	Y 1	PART NUMBER
	POWER STEERING													
	19-46-0 STEERING COLUMN GEARSHIFT TUBE Cont'd.													
19-46-30	CLIP Cont'd.													
	Except 3 Speed Man. Trans. Column Shift, w/O. Tilt-Tilt-Telescopic Strg. w/Single Coupling	70	—	—	—	—	—	—	1	1	—	—	—	2996 787
19-46-31	DECAL, Strg. Column Lock Control Housing	71	1	1	1	1	1	—	—	—	—	—	—	= 3575 258
19-46-41	WASHER, Gearshift Rod and Swivel, w/3 Speed Man. Trans.		4	—	4	4	4	4	4	4	—	—	—	631 217
19-46-50	RING, Shift Tube Retainer, w/Tilt, Tilt-Telescopic Strg.		—	—	—	1	1	1	1	1	1	1	1	3467 415
19-46-55	SUPPORT, Strg. Column Gearshift Housing, W/Man. Trans. Column Shift		1	—	1	1	1	1	1	1	1	—	—	2996 799
	Except Man. Trans. Column Shift also not used W/Tilt, Tilt-Telescopic Strg.		1	1	1	1	1	1	1	1	1	1	1	2996 800
	SUPPORT, Shift Tube, w/Tilt, Tilt-Telescopic Strg.		—	—	—	1	1	1	1	1	1	1	1	3467 394
19-46-58	RACK, Switch Actuator, w/Tilt, Tilt-Telescopic Strg.		—	—	—	1	1	1	1	1	1	1	1	3467 383
19-46-59	ACTUATOR, Switch, w/Tilt Strg.	71	—	—	—	1	1	—	—	—	—	—	—	3575 243
			—	—	—	—	—	1	1	—	—	—	—	3467 375
	w/Tilt-Telescopic Strg.		—	—	—	—	—	—	—	1	1	1	1	3467 374
	ACTUATOR, Column Switch		—	—	—	—	—	—	—	—	—	—	1	2996 789
19-46-60	SPRING, Column Switch Actuator		—	—	—	—	—	—	—	—	—	—	1	2880 396
19-46-61	SECTOR, Switch Actuator, w/Tilt, Tilt-Telescopic Strg.		—	—	—	1	1	1	1	1	1	1	1	3467 386
19-46-62	COVER, Actuator Rod w/Tilt Strg.		—	—	—	—	—	1	1	—	—	—	—	3467 409
		71	—	—	—	1	1	—	—	—	—	—	—	3575 224
	w/Tilt-Telescopic Strg.	70	—	—	—	—	—	—	—	1	1	1	1	3467 408
19-46-64	RING, Ignition Switch Sector Retaining w/Tilt, Tilt-Telescopic Strg.		—	—	—	1	1	1	1	1	1	1	1	3467 384
	19-48-0 GEARSHIFT CONTROL ROD													
19-48-1	ROD, Gearshift, First and Reverse, W/A903-3 Speed Man. Trans. Col. Shift	6	1	—	1	—	—	—	—	—	—	—	—	3467 101
		70 6	—	—	—	1	1	—	—	—	—	—	—	3467 103
		71 6	—	—	—	1	1	—	—	—	—	—	—	3467 201
	W/A230-3 Speed Man. Trans. Col. Shift		1	—	1	—	—	—	—	—	—	—	—	3467 102
		70	—	—	—	1	1	—	—	—	—	—	—	3467 104
		71	—	—	—	1	1	—	—	—	—	—	—	3467 241
			—	—	—	—	—	1	1	1	—	—	—	3467 105
	Second and Third W/A903-3 Speed Man. Trans. Col. Shift	6	1	—	1	—	—	—	—	—	—	—	—	3467 110
		70 6	—	—	—	1	1	—	—	—	—	—	—	3467 112
	W/A230-3 Speed Man. Trans. Col. Shift		1	—	1	—	—	—	—	—	—	—	—	3467 111
		70	—	—	—	1	1	—	—	—	—	—	—	3467 113
		71	—	—	—	1	1	—	—	—	—	—	—	3467 145
			—	—	—	—	—	1	1	1	—	—	—	3467 114
	ROD, Gearshift, W/Auto. Trans. Col. Shift													
		Front 70	1	—	1	—	—	—	—	—	—	—	—	2781 431
		Front	—	1	—	—	—	—	—	—	—	—	—	2950 297
		Front 70	—	—	—	1	1	—	—	—	—	—	—	2467 934
		Front 70	—	—	—	—	—	1	1	1	1	1	1	2996 459

CARLINES J - Challenger, B - Barracuda, V - Valiant, L - Dart, R - Belvedere · Satellite, W - Coronet - Charger, P - Plymouth, D - Dodge, C - Chrysler, Y - Imperial

AR Indicates use as required.

# Indicates parts not listed in any previous parts book.

Numerals in parentheses ( ) refer to notes.

★ Indicates change or addition.

Printed in U.S.A. January 1972

POWER STEERING

19-48-0 GEARSHIFT CONTROL ROD Cont'd.

CODE	PART NAME	ENG. TYPE OR CU.IN.		V 1-2	B J 1-2	L 1-2	R 1-2	W 1-2	P 1-2	D 1-2	C 1	C 2	C 3	Y 1	PART NUMBER
19-48-1	ROD Cont'd.														
	71			—	—	—	—	—	1	1	1	1	1	1	3467 729
	Rear			1	—	1	—	—	—	—	—	—	—	—	2781 432
	Rear			—	1	—	—	—	—	—	—	—	—	—	2950 298
	Rear	70		—	—	—	1	1	—	—	—	—	—	—	2467 933
	71			—	—	—	1	1	—	—	—	—	—	—	2950 298
	Rear			—	—	—	—	—	1	1	1	1	1	1	2996 473
	ROD, Gearshift Control Col. Lock Rear,														
	w/A904 Auto. Trans. Floor Shift	70		1	—	1	—	—	—	—	—	—	—	—	3467 079
	w/A727 Auto. Trans. Floor Shift	70		1	—	1	—	—	—	—	—	—	—	—	3467 212
	w/Auto. Trans. Floor Shift	70		—	1	—	—	—	—	—	—	—	—	—	2996 431
		70		—	—	—	1	1	—	—	—	—	—	—	3467 080
				—	—	—	—	—	1	1	1	1	1	—	2996 433
	ROD, Gearshift Col. Lock Front														
	w/Auto. Trans. Floor Shift	70		1	—	1	—	—	—	—	—	—	—	—	2781 431
		71		1	—	1	—	—	—	—	—	—	—	—	3467 674
		70		—	1	—	—	—	—	—	—	—	—	—	2950 297
		70		—	—	—	1	1	—	—	—	—	—	—	2467 934
		71		—	—	—	1	1	—	—	—	—	—	—	3467 657
		70		—	—	—	—	—	1	1	1	1	1	—	2996 459
		71		—	—	—	—	—	1	1	1	1	1	—	3467 729
	ROD, Gearshift Lock Col.														
	w/3 Speed Man. Trans. Floor Shift	70		1	—	1	—	—	—	—	—	—	—	—	2996 484
	w/4 Speed Man. Trans. Floor Shift	70		1	—	1	—	—	—	—	—	—	—	—	3467 616
	w/3, 4 Speed Man. Trans. Floor Shift	70		—	1	—	—	—	—	—	—	—	—	—	2996 413
		70		—	—	—	1	1	—	—	—	—	—	—	2467 934
	ROD, Gearshift Lock Trans.														
	W/3 Speed Man. Trans. Floor Shift			—	1	—	1	1	—	—	—	—	—	—	2996 309
	w/4 Speed Man. Trans. Floor Shift	70		1	—	1	—	—	—	—	—	—	—	—	3467 617
				—	1	—	1	1	—	—	—	—	—	—	2996 414
	Washer			AR	AR	AR	AR	AR	AR	AR	AR	AR	AR	AR	6027 457
	Washer, Rear Rod			1	—	1	1	1	—	—	—	—	—	—	6017 029
19-48-2	ROD END, Gearshift Control Front,														
	w/Auto. Trans. Column Shift	70		—	—	—	—	—	1	1	1	1	1	1	2996 460
		71		—	—	—	—	—	1	1	1	1	1	1	3467 672
	ROD END, Gearshift Col. Lock Front,														
	w/Auto. Trans. Floor Shift	70		—	—	—	—	—	1	1	1	1	1	—	2996 460
		71		—	—	—	—	—	1	1	1	1	1	1	3467 672
	ROD END, Gearshift Control Lower,														
	w/Auto. Trans. Floor Shift	70		—	1	—	—	—	—	—	—	—	—	—	3467 119
19-48-6	BUSHING, Gearshift Rod,														
	w/3-Speed Man. Trans. Column Shift	70		—	—	—	2	2	2	2	2	—	—	—	2800 804
		71		2	—	2	2	2	2	2	2	—	—	—	2781 445
	BUSHING, Gearshift Control Upper Rod, w/Auto. Trans. Floor Shift	71		1	1	1	1	1	1	1	1	1	1	—	3467 245
19-48-7	SMALL PARTS PACKAGE, Gearshift Control, w/3 Speed Man. Trans. Col. Shift	70		1	—	1	—	—	—	—	—	—	—	—	2808 425
		70		—	—	—	1	1	—	—	—	—	—	—	2808 424
	w/o 383 Eng.	70		—	—	—	—	—	1	1	—	—	—	—	2808 426
	w/383 Eng.	70	8	—	—	—	—	—	1	1	1	—	—	—	2808 427

CARLINES: J - Challenger, B - Barracuda, V - Valiant, L - Dart, R - Belvedere - Satellite, W - Coronet - Charger, P - Plymouth, D - Dodge, C - Chrysler, Y - Imperial

AR Indicates use as required.

Numerals in parentheses ( ) refer to notes.

# Indicates parts not listed in any previous parts book.

★ Indicates change or addition.

Printed in U.S.A. January 1972

POWER STEERING

19-48-0 GEARSHIFT CONTROL ROD Cont'd.

CODE	PART NAME	ENG. TYPE OR CU.IN.	V 1-2	B J 1-2	L 1-2	R 1-2	W 1-2	P 1-2	D 1-2	C 1	C 2	C 3	Y 1	PART NUMBER
19-48-9	SPRING, Gearshift Control Linkage Return w/Auto. Trans. Floor Shift	70	—	1	—	—	—	—	—	—	—	—	—	3467 648
		71	—	1	—	1	1	—	—	—	—	—	—	3467 648
19-48-12	CLAMP, Gearshift Lock Col. Rod, w/4 Speed Man. Trans.	70	1	—	1	—	—	—	—	—	—	—	—	2204 274
	CLAMP, Gearshift Front Rod W/Auto. Trans. Col. Shift		—	1	—	—	—	—	—	—	—	—	—	2204 274
		71	—	—	—	1	1	—	—	—	—	—	—	2204 274
	CLAMP, Gearshift Rod Rear Swivel W/Auto. Trans. Col. Shift		1	—	1	1	1	1	1	1	1	1	1	2204 274
	CLAMP, Gearshift Control Lower Rod Swivel, W/Auto. Trans. Floor Shift		1	1	1	1	1	1	1	1	1	1	—	2204 274
	CLAMP, Gearshift Rod Swivel W/3 Speed Man. Trans. Col. Shift		2	—	2	2	2	2	2	2	—	—	—	2204 274
	CLAMP, Gearshift Col. Lock Rear Rod, W/Auto. Trans. Floor Shift		1	—	1	1	1	—	—	—	—	—	—	2204 274
19-48-16	SWIVEL, Gearshift Rod, W/Auto. Trans. Column Shift Front	70	1	1	1	—	—	—	—	—	—	—	—	2467 935
	Rear	70	1	—	1	1	1	—	—	—	—	—	—	2467 935
	SWIVEL, Gearshift Lock Col. Rod w/4 Speed Man. Trans. Floor Shift	70	1	—	1	—	—	—	—	—	—	—	—	3467 237
	SWIVEL, Gearshift Col. Lock Rear Rod, w/Auto. Trans. Floor Shift	70	1	—	1	1	1	—	—	—	—	—	—	2467 935
		71	1	—	1	—	—	—	—	—	—	—	—	3467 665
	SWIVEL, Gearshift Col. Lock Front Rod, w/Auto. Trans. Floor Shift	70	—	1	—	—	—	—	—	—	—	—	—	2467 935
		71	—	1	—	1	1	—	—	—	—	—	—	3467 665
	SWIVEL, Gearshift Control Lower Rod, W/Auto. Trans. Floor Shift		—	1	—	—	—	—	—	—	—	—	—	2467 935
		71	1	—	1	—	—	—	—	—	—	—	—	3467 665
		71	—	—	—	1	1	—	—	—	—	—	—	2467 935
19-48-23	CLIP, Gearshift Control Rod		AR	AR	AR	AR	AR	AR	AR	AR	AR	AR	AR	1137 669
	CLIP, Gearshift Lock Column Swivel w/3 Speed Man. Trans. Floor Shift	70	1	—	1	—	—	—	—	—	—	—	—	1635 232
	CLIP, Gearshift Lock Trans. Rod, W/4 Speed Man. Trans. Floor Shift		1	1	1	1	1	—	—	—	—	—	—	1635 232
	CLIP, Gearshift Rod Swivel, W/3, 4 Speed Man. Trans. Floor Shift		AR	AR	AR	AR	AR	—	—	—	—	—	—	1635 232
	CLIP, Gearshift Selector Lever Pin, W/230-3 Speed Man. Trans. FLOOR Shift		1	1	1	1	1	—	—	—	—	—	—	1137 669
19-48-44	BOOT, W/Gasket Gearshift Control Torque Shaft, W/Auto. Trans. Floor Shift		1	1	1	1	1	1	1	1	1	1	—	2781 407
19-48-45	SHAFT, gearshift Torque, W/A904 Auto. Trans. Column Shift		1	—	1	—	—	—	—	—	—	—	—	2781 425
	W/A727 Auto. Trans. Column Shift		1	—	1	—	—	—	—	—	—	—	—	2800 939
	W/Auto. Trans. Column Shift		—	1	—	—	—	—	—	—	—	—	—	3467 608
	w/A904 Auto. Trans. Column Shift	70	—	—	—	1	1	—	—	—	—	—	—	2800 972
	w/A727 Auto. Trans. Column Shift	70	—	—	—	1	1	—	—	—	—	—	—	3467 605
	w/Auto. Trans. Column Shift	71	—	—	—	1	1	—	—	—	—	—	—	3467 608
	W/A 904 Auto. Trans. Column Shift		—	—	—	—	—	1	1	—	—	—	—	3467 606
	W/A 727 Auto. Trans. Column Shift		—	—	—	—	—	1	1	1	1	1	1	3467 607

CARLINES: J - Challenger, B - Barracuda, V - Valiant, L - Dart, R - Belvedere - Satellite, W - Coronet - Charger, P - Plymouth, D - Dodge, C - Chrysler, Y - Imperial

AR Indicates use as required.

Numerals in parentheses ( ) refer to notes.

# Indicates parts not listed in any previous parts book.

★ Indicates change or addition.

Printed in U.S.A. January 1972

POWER STEERING

19-48-0 GEARSHIFT CONTROL ROD Cont'd.

CODE	PART NAME	ENG. TYPE OR CU.IN.		V 1-2	B J 1-2	L 1-2	R 1-2	W 1-2	P 1-2	D 1-2	C 1	C 2	C 3	Y 1	PART NUMBER
19-48-45	SHAFT Cont'd.														
	W/A230-3 Speed Man. Trans. Col. Shift			—	—	—	—	—	1	1	1	—	—	—	3467 106
	SHAFT, Gearshift Lock Torque, w/3 Speed Man. Trans. Floor Shift	70	6	—	1	—	—	—	—	—	—	—	—	—	3467 626
	w/3 and 4 Speed Man. Trans. Floor Shift	70	8	—	1	—	—	—	—	—	—	—	—	—	3467 625
	w/3 and 4 Speed Man. Trans. Floor Shift	70		—	—	—	1	1	—	—	—	—	—	—	3467 625
	w/4 Speed Man. Trans. Floor Shift	70		1	—	1	—	—	—	—	—	—	—	—	3467 612
	SHAFT, Gearshift Control Torque, W/Auto. Trans. Floor Shift			1	—	1	—	—	—	—	—	—	—	—	3467 064
		70		—	1	—	—	—	—	—	—	—	—	—	3467 065
		71		—	1	—	1	1	—	—	—	—	—	—	3467 721
		70		—	—	—	1	1	—	—	—	—	—	—	3467 062
		70		—	—	—	—	—	1	1	1	1	1	—	3467 063
		71		—	—	—	—	—	1	1	1	1	1	—	3467 720
	SHAFT, Gearshift Col. Lock Torque, w/904 Auto. Trans. Floor Shift	70		1	—	1	—	—	—	—	—	—	—	—	2781 425
	w/727 Auto. Trans. Floor Shift	70		1	—	1	—	—	—	—	—	—	—	—	2800 939
	w/Auto. Trans. Floor Shift	70		—	1	—	—	—	—	—	—	—	—	—	3467 608
	w/727 Auto. Trans. Floor Shift	70		—	—	—	1	1	—	—	—	—	—	—	3467 605
	W/904 Auto. Trans. Floor Shift			—	—	—	—	—	1	1	—	—	—	—	3467 606
	W/727 Auto. Trans. Floor Shift			—	—	—	—	—	1	1	1	1	1	—	3467 607
	Washer			AR	AR	AR	AR	AR	AR	AR	AR	AR	AR	AR	9417 098
	Pin, Cotter			1	1	1	1	1	1	1	1	1	—	—	121 224
	Washer, Spring			1	1	1	1	1	1	1	1	1	—	—	905 206
19-48-46	BRACKET, Gearshift Torque Shaft Trans., W/904 Auto. Trans. Col. or Floor Shift			1	—	1	—	—	—	—	—	—	—	—	2781 429
	W/727 Auto. Trans. Col. or Floor Shift			1	—	1	—	—	—	—	—	—	—	—	2800 942
	W/Auto. Trans. Col. Shift, W/225, 318 Eng.	70		—	1	—	—	—	—	—	—	—	—	—	2950 909
	w/Auto. Trans. Col. Shift, except 225, 318 Eng.	70		—	1	—	—	—	—	—	—	—	—	—	2950 910
	w/904 Auto. Trans. Floor Shift	70		—	1	—	—	—	—	—	—	—	—	—	2950 909
	w/727 Auto. Trans. Floor Shift	70		—	1	—	—	—	—	—	—	—	—	—	2950 910
	w/904 Auto. Trans. Col. Shift	71		—	1	—	1	1	—	—	—	—	—	—	2950 909
	w/727 Auto. Trans. Col. Shift	71		—	1	—	1	1	—	—	—	—	—	—	2950 910
	w/904 Auto. Trans. Col. Shift	70		—	—	—	1	1	—	—	—	—	—	—	2800 970
	w/727 Auto. Trans. Col. or Floor Shift	70		—	—	—	1	1	—	—	—	—	—	—	2534 513
	W/904 Auto. Trans. Col. or Floor Shift			—	—	—	—	—	1	1	—	—	—	—	2950 044
	W/727 Auto. Trans. Col. or Floor Shift			—	—	—	—	—	1	1	1	1	1	1	2950 300
	BRACKET, Gearshift Torque Shaft Frame, w/Auto. Trans. Col. Shift L.H.D.			1	—	1	—	—	—	—	—	—	—	—	2467 932
	w/Auto. Trans. Col. or Floor Shift	70		—	1	—	—	—	—	—	—	—	—	—	2950 920
	w/Auto. Trans. Col. Shift	71		—	1	—	1	1	—	—	—	—	—	—	2950 920
	w/3, 4 Speed Man. Trans. Floor Shift	70		—	1	—	1	1	—	—	—	—	—	—	3467 148
	w/Auto. Trans. Col. or Floor Shift	70		—	—	—	1	1	—	—	—	—	—	—	2534 423
	w/904 Auto. Trans. Col. Shift	70		—	—	—	—	—	1	1	—	—	—	—	2950 044

CARLINES: J - Challenger, B - Barracuda, V - Valiant, L - Dart, R - Belvedere - Satellite, W - Coronet - Charger, P - Plymouth, D - Dodge, C - Chrysler, Y - Imperial

AR Indicates use as required.

Numerals in parentheses ( ) refer to notes.

# Indicates parts not listed in any previous parts book.

★ Indicates change or addition.

Printed in U.S.A. January 1972

POWER STEERING

19-48-0 GEARSHIFT CONTROL ROD Cont'd.

CODE	PART NAME	ENG. TYPE OR CU.IN.	V 1-2	B J 1-2	L 1-2	R 1-2	W 1-2	P 1-2	D 1-2	C 1	C 2	C 3	Y 1	PART NUMBER
19-48-46	BRACKET Cont'd.													
	w/727 Auto. Trans. Col. or Floor Shift	70	—	—	—	—	—	1	1	1	1	1	1	2950 043
	w/Auto. Trans. Col. or Floor Shift	71	—	—	—	—	—	1	1	1	1	1	1	2950 043
	w/4 Speed Man. Trans. Floor Shift	70	1	—	1	—	—	—	—	—	—	—	—	2467 932
	BRACKET, Gearshift Control Torque Shaft Upper, W/Auto. Trans. Floor Shift		1	—	1	—	—	—	—	—	—	—	—	2781 419
		70	—	1	—	—	—	—	—	—	—	—	—	3467 078
		71	—	1	—	1	1	—	—	—	—	—	—	3467 078
		70	—	—	—	1	1	—	—	—	—	—	—	3467 076
			—	—	—	—	—	1	1	1	1	1	—	3467 077
	BRACKET, Gearshift Control Torque Shaft Lower, w/Auto. Trans. Floor Shift	70	1	1	1	1	1	1	1	1	1	1	—	2660 401
		71	1	—	1	—	—	—	—	—	—	—	—	2660 401
		71	—	1	—	1	1	1	1	1	1	1	—	3467 717
	BRACKET, Gearshift Lock Torque Shaft Engine, w/4 Speed Man. Trans. Floor Shift	70	1	—	1	—	—	—	—	—	—	—	—	3467 615
	w/3, 4 Speed Man. Trans. Floor Shift,	70	—	—	—	1	1	—	—	—	—	—	—	2996 324
	w/318 Eng.	70 8	—	1	—	—	—	—	—	—	—	—	—	2996 325
	Except 318 Eng.	70	—	1	—	—	—	—	—	—	—	—	—	2996 324
	BRACKET, Gearshift Torque Shaft W/230-3 Speed Man. Trans. Col. Shift		—	—	—	—	—	1	1	1	—	—	—	3467 109
	BRACKET, Gearshift Torque Shaft To Floor Mounting, W/Auto. Trans. Floor Shift		—	1	—	—	—	—	—	—	—	—	—	3446 959
		71	—	—	—	1	1	—	—	—	—	—	—	3446 959
	Screw, Lower Bracket		2	2	2	2	2	2	2	2	2	2	—	6026 059
	Nut, w/Washer		AR	AR	AR	AR	AR	AR	AR	AR	AR	AR	—	6028 114
	Washer		1	1	1	1	1	—	—	—	—	—	—	6024 691
19-48-48	PLATE, Gearshift Torque Shaft Mounting, W/230-3 Speed Man. Trans. Col. Shift		—	—	—	—	—	1	1	1	—	—	—	2467 946
19-48-49	GROMMET, Gearshift Rod, w/3 Speed Man. Trans. Col. Shift		2	—	2	2	2	2	2	—	—	—	—	2781 444
	GROMMET, Gearshift Torque Shaft Bracket, W/230-3 Speed Man. Trans. Col. Shift		—	—	—	—	—	1	1	1	—	—	—	2208 158
19-48-50	BUSHING, Gearshift Rod Grommet w/3 Speed Man. Trans. Col. Shift		2	—	2	2	2	2	2	—	—	—	—	2781 445
	BUSHING, Gearshift Lock Torque Shaft, w/3, 4 Speed Man. Trans. Floor Shift	70	2	2	2	2	2	—	—	—	—	—	—	2781 420
	BUSHING, Gearshift Torque Shaft Bracket, W/Auto. Trans. Col. Shift		2	2	2	2	2	2	2	2	2	2	2	2781 420
	w/Auto. Trans. Floor Shift		AR	AR	AR	AR	AR	AR	AR	AR	AR	—	—	2781 420
	BUSHING, Gearshift Torque Shaft Grommet W/3 Speed Man. Trans. Col. Shift		—	—	—	—	—	1	1	1	—	—	—	2208 159

CARLINES J - Challenger, B - Barracuda, V - Valiant, L - Dart, R - Belvedere - Satellite, W - Coronet - Charger, P - Plymouth, D - Dodge, C - Chrysler, Y - Imperial

AR Indicates use as required.

# Indicates parts not listed in any previous parts book.

Numerals in parentheses ( ) refer to notes.

★ Indicates change or addition.

Printed in U.S.A. January 1972

POWER STEERING

19-48-0 GEARSHIFT CONTROL ROD Cont'd.

CODE	PART NAME	ENG. TYPE OR CU.IN.	V 1-2	B J 1-2	L 1-2	R 1-2	W 1-2	P 1-2	D 1-2	C 1	C 2	C 3	Y 1	PART NUMBER
19-48-51	SPACER, Gearshift Torque Shaft W/230-3 Speed Man. Trans. Col. Shift		—	—	—	—	—	2	2	2	—	—	—	2208 172
19-48-52	RETAINER, Gearshift Torque Shaft, W/A 230-3 Speed Man. Trans. Col. Shift		—	—	—	—	—	1	1	1	—	—	—	1671 569

19-54-0 POWER STEERING OIL PUMP

19-54-2	PUMP PACKAGE	6	—	1	—	1	1	—	—	—	—	—	—	3004 801
	w/3/8" Threaded Hole Pump Shaft	6	1	—	1	—	—	—	—	—	—	—	—	3004 801
	w/Key Slotted Pump Shaft 71	6	1	—	1	—	—	—	—	—	—	—	—	=2891 315
		6	—	—	—	—	—	1	1	—	—	—	—	3004 800
		8	1	—	1	—	—	—	—	—	—	—	—	3004 801
	W/Key Slotted Pump Shaft W/318, 340 Eng.	8	—	1	—	1	1	—	—	—	—	—	—	2891 218
	w/3/8" Threaded Hole Pump Shaft	8	1	—	1	1	1	—	—	—	—	—	—	3004 800
	W/Key Slotted Pump Shaft, Except 318, 340 Eng.	8	—	1	—	1	1	—	—	—	—	—	—	2891 123
	W/3/8" Threaded Hole Pump Shaft w/318, 360 Eng.	8	—	—	—	—	—	1	1	—	—	—	—	3004 800
	w/Key Slotted Pump Shaft w/318, 360 Eng.	8	—	—	—	—	—	1	1	1	—	—	—	2891 219
	W/Key Slotted Pump Shaft, Except 318, 360 Eng.	8	—	—	—	—	—	1	1	1	1	1	—	2891 196
	W/3/8" Threaded Hole Pump Shaft, Except 318 Eng.	8	—	—	—	—	—	1	1	1	1	1	1	3004 799
	w/3/8" Threaded Hole Pump Shaft Except 340-3-2 Bbl. Carbs., Trans. Am, Fast Strg.		—	1	—	—	—	—	—	—	—	—	—	3004 800
	w/340-3-2 Bbl. Carbs. Trans. Am, Fast Strg.		—	1	—	—	—	—	—	—	—	—	—	3004 799
	Washer, W/Key Slotted Pump Shaft	8	—	2	—	2	2	2	2	2	2	2	—	6025 063
	Washer, W/Key Slotted Pump Shaft	8	—	2	—	2	2	2	2	2	2	2	—	6022 190
19-54-5	STUD, Pump Mounting, W/Key Slotted Pump Shaft		2	2	2	2	2	2	2	2	2	2	—	2537 835
19-54-25	SHAFT and RETAINING RING PACKAGE, Pump, w/Key Slotted Pump Shaft		1	1	1	1	1	1	1	1	1	—	—	2891 168
19-54-28	RING, Pump Drive Shaft Retaining, W/Key Slotted Pump Shaft		1	1	1	1	1	1	1	1	1	1	—	2891 166
19-54-29	SEAL, Pump Drive Shaft, W/Key Slotted Pump Shaft		1	1	1	1	1	1	1	1	1	1	—	2537 899
19-54-31	VALVE, Pump Flow Control Pressure Relief, /Key Slotted Pump Shaft	8	—	1	—	1	1	—	—	—	—	—	—	2891 125
	w/Key Slotted Pump Shaft	8	—	—	—	—	—	1	1	1	1	1	—	2891 195
	w/Key Slotted Pump Shaft 71	6	1	—	1	—	—	—	—	—	—	—	—	=2891 124
19-54-32	SPRING, Pump Flow Control Valve, W/3/8" Threaded Hole Pump Shaft		1	1	1	1	1	1	1	1	1	1	1	2537 926
	SPRING, Pump Flow Control, W/Key Slotted Pump Shaft		1	1	1	1	1	1	1	1	1	1	—	2537 833
19-54-54	ROTATING GROUP PACKAGE, Pump, W/3/8" Threaded Hole Pump Shaft		1	1	1	1	1	1	1	1	1	1	1	2537 995
	REPAIR KIT, Pump Vane, W/Key Slotted Pump Shaft		1	1	1	1	1	1	1	1	1	1	—	2537 840
	REPAIR KIT, Pump Ring and Rotor Vane, w/Key Slotted Pump Shaft		1	1	1	1	1	1	1	1	—	—	—	2537 837

CARLINES J - Challenger, B - Barracuda, V - Valiant, L - Dart, R - Belvedere - Satellite, W - Coronet - Charger, P - Plymouth, D - Dodge, C - Chrysler, Y - Imperial

AR Indicates use as required.

# Indicates parts not listed in any previous parts book.

Numerals in parentheses ( ) refer to notes.

★ Indicates change or addition.

Printed in U.S.A. January 1972

POWER STEERING

19-54-0 POWER STEERING OIL PUMP Cont'd.

3004564

CODE	PART NAME	ENG. TYPE OR CU.IN.	V 1-2	B J 1-2	L 1-2	R 1-2	W 1-2	P 1-2	D 1-2	C 1	C 2	C 3	Y 1	PART NUMBER
19-54-55	SEAL KIT, Pump w/3-8 THD. HOLE													
	W/Key Slotted Pump Shaft		1	1	1	1	1	1	1	1	1	1	—	2537 838
19-54-86	PULLEY, Pump, w/3/8" Threaded Hole Pump Shaft	6	1	1	1	1	1	—	—	—	—	—	—	2951 157
	w/Key Slotted Pump Shaft 71	6	1	—	1	—	—	—	—	—	—	—	—	3418 950
		6	—	—	—	—	—	1	1	—	—	—	—	2946 765
	W/3/8" Threaded Hole Pump Shaft w/318 and 340, 340-3-2 Bbl. Carbs. Eng.	8	1	1	1	1	1	—	—	—	—	—	—	2951 901
	W/Key Slotted Pump Shaft W/318 and 340 Eng.	8	—	1	—	1	1	—	—	—	—	—	—	2951 989
	w/Key Slotted Pump Shaft, w/318, 360 Eng.	8	—	—	—	—	—	1	1	1	—	—	—	3512 721
	W/3/8" Threaded Hole Pump Shaft W/Leece Neville Altr. w/318, 360 Eng.	8	—	—	—	1	1	1	1	—	—	—	—	3462 044
	W/383 and 440 Eng.	8	—	1	—	—	—	—	—	—	—	—	—	2951 203
	W/426 Eng.	8	—	1	—	1	1	—	—	—	—	—	—	2951 207
	W/3/8" Threaded Hole Pump Shaft, W/Leece Neville Altr., W/O. A/Cond., W/383 and 440 Eng.	8	—	—	—	1	1	1	1	—	—	—	—	2951 207
	W/Key Slotted Pump Shaft W/383 and 440 Eng.	8	—	—	—	1	1	—	—	—	—	—	—	2951 203
	W/3/8" Threaded Hole Pump Shaft w/383 and 440 Eng.	8	—	—	—	—	—	1	1	1	1	1	1	2951 128
	W/Key Slotted Pump Shaft, W/383 and 440 Eng.	8	—	—	—	—	—	1	1	1	1	1	—	3418 950
	NUT, Pump Pulley, W/Key Slotted Pump Shaft	8	—	1	—	1	1	1	1	1	1	1	—	6026 656
19-54-115	BRACKET, Pump, w/3/8" Threaded Hole Pump Shaft	6	1	1	1	1	1	—	—	—	—	—	—	3462 860
	Front, w/Key Slotted Pump Shaft 71	6	1	—	1	—	—	—	—	—	—	—	—	=3671 101
	Rear, w/Key Slotted Pump Shaft 71	6	1	—	1	—	—	—	—	—	—	—	—	=3671 102
	SPACER, Front Bracket w/Key Slotted Pump Shaft 71	6	1	—	1	—	—	—	—	—	—	—	—	6027 919
	SPACER, Rear Bracket, w/Key Slotted Pump Shaft 71	6	1	—	1	—	—	—	—	—	—	—	—	6029 583
	BRACKET, Pump Front	6	—	—	—	—	—	1	1	—	—	—		
	BRACKET, Pump Rear	6	—	—	—	—	—	1	1	—	—	—	—	2899 804
	W/3/8" Threaded Hole Pump Shaft w/318 and 340, 360 Eng.	8	1	1	1	1	1	1	1	—	—	—	—	3418 348
	W/Key Slotted Pump Shaft w/318 and 340, 360 Eng. Front	8	—	1	1	1	1	1	1	1	—	—	—	2951 985
	W/Key Slotted Pump Shaft w/318 and 340, 360 Eng. Rear	8	—	1	—	1	1	1	1	1	—	—	—	2951 987
	w/Key Slotted Pump Shaft, w/383 and 440 Eng., Front	8	—	1	—	1	1	—	—	—	—	—	—	3512 668
	W/Key Slotted Pump Shaft W/383 and 440 Eng. Front	8	—	—	—	—	—	1	1	1	1	1	—	2951 196
	W/Key Slotted Pump Shaft W/383 and 440 Eng. Rear	8	—	1	—	1	1	1	1	1	1	1	—	2951 198
	W/3/8" Threaded Hole Pump Shaft, W/383, 426 and 440 Engs.	8	—	1	—	1	1	1	1	1	1	1	1	2951 126
	BRACKET, Pump Engine	6	1	1	1	1	1	—	—	—	—	—	—	3462 417
		6	—	—	—	—	—	1	1	—	—	—	—	2951 075
	w/318 and 340, 360 Eng. Front	8	1	1	1	1	1	1	1	1	—	—	—	2951 747

CARLINES: J - Challenger, B - Barracuda, V - Valiant, L - Dart, R - Belvedere - Satellite, W - Coronet - Charger, P - Plymouth, D - Dodge, C - Chrysler, Y - Imperial

AR Indicates use as required.

Numerals in parentheses ( ) refer to notes.

# Indicates parts not listed in any previous parts book.

★ Indicates change or addition.

Printed in U.S.A. January 1972

POWER STEERING

19-54-0 POWER STEERING OIL PUMP Cont'd.

CODE	PART NAME	ENG. TYPE OR CU.IN.	V 1-2	B J 1-2	L 1-2	R 1-2	W 1-2	P 1-2	D 1-2	C 1	C 2	C 3	Y 1	PART NUMBER
19-54-115	BRACKET Cont'd.													
	w/318 and 340, 360 Eng. Rear	8	1	1	1	1	1	1	1	1	—	—	—	2951 852
	BRACKET,													
	SPACER, Pump Mounting Bracket, w/318													
	Eng.	8	1	1	1	1	1	1	1	—	—	—	—	6025 215
	Bolt, Pump Mounting Bracket	6	1	1	1	1	1	1	1	—	—	—	—	6028 737
	Bolt, Pump Mounting Bracket	6	2	2	2	2	2	2	2	—	—	—	—	6028 811
	Washer, Pump Mounting Bracket													
	Bolt	6	2	2	2	2	2	2	2	—	—	—	—	6028 911
19-54-116	SPACER, Pump Mounting Bracket	6	1	1	1	1	1	—	—	—	—	—	—	3462 418
19-54-123	BOLT, Pump Eng. Bracket Swivel	6	1	1	1	1	1	—	—	—	—	—	—	2202 850
		6	—	—	—	—	—	2	2	—	—	—	—	186 282
	BOLT, Pump Eng. Bracket Front													
	Water Pump Body,													
	w/318 and 340, 360 Eng.	8	1	1	1	1	1	1	1	—	—	—	—	2129 379
	BOLT, Pump Engine Bracket Rear													
	Mounting Chain Case Cover													
	w/318 and 340, 360 Eng.	8	2	2	2	2	2	2	2	—	—	—	—	2121 588
	WASHER		AR	AR	AR	AR	AR	AR	AR	—	—	—	—	6022 190
19-54-126	"O" RING, Pump Pressure Plate,													
	W/3/8" Threaded Hole Pump Shaft		1	1	1	1	1	1	1	1	1	1	1	2537 694
	"O" RING, Pump Rear Plug,													
	W/3/8" Threaded Hole Pump Shaft		1	1	1	1	1	1	1	1	1	1	1	2537 858
	"O" RING, Pump Oil Reservoir Flange,													
	W/3/8" Threaded Hole Pump Shaft		1	1	1	1	1	1	1	1	1	1	1	2537 869
	"O" RING, Pump Flow Control Valve Bore,													
	W/3/8" Threaded Hole Pump Shaft		1	1	1	1	1	1	1	1	1	1	1	1859 444
19-54-130	SNAP RING, Pump Rear Plug,													
	w/3/8" Threaded Hole Pump													
	Shaft 70		1	1	1	1	1	1	1	1	1	1	1	2537 859
	71		1	1	1	1	1	1	1	1	1	1	1	2891 264
	SNAP RING, Pump Flow Control													
	Valve Bore Plug, W/3/8" Threaded Hole													
	Pump Shaft		1	1	1	1	1	1	1	1	1	1	1	2537 866
	SNAP RING, Pump Rotor Shaft													
	W/3/8" Threaded Hole Pump Shaft		2	2	2	2	2	2	2	2	2	2	2	1738 681
19-54-132	NUT, Pump Eng. Bracket Swivel Bolt	6	1	1	1	1	1	—	—	—	—	—	—	2129 684
19-54-150	SPRING, Pump Pressure Plate,													
	W/3/8" Threaded Hole Pump Shaft		1	1	1	1	1	1	1	1	1	1	1	2537 958
	W/Key Slotted Pump Shaft		1	1	1	1	1	1	1	1	1	1	—	2537 834
19-54-151	OIL SEAL, Pump Rotor Shaft,													
	W/3/8" Threaded Hole Pump Shaft		1	1	1	1	1	1	1	1	1	1	1	2537 689
	RING, Pump End and Pressure Plate,													
	W/Key Slotted Pump Shaft		1	1	1	1	1	1	1	1	1	1	—	2537 827
	SEAL, Pump Union Rectangular Section,													
	W/Key Slotted Pump Shaft		1	1	1	1	1	1	1	1	1	1	—	2537 829
	SEAL, Pump O Ring,													
	W/Key Slotted Pump Shaft		1	1	1	1	1	1	1	1	1	1	—	2537 830
19-54-152	PLATE, Pump End,													
	W/Key Slotted Pump Shaft		1	1	1	1	1	1	1	1	1	1	—	2537 820
19-54-153	RING, Pump End Plate Retaining													
	W/Key Slotted Pump Shaft		1	1	1	1	1	1	1	1	1	1	—	2537 823
19-54-154	PLATE, Pump Pressure													
	W/Key Slotted Pump Shaft		1	1	1	1	1	1	1	1	1	1	—	2537 821
19-54-156	PLATE, Pump Thrust,													
	W/Key Slotted Pump Shaft		1	1	1	1	1	1	1	1	1	1	—	2537 822
19-54-157	KEY, Pump Drive Shaft,													
	W/Key, Slotted Pump Shaft		1	1	1	1	1	1	1	1	1	1	—	2537 818

CARLINES J - Challenger, B - Barracuda, V - Valiant, L - Dart, R - Belvedere - Satellite, W - Coronet - Charger, P - Plymouth, D - Dodge, C - Chrysler, Y - Imperial

AR Indicates use as required.

Numerals in parentheses ( ) refer to notes.

# Indicates parts not listed in any previous parts book.

★ Indicates change or addition.

Printed in U.S.A.
January 1972

CODE	PART NAME	ENG. TYPE OR CU.IN.	V 1-2	B J 1-2	L 1-2	R 1-2	W 1-2	P 1-2	D 1-2	C 1	C 2	C 3	Y 1	PART NUMBER
	POWER STEERING													
	19-54-0 POWER STEERING OIL PUMP Cont'd.													
19-54-178	PIN, Pump Cam and Plate Dowel, W/3/8" Threaded Hole Pump Shaft		1	1	1	1	1	1	1	1	1	1	1	2537 503
	PIN, Pump Ring Dowel, W/Key Slotted Pump Shaft	8	1	1	1	1	1	1	1	1	1	1	—	2537 819
19-54-180	RESERVOIR, Pump Oil, W/3/8" Threaded Hole Pump Shaft		1	1	1	1	1	1	1	1	1	1	1	2891 156
	W/Key Slotted Pump Shaft 71	6	1	—	1	—	—	—	—	—	—	—	—	2891 224
	W/383 and 440 Eng.	8	—	1	—	1	1	1	1	1	1	1	—	2537 836
	W/318, 360 Eng.	8	—	1	—	1	1	1	1	1	—	—	—	2891 224
19-54-181	SEAL, Pump Oil Reservoir Mounting W/3/8" Threaded Hole Pump Shaft		1	1	1	1	1	1	1	1	1	1	1	2127 486
	SEAL, Pump Reservoir "O" Ring W/Key Slotted Pump Shaft		1	1	1	1	1	1	1	1	1	1	—	2537 828
	SEAL, Pump Reservoir Rectangular Section, W/Key Slotted Pump Shaft		1	1	1	1	1	1	1	1	1	1	—	2537 831
19-54-182	CAP, Pump Oil Reservoir, W/3/8" Threaded Hole Pump Shaft		1	1	1	1	1	1	1	1	1	1	1	2267 694
	w/Key Slotted Pump Shaft 70	8	—	1	—	1	1	1	1	1	1	1	—	2537 814
	w/Key Slotted Pump Shaft 71	8	1	1	1	1	1	1	1	1	1	1	—	2891 284
19-54-196	COOLER, Pump Oil W/318 and 340 Eng., W/3.54, 3.55 and 3.91 Axle Ratio	8	1	1	1	1	1	—	—	—	—	—	—	2891 241
	W/383 and 440 Eng., W/3.54, 3.55 and 3.91, 4.10 Axle Ratio	8	—	1	—	1	1	—	—	—	—	—	—	2891 162
19-54-213	GASKET, Pump Front Plate to Housing, W/3/8" Threaded Hole Pump Shaft		1	1	1	1	1	1	1	1	1	1	1	2891 165
19-54-219	PLUG, Pump Flow Control Valve, W/3/8" Threaded Hole Pump Shaft		1	1	1	1	1	1	1	1	1	1	1	2537 865
	PLUG, Pump Rear W/3/8" Threaded Hole Pump Shaft		1	1	1	1	1	1	1	1	1	1	1	2537 959
19-54-225	FITTING, Pump Discharge, W/Key Slotted Pump Shaft		1	1	1	1	1	1	1	1	1	1	—	2537 815
19-54-243	SEAT, Pump Flow Control Relief Valve, W/3/8" Threaded Hole Pump Shaft		1	1	1	1	1	1	1	1	1	1	1	2537 863
19-54-258	SEAL, Pump Front Plate to Housing, W/3/8" Threaded Hole Pump Shaft		1	1	1	1	1	1	1	1	1	1	1	2891 261
19-54-263	SHAFT, Pump Rotor W/3/8" Threaded Hole Pump Shaft		1	1	1	1	1	1	1	1	1	1	1	2537 095
	19-56-0 POWER STEERING GEAR PISTON													
19-56-6	RING AND "O" RING PACKAGE, Strg. Gear Piston Ring		1	1	1	1	1	1	1	1	1	1	1	= 3579 549
	"O" RING, Strg. Gear Piston Ring		1	1	1	1	1	1	1	1	1	1	1	1822 671
	RING, Strg. Gear Piston		1	1	1	1	1	1	1	1	1	1	1	1822 672
19-56-22	"O" RING, Strg. Gear Ferrule		1	1	1	1	1	1	1	1	1	1	1	1486 205
19-56-83	SPRING, Strg. Gear Pressure Control Valve		1	1	1	1	1	1	1	1	1	1	1	1822 442
19-56-90	"O" RING, Strg. Gear Pressure Control Valve		1	1	1	1	1	1	1	1	1	1	1	1536 268

CODE	PART NAME	ENG. TYPE OR CU.IN.	V 1-2	B J 1-2	L 1-2	R 1-2	W 1-2	P 1-2	D 1-2	C 1	C 2	C 3	Y 1	PART NUMBER
	POWER STEERING													
19-57-0	**POWER STEERING GEAR VALVES**													
19-57-1	SEAL PACKAGE, Strg. Gear Valve		1	1	1	1	1	1	1	1	1	1	1	2279 985
19-57-3	VALVE, Strg. Gear,													
	Except 426 Eng.		1	1	1	1	1	1	1	1	1	1	1	2537 777
	W/426 Eng.		—	1	—	1	1	—	—	—	—	—	—	2537 778
19-57-13	"O" RING, Strg. Gear Valve Housing		1	1	1	1	1	1	1	1	1	1	1	1733 612
19-57-16	GASKET, Strg. Gear Valve Plug		1	1	1	1	1	1	1	1	1	1	1	1733 724
19-57-19	ADAPTER, Strg. Gear Return Hose		1	1	1	1	1	1	1	1	1	1	1	2537 228
19-57-20	GASKET, Strg. Gear Return Hose Adapter		1	1	1	1	1	1	1	1	1	1	1	2537 229
19-57-63	LEVER, Strg. Gear Valve		1	1	1	1	1	1	1	1	1	1	1	1822 380
19-57-64	SPRING, Strg. Gear Valve Lever		1	1	1	1	1	1	1	1	1	1	1	1823 151
19-58-0	**POWER STEERING HOSE**													
19-58-7	HOSE PACKAGE, Pump Pressure	6	1	1	1	1	1	—	—	—	—	—	—	3514 988
		6	—	—	—	—	—	1	1	—	—	—	—	3004 835
	W/318 and 340 Eng.	8	1	—	1	—	—	—	—	—	—	—	—	3420 193
	W/Key Slotted Pump Shaft,													
	W/318 and 340, 360 Eng.	8	—	1	—	1	1	1	1	1	—	—	—	2891 208
	W/383 and 440 Eng.	8	—	1	—	1	1	1	1	1	1	1	—	2891 078
	W/3/8" Threaded Hole Pump Shaft,													
	W/318 and 340 Eng.	8	—	1	—	1	1	1	1	—	—	—	—	3420 194
	W/383 and 440 Eng.	8	—	—	—	—	—	1	1	1	1	1	—	3004 887
		8	—	—	—	—	—	—	—	—	—	—	1	3004 836
	W/426 Eng.	8	—	1	—	1	1	—	—	—	—	—	—	3004 834
	W/Leece Neville Altr., W/O A/Cond., W/383 Eng.	8	—	—	—	1	1	—	—	—	—	—	—	3004 833
19-58-9	SLEEVE, Power Strg. Pump Return Hose W/426 Eng.		—	1	—	1	1	—	—	—	—	—	—	2537 803
19-58-14	HOSE, Pump Return		1	1	1	1	1	1	1	1	1	1	1	2537 699
	Clamp		AR	AR	AR	AR	AR	AR	AR	AR	AR	AR	AR	6026 873
	HOSE, Reservoir to Oil Cooler., W/3.54, 3.55, 3.91 Axle Ratio, W/318 and 340 Eng.	8	1	1	1	—	—	—	—	—	—	—	—	2537 699
19-58-15	ADAPTER, Strg. Gear Pressure Hose, Except 426 Eng.		1	1	1	1	1	1	1	1	1	1	1	2537 386
	W/426 Eng.		—	1	—	1	1	—	—	—	—	—	—	2537 392
19-58-18	"O" RING, Pump Pressure Hose Fitting, W/3/8" Threaded Hole Pump Shaft		1	1	1	1	1	1	1	1	1	1	1	1859 445
	"O" RING, Strg. Gear Pressure Hose Adapter, W/426 Eng.	8	—	1	—	1	1	—	—	—	—	—	—	2267 530
19-58-21	NUT, Pump Pressure Hose Pump, W/Key Slotted Pump Shaft	8	—	1	—	1	1	1	1	1	1	1	—	1856 993
	NUT, Strg. Gear Pressure Hose Adapter, W/426 Eng.	8	—	1	—	1	1	—	—	—	—	—	—	2267 529
19-58-31	GASKET, Strg. Gear Pressure Hose Adapter, Except 426 Eng.		1	1	1	1	1	1	1	1	1	1	1	1618 611

CARLINES J - Challenger, B - Barracuda, V - Valiant, L - Dart, R - Belvedere - Satellite, W - Coronet - Charger, P - Plymouth, D - Dodge, C - Chrysler, Y - Imperial

AR Indicates use as required.

Numerals in parentheses ( ) refer to notes.

# Indicates parts not listed in any previous parts book.

★ Indicates change or addition.

Printed in U.S.A. January 1972

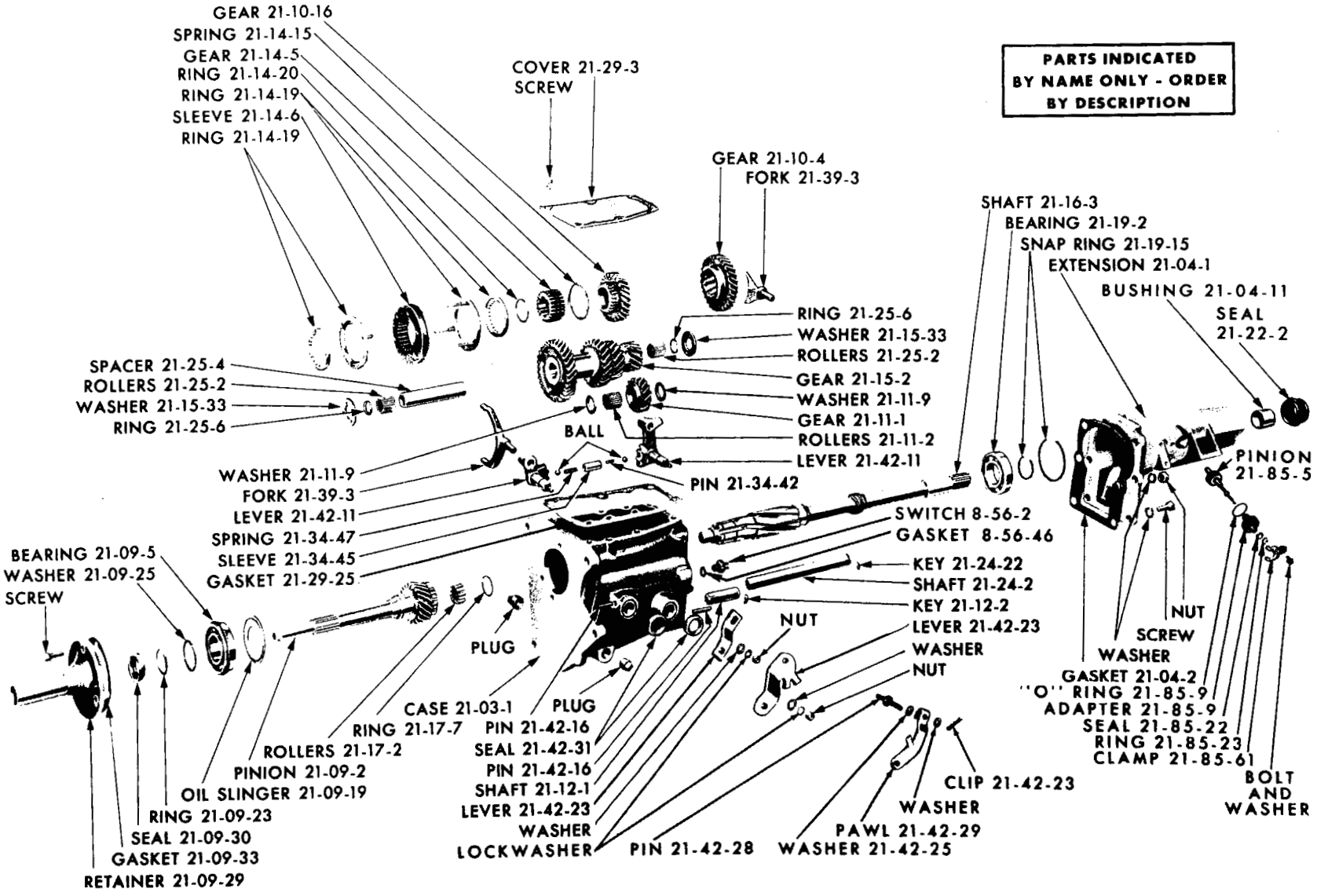

MANUAL 3 SPEED TRANSMISSION (6 CYLINDER) - VALIANT, DART, SWINGER, BELVEDERE, SATELLITE, CORONET AND CHARGER (A903)

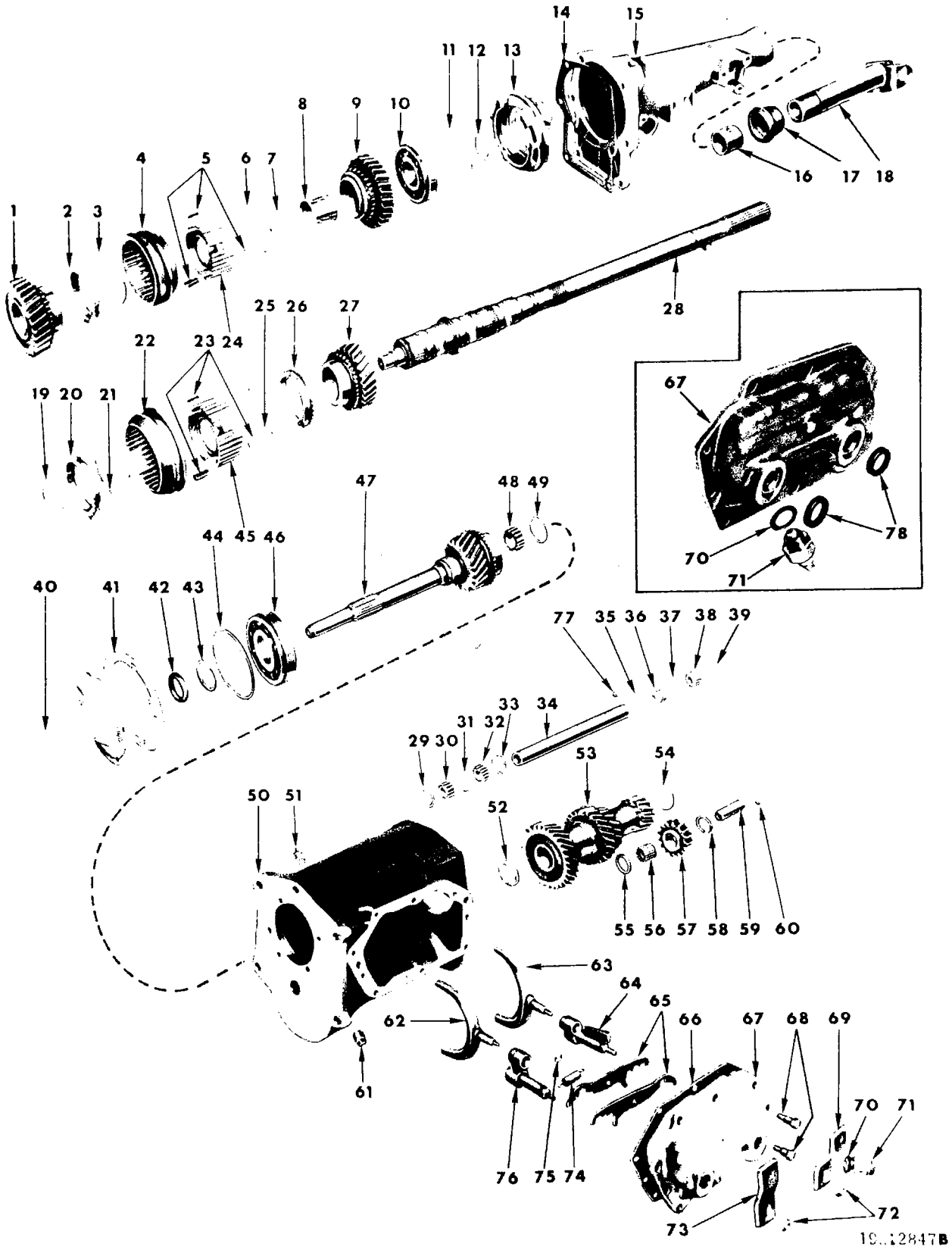

MANUAL 3 SPEED TRANSMISSION - A-230

MANUAL 3 SPEED TRANSMISSION - A-230

Ref. No.	Name	Part Type Code
1	Gear, Low	21-10-3
2	Ring	21-14-19
3	Spring	21-14-15
4	Sleeve (Serviced in 21-14-1)	
5	Strut (Serviced in 21-14-1)	
6	Spring	21-14-15
7	Snap Ring	21-14-20
8	Bushing (Serviced in 21-10-72)	
9	Gear, Reverse	21-10-72
10	Bearing	21-19-2
11	Snap Ring	21-19-15
12	Snap Ring	21-19-15
13	Retainer	21-23-2
14	Gasket	21-04-2
15	Extension	21-04-1
16	Bushing	21-04-11
17	Seal	21-22-2
18	Yoke	16-20-1
19	Snap Ring	21-14-20
20	Ring	21-14-19
21	Spring	21-14-15
22	Sleeve (Serviced in 21-14-1)	
23	Strut (Serviced in 21-14-1)	
24	Gear (Serviced in 21-14-1)	
25	Spring	21-14-15
26	Ring	21-14-19
27	Gear, Second	21-10-16
28	Shaft, Output	21-16-3
29	Washer	21-25-6
30	Roller	21-25-2
31	Washer	21-25-6
32	Roller	21-25-2
33	Washer	21-25-6
34	Countershaft	21-24-2
35	Washer	21-25-6
36	Roller	21-25-2
37	Washer	21-25-6
38	Roller	21-25-2
39	Washer	21-25-6
40	Retainer	21-09-29
41	Gasket	21-09-33
42	Seal	21-09-30
43	Snap Ring	21-09-23
44	Snap Ring	21-09-23
45	Gear (Serviced in 21-14-1)	
46	Bearing	21-09-5
47	Pinion, Drive	21-09-2
48	Roller	21-17-2
49	Snap Ring	21-17-7
50	Case	21-03-1
51	Plug, Filler (1/2"-14)	
52	Washer	21-15-33
53	Gear, Countershaft	21-15-2
54	Washer	21-15-33
55	Washer	21-11-9
56	Roller	21-11-2
57	Gear	21-11-1
58	Washer	21-11-9
59	Shaft	21-12-1
60	Key	21-12-2
61	Plug, Drain	
62	Fork	21-39-3
63	Fork	21-39-3
64	Lever	21-42-11
65	Lever, Interlock	21-42-23
66	Gasket	21-29-25
67	Housing	21-29-3
68	Bolt	21-29-3
69	Lever	21-42-23
70	Gasket	8-56-46
71	Switch	8-56-2
72	Nut, Locking	
73	Lever	21-42-23
74	Spring	21-34-47
75	Snap Ring	
76	Lever	21-42-11
77	Key	21-24-22
78	Seal	21-42-31

PARTS INDICATED BY NAME ONLY - ORDER BY DESCRIPTION

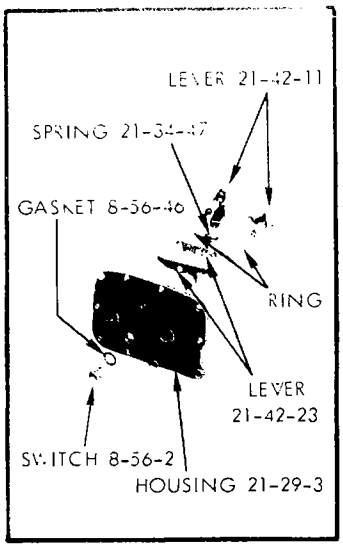

★SERVICED IN 21-14-1

PARTS INDICATED BY NAME ONLY - ORDER BY DESCRIPTION

4 SPEED MANUAL TRANSMISSION - A833 - ALL EXCEPT PLYMOUTH, DODGE, CHRYSLER AND IMPERIAL

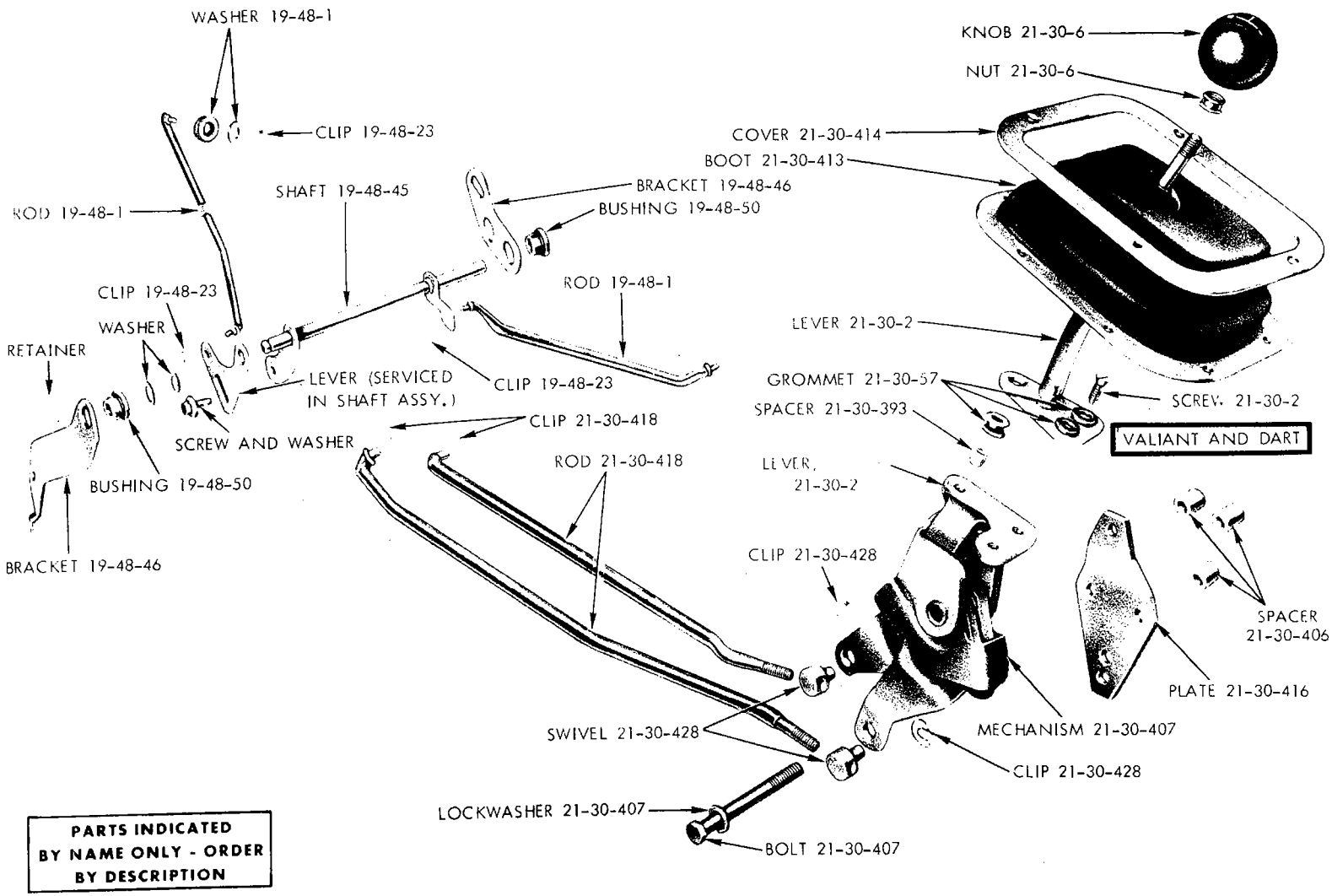

19a3094 **A**

MANUAL 3 SPEED TRANSMISSION CONTROLS (WITHOUT CONSOLE) - ALL EXCEPT PLYMOUTH, DODGE, CHRYSLER AND IMPERIAL

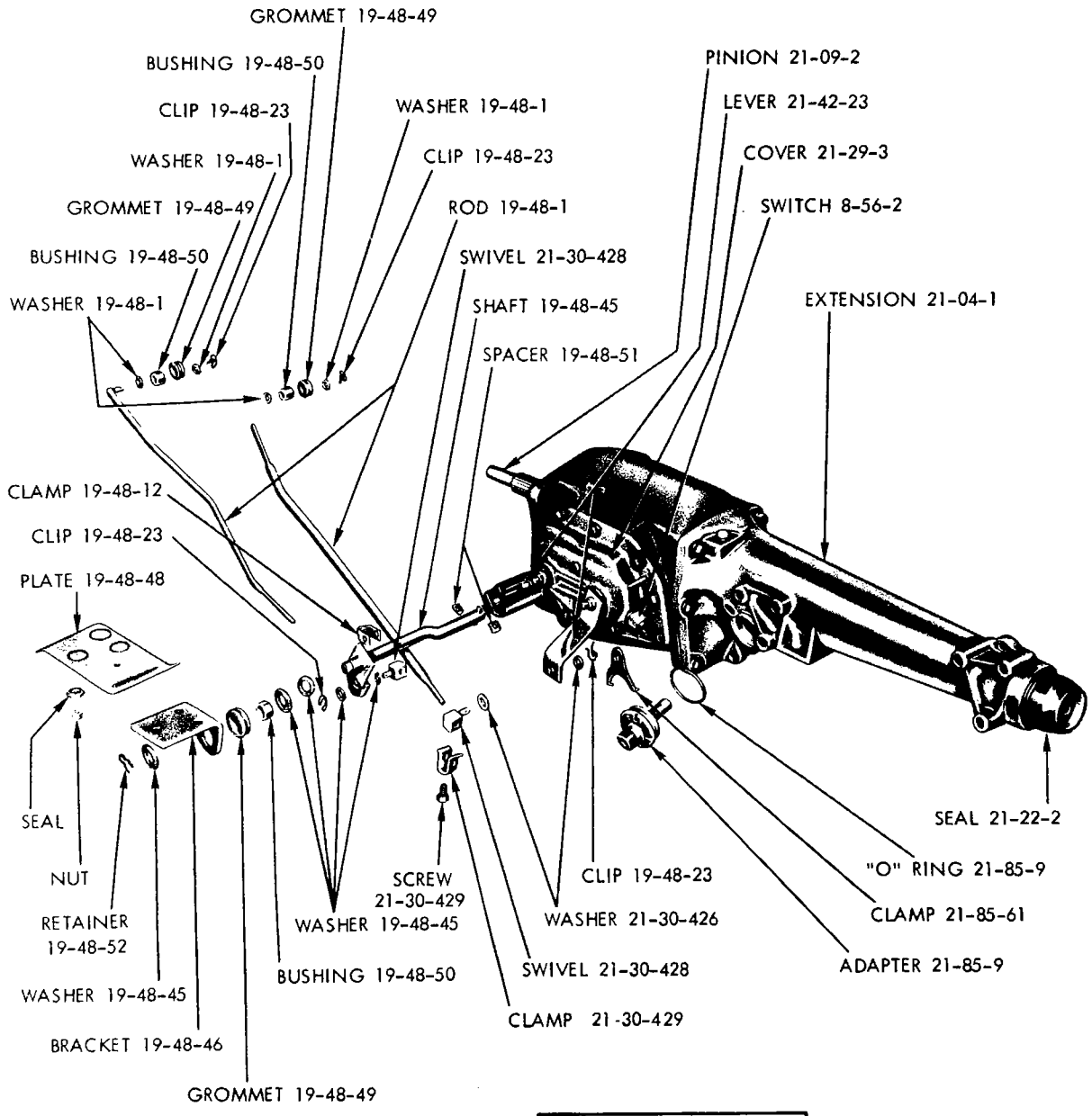

PARTS INDICATED BY NAME ONLY - ORDER BY DESCRIPTION

19a3347

COLUMN GEARSHIFT CONTROLS - 3 SPEED MANUAL TRANSMISSION - A-230

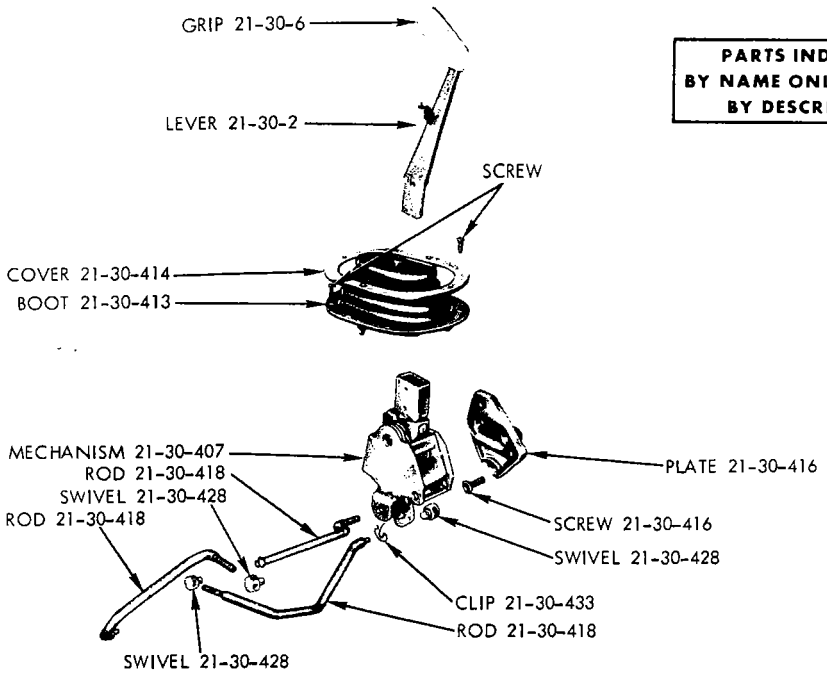

MANUAL 4 SPEED TRANSMISSION CONTROLS (HURST TYPE) - 1970

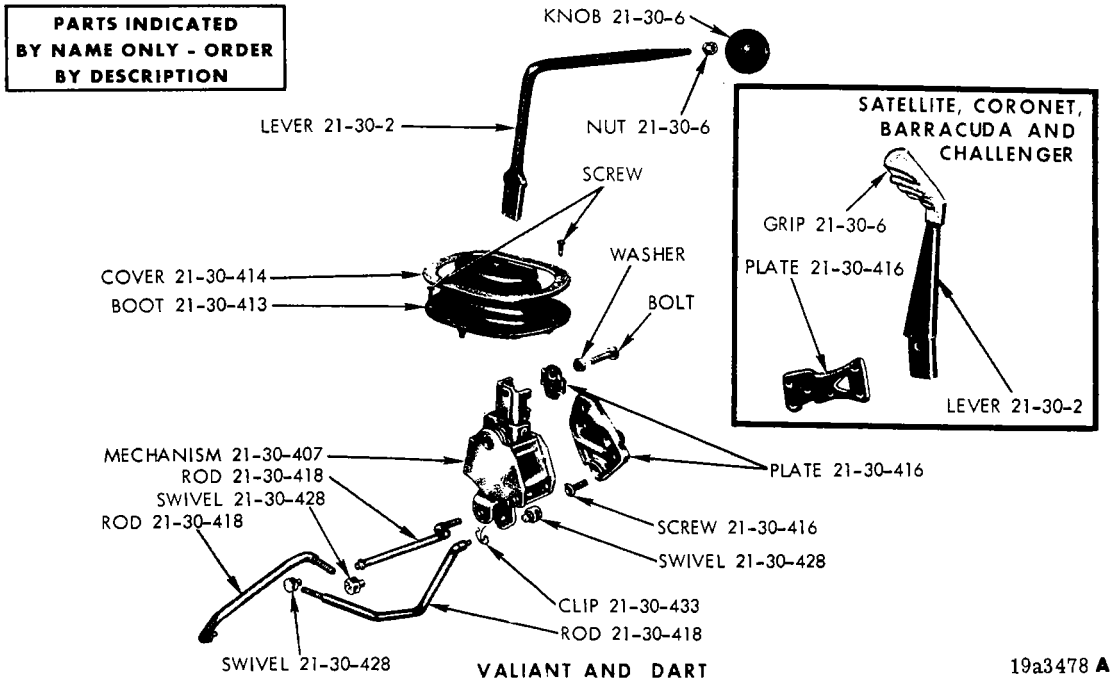

MANUAL 4 SPEED TRANSMISSION CONTROLS (HURST TYPE) - 1971

NOTES

MANUAL TRANSMISSION

21-02-0 TRANSMISSION

NOTE: *Transmission component parts for the transmission assemblies shown in code 21-02-1 below are catalogued in charted style after code 21-119-11. The respective service transmission part number and complete type code (A903-A230 etc.) is designated at the top of each chart column, and must be verified before specifying components.*

CODE	PART NAME	ENG. TYPE OR CU.IN.	V 1-2	B J 1-2	L 1-2	R 1-2	W 1-2	P 1-2	D 1-2	C 1	C 2	C 3	Y 1	PART NUMBER
21-02-1	TRANSMISSION, w 198, 225 and 318 Eng., w 3 Speed Trans., A230	70	1	—	1	—	—	—	—	—	—	—	—	3410 693
	w 198, 225 and 318 Eng., w 3 Speed Trans., A230	71	1	—	1	—	—	—	—	—	—	—	—	3515 833
	w 198 and Std. 225 Eng., Column Shift, w 3 Speed Trans., A903	71 6	1	—	1	1	1	—	—	—	—	—	—	3410 785
	w 225 Eng., Export, w 4 Speed Trans., A833	71 6	1	—	1	—	—	—	—	—	—	—	—	3410 758
	w 225 Eng., Export, w 4 Speed Trans., A833	70 6	1	—	1	—	—	—	—	—	—	—	—	3410 699
	w 318 Eng., Export, w 4 Speed Trans., A833	70 8	1	—	1	—	—	—	—	—	—	—	—	3410 681
	V, L, w 318 Eng., Export, V, L, w 340 Eng., w 4 Speed Trans., A833	71 8	1	—	1	—	—	—	—	—	—	—	—	3410 759
	w 340 Eng., w 3 Speed Trans., Floor Shift, A230	71 8	1	—	1	—	—	—	—	—	—	—	—	3515 832
	w 340 Eng., Floor Shift, A230	70 8	1	—	1	—	—	—	—	—	—	—	—	3410 747
	V, L, w 198 and 225 Eng., R, W, w 225 Eng., w 3 Speed Trans., A903	70 6	1	—	1	1	1	—	—	—	—	—	—	3410 612
	w 340 Eng., w 4 Speed Trans., A833	70 8	1	—	1	—	—	—	—	—	—	—	—	3410 681
	w 225 Eng., Export, w 4 Speed Trans., A833	70 6	—	1	—	—	—	—	—	—	—	—	—	3410 679
	B, J, w 198, 225 and 318 Eng., Floor Shift, R, W, w 225 Police and Taxi Type Eng., R, W, w 318 Eng., P, D, w 225 and 318 Eng., Column Shift, w 3 Speed Trans., A230	71	—	1	—	1	1	1	1	—	—	—	—	3515 834
	w 318 Eng., w 2 bbl. Carb. and 340 Eng., w 4 bbl. Carb., w 4 Speed Trans., A833	70 8	—	1	—	—	—	—	—	—	—	—	—	3410 697
	w 340 Eng., w 6 bbl. Carb., w 4 Speed Trans., A833	70 8	—	1	—	—	—	—	—	—	—	—	—	3410 790
	w 340 Eng., Floor Shift, A230	70 8	—	1	—	—	—	—	—	—	—	—	—	3410 766
	w 340 Eng., w 4 Speed Trans., A833	71 8	—	1	—	1	1	—	—	—	—	—	—	3410 763
	B, J, R, W, w 340 Eng., Floor Shift, P, D, C1, w 360 Eng., Column w 3 Speed Trans., A230	71 8	—	1	—	1	1	1	1	1	—	—	—	3515 836
	w 383 4 bbl. Carb., w 4 Speed Trans., A833	70 8	—	1	—	1	1	—	—	—	—	—	—	3410 682
	B, J, R, W, w 383 Eng., Floor Shift, P, D, C, w 383 Eng., Column Shift, w 3 Speed Trans., A230	71 8	—	1	—	1	1	1	1	1	—	—	—	3515 835
	w 383 4 bbl. Carb., w 4 Speed Trans., A833	71 8	—	1	—	1	1	—	—	—	—	—	—	3410 760
	w 426 and 440 Eng., w 4 Speed Trans., A833	70 8	—	1	—	1	1	—	—	—	—	—	—	3410 683
	w 426 and 440 Eng., w 4 Speed Trans., A833	71 8	—	1	—	1	1	—	—	—	—	—	—	3410 761

CARLINES: J - Challenger, B - Barracuda, V - Valiant, L - Dart, R - Belvedere · Satellite, W - Coronet · Charger, P - Plymouth, D - Dodge, C - Chrysler, Y - Imperial

AR Indicates use as required.

Numerals in parentheses ( ) refer to notes.

# Indicates parts not listed in any previous parts book.

★ Indicates change or addition.

Printed in U.S.A. January 1972

CODE	PART NAME	ENG. TYPE OR CU.IN.	V 1-2	B J 1-2	L 1-2	R 1-2	W 1-2	P 1-2	D 1-2	C 1	C 2	C 3	Y 1	PART NUMBER
	MANUAL TRANSMISSION													
	21-02-0 TRANSMISSION Cont'd.													
21-02-1	TRANSMISSION Cont'd.													
	B, J, w 198, 225 and 318 Eng., R, W, P, D, w 225 and 318 Eng., w 3 Speed Trans., A230 70		—	1	—	1	1	1	1	—	—	—	—	3410 694
	B, J, R, W, w 383 4 bbl. carb., P, D, C1, w 383 2 bbl. carb., w 3 Speed Trans. A230 70	8	—	1	—	1	1	1	1	1	—	—	—	3410 695
	w 383 Eng., w 4 Speed Trans., Temporary Substitution) A833 71	8	—	—	—	1	1	—	—	—	—	—	—	3410 791
	21-30-0 TRANSMISSION GEARSHIFT LEVER AND RODS													
21-30-2	LEVER, Gearshift Selector, Upper, Floor Shift, w 3 Speed Trans., w o Knob		1	—	1	—	—	—	—	—	—	—	—	2996 478
	w 4 Speed Trans., w o Knob, w o Console		1	—	1	—	—	—	—	—	—	—	—	2996 313
	Gearshift Control, w 4 Speed Trans., w o Knob, w Console		1	—	1	—	—	—	—	—	—	—	—	2996 314
	Lwr., w 3 Speed Trans., Floor Shift, Fits Into top of mechanism		1	1	1	1	1	—	—	—	—	—	—	2950 950
	Strg. Column Gearshift, w 3 Speed Trans., w Knob 70		1	—	1	1	1	—	—	—	—	—	—	3575 085
	Strg. Column Gearshift, w 3 Speed Trans., w Knob 71		1	—	1	1	1	—	—	—	—	—	—	3575 085
	Gearshift Selector, Upper, w 3 Speed Trans., Floor Shift, w o Knob 70		—	1	—	—	—	—	—	—	—	—	—	2950 943
	Gearshift Selector, Upper, w 3 Speed Trans., Floor Shift, w o Knob 71		—	1	—	1	1	—	—	—	—	—	—	2950 943
	Gearshift Selector, Upper, w 3 Speed Trans. Floor Shift, w o Knob w Sharp Lower Bend 71		—	—	—	1	1	—	—	—	—	—	—	3467 687
	w 4 Speed Trans., w Grips, Lens and Bezel		—	1	—	—	—	—	—	—	—	—	—	2996 461
	w 4 Speed Trans., w o Console, w Grips, Lens and Bezel 70		—	—	—	1	1	—	—	—	—	—	—	2996 462
	w 4 Speed Trans., w Console, w Grips, Lens and Bezel 70		—	—	—	1	1	—	—	—	—	—	—	2996 463
	w 4 Speed Trans., w Grips, Lens and Bezel, w Bucket Seats, w o Center Frt. Seat 71		—	—	—	1	1	—	—	—	—	—	—	2996 461
	w 4 Speed Trans., w Grips, Lens and Bezel, w Bench Seat or w Bucket Seats, w Center Frt. Seat 71		—	—	—	1	1	—	—	—	—	—	—	3467 638
	w 3 Speed Trans., Floor Shift, Upper, w Console, w o Knob 70		—	—	—	1	1	—	—	—	—	—	—	2996 497
	w 3 Speed Trans., Floor Shift, Upper, w o Console, w o Knob 70		—	—	—	1	1	—	—	—	—	—	—	2996 312
	w 3 Speed Trans., Strg. Column Gearshift, w Tilt Wheel, w Knob, Saginaw Blt. 71		—	—	—	1	1	1	1	—	—	—	—	3467 199
	Strg. Column Gearshift, w 3 Speed Trans., w Knob 70		—	—	—	—	—	1	1	1	—	—	—	2950 968
	w 3 Speed Trans. w Knob 71		—	—	—	—	—	1	1	1	—	—	—	3575 087
	PIN, Column Spring 70		1	1	1	1	1	1	1	1	—	—	—	9412 281

CARLINES J - Challenger V - Valiant R - Belvedere - Satellite P - Plymouth C - Chrysler
B - Barracuda L - Dart W - Coronet - Charger D - Dodge Y - Imperial

AR Indicates use as required. Numerals in parentheses ( ) refer to notes. Printed in U.S.A.

# Indicates parts not listed in any previous parts book. ★ Indicates change or addition. January 1972

CODE	PART NAME	ENG. TYPE OR CU.IN.	V 1-2	B J 1-2	L 1-2	R 1-2	W 1-2	P 1-2	D 1-2	C 1	C 2	C 3	Y 1	PART NUMBER
	MANUAL TRANSMISSION													
	21-30-0 TRANSMISSION GEARSHIFT LEVER AND RODS Cont'd.													
21-30-2	LEVER Cont'd.													
	Column Shift Spring, w/o Tilt	71	1	1	1	1	1	1	1	1	—	—	—	9412 281
	Column Shift Spring, w/ Tilt	71	—	—	—	1	1	1	1	1	—	—	—	152 233
	SCREW, w Washer, Shift Lever Base to top of Mechanism, w/3 Speed Floor Shift		3	3	3	3	3	—	—	—	—	—	—	6028 606
21-30-6	KNOB, Gearshift Selector, w/4 Speed Trans.		1	—	1	—	—	—	—	—	—	—	—	2950 213
	w/3 Speed Trans., Floor Shift, w/Shift Pattern, 1.88" O.D., 3/8"-24	70	1	1	1	1	1	—	—	—	—	—	—	2950 217
	w/3 Speed Trans., Floor Shift, w/o Shift Pattern, Black 1.88" O.D.	70	1	1	1	1	1	—	—	—	—	—	—	2996 480
	w/3 Speed Trans., Floor Shift, w Shift Pattern, Black, 1.81" O.D., 3/8"-16 L.H. Thread		1	1	1	1	1	—	—	—	—	—	—	3467 683
	Strg. Column Gearshift Lever, w 3 Speed Trans.	70	1	—	1	—	—	—	—	1	—	—	—	2883 402
	w/3 Speed Trans.	71	1	—	1	1	1	1	1	1	—	—	—	2883 402
	GRIP, Gearshift Selector Lever, w/4 Speed, Rt.		—	1	—	1	1	—	—	—	—	—	—	2996 466
	Lt.		—	1	—	1	1	—	—	—	—	—	—	2996 467
	SCREW, Grip		—	3	—	3	3	—	—	—	—	—	—	9431 606
	NUT, Knob	70	1	1	1	1	1	—	—	—	—	—	—	6026 132
		71	1	1	1	1	1	—	—	—	—	—	—	6029 094
21-30-19	COVER, Gearshift Indicator Hole, w/Black Face		—	—	—	—	—	1	1	—	—	—	—	2927 067
	w/Black Face, 2 53/64" Lgh.		—	—	—	—	—	—	—	1	—	—	—	2927 258
	SCREW, Mtg.		—	—	—	—	—	2	—	—	—	—	—	6024 654
21-30-21	LENS, Gearshift Selector Lever, w/4 Speed Trans., w/Shift Pattern		—	1	—	1	1	—	—	—	—	—	—	2996 464
21-30-22	PIN, Gearshift Selector Lever, w/3 Speed Trans., Floor Shift, w/Hole		1	1	1	1	1	—	—	—	—	—	—	2534 515
21-30-38	BUSHING, Gearshift Control Rod, w/3 and 4 Speed Trans.	71	1	1	1	1	1	—	—	—	—	—	—	3467 245
21-30-43	SPRING, Gearshift Selector Lever, w/3 Speed Trans., Floor Shift		1	1	1	1	1	—	—	—	—	—	—	2996 305
21-30-57	GROMMET, Gearshift Selector Lever, Upper, w/3 Speed Trans., Floor Shift		3	3	3	3	3	—	—	—	—	—	—	2660 374
21-30-393	SPACER, Gearshift Selector Lever, Upper, w/3 Speed Trans., Floor Shift		3	3	3	3	3	—	—	—	—	—	—	2996 477
21-30-401	LOCK, Gearshift Operating Lever Reverse, w/3 Speed Trans., Shift		1	1	1	1	1	—	—	—	—	—	—	3467 020
21-30-403	HOUSING, Gearshift Selector Lever, w/3 Speed Trans., w/Floor Shift		1	1	1	1	1	—	—	—	—	—	—	2950 652
21-30-406	SPACER, Gearshift Mechanism Mounting, w/3 Speed Trans., w/Floor Shift		3	—	3	—	—	—	—	—	—	—	—	2996 476
	Gearshift Operating Lever Spring, w/3 Speed Trans., w/Floor Shift, w/Square Slot		1	1	1	1	1	—	—	—	—	—	—	2950 940
	w/o Square Slot	71	1	1	1	1	1	—	—	—	—	—	—	# 3467 746

CARLINES: J - Challenger, B - Barracuda, V - Valiant, L - Dart, R - Belvedere - Satellite, W - Coronet - Charger, P - Plymouth, D - Dodge, C - Chrysler, Y - Imperial

AR Indicates use as required.

# Indicates parts not listed in any previous parts book.

Numerals in parentheses ( ) refer to notes.

★ Indicates change or addition.

Printed in U.S.A. January 1972

MANUAL TRANSMISSION

21-30-0 TRANSMISSION GEARSHIFT LEVER AND RODS Cont'd.

CODE	PART NAME		ENG. TYPE OR CU.IN.	V 1-2	B J 1-2	L 1-2	R 1-2	W 1-2	P 1-2	D 1-2	C 1	C 2	C 3	Y 1	PART NUMBER
21-30-406	SPACER Cont'd.														
	Gearshift Operating Lever, w/3 Speed Trans., w/ Floor Shift, .259" Thk.			1	1	1	1	1	—	—	—	—	—	—	2950 941
	.275" thk.		71	1	1	1	1	1	—	—	—	—	—	—	# 3467 745
21-30-407	MECHANISM, Gearshift Control, w/ 4 Speed Trans.			1	—	1	—	—	—	—	—	—	—	—	2950 060
	w/3 Speed Trans., w/ Reverse Lock Spacer			1	1	1	1	1	—	—	—	—	—	—	2950 939
	w/3 Speed Trans., w/o Reverse Lock Spacer		71	1	1	1	1	1	—	—	—	—	—	—	# 3467 743
	w/4 Speed Trans.		70	—	1	—	—	—	—	—	—	—	—	—	2950 750
	w/3 Speed Trans., w/ Bench Seat and w/ Bucket Seats w/ Fold Down Arm Rest		71	—	—	—	1	1	—	—	—	—	—	—	# 3467 744
	w/4 Speed Trans.		71	—	1	—	1	1	—	—	—	—	—	—	2950 750
	w/4 Speed Trans., Press In Gearshift Lever Type			—	—	—	1	1	—	—	—	—	—	—	2996 457
	w/4 Speed Trans., Gearshift Lever Bolt on Type			—	—	—	1	1	—	—	—	—	—	—	3467 690
	BOLT, w/ 3 Speed Trans.			1	1	1	—	—	—	—	—	—	—	—	9431 651
	w/3 and 4 Speed Trans.		70	1	1	1	1	1	—	—	—	—	—	—	9431 652
	w/3 Speed Trans., 3 8" - 16 x 2			3	—	3	—	—	—	—	—	—	—	—	6027 880
	w/3 Speed Trans.		70	—	3	—	—	—	—	—	—	—	—	—	6022 262
	w/4 Speed Trans., w/4 Speed Trans., used w/ Bolt on Type Gearshift Lever		70	—	—	—	2	2	—	—	—	—	—	—	9421 218
	WASHER		70	1	1	1	1	1	—	—	—	—	—	—	131 100
	Coned Type		70	—	—	—	2	2	—	—	—	—	—	—	6023 654
21-30-413	BOOT, Gearshift Floor, w/ 4 Speed Trans., Oblong Shape		70	—	1	—	1	—	—	—	—	—	—	—	2950 201
	w/4 Speed Trans., w/Console, Square Shape			1	—	1	—	—	—	—	—	—	—	—	2660 422
	w/4 Speed Trans., Oblong Shape		71	1	—	1	—	—	—	—	—	—	—	—	2950 201
	w/3 Speed Trans., Oblong Shape			1	—	1	—	—	—	—	—	—	—	—	2950 201
	w/3 and 4 Speed Trans., Square Shape, Floor Mounted		70	—	1	—	—	—	—	—	—	—	—	—	2996 405
			71	—	1	—	1	1	—	—	—	—	—	—	2996 405
	w/3 and 4 Speed Trans., w/Console		70	—	—	—	1	1	—	—	—	—	—	—	2996 454
	w/3 Speed Trans., w/o Console, Lever., Oblong Shape		70	—	—	—	1	1	—	—	—	—	—	—	2996 474
	w/3 and 4 Speed Trans., w/ 4 Rising Folds, w/o Console, Oblong Shape		70	—	—	—	1	1	—	—	—	—	—	—	2950 074
	w/3 and 4 Speed Trans.		71	—	—	—	1	1	—	—	—	—	—	—	3467 644
21-30-414	COVER, Gearshift Floor Boot, w/ 3 and 4 Speed			1	—	1	—	—	—	—	—	—	—	—	2660 393
	w/3 and 4 Speed Trans.		70	—	1	—	—	—	—	—	—	—	—	—	2996 415
	w/o Fold Down Arm Rest		71	—	1	—	1	1	—	—	—	—	—	—	2996 415
	w/3 and 4 Speed Trans.		70	—	—	—	1	1	—	—	—	—	—	—	2534 511
	w/Fold Down Arm Rest		71	—	—	—	1	1	—	—	—	—	—	—	3467 647
21-30-416	PLATE, Gearshift Mechanism Mounting, w/4 Speed Trans.			1	—	1	—	—	—	—	—	—	—	—	2950 205
	w/3 Speed Trans.		70	1	1	1	—	—	—	—	—	—	—	—	2950 942
			71	1	1	1	1	1	—	—	—	—	—	—	2950 942
	w/4 Speed Trans., w/ 5 Round Holes		70	—	1	—	—	—	—	—	—	—	—	—	2996 316
			71	—	1	—	1	1	—	—	—	—	—	—	2996 316

CARLINES: J - Challenger, B - Barracuda, V - Valiant, L - Dart, R - Belvedere - Satellite, W - Coronet - Charger, P - Plymouth, D - Dodge, C - Chrysler, Y - Imperial

AR Indicates use as required.

# Indicates parts not listed in any previous parts book.

Numerals in parentheses ( ) refer to notes.

★ Indicates change or addition.

Printed in U.S.A. January 1972

CODE	PART NAME	ENG. TYPE OR CU.IN.	V 1-2	B J 1-2	L 1-2	R 1-2	W 1-2	P 1-2	D 1-2	C 1	C 2	C 3	Y 1	PART NUMBER
	MANUAL TRANSMISSION													
	21-30-0 TRANSMISSION GEARSHIFT LEVER AND RODS Cont'd.													
21-30-416	PLATE Cont'd.													
	w/3 Speed Trans.	70	—	—	—	1	1	—	—	—	—	—	—	2996 421
		71	—	—	—	1	1	—	—	—	—	—	—	3467 700
	w/4 Speed Trans.	70	—	—	—	1	1	—	—	—	—	—	—	2950 206
	w/6 Round Holes	71	—	—	—	1	1	—	—	—	—	—	—	3467 668
	Gearshift Control Lever Stiffener, Steel, w/2 Holes, 1 3/4" High, 1 37/64" Wide, w/4 Speed Trans.	70	—	—	—	1	1	—	—	—	—	—	—	3467 699
		71	1	1	1	1	1	—	—	—	—	—	—	3467 699
	BRACKET, Gearshift Mechanism Mounting, w/3 Speed		1	1	1	1	1	—	—	—	—	—	—	2996 301
	w/Fold Down Arm Rest, w/3 Speed	71	—	—	—	1	1	—	—	—	—	—	—	3467 685
	BOLT, Plate, w/3 Speed Trans.	70	1	1	1	—	—	—	—	—	—	—	—	9431 651
		70	—	—	—	1	1	—	—	—	—	—	—	9431 652
	w/4 Speed Trans.	70	3	—	3	—	—	—	—	—	—	—	—	6024 554
		70	—	3	—	—	—	—	—	—	—	—	—	6026 764
		70	—	—	—	3	3	—	—	—	—	—	—	6024 552
21-30-418	ROD, Gearshift First and Reverse, w/3 Speed Trans., w/Floor Shift		1	—	1	—	—	—	—	—	—	—	—	2996 482
	Second and Third, w/3 Speed Trans., w/Floor Shift		1	—	1	—	—	—	—	—	—	—	—	2996 483
	First and Second, w/4 Speed Trans.		1	—	1	—	—	—	—	—	—	—	—	2950 052
	Third and Fourth, w/4 Speed Trans.		1	—	1	—	—	—	—	—	—	—	—	2950 053
	Reverse, w/4 Speed Trans.		1	—	1	—	—	—	—	—	—	—	—	2950 051
	First and Reverse, w/3 Speed Trans., Floor Shift	70	—	1	—	—	—	—	—	—	—	—	—	2950 852
		71	—	1	—	1	1	—	—	—	—	—	—	2950 852
	Second and Third, w/3 Speed Trans., Floor Shift	70	—	1	—	—	—	—	—	—	—	—	—	2950 853
		71	—	1	—	1	1	—	—	—	—	—	—	2950 853
	First and Second, w/4 Speed Trans.	70	—	1	—	—	—	—	—	—	—	—	—	2950 852
		71	—	1	—	1	1	—	—	—	—	—	—	2950 852
	Third and Fourth, w/4 Speed Trans.	70	—	1	—	—	—	—	—	—	—	—	—	2950 853
		71	—	1	—	1	1	—	—	—	—	—	—	2950 853
	Reverse, w/4 Speed Trans.	70	—	1	—	—	—	—	—	—	—	—	—	2950 854
		71	—	1	—	1	1	—	—	—	—	—	—	2950 854
	First and Reverse, w/3 Speed Trans., Floor Shift	70	—	—	—	1	1	—	—	—	—	—	—	2996 456
		71	—	—	—	1	1	—	—	—	—	—	—	3467 609
	Second and Third, w/3 Speed Trans., w/Floor Shift	70	—	—	—	1	1	—	—	—	—	—	—	2996 310
		71	—	—	—	1	1	—	—	—	—	—	—	3467 610
	First and Second, w/4 Speed Trans.	70	—	—	—	1	1	—	—	—	—	—	—	2996 456
		71	—	—	—	1	1	—	—	—	—	—	—	3467 609
	Third and Fourth, w/4 Speed Trans.	70	—	—	—	1	1	—	—	—	—	—	—	2996 455
		71	—	—	—	1	1	—	—	—	—	—	—	3467 610
	Reverse, w/4 Speed Trans.	70	—	—	—	1	1	—	—	—	—	—	—	2461 068
		71	—	—	—	1	1	—	—	—	—	—	—	3467 611
	CLIP, Rod, Trans. Hsg. End.	70	2	—	2	2	2	—	—	—	—	—	—	1137 669
21-30-421	SHAFT, Gearshift Operating Lever, w/3 Speed Trans., w/Floor Shift		1	1	1	1	1	—	—	—	—	—	—	2950 946
21-30-426	WASHER, Gearshift Control Rod, Frt., Second and High, w/3 Speed Trans.	70	AR	—	AR	AR	AR	AR	AR	AR	—	—	—	631 217

CARLINES: J - Challenger, B - Barracuda, V - Valiant, L - Dart, R - Belvedere - Satellite, W - Coronet - Charger, P - Plymouth, D - Dodge, C - Chrysler, Y - Imperial

AR Indicates use as required.

# Indicates parts not listed in any previous parts book.

Numerals in parentheses ( ) refer to notes.

★ Indicates change or addition.

Printed in U.S.A. January 1972

CODE	PART NAME	ENG. TYPE OR CU.IN.	V 1-2	B J 1-2	L 1-2	R 1-2	W 1-2	P 1-2	D 1-2	C 1	C 2	C 3	Y 1	PART NUMBER
	MANUAL TRANSMISSION													
	21-30-0 TRANSMISSION GEARSHIFT LEVER AND RODS Cont'd.													
21-30-428	SWIVEL, Gearshift Lock Column, w/3 Speed Trans., w/Floor Shift	70	1	—	1	—	—	—	—	—	—	—	—	2409 408
	Gearshift Rod, w/3 and 4 Speed Trans. w/Floor Shift		2	2	2	2	2	—	—	—	—	—	—	2409 408
	Gearshift Rod, Column Shift, w/3 Speed Trans.	70	2	—	2	2	2	2	2	2	—	—	—	2404 859
		71	2	—	2	2	2	2	2	2	2	2	—	3467 667
	Gearshift Reverse Rod, w 4 Speed Trans.	70	1	1	1	1	1	—	—	—	—	—	—	2996 317
		71	1	1	1	1	1	—	—	—	—	—	—	2409 408
21-30-429	CLAMP, Gearshift Rod Swivel w/3 Speed Trans.		2	—	2	2	2	2	2	2	—	—	—	2204 274
	SCREW		2	—	2	2	2	2	2	2	—	—	—	181 082
21-30-433	CLIP, Swivel, Mechanism End, w/3/8" to 7/16" Rods		2	—	2	2	2	—	—	—	—	—	—	1635 232
	Gearshift Selector Lever Pin, Floor Shift		1	1	1	1	1	—	—	—	—	—	—	1137 669
	Gearshift Rod and Swivel, w 3 Speed Trans.		AR	—	AR	4	4	4	4	4	—	—	—	1137 669
	21-84-0 TRANSMISSION SPEEDOMETER CABLE													
21-84-1	CABLE, w HOUSING, 63" Lgh.	70	1	1	1	1	1	1	—	1	—	—	—	2889 783
		71	1	1	1	1	1	1	1	1	—	—	—	2889 783
		70	—	—	—	—	—	—	1	—	—	—	—	2822 024
	Upper, For Fleet Use Only	71	—	—	—	—	—	1	1	1	—	—	—	3571 559
	CLIP, Cable to Clutch Brkt.	70	—	—	—	—	—	1	1	1	—	—	—	6028 024
	SCREW, Clip Attaching		—	—	—	—	—	1	1	1	—	—	—	9417 361
21-84-4	SHAFT or CABLE PACKAGE, 80" lgh.		1	1	1	1	1	1	1	1	—	—	—	2448 294
21-84-7	CONNECTOR, Cable, For Fleet Use Only	71	—	—	—	—	—	1	1	1	—	—	—	3571 560
21-84-8	GROMMET, Speedometer Cable Dash		1	1	1	1	1	1	1	1	—	—	—	2216 552
21-84-28	SEAL, Speedometer Cable, w/Sealed Speedometer	71	—	—	—	—	—	1	1	—	—	—	—	2644 764

NOTES

CARLINES J - Challenger, B - Barracuda, V - Valiant, L - Dart, R - Belvedere Satellite, W - Coronet - Charger, P - Plymouth, D - Dodge, C - Chrysler, Y - Imperial

AR Indicates use as required.

Numerals in parentheses ( ) refer to notes.

# Indicates parts not listed in any previous parts book.

★ Indicates change or addition.

Printed in U.S.A. January 1972

MANUAL TRANSMISSION

21-85-0 TRANSMISSION SPEEDOMETER GEAR AND PINION

21-85-5 PINION-MODEL YEAR 1970

Tire Size	2.45 to 1 Ratio Pinion Teeth	2.71 to 1 Ratio Pinion Teeth	2.76 to 1 Ratio Pinion Teeth	2.93 to 1 Ratio Pinion Teeth	2.94 to 1 Ratio Pinion Teeth
B78 x 14	———	———	2538930 30Y	———	———
C78 x 14	———	———	2538929 29BL	———	———
D78 x 14	———	———	2538929 29BL	———	———
E78 x 14	———	2538928 28B	2538928 28B	2538930 30Y	2538930 30Y
F78 x 14	3410025 25B	2538927 27W	2538928 28B	2538930 30Y	2538930 30Y
G78 x 14	3410024 24W	2538927 27W	2538927 27W	2538929 29BL	2538929 29BL
H78 x 14	———	2538926 26R	2538926 26R	2538928 28B	2538928 28B
E70 x 14	———	———	2538929 29BL	———	———
F70 x 14	3410025 25B	2538927 27W	2538928 28B	———	2538930 30Y
F78 x 15	———	2538926 26R	2538927 27W	———	2538929 29BL
G78 x 15	———	2538926 26R	2538926 26R	———	2538928 28B
H78 x 15	———	3410025 25B	2538926 26R	———	2538927 27W
J78 x 15	———	3410025 25B	2538926 26R	———	2538927 27W
L78 x 15	———	3410025 25B	2538926 26R	———	2538927 27W
E60 x 15	———	———	2538929 29BL	———	———
F60 x 15	3410025 25B	2538928 28B	2538928 28B	———	2538930 30Y
H70 x 15	———	2538926 26R	2538926 26R	———	2538928 28B
6.95 x 14	———	———	2538929 29BL	———	———
7.35 x 14	———	2538928 28B	2538928 28B	2538930 30Y	2538930 30Y
7.75 x 14	3410024 24W	2538927 27W	2538927 27W	2538929 29BL	2538929 29BL
7.75 x 15	3410024 24W	2538927 27W	2538927 27W	2538929 29BL	2538929 29BL
8.25 x 15	3410024 24W	2538926 26R	2538927 27W	2538928 28B	2538928 28B
8.55 x 15	———	2538926 26R	2538926 26R	———	2538928 28B

Tire Size	3.23 to 1 Ratio Pinion Teeth	3.54 to 1 Ratio Pinion Teeth	3.55 to 1 Ratio Pinion Teeth	3.91 to 1 Ratio Pinion Teeth	4.10 to 1 Ratio Pinion Teeth
B78 x 14	2538935 35O	———	2538938 38B	2538942 42W	———
C78 x 14	2538934 34G	———	2538937 37W	2538941 41R	———
D78 x 14	2538933 33Y	———	2538937 37W	2538940 40O	———
E78 x 14	2538933 33Y	———	2538936 36R	2538940 40O	———
F78 x 14	2538932 32BL	———	2538936 36R	2538939 39G	———
G78 x 14	2538932 32BL	———	2538935 35O	2538938 38B	———
H78 x 14	2538931 31G	———	2538934 34G	2538937 37W	———
E70 x 14	2538933 33Y	———	2538937 37W	2538940 40O	———
F70 x 14	2538932 32BL	2538936 36R	2538936 36R	2538939 39G	2538941 41R
F78 x 15	2538931 31G	———	2538935 35O	———	———
G78 x 15	2538931 31G	———	2538934 34G	———	———
H78 x 15	2538930 30Y	———	2538933 33Y	———	———
J78 x 15	2538930 30Y	———	2538933 33Y	———	———
L78 x 15	2538930 30Y	———	2538933 33Y	———	———
E60 x 15	2538934 34G	2538937 37W	2538937 37W	2538941 41R	2538943 43B
F60 x 15	2538933 33Y	2538936 36R	2538936 36R	2538940 40O	2538942 42W
H70 x 15	2538931 31G	———	2538934 34G	———	———
6.95 x 14	2538934 34G	———	2538937 37W	2538941 41R	———
7.35 x 14	2538933 33Y	———	2538936 36R	2538940 40O	———
7.75 x 14	2538932 32BL	———	2538935 35O	2538939 39G	2538941 41R
7.75 x 15	2538932 32BL	———	2538935 35O	2538938 38B	———
8.25 x 15	2538931 31G	———	2538934 34G	2538938 38B	———
8.55 x 15	2538931 31G	———	2538934 34G	———	———

COLOR OF PINIONS

G-GREEN R-RED W-WHITE B-BLUE Y-YELLOW
BL-BLACK O-ORANGE

CARLINES J - Challenger V - Valiant R - Belvedere - Satallite P - Plymouth C - Chrysler
B - Barracuda L - Dart W - Coronet - Charger D - Dodge Y - Imperial

AR Indicates use as required.
= Indicates parts not listed in any previous parts book.
Numerals in parentheses ( ) refer to notes.
★ Indicates change or addition.

Printed in U.S.A.
January 1972

MANUAL TRANSMISSION

21-85-0 TRANSMISSION SPEEDOMETER GEAR AND PINION Cont'd.

21-85-5	PINION-MODEL YEAR 1971				
TIRE SIZE	2.45 to 1 Ratio Pinion Teeth	2.71 to 1 Ratio Pinion Teeth	2.76 to 1 Ratio Pinion Teeth	2.93 to 1 Ratio Pinion Teeth	2.94 to 1 Ratio Pinion Teeth
B78 x 14	2538 927 27W	2538 929 29BL	2538 930 30Y	2538 932 32BL	2538 932 32BL
C78 x 14	2538 926 26R	2538 929 28BL	2538 929 29BL	2538 931 31G	2538 931 31G
D78 x 14	2538 926 26R	2538 928 28B	2538 929 29BL	2538 931 31G	2538 931 31G
E78 x 14	3410 025 25B	2538 928 28B	2538 928 28B	2538 930 30Y	2538 930 30Y
F78 x 14	3410 025 25B	2538 927 27W	2538 928 28B	2538 930 30Y	2538 930 30Y
G78 x 14	3410 024 24W	2538 927 27W	2538 927 27W	2538 929 29BL	2538 929 29BL
H78 x 14	3410 024 24W	2538 926 26R	2538 927 27W	2538 928 28B	2538 928 28B
F78 x 15	3410 024 24W	2538 927 27W	2538 927 27W	2538 929 29BL	2538 929 29BL
G78 x 15	3410 024 24W	2538 926 26R	2538 927 27W	2538 928 28B	2538 928 28B
H78 x 15	————	2538 926 26R	2538 926 26R	2538 928 28B	2538 928 28B
J78 x 15	————	3410 025 25B	2538 926 26R	2538 927 27W	2538 927 27W
L84 x 15	————	3410 025 25B	3410 025 25B	2538 927 27W	2538 927 27W
E-70 x 14	2538 926 26R	2538 928 28B	2538 929 29BL	2538 931 31G	2538 931 31G
F70 x 14	3410 025 25B	2538 928 28B	2538 928 28B	2538 930 30Y	2538 930 30Y
G70 x 14	3410 025 25B	2538 927 27W	2538 928 28B	2538 930 30Y	2538 930 30Y
H70 x 15	————	2538 926 26R	2538 927 27W	2538 928 28B	2538 928 28B
E60 x 15	3410 025 25B	2538 928 28B	2538 929 29BL	2538 930 30Y	2538 930 30Y
F60 x 15	3410 025 25B	2538 928 28B	2538 928 28B	2538 930 30Y	2538 930 30Y
G60 x 15	3410 025 25B	2538 927 27W	2538 928 28B	2538 930 30Y	2538 930 30Y
6.45 x 14	2538 926 26R	2538 929 29BL	2538 929 29BL	2538 931 31G	2538 931 31G
6.95 x 14	3610 025 25B	2538 928 28B	2538 929 29BL	2538 930 30Y	2538 930 30Y
7.35 x 14	3410 025 25B	2538 928 28B	2538 928 28B	2538 930 30Y	2538 930 30Y
7.75 x 14	————	2538 927 27W	2538 928 28B	2538 929 29BL	2538 929 29BL
8.25 x 14	3410 024 24W	2538 927 27W	3620 451	3620 452	3620 451
8.55 x 14	3410 024 24W	2538 926 26R	2538 926 26R	2538 928 28B	2538 928 28B
7.75 x 15	3410 024 24W	2538 927 27W	2538 928 28B	2538 929 29BL	2538 929 29BL
8.25 x 15	3410 024 24W	2538 926 26R	2538 927 27W	2538 928 28B	2538 929 29BL
8.55 x 15	————	2538 926 26R	2538 926 26R	2538 928 28B	2538 928 28B
8.90 x 15	————	————	3410 024 24W	3410 025 25B	3410 025 25B
9.00 x 15	————	3410 024 24B	3410 025 25B	2538 926 26R	2538 926 26R
9.15 x 15	————	3410 025 25B	2538 926 26R	2538 927 27W	2538 927 27W
TIRE SIZE	3.21 to 1 Ratio Pinion Teeth	3.23 to 1 Ratio Pinion Teeth	3.54 to 1 Ratio Pinion Teeth	3.55 to 1 Ratio Pinion Teeth	3.91 to 1 Ratio Pinion Teeth
B78 x 14	2538 935 35O	2538 935 35O	2538 938 38B	2538 938 38B	2538 942 42W
C78 x 14	2538 934 34G	2538 934 34G	2538 937 37W	2538 937 37W	2538 941 41R
D78 x 14	2538 933 33Y	2538 934 34G	2538 937 37W	2538 937 37W	2538 941 41R
E78 x 14	2538 933 33Y	2538 933 33Y	2538 936 36R	2538 936 36R	2538 940 40O
F78 x 14	2538 932 32BL	2538 933 33Y	2538 936 36R	2538 936 36R	2538 939 39G
G78 x 14	2538 932 32BL	2538 932 32BL	2538 935 35O	2538 935 35O	2538 939 39G
H78 x 14	2538 931 31G	2538 931 31G	2538 934 34G	2538 934 34G	2538 937 37W
F78 x 15	2538 931 31G	2538 932 32BL	2538 935 35O	2538 935 35O	2538 938 38B
G78 x 15	2538 931 31G	2538 931 31G	2538 934 34G	2538 934 34G	2538 938 38B
H78 x 15	2538 930 30Y	2538 930 30Y	2538 933 33Y	2538 933 33Y	2538 937 37W
J78 x 15	2538 930 30Y	2538 930 30Y	2538 933 33Y	2538 933 33Y	2538 936 36R
L84 x 15	2538 929 29BL	2538 929 29BL	2538 932 32BL	2538 932 32BL	2538 935 35O
E70 x 14	2538 934 34G	2538 934 34G	2538 937 37W	2538 937 37W	2538 941 41R
F70 x 14	2538 933 33Y	2538 933 33Y	2538 936 36R	2538 936 36R	2538 940 40O
G70 x 14	2538 932 32BL	2538 933 33Y	2538 936 36R	2538 936 36R	2538 939 39G
H70 x 15	2538 931 31G	2538 931 31G	2538 934 34G	2538 934 34G	2538 937 37W
E60 x 15	2538 933 33Y	2538 933 33Y	2538 937 37W	2538 937 37W	2538 940 40O
F60 x 15	2538 933 33Y	2538 933 33Y	2538 936 36R	2538 936 36R	2538 940 40O
G60 x 15	2538 932 32BL	2538 932 32BL	2538 936 36R	2538 936 36R	2538 939 39G
6.45 x 14	2538 934 34G	2538 934 34G	2538 937 37W	2538 938 38B	2538 942 42W
6.95 x 14	2538 933 33Y	2538 933 33Y	2538 937 37W	2538 937 37W	2538 940 40O
7.35 x 14	2538 933 33Y	2538 933 33Y	2538 936 36R	2538 936 36R	2538 40O
7.75 x 14	2538 932 32BL	2538 932 32BL	2538 935 35O	2538 935 35O	2538 939 39G
8.25 x 14	2538 932 32BL	2538 932 32BL	2538 935 35O	2538 935 35O	2538 938 38B
8.55 x 14	2538 931 31G	2538 931 31G	2538 934 34G	2538 934 34G	2538 937 37W

CARLINES				
J - Challenger	V - Valiant	R - Belvedere - Satallite	P - Plymouth	C - Chrysler
B - Barracuda	L - Dart	W - Coronet - Charger	D - Dodge	Y - Imperial

AR Indicates use as required.

**Indicates** parts not listed in any previous parts book.

Numerals in parentheses ( ) refer to notes.

★ *Indicates change or addition.*

Printed in U.S.A.
January 1972

MANUAL TRANSMISSION

21-85-0 TRANSMISSION SPEEDOMETER GEAR AND PINION Cont'd.

21-85-5 PINION-MODEL YEAR 1971

TIRE SIZE	3.21 to 1 Ratio Pinion Teeth	3.23 to 1 Ratio Pinion Teeth	3.54 to 1 Ratio Pinion Teeth	3.55 to 1 Ratio Pinion Teeth	3.91 to 1 Ratio Pinion Teeth
7.75 x 15	2538 932 32BL	2538 932 32BL	2538 935 35O	2538 935 35O	2538 939 39G
8.25 x 15	2538 931 31G	2538 931 31G	2538 934 34G	2538 934 34G	2538 938 38B
8.55 x 15	2538 931 31G	2538 931 31G	2538 934 34G	2538 934 34G	2538 937 37W
8.90 x 15	2538 928 28B	2538 928 28B	2538 930 30Y	2538 930 30Y	2538 933 33Y
9.00 x 15	2538 929 29BL	2538 929 29BL	2538 932 32BL	2538 932 32BL	2538 935 35O
9.15 x 15	2538 930 30Y	2538 930 30Y	2538 933 33Y	2538 933 33Y	2538 936 36R

TIRE SIZE	4.10 to 1 Ratio Pinion Teeth
B78 x 14	2538 944 44BL
C78 x 14	2538 943 43B
D78 x 14	2538 943 43B
E78 x 14	2538 942 42W
F78 x 14	2538 941 41R
G78 x 14	2538 940 40O
H78 x 14	2538 939 39G
F78 x 15	2538 940 40O
G78 x 15	2538 939 39G
H78 x 15	2538 938 38B
J78 x 15	2538 938 38B
L84 x 15	2538 937 37W
E70 x 14	2538 943 43B
F70 x 14	2538 942 42W
G70 x 14	2538 941 41R
H70 x 15	2538 939 39G
E60 x 15	2538 942 42W
F60 x 15	2538 942 42W
G60 x 15	2538 941 41R
6.95 x 14	2538 942 42W
6.45 x 14	2538 944 44BL
7.35 x 14	2538 942 42W
7.75 x 14	2538 941 41R
8.25 x 14	2538 940 40O
8.55 x 14	2538 939 39G
7.75 x 15	2538 941 41R
8.25 x 15	2538 940 40O
8.55 x 15	2538 939 39G
8.90 x 15	2538 935 35O
9.00 x 15	2538 937 37W
9.15 x 15	2538 938 38B

COLOR OF PINIONS

G-GREEN	R-RED BL-BLACK	W-WHITE	B-BLUE O-ORANGE	Y-YELLOW

NOTES

CARLINES					
	J - Challenger B - Barracuda	V - Valiant L - Dart	R - Belvedere - Satallite W - Coronet - Charger	P - Plymouth D - Dodge	C - Chrysler Y - Imperial

AR Indicates use as required.

# Indicates parts not listed in any previous parts book.

Numerals in parentheses ( ) refer to notes.

★ Indicates change or addition.

Printed in U.S.A.
January 1972

CODE	PART NAME	ENG. TYPE OR CU.IN.	V 1-2	B J 1-2	L 1-2	R 1-2	W 1-2	P 1-2	D 1-2	C 1	C 2	C 3	Y 1	PART NUMBER
	MANUAL TRANSMISSION													
	21-85-0 TRANSMISSION SPEEDOMETER GEAR AND PINION Cont'd.													
21-85-9	ADAPTER, Speedometer Drive Pinion, w/26 to 45 Tooth Pinions		1	1	1	1	1	1	1	1	—	—	—	2538 608
	w/21 to 25 Tooth Pinions	70	—	—	—	1	1	1	—	—	—	—	—	2892 994
		71	—	—	—	1	1	1	1	1	—	—	—	2892 994
	"O" Ring, Adapter, Rubber, 1 35/64" I.D.		1	1	1	1	1	1	1	1	—	—	—	6025 752
21-85-22	SEAL, Drive Pinion Adapter, Rubber		1	1	1	1	1	1	1	1	—	—	—	2538 588
21-85-23	RING, Speedometer Seal Retainer, Steel		1	1	1	1	1	1	1	1	—	—	—	2538 571
21-85-61	CLAMP, Speedometer Drive Pinion Adapter		1	1	1	1	1	1	1	1	—	—	—	2892 399
	SCREW, w/WASHER	70	1	1	1	1	1	1	1	1	—	—	—	180 077
		71	—	—	—	—	—	1	1	—	—	—	—	6028 783
	21-113-0 TRANSMISSION NEUTRAL STARTER AND BACK-UP LIGHT SWITCH													
	NOTE: See Code 8-56-2 for Manual Transmission Back-Up Light Switch													
	NOTE: See Code 8-52-42 for 4 Speed Manual Transmission Clutch Starter Switch													
	21-119-0 TRANSMISSION OIL PAN													
21-119-11	PLUG, Drain, w/426 and 440 Eng., w/4 Speed Trans.	8	—	1	—	1	1	—	—	—	—	—	—	2466 562

NOTES

CARLINES J - Challenger, B - Barracuda, V - Valiant, L - Dart, R - Belvedere - Satellite, W - Coronet - Charger, P - Plymouth, D - Dodge, C - Chrysler, Y - Imperial

AR Indicates use as required.

Numerals in parentheses ( ) refer to notes.

# Indicates parts not listed in any previous parts book.

★ Indicates change or addition.

Printed in U.S.A. January 1972

MANUAL TRANSMISSION

NOTE: All quantities are one (1) unless otherwise indicated in parenthesis

CODE	TRANSMISSION	3410 612 3 Speed A903	3410 693 3 Speed A230	3410 694 3 Speed A230	3410 695 3 Speed A230	3410 747 3 Speed A230	3410 766 3 Speed A230
21-01-0	**TRANSMISSION SETS OR PACKAGES**						
21-01-3	SEAL and GASKET PACKAGE	3420 066	3420 068	3420 067	3420 067	3420 067	3420 067
21-02-0	**TRANSMISSION VENT**						
21-02-6	VENT	1139 204	1139 204	1139 204	1139 204	1139 204	1139 204
21-03-0	**TRANSMISSION CASE**						
21-03-1	CASE	3410 056	3410 002	3410 002	3410 064	3410 002	3410 002
21-04-0	**TRANSMISSION CASE EXTENSION**						
21-04-1	EXTENSION	2892 836	3410 041	3410 005	3410 005	3410 041	3410 005
21-04-2	GASKET	1949 361	3410 008	3410 008	3410 008	3410 008	3410 008
21-04-11	BUSHING	2801 726	2801 726	2801 724	2801 724	2801 726	2801 724
21-09-0	**TRANSMISSION MAIN DRIVE PINION**						
21-09-2	PINION, 21T., 18T., 23 Splines, 10 17/32" lgh.	2204 944	———	———	———	———	———
	36T., 20T., 23 Splines, 11" lgh.	———	3410 009	3410 009	3410 066	3410 066	3410 066
21-09-5	BEARING, w/SNAP RING	1633 718	2124 516	2124 516	———	2124 516	2124 516
	w/o Snap Ring	———	3410 048	3410 048	2801 890	3410 048	3410 048
21-09-19	SLINGER, Brg. Oil	3410 413	———	———	———	———	———
21-09-23	SNAP RING, Brg. .088" thk. (AR)	6025 754	6025 754	6025 754	6025 754	6025 754	6025 754
	.091" thk. (AR)	6025 755	6025 755	6025 755	6025 755	6025 755	6025 755
	.094" thk. (AR)	6025 756	6025 756	6025 756	6025 756	6025 756	6025 756
	.097" thk. (AR)	6025 757	6025 757	6025 757	6025 757	6025 757	6025 757
	Outer	———	2124 518	2124 518	6027 225	2124 518	2124 518
21-09-25	WASHER, Brg.	631 877	———	———	———	———	———
21-09-29	RETAINER, Brg.	2204 491	3410 395	3410 395	3410 247	3410 395	3410 395
21-09-30	SEAL, Brg., Rubber Coated	2801 692	2801 692	2801 692	2801 692	2801 692	2801 692
21-09-31	SCREW, Brg. Retainer (3)	1920 101	———	———	———	———	———
	(4)	———	1920 101	1920 101	1920 101	1920 101	1920 101
21-09-33	GASKET, Brg. Retainer	672 709	2124 499	2124 499	2801 893	2124 499	2124 499
21-10-0	**TRANSMISSION MAIN DRIVE GEARS**						
21-10-3	GEAR, Low Speed	———	3410 012	3410 012	3410 068	3410 068	3410 068
21-10-4	GEAR, Sliding, First and Reverse, 29T., 32 Splines	2464 578	———	———	———	———	———
21-10-16	GEAR, Second Speed, 24T., 24T	2892 807	———	———	———	———	———
	36T., 24T	———	———	———	3410 067	3410 067	3410 067
	36T., 27T	———	3410 011	3410 011	———	———	———
21-10-72	GEAR, Reverse Speed, 34T., 32T	———	3410 013	3410 013	———	———	———
	34T., 28T	———	———	———	3410 069	3410 069	3410 069
21-11-0	**TRANSMISSION REVERSE IDLER GEAR**						
21-11-1	GEAR	1853 695	3410 018	3410 018	3410 072	3410 072	3410 072
21-11-2	ROLLER, Brg. (22)	666 927	666 927	666 927	666 927	666 927	666 927
21-11-9	WASHER (2)	666 924	3410 879	3410 879	3410 879	3410 879	3410 879

CARLINES J - Challenger, B - Barracuda; V - Valiant, L - Dart; R - Belvedere - Satallite, W - Coronet - Charger; P - Plymouth, D - Dodge; C - Chrysler, Y - Imperial

AR Indicates use as required.

= Indicates parts not listed in any previous parts book.

Numerals in parentheses ( ) refer to notes.

★ Indicates change or addition.

Printed in U.S.A.
January 1972

MANUAL TRANSMISSION

NOTE: All quantities are one (1) unless otherwise indicated in parenthesis

CODE	TRANSMISSION	3410 612 3 Speed A903	3410 693 3 Speed A230	3410 694 3 Speed A230	3410 695 3 Speed A230	3410 747 3 Speed A230	3410 766 3 Speed A230
21-12-0	**TRANSMISSION REVERSE IDLER GEAR SHAFT**						
21-12-1	SHAFT	1635 290	3410 210	3410 210	3410 210	3410 210	3410 210
	2 13/32" lgh.	3410 210	———	———	———	———	———
21-12-2	KEY	1635 293	1635 293	1635 293	1635 293	1635 293	1635 293
21-14-0	**TRANSMISSION CLUTCH GEAR**						
21-14-1	SYNCHRONIZER, Low	———	3410 582	3410 582	3410 582	3410 582	3410 582
	Second and Direct	———	3410 300	3410 300	3410 300	3410 300	3410 300
21-14-5	GEAR, Synchronizer	2204 619	———	———	———	———	———
21-14-6	SLEEVE, Synchronizer Clutch	1676 197	———	———	———	———	———
21-14-15	SPRING, Synchronizer						
	Stop Ring	2538 783	———	———	———	———	———
	Painted Orange	3410 428	———	———	———	———	———
	Synchronizer Low (2)	———	3410 554	3410 554	3410 554	3410 554	3410 554
	Synchronizer Second and Direct (2)	———	2892 740	2892 740	2892 740	2892 740	2892 740
21-14-19	RING, Synchronizer						
	Stop, Outer	2464 839	———	———	———	———	———
	Second Speed, Stop, Inner	3410 808	———	———	———	———	———
	Direct Speed Stop, Inner	3410 808	———	———	———	———	———
	Low Stop, Bronze	———	2892 288	2892 288	2892 288	2892 288	———
	Second and Direct Stop, Bronze (2)	———	2892 288	2892 288	2892 288	2892 288	2892 288
21-14-20	SNAP RING, Synchronizer, (AR)	6027 246	6024 131	6024 131	6024 131	6024 131	6024 131
21-14-21	SHIM, Synchronizer	2464 724	———	———	———	———	———
21-15-0	**TRANSMISSION COUNTERSHAFT GEAR**						
21-15-2	GEAR, 33T., 24T., 18T., 14T	2538 068	———	———	———	———	———
	29T., 23T., 16T., 16T	———	3410 020	3410 020	———	———	———
	31T., 25T., 17T., 13T	———	———	———	3410 073	3410 073	3410 073
21-15-33	WASHER, Thrust (2)	1633 763	3410 162	3410 162	3410 162	3410 162	3410 162
21-16-0	**TRANSMISSION MAIN OR OUTPUT SHAFT**						
21-16-3	SHAFT, 32T., 32T., 13T., 26T	2892 940	———	———	———	———	———
	40T., 40T., 13T., 26T	———	3410 043	———	———	3410 043	———
	40T., 40T., 13T., 30T	———	———	3410 010	3410 010	———	3410 010
21-17-0	**TRANSMISSION MAIN OR OUTPUT SHAFT PILOT BEARING**						
21-17-2	ROLLER (14)	1949 834	———	———	———	———	———
	(15)	———	1949 834	1949 834	1949 834	1949 834	1949 834
21-17-7	SNAP RING, Roller	601 108	862 173	862 173	862 173	862 173	862 173
21-19-0	**TRANSMISSION MAIN OR OUTPUT SHAFT BEARING**						
21-19-2	BEARING	1633 718	3410 048	3410 048	2801 890	3410 048	3410 048
21-19-15	SNAP RING, Inner, 1 13/32"						
	O.D. .086 thk. (AR)	6025 754	6025 754	6025 754	6025 754	6025 754	6025 754
	.091" thk. (AR)	6025 755	6025 755	6025 755	6025 755	6025 755	6025 755
	.094" thk. (AR)	6025 756	6025 756	6025 756	6025 756	6025 756	6025 756
	.097" thk. (AR)	6025 757	6025 757	6025 757	6025 757	6025 757	6025 757
	Outer, .086" thk. (AR)	640 280	———	———	———	———	———
	.089" thk. (AR)	631 809	———	———	———	———	———

CARLINES J - Challenger, B - Barracuda; V - Valiant, L - Dart; R - Belvedere - Satallite, W - Coronet - Charger; P - Plymouth, D - Dodge; C - Chrysler, Y - Imperial

AR Indicates use as required.

Numerals in parentheses ( ) refer to notes.

# Indicates parts not listed in any previous parts book.

★ Indicates change or addition.

Printed in U.S.A.
January 1972

MANUAL TRANSMISSION

NOTE: All quantities are one (1) unless otherwise indicated in parenthesis

CODE	TRANSMISSION	3410 612 3 Speed A903	3410 693 3 Speed A230	3410 694 3 Speed A230	3410 695 3 Speed A230	3410 747 3 Speed A230	3410 766 3 Speed A230
21-19-0	**TRANSMISSION MAIN OR OUTPUT SHAFT BEARING Cont'd.**						
21-19-15	SNAP RING Cont'd.						
	.092" thk. (AR)	631 810	———	———	———	———	———
	.093" thk. (AR)	———	6028 258	6028 258	6027 229	6028 258	6028 258
	.095" thk.	640 331	———	———	———	———	———
21-22-0	**TRANSMISSION MAIN OR OUTPUT SHAFT BEARING OIL SEAL**						
21-22-2	SEAL, Yoke, 2 1/2" O.D., Rubber, w/one Sealing Lip	2400 163	2400 163	———	———	2400 163	———
	2 3/4" O. D.	———	———	2400 300	2400 300	———	2400 300
21-23-0	**TRANSMISSION MAIN OR OUTPUT SHAFT BEARING RETAINER**						
21-23-2	RETAINER	———	3410 007	3410 007	3410 082	3410 007	3410 007
21-24-0	**TRANSMISSION COUNTERSHAFT**						
21-24-2	COUNTERSHAFT	1635 282	3410 026	3410 026	3410 026	3410 026	3410 026
21-24-22	KEY	1635 293	1635 293	1635 293	1635 293	1635 293	1635 293
21-25-0	**TRANSMISSION, COUNTERSHAFT BEARING**						
21-25-2	ROLLER (44)	666 927	———	———	———	———	———
	(88)	———	2124 502	2124 502	2124 502	2124 502	2124 502
21-25-4	SPACER	697 812	———	———	———	———	———
21-25-6	WASHER, Thrust (2)	1630 878	———	———	———	———	———
	Brg. (6)	———	2124 506	2124 506	2124 506	2124 506	2124 506
21-29-0	**TRANSMISSION GEARSHIFT CASE COVER OR HOUSING**						
21-29-3	COVER, Case	1949 345	———	———	———	———	———
	HOUSING, Gearshift	———	3410 029	3410 029	3410 029	3410 029	3410 029
	BOLT	———	6026 874	6026 874	6026 874	6026 874	6026 874
	(8)	———	6024 457	6024 457	6024 457	6024 457	6024 457
21-29-25	GASKET, Case Cover	1949 346	———	———	———	———	———
	Gearshift Hsg.	———	3410 030	3410 030	3410 030	3410 030	3410 030
21-34-0	**TRANSMISSION GEARSHIFT RAIL**						
21-34-42	PIN, Interlock	1949 356	———	———	———	———	———
21-34-45	SLEEVE, Interlock	1949 355	———	———	———	———	———
21-34-47	SPRING, Interlock	2205 131	3410 204	3410 204	3410 204	3410 204	3410 204
21-39-0	**TRANSMISSION GEARSHIFT FORK**						
21-39-3	FORK, Low and Reverse	1949 351	———	———	———	———	———
	Second and Direct	2125 059	———	———	———	———	———
	(2)	———	3410 038	3410 038	3410 038	3410 038	3410 038
21-42-0	**TRANSMISSION REMOTE CONTROL GEARSHIFT**						
21-42-11	LEVER, w/SHAFT, Gearshift, Low and Reverse	2801 938	3410 046	3410 046	3410 046	3410 046	3410 046
	Second and Direct	1949 352	3410 033	3410 033	3410 033	3410 033	3410 033
	PIN, Lever Shaft (2)	6022 161	———	———	———	———	———

CARLINES J - Challenger, B - Barracuda; V - Valiant, L - Dart; R - Belvedere - Satallite, W - Coronet - Charger; P - Plymouth, D - Dodge; C - Chrysler, Y - Imperial

AR Indicates use as required.

# Indicates parts not listed in any previous parts book.

Numerals in parentheses ( ) refer to notes.

★ Indicates change or addition.

Printed in U.S.A. January 1972

MANUAL TRANSMISSION

NOTE: All quantities are one (1) unless otherwise indicated in parenthesis

CODE	TRANSMISSION	3410 612 3 Speed A903	3410 693 3 Speed A230	3410 694 3 Speed A230	3410 695 3 Speed A230	3410 747 3 Speed A230	3410 766 3 Speed A230
21-42-0	**TRANSMISSION REMOTE CONTROL GEARSHIFT Cont'd.**						
21-42-23	LEVER, Gearshift Operating, Low and Reverse, V, L, w/198 and 225 Eng.	3410 362	———	———	———	———	———
	R, W, w/225 Eng.	3410 364	———	———	———	———	———
	Second and Direct, V, L, w/198 and 225 Eng.	3410 363	———	———	———	———	———
	R, W, w/225 Eng.	3410 365	———	———	———	———	———
	Low and Reverse, V, L, w/198, 225 and 318 Eng., Column Shift	———	3410 063	———	———	———	———
	Low and Reverse, V,L, w/198, 225, 318 and 340 Eng., Floor Shift, on Trans. Hsg.	———	3410 334	———	———	3410 334	———
	Low and Reverse, R,W, w/225 and 318 Eng., Column Shift	———	———	3410 296	———	———	———
	Low and Reverse, B,J, w/225, 318 and 383 Eng., Floor Shift, on Trans. Hsg.	———	———	3410 054	3410 054	———	3410 054
	Low and Reverse, P,D, w/225, 318 and 383 Eng., C, w/383 Eng., Column Shift	———	———	3410 037	3410 037	———	———
	Low and Reverse, R,W, w/383 Eng., Floor Shift, on Trans. Hsg.	———	———	———	3410 271	———	———
	Second and Direct, V, L, w/198, 225 and 318 Eng., Column Shift	———	3410 062	———	———	———	———
	Second and Direct, V, L, w/198, 225, 318 and 340 Eng., Floor Shift, on Trans. Hsg.	———	3410 053	———	———	3410 053	———
	Second and Direct, B,J, Floor Shift, on Trans. Hsg.	———	———	3410 49[illegible]	3410 490	———	3410 490
	Second and Direct, R,W, w/225 and 318 Eng., Column Shift	———	———	3410 295	———	———	———
	Second and Direct, P,D, w/225, 318 and 383 Eng., C, w 383 Eng., Column Shift	———	———	3410 036	3410 036	———	———
	Second and Direct, R,W, w/383 Eng., Floor Shift, on Trans. Hsg.	———	———	———	3410 270	———	———
	First and Reverse, on Mechanism	———	2950 948	———	———	2950 948	2950 948
	Second and Third, on Mechanism	———	2950 947	———	———	2950 947	2950 947
	Gearshift Interlock (2)	3410 207	3410 207	3410 207	3410 207	3410 207	3410 207
	CLIP, Interlock Lever	6025 071	———	———	———	———	———
	PIN, Interlock Lever	———	6028 261	6028 261	6028 261	6028 261	6028 261

CARLINES J - Challenger, B - Barracuda; V - Valiant, L - Dart; R - Belvedere - Satallite, W - Coronet - Charger; P - Plymouth, D - Dodge; C - Chrysler, Y - Imperial

AR Indicates use as required. Numerals in parentheses ( ) refer to notes.

# Indicates parts not listed in any previous parts book. ★ Indicates change or addition.

Printed in U.S.A. January 1972

MANUAL TRANSMISSION

NOTE: All quantities are one (1) unless otherwise indicated in parenthesis

CODE	TRANSMISSION	3410 612 3 Speed A903	3410 693 3 Speed A230	3410 694 3 Speed A230	3410 695 3 Speed A230	3410 747 3 Speed A230	3410 766 3 Speed A230
21-42-0	**TRANSMISSION REMOTE CONTROL GEARSHIFT Cont'd.**						
21-42-23	LEVER Cont'd.						
	SNAP RING, Interlock Lever Pin	———	6025 857	6025 857	6025 857	6025 857	6025 857
	NUT, Gearshift Operating Lever (2)	6028 034	———	———	———	———	———
21-42-25	WASHER, Interlock Lever Spring, Low and Reverse	6026 239	———	———	———	———	———
21-42-28	PIN, Interlock, Low and Reverse	2538 013	———	———	———	———	———
21-42-29	PAWL, Interlock Lever, Low and Reverse	2538 014	———	———	———	———	———
21-42-31	SEAL, Gearshift Lever Shaft Oil (2)	1949 350	1536 267	1536 267	1536 267	1536 267	1536 267

MANUAL TRANSMISSION

NOTE: All quantities are one (1) unless otherwise indicated in parenthesis

CODE	TRANSMISSION	3410 699 4 Speed A833	3410 681 4 Speed A833	3410 682 4 Speed A833	3410 683 4 Speed A833	3410 679 4 Speed A833	3410 697 4 Speed A833
21-01-0	**TRANSMISSION SETS OR PACKAGES**						
21-01-3	SEAL and GASKET PACKAGE	3420 069	3420 069	3420 069	3004 614	3420 069	3420 069
21-02-0	**TRANSMISSION VENT**						
21-02-6	VENT	1139 204	1139 204	1139 204	1139 204	1139 204	1139 204
21-03-0	**TRANSMISSION CASE**						
21-03-1	CASE	3410 193	3410 193	3410 194	3410 194	3410 193	3410 193
21-04-0	**TRANSMISSION CASE EXTENSION**						
21-04-1	EXTENSION	2892 961	2892 961	3410 394	3410 394	3410 394	3410 394
21-04-2	GASKET	2464 059	2464 059	2464 059	2464 059	2464 059	2464 059
21-04-11	BUSHING	2801 724	2801 724	2801 724	2801 724	2801 724	2801 724
21-04-17	BAFFLE, Vent	2538 785	2538 785	2538 785	2538 785	2538 785	2538 785
21-09-0	**TRANSMISSION MAIN DRIVE PINION**						
21-09-2	PINION, 23T., 22T., 36 Splines, 11 1/4" lgh.	2466 427	———	———	———	2466 427	———
	23T., 24T., 36 Splines, 11 15/64" lgh.	———	2466 406	2466 406	———	———	2466 406
	18T., 21T., 36 Splines, 11 15/64" lgh.	———	———	———	2538 196	———	———
21-09-5	BEARING, w/SNAP RING	2124 516	2124 516	———	———	2124 516	2124 516
	w/o Snap Ring	———	———	2801 890	2801 890	———	———
21-09-23	SNAP RING, Brg., Outer, Std.	2124 518	2124 518	———	———	2124 518	2124 518
	Std.	———	———	6027 225	6027 225	———	———
	.088" thk. (AR)	6025 754	6025 754	6025 754	6025 754	6025 754	6025 754
	.091" thk. (AR)	6025 755	6025 755	6025 755	6025 755	6025 755	6025 755
	.094" thk. (AR)	6025 756	6025 756	6025 756	6025 756	6025 756	6025 756
	.097" thk. (AR)	6025 757	6025 757	6025 757	6025 757	6025 757	6025 757

CARLINES J - Challenger, B - Barracuda; V - Valiant, L - Dart; R - Belvedere - Satallite, W - Coronet - Charger; P - Plymouth, D - Dodge; C - Chrysler, Y - Imperial

AR Indicates use as required.

= Indicates parts not listed in any previous parts book.

Numerals in parentheses ( ) refer to notes.

★ Indicates change or addition.

Printed in U.S.A. January 1972

MANUAL TRANSMISSION

NOTE: All quantities are one (1) unless otherwise indicated in parenthesis

CODE	TRANSMISSION	3410 699 4 Speed A833	3410 681 4 Speed A833	3410 682 4 Speed A833	3410 683 4 Speed A833	3410 679 4 Speed A833	3410 697 4 Speed A833
21-09-0	**TRANSMISSION MAIN DRIVE PINION Cont'd.**						
21-09-29	RETAINER, Brg.	3410 395	3410 395	3410 247	2801 892	3410 395	3410 395
21-09-30	SEAL, Pinion	2801 692	2801 692	2801 692	———	2801 692	2801 692
	Pinion Brg.	———	———	———	2801 733	———	———
21-09-31	SCREW, Brg. Retainer (4)	1920 101	1920 101	1920 101	1920 101	1920 101	1920 101
21-09-33	GASKET, Brg. Retainer	2124 499	2124 499	2801 893	2801 893	2124 499	2124 499
21-10-0	**TRANSMISSION MAIN DRIVE GEARS**						
21-10-3	GEAR, Low Speed	2464 018	2464 018	2464 018	2801 107	2464 018	2464 018
21-10-16	GEAR, Second Speed, 36T., 32T	2464 069	———	———	———	2464 069	———
	36T., 34T	———	2464 017	2464 017	———	———	2464 017
	36T., 30T	———	———	———	2801 105	———	———
21-10-31	GEAR, Third Speed	2464 659	2464 016	2464 016	2538 202	2464 659	2464 016
21-11-0	**TRANSMISSION REVERSE IDLER GEAR**						
21-11-1	GEAR, 22T	2464 073	2464 073	2464 073	2464 073	2464 073	2464 073
21-12-0	**TRANSMISSION REVERSE IDLER GEAR SHAFT**						
21-12-1	SHAFT	2464 023	2464 023	2464 023	2464 023	2464 023	2464 023
21-12-2	KEY	1635 293	1635 293	1635 293	1635 293	1635 293	1635 293
21-14-0	**TRANSMISSION CLUTCH GEAR**						
21-14-1	SYNCHRONIZER, First, Second and Reverse	3410 305	3410 305	3410 305	3410 305	3410 305	3410 305
	Third and Direct	3410 300	3410 300	3410 300	3410 300	3410 300	3410 300
	SNAP RING, Low, Second and Reverse	6024 131	6024 131	6024 131	6024 131	6024 131	6024 131
	Third and Direct	6024 131	6024 131	6024 131	6024 131	6024 131	6024 131
21-14-15	SPRING, Synchronizer, Low and Second (2)	2892 740	2892 740	2892 740	2892 740	2892 740	2892 740
	Third and Direct	2892 740	2892 740	2892 740	2892 740	2892 740	2892 740
21-14-19	RING, Synchronizer Stop, Bronze, w/3 Lugs (4)	2892 288	2892 288	2892 288	2892 288	2892 288	2892 288
	w/3 Slots (4)	2801 381	2801 381	2801 381	2801 381	2801 381	2801 381
21-15-0	**TRANSMISSION COUNTERSHAFT GEAR**						
21-15-2	GEAR, 33T., 29T., 25T., 17T., 17T	2464 658	———	———	———	2464 658	———
	27T., 24T., 20T., 17T., 16T	———	———	———	2801 109	———	———
	31T., 27T., 23T., 17T., 17T	———	2464 011	2464 011	———	———	2464 011
21-15-33	WASHER, Thrust (2)	2538 207	2538 207	2538 207	2538 207	2538 207	2538 207
21-16-0	**TRANSMISSION MAIN OR OUTPUT SHAFT**						
21-16-3	SHAFT, 40T., 40T., 13T., 30T., 23 1/4" lgh.	2892 909	2892 909	———	———	———	———
	40T., 40T., 13T., 30T., 27 23/64" lgh.	———	———	2892 942	2892 942	2892 942	2892 942
21-17-0	**TRANSMISSION MAIN OR OUTPUT SHAFT PILOT BEARING**						
21-17-2	ROLLER (16)	1949 834	1949 834	1949 834	1949 834	1949 834	1949 834
21-17-7	SNAP RING, Roller	6024 130	6024 130	6024 130	6024 130	6024 130	6024 130

CARLINES J - Challenger, B - Barracuda, V - Valiant, L - Dart, R - Belvedere - Satallite, W - Coronet - Charger, P - Plymouth, D - Dodge, C - Chrysler, Y - Imperial

AR Indicates use as required.

# Indicates parts not listed in any previous parts book.

Numerals in parentheses ( ) refer to notes.

★ Indicates change or addition.

Printed in U.S.A. January 1972

MANUAL TRANSMISSION

NOTE: All quantities are one (1) unless otherwise indicated in parenthesis

CODE	TRANSMISSION		3410 699 4 Speed A833	3410 681 4 Speed A833	3410 682 4 Speed A833	3410 683 4 Speed A833	3410 679 4 Speed A833	3410 697 4 Speed A833
21-19-0	**TRANSMISSION MAIN OR OUTPUT SHAFT BEARING**							
21-19-2	BEARING, Frt.		3410 048	3410 048	2801 890	2801 890	2801 890	2801 890
21-19-15	SNAP RING, Inner,							
	(AR)	.086" thk	6025 754	6025 754	6025 754	6025 754	6025 754	6025 754
		.091" thk	6025 755	6025 755	6025 755	6025 755	6025 755	6025 755
		.094" thk.	6025 756	6025 756	6025 756	6025 756	6025 756	6025 756
		.097" thk	6025 757	6025 757	6025 757	6025 757	6025 757	6025 757
	Outer (AR)	.087" thk.	6024 125	6024 125	———	———	———	———
		.093" thk.	———	———	6027 229	6027 229	6027 229	6027 229
21-22-0	**TRANSMISSION MAIN OR OUTPUT SHAFT BEARING OIL SEAL**							
21-22-2	SEAL, Yoke, 2 3/4" O.D.		2400 300	2400 300	2400 300	2400 300	2400 300	2400 300
21-24-0	**TRANSMISSION COUNTERSHAFT**							
21-24-2	COUNTERSHAFT		2464 012	2464 012	2464 012	2464 012	2464 012	2464 012
21-24-22	KEY		1635 293	1635 293	1635 293	1635 293	1635 293	1635 293
21-25-0	**TRANSMISSION COUNTERSHAFT BEARING**							
21-25-2	ROLLER (76)		2464 744	2464 744	2464 744	2464 744	2464 744	2464 744
21-25-4	SPACER		2464 013	2464 013	2464 013	2464 013	2464 013	2464 013
21-25-6	WASHER (4)		2464 743	2464 743	2464 743	2464 743	2464 743	2464 743
21-29-0	**TRANSMISSION GEARSHIFT CASE COVER OR HOUSING**							
21-29-3	HOUSING		2464 001	2464 001	2464 001	2464 001	2464 001	2464 001
	BOLT (7)		6024 457	6024 457	6024 457	6024 457	6024 457	6024 457
			6026 874	6026 874	6026 874	6026 874	6026 874	6026 874
21-29-25	GASKET		2464 037	2464 037	2464 037	2464 037	2464 037	2464 037
21-34-0	**TRANSMISSION GEARSHIFT RAIL**							
21-34-42	PIN, Interlock		2464 046	2464 046	2464 046	2464 046	2464 046	2464 046
21-34-44	PLUG, Reverse Lever Detent		1139 153	1139 153	1139 153	1139 153	1139 153	1139 153
21-34-45	SLEEVE, Interlock		2464 045	2464 045	2464 045	2464 045	2464 045	2464 045
21-34-46	GASKET, Reverse Lever Detent Plug		1302 807	1302 807	1302 807	1302 807	1302 807	1302 807
21-34-47	SPRING, Reverse Lever Detent Ball		2466 457	2466 457	2466 457	2466 457	2466 457	2466 457
	Gearshift Interlock Ball		2464 047	2464 047	2464 047	2464 047	2464 047	2464 047
	Gearshift Interlock Lever		3410 204	3410 204	3410 204	3410 204	3410 204	3410 204
21-34-51	RETAINER, Lever Detent Spring		2464 052	2464 052	2464 052	2464 052	2464 052	2464 052
21-34-53	GASKET, Gearshift Lever Detent Spring Retainer		2464 053	2464 053	2464 053	2464 053	2464 053	2464 053
21-39-0	**TRANSMISSION GEARSHIFT FORK**							
21-39-3	FORK, Low and Second		2538 421	2538 421	2538 421	2538 421	2538 421	2538 421
	Third and Direct		2466 961	2466 961	2466 961	2466 961	2466 961	2466 961
	Reverse		2464 051	2464 051	2464 051	2464 051	2464 051	2464 051

CARLINES J - Challenger, B - Barracuda; V - Valiant, L - Dart; R - Belvedere - Satallite, W - Coronet - Charger; P - Plymouth, D - Dodge; C - Chrysler, Y - Imperial

AR Indicates use as required.

Numerals in parentheses ( ) refer to notes.

# Indicates parts not listed in any previous parts book.

★ Indicates change or addition.

Printed in U.S.A. January 1972

MANUAL TRANSMISSION

NOTE: All quantities are one (1) unless otherwise indicated in parenthesis

CODE	TRANSMISSION	3410 699 4 Speed A833	3410 681 4 Speed A833	3410 682 4 Speed A833	3410 683 4 Speed A833	3410 679 4 Speed A833	3410 697 4 Speed A833
21-42-0	**TRANSMISSION REMOTE CONTROL GEARSHIFT**						
21-42-11	LEVER, Low and Second, Stamped Type "A"	2466 221	2466 221	2466 221	2466 221	2466 221	2466 221
	Low and Second, Stamped Type "B"	2466 222	2466 222	2466 222	2466 222	2466 222	2466 222
	Third and Direct	2464 038	2464 038	2464 038	2464 038	2464 038	2464 038
	Reverse	2466 295	2466 295	2466 295	2466 295	2466 295	2466 295
	BOLT, Gearshift Control Lever Mtg. (2)	———	———	9421 218	9421 218	———	———
21-42-23	LEVER, Operating, Low and Second	2538 575	2538 575	———	———	———	———
	B,J, Stamped 367	———	———	3410 367	3410 367	3410 367	3410 367
	B,J, Stamped 058	———	———	3515 058	3515 058	3515 058	3515 058
	R, W	———	———	2892 891	2892 891	———	———
	Third and Direct	2538 576	2538 576	———	———	———	———
	B,J, Stamped 366	———	———	3410 366	3410 366	3410 366	3410 366
	B,J, Stamped 057	———	———	3515 057	3515 057	3515 057	3515 057
	R, W	———	———	2892 890	2892 890	———	———
	Reverse	2892 967	2892 967	2892 967	2892 967	———	———
	B, J	———	———	3410 368	3410 368	3410 368	3410 368
	NUT, (AR)	6028 034	6028 034	6028 034	6028 034	6028 034	6028 034
21-42-31	SEAL, Gearshift Lever Shaft Oil (3)	1536 267	1536 267	1536 267	1536 267	1536 267	1536 267

NOTE: All quantities are one (1) unless otherwise indicated in parenthesis

CODE	TRANSMISSION	3410 790 4 Speed A833
21-01-0	**TRANSMISSION SETS OR PACKAGES**	
21-01-3	SEAL and GASKET PACKAGE	3420 069
21-02-0	**TRANSMISSION VENT**	
21-02-6	VENT	1139 204
21-03-0	**TRANSMISSION CASE**	
21-03-1	CASE	3410 193
21-04-0	**TRANSMISSION CASE EXTENSION**	
21-04-1	EXTENSION	3410 394
21-04-2	GASKET	2464 059
21-04-11	BUSHING	2801 724
21-04-17	BAFFLE, Vent	2538 785
21-09-0	**TRANSMISSION MAIN DRIVE PINION**	
21-09-2	PINION	3410 409
21-09-5	BEARING, w/SNAP RING	2124 516
	w/o Snap Ring	3410 048
21-09-23	SNAP RING, Brg., Outer	2124 518
	.088" thk. (AR)	6025 754
	.091" thk. (AR)	6025 755
	.094" thk. (AR)	6025 756
	.097" thk. (AR)	6025 757
21-09-29	RETAINER, Brg.	3410 395
21-09-30	SEAL, Pinion	2801 692

CARLINES J - Challenger, B - Barracuda; V - Valiant, L - Dart; R - Belvedere Satellite, W - Coronet - Charger; P - Plymouth, D - Dodge; C - Chrysler, Y - Imperial

AR Indicates use as required.

# Indicates parts not listed in any previous parts book.

Numerals in parentheses ( ) refer to notes.

★ Indicates change or addition.

Printed in U.S.A.
January 1972

MANUAL TRANSMISSION

NOTE: All quantities are one (1) unless otherwise indicated in parenthesis

CODE	TRANSMISSION	3410 790 4 Speed A833

21-09-0 TRANSMISSION MAIN DRIVE PINION Cont'd.

21-09-31	SCREW, Brg. Retainer (4)	1920 101
21-09-33	GASKET, Brg. Retainer	2124 499

21-10-0 TRANSMISSION MAIN DRIVE GEARS

21-10-3	GEAR, Low Speed	2464 018
21-10-16	GEAR, Second Speed 36T, 34T	2464 017
21-10-31	GEAR, Third Speed	2464 016

21-11-0 TRANSMISSION REVERSE IDLER GEAR

21-11-1	GEAR, 22T	2464 073

21-12-0 TRANSMISSION REVERSE IDLER GEAR SHAFT

21-12-1	SHAFT	2464 023
21-12-2	KEY	1635 293

21-14-0 TRANSMISSION CLUTCH GEAR

21-14-1	SYNCHRONIZER, First, Second and Reverse	3410 305
	Third and Direct	3410 300
	SNAP RING, Low, Second and Reverse	6024 131
	Third and Direct	6024 131
21-14-15	SPRING, Synchronizer, Low and Second (2)	2892 740
	Third and Direct (2)	2892 740
21-14-19	RING, Synchronizer Stop (4)	2892 288

21-15-0 TRANSMISSION COUNTERSHAFT GEAR

21-15-2	GEAR, 30T., 26T., 23T., 17T., 17T.	3410 412
21-15-33	WASHER, Thrust (2)	2538 207

21-16-0 TRANSMISSION MAIN OR OUTPUT SHAFT

21-16-3	SHAFT, 40T, 40T, 13T, 30T, 27 23/64" lgh.	2892 942

21-17-0 TRANSMISSION MAIN OR OUTPUT SHAFT PILOT BEARING

21-17-2	ROLLER, (16)	1949 834
21-17-7	SNAP RING, Roller	6024 130

21-19-0 TRANSMISSION MAIN OR OUTPUT SHAFT BEARING

21-19-2	BEARING, Frt.	2801 890
21-19-15	SNAP RING, Inner,	
	(AR) .086" thk.	6025 754
	(AR) .091" thk.	6025 755
	(AR) .094" thk.	6025 756
	(AR) .097" thk.	6025 757
	Outer (AR) .093" thk.	6027 229

21-22-0 TRANSMISSION MAIN OR OUTPUT SHAFT BEARING OIL SEAL

21-22-2	SEAL, Yoke, 2 3/4" O.D.	2400 300

MANUAL TRANSMISSION

NOTE: All quantities are one (1) unless otherwise indicated in parenthesis

CODE	TRANSMISSION	3410 790 4 Speed A833

21-24-0 TRANSMISSION COUNTERSHAFT

21-24-2	COUNTERSHAFT	2464 012
21-24-22	KEY	1635 293

21-25-0 TRANSMISSION COUNTERSHAFT BEARING

21-25-2	ROLLER (76)	2464 744
21-25-4	SPACER	2464 013
21-25-6	WASHER (4)	2464 743

21-29-0 TRANSMISSION GEARSHIFT CASE COVER OR HOUSING

21-29-3	HOUSING	2464 001
	BOLT (7)	6024 457 6026 874
21-29-25	GASKET	2464 037

21-34-0 TRANSMISSION GEARSHIFT RAIL

21-34-42	PIN, Interlock	2464 046
21-34-44	PLUG, Reverse Lever Detent	1139 153
21-34-45	SLEEVE, Interlock	2464 045
21-34-46	GASKET, Reverse Lever Detent Plug	1302 807
21-34-47	SPRING, Reverse Lever Detent Ball	2466 457
	Gearshift Interlock Ball	2464 047
	BALL, Gearshift Interlock (2)	147 500
21-34-51	RETAINER, Lever Detent Spring	2464 052
21-34-53	GASKET, Gearshift Lever Detent Spring Retainer	2464 053

21-39-0 TRANSMISSION GEARSHIFT FORK

21-39-3	FORK, Low and Second	2538 421
	Third and Direct	2466 961
	Reverse	2464 051

21-42-0 TRANSMISSION REMOTE CONTROL GEARSHIFT

21-42-11	LEVER, Low and Second, Type "A"	2466 221
	Low and Second, Type "B"	2466 222
	Third and Direct	2464 038
	Reverse	2466 295
21-42-23	LEVER, Operating, Low and Second	3410 367
	Third and Direct	3410 366
	Reverse	3410 368
	Nut (AR)	6028 034
21-42-31	SEAL, Gearshift Lever Shaft Oil (3)	1536 267

MANUAL TRANSMISSION

NOTE: All quantities are one (1) unless otherwise indicated in parenthesis

CODE	TRANSMISSION	3410 785 3 Speed A903	3515 832 3 Speed A230	3515 833 3 Speed A230	3515 834 3 Speed A230	3515 835 3 Speed A230	3515 836 3 Speed A230
21-01-0	**TRANSMISSION SETS OR PACKAGES**						
21-01-3	SEAL and GASKET PACKAGE	3420 066	3420 068	3420 068	3420 067	3420 067	3420 067
21-02-0	**TRANSMISSION VENT**						
21-02-6	VENT	1630 746	1630 746	1630 746	1630 746	1139 204	1139 204
21-03-0	**TRANSMISSION CASE**						
21-03-1	CASE	3515 015	———	———	———	3410 064	———
	Used UP TO 10/23/70	———	3410 002	3410 002	3410 002	———	3410 002
	Used AFTER 10/23/70	———	= 3515 438	= 3515 438	= 3515 438	———	= 3515 438
21-04-0	**TRANSMISSION CASE EXTENSION**						
21-04-1	EXTENSION	2892 836	3410 041	3410 041	3410 005	3410 005	3410 005
21-04-2	GASKET	1949 361	3410 008	3410 008	3410 008	3410 008	3410 008
21-04-11	BUSHING	2801 726	2801 726	2801 726	2801 724	2801 724	2801 724
21-09-0	**TRANSMISSION MAIN DRIVE PINION**						
21-09-2	PINION	3410 550	———	———	———	———	———
	36T., 20T., 23 Splines, 11" lgh.	———	3410 066	3410 009	3410 009	3410 066	3410 066
21-09-5	BEARING, w/SNAP RING	1633 718	2124 516	2124 516	2124 516	———	2124 516
	w/o Snap Ring	———	3410 048	3410 048	3410 048	2801 890	3410 048
21-09-19	SLINGER, Brg. Oil	3410 413	———	———	———	———	———
21-09-23	SNAP RING, Brg. .088" thk. (AR)	6025 754	6025 754	6025 754	6025 754	6025 754	6025 754
	.091" thk. (AR)	6025 755	6025 755	6025 755	6025 755	6025 755	6025 755
	.094" thk. (AR)	6025 756	6025 756	6025 756	6025 756	6025 756	6025 756
	.097" thk. (AR)	6025 757	6025 757	6025 757	6025 757	6025 757	6025 757
	Outer	———	2124 518	2124 518	2124 518	6027 225	2124 518
21-09-25	WASHER, Brg.	631 877	———	———	———	———	———
21-09-29	RETAINER, Brg.	2204 491	3410 395	3410 395	3410 395	3410 247	3410 395
21-09-30	SEAL, Brg., Rubber Coated	2801 692	2801 692	2801 692	2801 692	2801 692	2801 692
21-09-31	SCREW, Brg. Retainer (3)	1920 101	———	———	———	———	———
	(4)	———	1920 101	1920 101	1920 101	1920 101	1942 101
21-09-33	GASKET, Brg. Retainer	672 709	2124 499	2124 499	2124 499	2801 893	2124 499
21-10-0	**TRANSMISSION MAIN DRIVE GEARS**						
21-10-3	GEAR, Low Speed	———	3410 068	3410 012	3410 012	3410 068	3410 068
21-10-4	GEAR, Sliding, First and Reverse, 29T., 32 Spline	2464 578	———	———	———	———	———
21-10-16	GEAR, Second Speed, 24T., 24T	2892 807	———	———	———	———	———
	36T., 24T	———	3410 067	———	———	3410 067	3410 067
	36T., 27T	———	———	3410 011	3410 011	———	———
21-10-72	GEAR, Reverse Speed, 34T., 32T	———	———	3410 013	3410 013	———	———
	34T., 28T	———	3410 069	———	———	3410 069	3410 069
21-11-0	**TRANSMISSION REVERSE IDLER GEAR**						
21-11-1	GEAR	1853 695	3410 072	3410 018	3410 018	3410 072	3410 072
21-11-2	ROLLER, Brg. (22)	666 927	666 927	666 927	666 927	666 927	666 927

CARLINES J - Challenger, B - Barracuda; V - Valiant, L - Dart; R Belvedere - Satallite, W - Coronet - Charger; P - Plymouth, D - Dodge; C - Chrysler, Y - Imperial

AR Indicates use as required.

= Indicates parts not listed in any previous parts book.

Numerals in parentheses ( ) refer to notes.

★ Indicates change or addition.

Printed in U.S.A. January 1972

MANUAL TRANSMISSION

NOTE: All quantities are one (1) unless otherwise indicated in parenthesis

CODE	TRANSMISSION	3410 785 3 Speed A903	3515 832 3 Speed A230	3515 833 3 Speed A230	3515 834 3 Speed A230	3515 835 3 Speed A230	3515 836 3 Speed A230
21-11-0	**TRANSMISSION REVERSE IDLER GEAR Cont'd.**						
21-11-9	WASHER (2)	666 924	3410 879	3410 879	3410 879	3410 879	3410 879
	Steel, w/Bronze Side (2)	———	= 3515 472	= 3515 472	= 3515 472	= 3515 472	= 3515 472
21-12-0	**TRANSMISSION REVERSE IDLER GEAR SHAFT**						
21-12-1	SHAFT	1635 290	3410 210	3410 210	3410 210	3410 210	3410 210
	2 13/32" lgh.	3410 210	———	———	———	———	———
21-12-2	KEY	1635 293	1635 293	1635 293	1635 293	1635 293	1635 293
21-14-0	**TRANSMISSION CLUTCH GEAR**						
21-14-1	SYNCHRONIZER	2892 811	———	———	———	———	———
	Low	———	3410 582	3410 582	3410 582	3410 582	3410 582
	Second and Direct	———	3515 428	3515 428	3515 428	3515 428	3515 428
21-14-5	GEAR, Synchronizer	2204 619	———	———	———	———	———
21-14-6	SLEEVE, Synchronizer Clutch	1676 197	———	———	———	———	———
21-14-15	SPRING, Synchronizer						
	Stop Ring	2538 783	———	———	———	———	———
	Painted Orange	3410 428	———	———	———	———	———
	Synchronizer Low (2)	———	3410 554	3410 554	3410 554	3410 554	3410 554
	Second and Direct (2)	———	3410 554	3410 554	3410 554	3410 554	3410 554
21-14-19	RING, Synchronizer						
	Stop, Outer	2464 839	———	———	———	———	———
	Second Speed Stop, Inner	3410 808	———	———	———	———	———
	Direct Speed Stop, Inner	3410 808	———	———	———	———	———
	Low Stop, Bronze, w/3 Lugs	———	3515 023	3515 023	3515 023	3515 023	3515 023
	Second and Direct, Stop, w/3 Lugs (2)	———	3515 023	3515 023	3515 023	3515 023	3515 023
21-14-20	SNAP RING, Synchronizer, (AR)	6027 246	6024 131	6024 131	6024 131	6024 131	6024 131
21-14-21	SHIM, Synchronizer	2464 724	———	———	———	———	———
21-15-0	**TRANSMISSION COUNTERSHAFT GEAR**						
21-15-2	GEAR, 33T., 24T., 18T., 14T	2538 068	———	———	———	———	———
	29T., 23T., 16T., 16T	———	———	3410 020	3410 020	———	———
	31T., 25T., 17T., 13T	———	3410 073	———	———	3410 073	3410 073
21-15-33	WASHER, Thrust (2)	1633 763	3410 162	3410 162	3410 162	3410 162	3410 162
21-16-0	**TRANSMISSION MAIN OR OUTPUT SHAFT**						
21-16-3	SHAFT, 32T., 32T., 13T., 26T	2892 940	———	———	———	———	———
	40T., 40T., 13T., 26T	———	3410 043	3410 043	———	———	———
	40T., 40T., 13T., 30T	———	———	———	3410 010	3410 010	3410 010
21-17-0	**TRANSMISSION MAIN OR OUTPUT SHAFT PILOT BEARING**						
21-17-2	ROLLER (14)	1949 834	———	———	———	———	———
	(15)	———	1949 834	1949 834	1949 834	1949 834	1949 834
21-17-7	SNAP RING, Roller	601 108	862 173	862 173	862 173	862 173	862 173
21-19-0	**TRANSMISSION MAIN OR OUTPUT SHAFT BEARING**						
21-19-2	BEARING	1633 718	3410 048	3410 048	3410 048	2801 890	3410 048

CARLINES J - Challenger, B - Barracuda, V - Valiant, L - Dart, R - Belvedere - Satellite, W - Coronet - Charger, P - Plymouth, D - Dodge, C - Chrysler, Y - Imperial

AR Indicates use as required.

Numerals in parentheses ( ) refer to notes.

# Indicates parts not listed in any previous parts book.

★ Indicates change or addition.

Printed in U.S.A. January 1972

MANUAL TRANSMISSION

NOTE: All quantities are one (1) unless otherwise indicated in parenthesis

CODE	TRANSMISSION	3410 785 3 Speed A903	3515 832 3 Speed A230	3515 833 3 Speed A230	3515 834 3 Speed A230	3515 835 3 Speed A230	3515 836 3 Speed A230
21-19-0	**TRANSMISSION MAIN OR OUTPUT SHAFT BEARING Cont'd.**						
21-19-15	SNAP RING, Inner, 1 13/32"						
	O.D. .086" thk. (AR)	6025 754	6025 754	6025 754	6025 754	6025 754	6025 754
	.091" thk. (AR)	6025 755	6025 755	6025 755	6025 755	6025 755	6025 755
	.094" thk. (AR)	6025 756	6025 756	6025 756	6025 756	6025 756	6025 756
	.097" thk. (AR)	6025 757	6025 757	6025 757	6025 757	6025 757	6025 757
	Outer, .086" thk. (AR)	640 280	———	———	———	———	———
	.089" thk. (AR)	631 809	———	———	———	———	———
	.092" thk. (AR)	631 810	———	———	———	———	———
	.093" thk. (AR)	———	6028 258	6028 258	6028 258	6027 229	6028 258
	.095" thk. (AR)	640 331	———	———	———	———	———
21-22-0	**TRANSMISSION MAIN OR OUTPUT SHAFT BEARING OIL SEAL**						
21-22-2	SEAL, Yoke, 2 1/2" O.D., Rubber, w/one Sealing Lip	2400 163	2400 163	2400 163	———	———	———
	2 3/4" O.D.	———	———	———	2400 300	2400 300	2400 300
21-23-0	**TRANSMISSION MAIN OR OUTPUT SHAFT BEARING RETAINER**						
21-23-2	RETAINER	———	3410 007	3410 007	3410 007	3410 082	3410 007
21-24-0	**TRANSMISSION COUNTERSHAFT**						
21-24-2	COUNTERSHAFT	1635 282	3410 026	3410 026	3410 026	3410 026	3410 026
21-24-22	KEY	1635 293	1635 293	1635 293	1635 293	1635 293	1635 293
21-25-0	**TRANSMISSION COUNTERSHAFT BEARING**						
21-25-2	ROLLER (44)	666 927	———	———	———	———	———
	(88)	———	2124 502	2124 502	2124 502	2124 502	2124 502
21-25-4	SPACER	697 812	———	———	———	———	———
21-25-6	WASHER, Thrust (2)	1630 878	———	———	———	———	———
	Brg. (6)	———	2124 506	2124 506	2124 506	2124 506	2124 506
21-29-0	**TRANSMISSION GEARSHIFT CASE COVER OR HOUSING**						
21-29-3	COVER, Case	1949 345	———	———	———	———	———
	HOUSING, Gearshift	———	3410 921	3410 921	3410 921	3410 921	3410 921
	BOLT	———	6026 874	6026 874	6026 874	6026 874	6026 874
	(8)	———	6024 457	6024 457	6024 457	6024 457	6024 457
21-29-25	GASKET, Case Cover	1949 346	———	———	———	———	———
	Gearshift Hsg.	———	3410 030	3410 030	3410 030	3410 030	3410 030
21-34-0	**TRANSMISSION GEARSHIFT RAIL**						
21-34-42	Pin, Interlock	1949 356	———	———	———	———	———
21-34-45	SLEEVE, Interlock	1949 355	———	———	———	———	———
21-34-47	SPRING, Interlock	2205 131	3410 204	3410 204	3410 204	3410 204	3410 204
	WASHER	6026 239	———	———	———	———	———
21-39-0	**TRANSMISSION GEARSHIFT FORK**						
21-39-3	FORK, Low and Reverse	1949 351	———	———	———	———	———
	Second and Direct	3410 561	———	———	———	———	———
	(2)	———	3410 038	3410 038	3410 038	3410 038	3410 038

CARLINES J - Challenger, B - Barracuda; V - Valiant, L - Dart; R - Belvedere - Satallite, W - Coronet - Charger; P - Plymouth, D - Dodge; C - Chrysler, Y - Imperial

AR Indicates use as required.

= Indicates parts not listed in any previous parts book.

Numerals in parentheses ( ) refer to notes.

★ Indicates change or addition.

Printed in U.S.A. January 1972

MANUAL TRANSMISSION

NOTE: All quantities are one (1) unless otherwise indicated in parenthesis

CODE	TRANSMISSION	3410 785 3 Speed A903	3515 832 3 Speed A230	3515 833 3 Speed A230	3515 834 3 Speed A230	3515 835 3 Speed A230	3515 836 3 Speed A230
21-42-0	**TRANSMISSION REMOTE CONTROL GEARSHIFT**						
21-42-11	LEVER, w/SHAFT, Gearshift, Low and Reverse	2801 938	3515 238	3515 238	3515 238	3515 238	3515 238
	Second and Direct	3515 017	3410 930	3410 930	3410 930	3410 930	3410 930
	PIN, Shaft (2)	6022 161	———	———	———	———	———
21-42-13	SHAFT, Gearshift Lever, Second and Direct	———	3410 922	3410 922	3410 922	3410 922	3410 922
21-42-23	LEVER, Gearshift Operating, Low and Reverse, V, L, w/198 and 225 Eng.	3410 362	———	———	———	———	———
	Low and Reverse, R, W, w/225 Eng.	3515 065	———	———	———	———	———
	V, L, w/318 Eng.	———	———	3410 063	———	———	———
	Second and Direct, V, L, w/198 and 225 Eng.	3410 363	———	———	———	———	———
	R, W, w/225 Eng.	3410 365	———	———	———	———	———
	Low and Reverse, V, L, w/198, 225, 318 and 340 Eng., Floor Shift	———	3515 402	3515 402	———	———	———
	Low and Reverse, V, L, w/198, 225 and 318 Eng., Column Shift	———	———	3410 063	———	———	———
	Low and Reverse, B, J, R, W, Floor Shift, Stamped 403	———	———	———	3515 403	3515 403	3515 403
	Low and Reverse, R, W, w/225 and 318 Eng., Column Shift	———	———	———	3515 076	———	———
	Low and Reverse, R, W, Floor Shift, Stamped 404	———	———	———	———	3515 404	3515 404
	Low and Reverse, Column Shift	———	———	———	3410 037	3410 037	3410 037
	First and Reverse, Floor Shift, on Mechanism, w/Square Center Slot	———	2950 948	2950 948	2950 948	2950 948	2950 948
	First and Reverse, Floor Shift, on Mechanism, w/Round Center Slot						
	Second and Direct, Floor Shift	———	3410 053	3410 053	———	———	———
	Second and Direct, Column Shift	———	———	3410 062	———	———	———
	Second and Direct, R, W, w/225 and 318 Eng., Column Shift	———	———	———	3410 295	———	———
	Second and Direct, B, J, R, W, Floor Shift, Stamped 490	———	———	———	3410 490	3410 490	3410 490
	Second and Direct, R, W, Floor Shift, Stamped 172	———	———	———	———	= 3515 172	= 3515 172
	Second and Direct, P, D, C, Column Shift	———	———	———	3410 036	3410 036	3410 036

CARLINES J - Challenger, B - Barracuda, V - Valiant, L - Dart, R - Belvedere - Satallite, W - Coronet - Charger, P - Plymouth, D - Dodge, C - Chrysler, Y - Imperial

AR Indicates use as required.

# Indicates parts not listed in any previous parts book.

Numerals in parentheses ( ) refer to notes.

★ Indicates change or addition.

Printed in U.S.A. January 1972

MANUAL TRANSMISSION

NOTE: All quantities are one (1) unless otherwise indicated in parenthesis

CODE	TRANSMISSION	3410 785 3 Speed A903	3515 832 3 Speed A230	3515 833 3 Speed A230	3515 834 3 Speed A230	3515 835 3 Speed A230	3515 836 3 Speed A230
21-42-0	**TRANSMISSION REMOTE CONTROL GEARSHIFT Cont'd.**						
21-42-23	LEVER Cont'd.						
	Second and Third, on Mechanism	———	2950 947	2950 947	2950 947	2950 947	2950 947
	Gearshift Interlock (2)	———	3410 207	3410 207	3410 207	3410 207	3410 207
	CLIP, Interlock Lever	6025 071	———	———	———	———	———
	PIN, Interlock Lever	———	6028 261	6028 261	6028 261	6028 261	6028 261
	SNAP RING, Interlock Lever Pin	———	6025 857	6025 857	6025 857	6025 857	6025 857
	NUT, Gearshift Operating Lever (2)	6028 034	———	———	———	———	———
21-42-25	WASHER, Interlock Lever Spring, Low and Reverse	6026 239	———	———	———	———	———
21-42-28	PIN, Interlock, Low and Reverse	2538 013	———	———	———	———	———
21-42-29	PAWL, Interlock Lever, Low and Reverse	2538 014	———	———	———	———	———
21-42-31	SEAL, Gearshift Lever Shaft Oil (2)	1949 350	1949 350	1949 350	1949 350	1949 350	1949 350

NOTE: All quantities are one (1) unless indicated in parenthesis

CODE	TRANSMISSION	3410 758 4 Speed A833	3410 759 4 Speed A833	3410 760 4 Speed A833	3410 761 4 Speed A833	3410 763 4 Speed A833
21-01-0	**TRANSMISSION SETS OR PACKAGES**					
21-01-3	SEAL and GASKET PACKAGE	3420 069	3420 069	3420 069	3004 614	3420 069
21-02-0	**TRANSMISSION VENT**					
21-02-6	VENT	1630 746	1630 746	1630 746	1630 746	1630 746
21-03-0	**TRANSMISSION CASE**					
21-03-1	CASE	3410 193	3410 193	3410 193	3410 193	3410 193
21-04-0	**TRANSMISSION CASE EXTENSION**					
21-04-1	EXTENSION	2892 961	2892 961	3410 394	3410 394	3410 394
21-04-2	GASKET	2464 059	2464 059	2464 059	2464 059	2464 059
21-04-11	BUSHING	2801 724	2801 724	2801 724	2801 724	2801 724
21-04-17	BAFFLE, Vent	2538 785	2538 785	2538 785	2538 785	2538 785
21-09-0	**TRANSMISSION MAIN DRIVE PINION**					
21-09-2	PINION, 23T., 22T., 36 Splines, 11 1/4" lgh.	2466 427	———	———	———	———
	23T., 25T., 36 Splines	———	3410 409	3410 409	———	3410 409
	18T., 22T., 36 Splines	———	———	———	3410 402	———
21-09-5	BEARING, w/SNAP RING	2124 516	2124 516	———	———	2124 516
	w/o Snap Ring	———	———	2801 890	2801 890	———
21-09-23	SNAP RING, Brg., Outer, Std.	2124 518	2124 518	6027 225	6027 225	2124 518
	.088" thk. (AR)	6025 754	6025 754	6025 754	6025 754	6025 754
	.091" thk. (AR)	6025 755	6025 755	6025 755	6025 755	6025 755
	.094" thk. (AR)	6025 756	6025 756	6025 756	6025 756	6025 756
	.097" thk. (AR)	6025 757	6025 757	6025 757	6025 757	6025 757

CARLINES J - Challenger, B - Barracuda; V - Valiant, L - Dart; R - Belvedere - Satallite, W - Coronet - Charger; P - Plymouth, D - Dodge; C - Chrysler, Y - Imperial

AR Indicates use as required.

Numerals in parentheses ( ) refer to notes.

≠ Indicates parts not listed in any previous parts book.

★ Indicates change or addition.

Printed in U.S.A. January 1972

MANUAL TRANSMISSION

NOTE: All quantities are one (1) unless otherwise indicated in parenthesis

CODE	TRANSMISSION	3410 758 4 Speed A833	3410 759 4 Speed A833	3410 760 4 Speed A833	3410 761 4 Speed A833	3410 763 4 Speed A833
21-09-0	**TRANSMISSION MAIN DRIVE PINION Cont'd.**					
21-09-29	RETAINER, Brg.	3410 395	3410 395	3410 247	2801 892	3410 395
21-09-30	SEAL, Pinion	2801 692	2801 692	2801 692	———	2801 692
	Pinion Brg.	———	———	———	2801 733	———
21-09-31	SCREW, Brg. Retainer (4)	1920 101	1920 101	1920 101	1920 101	1920 101
21-09-33	GASKET, Brg. Retainer	2124 499	2124 499	2801 893	2801 893	2124 499
21-10-0	**TRANSMISSION MAIN DRIVE GEARS**					
21-10-3	GEAR, Low Speed	2464 018	2464 018	2464 018	2801 107	2464 018
21-10-16	GEAR, Second Speed, 36T., 32T	2464 069	———	———	———	———
		———	3410 411	3410 411	3410 403	3410 411
21-10-31	GEAR, Third Speed	2464 659	3410 410	3410 410	3410 405	3410 410
21-11-0	**TRANSMISSION REVERSE IDLER GEAR**					
21-11-1	GEAR, 22T	2464 073	2464 073	2464 073	2464 073	2464 073
21-12-0	**TRANSMISSION REVERSE IDLER GEAR SHAFT**					
21-12-1	SHAFT	2464 023	2464 023	2464 023	2464 023	2464 023
21-12-2	KEY	1635 293	1635 293	1635 293	1635 293	1635 293
21-14-0	**TRANSMISSION CLUTCH GEAR**					
21-14-1	SYNCHRONIZER, First, Second and Reverse, UP TO approx. Dec.1970	3410 305	3410 305	3410 305	3410 305	3410 305
	AFTER approx. Dec.1970	= 3515 470	= 3515 470	= 3515 470	= 3515 470	= 3515 470
	Third and Direct, UP TO approx. Dec.1970	3410 300	3410 300	3410 300	3410 300	3410 300
	AFTER approx. Dec.1970	= 3515 469	= 3515 469	= 3515 469	= 3515 469	= 3515 469
	SNAP RING, Low, Second and Reverse	6024 131	6024 131	6024 131	6024 131	6024 131
	Third and Direct	6024 131	6024 131	6024 131	6024 131	6024 131
21-14-15	SPRING, Synchronizer, Low and Second(2) 31/32" O.D. (2)	2892 740	2892 740	2892 740	2892 740	2892 740
	3 7/64" O.D.	= 3515 468	= 3515 468	= 3515 468	= 3515 468	= 3515 468
	Third and Direct (2)	2892 740	2892 740	2892 740	2892 740	2892 740
21-14-19	RING, Synchronizer Stop, Bronze (2)	2892 288	2892 288	2892 288	2892 288	2892 288
	Third and Direct (2)	2892 288	2892 288	2892 288	2892 288	2892 288
21-15-0	**TRANSMISSION COUNTERSHAFT GEAR**					
21-15-2	GEAR, 33T., 29T., 25T., 17T., 17T	2464 658	———	———	———	———
		———	3410 412	3410 412	3410 407	3410 412
21-15-33	WASHER, Thrust (2)	2538 207	2538 207	2538 207	2538 207	2538 207

CARLINES J - Challenger, B - Barracuda, V - Valiant, L - Dart, R - Belvedere - Satellite, W - Coronet - Charger, P - Plymouth, D - Dodge, C - Chrysler, Y - Imperial

AR Indicates use as required.

\# Indicates parts not listed in any previous parts book.

Numerals in parentheses ( ) refer to notes.

★ Indicates change or addition.

Printed in U.S.A. January 1972

MANUAL TRANSMISSION

NOTE: All quantities are one (1) unless otherwise indicated in parenthesis

CODE	TRANSMISSION	3410 758 4 Speed A833	3410 759 4 Speed A833	3410 760 4 Speed A833	3410 761 4 Speed A833	3410 763 4 Speed A833
21-16-0	**TRANSMISSION MAIN OR OUTPUT SHAFT**					
21-16-3	SHAFT, 40T., 40T., 13T., 30T., 23 1/4" lgh.	2892 909	2892 909	———	———	———
	40T., 40T., 13T., 30T., 27 23/64" lgh.	———	———	2892 942	2892 942	2892 942
21-17-0	**TRANSMISSION MAIN OR OUTPUT SHAFT PILOT BEARING**					
21-17-2	ROLLER (16)	1949 834	1949 834	1949 834	1949 834	1949 834
21-17-7	SNAP RING, Roller	6024 130	6024 130	6024 130	6024 130	6024 130
21-19-0	**TRANSMISSION MAIN OR OUTPUT SHAFT BEARING**					
21-19-2	BEARING, Frt.	3410 048	3410 048	2801 890	2801 890	2801 890
21-19-15	SNAP RING, Inner,					
	(AR) .086" thk.	6025 754	6025 754	6025 754	6025 754	6025 754
	(AR) .091" thk.	6025 755	6025 755	6025 755	6025 755	6025 755
	(AR) .094" thk.	6025 756	6025 756	6025 756	6025 756	6025 756
	(AR) .097" thk.	6025 757	6025 757	6025 757	6025 757	6025 757
	Outer (AR) .087" thk.	6024 125	6024 125	———	———	———
	(AR) .093" thk.	———	———	6027 229	6027 229	6027 229
21-22-0	**TRANSMISSION MAIN OR OUTPUT SHAFT BEARING OIL SEAL**					
21-22-2	SEAL, Yoke	2400 300	2400 300	2400 300	2400 300	2400 300
21-24-0	**TRANSMISSION COUNTERSHAFT**					
21-24-2	COUNTERSHAFT	2464 012	2464 012	2464 012	2464 012	2464 012
21-24-22	KEY	1635 293	1635 293	1635 293	1635 293	1635 293
21-25-0	**TRANSMISSION COUNTERSHAFT BEARING**					
21-25-2	ROLLER (76)	2464 744	2464 744	2464 744	2464 744	2464 744
21-25-4	SPACER	2464 013	2464 013	2464 013	2464 013	2464 013
21-25-6	WASHER (4)	2464 743	2464 743	2464 743	2464 743	2464 743
21-29-0	**TRANSMISSION GEARSHIFT CASE COVER OR HOUSING**					
21-29-3	HOUSING	3515 350	3410 244	3515 350	3515 350	3410 244
	BOLT (7)	6024 457	6024 457	6024 457	6024 457	6024 457
		6026 874	6026 874	6026 874	6026 874	6026 874
21-29-25	GASKET	2464 037	2464 037	2464 037	2464 037	2464 037
21-34-0	**TRANSMISSION GEARSHIFT RAIL**					
21-34-42	PIN, Interlock	6028 630	6028 630	6028 630	6028 630	6028 630
21-34-44	PLUG, Reverse Lever Detent	1139 153	1139 153	1139 153	1139 153	1139 153
21-34-46	GASKET, Reverse Lever Detent Plug	1302 807	1302 807	1302 807	1302 807	1302 807
21-34-47	SPRING, Reverse Lever Detent Ball	2466 457	2466 457	2466 457	2466 457	2466 457
	Gearshift Interlock Lever	3410 204	3410 204	3410 204	3410 204	3410 204
21-34-51	RETAINER, Lever Detent Spring	2464 052	2464 052	2464 052	2464 052	2464 052
21-34-53	GASKET, Gearshift Lever Detent Spring Retainer	2464 053	2464 053	2464 053	2464 053	2464 053

CARLINES J - Challenger, B - Barracuda; V - Valiant, L - Dart; R - Belvedere - Satallite, W - Coronet - Charger; P - Plymouth, D - Dodge; C - Chrysler, Y - Imperial

AR Indicates use as required.

≠ Indicates parts not listed in any previous parts book.

Numerals in parentheses ( ) refer to notes.

★ Indicates change or addition.

Printed in U.S.A. January 1972

MANUAL TRANSMISSION

NOTE: All quantities are one (1) unless otherwise indicated in parenthesis

CODE	TRANSMISSION	3410 758 4 Speed A833	3410 759 4 Speed A833	3410 760 4 Speed A833	3410 761 4 Speed A833	3410 763 4 Speed A833
21-39-0	**TRANSMISSION GEARSHIFT FORK**					
21-39-3	FORK, Low and Second	3410 141	3410 141	3410 141	3410 141	3410 141
	Third and Direct	3410 038	3410 038	3410 038	3410 038	3410 038
	Reverse	2464 051	2464 051	2464 051	2464 051	2464 051
21-42-0	**TRANSMISSION REMOTE CONTROL GEARSHIFT**					
21-42-11	LEVER, w/SHAFT, Low and Second, Stamped Type "A"	3410 542	3410 542	3410 542	3410 542	3410 542
	Low and Second, Stamped Type "B"	3410 543	3410 543	3410 543	3410 543	3410 543
	Third and Direct	3410 168	3515 348	3410 168	3410 168	3515 348
	Reverse	2466 295	2466 295	2466 295	2466 295	2466 295
21-42-23	LEVER, Operating, Low and Second, V, L	2538 575	2538 575	———	———	———
	Low and Second, R, W, Stamped 147	———	———	3515 147	3515 147	3515 147
	Low and Second, B, J, R, W, Stamped 058	———	———	3515 058	3515 058	3515 058
	Third and Direct, V, L	2538 576	2538 576	———	———	———
	Third and Direct, B, J, R, W, Stamped 057	———	———	3515 057	3515 057	3515 057
	Third and Direct, R, W, Stamped 146	———	———	3515 146	3515 146	3515 146
	Reverse, Stamped 967	2892 967	2892 967	2892 967	2892 967	———
	Reverse, Stamped 148	———	———	3515 148	3515 148	3515 148
	Reverse, B, J, R, W, Stamped 368	———	———	3410 368	3410 368	3410 368
	Interlock (2)	3410 093	3410 093	3410 093	3410 093	3410 093
	NUT (AR)	6028 034	6028 034	6028 034	6028 034	6028 034
	PIN, Interlock	6028 630	6028 630	6028 630	6028 630	6028 630
21-42-31	SEAL, Gearshift Lever Shaft Oil (3)	1536 267	1536 267	1536 267	1536 267	1536 267

NOTE: All quantities are one (1) unless otherwise indicated in parenthesis

CODE	TRANSMISSION	3410 791 4 Speed A833
21-01-0	**TRANSMISSION SETS OR PACKAGES**	
21-01-3	SEAL and GASKET PACKAGE	3420 069
21-02-0	**TRANSMISSION**	
	VENT	1139 204
21-03-0	**TRANSMISSION CASE**	
21-03-1	CASE	3410 194
21-04-0	**TRANSMISSION CASE EXTENSION**	
21-04-1	EXTENSION	3410 394
21-04-2	GASKET	2464 059
21-04-11	BUSHING	2801 724
21-04-17	BAFFLE, Vent	2538 785

CARLINES J - Challenger, B - Barracuda; V - Valiant, L - Dart; R - Belvedere - Satallite, W - Coronet - Charger; P - Plymouth, D - Dodge; C - Chrysler, Y - Imperial

AR Indicates use as required.

# Indicates parts not listed in any previous parts book.

Numerals in parentheses ( ) refer to notes.

★ Indicates change or addition.

Printed in U.S.A. January 1972

MANUAL TRANSMISSION

NOTE: All quantities are one (1) unless otherwise indicated in parenthesis

CODE	TRANSMISSION	3410 791 4 Speed A833

21-09-0 TRANSMISSION MAIN DRIVE PINION

21-09-2	PINION	3410 409
21-09-5	BEARING, w/o Snap Ring	2801 890
21-09-23	SNAP RING, Brg., Outer, Std.	6027 225
	.088" thk. (AR)	6025 754
	.091" thk. (AR)	6025 755
	.094" thk. (AR)	6025 756
	.097" thk. (AR)	6025 757
21-09-29	RETAINER, Brg.	3410 247
21-09-30	SEAL, Pinion	2801 692
21-09-31	SCREW, Brg. Retainer (4)	1920 101
21-09-33	GASKET, Brg. Retainer	2801 893

21-10-0 TRANSMISSION MAIN DRIVE GEARS

21-10-3	GEAR, Low Speed	2464 018
21-10-16	GEAR, Second Speed	3410 411
21-10-31	GEAR, Third Speed	3410 410

21-11-0 TRANSMISSION REVERSE IDLE GEAR

21-11-1	GEAR	2464 073

21-12-0 TRANSMISSION REVERSE IDLER GEAR SHAFT

21-12-1	SHAFT	2464 023
21-12-2	KEY	1635 293

21-14-0 TRANSMISSION CLUTCH GEAR

21-14-1	SYNCHRONIZER, First Second and Reverse,	
	UP TO approx. Dec.1970	3410 305
	AFTER approx. Dec.1970	= 3515 470
	Third and Direct,	
	UP TO approx. Dec.1970	3410 300
	AFTER approx. Dec.1970	= 3515 469
	SNAP RING, Low, Second and Reverse	6024 131
	Third and Direct	6024 131
21-14-15	SPRING, Synchronizer, Low, Second and Reverse 2 31/32" O.D. (2)	2892 740
	3 7/64" O.D.	= 3515 468
	Third and Direct (2)	2892 740
21-14-19	RING, Synchronizer Stop, Bronze (4)	2892 288

21-15-0 TRANSMISSION COUNTERSHAFT GEAR

21-15-2	GEAR, 30T., 26T., 23T., 17T., 17T	3410 412
21-15-33	WASHER, Thrust (2)	2538 207

MANUAL TRANSMISSION

NOTE: All quantities are one (1) unless otherwise indicated in parenthesis

		3410 791
		4 Speed
CODE	TRANSMISSION	A833

21-16-0 TRANSMISSION MAIN OR OUTPUT SHAFT

21-16-3	SHAFT, 40T., 40T., 13T., 30T., 27 23/64" lgh.	2892 942

21-17-0 TRANSMISSION MAIN OR OUTPUT SHAFT PILOT BEARING

21-17-2	ROLLER (16)	1949 834
21-17-7	SNAP RING, Roller	6024 130

21-19-0 TRANSMISSION MAIN OR OUTPUT SHAFT BEARING

21-19-2	BEARING, Frt.		2801 890
21-19-15	SNAP RING, Inner,		
	(AR)	.086" thk.	6025 754
		.091" thk.	6025 755
		.094" thk.	6025 756
		.097" thk.	6025 757
	Outer (AR)	.093" thk.	6027 229

21-22-0 TRANSMISSION MAIN OR OUTPUT SHAFT BEARING OIL SEAL

21-22-2	SEAL, Yoke	2400 300

21-24-0 TRANSMISSION COUNTERSHAFT

21-24-2	COUNTERSHAFT	2464 012
21-24-22	KEY	1635 293

21-25-0 TRANSMISSION COUNTERSHAFT BEARING

21-25-2	ROLLER (76)	2464 744
21-25-4	SPACER	2464 013
21-25-6	WASHER (4)	2464 743

21-29-0 TRANSMISSION GEARSHIFT CASE COVER OR HOUSING

21-29-3	HOUSING,	2464 001
		6026 874
21-29-25	GASKET	2464 037

21-34-0 TRANSMISSION GEARSHIFT RAIL

21-34-42	PIN, Interlock	2464 046
21-34-44	PLUG, Reverse Lever Detent	1139 153
21-34-45	SLEEVE, Interlock	2464 045
21-34-46	GASKET, Reverse Lever Detent Plug	1302 807
21-34-47	SPRING, Reverse Lever Detent Ball	2466 457
	Gearshift Interlock Lever	3410 204
	Gearshift Interlock	3464 047
21-34-51	RETAINER, Lever Detent Spring	2464 052
21-34-53	GASKET, Gearshift Lever Detent Spring Retainer	2464 053

MANUAL TRANSMISSION

NOTE: All quantities are one (1) unless otherwise indicated in parenthesis

		3410 791 4 Speed
CODE	TRANSMISSION	A833

21-39-0 TRANSMISSION GEARSHIFT FORK

21-39-3	FORK, Low and Second	2538 421
	Third and Direct	2466 961
	Reverse	2464 051

21-42-0 TRANSMISSION REMOTE CONTROL GEARSHIFT

21-42-11	LEVER, w/SHAFT, Low and Second, Stamped Type "A"	2466 221
	Low and Second, Stamped Type "B"	2466 222
	Third and Direct	2464 038
	Reverse	2466 295
		3515 324
21-42-23	LEVER, Operating, Low and Second, Stamped 147	3515 147
	Third and Direct, Stamped 146	3515 146
	Reverse, Stamped 967	2892 967
	Reverse, Stamped 148	3515 148
	Interlock (2)	3410 093
	NUT (2)	6028 034
	BALL, Interlock (2)	147 500
21-42-31	SEAL, Gearshift Lever Shaft Oil (3)	1536 267

NOTES

NOTES

GROUP 21 - TRANSMISSION
AUTOMATIC

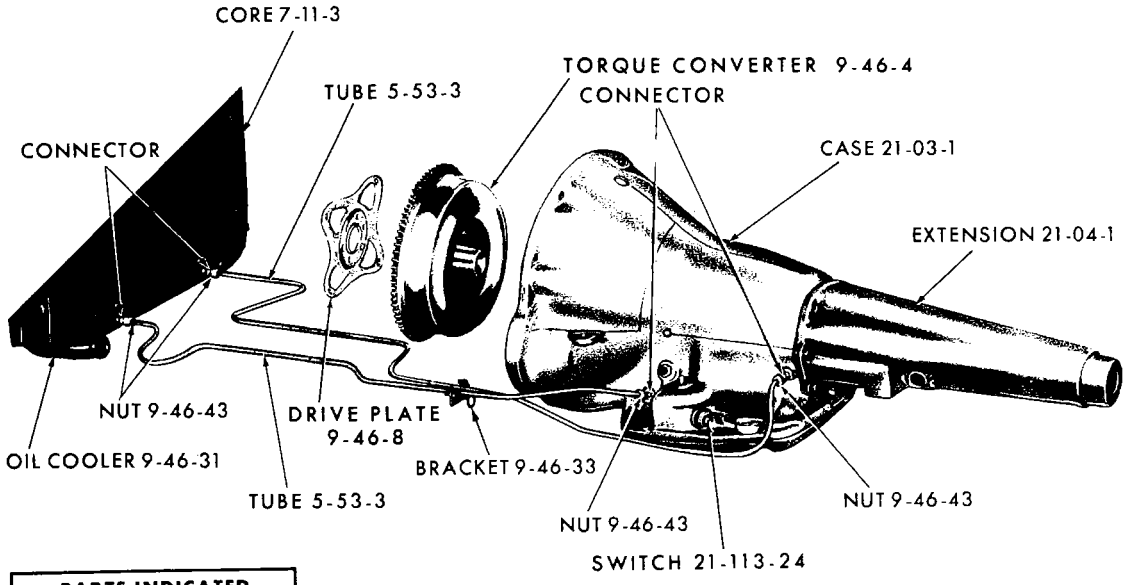

PARTS INDICATED BY NAME ONLY - ORDER BY DESCRIPTION

19x9340F

AUTOMATIC TRANSMISSION OIL COOLER SYSTEM

NOTES

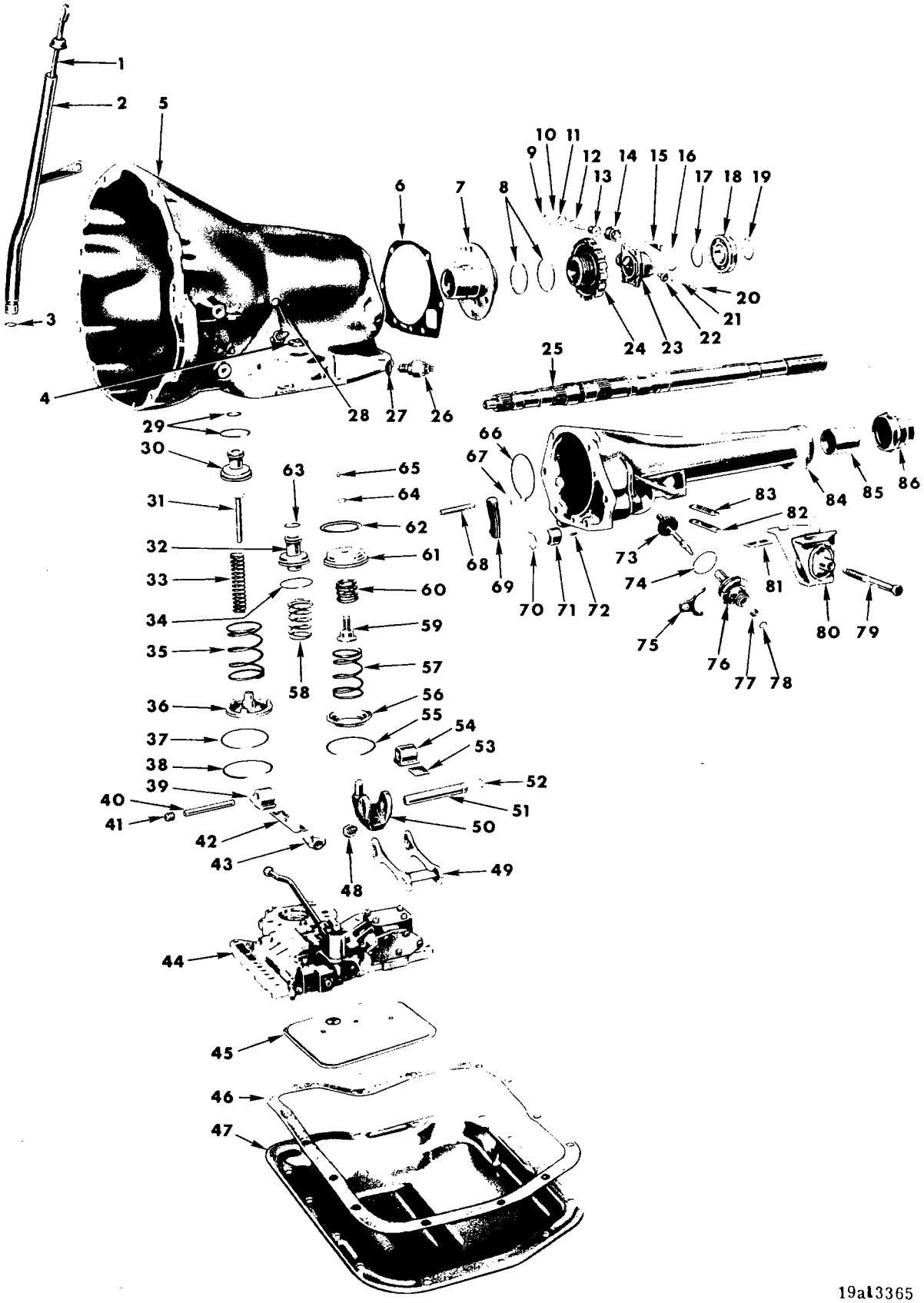

A727 AND A904 3 SPEED AUTOMATIC TRANSMISSION CASE AND EXTENSION

Printed in U.S.A.

A727 AND A904 3 SPEED AUTOMATIC TRANSMISSION
CASE AND EXTENSION

Ref. No.	Name	Part Type Code
1	Indicator	21-119-19
2	Tube	21-119-15
3	Seal	21-119-25
4	Seal	21-139-16
5	Case	21-03-1
6	Gasket	21-04-2
7	Support	21-05-25
8	Ring	21-138-38
9	Ring	21-138-29
10	Ring	21-138-19
11	Ring	21-138-19
12	Spring	21-138-15
13	Weight	21-138-13
14	Weight	21-138-13
15	Lock	21-138-21
16	Ring	21-138-7
17	Ring	21-05-8
18	Bearing	21-05-2
19	Ring	21-05-8
20	Ring	21-138-29
21	Shaft	21-138-26
22	Valve	21-138-23
23	Housing (Serviced in 21-138-2)	
24	Support	21-138-10
25	Shaft, Output	21-05-1
26	Switch	21-113-24
27	Washer	21-113-29
28	Screw	21-136-17
29	Ring	21-137-8
30	Piston	21-137-5
31	Rod	21-137-11
32	Piston	21-137-200
33	Spring	21-137-22
34	Ring, Large	21-137-202
35	Spring	21-137-22
36	Guide	21-137-13
37	Ring	21-137-8
38	Ring	21-137-19
39	Lever	21-136-20
40	Shaft	21-136-23
41	Plug	
42	Strut	21-136-15
43	Anchor	21-136-15
44	Body, w/Plate	21-139-4
45	Filter	21-117-1
46	Gasket	21-119-5
47	Pan	21-119-3
48	Screw	21-136-52
49	Link	21-136-44
50	Lever, w/Stem	21-136-47
51	Shaft	21-136-49
52	Seal	21-136-55
53	Strut	21-136-41
54	Lever, Short	21-136-47
55	Ring	21-137-59
56	Retainer	21-137-56
57	Spring	21-137-53
58	Spring	21-137-205
59	Plug	21-137-47
60	Spring	21-137-41
61	Piston	21-137-35
62	Seal	21-137-50
63	Ring, Small	21-137-202
64	Ring	21-137-44
65	Screw	
66	Ring	21-05-8
67	Spring	4-10-11
68	Shaft	4-10-8
69	Sprag	4-10-10
70	Ring	4-10-33
71	Plug	4-10-32
72	Pin (Serviced in 4-10-32)	
73	Pinion	21-85-5
74	Seal, Outer	21-85-22
75	Clamp	21-85-61
76	Adapter	21-85-9
77	Seal, Inner	21-85-22
78	Ring	21-85-23
79	Bolt	
80	Insulator	9-71-5
81	Spacer	9-69-12
82	Cover	21-04-8
83	Gasket	21-04-2
84	Extension	21-04-1
85	Bushing	21-04-11
86	Seal	21-05-12

PARTS INDICATED BY NAME ONLY - ORDER BY DESCRIPTION

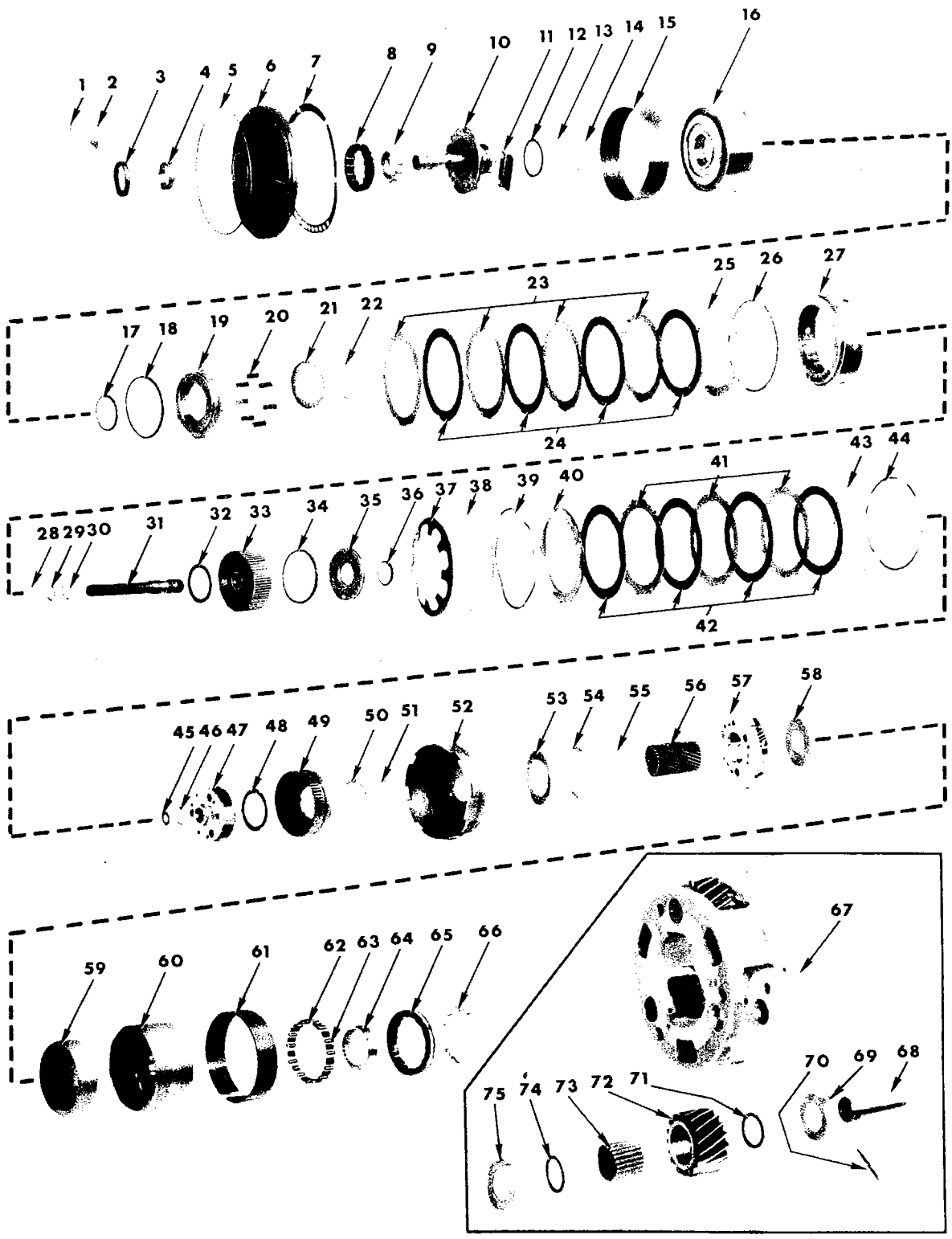

A727 AND A904 3 SPEED AUTOMATIC TRANSMISSION GEAR TRAIN

A727 AND A904 3 SPEED AUTOMATIC TRANSMISSION
GEAR TRAIN

Ref. No.	Name	Part Type Code
1	Plug	21-118-58
2	Shield	21-118-57
3	Seal	9-46-130
4	Bushing	21-118-47
5	Seal	21-118-45
6	Housing	21-118-40
7	Gasket (A727) 904-21-129-24	21-118-54
8	Rotor (Serviced in 21-118-6)	
9	Rotor (Serviced in 21-118-6)	
10	Shaft, w/Support	21-129-10
11	Baffle	21-02-8
12	Washer	21-133-65
13	Ring	21-129-13
14	Ring	21-129-13
15	Band KICK DOWN	21-136-5
16	Retainer, Front Clutch	21-133-7
17	Seal, Inner	21-133-17
18	Seal, Outer	21-133-17
19	Piston, Front Clutch	21-133-15
20	Spring	21-133-20
21	Retainer	21-133-22
22	Ring, Inner	21-133-43
23	Plate	21-133-38
24	Disc	21-133-36
25	Plate, Front Clutch	21-133-39
26	Ring, Outer	21-133-43
27	Retainer, Rear Clutch	21-133-7
28	Ring	21-133-25
29	Ring	21-129-7
30	Ring	21-129-7
31	Shaft, Input	21-129-5
32	Washer	21-133-65
33	Retainer, Rear Piston	21-133-7
34	Seal, Outer	21-133-17
35	Piston, Rear Clutch	21-133-15
36	Seal, Inner	21-133-17
37	Spring	21-133-20
38	Ring	21-133-25
39	Spring	21-133-31
40	Plate, Rear Clutch Front	21-133-39
41	Plate	21-133-38
42	Disc	21-133-36
43	Plate, Rear Clutch Rear	21-133-39
44	Ring, Rear	21-133-43
45	Washer	21-05-35
46	Ring	21-05-8
47	Carrier, Front	21-134-5
48	Washer	21-134-30
49	Gear, Front	21-134-38
50	Washer	21-134-30
51	Ring	21-133-46
52	Shell	21-133-42
53	Plate	21-133-47
54	Washer	21-133-48
55	Ring	21-133-46
56	Gear, Sun	21-133-40
57	Carrier, Rear	21-134-5
58	Plate	21-134-45
59	Gear, Rear	21-134-38
60	Drum	21-136-65
61	Band REVERSE	21-136-30
62	Spring	21-136-236
63	Roller	21-136-235
64	Race	21-136-232
65	Cam	21-136-231
66	Retainer	21-136-233
67	Carrier (Serviced in 21-134-5)	
68	Shaft	21-134-9
69	Washer	21-134-10
70	Pin	
71	Ring	21-134-12
72	Pinion	21-134-8
73	Roller	21-134-11
74	Ring	21-134-12
75	Washer	21-134-10

PARTS INDICATED BY NAME ONLY - ORDER BY DESCRIPTION

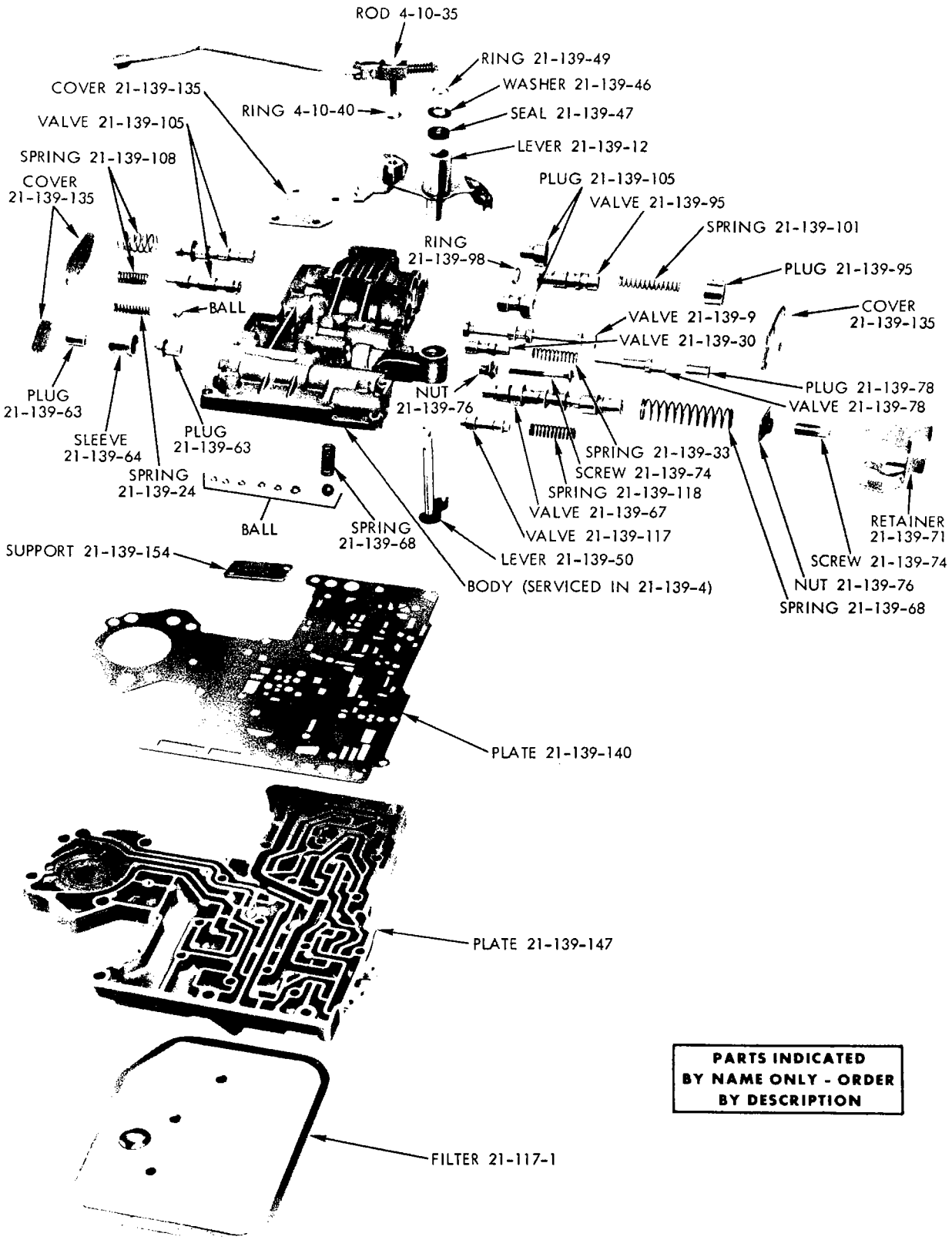

PARTS INDICATED BY NAME ONLY - ORDER BY DESCRIPTION

19a3366

A727 AND A904 3 SPEED AUTOMATIC TRANSMISSION VALVE BODY

NOTES

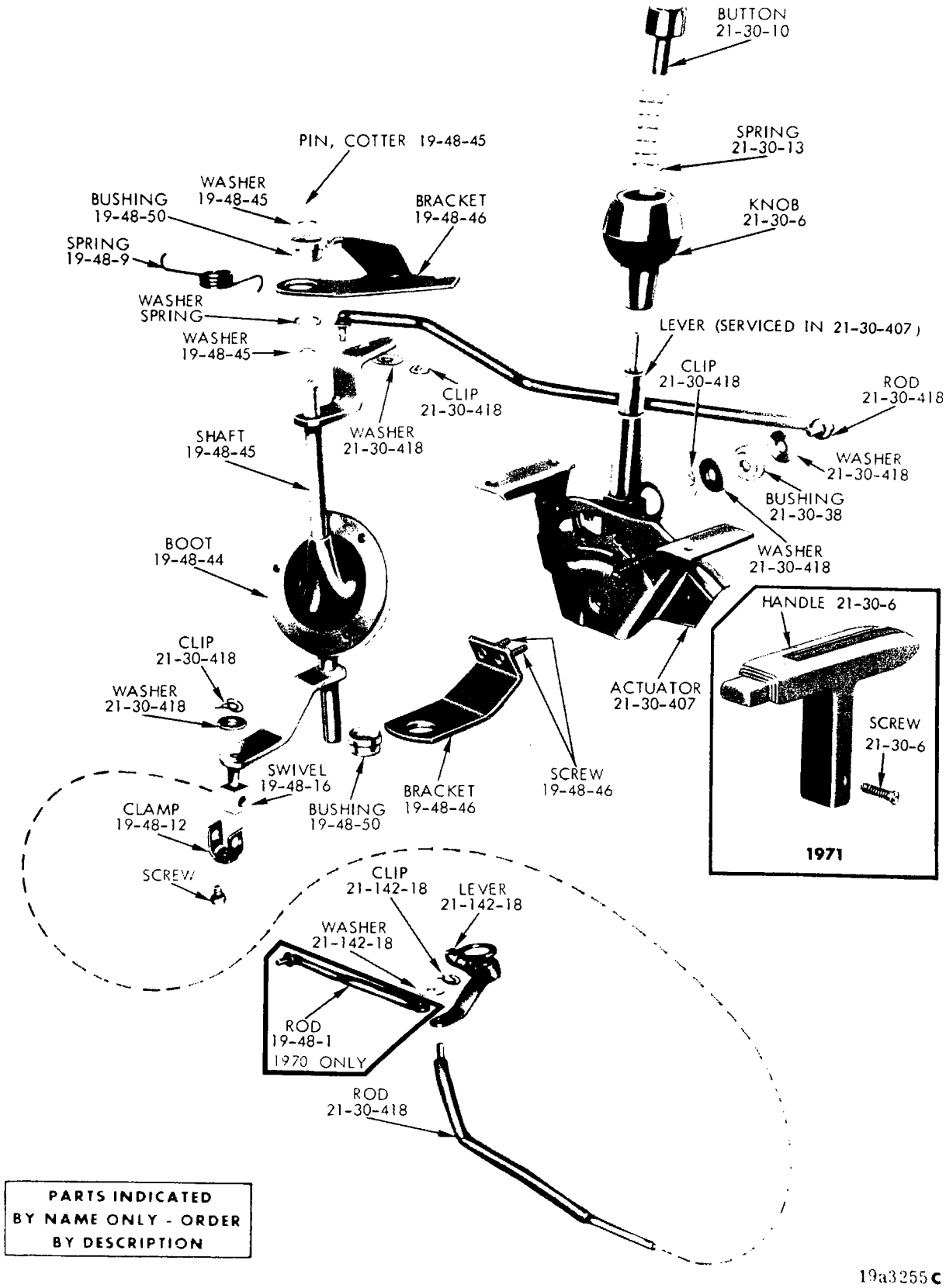

SHIFT CONTROLS WITH CONSOLE AND AUTOMATIC TRANSMISSION - BARRACUDA, CHALLENGER, SATELLITE AND CORONET

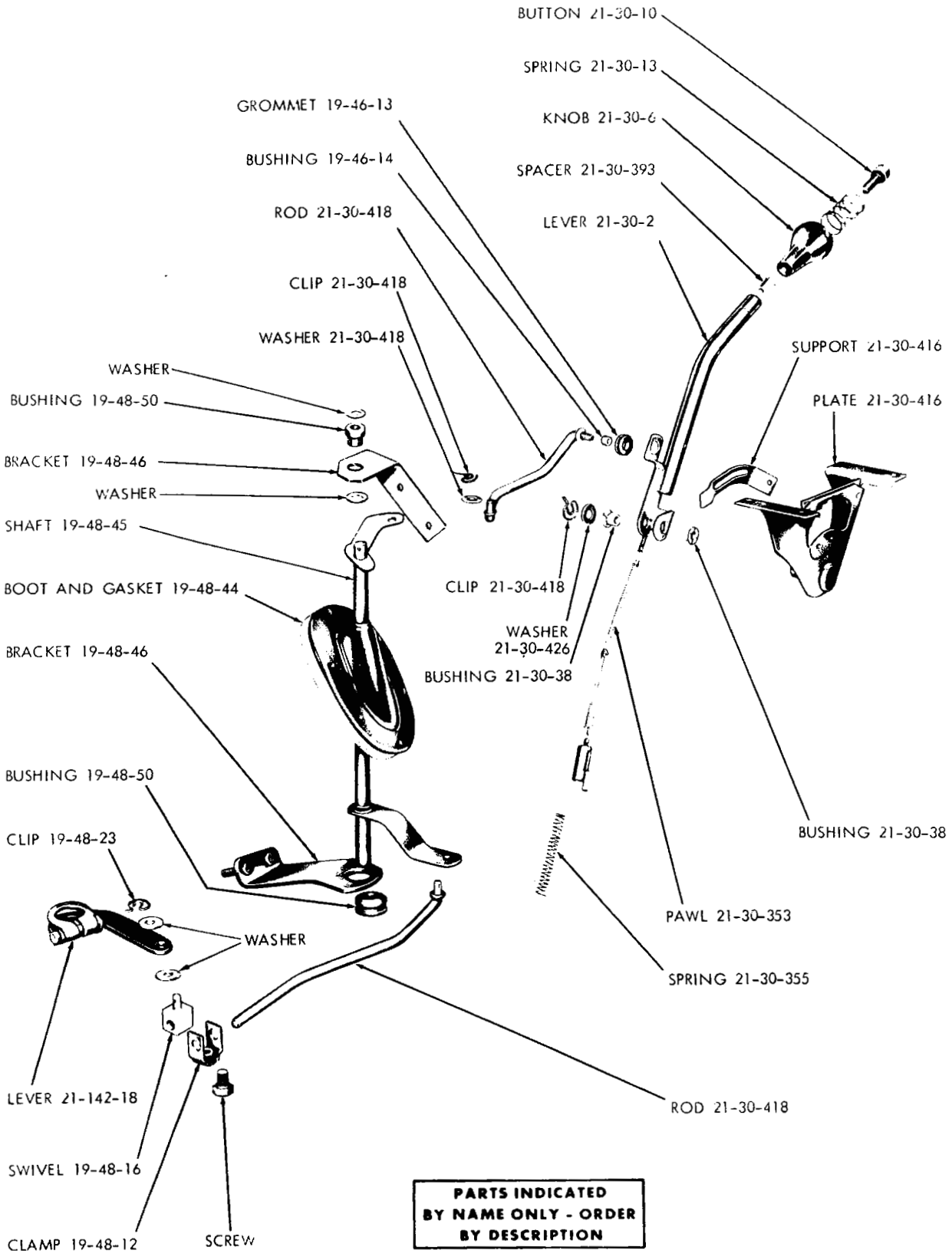

19a0534 F

AUTOMATIC TRANSMISSION CONTROLS - WITH CONSOLE -
BELVEDERE, CORONET, CHARGER, PLYMOUTH, DODGE AND CHRYSLER

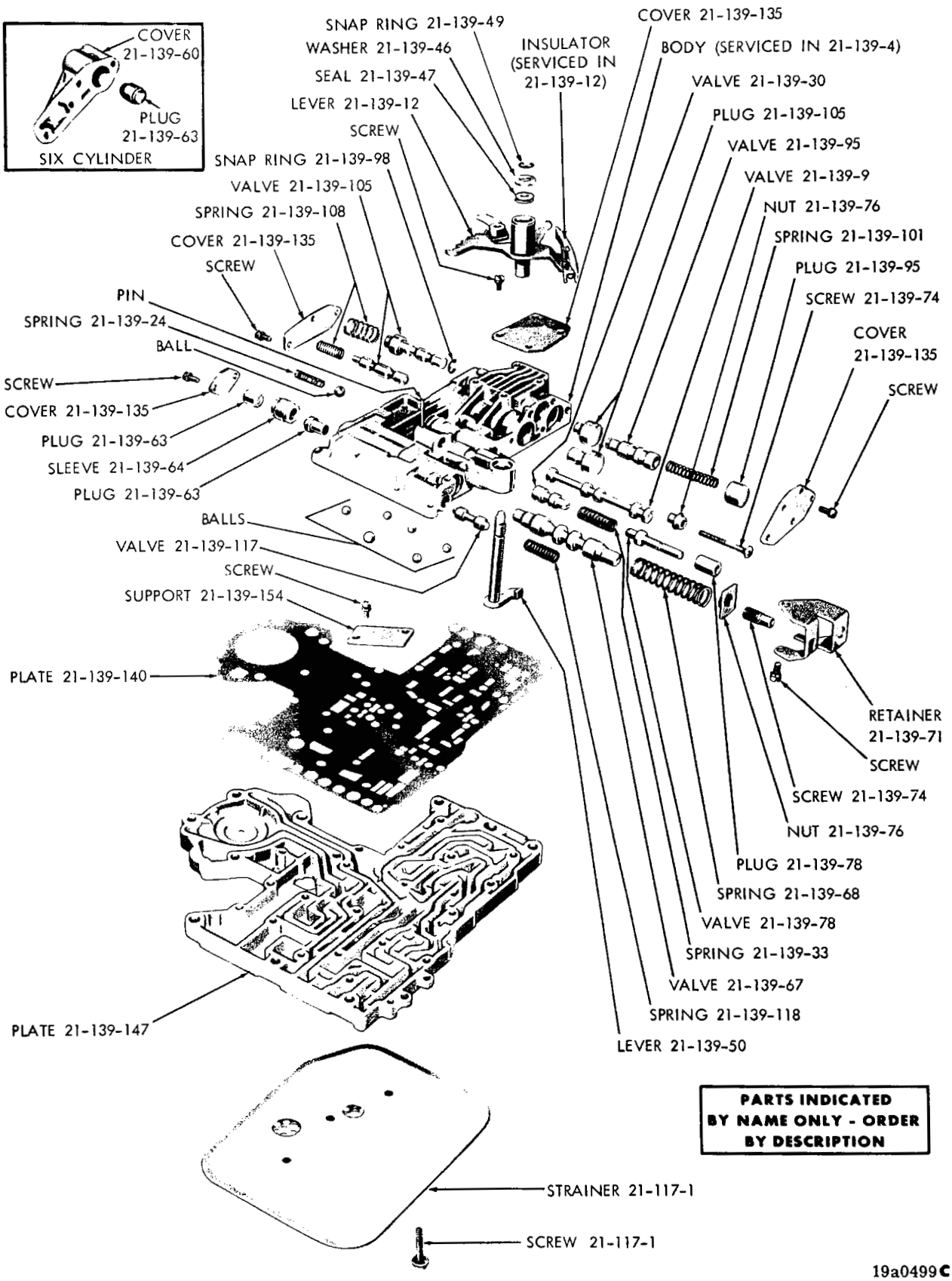

TRANSMISSION VALVE BODY AND VALVES

CODE	PART NAME	ENG. TYPE OR CU.IN.	V 1-2	B J 1-2	L 1-2	R 1-2	W 1-2	P 1-2	D 1-2	C 1	C 2	C 3	Y 1	PART NUMBER
	AUTOMATIC TRANSMISSION													
	NOTE: Transmission Number and Serial Number can be found on the Transmission Oil Pan Rail													
	NOTE: Transmission component parts for the transmission assemblies shown in code 21-02-1 below are catalogued in charted style after code 21-142-18. The respective service transmission part number is designated at the top of each column, and must be verified before specifying components.													
21-02-0	**TRANSMISSION**													
21-02-1	TRANSMISSION, w/225 Eng., Export, Used UP TO approx. June 1970, A904	70 6	1	—	1	1	1	—	—	—	—	—	—	3410 635
	w/225 Eng., used AFTER approx. June 1970, A904	70 6	1	—	1	1	1	—	—	—	—	—	—	3410 778
	w/340 Eng., Early Type, A727	70 8	1	—	1	—	—	—	—	—	—	—	—	2892 089
	w/340 Eng., Late Type, A727	70 8	1	—	1	—	—	—	—	—	—	—	—	3410 769
	V, L, w/198 and 225 Eng., B, J, R, W, P, D, w/225 Eng., used UP TO approx. June 1970, A904	70 6	1	1	1	1	1	1	1	—	—	—	—	3410 636
	V, L, B, J, w/198 and 225 Eng., R, W, P, D, w/225 Eng., used AFTER approx. June 1970, A904	70 6	1	1	1	1	1	1	1	—	—	—	—	3410 777
	V, L, B, J, w/198 and 225 Eng., R, W, P, D, w/225 Eng., A904	71 6	1	1	1	1	1	1	1	—	—	—	—	3515 804
	w/318 Eng., Early Type A904	70 8	1	1	1	1	1	1	1	—	—	—	—	3410 637
	w/318 Eng., Late Type, A904	70 8	1	1	1	1	1	1	1	—	—	—	—	3410 779
	w/318 Eng., Late Type, A904	70 8	1	1	1	1	1	1	1	—	—	—	—	3515 806
	w/318 Eng., Early Type, A94-1	71 8	1	1	1	1	1	1	1	—	—	—	—	3515 806
	w/318 Eng., Late Type, A94-1	8	1	1	1	1	1	1	1	—	—	—	—	3515 852
	w/340 Eng., Except Trans. AM A727	71 8	1	1	1	1	1	—	—	—	—	—	—	3515 843
	w/340 Eng., and Trans. AM A727	70 8	—	1	—	—	—	—	—	—	—	—	—	3410 769
	w/340 Eng., and Trans. Am (Cancelled-Service Component Parts)	71	—	1	—	—	—	—	—	—	—	—	—	3515 851
	w/426 Eng., A727	70 8	—	1	—	1	1	—	—	—	—	—	—	3410 671
	w/426 Eng., A727	71 8	—	1	—	1	1	—	—	—	—	—	—	3515 849
	w/440 Eng., 3 2 bbl. Carb., A727	70 8	—	1	—	1	1	1	—	—	—	—	—	3410 672
	w/440 Eng., 3 2 Bbl. Carb., A727	71 8	—	1	—	1	1	—	—	—	—	—	—	3515 850
	w/383 2 Bbl. Carb. Eng., used UP TO approx. April 27, 1970, A727	70 8	—	1	—	1	1	1	1	1	—	—	—	3410 667
	w/383 2 bbl. Carb. Eng., A727	71 8	—	1	—	1	1	1	1	1	—	—	—	3515 845
	w/383 2 Bbl. Carb. Eng., used AFTER approx. April 27, 1970, A727	70 8	—	1	—	1	1	1	1	1	—	—	—	3515 815
	w/383 4 Bbl. Carb. Eng., used UP TO approx. April 27, 1970, A727	70 8	—	1	—	1	1	1	1	1	—	—	—	3410 668
	w/383 4 bbl. Carb. Eng., A727	71 8	—	1	—	1	1	1	1	1	1	1	—	3515 846
	w/383 4 Bbl. Carb. Eng., used AFTER approx. April 27, 1970, A727	70	—	1	—	1	1	1	1	1	1	1	—	3515 816
	w/440 Eng., High Performance, w/1 4 bbl. Carb., Includes Police, A727	70	—	1	—	1	1	1	1	1	1	1	—	3410 670
	B, J, R, W, C, w/440 Eng., Hi Perf., P, D, w/440 and Hi-Perf., w/1 4 bbl. Carb., Includes Police, A727	71	—	1	—	1	1	1	1	1	1	1	—	3515 848
	w/225 Eng., Export, A904	71 6	—	—	1	—	1	—	—	—	—	—	—	3515 805
	w/225 Eng., Heavy Duty, A727	70 6	—	—	—	1	1	1	1	—	—	—	—	2892 086
	w/225 Eng., Heavy Duty, A727	71 6	—	—	—	1	1	1	1	—	—	—	—	3515 841
	w/318 Eng., Early Type, A727	70 8	—	—	—	1	1	1	1	—	—	—	—	2892 087

CARLINES J - Challenger, B - Barracuda, V - Valiant, L - Dart, R - Belvedere - Satellite, W - Coronet - Charger, P - Plymouth, D - Dodge, C - Chrysler, Y - Imperial

AR Indicates use as required.

# Indicates parts not listed in any previous parts book.

Numerals in parentheses ( ) refer to notes.

★ Indicates change or addition.

Printed in U.S.A. January 1972

AUTOMATIC TRANSMISSION

21-02-0 TRANSMISSION Cont'd.

CODE	PART NAME	ENG. TYPE OR CU.IN.	V 1-2	B J 1-2	L 1-2	R 1-2	W 1-2	P 1-2	D 1-2	C 1	C 2	C 3	Y 1	PART NUMBER
21-02-1	TRANSMISSION Cont'd.													
	w/318 Eng., Late Type, A727	70 8	—	—	—	1	1	1	1	—	—	—	—	3410 767
	w/318 Eng., A727	71 8	—	—	—	1	1	1	1	—	—	—	—	3515 842
	w/360 Eng., A727	71 8	—	—	—	—	—	1	1	1	—	—	—	3515 844
	w/Std. 440 Eng., Std. w/1 4 Bbl. Carb., except Police Eng. Conversion, used UP TO approx. April 27, 1970, A727	70 8	—	—	—	—	—	1	1	1	1	1	1	3410 669
	w/Std. 440 Eng., w/1 4 bbl. Carb., except Police Eng. Conversion, A727	71 8	—	—	—	—	—	1	1	1	1	1	1	3515 847
	w/Std. 440 Eng., w/1 4 Bbl. Carb., except Police Engine Conversion, used AFTER approx. April 27, 1970, A727 (Cancelled-Service Component Parts) (Use 3515 847 replacement assembly)	70 8	—	—	—	—	—	1	1	1	1	1	1	3515 817
	w/360 Eng. A727 (Cancelled-Service Component Parts) (Use 3515 844 replacement assembly)	70 8	—	—	—	—	—	—	1	—	—	—	—	3515 814

21-03-0 TRANSMISSION CASE

CODE	PART NAME	ENG. TYPE OR CU.IN.	V 1-2	B J 1-2	L 1-2	R 1-2	W 1-2	P 1-2	D 1-2	C 1	C 2	C 3	Y 1	PART NUMBER
21-03-6	COVER, V, L, w/198 and 225 Eng., B, J, R, W, P, D, w/225 Eng., A904	70 6	1	1	1	1	1	1	1	—	—	—	—	1949 767
	V, L, B, J, w/198 and 225 Eng., R, W, P, D, w/225 Eng., A94-1	71 6	1	1	1	1	1	1	1	—	—	—	—	1949 767
	w/318 Eng., A904	8	1	1	1	1	1	1	1	—	—	—	—	2892 913
	V, L, B, J, w/340 Eng., R, W, P, D, w/318 Eng., A727	70 8	1	1	1	1	1	1	1	—	—	—	—	2892 912
	V, L, B, J, R, W, w/340 Eng., R, W, P, D, w/318 Eng., P, D, C1, w/360 Eng., A727	71 8	1	1	1	1	1	1	1	1	—	—	—	2892 912
	B, J, R, W, w/383, 426 and 440 Eng., P, D, C, w/383 and 440 Eng., Y, A727		—	1	—	1	1	1	1	1	1	1	1	1942 248
	w/225 Eng., Heavy Duty, A727	6	—	—	—	1	1	1	1	—	—	—	—	2892 163
21-03-7	COVER, Torque Conv. Drain, w/318 Eng., A904	8	1	1	1	1	1	1	1	—	—	—	—	2464 551
	V, L, B, J, w/340 Eng., R, W, P, D, w/318 Eng., A727	70 8	1	1	1	1	1	1	1	—	—	—	—	2204 728
	V, L, B, J, R, W, w/340 Eng., R, W, P, D, w/318 Eng., P, D, C1, w/360 Eng. A727	71 8	1	1	1	1	1	1	1	1	—	—	—	2204 728
21-03-8	BLOCK OUT, w/BOLT and NUT, Gearshift, 4 3/4" lgh., w/2 Round Holes and 2 Slot Holes, (Fleet AFTER approx. April 27, 1970, A727	70	—	1	—	1	1	1	1	1	1	1	—	3515 816
	use only) A727 Trans.	70	—	—	—	1	1	1	1	—	—	—	—	3412 768
21-03-23	SCREW, w/WASHER, Case to Cyl. Block, 3/8"-16 x 1 3/8"		AR	AR	AR	AR	AR	AR	AR	AR	AR	AR	AR	6023 187
	3/8"-16 x 2 5/8"	6	—	—	—	3	3	3	3	—	—	—	—	6027 252
	Cyl. Block to Trans. Case, 7/16" - 14 x 1 7/8"		AR	AR	AR	AR	AR	AR	AR	AR	AR	AR	AR	6024 862
	3/8" - 16 x 1 7/8"	6	1	1	1	1	1	1	1	—	—	—	—	6024 864

CARLINES: J - Challenger, B - Barracuda, V - Valiant, L - Dart, R - Belvedere - Satellite, W - Coronet - Charger, P - Plymouth, D - Dodge, C - Chrysler, Y - Imperial

AR Indicates use as required.

Numerals in parentheses ( ) refer to notes.

# Indicates parts not listed in any previous parts book.

★ Indicates change or addition.

Printed in U.S.A. January 1972

AUTOMATIC TRANSMISSION

21-03-0 TRANSMISSION Cont'd.

CODE	PART NAME		ENG. TYPE OR CU.IN.	V 1-2	B J 1-2	L 1-2	R 1-2	W 1-2	P 1-2	D 1-2	C 1	C 2	C 3	Y 1	PART NUMBER
21-03-23	SCREW W/WASHER Cont'd.														
	7/16" - 14 x 2 1/8"			AR	AR	AR	AR	AR	AR	AR	AR	AR	AR	AR	6024 863
	Rt., 7/16" - 14 x 1 5/8"		8	1	—	1	—	—	—	—	—	—	—	—	6025 571
	Strut to Case, 7/16" - 14 x 1 1/8"			AR	AR	AR	AR	AR	AR	AR	2	—	—	—	6023 143
	Strut to Cyl. Block, 7/16" - 14 x 1 1/8"			2	2	2	2	2	2	2	—	—	—	—	6023 143
	Case to Strut, 7/16"-14 x 1 7/8"		8	1	1	1	1	1	1	1	—	—	—	—	6024 862
21-03-28	STRUT, Case to Cylinder Block	Lt.	6	1	1	1	1	1	1	1	—	—	—	—	1949 701
	w/318 and 340 Eng.	70 Rt.	8	1	1	1	1	1	1	1	—	—	—	—	2204 702
		70 Lt.	8	1	1	1	1	1	1	1	—	—	—	—	= 2464 552
	w/318, 340 and 360 Eng.	71 Rt.	8	1	1	1	1	1	1	1	1	—	—	—	2204 702
		71 Lt.	8	1	1	1	1	1	1	1	1	—	—	—	2466 009

21-04-0 TRANSMISSION CASE EXTENSION DAMPER

21-04-19	WEIGHT, Damper, w/318 Eng., A94-1 Trans.	71	8	—	—	—	1	1	—	—	—	—	—	—	3515 395
21-04-26	INSULATOR, Damper Weight, w/318 Eng., Rubber, A94-1 Trans.														
	UP TO Apr. 1971	71	8	—	—	—	1	1	—	—	—	—	—	—	1400 269
	AFTER Apr. 1971	71	8	—	—	—	1	1	—	—	—	—	—	—	= 3515 578
21-04-27	SUPPORT, Damper Weight, w/318 Eng., A94-1 Trans.	71	8	—	—	—	1	1	—	—	—	—	—	—	3515 396
	SCREW, Support	71	8	—	—	—	3	3	—	—	—	—	—	—	180 077

21-30-0 TRANSMISSION GEARSHIFT CONTROLS

21-30-2	LEVER, w/KNOB, Column Shift, Chrysler Blt.	70		1	—	1	1	1	—	—	—	—	—	—	2950 965
		71		1	—	1	1	1	1	1	1	1	1	1	3575 036
	Column Shift, w/Knob, Black Finish, Chrysler Blt.	70		—	1	—	—	—	—	—	—	—	—	—	2950 970
	w/Knob	71		—	1	—	—	—	—	—	—	—	—	—	3575 038
	Column Shift, w/Knob, Chrome, Chrysler Blt.	70		—	1	—	—	—	—	—	—	—	—	—	2950 971
	Column Shift, w/Knob, Chrome	70		—	—	—	—	—	1	1	1	1	1	1	2950 969
	Column Shift, w/Knob, Chrome, w/Tilt and Telescopic, Saginaw Blt.	70		—	—	—	—	—	—	—	1	1	1	1	2950 976
	w/Tilt Wheel, w/Knob			—	—	—	—	—	1	1	—	—	—	—	3575 216
	w/Tilt and Telescopic, Saginaw														
	w/Tilt and Telescopic, Saginaw Blt., w/Knob, AFTER Dec. 1970	71		—	—	—	1	1	1	1	1	1	1	1	= 3575 216
	w/Tilt and Telescopic, Saginaw Blt., w/Knob, UP TO Dec. 1970	71		—	—	—	—	—	—	—	1	1	1	1	3575 099
	w/o Knob, w/Bracket, w/Console			1	—	1	—	—	1	1	1	—	—	—	3467 641
		70		—	—	—	1	1	—	—	—	—	—	—	3467 642
	w/o Knob, w/Console, Canada	70		—	—	—	—	—	—	—	—	1	1	—	3467 641
	PIN, Column Shift Spring	70		1	1	1	1	1	1	1	1	1	1	1	9421 202
	Column Shift Spring, w/o Tilt	71		1	1	1	1	1	1	1	1	1	1	1	9412 281
	Column Shift Spring, w/ Tilt	71		—	—	—	1	1	1	1	1	1	1	1	152 233
21-30-6	KNOB, w/PAD, Gearshift Control Selector Lever, w/Console, Wood Grained	70		1	1	1	1	1	1	1	1	1	1	—	2950 713
		71		1	—	1	—	—	1	1	1	1	1	—	2950 713
	B, J, R, W, C, w/440 Eng., Hi-Perf., P, D, w/410 and Hi-Perf.			1	1	1	1	1	1	1	1	1	1	1	2883 402
	Columw eer			1	1	1	1	1	1	1	1	1	1	1	2883 402

CARLINES: J - Challenger, B - Barracuda, V - Valiant, L - Dart, R - Belvedere - Satellite, W - Coronet - Charger, P - Plymouth, D - Dodge, C - Chrysler, Y - Imperial

AR Indicates use as required.

Numerals in parentheses ( ) refer to notes.

# Indicates parts not listed in any previous parts book.

★ Indicates change or addition.

Printed in U.S.A. January 1972

AUTOMATIC TRANSMISSION

21-30-0 TRANSMISSION GEARSHIFT CONTROLS Cont'd.

CODE	PART NAME	ENG. TYPE OR CU.IN.	V 1-2	B J 1-2	L 1-2	R 1-2	W 1-2	P 1-2	D 1-2	C 1	C 2	C 3	Y 1	PART NUMBER
21-30-6	KNOB Cont'd.													
	HANDLE, w/Console	71	—	1	—	1	1	—	—	—	—	—	—	3467 051
	SCREW, Handle Set	71	—	1	—	1	1	—	—	—	—	—	—	6029 201
21-30-10	BUTTON, Gearshift, Control Selector Lever Knob, w/Console, Black	70	1	1	1	1	1	1	1	1	1	1	—	2950 715
		71	1	—	1	—	—	1	1	1	1	1	—	2950 715
		71	—	1	—	1	1	—	—	—	—	—	—	3467 055
21-30-11	GATE, Column Gearshift Lever	70	1	1	1	1	1	1	1	1	1	1	1	2950 988
		71	1	1	1	1	1	1	1	1	1	1	1	3467 821
	Shift Lever, w/o Console, Tilt, Telescopic, Saginaw Blt.	70	—	—	—	—	—	1	1	1	1	1	1	2950 562
	Shift Lever, w/o Console, Tilt, Telescopic	71	—	—	—	1	1	1	1	1	1	1	1	3575 219
	SCREW		2	2	2	2	2	2	2	2	2	2	—	6027 370
21-30-13	SPRING, Gearshift Control Selector Lever Knob, w/Console, 8 Coils	70	1	1	1	1	1	1	1	1	1	1	—	2950 716
		71	1	—	1	—	—	1	1	1	1	1	—	2950 716
	Button, w/Console	71	—	1	—	1	1	—	—	—	—	—	—	3467 019
	Gearshift Control Actuator Lower Gate, w/Console	70	—	1	—	—	—	—	—	—	—	—	—	3467 018
		71	—	1	—	1	1	—	—	—	—	—	—	3467 018
21-30-15	LAMP, w/LENS and HOUSING, Console Gearshift Selector Indicator, w/o Socket, w/Shift Pattern, V-S (Also See Code 21-30-28)	70	1	—	1	1	1	1	1	1	1	1	—	2820 756
		71	1	—	1	—	—	1	1	1	1	1	—	2820 756
	(Also See Code 21-30-28)	70	—	1	—	—	—	—	—	—	—	—	—	2947 944
	UP TO approx. Dec. 1970	71	—	1	—	1	1	—	—	—	—	—	—	= 3488 485
	AFTER approx. Dec. 1970	71	—	1	—	1	1	—	—	—	—	—	—	≠ 3488 535
21-30-19	COVER, Gearshift Indicator Opening, w/Black Face, w/Console		—	—	—	—	—	1	1	—	—	—	—	2927 067
	w/Black Face, w/Console, 2 53/64" Igh.		—	—	—	—	—	—	—	1	1	1	—	2927 258
	SCREW, Mtg.	70	—	—	—	—	—	—	2	—	—	—	—	6024 654
		71	—	—	—	—	—	2	—	—	—	—	—	6024 654
21-30-21	LENS, w/MASK and BACKDIAL, Column Gearshift Selector Indicator Lamp, w/Shift Pattern, Painted Blue		1	—	1	1	1	—	—	—	—	—	—	2947 724
	Painted Black		—	1	—	—	—	—	—	—	—	—	—	2947 903
	Gearshift Selector Indicator, w/Tilt Wheel, w/Shift Pattern	71	—	—	—	1	1	—	—	—	—	—	—	3486 158
21-30-23	POINTER, Column Gearshift Indicator or Dial	70	1	1	1	1	1	—	—	—	—	—	—	2950 987
	Black, w/Fire Orange Pointer	71	1	1	1	1	1	—	—	—	—	—	—	2950 987
	White, w/Fire Orange Pointer	71	1	1	1	1	1	—	—	—	—	—	—	≠ 3575 320
	w/Bracket, Nut and Washers	70	—	—	—	—	—	1	—	—	—	—	—	3420 571
		71	—	—	—	—	—	1	1	—	—	—	—	3420 571
		70	—	—	—	—	—	—	1	—	—	—	—	3420 572
			—	—	—	—	—	—	—	1	1	1	1	3420 573
	w/Tilt Wheel	71	—	—	—	1	1	—	—	—	—	—	—	3488 160
	INDICATOR, LENS and DIAL, Gearshift w/o Console, w/Shift Pattern	70	—	—	—	—	—	1	—	—	—	—	—	2927 063
		71	—	—	—	—	—	1	1	—	—	—	—	2927 063
	SCREW, Column Gearshift Pointer	70	1	1	1	1	1	—	—	—	—	—	—	9405 339
	6-32 x 5/16"	71	1	1	1	1	1	1	—	—	—	—	—	6029 134

CARLINES: J - Challenger, B - Barracuda, V - Valiant, L - Dart, R - Belvedere · Satellite, W - Coronet · Charger, P - Plymouth, D - Dodge, C - Chrysler, Y - Imperial

AR Indicates use as required.

Numerals in parentheses ( ) refer to notes.

# Indicates parts not listed in any previous parts book.

★ Indicates change or addition.

Printed in U.S.A. January 1972

AUTOMATIC TRANSMISSION

21-30-0 TRANSMISSION GEARSHIFT CONTROLS Cont'd.

CODE	PART NAME	ENG. TYPE OR CU.IN.	V 1-2	B J 1-2	L 1-2	R 1-2	W 1-2	P 1-2	D 1-2	C 1	C 2	C 3	Y 1	PART NUMBER
21-30-24	BRACKET, w/STUD, Column Gearshift Tube Indicator		—	—	—	—	—	1	1	1	1	1	1	3467 176
	BRACKET, Lens Retainer Tilt Column Gearshift Selector Indicator Lamp	71	—	—	—	1	1	—	—	—	—	—	—	3488 375
	BRACKET, w/SOCKET, WIRE and TERMINAL, Tilt Column Gearshift Indicator Lamp	71	—	—	—	1	1	—	—	—	—	—	—	3488 376
	RIVET		—	—	—	—	—	2	2	2	2	2	—	6027 976
21-30-28	LAMP, w/HOUSING, DIFFUSER, BULB and WIRE, Column Gearshift Selector Indicator		1	1	1	1	1	—	—	—	—	—	—	2947 553
	SOCKET, Gearshift Selector Lamp (Also see 21-30-24)		—	1	—	1	1	—	—	—	—	—	—	2096 374
			1	—	1	—	—	1	1	1	1	1	—	1753 632
	w/o Console	70	—	—	—	—	—	—	1	—	—	—	—	2097 003
	SCREW, Column Gearshift Indicator Lamp	71	2	2	2	2	2	—	—	—	—	—	—	6023 088
21-30-33	CONTACT, Gearshift Selector Lamp Socket		1	1	1	1	1	1	1	1	1	1	—	2256 966
21-30-38	BUSHING, Gearshift Control Selector Lever Pivot Stud, w/Console	70	2	—	2	2	2	2	2	2	2	2	—	2643 910
		71	2	—	2	—	—	2	2	2	2	2	—	2643 910
	Gearshift Control Rod, Upper, w/Console		1	1	1	1	1	1	1	1	1	1	—	3467 245
21-30-43	SPRING, Shift Lever, w/Tilt Wheel, Telescopic w/o Console, Saginaw Blt., 10 Coils	70	—	—	—	—	—	1	1	1	1	1	1	2880 284
		71	—	—	—	1	1	1	1	1	1	1	1	2880 284
		70	—	—	—	1	1	1	1	1	1	1	—	3467 049
21-30-61	CAP, Gearshift Control Selector Lever Button Retainer, w/Console	71	—	1	—	1	1	—	—	—	—	—	—	3467 059
21-30-67	CLIP, Gearshift Indicator Lens Retaining, w/Tilt Wheel, Steel	71	—	—	—	1	1	—	—	—	—	—	—	3488 161
21-30-68	RETAINER, Gearshift Selector Lens, w/Tilt Wheel, Dark Blue	71	—	—	—	1	1	—	—	—	—	—	—	4208 GB7
	Dark Green	71	—	—	—	1	1	—	—	—	—	—	—	4208 GF7
		71	—	—	—	1	1	—	—	—	—	—	—	4208 GT6
	Black	71	—	--	—	1	1	—	—	—	—	—	—	4208 GX9
		71	—	—	—	1	1	—	—	—	—	—	—	4208 GY6
	Gearshift Selector Indicator Lens, w/Tilt Wheel	71	—	—	—	1	1	—	—	—	—	—	—	3488 159
21-30-69	CAP, Gearshift Selector Indicator Lens Lamp, w/Tilt Wheel, Plastic	71	—	—	—	1	1	—	—	—	—	—	—	3488 162
21-30-100	SPRING, Column Gearshift Lever, 8 Coils		1	1	1	1	1	1	1	1	1	1	1	2996 786
	PIN		1	1	1	1	1	1	1	1	1	1	1	9421 202
21-30-353	PAWL, w/WIRE, Gearshift Control Selector Lever Lock, w/Console	70	1	—	1	1	1	1	1	1	1	1	—	2950 210
		71	1	—	1	—	—	1	1	1	1	1	—	2950 210
21-30-355	SPRING, Gearshift Control Selector Lever Lock Pawl, 23 Coils, w/Console	70	1	—	1	1	1	1	1	1	1	1	—	2643 913
		71	1	—	1	—	—	1	1	1	1	1	—	2643 913
21-30-393	SPACER, Gearshift Control Selector Lever Cable, 7/8" lgh., w/Console	70	1	—	1	1	1	1	1	1	1	1	—	2768 061
		71	1	—	1	—	—	1	1	1	1	1	—	2768 061

CARLINES J - Challenger, B - Barracuda, V - Valiant, L - Dart, R - Belvedere - Satellite, W - Coronet - Charger, P - Plymouth, D - Dodge, C - Chrysler, Y - Imperial

AR Indicates use as required.

# Indicates parts not listed in any previous parts book.

Numerals in parentheses ( ) refer to notes.

★ Indicates change or addition.

Printed in U.S.A.
January 1972

AUTOMATIC TRANSMISSION

21-30-0 TRANSMISSION GEARSHIFT CONTROLS Cont'd.

CODE	PART NAME	ENG. TYPE OR CU.IN.	V 1-2	B J 1-2	L 1-2	R 1-2	W 1-2	P 1-2	D 1-2	C 1	C 2	C 3	Y 1	PART NUMBER
21-30-407	ACTUATOR, w/LEVER, PLATE, and GATE, Gearshift Control, w/Console	70	—	1	—	—	—	—	—	—	—	—	—	3467 627
	w/T Handle Type Shift	71	—	1	—	1	1	—	—	—	—	—	—	3467 001
	SCREW		3	3	3	3	3	3	3	3	3	3	—	6025 311
21-30-408	COVER, Console Trans. Control Lever Opening, Plastic, 8 15/16" lgh., w/ Console	70	1	—	1	1	1	1	1	—	—	—	—	2656 089
	Floor Console Trans. Control Lever Opening	70	—	—	—	—	—	—	1	1	1	1	—	2656 089
	(See Code 21-30-15 for B, J, R and W Models)	71	1	—	1	—	—	1	1	1	1	1	—	2656 089
21-30-416	PLATE, w/STUD and GATE, Gearshift Control Actuator, w/Console	70	1	—	1	1	1	1	1	1	1	1	—	3467 116
		71	1	—	1	—	—	1	1	1	1	1	—	3467 116
	BRACKET, w/NUT, Console Gear Selector to Floor Pan Mtg., w/Console	70	—	1	—	—	—	—	—	—	—	—	—	3445 948
		71	—	1	—	1	1	—	—	—	—	—	—	3445 948
		70	—	—	—	1	1	—	—	—	—	—	—	3504 646
			—	—	—	—	—	1	1	1	1	1	—	3504 647
21-30-418	ROD, Gearshift Control, Upper, w/Console		1	—	1	—	—	—	—	—	—	—	—	2781 417
	Lwr.		1	—	1	—	—	—	—	—	—	—	—	2950 212
	Gearshift, Rr., w/o Console		1	—	1	—	—	—	—	—	—	—	—	2800 947
	Gearshift Control, Upper, w/Console	70	—	1	—	—	—	—	—	—	—	—	—	2996 432
		71	—	1	—	1	1	—	—	—	—	—	—	2996 432
	Lwr., w/Console	70	—	1	—	—	—	—	—	—	—	—	—	3467 058
		71	—	1	—	1	1	—	—	—	—	—	—	3467 727
	Upper, w/Console	70	—	—	—	1	1	—	—	—	—	—	—	2800 815
	Lwr., w/Console	70	—	—	—	1	1	1	1	1	1	1	—	2950 211
		71	—	—	—	—	—	1	1	1	1	1	—	3467 726
	Upper, w/Console		—	—	—	—	—	1	1	1	1	1	—	2800 817
	Frt.	70	—	—	—	—	—	1	1	1	1	1	1	2996 459
		71	—	—	—	—	—	1	1	1	1	1	1	3467 671
	WASHER, w/Console		AR	AR	AR	AR	AR	AR	AR	AR	AR	AR	—	6027 467
21-30-426	WASHER, Gearshift Control Selector Lever Pivot Stud, w/Console	70	1	—	1	1	1	1	1	1	1	1	—	632 258
21-30-428	SWIVEL, Gearshift Control Rod, Lwr., w/Console	70	1	—	1	1	1	1	1	1	1	1	—	2996 423
		71	—	—	—	—	—	1	1	1	1	1	—	2996 423
21-30-429	CLAMP, Gearshift Rod, w/Console		1	1	1	1	1	1	1	1	1	1	—	2204 274
21-30-433	CLIP, Gearshift Control Selector Lever Pivot Stud, w/Console, w/3/8" to 7/16" Rods	70	1	—	1	—	—	—	—	—	—	—	—	1635 232
	Gearshift Control Rod Cotter		AR	AR	AR	AR	AR	AR	—	—	—	—	—	1137 669

21-84-0 TRANSMISSION SPEEDOMETER CABLE ASSEMBLY

21-84-1	CABLE, w/HOUSING, w/o Auto. Speed Control, 63" Lgh.	70	1	1	1	1	1	1	—	1	1	1	1	2889 783
		71	1	1	1	1	1	1	1	1	1	1	1	2889 783
		70	—	—	—	—	—	—	1	—	—	—	—	2822 024
	w/Auto. Speed Control, Upper 36" Lgh.	70	—	1	—	1	1	1	—	—	—	—	—	2927 910
		71	—	—	—	1	1	1	1	—	—	—	—	2927 910
		70	—	—	—	—	—	—	1	—	—	—	—	2927 912
	34" Lgh.		—	—	—	—	—	—	—	1	1	1	1	2927 914
	Lwr., 54" Lgh.	70	—	1	—	1	1	—	—	—	—	—	—	2927 666
		71	—	—	—	1	1	1	1	1	1	1	1	2927 666
		70	—	—	—	—	—	1	1	1	1	1	1	2889 785

CARLINES: J - Challenger; B - Barracuda; V - Valiant; L - Dart; R - Belvedere - Satellite; W - Coronet - Charger; P - Plymouth; D - Dodge; C - Chrysler; Y - Imperial

AR Indicates use as required.

Numerals in parentheses ( ) refer to notes.

# Indicates parts not listed in any previous parts book.

★ Indicates change or addition.

Printed in U.S.A. January 1972

CODE	PART NAME	ENG. TYPE OR CU.IN.	V 1-2	B J 1-2	L 1-2	R 1-2	W 1-2	P 1-2	D 1-2	C 1	C 2	C 3	Y 1	PART NUMBER
	AUTOMATIC TRANSMISSION													
	21-84-0 TRANSMISSION SPEEDOMETER CABLE ASSEMBLY Cont'd.													
21-84-1	CABLE Cont'd.													
	w/NOx Exhaust Emission Control,													
	Upper, 25" Lgh.	71	1	—	1	—	—	—	—	—	—	—	—	2985 875
	Lwr.	71	1	—	1	—	—	—	—	—	—	—	—	2985 878
	CLIP, Cable	70	—	—	—	—	—	1	1	1	—	—	—	6028 024
	Upper, For Fleet Use Only	71	—	—	—	—	—	1	1	1	1	1	—	3571 559
	SCREW, Clip Attaching		—	—	—	—	—	1	1	1	—	—	—	9417 361
21-84-4	SHAFT or CABLE PACKAGE, 80" lgh.		1	1	1	1	1	1	1	1	1	1	1	2448 294
21-84-7	CONNECTOR, Cable, For Fleet Use Only	71	—	—	—	—	—	1	1	1	1	1	—	3571 560
21-84-8	GROMMET, Speedometer Cable Dash		1	1	1	1	1	1	1	1	1	1	1	2216 552
21-84-28	SEAL, Speedometer Cable, w/Sealed Speedometer, Steel	71	—	—	—	—	—	1	1	—	—	—	—	2644 764

NOTES

CARLINES J - Challenger, B - Barracuda, V - Valiant, L - Dart, R - Belvedere - Satellite, W - Coronet - Charger, P - Plymouth, D - Dodge, C - Chrysler, Y - Imperial

AR Indicates use as required.

# Indicates parts not listed in any previous parts book.

Numerals in parentheses ( ) refer to notes.

★ Indicates change or addition.

Printed in U.S.A. January 1972

AUTOMATIC TRANSMISSION

21-85-0 TRANSMISSION SPEEDOMETER GEAR AND PINION

21-85-5 PINION-MODEL YEAR 1970

Tire Size	2.45 to 1 Ratio Pinion Teeth	2.71 to 1 Ratio Pinion Teeth	2.76 to 1 Ratio Pinion Teeth	2.93 to 1 Ratio Pinion Teeth	2.94 to 1 Ratio Pinion Teeth
B78 x 14	———	———	2538930 30Y	———	———
C78 x 14	———	———	2538929 29BL	———	———
D78 x 14	———	———	2538 929 29BL	———	———
E78 x 14	———	2538928 28B	2538928 28B	2538930 30Y	2538930 30Y
F78 x 14	3410025 25B	2538927 27W	2538 928 28B	2538930 30Y	2538930 30Y
G78 x 14	3410024 24W	2538927 27W	2538927 27W	2538929 29BL	2538929 29BL
H78 x 14	———	2538926 26R	2538926 26R	2538928 28B	2538928 28B
E70 x 14	———	———	2538929 29BL	———	———
F70 x 14	3410025 25B	2538927 27W	2538928 28B	———	2538930 30Y
F78 x 15	———	2538926 26R	2538927 27W	———	2538929 29BL
G78 x 15	———	2538926 26R	2538926 26R	———	2538928 28B
H78 x 15	———	3410025 25B	2538926 26R	———	2538927 27W
J78 x 15	———	3410025 25B	2538926 26R	———	2538927 27W
L78 x 15	———	3410025 25B	2538926 26R	———	2538927 27W
E60 x 15	———	———	2538929 29BL	———	———
F60 x 15	3410025 25B	2538928 28B	2538928 28B	———	2538930 30Y
H70 x 15	———	2538926 26R	2538926 26R	———	2538928 28B
6.95 x 14	———	———	2538929 29BL	———	———
7.35 x 14	———	2538928 28B	2538928 28B	2538930 30Y	2538930 30Y
7.75 x 14	3410024 24W	2538927 27W	2538927 27W	2538929 29BL	2538929 29BL
7.75 x 15	3410024 24W	2538927 27W	2538927 27W	2538929 29BL	2538929 29BL
8.25 x 15	3410024 24W	2538926 26R	2538927 27W	2538928 28B	2538928 28B
8.55 x 15	———	2538926 26R	2538926 26R	———	2538928 28B

Tire Size	3.23 to 1 Ratio Pinion Teeth	3.54 to 1 Ratio Pinion Teeth	3.55 to 1 Ratio Pinion Teeth	3.91 to Ratio Pinion Teeth	4.10 to 1 Ratio Pinion Teeth
B78 x 14	2538935 350	———	2538938 38B	2538942 42W	———
C78 x 14	2538934 34G	———	2538937 37W	2538941 41R	———
D78 x 14	2538933 33Y	———	2538937 37W	2538940 40O	———
E78 x 14	2538933 33Y	———	2538936 36R	2538940 40O	———
F78 x 14	2538932 32BL	———	2538936 36R	2538939 39G	———
G78 x 14	2538932 32BL	———	2538935 350	2538938 38B	———
H78 x 14	2538931 31G	———	2538934 34G	2538937 37W	———
E70 x 14	2538933 33Y	———	2538937 37W	2538940 40O	———
F70 x 14	2538932 32BL	2538936 36R	2538936 36R	2538939 39G	2538941 41R
F78 x 15	2538931 31G	———	2538935 35O	———	———
G78 x 15	2538931 31G	———	2538934 34G	———	———
H78 x 15	2538930 30Y	———	2538933 33Y	———	———
J78 x 15	2538930 30Y	———	2538933 33Y	———	———
L78 x 15	2538930 30Y	———	2538933 33Y	———	———
E60 x 15	2538934 34G	2538937 37W	2538937 37W	2538941 41R	2538943 43B
F60 x 15	2538933 33Y	2538936 36R	2538936 36R	2538940 40O	2538942 42W
H70 x 15	2538931 31G	———	2538934 34G	———	———
6.95 x 14	2538934 34G	———	2538937 37W	2538941 41R	———
7.35 x 14	2538933 33Y	———	2538936 36R	2538940 40O	———
7.75 x 14	2538932 32BL	———	2538935 350	2538939 39G	2538941 41R
7.75 x 15	2538932 32BL	———	2538935 350	2538938 38B	———
8.25 x 15	2538931 31G	———	2538934 34G	2538938 38B	———
8.55 x 15	2538931 31G	———	2538934 34G	———	———

COLOR OF PINIONS

G-GREEN	R-RED	W-WHITE	B-BLUE	Y-YELLOW
		BL-BLACK		O-ORANGE

CARLINES					
	J - Challenger B - Barracuda	V - Valiant L - Dart	R - Belvedere - Satallite W - Coronet - Charger	P - Plymouth D - Dodge	C - Chrysler Y - Imperial

AR Indicates use as required.

Numerals in parentheses ( ) refer to notes.

# Indicates parts not listed in any previous parts book.

★ Indicates change or addition.

Printed in U.S.A.
January 1972

AUTOMATIC TRANSMISSION

21-85-0 TRANSMISSION SPEEDOMETER GEAR AND PINION Cont'd.

21-85-5 PINION - MODEL YEAR 1971

TIRE SIZE	2.45 to 1 Ratio Pinion Teeth	2.71 to 1 Ratio Pinion Teeth	2.76 to 1 Ratio Pinion Teeth	2.93 to 1 Ratio Pinion Teeth	2.94 to 1 Ratio Pinion Teeth
B78 x 14	2538 927 27W	2538 929 29BL	2538 930 30Y	2538 932 32BL	2538 932 32BL
C78 x 14	2538 926 26R	2538 929 29BL	2538 929 29BL	2538 931 31G	2538 931 31G
D78 x 14	2538 926 26R	2538 928 28B	2538 929 29BL	2538 931 31G	2538 931 31G
E78 x 14	3410 025 25B	2538 928 28B	2538 928 28B	2538 930 30Y	2538 930 30Y
F78 x 14	3410 025 25B	2538 927 27W	2538 928 28B	2538 930 30Y	2538 930 30Y
G78 x 14	3410 024 24W	2538 927 27W	2538 927 27W	2538 929 29BL	2538 929 29BL
H78 x 14	3410 024 24W	2538 926 26R	2538 927 27W	2538 928 28B	2538 928 28B
F78 x 15	3410 024 24W	2538 927 27W	2538 927 27W	2538 929 29BL	2538 929 29BL
G78 x 15	3410 024 24W	2538 926 26R	2538 927 27W	2538 928 28B	2538 928 28B
H78 x 15	———	2538 926 26R	2538 926 26R	2538 928 28B	2538 928 28B
J78 x 15	———	3410 025 25B	2538 926 26R	2538 927 27W	2538 927 27W
L84 x 15	———	3410 025 25B	3410 025 25B	2538 927 27W	2538 927 27W
E-70 x 14	2538 926 26R	2538 928 28B	2538 929 29BL	2538 931 31G	2538 931 31G
F70 x 14	3410 025 25B	2538 928 28B	2538 928 28B	2538 930 30Y	2538 930 30Y
G70 x 14	3410 025 25B	2538 927 27W	2538 928 28B	2538 930 30Y	2538 930 30Y
H70 x 15	———	2538 926 26R	2538 927 27W	2538 928 28B	2538 928 28B
E60 x 15	3410 025 25B	2538 928 28B	2538 929 29BL	2538 930 30Y	2538 930 30Y
F60 x 15	3410 025 25B	2538 928 28B	2538 928 28B	2538 930 30Y	2538 930 30Y
G60 x 15	3410 025 25B	2538 927 27W	2538 928 28B	2538 930 30Y	2538 930 30Y
6.45 x 14	2538 926 26R	2538 929 29BL	2538 929 29BL	2538 931 31G	2538 931 31G
6.95 x 14	3410 025 25B	2538 928 28B	2538 929 29BL	2538 930 30Y	2538 930 30Y
7.35 x 14	3410 025 25B	2538 928 28B	2538 928 28B	2538 930 30Y	2538 930 30Y
7.75 x 14	———	2538 927 27W	2538 928 28B	2538 929 29BL	2538 929 29BL
8.25 x 14	3410 024 24W	2538 927 27W	2538 927 27W	2538 929 29BL	2538 929 29BL
8.55 x 14	3410 024 24W	2538 926 26R	2538 926 26R	2538 928 28B	2538 928 28B
7.75 x 15	3410 024 24W	2538 927 27W	2538 928 28B	2538 929 29BL	2538 929 29BL
8.25 x 15	3410 024 24W	2538 926 26R	2538 927 27W	2538 928 28B	2538 929 29BL
8.55 x 15	———	2538 926 26R	2538 926 26R	2538 928 28B	2538 928 28B
8.90 x 15	———	———	3410 024 24W	3410 025 25B	3410 025 25B
9.00 x 15	———	3410 024 24B	3410 025 25B	2538 926 26R	2538 926 26R
9.15 x 15	———	3410 025 25B	2538 926 26R	2538 927 27W	2538 927 27W

TIRE SIZE	3.21 to 1 Ratio Pinion Teeth	3.23 to 1 Ratio Pinion Teeth	3.54 to 1 Ratio Pinion Teeth	3.55 to 1 Ratio Pinion Teeth	3.91 to 1 Ratio Pinion Teeth
B78 x 14	2538 935 35O	2538 935 35O	2538 938 38B	2538 938 38B	2538 942 42W
C78 x 14	2538 934 34G	2538 934 34G	2538 937 37W	2538 937 37W	2538 941 41R
D78 x 14	2538 933 33Y	2538 934 34G	2538 937 37W	2538 937 37W	2538 941 41R
E78 x 14	2538 933 33Y	2538 933 33Y	2538 936 36R	2538 936 36R	2538 940 40O
F78 x 14	2538 932 32BL	2538 933 33Y	2538 936 36R	2538 936 36R	2538 939 39G
G78 x 14	2538 932 32BL	2538 932 32BL	2538 935 35O	2538 935 35O	2538 939 39G
H78 x 14	2538 931 31G	2538 931 31G	2538 934 34G	2538 934 34G	2538 937 37W
F78 x 15	2538 931 31G	2538 932 32BL	2538 935 35O	2538 935 35O	2538 938 38B
G78 x 15	2538 931 31G	2538 931 31G	2538 934 34G	2538 934 34G	2538 938 38B
H78 x 15	2538 930 30Y	2538 930 30Y	2538 933 33Y	2538 933 33Y	2538 937 37W
J78 x 15	2538 930 30Y	2538 930 30Y	2538 933 33Y	2538 933 33Y	2538 936 36R
L84 x 15	2538 929 29BL	2538 929 29BL	2538 932 32BL	2538 932 32BL	2538 935 35O
E70 x 14	2538 934 34G	2538 934 34G	2538 937 37W	2538 937 37W	2538 941 41R
F70 x 14	2538 933 33Y	2538 933 33Y	2538 936 36R	2538 936 36R	2538 940 40O
G70 x 14	2538 932 32BL	2538 933 33Y	2538 936 36R	2538 936 36R	2538 939 39G
H70 x 15	2538 931 31G	2538 931 31G	2538 934 34G	2538 934 34G	2538 937 37W
E60 x 15	2538 933 33Y	2538 933 33Y	2538 937 37W	2538 937 37W	2538 940 40O
F60 x 15	2538 933 33Y	2538 933 33Y	2538 936 36R	2538 936 36R	2538 940 40O
G60 x 15	2538 932 32BL	2538 932 32BL	2538 936 36R	2538 936 36R	2538 939 39G
6.45 x 14	2538 934 34G	2538 934 34G	2538 937 37W	2538 938 38B	2538 942 42W
6.95 x 14	2538 933 33Y	2538 933 33Y	2538 937 37W	2538 937 37W	2538 940 40O
7.35 x 14	2538 933 33Y	2538 933 33Y	2538 936 36R	2538 936 36R	2538 940 40O
7.75 x 14	2538 932 32BL	2538 932 32BL	2538 935 35O	2538 935 35O	2538 939 39G
8.25 x 14	2538 932 32BL	2538 932 32BL	2538 935 35O	2538 935 35O	2538 938 38B
8.55 x 14	2538 931 31G	2538 931 31G	2538 934 34G	2538 934 34G	2538 937 37W

CARLINES J - Challenger, B - Barracuda, V - Valiant, L - Dart, R - Belvedere - Satallite, W - Coronet - Charger, P - Plymouth, D - Dodge, C - Chrysler, Y - Imperial

AR Indicates use as required.

Numerals in parentheses ( ) refer to notes.

≠ Indicates parts not listed in any previous parts book.

★ Indicates change or addition.

Printed in U.S.A. January 1972

AUTOMATIC TRANSMISSION

21-85-0 TRANSMISSION SPEEDOMETER GEAR AND PINION Cont'd.

21-85-5 PINION-MODEL YEAR 1971 Cont'd.

TIRE SIZE	3.21 to 1 Ratio Pinion Teeth	3.23 to 1 Ratio Pinion Teeth	3.54 to 1 Ratio Pinion Teeth	3.55 to 1 Ratio Pinion Teeth	3.91 to 1 Ratio Pinion Teeth
7.75 x 15	2538 932 32BL	2538 932 32BL	2538 935 35O	2538 935 35O	2538 939 39G
8.25 x 15	2538 931 31G	2538 931 31G	2538 934 34G	2538 934 34G	2538 938 38B
8.55 x 15	2538 931 31G	2538 931 31G	2538 934 34G	2538 934 34G	2538 937 37W
8.90 x 15	2538 928 28B	2538 928 28B	2538 930 30Y	2538 930 30Y	2538 933 33Y
9.00 x 15	2538 929 29BL	2538 929 29BL	2538 932 32BL	2538 932 32BL	2538 935 35O
9.15 x 15	2538 930 30Y	2538 930 30Y	2538 933 33Y	2538 933 33Y	2538 936 36R

TIRE SIZE	4.10 to 1 Ratio Pinion Teeth
B78 x 14	2538 944 44BL
C78 x 14	2538 943 43B
D78 x 14	2538 943 43B
E78 x 14	2538 942 42W
F78 x 14	2538 941 41R
G78 x 14	2538 940 40O
H78 x 14	2538 939 39G
F78 x 15	2538 940 40O
G78 x 15	2538 939 39G
H78 x 15	2538 938 38B
J78 x 15	2538 938 38B
L84 x 15	2538 937 37W
E70 x 14	2538 943 43B
F70 x 14	2538 942 42W
G70 x 14	2538 941 41R
H70 x 15	2538 939 39G
E60 x 15	2538 942 42W
F60 x 15	2538 942 42W
G60 x 15	2538 941 41R
6.45 x 14	2538 944 44BL
6.95 x 14	2538 942 42W
7.35 x 14	2538 942 42W
7.75 x 14	2538 941 41R
8.25 x 14	2538 940 40O
8.55 x 14	2538 939 39G
7.75 x 15	2538 941 41R
8.25 x 15	2538 940 40O
8.55 x 15	2538 939 39G
8.90 x 15	2538 935 35O
9.00 x 15	2538 937 37W
9.15 x 15	2538 938 38B

COLOR OF PINIONS

G-GREEN R-RED W-WHITE BL-BLACK B-BLUE Y-YELLOW O-ORANGE

CARLINES J - Challenger B - Barracuda V - Valiant L - Dart R - Belvedere - Satallite W - Coronet - Charger P - Plymouth D - Dodge C - Chrysler Y - Imperial

AR Indicates use as required.

# Indicates parts not listed in any previous parts book.

Numerals in parentheses ( ) refer to notes.

★ Indicates change or addition.

Printed in U.S.A.
January 1972

CODE	PART NAME		ENG. TYPE OR CU.IN.	V 1-2	B J 1-2	L 1-2	R 1-2	W 1-2	P 1-2	D 1-2	C 1	C 2	C 3	Y 1	PART NUMBER

AUTOMATIC TRANSMISSION

21-85-0 TRANSMISSION SPEEDOMETER GEAR AND PINION Cont'd.

21-85-9	ADAPTER, Speedometer Drive Pinion, w/26 to 45 Tooth Pinions			1	1	1	1	1	1	1	1	1	1	1	2538 608
	w/21 to 25 Tooth Pinions	70		—	—	—	1	1	1	—	—	—	—	—	2892 994
		71		—	—	—	1	1	1	1	1	1	1	—	2892 994
	"O" RING, Adapter, Rubber, 1 35/64" I.D.			1	1	1	1	1	1	1	1	1	1	1	6025 752
21-85-22	SEAL, Pinion Adapter, Rubber			1	1	1	1	1	1	1	1	1	1	1	2538 588
21-85-23	RING, Speedometer Seal Retainer			1	1	1	1	1	1	1	1	1	1	1	2538 571
21-85-61	CLAMP, Speedometer Drive Pinion Adapter			1	1	1	1	1	1	1	1	1	1	1	2892 399
	SCREW, w/WASHER, Clamp			1	1	1	1	1	1	1	1	1	1	1	180 077
		71		—	—	—	—	—	1	1	—	—	—	—	6028 783

21-113-0 TRANSMISSION NEUTRAL STARTER AND BACK-UP LIGHT SWITCH

21-113-24	SWITCH, w/WASHER, w/3 Prongs			1	1	1	1	1	1	1	1	1	1	1	2932 820
21-113-29	WASHER, Mtg.			1	1	1	1	1	1	1	1	1	1	1	2408 143

21-119-0 TRANSMISSION OIL PAN

21-119-15	TUBE, Oil Filler, w/198 and 225 Eng., A904 Trans.		6	1	1	1	1	1	1	1	—	—	—	—	2801 911
	w/318 Eng., A904 Trans.		8	1	1	1	1	1	1	1	—	—	—	—	2801 912
	w/340 Eng., A727 Trans.	70	8	1	1	1	—	—	—	—	—	—	—	—	2892 405
	V, L, B, J, R, W, w/340 Eng., R, W, P, D, w/318 Eng., P, D, C1, w/360 Eng., w/A727 Trans.	71	8	1	1	1	1	1	1	1	1	—	—	—	2892 405
	w/383 and 440 Eng., A727 Trans.		8	—	1	—	1	1	1	1	1	1	1	1	3410 535
	w/426 Eng., A727 Trans.		8	—	1	—	1	1	—	—	—	—	—	—	2892 815
	w/225 Eng., Heavy Duty, A727 Trans.		6	—	—	—	1	1	1	1	—	—	—	—	2892 408
	w/318 Eng., A727 Trans.	70		—	—	—	1	1	1	1	—	—	—	—	2801 918
21-119-19	INDICATOR, Oil Level, w/o 426 Eng.			1	1	1	1	1	1	1	1	1	1	1	2466 302
	w/426 Eng.			—	1	—	1	1	—	—	—	—	—	—	2538 849
21-119-25	SEAL, Oil Filler Tube			1	1	1	1	1	1	1	1	1	1	1	1316 815

21-142-0 TRANSMISSION CONTROL LEVER

21-142-12	LEVER, w/BOLT and NUT, Throttle Control		6	1	—	1	—	—	—	—	—	—	—	—	2946 609
	w/318 Eng., w/Bolt and Nut, A904 Trans.	70	8	1	—	1	1	1	—	—	—	—	—	—	2863 708
	w/318 Eng., w/Bolt and Nut, A904 Trans.	71	8	1	—	1	—	—	—	—	—	—	—	—	2863 708
	w/340 Eng., w/Bolt and Nut, A727 Trans.	70	8	1	—	—	—	—	—	—	—	—	—	—	2536 270
	V, L, w/340 Eng., B, J, R, W, w/340 and 426 Eng., w/Bolt and Nut	71	8	1	1	1	1	1	—	—	—	—	—	—	2536 270
	w/318 Eng., A904 Trans.	70	8	—	1	—	—	—	1	1	—	—	—	—	2946 604
	w/225 Eng., A904 Trans.	71	6	—	1	—	1	1	1	1	—	—	—	—	2899 322
	w/318 Eng., A904 Trans.	71		—	1	—	1	1	1	1	—	—	—	—	2946 604
	w/198 and 225 Eng., w/Bolt and Nut, A904 Trans.		6	—	1	—	1	1	1	1	—	—	—	—	2899 321
	w/340 Eng., w/6 bbl. Carb. and 383 Eng., w/2 bbl. Carb., A727 Trans.	70	8	—	1	—	—	—	—	—	—	—	—	—	2899 370
	w/340 and 440 Eng., w/6 bbl. Carb. and 383 and 440 Eng. w/4 bbl. Carb., A727 Trans.	71		—	1	—	—	—	—	—	—	—	—	—	2899 370

CARLINES J - Challenger, B - Barracuda, V - Valiant, L - Dart, R - Belvedere - Satellite, W - Coronet - Charger, P - Plymouth, D - Dodge, C - Chrysler, Y - Imperial

AR Indicates use as required.

# Indicates parts not listed in any previous parts book.

Numerals in parentheses ( ) refer to notes.

★ Indicates change or addition.

Printed in U.S.A. January 1972

AUTOMATIC TRANSMISSION

21-142-0 TRANSMISSION CONTROL LEVER Cont'd.

CODE	PART NAME	ENG. TYPE OR CU.IN.	V 1-2	B J 1-2	L 1-2	R 1-2	W 1-2	P 1-2	D 1-2	C 1	C 2	C 3	Y 1	PART NUMBER
21-142-12	LEVER Cont'd.													
	w/340, 383, 426 and 440 Eng., 4 bbl. Carb., A727 Trans.	70 8	—	1	—	—	—	—	—	—	—	—	—	2536 270
	w/225 Eng., w/Bolt and Nut, A727 Trans.	6	—	—	—	1	1	1	1	—	—	—	—	2899 325
	w/318 Eng., A727 Trans.	70 8	—	—	—	1	1	—	—	—	—	—	—	2536 275
	w/318, 383 and 440 Eng., A727 Trans.	71 8	—	—	—	1	1	—	—	—	—	—	—	2899 370
	w/383, 426 and 440 Hi-Perf. and 3-2 bbl. Carb., w/Bolt and Nut, A727 Trans.	70 8	—	—	—	1	1	—	—	—	—	—	—	2536 270
	w/318, 383 and 440 Eng., A727 Trans.	8	—	—	—	—	—	1	1	1	1	1	1	2899 370
21-142-18	LEVER, Manual Control, w/49/64" I.D. Hole in Bolt End, w/A904 Trans.		1	1	1	1	1	1	1	—	—	—	—	2538 064
	w/53/64" I.D. Hole in Bolt End, w/A727 Trans.		1	1	1	1	1	1	1	1	1	1	1	2801 828
	WASHER	70	2	2	2	2	2	2	2	2	2	2	—	6027 467
	CLIP	70	1	1	1	1	1	1	1	1	1	1	—	1137 669

NOTES

CARLINES J - Challenger, B - Barracuda, V - Valiant, L - Dart, R - Belvedere - Satellite, W - Coronet - Charger, P - Plymouth, D - Dodge, C - Chrysler, Y - Imperial

AR Indicates use as required.

# Indicates parts not listed in any previous parts book.

Numerals in parentheses ( ) refer to notes.

★ Indicates change or addition.

Printed in U.S.A. January 1972

AUTOMATIC TRANSMISSION

NOTE: All quantities are one (1) unless otherwise indicated in parenthesis.

CODE	TRANSMISSION	3410 635 A904	3410 636 A904	3410 637 A904	2892 086 A727	2892 087 A727	2892 089 A727
21-01-0	**TRANSMISSION SETS OR PACKAGES**						
21-01-3	SEAL and GASKET PACKAGE	3420 064	3420 064	3420 064	2808 414	2808 414	2808 414
21-03-0	**TRANSMISSION CASE**						
21-03-1	CASE	3410 281	3410 281	3410 280	———	2892 853	2892 853
	(Specify 1-1882735 Plug)	———	———	———	2892 855	———	———
	SCREW, w/Washer, Cover 1/4"-20 x 1/2" (AR)	6023 092	6023 092	6023 092	6023 092	6023 092	6023 092
21-03-15	PLUG	———	———	———	1882 735	———	———
21-04-0	**TRANSMISSION CASE EXTENSION**						
21-04-1	EXTENSION	2466 956	2466 956	2466 956	2466 969	2466 969	2466 969
	SCREW, w/WASHER (6)	6023 514	6023 514	6023 514	6023 514	6023 514	6023 514
21-04-2	GASKET	2466 954	2466 954	2466 954	2466 954	2466 954	2466 954
	Output Shaft Brg. Inspection Cover	2801 398	2801 398	2801 398	2801 398	2801 398	2801 398
21-04-8	COVER, Output Shaft Brg. Inspection	2466 957	2466 957	2466 957	2466 957	2466 957	2466 957
	SCREW (2)	6026 884	6026 884	6026 884	6026 884	6026 884	6026 884
21-04-11	BUSHING	2801 726	2801 726	2801 726	2801 724	2801 724	2801 724
21-05-0	**TRANSMISSION OUTPUT SHAFT**						
21-05-1	SHAFT, w/PLUG, Early Type, 21 11/32" lgh., Uses two Brg. Snap Rings	2538 567	2538 567	2538 567	———	———	———
	SHAFT	———	———	———	2801 314	2801 314	2801 314
21-05-2	BEARING, 1 15/64" I.D.	2466 484	2466 484	2466 484	———	———	———
	1 5/32" I.D.	3410 465	3410 465	3410 465	———	———	———
		———	———	———	2466 224	2466 224	2466 224
21-05-8	SNAP RING, Brg., Outer	2400 185	2400 185	2400 185	2400 320	2400 320	2400 320
	Brg., Early Type, 1 5/32" I.D. (2)	6025 668	6025 668	6025 668	———	———	———
	Late Type	6028 901	6028 901	6028 901	———	———	———
		———	———	———	6025 570	6025 570	6025 570
21-05-12	SEAL, Yoke, 1 9/16" lgh., w/One Lip, Rubber and Metal	2400 163	2400 163	2400 163	———	———	———
	1 61/64" lgh., 2 1/2" O.D.	———	———	———	2400 300	2400 300	2400 300
21-05-19	SNAP RING, Output Shaft, .040" thk., Red (AR)	6026 289	6026 289	6026 289	———	———	———
	.048" thk., Orange (AR)	6026 290	6026 290	6026 290	———	———	———
	.059" thk., Yellow (AR)	6026 291	6026 291	6026 291	———	———	———
	.048" thk. (AR)	———	———	———	6022 816	6022 816	6022 816
	.055" thk. (AR)	———	———	———	6024 311	6024 311	6024 311
	.062" thk. (AR)	———	———	———	6024 312	6024 312	6024 312
21-05-25	SUPPORT	2466 881	2466 881	2466 881	2466 882	2466 882	2466 882
21-05-35	WASHER, Output Shaft Thrust, Natural						
	.052" thk. (AR)	2538 669	2538 669	2538 669	———	———	———
	.068" thk. Red (AR)	2538 670	2538 670	2538 670	———	———	———
	.083" thk. Black (AR)	2538 671	2538 671	2538 671	———	———	———
	.062" thk.	———	———	———	2400 843	2400 843	2400 843

CARLINES J - Challenger, B - Barracuda; V - Valiant, L - Dart; R - Belvedere - Satallite, W - Coronet - Charger; P - Plymouth, D - Dodge; C - Chrysler, Y - Imperial

AR Indicates use as required.

Numerals in parentheses ( ) refer to notes.

# Indicates parts not listed in any previous parts book.

★ Indicates change or addition.

Printed in U.S.A. January 1972

AUTOMATIC TRANSMISSION

NOTE: All quantities are one (1) unless otherwise indicated in parenthesis

CODE	TRANSMISSION	3410 635 A904	3410 636 A904	3410 637 A904	2892 086 A727	2892 087 A727	2892 089 A727
21-117-0	**TRANSMISSION OIL FILTER**						
	NOTE: See Code 5-53-3 for Tubes						
21-117-1	FILTER or STRAINER	3410 253	3410 253	3410 253	3410 253	3410 253	3410 253
	SCREW, w/WASHER (3)	6026 390	6026 390	6026 390	6026 390	6026 390	6026 390
21-118-0	**TRANSMISSION OIL PUMP**						
21-118-6	ROTOR PACKAGE, Frt. Oil Pump	2808 685	2808 685	2808 685	2808 675	2808 675	2808 675
21-118-40	HOUSING, w/BUSHING, Frt. Pump	2538 206	2538 206	2538 206	———	———	———
	HOUSING, w/BUSHING and PLUG, Frt. Pump	———	———	———	3410 965	3410 965	3410 965
	SCREW and WASHER (6)	6023 943	6023 943	6023 943	———	———	———
	(7)	———	———	———	6023 943	6023 943	6023 943
21-118-45	SEAL, Frt. Pump Hsg., 8 17/64" O.D.	2204 709	2204 709	2204 709	———	———	———
	10" O.D.	———	———	———	1942 021	1942 021	1942 021
21-118-47	BUSHING, Frt. Pump Hsg.	2466 796	2466 796	2466 796	2466 324	2466 324	2466 324
21-118-54	GASKET, Frt. Pump Hsg.	———	———	———	2124 846	2124 846	2124 846
21-118-57	SHIELD, Frt. Pump Hsg.						
	Vent	———	———	———	2204 993	2204 993	2204 993
	w/PLUG	———	———	———	2892 679	2892 679	2892 679
	BAFFLE, w/NAIL, Frt. Pump Hsg.	———	———	———	3420 087	3420 087	3420 087
21-118-58	PLUG, Vent Shield	———	———	———	2892 553	2892 553	2892 553
21-119-0	**TRANSMISSION OIL PAN**						
21-119-3	PAN, Oil	2464 413	2464 413	2464 413	———	———	———
	w/PLUG	———	———	———	2464 419	2464 419	2464 419
	SCREW, w/WASHER (14)	6023 355	6023 355	6023 355	6023 355	6023 355	6023 355
21-119-5	GASKET, Oil Pan	2205 299	2205 299	2205 299	2464 324	2464 324	2464 324
21-119-11	PLUG, Oil Pan Drain	———	———	———	2125 890	2125 890	2125 890
21-119-12	GASKET, Drain Plug	———	———	———	2268 513	2268 513	———
21-129-0	**TRANSMISSION INPUT SHAFT AND TORQUE CONVERTER REACTION SHAFT**						
21-129-1	REPAIR PACKAGE, Reaction Shaft and Frt. Clutch	———	———	———	3420 095	———	3420 098
21-129-5	SHAFT, Input	2538 407	2538 407	2538 07	2801 053	2801 053	2801 053
	SNAP RING	6022 859	6022 859	6022 859	———	———	———
21-129-6	BUSHING, Input Shaft	———	———	———	2205 242	2205 242	2205 242
21-129-7	RING, Input Shaft Seal (AR)	1941 831	1941 831	1941 831	2801 054	2801 054	2801 054
21-129-10	SHAFT, w/SUPPORT, Reaction	2538 409	2538 409	2538 409	2801 045	2801 045	2801 045
	BALL (2)	104 918	104 918	104 918	———	———	———
	Large 11/32"	———	———	———	147 488	147 488	147 488
21-129-11	BAFFLE, Vent, 3" lgh., 1 53/64" high	———	———	———	2400 479	2400 479	2400 479
21-129-13	RING, Reaction Shaft Support Seal (2)	1942 389	1942 389	1942 389	2124 813	2124 813	2124 813
21-129-23	BUSHING, Reaction Shaft	2801 728	2801 728	2801 728	2801 348	2801 348	2801 348
21-129-24	GASKET, Reaction Shaft Support, 8 15/64" O.D.	1942 390	1942 390	1942 390	———	———	———

CARLINES J - Challenger, B - Barracuda, V - Valiant, L - Dart, R - Belvedere - Satallite, W - Coronet - Charger, P - Plymouth, D - Dodge, C - Chrysler, Y - Imperial

AR Indicates use as required.

# Indicates parts not listed in any previous parts book.

Numerals in parentheses ( ) refer to notes.

★ Indicates change or addition.

Printed in U.S.A.
January 1972

AUTOMATIC TRANSMISSION

NOTE: All quantities are one (1) unless otherwise indicated in parenthesis.

CODE	TRANSMISSION	3410 635 A904	3410 636 A904	3410 637 A904	2892 086 A727	2892 087 A727	2892 089 A727
21-133-0	**TRANSMISSION CLUTCH**						
21-133-1	REPAIR PACKAGE, Frt. Clutch Reaction Shaft	———	———	———	3420 095	———	3420 098
21-133-4	RETAINER and WASHER PACKAGE, Frt. Clutch	3420 077	3420 076	3420 077	———	———	———
21-133-7	RETAINER, w/BUSHING, Frt.	———	———	———	———	———	———
	Clutch	———	———	———	2801 284	2801 284	2801 989
	Rr. Clutch	2892 441	2892 441	2892 422	2466 801	2466 801	2466 801
	Rr. Clutch Piston	———	———	———	2124 833	2124 833	2124 833
21-133-10	BUSHING, Frt. Clutch Retainer	2801 727	2801 727	2801 727	2205 241	2205 241	2205 241
21-133-15	PISTON, Frt. Clutch	2892 420	2892 420	2892 420	2464 651	2464 651	2464 651
	Rr.	2892 554	2892 554	2892 554	2204 645	2204 645	2204 645
	BALL, Clutch Check Valve	147 483	147 483	147 483	147 483	147 483	147 483
21-133-17	SEAL, Frt. Clutch Piston, Inner	1942 396	1942 396	1942 396	3410 226	3410 226	3410 226
	Outer	1942 397	1942 397	1942 397	3410 225	3410 225	3410 225
	Rr. Clutch Piston, Inner	2538 510	2538 510	2538 510	1942 054	1942 054	1942 054
	Outer	2538 695	2538 695	2538 695	2124 835	2124 835	2124 835
	Rr. Clutch Retainer Ring	1323 593	1323 593	1323 593	———	———	———
21-133-20	SPRING, Frt. Clutch Piston	2801 844	1942 467	1942 467	———	———	———
	(12)	———	———	———	2801 243	2801 243	———
	(6)	———	———	———	———	———	2801 243
	Rr.	1942 414	1942 414	1942 414	1942 015	1942 015	1942 015
21-133-22	RETAINER, Frt. Clutch Piston Spring	1942 399	1942 399	1942 399	2801 949	2801 949	2801 949
	BALL, Check Valve	147 483	147 483	147 483	147 483	147 483	147 483
21-133-25	SNAP RING, Rr. Clutch Retainer, .060" thk., 5 1/4" O.D. (AR)	1942 421	1942 421	1942 421	———	———	———
	.076" thk. (AR)	1942 423	1942 423	1942 423	———	———	———
	.098" thk. (AR)	2538 617	2538 617	2538 617	———	———	———
	.060" thk. 7" O.D. (AR)	———	———	———	1942 063	1942 063	1942 063
	.074" thk. (AR)	———	———	———	1942 064	1942 064	1942 064
	.088" thk. (AR)	———	———	———	1942 065	1942 065	1942 065
	.106" thk. (AR)	———	———	———	2466 811	2466 811	2466 811
	Rr. Clutch Piston Retainer, .060" thk., 1 31/64" O.D.	———	———	———	2124 872	2124 872	2124 872
21-133-31	SPRING, Rr. Clutch Wave, 5 11/32" O.D.	2466 283	2466 283	2801 626	2466 806	2466 806	2466 806
21-133-36	DISC, Frt. Clutch (4)	2205 203	———	2205 203	2801 167	2801 167	2124 827
	(3)	———	2205 203	———	———	———	———
	Rr. Clutch (3)	2892 551	2892 551	———	———	———	———
	(4)	———	———	2892 551	2801 992	2801 992	2801 992
21-133-38	PLATE, Frt. Clutch (4)	1942 403	———	1942 403	———	———	2124 826
	(3)	———	1942 403	———	2124 826	2124 826	———
	Rr. (2)	1942 403	1942 403	———	———	———	———
	(3)	———	———	1942 403	2124 826	2124 826	2124 826
21-133-39	PLATE, Frt. Clutch Pressure	2801 969	2801 969	2801 969	2801 961	2801 961	2801 961
	Rr. Clutch Pressure, Frt.	2466 281	2466 281	2466 281	2466 803	2466 803	2466 803
	Rr., Rr.	2801 969	2801 969	2801 969	2801 961	2801 961	2801 961
21-133-40	GEAR, w/BUSHING, Sun	1942 434	1942 434	1942 434	2801 311	2801 311	2801 311
21-133-42	SHELL, Sun Gear Driving	1942 438	1942 438	1942 438	2400 662	2400 662	2400 662

CARLINES J - Challenger, B - Barracuda, V - Valiant, L - Dart, R - Belvedere - Satallite, W - Coronet - Charger, P - Plymouth, D - Dodge, C - Chrysler, Y - Imperial

AR Indicates use as required.

Numerals in parentheses ( ) refer to notes.

# Indicates parts not listed in any previous parts book.

★ Indicates change or addition.

Printed in U.S.A. January 1972

AUTOMATIC TRANSMISSION

NOTE: All quantities are one (1) unless otherwise indicated in parenthesis.

CODE	TRANSMISSION	3410 635 A904	3410 636 A904	3410 637 A904	2892 086 A727	2892 087 A727	2892 089 A727
21-133-0	**TRANSMISSION CLUTCH Cont'd.**						
21-133-43	SNAP RING, Frt. Clutch, Inner, 2 7/16" O.D.	1942 400	1942 400	1942 400	———	———	———
	Inner, 3" I.D., .060" thk.	———	———	———	2124 824	2124 824	2124 824
	Outer, 5 1/4" O.D., .060" thk.	1942 421	1942 421	1942 421	———	———	———
	Frt. Clutch, 7" O.D., .060" thk. (AR)	———	———	———	1942 063	1942 063	1942 063
21-133-46	RING, Sun Gear Driving Shell Lock (2)	1942 439	1942 439	1942 439	1736 521	1736 521	1736 521
21-133-47	PLATE, Sun Gear Driving Shell Thrust, w/28 Tangs (2)	3410 540	3410 540	3410 540	———	———	———
	w/4 Inside Tangs	———	———	———	1942 080	1942 080	1942 080
21-133-48	WASHER, Sun Gear Driving Shell Thrust, w/3 Outside Tabs and 3 Oil Grooves (2)	2801 356	2801 356	———	———	———	———
	w/4 Outside Tabs and 4 Oil Grooves (2)	———	———	2538 515	———	———	———
	w/3 Outside Tabs	———	———	———	1942 081	1942 081	1942 081
21-133-62	SPACER, Rr. Clutch Piston Spring	2801 162	2801 162	2801 162	2801 161	2801 161	2801 161
21-133-65	WASHER, Frt. Clutch Thrust (2)	2204 369	2204 369	2204 369	———	———	———
	Frt., Green, .061" thk., 3 21/64" O.D. (AR)	———	———	———	2204 622	2204 622	2204 622
	Red, .084" thk. (AR)	———	———	———	2204 623	2204 623	2204 623
	Yellow, .102" thk. (AR)	———	———	———	2400 284	2400 284	2400 284
	Frt. Clutch Thrust, Rr., Green, .061" thk. (AR)	———	———	———	2204 622	2204 622	2204 622
21-134-0	**TRANSMISSION FRONT AND REAR PLANET PINION CARRIER AND COMPONENTS**						
21-134-5	CARRIER, w/PINION and WASHER, Frt.	2801 018	2801 018	2538 523	2466 537	2466 537	2801 171
	Rr.	2801 180	2801 180	2538 522	2466 539	2466 539	2466 539
21-134-8	PINION, Frt. Planet (3)	2466 759	2466 759	———	2400 667	2400 667	———
	(4)	———	———	2466 759	———	———	2400 667
	Rr. (3)	2466 759	2466 759	———	2400 667	2400 667	2400 667
	(4)	———	———	2466 759	———	———	———
21-134-9	SHAFT, Frt. (3)	2801 363	2801 363	———	2464 178	2464 178	———
	(4)	———	———	2801 363	———	———	2464 178
	Rr. (3)	2801 363	2801 363	———	2464 178	2464 178	2464 178
	(4)	———	———	2801 363	———	———	———
	PIN (AR)	———	———	———	6024 666	6024 666	6024 666
21-134-10	WASHER, Frt. and Rr. (12)	2466 758	2466 758	———	———	———	———
	(16)	———	———	2466 758	———	———	———
	Frt. (6)	———	———	———	2801 315	2801 315	———
	(8)	———	———	———	———	———	2801 315
	Rr. (6)	———	———	———	2801 315	2801 315	2801 315
21-134-11	ROLLER, Frt. and Rr. (114)	2466 756	2466 756	———	———	———	———
	(152)	———	———	2466 756	———	———	———
	Frt. (69)	———	———	———	2204 647	2204 647	———
	(92)	———	———	———	———	———	2204 647
	Rr. (69)	———	———	———	2204 647	2204 647	2204 647

CARLINES J - Challenger, B - Barracuda, V - Valiant, L - Dart, R - Belvedere - Satellite, W - Coronet - Charger, P - Plymouth, D - Dodge, C - Chrysler, Y - Imperial

AR Indicates use as required.

# Indicates parts not listed in any previous parts book.

Numerals in parentheses ( ) refer to notes.

★ Indicates change or addition.

Printed in U.S.A.
January 1972

AUTOMATIC TRANSMISSION

NOTE: All quantities are one (1) unless otherwise indicated in parenthesis.

CODE	TRANSMISSION	3410 635 A904	3410 636 A904	3410 637 A904	2892 086 A727	2892 086 A727	2892 087 A727	2892 089
21-134-0	**TRANSMISSION FRONT AND REAR PLANET PINION CARRIER AND COMPONENTS Cont'd.**							
21-134-12	RING, Frt. and Rr. Planet Pinion Roller Thrust, 39.64" O.D. (12)	2466 757	2466 757	———	———	———	———	
	(16)	———	———	2466 757	———	———	———	
	Frt. 49.64" O.D. (6)	———	———	———	2204 649	2204 649	———	
	(8)	———	———	———	———	———	2204 649	
	Rr. (6)	———	———	———	2204 649	2204 649	2204 649	
21-134-30	WASHER, Frt. Carrier Thrust	———	———	———	1942 081	1942 081	2801 060	
	Rr.	———	———	———	1942 081	1942 081	1942 081	
21-134-36	SUPPORT, Frt. Annulus Gear	2538 574	2538 574	2538 574	———	———	———	
	Rr.	1942 450	1942 450	1942 450	———	———	———	
21-134-38	GEAR, Frt. and Rr. Annulus (2)	1942 443	1942 443	1942 443	———	———	———	
	Frt.	———	———	———	2892 656	2892 656	2892 656	
	Rr.	———	———	———	2538 185	2538 185	2538 185	
21-134-40	SNAP RING, Frt. and Rr. Annulus Gear (2)	1942 444	1942 444	1942 444	———	———	———	
	Frt. Annulus Gear Support	6026 278	6026 278	6026 278	———	———	———	
21-134-45	WASHER, Frt. Annulus Gear Support Thrust, w/ 6 Oil Grooves and 1 Outside Tab	2538 696	2538 696	2538 696	———	———	———	
	PLATE, Rr. Annulus Gear Thrust, w/31 Inside Teeth, 3 23/64" O.D	———	———	———	2400 580	2400 580	2400 580	
21-136-0	**TRANSMISSION BANDS**							
21-136-5	BAND, Kickdown	2204 792	2204 792	2204 792	2124 342	2124 342	2124 342	
21-136-15	STRUT, Kickdown Band	1630 896	1630 896	1630 896	2124 848	2124 848	2124 848	
	ANCHOR, Kickdown Band	———	———	———	1942 120	1942 120	1942 120	
21-136-17	SCREW, Kickdown Band Adjusting	1942 477	1942 477	1942 477	2400 389	2400 389	2400 389	
	NUT, Lock 1 2"-20	124 934	124 934	124 934	124 934	124 934	124 934	
21-136-20	LEVER, Kickdown Band	2124 579	2125 067	2124 579	2204 952	2204 952	2125 067	
21-136-23	SHAFT, Kickdown Band Lever	1942 132	1942 132	1942 132	1942 132	1942 132	1942 132	
21-136-30	BAND, Reverse	1942 487	1942 487	2801 818	1942 133	1942 133	1942 133	
21-136-41	STRUT, Reverse Band	1942 497	1942 497	———	2204 823	2204 823	2204 823	
21-136-44	LINK, w/ANCHOR, Reverse Band	2464 439	2464 439	———	2204 820	2204 820	2204 820	
21-136-47	LEVER, w/STEM, Reverse Band	1942 491	1942 491	2801 815	1942 137	1942 137	1942 137	
	Reverse Band, Short	2464 851	2464 851	———	2892 233	2892 233	2892 233	
21-136-49	SHAFT, Reverse Band Lever	3410 102	3410 102	3410 102	2124 857	2124 857	2124 857	
	Reverse Band Reaction	3410 102	3410 102	3410 102	———	———	———	
21-136-50	SEAL, Reverse Band Reaction Shaft	———	———	1556 385	———	———	———	
21-136-52	SCREW, Reverse Band Adjusting	1942 543	1942 543	2538 472	1942 141	1942 141	1942 141	
	NUT	120 369	120 369	120 369	271 506	271 506	271 206	
21-136-55	SEAL, Reverse Band Lever Shaft	1556 385	1556 385	1556 385	1672 358	1672 358	1672 358	
21-136-65	DRUM, Reverse 12T., 24T	2892 728	2892 728	2892 728	———	———	———	
	12T., 47T	2538 474	2538 474	2538 474	———	———	———	
	26T (See Note 1)	———	———	———	3515 451	3515 451	3515 451	

CARLINES J - Challenger, B - Barracuda, V - Valiant, L - Dart, R - Belvedere - Satallite, W - Coronet - Charger, P - Plymouth, D - Dodge, C - Chrysler, Y - Imperial

AR Indicates use as required.

Numerals in parentheses ( ) refer to notes.

Printed in U.S.A.

January 1972

≠ Indicates parts not listed in any previous parts book.

★ Indicates change or addition.

AUTOMATIC TRANSMISSION

NOTE: All quantities are one (1) unless otherwise indicated in parenthesis.

CODE	TRANSMISSION	3410 635 A904	3410 636 A904	3410 637 A904	2892 086 A727	2892 087 A727	2892 089 A727
21-136-0	**TRANSMISSION BANDS Cont'd.**						
21-136-228	CAM and RETAINER PACKAGE, "O" Running Clutch	2808 637	2808 637	2808 637	———	———	———
21-136-229	SCREW, w/WASHER, "O" Running Clutch Cam (7)	1559 489	1559 489	1559 489	———	———	———
21-136-231	CAM, "O" Running Clutch	———	———	———	1942 095	1942 095	1942 095
21-136-232	RACE, ROLLER and SPRING PACKAGE, "O" Running Clutch 24T	3420 023	3420 023	3420 023	———	———	———
	47T	2808 668	2808 668	2808 668	———	———	———
	26T	———	———	———	3420 100	3420 100	3420 100
21-136-233	RETAINER, "O" Running Clutch Spring	———	———	———	2801 426	2801 426	2801 426
21-136-235	ROLLER, "O" Running Clutch (10)	2464 888	2464 888	2464 888	———	———	———
	(12)	———	———	———	670 776	670 776	670 776
21-136-236	SPRING, "O" Running Clutch Roller (10)	2464 446	2464 446	2464 446	———	———	———
	(12)	———	———	———	1942 187	1942 187	1942 187
21-137-0	**TRANSMISSION SERVOS**						
21-137-5	PISTON, Kickdown Servo	1942 478	1942 478	1942 478	2124 850	2124 850	2124 850
21-137-8	RING, Kickdown Servo Piston Seal, Small	1672 287	1672 287	1672 287	———	———	———
	Large	1636 470	1636 470	1636 470	———	———	———
	Kickdown Servo Guide	1636 470	1636 470	1636 470	1942 123	1942 123	1942 123
	Kickdown Servo Piston, Small	———	———	———	2124 851	2124 851	2124 851
	Large	———	———	———	1942 123	1942 123	1942 123
21-137-11	ROD, Kickdown Servo Piston	1942 482	1942 482	1942 482	2124 853	2124 853	2124 853
21-137-13	GUIDE, Kickdown Servo	1942 485	1942 485	1942 485	2124 856	2124 856	2124 856
21-137-19	SNAP RING, Kickdown Servo	1942 486	1942 486	1942 486	———	———	———
	Kickdown Servo Guide	———	———	———	1942 130	1942 130	1942 130
21-137-22	SPRING, Kickdown Servo Piston	2801 316	2801 316	2801 316	———	———	———
	Inner	———	———	———	3410 245	3410 245	3410 245
	Outer	———	———	———	2125 069	2125 069	———
21-137-35	PISTON, Reverse Servo	2801 271	2801 271	2801 271	2801 281	2801 281	2801 281
21-137-41	SPRING, Reverse Servo Cushion	2801 273	2801 273	2801 872	2801 273	2801 273	2801 273
21-137-47	PLUG, Reverse Servo Piston	2801 272	2801 272	2801 272	2801 272	2801 272	2801 272
	RING, .435" I.D.	6027 153	6027 153	6027 153	6027 153	6027 153	6027 153
21-137-50	SEAL, Reverse Servo Piston, Rubber	2464 462	2464 462	2464 462	2464 481	2464 481	2464 481
21-137-53	SPRING, Reverse Servo Piston	2801 274	2801 274	2801 274	2801 241	2801 241	2801 241
21-137-56	RETAINER, Reverse Servo Piston Spring	2464 463	2464 463	2464 463	———	———	———
	Reverse Servo Piston	———	———	———	1942 150	1942 150	1942 150
21-137-59	SNAP RING, Reverse Servo Piston Spring Retainer	2464 464	2464 464	2464 464	1942 130	1942 130	1942 130
21-137-200	PISTON, Accumulator	1942 153	1942 153	1942 153	1942 153	1942 153	1942 153
	NOTE 1: Also specify 1 of 3420 100 Race Package						
21-137-202	RING, Accumulator Piston Seal, Small	1941 831	1941 831	1941 831	1941 831	1941 831	1941 831
	Large	2124 255	2124 255	2124 255	2124 255	2124 255	2124 255
21-137-205	SPRING, Accumulator	2125 109	2125 109	2801 871	2464 076	2538 264	2464 076

CARLINES J - Challenger, B - Barracuda, V - Valiant, L - Dart, R - Belvedere - Satallite, W - Coronet - Charger, P - Plymouth, D - Dodge, C - Chrysler, Y - Imperial

AR Indicates use as required.

 # Indicates parts not listed in any previous parts book.

Numerals in parentheses ( ) refer to notes.

★ Indicates change or addition.

Printed in U.S.A.
January 1972

AUTOMATIC TRANSMISSION

NOTE: All quantities are one (1) unless otherwise indicated in parenthesis.

CODE	TRANSMISSION	3410 635 A904	3410 636 A904	3410 637 A904	2892 086 A727	2892 087 A727	2892 089 A727
21-138-0	**TRANSMISSION GOVERNOR**						
21-138-2	REPAIR PACKAGE, Governor	3004 606	3004 607	3004 606	2275 498	2585 589	3004 545
21-138-7	SNAP RING, Governor Body	6027 271	6027 271	6027 271	6022 817	6022 817	6022 817
21-138-10	SUPPORT, Governor	2538 635	2538 635	2538 635	2538 634	2538 634	2538 634
21-138-13	WEIGHT, Governor, Outer	1636 461	1636 461	1636 461	1636 461	1636 461	1636 461
	Inner	1636 462	1636 462	1636 462	1636 462	1636 462	1636 462
21-138-15	SPRING, Governor Weight	2124 662	1949 858	2124 662	1949 858	2124 662	2892 248
21-138-19	SNAP RING, Governor						
	Weight, Outer	1636 465	1636 465	1636 465	1636 465	1636 465	1636 465
	Inner	1636 464	1636 464	1636 464	1636 464	1636 464	1636 464
21-138-21	LOCK, Governor Body						
	Bolt (2)	2125 024	2125 024	2125 024	2125 024	2125 024	2125 024
21-138-23	VALVE, Governor	2124 663	2124 663	2124 663	2124 663	2124 663	2124 663
21-138-26	SHAFT, Governor Valve	1556 082	1556 082	1556 082	1556 082	1556 082	1556 082
21-138-29	SNAP RING, Governor Valve						
	Shaft (3)	1638 461	1638 461	1638 461	———	———	———
	(2)	———	———	———	1638 461	1638 461	1638 461
21-138-38	RING, Governor Support						
	Inspection Cover	2801 398	2801 398	2801 398	2801 398	2801 398	2801 398
	Seal, Frt. and Rr. (2)	1942 109	1942 109	1942 109	1942 109	1942 109	1942 109
21-139-0	**TRANSMISSION VALVE BODY AND VALVES**						
21-139-4	BODY, w/Transfer PLATE	2892 498	2892 498	2892 499	2892 357	2892 357	2892 357
	BALL, Check Valve,						
	Small (5)	104 918	104 918	104 918	104 918	104 918	104 918
	Large	147 488	147 488	147 488	147 488	147 488	147 488
21-139-9	VALVE, Manual	2801 259	2801 259	2801 259	2801 259	2801 259	2801 259
21-139-12	LEVER, w/INSULATOR,						
	Manual Valve	2801 783	2801 783	2801 783	2801 783	2801 783	2801 783
21-139-16	SEAL, Manual Valve						
	Shaft	2466 842	2466 842	2466 842	2466 842	2466 842	2466 842
21-139-24	SPRING, Manual Valve						
	Lever Detent	2466 615	2466 615	2466 615	2466 615	2466 615	2466 615
	BALL 11/32"	147 488	147 488	147 488	147 488	147 488	147 488
21-139-30	VALVE, Throttle	2892 349	2892 349	2892 349	2892 349	2892 349	2892 349
21-139-33	SPRING, Throttle Valve	2892 350	2892 350	2892 350	2892 350	2892 350	2892 350
21-139-34	PIN, Manual Valve						
	Lever Spring	2466 756	2466 756	2466 756	2466 756	2466 756	2466 756
21-139-46	WASHER, Throttle Valve						
	Lever Shaft	2538 062	2538 062	2538 062	2538 062	2538 062	2538 062
21-139-47	SEAL, Throttle Lever						
	Shaft, 11/16" O.D.	2466 548	2466 548	2466 548	2466 548	2466 548	2466 548
21-139-49	E-RING, Throttle Valve						
	Lever Shaft	6025 857	6025 857	6025 857	6025 857	6025 857	6025 857
21-139-50	LEVER, Throttle Valve	2466 854	2466 854	2466 854	2466 854	2466 854	2466 854
21-139-60	COVER, Throttle Pressure	2801 198	2801 198	———	———	———	———
	SCREW, w/WASHER, Long	9418 651	9418 651	———	———	———	———
21-139-63	PLUG, Throttle Pressure	2801 197	2801 197	———	———	———	———
	Regulator Valve Throttle Pressure	1942 245	1942 245	1942 245	1942 245	1942 245	1942 245
	Regulator Valve Line Pressure	1942 218	1942 218	1942 218	1942 218	1942 218	1942 218
21-139-64	SLEEVE, Regulator Valve						
	Line Pressure Plug	1942 213	1942 213	1942 213	1942 213	1942 213	1942 213
21-139-67	VALVE PACKAGE, Regulator	2240 685	2240 685	2240 685	2240 685	2240 685	2240 685
21-139-68	SPRING, Regulator Valve	2124 734	2124 734	2124 734	2124 734	2124 734	2124 734
	Pressure Relief	2892 846	2892 846	2892 846	2892 846	2892 846	2892 846
	BALL, Pressure Relief 3/16"	147 483	147 483	147 483	147 483	147 483	147 483

CARLINES J - Challenger, B - Barracuda; V - Valiant, L - Dart; R - Belvedere - Satallite, W - Coronet - Charger; P - Plymouth, D - Dodge; C - Chrysler, Y - Imperial

AR Indicates use as required.

≠ Indicates parts not listed in any previous parts book.

Numerals in parentheses ( ) refer to notes.

★ Indicates change or addition.

Printed in U.S.A. January 1972

AUTOMATIC TRANSMISSION

NOTE: All quantities are one (1) unless otherwise indicated in parenthesis.

CODE	TRANSMISSION	3410 635 A904	3410 636 A904	3410 637 A904	2892 086 A727	2892 087 A727	2892 089 A727
21-139-0	**TRANSMISSION VALVE BODY AND VALVES Cont'd.**						
21-139-71	RETAINER, Regulator Valve Spring	2204 975	2204 975	2204 975	2204 975	2204 975	2204 975
21-139-74	SCREW, Line Pressure Adjusting	2124 736	2124 736	2124 736	2124 736	2124 736	2124 736
	Throttle Pressure Adjusting	6023 343	6023 343	6023 343	6023 343	6023 343	6023 343
21-139-76	NUT, Throttle Pressure Adjusting Screw Lock	2892 353	2892 353	2892 353	2892 353	2892 353	2892 353
	Line Pressure Adjusting Screw	2124 737	2124 737	2124 737	2124 737	2124 737	2124 737
21-139-78	VALVE, Kickdown	2892 351	2892 351	2892 351	2892 351	2892 351	2892 351
	PLUG, Kickdown Detent	2892 352	2892 352	2892 352	2892 352	2892 352	2892 352
21-139-95	VALVE, Shuttle	1854 275	1854 275	1854 275	1854 275	1854 275	1854 275
	PLUG, Shuttle Valve	1854 274	1854 274	1854 274	1854 274	1854 274	1854 274
21-139-98	SNAP RING, Shuttle Valve	6025 857	6025 857	6025 857	6025 857	6025 857	6025 857
21-139-101	SPRING, Shuttle Valve, 16 Coils	2124 697	2124 697	2124 697	2124 697	2124 697	2124 697
	15 Coils	3410 319	3410 319	3410 319	———	———	———
21-139-105	VALVE, 1-2 Shift	1941 602	1941 602	1941 602	1941 602	1941 602	1941 602
	PLUG, 1-2 Shift Valve	3410 886	3410 886	3410 886	3410 886	3410 886	3410 886
	VALVE, 2-3 Shift	1941 600	1941 600	1941 600	1941 600	1941 600	1941 600
	PLUG, 2-3 Shift Valve	1941 601	1941 601	1941 601	1941 601	1941 601	1941 601
21-139-108	SPRING, 1-2 Shift Valve	2204 547	2204 547	2204 547	2204 547	2204 547	2204 547
	2-3 Shift Valve	1942 231	1942 231	1942 231	1942 231	1942 231	1942 231
21-139-117	VALVE, Torque Conv. Control	2124 256	2124 256	2124 256	2124 256	2124 256	2124 256
21-139-118	SPRING, Torque Conv. Control Valve	2124 257	2124 257	2124 257	2124 257	2124 257	2124 257
21-139-135	COVER, Reg. Valve	2205 034	2205 034	2205 034	2205 034	2205 034	2205 034
	Shift Valve Plug	2538 662	2538 662	2538 662	2538 662	2538 662	2538 662
	Shuttle Valve	1942 227	1942 227	1942 227	1942 227	1942 227	1942 227
	Shift Valve	———	———	2801 244	2801 244	2801 244	2801 244
21-139-140	PLATE, Valve Body	2892 901	2892 901	2892 902	2892 845	2892 845	2892 845
21-139-147	PLATE, Transfer	2801 295	2801 295	2801 295	2801 295	2801 295	2801 295
	SCREW, w/WASHER, Plate to Valve Body (14)	6027 391	6027 391	6027 391	6027 391	6027 391	6027 391
21-139-154	SUPPORT, Transfer Plate	1942 237	1942 237	1942 237	1942 237	1942 237	1942 237

NOTE: All quantities are one (1) unless otherwise indicated in parenthesis

CODE	TRANSMISSION	3410 667 A727	3410 668 A727	3410 669 A727	3410 670 A727	3410 671 A727	3410 672 A727
21-01-0	**TRANSMISSION SETS OR PACKAGES**						
21-01-3	SEAL and GASKET PACKAGES	3420 020	3420 020	3420 020	3420 020	3420 020	3420 020
21-03-0	**TRANSMISSION CASE**						
21-03-1	CASE	3410 213	3410 213	3410 213	3410 213	3410 213	3410 213
	SCREW, w/WASHER, Cover 1/4"-20 x 1/2" (AR)	6023 092	6023 092	6023 092	6023 092	6023 092	6023 092
21-04-0	**TRANSMISSION CASE EXTENSION**						
21-04-1	EXTENSION	2466 969	2466 969	2466 969	2466 969	2466 969	2466 969
	SCREW, w/WASHER (6)	6023 514	6023 514	6023 514	6023 514	6023 514	6023 514
21-04-2	GASKET	2466 954	2466 954	2466 954	2466 954	2466 954	2466 954
	Output Shaft Brg. Inspection Cover	2801 398	2801 398	2801 398	2801 398	2801 398	2801 398

CARLINES J - Challenger, B - Barracuda; V - Valiant, L - Dart; R - Belvedere - Satallite, W - Coronet - Charger; P - Plymouth, D - Dodge; C - Chrysler, Y - Imperial

AR Indicates use as required.

 # Indicates parts not listed in any previous parts book.

Numerals in parentheses ( ) refer to notes.

★ Indicates change or addition.

Printed in U.S.A.
January 1972

AUTOMATIC TRANSMISSION

NOTE: All quantities are one (1) unless otherwise indicated in parenthesis

CODE	TRANSMISSION	3410 667 A727	3410 668 A727	3410 669 A727	3410 670 A727	3410 671 A727	3410 672 A727
21-04-0	**TRANSMISSION CASE EXTENSION Cont'd.**						
21-04-8	COVER, Output Shaft Brg. Inspection	2466 957	2466 957	2466 957	2466 957	2466 957	2466 957
	SCREW, 1/4"-20 x 5/8" (2)	6026 884	6026 884	6026 884	6026 884	6026 884	6026 884
21-04-11	BUSHING	2801 724	2801 724	2801 724	2801 724	2801 724	2801 724
21-05-0	**TRANSMISSION OUTPUT SHAFT**						
21-05-1	SHAFT	2801 314	2801 314	2801 314	2892 655	2892 655	2892 655
21-05-2	BEARING, Output Shaft	2466 224	2466 224	2466 224	2466 224	2466 224	2466 224
21-05-8	SNAP RING, Brg., Outer	2400 320	2400 320	2400 320	2400 320	2400 320	2400 320
	Brg. (2)	6025 570	6025 570	6025 570	6025 570	6025 570	6025 570
21-05-12	SEAL, Yoke, 1 61/64" lgh., 2 1/2" O.D.	2400 300	2400 300	2400 300	2400 300	2400 300	2400 300
21-05-19	SNAP RING, Output Shaft, .048" thk. (AR)	6022 816	6022 816	6022 816	6022 816	6022 816	6022 816
	.055" thk. (AR)	6024 311	6024 311	6024 311	6024 311	6024 311	6024 311
	.062" thk. (AR)	6024 312	6024 312	6024 312	6024 312	6024 312	6024 312
21-05-25	SUPPORT, Output Shaft	2466 882	2466 882	2466 882	2466 882	2466 882	2466 882
21-05-35	WASHER, Output Shaft .062" thk.	2400 843	2400 843	2400 843	2400 843	2801 568	2801 568
21-117-0	**TRANSMISSION OIL FILTER**						
	NOTE: See Code 5-53-3 for Tubes						
21-117-1	FILTER or STRAINER	3410 253	3410 253	3410 253	3410 253	3410 253	3410 253
	SCREW, w/WASHER (3)	6026 390	6026 390	6026 390	6026 390	6026 390	6026 390
21-118-0	**TRANSMISSION OIL PUMP**						
21-118-6	ROTOR PACKAGE, Frt. Oil Pump	2808 675	2808 675	2808 675	2808 675	2808 675	2808 675
21-118-40	HOUSING, w/BUSHING and PLUG, Frt. Pump	3410 965	3410 965	3410 965	3410 965	2892 424	2892 424
	SCREW, w/WASHER (7)	6023 943	6023 943	6023 943	6023 943	6023 943	6023 943
21-118-45	SEAL, Frt. Pump Hsg., 10" O.D.	1942 021	1942 021	1942 021	1942 021	1942 021	1942 021
21-118-47	BUSHING, Frt. Pump Hsg.	2466 324	2466 324	2466 324	2466 324	2466 324	2466 324
21-118-54	GASKET, Frt. Pump Hsg.	2124 846	2124 846	2124 846	2124 846	2124 846	2124 846
21-118-57	SHIELD, Frt. Pump Hsg.	2204 993	2204 993	2204 993	2204 993	2204 993	2204 993
	w/Plug	2892 679	2892 679	2392 679	2892 679	2892 679	2892 679
	BAFFLE, w/Nail, Frt. Pump Hsg.	———	———	———	———	3420 087	3420 087
21-118-58	PLUG, Vent Shield	2892 553	2892 553	2892 553	2892 553	2892 553	2892 553
21-119-0	**TRANSMISSION OIL PAN**						
21-119-3	PAN, w/PLUG, Oil	2464 323	2464 323	2464 323	2464 323	2464 323	2464 323
	SCREW, w/WASHER, (14)	6023 355	6023 355	6023 355	6023 355	6023 355	6023 355
21-119-5	GASKET, Oil Pan	2464 324	2464 324	2464 324	2464 324	2464 324	2464 324
21-119-11	PLUG, Oil Pan Drain	2125 890	2125 890	2125 890	2125 890	2125 890	2125 890
21-129-0	**TRANSMISSION INPUT SHAFT AND TORQUE CONVERTER REACTION SHAFT**						
21-129-1	REPAIR PACKAGE, Reaction Shaft and Front Clutch	3420 098	3420 098	3420 098	3420 096	3420 097	3420 097
21-129-5	SHAFT, Input	2801 053	2801 053	2801 053	2801 053	2801 053	2801 053
21-129-6	BUSHING, Input Shaft	2205 242	2205 242	2205 242	2205 242	2205 242	2205 242

CARLINES J - Challenger, B - Barracuda, V - Valiant, L - Dart, R - Belvedere - Satallite, W - Coronet - Charger, P - Plymouth, D - Dodge, C - Chrysler, Y - Imperial

AR Indicates use as required.

≠ Indicates parts not listed in any previous parts book.

Numerals in parentheses ( ) refer to notes.

★ Indicates change or addition.

Printed in U.S.A. January 1972

AUTOMATIC TRANSMISSION

NOTE: All quantities are one (1) unless otherwise indicated in parenthesis

CODE	TRANSMISSION	3410 667 A727	3410 668 A727	3410 669 A727	3410 670 A727	3410 671 A727	3410 672 A727
21-129-0	**TRANSMISSION INPUT SHAFT AND TORQUE CONVERTER REACTION SHAFT Cont'd.**						
21-129-7	RING, Input Shaft Seal (2)	2801 054	2801 054	2801 054	2801 054	2801 054	2801 054
21-129-10	SHAFT, w/SUPPORT, Reaction	2801 045	2801 045	2801 045	2801 045	2801 045	2801 045
	BALL, Large 11/32"	147 488	147 488	147 488	147 488	147 488	147 488
21-129-11	BAFFLE, Vent, 3" Lgh., 1 53/64" high	2400 479	2400 479	2400 479	2400 479	———	———
		———	———	———	———	2466 197	2466 197
21-129-13	RING, Reaction Shaft Support Seal (2)	2124 813	2124 813	2124 813	2124 813	2124 813	2124 813
21-129-23	BUSHING, Reaction Shaft	2801 348	2801 348	2801 348	2801 348	2801 348	2801 348
21-133-0	**TRANSMISSION CLUTCH**						
21-133-1	REPAIR PACKAGE, Frt. Clutch Reaction Shaft	———	———	———	3420 096	3420 097	3420 097
21-133-7	RETAINER, w/BUSHING, Frt. Clutch, Cstg. 2204 933	2801 989	2801 989	2801 989	2801 989	———	———
	Casting No. 2801 219	———	———	———	———	2801 220	2801 220
	Rr. Clutch	2466 801	2466 801	2466 801	2466 801	2538 047	2538 047
	Rr. Clutch Piston	2124 833	2124 833	2124 833	2124 833	2124 833	2124 833
21-133-10	BUSHING, Frt. Clutch Retainer	2205 241	2205 241	2205 241	2205 241	2205 241	2205 241
21-133-15	PISTON, Frt. Clutch	2124 819	2464 651	2464 651	2124 819	2464 651	2464 651
	Rr.	2204 645	2204 645	2204 645	2204 645	2204 645	2204 645
	BALL, Rr. Clutch Check Valve	147 483	147 483	147 483	147 483	147 483	147 483
21-133-17	SEAL, Frt. Clutch Piston, Inner	3410 226	3410 226	3410 226	3410 226	3410 226	3410 226
	Outer	3410 225	3410 225	3410 225	3410 225	3410 225	3410 225
	Rr. Clutch Piston, Inner	1942 054	1942 054	1942 054	1942 054	1942 054	1942 054
	Outer	2124 835	2124 835	2124 835	2124 835	2124 835	2124 835
21-133-20	SPRING, Frt. Clutch Piston (8)	2801 243	———	———	———	———	———
	(6)	———	2801 243	2801 243	———	———	———
	(10)	———	———	———	2801 243	———	———
	(12)	———	———	———	———	2801 243	2801 243
	Rr.	1942 015	1942 015	1942 015	1942 015	1942 015	1942 015
21-133-22	RETAINER, Frt. Clutch Piston Spring	2801 949	2801 949	2801 949	2801 949	2801 949	2801 949
	Ball, Check Valve	147 483	147 483	147 483	147 483	147 483	147 483
21-133-25	SNAP RING, Rr. Clutch Retainer, .060" thk.						
	7" O.D. (AR)	1942 063	1942 063	1942 063	1942 063	1942 063	1942 063
	.074" thk. (AR)	1942 064	1942 064	1942 064	1942 064	1942 064	1942 064
	.088" thk. (AR)	1942 065	1942 065	1942 065	1942 065	1942 065	1942 065
	.106" thk. (AR)	2466 811	2466 811	2466 811	2466 811	2466 811	2466 811
	Rr. Clutch Piston Retainer, .060" thk., 1 31/64" O.D.	2124 872	2124 872	2124 872	2124 872	2124 872	2124 872
21-133-31	SPRING, Rr. Clutch Wave, 5 11/32" O.D.	2466 806	2466 806	2466 806	2466 806	2466 806	2466 806
21-133-36	DISC, Frt. Clutch (4)	2124 827	2124 827	2124 827	———	———	———
	(3)	———	———	———	2801 167	———	———
	(5)	———	———	———	———	2400 725	2400 725
	Rr. Clutch (4)	2801 992	2801 992	2801 992	2801 992	2801 992	2801 992
21-133-38	PLATE, Frt. Clutch (4)	2124 826	2124 826	2124 826	2124 826	———	———
	(5)	———	———	———	———	2124 826	2124 826
	Rr. (3)	2124 826	2124 826	2124 826	2124 826	2124 826	2124 826

CARLINES J - Challenger, B - Barracuda, V - Valiant, L - Dart, R - Belvedere - Satallite, W - Coronet - Charger, P - Plymouth, D - Dodge, C - Chrysler, Y - Imperial

AR Indicates use as required.

# Indicates parts not listed in any previous parts book.

Numerals in parentheses ( ) refer to notes.

★ Indicates change or addition.

Printed in U.S.A.
January 1972

AUTOMATIC TRANSMISSION

NOTE: All quantities are one (1) unless otherwise indicated in parenthesis

CODE	TRANSMISSION	3410 667 A727	3410 668 A727	3410 669 A727	3410 670 A727	3410 671 A727	3410 672 A727
21-133-0	**TRANSMISSION CLUTCH Cont'd.**						
21-133-39	PLATE, Frt. Clutch Pressure	2801 961	2801 961	2801 961	2801 961	2801 961	2801 961
	Rr. Clutch Pressure, Frt.	2466 803	2466 803	2466 803	———	2466 803	———
	Rr.	2801 961	2801 961	2801 961	2801 961	2801 961	2801 961
21-133-40	GEAR, w BUSHING, Sun	2801 311	2801 311	2801 311	2801 311	2801 311	2801 311
21-133-42	SHELL, Sun Gear Driving	2400 662	2400 662	2400 662	2400 662	2400 662	2400 662
21-133-43	SNAP RING, Frt. Clutch, .060" thk., 7" O.D.,	1942 063	1942 063	1942 063	1942 063	1942 063	1942 063
	.106" thk. (AR)	———	———	———	2466 811	2466 811	2466 811
	Frt. Clutch, Inner, .060" thk., 3" I.D.	———	———	———	———	2124 824	2124 824
	.061" thk., 3 3 16" I.D	———	———	———	———	2466 369	2466 369
21-133-46	RING, Sun Gear Driving Shell Lock (2)	1736 521	1736 521	1736 521	1736 521	1736 521	1736 521
21-133-47	PLATE, Sun Gear Driving Shell Thrust, w 4 Tangs	1942 080	1942 080	1942 080	1942 080	1942 080	1942 080
21-133-48	WASHER, Sun Gear Driving Shell Thrust, w 3 Outside Tabs	1942 081	———	———	———	———	———
	w 4 Outside Tabs	———	2801 060	2801 060	2801 060	2801 060	2801 060
21-133-62	SPACER, Rr. Clutch Piston Spring	2801 161	2801 161	2801 161	2801 161	2801 161	2801 161
21-133-65	WASHER, Frt. Clutch Thrust, Frt., Green, .061" thk., 3 21 64" O.D. (AR)	2204 622	2204 622	2204 622	2204 622	2204 622	2204 622
	Red, .084" thk. (AR)	2204 623	2204 623	2204 623	2204 623	2204 623	2204 623
	Yellow, .106" thk. (AR)	2400 284	2400 284	2400 284	2400 284	2400 284	2400 284
	Frt. Clutch Thrust, Rr., Green, .061" thk. (AR)	2204 622	2204 622	2204 622	2204 622	2204 622	2204 622
21-134-0	**TRANSMISSION FRONT AND REAR PLANET PINION CARRIER AND COMPONENTS**						
21-134-5	CARRIER, w PINION and WASHERS, Frt.	2466 537	2801 171	2801 171	2801 171	2801 171	2801 171
	Rr.	2466 539	2466 539	2466 539	2801 061	2801 061	2801 061
21-134-8	PINION, Frt. Planet (3)	2400 667	———	———	———	———	———
	(4)	———	2400 667	2400 667	2400 667	2400 667	2400 667
	Rr. (3)	2400 667	2400 667	2400 667	———	———	———
	(4)	———	———	———	2400 667	2400 667	2400 667
21-134-9	SHAFT, Frt. (3)	2464 178	———	———	———	———	———
	(4)	———	2464 178	2464 178	2464 178	2464 178	2464 178
	Rr. (3)	2464 178	2464 178	2464 178	———	———	———
	(4)	———	———	———	2464 178	2464 178	2464 178
	PIN (AR)	6024 666	6024 666	6024 666	6024 666	6024 666	6024 666
21-134-10	WASHER, Frt. (6)	2801 315	———	———	———	———	———
	(8)	———	2801 315	2801 315	2801 315	2801 315	2801 315
	Rr. (6)	2801 315	2801 315	2801 315	———	———	———
	(8)	———	———	———	2801 315	2801 315	2801 315
21-134-11	ROLLER, Frt. (69)	2204 647	———	———	———	———	———
	(92)	———	2204 647	2204 647	2204 647	2204 647	2204 647
	Rr. (69)	2204 647	2204 647	2204 647	———	———	———
	(92)	———	———	———	2204 647	2204 647	2204 647
21-134-12	RING, Frt. 49 64" O.D. (6)	2204 649	———	———	———	———	———
	(8)	———	2204 649	2204 649	2204 649	2204 649	2204 649
	Rr. (6)	2204 649	2204 649	2204 649	———	———	———
	(8)	———	———	———	2204 649	2204 649	2204 649

CARLINES J - Challenger, B - Barracuda, V - Valiant, L - Dart, R - Belvedere - Satallite, W - Coronet - Charger, P - Plymouth, D - Dodge, C - Chrysler, Y - Imperial

AR Indicates use as required.

≠ Indicates parts not listed in any previous parts book.

Numerals in parentheses ( ) refer to notes.

★ Indicates change or addition.

Printed in U.S.A.
January 1972

AUTOMATIC TRANSMISSION

NOTE: All quantities are one (1) unless otherwise indicated in parenthesis

CODE	TRANSMISSION	3410 667 A727	3410 668 A727	3410 669 A727	3410 670 A727	3410 671 A727	3410 672 A727
21-134-0	**TRANSMISSION FRONT AND REAR PLANET PINION CARRIER AND COMPONENTS Cont'd.**						
21-134-30	WASHER, Frt. Carrier Thrust	1942 081	2801 060	2801 060	2801 060	2801 060	2801 060
	Rr.	1942 081	1942 081	1942 081	2801 060	2801 060	2801 060
21-134-38	GEAR, Frt. Annulus	2892 656	2892 656	2892 656	2892 656	2892 656	2892 656
	Rr.	2538 185	2538 185	2538 185	2538 185	2538 185	2538 185
21-134-45	PLATE, Rr. Annulus Gear Thrust, w 31 Inside Teeth, 3 23/64" O.D	2400 580	2400 580	2400 580	2400 580	2400 580	2400 580
21-136-0	**TRANSMISSION BANDS**						
21-136-5	BAND, Kickdown	2124 342	2124 342	2124 342	2124 342	2538 461	2538 461
21-136-15	STRUT, Kickdown Band	2124 848	2124 848	2124 848	2124 848	2124 848	2124 848
	ANCHOR, Kickdown Band	1942 120	1942 120	1942 120	1942 120	1942 120	1942 120
21-136-17	SCREW, Kickdown Band Adjusting	2400 389	2400 389	2400 389	2400 389	2400 389	2400 389
	NUT, Lock 1 2"-20	124 934	124 934	124 934	124 934	124 934	124 934
21-136-20	LEVER, Kickdown Band	2125 067	2125 067	2125 067	2125 067	2801 217	2801 217
21-136-23	SHAFT, Kickdown Band Lever	1942 132	1942 132	1942 132	1942 132	1942 132	1942 132
21-136-30	BAND, Reverse	1942 133	1942 133	1942 133	1942 133	1942 133	1942 133
21-136-41	STRUT, Reverse Band	2204 823	2204 823	2204 823	2204 823	2204 823	2204 823
21-136-44	LINK, Reverse Band	2204 820	2204 820	2204 820	2204 820	2204 820	2204 820
21-136-47	LEVER, w STEM, Reverse Band	1942 137	1942 137	1942 137	1942 137	1942 137	1942 137
	Reverse Band, Short	2892 233	2892 233	2892 233	2892 233	2892 233	2892 233
21-136-49	SHAFT, Reverse Band Lever	2124 857	2124 857	2124 857	2124 857	2124 857	2124 857
21-136-52	SCREW, Reverse Band Adjusting	1942 141	1942 141	1942 141	1942 141	1942 141	1942 141
21-136-55	SEAL, Reverse Band Lever Shaft	1672 358	1672 358	1672 358	1672 358	1672 358	1672 358
21-136-65	DRUM, Reverse 26T (Note 1)	3515 451	3515 451	3515 451	3515 451	3515 451	3515 451
21-136-231	CAM, "O" Running Clutch	1942 095	1942 095	1942 095	1942 095	1942 095	1942 095
21-136-232	RACE, "O" Running Clutch	3420 100	3420 100	3420 100	3420 100	3420 100	3420 100
21-136-233	RETAINER, "O" Running Clutch Spring	2801 426	2801 426	2801 426	2801 426	2801 426	2801 426
21-136-235	ROLLER, "O" Running Clutch (12)	670 776	670 776	670 776	670 776	670 776	670 776
21-136-236	SPRING, "O" Running Clutch Roller (12)	1942 187	1942 187	1942 187	1942 187	1942 187	1942 187
21-137-0	**TRANSMISSION SERVOS**						
21-137-5	PISTON, Kickdown Servo	2124 850	2124 850	2124 850	2124 850	2124 850	2124 850
21-137-8	RING, Kickdown Servo Guide	1942 123	1942 123	1942 123	1942 123	1942 123	1942 123
	Kickdown Servo Piston, Small	2124 851	2124 851	2124 851	2124 851	2124 851	2124 851
	Large	1942 123	1942 123	1942 123	1942 123	1942 123	1942 123
21-137-11	ROD, Kickdown Servo Piston	2124 853	2124 853	2124 853	2124 853	2124 853	2124 853
21-137-13	GUIDE, Kickdown Servo	2124 856	2124 856	2124 856	2124 856	2124 856	2124 856
	NOTE 1: Also Specify 1 of 3420 100 Race Package						
21-137-19	SNAP RING, Kickdown Servo Guide	1942 130	1942 130	1942 130	1942 130	1942 130	1942 130
21-137-22	SPRING, Kickdown Servo Piston, Inner	3410 245	3410 245	3410 245	3410 245	2400 729	2400 729
	Outer	2125 069	———	———	———	———	———

AUTOMATIC TRANSMISSION

NOTE: All quantities are one (1) unless otherwise indicated in parenthesis

CODE	TRANSMISSION	3410 667 A727	3410 668 A727	3410 669 A727	3410 670 A727	3410 671 A727	3410 672 A727
21-137-0	**TRANSMISSION SERVOS Cont'd.**						
21-137-35	PISTON, Reverse Servo	2801 281	2801 281	2801 281	2801 281	2801 281	2801 281
21-137-41	SPRING, Reverse Servo Cushion	2801 273	2801 273	2801 273	2801 273	2801 273	2801 273
21-137-47	PLUG, Reverse Servo Piston	2801 272	2801 272	2801 272	2801 272	2801 272	2801 272
	RING, .435" I.D.	6027 153	6027 153	6027 153	6027 153	6027 153	6027 153
21-137-50	SEAL, Reverse Servo Piston, Rubber	2464 481	2464 481	2464 481	2464 481	2464 481	2464 481
21-137-53	SPRING, Reverse Servo Piston	2801 241	2801 241	2801 241	2801 241	2801 241	2801 241
21-137-56	RETAINER, Reverse Servo Piston	1942 150	1942 150	1942 150	1942 150	1942 150	1942 150
21-137-59	SNAP RING, Reverse Servo Piston Spring Retainer	1942 130	1942 130	1942 130	1942 130	1942 130	1942 130
21-137-200	PISTON, Accumulator	1942 153	1942 153	1942 153	1942 153	1942 153	1942 153
21-137-202	RING, Accumulator Piston Seal, Small	1941 831	1941 831	1941 831	1941 831	1941 831	1941 831
	Large	2124 255	2124 255	2124 255	2124 255	2124 255	2124 255
21-137-205	SPRING, Accumulator	2538 264	2464 076	2464 076	2464 076	———	———
21-138-0	**TRANSMISSION GOVERNOR**						
21-138-2	REPAIR PACKAGE, Governor	2585 589	2298 514	2585 589	2298 514	2808 362	2298 514
21-138-7	SNAP RING, Governor Body	6022 817	6022 817	6022 817	6022 817	6022 817	6022 817
21-138-10	SUPPORT, Governor	2538 634	2538 634	2538 634	2538 634	2538 634	2538 634
21-138-13	WEIGHT, Governor, Outer	1636 461	1636 461	1636 461	1636 461	1636 461	1636 461
	Inner	1636 462	1636 462	1636 462	1636 462	2801 257	1636 462
21-138-15	SPRING, Governor Weight	2124 662	1949 859	2124 662	1949 859	1949 859	1949 859
21-138-19	SNAP RING, Governor Weight, Outer	1636 465	1636 465	1636 465	1636 465	1636 465	1636 465
	Inner	1636 464	1636 464	1636 464	1636 464	1636 464	1636 464
21-138-21	LOCK, Governor Body Bolt (2)	2125 024	2125 024	2125 024	2125 024	2125 024	2125 024
21-138-23	VALVE, Governor	2124 663	2124 663	2124 663	2124 663	2124 663	2124 663
21-138-26	SHAFT, Governor Valve	1556 082	1556 082	1556 082	1556 082	1556 082	1556 082
21-138-29	SNAP RING, Governor Valve Shaft (2)	1638 461	1638 461	1638 461	1638 461	1638 461	1638 461
21-138-38	RING, Governor Support Seal, Frt. and Rear (2)	1942 109	1942 109	1942 109	1942 109	1942 109	1942 109
21-139-0	**TRANSMISSION VALVE BODY AND VALVES**						
21-139-4	BODY, w Transfer Plate	2892 357	2892 357	2892 355	2892 355	2892 355	2892 355
	BALL, Check Valve, Small (5)	104 918	104 918	104 918	104 918	104 918	104 918
	Large	147 488	147 488	147 488	147 488	147 488	147 488
21-139-9	VALVE, Manual	2801 259	2801 259	2801 259	2801 259	2801 259	2801 259
21-139-12	LEVER, w/INSULATOR, Manual Valve	2801 783	2801 783	2801 783	2801 783	2801 783	2801 783
21-139-16	SEAL, Manual Valve Shaft	2466 842	2466 842	2466 842	2466 842	2466 842	2466 842
21-139-24	SPRING, Manual Valve Lever Detent	2466 615	2466 615	2466 615	2466 615	2466 615	2466 615
	BALL 11 32"	147 488	147 488	147 488	147 488	147 488	147 488
21-139-30	VALVE, Throttle	2892 349	2892 349	2892 349	2892 349	2892 349	2892 349
21-139-33	SPRING, Throttle Valve	2892 350	2892 350	2892 350	2892 350	2892 350	2892 350
21-139-34	PIN, Manual Valve Lever Spring	2466 756	2466 756	2466 756	2466 756	2466 756	2466 756

CARLINES J - Challenger, B - Barracuda; V - Valiant, L - Dart; R - Belvedere - Satallite, W - Coronet - Charger; P - Plymouth, D - Dodge; C - Chrysler, Y - Imperial

AR Indicates use as required.

≠ Indicates parts not listed in any previous parts book.

Numerals in parentheses ( ) refer to notes.

★ Indicates change or addition.

Printed in U.S.A.
January 1972

AUTOMATIC TRANSMISSION

NOTE: All quantities are one (1) unless otherwise indicated in parenthesis

CODE	TRANSMISSION	3410 667 A727	3410 668 A727	3410 669 A727	3410 670 A727	3410 671 A727	3410 672 A727
21-139-0	**TRANSMISSION VALVE BODY AND VALVES Cont'd.**						
21-139-46	WASHER, Throttle Valve Lever Shaft	2538 062	2538 062	2538 062	2538 062	2538 062	2538 062
21-139-47	SEAL, Throttle Lever Shaft, 11/16" O.D.	2466 548	2466 548	2466 548	2466 548	2466 548	2466 548
21-139-49	E-RING, Throttle Valve Lever Shaft	6025 857	6025 857	6025 857	6025 857	6025 857	6025 857
21-139-50	LEVER, Throttle Valve	2466 854	2466 854	2466 854	2466 854	2466 854	2466 854
21-139-63	PLUG, Throttle Pressure Regulator Valve Throttle Pressure	1942 245	1942 245	1942 245	1942 245	1942 245	1942 245
	Regulator Valve Line Pressure	1942 218	1942 218	1942 218	1942 218	1942 218	1942 218
21-139-64	SLEEVE, Regulator Valve Line Pressure Plug	1942 213	1942 213	1942 213	1942 213	1942 213	1942 213
21-139-67	VALVE PACKAGE, Regulator	2240 685	2240 685	2240 685	2240 685	2240 685	2240 685
21-139-68	SPRING, Regulator Valve	2124 734	2124 734	2124 734	2124 734	2124 734	2124 734
	Pressure Relief	2892 846	2892 846	2892 846	2892 846	2892 846	2892 846
	BALL, Pressure Relief 3/16"	147 483	147 483	147 483	147 483	147 483	147 483
21-139-71	RETAINER, Regulator Valve Spring	2204 975	2204 975	2204 975	2204 975	2204 975	2204 975
21-139-74	SCREW, Line Pressure Adjusting	2124 736	2124 736	2124 736	2124 736	2124 736	2124 736
	Throttle Pressure Adjusting	6023 343	6023 343	6023 343	6023 343	6023 343	6023 343
21-139-76	NUT, Throttle Pressure Adjusting Screw Lock	2892 353	2892 353	2892 353	2892 353	2892 353	2892 353
	Line Pressure Adjusting Screw	2124 737	2124 737	2124 737	2124 737	2124 737	2124 737
21-139-78	VALVE, Kickdown	2892 351	2892 351	2892 351	2892 351	2892 351	2892 351
	PLUG, Kickdown Detent	2892 352	2892 352	2892 352	2892 352	2892 352	2892 352
21-139-95	VALVE, Shuttle	1854 275	1854 275	1854 275	1854 275	1854 275	1854 275
	PLUG, Shuttle Valve	1854 274	1854 274	1854 274	1854 274	1854 274	1854 274
21-139-98	SNAP RING, Shuttle Valve	6025 857	6025 857	6025 857	6025 857	6025 857	6025 857
21-139-101	SPRING, Shuttle Valve	2124 697	2124 697	2124 697	2124 697	2124 697	2124 697
21-139-105	VALVE, 1-2 Shift	1941 602	1941 602	1941 602	1941 602	1941 602	1941 602
	PLUG, 1-2 Shift	3410 886	3410 886	3410 886	3410 886	3410 886	3410 886
	VALVE, 2-3 Shift	1941 600	1941 600	1941 600	1941 600	1941 600	1941 600
	PLUG, 2-3 Shift	1941 601	1941601	1941 601	1941 601	1941 601	1941 601
21-139-108	SPRING, 1-2 Shift Valve	2204 547	2204 547	2204 547	2204 547	2204 547	2204 547
	2-3 Shift Valve	1942 231	1942 231	1942 231	1942 231	1942 231	1942 231
21-139-117	VALVE, Torque Conv. Control	2124 256	2124 256	2124 256	2124 256	2124 256	2124 256
21-139-118	SPRING, Torque Conv. Control Valve	2124 257	2124 257	2124 257	2124 257	2124 257	2124 257
21-139-135	COVER, Regulator Valve	2205 034	2205 034	2205 034	2205 034	2205 034	2205 034
	Shift Valve Plug	2538 662	2538 662	2538 662	2538 662	2538 662	2538 662
	Shuttle Valve	1942 227	1942 227	1942 227	1942 227	1942 227	1942 227
	Shift Valve	2801 244	2801 244	2801 244	2801 244	2801 244	2801 244
21-139-140	PLATE, Valve Body	2892 845	2892 845	2892 845	2892 845	2892 845	2892 845
21-139-147	PLATE, Transfer	2801 295	2801 295	2466 886	2466 886	2466 886	2466 886
	SCREW, w/WASHER, Plate to Valve Body (14)	6027 391	6027 391	6027 391	6027 391	6027 391	6027 391
21-139-154	SUPPORT, Transfer PLATE	1942 237	1942 237	1942 237	1942 237	1942 237	1942 237

AUTOMATIC TRANSMISSION

NOTE: All quantities are one (1) unless otherwise indicated in parenthesis.

CODE	TRANSMISSION	3410 767 A727	3410 769 A727
21-01-0	**TRANSMISSION SETS OR PACKAGES**		
21-01-3	SEAL and GASKET PACKAGE	3420 020	3420 020
21-03-0	**TRANSMISSION CASE**		
21-03-1	CASE	3410 880	3410 880
	SCREW, w/ WASHER, Cover (AR)	6023 092	6023 092
21-04-0	**TRANSMISSION CASE EXTENSION**		
21-04-1	EXTENSION	2466 969	2466 969
	SCREW, w/WASHER (6)	6023 514	6023 514
21-04-2	GASKET	2466 954	2466 954
	Output Shaft Brg. Inspection Cover	2801 398	2801 398
21-04-8	COVER, Output Shaft Brg. Inspection	2466 957	2466 957
	SCREW 1/4"-20 x 5/8" (2)	6026 884	6026 884
21-04-11	BUSHING	2801 724	2801 724
21-05-0	**TRANSMISSION OUTPUT SHAFT**		
21-05-1	SHAFT	2801 314	2801 314
21-05-2	BEARING, Output Shaft	2466 224	2466 224
21-05-8	SNAP RING, Brg., Outer	2400 320	2400 320
	BRG. (2)	6025 570	6025 570
21-05-12	SEAL, Yoke, 1 60 64" lgh.	2400 300	2400 300
21-05-19	SNAP RING, Output Shaft, .048" thk. (AR)	6022 816	6022 816
	.055" thk. (AR)	6024 311	6024 311
	.062" thk. (AR)	6024 312	6024 312
21-05-25	SUPPORT, Output Shaft	2466 882	2466 882
21-05-35	WASHER, Output Shaft Thrust, 062" thk.	2400 843	2400 843
21-117-0	**TRANSMISSION OIL FILTER**		
	NOTE: See Code 5-53-3 for Tubes		
21-117-1	FILTER or STRAINER	3410 253	3410 253
	SCREW, w/WASHER	6026 390	6026 390
21-118-0	**TRANSMISSION OIL PUMP**		
21-118-6	ROTOR PACKAGE, Frt. Oil Pump	2808 675	2808 675
21-118-40	HOUSING, w/ Bushing and Plug, Frt. Pump	3410 965	3410 965
	SCREW, w/WASHER (7)	6023 943	6023 943
21-118-45	SEAL, Frt. Pump Hsg., 10" O.D.	1942 021	1942 021
21-118-47	BUSHING, Frt. Pump Hsg.	2466 324	2466 324
21-118-54	GASKET, Frt. Pump Hsg.	2124 846	2124 846
21-118-57	SHIELD, Frt. Pump Hsg. Vent w/PLUG	2204 993 2892 679	2204 993 2892 679
	BAFFLE, w/NAIL, Frt. Pump Hsg.	3420 087	3420 087
21-118-58	PLUG, Vent Shield	2892 553	2892 553
21-119-0	**TRANSMISSION OIL PAN**		
21-119-3	PAN, w/PLUG, Oil	2464 419	2464 323
	SCREW, w/WASHER (14)	6023 355	6023 355
21-119-5	GASKET, Oil Pan	2464 324	2464 324
21-119-11	PLUG, Oil Pan Drain	2125 890	———

CARLINES J - Challenger, B - Barracuda; V - Valiant, L - Dart; R - Belvedere - Satallite, W - Coronet - Charger; P - Plymouth, D - Dodge; C - Chrysler, Y - Imperial

AR Indicates use as required.

≠ Indicates parts not listed in any previous parts book.

Numerals in parentheses ( ) refer to notes.

★ Indicates change or addition.

Printed in U.S.A. January 1972

AUTOMATIC TRANSMISSION

NOTE: All quantities are one (1) unless otherwise indicated in parenthesis.

CODE	TRANSMISSION	3410 767 A727	3410 769 A727
21-119-0	**TRANSMISSION OIL PAN Cont'd.**		
21-119-12	GASKET, Drain Plug	2268 513	———
21-129-0	**TRANSMISSION INPUT SHAFT AND TORQUE CONVERTER REACTION SHAFT**		
21-129-1	REPAIR PACKAGE, Reaction Shaft and Frt. Clutch	3420 095	3420 098
21-129-5	SHAFT, Input	2801 053	2801 053
21-129-6	BUSHING, Input Shaft	2205 242	2205 242
21-129-7	RING, Input Shaft Seal (2)	2801 054	2801 054
21-129-10	SHAFT, w/SUPPORT, Reaction	2801 045	2801 045
	BALL	147 488	147 488
21-129-13	RING, Reaction Shaft Support Seat (2)	2124 813	2124 813
21-129-23	BUSHING, Reaction Shaft	2801 348	2801 348
21-133-0	**TRANSMISSION CLUTCH**		
21-133-1	REPAIR PACKAGE, Frt. Clutch Reaction Shaft	3420 095	3420 098
21-133-7	RETAINER, w/BUSHING, Frt. Clutch	2801 284	2801 989
	Rr. Clutch	2466 801	2466 801
	Rr. Clutch Piston	2124 833	2124 833
21-133-10	BUSHING, Frt. Clutch Retainer	2205 241	2205 241
21-133-15	PISTON, Frt. Clutch	2464 651	2464 651
	Rr.	2204 645	2204 645
	BALL, Check Valve	147 483	147 483
21-133-17	SEAL, Frt. Clutch Piston, Inner	3410 226	3410 226
	Outer	3410 225	3410 225
	Rr. Clutch Piston, Inner	1942 054	1942 054
	Outer	2124 835	2124 835
21-133-20	SPRING, Frt. Clutch Piston (12)	2801 243	———
	(6)	———	2801 243
	Rr.	1942 015	1942 015
21-133-22	RETAINER, Frt. Clutch Piston Spring	2801 949	2801 949
	BALL, Check Valve	147 483	147 483
21-133-25	SNAP RING, Rr. Clutch Retainer, .060" thk. 7" O.D. (AR)	1942 063	1942 063
	.074" thk. (AR)	1942 064	1942 064
	.088" thk. (AR)	1942 065	1942 065
	.106" thk. (AR)	2466 811	2466 811
	Rr. Clutch Piston Retainer, 1 31/64" O.D., .060" thk.	2124 872	2124 872
21-133-31	SPRING, Rr. Clutch Wave	2466 806	2466 806
21-133-36	DISC, Frt. Clutch (3)	2801 167	———
	(4)	———	2124 827
	Rr. Clutch (4)	2801 992	2801 992
21-133-38	PLATE, Frt. Clutch (3)	2124 826	———
	(4)	———	2124 826
	Rr. (3)	2124 826	2124 826
21-133-39	PLATE, Frt. Clutch Pressure	2801 961	2801 961
	Rr. Clutch Pressure Frt.	2466 803	2466 803
	Rr.	2801 961	2801 961
21-133-40	GEAR, w/BUSHING, Sun	2801 311	2801 311
21-133-42	SHELL, Sun Gear Driving	2400 622	2400 662

AUTOMATIC TRANSMISSION

NOTE: All quantities are one (1) unless otherwise indicated in parenthesis.

CODE	TRANSMISSION	3410 767 A727	3410 769 A727
21-133-0	**TRANSMISSION CLUTCH Cont'd.**		
21-133-43	SNAP RING, Frt. Clutch, 7 "O.D., .060" thk. (AR)	1942 063	1942 063
21-133-46	RING, Sun Gear Driving Shell Lock (2)	1736 521	1736 521
21-133-47	PLATE, Sun Gear Driving Shell Thrust, w/4 Inside Tangs	1942 080	1942 080
21-133-48	WASHER, Sun Gear Driving Shell Thrust, w/3 Outside Tabs	1942 081	1942 081
21-133-62	SPACER, Rr. Clutch Piston Spring	2801 161	2801 161
21-133-65	WASHER, Frt. Clutch Thrust, Frt., Green, 3 21/64" O.D., .061" thk., (AR)	2204 622	2204 622
	Red, .084" thk. (AR)	2204 623	2204 623
	Yellow, .102" thk. (AR)	2400 284	2400 284
	Frt. Clutch Thrust, Rr., Green, .061" thk. (AR)	2204 622	2204 622
21-134-0	**TRANSMISSION FRONT AND REAR PLANET PINION CARRIER AND COMPONENTS**		
21-134-5	CARRIER, w/PINION and WASHER, Frt.	2466 537	2801 171
	Rr.	2466 539	2466 539
21-134-8	PINION, Frt. Planet (3)	2400 667	———
	(4)	———	2400 667
	Rr. (3)	2400 667	2400 667
21-134-9	SHAFT, Frt. Planet Pinion (3)	2464 178	———
	(4)	———	2464 178
	Rr. (3)	2464 178	2464 178
	PIN (AR)	6024 666	6024 666
21-134-10	WASHER, Frt. (6)	2801 315	———
	(8)	———	2801 315
	Rr. (6)	2801 315	2801 315
21-134-11	ROLLER, Frt. (69)	2204 647	———
	(92)	———	2204 647
	Rr. (69)	2204 647	2204 647
21-134-12	RING, Frt. Roller Thrust, 49 64" O.D. (6)	2204 649	———
	(8)	———	2204 649
	Rr. (6)	2204 649	2204 649
21-134-30	WASHER, Frt. Carrier Thrust	1942 081	2801 060
	Rr.	1942 081	1942 081
21-134-38	GEAR, Frt. Annulus	2892 656	2892 656
	Rr.	2538 185	2538 185
21-134-45	PLATE, Rr. Annulus Gear Thrust, w/31 Inside Teeth, 3 23/64" O.D.	2400 580	2400 580
21-136-0	**TRANSMISSION BANDS**		
21-136-5	BAND, Kickdown	2124 342	2124 342
21-136-15	STRUT, Kickdown Band	2124 848	2124 848
	ANCHOR, Kickdown	1942 120	1942 120
21-136-17	SCREW, Kickdown Band Adjusting	2400 389	2400 389
	NUT, Lock	124 934	124 934
21-136-20	LEVER, Kickdown Band	2204 952	2125 067
21-136-23	SHAFT, Kickdown Band Lever	1942 132	1942 132
21-136-30	BAND, Reverse	1942 133	1942 133

CARLINES J - Challenger, B - Barracuda, V - Valiant, L - Dart, R - Belvedere - Satallite, W - Coronet - Charger, P - Plymouth, D - Dodge, C - Chrysler, Y - Imperial

AR Indicates use as required.

# Indicates parts not listed in any previous parts book.

Numerals in parentheses ( ) refer to notes.

★ Indicates change or addition.

Printed in U.S.A.
January 1972

AUTOMATIC TRANSMISSION

NOTE: All quantities are one (1) unless otherwise indicated in parenthesis.

CODE	TRANSMISSION	3410 767 A727	3410 769 A727
21-136-0	**TRANSMISSION BANDS Cont'd.**		
21-136-41	STRUT, Reverse Band	2204 823	2204 823
21-136-44	LINK, w Anchor, Reverse Band	2204 820	2204 820
21-136-47	LEVER, w STEM, Reverse Band	1942 137	1942 137
	Reverse Band, Short	2892 233	2892 233
21-136-49	SHAFT, Reverse Band Lever	2124 857	2124 857
21-136-52	SCREW, Reverse Band Adjusting	1942 141	1942 141
21-136-55	SEAL, Reverse Band Lever Shaft	1672 358	1672 358
21-136-65	DRUM, Reverse, 26T (Note 1)	3515 451	3515 451
21-136-231	CAM, "O" Running Clutch	1942 095	1942 095
21-136-232	RACE, "O" Running Clutch, 26T	3420 100	3420 100
21-136-233	RETAINER, "O" Running Clutch Spring	2801 426	2801 426
21-136-235	ROLLER, "O" Running Clutch (12)	670 776	670 776
21-136-236	SPRING, "O" Running Clutch Roller (12)	1942 187	1942 187
21-137-0	**TRANSMISSION SERVOS**		
21-137-5	PISTON, Kickdown Servo	2124 850	2124 850
21-137-8	RING, Kickdown Servo Guide	1942 123	1942 123
	Kickdown Servo Piston, Small	2124 851	2124 851
	Large	1942 123	1942 123
21-137-11	ROD, Kickdown Servo Piston	2124 853	2124 853
21-137-13	GUIDE, Kickdown Servo	2124 856	2124 856
21-137-19	SNAP RING, Kickdown Servo Guide	1942 130	1942 130
21-137-22	SPRING, Kickdown Servo Piston, Inner	3410 245	3410 245
	Outer	2125 069	———
21-137-35	PISTON, Reverse Servo	2801 281	2801 281
21-137-41	SPRING, Reverse Servo Cushion	2801 273	2801 273
21-137-47	PLUG, Reverse Servo Piston RING	2801 272 6027 153	2801 272 6027 153
21-137-50	SEAL, Reverse Servo Piston, Rubber	2464 481	2464 481
21-137-53	SPRING, Reverse Servo Piston	2801 241	2801 241
21-137-56	RETAINER, Reverse Servo Piston	1942 150	1942 150
21-137-59	SNAP RING, Reverse Servo Piston Retainer	1942 130	1942 130
21-137-200	PISTON, Accumulator	1942 153	1942 153
21-137-202	RING, Accumulator Piston Seal, Small	1941 831	1941 831
	Large	2124 255	2124 255
21-137-205	SPRING, Accumulator	2538 264	2464 076
21-138-0	**TRANSMISSION GOVERNOR**		
21-138-2	REPAIR PACKAGE, Governor	2585 589	3004 545
21-138-7	SNAP RING, Governor Body	6022 817	6022 817
21-138-10	SUPPORT, Governor	2538 634	2538 634
21-138-13	WEIGHT, Governor, Outer	1636 461	1636 461
	Inner	1636 462	1636 462
	NOTE 1: Also specify 1 of 3420 100 Race Package		
21-138-15	SPRING, Governor Weight	2124 662	2892 248
21-138-19	SNAP RING, Governor Weight, Outer	1636 465	1636 465
	Inner	1636 464	1636 464
21-138-21	LOCK, Governor Body Bolt (2)	2125 024	2125 024

AUTOMATIC TRANSMISSION

NOTE: All quantities are one (1) unless otherwise indicated in parenthesis.

CODE	TRANSMISSION	3410 767 A727	3410 769 A727
21-138-0	**TRANSMISSION BANDS Cont'd.**		
21-138-23	VALVE, Governor	2124 663	2124 663
21-138-26	SHAFT, Governor Valve	1556 082	1556 082
21-138-29	SNAP RING, Governor Valve Shaft (2)	1638 461	1638 461
21-138-38	RING, Governor Support Seal, Frt. and Rr. (2)	1942 109	1942 109
21-139-0	**TRANSMISSION VALVE BODY AND VALVES**		
21-139-4	BODY, w/Transfer Plate	2892 357	2892 357
	BALL, Check Valve, Small (5)	104 918	104 918
	Large	147 488	147 488
21-139-9	VALVE, Manual	2801 259	2801 259
21-139-12	LEVER, w/INSULATOR, Manual Valve	2801 783	2801 783
21-139-16	SEAL, Manual Valve Shaft	2466 842	2466 842
21-139-24	SPRING, Manual Valve Lever Detent	2466 615	2466 615
	BALL 11/32"	147 488	147 488
21-139-30	VALVE, Throttle	2892 349	2892 349
21-139-33	SPRING, Throttle Valve	2892 350	2892 350
21-139-34	PIN, Manual Valve Lever Spring	2466 756	2466 756
21-139-46	WASHER, Throttle Valve Lever Shaft	2538 062	2538 062
21-139-47	SEAL, Throttle Lever Shaft 11/16" O.D.	2466 548	2466 548
21-139-49	E-RING, Throttle Valve Lever Shaft	6025 857	6025 857
21-139-50	LEVER, Throttle Valve	2466 854	2466 854
21-139-63	PLUG, Regulator Valve Throttle Pressure	1942 245	1942 245
	Regulator Valve Line Pressure	1942 218	1942 218
21-139-64	SLEEVE, Regulator Valve Line Pressure Plug	1942 213	1942 213
21-139-67	VALVE PACKAGE, Regulator	2240 685	2240 685
21-139-68	SPRING, Regulator Valve	2124 734	2124 734
	Pressure Relief	2892 846	2892 846
	BALL, Pressure Relief 3/16"	147 483	147 483
21-139-71	RETAINER, Regulator Valve Spring	2204 975	2204 975
21-139-74	SCREW, Line Pressure Adjusting	2124 736	2124 736
	Throttle Pressure Adjusting	6023 343	6023 343
21-139-76	NUT, Throttle Pressure Adjusting Screw Lock	2892 353	2892 353
	Line Pressure Adjusting Screw	2124 737	2124 737
21-139-78	VALVE, Kickdown	2892 351	2892 351
	PLUG, Kickdown Detent	2892 352	2892 352
21-139-95	VALVE, Shuttle	1854 275	1854 275
	PLUG, Shuttle Valve	1854 274	1854 274
21-139-98	SNAP RING, Shuttle Valve	6025 857	6025 857
21-139-101	SPRING, Shuttle Valve	2124 697	2124 697
21-139-105	VALVE, 1-2 Shift	1941 602	1941 602
	PLUG, 1-2 Shift Valve	3410 886	3410 886
	VALVE, 2-3 Shift	1941 600	1941 600
	PLUG,	1941 601	1941 601
21-139-108	SPRING, 1-2 Shift Valve	2204 547	2204 547
	2-3 Shift Valve	1942 231	1942 231

CARLINES J - Challenger, B - Barracuda, V - Valiant, L - Dart, R - Belvedere - Satallite, W - Coronet - Charger, P - Plymouth, D - Dodge, C - Chrysler, Y - Imperial

AR Indicates use as required.

Numerals in parentheses ( ) refer to notes.

= Indicates parts not listed in any previous parts book.

★ Indicates change or addition.

Printed in U.S.A.
January 1972

AUTOMATIC TRANSMISSION

NOTE: All quantities are one (1) unless otherwise indicated in parenthesis.

CODE	TRANSMISSION	3410 767 A727	3410 769 A727
21-139-0	**TRANSMISSION VALVE BODY AND VALVES Cont'd.**		
21-139-117	VALVE, Torque Conv. Control	2124 256	2124 256
21-139-118	SPRING, Torque Conv. Control Cable	2124 257	2124 257
21-139-135	COVER, Reg. Valve	2205 034	2205 034
	Shift Valve Plug	2538 662	2538 662
	Shuttle Valve	1942 227	1942 227
	Shift Valve	2801 244	2801 244
21-139-140	PLATE, Valve Body	2892 845	2892 845
	SCREW, w/WASHER, Plate to Transfer Plate (14)	6029 271	6029 271
21-139-147	PLATE, Transfer	2801 295	2801 295
	SCREW, w/WASHER, Plate to Valve Body (14)	6027 391	6027 391
21-139-154	SUPPORT, Transfer Plate	1942 237	1942 237

Note: All quantities are one (1) unless otherwise indicated in parenthesis.

CODE	TRANSMISSION	3515 806 A94-1	3515 815 A727	3515 816 A727	3515 817 A727
21-01-0	**TRANSMISSION SETS OR PACKAGES**				
21-01-3	SEAL and GASKET PACKAGE	3621 459	3420 093	3420 093	3420 093
21-03-0	**TRANSMISSION CASE**				
21-03-1	CASE	3410 503	3410 470	3410 470	3410 470
	SCREW, w/WASHER, Cover (AR)	6023 092	6023 092	6023 092	6023 092
21-04-0	**TRANSMISSION CASE EXTENSION**				
21-04-1	EXTENSION	2466 956	2466 969	2466 969	2466 969
	SCREW, w/WASHER (6)	6023 514	6023 514	6023 514	6023 514
21-04-2	GASKET	2466 954	2466 954	2466 954	2466 954
	Output Shaft Brg. Inspection Cover	2801 398	2801 398	2801 398	2801 398
21-04-8	COVER, Output Shaft Brg. Inspection	2466 957	2466 957	2466 957	2466 957
	SCREW 1/4"-20x5/8" (2)	6026 884	6026 884	6026 884	6026 884
21-04-11	BUSHING	2801 726	2801 724	2801 724	2801 724
21-05-0	**TRANSMISSION OUTPUT SHAFT**				
21-05-1	SHAFT, w/PLUG, 21 11/32" lgh.	2538 567	———	———	———
	SHAFT	———	2801 314	2801 314	2801 314
21-05-2	BEARING	2466 484	2466 224	2466 224	2466 224
21-05-8	SNAP RING, Brg., Outer Brg. (2)	2400 185	2400 320	2400 320	2400 320
		6025 668	6025 570	6025 570	6025 570
21-05-12	SEAL, Yoke	2400 163	2400 300	2400 300	2400 300
21-05-19	SNAP RING .040" thk. (AR)	6026 289	———	———	———
	.048" thk. (AR)	6026 290	6022 816	6022 816	6022 816
	.055" thk. (AR)	———	6024 311	6024 311	6024 311
	.059" thk. (AR)	6026 291	———	———	———
	.062" thk. (AR)	———	6024 312	6024 312	6024 312
21-05-25	SUPPORT	2466 881	2466 882	2466 882	2466 882
21-05-35	WASHER .052" thk. (AR)	2538 669	———	———	———
	.062" thk. (AR)	———	2400 843	2400 843	2400 843
	.068" thk. (AR)	2538 670	———	———	———
	.083" thk. (AR)	2538 671	———	———	———

CARLINES J - Challenger, B - Barracuda, V - Valiant, L - Dart, R - Belvedere - Satallite, W - Coronet - Charger, P - Plymouth, D - Dodge, C - Chrysler, Y - Imperial

AR Indicates use as required.

Numerals in parentheses ( ) refer to notes.

# Indicates parts not listed in any previous parts book.

★ Indicates change or addition.

Printed in U.S.A.
January 1972

AUTOMATIC TRANSMISSION

NOTE: All quantities are one (1) unless otherwise indicated in parenthesis.

CODE	TRANSMISSION	3515 806 A94-1	3515 815 A727	3515 816 A727	3515 817 A727
21-117-0	**TRANSMISSION OIL FILTER**				
	NOTE: See Code 5-53-3 for tubes				
21-117-1	FILTER or STRAINER	3410 253	3410 253	3410 253	3410 253
	SCREW, w/WASHER (3)	6026 390	6026 390	6026 390	6026 390
21-118-0	**TRANSMISSION OIL PUMP**				
21-118-6	ROTOR PACKAGE, Frt. Oil Pump	2808 685	2808 675	2808 675	2808 675
21-118-40	HOUSING, w/BUSHING, Frt. Pump	2538 206	———	———	———
	w/Bushing and Plug	———	3410 965	3410 965	3410 965
	SCREW, w/WASHER (6)	6023 943	———	———	———
	(7)	———	6023 943	6023 943	6023 943
21-118-45	SEAL, Frt. Pump Hsg., 8 17/64" O.D.	2204 709	———	———	———
	10" O.D.	———	1942 021	1942 021	1942 021
21-118-47	BUSHING, Frt. Pump Hsg.	2466 796	2466 324	2466 324	2466 324
21-118-54	GASKET, Frt. Pump Hsg.	———	2124 846	2124 846	2124 846
21-118-57	SHIELD, Frt. Pump Hsg.	———	2204 993	2204 993	2204 993
	w/Plug	———	2892 679	2892 679	2892 679
21-118-58	PLUG, Vent Shield	———	2892 553	2892 553	2892 553
21-119-0	**TRANSMISSION OIL PAN**				
21-119-3	PAN, Oil	2464 413	———	———	———
	w/Plug	———	2464 419	2464 419	2464 419
	SCREW, w/WASHER (14)	6023 355	6023 355	6023 355	6023 355
21-119-5	GASKET	2205 299	2464 324	2464 324	2464 324
21-119-11	PLUG, Drain	———	2125 890	2125 890	2125 890
21-129-0	**TRANSMISSION INPUT SHAFT AND TORQUE CONVERTER REACTION SHAFT**				
21-129-1	REPAIR PACKAGE, Reaction Shaft and Frt. Clutch	———	3420 098	3420 098	3420 098
21-129-5	SHAFT, Input	2538 407	2801 053	2801 053	2801 053
	SNAP RING	6022 859	———	———	———
21-129-6	BUSHING, Input Shaft	———	2205 242	2205 242	2205 242
21-129-7	RING, Input Shaft Seal (AR)	1941 831	———	———	———
	(2)	———	2801 054	2801 054	2801 054
21-129-10	SHAFT, w/SUPPORT, Reaction	2538 409	2801 045	2801 045	2801 045
	BALL (2)	104 918	———	———	———
	Large 11/32"	———	147 488	147 488	147 488
21-129-11	BAFFLE, Vent, 3" lgh.	———	2400 479	2400 479	2400 479
21-129-13	RING, Reaction Shaft Support Seal (2)	1942 389	2124 813	2124 813	2124 813
21-129-23	BUSHING, Reaction Shaft	2801 728	2801 348	2801 348	2801 348
21-129-24	GASKET, Reaction Shaft Support, 8 15/64" O.D.	1942 390	———	———	———
21-133-0	**TRANSMISSION CLUTCH**				
21-133-1	REPAIR PACKAGE, Frt. Clutch Reaction Shaft	———	3420 098	3420 098	3420 098
21-133-7	RETAINER, w/BUSHING, Frt. Clutch	3410 920	3410 905	3410 906	3410 906

CARLINES J - Challenger, B - Barracuda; V - Valiant, L - Dart; R - Belvedere - Satallite, W - Coronet - Charger; P - Plymouth, D - Dodge; C - Chrysler, Y - Imperial

AR Indicates use as required.

≠ Indicates parts not listed in any previous parts book.

Numerals in parentheses ( ) refer to notes.

★ Indicates change or addition.

Printed in U.S.A.
January 1972

AUTOMATIC TRANSMISSION

NOTE: All quantities are one (1) unless otherwise indicated in parenthesis.

CODE	TRANSMISSION	3515 806 A94-1	3515 815 A727	3515 816 A727	3515 817 A727
21-133-0	**TRANSMISSION CLUTCH Cont'd.**				
21-133-7	RETAINER Cont'd.				
	Rr. Clutch	2892 422	2466 801	2466 801	2466 801
	Rr. Clutch Piston	———	2124 833	2124 833	2124 833
	BALL, Check Valve	147 483	———	———	———
21-133-10	BUSHING, Frt. Clutch Retainer	2801 727	2205 241	2205 241	2205 241
21-133-15	PISTON, Frt. Clutch	2892 420	2124 819	2464 651	2464 651
	Rr.	2892 554	2204 645	2204 645	2204 645
	BALL, Clutch Check Valve	147 483	147 483	147 483	147 483
21-133-17	SEAL, Frt. Clutch Piston, Inner	1942 396	3410 226	3410 226	3410 226
	Outer	1942 397	3410 225	3410 225	3410 225
	Rr. Clutch Piston, Inner	2538 510	1942 054	1942 054	1942 054
	Outer	2538 695	2124 835	2124 835	2124 835
	Rr. Clutch Retainer Ring	1323 593	———	———	———
21-133-20	SPRING, Frt. Clutch Piston	3410 898	———	———	———
	Rr.	1942 414	———	———	———
	Frt. (9)	———	2801 243	2801 243	2801 243
	Rr.	———	1942 015	1942 015	1942 015
21-133-22	RETAINER, Frt. Clutch Piston Spring	1942 399	2801 949	2801 949	2801 949
	BALL, Check Valve	147 483	147 483	147 483	147 483
21-133-25	SNAP RING, Rr. Clutch Retainer, 5 1/4" O.D., .060" thk. (AR)	1942 421	———	———	———
	.076" thk. (AR)	1942 423	———	———	———
	.098" thk. (AR)	2538 617	———	———	———
	7" O.D., .060" thk. (AR)	———	1942 063	1942 063	1942 063
	.074" thk. (AR)	———	1942 064	1942 064	1942 064
	.088" thk. (AR)	———	1942 065	1942 065	1942 065
	.106" thk. (AR)	———	2466 811	2466 811	2466 811
	Rr. Clutch Piston Retainer, .060" thk., 1 31/64" O.D.	———	2124 872	2124 872	2124 872
21-133-31	SPRING, Rr. Clutch Wave,	2801 626	2466 806	2466 806	2466 806
21-133-36	DISC, Frt. Clutch (4)	2205 203	———	2801 167	2801 167
	(3)	———	2801 167	———	———
	Rr. Clutch (4)	2892 551	2801 992	2801 992	2801 992
21-133-38	PLATE, Frt. Clutch (4)	1942 403	2124 826	2124 826	2124 826
	Rr. (3)	1942 403	2124 826	2124 826	2124 826
21-133-39	PLATE, Frt. Clutch Pressure	2801 969	2801 961	2801 961	2801 961
	Rr. Clutch Pressure, Frt.	2466 281	2466 803	2466 803	2466 803
	Rr., Rr.	2801 969	2801 961	2801 961	2801 961
21-133-40	GEAR, w/BUSHING, Sun	1942 434	2801 311	2801 311	3801 311
21-133-42	SHELL, Sun Gear Driving	1942 438	2400 662	2400 662	2400 662
21-133-43	SNAP RING, Frt. Clutch, 2 7/16" O.D., Inner	1942 400	———	———	———
	Outer	3410 571	———	———	———
		———	3410 570	3410 570	3410 570
21-133-46	RING, Sun Gear Driving Shell Lock (2)	1942 439	1736 521	1736 521	1736 521
21-133-47	PLATE, Sun Gear Driving Shell Thrust, w/28 Tangs (2)	3410 540	———	———	———
	w/4 Tangs	———	1924 080	1942 080	1942 080

CARLINES J - Challenger, B - Barracuda, V - Valiant, L - Dart, R - Belvedere - Satallite, W - Coronet - Charger, P - Plymouth, D - Dodge, C - Chrysler, Y - Imperial

AR Indicates use as required.

Numerals in parentheses ( ) refer to notes.

# Indicates parts not listed in any previous parts book.

★ Indicates change or addition.

Printed in U.S.A.
January 1972

AUTOMATIC TRANSMISSION

NOTE: All quantities are one (1) unless otherwise indicated in parenthesis.

CODE	TRANSMISSION	3515 806 A94-1	3515 815 A727	3515 816 A727	3515 817 A727
21-133-0	**TRANSMISSION CLUTCH Cont'd.**				
21-133-48	WASHER, Sun Gear Driving Shell Thrust, w/4 Outside Tabs and 4 Oil Grooves (2)	2538 515	———	———	———
	w/3 Outside Tabs	———	1942 081	———	———
	w/4 Outside Tabs	———	———	2801 060	2801 060
21-133-62	SPACER, Rr. Clutch Piston Spring	2801 162	———	———	———
	6 51/64" O.D.	———	2801 161	2801 161	2801 161
21-133-65	WASHER, Frt. Clutch Thrust, Frt., 3 21/64" O.D., Green, .061" thk. (AR)	———	2204 622	2204 622	2204 622
	Red, .084" thk. (AR)	———	2204 623	2204 623	2204 623
	Yellow, .106" thk. (AR)	———	2400 284	2400 284	2400 284
	Frt. Clutch Thrust, Rr., Green, .061" thk. (AR)	———	2204 622	2204 622	2204 622
21-134-0	**TRANSMISSION FRONT AND REAR PLANET PINION CARRIER AND COMPONENTS**				
21-134-5	CARRIER, w/PINION and WASHER, Frt.	2538 523	2466 537	2801 171	2801 171
	Rr.	2538 522	2466 539	2466 539	2466 539
21-134-8	PINION, Frt. Planet (4)	2466 759	———	2400 667	2400 667
	(3)	———	2400 667	———	———
	Rr. (4)	2466 759	———	———	———
	(3)	———	2400 667	2400 667	2400 667
21-134-9	SHAFT, Frt. (4)	2801 363	———	2464 178	2464 178
	(3)	———	2464 178	———	———
	Rr. (4)	2801 363	———	———	———
	(3)	———	2464 178	2464 178	2464 178
	PIN	———	6024 666	6024 666	6024 666
21-134-10	WASHER, Frt. and Rr. (16)	2466 758	———	———	———
	Frt. (6)	———	2801 315	———	———
	(8)	———	———	2801 315	2801 315
	Rr. (6)	———	2801 315	2801 315	2801 315
21-134-11	ROLLER, Frt. and Rr. (152)	2466 756	———	———	———
	Frt. (69)	———	2204 647	———	———
	(92)	———	———	2204 647	2204 647
	Rr. (92)	———	2204 647	2204 647	2204 647
21-134-12	RING, Frt. and Rr. Planet Pinion Roller Thrust, 39/64" O.D. (16)	2466 757	———	———	———
	Frt. 49/64" O.D. (6)	———	2204 649	———	———
	(8)	———	———	2204 649	2204 649
	Rr. (6)	———	2204 649	2204 649	2204 649
21-134-30	WASHER, Frt. Carrier Thrust	———	1942 081	2801 060	2801 060
	Rr.	———	1942 081	1942 081	1942 081
21-134-36	SUPPORT, Frt. Annulus Gear	2538 574	———	———	———
	Rr.	1942 450	———	———	———
21-134-38	GEAR, Frt. and Rr. Annulus (2)	1942 443	———	———	———
	Frt.	———	2892 656	2892 656	2892 656
	Rr.	A904	A904	2538 185	2538 185
21-134-40	SNAP RING, Frt. and Rr. Annulus Gear (2)	1942 444	———	———	———

CARLINES J - Challenger, B - Barracuda; V - Valiant, L - Dart; R - Belvedere - Satallite, W - Coronet - Charger; P - Plymouth, D - Dodge; C - Chrysler, Y - Imperial

AR Indicates use as required.

# Indicates parts not listed in any previous parts book.

Numerals in parentheses ( ) refer to notes.

★ Indicates change or addition.

Printed in U.S.A.
January 1972

AUTOMATIC TRANSMISSION

NOTE: All quantities are one 1 unless otherwise indicated in parenthesis.

CODE	TRANSMISSION	3515 806 A94-1	3515 815 A727	3515 816 A727	3515 817 A727
21-134-0	**TRANSMISSION FRONT AND REAR PLANET PINION CARRIER AND COMPONENTS Cont'd.**				
21-134-40	SNAP RING Cont'd. Frt. Annulus Gear Support	A904	A904	———	———
21-134-45	WASHER, Frt. Annulus Gear Support Thrust, w 6 Oil Grooves and 1 Outside Tab	A904	A904	———	———
	PLATE, Rr. Annulus Gear Thrust, w 31 Inside Teeth, 3 23 64" O.D.	A904	A904	2400 580	2400 580
	28T., 2 53 64" O.D.	2892 478	———	———	———
21-136-0	**TRANSMISSION BANDS**				
21-136-5	BAND, Kickdown	2204 792	2124 342	2124 342	2124 342
21-136-15	STRUT, Kickdown Band	A904	A904	2124 848	2124 848
	ANCHOR, Kickdown Band	———	1942 120	1942 120	1942 120
21-136-17	SCREW, Kickdown Band Adjusting	1942 477	2400 389	2400 389	2400 389
	NUT, Lock 1 2"-20	124 934	124 934	124 934	124 934
21-136-20	LEVER, Kickdown Band	2124 579	2125 067	2125 067	2125 067
21-136-23	SHAFT, Kickdown Band Lever	1942 132	1942 132	1942 132	1942 132
21-136-30	BAND, Reverse	A904	A904	1942 133	1942 133
21-136-41	STRUT, Reverse Band	———	2204 823	2404 823	2404 823
21-136-44	LINK, Reverse Band	———	2204 820	2204 820	2204 820
21-136-47	LEVER, w STEM, Reverse Band	2801 815	1942 137	1942 137	1942 137
	Reverse Band, Short	———	2892 233	2892 233	2892 233
21-136-49	SHAFT, Reverse Band Lever	3410 102	2124 857	2124 857	2124 857
	Reverse Band Reaction	3410 102	———	———	———
21-136-50	SEAL, Reverse Band Lever Shaft	1556 385	———	———	———
	Reverse Band Reaction Shaft	1556 385	———	———	———
21-136-52	SCREW, Reverse Band Adjusting	2538 472	1942 141	1942 141	1942 141
	NUT	120 369	———	———	———
21-136-55	SEAL, Reverse Band Lever Shaft	1556 385	1672 358	1672 358	1672 358
21-136-65	DRUM, Reverse, 12T., 24T.	2892 728	———	———	———
	12T., 47T.	2538 474	———	———	———
	26T., (See Note 1)	———	3515 451	3515 451	3515 451
21-136-228	CAM and RETAINER PACKAGE, "O" Running Clutch	2808 637	———	———	———
21-136-229	SCREW, w WASHER, "O" Running Clutch Cam (7)	1559 489	———	———	———
	NOTE 1: Also specify 1 of 3420 100 Race Package				
21-136-231	CAM, "O" Running Clutch	———	1942 095	1942 095	1942 095
21-136-232	RACE, ROLLER and SPRING PACKAGE, "O" Running Clutch 24T.	3420 023	———	———	———
	47T.	2808 668	———	———	———
	26T.	———	3420 100	3420 100	3420 100
21-136-233	RETAINER, "O" Running Clutch Spring	———	2801 426	2801 426	2801 426

CARLINES J - Challenger, B - Barracuda, V - Valiant, L - Dart, R - Belvedere - Satallite, W - Coronet - Charger, P - Plymouth, D - Dodge, C - Chrysler, Y - Imperial

AR Indicates use as required. Numerals in parentheses ( ) refer to notes. Printed in U.S.A.

# Indicates parts not listed in any previous parts book. ★ Indicates change or addition. January 1972

AUTOMATIC TRANSMISSION

NOTE: All quantities are one (1) unless otherwise indicated in parenthesis.

CODE	TRANSMISSION	3515 806 A94-1	3515 815 A727	3515 816 A727	3515 817 A727
21-136-0	**TRANSMISSION BANDS Cont'd.**				
21-136-235	ROLLER, "O" Running Clutch				
	(10)	2464 888	———	———	———
	(12)	———	670 776	670 776	670 776
21-136-236	SPRING, "O" Running Clutch				
	Roller (10)	2464 446	———	———	———
	(12)	———	1942 187	1942 187	1942 187
21-137-0	**TRANSMISSION SERVOS**				
21-137-5	PISTON, Kickdown Servo	3410 333	3410 440	3410 440	3410 440
	Inner, w/ROD and SEAL	———	3410 445	3410 445	3410 445
	SEAL, Inner	———	6028 864	6028 864	6028 864
	SNAP RING, Inner	———	6024 336	6024 336	6024 336
21-137-6	RETAINER, Kickdown Piston, Inner	———	3410 437	3410 437	3410 437
21-137-8	RING, Kickdown Servo				
	Piston Seal, Small	3410 374	2124 851	2124 851	2124 851
	Large	3410 372	1942 123	1942 123	1942 123
	Kickdown Servo Guide	1636 470	1942 123	1942 123	1942 123
21-137-11	ROD, Kickdown Servo Piston	1942 482	2124 853	2124 853	2124 853
21-137-13	GUIDE, Kickdown Servo	3410 332	3410 441	3410 441	3410 441
21-137-19	SNAP RING, Kickdown Servo	6028 863	———	———	———
	Kickdown Servo Guide	———	1942 130	1942 130	1942 130
21-137-22	SPRING, Kickdown Servo				
	Piston	2801 316	———	———	———
	Inner	3515 111	———	———	———
	Outer	3515 412	3410 518	3410 518	3410 518
	Kickdown Piston, Inner	———	3410 444	3410 444	3410 444
21-137-35	PISTON, Reverse Servo	2801 271	2801 281	2801 281	2801 281
21-137-41	SPRING, Reverse Servo Cushion	2801 872	2801 273	2801 273	2801 273
21-137-47	PLUG, Reverse Servo Piston	2801 272	2801 272	2801 272	2801 272
	RING, .435" I.D.	6027 153	6027 153	6027 153	6027 153
21-137-50	SEAL, Reverse Servo Piston, Rubber	2464 462	2464 481	2464 481	2464 481
21-137-53	SPRING, Reverse Servo Piston	2801 274	2801 241	2801 241	2801 241
21-137-56	RETAINER, Reverse Servo Piston Spring	2464 463	———	———	———
	Reverse Servo Piston	———	1942 150	1942 150	1942 150
21-137-59	SNAP RING, Reverse Servo Piston Spring Retainer	2464 464	1942 130	1942 130	1942 130
21-137-200	PISTON, Accumulator	3410 908	3410 908	3410 908	3410 908
21-137-202	RING, Accumulator				
	Piston Seal, Small	1941 831	1941 831	1941 831	1941 831
	Large	2124 255	2124 255	2124 255	2124 255
21-137-205	SPRING, Accumulator, 6 Coils	3515 080	———	———	3621 452
	5 1/2" Coils, 1.07 I.D.	≠ 3515 411	———	———	———
		———	3515 079	3515 079	3515 079
21-138-0	**TRANSMISSION GOVERNOR**				
21-138-2	REPAIR PACKAGE, Governor	3621 454	3621 451	3621 452	3621 451
21-138-7	SNAP RING, Governor Body	6027 271	6022 817	6022 817	6022 817
21-138-10	SUPPORT, Governor	2538 635	2538 634	2538 634	2538 634

CARLINES J - Challenger, B - Barracuda, V - Valiant, L - Dart, R - Belvedere - Satallite, W - Coronet - Charger, P - Plymouth, D - Dodge, C - Chrysler, Y - Imperial

AR Indicates use as required.

≠ Indicates parts not listed in any previous parts book.

Numerals in parentheses ( ) refer to notes.

★ Indicates change or addition.

Printed in U.S.A.
January 1972

AUTOMATIC TRANSMISSION

NOTE: All quantities are one '1) unless otherwise indicated in parenthesis.

CODE	TRANSMISSION	3515 806 A94-1	3515 815 A727	3515 816 A727	3515 817 A727
21-138-0	**TRANSMISSION GOVERNOR Cont'd.**				
21-138-13	WEIGHT, Governor, Outer	1636 461	1636 461	1636 461	1636 461
	Inner, 51/64" lgh.	3515 098	3515 098	3515 098	3515 098
21-138-15	SPRING, Governor Weight	3515 085	3515 085	3515 110	3515 085
21-138-19	SNAP RING, Governor				
	Weight, Outer	1636 465	1636 465	1636 465	1636 465
	Inner	1636 464	1636 464	1636 464	1636 464
21-138-21	LOCK, Governor Body				
	Bolt (2)	2125 024	2125 024	2125 024	2125 024
21-138-23	VALVE, Governor, .844"-.854"				
	Lgh.	2124 663	2124 663	2124 663	2124 663
	.859" Lgh.	= 3515 479	———	———	———
21-138-26	SHAFT, Governor Valve	1556 082	1556 082	1556 082	1556 082
21-138-29	SNAP RING, Governor Valve				
	Shaft (3)	1638 461	———	———	———
	(2)	———	1638 461	1638 461	1638 461
21-138-38	RING, Governor Support				
	Seal, Frt. and Rr. (2)	1942 109	1942 109	1942 109	1942 109
21-139-0	**TRANSMISSION VALVE BODY AND VALVES**				
21-139-4	BODY, w/Transfer PLATE	3410 509	3515 036	3410 478	3410 478
	BALL, Check Valve,				
	Small (5)	104 918	104 918	104 918	104 918
	Large	147 488	147 488	147 488	147 488
21-139-9	VALVE, Manual	2801 259	2801 259	2801 259	2801 259
21-139-11	VALVE, Limit	3410 560	3410 560	3410 560	3410 560
21-139-12	LEVER, w/INSULATOR, Manual				
	Valve	3410 484	3410 484	3410 484	3410 484
21-139-16	SEAL, Manual Valve				
	Shaft	2466 842	2466 842	2466 842	2466 842
21-139-19	BODY, Limit Valve	3410 564	3410 564	3410 564	3410 564
21-139-24	SPRING, Manual Valve				
	Lever Detent	2466 615	2466 615	2466 615	2466 615
	BALL 11/32"	147 488	147 488	147 488	147 488
21-139-30	VALVE, Throttle	2892 349	2892 349	2892 349	2892 349
21-139-33	SPRING, Throttle Valve	2892 350	2892 350	2892 350	2892 350
21-139-34	PIN, Manual Valve				
	Lever Spring	2466 756	2466 756	2466 756	2466 756
21-139-46	WASHER, Throttle Valve				
	Lever Shaft	2538 062	2538 062	2538 062	2538 062
21-139-47	SEAL, Throttle Lever				
	Shaft, 11/16" O.D.	2466 548	2466 548	2466 548	2464 548
21-139-49	E-RING, Throttle Valve				
	Lever Shaft	6025 857	6025 857	6025 857	6025 857
21-139-50	LEVER, Throttle Valve	2466 854	2466 854	2466 854	2466 854
21-139-63	PLUG, Regulator Valve				
	Throttle Pressure	1942 245	1942 245	1942 245	1942 245
	Regulator Valve Line				
	Pressure	1942 218	1942 218	1942 218	1942 218
	Throttle Pressure	2892 943	———	———	———
21-139-64	SLEEVE, Regulator Valve				
	Line Pressure Plug	1942 213	1942 213	1942 213	1942 213
	Shuttle Valve, Plastic	3410 312	3410 312	3410 312	3410 312
21-139-67	VALVE PACKAGE, Regulator	2240 685	2240 685	2240 685	2240 685
21-139-68	SPRING, Regulator Valve	2124 734	2124 734	2124 734	2124 734
	Pressure Relief	2892 846	2892 846	2892 846	2892 846
	Limit Valve	3515 251	———	———	———
	BALL, Pressure Relief 3/16"	147 483	147 483	147 483	147 483

CARLINES J - Challenger, B - Barracuda; V - Valiant, L - Dart; R - Belvedere - Satallite, W - Coronet - Charger; P - Plymouth, D - Dodge; C - Chrysler, Y - Imperial

AR Indicates use as required.

# Indicates parts not listed in any previous parts book.

Numerals in parentheses ( ) refer to notes.

★ Indicates change or addition.

Printed in U.S.A.
January 1972

AUTOMATIC TRANSMISSION

NOTE: All quantities are one (1) unless otherwise indicated in parenthesis.

CODE	TRANSMISSION	3515 806 A94-1	3515 815 A727	3515 816 A727	3515 817 A727
21-139-0	**TRANSMISSION VALVE BODY AND VALVES Cont'd.**				
21-139-71	RETAINER, Regulator Valve Spring	2204 975	2204 975	2204 975	2204 975
	Limit Valve Spring	2892 947	———	———	———
21-139-74	SCREW, Line Pressure Adjusting	2124 736	2124 736	2124 736	2124 736
	Throttle Pressure Adjusting	6023 343	6023 343	6023 343	6023 343
21-139-76	NUT, Throttle Pressure Adjusting Screw Lock	2892 353	2892 353	2892 353	2892 353
	Line Pressure Adjusting Screw	2124 737	2124 737	2124 737	2124 737
21-139-78	VALVE, Kickdown	2892 351	2892 351	2892 351	2892 351
	PLUG, Kickdown Detent	2892 352	2892 352	2892 352	2892 352
21-139-95	VALVE, Shuttle, 1 51/64" lgh.	1854 275	1854 275	1854 275	1854 275
	2 7 32" lgh.	2892 926	———	———	———
	PLUG, Shuttle Valve, 35/64" lgh.	1854 274	1854 274	1854 274	1854 274
	29/64" lgh.	2892 927	———	———	———
21-139-98	SNAP RING, Shuttle Valve	6025 857	6025 857	6025 857	6025 857
21-139-101	SPRING, Shuttle Valve, Primary	3515 047	3515 047	3515 047	3515 047
	Secondary	3515 048	3515 048	3515 048	3515 048
21-139-105	VALVE, 1-2 Shift	3410 881	3410 881	3410 881	3410 881
	1-2 Shift Control	3410 912	3410 912	3410 912	3410 912
	2-3 Shift	3515 132	3515 132	3515 132	3515 132
	PLUG, 1-2 Shift Valve, w/o Lip on Center of Shaft	3410 826	3410 826	3410 826	3410 826
	w/Lip on Center of Shaft	≠ 3515 948	———	———	———
	2-3 Shift	2892 990	2892 990	2892 990	2892 990
21-139-108	SPRING, 1-2 Shift Control Valve	3410 517	———	———	———
	1-2 Shift Control	———	3410 517	3410 517	3410 517
21-139-117	VALVE, Torque Conv. Control	2124 256	2124 256	2124 256	2124 256
21-139-118	SPRING, Torque Conv. Control Valve	2124 257	2124 257	2124 257	2124 257
21-139-135	COVER, Limit Valve	2892 944	2892 944	2892 944	2892 944
	Shuttle Valve	3410 889	3410 889	3410 889	3410 889
	Shift Valve Plug	3410 378	3410 378	3410 378	3410 378
	Shift Valve	2801 244	2801 244	2801 244	2801 244
	Regulator Valve	2205 034	2205 034	2205 034	2205 034
	SCREW, w/WASHER, Limit Valve Cover (3)	6029 272	6029 272	6029 272	6029 272
	Regulator Valve Cover (2)	6029 271	———	———	———
	Shift Valve Cover (5)	6029 271	———	———	———
21-139-140	PLATE, Valve Body	3410 512	3515 045	3410 934	3410 934
	SCREW, w/WASHER, Valve Body Plate to Transfer Plate (2)	6029 271	6029 271	6029 271	6029 271
21-139-145	BALL, Valve Body Check Valve, Copper Plated, Large, 11/16"	≠ 3515 398	———	———	———
21-139-147	PLATE, Transfer	3410 435	3410 435	3410 381	3410 381
	SCREW, w/WASHER, Plate to Valve Body (14)	———	6027 391	6027 391	6027 391

CARLINES J - Challenger, B - Barracuda; V - Valiant, L - Dart; R - Belvedere - Satallite, W - Coronet - Charger; P - Plymouth, D - Dodge; C - Chrysler, Y - Imperial

AR Indicates use as required.

≠ Indicates parts not listed in any previous parts book.

Numerals in parentheses ( ) refer to notes.

★ Indicates change or addition.

Printed in U.S.A.
January 1972

AUTOMATIC TRANSMISSION

NOTE: All quantities are one (1) unless otherwise indicated in parenthesis.

CODE	TRANSMISSION	3515 806 A94-1	3515 815 A727	3515 816 A727	3515 817 A727		
21-139-0	**TRANSMISSION VALVE BODY AND VALVES Cont'd.**						
21-139-154	SUPPORT, Transfer Plate	3410 380	3410 380	3410 380	3410 380		
	SCREW, w/WASHER (2)	6029 271	———	———	———		

NOTE: All quantities are one (1) unless otherwise indicated in parenthesis

CODE	TRANSMISSION	3515 804 A94-1	3515 805 A94-1	3515 841 A727	3515 842 A727	3515 843 A727	3515 844 A727
21-01-0	**TRANSMISSION SET OR PACKAGES**						
21-01-3	SEAL and GASKET PACKAGE	= 3621 459	= 3621 459	3420 093	3420 093	3420 093	3420 093
	Complete	———	———	= 3621 460	= 3621 460	= 3621 460	= 3621 460
21-03-0	**TRANSMISSION CASE**						
21-03-1	CASE	3410 281	3410 281	3410 468	3410 469	3410 469	3410 469
	SCREW, w/WASHER, Cover 1/4"-20 x 1/2" (AR)	6023 092	6023 092	6023 092	6023 092	6023 092	6023 092
21-04-0	**TRANSMISSION CASE EXTENSION**						
21-04-1	EXTENSION	2466 956	2466 956	2466 969	2466 969	2466 969	2466 969
	SCREW, w/WASHER (6)	6023 514	6023 514	6023 514	6023 514	6023 514	6023 514
21-04-2	GASKET	2466 954	2466 954	2466 954	2466 954	2466 954	2466 954
	Output Shaft Brg. Inspection Cover	2801 398	2801 398	2801 398	2801 398	2801 398	2801 398
21-04-8	COVER, Output Shaft Brg. Inspection	2466 957	2466 957	2466 957	2466 957	2466 957	2466 957
	SCREW 1/4"-20 x 5/8" (2)	6026 884	6026 884	6026 884	6026 884	6026 884	6026 884
21-04-11	BUSHING	2801 726	2801 726	2801 724	2801 724	2801 724	2801 724
21-05-0	**TRANSMISSION OUTPUT SHAFT**						
21-05-1	SHAFT	3410 949	3410 949	2801 314	2801 314	2801 314	2801 314
21-05-2	BEARING	3410 465	3410 465	2466 224	2466 224	2466 224	2466 224
21-05-8	SNAP RING, Brg., Outer	2400 185	2400 185	2400 320	2400 320	2400 320	2400 320
	Brg. (2)	———	———	6025 570	6025 570	6025 570	6025 570
		6028 901	6028 901	———	———	———	———
21-05-12	SEAL, Yoke, 1 9/16" Igh., w/One Lip, Rubber and Metal	2400 163	2400 163	———	———	———	———
	1 61/64" Igh., 2 1/2" O.D.	———	———	2400 300	2400 300	2400 300	2400 300
21-05-19	SNAP RING, Output Shaft, .040" thk., Red (AR)	6026 289	6026 289	———	———	———	———
	.048" thk., Orange (AR)	6026 290	6026 290	———	———	———	———
	.059" thk., Yellow (AR)	6026 291	6026 291	———	———	———	———
	.048" thk. (AR)	———	———	6022 816	6022 816	6022 816	6022 816
	.055" thk. (AR)	———	———	6024 311	6024 311	6024 311	6024 311
	.062" thk. (AR)	———	———	6024 312	6024 312	6024 312	6024 312
21-05-25	SUPPORT	2466 881	2466 881	2466 882	2466 882	2466 882	2466 882
21-05-35	WASHER, Output Shaft Thrust, Natural, .052" thk. (AR)	2538 669	2538 669	———	———	———	———
	.068" thk. Red (AR)	2538 670	2538 670	———	———	———	———
	.083" thk. Black (AR)	2538 671	2538 671	———	———	———	———
	.062" thk.	———	———	2400 843	2400 843	2400 843	2400 843

CARLINES J - Challenger, B - Barracuda, V - Valiant, L - Dart, R - Belvedere - Satallite, W - Coronet - Charger, P - Plymouth, D - Dodge, C - Chrysler, Y - Imperial

AR Indicates use as required.

Numerals in parentheses ( ) refer to notes.

Printed in U.S.A.

# Indicates parts not listed in any previous parts book.

★ Indicates change or addition.

January 1972

AUTOMATIC TRANSMISSION

NOTE: All quantities are (1) unless otherwise indicated in parenthesis

CODE	TRANSMISSION	3515 804 A94-1	3515 805 A94-1	3515 841 A727	3515 842 A727	3515 843 A727	3515 844 A727
21-117-0	**TRANSMISSION OIL FILTER**						
	NOTE: See Code 5-53-3 for Tubes						
21-117-1	FILTER or STRAINER	3410 253	3410 253	3410 253	3410 253	3410 253	3410 253
	SCREW, w/WASHER (3)	6026 390	6026 390	6026 390	6026 390	6026 390	6026 390
21-118-0	**TRANSMISSION OIL PUMP**						
21-118-6	ROTOR PACKAGE, Frt. Oil Pump	2808 685	2808 685	2808 675	2808 675	2808 675	2808 675
21-118-40	HOUSING, w/BUSHING, Frt. Pump	2538 206	2538 206	———	———	———	———
	HOUSING, w/BUSHING and Plug, Frt. Pump	———	———	3410 965	3410 965	3410 965	3410 965
	SCREW, w/WASHER (6)	6023 943	6023 943	———	———	———	———
	(7)	———	———	6023 943	6023 943	6023 943	6023 943
21-118-45	SEAL, Frt. Pump Hsg., 8 17/64" O.D.	2204 709	2204 709	———	———	———	———
	10" O.D.	———	———	1942 021	1942 021	1942 021	1942 021
21-118-47	BUSHING, Frt. Pump Hsg.	2466 796	2466 796	2466 324	2466 324	2466 324	2466 324
21-118-54	GASKET, Frt. Pump Hsg.	———	———	2124 846	2124 846	2124 846	2124 846
21-118-57	SHIELD, Frt. Pump Hsg.	———	———	———	———	———	———
	Vent	———	———	2204 993	2204 993	2204 993	2204 993
	w/Plug	———	———	2892 679	2892 679	2892 679	2892 679
	BAFFLE, w/NAIL, Frt. Pump Hsg.	———	———	3420 087	3420 087	3420 087	3420 087
21-118-58	PLUG, Vent Shield	———	———	2892 553	2892 553	2892 553	2892 553
21-119-0	**TRANSMISSION OIL PAN**						
21-119-3	PAN, Oil	2464 413	2464 413	———	———	———	———
	w/PLUG	———	———	2464 419	2464 419	2464 419	2464 419
	SCREW, w/WASHER (14)	6023 355	6023 355	6023 355	6023 355	6023 355	6023 355
21-119-5	GASKET	2205 299	2205 299	2464 324	2464 324	2464 324	2464 324
21-119-11	PLUG, Drain	———	———	———	2125 890	2125 890	———
21-119-12	GASKET, Drain Plug	———	———	———	2268 513	2268 513	———
21-129-0	**TRANSMISSION INPUT SHAFT AND TORQUE CONVERTER REACTION SHAFT**						
21-129-5	SHAFT, Input	2538 407	2538 407	2801 053	2801 053	2801 053	2801 053
	SNAP RING	6022 859	6022 859	———	———	———	———
21-129-6	BUSHING, Input Shaft	———	———	2205 242	2205 242	2205 242	2205 242
21-129-7	RING, Input Shaft Seal	1941 831	1941 831	———	———	———	———
	(2)	———	———	2801 054	2801 054	2801 054	2801 054
21-129-10	SHAFT, w/SUPPORT, Reaction	2538 409	2538 409	3410 899	3410 899	3410 899	3410 899
21-129-11	BAFFLE, Vent	———	———	3420 087	3420 087	3420 087	3420 087
21-129-13	RING, Reaction Shaft Support Seal (2)	1942 389	1942 389	3515 321	3515 321	3515 321	3515 321
21-129-23	BUSHING, Reaction Shaft	2801 728	2801 728	2801 348	2801 348	2801 348	2801 348
21-129-24	GASKET, Reaction Shaft Support, 8 15/64" O.D.	1942 390	1942 390	———	———	———	———
21-133-0	**TRANSMISSION CLUTCH**						
21-133-7	RETAINER, w/BUSHING, Frt. Clutch	3410 919	3410 920	3515 314	3515 314	3515 314	3515 314
	Rr. Clutch	2892 441	2892 441	2466 801	2466 801	2466 801	2466 801

CARLINES J - Challenger, B - Barracuda, V - Valiant, L - Dart, R - Belvedere - Satallite, W - Coronet - Charger, P - Plymouth, D - Dodge, C - Chrysler, Y - Imperial

AR Indicates use as required.

Numerals in parentheses ( ) refer to notes.

≠ Indicates parts not listed in any previous parts book.

★ Indicates change or addition.

Printed in U.S.A. January 1972

AUTOMATIC TRANSMISSION

NOTE: All quantities are (1) unless otherwise indicated in parenthesis

CODE	TRANSMISSION	3515 804 A94-1	3515 805 A94-1	3515 841 A727	3515 842 A727	3515 843 A727	3515 844 A727
21-133-0	**TRANSMISSION CLUTCH Cont'd.**						
21-133-7	RETAINER Cont'd.						
	Rr. Clutch Piston	———	———	3410 814	3410 814	3410 814	3410 814
	BALL, Check Valve, 3/16"	147 483	147 483	———	———	———	———
21-133-10	BUSHING, Frt. Clutch Retainer	2801 727	2801 727	3515 315	3515 315	3515 315	3515 315
21-133-15	PISTON, Frt., Clutch	2892 420	2892 420	2464 651	2464 651	2464 651	2464 651
	Rr.	2892 554	2892 554	2204 645	2204 645	2204 645	2204 645
	BALL, Clutch Check Valve, Rr.	147 483	147 483	147 483	147 483	147 483	147 483
21-133-17	SEAL, Frt. Clutch Piston, Inner	1942 396	1942 396	3410 226	3410 226	3410 226	3410 226
	Outer	1942 397	1942 397	3410 225	3410 225	3410 225	3410 225
	Rr., Inner	2538 510	2538 510	1942 054	1942 054	1942 054	1942 054
	Outer	2538 695	2538 695	2124 835	2124 835	2124 835	2124 835
	Rr. Clutch Retainer Ring	1323 593	1323 593	———	———	———	———
21-133-20	SPRING, Frt. Clutch Piston	3410 898	2801 844	———	———	———	———
	(13)	———	———	2801 243	———	———	———
	(11)	———	———	———	2801 243	———	———
	(9)	———	———	———	———	2801 243	2801 243
	Rr.	1942 414	1942 414	1942 015	1942 015	1942 015	1942 015
21-133-22	RETAINER, Frt., Clutch Piston Spring	1942 399	1942 399	2801 949	2801 949	2801 949	2801 949
	BALL, Check Valve	147 483	147 483	147 483	147 483	147 483	147 483
21-133-25	SNAP RING, Rr. Clutch Retainer, .060" thk., 5 1/4" O.D. (AR)	1942 421	1942 421	———	———	———	———
	.076" thk. (AR)	1942 423	1942 423	———	———	———	———
	.098" thk. (AR)	2538 617	2538 617	———	———	———	———
	7" O.D. .060" thk. (AR)	———	———	1942 063	1942 063	1942 063	1942 063
	.074" thk. (AR)	———	———	1942 064	1942 064	1942 064	1942 064
	.088" thk. (AR)	———	———	1942 065	1942 065	1942 065	1942 065
	.106" thk. (AR)	———	———	2466 811	2466 811	2466 811	2466 811
	Rr. Clutch Piston Retainer, .060" thk., 1 31/64" O.D.	———	———	2124 872	2124 872	2124 872	2124 872
21-133-31	SPRING, Rr. Clutch Wave	2466 283	2466 283	2466 806	2466 806	2466 806	2466 806
21-133-36	DISC, Frt. Clutch (3)	2205 203	———	2801 167	2801 167	2801 167	2801 167
	(4)	———	2205 203	———	———	———	———
	Rr. (3)	2892 551	2892 551	———	———	———	———
	(4)	———	———	2801 992	2801 992	2801 992	2801 992
21-133-38	PLATE, Frt. and Rr. Clutch (6)	———	———	2124 826	2124 826	2124 826	2124 826
	Frt. (3)	1942 403	———	———	———	———	———
	(4)	———	1942 403	———	———	———	———
	Rr. (2)	1942 403	1942 403	———	———	———	———
21-133-39	PLATE, Frt. Clutch Pressure	2801 969	2801 969	2801 961	2801 961	2801 961	2801 961
	Rr. Clutch Pressure, Frt.	2466 281	2466 281	2466 803	2466 803	2466 803	2466 803
	Rr., Rr.	2801 969	2801 969	2801 961	2801 961	2801 961	2801 961
21-133-40	GEAR, w/BUSHING, Sun	1942 434	1942 434	2801 311	2801 311	2801 311	2801 311
21-133-42	SHELL, Sun Gear Driving	1942 438	1942 438	2400 662	2400 662	2400 662	2400 662
21-133-43	SNAP RING, Frt. Clutch, Inner, 2 7/16" O.D.	1942 400	1942 400	———	———	———	———
	Outer	3410 571	3410 571	———	———	———	———
	Frt. Clutch, .050" thk. (AR)	———	———	3410 570	3410 570	3410 570	3410 570

CARLINES J - Challenger, B - Barracuda; V - Valiant, L - Dart; R - Belvedere - Satallite, W - Coronet - Charger; P - Plymouth, D - Dodge; C - Chrysler, Y - Imperial

AR Indicates use as required.

# Indicates parts not listed in any previous parts book.

Numerals in parentheses ( ) refer to notes.

★ Indicates change or addition.

Printed in U.S.A.
January 1972

AUTOMATIC TRANSMISSION

NOTE: All quantities are (1) unless otherwise indicated in parenthesis

CODE	TRANSMISSION	3515 804 A904	3515 805 A904	3515 841 A727	3515 842 A727	3515 843 A727	3515 844 A727	———
21-133-0	**TRANSMISSION CLUTCH Cont'd.**							
21-133-43	SNAP RING Cont'd. Frt. Clutch, Inner, .060" thk., 3" I.D.	———	———	2124 824	2124 824	2124 824	2124 824	
21-133-46	RING, Sun Gear Driving Shell Lock (2)	1942 439	1942 439	1736 521	1736 521	1736 521	1736 521	
21-133-47	PLATE, Sun Gear Driving Shell Thrust, w/28 Tangs (2)	3410 540	3410 540	———	———	———	———	
	w/4 Inside Tangs	———	———	1942 080	1942 080	1942 080	1942 080	
21-133-48	WASHER, Sun Gear Driving Shell Thrust, w/3 Oil Grooves (2)	2801 356	2801 356	———	———	———	———	
	w/3 Outside Tabs	———	———	1942 081	1942 081	1942 081	1942 081	
21-133-62	SPACER, Rr. Clutch Piston Spring	2801 162	2801 162	———	———	———	———	
	Steel	———	———	2801 161	2801 161	2801 161	2801 161	
	Plastic	———	———	= 3515 077	= 3515 077	= 3515 077	= 3515 077	
21-133-65	WASHER, Frt. Clutch Thrust, 5 7/8" O.D. (2)	3410 572	3410 572	———	———	———	———	
	Frt. Clutch Thrust, Frt., Green, .061" thk., 3 21/64" O.D. (AR)	———	———	2204 622	2204 622	2204 622	2204 622	
	Red, .084" thk. (AR)	———	———	2204 623	2204 623	2204 623	2204 623	
	Yellow, .102" thk. (AR)	———	———	2400 284	2400 284	2400 284	2400 284	
	Frt. Clutch Thrust, Rr.	———	———	2204 622	2204 622	2204 622	2204 622	
21-134-0	**TRANSMISSION FRONT AND REAR PLANET PINION CARRIER AND COMPONENTS**							
21-134-5	CARRIER, w/PINION and WASHER, Frt.	2801 018	2801 018	2466 537	2466 537	2801 171	2466 537	
	Rr.	2801 180	2801 180	2466 539	2466 539	2466 539	2466 539	
21-134-8	PINION, Frt. Planet (3)	2466 759	2466 759	2400 667	2400 667	———	2400 667	
	(4)	———	———	———	———	2400 667	———	
	Rr. (3)	———	———	2400 667	2400 667	2400 667	2400 667	
21-134-9	SHAFT, Frt. (3)	2801 363	2801 363	2464 178	2464 178	———	2464 178	
	(4)	———	———	———	———	2464 178	———	
	Rr. (3)	2801 363	2801 363	2464 178	2464 178	2464 178	2464 178	
	Pin (AR)	6024 666	6024 666	6024 666	6024 666	6024 666	6024 666	
21-134-10	WASHER, Frt. and Rr. (12)	2466 758	2466 758	———	———	———	———	
	Frt. (6)	———	———	2801 315	2801 315	———	2801 315	
	(8)	———	———	———	———	2801 315	———	
	Rr. (6)	———	———	2801 315	2801 315	2801 315	2801 315	
21-134-11	ROLLER, Frt. and Rr. (114)	2466 756	2466 756	———	———	———	———	
	Frt. (69)	———	———	2204 647	2204 647	———	2204 647	
	(92)	———	———	———	———	2204 647	———	
	Rr. (69)	———	———	2204 647	2204 647	2204 647	2204 647	
21-134-12	RING, Frt. and Rr. Planet Pinion Roller Thrust 39/64" O.D. (12)	2466 757	2466 757	———	———	———	———	
	Frt. (6)	———	———	2204 649	2204 649	———	2204 649	
	(8)	———	———	———	———	2204 649	———	
	Rr. (6)	———	———	2204 649	2204 649	2204 649	2204 649	
21-134-30	WASHER, Frt. Carrier Thrust	———	———	1942 081	1942 081	2801 060	1942 081	
	Rr.	———	———	1942 081	1942 081	1942 081	1942 081	
21-134-36	SUPPORT, Frt. Annulus Gear	2538 574	2538 574	———	———	———	———	
	Rr.	1942 450	1942 450	———	———	———	———	

CARLINES J - Challenger, B - Barracuda; V - Valiant, L - Dart; R - Belvedere - Satallite, W - Coronet - Charger; P - Plymouth, D - Dodge; C - Chrysler, Y - Imperial

AR Indicates use as required.

= Indicates parts not listed in any previous parts book.

Numerals in parentheses ( ) refer to notes.

★ Indicates change or addition.

Printed in U.S.A.
January 1972

AUTOMATIC TRANSMISSION

NOTE: All quantities are (1) unless otherwise indicated in parenthesis

CODE	TRANSMISSION	3515 804 A94-1	3515 805 A94-1	3515 841 A727	3515 842 A727	3515 843 A727	3515 844 A727
21-134-0	**TRANSMISSION FRONT AND REAR PLANET PINION CARRIER AND COMPONENTS Cont'd.**						
21-134-36	SUPPORT Cont'd.						
	SNAP RING, Frt.	6026 278	6026 278	———	———	———	———
21-134-38	GEAR, Frt. and Rr.						
	Annulus (2)	1942 443	1942 443	———	———	———	———
	Frt.	———	———	2892 656	2892 656	2892 656	2892 656
	Rr.	———	———	2538 185	2538 185	2538 185	2538 185
21-134-40	SNAP RING, Frt. and Rr. Annulus Gear (2)	1942 444	1942 444	———	———	———	———
21-134-45	WASHER, Frt. Annulus Gear Support Thrust, w/6 Oil Grooves and 1 Outside Tab	2538 696	2538 696	———	———	———	———
	PLATE, Rr. Annulus Gear Thrust, w/31 Inside Teeth, 3 23/64" O.D.	———	———	2400 580	2400 580	2400 580	2400 580
	28T., 2 53/64" O.D.	2892 478	2892 478	———	———	———	———
21-136-0	**TRANSMISSION BANDS**						
21-136-5	BAND, Kickdown	2204 792	2204 792	2124 342	2124 342	2124 342	2124 342
21-136-15	STRUT, Kickdown Band	3415 084	3515 084	2124 848	2124 848	2124 848	2124 848
	ANCHOR, Kickdown Band	———	———	1942 120	1942 120	1942 120	1942 120
21-136-17	SCREW, Kickdown Band Adjusting	1942 477	1942 477	2400 389	2400 389	2400 389	2400 389
	NUT, Lock 1/2"-20	124 934	124 934	124 934	124 934	124 934	124 934
21-136-20	LEVER, Kickdown Band	2125 067	2124 579	2204 952	2204 952	2124 666	2204 952
21-136-23	SHAFT, Kickdown Band Lever	1942 132	1942 132	1942 132	1942 132	1942 132	1942 132
21-136-30	BAND, Reverse	1942 487	1942 487	1942 133	1942 133	1942 133	1942 133
21-136-41	STRUT, Reverse Band	1942 497	1942 497	2204 823	2204 823	2204 823	2204 823
21-136-44	LINK, w/ANCHOR, Reverse Band	2464 439	2464 439	2204 820	2204 820	2204 820	2204 820
21-136-47	LEVER, w/STEM, Reverse Band	1942 491	1942 491	1942 137	1942 137	1942 137	1942 137
	Reverse Band, Short	2464 851	2464 851	2892 233	2892 233	2892 233	2892 233
21-136-49	SHAFT, Reverse Band Lever	3410 102	3410 102	2124 857	2124 857	2124 857	2124 857
21-136-50	SEAL, Reverse Band Reaction Shaft	1556 385	1556 385	———	———	———	———
21-136-52	SCREW, Reverse Band Adjusting	1942 543	1942 543	1942 141	1942 141	1942 141	1942 141
	NUT	120 369	120 369	271 506	271 506	271 506	271 506
21-136-55	SEAL, Reverse Band Lever Shaft	1556 385	1556 385	1672 358	1672 358	1672 358	1672 358
21-136-65	DRUM, Reverse (See Note 1)	2892 728	2892 728	= 3515 451	= 3515 451	= 3515 451	= 3515 451
21-136-228	CAM and RETAINER PACKAGE, "O" Running Clutch	2808 637	2808 637	———	———	———	———
21-136-229	SCREW, w/WASHER, "O" Running Clutch Cam (7)	1559 489	1559 489	———	———	———	———
21-136-231	CAM, "O" Running Clutch	———	———	1942 095	1942 095	1942 095	1942 095
21-136-232	RACE, ROLLER and SPRING, PACKAGE, "O" Running Clutch 24T	3420 023	3420 023	———	———	———	———
	26T	———	———	3420 100	3420 100	3420 100	3420 100
21-136-233	RETAINER, "O" Running Clutch Spring	———	———	2801 426	2801 426	2801 426	2801 426

AUTOMATIC TRANSMISSION

NOTE: All quantities are (1) unless otherwise indicated in parenthesis

CODE	TRANSMISSION	3515 804 A94-1	3515 805 A94-1	3515 841 A727	3515 842 A727	3515 843 A727	3515 844 A727
21-136-0	**TRANSMISSION BANDS Cont'd.**						
21-136-235	ROLLER, "O" Running Clutch						
	(10)	2464 888	2464 888	———	———	———	———
	(12)	———	———	670 776	670 776	670 776	670 776
21-136-236	SPRING, "O" Running Clutch						
	Roller (10)	2464 446	2464 446	———	———	———	———
	(12)	———	———	1942 187	1942 187	1942 187	1942 187
	NOTE 1: Also specify 1 of 3420 100 Race Package						
21-137-0	**TRANSMISSION SERVOS**						
21-137-5	PISTON, Kickdown Servo	1942 478	1942 478	3410 440	2124 850	3410 440	3410 440
	Inner, w/ROD and SEAL	———	———	3410 445	3410 445	3410 445	3410 445
	SEAL, Inner	———	———	6028 864	6028 864	6028 864	6028 864
	SNAP RING, Inner	———	———	6024 336	6024 336	6024 336	6024 336
21-137-6	RETAINER, Kickdown Piston, Inner	———	———	3410 437	3410 437	3410 437	3410 437
21-137-8	RING, Kickdown Servo						
	Piston Seal, Small	1672 287	1672 287	2124 851	2124 851	2124 851	2124 851
	Large	1636 470	1636 470	1942 123	1942 123	1942 123	1942 123
	Kickdown Servo Guide	3410 372	3410 372	1942 123	1942 123	1942 123	1942 123
21-137-11	ROD, Kickdown Servo						
	Piston	1942 482	1942 482	———	———	———	———
	Inner	———	———	3410 443	3410 443	3410 443	3410 443
21-137-13	GUIDE, Kickdown Servo	1942 485	1942 485	3410 441	2124 856	3410 441	3410 441
21-137-19	SNAP RING, Kickdown Servo	1942 486	1942 486	———	———	———	———
	Kickdown Servo Guide	———	———	1942 130	1942 130	1942 130	1942 130
21-137-22	SPRING, Kickdown Servo						
	Piston	2801 316	2801 316	———	———	———	———
	Inner	3515 112	———	3410 444	3515 112	3410 444	3410 444
	Outer	———	———	3410 518	———	3410 518	3410 518
21-137-35	PISTON, Reverse Servo	2801 271	2801 271	2801 281	2801 281	2801 281	2801 281
21-137-41	SPRING, Reverse Servo Cushion	2801 273	2801 273	2801 273	2801 273	2801 273	2801 273
21-137-47	PLUG, Reverse Servo Piston	2801 272	2801 272	2801 272	2801 272	2801 272	2801 272
	RING, .435" I.D.	6027 153	6027 153	6027 153	6027 153	6027 153	6027 153
21-137-50	SEAL, Reverse Servo Piston, Rubber	2464 462	2464 462	2464 481	2464 481	2464 481	2464 481
21-137-53	SPRING, Reverse Servo Piston	2801 274	2801 274	2801 241	2801 241	2801 241	2801 241
21-137-56	RETAINER, Reverse Servo Piston Spring	2464 463	2464 463	———	———	———	———
	Reverse Servo Piston	———	———	1942 150	1942 150	1942 150	1942 150
21-137-59	SNAP RING, Reverse Servo Piston Spring Retainer	2464 464	2464 464	1942 130	1942 130	1942 130	1942 130
21-137-200	PISTON, Accumulator	3410 908	3410 908	3410 908	3410 908	3410 908	3410 908
21-137-202	RING, Accumulator Piston						
	Seal, Small	1941 831	1941 831	1941 831	1941 831	1941 831	1941 831
	Large	2124 255	2124 255	2124 255	2124 255	2124 255	2124 255
21-137-205	SPRING, Accumulator	2125 109	2125 109	3515 079	3515 079	3515 079	3515 079
21-138-0	**TRANSMISSION GOVERNOR**						
21-138-2	REPAIR PACKAGE, Governor	= 3621 455	= 3621 454	3621 450	3621 451	3621 452	3621 451
21-138-7	SNAP RING, Governor Body	6027 271	6027 271	6022 817	6022 817	6022 817	6022 817
21-138-10	SUPPORT, Governor	2538 635	2538 635	2538 634	2538 634	2538 634	2538 634
21-138-13	WEIGHT, Governor, Outer, 29/32" Lgh.	1636 461	1636 461	1636 461	1636 461	1636 461	1636 461
	29/32" Lgh., Gray to Black Finish	= 3515 491	———	= 3515 491	———	———	———
	Inner, 51/64" Lgh.	3515 098	3515 098	3515 098	3515 098	3515 098	3515 098

CARLINES J - Challenger, B - Barracuda; V - Valiant, L - Dart; R - Belvedere - Satallite, W - Coronet - Charger; P - Plymouth, D - Dodge; C - Chrysler, Y - Imperial

AR Indicates use as required.

# Indicates parts not listed in any previous parts book.

Numerals in parentheses ( ) refer to notes.

★ Indicates change or addition.

Printed in U.S.A.
January 1972

AUTOMATIC TRANSMISSION

NOTE: All quantities are (1) unless otherwise indicated in parenthesis

CODE	TRANSMISSION	3515 804 A94-1	3515 805 A94-1	3515 841 A727	3515 842 A727	3515 843 A727	3515 844 A727
21-138-0	**TRANSMISSION GOVERNOR Cont'd.**						
21-138-13	WEIGHT Cont'd.						
	Inner, 13/16" Lgh.	= 3515 482	= 3515 478	= 3515 482	= 3515 478	= 3515 478	= 3515 478
21-138-15	SPRING, Governor Weight	3515 110	3515 085	3515 110	3515 085	3515 110	3515 085
21-138-19	SNAP RING, Governor						
	Weight, Outer	1636 465	1636 465	1636 465	1636 465	1636 465	1636 465
	Inner	1636 464	1636 464	1636 464	1636 464	1636 464	1636 464
21-138-21	LOCK, Governor Body						
	Bolt (2)	2125 024	2125 024	2125 024	2124 024	2125 024	2125 024
21-138-23	VALVE, Governor, .844"-.854"						
	Lgh.	2124 663	2124 663	2124 663	2124 663	2124 663	2124 663
	.859" Lgh.	= 3515 479	= 3515 479	= 3515 479	= 3515 479	= 3515 479	= 3515 479
21-138-26	SHAFT, Governor Valve	1556 082	1556 082	1556 082	1556 082	1556 082	1556 082
21-138-29	SNAP RING, Governor Valve						
	Shaft (2)	1638 461	1638 461	1638 461	1638 461	1638 461	1638 461
21-138-38	RING, Governor Support						
	Seal, Frt. and Rr. (2)	1942 109	1942 109	1942 109	1942 109	1942 109	1942 109
21-139-0	**TRANSMISSION VALVE BODY AND VALVES**						
21-139-4	BODY, w/Transfer PLATE and						
	Valve	3410 508	3410 508	3515 106	3515 106	3410 478	3515 036
	BALL, Check Valve,						
	Small (5)	104 918	104 918	104 918	104 918	104 918	104 918
	Large	147 488	147 488	147 488	147 488	147 488	147 488
21-139-9	VALVE, Manual	2801 259	2801 259	2801 259	2801 259	2801 259	2801 259
21-139-11	VALVE, Limit	———	———	———	———	3410 560	3410 560
21-139-12	LEVER, w/INSULATOR,						
	Manual Valve	3410 484	3410 484	3410 484	3410 484	3410 484	3410 484
21-139-16	SEAL, Manual Valve						
	Shaft	2466 842	2466 842	2466 842	2466 842	2466 842	2466 842
21-139-19	BODY, Limit Valve	———	———	———	———	3410 564	3410 564
21-139-24	SPRING, Manual Valve						
	Lever Detent	2466 615	2466 615	2466 615	2466 615	2466 615	2466 615
	BALL 11/32"	147 488	147 488	147 488	147 488	147 488	147 488
21-139-30	VALVE, Throttle	2892 349	2892 349	2892 349	2892 349	2892 349	2892 349
21-139-33	SPRING, Throttle Valve	2892 350	2892 350	2892 350	2892 350	2892 350	2892 350
21-139-34	PIN, Manual Valve						
	Lever Spring	2466 756	2466 756	2466 756	2466 756	2466 756	2466 756
21-139-46	WASHER, Throttle Valve						
	Lever Shaft	2538 062	2538 062	2538 062	2538 062	2538 062	2538 062
21-139-47	SEAL, Throttle Lever						
	Shaft, 11/16" O.D.	2466 548	2466 548	2466 548	2466 548	2466 548	2466 548
21-139-49	E-RING, Throttle Valve						
	Lever Shaft	6025 857	6025 857	6025 857	6025 857	6025 857	6025 857
21-139-50	LEVER, Throttle Valve	2466 854	2466 854	2466 854	2466 854	2466 854	2466 854
21-139-60	COVER, Throttle Pressure	2801 198	2801 198	———	———	———	———
	SCREW, w/WASHER,						
	Long	9418 651	9418 651	———	———	———	———
	Short (2)	6029 271	6029 271	———	———	———	———
21-139-63	PLUG, Throttle Pressure	2801 197	2801 197	— ——	———	2892 943	2892 943
	Regulator Valve Throttle						
	Pressure	———	———	1942 245	1942 245	1942 245	1942 245
	Regulator Valve Line						
	Pressure	1942 218	1942 218	1942 218	1942 218	1942 218	1942 218
21-139-64	SLEEVE, Regulator Valve						
	Line Pressure Plug	1942 213	1942 213	1942 213	1942 213	1942 213	1942 213
	Shuttle Valve	———	———	3410 312	3410 312	3410 312	3410 312
21-139-67	VALVE PACKAGE, Regulator	2240 685	2240 685	2240 685	2240 685	2240 685	2240 685

CARLINES					
	J - Challenger B - Barracuda	V - Valiant L - Dart	R - Belvedere - Satallite W - Coronet - Charger	P - Plymouth D - Dodge	C - Chrysler Y - Imperial

AR Indicates use as required.

Numerals in parentheses ( ) refer to notes.

Printed in U.S.A.

# Indicates parts not listed in any previous parts book.

★ Indicates change or addition.

January 1972

AUTOMATIC TRANSMISSION

NOTE: All quantities are (1) unless otherwise indicated in parenthesis

CODE	TRANSMISSION	3515 804 A94-1	3515 805 A94-1	3515 841 A727	3515 842 A727	3515 843 A727	3515 844 A727
21-139-0	**TRANSMISSION VALVE BODY AND VALVES Cont'd.**						
21-139-68	SPRING, Regulator Valve	2124 734	2124 734	2124 734	2124 734	2124 734	2124 734
	Pressure Relief	2892 846	2892 846	2892 846	2892 846	2892 846	2892 846
	Limit Valve	———	———	———	———	3515 251	3515 251
	BALL, Pressure Relief 3/8"	147 500	147 500	147 500	147 500	147 500	147 500
21-139-71	RETAINER, Regulator Valve Spring	2204 975	2204 975	2204 975	2204 975	2204 975	2204 975
	Limit Valve Spring	———	———	———	———	2892 947	2892 947
	SCREW, w/WASHER, Regulator Valve Spring (3)	6029 271	6029 271	6029 271	6029 271	6029 271	6129 271
21-139-74	SCREW, Line Pressure Adjusting	2124 736	2124 736	2124 736	2124 736	2124 736	2124 736
	Throttle Pressure Adjusting	6023 343	6023 343	6023 343	6023 343	6023 343	6023 343
21-139-76	NUT, Throttle Pressure Adjusting Screw Lock	2892 353	2892 353	2892 353	2892 353	2892 353	2892 353
	Line Pressure Adjusting Screw	2124 737	2124 737	2124 737	2124 737	2124 737	2124 737
21-139-78	VALVE, Kickdown	2892 351	2892 351	2892 351	2892 351	2892 351	2892 351
	PLUG, Kickdown Detent	2892 352	2892 352	2892 352	2892 352	2892 352	2892 352
21-139-95	VALVE, Shuttle	1854 275	1854 275	2892 926	2892 926	2892 926	2892 926
	PLUG, Shuttle Valve	2892 927	2892 927	2892 927	2892 927	2892 927	2892 927
21-139-98	SNAP RING, Shuttle Valve	6025 857	6025 857	6025 857	6025 857	6025 857	6025 857
21-139-101	SPRING, Shuttle Valve	3515 202	3515 202	≠ 3515 502	≠ 3515 502	3515 047	3515 047
	Secondary	———	———	3515 048	3515 048	3515 048	3515 048
21-139-105	VALVE, 1-2 Shift Control	———	———	3410 912	3410 912	3410 912	3410 912
	VALVE, 1-2 Shift	3410 881	3410 881	3410 881	3410 881	3410 881	3410 881
	PLUG, 1-2 Shift Valve, w/o Lip on Center of Shaft	3410 826	3410 826	3410 826	3410 826	3410 826	3410 826
	w/Lip on Center of Shaft	≠ 3515 948	≠ 3515 948	≠ 3515 948	≠ 3515 948	≠ 3515 948	≠ 3515 948
	VALVE, 2-3 Shift	3515 132	3515 132	3515 132	3515 132	3515 132	3515 132
	PLUG, 2-3 Shift Valve	2892 990	2892 990	2892 990	2892 990	2892 990	2892 990
21-139-108	SPRING, 1-2 Shift Valve	2204 547	2204 547	2204 547	2204 547	2204 547	2204 547
	1-2 Shift Control Valve	———	———	3410 517	3410 517	3410 517	3410 517
	2-3 Shift Valve	1942 231	1942 231	1942 231	1942 231	1942 231	1942 231
21-139-117	VALVE, Torque Conv. Control	2124 256	2124 256	2124 256	2124 256	2124 256	2124 256
21-139-118	SPRING, Torque Conv. Control Valve	2124 257	2124 257	2124 257	2124 257	2124 257	2124 257
21-139-135	COVER, Regulator Valve	2205 034	2205 034	2205 034	2205 034	2205 034	2205 034
	Shift Valve Plug	3410 378	3410 378	3410 378	3410 378	3410 378	3410 378
	Shuttle Valve	3410 889	3410 889	3410 889	3410 889	3410 889	3410 889
	Limit Valve	———	———	———	———	2892 944	2892 944
	Shift and 1-2 Shift Control, Inside dia. of Small Hole .057"-.063"	———	———	≠ 3410 461	≠ 3410 461	———	———
	Inside dia. of Small Hole .087"-.093"	———	———	≠ 3515 480	≠ 3515 480	———	———
	SCREW, w/WASHER, Limit Valve Cover (3)	———	———	———	———	6029 272	6029 272
	Shift Valve Cover (3)	———	———	6029 271	6029 271	———	———
	(5)	6029 271	6029 271	———	———	———	———
	Shuttle Valve Cover (AR)	6029 271	6029 271	6029 271	6029 271	6029 271	6029 271

CARLINES J - Challenger, B - Barracuda; V - Valiant, L - Dart; R - Belvedere - Satallite, W - Coronet - Charger; P - Plymouth, D - Dodge; C - Chrysler, Y - Imperial

AR Indicates use as required.

≠ Indicates parts not listed in any previous parts book.

Numerals in parentheses ( ) refer to notes.

★ Indicates change or addition.

Printed in U.S.A.
January 1972

AUTOMATIC TRANSMISSION

NOTE: All quantities are (1) unless otherwise indicated in parenthesis

CODE	TRANSMISSION	3515 804 A94-1	3515 805 A94-1	3515 841 A727	3515 842 A727	3515 843 A727	3515 844 A727
21-139-0	**TRANSMISSION VALVE BODY AND VALVES Cont'd.**						
21-139-135	COVER Cont'd. Regulator Valve Cover (2)	6029 271	6029 271	6029 271	6029 271	6029 271	6029 271
21-139-140	PLATE, Valve Body	3515 008	3515 008	3515 045	3515 045	3410 934	3515 045
	SCREW, w/WASHER, Valve Body Plate to Transfer Plate (2)	6029 271	6029 271	6029 271	6029 271	6029 271	6029 271
21-139-145	BALL, Valve Body Check Valve, Dull Copper Plating, Large, 11/16"	= 3515 398	= 3515 398	———	———	———	———
21-139-147	PLATE, Transfer	2801 295	2801 295	3410 381	3410 381	3410 381	3410 435
	SCREW, w/WASHER, Plate to Valve Body (14)	6027 391	6027 391	6027 391	6027 391	6027 391	6027 391
21-139-154	SUPPORT, Transfer Plate	3410 380	3410 380	3410 380	3410 380	3410 380	3410 380
	Screw, w/WASHER (2)	6029 271	6029 271	6029 271	6029 271	6029 271	6029 271

NOTE: All quantities are one (1) unless otherwise indicated in parenthesis

CODE	TRANSMISSION	3515 845 A727	3515 846 A727	3515 847 A727	3515 848 A727	3515 849 A727	3515 850 A727
21-01-0	**TRANSMISSION SETS OR PACKAGES**						
21-01-3	SEAL and GASKET PACKAGE	3420 093	3420 093	3420 093	3420 093	3420 093	3420 093
	Complete	= 3621 460	= 3621 460	= 3621 460	= 3621 460	= 3621 460	= 3621 460
21-03-0	**TRANSMISSION CASE**						
21-03-1	CASE	3410 470	3410 470	3410 470	3410 470	3410 470	3410 470
	SCREW, w/WASHER, Cover 1/4"-20 x 1/2" (AR)	6023 092	6023 092	6023 092	6023 092	6023 092	6023 092
21-04-0	**TRANSMISSION CASE EXTENSION**						
21-04-1	EXTENSION	2466 969	2466 969	2466 969	2466 969	2466 969	2466 969
	SCREW, w/WASHER (6)	6023 514	6023 514	6023 514	6023 514	6023 514	6023 514
21-04-2	GASKET	2466 954	2466 954	2466 954	2466 954	2466 954	2466 954
	Output Shaft Brg. Inspection Cover	2801 398	2801 398	2801 398	2801 398	2801 398	2801 398
21-04-8	COVER, Output Shaft Brg. Inspection	2466 957	2466 957	2466 957	2466 957	2466 957	2466 957
	SCREW 1/4"-20 x 5/8" (2)	6026 884	6026 884	6026 884	6026 884	6026 884	6026 884
21-04-11	BUSHING	2801 724	2801 724	2801 724	2801 724	2801 724	2801 724
21-05-0	**TRANSMISSION OUTPUT SHAFT**						
21-05-1	SHAFT	2801 314	2801 314	2801 314	2892 655	2892 655	2892 655
21-05-2	BEARING	2466 224	2466 224	2466 224	2466 224	2466 224	2466 224
21-05-8	SNAP RING, Brg., Outer	2400 320	2400 320	2400 320	2400 320	2400 320	2400 320
	Brg. (2)	6025 570	6025 570	6025 570	6025 570	6025 570	6025 570
21-05-12	SEAL, Yoke, 1 61/64" lgh., 2 1/2" O.D.	2400 300	2400 300	2400 300	2400 300	2400 300	2400 300
21-05-19	SNAP RING, Output Shaft, .048" thk. (AR)	6022 816	6022 816	6022 816	6022 816	6022 816	6022 816
	.055" thk. (AR)	6024 311	6024 311	6024 311	6024 311	6024 311	6024 311
	.062" thk. (AR)	6024 312	6024 312	6024 312	6024 312	6024 312	6024 312
21-05-25	SUPPORT	2466 882	2466 882	2466 882	2466 882	2466 882	2466 882
21-05-35	WASHER, Output Shaft Thrust, .062" thk.	2400 843	2400 843	2400 843	2400 843	2801 568	2801 568

CARLINES				
J - Challenger	V - Valiant	R - Belvedere - Satallite	P - Plymouth	C - Chrysler
B - Barracuda	L - Dart	W - Coronet - Charger	D - Dodge	Y - Imperial

AR Indicates use as required.

Numerals in parentheses ( ) refer to notes.

Printed in U.S.A.

# Indicates parts not listed in any previous parts book.

★ Indicates change or addition.

January 1972

AUTOMATIC TRANSMISSION

NOTE: All quantities are one (1) unless otherwise indicated in parenthesis.

CODE	TRANSMISSION	3515 845 A727	3515 846 A727	3515 847 A727	3515 848 A727	3515 849 A727	3515 850 A727
21-117-0	**TRANSMISSION OIL FILTER**						
	NOTE: See Code 5-53-3 for Tubes						
21-117-1	FILTER or STRAINER	3410 253	3410 253	3410 253	3410 253	3410 253	3410 253
	SCREW, w/WASHER (3)	6026 390	6026 390	6026 390	6026 390	6026 390	6026 390
21-118-0	**TRANSMISSION OIL PUMP**						
21-118-6	ROTOR PACKAGE, Frt. Oil Pump	2808 675	2808 675	2808 675	2808 675	2808 675	2808 675
21-118-40	HOUSING, w/BUSHING and PLUG, Frt. Pump	3410 965	3410 965	3410 965	3410 965	3410 965	3410 965
	SCREW, w/WASHER (7)	6023 943	6023 943	6023 943	6023 943	6023 943	6023 943
21-118-45	SEAL, Frt. Pump Hsg., 10" O.D.	1942 021	1942 021	1942 021	1942 021	1942 021	1942 021
21-118-47	BUSHING, Frt. Pump Hsg.	2466 324	2466 324	2466 324	2466 324	2466 324	2466 324
21-118-54	GASKET, Frt. Pump Hsg.	2124 846	2124 846	2124 846	2124 846	2124 846	2124 846
21-118-57	SHIELD, Frt. Pump Hsg. Vent	2204 993	2204 993	2204 993	2204 993	2204 993	2204 993
	w/Plug	2892 679	2892 679	2892 679	2892 679	2892 679	2892 679
	BAFFLE, w/NAIL, Frt. Pump Hsg.	3420 087	3420 087	3420 087	3420 087	3420 087	3420 087
21-118-58	PLUG, Vent Shield	2892 553	2892 553	2892 553	2892 553	2892 553	2892 553
21-119-0	**TRANSMISSION OIL PAN**						
21-119-3	PAN, w/PLUG, Oil	2464 419	2464 419	2464 419	2464 419	2464 419	2464 419
	SCREW, w/WASHER (14)	6023 355	6023 355	6023 355	6023 355	6023 355	6023 355
21-119-5	GASKET	2464 324	2464 324	2464 324	2464 324	2464 324	2464 324
21-129-0	**TRANSMISSION INPUT SHAFT AND TORQUE CONVERTER REACTION SHAFT**						
21-129-5	SHAFT, Input	2801 053	2801 053	2801 053	2801 053	2801 053	2801 053
21-129-6	BUSHING, Input Shaft	2205 242	2205 242	2205 242	2205 242	2205 242	2205 242
21-129-7	RING, Input Shaft Seal (2)	2801 054	2801 054	2801 054	2801 054	2801 054	2801 054
21-129-10	SHAFT, w/SUPPORT, Reaction	3410 899	3410 899	3410 899	3410 899	3410 899	3410 899
21-129-11	BAFFLE, Vent	3420 087	3420 087	3420 087	3420 087	3420 087	3420 087
21-129-13	RING, Reaction Shaft Support Seal (2)	3515 321	3515 321	3515 321	3515 321	3515 321	3515 321
21-129-23	BUSHING, Reaction Shaft	2801 348	2801 348	2801 348	2801 348	2801 348	2801 348
21-133-0	**TRANSMISSION CLUTCH**						
21-133-7	RETAINER, w/BUSHING, Frt. Clutch	3515 314	3410 810	3410 810	3410 810	———	———
	Casting No. 3515 495	———	———	———	———	= 3515 494	= 3515 494
	Casting No. 2801 219	———	———	———	———	3410 900	3410 900
	Rr. Clutch	2466 801	2466 801	2466 801	2466 801	2538 047	2538 047
	Rr. Clutch Piston	3410 814	3410 814	3410 814	3410 814	3410 814	3410 814
21-133-10	BUSHING, Frt. Clutch Retainer	3515 315	3515 315	3515 315	3515 315	3515 315	3515 315
21-133-15	PISTON, Frt. Clutch	2464 651	2464 651	2464 651	2464 651	2464 651	2464 651
	Rr.	2204 645	2204 645	2204 645	2204 645	2204 645	2204 645
	BALL, Clutch Check Valve	147 483	147 483	147 483	147 483	147 483	147 483
21-133-17	SEAL, Frt. Clutch Piston, Inner	3410 226	3410 226	3410 226	3410 226	3410 226	3410 226
	Outer	3410 225	3410 225	3410 225	3410 225	3410 225	3410 225
	Rr., Inner	1942 054	1942 054	1942 054	1942 054	1942 054	1942 054

CARLINES J - Challenger, B - Barracuda; V - Valiant, L - Dart; R Belvedere - Satallite, W - Coronet - Charger; P - Plymouth, D - Dodge; C - Chrysler, Y - Imperial

AR Indicates use as required.

Numerals in parentheses ( ) refer to notes.

# Indicates parts not listed in any previous parts book.

★ Indicates change or addition.

Printed in U.S.A. January 1972

AUTOMATIC TRANSMISSION

NOTE: All quantities are one (1) unless otherwise indicated in parenthesis.

CODE	TRANSMISSION	3515 845 A727	3515 846 A727	3515 847 A727	3515 848 A727	3515 849 A727	3515 850 A727
21-133-0	**TRANSMISSION CLUTCH Cont'd.**						
21-133-17	SEAL Cont'd.						
	Outer	2124 835	2124 835	2124 835	2124 835	2124 835	2124 835
21-133-20	SPRING, Frt. Clutch Piston						
	(9)	2801 243	2801 243	2801 243	2801 243	———	———
	(12)	———	———	———	———	2801 243	2801 243
21-133-22	RETAINER, Frt. Clutch						
	Piston Spring	2801 949	2801 949	2801 949	2801 949	2801 949	2801 949
	BALL, Check Valve	147 483	147 483	147 483	147 483	147 483	147 483
21-133-25	SNAP RING, Rr. Clutch						
	Retainer, .060" thk.,						
	7" O.D. (AR)	1942 063	1942 063	1942 063	1942 063	1942 063	1942 063
	.074" thk. (AR)	1942 064	1942 064	1942 064	1942 064	1942 064	1942 064
	.088" thk. (AR)	1942 065	1942 065	1942 065	1942 065	1942 065	1942 065
	.106" thk. (AR)	2466 811	2466 811	2466 811	2466 811	2466 811	2466 811
	Rr. Clutch Piston						
	Retainer, .060" thk.,						
	1 31/64" O.D.	2124 872	2124 872	2124 872	2124 872	2124 872	2124 872
21-133-31	SPRING, Rr. Clutch Wave	2466 806	2466 806	2466 806	2466 806	2466 806	2466 806
21-133-36	DISC, Frt. Clutch (3)	2801 167	———	———	———	———	———
	(4)	———	2801 167	2801 167	2801 167	———	———
	(5)	———	———	———	———	2400 725	2400 725
	Rr. (4)	2801 992	2801 992	2801 992	2801 992	2801 992	2801 992
21-133-38	PLATE, Frt. Clutch (3)	2124 826	———	———	———	———	———
	(4)	———	2124 826	2124 826	2124 826	———	———
	(5)	———	———	———	———	2124 826	2124 826
	Rr. (3)	2124 826	2124 826	2124 826	2124 826	2124 826	2124 826
21-133-39	PLATE, Frt. Clutch						
	Pressure	2801 961	2801 961	2801 961	2801 961	2801 961	2801 961
	Rr. Clutch Pressure,						
	Frt.	2466 803	2466 803	2466 803	2466 803	2466 803	2466 803
	Rr. Rr.	2801 961	2801 961	2801 961	2801 961	2801 961	2801 961
21-133-40	GEAR, w/BUSHING, Sun	2801 311	2801 311	2801 311	2801 311	2801 311	2801 311
21-133-42	SHELL, Sun Gear Driving	2400 662	2400 662	2400 662	2400 662	2400 662	2400 662
21-133-43	SNAP RING, Frt. Clutch,						
	7 7/64" O.D., .050" thk.						
	(AR)	3410 570	3410 570	3410 570	3410 570	———	———
	7 7/64" O.D., .060" thk.						
	(AR)	———	———	———	———	3515 212	3515 212
	.106" thk. (AR)	———	———	———	———	3515 215	3515 215
	Frt. Clutch, Inner,						
	3" I.D., .060" thk.	2124 824	2124 824	2124 824	2124 824	———	———
	3 3/16" I.D., .061" thk.	———	———	———	———	2466 369	2466 369
21-133-46	RING, Sun Gear Driving						
	Shell Lock (2)	1736 521	1736 521	1736 521	1736 521	1736 521	1736 521
21-133-47	PLATE, Sun Gear Driving						
	Shell Thrust, w/4						
	Inside Tangs	1942 080	1942 080	1942 080	1942 080	1942 080	1942 080
21-133-48	WASHER, Sun Gear Driving						
	Shell Thrust, w/3						
	Outside Tabs	1942 081	1942 081	1942 081	1942 081	1942 081	1942 081
21-133-62	SPACER, Rr. Clutch						
	Piston Spring, Steel	2801 161	2801 161	2801 161	2801 161	2801 161	2801 161
	Plastic	= 3515 077	= 3515 077	= 3515 077	= 3515 077	= 3515 077	= 3515 077
21-133-65	WASHER, Frt. Clutch Thrust,						
	Frt., Green, .061" thk.,						
	3 21/64" O.D. (AR)	2204 622	2204 622	2204 622	2204 622	2204 622	2204 622
	Red, .084" thk. (AR)	2204 623	2204 623	2204 623	2204 623	2204 623	2204 623
	Yellow, .102" thk. (AR)	2400 284	2400 284	2400 284	2400 284	2400 284	2400 284
	Frt. Clutch Thrust, Rr.	2204 622	2204 622	2204 622	2204 622	2204 622	2204 622

CARLINES					
J - Challenger B - Barracuda	V - Valiant L - Dart	R - Belvedere - Satallite W - Cororet - Charger	P - Plymouth D - Dodge	C - Chrysler Y - Imperial

AR Indicates use as required.

# Indicates parts not listed in any previous parts book.

Numerals in parentheses ( ) refer to notes.

★ Indicates change or addition.

Printed in U.S.A.
January 1972

AUTOMATIC TRANSMISSION

NOTE: All quantities are one (1) unless otherwise indicated in parenthesis.

CODE	TRANSMISSION	3515 845 A727	3515 846 A727	3515 847 A727	3515 848 A727	3515 849 A727	3515 850 A727
21-134-0	**TRANSMISSION FRONT AND REAR PLANET PINION CARRIER AND COMPONENTS**						
21-134-5	CARRIER, w/PINION and WASHER, Frt.	2466 537	2801 171	2801 171	2801 171	2801 171	2801 171
	Rr.	2466 539	2466 539	2466 539	2801 061	2801 061	2801 061
21-134-8	PINION, Frt. Planet (3)	2400 667	———	———	———	———	———
	(4)	———	2400 667	2400 667	2400 667	2400 667	2400 667
	Rr. (3)	2400 667	2400 667	2400 667	———	———	———
	(4)	———	———	———	2400 667	2400 667	2400 667
21-134-9	SHAFT, Frt. (3)	2464 178	———	———	———	———	———
	(4)	———	2464 178	2464 178	2464 178	2464 178	2464 178
	Rr. (3)	2464 178	2464 178	2464 178	———	———	———
	(4)	———	———	———	2464 178	2464 178	2464 178
	PIN (AR)	6024 666	6024 666	6024 666	6024 666	6024 666	6024 666
21-134-10	WASHER, Frt. (6)	2801 315	———	———	———	———	———
	(8)	———	2801 315	2801 315	2801 315	2801 315	2801 315
	Rr. (6)	2801 315	2801 315	2801 315	———	———	———
	(8)	———	———	———	2801 315	2801 315	2801 315
21-134-11	ROLLER, Frt. (69)	2204 647	———	———	———	———	———
	(92)	———	2204 647	2204 647	2204 647	2204 647	2204 647
	Rr. (69)	2204 647	2204 647	2204 647	———	———	———
	(92)	———	———	———	2204 647	2204 647	2204 647
21-134-12	RING, Frt. Planet Pinion Roller Thrust						
	(6)	2204 649	———	———	———	———	———
	(8)	———	2204 649	2204 649	2204 649	2204 649	2204 649
	Rr. (6)	2204 649	2204 649	2204 649	———	———	———
	(8)	———	———	———	2204 649	2204 649	2204 649
21-134-30	WASHER, Frt. Carrier Thrust	1942 081	2801 060	2801 060	2801 060	2801 060	2801 060
	Rr.	1942 081	1942 081	1942 081	2801 060	2801 060	2801 060
21-134-38	GEAR, Frt. Annulus	2892 656	2892 656	2892 656	2892 656	2892 656	2892 656
	Rr.	2538 185	2538 185	2538 185	2538 185	2538 185	2538 185
21-134-45	PLATE, Rr. Annulus Gear Thrust, w/31 Inside Teeth, 3 23/64" O.D.	2400 580	2400 580	2400 580	2400 580	2400 580	2400 580
21-136-0	**TRANSMISSION BANDS**						
21-136-5	BAND, Kickdown	2124 342	2124 342	2124 342	2124 342	2538 461	2538 461
21-136-15	STRUT, Kickdown Band	2124 848	2124 848	2124 848	2124 848	2124 848	2124 848
	ANCHOR, Kickdown Band	1942 120	1942 120	1942 120	1942 120	1942 120	1942 120
21-136-17	SCREW, Kickdown Band Adjusting	2400 389	2400 389	2400 389	2400 389	2400 389	2400 389
	NUT, Lock 1/2" - 20	124 934	124 934	124 934	124 934	124 934	124 934
21-136-20	LEVER, Kickdown Band	2204 952	2124 666	2124 666	2125 067	2801 217	2801 217
21-136-23	SHAFT, Kickdown Band Lever	1942 132	1942 132	1942 132	1942 132	1949 132	1942 132
21-136-30	BAND, Reverse	1942 133	1942 133	1942 133	1942 133	1942 133	1942 133
21-136-41	STRUT, Reverse Band	2204 823	2204 823	2204 823	2204 823	2204 823	2204 823
21-136-44	LINK, w/ANCHOR, Reverse Band	2204 820	2204 820	2204 820	2204 820	2204 820	2204 820
21-136-47	LEVER, w/STEM, Reverse Band	1942 137	1942 137	1942 137	1942 137	1942 137	1942 137
	Reverse Band, Short	2892 233	2892 233	2892 233	2892 233	2892 233	2892 233
21-136-49	SHAFT, Reverse Band	2124 857	2124 857	2124 857	2124 857	2124 857	2124 857
21-136-52	SCREW, Reverse Band Adjusting	1942 141	1942 141	1942 141	1942 141	1942 141	1942 141
	NUT	271 506	271 506	271 506	271 506	271 506	271 506

CARLINES J - Challenger, B - Barracuda; V - Valiant, L - Dart; R - Belvedere - Satallite, W - Coronet - Charger; P - Plymouth, D - Dodge; C - Chrysler, Y - Imperial

AR Indicates use as required.

Numerals in parentheses ( ) refer to notes.

≠ Indicates parts not listed in any previous parts book.

★ Indicates change or addition.

Printed in U.S.A.
January 1972

AUTOMATIC TRANSMISSION

NOTE: All quantities are one (1) unless otherwise indicated in parenthesis.

CODE	TRANSMISSION	3515 845 A727	3515 846 A727	3515 847 A727	3515 848 A727	3515 849 A727	3515 850 A727
21-136-0	**TRANSMISSION BANDS Cont'd.**						
21-136-55	SEAL, Reverse Band Lever Shaft	1672 358	1672 358	1672 358	1672 358	1672 358	1672 358
21-136-65	DRUM, Reverse (See Note 1)	= 3515 451	= 3515 451	= 3515 451	= 3515 451	= 3515 451	= 3515 451
21-136-231	CAM, "O" Running Clutch	1942 095	1942 095	1942 095	1942 095	1942 095	1942 095
21-136-232	RACE, ROLLER and SPRING Package, "O" Running Clutch, 26T	3420 100	3420 100	3420 100	3420 100	3420 100	3420 100
21-136-233	RETAINER, "O" Running Clutch Spring	2801 426	2801 426	2801 426	2801 426	2801 426	2801 426
21-136-235	ROLLER, "O" Running Clutch (12)	670 776	670 776	670 776	670 776	670 776	670 776
21-136-236	SPRING, "O" Running Clutch Roller (12)	1942 187	1942 187	1942 187	1942 187	1942 187	1942 187
21-137-0	**TRANSMISSION SERVOS**						
21-137-5	PISTON, Kickdown Servo Inner, w/Piston, Rod and Seal	3410 440	3410 440	3410 440	2124 850	2124 850	2124 850
		= 3410 445	= 3410 445	= 3410 445	———	———	———
	SEAL, Inner	6028 864	6028 864	6028 864	———	———	———
	SNAP RING, Inner	6024 336	6024 336	6024 336	———	———	———
21-137-6	RETAINER, Kickdown Piston, Inner	3410 437	3410 437	3410 437	———	———	———
21-137-8	RING, Kickdown Servo Piston Seal, Small	2124 851	2124 851	2124 851	2124 851	2124 851	2124 851
	Large	1942 123	1942 123	1942 123	1942 123	1942 123	1942 123
	Kickdown Servo Guide	1942 123	1942 123	1942 123	1942 123	1942 123	1942 123
21-137-11	ROD, w/END, Kickdown Servo Piston	———	———	———	2124 853	2124 853	2124 853
	Inner	3410 443	3410 443	3410 443	———	———	———
21-137-13	GUIDE, Kickdown Servo	3410 441	3410 441	3410 441	2124 856	2124 856	2124 856
	NOTE 1: Also specify 1 of 3420 100 Race Package						
21-137-19	SNAP RING, Kickdown Servo Guide	1942 130	1942 130	1942 130	1942 130	1942 130	1942 130
21-137-22	SPRING, Kickdown Servo Piston, Inner	3410 444	3410 444	3410 444	3515 112	3515 112	3515 112
	Outer	3410 518	3410 518	3410 518	2125 069	———	———
21-137-35	PISTON, Reverse Servo	2801 281	2801 281	2801 281	2801 281	2801 281	2801 281
21-137-41	SPRING, Reverse Servo Cushion	2801 273	2801 273	2801 273	2801 273	2801 273	2801 273
21-137-47	PLUG, Reverse Servo Piston	2801 272	2801 272	2801 272	2801 272	2801 272	2801 272
	RING, .435" I.D.	6027 153	6027 153	6027 153	6027 153	6027 153	6027 153
21-137-50	SEAL, Reverse Servo Piston, Rubber	2464 481	2464 481	2464 481	2464 481	2464 481	2464 481
21-137-53	SPRING, Reverse Servo Piston	2801 241	2801 241	2801 241	2801 241	2801 241	2801 241
21-137-56	RETAINER, Reverse Servo Piston	1942 150	1942 150	1942 150	1942 150	1942 150	1942 150
21-137-59	SNAP RING, Reverse Servo Piston Spring Retainer	1942 130	1942 130	1942 130	1942 130	1942 130	1942 130
21-137-200	PISTON, Accumulator	3410 908	3410 908	3410 908	3410 908	3410 908	3410 908
21-137-202	RING, Accumulator Piston Seal, Small	1941 831	1941 831	1941 831	1941 831	1941 831	1941 831
	Large	2124 255	2124 255	2124 255	2124 255	2124 255	2124 255
21-137-205	SPRING, Accumulator, Lwr.	3515 079	3515 079	3515 079	———	———	———
	Upper	———	———	———	3515 114	———	———

AUTOMATIC TRANSMISSION

NOTE: All quantities are one (1) unless otherwise indicated in parenthesis.

CODE	TRANSMISSION	3515 845 A727	3515 846 A727	3515 847 A727	3515 848 A727	3515 849 A727	3515 850 A727
21-138-0	**TRANSMISSION GOVERNOR**						
21-138-2	REPAIR PACKAGE, Governor	3621 451	3621 452	3621 451	3621 452	3621 453	3621 452
21-138-7	SNAP RING, Governor Body	6022 817	6022 817	6022 817	6022 817	6022 817	6022 817
21-138-10	SUPPORT, Governor	2538 634	2538 634	2538 634	2538 634	2538 634	2538 634
21-138-13	WEIGHT, Governor, Outer, 29/32" Lgh.	1636 461	1636 461	1636 461	1636 461	1823 726	1636 461
	29/32" Lgh., Gray to Black Finish	———	———	———	———	= 3515 491	———
	Inner, 51/64" Lgh.	3515 098	3515 098	3515 098	3515 098	———	3515 098
	13/16" Lgh.	= 3515 478	= 3515 478	= 3515 478	= 3515 478	———	= 3515 478
	Gray to Black Finish	———	———	———	———	3515 491	———
21-138-15	SPRING, Governor Weight	3515 085	3515 110	3515 085	3515 110	3515 110	3515 110
21-138-19	SNAP RING, Governor Weight, Outer	1636 465	1636 465	1636 465	1636 465	1636 465	1636 465
	Inner	1636 464	1636 464	1636 464	1636 464	1636 464	1636 464
21-138-21	LOCK, Governor Body Bolt (2)	2125 024	2125 024	2125 024	2125 024	2125 024	2125 024
21-138-23	VALVE, Governor, .844"-.854" Lgh.	2124 663	2124 663	2124 663	2124 663	2124 663	2124 663
	.859" Lgh.	2124 663	2124 663	2124 663	2124 663	2124 663	2124 663
		= 3515 479	= 3515 479	= 3515 479	= 3515 479	= 3515 479	= 3515 479
21-138-26	SHAFT, Governor Valve	1556 082	1556 082	1556 082	1556 082	1556 082	1556 082
21-138-29	SNAP RING, Governor Valve Shaft (2)	1638 461	1638 461	1638 461	1638 461	1638 461	1638 461
21-138-38	RING, Governor Support Seal, Frt. and Rr. (2)	1942 109	1942 109	1942 109	1942 109	1942 109	1942 109
21-139-0	**TRANSMISSION VALVE BODY AND VALVES**						
21-139-4	BODY, w/Transfer PLATE	3515 036	3410 478	3410 478	3515 037	3515 038	3515 038
	BALL, Check Valve, Small (5)	104 918	104 918	104 918	104 918	104 918	104 918
	Large	147 488	147 488	147 488	147 488	147 488	147 488
21-139-9	VALVE, Manual	2801 259	2801 259	2801 259	2801 259	2801 259	2801 259
21-139-11	VALVE, Limit	3410 560	3410 560	3410 560	3410 560	———	———
21-139-12	LEVER, w/INSULATOR, Manual Valve	3410 484	3410 484	3410 484	3410 484	3410 484	3410 484
21-139-16	SEAL, Manual Valve Shaft	2466 842	2466 842	2466 842	2466 842	2466 842	2466 842
21-139-19	BODY, Limit Valve	3410 564	3410 564	3410 564	3410 564	———	———
21-139-24	SPRING, Manual Valve Lever Detent	2466 615	2466 615	2466 615	2466 615	2466 615	2466 615
	Ball 11/32"	147 488	147 488	147 488	147 488	147 488	147 488
21-139-30	VALVE, Throttle	2892 349	2892 349	2892 349	2892 349	2892 349	2892 349
21-139-33	SPRING, Throttle Valve	2892 350	2892 350	2892 350	2892 350	2892 350	2892 350
21-139-34	PIN, Manual Valve Lever Spring	2466 756	2466 756	2466 756	2466 756	2466 756	2466 756
21-139-46	WASHER, Throttle Valve Lever Shaft	2538 062	2538 062	2538 062	2538 062	2538 062	2538 062
21-139-47	SEAL, Throttle Lever Shaft, 11/16" O.D.	2466 548	2466 548	2466 548	2466 548	2466 548	2466 548
21-139-49	"E" RING, Throttle Valve Lever Shaft	6025 857	6025 857	6025 857	6025 857	6025 857	6025 857
21-139-50	LEVER, Throttle Valve	2466 854	2466 854	2466 854	2466 854	2466 854	2466 854
21-139-63	PLUG, Throttle Pressure	2892 943	2892 943	2892 943	2892 943	———	———
	Regulator Valve Throttle Pressure	1942 245	1942 245	1942 245	1942 245	1942 245	1942 245
	Regulator Valve Line Pressure	1942 218	1942 218	1942 218	1942 218	1942 218	1942 218
21-139-64	SLEEVE, Regulator Valve Line Pressure Plug	1942 213	1942 213	1942 213	1942 213	1942 213	1942 213
	Shuttle Valve, Plastic	3410 312	3410 312	3410 312	3410 312	3410 312	3410 312

CARLINES J - Challenger, B - Barracuda; V - Valiant, L - Dart; R - Belvedere - Satallite, W - Coronet - Charger; P - Plymouth, D - Dodge; C - Chrysler, Y - Imperial

AR Indicates use as required.

≠ Indicates parts not listed in any previous parts book.

Numerals in parentheses ( ) refer to notes.

★ Indicates change or addition.

Printed in U.S.A.
January 1972

AUTOMATIC TRANSMISSION

NOTE: All quantities are one (1) unless otherwise indicated in parenthesis.

CODE	TRANSMISSION	3515 845 A727	3515 846 A727	3515 847 A727	3515 848 A727	3515 849 A727	3515 850 A727
21-139-0	**TRANSMISSION VALVE BODY AND VALVES Cont'd.**						
21-139-67	VALVE PACKAGE, Regulator	2240 685	2240 685	2240 685	2240 685	2240 685	2240 685
21-139-68	SPRING, Regulator Valve	2124 734	2124 734	2124 734	2124 734	2124 734	2124 734
	Pressure Relief	2892 846	2892 846	2892 846	2892 846	2892 846	2892 846
	Limit Valve	3515 251	3515 251	3515 251	3515 251	———	———
	BALL, Pressure Relief 3/16"	147 483	147 483	147 483	147 483	147 483	147 483
21-139-71	RETAINER, Regulator Valve Spring	2204 975	2204 975	2204 975	2204 975	2204 975	2204 975
	Limit Valve Spring	2892 947	2892 947	2892 947	2892 947	———	———
	SCREW, w/WASHER, Regulator Valve Spring (3)	6029 271	6029 271	6029 271	6029 271	6029 271	6029 271
21-139-74	SCREW, Line Pressure Adjusting	2124 736	2124 736	2124 736	2124 736	2124 736	2124 736
	Throttle Pressure Adjusting	6023 343	6023 343	6023 343	6023 343	6023 343	6023 343
21-139-76	NUT, Throttle Pressure Adjusting Screw Lock	2892 353	2892 353	2892 353	2892 353	2892 353	2892 353
	Line Pressure Adjusting Screw	2124 737	2124 737	2124 737	2124 737	2124 737	2124 737
21-139-78	VALVE, Kickdown	2892 351	2892 351	2892 351	2892 351	2892 351	2892 351
	PLUG, Kickdown Detent	2892 352	2892 352	2892 352	2892 352	2892 352	2892 352
21-139-95	VALVE, Shuttle	2892 926	2892 926	2892 926	2892 926	2892 926	2892 926
	PLUG, Shuttle Valve	2892 927	2892 927	2892 927	2892 927	2892 927	2892 927
21-139-98	SNAP RING, Shuttle Valve	6025 857	6025 857	6025 857	6025 857	6025 857	6025 857
21-139-101	SPRING, Shuttle Valve, Pri.	3515 047	3515 057	3515 047	3515 047	3515 047	3515 047
	Secondary	3515 048	3515 048	3515 048	3515 048	3515 048	3515 048
21-139-105	VALVE, 1-2 Shift Control	3410 912	3410 912	3410 912	3410 912	3410 912	3410 912
	VALVE, 1-2 Shift	3410 881	3410 881	3410 881	3410 881	3410 881	3410 881
	PLUG, 1-2 Shift Valve	3410 826	3410 826	3410 826	3410 826	3410 826	3410 826
	w/o Lip on Center of Shaft	3410 826	3410 826	3410 826	3410 826	3410 826	———
	w/Lip on Center of Shaft	= 3515 948	= 3515 948	= 3515 948	= 3515 948	= 3515 948	———
	VALVE, 2-3 Shift	3515 132	3515 132	3515 132	3515 132	3515 132	3515 132
	PLUG, 2-3 Shift Valve	2892 990	2892 990	2892 990	2892 990	2892 990	2892 990
21-139-108	SPRING, 1-2 Shift Valve	2204 547	2204 547	2204 547	2204 547	2204 547	2204 547
	1-2 Shift Control	3410 517	3410 517	3410 517	3410 517	3410 517	3410 517
	2-3 Shift Valve	1942 231	1942 231	1942 231	1942 231	1942 231	1942 231
21-139-117	VALVE, Torque Conv. Control	2124 256	2124 256	2124 256	2124 256	2124 256	2124 256
21-139-118	SPRING, Torque Conv. Control Valve	2124 257	2124 257	2124 257	2124 257	2124 257	2124 257
21-139-135	COVER, Regulator Valve	2205 034	2205 034	2205 034	2205 034	2205 034	2205 034
	Shift Valve Plug	3410 378	3410 378	3410 378	3410 378	3410 378	3410 378
	Shuttle Valve	3410 889	3410 889	3410 889	3410 889	3410 889	3410 889
	Limit Valve	2892 944	2892 944	2892 944	2892 944	———	———
	Shift and 1-2 Shift Control	———	———	———	———	3410 461	3410 461
	SCREW, w/WASHER, Limit Valve Cover (3)	6029 272	6029 272	6029 272	6029 272	———	———
	Shift Valve Cover (3)	———	———	———	———	6029 271	6029 271
	Shuttle Valve Cover (AR)	6029 271	6029 271	6029 271	6029 271	6029 271	6029 271
	Regulator Valve Cover	6029 271	6029 271	6029 271	6029 271	6029 271	———

CARLINES J - Challenger, B - Barracuda; V - Valiant, L - Dart; R - Belvedere - Satallite, W - Coronet - Charger; P - Plymouth, D - Dodge; C - Chrysler, Y - Imperial

AR Indicates use as required.

# Indicates parts not listed in any previous parts book.

Numerals in parentheses ( ) refer to notes.

★ Indicates change or addition.

Printed in U.S.A.
January 1972

AUTOMATIC TRANSMISSION

NOTE: All quantities are one (1) unless otherwise indicated in parenthesis.

CODE	TRANSMISSION	3515 845 A727	3515 846 A727	3515 847 A727	3515 848 A727	3515 849 A727	3515 850 A727
21-139-0	**TRANSMISSION VALVE BODY AND VALVES Cont'd.**						
21-139-140	PLATE, Valve Body	3515 045	3410 934	3410 934	3410 934	3410 934	3410 934
	SCREW, w/WASHER, Valve Body Plate to Transfer Plate (2)	6029 271	6029 271	6029 271	6029 271	6029 271	6029 271
21-139-147	PLATE, Transfer	3410 435	3410 381	3410 381	3410 381	3410 381	3410 381
	SCREW, w/WASHER, Plate to Valve Body (14)	6027 391	6027 391	6027 391	6027 391	6027 391	6027 391
21-139-154	SUPPORT, Transfer Plate	3410 380	3410 380	3410 380	3410 380	3410 380	3410 380
	SCREW, w/WASHER (2)	6029 271	6029 271	6029 271	6029 271	6029 271	6029 271

NOTE: All quantities are one (1) unless otherwise indicated in parenthesis

CODE	TRANSMISSION	3410 777 A904	3410 778 A904	3410 779 A904	3515 814 A727
21-01-0	**TRANSMISSION SETS OR PACKAGES**				
21-01-3	SEAL and GASKET PACKAGE	3420 064	3420 064	3420 064	3420 093
21-03-0	**TRANSMISSION CASE**				
21-03-1	CASE	3410 281	3410 281	3410 280	3410 469
	SCREW, w/WASHER, Cover 1/4"-20 x 1/2" (AR)	6023 092	6023 092	6023 092	6023 092
21-04-0	**TRANSMISSION CASE EXTENSION**				
21-04-1	EXTENSION	2466 956	2466 956	2466 956	2466 969
	SCREW, w/WASHER (6)	6023 514	6023 514	6023 514	6023 514
21-04-2	GASKET	2466 954	2466 954	2466 954	2466 954
	Output Shaft Brg. Inspection Cover	2801 398	2801 398	2801 398	2801 398
21-04-8	COVER, Output Shaft Brg. Inspection	2466 957	2466 957	2466 957	2466 957
	SCREW 1/4"-20 x 5/8" (2)	6026 884	6026 884	6026 884	6026 884
21-04-11	BUSHING	2801 726	2801 726	2801 726	2801 724
21-05-0	**TRANSMISSION OUTPUT SHAFT**				
21-05-1	SHAFT, 21 11/32" lgh.	3410 949	3410 949	3410 949	2801 314
21-05-2	BEARING, 1 5/32" I.D.	3410 465	3410 465	3410 465	———
		———	———	———	2466 224
21-05-8	SNAP RING, Brg.	6028 901	6028 901	6028 901	———
	Outer	———	———	———	2400 320
	Brg. (2)	———	———	———	6025 570
21-05-12	SEAL, Yoke, 1 9/16" lgh., w/One Lip, Rubber and Metal	2400 163	2400 163	2400 163	———
		———	———	———	2400 300
21-05-19	SNAP RING, Output Shaft, .040" thk., Red (AR)	6026 289	6026 289	6026 289	———
	.048" thk., Orange (AR)	6026 290	6026 290	6026 290	6022 816
	.055" thk., (AR)	———	———	———	6024 311
	.059" thk., Yellow (AR)	6026 291	6026 291	2026 291	———
	.062" thk. (AR)	———	———	———	6024 312
21-05-25	SUPPORT	2466 881	2466 881	2466 881	2466 882

CARLINES J - Challenger, B - Barracuda; V - Valiant, L - Dart; R - Belvedere - Satellite, W - Coronet - Charger; P - Plymouth, D - Dodge; C - Chrysler, Y - Imperial

AR Indicates use as required.

Numerals in parentheses ( ) refer to notes.

≠ Indicates parts not listed in any previous parts book.

★ Indicates change or addition.

Printed in U.S.A. January 1972

AUTOMATIC TRANSMISSION

NOTE: All quantities are one (1) unless otherwise indicated in parenthesis

CODE	TRANSMISSION	3410 777 A904	3410 778 A904	3410 779 A904	3515 814 A727
21-05-0	**TRANSMISSION OUTPUT SHAFT Cont'd.**				
21-05-35	WASHER, Thrust, Natural				
	.052" thk. (AR)	2538 669	2538 669	2538 669	———
	.062" thk. (AR)	———	———	———	2400 843
	.068" thk. Red (AR)	2538 670	2538 670	2538 670	———
	.083" thk. Black (AR)	2538 671	2538 671	2538 671	———
21-117-0	**TRANSMISSION OIL FILTER**				
	NOTE: See Code 5-53-3 for Tubes				
21-117-1	FILTER or STRAINER	3410 253	3410 253	3410 253	3410 253
	SCREW, w/Washer (3)	6026 390	6026 390	6026 390	6026 390
21-118-0	**TRANSMISSION OIL PUMP**				
21-118-6	ROTOR PACKAGE, Frt. Oil Pump	2808 685	2808 685	2808 685	2808 675
21-118-40	HOUSING, w/BUSHING, Frt. Pump	2538 206	2538 206	2538 206	———
	w/Bushing and Plug	———	———	———	3410 965
	SCREW, w/WASHER (6)	6023 943	6023 943	6023 943	———
	(7)	———	———	———	6023 943
21-118-45	SEAL, Frt. Pump Hsg., 8 17/64 O.D.	2204 709	2204 709	2204 709	———
	10" O.D.	———	———	———	1942 021
21-118-47	BUSHING, Frt. Pump Hsg.	2466 796	2466 796	2466 796	2466 324
21-118-54	GASKET, Frt. Pump Hsg.	———	———	———	2124 846
21-118-57	SHIELD, Frt. Pump Hsg.	———	———	———	2204 993
	w/Plug	———	———	———	2892 679
21-118-58	PLUG, Vent Shield	———	———	———	2892 553
21-119-0	**TRANSMISSION OIL PAN**				
21-119-3	PAN, Oil	2464 413	2464 413	2464 413	———
	w/Plug	———	———	———	2464 419
	SCREW, w/WASHER (14)	6023 355	6023 355	6023 355	6023 355
21-119-5	GASKET, Oil Pan	2205 299	2205 299	2205 299	2464 324
21-119-11	PLUG, Drain	———	———	———	2125 890
21-129-0	**TRANSMISSION INPUT SHAFT AND TORQUE CONVERTER REACTION SHAFT**				
21-129-5	SHAFT, Input	2538 407	2538 407	2538 407	2801 053
	SNAP RING, 57/64" I.D.	6022 859	6022 859	6022 859	———
21-129-6	BUSHING, Input Shaft	———	———	———	2205 242
21-129-7	RING, Input Shaft Seal (AR)	1941 831	1941 831	1941 831	———
	(2)	———	———	———	2801 054
21-129-10	SHAFT, w/SUPPORT, Reaction	2538 409	2538 409	2538 409	2801 045
	BALL (2)	104 918	104 918	104 918	———
	Large 11/32"	———	———	———	147 488
21-129-11	BAFFLE, Vent, 3" lgh.	———	———	———	2400 479
21-129-13	RING, Reaction Shaft Support Seal (2)	1942 389	1942 389	1942 389	2124 813
21-129-23	BUSHING, Reaction Shaft	2801 728	2801 728	2801 728	2801 348
21-129-24	GASKET, Reaction Shaft Support, 8 15/64" O.D.	1942 390	1942 390	1942 390	———

CARLINES J - Challenger, B - Barracuda, V - Valiant, L - Dart, R - Belvedere - Satallite, W - Coronet - Charger, P - Plymouth, D - Dodge, C - Chrysler, Y - Imperial

AR Indicates use as required.

# Indicates parts not listed in any previous parts book.

Numerals in parentheses ( ) refer to notes.

★ Indicates change or addition.

Printed in U.S.A.
January 1972

AUTOMATIC TRANSMISSION

NOTE: *All quantities are one (1) unless otherwise indicated in parenthesis*

CODE	TRANSMISSION	3410 777 A904	3410 778 A904	3410 779 A904	3515 814 A727
21-133-0	**TRANSMISSION CLUTCH**				
21-133-1	RETAINER and WASHER PACKAGE, Frt. Clutch	3420 076	3420 077	3420 077	———
	RETAINER, w/Bushing, Frt. Clutch	———	———	———	3410 905
	Rr. Clutch	2892 441	2892 441	2892 422	2466 801
	Rr. Clutch Piston	———	———	———	2124 833
21-133-10	BUSHING, Frt. Clutch Retainer	2801 727	2801 727	2801 727	2205 241
21-133-15	PISTON, Frt. Clutch	2892 420	2892 420	2892 420	2124 819
	Rr.	2892 554	2892 554	2892 554	2204 645
	Ball, Clutch Check Valve	147 483	147 483	147 483	147 483
21-133-17	SEAL, Frt. Clutch Piston, Inner	1942 396	1942 396	1942 396	3410 226
	Outer	1942 397	1942 397	1942 397	3410 225
	Rr. Clutch Piston, Inner	2538 510	2538 510	2538 510	1942 054
	Outer	2538 695	2538 695	2538 695	2124 835
	Rr. Clutch Retainer Ring	1323 593	1323 593	1323 593	———
21-133-20	SPRING, Frt. Clutch Piston	1942 467	2801 844	1942 467	———
	(9)	———	———	———	2801 243
	Rr.	1942 414	1942 414	1942 414	1942 015
21-133-22	RETAINER, Frt. Clutch Piston Spring	1942 399	1949 399	1942 399	2801 949
	BALL, Check Valve	147 483	147 483	147 483	147 483
21-133-25	SNAP RING, Rr. Clutch Retainer, 5 1/4" O.D., .060" thk. (AR)	1942 421	1942 421	1942 421	———
	.076" thk. (AR)	1942 423	1942 423	1942 423	———
	.098" thk. (AR)	2538 617	2538 617	2538 617	———
	7" O.D. .060" thk. (AR)	———	———	———	1942 063
	.074" thk. (AR)	———	———	———	1942 064
	.088" thk. (AR)	———	———	———	1942 065
	.106" thk. (AR)	———	———	———	2466 811
	Rr. Clutch Piston Retainer, 1 31/64" O.D., .060" thk.	———	———	———	2124 872
21-133-31	SPRING, Rr. Clutch Wave, 5 11/32" O.D.	2466 283	2466 283	2801 626	2466 806
21-133-36	DISC, Frt. Clutch (3)	2205 203	———	———	2801 167
	(4)	———	2205 203	2205 203	———
	Rr. Clutch (3)	2892 551	2892 551	———	———
	(4)	———	———	2892 551	2801 992
21-133-38	PLATE, Frt. Clutch (3)	1942 403	———	———	———
	(4)	———	1942 403	1942 403	2124 826
	Rr. (2)	1942 403	1942 403	———	———
	(3)	———	———	1942 403	2124 826
21-133-39	PLATE, Frt. Clutch Pressure	2801 969	2801 969	2801 969	2801 961
	Rr. Clutch Pressure, Frt.	2466 281	2466 281	2466 281	2466 803
	Rr. Rr.	2801 969	2801 969	2801 969	2801 961
21-133-40	GEAR, w/BUSHING, Sun	1942 434	1942 434	1942 434	2801 311
21-133-42	SHELL, Sun Gear Driving	1942 438	1942 438	1942 438	2400 662
21-133-43	SNAP RING, Frt. Clutch, Inner, 2 7/16" O.D.	1942 400	1942 400	1942 400	———
	Outer, 5 1/4" O.D., .060" thk.	1942 421	1942 421	1942 421	———
		———	———	———	3410 570

CARLINES J - Challenger, B - Barracuda; V - Valiant, L - Dart; R - Belvedere - Satallite, W - Coronet - Charger; P - Plymouth, D - Dodge; C - Chrysler, Y - Imperial

AR Indicates use as required.

# Indicates parts not listed in any previous parts book.

Numerals in parentheses ( ) refer to notes.

★ Indicates change or addition.

Printed in U.S.A. January 1972

AUTOMATIC TRANSMISSION

NOTE: All quantities are one (1) unless otherwise indicated in parenthesis

CODE	TRANSMISSION	3410 777 A904	3410 778 A904	3410 779 A904	3515 814 A727
21-133-0	**TRANSMISSION CLUTCH Cont'd.**				
21-133-46	RING, Sun Gear Driving Shell Lock (2)	1942 439	1942 439	1942 439	1736 521
21-133-47	PLATE, Sun Gear Driving Shell Thrust, w/28 Tangs (2)	3410 540	3410 540	3410 540	———
	w/4 Tangs	———	———	———	1942 080
21-133-48	WASHER, Sun Gear Driving Shell Thrust w/3 Outside Tabs and 3 Oil Grooves (2)	2801 356	2801 356	———	———
	w/4 Outside Tabs and 4 Oil Grooves (2)	———	———	2538 515	———
	w/3 Outside Tabs	———	———	———	1942 081
21-133-62	SPACER, Rr. Clutch Piston Spring	2801 162	2801 162	2801 162	———
	6 51/64" O.D.	———	———	———	2801 161
21-133-65	WASHER, Frt. Clutch Thrust 5 7/8" O.D. (2)	3410 572	3410 572	3410 572	———
	Frt. Clutch Thrust, Frt., 3 21/64" O.D., Green, .061" thk. (AR)	———	———	———	2204 622
	Red, .084" thk. (AR)	———	———	———	2204 623
	Yellow, .106" thk. (AR)	———	———	———	2400 284
	Frt. Clutch Thrust, Rr. Green, .061" thk. (AR)	———	———	———	2204 622
21-134-0	**TRANSMISSION FRONT AND REAR PLANET PINION CARRIER and COMPONENTS**				
21-134-5	CARRIER, w/PINION and WASHER, Frt.	2801 018	2801 018	2538 523	2466 537
	Rr.	2801 180	2801 180	2538 522	2466 539
21-134-8	PINION, Frt. Planet (3)	2466 759	2466 759	———	2400 667
	(4)	———	———	2466 759	———
	Rr. (3)	2466 759	2466 759	———	2400 667
	(4)	———	———	2466 759	———
21-134-9	SHAFT, Frt. (3)	2801 363	2801 363	———	2464 178
	(4)	———	———	2801 363	———
	Rr. (3)	2801 363	2801 363	———	2467 178
	(4)	———	———	2801 363	———
	PIN	———	———	———	6024 666
21-134-10	WASHER, Frt. and Rr. (12)	2466 758	2466 758	———	———
	(16)	———	———	2466 758	———
	Frt. and Rr. (12)	———	———	———	2801 315
21-134-11	ROLLER, Frt. and Rr. (114)	2466 757	2466 757	———	———
	(152)	———	———	2466 756	———
	Frt. and Rr. (184)	———	———	———	2204 647
21-134-12	RING, Frt. and Rr. Planet Pinion Roller Thrust, 39/64" O.D. (12)	2466 757	2466 757	———	———
	(16)	———	———	2466 757	———
	Frt. and Rr., 49/64" O.D., (12)	———	———	———	2204 649
21-134-30	WASHER, Frt. and Rr. Carrier Thrust (2)	———	———	———	1942 081
21-134-36	SUPPORT, Frt. Annulus Gear	2538 574	2538 574	2538 574	———
	Rr.	1942 450	1942 450	1942 450	———

CARLINES J - Challenger, B - Barracuda; V - Valiant, L - Dart; R - Belvedere - Satallite, W - Coronet - Charger; P - Plymouth, D - Dodge; C - Chrysler, Y - Imperial

AR Indicates use as required. Numerals in parentheses ( ) refer to notes. Printed in U.S.A.

# Indicates parts not listed in any previous parts book. ★ Indicates change or addition. January 1972

AUTOMATIC TRANSMISSION

NOTE: All quantities are one (1) unless otherwise indicated in parenthesis

CODE	TRANSMISSION	3410 777 A904	3410 778 A904	3410 779 A904	3515 814 A727
21-134-0	**TRANSMISSION FRONT AND REAR PLANET PINION CARRIER AND COMPONENTS Cont'd.**				
21-134-38	GEAR, Frt. and Rr. Annulus (2)	1942 443	1942 443	1942 443	———
	Frt.	———	———	———	2892 656
	Rr.	———	———	———	2538 185
21-134-40	SNAP RING, Frt. and Rr. Annulus Gear (2)	1942 444	1942 444	1942 444	———
	Frt. Annulus Gear Support	6026 278	6026 278	6026 278	———
21-134-45	WASHER, Frt. Annulus Gear Support Thrust, w/6 Oil Grooves and 1 Outside Tab	2538 696	2538 696	2538 696	———
	PLATE, Rr. Annulus Gear Thrust, w/31 Inside Teeth, 3 23/64" O.D.	———	———	———	2400 580
21-136-0	**TRANSMISSION BANDS**				
21-136-5	BAND, Kickdown	2204 792	2204 792	2204 792	2124 342
21-136-15	STRUT, Kickdown Band	1630 896	1630 896	1630 896	2124 848
	ANCHOR, Kickdown Band	———	———	———	1942 120
21-136-17	SCREW, Kickdown Band Adjusting	1942 477	1942 477	1942 477	2400 389
	NUT, Lock 1/2"-20	124 934	124 934	124 934	124 934
21-136-20	LEVER, Kickdown Band	2125 067	2124 579	2124 579	2125 067
21-136-23	SHAFT, Kickdown Band Lever	1942 132	1942 132	1942 132	1942 132
21-136-30	BAND, Reverse	1942 487	1942 487	2801 818	1942 133
21-136-41	STRUT, Reverse Band	1942 497	1942 497	———	2204 823
21-136-44	LINK, w/ANCHOR, Reverse Band	2464 439	2464 439	———	———
21-136-47	LEVER, w/STEM, Reverse Band	1942 491	1942 491	2801 815	1942 137
	Reverse Band, Short	2464 851	2464 851	———	2892 233
21-136-49	SHAFT, Reverse Band Lever	3410 102	3410 102	3410 102	2124 857
	Reverse Band Reaction	3410 102	3410 102	3410 102	———
21-136-50	SEAL, Reverse Band Reaction Shaft	———	———	1556 385	———
21-136-52	SCREW, Reverse Band Adjusting	1942 543	1942 543	2538 472	1942 141
	NUT	120 369	120 369	120 369	———
21-136-55	SEAL, Reverse Band Lever Shaft	1556 385	1556 385	1556 385	1672 358
21-136-65	DRUM, Reverse, 12T., 24T	2892 728	2892 728	2892 728	———
	12T., 47T	2538 474	2538 474	2538 474	———
	26T (Note 1)	———	———	———	3515 451
21-136-228	CAM and RETAINER PACKAGE, "O" Running Clutch	2808 637	2808 637	2808 637	———
	NOTE 1: Also specify 1 of 3420 100 Race Package				
21-136-229	SCREW, w/WASHER, "O" Running Clutch Cam (7)	1559 489	1559 489	1559 489	———
21-136-232	RACE, ROLLER and SPRING PACKAGE, "O" Running Clutch 24T	3420 023	3420 023	3420 023	———
	47T	2808 668	2808 668	2808 668	———
	26T	———	———	———	3420 100
21-136-233	RETAINER, "O" Running Clutch Spring	———	———	———	2801 426

CARLINES J - Challenger, B - Barracuda; V - Valiant, L - Dart; R - Belvedere - Satellite, W - Coronet - Charger; P - Plymouth, D - Dodge; C - Chrysler, Y - Imperial

AR Indicates use as required.

= Indicates parts not listed in any previous parts book.

Numerals in parentheses ( ) refer to notes.

★ Indicates change or addition.

Printed in U.S.A.
January 1972

AUTOMATIC TRANSMISSION

NOTE: All quantities are one (1) unless otherwise indicated in parenthesis

CODE	TRANSMISSION	3410 777 A904	3410 778 A904	3410 779 A904	3515 814 A727
21-136-0	**TRANSMISSION BANDS Cont'd.**				
21-136-235	ROLLER, "O" Running Clutch				
	(10)	2464 888	2464 888	2464 888	———
	(12)	———	———	———	670 776
21-136-236	SPRING, "O" Running Clutch				
	Roller (10)	2464 446	2464 446	2464 446	———
	(12)	———	———	———	1942 187
21-137-0	**TRANSMISSION SERVOS**				
21-137-5	PISTON, Kickdown Servo	1942 478	1942 478	1942 478	3410 440
	Inner, w/ROD and SEAL	———	———	———	3410 445
	SEAL, Inner	———	———	———	6028 864
	SNAP RING, Inner	———	———	———	6024 336
21-137-6	RETAINER, Kickdown Piston, Inner	———	———	———	3410 437
21-137-8	RING, Kickdown Servo				
	Piston Seal, Small	1672 287	1672 287	1672 287	2124 851
	Large	1636 470	1636 470	1636 470	1942 123
	Kickdown Servo Guide	1636 470	1636 470	1636 470	1942 123
21-137-11	ROD, Kickdown Servo Piston	1942 482	1942 482	1942 482	2124 853
21-137-13	GUIDE, Kickdown Servo	1942 485	1942 485	1942 485	3410 441
21-137-19	SNAP RING, Kickdown Servo	1942 486	1942 486	1942 486	———
	Kickdown Servo Guide	———	———	———	1942 130
21-137-22	SPRING, Kickdown Servo				
	Piston, 7 1/2 Coils	2801 316	2801 316	2801 316	———
	8 Coils	3515 111	3515 111	3515 111	———
	Outer	———	———	———	3410 518
	Inner	———	———	———	3410 444
21-137-35	PISTON, Reverse Servo	2801 271	2801 271	2801 271	2801 281
21-137-41	SPRING, Reverse Servo Cushion	2801 273	2801 273	2801 273	2801 273
21-137-47	PLUG, Reverse Servo Piston	2801 272	2801 272	2801 272	2801 272
	RING, .435" I.D.	6027 153	6027 153	6027 153	6027 153
21-137-50	SEAL, Reverse Servo Piston, Rubber	2464 462	2464 462	2464 462	2464 481
21-137-53	SPRING, Reverse Servo Piston	2801 274	2801 274	2801 274	2801 241
21-137-56	RETAINER, Reverse Servo Piston Spring	2464 463	2464 463	2464 463	———
	Reverse Servo Piston	———	———	———	1942 150
21-137-59	SNAP RING, Reverse Servo Piston Spring Retainer	2464 464	2464 464	2464 464	1942 130
21-137-200	PISTON, Accumulator	1942 153	1942 153	1942 153	3410 908
21-137-202	RING, Accumulator				
	Piston Seal, Small	1941 831	1941 831	1941 831	1941 831
	Large	2124 255	2124 255	2124 255	2124 255
21-137-205	SPRING, Accumulator	2125 109	2125 109	2801 871	3515 079
21-138-0	**TRANSMISSION GOVERNOR**				
21-138-2	REPAIR PACKAGE, Governor	3004 607	3004 606	3004 606	3621 451
21-138-7	SNAP RING, Governor Body	6027 271	6027 271	6027 271	6022 817
21-138-10	SUPPORT, Governor	2538 635	2538 635	2538 635	2538 634
21-138-13	WEIGHT, Governor, Outer	1636 461	1636 461	1636 461	1636 461
	Inner	1636 462	1636 462	1636 462	3515 098
21-138-15	SPRING, Governor Weight	1949 858	2124 662	2124 662	3515 085

AUTOMATIC TRANSMISSION

NOTE: All quantities are one (1) unless otherwise indicated in parenthesis

CODE	TRANSMISSION	3410 777 A904	3410 778 A904	3410 779 A904	3515 814 A727
21-138-0	**TRANSMISSION GOVERNOR Cont'd.**				
21-138-19	SNAP RING, Governor Weight, Outer	1636 465	1636 465	1636 465	1636 465
	Inner	1636 464	1636 464	1636 464	1636 464
21-138-21	LOCK, Governor Body Bolt (2)	2125 024	2125 024	2125 024	2125 024
21-138-23	VALVE, Governor	2124 663	2124 663	2024 663	2124 663
21-138-26	SHAFT, Governor Valve	1556 082	1556 082	1556 082	1556 082
21-138-29	SNAP RING, Governor Valve Shaft (3)	1638 461	1638 461	1638 461	———
	(2)	———	———	———	1638 461
21-138-38	RING, Governor Support Seal, Frt. and Rr. (2)	1942 109	1942 109	1942 109	1942 109
21-139-0	**TRANSMISSION VALVE BODY AND VALVES**				
21-139-4	BODY, w/TRANSFER PLATE	2892 498	2892 498	2892 499	3515 036
	BALL, Check Valve, Small (5)	104 918	104 918	104 918	104 918
	Large 11/32"	147 488	147 488	147 488	147 488
21-139-9	VALVE, Manual	2801 259	2801 259	2801 259	2801 259
21-139-11	VALVE, Limit	———	———	———	3410 560
21-139-12	LEVER, w/INSULATOR, Manual Valve	2801 783	2801 783	2801 783	3410 484
21-139-16	SEAL, Manual Valve Shaft	2466 842	2466 842	2466 842	2466 842
21-139-19	BODY, Limit Valve	———	———	———	3410 564
21-139-24	SPRING, Manual Valve Lever Detent	2466 615	2466 615	2466 615	2466 615
	Ball 11/32"	147 488	147 488	147 488	147 488
21-139-30	VALVE, Throttle	2892 349	2892 349	2892 349	2892 349
21-139-33	SPRING, Throttle Valve	2892 350	2892 350	2892 350	2892 350
21-139-34	PIN, Manual Valve Lever Spring	2466 756	2466 756	2466 756	2466 756
21-139-46	WASHER, Throttle Valve Lever Shaft	2538 062	2538 062	2538 062	2538 062
21-139-47	SEAL, Throttle Lever Shaft, 11/16" O.D.	2466 548	2466 548	2466 548	2466 548
21-139-49	E-RING, Throttle Valve Lever Shaft	6025 857	6025 857	6025 857	6025 857
21-139-50	LEVER, Throttle Valve	2466 854	2466 854	2466 854	2466 854
21-139-60	COVER, Throttle Pressure	2801 198	2801 198	———	———
	Screw, w/Washer, Long	9418 651	9418 651	———	———
21-139-63	PLUG, Throttle Pressure Regulator Valve Throttle Pressure	1942 245	1942 245	1942 245	1942 245
	Regulator Valve Line Pressure	1942 218	1942 218	1942 218	1942 218
21-139-64	SLEEVE, Regulator Valve Line Pressure Plug	1942 213	1942 213	1942 213	1942 213
21-139-67	VALVE PACKAGE, Regulator	2240 685	2240 685	2240 685	2240 685
21-139-68	SPRING, Regulator Valve	2124 734	2124 734	2124 734	2124 734
	Pressure Relief	2892 846	2892 846	2892 846	2892 846
	BALL, Pressure Relief 3/16"	147 483	147 483	147 483	147 483
21-139-71	RETAINER, Regulator Valve Spring	2204 975	2204 975	2204 975	2204 975

CARLINES J - Challenger, B - Barracuda; V - Valiant, L - Dart; R - Belvedere - Satallite, W - Coronet - Charger; P - Plymouth, D - Dodge; C - Chrysler, Y - Imperial

AR Indicates use as required.

# Indicates parts not listed in any previous parts book.

Numerals in parentheses ( ) refer to notes.

★ Indicates change or addition.

Printed in U.S.A.
January 1972

AUTOMATIC TRANSMISSION

NOTE: All quantities are one (1) unless otherwise indicated in parenthesis

CODE	TRANSMISSION	3410 777 A904	3410 778 A904	3410 779 A904	3515 814 A727
21-139-0	**TRANSMISSION VALVE BODY AND VALVES Cont'd.**				
21-139-74	SCREW, Line Pressure Adjusting	2124 736	2124 736	2124 736	2124 736
	Throttle Pressure Adjusting	6023 343	6023 343	6023 343	6023 343
21-139-76	NUT, Throttle Pressure Adjusting Screw Lock	2892 353	2892 353	2892 353	2892 353
	Line Pressure Adjusting Screw	2124 737	2124 737	2124 737	2124 737
21-137-78	VALVE, Kickdown	2892 351	2892 351	2892 351	2892 351
	PLUG, Kickdown Detent	2892 352	2892 352	2892 352	2892 352
21-139-95	VALVE, Shuttle	1854 275	1854 275	1854 275	1854 275
	PLUG, Shuttle Valve	1854 274	1854 274	1854 274	1854 274
21-139-98	SNAP RING, Shuttle Valve	6025 857	6025 857	6025 857	6025 857
21-139-101	SPRING, Shuttle Valve, 16 Coils	2124 697	2124 697	2124 697	———
	15 Coils	3410 319	3410 319	3410 319	———
		———	———	———	3515 047
21-139-105	VALVE, 1-2 Shift	1941 602	1941 602	1941 602	3410 881
	1-2 Shift Control	———	———	———	3410 912
	PLUG, 1-2 Shift Valve	3410 886	3410 886	3410 886	3410 826
	VALVE, 2-3 Shift	1941 600	1941 600	1941 600	3515 132
	PLUG, 2-3 Shift Valve	1941 601	1941 601	1941 601	2892 990
21-139-108	SPRING, 1-2 Shift Valve	2204 547	2204 547	2204 547	———
	2-3 Shift Valve	1942 231	1942 231	1942 231	———
	1-2 Shift Control	———	———	———	3410 517
21-139-117	VALVE, Torque Conv. Control	2124 256	2124 256	2124 256	2124 256
21-139-118	SPRING, Torque Conv. Control Valve	2124 257	2124 257	2124 257	2124 257
21-139-135	COVER, Reg. Valve	2205 034	2205 034	2205 034	2205 034
	Shift Valve Plug	2538 662	2538 662	2538 662	3410 378
	Shuttle Valve	1942 227	1942 227	1942 227	3410 889
	Shift Valve	———	———	2801 244	2801 244
	Limit Valve	———	———	———	2892 944
	SCREW, w/WASHER, Limit Valve Cover (3)	———	———	———	6029 272
	Shuttle Valve Cover	———	———	———	6029 271
21-139-140	PLATE, Valve Body	2892 901	2892 901	2892 902	3515 045
	SCREW, w/WASHER, Valve Body Plate to Transfer Plate (3)	6029 271	6029 271	6029 271	———
21-139-147	PLATE, Transfer	2801 295	2801 295	2801 295	3410 435
	SCREW, w/WASHER, Plate to Valve Body (14)	6027 391	6027 391	6027 391	6027 391
21-139-154	SUPPORT, Transfer Plate	1942 237	1942 237	1942 237	3410 380

NOTE: All quantities are one (1) unless otherwise indicated in parenthesis.

CODE	TRANSMISSION	3515 852 A94-1
21-01-1	**TRANSMISSION SETS OR PACKAGES**	
21-01-3	SEAL and GASKET PACKAGE	= 3621 459

CARLINES: J - Challenger, B - Barracuda, V - Valiant, L - Dart, R - Belvedere - Satallite, W - Coronet - Charger, P - Plymouth, D - Dodge, C - Chrysler, Y - Imperial

AR Indicates use as required.

Numerals in parentheses ( ) refer to notes.

# Indicates parts not listed in any previous parts book.

★ Indicates change or addition.

Printed in U.S.A.
January 1972

AUTOMATIC TRANSMISSION

NOTE: All quantities are one (1) unless otherwise indicated in parenthesis.

CODE	TRANSMISSION	3515 852 A94-1
21-03-0	**TRANSMISSION CASE**	
21-03-1	CASE	3410 503
	SCREW, w/WASHER, Cover (3)	6023 092
21-04-0	**TRANSMISSION CASE EXTENSION**	
21-04-1	EXTENSION	= 3515 579
	SCREW, w/WASHER (6)	6023 514
21-04-2	GASKET	2466 954
	Output Shaft Brg. Inspection Cover	2801 398
21-04-8	COVER, Output Shaft Brg. Inspection	2466 957
	SCREW, 1/4" - 20 x 5/8" (2)	6026 884
21-04-11	BUSHING	2801 726
21-05-0	**TRANSMISSION OUTPUT SHAFT**	
21-05-1	SHAFT	3410 949
21-05-2	BEARING	3410 465
21-05-8	SNAP RING, Brg., Outer	2400 185
	Brg.	6028 901
21-05-12	SEAL, Yoke	2400 163
21-05-19	SNAP RING .040" thk. (AR)	6026 289
	.048" thk. (AR)	6026 290
	thk. (AR)	6026 291
21-05-35	WASHER .052" thk. (AR)	2538 669
	.068" thk. (AR)	2538 670
	.083" thk. (AR)	2538 671
21-117-0	**TRANSMISSION OIL FILTER**	
	NOTE: See Code 5-53-3	
21-117-1	FILTER or STRAINER	2466 849
	SCREW, w/WASHER (3)	6026 390
21-118-0	**TRANSMISSION OIL PUMP**	
21-118-6	ROTOR PACKAGE, Frt. Oil Pump	2808 685
21-118-40	HOUSING, w/BUSHING, Frt. Pump	2538 206
	SCREW, w/WASHER	6023 943
21-118-45	SEAL, Frt. Pump Hsg., 8 17/64" O.D.	2204 709
21-118-47	BUSHING, Frt. Pump Hsg.	2466 796
21-119-0	**TRANSMISSION OIL PAN**	
21-119-3	PAN, Oil	
	SCREW, w/WASHER (14)	6023 355
21-119-5	GASKET	2205 299
21-129-0	**TRANSMISSION INPUT SHAFT AND TORQUE CONVERTER REACTION SHAFT**	
21-129-5	SHAFT, Input	2538 407
	SNAP RING	6022 859

CARLINES J - Challenger, B - Barracuda, V - Valiant, L - Dart, R - Belvedere - Satallite, W - Coronet - Charger, P - Plymouth, D - Dodge, C - Chrysler, Y - Imperial

AR Indicates use as required.

= Indicates parts not listed in any previous parts book.

Numerals in parentheses ( ) refer to notes.

★ Indicates change or addition.

Printed in U.S.A. January 1972

AUTOMATIC TRANSMISSION

NOTE: All quantities are one (1) unless otherwise indicated in parenthesis.

CODE	TRANSMISSION	3515 852 A94-1

21-129-0 TRANSMISSION INPUT SHAFT AND TORQUE CONVERTER REACTION SHAFT Cont'd.

21-129-7	RING, Input Shaft Seal	1941 831
21-129-10	SHAFT, w/SUPPORT Reaction	2538 409
	BALL (2)	104 918
21-129-13	RING, Reaction Shaft Support Seal (2)	1942 389
21-129-23	BUSHING, Reaction Shaft	2801 728
21-129-24	GASKET, Reaction Shaft Support, 8 15/64" O.D.	1942 390

21-133-0 TRANSMISSION CLUTCH

21-133-7	RETAINER, w/BUSHING, Frt. Clutch	3410 920
	Rr. Clutch	2892 422
21-133-10	BUSHING, Frt. Clutch Retainer	2801 727
21-133-15	PISTON, Frt. Clutch	2892 420
	Rr.	2892 554
	BALL, Clutch Check Valve	147 483
21-133-17	SEAL, Frt. Clutch Piston, Inner	1942 396
	Outer	1942 397
	Rr. Clutch Piston, Inner	2538 510
	Outer	2538 695
	Rr. Clutch Retainer Ring	1323 593
21-133-20	SPRING, Frt. Clutch Piston	2801 844
	Rr.	1942 414
21-133-22	RETAINER, Frt. Clutch Piston Spring	1942 399
	BALL, Check Valve	147 483
21-133-25	SNAP RING, Rr. Clutch Retainer, 5 1/4" O.D., .060" thk. (AR)	1942 421
	.076" thk. (AR)	1942 423
	.098" thk. (AR)	2538 617
21-133-31	SPRING, Rr. Clutch Wave	2801 626
21-133-36	DISC, Frt. Clutch (4)	2400 625
	Rr. (4)	2892 551
21-133-38	PLATE, Frt. Clutch (4)	1942 403
	Rr. (3)	1942 403
21-133-39	PLATE, Frt. Clutch Pressure	2801 969
	Rr. Clutch Pressure, Frt.	2466 281
	Rr. Rr.	2801 969
21-133-40	GEAR, w/BUSHING, Sun	1942 434
21-133-42	SHELL, Sun Gear Driving	1942 438
21-133-43	SNAP RING, Frt. Clutch, 2 7/16" O.D., Inner	1942 400
	Outer	3410 571
21-133-46	RING, Sun Gear Driving Shell Lock (2)	1942 439

AUTOMATIC TRANSMISSION

NOTE: All quantities are one (1) unless otherwise indicated in parenthesis.

CODE	TRANSMISSION	3515 852 A94-1

21-133-0 TRANSMISSION CLUTCH Cont'd.

21-133-47	PLATE, Sun Gear Driving Shell Thrust, w/28 Tangs (2)	3410 540
21-133-48	WASHER, Sun Gear Driving Shell Thrust, w/4 Outside Tabs and 4 Oil Grooves (2)	2538 515
21-133-62	SPACER, Rr. Clutch Piston Spring	2801 162

21-134-0 TRANSMISSION FRONT AND REAR PLANET PINION CARRIER AND COMPONENTS

21-134-5	CARRIER, w/PINION and WASHER, Frt.	2538 523
	Rr.	2538 522
21-134-8	PINION, Frt. Planet (4)	2466 759
	Rr. (4)	2466 759
21-134-9	SHAFT, Frt. (4)	2801 363
	Rr. (4)	2801 363
21-134-10	WASHER, Frt. and Rr. (16)	2466 758
21-134-11	ROLLER, Frt. and Rr. (152)	2466 756
21-134-12	RING, Frt. and Rr. Planet Pinion Roller Thrust, 39/64" O.D. (16)	2466 757
21-134-36	SUPPORT, Frt. Annulus Gear	2538 574
	Rr.	2892 477
21-134-38	GEAR, Frt. and Rr. Annulus (2)	1942 443
21-134-40	SNAP RING, Frt. and Rr. Annulus Gear (2)	1942 444
	Frt. Annulus Gear Support	6026 278
21-134-45	WASHER, Frt. Annulus Gear Support Thrust, w/6 Oil Grooves and 1 Outside Tab	2538 696

21-136-0 TRANSMISSION BANDS

21-136-5	BAND, Kickdown	2204 792
21-136-15	STRUT, Kickdown Band	3515 084
21-136-17	SCREW, Kickdown Band Adjusting	1942 477
	NUT, Lock 1/2"-20	124 934
21-136-20	LEVER, Kickdown Band	2124 666
21-136-23	SHAFT, Kickdown Band Lever	1942 132
21-136-30	BAND, Reverse	2801 818
21-136-47	LEVER, w/STEM, Reverse Band	2801 815
21-136-49	SHAFT, Reverse Band Lever	3410 102
	Reverse Band Reaction	3410 102
21-136-50	SEAL, Reverse Band Lever Shaft	1556 385

AUTOMATIC TRANSMISSION

NOTE: All quantities are one (1) unless otherwise indicated in parenthesis.

CODE	TRANSMISSION	3515 852 A94-1
21-136-0	**TRANSMISSION BANDS Cont'd.**	
21-136-50	SEAL Cont'd.	
	Reverse Band Reaction Shaft	1556 385
21-136-52	SCREW, Reverse Band Adjusting	2538 472
	NUT	120 369
21-136-65	DRUM, Reverse, 12T., 24T	2892 728
21-136-228	CAM and RETAINER PACKAGE, "O" Running Clutch	2808 637
21-136-229	SCREW, w/WASHER, "O" Running Clutch Cam (7)	1559 489
21-136-232	RACE, ROLLER and SPRING PACKAGE, "O" Running Clutch 24T	3420 023
21-136-225	ROLLER, "O" Running Clutch (10)	2464 888
21-136-236	SPRING, "O" Running Clutch Roller (10)	2464 446
21-137-0	**TRANSMISSION SERVOS**	
21-137-5	PISTON, Kickdown Servo	3410 333
21-137-8	RING, Kickdown Servo Piston Seal, Small	3410 374
	Large	3410 372
	Kickdown Servo Guide	3410 372
21-137-11	ROD, Kickdown Servo Piston	1942 482
21-137-13	GUIDE, Kickdown Servo	3410 332
21-137-19	SNAP RING, Kickdown Servo	6028 863
21-137-22	SPRING, Kickdown Servo Piston	
	Inner	3515 111
	Outer	3515 412
21-137-35	PISTON, Reverse Servo	2801 271
21-137-41	SPRING, Reverse Servo Cushion	2801 872
21-137-47	PLUG, Reverse Servo Piston	2801 272
	RING, .435" I.D.	6027 153
21-137-50	SEAL, Reverse Servo Piston, Rubber	2464 462
21-137-53	SPRING, Reverse Servo Piston	2801 274
21-137-56	RETAINER, Reverse Servo Piston Spring	2464 463
21-137-59	SNAP RING, Reverse Servo Piston Spring Retainer	2464 464
21-137-200	PISTON, Accumulator	3410 908
21-137-202	RING, Accumulator Piston Seal, Small	1941 831
	Large	2124 255
21-137-205	SPRING, Accumulator, 5 1/2 Coils, 1.07 I.D.	3515 411
21-138-0	**TRANSMISSION GOVERN**	
21-138-2	REPAIR PACKAGE, Governor	3621 454
21-138-7	SNAP RING, Governor Body	6027 271

AUTOMATIC TRANSMISSION

NOTE: All quantities are one (1) unless otherwise indicated in parenthesis.

CODE	TRANSMISSION	3515 852 A94-1
21-138-0	**TRANSMISSION GOVERNOR Cont'd.**	
21-138-10	SUPPORT, Governor	2538 635
21-138-13	WEIGHT, Governor, Outer	1636 461
	Inner 13/16" Lgh.	3515 478
	51/64" Lgh.	3515 098
21-138-15	SPRING, Governor Weight	3515 085
21-138-19	SNAP RING, Governor	
	Weight, Outer	1636 465
	Inner	1636 464
21-138-21	LOCK, Governor Body	
	Bolt (2)	2125 024
21-138-23	VALVE, Governor .859" Lgh.	≠ 3515 479
21-138-26	SHAFT, Governor Valve	1556 082
21-138-29	SNAP RING, Governor Valve	
	Shaft (2)	1638 461
21-138-38	RING, Governor Support	
	Seal, Frt. and Rr. (2)	1942 109
21-139-0	**TRANSMISSION VALVE BODY AND VALVES**	
21-139-4	BODY, w/Transfer PLATE	3410 509
	BALL, Check Valve,	
	Small (5)	104 918
21-139-9	VALVE, Manual	2801 259
21-139-11	VALVE, Limit	3410 560
21-139-12	LEVER, w/INSULATOR, Manual	
	Valve	3410 484
21-139-16	SEAL, Manual Valve	
	Shaft	2466 842
21-139-19	BODY, Limit Valve	3410 564
21-139-24	SPRING, Manual Valve	
	Lever Detent	2466 615
21-139-30	VALVE, Throttle	2892 349
21-139-33	SPRING, Throttle Valve	2892 350
21-139-34	PIN, Manual Valve	
	Lever Spring	2466 756
21-139-46	WASHER, Throttle Valve	
	Lever Shaft	2538 062
21-139-47	SEAL, Throttle Lever	
	Shaft 11/16" O.D.	2466 548
21-139-49	"E"-RING, Throttle Valve	
	Lever Shaft	6025 857
21-139-50	LEVER, Throttle Valve	2466 854
21-139-63	PLUG, Regulator Valve	
	Throttle Pressure	1942 245
	Regulator Valve Line	
	Pressure	1942 218
	Throttle Pressure	2892 943
21-139-64	SLEEVE, Regulator Valve	
	Line Pressure Plug	1942 215
	Shuttle Valve, Plastic	3410 312
21-139-67	VALVE PACKAGE, Regulator	2240 685
21-139-68	SPRING, Regulator Valve	2124 734
	Pressure Relief	2892 846
	Limit Valve	3515 251
	BALL, Pressure Relief 3/16"	147 500
21-139-71	RETAINER, Regulator	
	Valve Spring	2204 975
	Limit Valve Spring	2892 947

AUTOMATIC TRANSMISSION

NOTE: All quantities are one (1) unless otherwise indicated in parenthesis.

CODE	TRANSMISSION	3515 852 A94-1
21-139-0	**TRANSMISSION VALVE BODY AND VALVES Cont'd.**	
21-139-74	SCREW, Line Pressure Adjusting	2124 736
	Throttle Pressure Adjusting	6023 343
21-139-76	NUT, Throttle Pressure Adjusting Screw Lock	2892 353
	Line Pressure Adjusting Screw	2124 737
21-139-78	VALVE, Kickdown	2892 351
	PLUG, Kickdown Detent	2892 352
21-139-95	VALVE, Shuttle, 2 7/32" Lgh.	2892 926
	PLUG, Shuttle Valve, 29/64" Lgh.	2892 927
21-139-98	SNAP RING, Shuttle Valve	6025 857
21-139-101	SPRING, Shuttle Valve, Primary	3515 047
	Secondary	3515 048
21-139-105	VALVE, 1-2 Shift	3410 881
	1-2 Shift Control	3410 912
	2-3 Shift	3515 132
	PLUG, 1-2 Shift Valve	3515 948
	2-3 Shift	2892 990
21-139-108	SPRING, 1-2 Shift Control Valve	3410 517
21-139-117	VALVE, Torque Conv. Control	2124 256
21-139-118	SPRING, Torque Conv. Control Valve	2124 257
21-139-135	COVER, Limit Valve	2892 944
	Shuttle Valve	3410 889
	Shift Valve Plug	3410 378
	Regulator Valve	2205 034
	SCREW, w/WASHER, Limit Valve, Cover (3)	6028 785
	Regulator Valve Cover (2)	6029 271
	Shift Valve Cover (6)	6029 271
21-139-140	PLATE, Valve Body	3410 512
	SCREW, w/WASHER, Valve Body Plate to Transfer Plate (2)	6029 271
21-139-147	PLATE, Transfer	3410 435
21-139-154	SUPPORT, Transfer Plate	3410 380
	SCREW, w/WASHER (2)	6029 271

NOTES

CARLINES J - Challenger, B - Barracuda, V - Valiant, L - Dart, R - Belvedere - Satallite, W - Coronet - Charger, P - Plymouth, D - Dodge, C - Chrysler, Y - Imperial

AR Indicates use as required.

Numerals in parentheses ( ) refer to notes.

Printed in U.S.A.

# Indicates parts not listed in any previous parts book.

★ Indicates change or addition.

January 1972

GROUP 22 - WHEELS

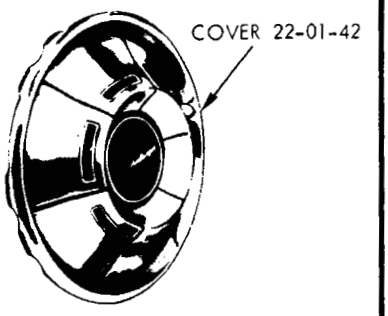

2944 433 CHALLENGER

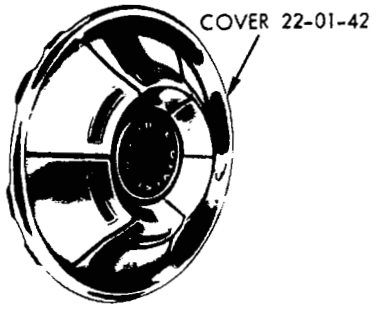

2944 435 CORONET AND DART

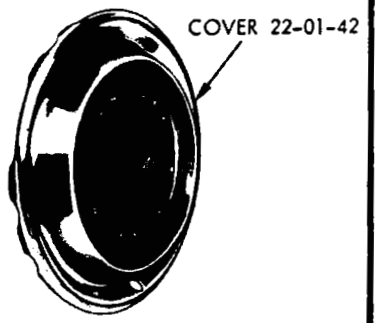

2944 431 PLYMOUTH

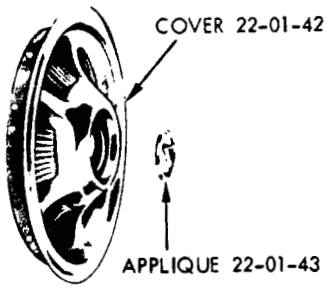

2944 441 CORONET AND CHALLENGER

3461 419 (15") PLYMOUTH AND DODGE

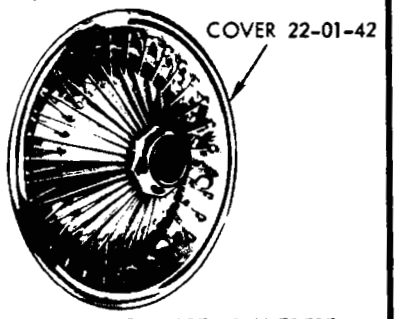

2944 400 (14") VALIANT, DART, BELVEDERE, CORONET, BARRACUDA AND CHALLENGER

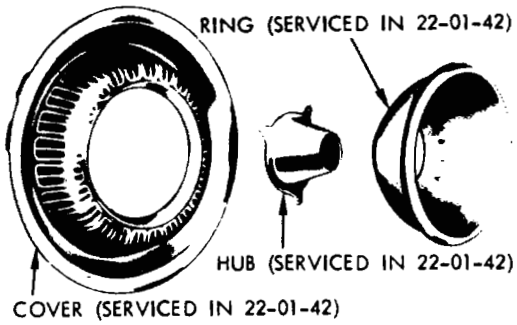

2881 775 PLYMOUTH

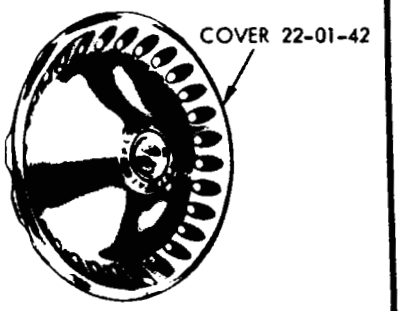

2944 432 BELVEDERE AND BARRACUDA

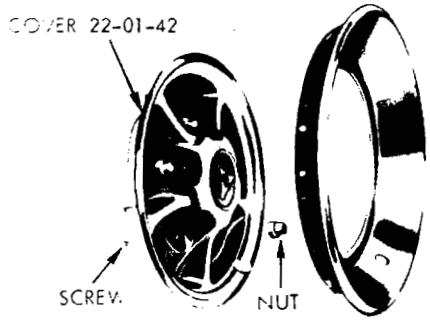

2944 092 DART

19a3048 A

WHEEL COVERS

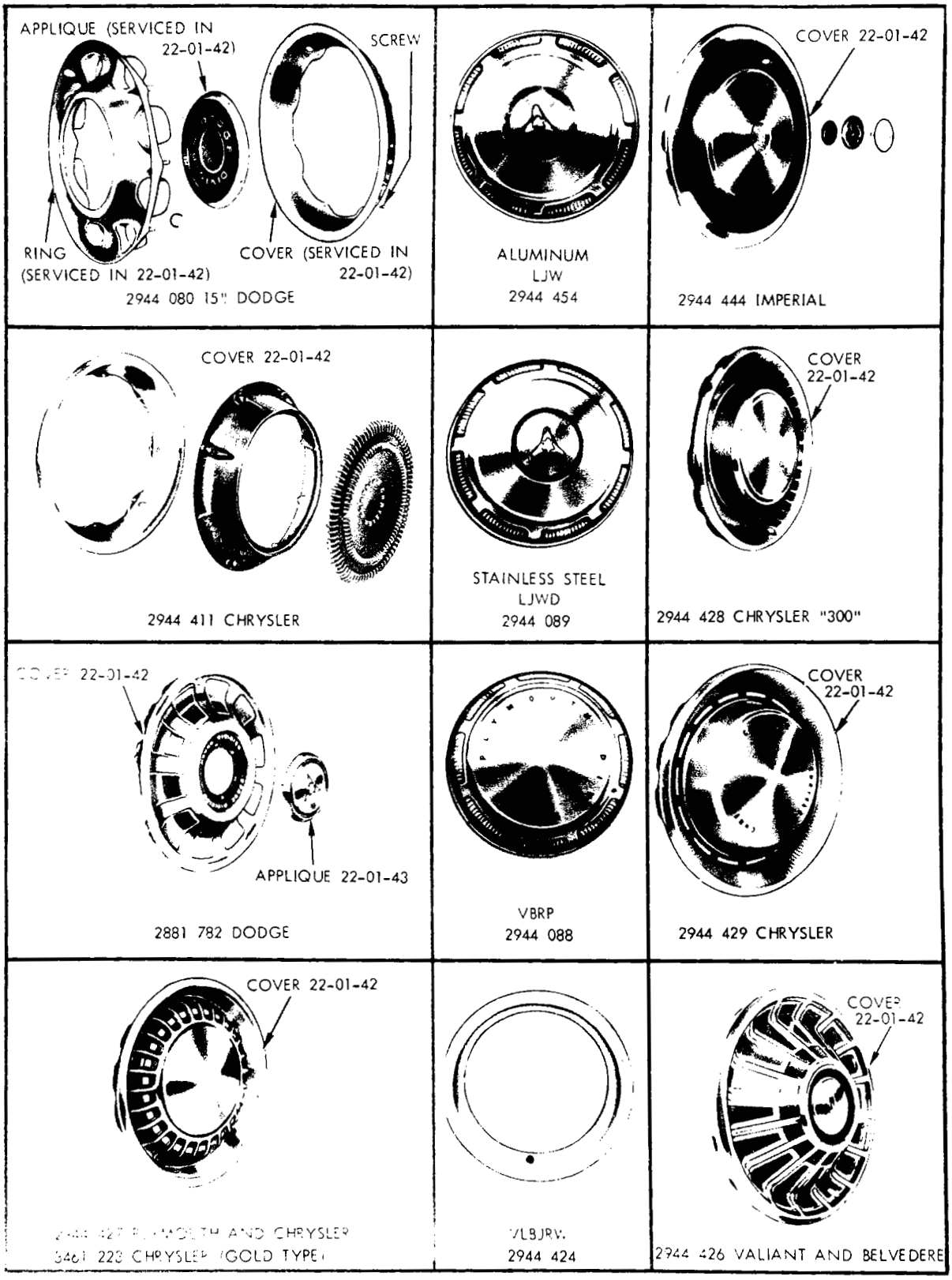

19a3049 C

WHEEL COVERS

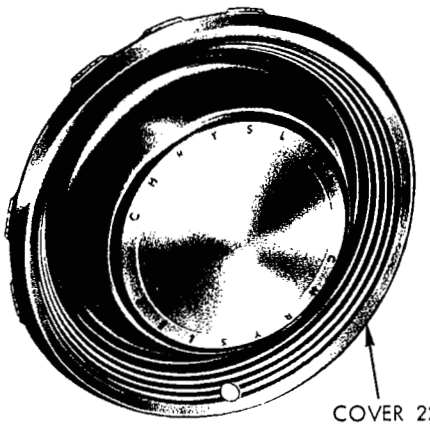

3461 410
CHRYSLER NEWPORT

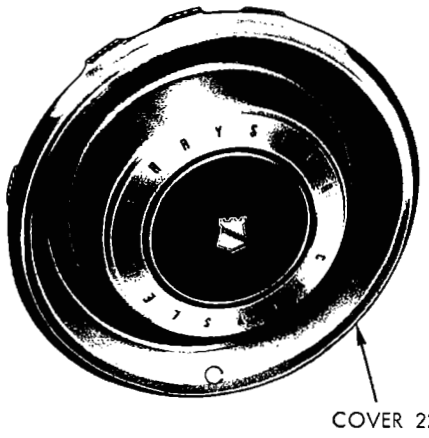

3461 413
CHRYSLER "300"

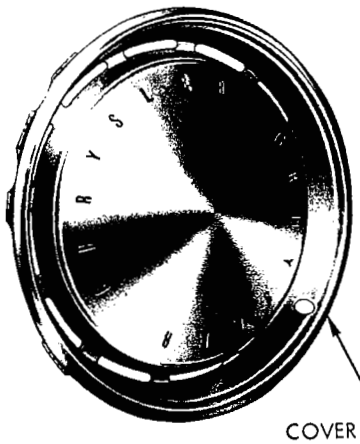

3461 416
CHRYSLER NEW YORKER AND STATION WAGON

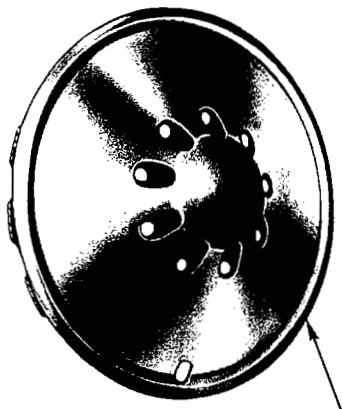

3461 401
VALIANT, BARRACUDA AND SATELLITE

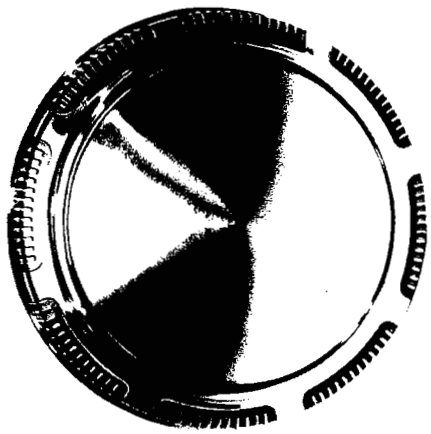

3461 450 V-B-R-P

19a3465A

WHEEL COVERS

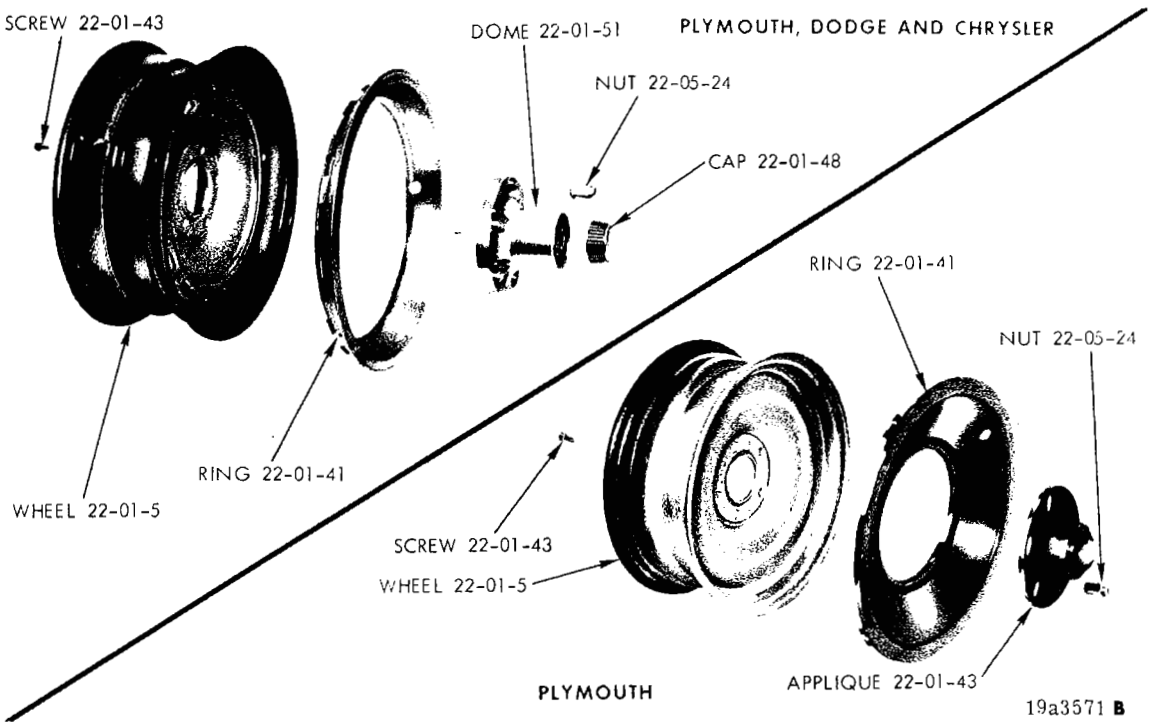

WHEELS

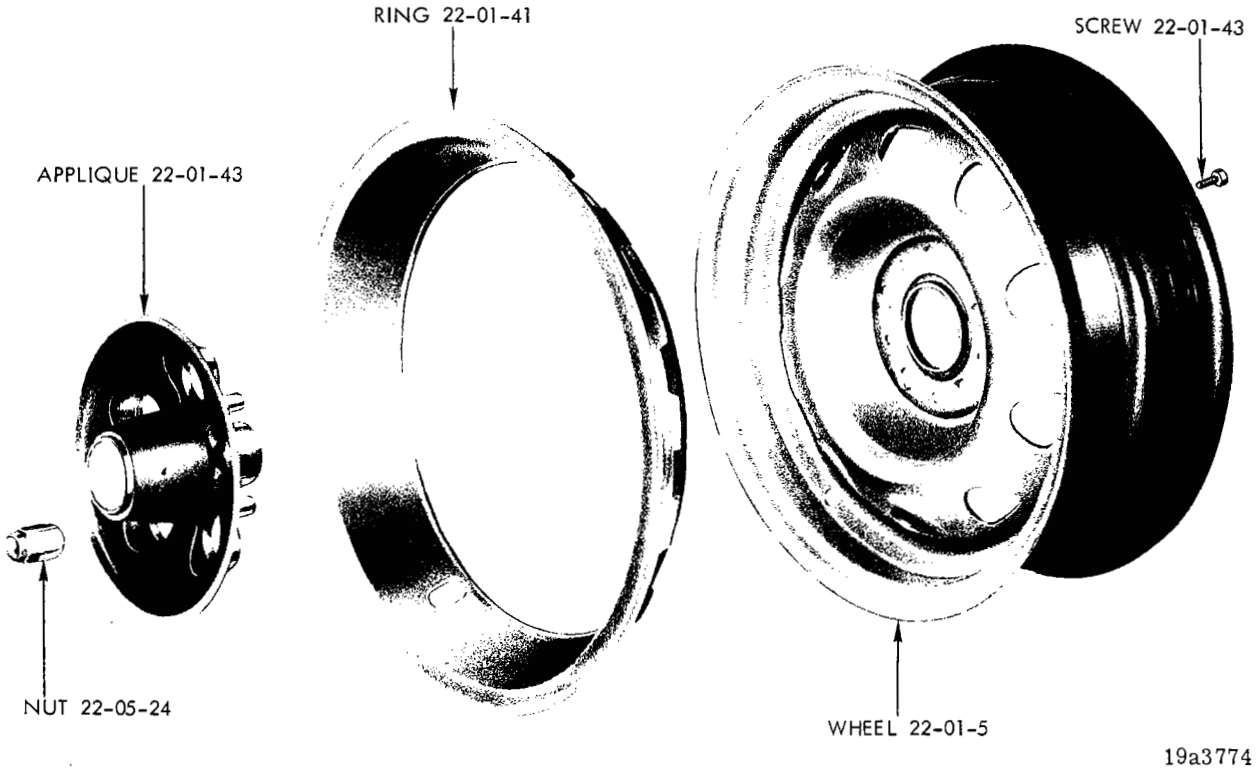

RALLYE WHEEL - VALIANT, DART, BARRACUDA, CHALLENGER, SATELLITE AND CORONET

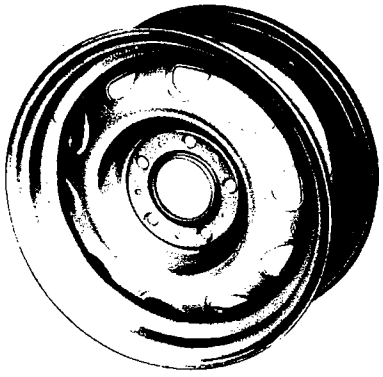

2944 252 (1970) 2944 388 14" (1971)
STYLED ROAD WHEEL 14x5.50
CLASS 1 RALLYE TYPE
2944 390 15" (1971)

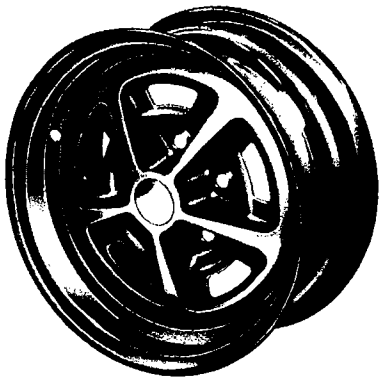

2944 474
STYLED ROAD WHEEL 14x5.50
CLASS 2 - CHROME

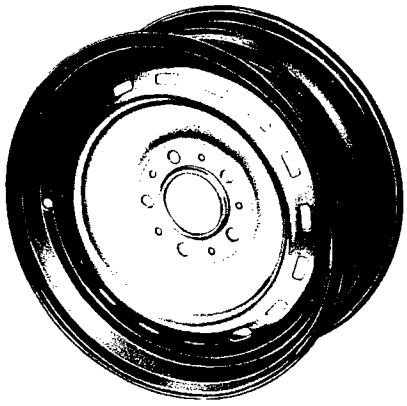

2944 394 (1970) 3461 061 (1971)
STYLED ROAD WHEEL 15x6.00
CLASS 2 CHROME PLATE DISC
16 SLOTS

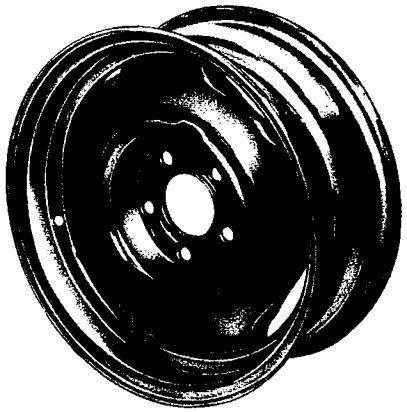

3004 989
WHEEL 15x5.50 PAINTED

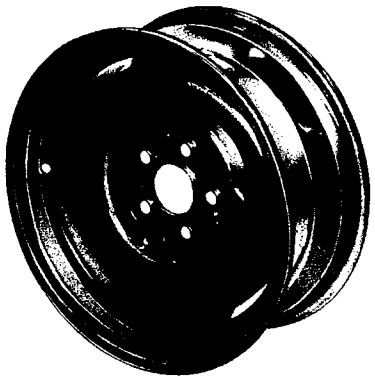

3420 965
WHEEL 14x5.50 NORRIS
THERMADOR TYPE
PAINTED

WHEEL MEASUREMENTS

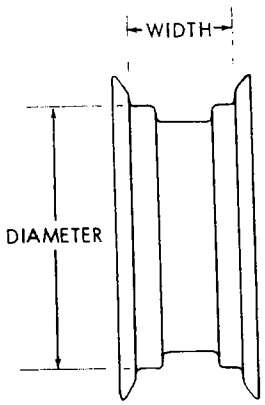

19a3321 A

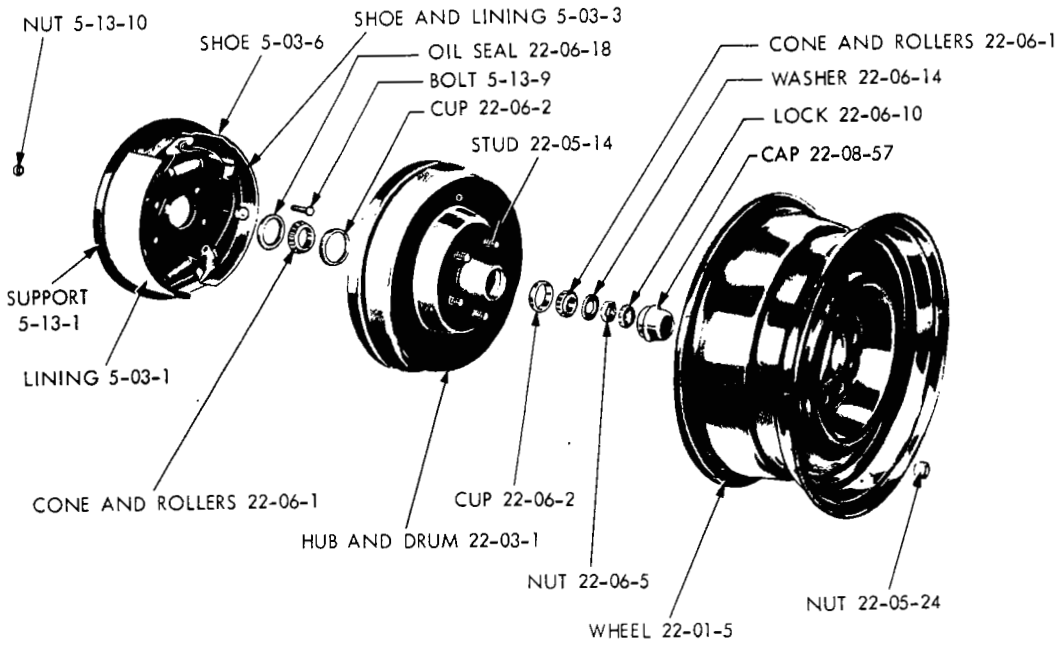

19a3230

FRONT WHEEL

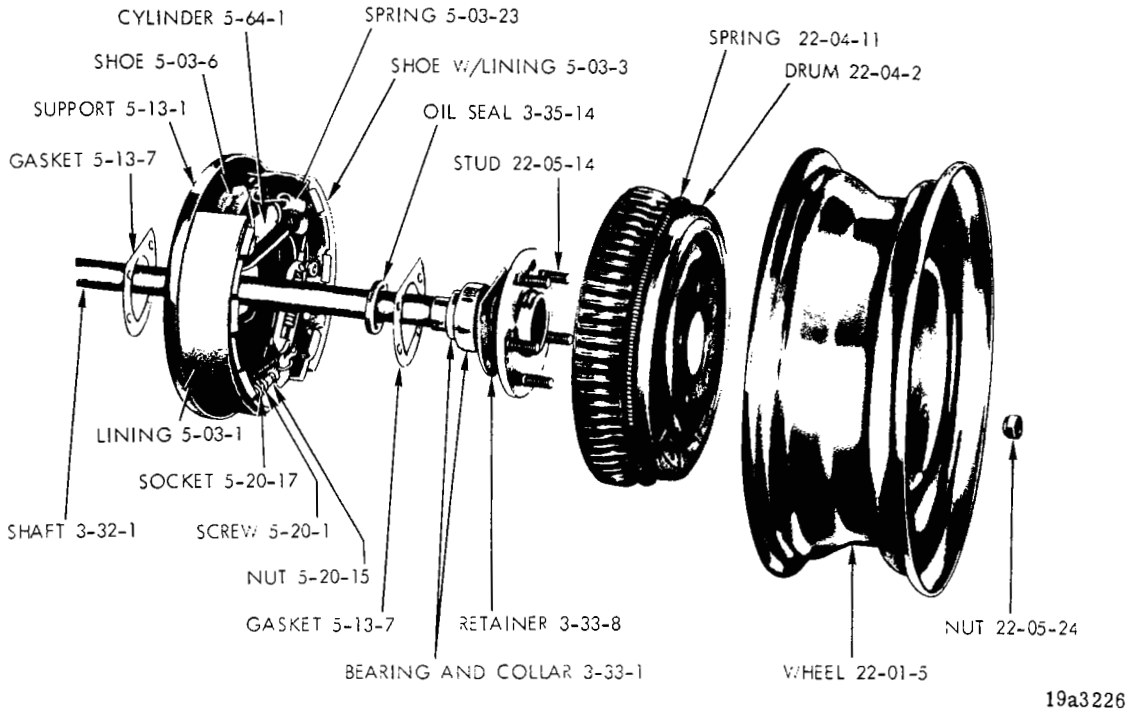

19a3226

REAR WHEEL

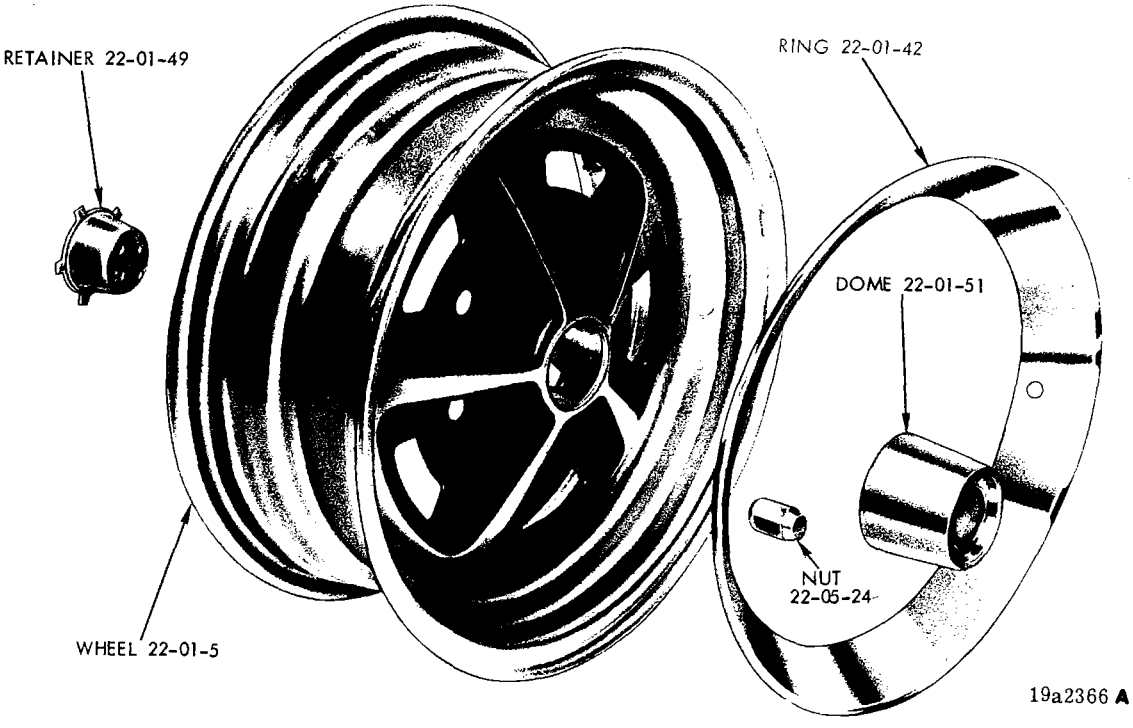

CHROME WHEEL - BARRACUDA, CHALLENGER, BELVEDERE, SATELLITE, CORONET AND CHARGER

NOTES

NOTES

22-01-0 WHEELS

CODE	PART NAME	ENG. TYPE OR CU.IN.	V 1-2	B J 1-2	L 1-2	R 1-2	W 1-2	P 1-2	D 1-2	C 1	C 2	C 3	Y 1	PART NUMBER
22-01-5	WHEELS													
	14 x 4.50 Painted		5	—	5	—	—	—	—	—	—	—	—	2660 308
	14 x 5.00 Painted		—	5	—	5	5	—	—	—	—	—	—	3420 976
	14 x 5.50 Painted		5	—	5	—	—	—	—	—	—	—	—	2660 312
	14 x 5.50 Painted		—	5	—	5	5	—	—	—	—	—	—	3420 977
	14 x 5.50 Painted - Norris Thermadore		5	—	5	—	—	—	—	—	—	—	—	3420 965
	14 x 5.50 Spare, w/Decal		—	1	—	1	1	—	—	—	—	—	—	2944 395
	14 x 5.50 Styled Wheel, Class 1		4	—	4	—	—	—	—	—	—	—	—	2944 388
	14 x 5.50 Styled Wheel, Class 1		—	4	—	4	4	—	—	—	—	—	—	2944 252
	14 x 5.50 Styled Wheel, Class 2		—	4	—	4	4	—	—	—	—	—	—	2944 474
	14 x 6.00 Styled Wheel Class 2		—	—	—	4	4	—	—	—	—	—	—	#3461 359
	14 x 6.00 Painted		—	5	—	5	5	—	—	—	—	—	—	3420 978
	15 x 5.00		—	—	—	—	—	5	—	—	—	—	—	3004 988
	15 x 5.00 Heavy Duty		—	—	—	—	—	5	—	—	—	—	—	2944 149
	15 x 5.50 Painted		—	—	—	—	—	5	5	5	5	5	—	3004 989
	15 x 6.00 Painted		—	—	—	—	—	5	5	5	5	5	—	3004 987
	15 x 6.00 Painted - Heavy Duty		—	—	—	5	5	5	5	5	5	5	—	2944 169
	15 x 6.00 Painted - Heavy Duty		—	—	—	—	—	5	5	5	5	5	—	3461 420
	15 x 6.00 Painted-Extra Heavy Duty		—	—	—	—	—	5	5	5	5	5	—	3461 421
	15 x 6.00 Chrysler 300 H only		—	—	—	—	—	—	—	—	5	—	—	3571 375
	15 x 6.00 Painted		—	—	—	—	—	—	—	—	—	—	5	2944 352
	15 x 6.00 Styled Wheel, Class 1, 16 Slots	70	—	—	—	—	—	5	—	—	—	—	—	3461 061
	15 x 6.00 Styled Wheel, Class 1,	71	—	—	—	—	—	5	—	—	—	—	—	3461 238
	15 x 6.00 Styled Wheel, Class 2, 16 Slots		—	—	—	—	—	4	4	4	4	4	—	2944 394
	15 x 6.50 Painted, exc. Sta. Wagon		—	—	—	—	—	5	5	5	5	5	—	3004 990
	15 x 6.50 Painted		—	—	—	—	—	5	—	—	—	—	—	3004 990
	15 x 6.50 Painted, Sta. Wgn.		—	—	—	—	—	—	5	—	—	—	—	3004 990
	15 x 6.50 Painted, Sta. Wagon		—	—	—	—	—	5	5	5	5	5	—	2944 155
	15 x 7.00 Painted		—	5	—	5	5	—	—	—	—	—	—	2944 450
	15 x 7.00 Styled Wheel, Class 1		—	5	—	5	5	—	—	—	—	—	—	2944 390
22-01-41	RING, Wheel Trim													
	Styled Road Wheel-Class 1-11		4	4	4	4	4	—	—	—	—	—	—	2944 424
	E60 or F60 15" Tire Chrome	70	—	4	—	4	4	—	—	—	—	—	—	3461 043
	Brushed Chrome Finish		—	4	—	4	4	—	—	—	—	—	—	3461 222
			—	—	—	—	—	4	4	4	4	4	—	3461 012
	Styled Class 1 Use w/Wheel 3461238	71	—	—	—	—	—	4	—	—	—	—	—	3461 234
	NOTE: For Illustration See Wheel Covers Illustrated at Start of GR. 22.													
22-01-42	COVER, Wheel — For replacement parts, refer to Wheel Cover Illustration Pages.													
22-01-43	APPLIQUE, Wheel Cover, J, W, Only	70	—	4	—	—	4	—	—	—	—	—	—	2944 443
	D, Only		—	—	—	—	—	—	4	—	—	—	—	2881 751
	Applique and Decal Assy.	70	4	—	4	—	—	—	—	—	—	—	—	3461 065
	Applique and Decal Assy.	71	4	—	4	—	—	—	—	—	—	—	—	3461 351
		71	—	4	—	4	4	—	—	—	—	—	—	3461 352
	Applique and Decal Assy.	70	—	4	—	4	4	—	—	—	—	—	—	3461 066
	Applique Styled Wheel	71	—	—	—	—	—	4	—	—	—	—	—	3461 235
	Applique, Wheel Cover, Canada Only		—	—	—	—	—	—	—	—	—	—	4	2944 446
	Decal, Wheel	70	—	—	—	—	—	—	—	—	4	—	—	3571 252
	Screw, Applique to Wheel		AR	AR	AR	AR	AR	AR	AR	AR	AR	AR	—	#6029 190
22-01-46	STEM, Valve Coll. Spare 1 1/4" Lgh.		—	1	—	1	1	—	—	—	—	—	—	3461 052
	EXTENSION PACKAGE, Valve Stem													
	1/2" LGH.		1	1	1	1	1	1	1	1	1	1	—	2660 315
	3/4" LGH, V, R, B, Only		1	1	—	1	—	—	—	—	—	—	—	2401 840
	1" Lgh.	71	—	—	—	—	—	1	1	—	—	—	—	2530 154

CARLINES: J - Challenger, B - Barracuda, V - Valiant, L - Dart, R - Beivedere - Satellite, W - Coronet - Charger, P - Plymouth, D - Dodge, C - Chrysler, Y - Imperial

AR Indicates use as required.

Numerals in parentheses ( ) refer to notes.

# Indicates parts not listed in any previous parts book.

★ Indicates change or addition.

Printed in U.S.A. January 1972

CODE	PART NAME	ENG. TYPE OR CU.IN.	V 1-2	B J 1-2	L 1-2	R 1-2	W 1-2	P 1-2	D 1-2	C 1	C 2	C 3	Y 1	PART NUMBER
22-01-0	**WHEELS Cont'd.**													
22-01-46	STEM Cont'd.													
	1 1/4" LGH.		—	—	—	—	—	—	—	—	—	—	1	2401 841
	Extension, 1 1/4" LGH.		—	—	—	—	—	—	—	—	—	—	4	2207 519
22-01-48	CAP, Wheel Dome		—	—	—	—	—	4	4	4	4	4	—	3461 042
22-01-49	RETAINER, Wheel Dome		—	4	—	4	4	—	—	—	—	—	—	2823 845
	Cover Applique		—	—	—	—	—	—	—	—	—	—	4	2944 447
22-01-51	DOME, Wheel		—	4	—	4	4	—	—	—	—	—	—	2823 842
22-01-52	SPACER, Cover Applique, Canada Only		—	—	—	—	—	—	—	—	—	—	4	2530 343
22-03-0	**FRONT HUB AND DRUM**													
22-03-1	HUB and DRUM													
	9" Brakes	70	1	—	1	—	—	—	—	—	—	—	—	3004 728-9
	9" x 2 1/2" Brakes w/Fins Rt.	70	1	—	1	—	—	—	—	—	—	—	—	3580 532
	w/Fins Lt.	70	1	—	1	—	—	—	—	—	—	—	—	3580 533
	w/Fins	71	2	—	2	—	—	—	—	—	—	—	—	3580 690
	10" x 2 1/4" Brakes	70	1	—	1	—	—	—	—	—	—	—	—	3549 836-7
	10 x 2 1/4 Brakes	71	2	—	2	—	—	—	—	—	—	—	—	3580 534
	10" x 2 1/2" Brakes	70	—	1	—	1	1	—	—	—	—	—	—	3004 732-3
	10 x 2 1/2 Brakes M-W	71	—	2	—	2	2	—	—	—	—	—	—	3580 630
	11" x 3" Brakes	70	—	1	—	1	1	—	—	—	—	—	—	2781 564-5
	11 x 3 Brakes M-W	71	—	2	—	2	2	—	—	—	—	—	—	3580 546
	11 x 3" Brakes K-H	71	—	2	—	2	2	—	—	—	—	—	—	=3580 692
	11" x 2 3/4" Brakes Rt. w/Fins	70	—	—	—	—	—	1	1	1	1	—	—	3004 974
	11" x 2 3/4" Brakes Lt. w/Fins	70	—	—	—	—	—	1	1	1	1	—	—	3004 973
	11 x 2 3/4 Brakes	71	—	—	—	—	—	2	2	2	2	2	—	3549 846
	11" x 3" Brakes	70	—	—	—	—	—	1	1	1	1	1	—	2944 822-3
	11 x 3 Brakes	71	—	—	—	—	—	2	2	—	—	—	—	3580 544
	NOTE: For Hub w/Disc See Part Type Code 5-05-3.													
22-04-0	**REAR BRAKE DRUM**													
22-04-2	DRUM,													
	9" Brakes	70	2	—	2	—	—	—	—	—	—	—	—	3461 885
	9" Brakes	71	2	—	2	—	—	—	—	—	—	—	—	3580 549
	10 x 1 3/4 Brakes	71	2	—	2	—	—	—	—	—	—	—	—	3580 551
	10 x 1 3/4 Brakes W/Heavy Duty or W/Front Disc	70	2	—	2	—	—	—	—	—	—	—	—	3461 685
	10 x 1 3/4" Brakes Budd, K-H	70	—	—	—	2	2	—	—	—	—	—	—	3004 744
	10 x 2 1/2" Brakes	70	—	2	—	2	2	—	—	—	—	—	—	3004 745
	10 x 2 1/2 Brakes	71	—	2	—	2	2	—	—	—	—	—	—	3580 553
	11 x 2" Brakes	70	—	—	-	—	—	2	2	—	—	—	—	3004 932
	11 x 2 Brakes	71	—	—	—	—	—	2	2	—	—	—	—	3549 843
	11 x 2 1/2" Brakes Fin Type	70	—	2	—	2	2	2	2	2	2	2	—	3004 933
	11 x 2 1/2 Brakes	71	—	2	—	2	2	2	2	2	2	2	—	3549 842
	11 x 3" Brakes Budd	70	—	—	—	—	—	2	2	2	2	2	—	2405 758
	11 x 3" Brakes M-W	70	—	—	—	—	—	—	—	—	—	—	2	2534 905
	11 x 3" Brakes Wide Axle	70	—	—	—	—	—	—	—	—	—	—	2	3461 715
	11 x 3 Brakes M-W	71	—	—	—	—	—	—	—	—	—	—	2	3580 567
22-04-11	SPRING, Wheel Brake Drum Damper													
	w/9" Brakes	70	AR	—	AR	—	—	—	—	—	—	—	—	2266 298
	w/10" Brakes	70	AR	AR	AR	AR	AR	—	—	—	—	—	—	1142 316
	w/Heavy Duty Brakes		—	AR	—	AR	AR	—	—	—	—	—	—	2266 877
		70	—	—	—	—	—	AR	AR	AR	AR	AR	AR	1142 259
22-04-14	RETAINER, RR. Brake Drum to Axle Shaft		AR	AR	AR	—	—	—	—	—	—	—	—	6026 647
			—	AR	—	AR	AR	AR	AR	AR	AR	AR	AR	6026 430

CARLINES J - Challenger, B - Barracuda, V - Valiant, L - Dart, R - Belvedere - Satellite, W - Coronet - Charger, P - Plymouth, D - Dodge, C - Chrysler, Y - Imperial

AR Indicates use as required.

Numerals in parentheses ( ) refer to notes.

# Indicates parts not listed in any previous parts book.

★ Indicates change or addition.

Printed in U.S.A. January 1972

CODE	PART NAME	ENG. TYPE OR CU.IN.	V 1-2	B J 1-2	L 1-2	R 1-2	W 1-2	P 1-2	D 1-2	C 1	C 2	C 3	Y 1	PART NUMBER
22-05-0	**WHEEL DRIVING STUD AND NUT**													
22-05-14	STUD, Front Wheel													
	w/9" Brakes, Cast Iron, w/Steel Back Drum	70	5	—	5	—	—	—	—	—	—	—	—	2409 808-9
	w/9" Brakes	71	10	—	10	—	—	—	—	—	—	—	—	2409 808
	w/10" Brakes	70	5	—	5	—	—	—	—	—	—	—	—	2534 754-5
	w/10" Brakes	71	10	—	10	—	—	—	—	—	—	—	—	2534 754
	w/Disc. Brakes	70	5	—	5	—	—	—	—	—	—	—	—	2768 028-9
		71	10	—	10	—	—	—	—	—	—	—	—	2768 028
	Rear Wheel	70	5	—	5	—	—	—	—	—	—	—	—	2070 158-9
	Rear Wheel	71	10	—	10	—	—	—	—	—	—	—	—	2070 158
	w/Motor Wheel Drum	70	—	5	—	5	5	—	—	—	—	—	—	2405 144-5
	w/Budd Drum	70	—	5	—	5	5	—	—	—	—	—	—	2460 614-5
	w/11" Brakes and Motor Wheel Drum	70	—	5	—	5	5	5	5	5	5	5	—	2781 566-7
	w/11" Brakes and Motor Wheel Drum	71	—	10	—	10	10	10	10	10	10	10	—	2781 566
	w/11" Brakes and Kelsey Hayes	71	—	10	—	10	10	—	—	—	—	—	—	= 2800 504
	w/Disc. Brakes	70	—	5	—	5	5	—	—	—	—	—	—	2944 702-3
	w/Disc. Brakes up to Jan. 1, 1971	71	—	10	—	10	10	—	—	—	—	—	—	2944 702
	w/Disc Brakes After Jan. 1, 1971	71	—	10	—	10	10	—	—	—	—	—	—	= 3580 598
	Rear Wheel 1.46 Lgh.	70	5	—	5	5	5	5	5	5	5	5	—	2404 435-6
		71	10	—	10	10	10	10	10	10	10	10	—	2404 435
	1.51 Lgh.	70	—	5	—	5	5	5	5	5	5	5	5	3432 698-9
		71	—	10	—	10	10	10	10	10	10	10	10	3432 698
	Front Wheel		—	—	—	—	—	—	—	—	—	—	—	
	w/11" Brakes and Kelsey Hayes Drum	70	—	—	—	—	—	5	5	5	5	5	—	2800 504-5
	w/Disc. Brakes 3/16" Thick Head	70	—	—	—	—	—	5	5	5	5	5	5	2925 170-1
	w/Disc. Brakes 3/16" Thick Head	71	—	—	—	—	—	10	10	10	10	10	10	2925 170
	1/4" Thick Head	70	—	5	—	5	5	5	5	5	5	5	—	3461 816-7
	1/4" Thick Head	71	—	10	—	10	10	10	10	10	10	10	—	3461 816
22-5-24	NUT, Wheel Mtg. Standard	70	10	—	10	—	—	—	—	—	—	—	—	2409 824-5
	Standard	71	20	—	20	—	—	—	—	—	—	—	—	2409 824
	Chrome	71	10	—	10	—	—	—	—	—	—	—	—	2530 346-7
	Cap Style		20	—	20	—	—	—	—	—	—	—	—	2530 346
	Standard 1/2 Thd.	70	—	10	—	10	10	10	10	10	10	10	10	2409 826-7
		71	—	20	—	20	20	20	20	20	20	20	20	2409 826
	w/Cast Alum. Style Wheel 1/2 Thd.	71	—	20	—	20	20	—	—	—	—	—	—	2823 848
		70	—	10	—	10	10	10	10	10	10	—	—	2823 848-9
		71	—	—	—	—	—	20	20	20	20	20	—	3461 218
22-06-0	**FRONT WHEEL BEARING**													
22-06-1	CONE and ROLLER, Frt. Wheel Bearing													
	Inner, w/9" Brakes		2	—	2	—	—	—	—	—	—	—	—	2203 352
	Outer, w/9" Brakes		2	—	2	—	—	—	—	—	—	—	—	2203 350
	Inner		2	2	2	2	2	2	2	2	2	2	—	1619 701
	Outer		2	2	2	2	2	2	2	2	2	2	—	1619 703
	Inner		—	—	—	—	—	—	—	—	—	—	2	1789 755
	Outer		—	—	—	—	—	—	—	—	—	—	2	1790 241
22-06-2	CUP, Frt. Wheel Bearing													
	Inner, w/9" Brakes		2	—	2	—	—	—	—	—	—	—	—	2203 353
	Outer, w/9" Brakes		2	—	2	—	—	—	—	—	—	—	—	2203 351
	Inner		2	2	2	2	2	2	2	2	2	2	—	1619 700
	Outer		2	2	2	2	2	2	2	2	2	2	—	1619 702
	Inner		—	—	—	—	—	—	—	—	—	—	2	1789 754
	Outer		—	—	—	—	—	—	—	—	—	—	2	1790 244
22-06-5	NUT, Frt. Wheel Bearing													
	w/9" Brakes		2	—	2	—	—	—	—	—	—	—	—	2072 731
	Except 9" Brakes		2	2	2	2	2	2	2	2	2	2	2	1732 300

CARLINES J - Challenger, B - Barracuda, V - Valiant, L - Dart, R - Belvedere - Satellite, W - Coronet - Charger, P - Plymouth, D - Dodge, C - Chrysler, Y - Imperial

AR Indicates use as required.

# Indicates parts not listed in any previous parts book.

Numerals in parentheses ( ) refer to notes.

★ Indicates change or addition.

Printed in U.S.A. January 1972

CODE	PART NAME	ENG. TYPE OR CU.IN.	V 1-2	B J 1-2	L 1-2	R 1-2	W 1-2	P 1-2	D 1-2	C 1	C 2	C 3	Y 1	PART NUMBER
22-06-0	**FRONT WHEEL BEARING Cont'd.**													
22-06-10	LOCK, Frt. Wheel Bearing Nut		2	2	2	2	2	2	2	2	2	2	2	1673 324
22-06-14	WASHER, Thrust,		2	2	2	2	2	2	2	2	2	2	2	600 194
22-06-18	SEAL, Frt. Wheel Hub Dust													
	w/9" Brake		2	—	2	—	—	—	—	—	—	—	—	2525 063
	w/10" Brake		2	2	2	2	2	—	—	—	—	—	—	2808 267
	w/11" Brake		—	2	—	2	2	2	2	2	2	2	—	2808 269
	Up to 5-1-70		—	—	—	—	—	—	—	—	—	—	2	2808 268
	After 5-1-70	70	—	—	—	—	—	—	—	—	—	—	2	3461 895
	W/ Disc BR.											2		2808 269
22-08-0	**WHEEL HUB CAPS**													
22-08-5	CAP, Wheel Hub, for replacement refer To Illustrated Covers in front of Wheel Group 22.													
22-08-57	CAP, Frt. Wheel Grease													
	W/9" Brake	70	2	—	2	—	—	—	—	—	—	—	—	2072 718
	Except 9" Brake		2	2	2	2	2	2	2	2	2	2	—	1613 416
			—	—	—	—	—	—	—	—	—	—	2	1671 341
22-09-0	**WHEEL BALANCE WEIGHT**													
22-09-1	WEIGHT	1/2 OZ.	AR	AR	AR	AR	AR	ar	AR	AR	AR	AR	AR	1615 349
		1 OZ.	AR	AR	AR	AR	AR	AR	AR	AR	AR	AR	AR	1615 350
		1 1/2 OZ.	AR	AR	AR	AR	AR	AR	AR	AR	AR	AR	AR	1615 351
		2 OZ.	AR	AR	AR	AR	AR	AR	AR	AR	AR	AR	AR	1615 352
		2 1/2 OZ.	AR	AR	AR	AR	AR	AR	AR	AR	AR	AR	AR	1615 353
		3 OZ.	AR	AR	AR	AR	AR	AR	AR	AR	AR	AR	AR	1615 354
22-20-0	**SPARE WHEEL CARRIER**													
22-20-29	BRACKET, Spare Whl. Anchor Bolt	70	1	—	1	—	—	—	—	—	—	—	—	2841 154
22-20-87	ROD, Spare Wheel Anchor w/D 78 x 14													
	Tires	70	1	—	1	—	—	—	—	—	—	—	—	2527 196
		71	—	—	—	—	—	—	—	—	—	—	—	6029 264
	w/E 70 x 14 Tires	70	1	—	1	—	—	—	—	—	—	—	—	3505 363
	w/E70 x 14 Tires	71	1	—	1	—	—	—	—	—	—	—	—	#6027 740
	Except CV. CP.	70	—	1	—	1	1	—	—	—	—	—	—	2964 744
	W/Collapsible Spare Tire Cv. Cp., B		—	1	—	—	—	—	—	—	—	—	—	3444 581
	W/Collapsible Spare Tire J All		—	1	—	—	—	—	—	—	—	—	—	3444 581
	W/Collapsible Spare Tire B except Cv. Cp.,		—	1	—	—	—	—	—	—	—	—	—	2964 999
	w/o, Collapsible Spare Tire	71	—	1	—	—	—	—	—	—	—	—	—	2964 744
	Sta. Wgn. Only	70	—	—	—	1	1	—	—	—	—	—	—	2664 275
	CV. CP. and Fastback	70	—	—	—	1	1	—	—	—	—	—	—	2965 021
	Sta. Wgn.	71	—	—	—	1	1	—	—	—	—	—	—	3440 134
	Except CV. CP., Fastback and Sta. Wgn.	70	—	—	—	1	1	—	—	—	—	—	—	2965 020
	2 D.H.T., 4 D.	71	—	—	—	1	—	—	—	—	—	—	—	3445 046
	2 D.H.T., Fast Back, 4 D.	71	—	—	—	—	1	—	—	—	—	—	—	3445 046
	Except Sta. Wgn.		—	—	—	—	—	1	1	1	1	1	1	2965 020
	2 D., 2 D.H.T., Fast Back, 4 D., 4 D.H.T.	71	—	—	—	—	—	1	—	—	—	—	—	3505 392
	Sta. Wgn. Only		—	—	—	—	—	1	1	1	1	1	—	2573 028
	NUT, Spare Wheel Anchor and Spacer	70	—	—	—	—	2	—	—	—	—	—	—	2409 826
22-20-96	WING NUT, Spare Wheel Anchor Stud		AR	AR	AR	AR	AR	AR	AR	AR	AR	AR	AR	2842 961
	Sta. Wgn. Only	71	—	—	—	1	1	—	—	—	—	—	—	#3499 878

EXTERIOR VIEW ILLUSTRATION INDEX

		PAGE NO. 1970	1971
VALIANT			
V-L	4 Door Sedan	23-134	23-444
V-L	Fastback	23-136	23-448
V-H	Scamp 2 Door Hardtop	------	23-452
V-S	Fastback	23-138	23-454
DART			
L-L	4 Door Sedan	23-246	23-546
L-L	Fastback	23-248	23-548
L-L	Swinger Special 2 Dr. Hardtop	------	23-552
L-M	Fastback	23-250	23-554
L-H	4 Door Sedan	23-252	23-556
L-H	2 Door Hardtop	23-254	23-560
BARRACUDA			
B-H	2 Door Hardtop	23-140	23-458
B-H	Convertible Coupe	23-144	23-462
B-P	Gran Coupe 2 Door Hardtop	23-152	23-472
B-P	Gran Coupe Convertible Coupe	23-154	------
B-S	2 Door Hardtop	23-146	23-464
B-S	2 Door Hardtop (Trans-Am)	23-148	------
B-S	Convertible Coupe	23-150	23-468
CHALLENGER			
J-H	2 Door Hardtop	23-230	23-586
J-H	2 Door Hardtop (Trans-Am)	23-232	------
J-H	Fastback	23-234	------
J-H	Convertible Coupe	23-236	23-590
J-S	R/T 2 Door Hardtop	23-238	23-592
J-S	R/T Fastback	23-242	------
J-S	R/T Convertible Coupe	23-244	------
SATELLITE (1971) - BELVEDERE (1970)			
R-L	2 Door Sedan	23-156	------
R-L	4 Door Sedan	23-158	23-476
R-L	Station Wagon	23-160	23-478
R-M	2 Door Sedan	23-162	------
R-M	2 Door Hardtop	23-164	23-480
R-M	Convertible Coupe	23-166	------
R-H	4 Door Sedan	23-168	23-482
R-H	2 Door Hardtop	23-172	23-486
R-H	Convertible Coupe	23-174	------
R-H	Station Wagon	23-176	23-484
R-P	4 Door Sedan	23-180	23-490
R-P	2 Door Hardtop	23-184	23-488
R-P	Station Wagon	23-186	23-492
R-S	2 Door Hardtop	23-190	23-494
CORONET			
W-L	2 Door Sedan	23-256	------
W-L	4 Door Sedan	23-258	23-562
W-L	Station Wagon	23-260	23-564
W-M	2 Door Sedan	23-262	------
W-M	2 Door Hardtop	23-264	23-576
W-H	2 Door Sedan	23-266	------
W-H	4 Door Sedan	23-268	23-566
W-H	2 Door Hardtop	23-270	23-578
W-H	Station Wagon	23-272	23-568

		PAGE NO. 1970	1971
CORONET - Continued			
W-P	4 Door Sedan	23-274	23-570
W-P	2 Door Hardtop	23-276	23-580
W-P	Charger 500 Fastback	23-288	23-582
W-P	Convertible Coupe	23-278	------
W-P	Station Wagon	23-280	23-574
W-S	R/T 2 Door Hardtop	23-284	23-584
W-S	Charger R/T Fastback	23-290	------
W-S	Convertible Coupe	23-286	------
PLYMOUTH			
P-E	2 Door Sedan	23-192	23-496
P-E	4 Door Sedan	23-194	23-498
P-E	Custom Spring Special 2 Door Sedan	------	23-500
P-E	Custom Spring Special 4 Door Sedan	------	23-502
P-L	2 Door Sedan	23-196	------
P-L	4 Door Sedan	23-198	23-504
P-L	2 Door Hardtop	------	23-506
P-L	Gran Coupe 2 Door Sedan	23-202	------
P-L	Station Wagon	23-200	23-508
P-M	4 Door Sedan	23-204	23-510
P-M	2 Door Hardtop	23-206	23-512
P-M	4 Door Hardtop	23-208	23-516
P-M	Fastback	23-210	23-518
P-M	Gran Coupe 4 Door Hardtop	------	23-520
P-M	Gran Coupe Fastback	------	23-522
P-M	Convertible Coupe	23-214	------
P-M	Station Wagon	23-212	23-524
P-H	4 Door Sedan	23-216	23-526
P-H	2 Door Hardtop	23-218	23-528
P-H	4 Door Hardtop	23-220	23-536
P-H	Fastback	23-224	23-532
P-H	Suburban	23-226	23-540
P-P	GT 2 Door Hardtop	23-222	23-544
DODGE			
D-E	4 Door Sedan	------	23-596
D-E	2 Door Hardtop	------	23-598
D-E	4 Door Hardtop	------	23-600
D-L	4 Door Sedan	23-292	23-602
D-L	2 Door Hardtop	23-294	23-604
D-L	4 Door Hardtop	23-296	23-606
D-L	Convertible Coupe	23-298	------
D-L	Station Wagon	23-300	23-608
D-M	2 Door Hardtop	------	23-610
D-M	4 Door Hardtop	------	23-612
D-H	4 Door Sedan	23-302	23-614
D-H	2 Door Hardtop	23-304	23-616
D-H	4 Door Hardtop	23-306	23-618
D-H	Station Wagon	23-308	23-620
CHRYSLER			
C-E	4 Door Sedan	23-312	23-624
C-E	2 Door Hardtop	23-314 and 23-322	23-626
C-E	4 Door Hardtop	23-316 and 23-324	23-628

EXTERIOR VIEW ILLUSTRATION INDEX - CONTINUED

	PAGE NO. 1970	1971
CHRYSLER - Continued		
C-E Convertible Coupe	23-326	------
C-E Royal 4 Door Sedan	------	23-630
C-E Royal 2 Door Hardtop	23-318	23-632
C-E Royal 4 Door Hardtop	23-320	23-634
C-L 4 Door Sedan	23-328	23-636
C-L 2 Door Hardtop	23-330	23-638
C-L 4 Door Hardtop	23-332	23-640
C-M(S)300 2 Door Hardtop	23-334 and 23-336	23-642
C-M(S)300 4 Door Hardtop	23-338	23-644
C-M Convertible Coupe	23-340	------
C-H 4 Door Sedan	23-342	23-646
C-H 2 Door Hardtop	23-344	23-648
C-H 4 Door Hardtop	23-346	23-650
C-P Town & Country Station Wagon	23-348	23-652
IMPERIAL		
Y-L 2 Door Hardtop	23-352	------
Y-L 4 Door Hardtop	23-354	------
Y-M 2 Door Hardtop	23-356	23-656
Y-M 4 Door Hardtop	23-358	23-660
INTERIOR VIEWS - FRONT AND REAR		
VALIANT	23-360 and 23-361	23-663 thru 23-666
DART	23-397 thru 23-399	23-712 and 23-713

	PAGE NO. 1970	1971
INTERIOR VIEWS - Continued		
BARRACUDA	23-362 thru 23-368	23-667 thru 23-669
CHALLENGER	23-393 thru 23-396	23-720 thru 23-722
SATELLITE	23-369 thru 23-377	23-670 thru 23-683
CORONET	23-400 thru 23-406	23-714 thru 23-719
CHARGER	23-407	23-723 thru 23-729
PLYMOUTH	23-378 thru 23-392	23-684 thru 23-711
DODGE	23-408 thru 23-416	23-730 thru 23-748
CHRYSLER	23-417 thru 23-435	23-749 thru 23-770
IMPERIAL	23-436 thru 23-441	23-771 thru 23-774

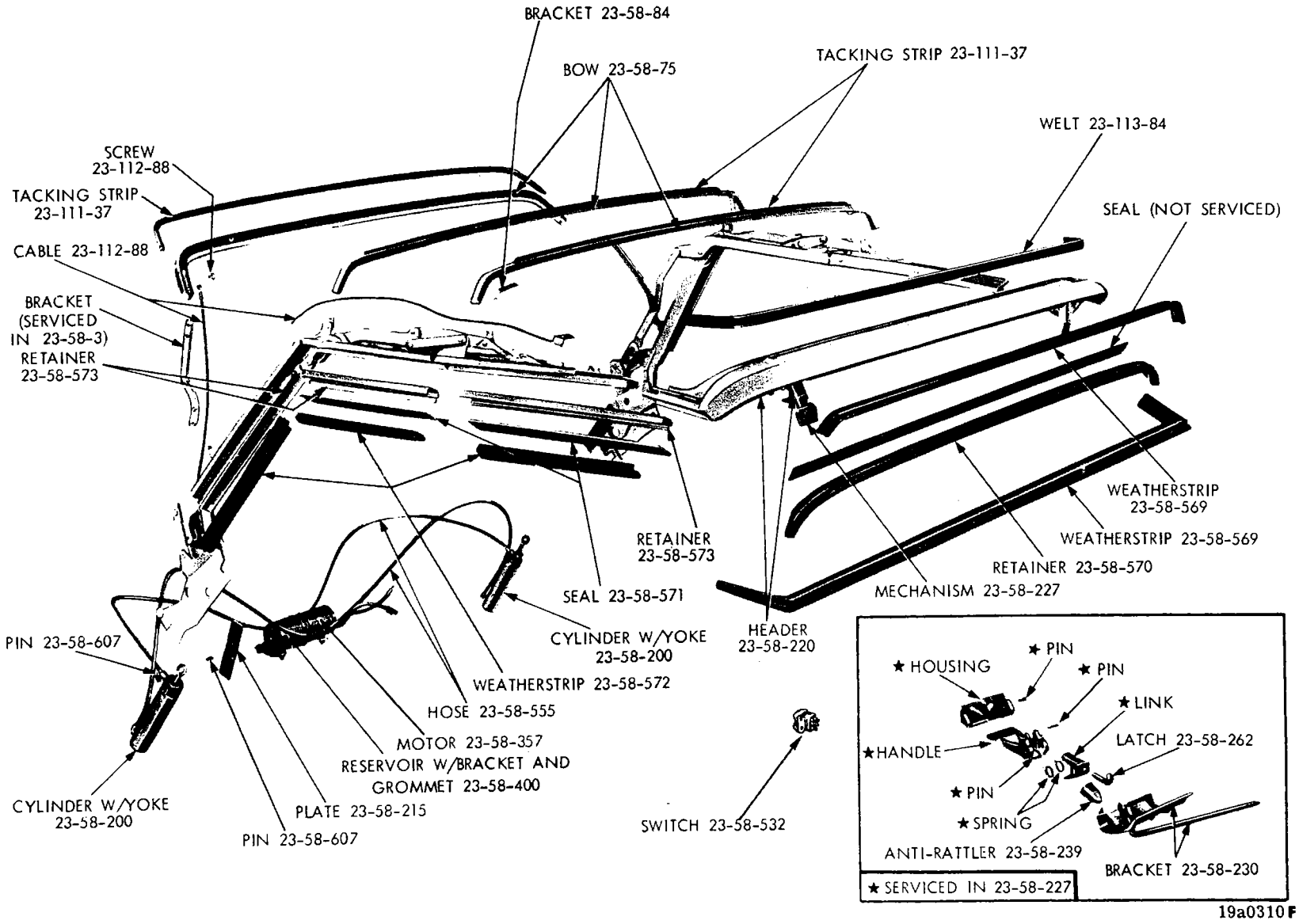

FOLDING TOP - BELVEDERE AND CORONET

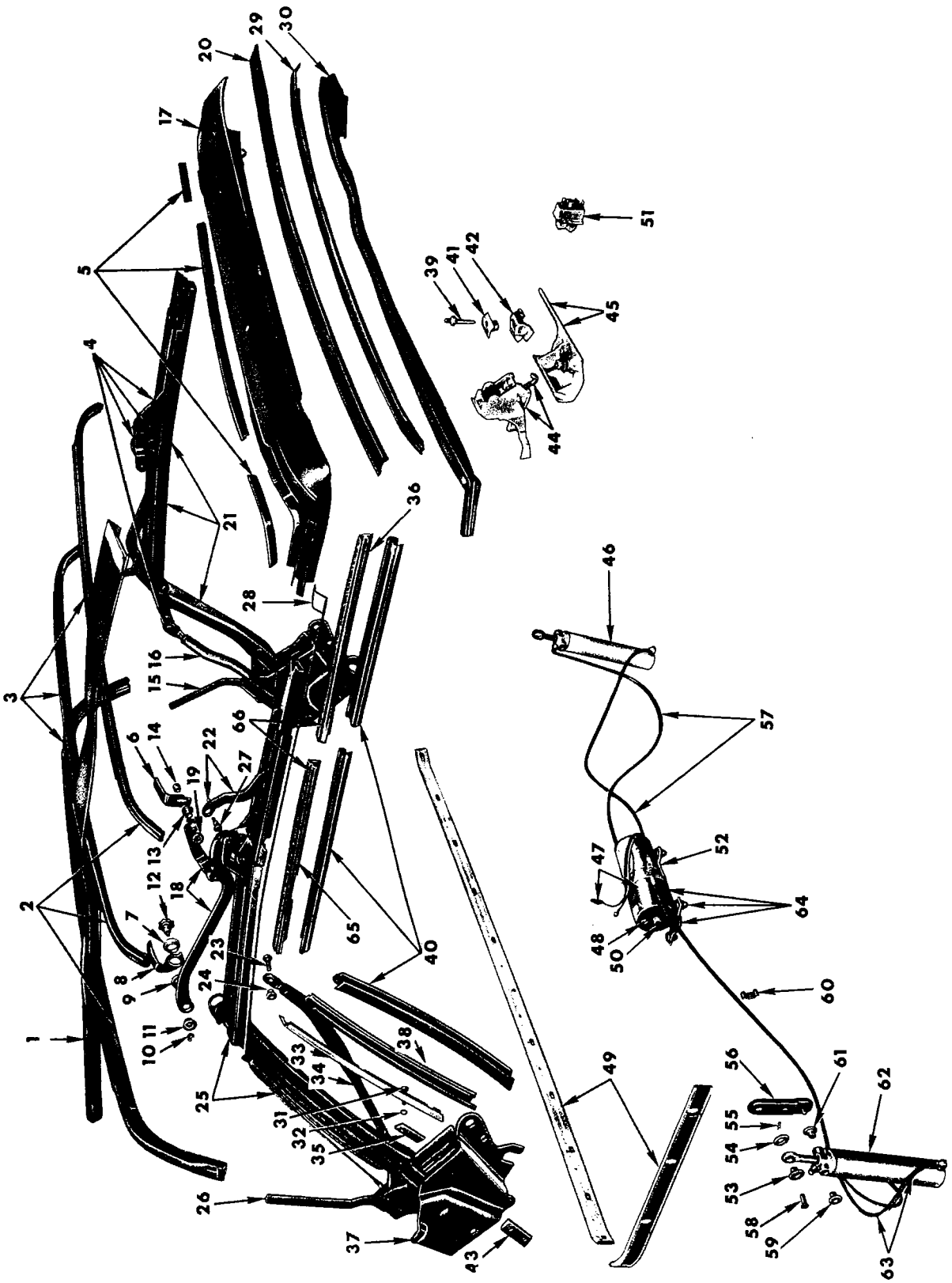

FOLDING TOP - BARRACUDA AND CHALLENGER (TYPICAL OF MANUAL FOLDING TOP)

FOLDING TOP - BARRACUDA AND CHALLENGER
(TYPICAL OF MANUAL FOLDING TOP)

Ref. No.	Name	Part Type Code
1	Pad	23-112-112
2	Bow	23-58-75
3	Tacking Strip	23-111-37
4	Link (Serviced in 23-58-3)	
5	Welt	23-113-84
6	Bracket	23-58-84
7	Bushing	
8	Bracket	23-58-84
9	Washer	
10	Snap Ring	
11	Bushing	
12	Cam	23-58-603
13	Bushing	
14	Nut	
15	Bracket (Serviced in 23-58-3)	
16	Link (Serviced in 23-58-3)	
17	Header	23-58-220
18	Link (Serviced in 23-58-3)	
19	Washer	
20	Weatherstrip	23-58-569
21	Rail (Serviced in 23-58-3)	
22	Link w/Pin (Serviced in 23-58-3)	
23	Bolt	
24	Bushing	
25	Rail (Serviced in 23-58-3)	
26	Bracket (Serviced in 23-58-3)	
27	Screw	
28	Cable	23-112-88
29	Retainer	23-58-570
30	Weatherstrip	23-58-569
31	Bolt	
32	Washer	
33	Retainer	23-112-4
34	Link (Serviced in 23-58-3)	
35	Plate	23-58-78
36	Retainer	23-58-573
37	Support (Serviced in 23-58-3)	
38	Retainer	23-58-573
39	Dowel	23-58-228
40	Weatherstrip	23-58-572
41	Anti-Rattler	23-58-239
42	Bracket	23-58-230
43	Plate	23-58-78
44	Latch	23-58-262
45	Arm w/Bracket	23-103-10
46	Cylinder w/Yoke	23-58-200
47	Motor w/End Plate	23-58-357
48	Bolt (Serviced in 23-58-388)	
49	Retainer	23-111-6
50	Plug	23-58-395
51	Switch	23-58-532
52	Bracket	23-58-396
53	Bushing	23-58-213
54	Washer	23-58-606
55	Pin	23-58-607
56	Plate	23-58-215
57	Hose	23-58-555
58	Pin	23-58-607
59	Bushing	23-58-213
60	Clip	23-58-557
61	Bushing	23-58-213
62	Cylinder w/Yoke	23-58-200
63	Hose	23-58-555
64	Reservoir w/Bracket and Grommet	23-58-400
65	Retainer	23-58-573
66	Seal	Not Serviced

PARTS INDICATED BY NAME ONLY - ORDER BY DESCRIPTION

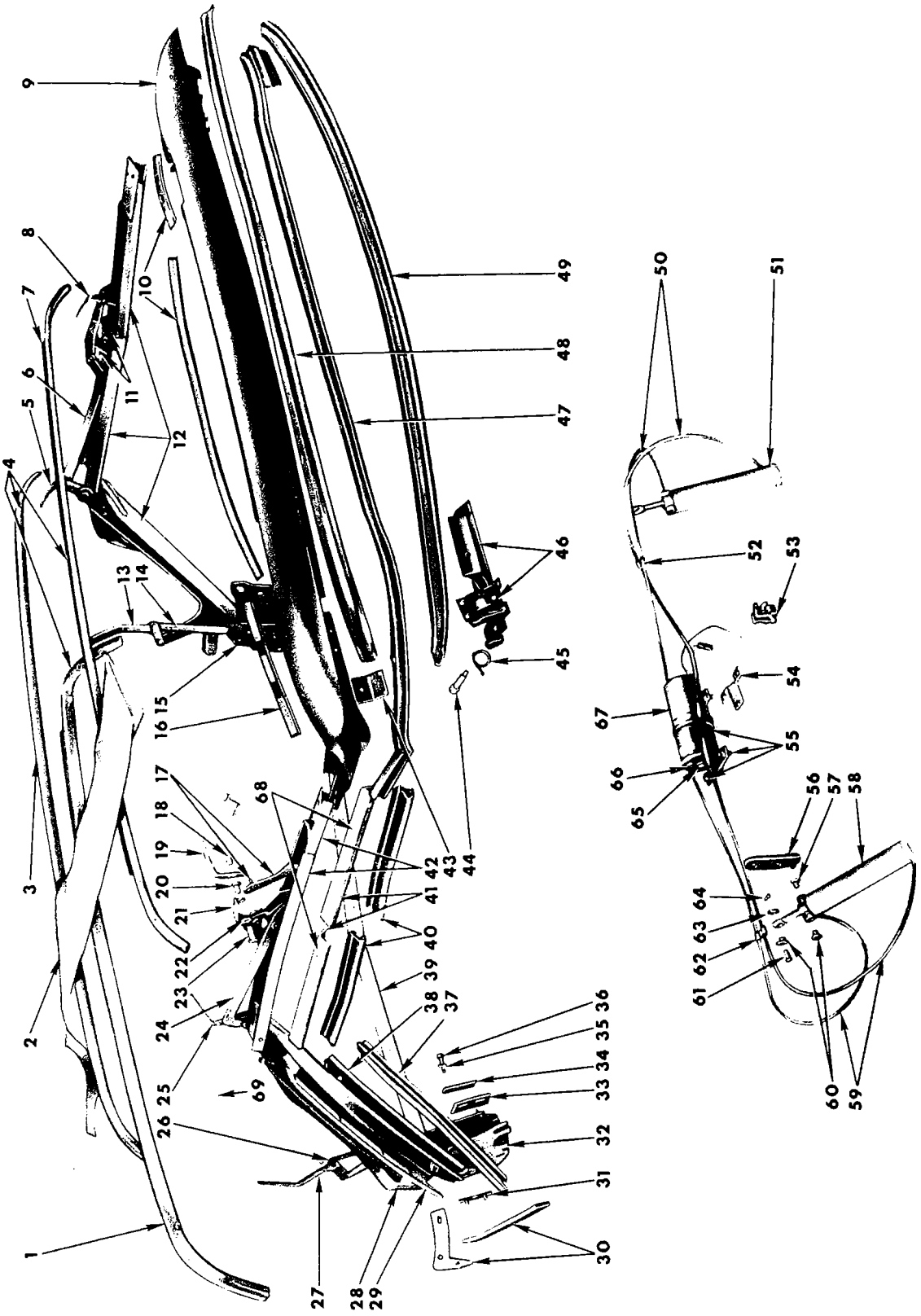

FOLDING TOP - PLYMOUTH, DODGE AND CHRYSLER

FOLDING TOP - PLYMOUTH, DODGE AND CHRYSLER

Ref. No.	Name	Part Type Code
1	Tacking Strip	23-111-37
2	Pad	23-112-112
3	Tacking Strip	23-111-37
4	Bow	23-58-75
5	Bracket	23-58-84
6	Link (Serviced in 23-58-3)	
7	Tacking Strip	23-111-37
8	Bracket (Serviced in 23-58-3)	
9	Header	23-58-220
10	Welt	23-113-84
11	Links (Serviced in 23-58-3)	
12	Rail (Serviced in 23-58-3)	
13	Bracket (Serviced in 23-58-3)	
14	Link (Serviced in 23-58-3)	
15	Support (Serviced in 23-58-3)	
16	Welt	23-113-84
17	Link w/Pin (Serviced in 23-58-3)	
18	Nut	
19	Bracket (Serviced in 23-58-3)	
20	Bushing	
21	Link (Serviced in 23-58-3)	
22	Washer	
23	Screw	
24	Link (Serviced in 23-58-3)	
25	Bracket	23-58-84
26	Link (Serviced in 23-58-3)	
27	Bracket (Serviced in 23-58-3)	
28	Link (Serviced in 23-58-3)	
29	Retainer	23-112-4
30	Retainer	23-112-4
31	Plate	23-58-78
32	Support (Serviced in 23-58-3)	
33	Plate	23-58-78
34	Plate	23-58-78
35	Washer	
36	Bolt	
37	Weatherstrip	23-58-572
38	Retainer	23-58-573
39	Retainer	23-112-4
40	Weatherstrip	23-58-572
41	Retainer	23-58-573
42	Rail (Serviced in 23-58-3)	
43	Wedge	23-58-238
44	Screw	23-58-262
45	Spring	23-58-266
46	Latch	23-58-262
47	Weatherstrip	23-58-569
48	Retainer	23-58-570
49	Weatherstrip	23-58-569
50	Hose	23-58-555
51	Cylinder w/Yoke	23-58-200
52	Clip	23-58-557
53	Switch	23-58-532
54	Bracket	23-58-396
55	Reservoir w/Bracket and Grommet	23-58-400
56	Plate	23-58-215
57	Bushing	23-58-213
58	Cylinder w/Yoke	23-58-200
59	Hose	23-58-555
60	Bushing	23-58-213
61	Pin	23-58-607
62	Clip	23-58-557
63	Washer	23-58-606
64	Pin	23-58-607
65	Bolt (Serviced in 23-58-388)	
66	Plug	23-58-395
67	Motor w/End Plate	23-58-357
68	Seal	Not Serviced
69	Cable	23-112-88

PARTS INDICATED BY NAME ONLY - ORDER BY DESCRIPTION

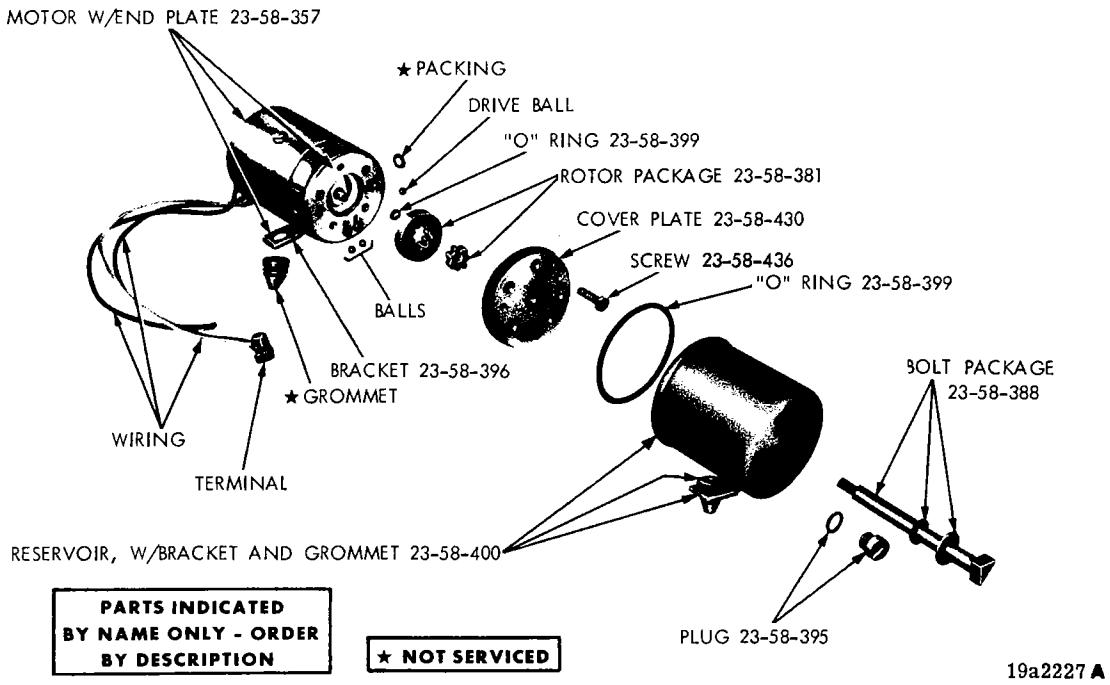

FOLDING TOP MOTOR

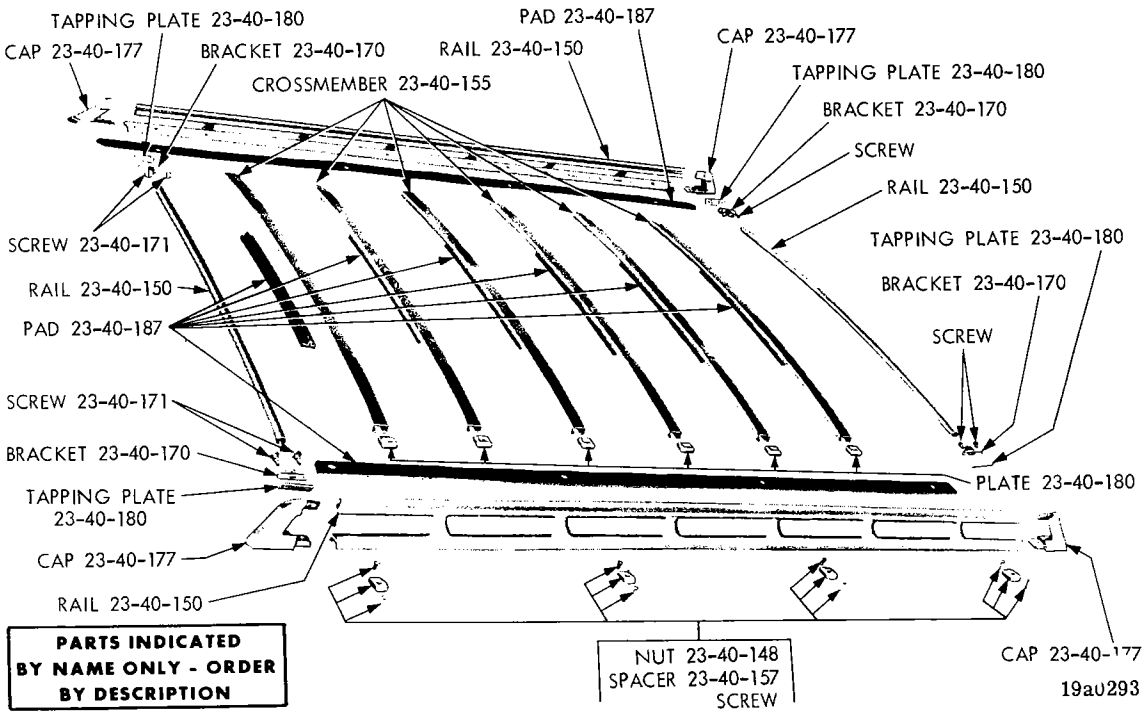

ROOF LUGGAGE RACK - BELVEDERE AND CORONET (1970 ONLY)

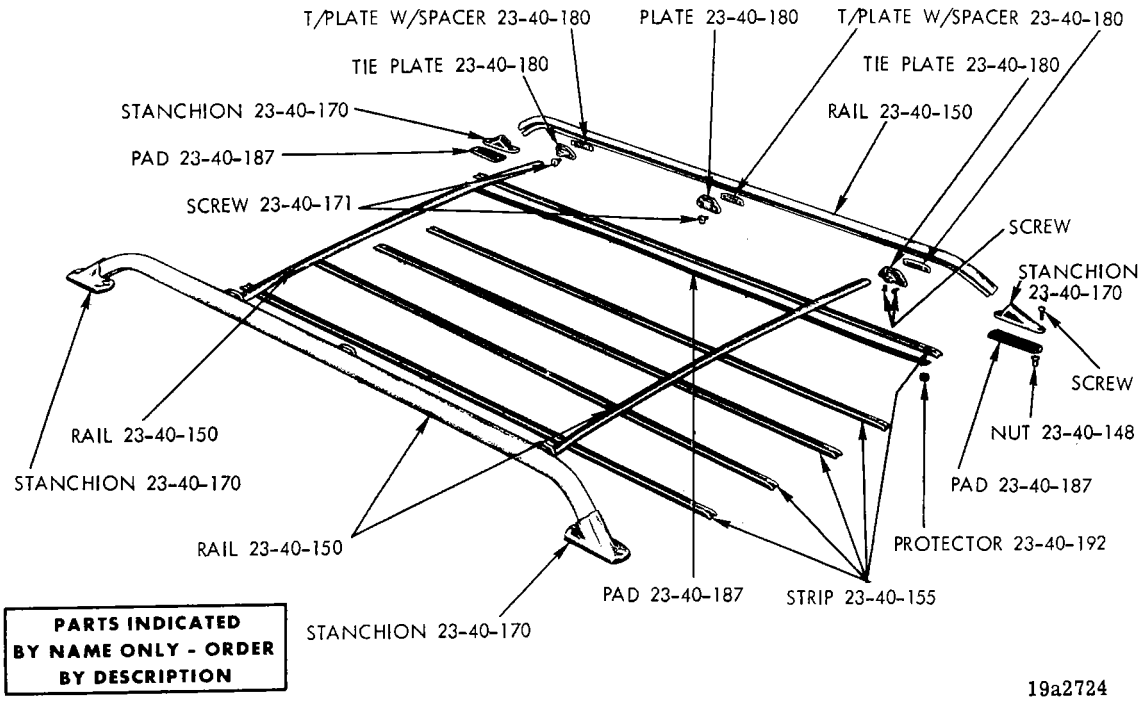

ROOF LUGGAGE RACK - PLYMOUTH, DODGE AND CHRYSLER (1970 ONLY)

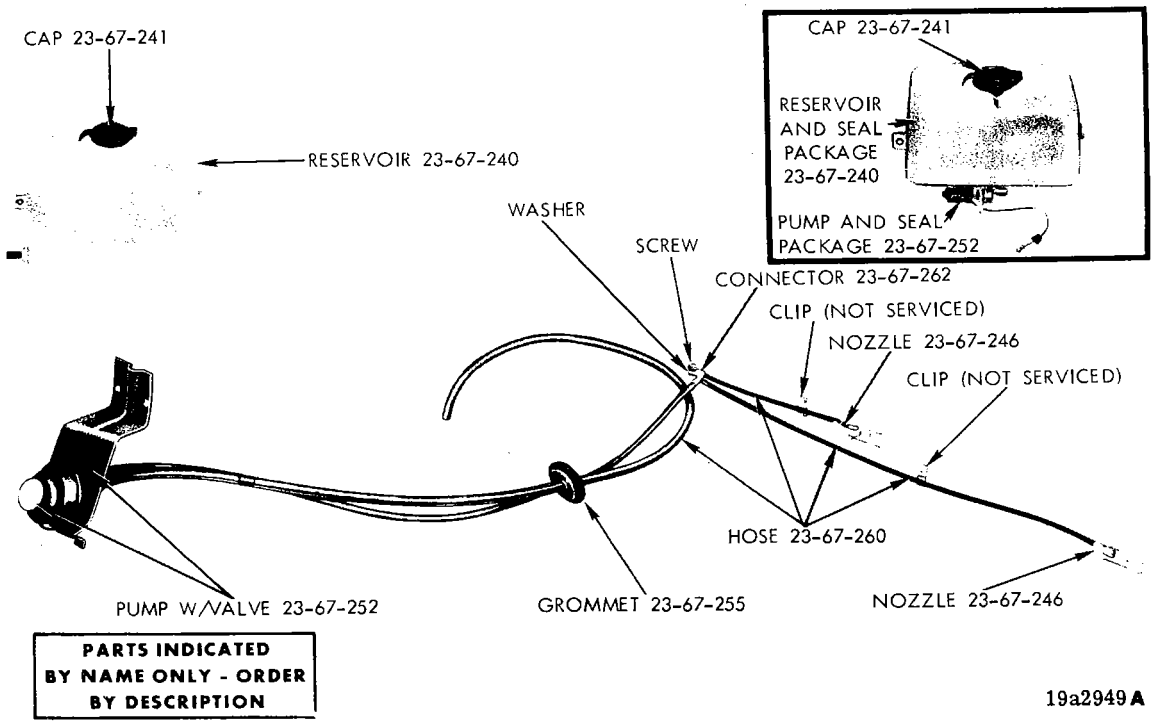

WINDSHIELD WASHER SYSTEM (FOOT OPERATED) - VALIANT AND DART

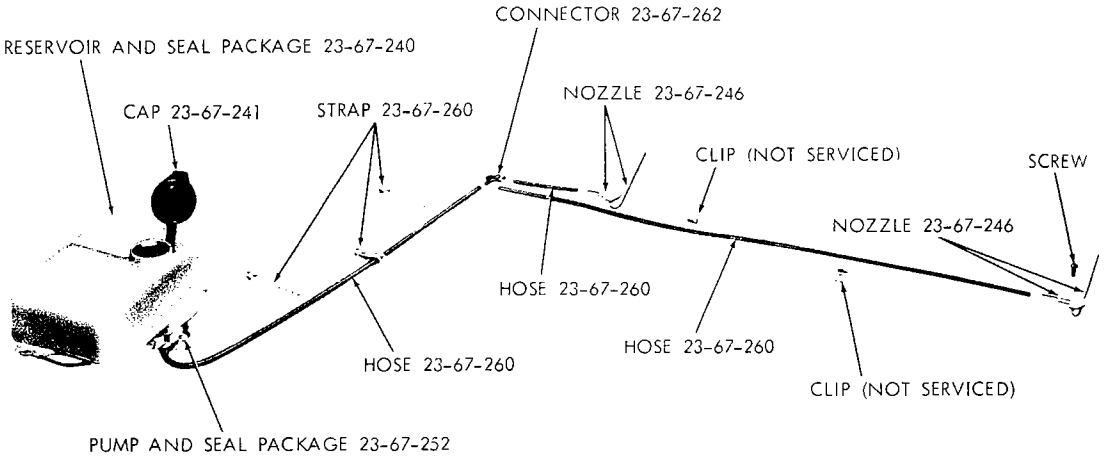

PARTS INDICATED BY NAME ONLY - ORDER BY DESCRIPTION

19a2725

WINDSHIELD WASHER SYSTEM - BELVEDERE AND CORONET

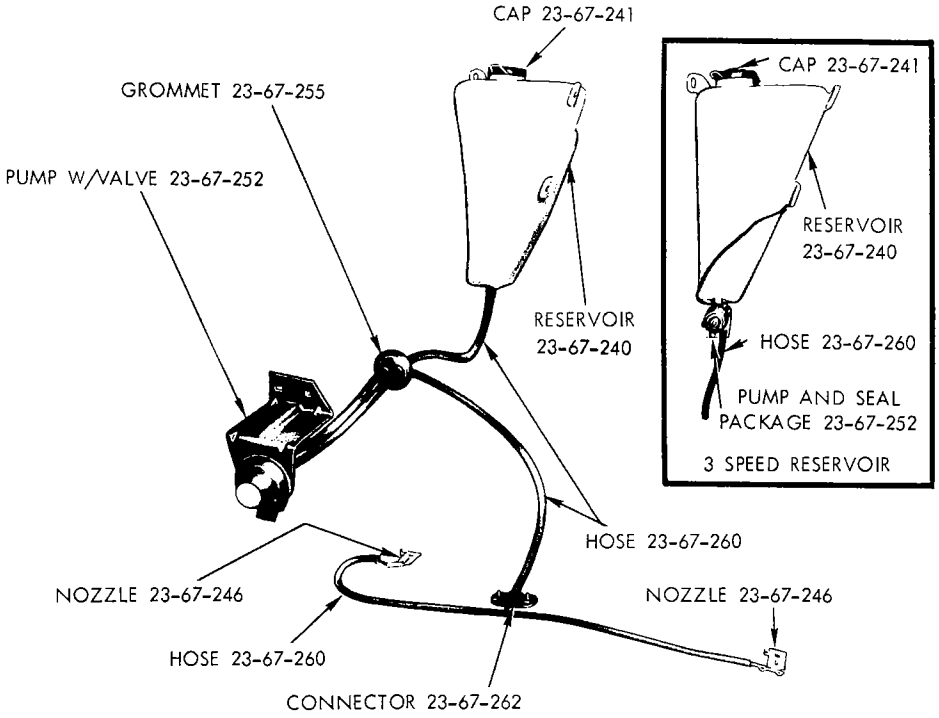

19a2951

WINDSHIELD WASHER SYSTEM (FOOT OPERATED) - BARRACUDA AND CHALLENGER

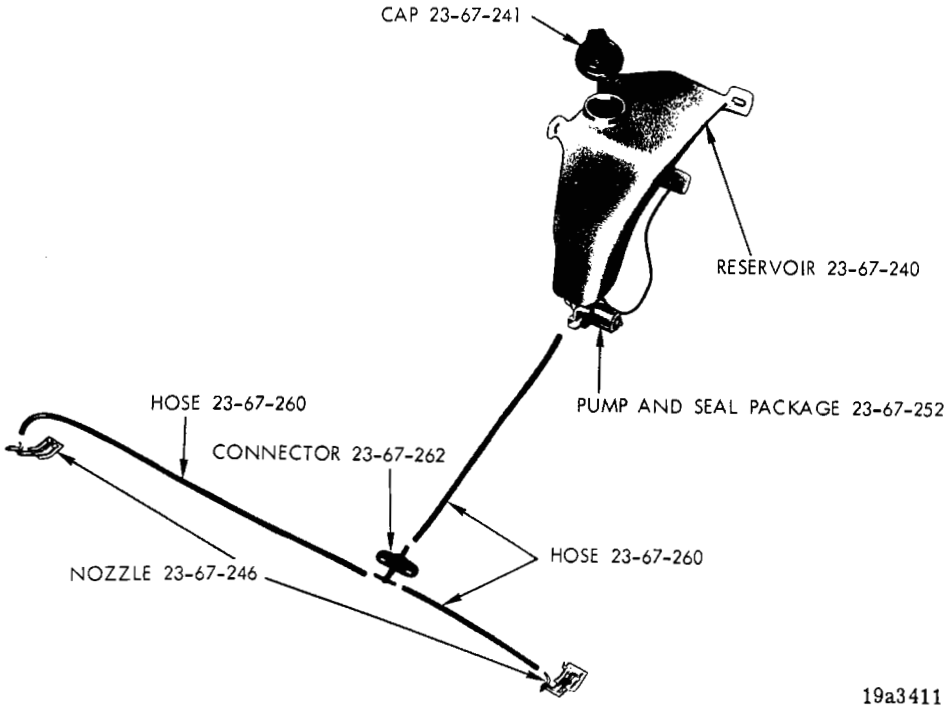

WINDSHIELD WASHER SYSTEM - SATELLITE, CORONET AND CHARGER

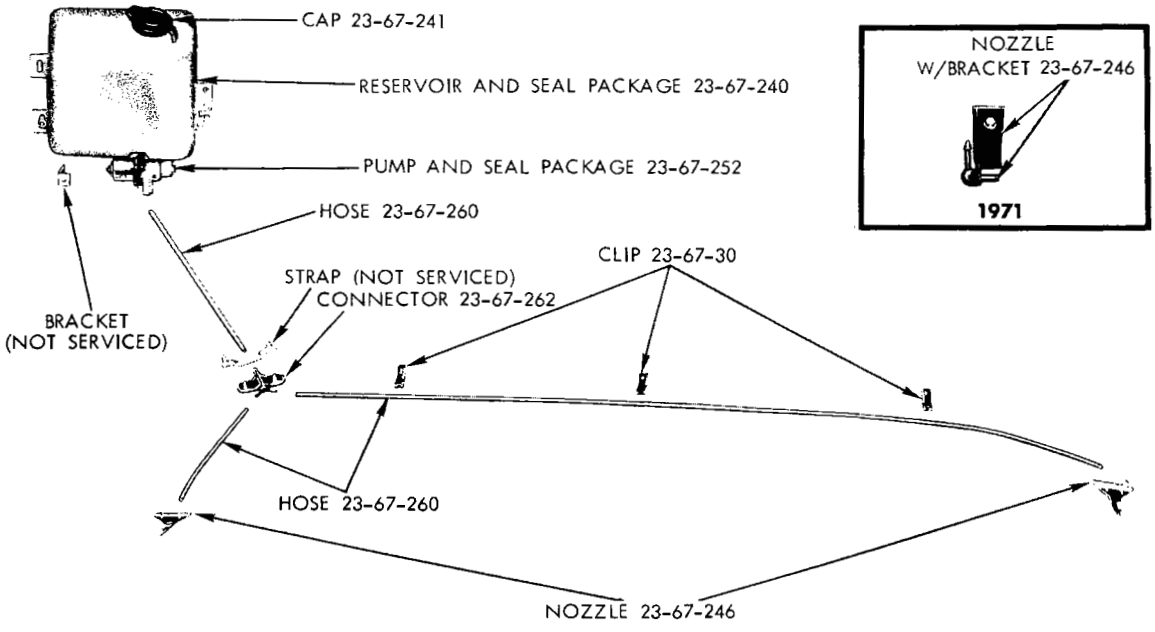

WINDSHIELD WASHER SYSTEM - PLYMOUTH, DODGE, CHRYSLER AND IMPERIAL

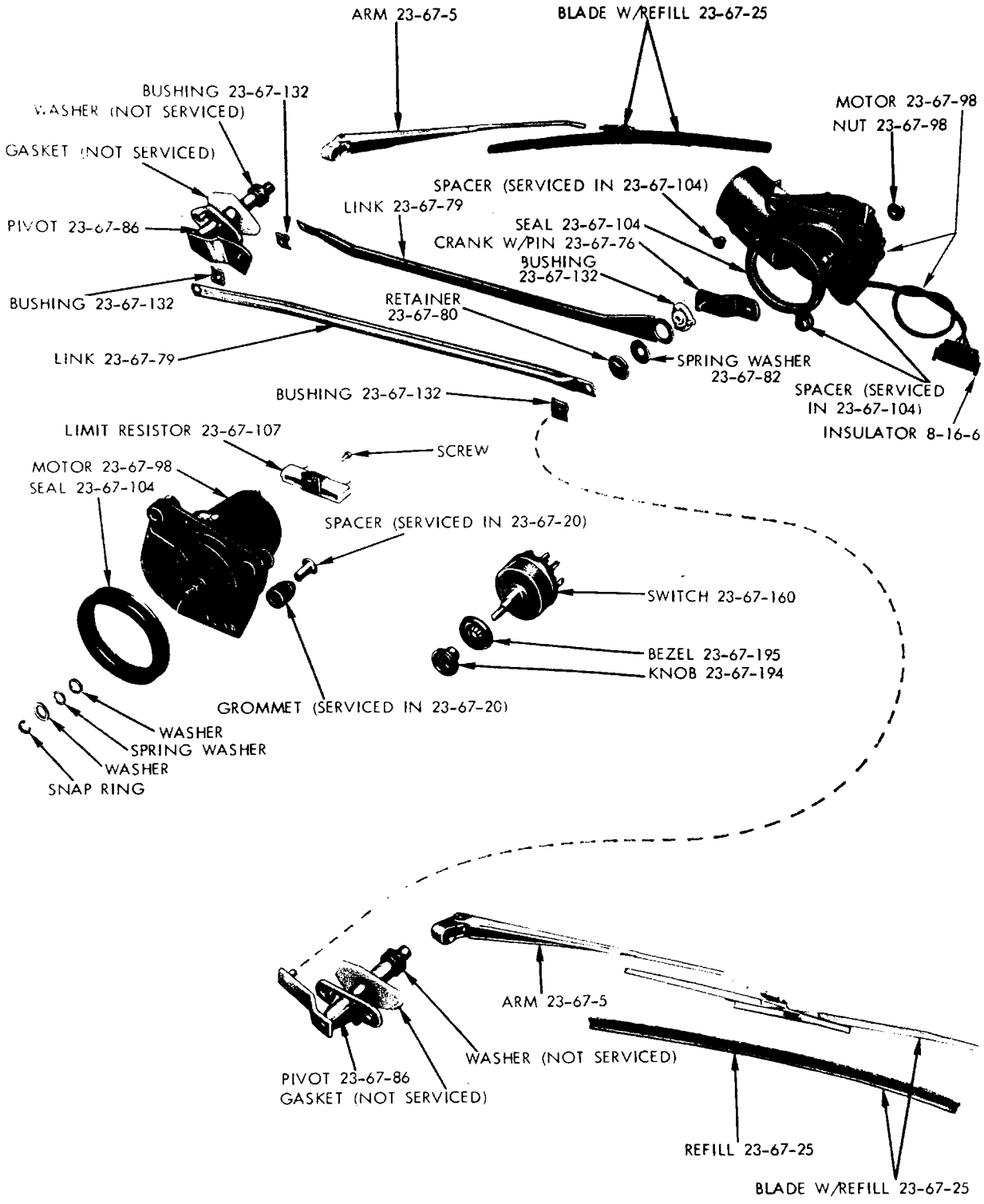

PARTS INDICATED BY NAME ONLY - ORDER BY DESCRIPTION

19a2657

WINDSHIELD WIPER - VALIANT AND DART

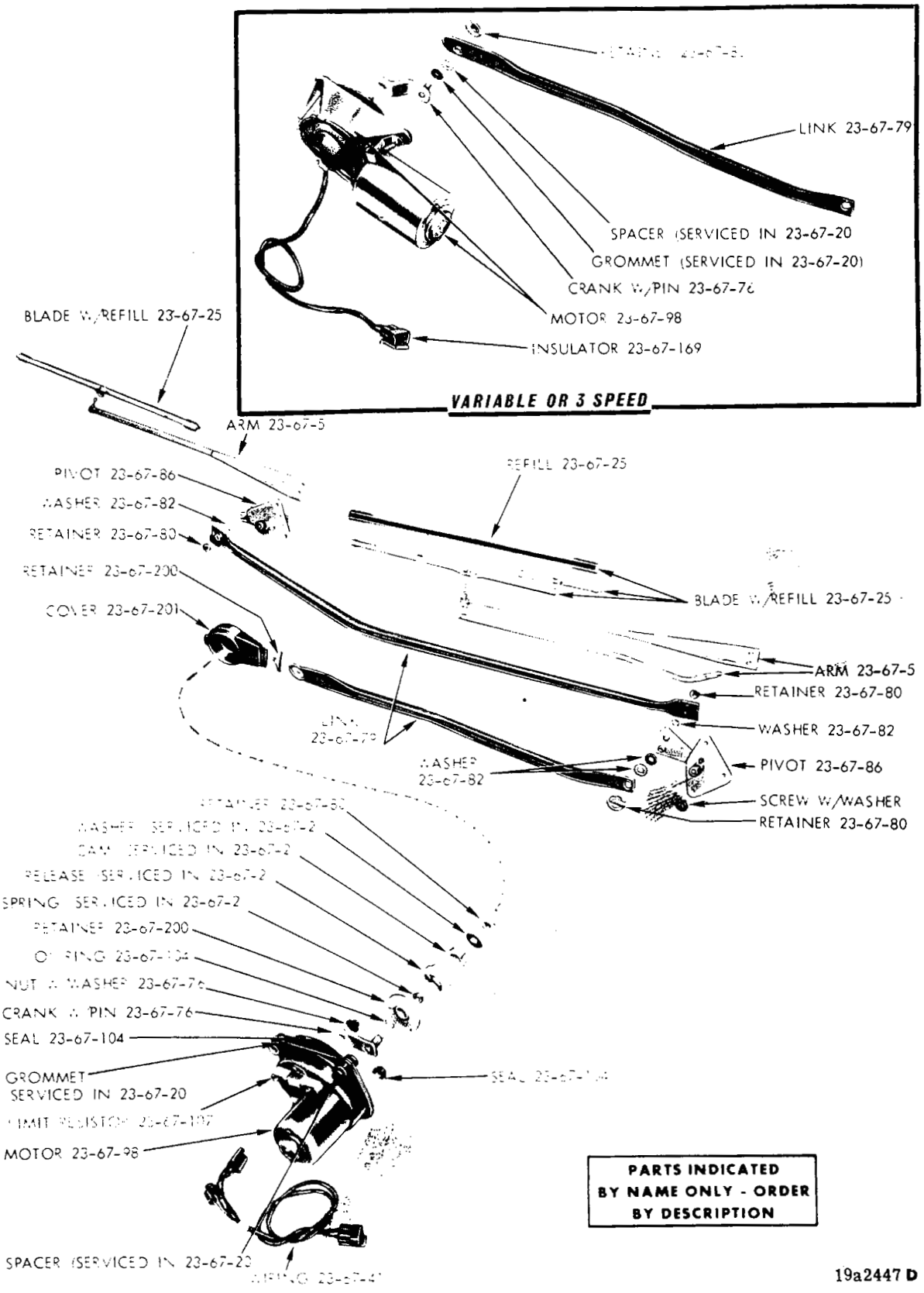

WINDSHIELD WIPER (2 AND 3 SPEED) -
PLYMOUTH, DODGE, CHRYSLER AND IMPERIAL
(TYPICAL OF BARRACUDA, CHALLENGER, SATELLITE, CORONET AND CHARGER)

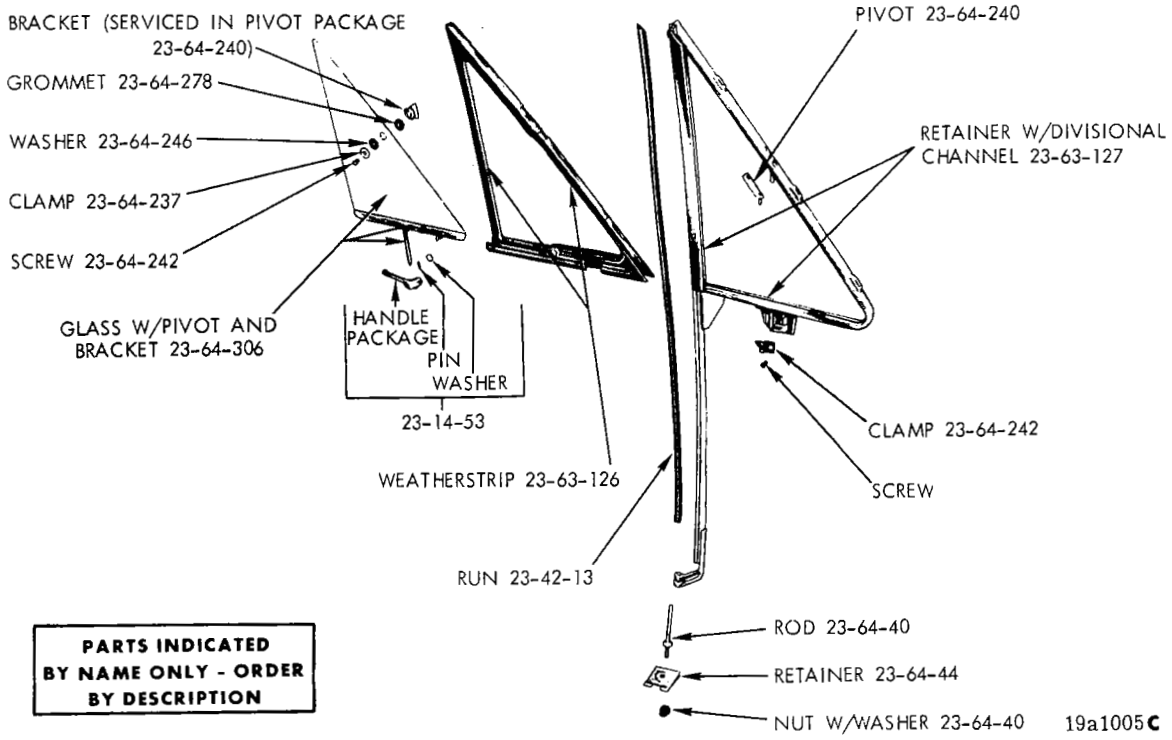

DOOR VENT WING AND GLASS - VALIANT AND DART 4 DOOR SEDAN

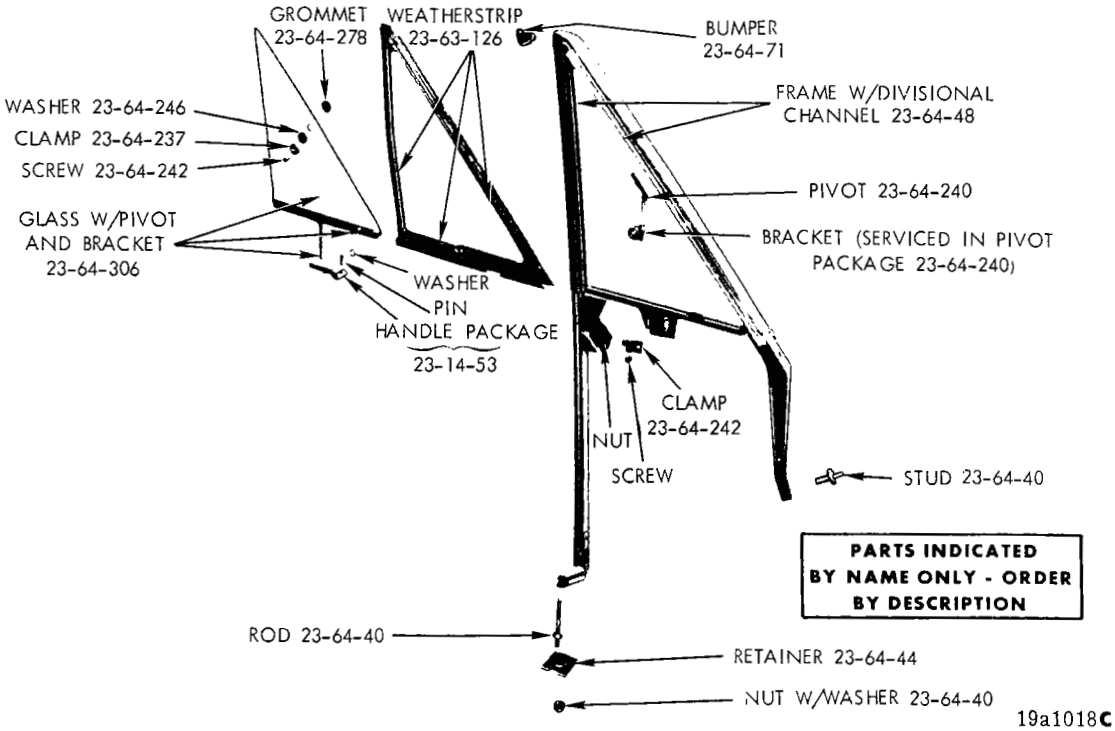

DOOR VENT WING AND GLASS - VALIANT AND DART 2 DOOR HARDTOP

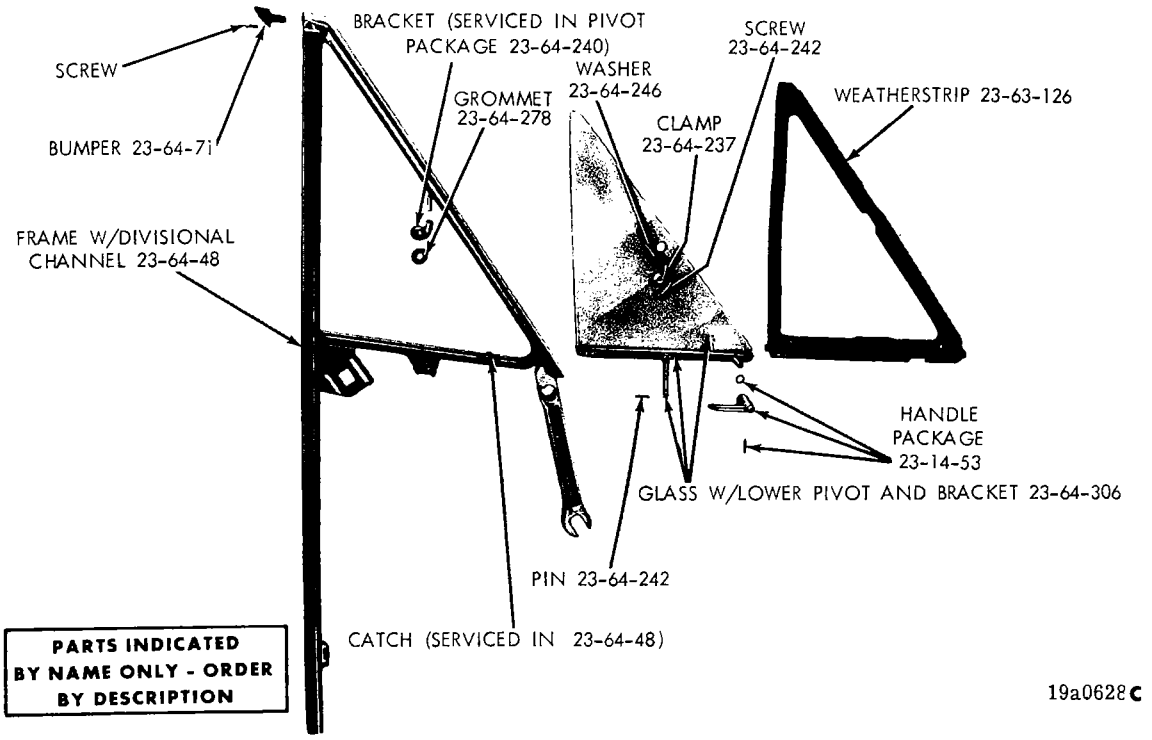

FRONT DOOR VENT WING AND GLASS - BELVEDERE AND CORONET
2 DOOR SEDAN, 2 DOOR HARDTOP AND CONVERTIBLE COUPE

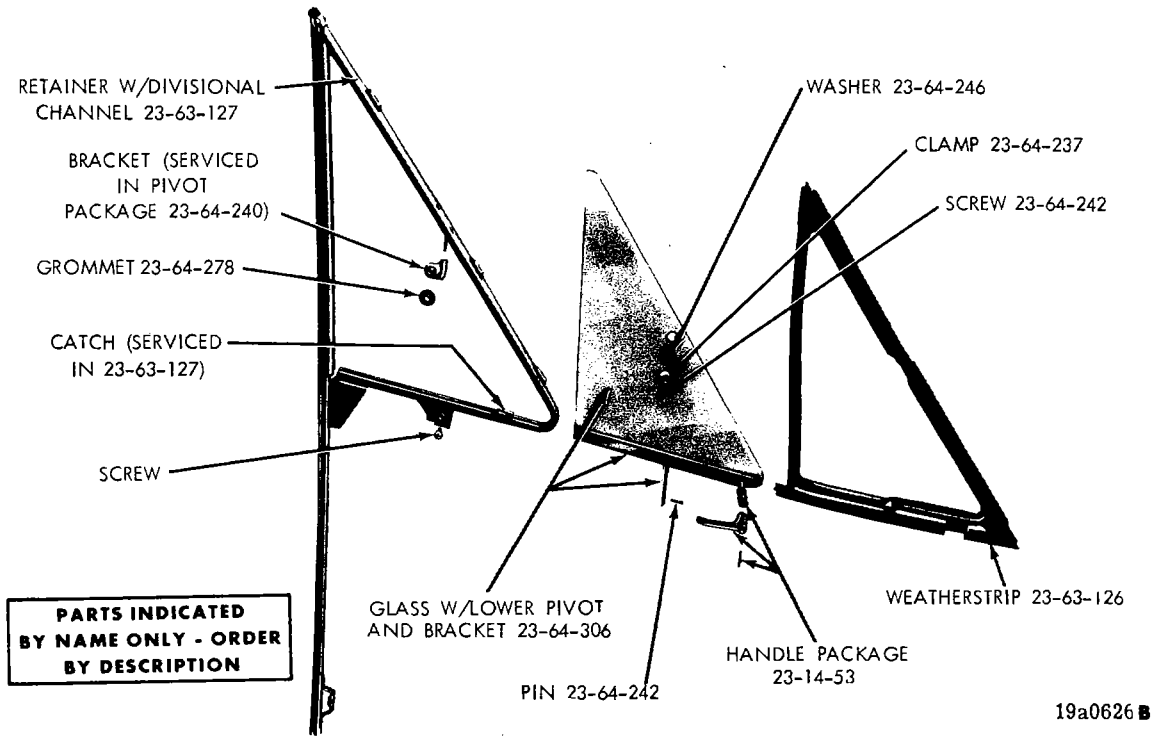

FRONT DOOR VENT WING AND GLASS - BELVEDERE AND CORONET
4 DOOR SEDAN AND STATION WAGON

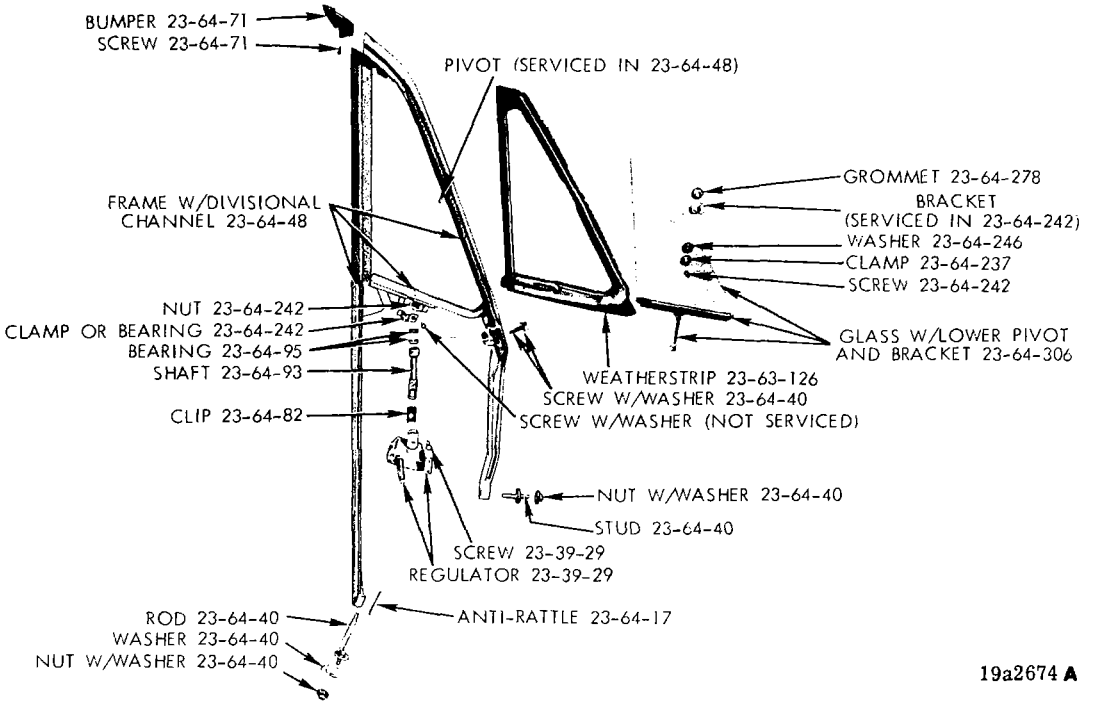

FRONT DOOR VENT WING AND GLASS - PLYMOUTH, DODGE, CHRYSLER AND IMPERIAL
2 DOOR SEDAN, CONVERTIBLE COUPE AND 4 DOOR HARDTOP

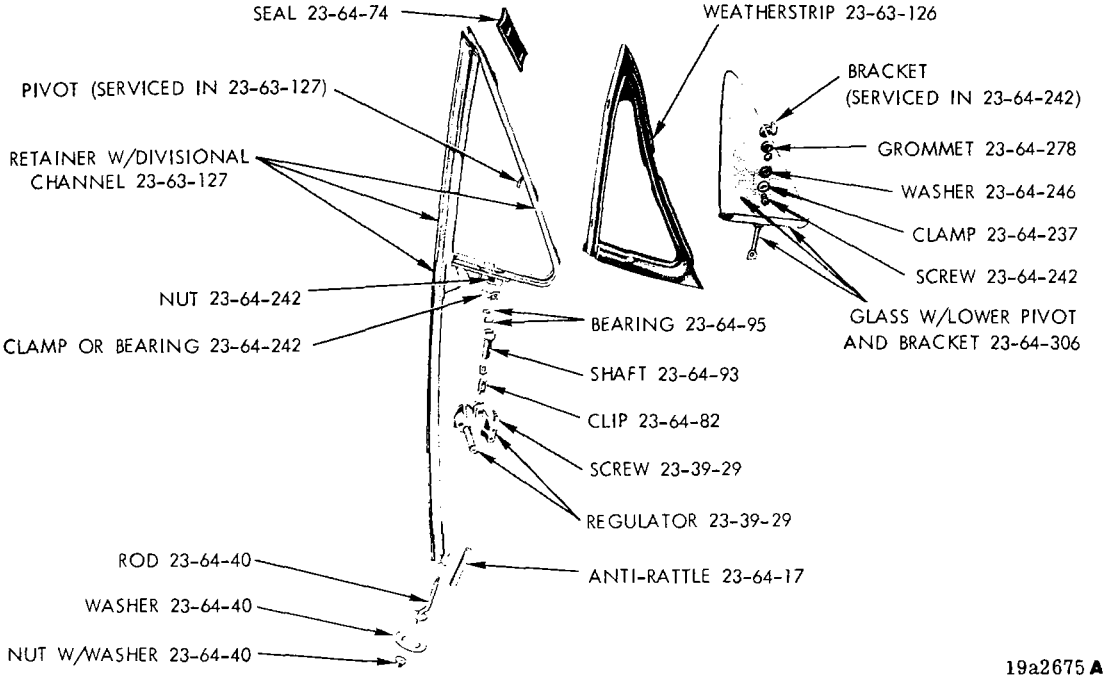

FRONT DOOR VENT WING AND GLASS - PLYMOUTH, DODGE AND CHRYSLER
4 DOOR SEDAN AND STATION WAGON

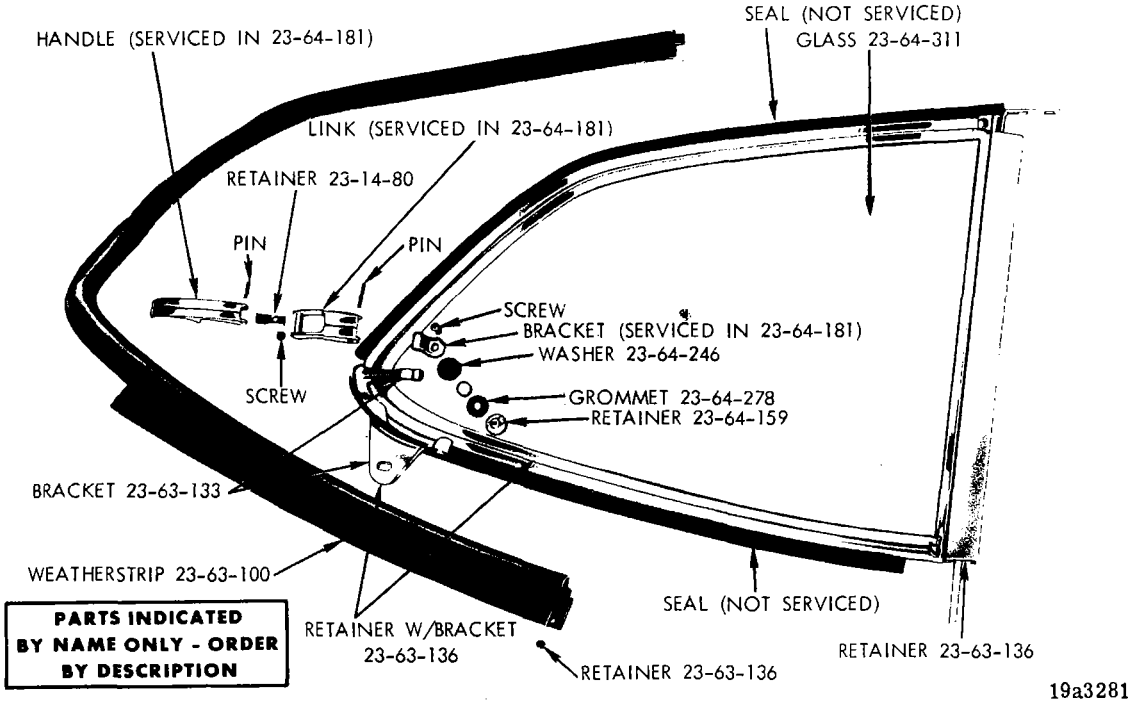

QUARTER WINDOW (VENT TYPE) - VALIANT AND DART FASTBACK

NOTES

19aL3280A

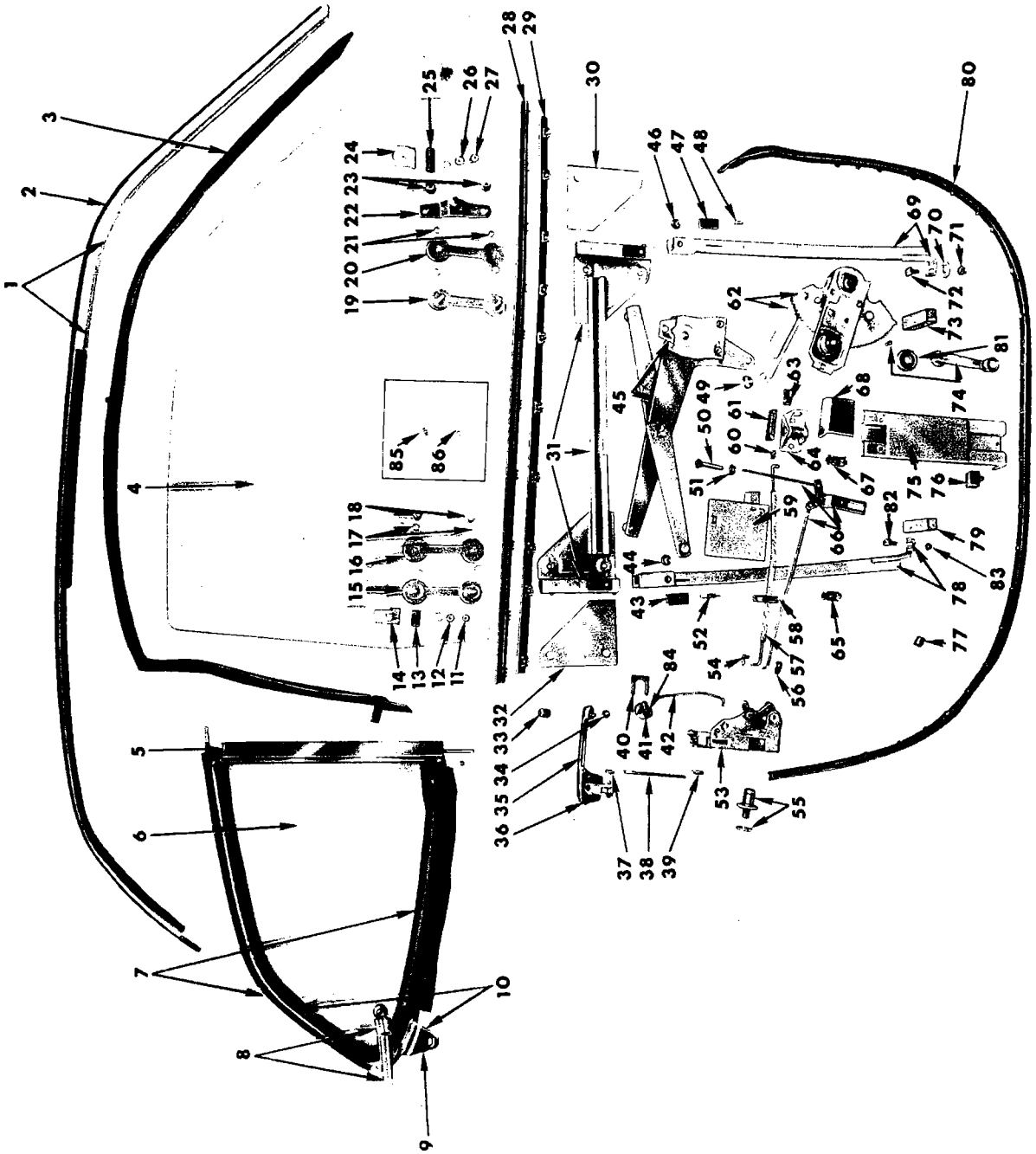

DOOR AND QUARTER WINDOW REGULATORS AND WEATHERSTRIPS - VALIANT AND DART FASTBACK

DOOR AND QUARTER WINDOW REGULATORS AND WEATHERSTRIPS - VALIANT AND DART FASTBACK

Ref. No.	Name	Part Type Code
1	Retainer	23-63-55
2	Seal	23-63-37
3	Weatherstrip	23-63-33
4	Glass	23-64-308
5	Retainer	23-63-136
6	Glass	23-64-311
7	Weatherstrip	23-63-100
8	Latch Package	23-64-181
9	Bracket	23-63-133
10	Retainer w/Bracket	23-63-136
11	Screw	23-64-12
12	Stop	23-64-12
13	Bumper	23-64-4
14	Stop	23-64-12
15	Plate w/Stud	23-64-201
16	Gasket	23-64-199
17	Spacer	23-09-53
18	Nut w/Washer (Part No. 120 375)	
19	Plate w/Stud	23-64-201
20	Gasket	23-64-199
21	Spacer	23-09-53
22	Bracket w/Roller	23-64-269
23	Nut w/Washer (Part No. 120 375)	
24	Stop	23-64-12
25	Bumper	23-64-4
26	Stop	23-64-12
27	Screw	23-64-12
28	Weatherstrip	23-63-15
29	Weatherstrip	23-63-14
30	Gasket	23-64-199
31	Channel w/Stabilizer	23-09-51
32	Gasket	23-64-199
33	Bumper	23-08-12
34	Gasket or Seal	23-14-147
35	Handle	23-14-10
36	Gasket or Seal	23-14-147
37	Clip	23-18-29
38	Link	23-18-20
39	Clip	23-18-29
40	Retainer	23-17-28
41	Gasket	23-17-27
42	Link	23-18-26
43	Wedge	23-64-14
44	Screw w/Washer (Part No. 6027 219)	
45	Arm	23-39-5
46	Screw w/Washer (Part No. 6027 219)	
47	Wedge	23-64-14
48	Spring	23-64-276
49	Spring Nut (Part No. 6000 305)	
50	Knob Package	23-18-27
51	Escutcheon	23-18-49
52	Spring	23-64-276
53	Latch	23-18-5
54	Clip	23-18-29
55	Striker	23-08-60
	Washer	23-08-60
56	Clip	23-18-29
57	Link w/Sleeve	23-18-11
58	Clip	23-18-29
59	Plate w/Guide	23-39-24
60	Clip	23-18-29
61	Seal	23-18-37
62	Sector Plate w/Link	23-39-5
63	Bumper	23-18-48
64	Remote Control	23-18-13
65	Nut	23-76-16
66	Control w/Link	23-18-25
67	Nut	23-76-16
68	Handle	23-14-27
69	Track w/Brackets	23-64-254
70	Washer	
71	Nut w/Washer	
72	Bolt	
73	Strip	23-64-290
74	Handle	23-14-18
	Screw	23-14-18
75	Brace and Nut	23-11-9
76	Bumper	23-64-4
77	Bumper	23-08-12
78	Track w/Brackets	23-64-254
79	Strip	23-64-290
80	Weatherstrip	23-63-33
81	Spacer	23-14-24
82	Bolt	
83	Nut w/Washer	
84	Cylinder and Key Package	23-17-2
85	Fastener	23-64-272
86	Bushing	23-09-53

PARTS INDICATED BY NAME ONLY - ORDER BY DESCRIPTION

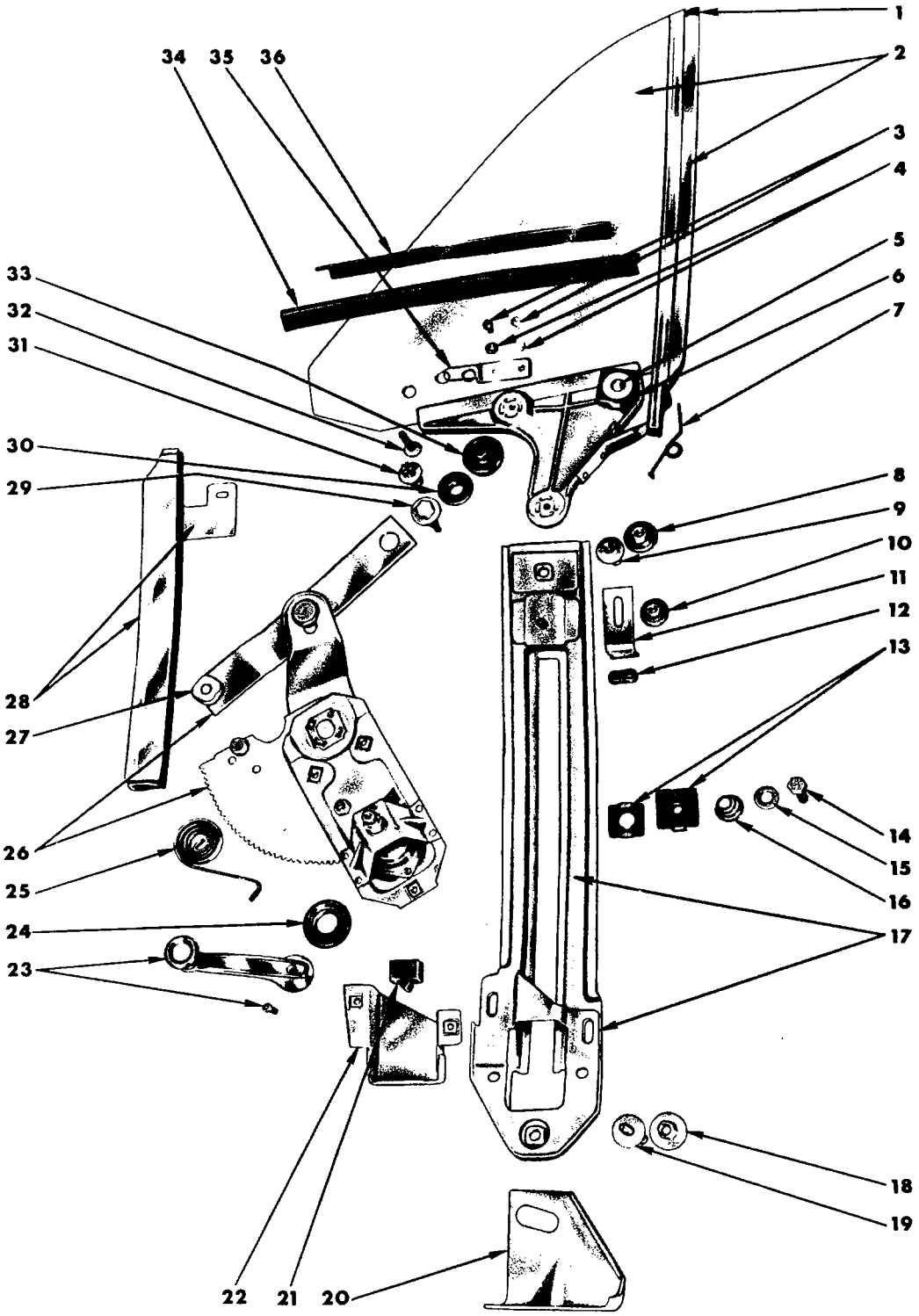

19aL3287

QUARTER WINDOW REGULATORS AND WEATHERSTRIPS - BARRACUDA AND CHALLENGER
2 DOOR HARDTOP AND FASTBACK (TYPICAL OF CONVERTIBLE COUPE)

QUARTER WINDOW REGULATORS AND WEATHERSTRIPS -
BARRACUDA AND CHALLENGER 2 DOOR HARDTOP AND FASTBACK
(TYPICAL OF CONVERTIBLE COUPE)

Ref. No.	Name	Part Type Code
1	Weatherstrip	23-63-104
2	Glass Complete	23-64-311
3	Screw	Not Serviced
4	Washer	
5	Rivet	
6	Slide	23-64-282
7	Spring	23-64-276
8	Nut w/Washer	(Part No. 120 376)
9	Stud	23-64-299
10	Nut w/Washer	(Part No. 120 375)
11	Stop	23-64-12
12	Anti-Rattler	23-64-17
13	Slide	23-64-282
14	Bolt	23-64-282
15	Washer	
16	Spring	23-64-276
17	Track w/Support	23-64-299
18	Nut w/Washer	
19	Stud	23-64-299
20	Bracket	23-64-300
21	Bumper	23-64-4
22	Stop	23-64-12
23	Handle	23-14-79
24	Spacer	23-14-24
25	Spring	23-39-44
26	Regulator	23-39-34
27	Slide	23-64-282
28	Run w/Retainer	23-42-38
29	Bolt	23-64-282
30	Retainer	23-64-293
31	Stop	23-64-12
32	Screw	Not Serviced
33	Slide	23-64-282
34	Weatherstrip	23-63-20
35	Stop	23-64-12
36	Weatherstrip	23-63-21

PARTS INDICATED BY NAME ONLY - ORDER BY DESCRIPTION

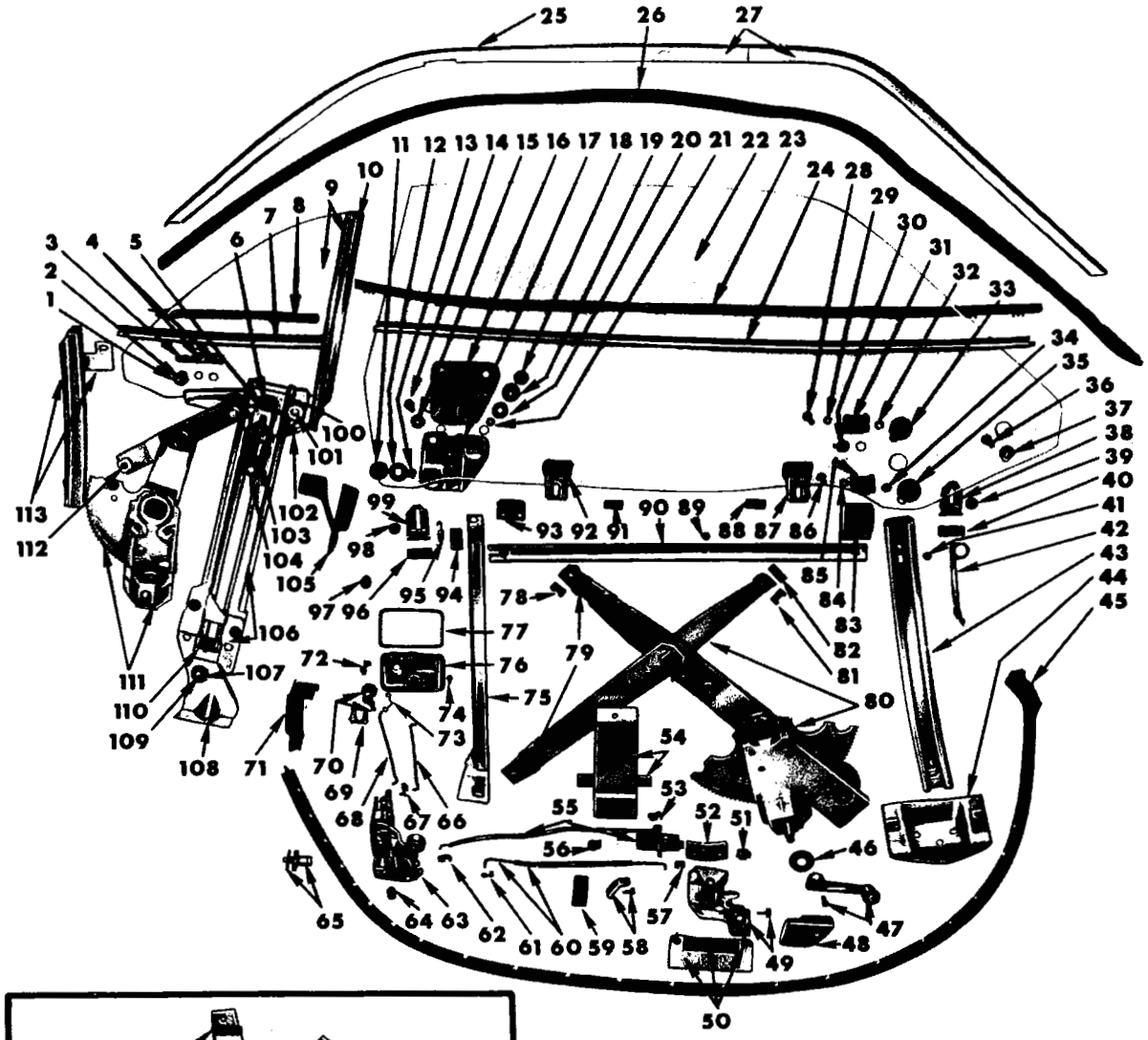

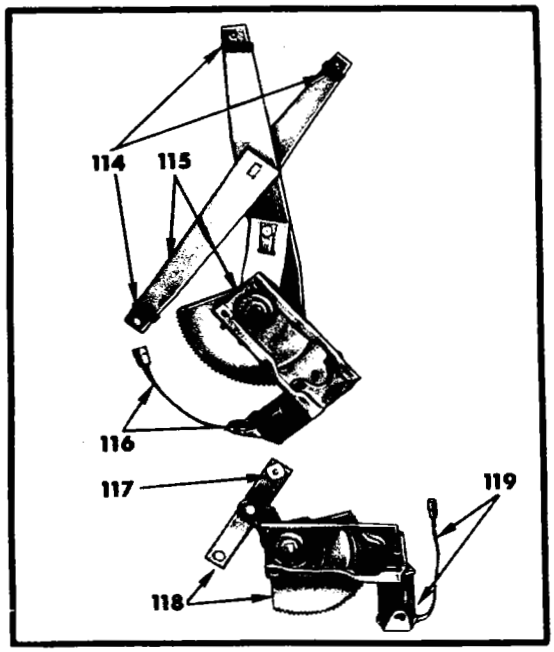

19al3361

DOOR AND QUARTER WINDOW REGULATORS AND WEATHERSTRIPS - BARRACUDA AND CHALLENGER 2 DOOR HARDTOP AND FASTBACK (TYPICAL OF CONVERTIBLE COUPE)



DOOR AND QUARTER WINDOW REGULATORS AND WEATHERSTRIPS - BARRACUDA AND CHALLENGER 2 DOOR HARDTOP AND FASTBACK (TYPICAL OF CONVERTIBLE COUPE)

Ref. No.	Name	Part Type Code
1	Screw	Not Serviced
2	Stop	23-64-12
3	Stop	23-64-12
4	Washer	
5	Stud	23-64-299
6	Nut w/Washer	
7	Weatherstrip	23-63-20
8	Weatherstrip	23-63-21
9	Glass Complete	23-64-311
10	Weatherstrip	23-63-104
11	Nut w/Washer	
12	Washer	23-64-272
13	Spacer	23-64-272
14	Screw	23-64-12
15	Stop	23-64-12
16	Gasket	23-64-199
17	Guide w/Support	23-64-197
18	Screw w/Washer	
19	Washer	
20	Washer	23-64-272
21	Spacer	23-64-272
22	Glass	23-64-308
23	Weatherstrip	23-63-14
24	Weatherstrip	23-63-15
25	Seal	23-63-37
26	Weatherstrip	23-63-33
27	Retainer	23-63-55
28	Screw	23-64-197
29	Gasket	23-64-272
30	Fastener	23-64-272
31	Guide	23-64-197
32	Nut	
33	Fastener	23-64-272
34	Nut	
35	Fastener	23-64-272
36	Screw	23-64-12
37	Stop	23-64-12
38	Bracket	23-64-12
39	Screw	23-64-12
40	Bumper	23-64-4
41	Bumper	23-64-266
42	Guide, w/Nut	23-21-58
43	Track w/Bracket	23-64-254
44	Support w/Retainer	23-64-269
45	Weatherstrip	23-63-33
46	Spacer	23-14-24
47	Handle	23-14-18
	Screw	23-14-18
48	Handle	23-14-27
49	Remote Control	23-18-13
50	Plate w/Seal	23-26-80
51	Nut	23-76-16
52	Seal	23-18-37
53	Clip	23-18-29
54	Support w/Guide	23-39-24
55	Control w/Link	23-18-25
56	Nut	23-76-16
57	Clip	23-18-29
58	Knob	23-18-27
59	Bumper	23-64-4
60	Link w/Sleeve	23-18-11
61	Clip	23-18-29
62	Clip	23-18-29
63	Latch	23-18-5
64	Bumper	23-08-12
65	Striker	23-08-60
66	Link	23-18-20
67	Clip	23-18-29
68	Link	23-18-26
69	Spacer	23-14-147
70	Cylinder and Key Package	23-17-2
71	Seal	23-63-33
72	Clip	23-18-29
73	Retainer	23-17-28
74	Bumper	23-14-153
75	Track w/Bracket	23-64-254
76	Handle	23-14-10
77	Gasket or Seal	23-14-147
78	Clip	23-64-294
79	Anti-Rattler	23-64-17
80	Regulator	23-39-5
81	Clip	23-64-294
82	Anti-Rattler	23-64-17
83	Stabilizer	23-64-198
84	Gasket	23-64-17
85	Guide	23-64-197
86	Screw	23-64-197
87	Bracket	23-64-200
88	U/Nut	
89	Bumper	23-64-266
90	Channel	23-09-52
91	U/Nut	
92	Bracket	23-64-200
93	Stabilizer	23-64-198
94	Wedge	23-64-14
95	Spring	23-64-276
96	Bumper	23-64-4
97	Bumper	23-08-12
98	Screw	23-64-12
99	Bracket	23-64-12
100	Slide	23-64-282
101	Rivet	
102	Spring	23-64-276
103	Slide	23-64-282
104	Bolt	23-64-282
105	Seal	23-63-33
106	Track w/Support	23-64-299
107	Nut w/Washer	
108	Bracket	23-64-300
109	Stud	23-64-299
110	Bumper	23-64-4
111	Regulator	23-39-34
112	Slide	23-64-282
113	Run w/Retainer	23-42-38
114	Anti-Rattler	23-64-17
115	Regulator	23-41-4
116	Motor w/Mechanism	23-41-106
117	Slide	23-64-282
118	Regulator	23-41-4
119	Motor w/Mechanism	23-41-106

PARTS INDICATED BY NAME ONLY - ORDER BY DESCRIPTION

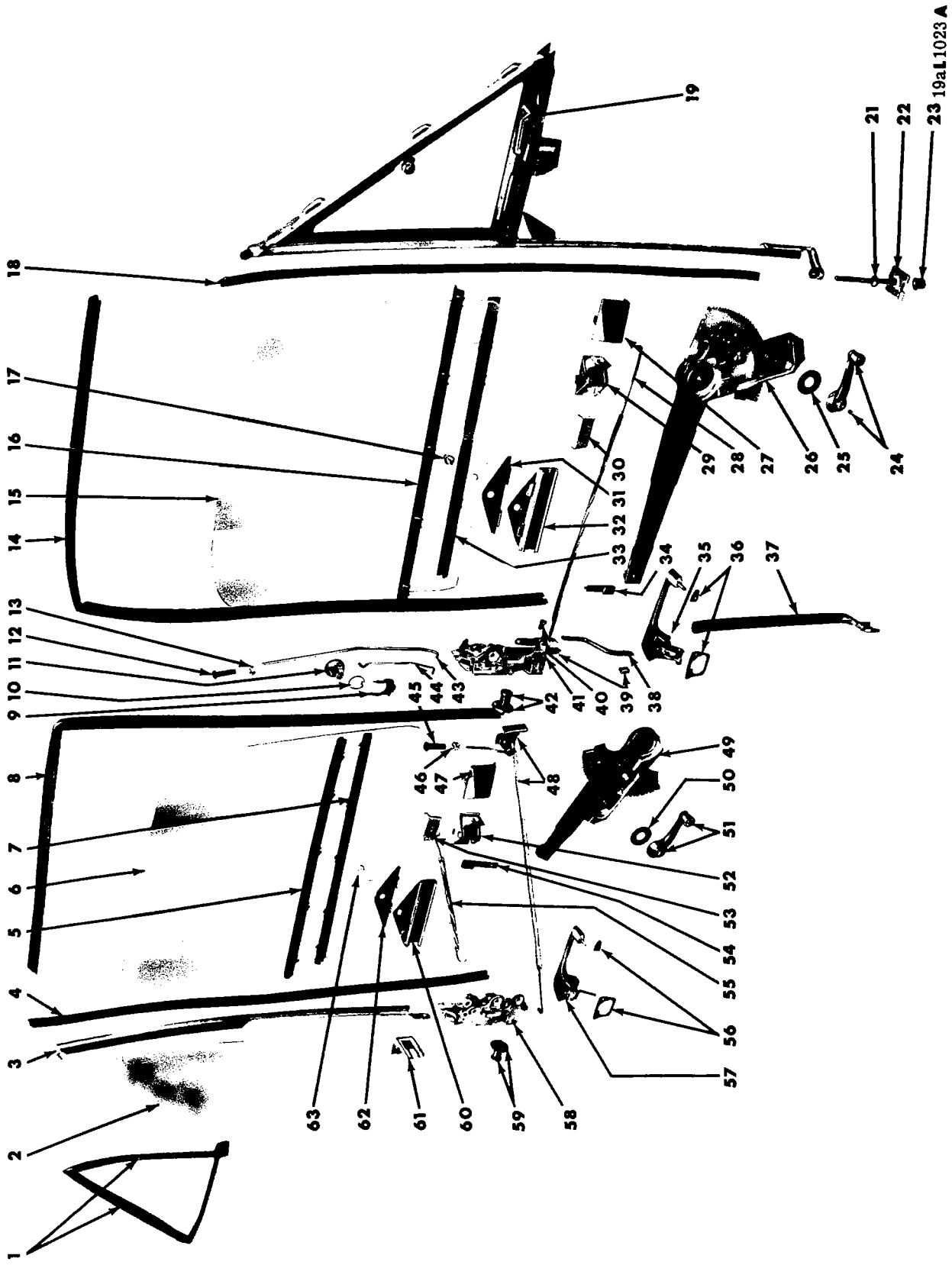

DOOR WINDOW REGULATORS AND RUNS - VALIANT AND DART 4 DOOR SEDAN

DOOR WINDOW REGULATORS AND RUNS - VALIANT AND DART 4 DOOR SEDAN

Ref. No.	Name	Part Type Code
1	Weatherstrip	23-63-97
2	Glass	23-64-308
3	Channel w/Lower Bracket	23-09-56
4	Run	23-42-13
5	Weatherstrip	23-63-14
6	Glass	23-64-308
7	Weatherstrip	23-63-15
8	Run	23-42-23
9	Retainer	23-17-28
10	Gasket	23-17-27
11	Cylinder & Key Package	23-17-2
12	Knob Package	23-18-27
13	Escutcheon	23-18-49
14	Run	23-42-16
15	Glass	23-64-308
16	Weatherstrip	23-63-14
17	Rivet	23-09-52
18	Run	23-42-13
19	Handle Package	23-14-53
20		
21	Rod	23-64-40
22	Retainer	23-64-44
23	Nut w/Washer	23-64-40
24	Handle	23-14-18
	Screw	23-14-18
25	Spacer	23-14-24
26	Regulator	23-39-5
27	Handle	23-14-27
28	Link w/Sleeve	23-18-11
29	Remote Control	23-18-13
30	Seal	23-18-37
31	Gasket	23-09-54
32	Bracket w/Guide	23-09-52
33	Weatherstrip	23-63-15
34	Retainer or Clip	23-18-29
35	Handle	23-14-10
36	Gasket or Seal	23-14-147
37	Channel w/Nut	23-09-51
38	Link	23-18-20
39	Clip	23-18-29
40	Clip	23-18-29
41	Latch	23-18-5
42	Striker	23-08-60
43	Link or Rod	23-18-26
44	Link	23-18-26
45	Knob Package	23-18-27
46	Escutcheon	23-18-49
47	Handle	23-14-27
48	Control w/Link	23-18-25
49	Regulator	23-39-5
50	Spacer	23-14-24
51	Handle	23-14-18
	Screw	23-14-18
52	Remote Control	23-18-13
53	Seal	23-18-37
54	Clip	23-18-29
55	Link w/Sleeve	23-18-11
56	Gasket or Seal	23-14-147
57	Handle	23-14-10
58	Latch	23-18-5
59	Striker	23-08-60
60	Bracket w/Guide	23-09-58
61	Support w/Nut	23-64-273
62	Gasket	23-09-54
63	Rivet	23-09-58

PARTS INDICATED BY NAME ONLY - ORDER BY DESCRIPTION

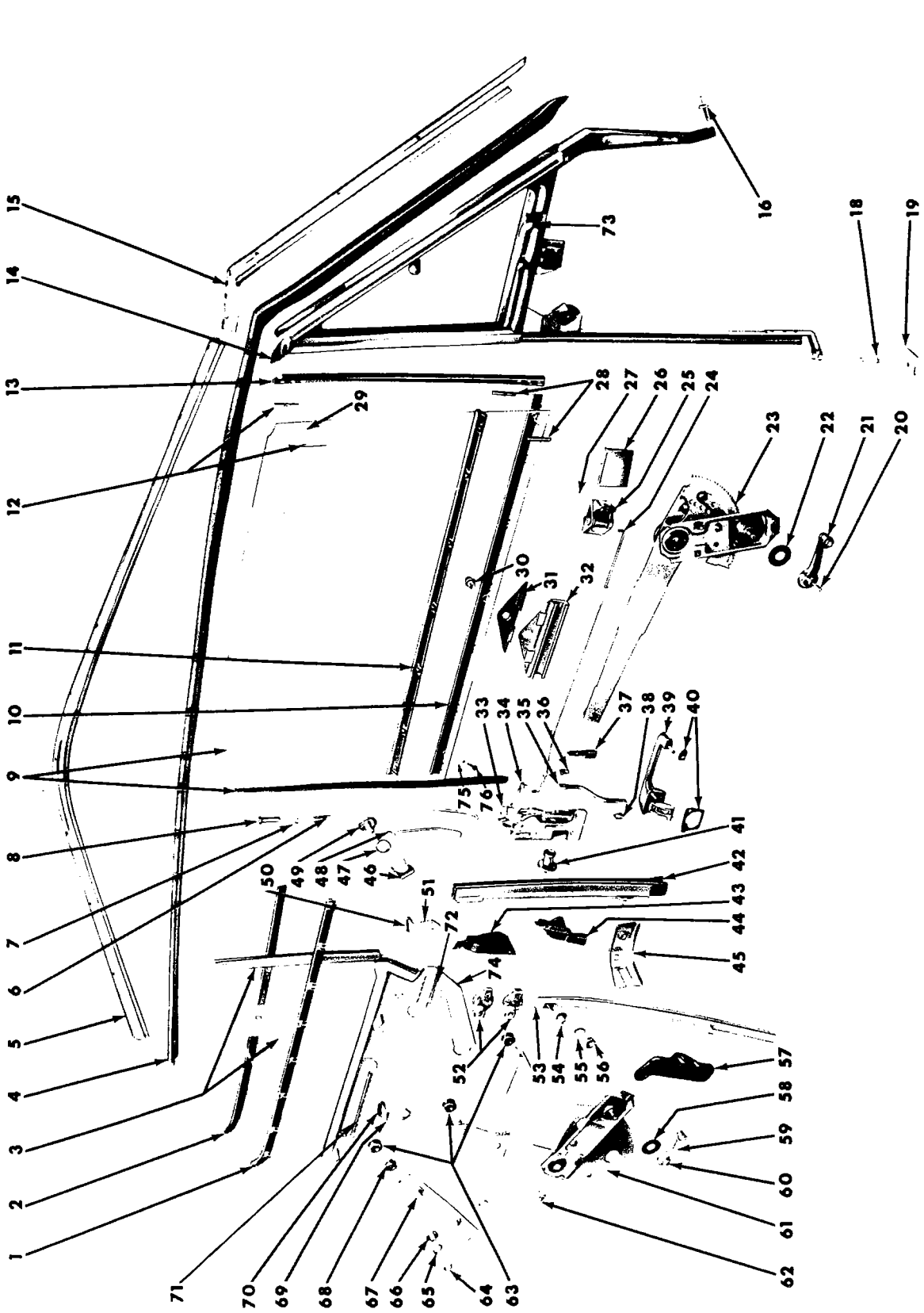

DOOR AND QUARTER WINDOW REGULATORS AND RUNS - VALIANT AND DART 2 DOOR HARDTOP

DOOR AND QUARTER WINDOW REGULATORS AND RUNS - VALIANT AND DART 2 DOOR HARDTOP

Ref. No.	Name	Part Type Code
1	Weatherstrip	23-63-20
2	Weatherstrip	23-63-21
3	Glass w/Front Frame	23-64-311
4	Weatherstrip	23-63-33
5	Retainer	23-63-55
6	Link or Rod	23-18-26
7	Escutcheon	23-18-49
8	Knob Package	23-18-27
9	Glass w/Rear Frame	23-64-308
10	Weatherstrip	23-63-15
11	Weatherstrip	23-63-14
12	Slide	23-64-282
13	Weatherstrip Package	23-63-33
14	Bumper	23-64-71
15	Retainer	23-63-55
16	Stud	23-64-40
17		
18	Rod	23-64-40
19	Retainer	23-64-44
20	Screw	23-14-18
21	Handle	23-14-18
22	Spacer	23-14-24
23	Regulator	23-39-5
24	Link w/Sleeve	23-18-11
25	Remote Control	23-18-13
26	Handle	23-14-27
27	Seal	23-18-37
28	Slide	23-64-282
29	Pin	23-64-286
30	Rivet	23-09-52
31	Gasket	23-09-54
32	Bracket w/Guide	23-09-52
33	Latch	23-18-5
34	Clip	23-18-29
35	Link	23-18-20
36	Clip	23-18-29
37	Clip	23-18-29
38	Clip	23-18-29
39	Handle	23-14-10
40	Gasket or Seal	23-14-147
41	Striker	23-08-60
42	Channel & Bracket	23-09-51
43	Seal	23-63-33
44	Seal	23-63-33
45	Support w/Nut	23-09-47
46	Retainer	23-17-28
47	Gasket	23-17-27
48	Link	23-18-26
49	Cylinder & Key Package	23-17-2
50	Anti-Rattler	23-64-17
51	Stop	23-64-12
52	Bracket w/Roller	23-64-269
53	Track	23-64-299
54	Sleeve Nut	23-64-297
55	Washer	
56	Nut	
57	Brace	23-64-281
58	Spacer	23-14-24
59	Handle	23-14-79
60	Screw	23-14-79
61	Regulator	23-39-34
62	Bracket	23-39-48
63	Roller	23-39-45
64	Nut	
65	Spring Washer	
66	Sleeve Nut	23-64-297
67	Track	23-64-299
68	Slide	23-64-282
69	Stop	23-64-12
70	Anti-Rattler	23-64-17
71	Cap	23-09-27
72	Cap	23-09-27
73	Handle Package	23-14-53
74	Frame w/Cap	23-09-9
75	Stop	23-64-12
76	Screw	23-64-12

PARTS INDICATED BY NAME ONLY - ORDER BY DESCRIPTION

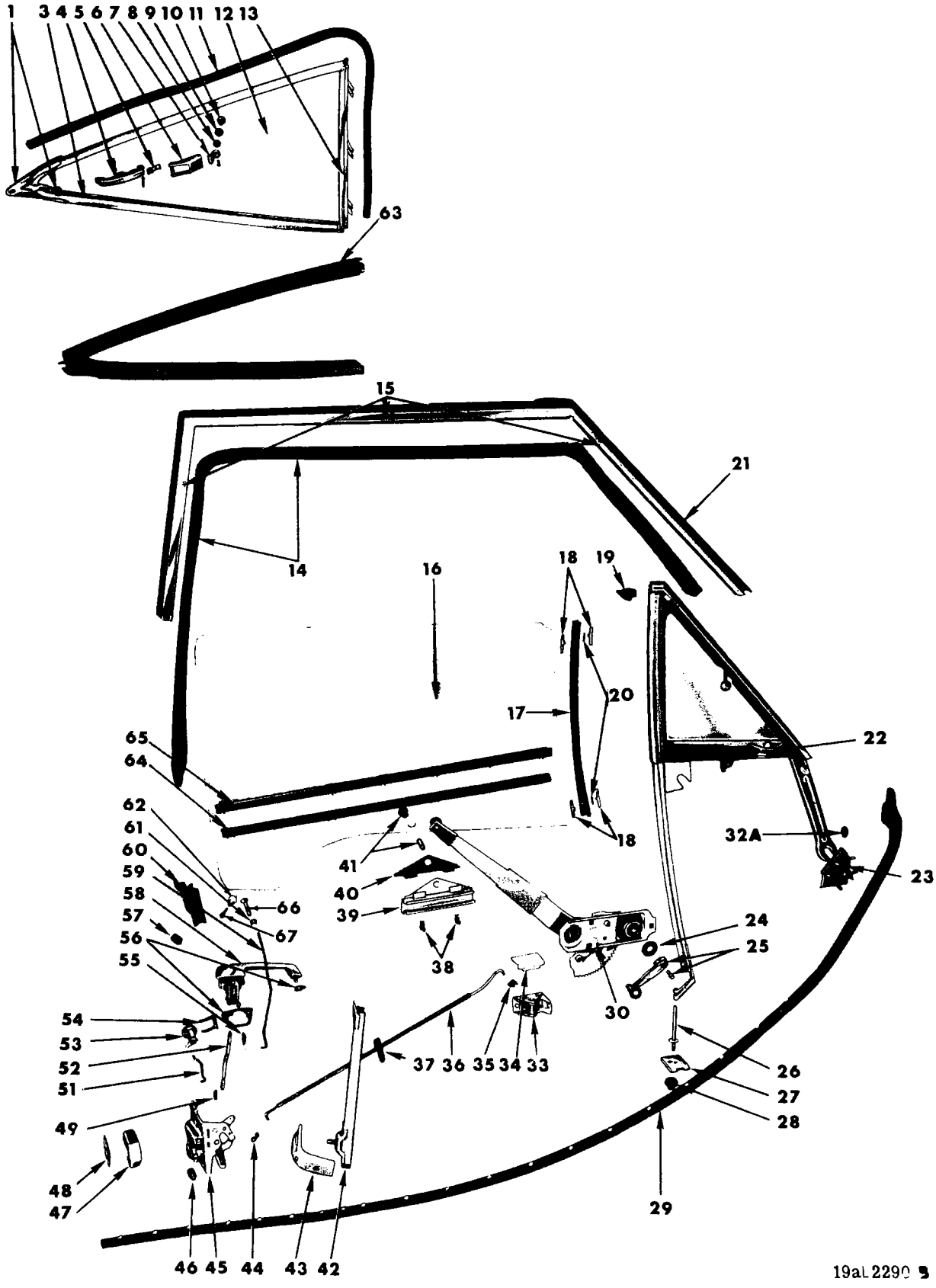

DOOR AND QUARTER WINDOW REGULATORS AND RUNS - BELVEDERE AND CORONET 2 DOOR SEDAN

DOOR AND QUARTER WINDOW REGULATORS AND RUNS -
BELVEDERE AND CORONET 2 DOOR SEDAN

Ref. No.	Name	Part Type Code
1	Bracket	23-63-133
2		
3	Retainer w/Bracket	23-63-136
4	Handle	23-14-70
5	Retainer	23-14-80
6	Link (Serviced in 23-64-181)	
7	Bracket (Serviced in 23-64-181)	
8	Washer	23-64-246
9	Grommet	23-64-278
10	Retainer	23-64-159
11	Seal	Not Serviced
12	Glass	23-64-311
13	Frame w/Bracket	23-64-280
14	Weatherstrip	23-63-33
15	Retainer	23-63-55
16	Glass	23-64-308
17	Weatherstrip Package	23-63-33
18	Slide	23-64-282
19	Bumper	23-64-71
20	Pin	23-64-286
21	Seal	Not Serviced
22	Handle Package	23-14-53
23	Bracket	23-64-242
24	Spacer	23-14-24
25	Handle	23-14-18
26	Rod	23-64-40
27	Retainer	23-64-44
28	Nut	23-64-40
29	Weatherstrip	23-63-33
30	Regulator	23-39-5
31		
32		
32A	Plug	23-64-71
33	Remote Control	23-18-13
34	Seal	23-18-37
35	Clip	23-18-29
36	Link w/Sleeve	23-18-11
37	Clip	23-18-29
38	Clip	
39	Bracket w/Guide	23-09-52
40	Gasket	23-09-54
41	Rivet	23-09-52
42	Channel and Bracket	23-09-51
43	Support w/Nut	23-09-47
44	Clip	23-18-29
45	Latch	23-18-5
46	Bumper	23-08-12
47	Striker	23-08-60
48	Spacer	23-08-54
49	Clip	23-18-29
50		
51	Link	23-18-26
52	Link	23-18-20
53	Cylinder and Key Package	23-17-2
54	Retainer	23-17-28
55	Clip	23-18-29
56	Gasket or Seal	23-14-147
57	Bumper	23-08-12
58	Handle	23-14-10
59	Rod	23-18-26
60	Seal	23-63-33
61	Escutcheon	23-18-49
62	Stop	23-64-12
63	Weatherstrip	23-63-100
64	Weatherstrip	23-63-15
65	Weatherstrip	23-63-14
66	Knob Package	23-18-27
67	Screw	23-64-12

PARTS INDICATED BY NAME ONLY - ORDER BY DESCRIPTION

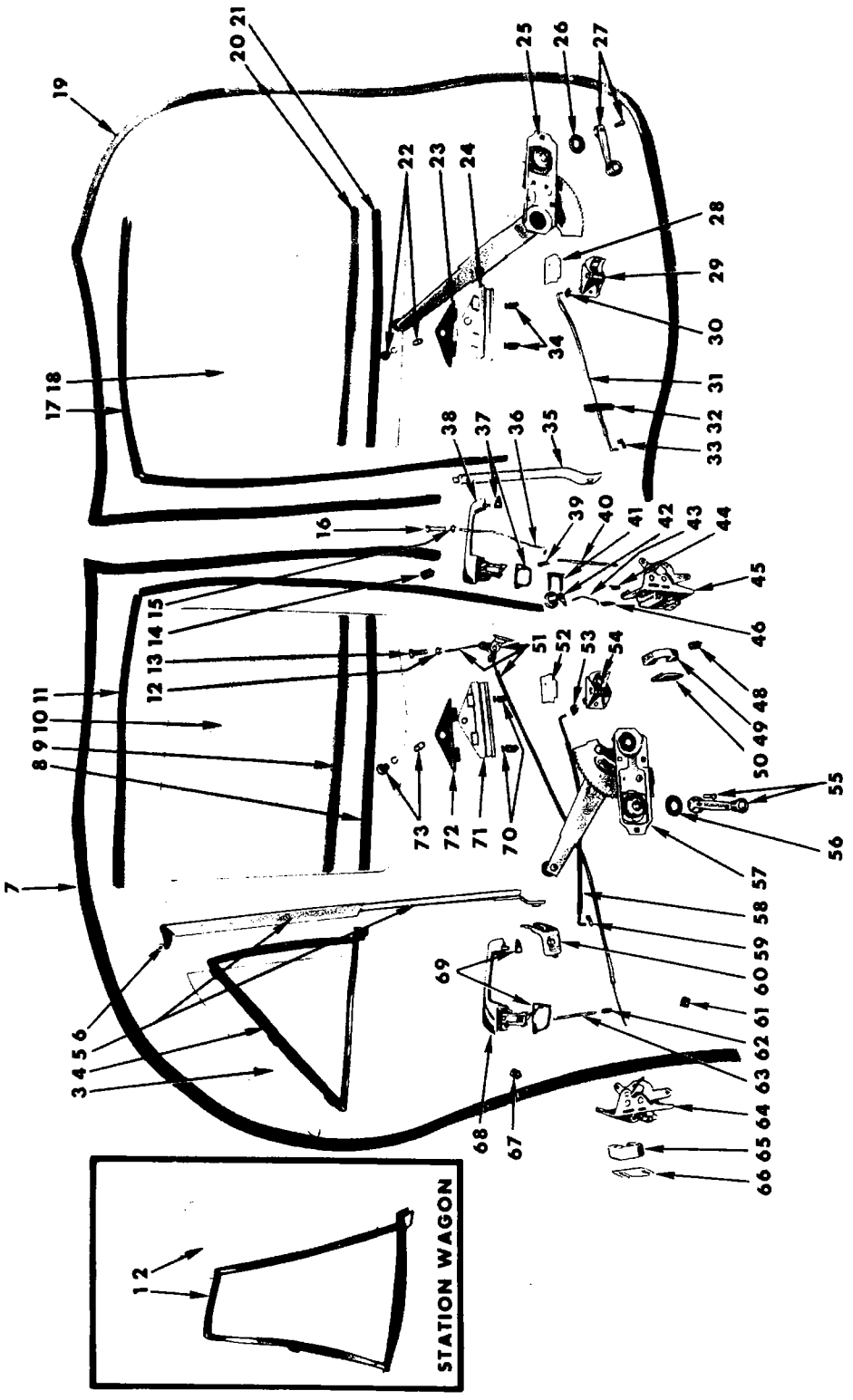

DOOR WINDOW REGULATORS AND RUNS - BELVEDERE AND CORONET 4 DOOR SEDAN AND STATION WAGON

DOOR WINDOW REGULATORS AND RUNS - BELVEDERE AND CORONET
4 DOOR SEDAN AND STATION WAGON

Ref. No.	Name	Part Type Code
1	Weatherstrip	23-63-97
2	Glass	23-64-308
3	Glass	23-64-308
4	Weatherstrip	23-63-97
5	Channel	23-09-56
6	Run	23-42-13
7	Weatherstrip	23-63-33
8	Weatherstrip	23-63-15
9	Weatherstrip	23-63-14
10	Glass	23-64-308
11	Run	23-42-23
12	Escutcheon	23-18-49
13	Knob Package	23-18-27
14	Bumper	23-08-12
15	Escutcheon	23-18-49
16	Knob Package	23-18-27
17	Run	23-42-16
18	Glass	23-64-308
19	Weatherstrip	23-63-33
20	Weatherstrip	23-63-14
21	Weatherstrip	23-63-15
22	Rivet	23-09-52
23	Gasket	23-09-54
24	Bracket	23-09-52
25	Regulator	23-39-5
26	Spacer	23-14-24
27	Handle	23-14-18
28	Seal	23-18-37
29	Remote Control	23-18-13
30	Clip	23-18-29
31	Link w/Sleeve	23-18-11
32	Clip	23-18-29
33	Clip	23-19-29
34	Clip	
35	Channel w/Bracket	23-09-51
36	Rod	23-18-26
37	Gasket or Seal	23-14-147
38	Handle	23-14-10
39	Clip	23-18-20
40	Link	23-18-20
41	Retainer	23-17-28
42	Cylinder and Key Package	23-17-2
43	Link	23-18-26
44	Clip	23-18-29
45	Latch	23-18-5
46	Clip	23-18-29
47		
48	Bumper	23-08-12
49	Striker	23-08-60
50	Spacer	23-08-54
51	Control w/Link	23-18-25
52	Seal	23-18-37
53	Clip	23-18-29
54	Remote Control	23-18-13
55	Handle	23-14-18
56	Spacer	23-14-24
57	Regulator	23-39-5
58	Link w/Sleeve	23-18-11
59	Clip	23-18-29
60	Support w/Nut	23-64-273
61	Bumper	23-00-12
62	Clip	23-18-29
63	Link	23-18-20
64	Latch	23-18-5
65	Striker	23-08-60
66	Spacer	23-08-54
67	Bumper	23-08-12
68	Handle	23-14-10
69	Gasket or Seal	23-14-147
70	Clip	
71	Bracket w/Guide	23-09-58
72	Gasket	23-09-54
73	Rivet	23-09-58

PARTS INDICATED BY NAME ONLY - ORDER BY DESCRIPTION

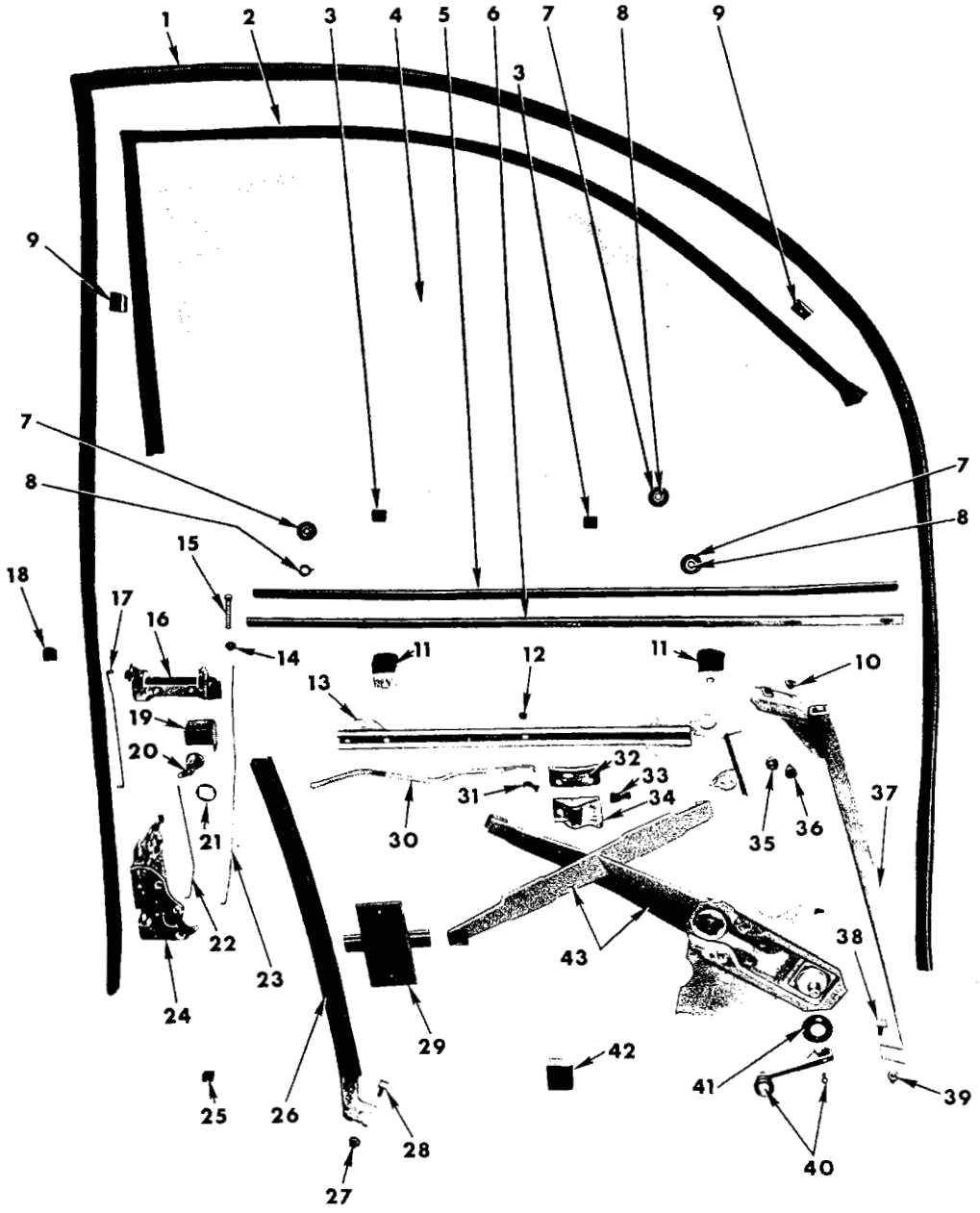

19a13737

1971
FRONT DOOR WINDOW REGULATORS AND RUNS - SATELLITE AND CORONET 4 DOOR SEDAN AND STATION WAGON

1971
FRONT DOOR WINDOW REGULATORS AND RUNS -
SATELLITE AND CORONET 4 DOOR SEDAN AND STATION WAGON

Ref. No.	Name	Part Type Code	Ref. No.	Name	Part Type Code
1	Weatherstrip	23-63-33	23	Rod	23-18-26
2	Run	23-42-16	24	Latch	23-18-5
3	Bumper	23-64-266	25	Bumper	23-08-12
4	Glass	23-64-308	26	Channel w/Run	23-09-51
5	Weatherstrip	23-63-15	27	Nut w/Washer	
6	Weatherstrip	23-63-14	28	Bolt	
7	Fastener	23-64-272	29	Guide	23-39-24
8	Bushing	23-09-53	30	Link w/Sleeve	23-18-11
9	Retainer	23-64-28	31	Clip	23-18-29
10	U-Nut		32	Seal	23-18-37
11	Bracket	23-64-200	33	Bumper	23-18-48
12	Bumper	23-64-266	34	Remote Control	23-18-13
13	Channel w/Stabilizer	23-09-51	35	Roller	23-39-45
14	Grommet	23-18-54	36	Screw	
15	Knob Package	23-18-27	37	Track	23-64-254
16	Handle	23-14-10	38	Bolt	
17	Link	23-18-20	39	Nut w/Washer	
18	Bumper	23-08-12	40	Handle	23-14-18
19	Retainer	23-17-28		Screw	23-14-18
20	Cylinder and Key Package	23-17-2	41	Spacer	23-14-24
21	Gasket	23-17-27	42	Bumper	23-64-4
22	Link	23-18-26	43	Regulator	23-39-5

PARTS INDICATED BY NAME ONLY - ORDER BY DESCRIPTION

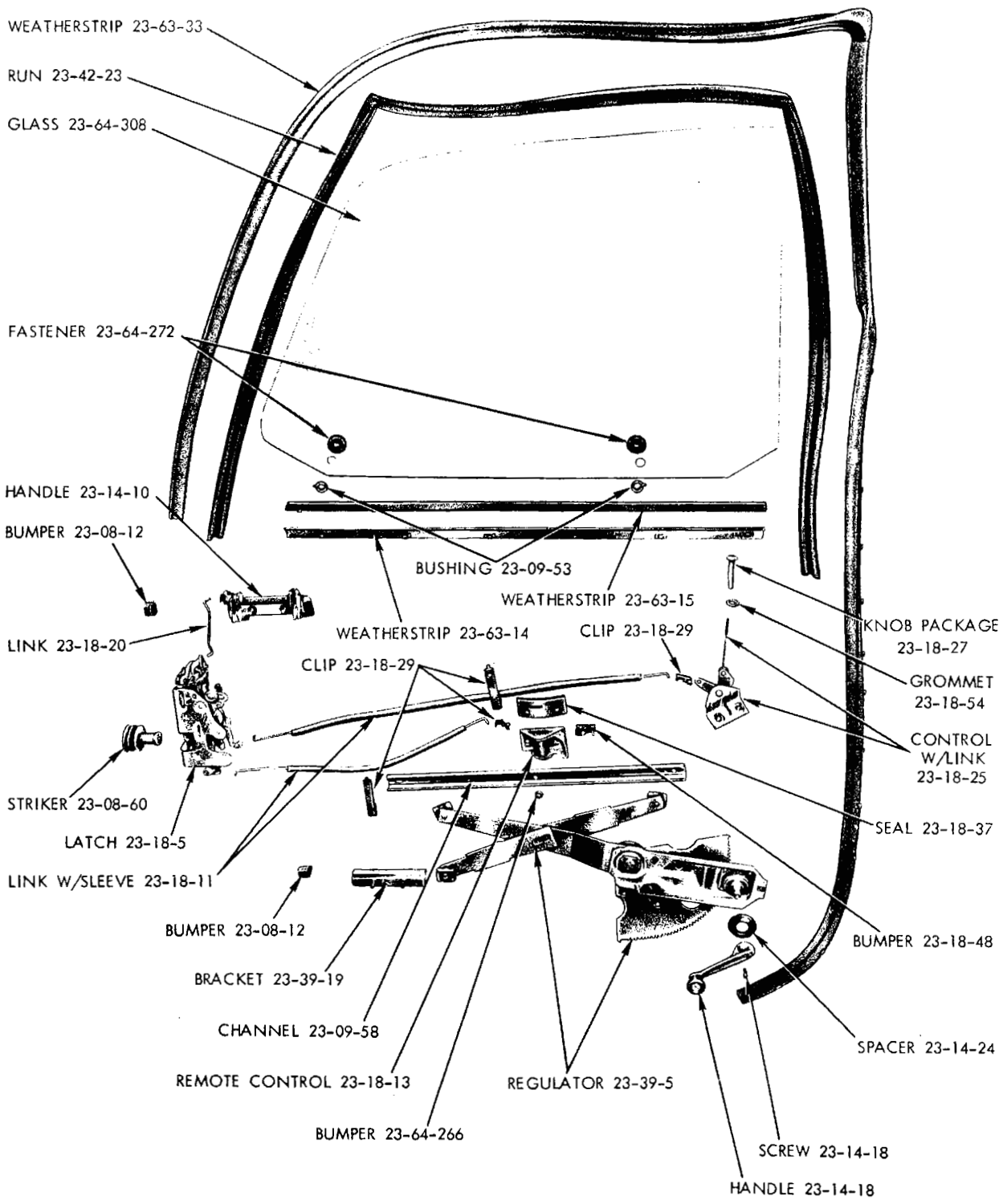

19a3738

1971
REAR DOOR WINDOW REGULATORS AND RUNS - SATELLITE AND CORONET 4 DOOR SEDAN AND STATION WAGON

NOTES

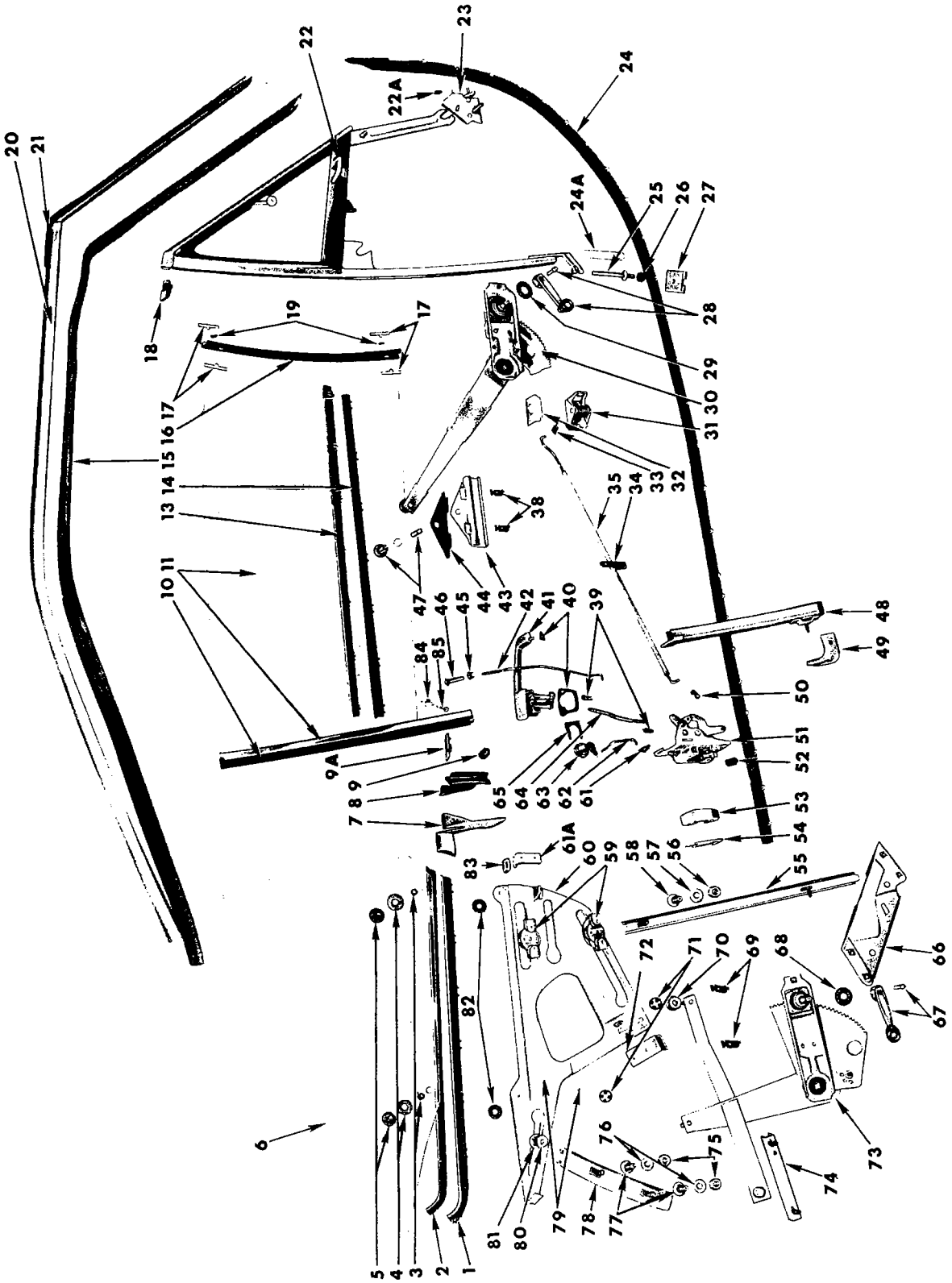

DOOR AND QUARTER WINDOW REGULATORS AND RUNS - BELVEDERE AND CORONET 2 DOOR HARDTOP (TYPICAL OF CHARGER)

DOOR AND QUARTER WINDOW REGULATORS AND RUNS -
BELVEDERE AND CORONET 2 DOOR HARDTOP
(TYPICAL OF CHARGER)

Ref. No.	Name	Part Type Code
1	Weatherstrip	23-63-20
2	Weatherstrip	23-63-21
3	Spacer	23-09-53
4	Grommet	23-09-61
5	Bushing	23-39-17
6	Glass	23-64-311
7	Seal	23-63-33
8	Seal	23-63-33
9	Bumper	23-08-12
9A	Cover	23-34-124
10	Weatherstrip	23-63-33
11	Glass w/rear Frame	23-64-308
12		
13	Weatherstrip	23-63-14
14	Weatherstrip	23-63-15
15	Weatherstrip	23-63-33
16	Weatherstrip Package	23-63-33
17	Slide	23-64-282
18	Bumper	23-64-71
19	Pin	23-64-286
20	Retainer	23-63-55
21	Seal	Not Serviced
22	Handle Package	23-14-53
22A	Plug	23-64-71
23	Bracket	23-64-242
24	Weatherstrip	23-63-33
24A	Anti-Rattler	23-64-17
25	Rod	23-64-40
26	Nut	23-64-40
27	Retainer	23-64-44
28	Handle	23-14-18
29	Spacer	23-14-24
30	Regulator	23-39-5
31	Remote Control	23-18-13
32	Seal	23-18-37
33	Clip	23-18-29
34	Clip	23-18-29
35	Link w/Sleeve	23-18-11
36		
37		
38	Clip	
39	Clip	
40	Gasket or Seal	23-14-147
41	Handle	23-14-10
42	Rod	23-18-26
43	Bracket w/Guide	23-09-52
44	Gasket	23-09-54
45	Escutcheon	23-18-49
46	Knob Package	23-18-27
47	Rivet	23-09-52
48	Channel w/Bracket	23-09-51
49	Support w/Nut	23-09-47
50	Clip	23-18-29
51	Latch	23-18-5
52	Bumper	23-08-12
53	Striker	23-08-60
54	Spacer	23-08-54
55	Track	23-64-299
56	Nut	
57	Washer	23-64-299
58	Sleeve Nut	23-64-297
59	Bracketw/Roller and Guide	23-64-269
60	Frame w/Cap	23-09-9
61	Clip	23-18-29
61A	Stop	23-64-12
62	Link	23-18-26
63	Cylinder and Key Package	23-17-2
64	Link	23-18-20
65	Retainer	23-17-28
66	Brace	23-64-281
67	Handle	23-14-79
68	Spacer	23-14-24
69	Clip	
70	Roller	23-39-45
71	Spring Nut	23-39-12
72	Stop	23-64-12
73	Regulator	23-39-34
74	Bracket	23-39-48
75	Nut	
76	Washer	23-64-29
77	Sleeve Nut	23-64-297
78	Track	23-64-299
79	Bushing	23-39-17
80	Slide	23-64-282
81	Roller	23-64-291
82	Grommet	23-09-61
83	Anti-Rattler	23-64-17
84	Stop	23-64-12
85	Screw	23-64-12

PARTS INDICATED BY NAME ONLY - ORDER BY DESCRIPTION

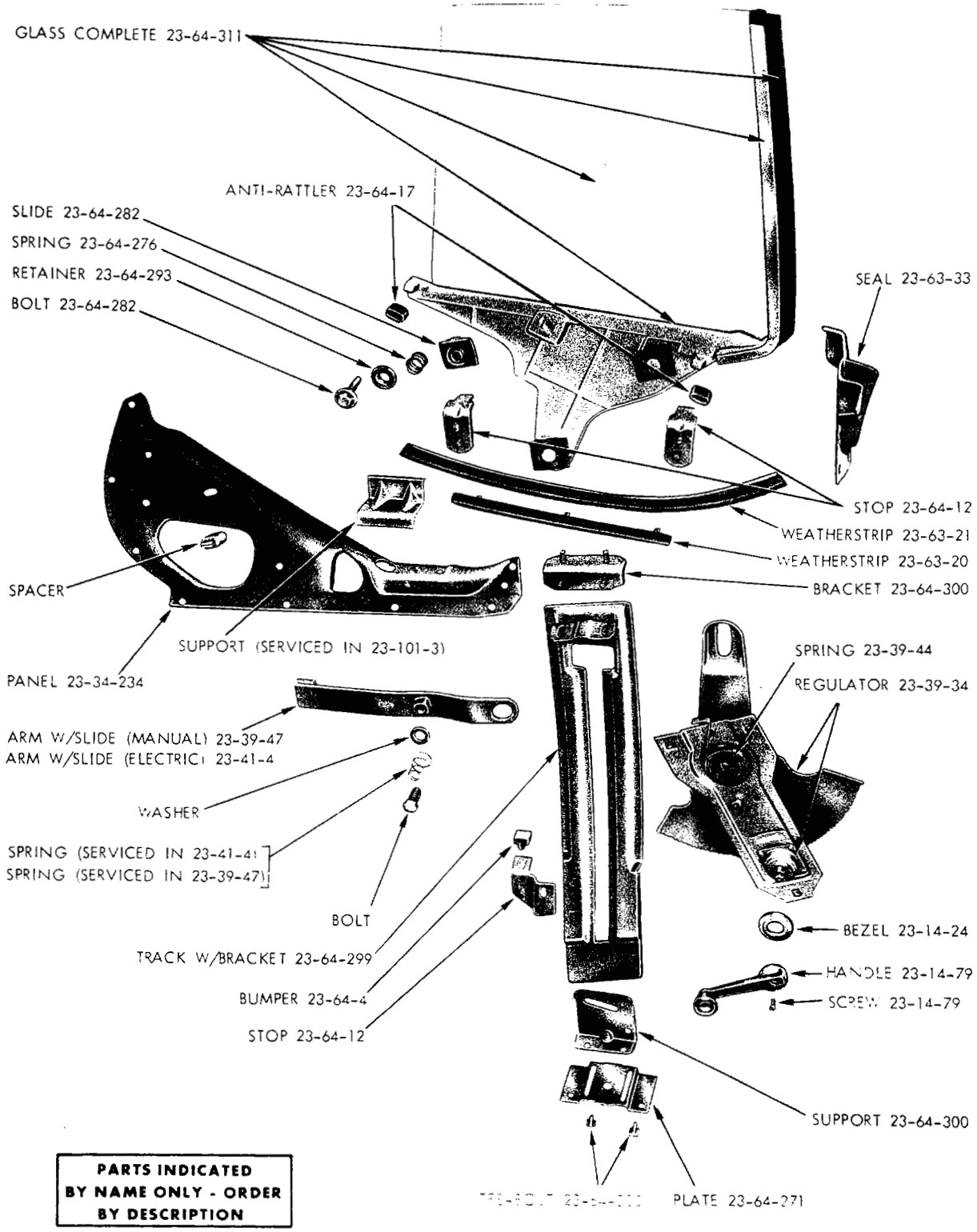

19a3745A

1971
QUARTER WINDOW REGULATORS AND WEATHERSTRIPS -
SATELLITE AND CHARGER 2 DOOR HARDTOP

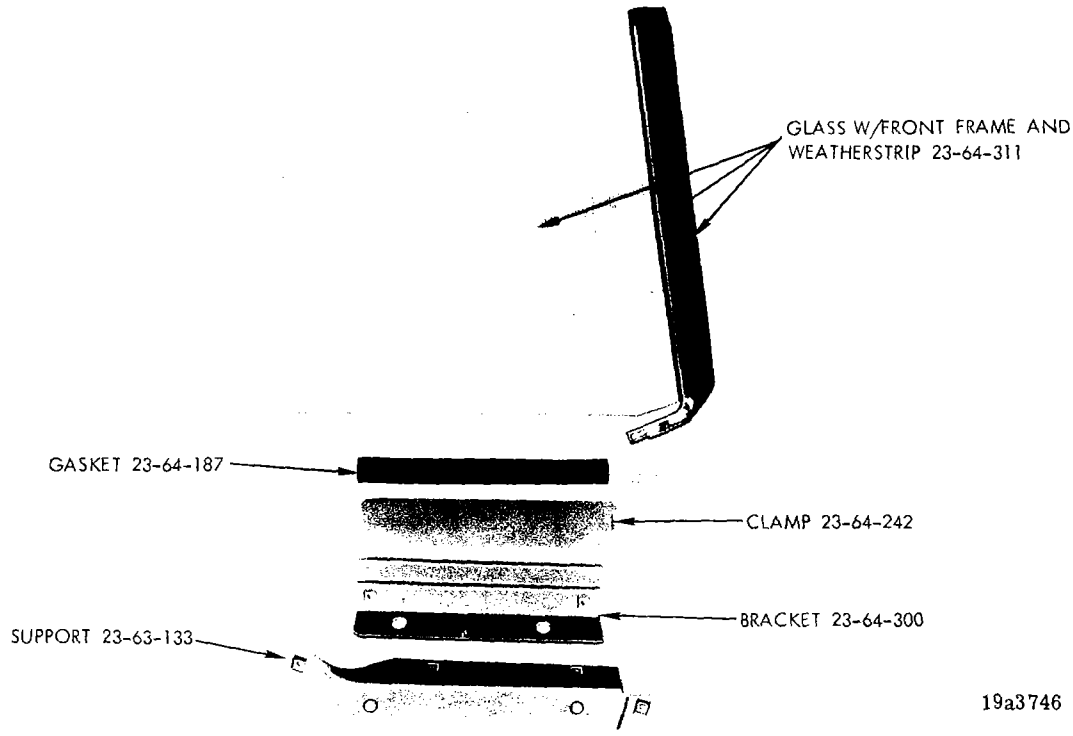

1971
FIXED QUARTER WINDOW - SATELLITE AND CHARGER 2 DOOR HARDTOP

NOTES

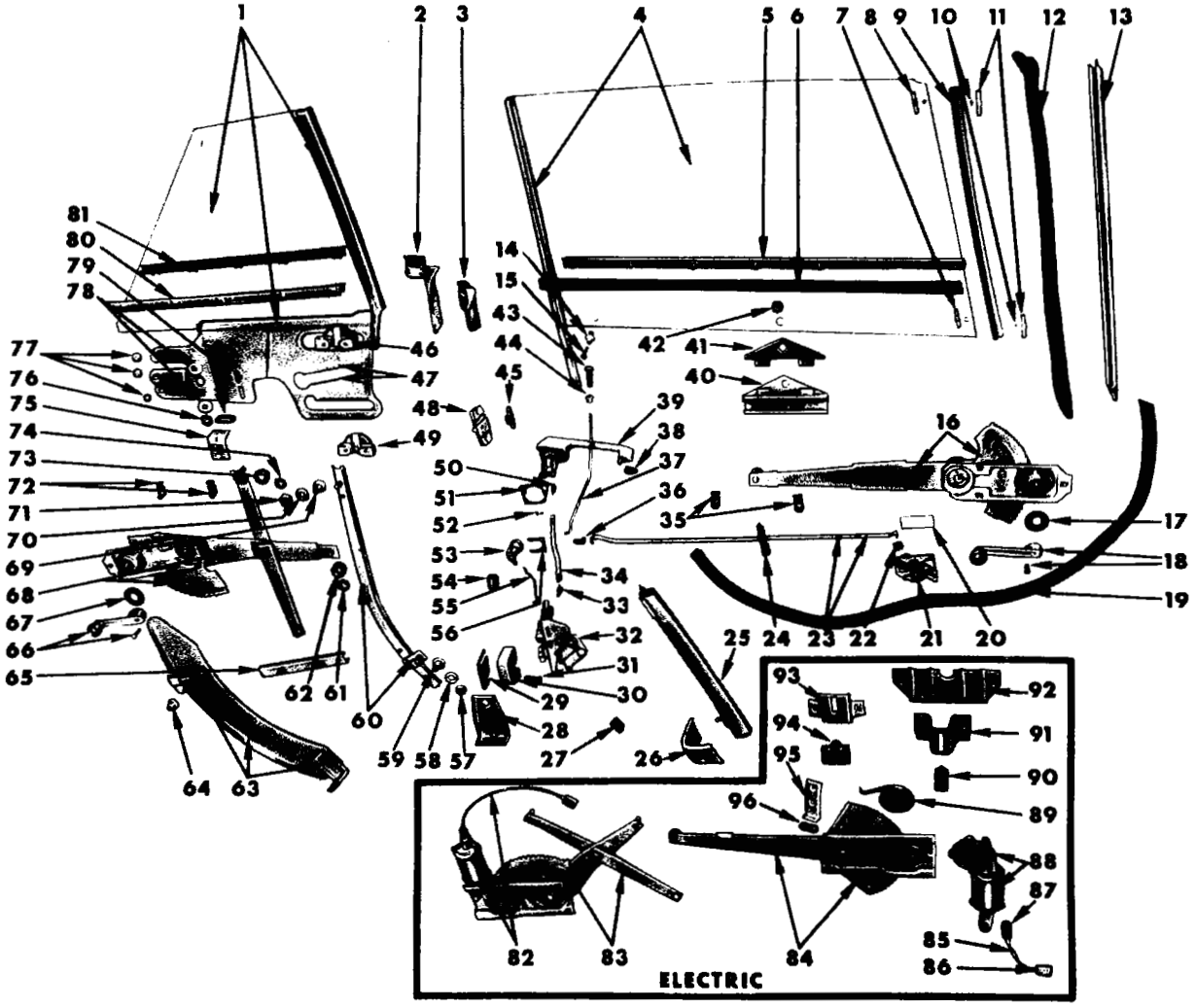

19aL2367 B

DOOR AND QUARTER WINDOW REGULATORS AND WEATHERSTRIPS - BELVEDERE AND CORONET CONVERTIBLE COUPE

DOOR AND QUARTER WINDOW REGULATORS AND WEATHERSTRIPS - BELVEDERE AND CORONET CONVERTIBLE COUPE

Ref. No.	Name	Part Type Code
1	Glass Complete	23-64-311
2	Seal	23-63-33
3	Seal	23-63-33
4	Glass w/Rear Frame	23-64-308
5	Weatherstrip	23-63-14
6	Weatherstrip	23-63-15
7	Slide	23-64-282
8	Slide	23-64-282
9	Weatherstrip Package	23-63-33
10	Pin	23-64-286
11	Slide	23-64-282
12	Weatherstrip	23-63-33
13	Retainer	23-63-55
14	Stop	23-64-12
15	Screw	23-64-12
16	Regulator	23-39-5
17	Spacer	23-14-24
18	Handle	23-14-18
	Screw	23-14-18
19	Weatherstrip	23-63-33
20	Seal	23-18-37
21	Remote Control	23-18-13
22	Clip	23-18-29
23	Link w/Sleeve	23-18-11
24	Clip	23-18-29
25	Channel w/Bracket	23-09-51
26	Support w/Nut	23-09-47
27	Bumper	23-08-12
28	Bracket	23-64-300
29	Spacer	23-08-54
30	Striker	23-08-60
31	Screw and Washer	23-08-60
32	Latch	23-18-5
33	Clip	23-18-29
34	Link	23-18-20
35	Nut	23-76-16
36	Clip	23-18-29
37	Rod	23-18-26
38	Gasket or Seal	23-14-147
39	Handle	23-14-10
40	Bracket w/Guide	23-09-52
41	Gasket	23-09-54
42	Rivet	23-09-52
43	Knob Package	23-18-27
44	Escutcheon	23-18-49
45	Striker	23-08-12
46	Bracket w/Roller and Guide	23-64-269
47	Cap	23-09-27
48	Wedge	23-08-12
49	Bracket w/Roller and Guide	23-64-269
50	Clip	23-18-29
51	Gasket or Seal	23-14-147
52	Screw	
53	Cylinder and Key Package	23-17-2
54	Bumper	23-08-12
55	Link	23-18-26
56	Retainer	23-17-28
57	Nut	
58	Washer	23-64-299
59	Sleeve Nut	23-64-297
60	Track w/Stud and Bracket	23-64-299
61	Spring Nut	23-39-12
62	Roller	23-39-45
63	Track	23-64-198
64	Sleeve Nut	23-64-297
65	Bracket	23-39-48
66	Handle	23-14-79
	Screw	23-14-79
67	Spacer	23-14-24
68	Regulator	23-39-34
69	Sleeve Nut	23-64-297
70	Washer	23-64-299
71	Nut	
72	Nut	23-76-16
73	Roller	23-39-45
74	Spring Nut	23-39-12
75	Stop	23-64-12
76	Spring Nut	23-39-12
77	Slide	23-64-282
78	Bushing	23-39-17
79	Anti-Rattler	23-64-17
80	Weatherstrip	23-63-20
81	Weatherstrip	23-63-21
82	Motor and Mechanism Package	23-41-106
83	Regulator	23-41-4
84	Regulator	23-41-4
85	Wiring	8-16-3
86	Terminal	8-16-1
87	Mold	8-16-6
88	Motor and Mechanism Package	23-41-106
89	Spring	23-41-7
90	Bumper	23-64-4
91	Bracket	23-64-12
92	Stop	23-64-12
93	Support	23-64-12
94	Bumper	23-64-4
95	Bracket	23-64-12
96	Anti-Rattler	23-64-17

PARTS INDICATED BY NAME ONLY - ORDER BY DESCRIPTION

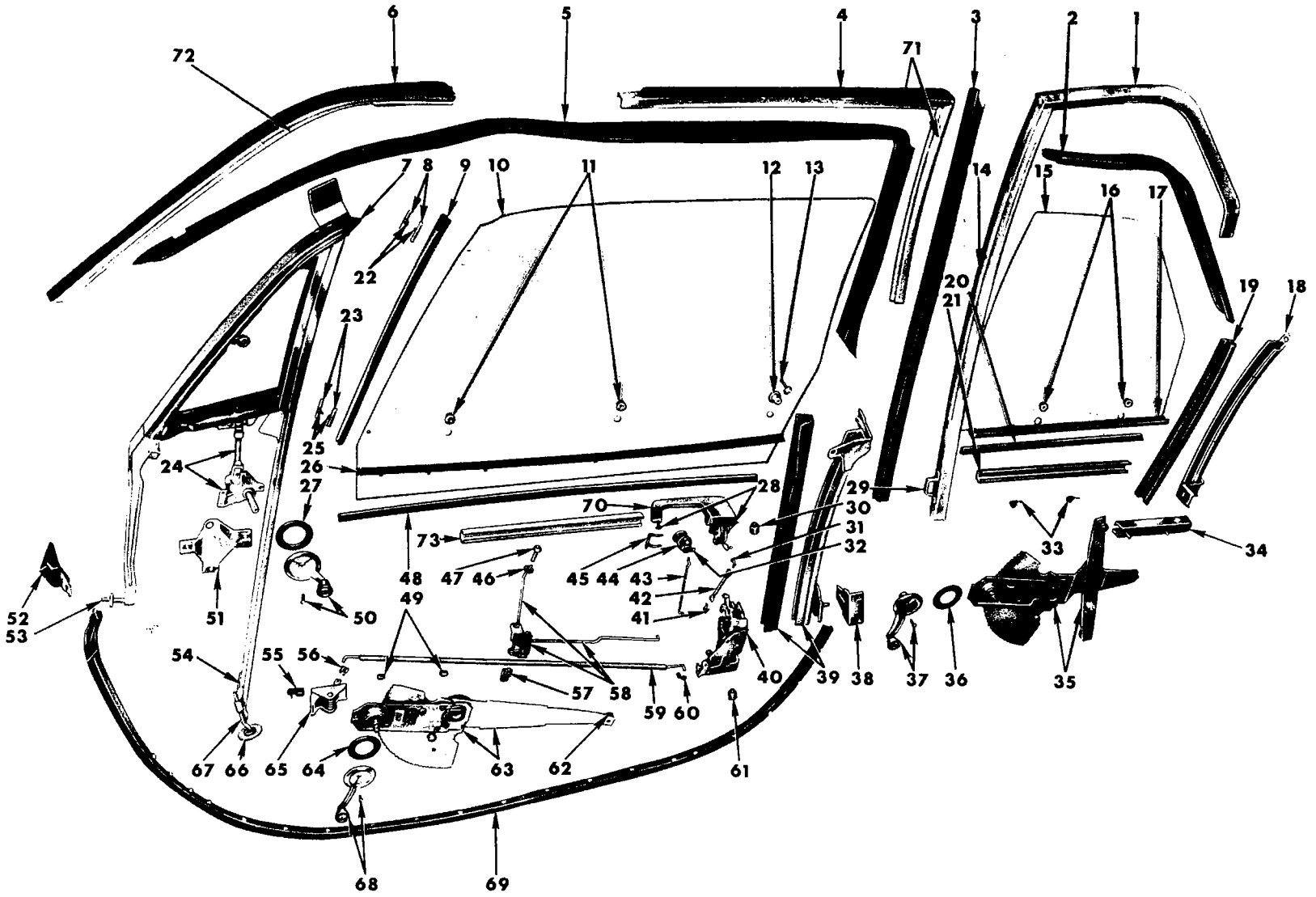

WINDOW REGULATORS AND RUNS - PLYMOUTH 2 DOOR SEDAN

Printed in U.S.A.

WINDOW REGULATORS AND RUNS -
PLYMOUTH 2 DOOR SEDAN

Ref. No.	Name	Part Type Code
1	Retainer	23-63-136
2	Weatherstrip	23-63-100
3	Run	23-42-38
4	Seal	Not Serviced
5	Weatherstrip	23-63-33
6	Seal	Not Serviced
7	Bumper	23-64-71
8	Slide	23-64-282
9	Weatherstrip	23-63-33
10	Glass	23-64-308
11	Fastener	23-64-272
12	Stop	23-64-12
13	Screw	23-64-12
14	Bracket w/ Retainer	23-63-133
15	Glass	23-64-311
16	Fastener	23-64-272
17	Weatherstrip	23-63-21
18	Retainer w/ Bracket	23-42-56
19	Run	23-42-38
20	Weatherstrip	23-63-20
21	Guide	23-09-9
22	Pin	23-64-286
23	Slide	23-64-282
24	Regulator	23-39-29
25	Pin	23-64-286
26	Weatherstrip	23-63-15
27	Spacer	23-14-24
28	Gasket or Seal	23-14-147
29	Bracket	23-63-133
30	Bumper	23-08-12
31	Clip	23-18-29
32	Cylinder and Key Package	23-17-2
33	Nut	23-76-16
34	Bracket	23-39-48
35	Regulator	23-39-34
36	Spacer	23-14-24
37	Handle	23-14-79
38	Support w/ Nut	23-09-47
39	Channel w/ Bracket	23-09-51
40	Latch	23-18-5
41	Clip	23-18-29
42	Link	23-18-20
43	Link	23-18-26
44	Gasket	23-17-27
45	Retainer	23-17-28
46	Grommet	23-18-54
47	Knob Package	23-18-27
48	Weatherstrip	23-63-14
49	Nut	23-76-16
50	Handle	23-14-53
51	Spacer	23-11-12
52	Seal	23-63-33
53	Stud	23-64-40
54	Anti-Rattler	23-64-17
55	Bumper	23-18-48
56	Clip	23-18-29
57	Link	23-18-29
58	Control w/ Link	23-18-25
	Link	23-18-26
59	Link w/ Sleeve	23-18-11
60	Clip	23-18-29
61	Bumper	23-08-12
62	Slide	23-64-282
63	Regulator	23-39-5
64	Spacer	23-14-24
65	Remote Control	23-18-13
66	Washer	23-64-40
67	Rod	23-64-40
68	Handle	23-14-18
69	Weatherstrip	23-63-33
70	Handle	23-14-10
71	Retainer	23-63-55
72	Retainer	23-63-55
73	Channel	23-09-52

PARTS INDICATED BY NAME ONLY - ORDER BY DESCRIPTION

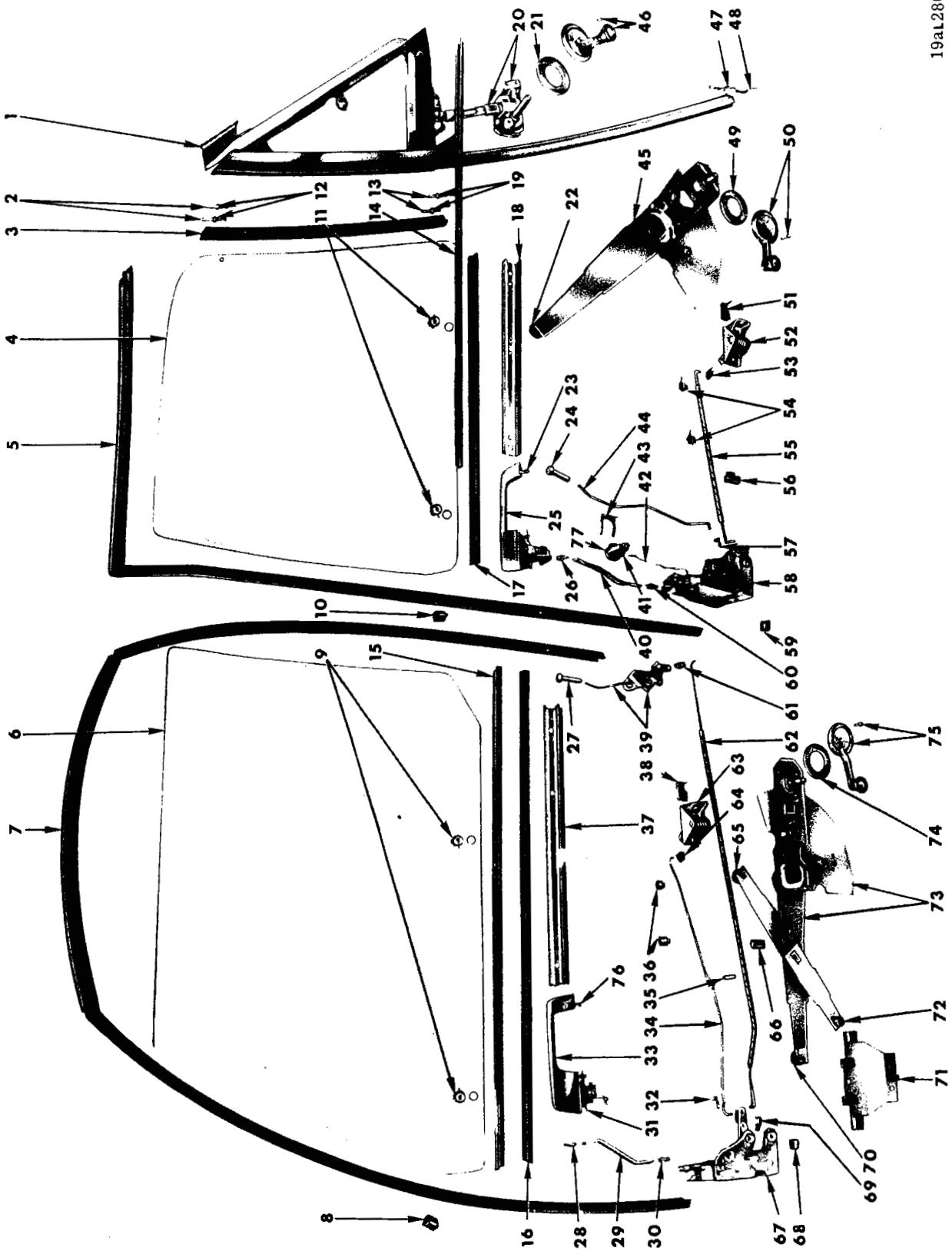

DOOR LOCK, WINDOW REGULATORS AND RUNS - PLYMOUTH, DODGE AND CHRYSLER 4 DOOR SEDAN AND STATION WAGON

DOOR LOCK, WINDOW REGULATORS AND RUNS -
PLYMOUTH, DODGE, CHRYSLER AND IMPERIAL
4 DOOR SEDAN AND STATION WAGON

Ref. No.	Name	Part Type Code
1	Seal	23-64-74
2	Slide	23-64-282
3	Weatherstrip	23-63-33
4	Glass	23-64-308
5	Run	23-42-16
6	Glass	23-64-308
7	Run	23-42-23
8	Bumper	23-08-12
9	Fastener	23-64-272
10	Bumper	23-08-12
11	Fastener	23-64-272
12	Pin	23-64-286
13	Slide	23-64-282
14	Weatherstrip	23-63-14
15	Weatherstrip	23-63-14
16	Weatherstrip	23-63-15
17	Weatherstrip	23-63-15
18	Channel	23-09-52
19	Pin	23-64-286
20	Regulator	23-39-29
21	Spacer	23-14-24
22	Slide	23-64-282
23	Gasket or Seal	23-14-147
24	Knob Package	23-18-27
25	Handle	23-14-10
26	Clip	23-18-29
27	Knob Package	23-18-27
28	Clip	23-18-29
29	Link	23-18-20
30	Clip	23-18-29
31	Gasket or Seal	23-14-147
32	Clip	23-18-29
33	Handle	23-14-10
34	Link	23-18-11
35	Spring	23-18-21
36	Nut	23-76-16
37	Channel	23-09-58
38	Bumper	23-18-48
39	Control w/ Link	23-18-25
40	Link	23-18-20
41	Cylinder and Key Package	23-17-2
42	Link	23-18-26
43	Retainer	23-17-28
44	Rod	23-18-26
	Rod	23-18-125
45	Regulator	23-39-5
46	Handle	23-14-53
47	Anti-Rattler	23-64-17
48	Rod	23-64-40
49	Spacer	23-14-24
50	Handle	23-14-18
51	Bumper	23-18-48
52	Remote Control	23-18-13
53	Clip	23-18-29
54	Nut	23-76-16
55	Link w/Sleeve	23-18-11
56	Clip	23-18-29
57	Clip	23-18-29
58	Latch	23-18-5
59	Bumper	23-08-12
60	Clip	23-18-29
61	Clip	23-18-29
62	Link w/Sleeve	23-18-26
63	Remote Control	23-18-13
64	Clip	23-18-29
65	Slide	23-64-282
66	Clip	23-18-29
67	Latch	23-18-5
68	Bumper	23-08-12
69	Clip	23-18-29
70	Slide	23-64-282
71	Bracket w/Support	23-39-19
72	Roller	23-39-45
73	Regulator	23-39-5
74	Spacer	23-14-24
75	Handle	23-14-18
76	Gasket or Seal	23-14-147
77	Gasket	23-17-27

PARTS INDICATED BY NAME ONLY - ORDER BY DESCRIPTION

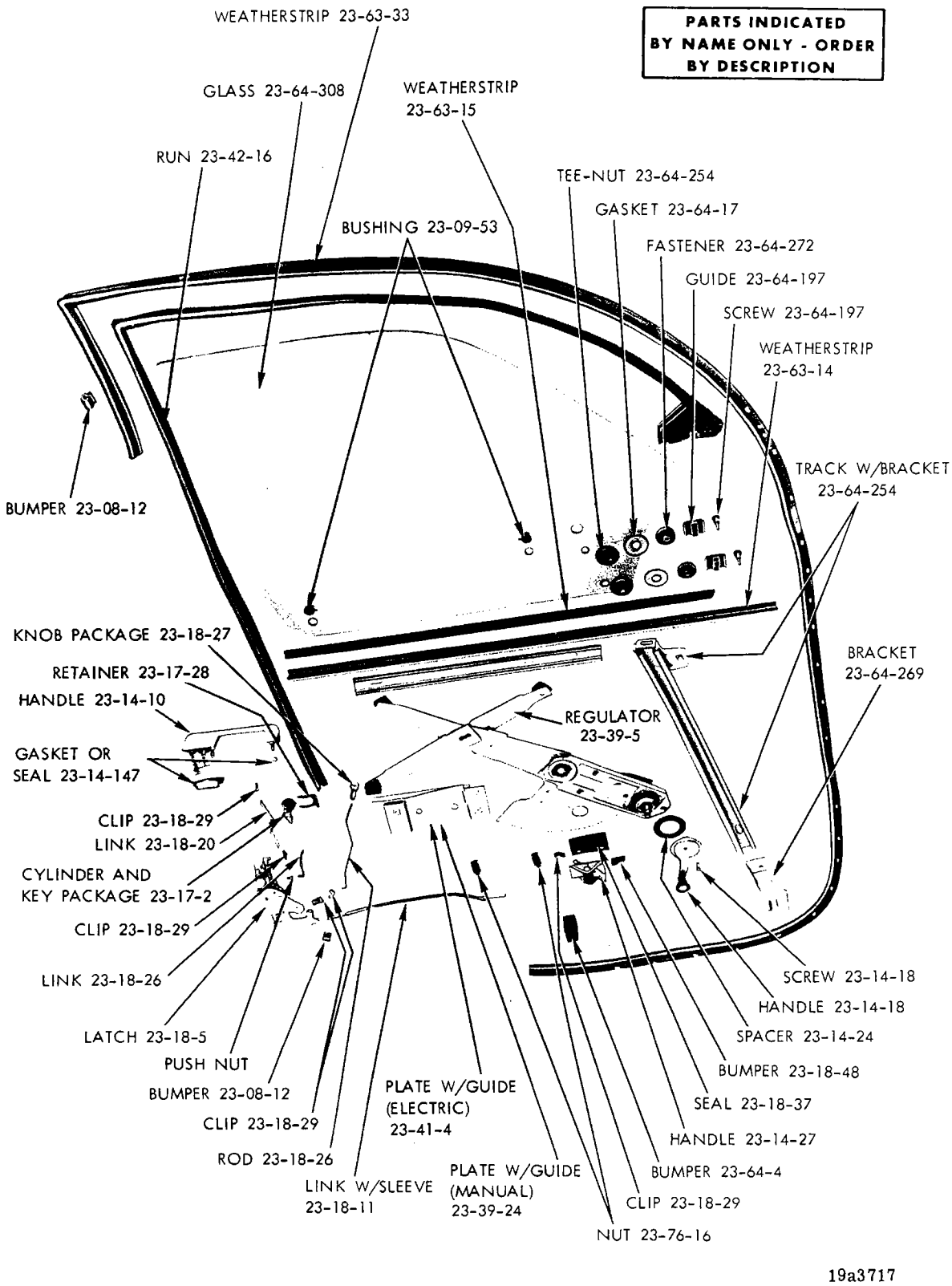

FRONT DOOR WINDOW REGULATORS AND WEATHERSTRIPS - PLYMOUTH, DODGE AND CHRYSLER 4 DOOR SEDAN (1971)

NOTES

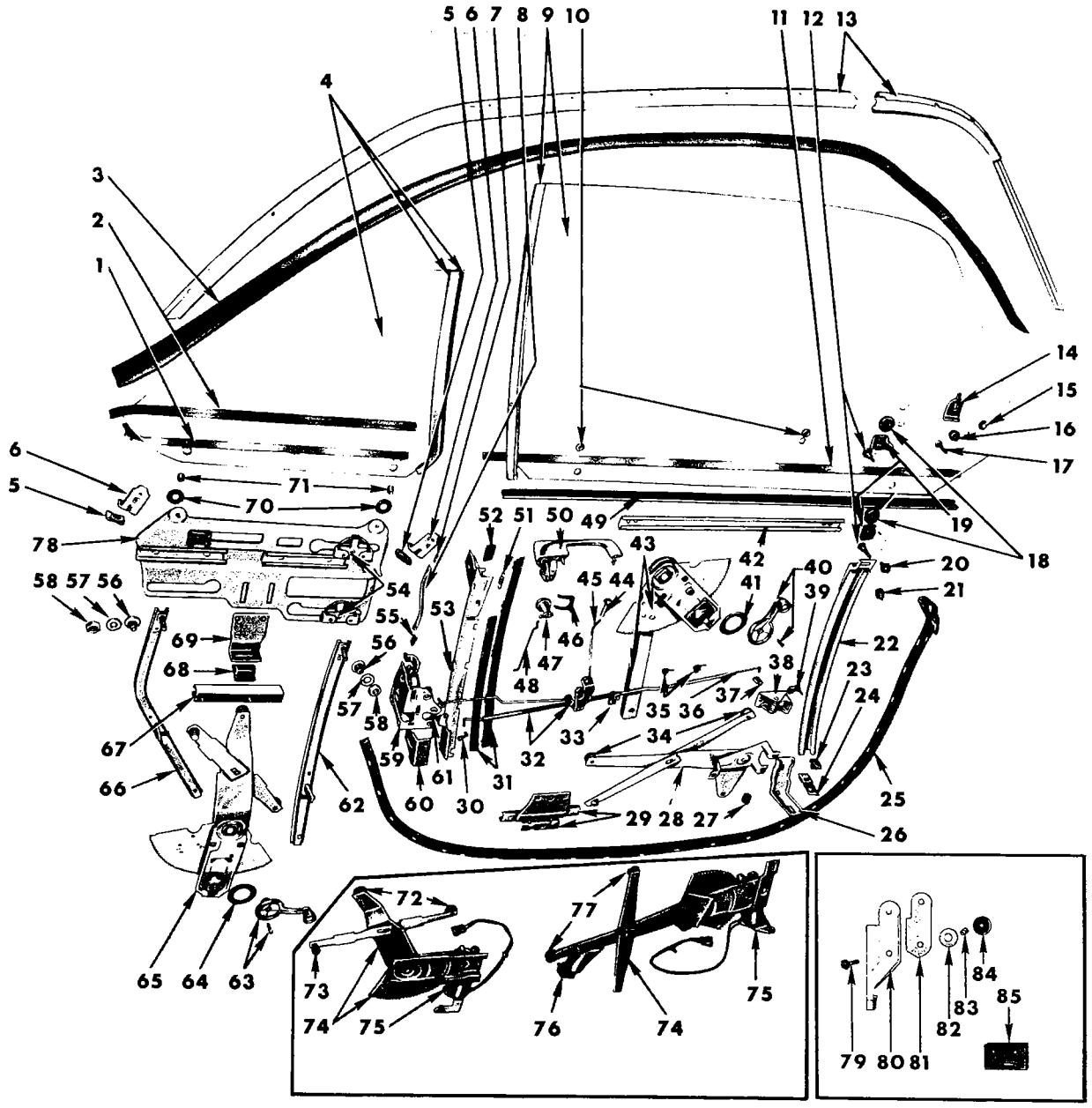

19at2800 A

WINDOW REGULATORS AND RUNS - PLYMOUTH, DODGE, CHRYSLER AND IMPERIAL
2 DOOR HARDTOP AND FASTBACK

Printed in U.S.A.

WINDOW REGULATORS AND RUNS -
PLYMOUTH, DODGE, CHRYSLER AND IMPERIAL 2 DOOR HARDTOP AND FASTBACK

Ref. No.	Name	Part Type Code
1	Weatherstrip	23-63-20
2	Weatherstrip	23-63-21
3	Weatherstrip	23-63-33
4	Glass w/Front Frame & W/Strip	23-64-311
5	Anti-Rattler	23-64-17
6	Stop	23-64-12
7	Clip	23-18-29
8	Link	23-18-20
9	Glass w/Rear Frame	23-64-308
10	Fastener	23-64-272
11	Weatherstrip	23-63-15
12	Screw	23-64-197
13	Retainer	23-63-55
14	Stop	23-64-12
15	Screw w/Washer	23-64-12
16	Stop	23-64-12
17	Screw	23-64-12
18	Fastener	23-64-272
19	Guide	23-64-197
20	Screw w/Washer	23-64-12
21	Bumper	23-08-12
22	Track w/Upper Bracket	23-64-254
23	Bumper	23-64-266
24	Retainer w/Weld Screw	23-64-28
25	Weatherstrip	23-63-33
26	Bracket	23-64-269
27	Bumper	23-08-12
28	Arm	23-39-5
29	Bracket w/Support	23-39-19
30	Clip	23-18-29
31	Run	23-42-16
32	Control w/Link	23-18-25
33	Clip	23-18-29
34	Slide	23-64-282
35	Nut	23-76-16
36	Link w/Sleeve	23-18-11
37	Clip	23-18-29
38	Remote Control	23-18-13
39	Bumper	23-18-48
40	Handle	23-14-18
41	Spacer	23-14-24
42	Channel	23-09-52
43	Plate and Link	23-39-5
44	Knob Package	23-18-27
45	Rod	23-18-26
	Push Rod	23-18-125
46	Retainer	23-17-28
47	Cylinder and Key Package	23-17-2
48	Link	23-18-26
49	Weatherstrip	23-63-14
50	Handle	23-14-10
51	Spring	23-64-276
52	Wedge	23-64-14
53	Channel w/Bracket	23-09-51
54	Bracket w/Roller and Guide	23-64-269
55	Clip	23-18-29
56	Sleeve Nut	23-64-297
57	Washer	23-64-299
58	Nut	
59	Latch	23-18-5
60	Support w/Nut	23-09-47
61	Clip	23-18-29
62	Track	23-64-299
63	Handle	23-14-79
64	Spacer	23-14-24
65	Regulator	23-39-34
66	Track	23-64-299
67	Bracket	23-39-48
68	Bumper	23-64-4
69	Stop	23-64-12
70	Grommet	23-09-61
71	Spacer	23-09-53
72	Slide	23-64-282
73	Roller	23-41-250
74	Regulator	23-41-4
75	Motor and Mechanism	23-41-106
76	Bumper	23-64-4
77	Slide	23-64-282
78	Frame	23-09-9
79	Screw w/Washer	23-64-12
80	Stop	23-64-12
81	Gasket	23-64-17
82	Gasket	23-64-17
83	Spacer	23-64-17
84	Nut	23-64-12
85	Seal	23-18-37

PARTS INDICATED BY NAME ONLY - ORDER BY DESCRIPTION

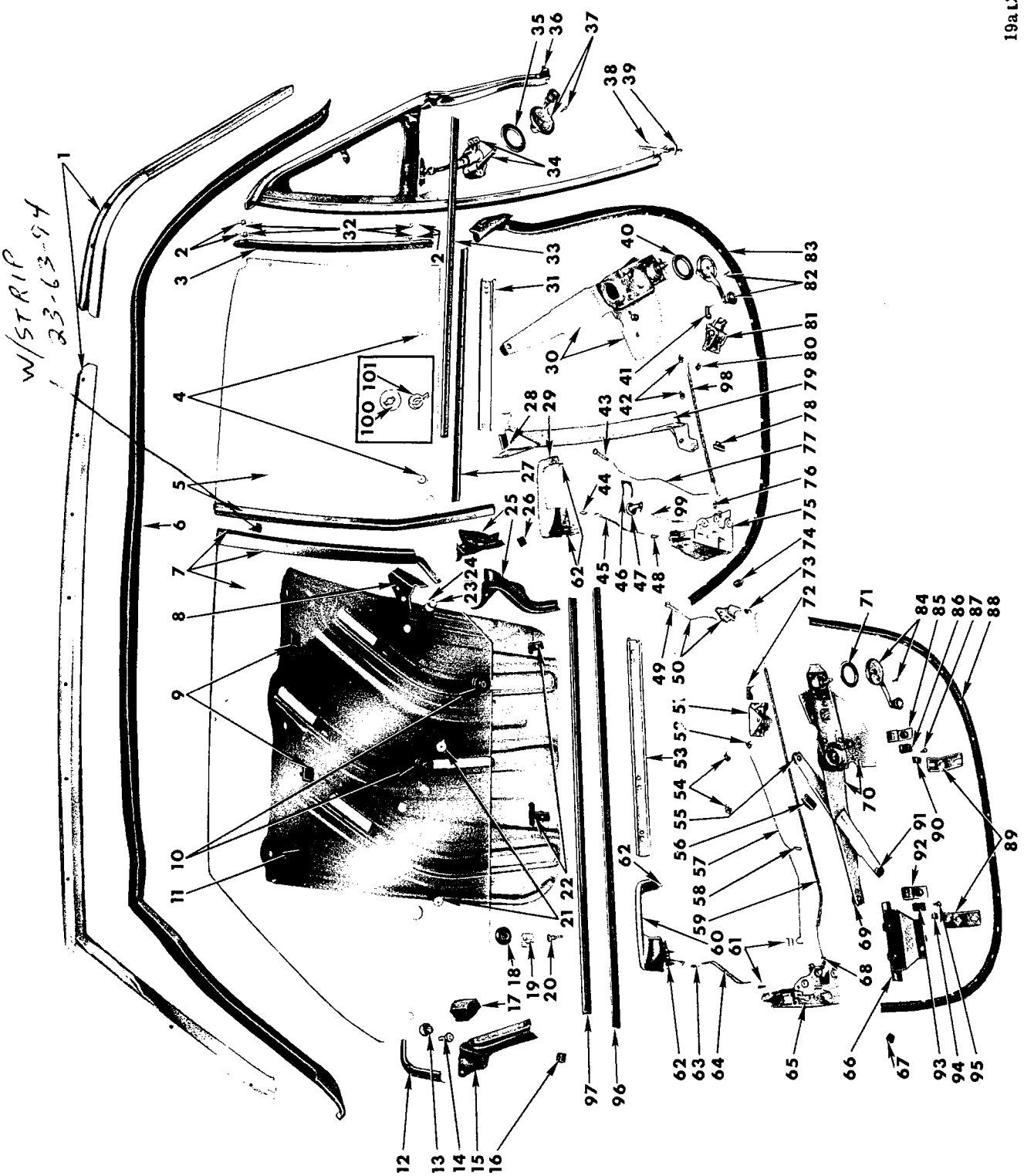

WINDOW REGULATORS AND RUNS - PLYMOUTH, DODGE, CHRYSLER AND IMPERIAL 4 DOOR HARDTOP

WINDOW REGULATORS AND RUNS -
PLYMOUTH, DODGE, CHRYSLER AND IMPERIAL
4 DOOR HARDTOP

Ref. No.	Name	Part Type Code
1	Retainer	23-63-55
2	Slide	23-64-282
3	Weatherstrip	23-63-33
4	Fastener	23-64-272
5	Glass w/Rear Frame	23-64-308
6	Weatherstrip	23-63-33
7	Glass w/Front Frame & W/Strip	23-64-308
8	Bracket	23-64-12
9	Bumper	23-64-266
10	Fastener	23-64-272
11	Panel w/Reinforcement	23-64-268
12	Bracket	23-64-12
13	Stop	23-64-12
14	Screw	23-64-12
15	Seal	23-63-33
16	Bumper	23-08-12
17	Bumper w/Insert	23-64-4
18	Fastener	23-64-272
19	Guide	23-64-197
20	Screw	23-64-197
21	Fastener	23-64-272
22	Nut	
23	Screw	23-64-12
24	Stop	23-64-12
25	Seal	23-63-33
26	Bumper	23-08-12
27	Weatherstrip	23-63-15
28	Run	23-42-16
29	Handle	23-14-10
30	Regulator	23-39-5
31	Channel	23-09-52
32	Pin	23-64-286
33	Weatherstrip	23-63-14
34	Regulator	23-39-29
35	Spacer	23-14-24
36	Stud	23-64-40
37	Handle	23-14-53
38	Anti-Rattler	23-64-17
39	Rod	23-64-40
40	Spacer	23-14-24
41	Bumper	23-18-48
42	Nut	23-76-16
43	Knob Package	23-18-27
44	Clip	23-18-29
45	Link	23-18-20
46	Retainer	23-17-28
47	Cylinder and Key Package	23-17-2
48	Clip	23-18-29
49	Knob Package	23-18-27
50	Control w/Link	23-18-25
51	Remote Control	23-18-13
52	Clip	23-18-29
53	Channel	23-09-58
54	Nut	23-76-16
55	Slide	23-64-282
56	Clip	23-18-29
57	Link	23-18-11
58	Spring	23-18-21
59	Link w/Sleeve	23-18-26
60	Handle	23-14-10
61	Clip	23-18-29
62	Gasket	23-17-27
63	Clip	23-18-29
64	Link	23-18-20
65	Latch	23-18-5
66	Bracket w/Support	23-39-19
67	Bumper	23-08-12
68	Clip	23-18-29
69	Slide	23-64-282
70	Regulator	23-39-5
71	Spacer	23-14-24
72	Bumper	23-18-48
73	Clip	23-18-29
74	Bumper	23-08-12
75	Latch	23-18-5
76	Clip	23-18-29
77	Rod	23-18-26
	Rod	23-18-125
78	Clip	23-18-29
79	Channel w/Bracket	23-09-51
80	Clip	23-18-29
81	Remote Control	23-18-13
82	Handle	23-14-18
83	Weatherstrip	23-63-33
84	Handle	23-14-18
85	Retainer	23-64-28
86	Bumper	23-64-266
87	Screw	
88	Weatherstrip	23-63-33
89	Bracket	23-64-28
90	Nut	
91	Roller	23-39-45
92	Retainer	23-64-28
93	Bumper	23-64-266
94	Nut	
95	Screw	
96	Weatherstrip	23-63-14
97	Weatherstrip	23-63-15
98	Link w/Sleeve	23-18-11
99	Link	23-18-26
100	Fastener	23-64-272
101	Bushing	23-09-53

PARTS INDICATED BY NAME ONLY - ORDER BY DESCRIPTION



19al3716

FRONT DOOR WINDOW REGULATORS AND WEATHERSTRIPS - PLYMOUTH, DODGE, CHRYSLER AND IMPERIAL 4 DOOR HARDTOP (1971)

FRONT DOOR WINDOW REGULATORS AND WEATHERSTRIPS -
PLYMOUTH, DODGE, CHRYSLER AND IMPERIAL
4 DOOR HARDTOP (1971)

Ref. No.	Name	Part Type Code
1	Glass w/Rear Frame	23-64-308
2	Bushing	23-~~09~~-53
3	Stop	23-64-12
4	Screw	23-64-12
5	Tee-Nut	23-64-254
6	Gasket	23-64-17
7	Fastener	23-64-272
8	Guide	23-64-197
9	Screw	23-64-197
10	Seal	23-63-33
11	Bumper	23-64-4
12	Stop	23-64-12
13	Track w/Bracket	23-64-254
14	Bracket	23-64-269
15	Bumper	23-64-4
16	Weatherstrip	23-63-33
17	Seal	23-63-33
18	Weatherstrip	23-63-14
19	Weatherstrip	23-63-15
20	Regulator	23-39-5
21	Plate w/Guide (Manual)	23-39-24
	Plate w/Guide (Electric)	23-41-4
22	Spring	23-64-276
23	Wedge	23-64-14
24	Run (Inner)	23-42-16
25	Run (Outer)	23-42-16
26	Handle	23-14-18
	Screw	23-14-18
27	Spacer	23-14-24
28	Handle	23-14-27
29	Bumper	23-18-48
30	Clip	23-18-29
31	Link w/Sleeve	23-18-11
32	Bumper	23-08-12
33	Latch	23-18-5
34	Knob Package	23-18-27
35	Rod	23-18-26
36	Link	23-18-26
37	Link	23-18-20
38	Clip	23-18-29
39	Cylinder and Key Package	23-17-2
40	Retainer	23-17-28
41	Gasket or Seal	23-14-147
42	Handle	23-14-10
43	Bumper	23-08-12
44	Channel	23-09-52
45	Channel w/Bracket	23-09-51
46	Clip	23-18-29
47	Seal	23-18-37
48	Nut	23-76-16
49	Push Nut	

PARTS INDICATED BY NAME ONLY - ORDER BY DESCRIPTION

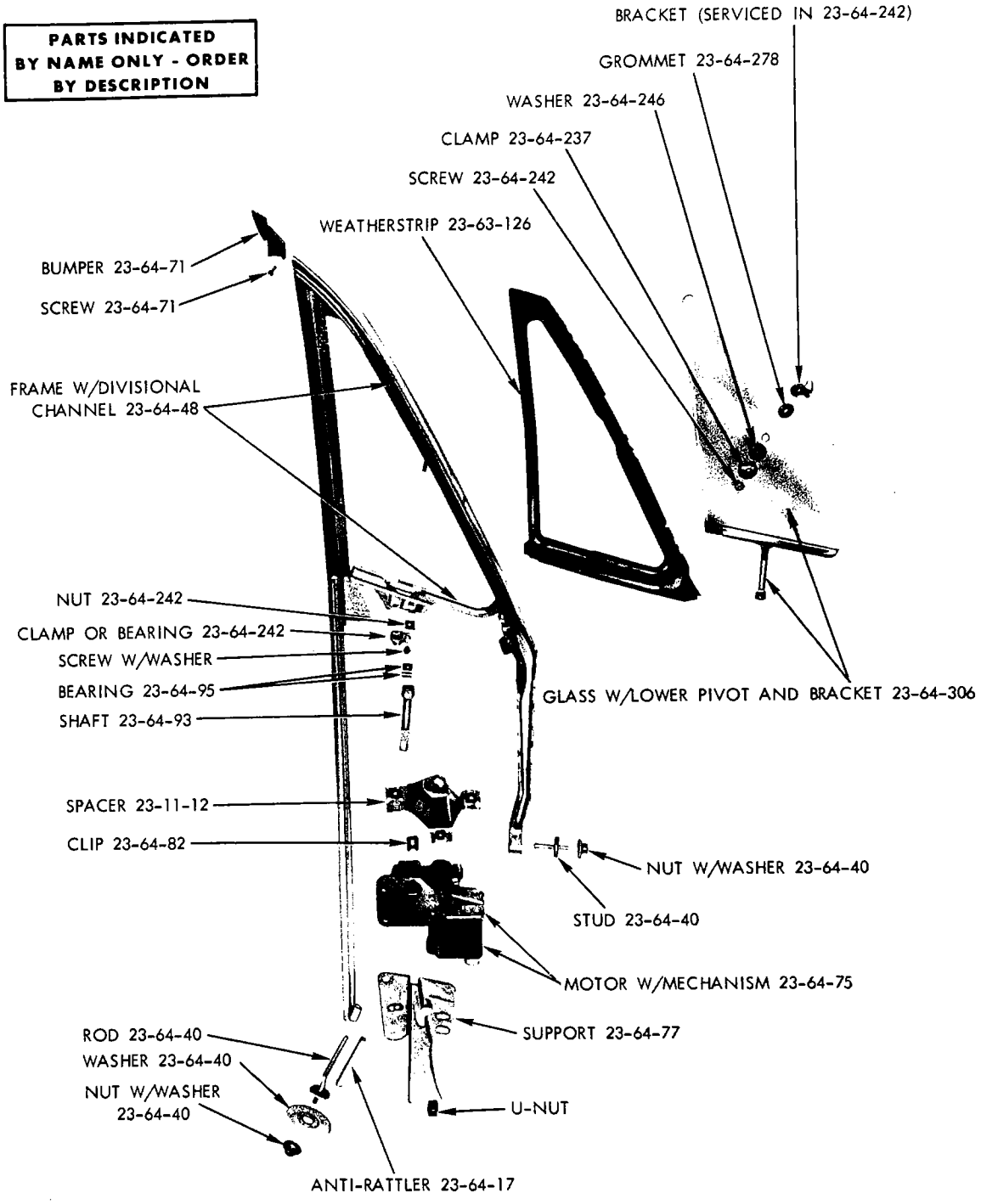

19a3706

POWER VENT WINDOW - CHRYSLER AND IMPERIAL 4 DOOR HARDTOP (1971)

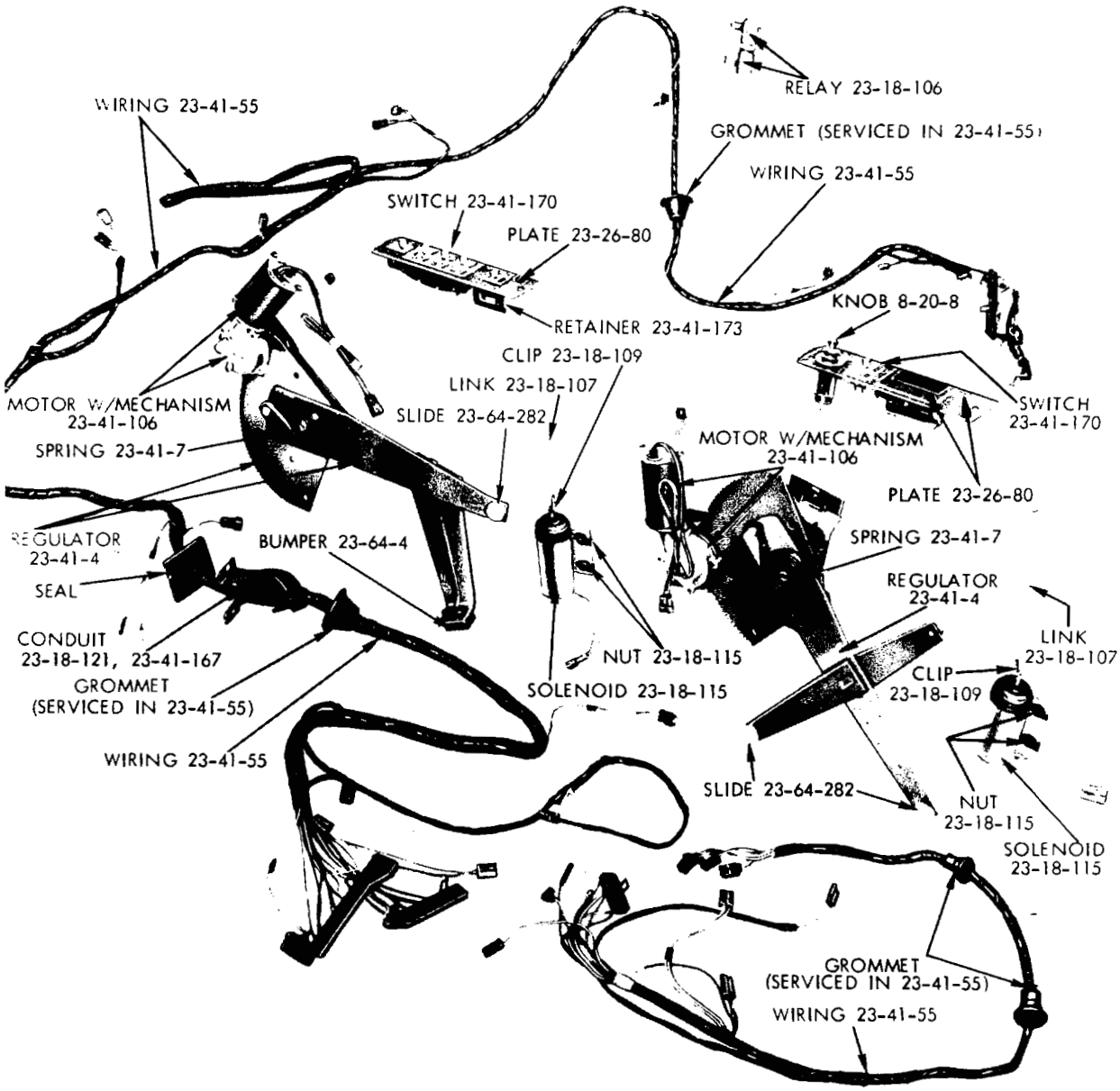

PARTS INDICATED BY NAME ONLY - ORDER BY DESCRIPTION

19a2934

ELECTRIC WINDOW LIFT AND DOOR LOCK SYSTEM - IMPERIAL 4 DOOR HARDTOP
(TYPICAL OF PLYMOUTH, DODGE AND CHRYSLER)

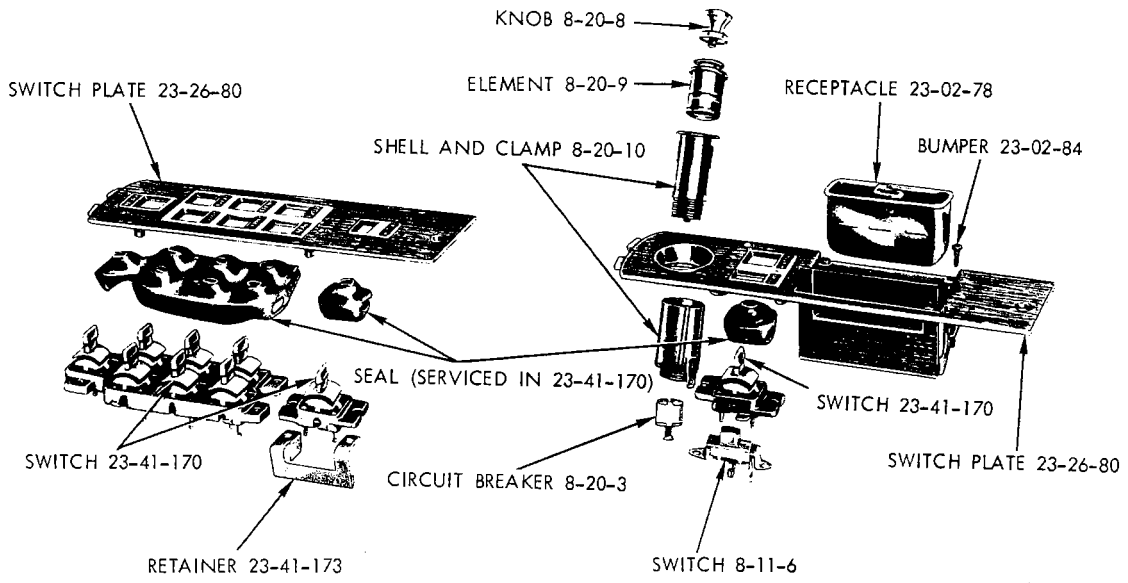

ELECTRICAL CONTROLS - FRONT AND REAR - IMPERIAL

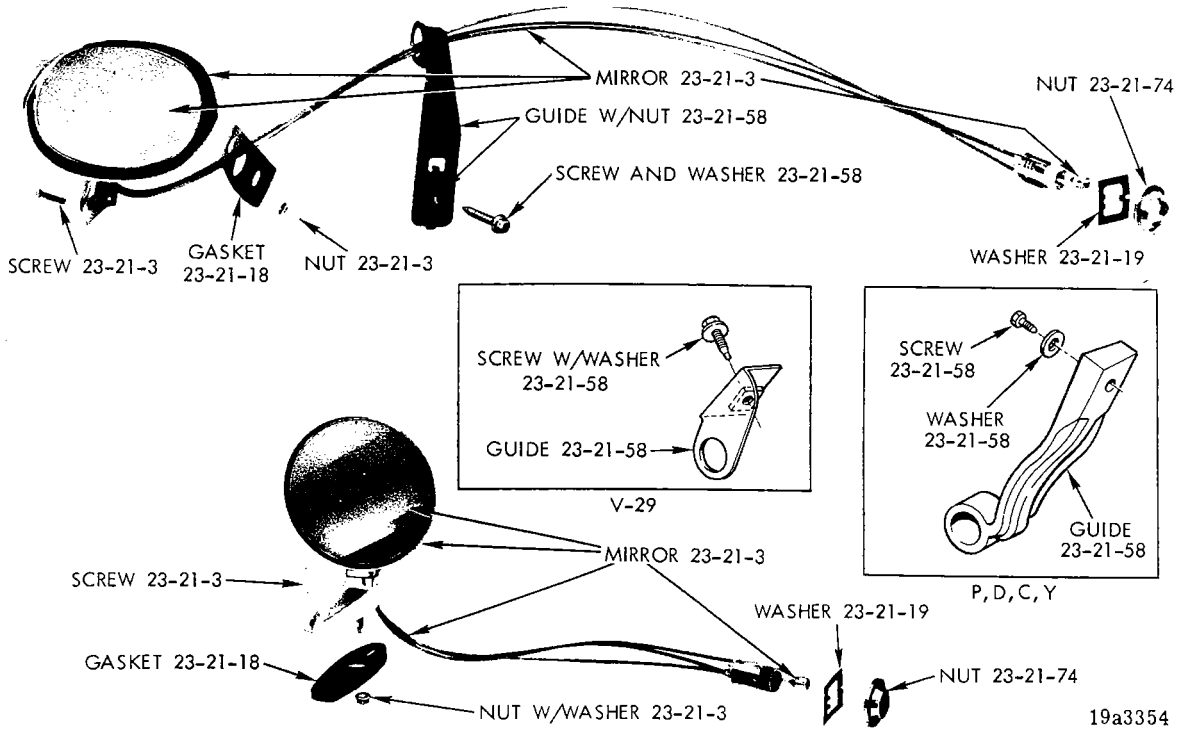

MIRRORS

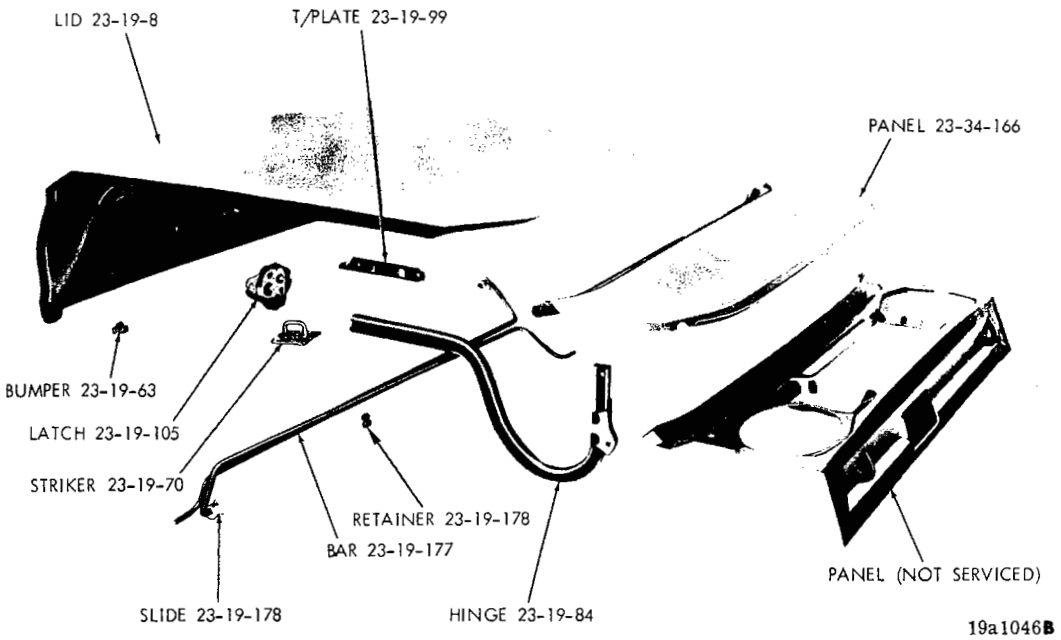

DECK LID HINGES AND LOCK - VALIANT 4 DOOR SEDAN
(TYPICAL OF DART)

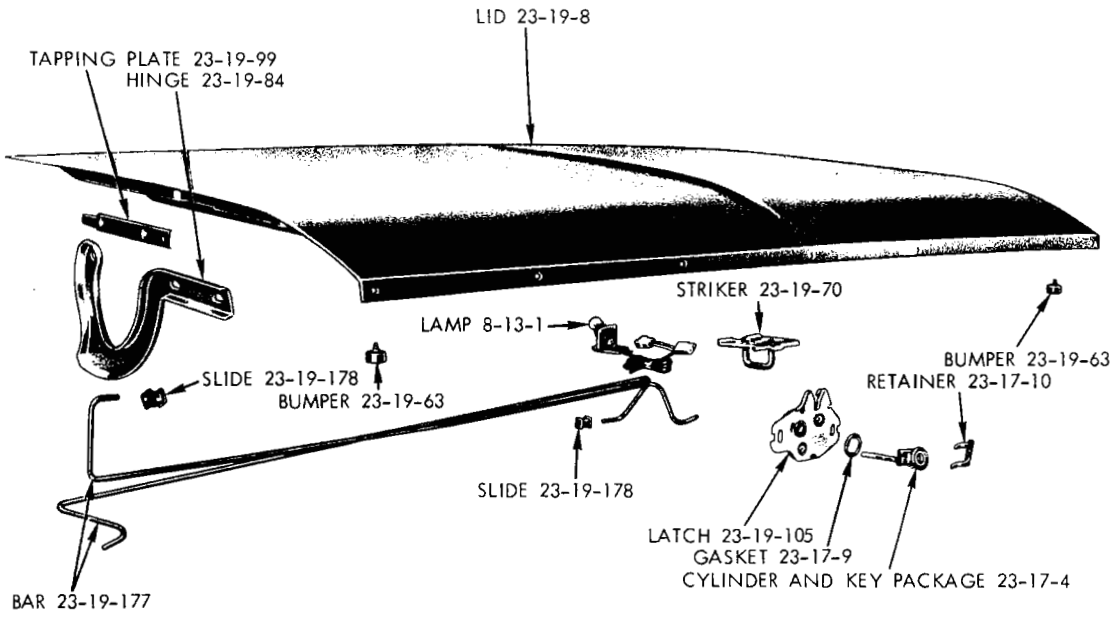

DECK LID AND HINGES - BARRACUDA AND CHALLENGER

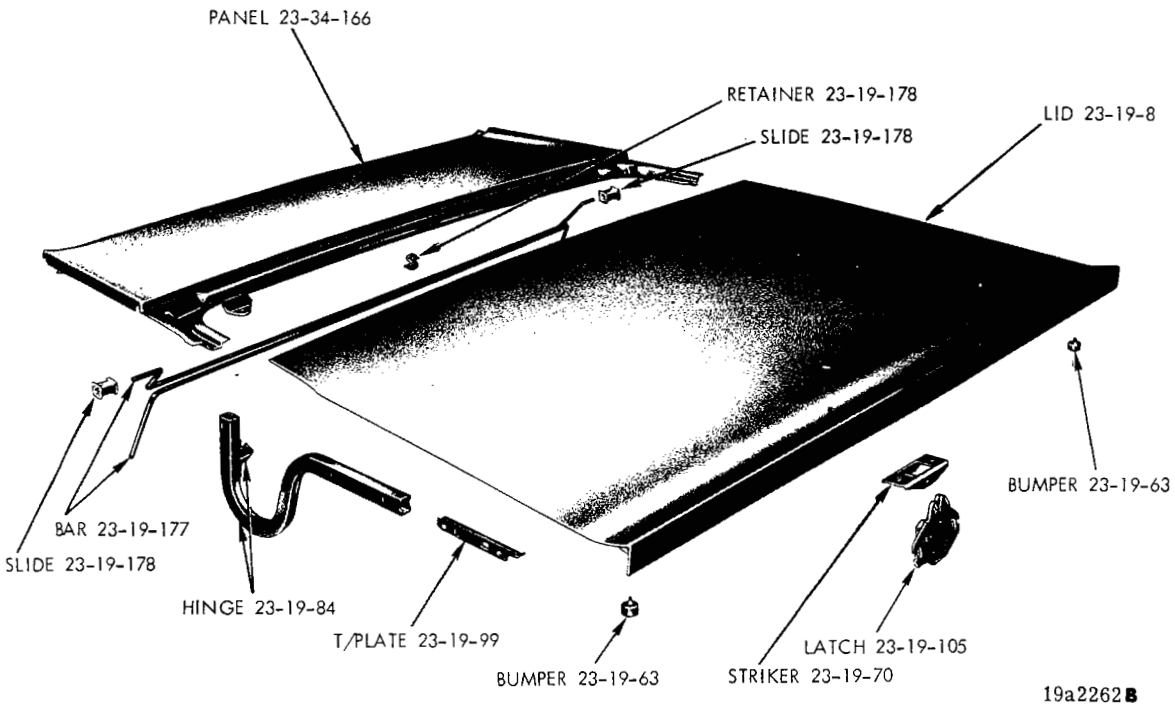

DECK LID HINGES AND LOCK - CHARGER

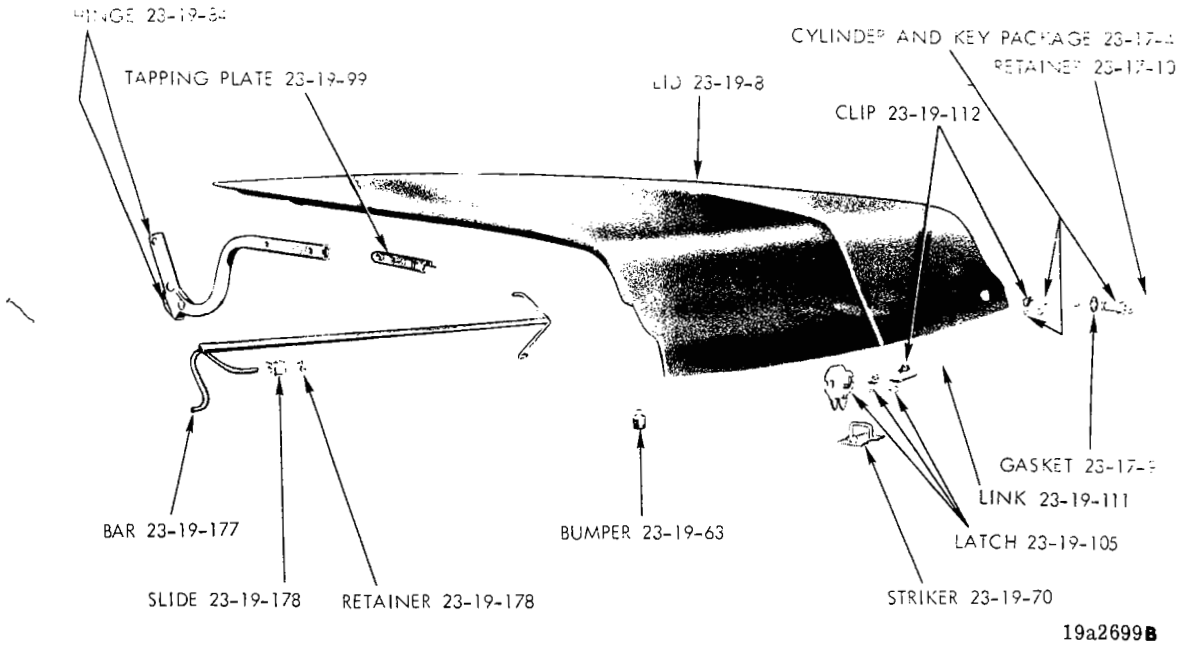

DECK LID HINGES AND LOCK - PLYMOUTH (TYPICAL OF DODGE)

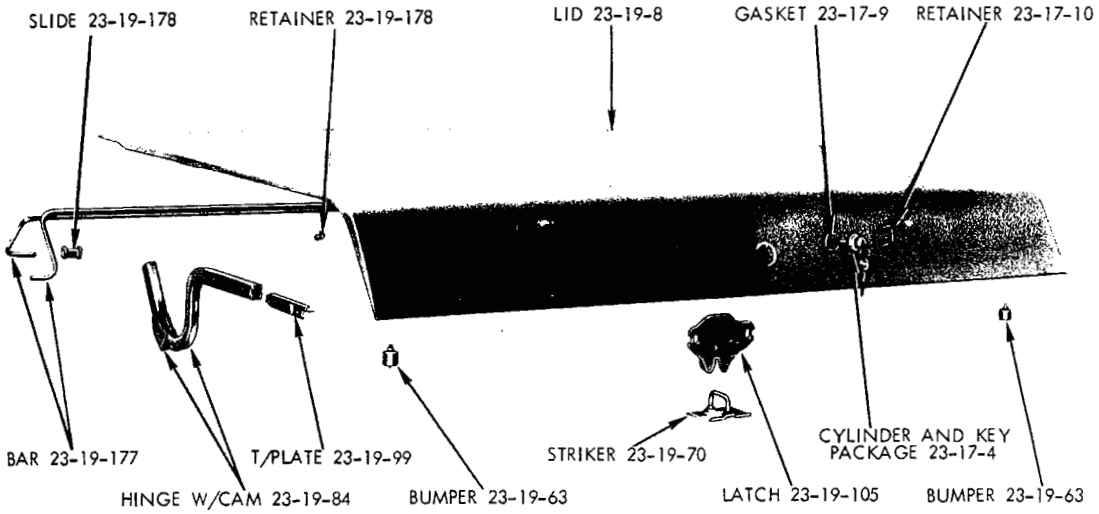

DECK LID HINGES AND LOCK - CHRYSLER (TYPICAL OF IMPERIAL)

PARTS INDICATED BY NAME ONLY - ORDER BY DESCRIPTION

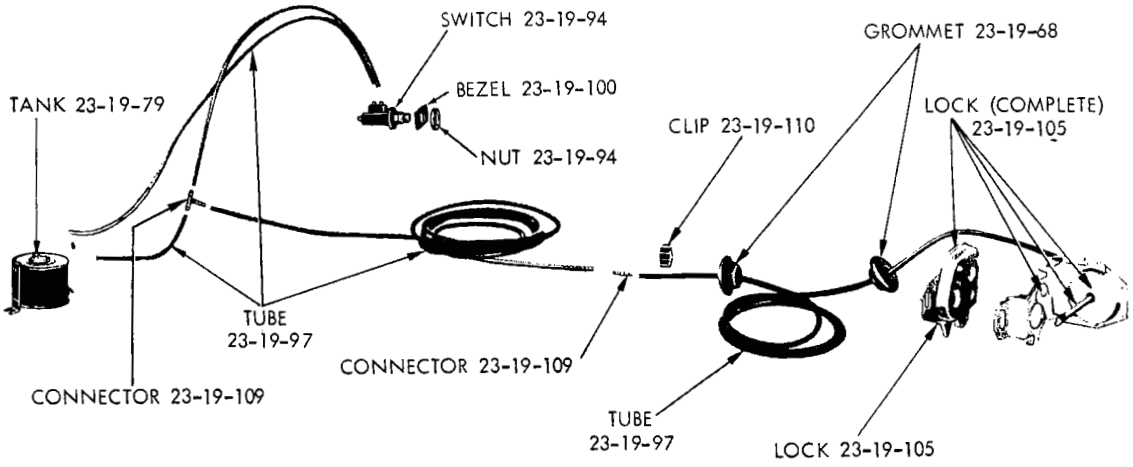

VACUUM DECK LID LOCK - PLYMOUTH, DODGE, CHRYSLER AND IMPERIAL

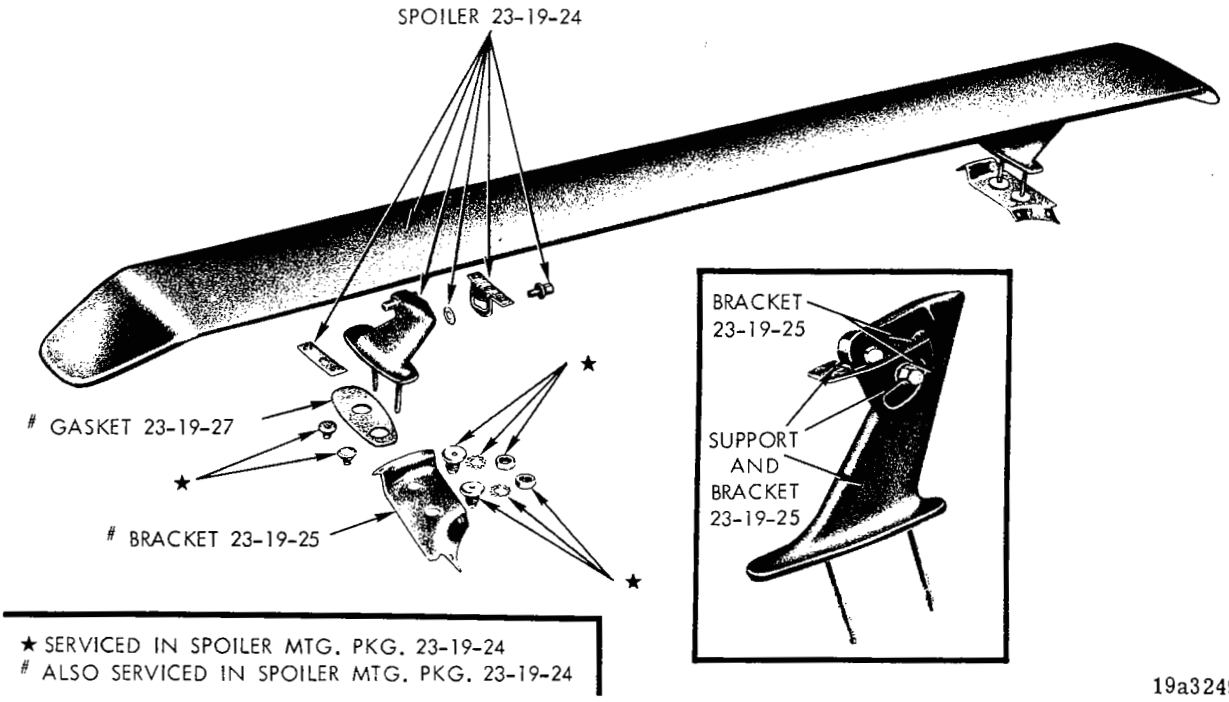

DECK LID SPOILER - BARRACUDA (TYPICAL OF VALIANT, DART, CHALLENGER, SATELLITE AND CORONET)

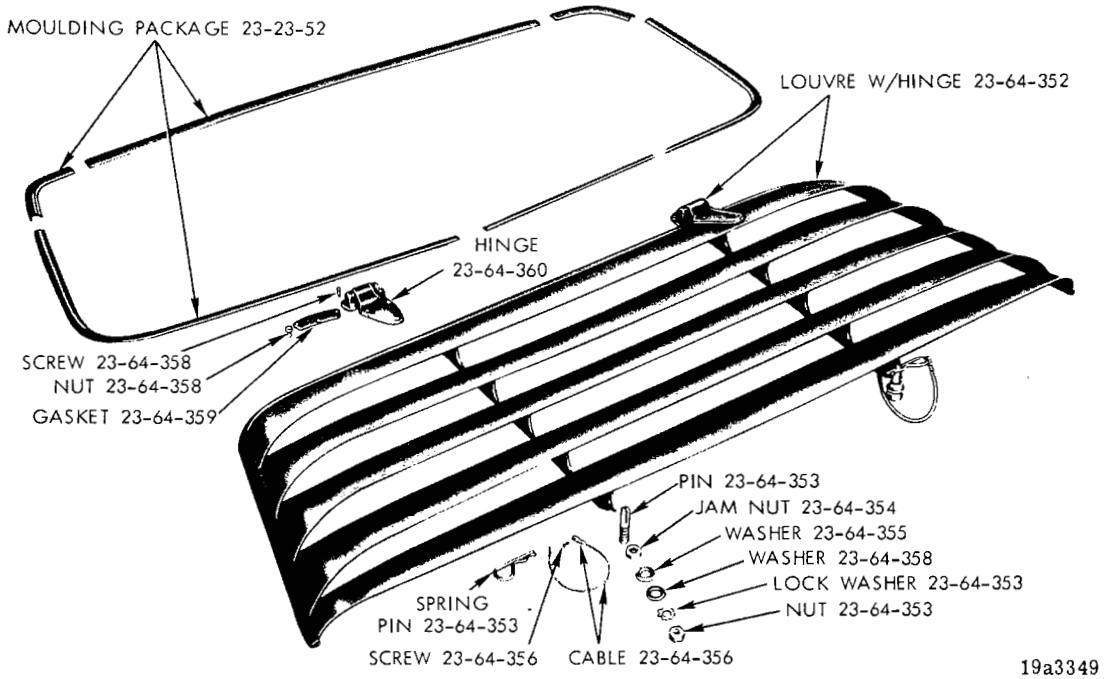

REAR WINDOW OUTSIDE LOUVRE - BARRACUDA AND CHALLENGER 2 DOOR HARDTOP

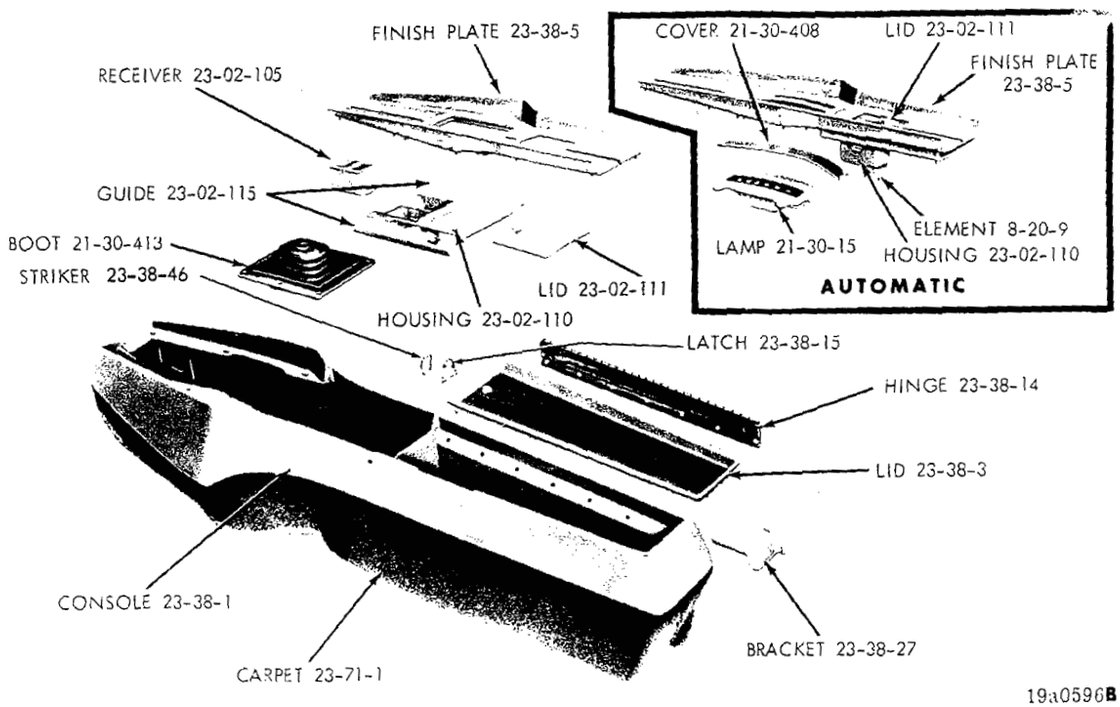

FLOOR CONSOLE - VALIANT AND DART

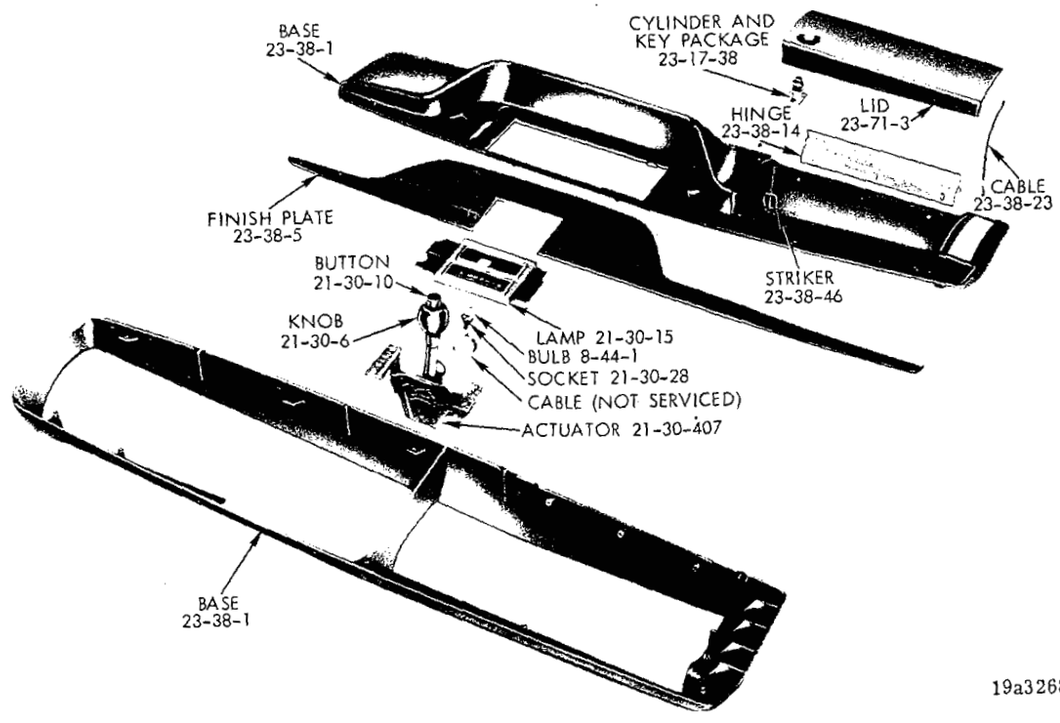

FLOOR CONSOLE (WITH AUTOMATIC TRANSMISSION) - BARRACUDA AND CHALLENGER

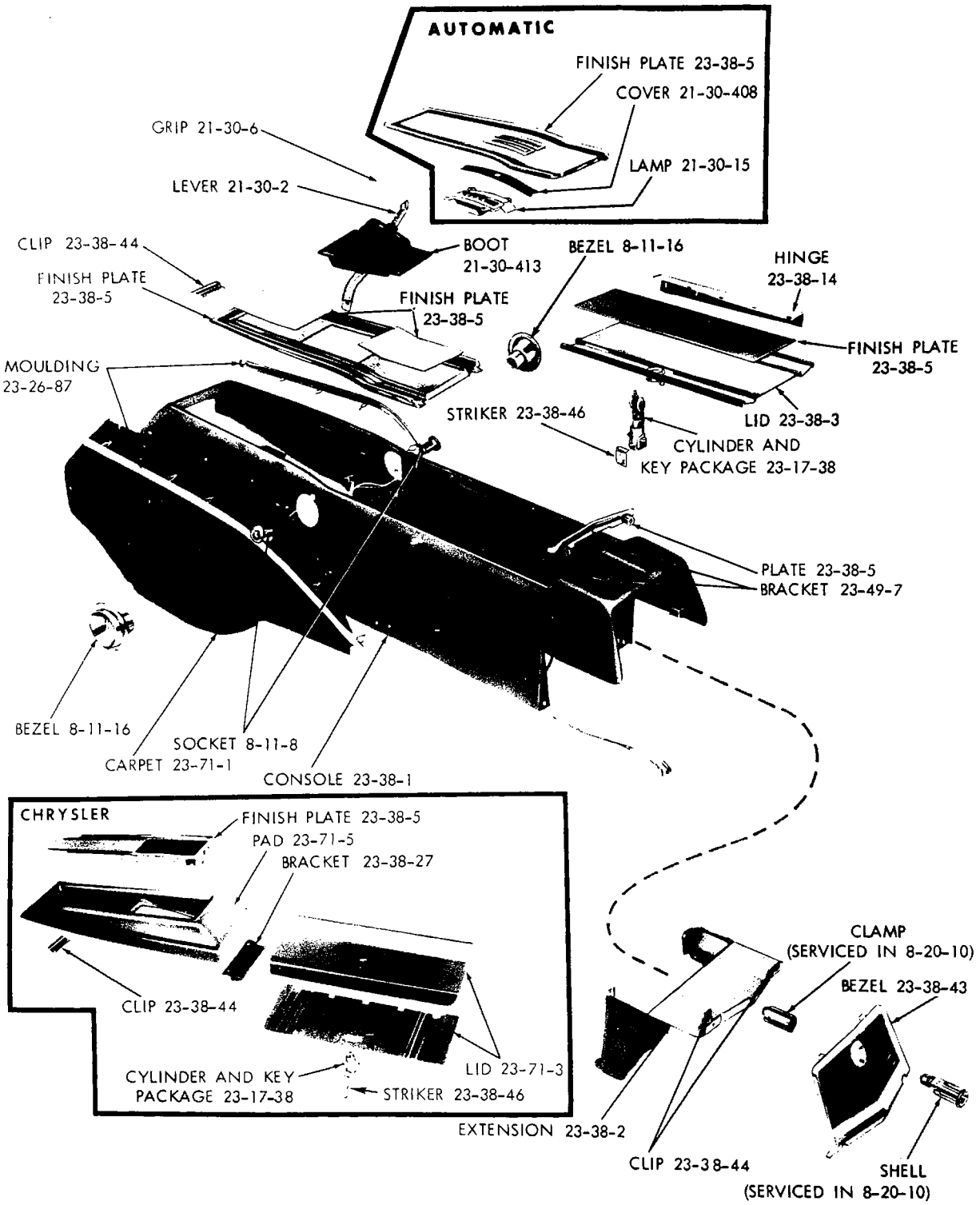

CONSOLE (4 SPEED MANUAL AND 3 SPEED AUTOMATIC) - BELVEDERE, CORONET, CHARGER, PLYMOUTH, DODGE AND CHRYSLER

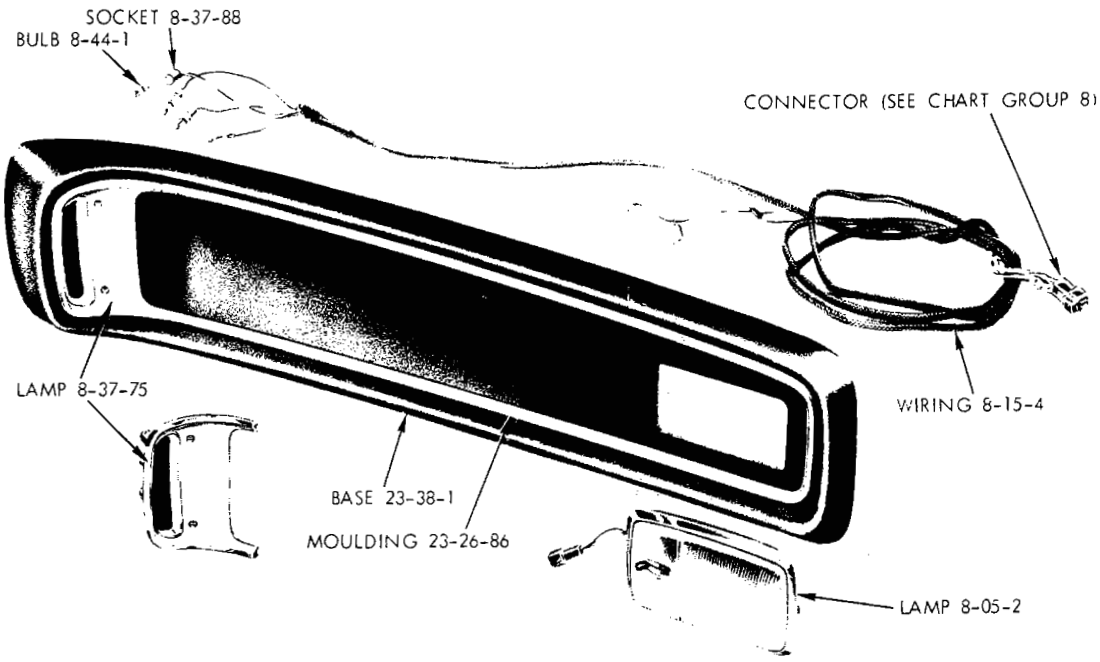

ROOF CONSOLE - BARRACUDA AND CHALLENGER

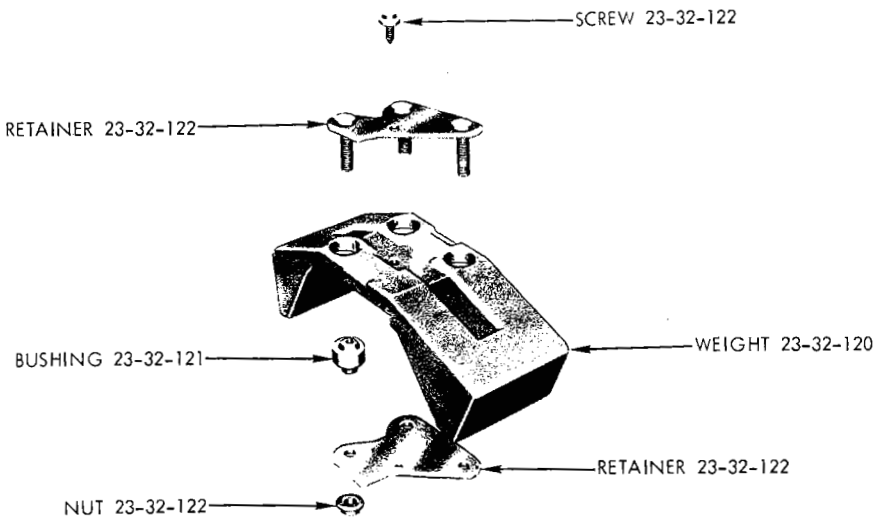

DAMPER - CENTER FLOOR PAN - SATELLITE AND CORONET

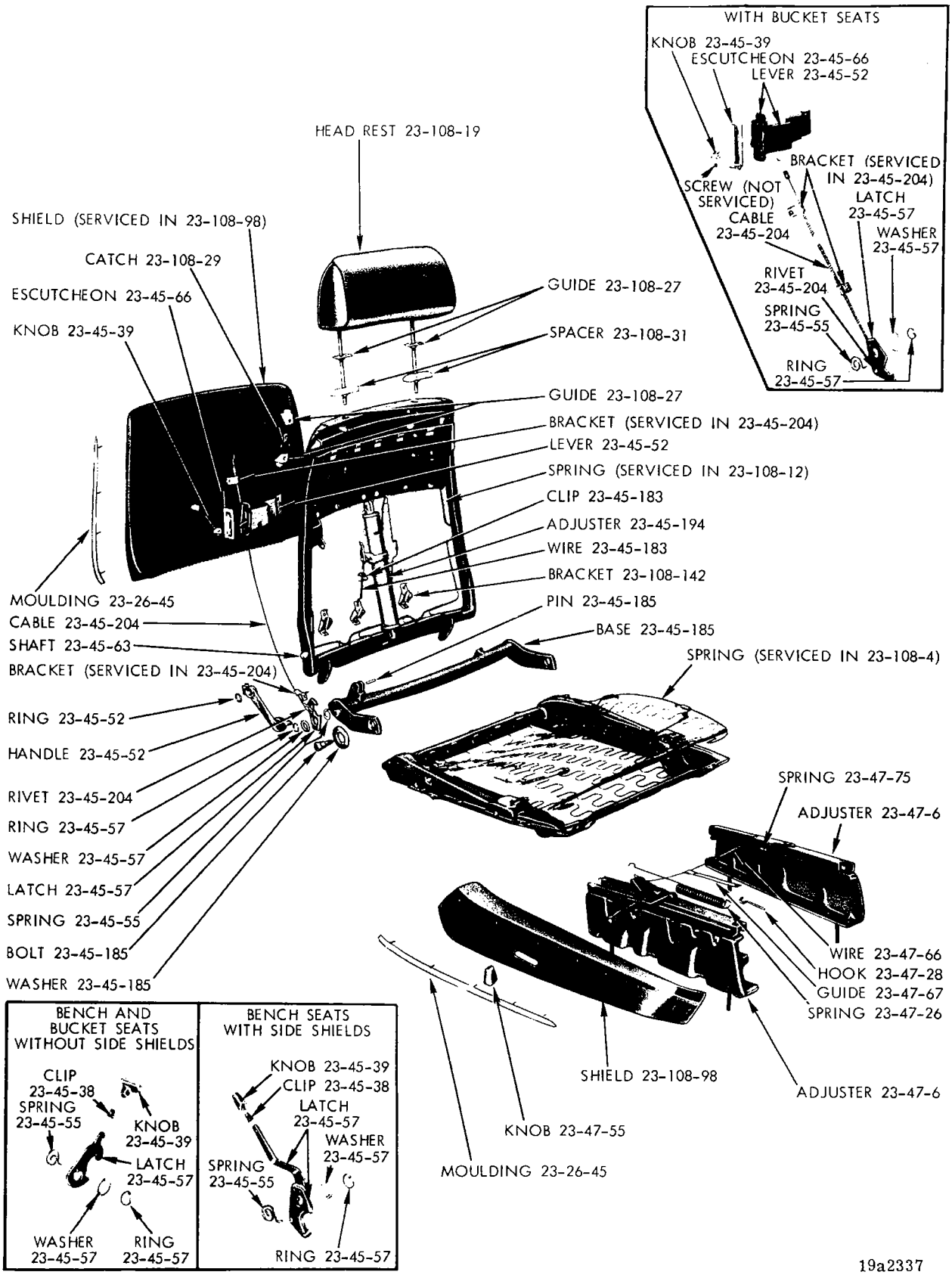

RECLINING BUCKET SEAT

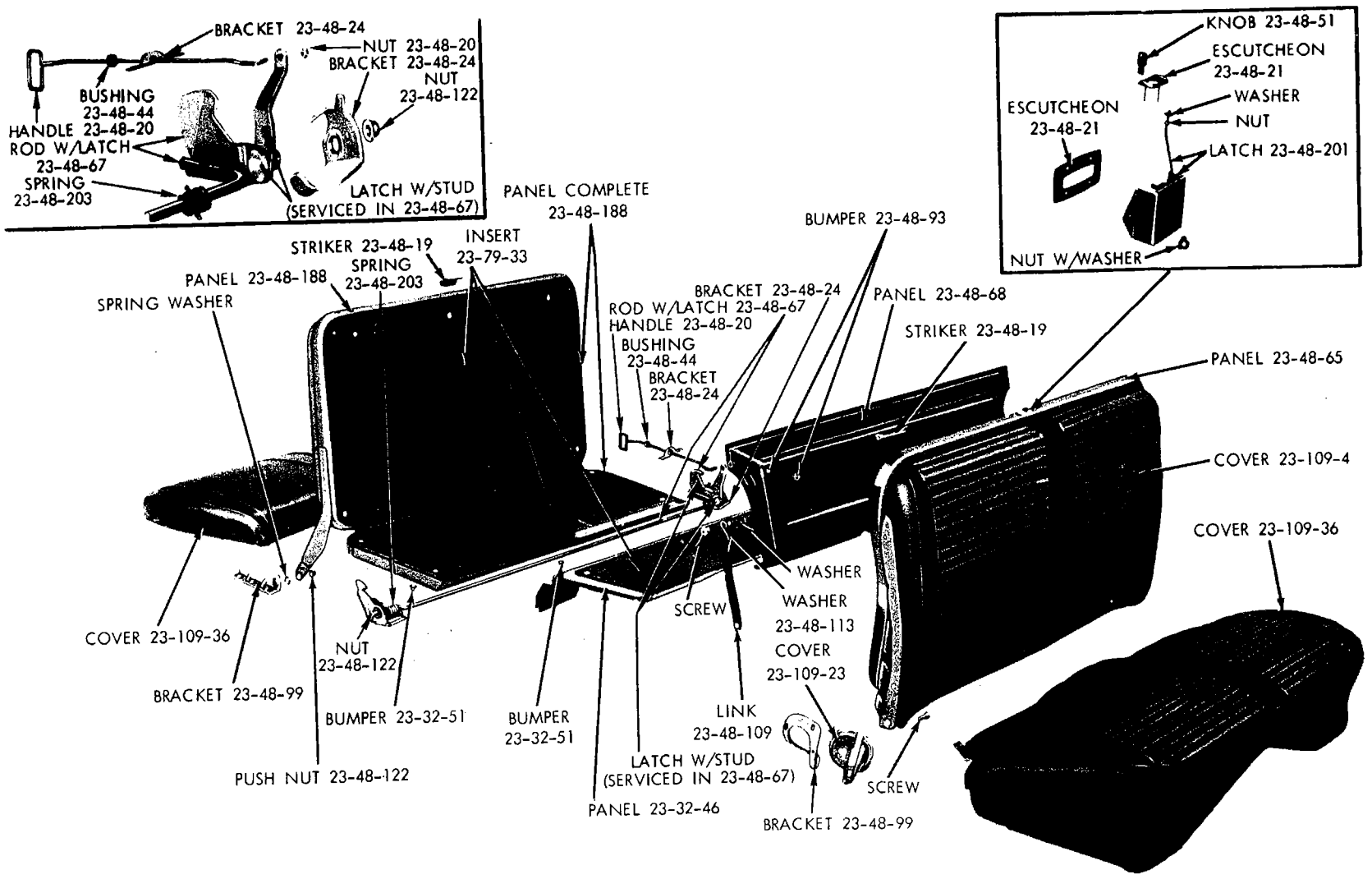

PARTS INDICATED BY NAME ONLY - ORDER BY DESCRIPTION

19a0676 B

STATION WAGON SEATS - BELVEDERE AND CORONET

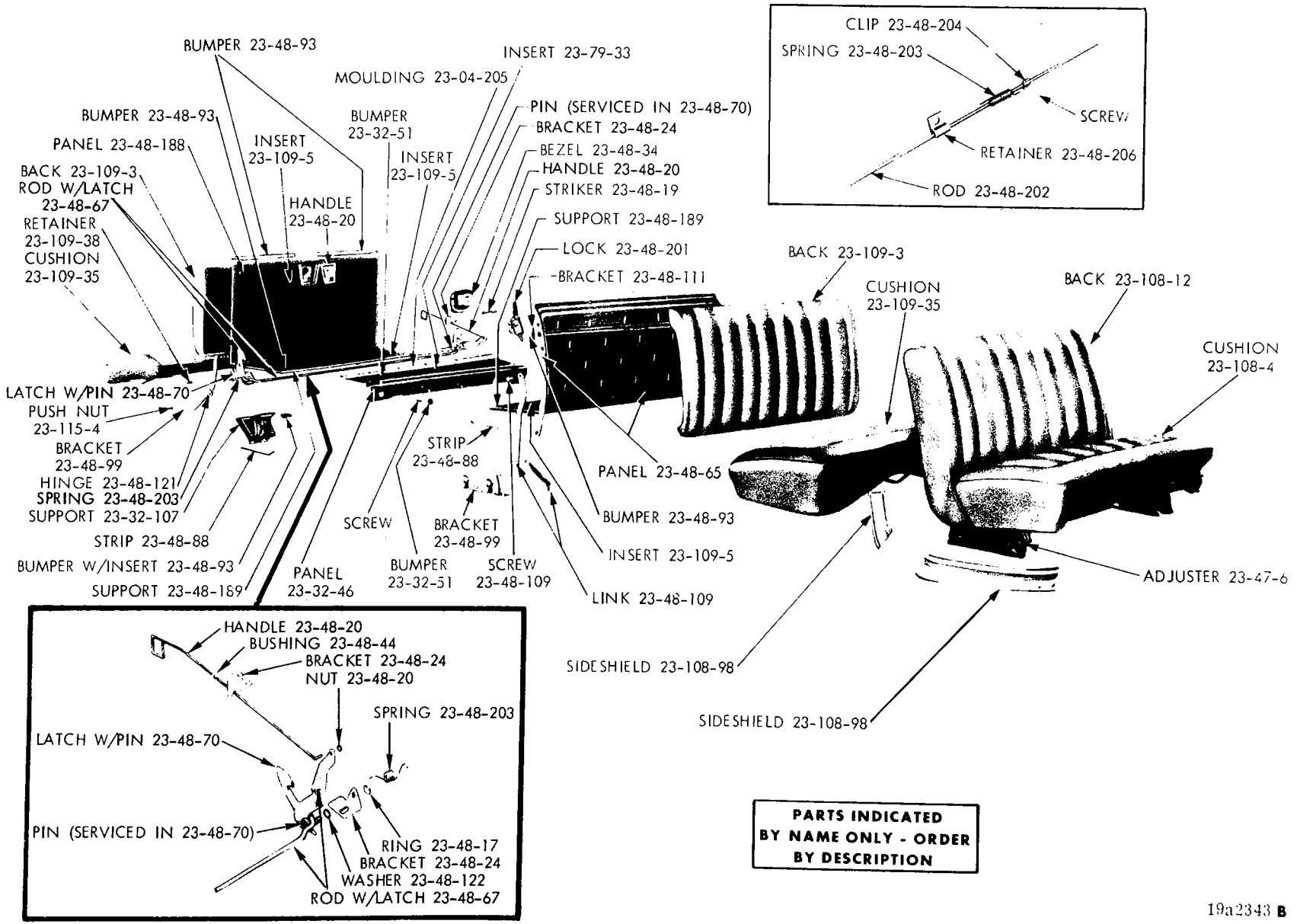

PARTS INDICATED BY NAME ONLY - ORDER BY DESCRIPTION

19a2343 **B**

STATION WAGON SEATS (3 SEATER) - PLYMOUTH, DODGE AND CHRYSLER

Printed in U.S.A.

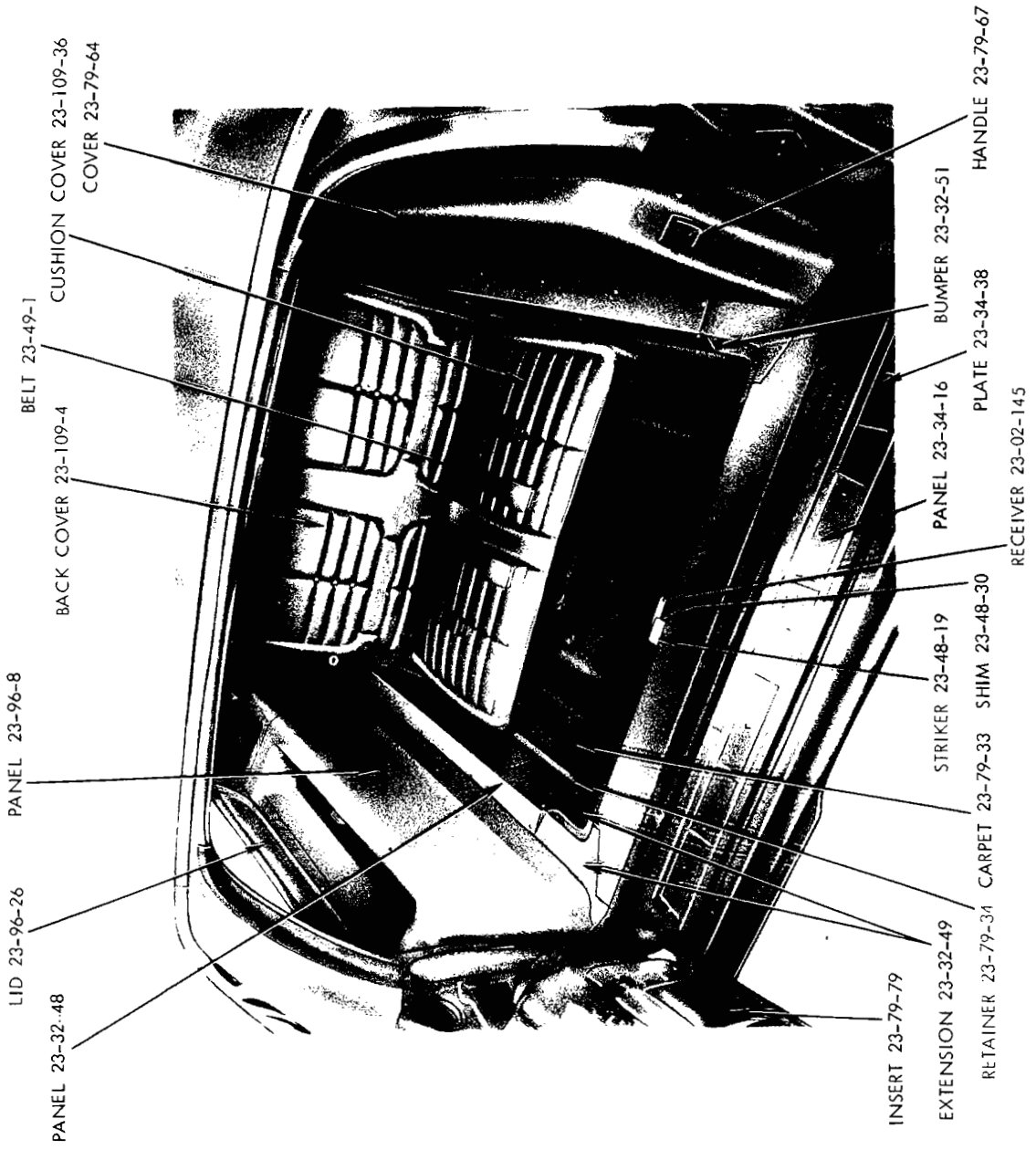

STATION WAGON 3RD SEAT AND WELL - PLYMOUTH, DODGE AND CHRYSLER

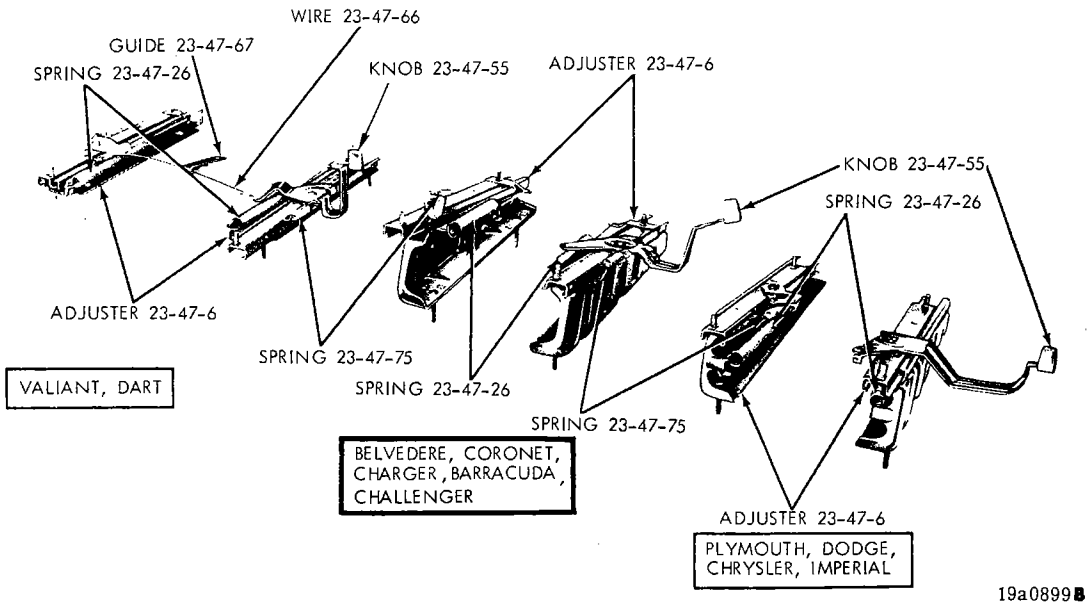

MANUAL SEAT ADJUSTER (BENCH TYPE)

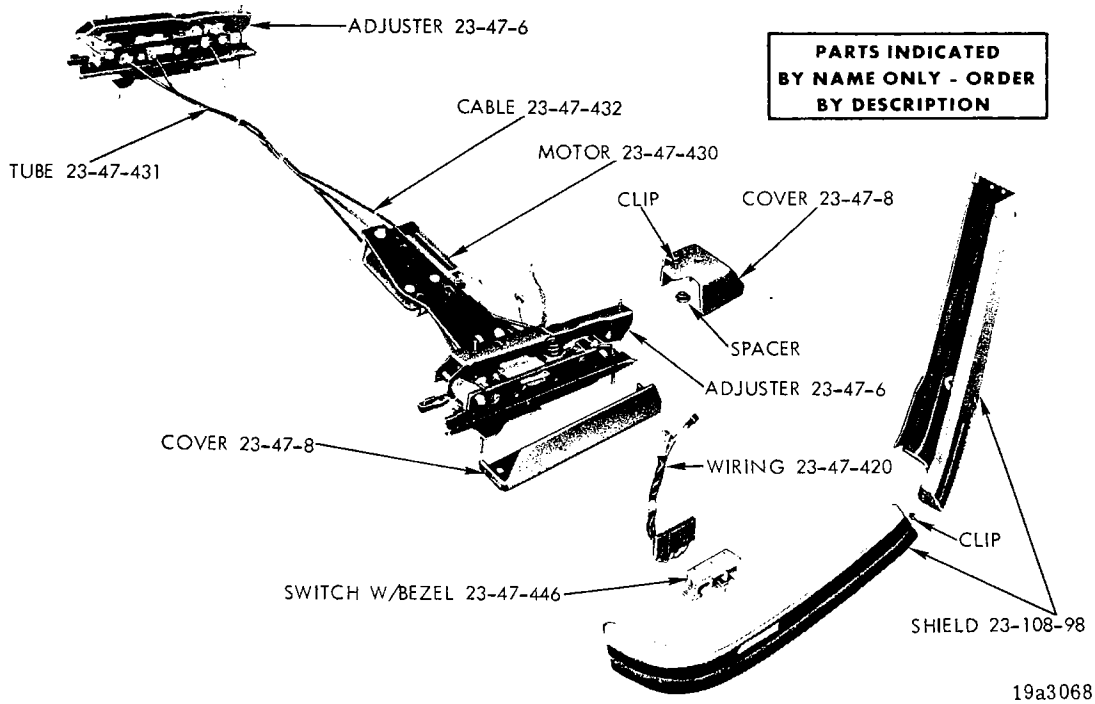

ELECTRIC SEAT ADJUSTER (BENCH TYPE) -
PLYMOUTH, DODGE, CHRYSLER AND IMPERIAL

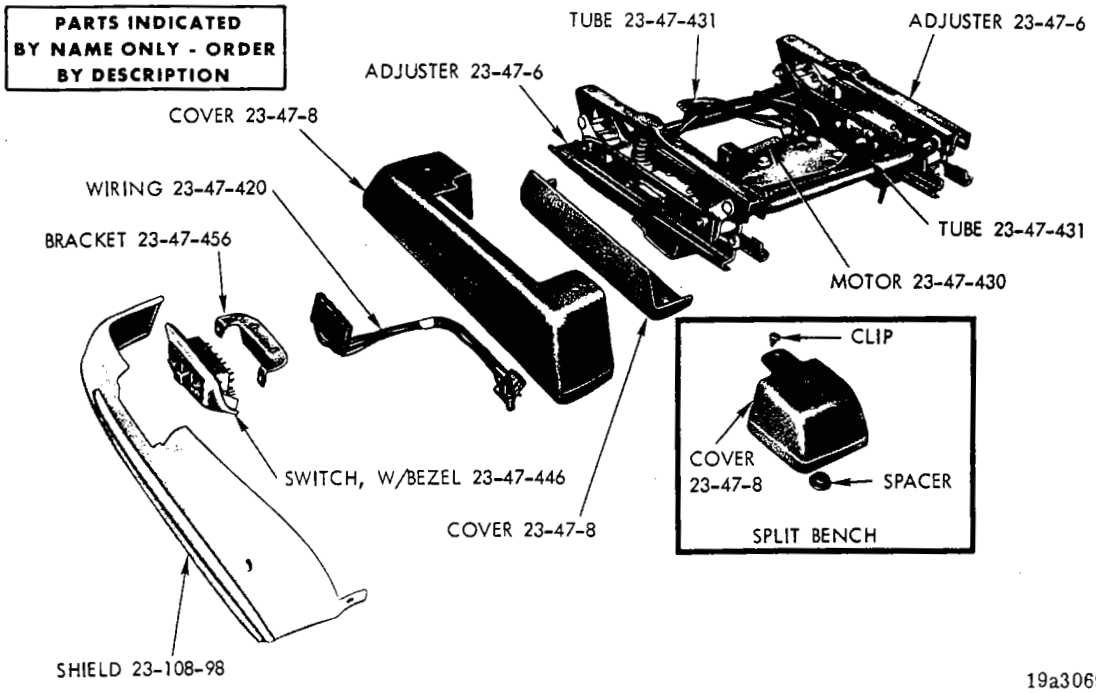

ELECTRIC SEAT ADJUSTER (BUCKET AND SPLIT BENCH) - PLYMOUTH, DODGE, CHRYSLER AND IMPERIAL

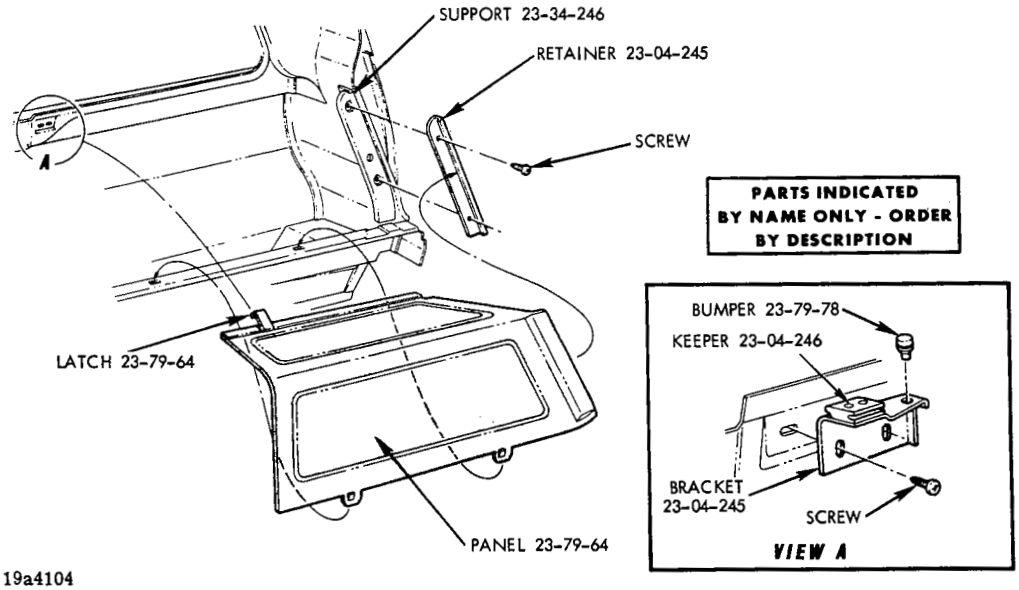

SPARE TIRE COVER OR PANEL - R AND W STATION WAGON (1971)

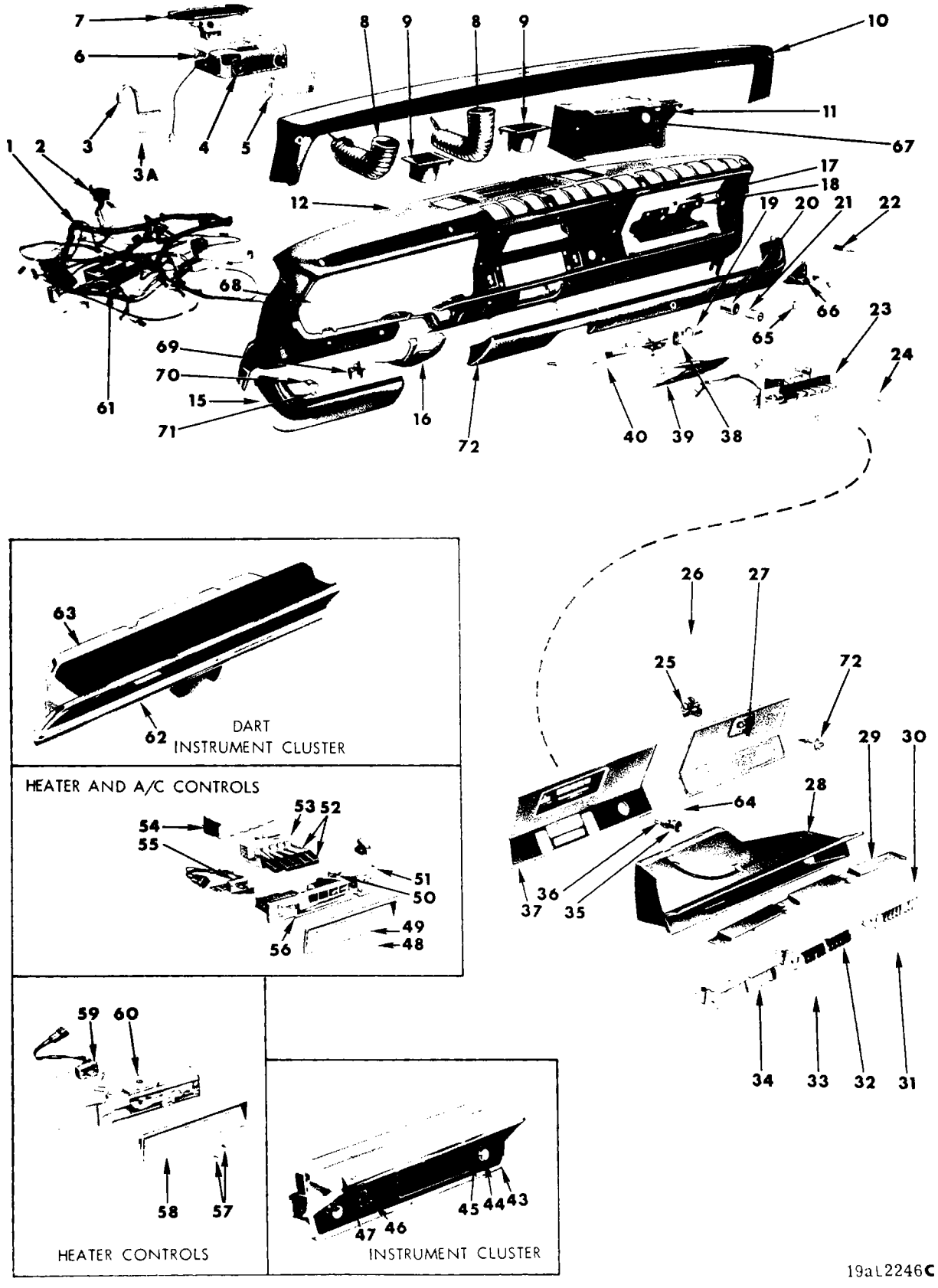

INSTRUMENT PANEL - VALIANT AND DART

INSTRUMENT PANEL - VALIANT AND DART

Ref. No.	Name	Part Type Code
1	Wiring	8-19-3
2	Connector (see Chart Group 8)	
3	Strap	24-28-16
3A	Bracket	1-87-61
4	Control	1-87-58
5	Radio	1-87-1
6	Radio	1-87-1
7	Speaker and Cover	1-87-2
8	Tube	1-48-151
9	Grille	1-48-158
10	Pad	23-84-3
11	Box	23-06-4
12	Panel	23-33-109
13		
14		
15	Pad	23-84-3
16	Cover	23-33-132
17	Catch	23-06-15
18	Hinge	23-06-21
19	Flasher	8-50-186
20	Clamp (Serviced in 8-20-10)	
21	Shell (Serviced in 8-20-10)	
22	Lamp and Switch	8-38-23
23	Control (refer to break down)	
24	Plate	
25	Latch	23-06-15
26	Cable	23-06-46
27	Door	23-06-10
28	Duct	24-28-73
29	Bracket (Serviced in 24-28-73)	
30	Louver	24-28-78
31	Plate	24-28-107
32	Louver	24-28-78
33	Plate	24-28-107
34	Louver	24-28-78
35	Knob	8-20-8
36	Element	8-20-9
37	Trim Plate	23-33-135
38	Clip	8-50-191
39	Receptacle	23-02-18
40	Housing	23-02-19
41		
42		
43	Bezel	8-37-90
44	Knob	23-67-194
45	Nut	23-67-161
46	Switch	1-06-2
47	Housing	8-37-178
48	Knob	1-48-942
49	Bezel	24-24-140
50	Clip	1-48-374
51	Lamp	24-24-167
52	Extension and Cover	24-24-164
53	Switch	24-24-150
54	Plate (Serviced in 24-24-150)	
55	Switch	24-24-5
56	Control	24-24-39
57	Knob	1-48-942
58	Bezel	1-48-70
59	Switch	1-48-770
60	Control	1-48-4
61	Insulator, Gasket and Clip	8-19-87
62	Bezel	8-37-90
63	Housing	8-37-178
64	Knob	1-48-942
65	Bulb	8-44-1
66	Lamp	8-42-1
67	Lens	8-38-3
68	Switch	8-42-25
69	Hinge, w/Bracket	4-08-13
70	Bezel	8-42-29
71	Nut	
72	Cylinder	23-06-28
	Cylinder and Key Package	23-17-4

PARTS INDICATED BY NAME ONLY - ORDER BY DESCRIPTION

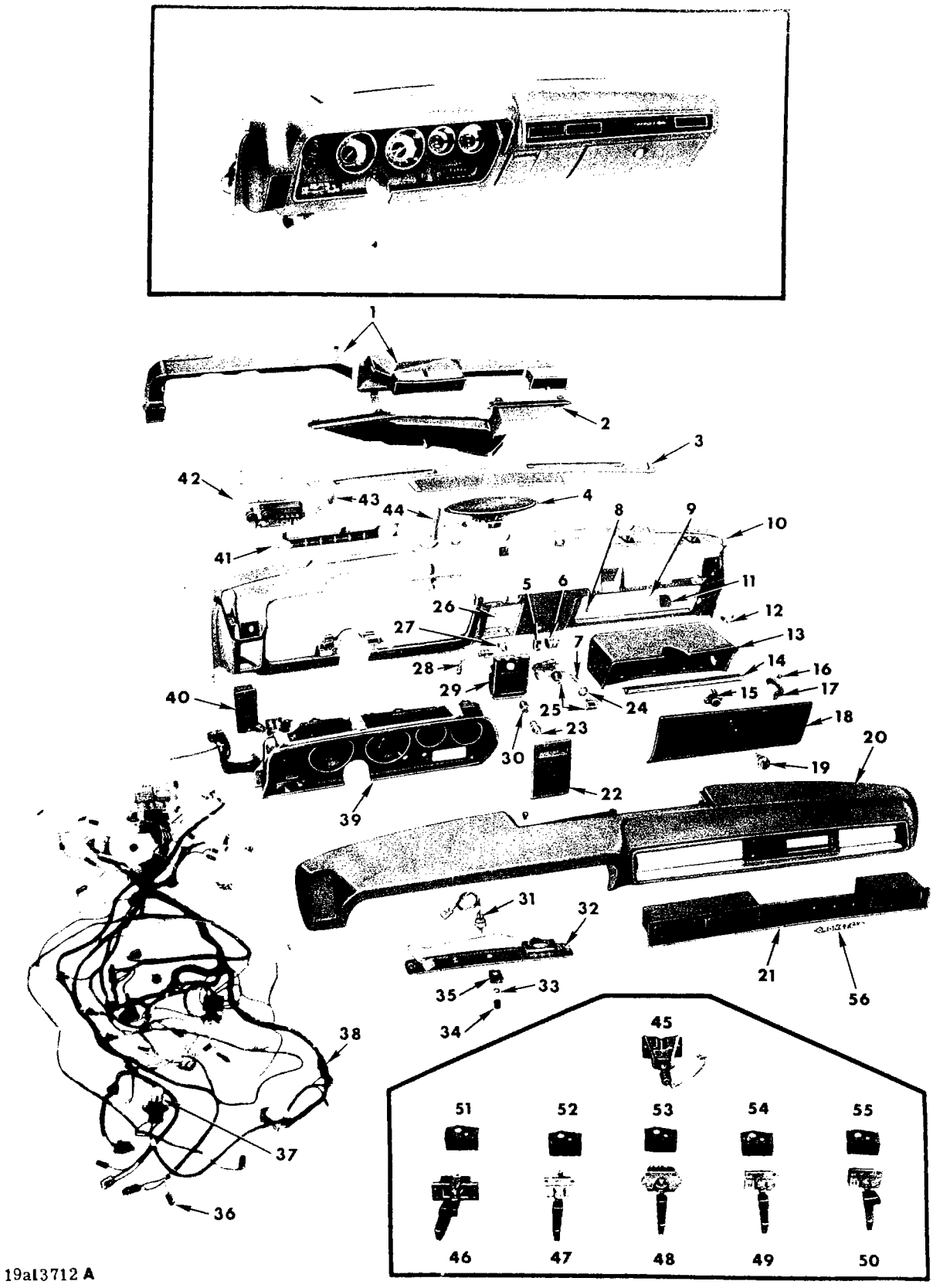

INSTRUMENT PANEL - SATELLITE, CORONET AND CHARGER (1971)

INSTRUMENT PANEL - SATELLITE, CORONET AND CHARGER (1971)

Ref. No.	Name	Part Type Code
1	Duct	24-28-73
2	Duct	1-48-141
3	Plate	23-33-42
4	Speaker	1-87-2
5	Clip	8-50-191
6	Flasher	8-50-186
7	Bulb	8-44-1
8	Bumper	23-06-14
9	Catch	23-06-15
10	Panel	23-33-109
11	Relay	8-37-70
12	Lamp	8-38-23
13	Box	23-06-4
14	Hinge	23-06-21
15	Latch	23-06-15
16	Bumper	23-06-14
17	Arm	23-06-13
18	Door	23-06-10
19	Cylinder and Key Package	23-06-28
	Cylinder and Key Package	23-17-4
20	Pad	23-84-3
21	Air Outlet, Center and Right	24-28-78
22	Receiver	23-02-18
23	Knob	8-20-8
	Element	8-20-9
24	Nut	
25	Lamp	8-37-75
26	Bumper	23-02-38
27	Shell and Clamp	8-20-10
28	Lamp	8-19-83
29	Housing	23-02-19
30	Shell and Clamp	8-20-10
31	Control	1-87-58
32	Lamp	8-42-1
33	Nut	
34	Knob	1-87-180
35	Bezel	1-87-22
36	Connectors (See PTC 8-16-0)	
37	Switch	8-53-150
38	Wiring	8-19-3
39	Cluster (See Illustration on Instrument Cluster)	
40	Spot Cooler	24-28-78
41	Retainer	8-19-10
42	Radio	1-87-1
43	Bracket	
44	Brace	23-33-10
45	Lamp	8-37-15
46	Switch	15-03-84
47	Switch	23-54-167
48	Switch	23-54-167
49	Switch	8-34-281
50	Switch	1-47-7
51	Bezel	15-03-85
52	Bezel	23-54-170
53	Bezel	23-54-170
54	Bezel	8-34-289
55	Bezel	1-47-9
56	Name Plate	23-33-96

PARTS INDICATED BY NAME ONLY - ORDER BY DESCRIPTION

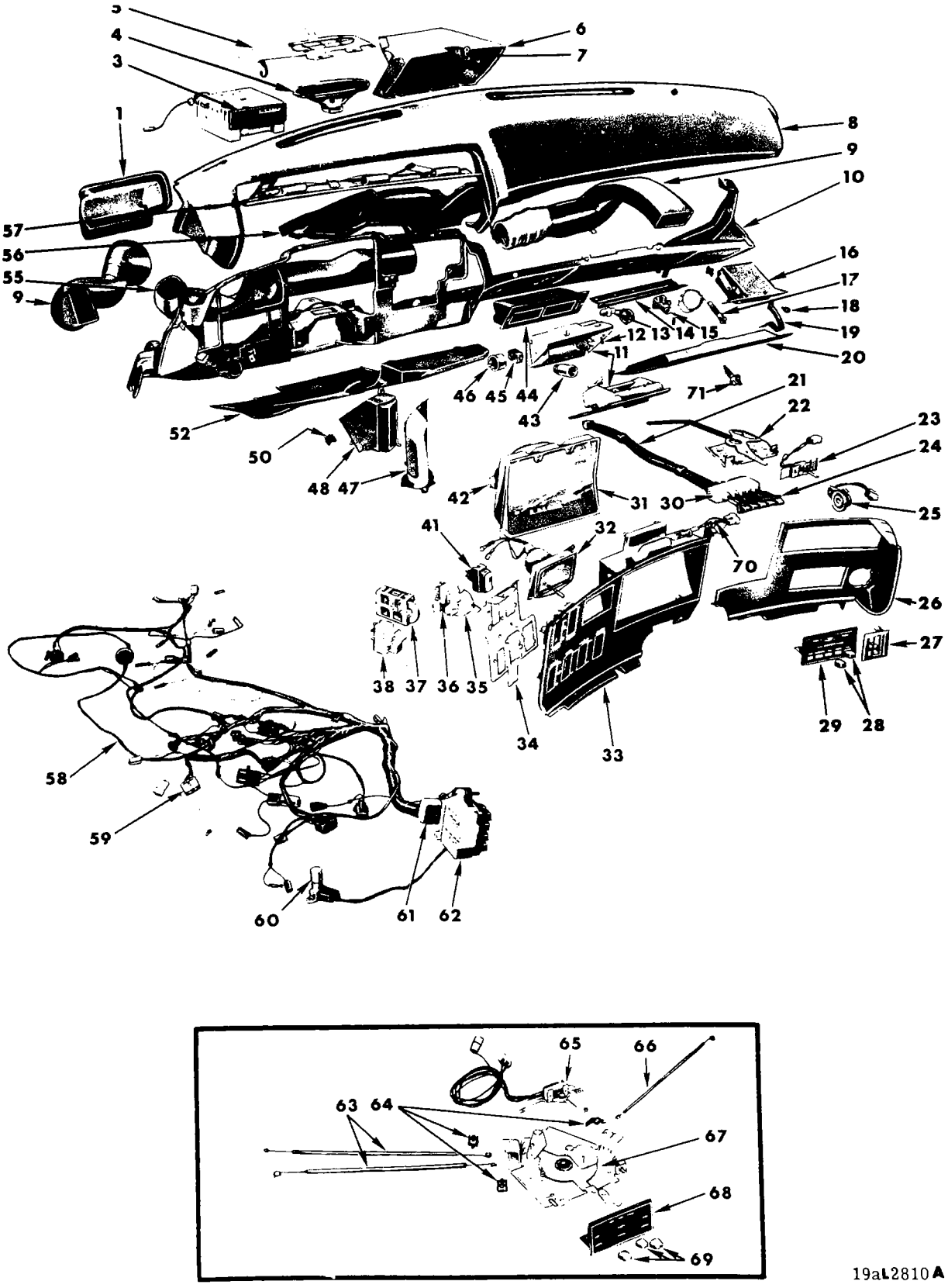

19aL2810A

INSTRUMENT PANEL - PLYMOUTH

INSTRUMENT PANEL - PLYMOUTH

Ref. No.	Name	Part Type Code
1	Duct	24-28-73
2		
3	Radio	1-87-1
4	Speaker	1-87-2
5	Grille	23-33-42
6	Box	23-06-4
7	Catch	23-06-15
8	Pad	23-84-3
9	Duct	24-28-73
10	Panel	23-33-109
11	Receiver - Comp.	23-02-18
12	Bumper	23-02-38
13	Lamp	8-19-83
14	Hinge	23-06-21
15	Latch	23-06-15
16	Spot Cooler	24-28-78
17	Lamp, w/Switch	8-38-23
18	Bumper	23-06-14
19	Arm	23-06-13
20	Door	23-06-10
21	Hose	24-28-24
22	Arm and Plate (Serviced in 1-48-4).	
23	Switch	1-48-770
24	Push Button	24-24-164
25	Control	1-87-58
26	Bezel	23-33-135
27	Bezel	1-87-22
28	Knob	1-48-942
29	Bezel	1-48-70
30	Switch	24-24-150
31	Housing	8-37-178
32	Clock	1-21-1
33	Bezel	8-37-90
34	Plate	8-53-289
35	Knob (Serviced in 23-67-160)	
36	Switch	23-67-160
37	Switch	8-53-150
38	Switch	8-53-270
39		
40		
41	Switch	23-67-160
42	Limiter	8-37-2
43	Shell (Serviced in 8-20-10)	
44	Air Outlet	24-28-78
45	Clip	8-50-191
46	Flasher	8-50-186
47	Bezel	24-24-140
48	Spot Cooler	24-28-78
49		
50	Clip	24-28-72
51		
52	Cover	23-33-132
53		
54		
55	Duct	24-28-73
56	Duct	1-48-141
57	Panel	8-41-41
58	Wiring	8-19-3
59	Connector, Insulator and Terminal (See Code 8-16-0)	
60	Switch	8-53-150
61	Relay	8-33-164
62	Connector and Gasket, Bulkhead	8-19-87
63	Cable	1-48-941
64	Clip	1-48-941
65	Switch	1-48-770
66	Cable	1-48-941
67	Plate and Lever and Cam	1-48-945
68	Bezel	1-48-70
69	Knob	1-48-942
70	Wiring	8-19-3
71	Cylinder and Key Package	23-17-4
	Cylinder and Key Package	23-06-28

PARTS INDICATED BY NAME ONLY - ORDER BY DESCRIPTION

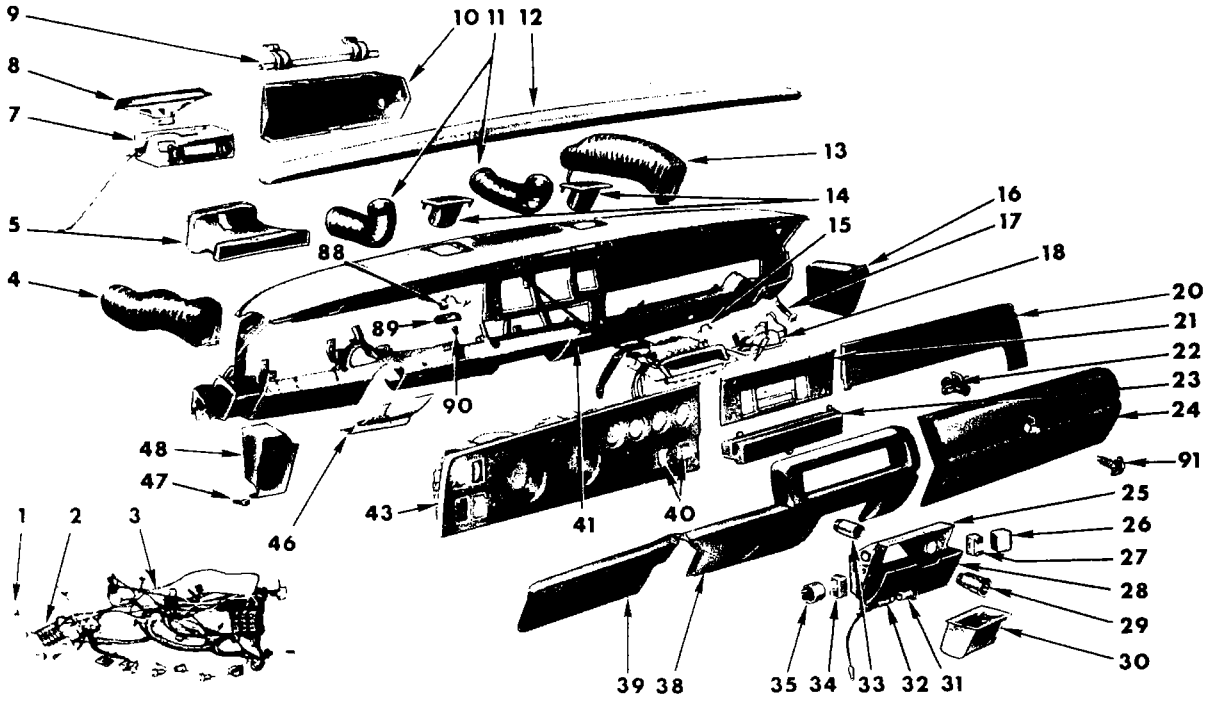

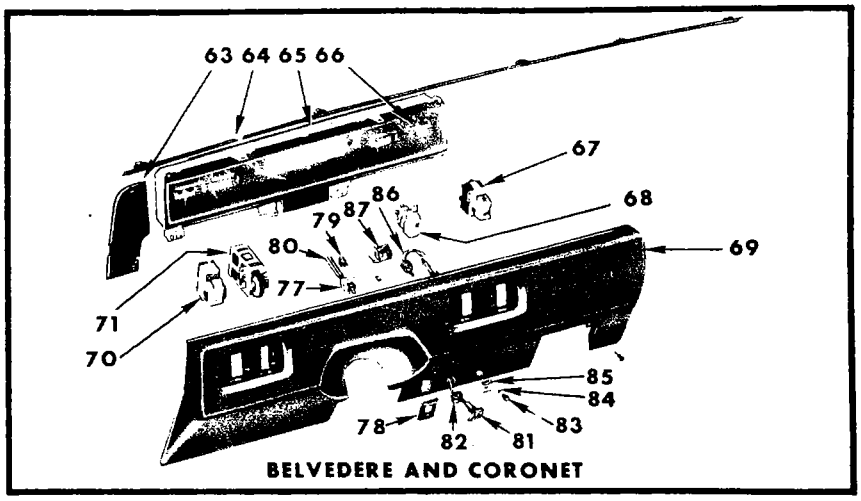

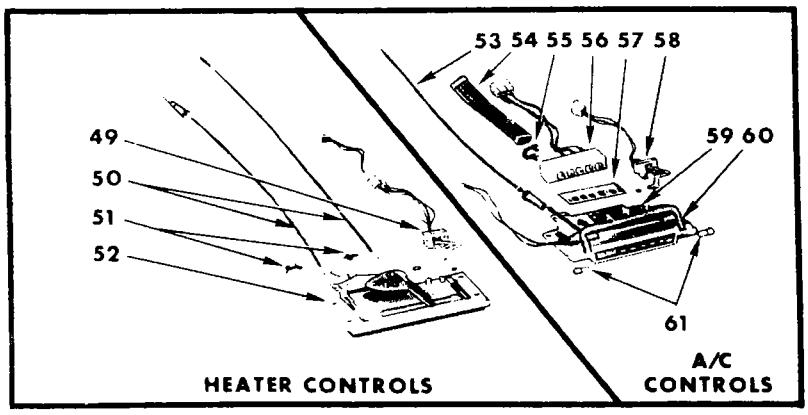

19aL2247B

INSTRUMENT PANEL - CHARGER AND CHARGER R/T

INSTRUMENT PANEL - CHARGER AND CHARGER R/T

Ref. No.	Name	Part Type Code
1	Insulator (see Chart Group 8)	
2	Insulator, Clip and Gasket	8-19-87
3	Wiring	8-19-3
4	Tube	24-28-24
5	Duct	24-28-73
6		
7	Radio	1-87-1
8	Speaker & Cover	1-87-2
9	Hinge	23-06-21
10	Box	23-06-4
11	Tubes	1-48-151
12	Pad	23-84-3
13	Tube	24-28-24
14	Grilles	1-48-158
15	Catch	23-06-15
16	Spot Cooler	24-28-78
17	Lamp and Switch	8-38-23
18	Lamp	24-24-167
19		
20	Finish Plate	23-33-135
21	Plate	23-33-135
22	Latch	23-06-15
23	Louver	24-28-78
24	Pad or Door	23-06-10
25	Receptacle	23-02-18
26	Flasher	8-50-186
27	Clip	8-50-191
28	Pad	23-84-3
29	Shell (Serviced in 8-20-10)	
30	Receiver	23-02-18
31	Socket	
32	Lamp	8-19-83
33	Clamp (Serviced in 8-20-10)	
34	Clip	8-50-191
35	Flasher	8-50-186
36		
37		
38	Pad	23-84-3
39	Pad	23-84-3
40	Button	23-67-258
41	Panel	23-33-109
42		
43	Bezel	8-37-90
44		
45		
46	Cover	23-33-132
47	Knob	24-28-104
48	Spot Cooler	24-28-78
49	Switch	1-48-770
50	Cable	1-48-941
51	Clip	1-48-941
52	Control	1-48-4
53	Cable (Serviced in 24-24-150)	
54	Hose	24-28-24
55	Clamp	
56	Switch	24-24-150
57	Plate (Serviced in 24-24-39)	
58	Switch	24-24-5
59	Extension	24-24-164
60	Control	24-24-39
61	Bulb	8-44-1
62		
63	Finish Plate	23-33-135
64	Moulding	23-33-86
65	Bezel	8-37-90
66	Clock	1-21-1
67	Switch	23-67-160
68	Button	23-67-258
69	Pad	23-84-3
70	Button	23-67-258
71	Switch	23-54-167
72	Lens	8-37-162
73		
74	Switch	8-53-270
75	Switch	8-53-150
76		
77	Switch	15-03-84
78	Bezel	15-03-85
79	Clip	
80	Hose	15-03-93
81	Lamp	8-37-75
82	Nut	
83	Knob	1-87-180
84	Nut	
85	Bezel	1-87-292
86	Control	1-87-58
87	Solenoid	8-27-97
88	Switch	23-54-167 and 23-58-532
89	Plate	1-47-23
90	Knob	23-58-534 and 23-54-169
91	Cylinder and Key Package	23-06-28
	Cylinder and Key Package	23-17-4

PARTS INDICATED BY NAME ONLY - ORDER BY DESCRIPTION

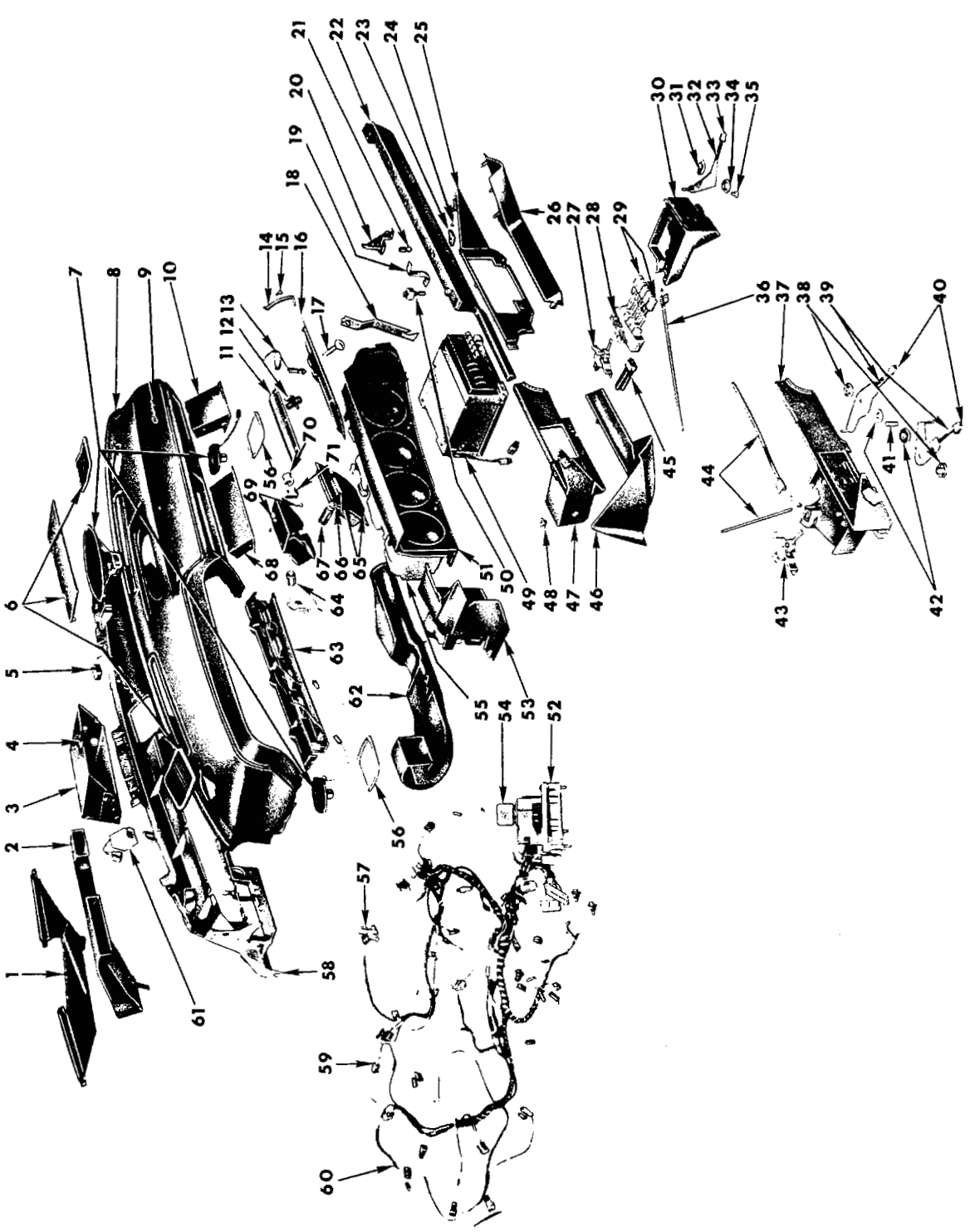

INSTRUMENT PANEL - CHALLENGER (TYPICAL OF BARRACUDA)

INSTRUMENT PANEL - CHALLENGER
(TYPICAL OF BARRACUDA)

Ref. No.	Name	Part Type Code
1	Duct	1-48-141
2	Duct, Center	24-28-73
	Duct, Right	24-28-73
3	Box	23-06-4
4	Catch	23-06-15
5	Buzzer	8-35-66
6	Grille	23-33-42
7	Speaker	1-87-2
8	Pad	23-84-3
9	Name Plate	23-33-96
10	Spot Cooler	24-28-78
11	Hinge	23-06-21
12	Latch	23-06-15
13	Lamp	8-38-23
14	Arm	23-06-13
15	Bumper	23-06-14
16	Door	23-06-10
17	Cylinder	23-06-28
	Cylinder and Key Package	23-17-4
18	Bracket	Not Serviced
19	Ground Strap	Not Serviced
20	Lamp	8-42-1
21	Bulb	8-44-1
22	Shield	23-33-119
23	Bezel	8-42-29
24	Nut	
25	Bezel	1-87-22
26	Panel	23-84-3
27	Switch	24-24-5
28	Switch	24-24-150
29	Extension and Cover	24-24-164
30	Control	24-24-39
31	Clip (Serviced in 24-24-39)	
32	Lever (Serviced in 24-24-39)	
33	Knob (Serviced in 24-24-39)	
34	Spacer	1-48-608
35	Pin (Serviced in 24-24-39)	
36	Cable	24-01-65
37	Bezel	1-48-70
38	Spacer (Serviced in 1-48-4)	
39	Control	1-48-4
40	Knob and Clip	1-48-942
41	Pin (Serviced in 1-48-4)	
42	Pad (Serviced in 1-48-4)	
43	Switch	1-48-770
44	Cable	1-48-941
45	Hose w/Connector	24-28-24
46	Panel	23-84-3
47	Spot Cooler Lt. w/Control Bezel	24-28-78
48	Clip	24-28-72
49	Radio	1-87-1
50	Switch	8-42-25
51	Bezel	8-37-90
52	Insulator, Gasket and Clip, Bulkhead Conn.	8-19-83
53	Bezel	8-53-294
54	Relay	8-33-164
55	Housing	8-37-178
56	Plate	1-87-30
57	Switch	8-53-150
58	Panel	23-33-109
59	Insulator (See Chart Group 8-16-0)	
60	Wiring	8-19-3
61	Crossover	1-87-19
62	Duct	24-28-73
63	Panel	8-41-41
64	Shell (Serviced in 8-20-10)	
65	Receptacle, w/Face Plate	23-02-18
	Handle, w/Face Plate	23-02-42
66	Knob	8-20-8
67	Clamp (Serviced in 8-20-10)	
68	Air Outlet	24-28-78
69	Housing	23-02-19
	Bumper (Serviced in Housing)	
70	Flasher	8-50-186
71	Clip	8-50-191

PARTS INDICATED BY NAME ONLY - ORDER BY DESCRIPTION

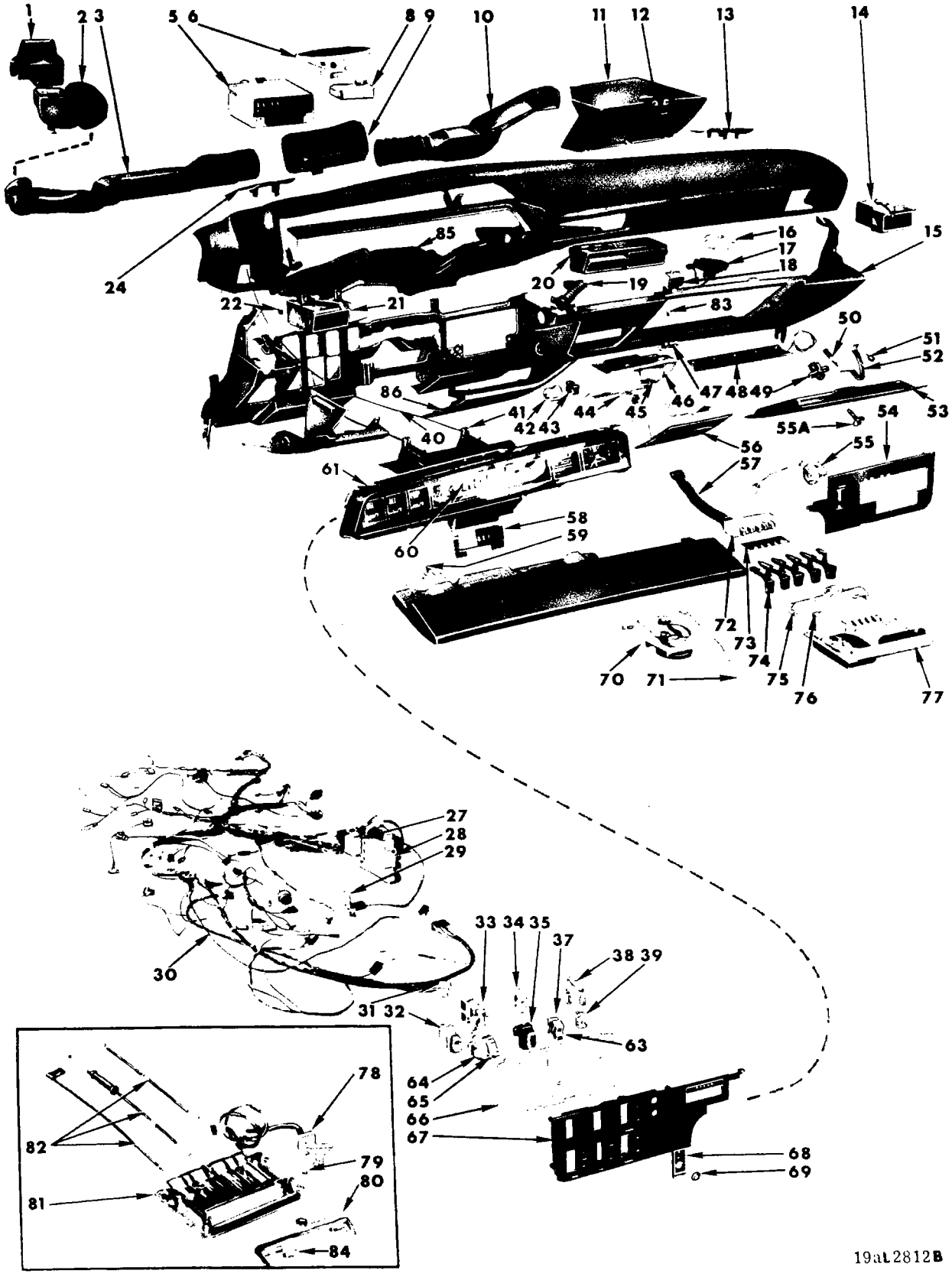

INSTRUMENT PANEL - DODGE

INSTRUMENT PANEL - DODGE

Ref No.	Name	Part Type Code
1	Duct	24-28-73
2	Duct	24-28-73
3	Duct	24-28-73
4		
5	Radio	1-87-1
6	Speaker	1-87-2
7		
8	Plate w/Cover	1-87-19
9	Duct	24-28-73
10	Duct	24-28-73
11	Box	23-06-4
12	Catch	23-06-15
13	Grille	23-33-42
14	Spot Cooler	24-28-78
15	Panel	23-33-109
16	Plate, Speaker Mtg.	23-33-43
17	Speaker	1-87-2
18	Limiter	8-37-2
19	Tube, Aspirator	24-28-24
20	Outlet, w/Louvers	24-28-78
21	Spot Cooler	24-28-78
22	Clip	24-28-72
23		8-40-5
24	Grille	23-33-42
25		
26		
27	Relay	8-33-164
28	Connector and Gasket, Bulkhead	8-19-87
29	Switch	8-53-150
30	Wiring	8-19-3
31	Connector, Insulator and Terminal (See Code 8-16-0)	
32	Switch	8-53-270
33	Switch	8-53-150
34	Bezel	8-37-90
35	Switch	23-67-160
36		
37	Switch	23-67-160
38	Lamp	8-39-9
39	Switch	8-14-23
40	Cable	1-48-941
41	Cover	23-33-132
42	Flasher	8-50-186
43	Clip	8-50-191
44	Shell and Clamp	8-20-10
45	Bumper	23-02-38
46	Housing	23-02-19
47	Lamp	8-19-83
48	Hinge	23-06-21
49	Latch	23-06-15
50	Lamp and Switch	8-38-23
51	Bumper	23-06-14
52	Arm	23-06-13
53	Door	23-06-10
54	Bezel	23-33-135
55	Control	1-87-58
55A	Cylinder and Key Package	23-06-28
	Cylinder and Key Package	23-17-4
56	Receptacle or Receiver	23-02-18
57	Extension, Vacuum Hose	24-28-24
58	Dial (Serviced in 8-37-90)	
59	Wiring	8-19-3
60	Lens	8-37-162
61	Bezel	8-37-90
62		
63	Knob (Serviced in 23-67-160)	
64	Switch	23-67-160
65	Knob (Serviced in 23-67-160)	
66	Plate	8-53-289
67	Bezel	8-53-294
68	Bezel	8-14-9
69	Nut	
70	Potentiometer, w/ Thumbwheel and Bracket	24-01-45
71	Cable	1-21-19
72	Switch	24-24-150
73	Control (Serviced in 24-24-161)	
74	Extension, Push Button	24-24-164
75	Lamp and Socket	24-24-167
76	Lamp and Socket	24-24-167
77	Control	24-24-167
78	Switch	1-48-770
79	Retainer	1-48-950
80	Lamp and Sockets	1-48-10
81	Control	1-48-4
82	Cable	1-48-941
83	Bumper	23-06-14
84	Bulb	8-44-1
85	Duct	1-48-141
86	Plate	23-33-135

PARTS INDICATED BY NAME ONLY - ORDER BY DESCRIPTION

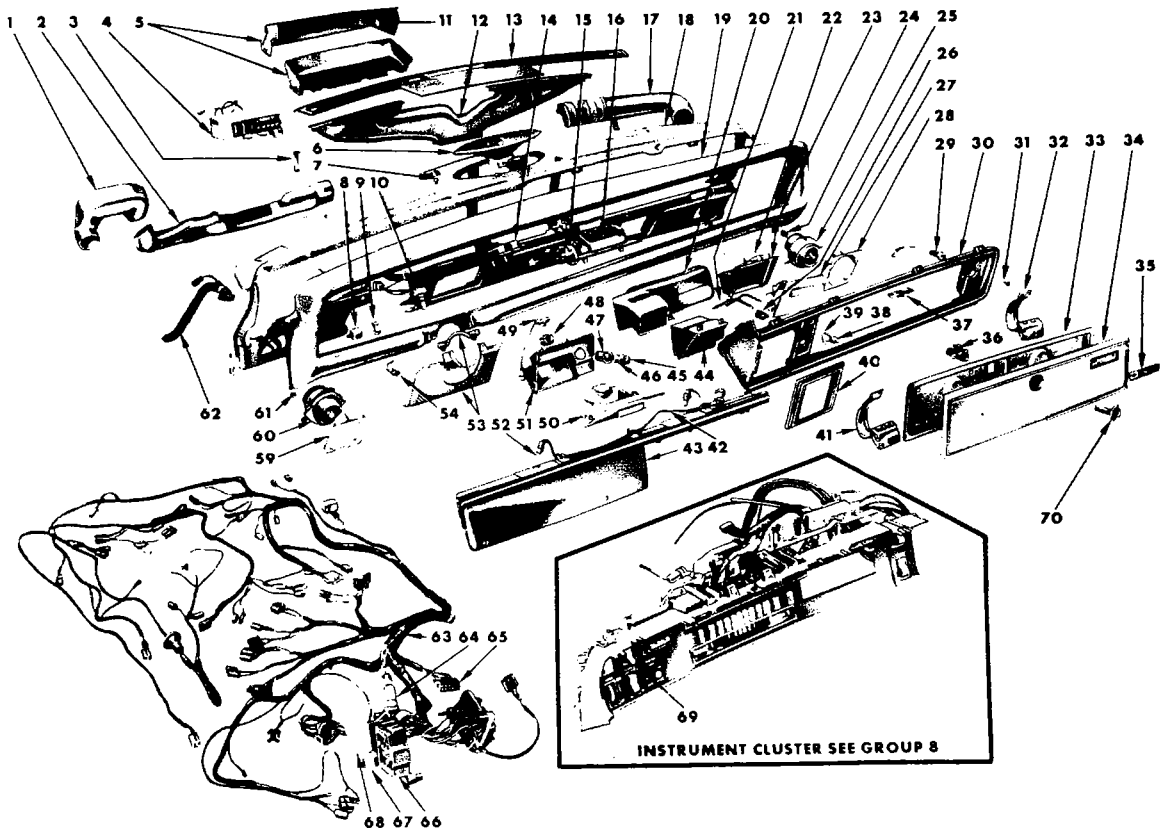

19aL2697 B

INSTRUMENT PANEL - CHRYSLER

INSTRUMENT PANEL - CHRYSLER

Ref. No.	Name	Part Type Code
1	Duct	24-28-73
2	Duct	24-28-73
3	Bracket	Not Serviced
4	Radio	1-87-1
5	Box	23-06-4
6	Speaker	1-87-2
7	Photocell	8-53-304
8	Flasher	8-50-186
9	Clip	8-50-191
10	Switch	1-06-3
11	Lens	8-38-3
12	Duct	1-48-141
13	Grille	23-33-42
14	Control	1-48-374
15	Control	1-87-58
16	Control	1-48-374
17	Duct, Rt.	24-28-73
18	Panel	23-33-109
19	Pad	23-84-3
20	Duct, Center	24-28-73
21	Tube	23-19-97
22	Lamp	8-19-83
23	Housing, Rt.	23-02-19
24	Clip	24-28-72
25	Spot Cooler	24-28-78
26	Switch	23-19-94
27	Receptacle, Rt.	23-02-18
28	Bezel	24-24-140
29	Lamp and Switch	8-38-23
30	Bezel	23-33-135
31	Bumper	23-06-14
32	Hinge	23-06-21
33	Panel, Inner	23-06-10
34	Panel w/Insert, Outer	23-06-10
35	Name Plate	23-06-53
36	Latch	23-06-15
37	Catch	23-06-15
38	Nut	23-19-94
39	Bezel	23-19-100
40	Bezel	23-33-135
41	Hinge	23-06-21
42	Wiring	8-19-3
43	Panel	8-41-41
44	Air Outlet	24-28-78
45	Knob	8-20-8
46	Element	8-20-9
47	Shell (Serviced in 8-20-10)	
48	Clamp (Serviced in 8-20-10)	
49	Lamp	8-19-83
50	Receptacle, Lt.	23-02-18
51	Housing, Lt.	23-02-19
52	Bulb	8-44-1
53	Cover	23-33-132
54	Lamp	8-40-5
55		
56		
57		
58		
59	Bezel	24-24-140
60	Spot Cooler	24-28-78
61	Clip	24-28-72
62	Adaptor	24-24-53
63	Wiring	8-19-3
64	Relay	8-40-10
65	Connector (see Code 8-16-0)	
66	Fuse Block	8-15-3
67	Circuit Breaker	8-17-30
68	Relay	8-33-164
69	Knob (Serviced in 23-67-160)	
70	Cylinder and Key Package	23-06-28
	Cylinder and Key Package	23-17-4

PARTS INDICATED BY NAME ONLY - ORDER BY DESCRIPTION

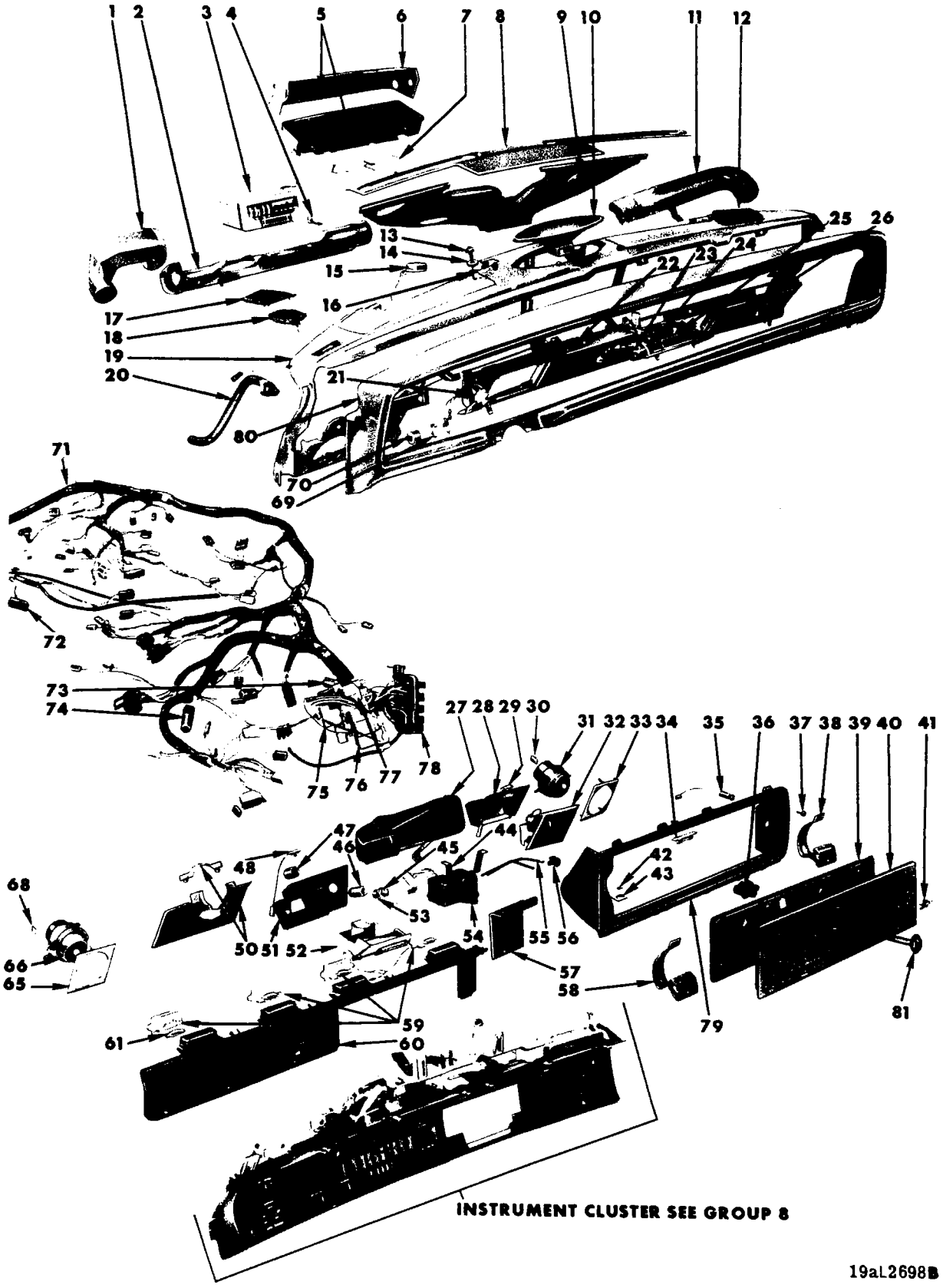

INSTRUMENT PANEL - IMPERIAL

INSTRUMENT PANEL - IMPERIAL

Ref. No.	Name	Part Type Code
1	Duct	24-28-73
2	Duct	24-28-73
3	Radio (Standard Equipment)	Not Serviced
4	Bracket	Not Serviced
5	Box	23-06-4
6	Lens	8-38-3
7	Plate and Cover	1-87-19
8	Grille	23-33-42
9	Duct	1-48-141
10	Speaker	1-87-2
11	Duct	24-28-73
12	Grille	23-33-42
13	Photocell	8-53-304
14	Spacer	8-53-308
15	Relay, w/Wiring	8-37-70
16	Clip	8-53-305
17	Grille	23-33-42
18	Speaker	1-87-2
19	Panel	23-33-109
20	Adaptor	24-24-53
21	Switch	1-06-3
22	Control	1-48-374
23	Control	1-87-58
24	Thumbwheel	24-01-45
25	Bulb	8-44-1
26	Knob	24-24-156
27	Air Outlet	24-28-78
28	Housing, Rt.	23-02-19
29	Lamp	8-19-83
30	Clip	24-28-72
31	Spot Cooler	24-28-78
32	Receptacle, Rt.	23-02-18
33	Bezel	24-24-140
34	Catch	23-06-15
35	Lamp and Switch	8-38-23
36	Latch	23-06-15
37	Bumper	23-06-14
38	Hinge	23-06-21
39	Panel, Inner	23-06-10
40	Panel, Outer	23-06-10
41	Name Plate	23-06-53
42	Nut	23-19-94
43	Bezel	23-19-100
44	Bracket	8-53-303
45	Knob	8-20-8
46	Shell (Serviced in 8-20-10)	
47	Clamp (Serviced in 8-20-10)	
48	Lamp	8-19-83
49		
50	Cover	23-33-132
51	Housing, Lt.	23-02-19
52	Receptacle, Lt.	23-02-18
53	Element	8-20-9
54	Amplifier	8-53-301
55	Tube	23-19-97
56	Switch	23-19-94
57	Plate	8-41-43
58	Hinge	23-06-21
59	Lens	8-41-44
60	Panel	8-41-41
61	Bulb	8-44-1
62		
63		
64		
65	Bezel	24-24-140
66	Spot Cooler	24-28-78
67		
68	Clip	24-28-72
69	Clip	8-50-191
70	Flasher	8-50-186
71	Wiring	8-19-3
72	Connector (see Code 8-16-0)	
73	Circuit Breaker	8-17-30
74	Relay	8-40-10
75	Relay	8-33-164
76	Circuit Breaker	8-17-30
77	Relay	23-41-27
78	Fuse Block	8-15-3
79	Bezel	23-33-135
80	Pad	23-84-3
81	Cylinder and Key Package	23-06-28
	Cylinder and Key Package	23-17-4

PARTS INDICATED BY NAME ONLY - ORDER BY DESCRIPTION

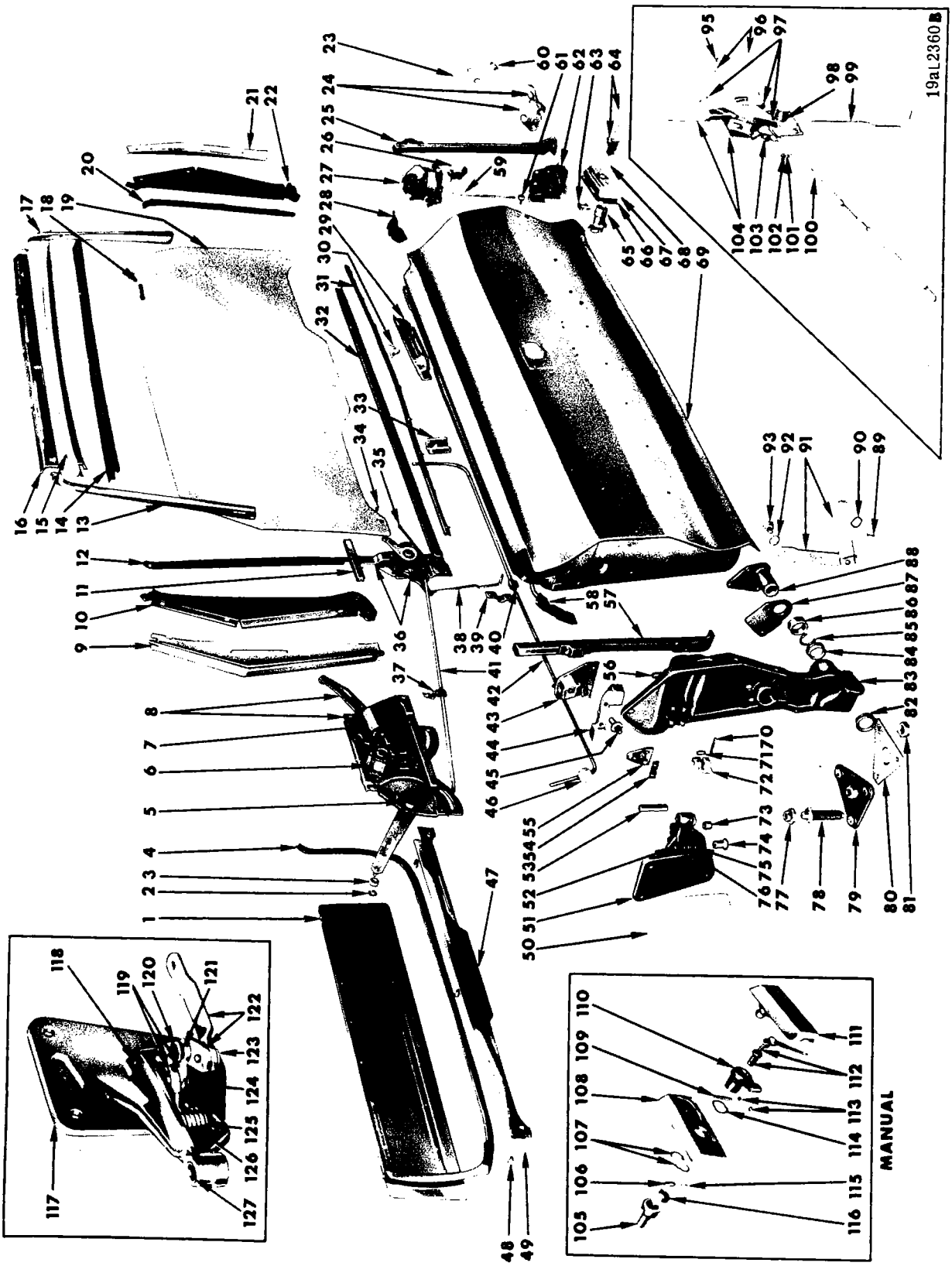

TAILGATE (TWO WAY) - BELVEDERE AND CORONET

TAILGATE (TWO WAY) - BELVEDERE AND CORONET

Ref. No.	Name	Part Type Code
1	Cover	23-54-150
2	Nut	23-54-72
3	Roller	23-54-98
4	Weatherstrip	23-63-171
5	Spring	23-54-74
6	Mechanism	23-54-165
7	Motor	23-54-160
8	Regulator	23-54-72
9	Retainer	23-42-32
10	Run	23-42-46
11	Weatherstrip	23-54-222
12	Run	23-42-46
13	Moulding	23-23-60
14	Run	23-42-46
15	Retainer	23-42-32
16	Header	23-34-293
17	Moulding	23-23-60
18	Label	23-54-70
19	Glass	23-64-10
20	Run	23-42-46
21	Retainer	23-42-32
22	Run	23-42-46
23	Plate	23-54-6
24	Striker	23-54-6
25	Channel w/Bracket	23-09-67
26	Switch	23-54-167
27	Latch	23-54-1
28	Seal	23-63-37
29	Bezel	23-54-221
30	Knob	23-54-214
31	Weatherstrip (Outer)	23-63-181
32	Weatherstrip (Inner)	23-63-181
33	Clamp	23-54-144
34	Swivel	23-54-216
35	Link	23-54-216
36	Control	23-54-218
37	Clip	23-54-217
38	Link	23-54-216
39	Retainer	23-54-141
40	Bearing	23-54-142
41	Link w/Sleeve	23-54-216
42	Bar	23-54-140
43	Latch	23-54-1
44	Wedge	23-54-21
45	Striker	23-54-6
46	Bearing	23-54-142
47	Gasket	23-63-181
48	Fastener	23-64-272
49	Frame	23-09-64
50	Shim	23-54-27
51	Strap	23-54-4
52	Screw w/Washer	23-54-4
53	Pin	23-54-4
54	Nut	Not Serviced
55	T/Plate	23-54-6
56	Stud	23-54-4
57	Channel w/Bracket	23-09-67
58	Seal	23-63-37
59	Link	23-54-216
60	Striker	23-54-6
61	Swivel	23-54-216
62	Latch	23-54-1
63	Retainer	23-17-52
64	Cylinder and Key Package	23-17-2
65	Switch	23-54-167
66	Gasket	23-54-92
67	Ornament	23-54-11
68	Gasket	23-17-51
69	Tailgate	23-54-3
70	Pin	23-54-4
71	Pin	23-54-4
72	Bracket	23-54-143
73	Bushing	23-54-20
74	Nut	23-54-40
75	Spring	23-54-31
76	Spacer	23-54-27
77	Bushing	23-54-20
78	Stud	23-54-4
79	Support	23-54-5
80	T/Plate	23-54-136
81	Nut	23-54-4
82	Bushing	23-54-20
83	Hinge	23-54-4
84	Bushing	23-54-20
85	Ring	23-54-20
86	Spacer	23-54-27
87	Clamp	23-54-144
88	Support	23-54-5
89	Bolt	23-54-56
90	Washer	23-54-56
91	Link	23-54-56
92	Washer	23-54-56
93	Bolt	23-54-56
94		
95	Swivel	23-54-216
96	Link	23-54-216
97	Clip	23-54-217
98	Spring (Serviced in 23-54-218)	
99	Link	23-54-216
100	Link w/Sleeve	23-54-216
101	Clip	23-54-217
102	Clip	23-54-217
103	Spring (Serviced in 23-54-218)	
104	Control	23-54-218
105	Housing	23-54-100
106	Pawl (Serviced in 23-54-73)	
107	Ring	23-54-77
108	Base (Serviced in 23-54-73)	
109	Pin (Serviced in 23-54-73)	
110	Lever (Serviced in 23-54-73)	
111	Handle	23-54-73
112	Cylinder and Keys	23-17-2
113	Set Screw	23-54-102
114	Retainer (Serviced in 23-54-73)	
115	Spring (Serviced in 23-54-73)	
116	Clip	23-54-128
117	Hinge (Serviced in 23-54-4)	
118	Rivet (Serviced in 23-54-4)	
119	Link (Serviced in 23-54-4)	
120	Rivet (Serviced in 23-54-4)	
121	Washer (Serviced in 23-54-4)	
122	Link (Serviced in 23-54-4)	
123	Rivet (Serviced in 23-54-4)	
124	Rivet (Serviced in 23-54-4)	
125	Nut	23-54-40
126	Spring	23-54-31
127	Bushing	23-54-20

PARTS INDICATED BY NAME ONLY - ORDER BY DESCRIPTION

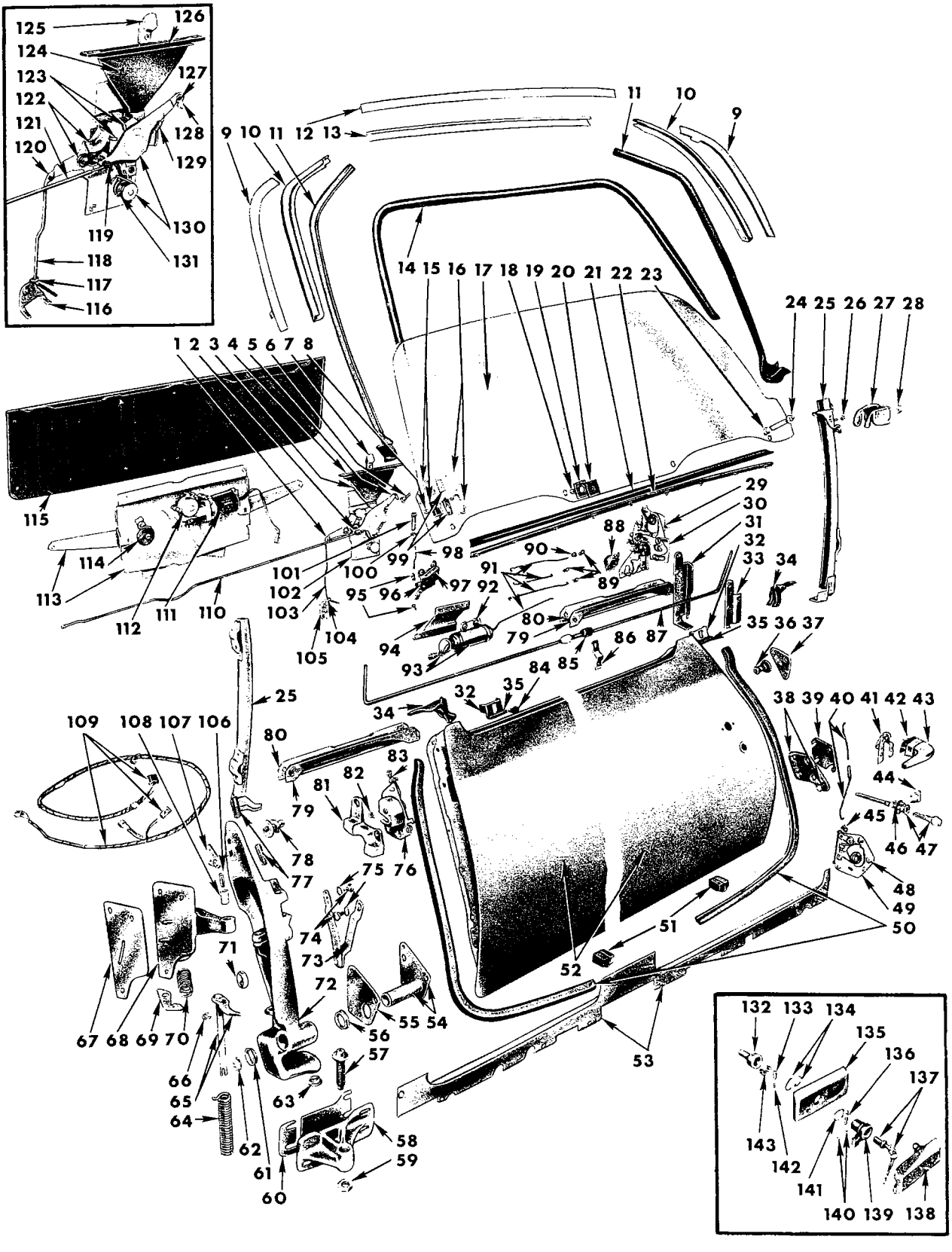

19a13719

TAILGATE (TWO WAY) - SATELLITE AND CORONET (1971)

TAILGATE (TWO WAY) - SATELLITE AND CORONET (1971)

Ref. No.	Name	Part Type Code
1	Clip Retainer	23-54-217
2	Swivel	23-54-216
3	Boot	23-54-222
4	Bezel	23-54-221
5	Clip	23-54-217
6	Screw	23-54-88
7	Knob	23-54-214
8	Sleeve Nut	23-54-88
9	Moulding	23-23-60
10	Retainer	23-42-32
11	Weatherstrip (Inner)	23-63-181
12	Moulding	23-23-60
13	Retainer	23-42-32
14	Weatherstrip (Outer)	23-63-181
15	Base	23-54-18
16	Spring	23-54-31
17	Glass	23-64-10
18	Spacer	23-64-272
19	Gasket	23-63-181
20	Gasket	23-63-181
21	Weatherstrip (Inner)	23-63-181
22	Weatherstrip (Outer)	23-63-181
23	Pin (Inner)	23-54-126
24	Pin (Outer)	23-54-126
25	Channel w/Bracket	23-09-67
26	Sleeve Nut	23-54-143
27	Bracket	23-54-143
28	Jam Nut	23-54-143
29	Bumper	23-54-205
30	Latch	23-54-1
31	Bracket	23-54-143
32	Bracket	23-64-12
33	Clamp	23-54-144
34	Seal	23-63-37
35	Bumper	23-54-103
36	Striker	23-54-6
37	Plate	23-54-6
38	Striker	23-54-6
39	Plate	23-54-6
40	Link	23-54-216
41	Bracket w/Cam	23-54-187
42	Gasket	23-54-92
43	Handle	23-54-73
44	Retainer	23-17-52
45	Clip	23-54-217
46	Gasket	23-17-51
47	Cylinder and Key Package	23-17-2
48	Bumper	23-54-205
49	Latch	23-54-1
50	Weatherstrip	23-63-171
51	Bumper	23-54-103
52	Tailgate	23-54-3
53	Seal	23-54-28
54	Support	23-54-5
55	Clamp	23-54-144
56	Bushing	23-54-20
57	Bolt	23-54-4
58	Support	23-54-5
59	Nut	23-54-4
60	Plate	23-54-136
61	Bushing	23-54-20
62	Ring	23-54-20
63	Bushing	23-54-20
64	Spring	23-54-31
65	Lever w/Shaft	23-54-189
66	Ring	23-54-20
67	Plate	23-54-30
68	Hinge	23-54-4
69	Lever (Serviced in Hinge 23-54-4)	
70	Spring (Serviced in Hinge 23-54-4).	
71	Bearing	23-54-142
72	Hinge	23-54-4
73	Link	23-54-56
74	Bolt	23-54-56
75	Washer	23-54-56
76	Latch	23-54-1
77	Stud	23-54-4
78	Striker	23-54-6
79	Gasket	23-63-181
80	Frame w/Channel	23-09-64

CONTINUED ON NEXT PAGE

PARTS INDICATED BY NAME ONLY - ORDER BY DESCRIPTION

TAILGATE (TWO WAY) - SATELLITE AND CORONET (1971) - Cont'd

Ref. No.	Name	Part Type Code
81	Wedge	23-54-21
82	Bumper	23-54-205
83	Clip	23-54-217
84	Bolt	23-64-12
85	Bearing	23-54-142
86	Retainer	23-54-141
87	Bar	23-54-140
88	Switch	23-54-167
89	Clip	23-54-217
90	Swivel	23-54-216
91	Link	23-54-216
92	U-Nut	23-54-179
93	Solenoid	23-54-179
94	Bracket	23-54-187
95	Clip	23-54-217
96	Clip Retainer	23-54-217
97	Control	23-54-218
98	Rod	23-54-223
99	Slide	23-54-88
100	Escutcheon	23-54-221
101	Knob	23-54-214
102	Control	23-54-218
103	Link	23-54-216
104	Bushing	23-54-20
105	Bracket	23-54-187
106	Pin	23-54-4
107	T/Plate	23-54-6
108	Bushing	23-54-20
109	Wiring	23-54-178
110	Link	23-54-216
111	Motor	23-54-160
112	Drive	23-54-165
113	Regulator	23-54-72
114	Spring	23-54-74
115	Cover	23-54-150
116	Bracket	23-54-187
117	Bushing	23-54-20
118	Link	23-54-216
119	Swivel	23-54-216
120	Clip Retainer	23-54-217
121	Link	23-54-216
122	Spring (Serviced in 23-54-218)	
123	Spring (Serviced in 23-54-218)	
124	Boot	23-54-222
125	Knob	23-54-214
126	Bezel	23-54-221
127	Clip Retainer	23-54-217
128	Clip	23-54-217
129	Spring	23-54-228
130	Control	23-54-218
131	Spring (Serviced in 23-54-218)	
132	Housing	23-54-100
133	Pawl (Serviced in 23-54-73)	
134	Ring	23-54-77
135	Base (Serviced in 23-54-73)	
136	Pin (Serviced in 23-54-73)	
137	Cylinder and Key Package	23-17-2
138	Handle	23-54-73
139	Lever (Serviced in 23-54-73)	
140	Set Screw	23-54-102
141	Retainer	23-54-79
142	Spring (Serviced in 23-54-73)	
143	Clip	23-54-128

PARTS INDICATED BY NAME ONLY - ORDER BY DESCRIPTION

NOTES

Printed in U.S.A. December 1971.

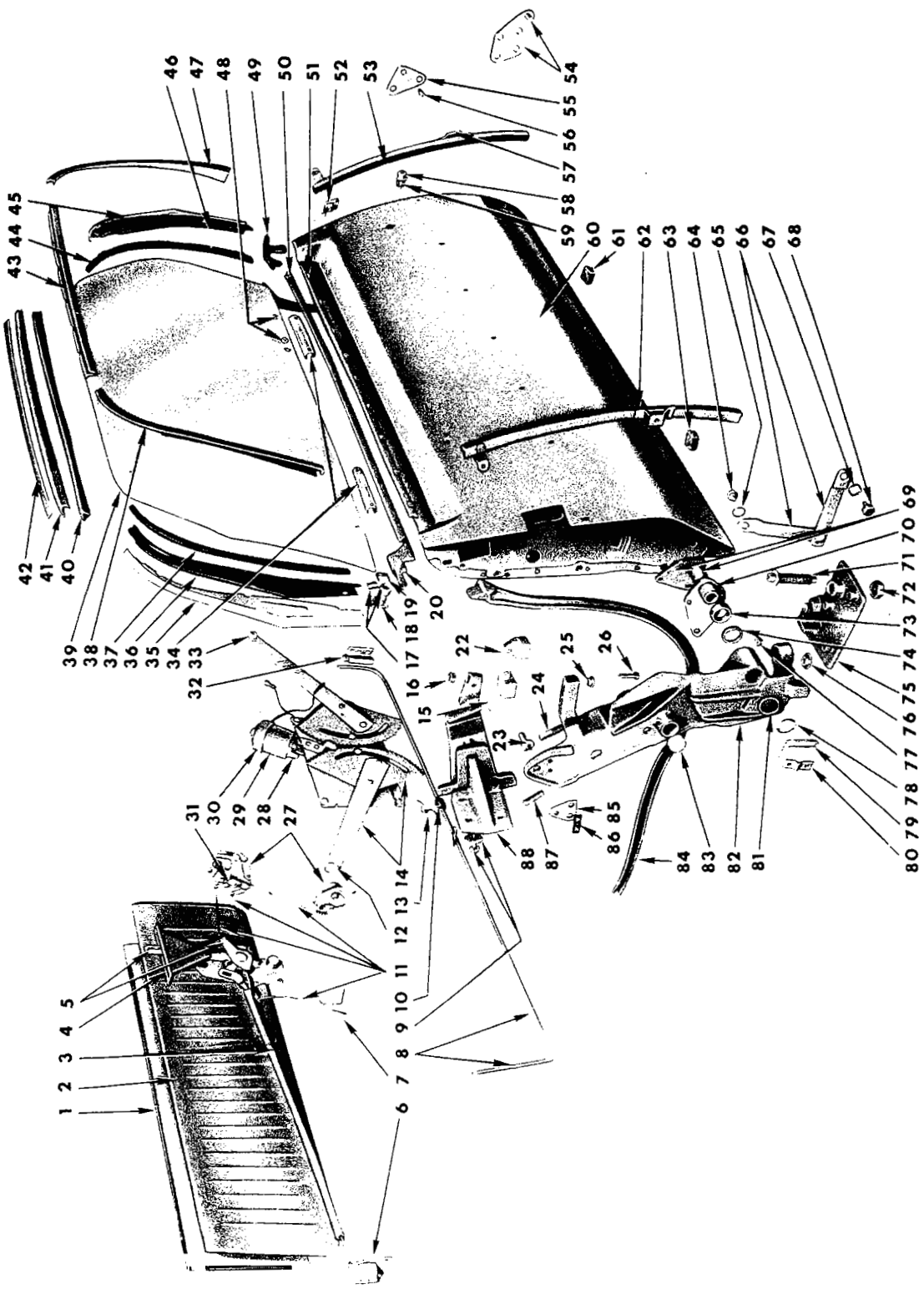

TAILGATE (TWO WAY) - PLYMOUTH, DODGE AND CHRYSLER

TAILGATE (TWO WAY) - PLYMOUTH, DODGE AND CHRYSLER

Ref. No.	Name	Part Type Code
1	Carpet	23-79-79
2	Cover	23-54-150
3	Link w/Sleeve	23-54-216
4	Boot	23-54-222
5	Control	23-54-218
6	Latch	23-54-1
7	Bracket w/Bushing	23-54-187
8	Bar	23-54-140
9	Screw w/Washer	
10	Bearing	23-54-142
11	Link	23-54-216
12	Slide	23-54-88
13	Retainer	23-54-141
14	Regulator	23-54-72
15	Pin	23-54-17
16	Bushing	23-54-20
17	Retainer (Serviced in Pkg. 23-17-2)	
	Housing (Serviced in Pkg. 23-17-2)	
18	Switch	23-54-167
19	Retainer	23-17-52
20	Seal	23-63-37
21		
22	Wedge	23-54-21
23	Striker	23-54-6
24	Stud	23-54-4
25	Bushing	23-54-20
26	Pin	23-54-17
27	Latch	23-54-1
28	Mechanism	23-54-165
29	Motor	23-54-160
30	Pad	23-54-78
31	Swivel	23-54-216
32	Clamp	23-54-144
33	Slide	23-54-88
34	Channel	23-09-64
35	Retainer	23-42-32
36	Run or Weatherstrip (Inner)	23-42-46
37	Run or Weatherstrip (Outer)	23-42-46
38	Moulding	23-23-60
39	Glass	23-64-10
40	Weatherstrip	23-42-55
41	Retainer	23-42-32
42	Seal	23-42-55
43	Moulding	23-23-60
44	Run or Weatherstrip (Outer)	23-42-46
45	Retainer	23-42-32
46	Run or Weatherstrip (Inner)	23-42-46
47	Moulding	23-23-60
48	Spacer	23-64-272
49	Seal	23-63-37
50	Weatherstrip (Inner)	23-63-181
51	Weatherstrip (Outer)	23-63-181
52	Switch	23-54-167
53	Run	23-42-46
54	Striker	23-54-6
55	Plate	23-54-6
56	Striker	23-54-6
57	Channel w/Bracket	23-09-67
58	Cylinder and Key Package	23-17-2
59	Gasket	23-17-51
60	Tailgate	23-54-3
61	Bumper	23-54-103
62	Channel w/Bracket	23-09-67
63	Bumper	23-54-103
64	Bolt	23-54-56
65	Washer	23-54-56
66	Link	23-54-56
67	Washer	23-54-56
68	Bolt	23-54-56
69	Support	23-54-5
70	Clamp	23-54-144
71	Pin	23-54-4
72	Nut	23-54-4
73	Spacer	23-54-27
74	Bushing	23-54-20
75	Support	23-54-5
76	Bushing	23-54-20
77	Spacer	23-54-27
78	Ring	23-54-20
79	Bar	23-54-140
80	Bracket	23-54-143
81	Bushing	23-54-20
82	Hinge	23-54-4
83	Bearing	23-54-142
84	Weatherstrip	23-63-171
85	T/Plate	23-54-6
86	Nut	Not Serviced
87	Stud	23-54-4
88	Hinge	23-54-4

PARTS INDICATED BY NAME ONLY - ORDER BY DESCRIPTION

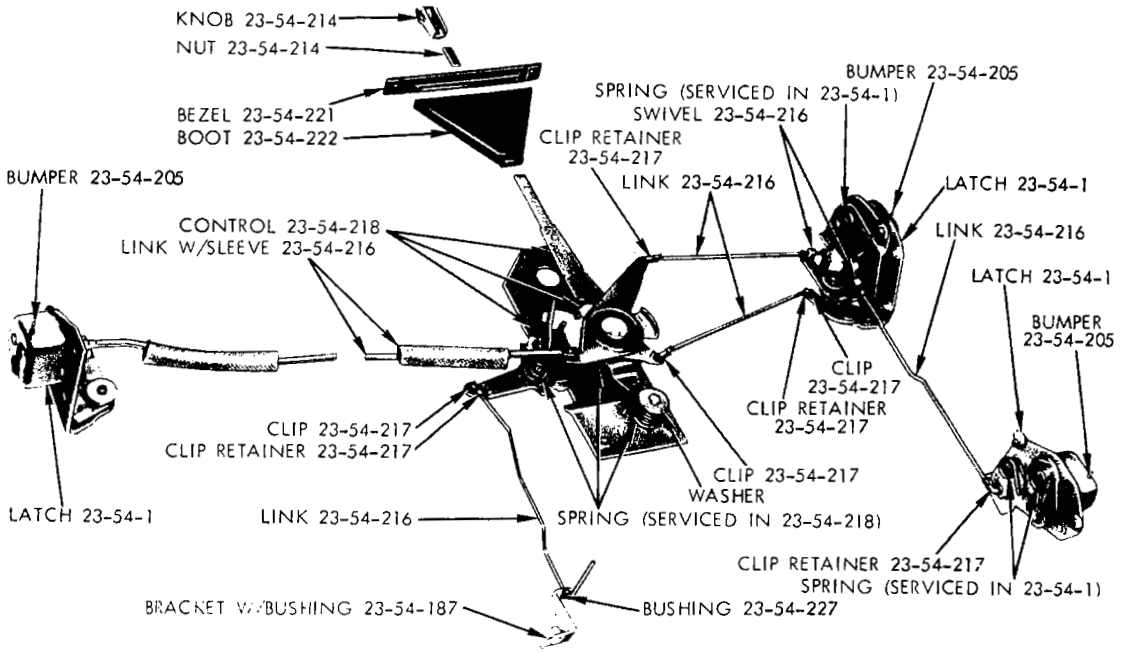

19a2775

TWO WAY TAILGATE CONTROLS - PLYMOUTH, DODGE AND CHRYSLER

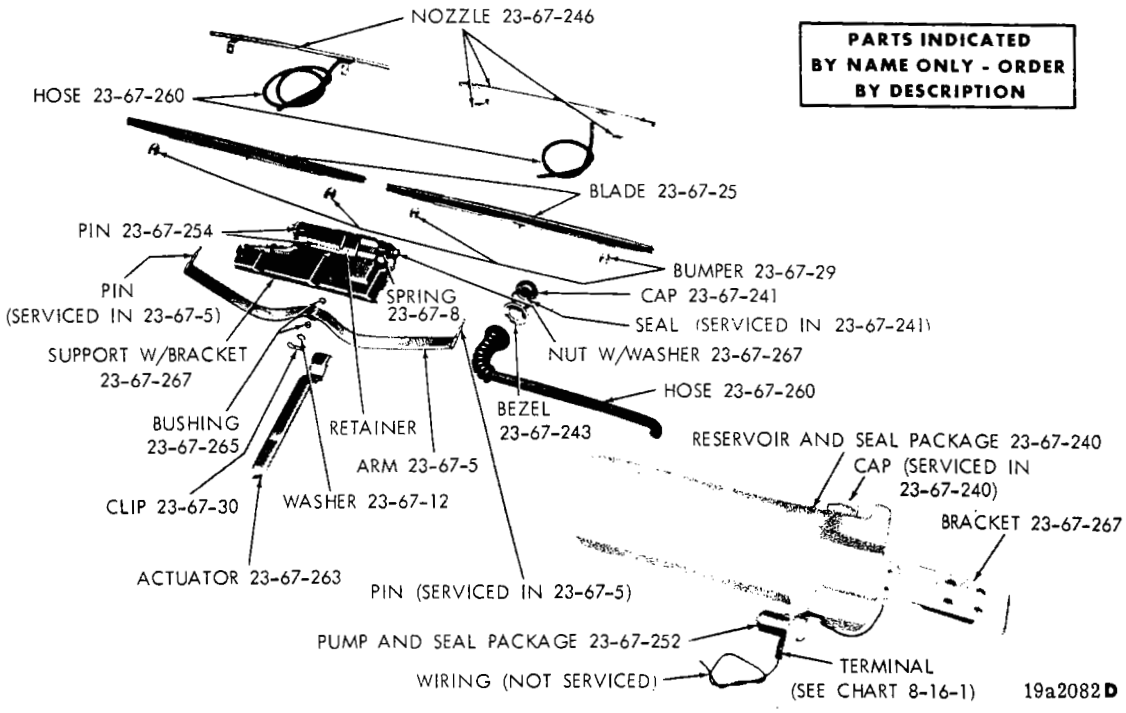

TAILGATE WINDOW WASHER AND WIPER - BELVEDERE AND CORONET

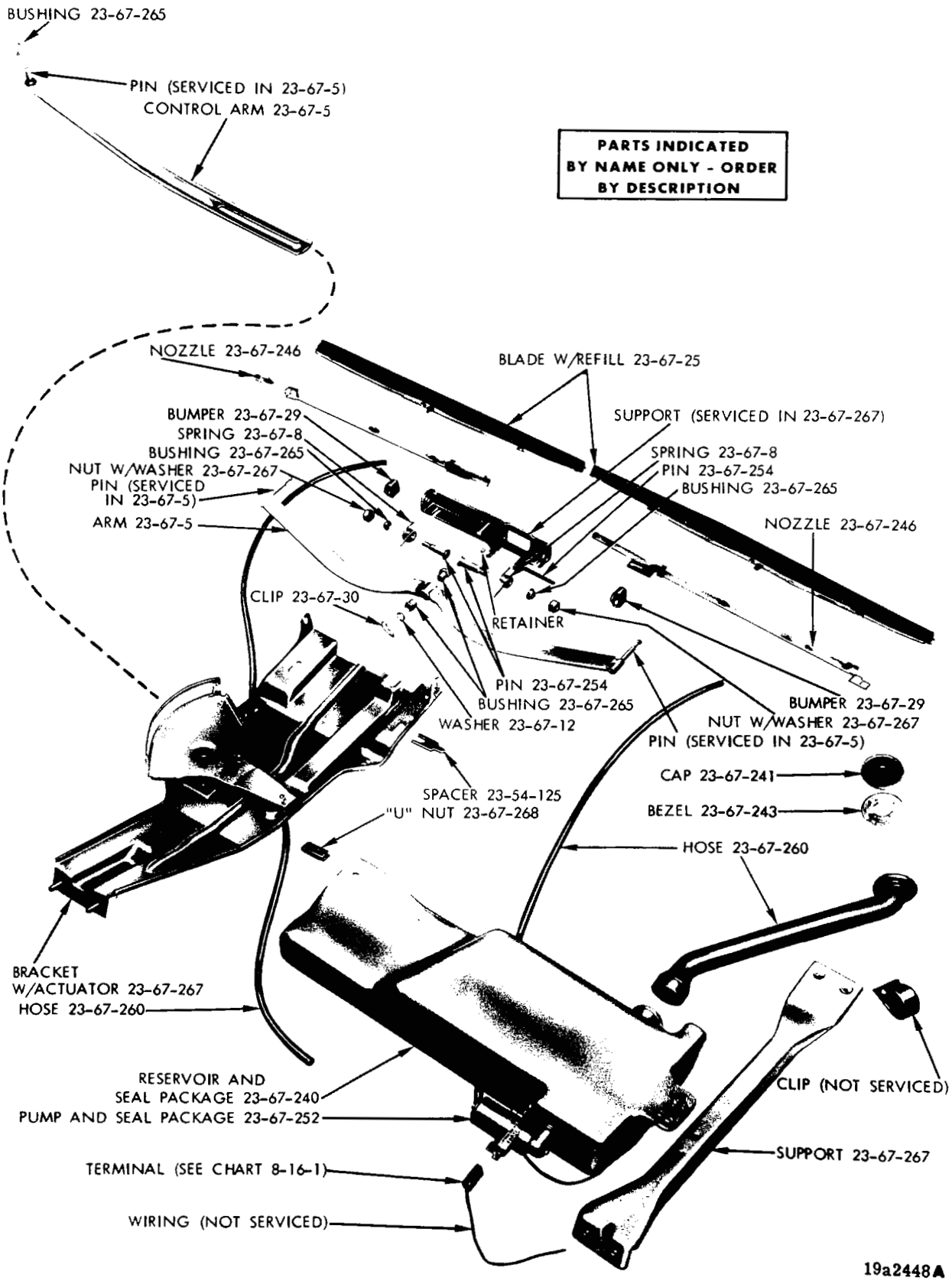

TAILGATE WINDOW WASHER AND WIPER - PLYMOUTH, DODGE AND CHRYSLER

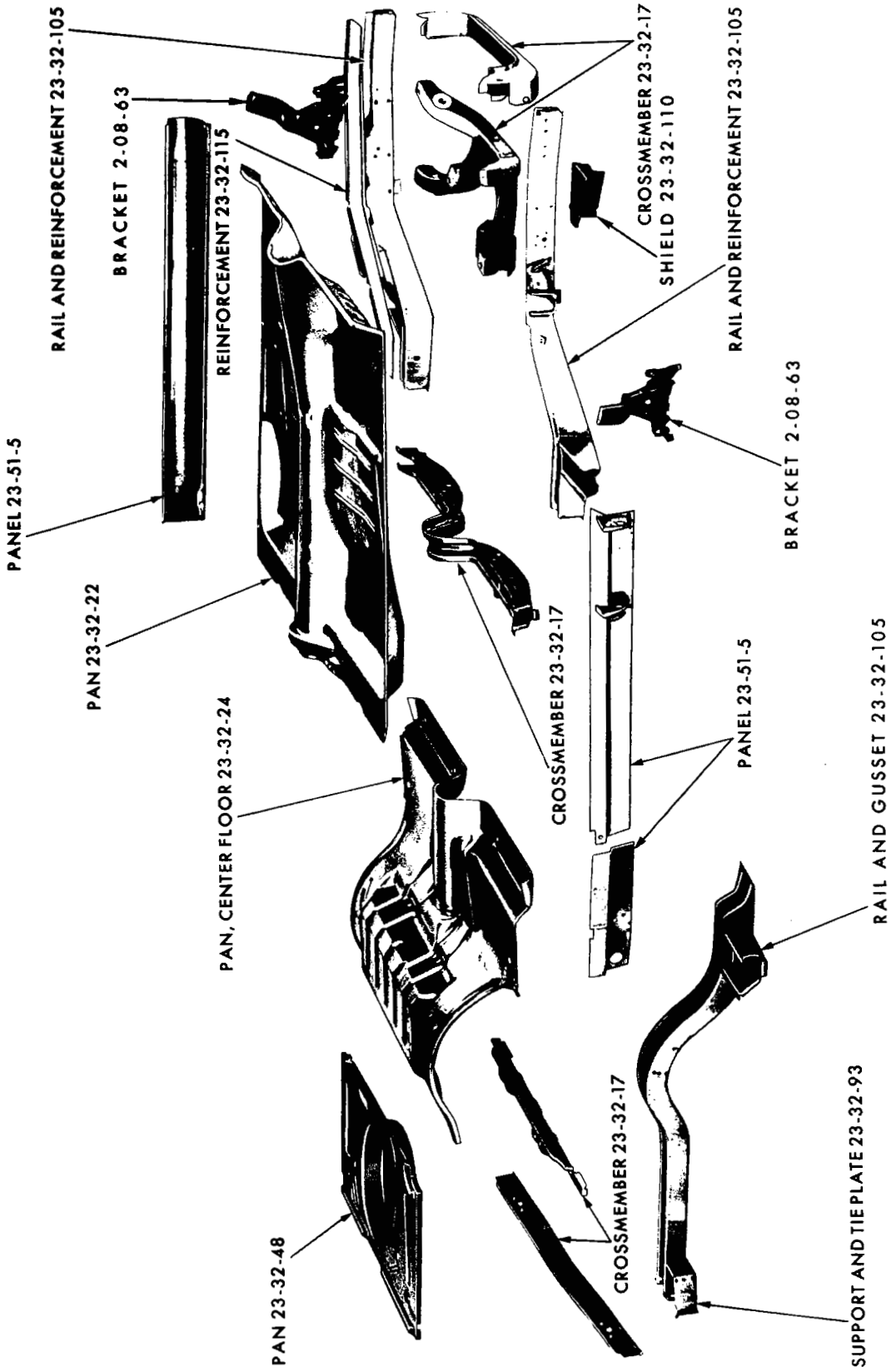

UNDERBODY - VALIANT AND DART

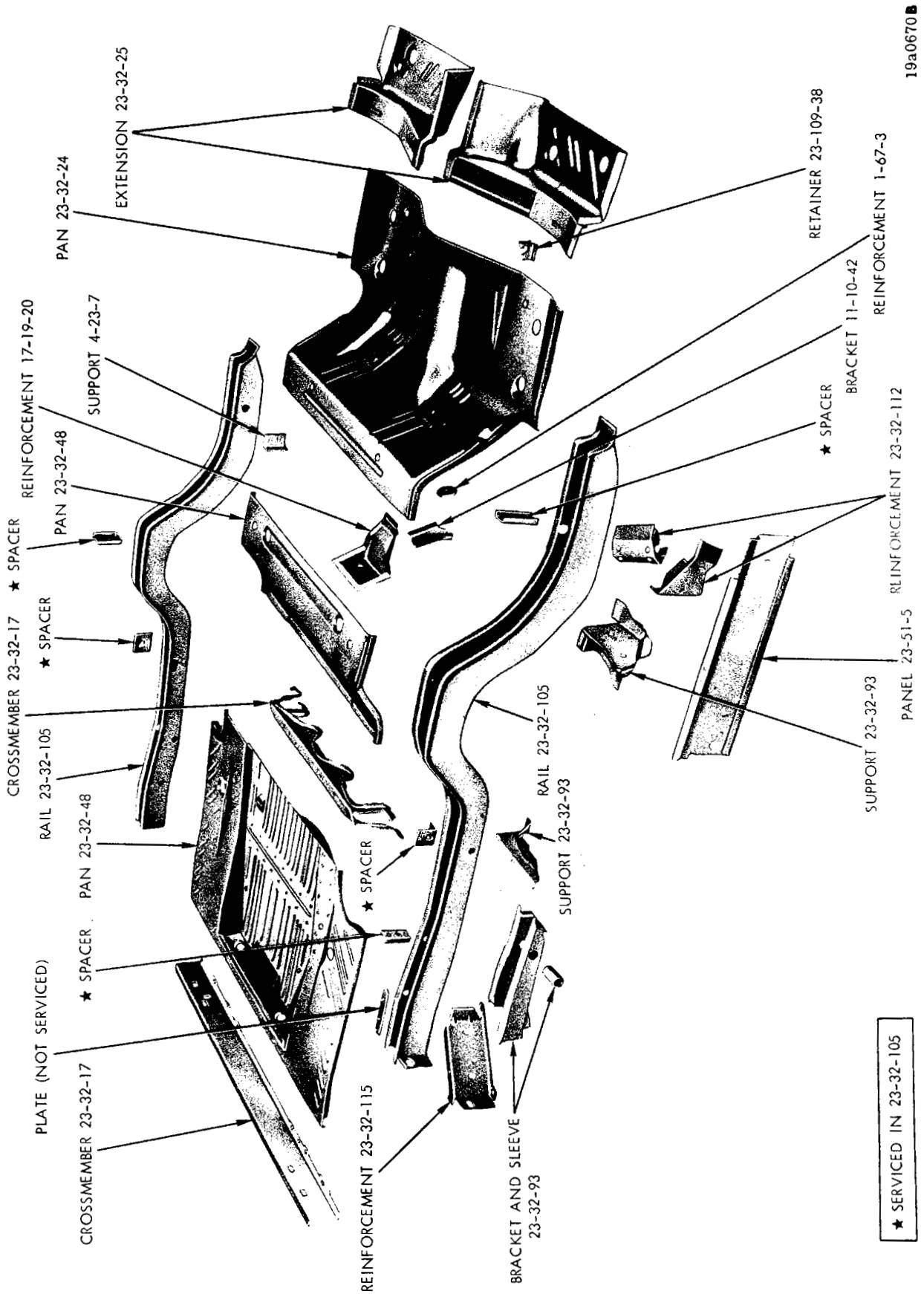

UNDERBODY - BELVEDERE AND CORONET (TYPICAL OF BARRACUDA AND CHALLENGER)

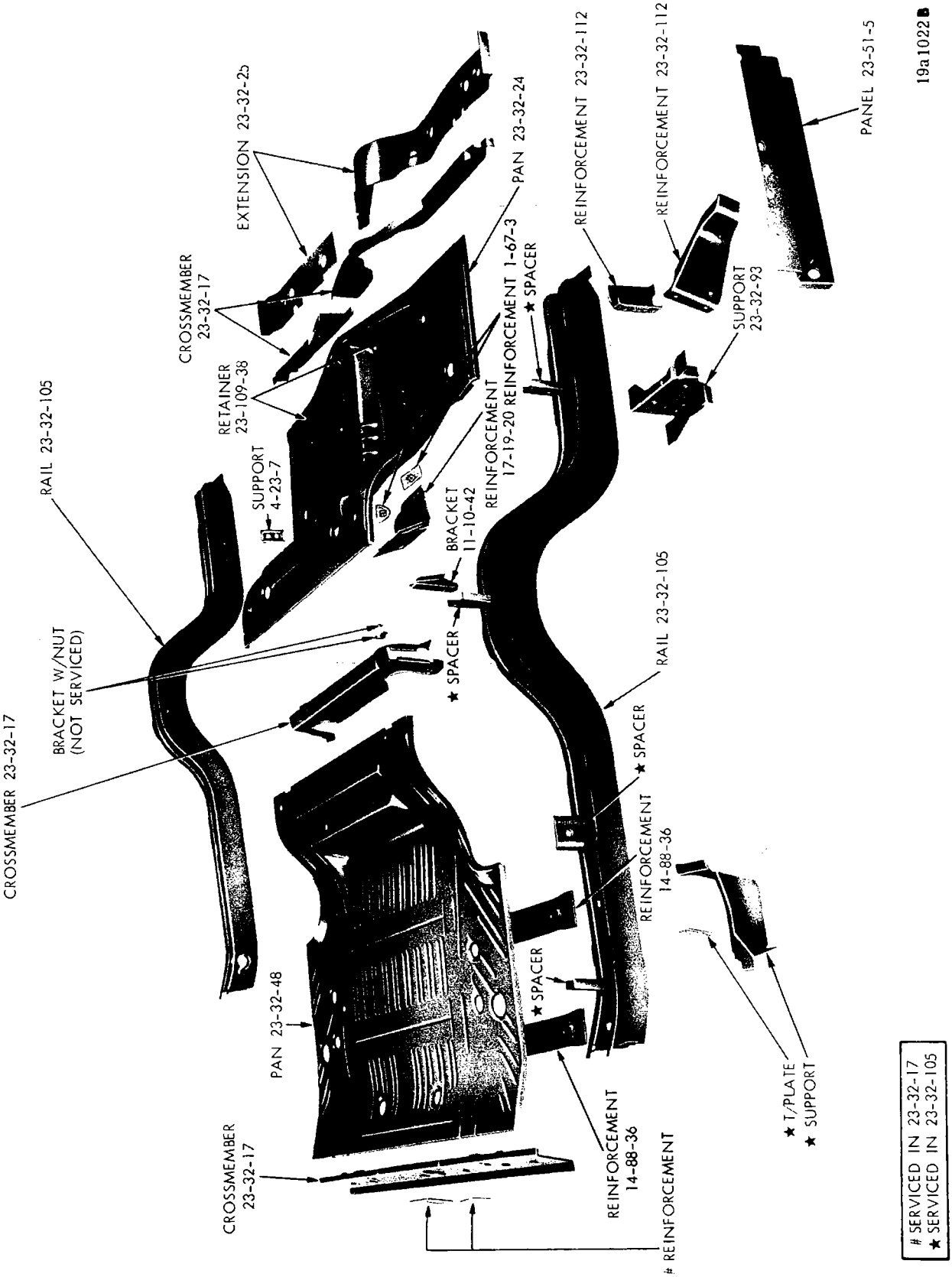

REAR UNDERBODY - PLYMOUTH, DODGE, CHRYSLER AND IMPERIAL

SERVICED IN 23-32-17
★ SERVICED IN 23-32-105

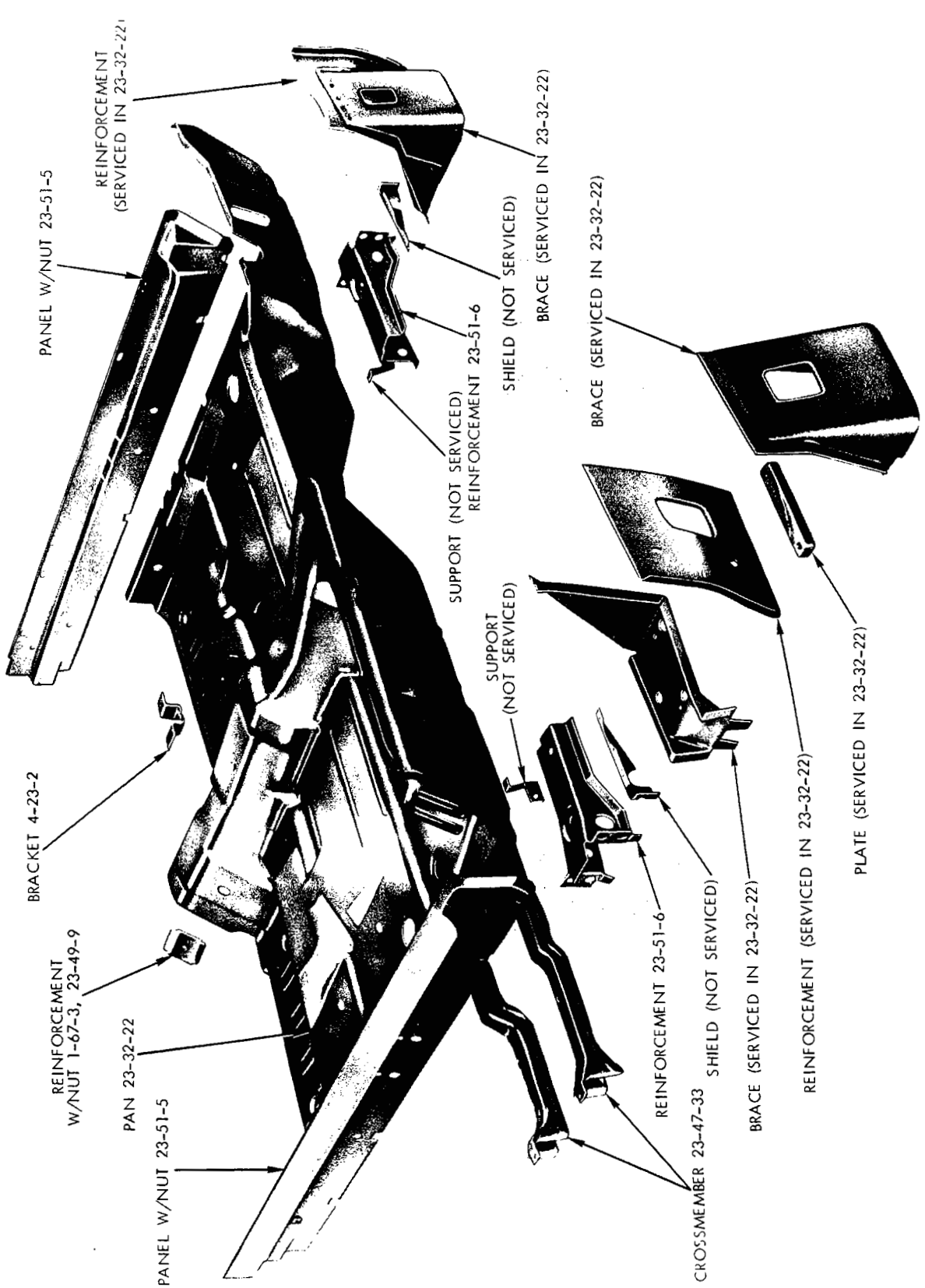

FRONT FLOOR PAN - PLYMOUTH, DODGE, CHRYSLER AND IMPERIAL

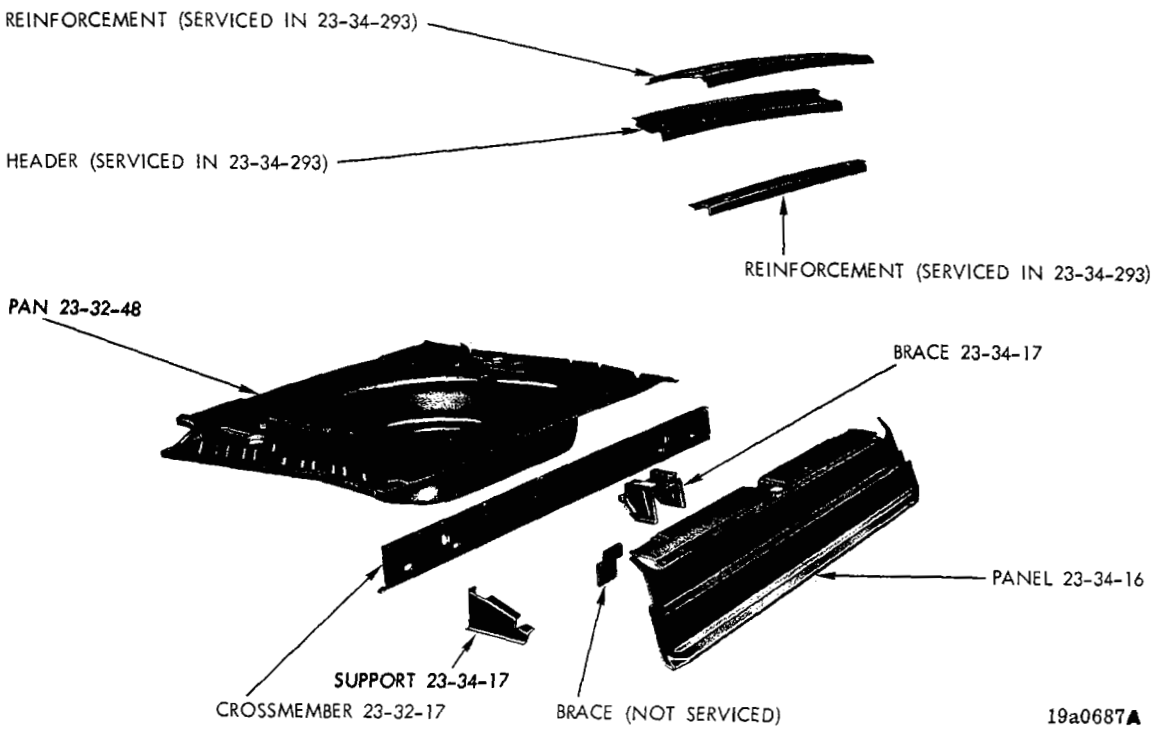

REAR FLOOR PAN - BELVEDERE AND CORONET STATION WAGON

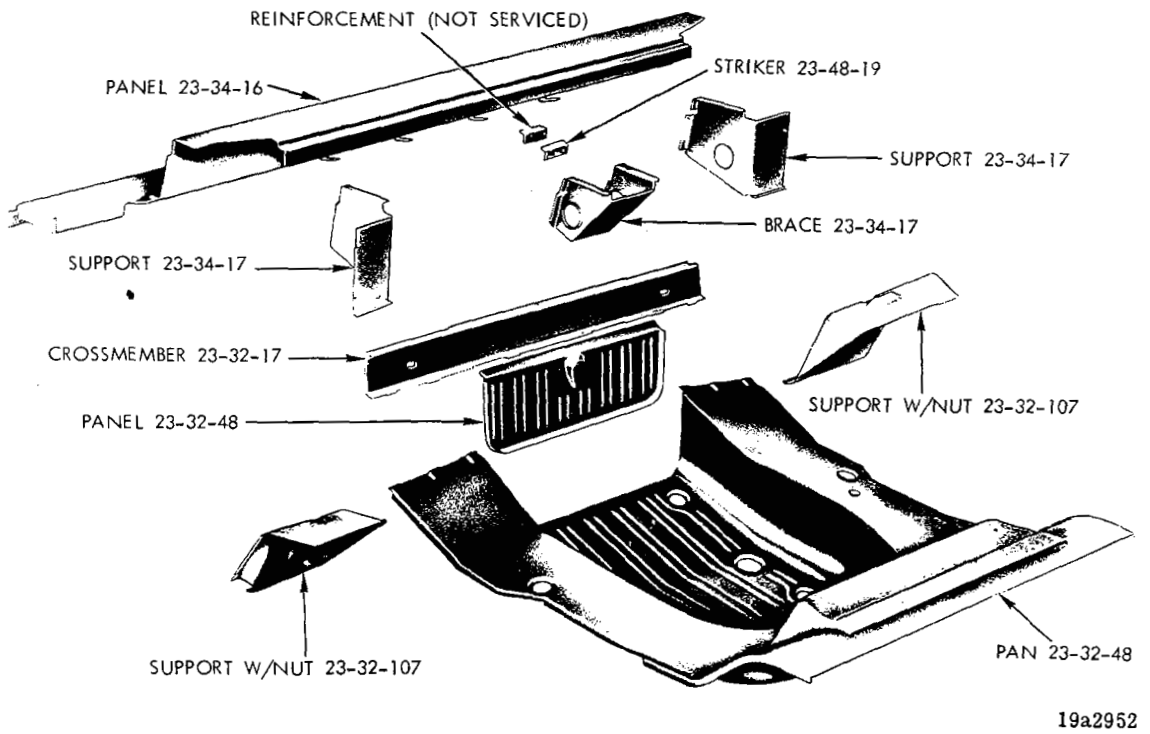

REAR FLOOR PAN - PLYMOUTH, DODGE AND CHRYSLER STATION WAGON

Printed in U.S.A.

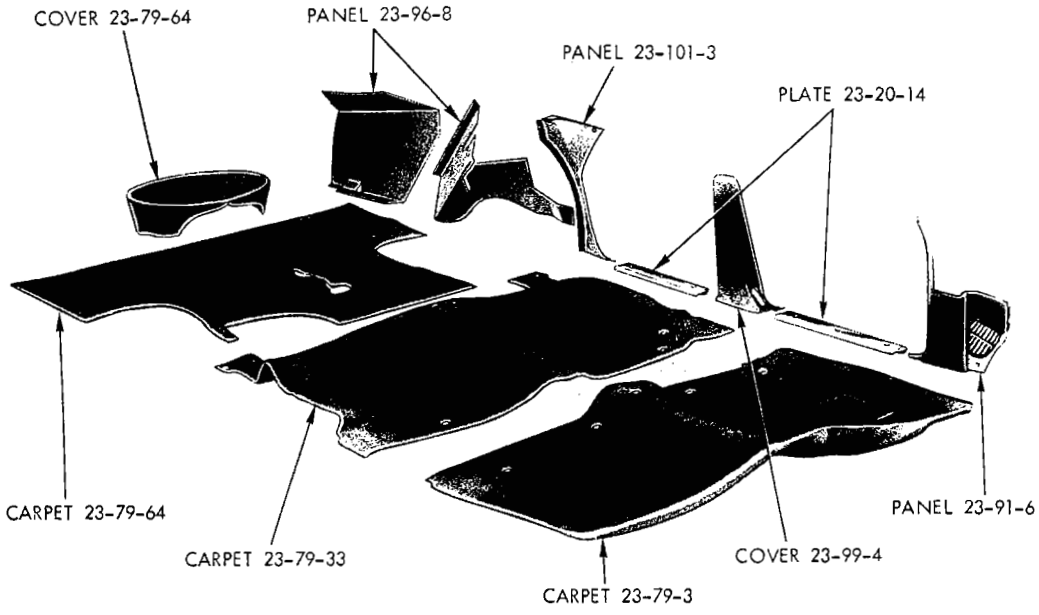

19a2774

INTERIOR FLOOR MATS AND SCUFF PLATES

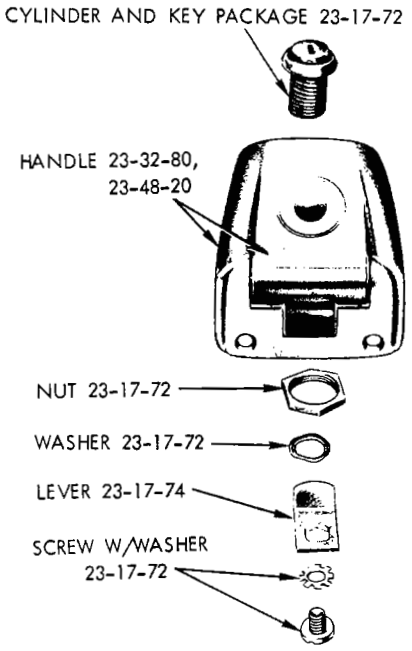

BELVEDERE AND CORONET

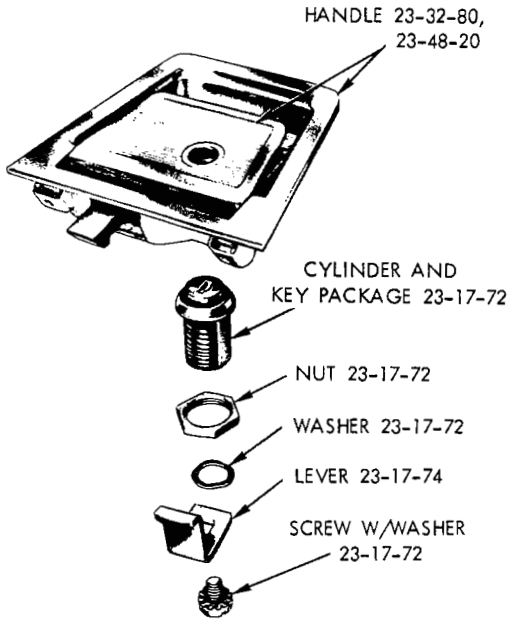

PLYMOUTH, DODGE AND CHRYSLER

19a3337

STATION WAGON REAR COMPARTMENT LOCK AND LATCH

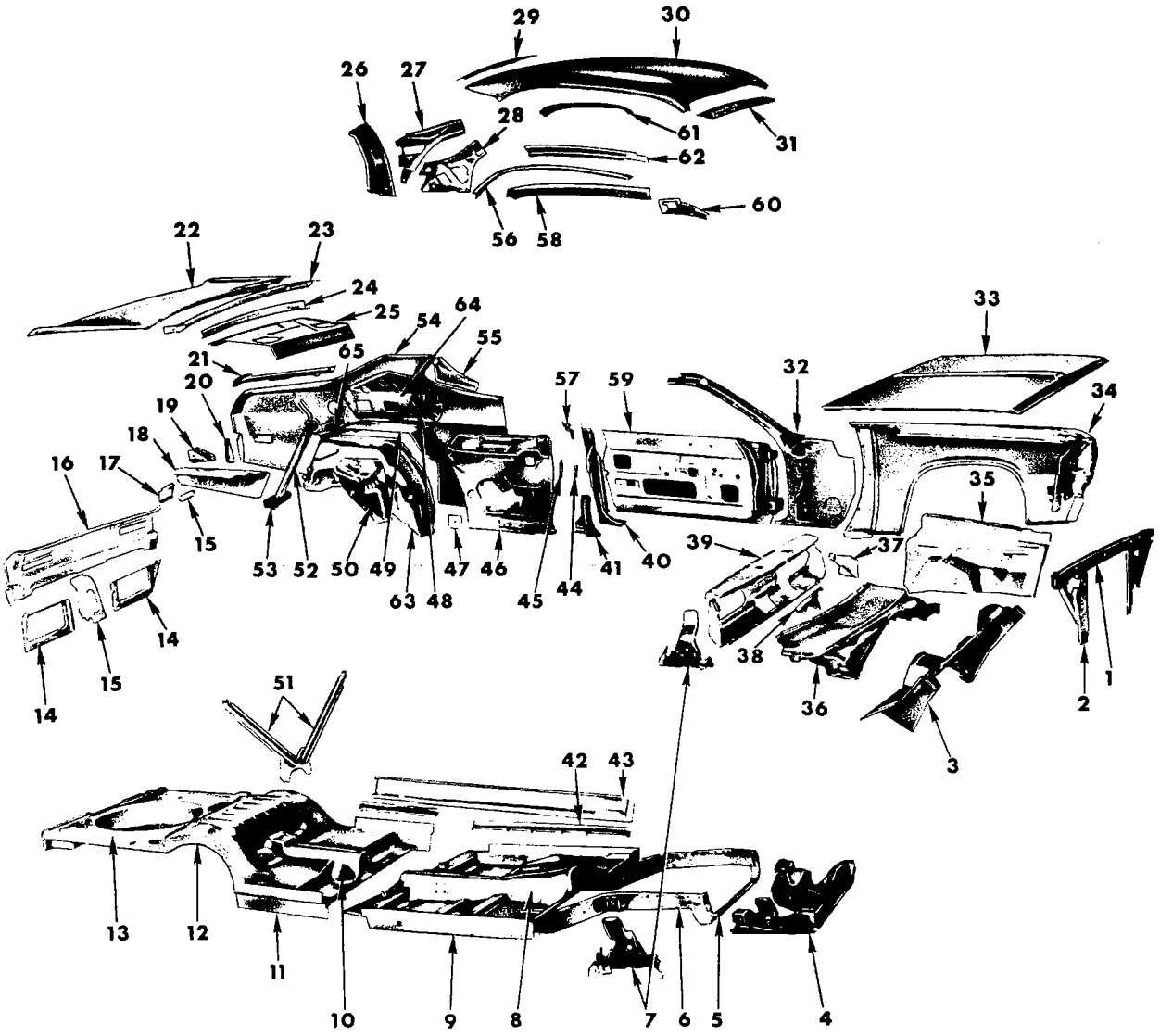

19a13333

BODY IN WHITE - VALIANT AND DART

BODY IN WHITE - VALIANT AND DART

Ref. No.	Name	Part Type Code
1	Crossmember	7-26-32
2	Panel	7-26-30
3	Panel	23-34-110
4	Crossmember	23-32-17
5	Crossmember	23-32-17
6	Rail	23-32-105
7	Bracket	2-08-63
8	Pan	23-32-22
9	Panel	23-51-5
10	Pan	23-32-24
11	Panel	23-51-5
12	Rail	23-32-105
13	Pan	23-32-48
14	Reinforcement	8-55-23
15	Support	23-34-179
16	Panel	23-34-167
17	Extension	23-32-17
18	Extension	23-32-49
19	Bracket	23-34-191
20	Gusset	23-34-257
21	Trough	23-59-35
22	Lid	23-19-8
23	Panel	23-34-166
24	Frame	23-64-66
25	Panel	Not Serviced
26	Support	23-34-22
27	Extension	23-40-92
28	Panel	23-34-234
29	Frame	23-64-66
30	Panel	23-34-301
31	Frame w/Reinforcement	23-66-65
32	Panel	23-34-80
33	Panel	15-03-3
34	Fender	12-01-5
35	Shield	12-04-4
36	Panel	23-34-80
37	Plate	Not Serviced
38	Brace	23-33-10
39	Panel	23-33-109
40	Pillar	23-36-53
41	Reinforcement	23-36-66
42	Cover	23-34-36
43	Panel	23-51-5
44	T/Plate	Not Serviced
45	Retainer	Not Serviced
46	Panel	23-34-234
47	Reinforcement	Not Serviced
48	Bracket	Not Serviced
49	Extension	Not Serviced
50	Support	23-19-82
51	Brace	Not Serviced
52	Tube	14-86-40
53	Seal	14-86-42
54	Panel	23-34-235
55	Filler	23-64-213
56	Trough	23-59-56
57	Filler	23-36-29
58	Rail	23-40-85
59	Shell	23-11-1
60	Extension	23-66-65
61	Frame	23-64-66
62	Rail	23-40-85
63	Panel	23-34-27
64	Panel	23-34-234
65	Extension	23-64-68

PARTS INDICATED BY NAME ONLY - ORDER BY DESCRIPTION

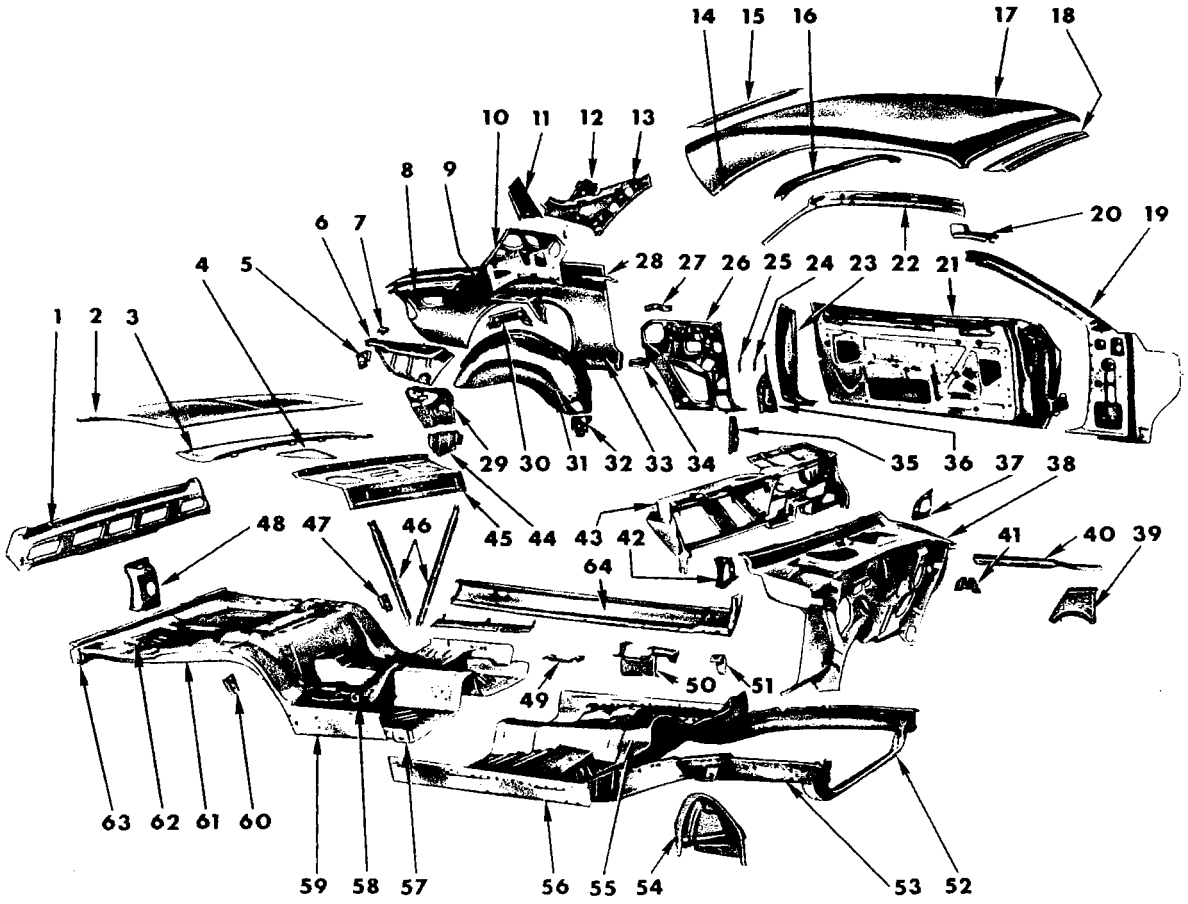

19a13574

BODY IN WHITE - BARRACUDA AND CHALLENGER 2 DOOR

BODY IN WHITE - BARRACUDA AND CHALLENGER 2 DOOR

Ref. No.	Name	Part Type Code
1	Panel	23-34-167
2	Lid	23-19-18
3	Panel	23-34-166
4	Brace	Not Serviced
5	Extension	23-32-17
6	Extension	23-32-49
7	Filler	23-32-56
8	Trough	23-59-35
9	Extension	Not Serviced
10	Panel	23-34-234
11	Support	23-34-22
12	Extension	23-40-92
13	Panel	23-34-234
14	Trough	23-59-56
15	Frame	23-64-66
16	Rail	23-40-85
17	Panel	23-34-301
18	Frame	23-66-65
19	Panel	23-34-80
20	Extension	23-66-65
21	Shell	23-11-1
	Panel	23-34-120
22	Rail	23-40-85
23	Pillar	23-36-53
24	Retainer	Not Serviced
25	T/Plate	Not Serviced
26	Panel	23-34-234
27	Reinforcement	23-64-281
28	Reinforcement	23-34-246
29	Support	23-19-82
30	Bracket	Not Serviced
31	Panel	23-34-27
32	Bracket	23-49-7
33	Panel	23-34-235
34	Support (Serviced in 23-39-49)	
35	Reinforcement	23-36-66
36	Reinforcement	23-36-66
37	Bracket	23-66-77
38	Panel	23-34-80
39	Reinforcement	2-08-70
40	Brace	12-07-1
41	Bracket	4-23-2
42	Bracket	23-66-77
43	Panel	23-33-109
44	Support	23-19-82
45	Panel	Not Serviced
46	Brace	Not Serviced
47	Spacer (Serviced in 23-32-105)	
48	Support	23-19-74
49	Bracket	23-38-27
50	Bracket	21-30-416
51	Bracket	19-48-46
52	Crossmember	23-32-17
53	Rail	23-32-105
54	Bracket	2-08-63
55	Pan	23-32-22
56	Panel	23-51-5
57	Panel	23-32-24
58	Retainer	23-109-38
59	Panel	23-51-5
60	Spacer (Serviced in 23-32-105)	
61	Rail	23-32-105
62	Panel	23-32-48
63	Crossmember	23-32-17
64	Panel	23-51-5

PARTS INDICATED BY NAME ONLY - ORDER BY DESCRIPTION

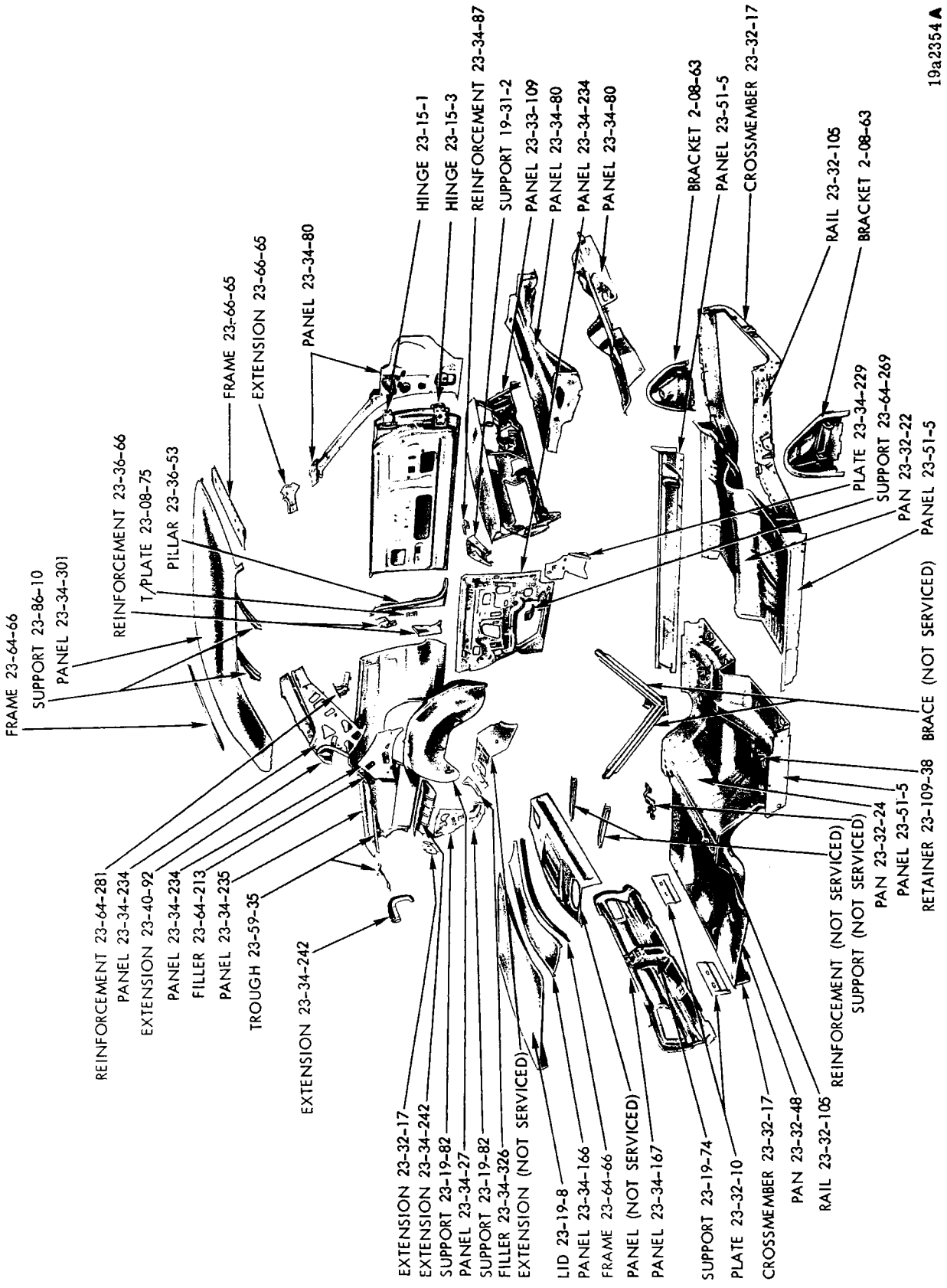

BODY IN WHITE - BELVEDERE AND CORONET 2 DOOR HARDTOP

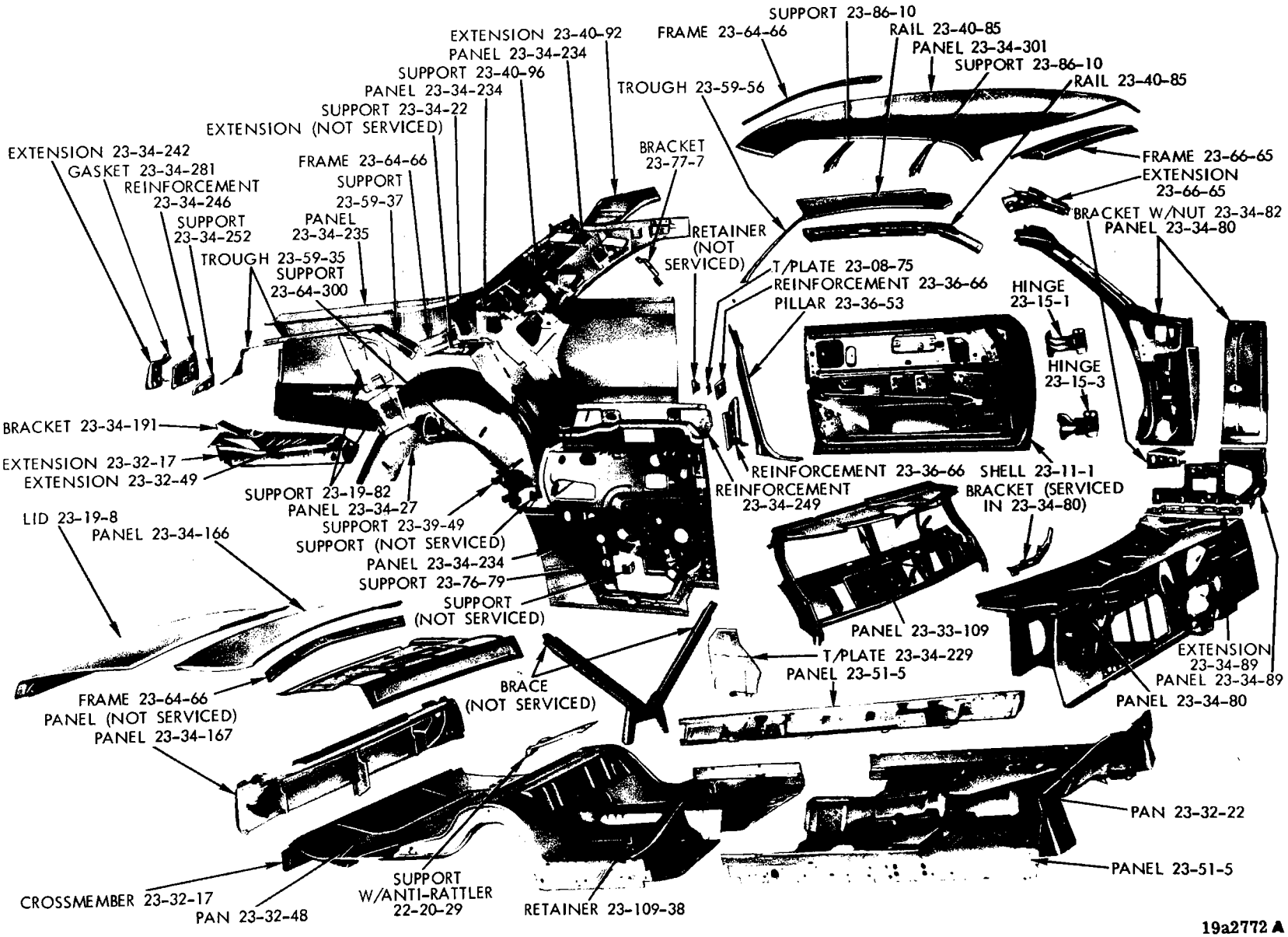

BODY IN WHITE - IMPERIAL 2 DOOR HARDTOP (TYPICAL OF PLYMOUTH, DODGE AND CHRYSLER)

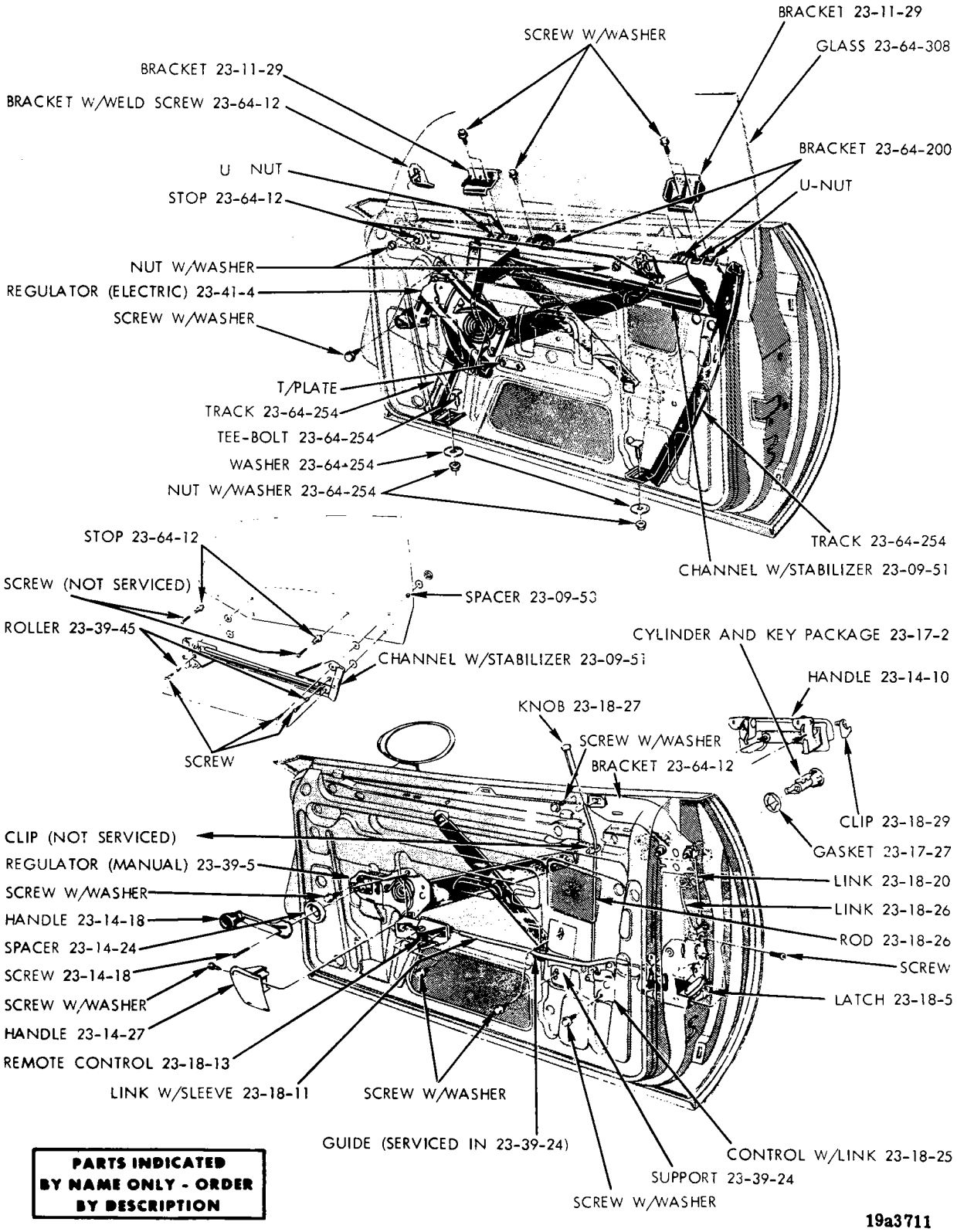

FRONT DOOR INSIDE PANEL - SATELLITE AND CORONET
2 DOOR HARDTOP AND FASTBACK (1971)

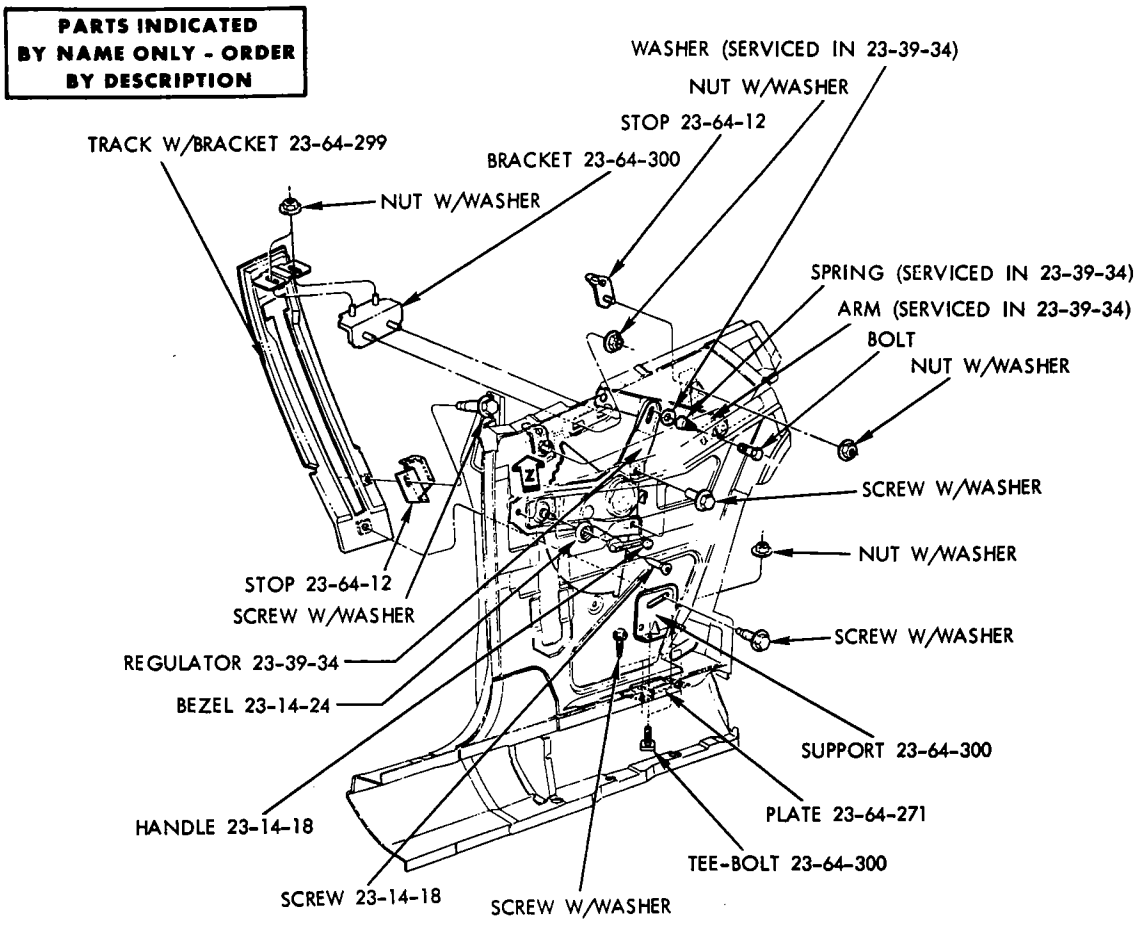

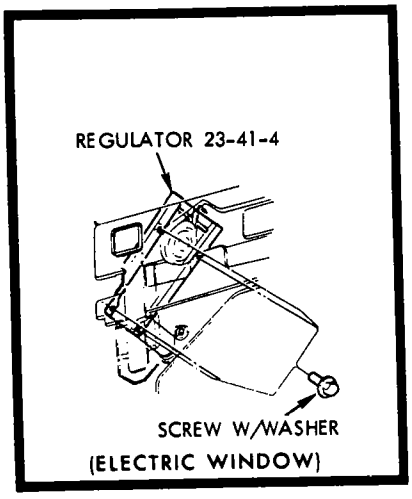

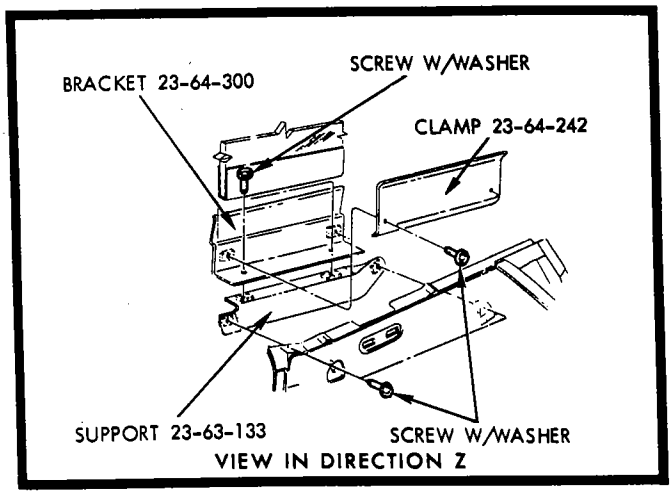

12a3705

QUARTER INSIDE PANEL - SATELLITE AND CORONET
2 DOOR HARDTOP AND FASTBACK (1971)

STOP  STOP 3582 011 STOP 2894 599	STOP  3499 300	STOP 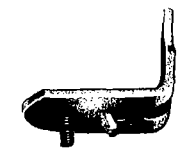 3581 053	BUMPER  3440 798	BUMPER  3440 301
BUMPER  2861 758	BUMPER  3499 234	BUMPER  3440 830	BUMPER  3499 130	BUMPER  3445 501
BUMPER 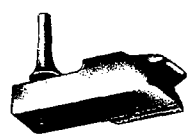 2862 053	BUMPER 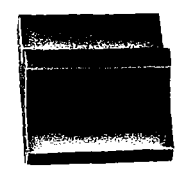 2901 603	BOLT  6028 428	BOLT  6028 820	BOLT  6027 541
RETAINER W/WELD SCREW  2895 233	RETAINER 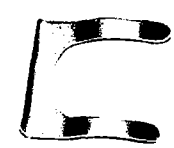 2583 377	RETAINER  2841 646	RETAINER  6000 305	RETAINER  3445 164
CLIP  6029 078  PLATE AND SCREW 3581 456	CLIP 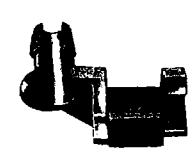 2945 109	CLIP  2765 654	CLIP  3454 256	CLIP  2520 697
SCREW  6029 443	STUD  6027 538	NUT  6025 553	NUT  6028 587	NUT  6029 003	GASKET  3581 798 19a3768

1971
FRONT AND REAR INSIDE DOOR PARTS

Printed in U.S.A.

FASTENER 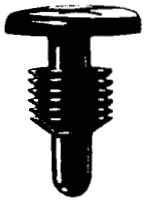 2898 909	FASTENER  2811 852	FASTENER  3581 596	FASTENER  3499 813	BUSHING  3581 597
BRACKET W/ROLLER AND GUIDE  3454 230	BRACKET  3581 974	BRACKET W/WELD SCREW 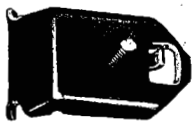 3581 439	SLIDE  3445 149	SLIDE  3506 336
SPRING  3506 341  RETAINER 3506 339	SPRING 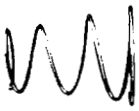 3548 293	ESCUTCHEON 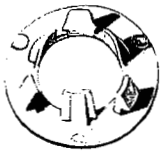 2862 309	A/RATTLER  3506 487	SPACER  2216 544
CONTROL 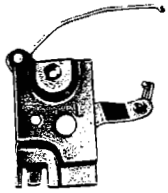 3548 758-9	CONTROL 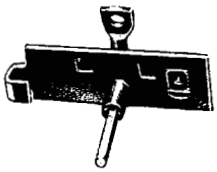 CONTROL 2999 400 CONTROL 2999 426	SEAL 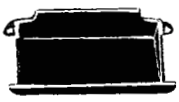 2802 973	ROLLER  3581 323	PIN  2588 717  WASHER 6029 235
GUIDE  2895 092	CLIP  2935 085			
				19a3769

1971
FRONT AND REAR INSIDE DOOR PARTS

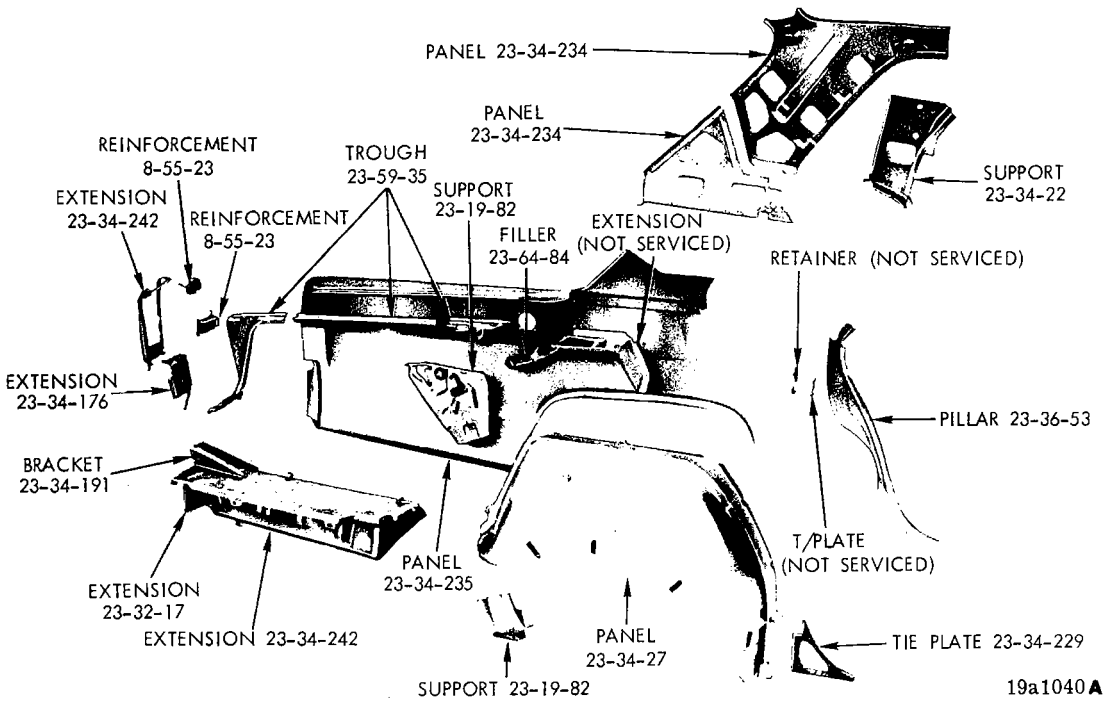

REAR QUARTER PANEL - VALIANT 4 DOOR SEDAN

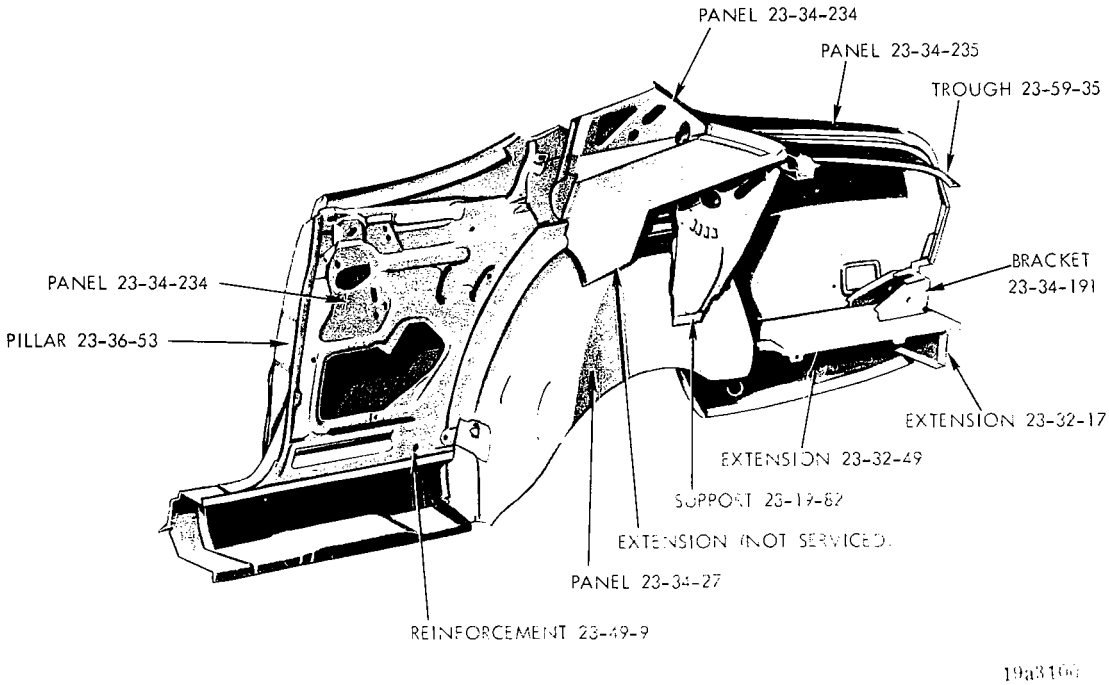

REAR QUARTER PANEL - VALIANT 2 DOOR HARDTOP

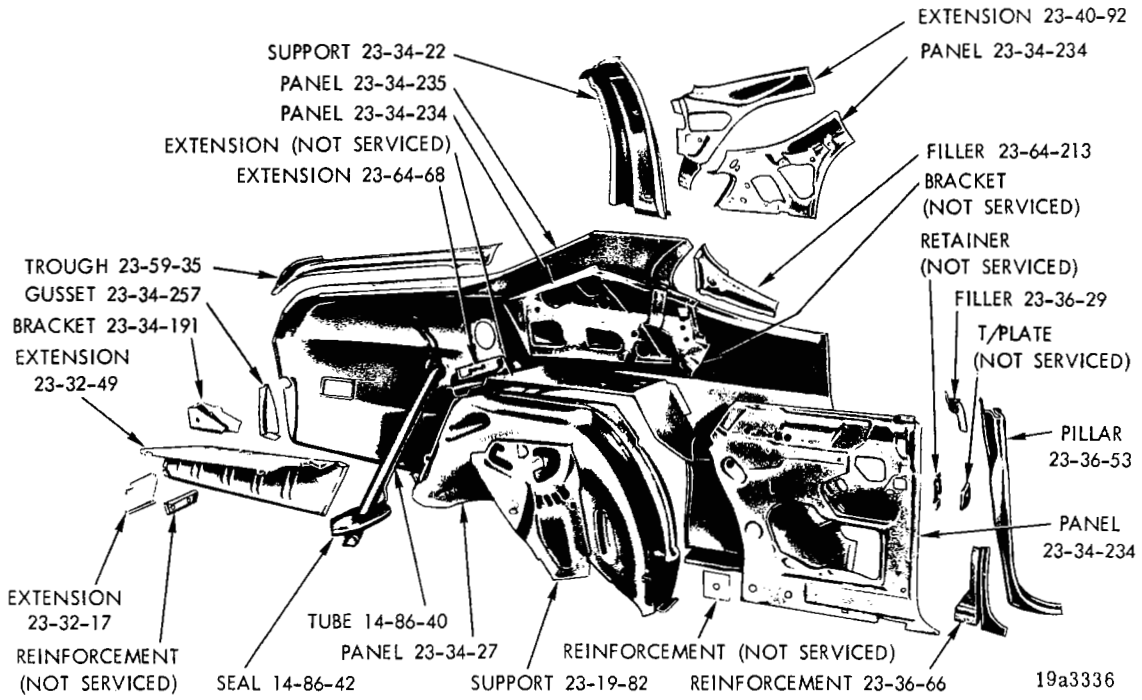

REAR QUARTER PANEL - VALIANT DUSTER AND DART DEMON

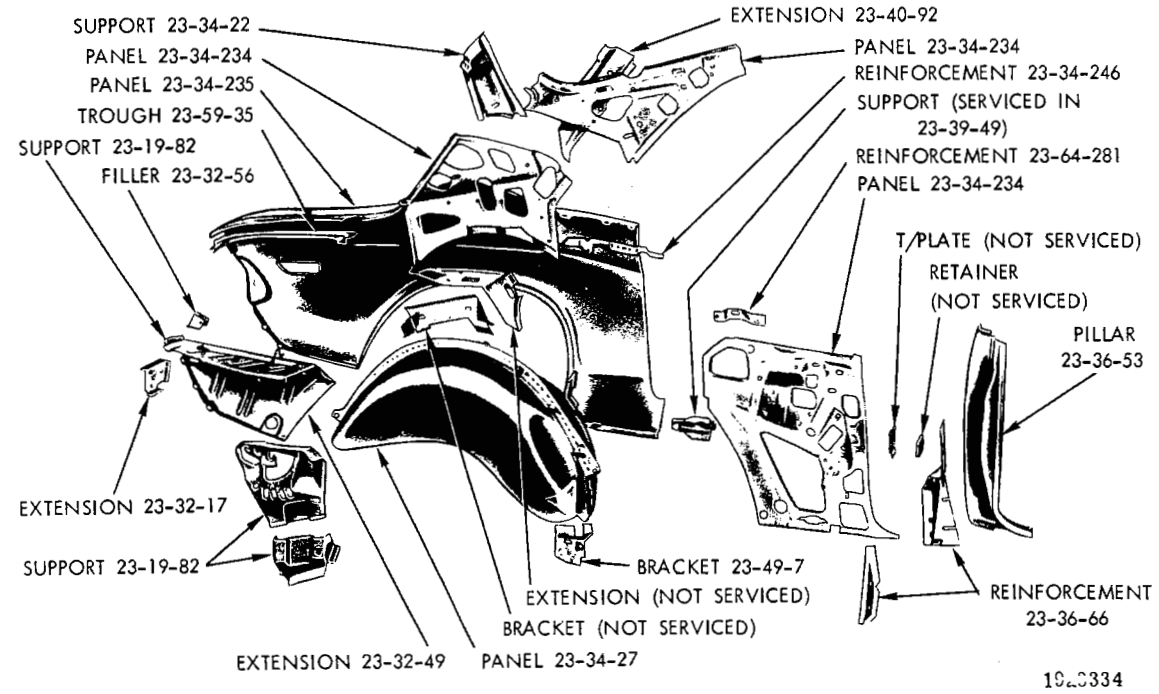

REAR QUARTER PANEL - BARRACUDA AND CHALLENGER 2 DOOR HARDTOP

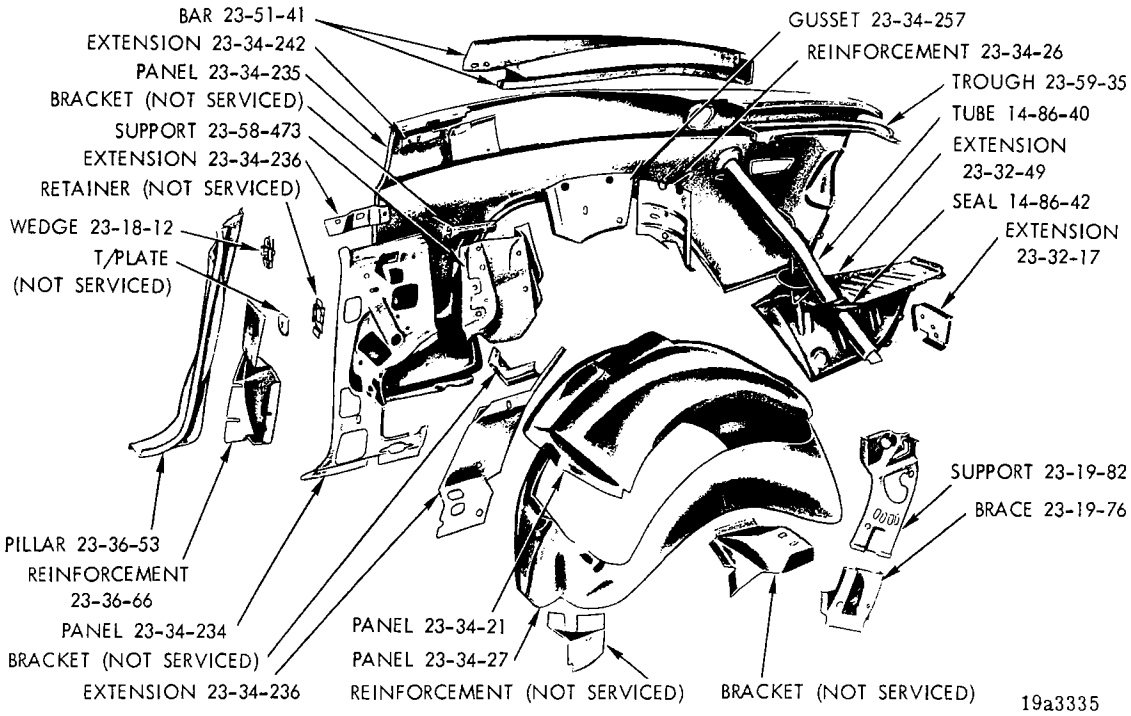

REAR QUARTER PANEL - BARRACUDA AND CHALLENGER CONVERTIBLE COUPE

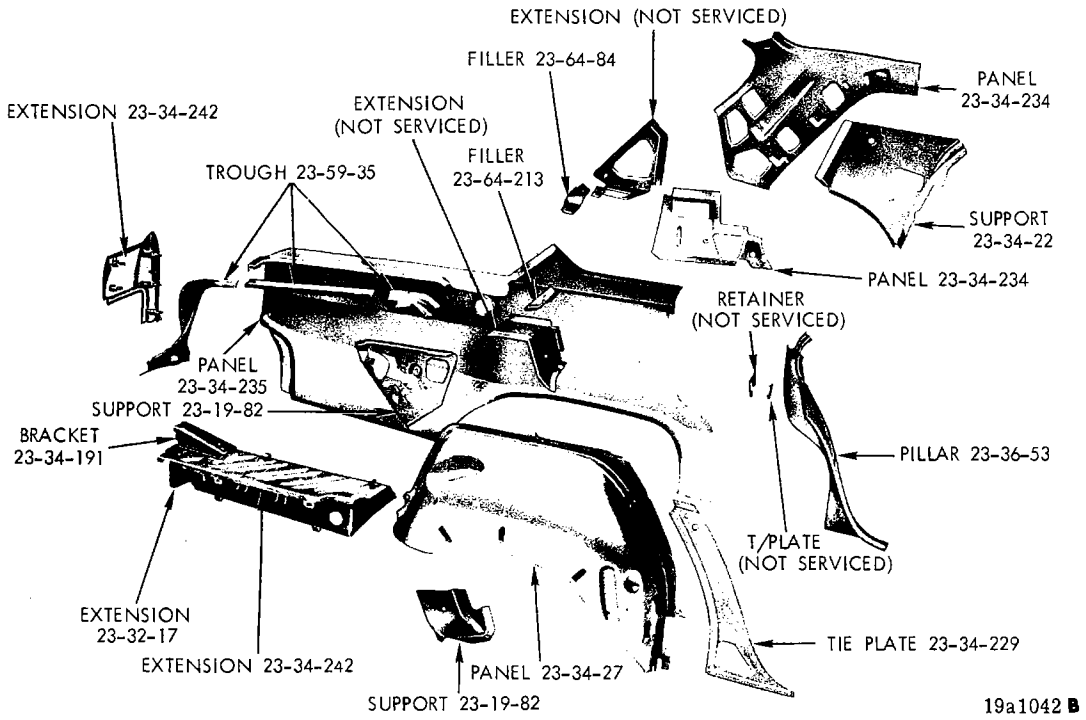

REAR QUARTER PANEL - DART 4 DOOR SEDAN

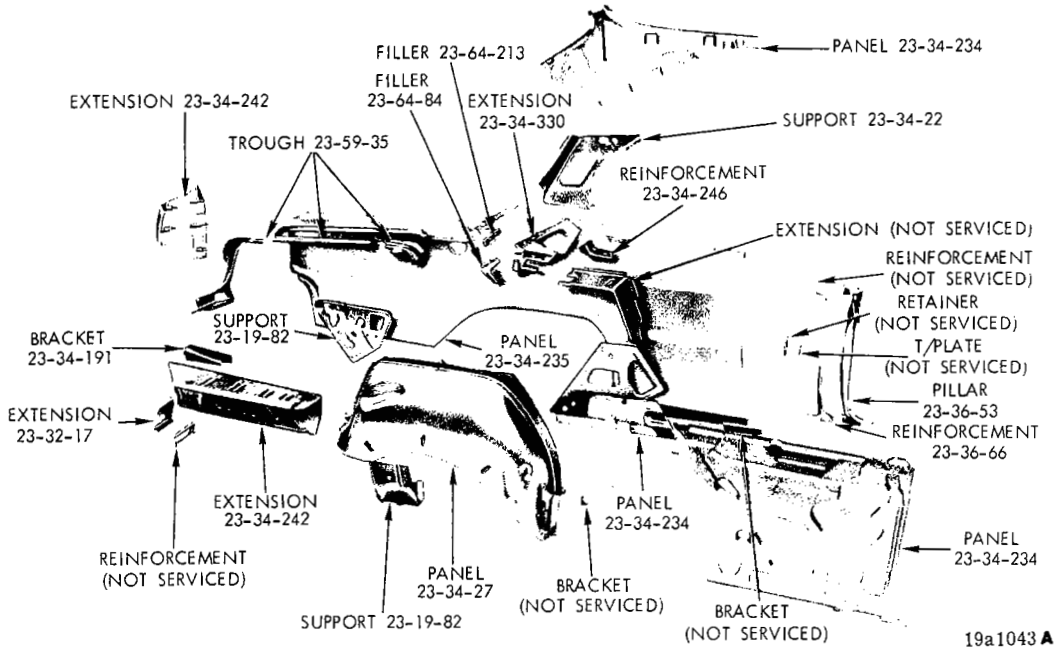

REAR QUARTER PANEL - DART 2 DOOR HARDTOP

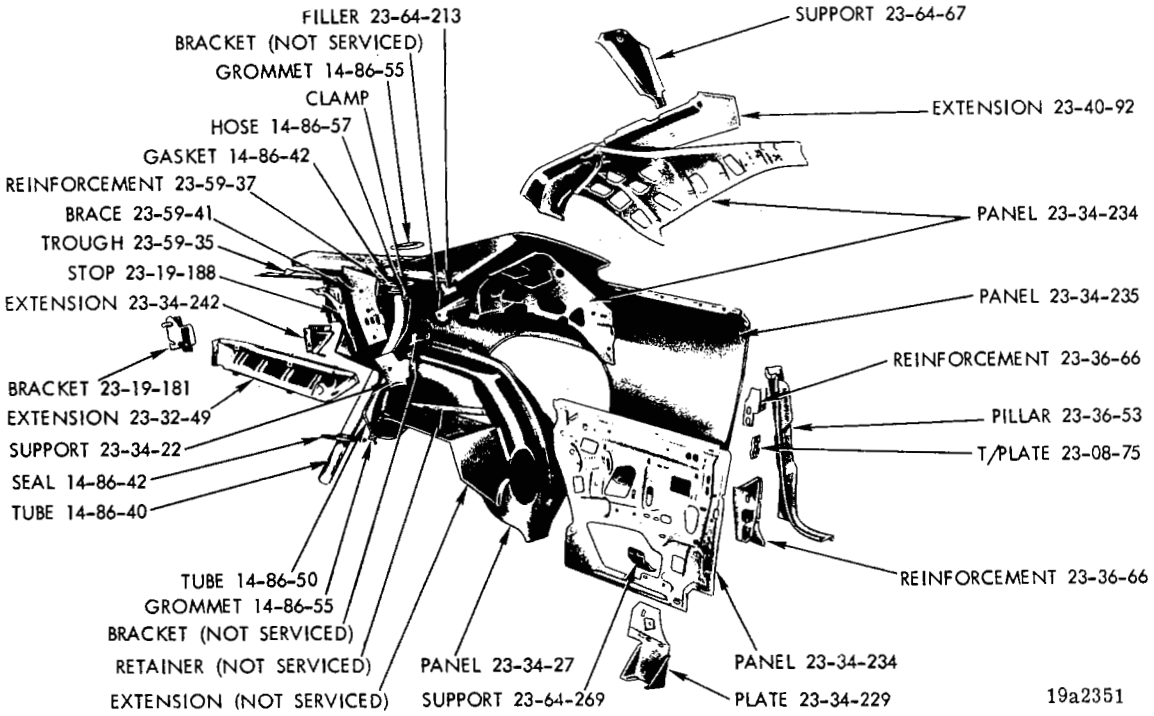

REAR QUARTER PANEL - CHARGER

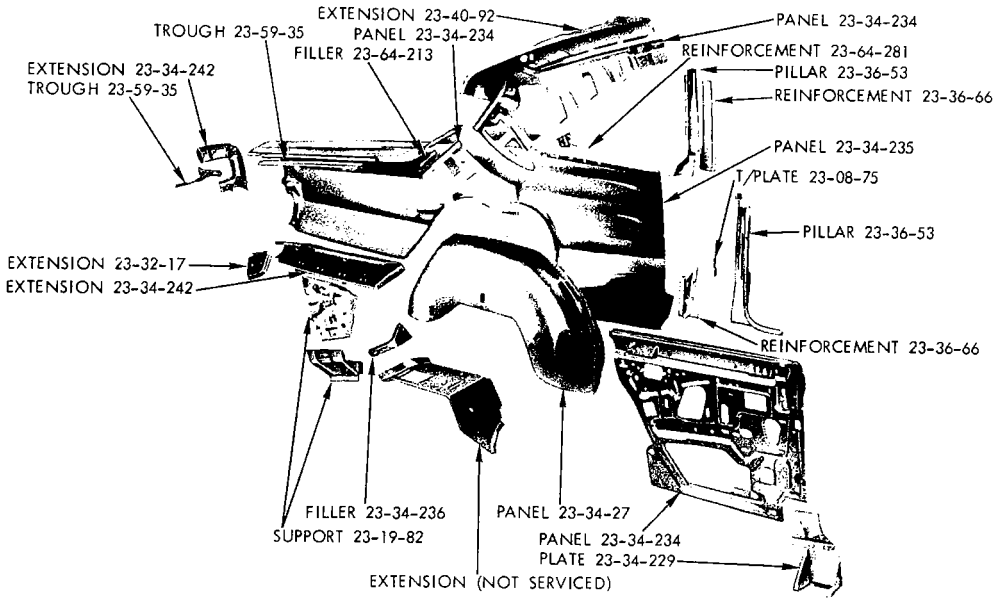

REAR QUARTER PANEL - BELVEDERE AND CORONET 2 DOOR SEDAN

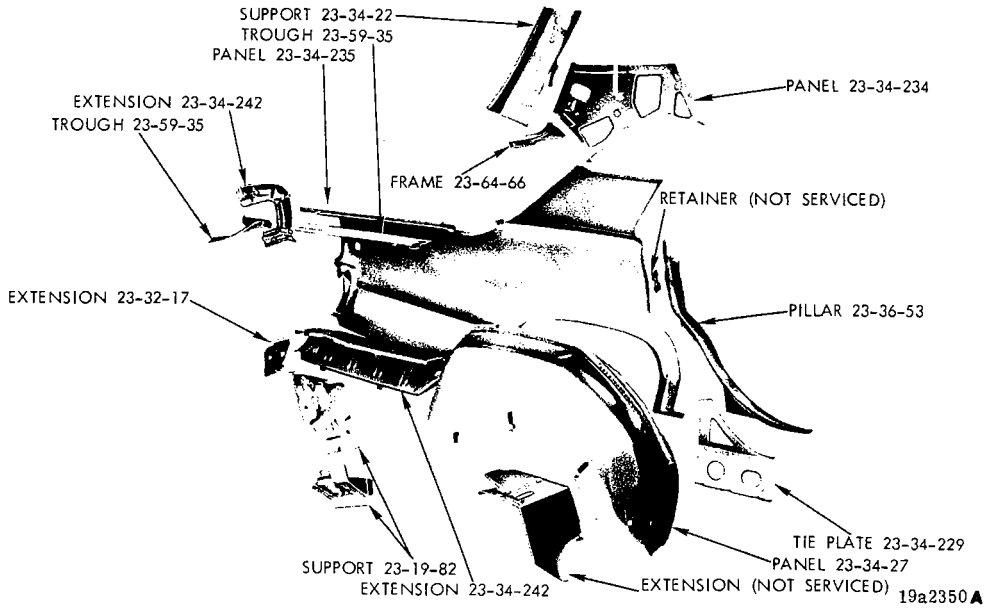

REAR QUARTER PANEL - BELVEDERE AND CORONET 4 DOOR SEDAN

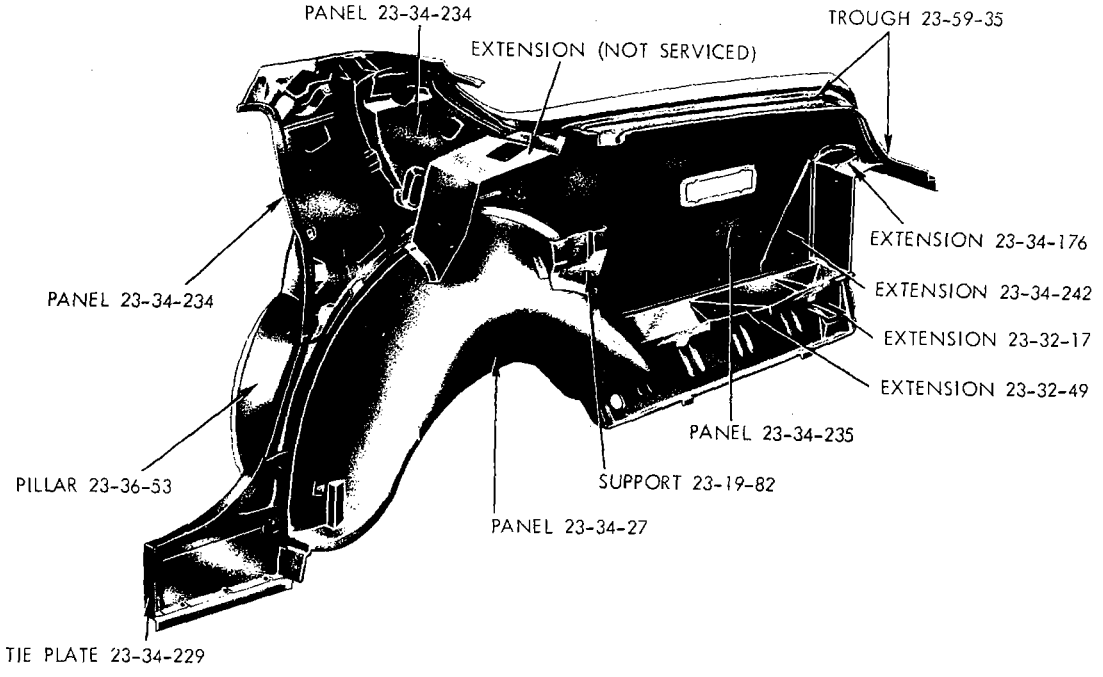

REAR QUARTER PANEL - SATELLITE AND CORONET 4 DOOR SEDAN (1971)

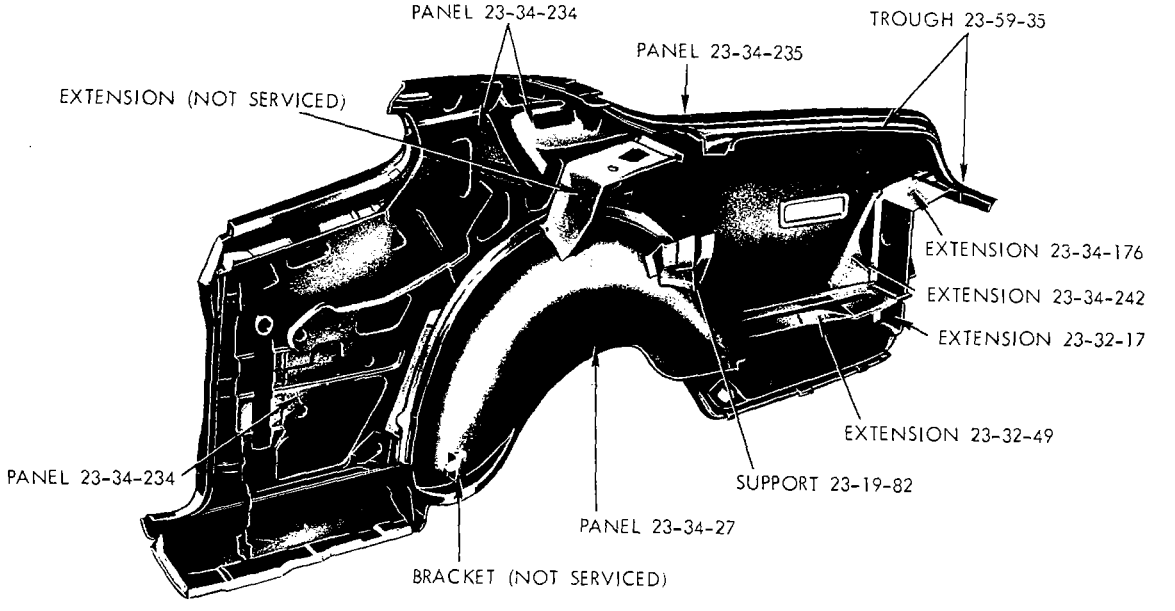

REAR QUARTER PANEL - SATELLITE AND CORONET 2 DOOR HARDTOP AND FASTBACK (1971)

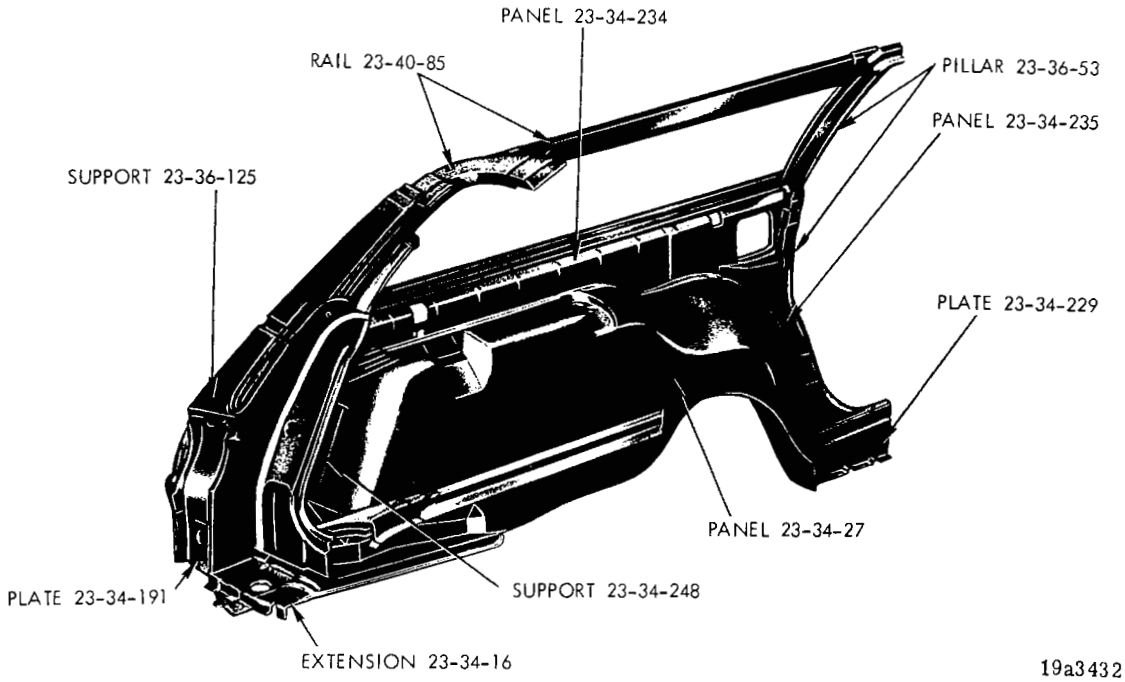

REAR QUARTER PANEL - SATELLITE AND CORONET STATION WAGON (1971)

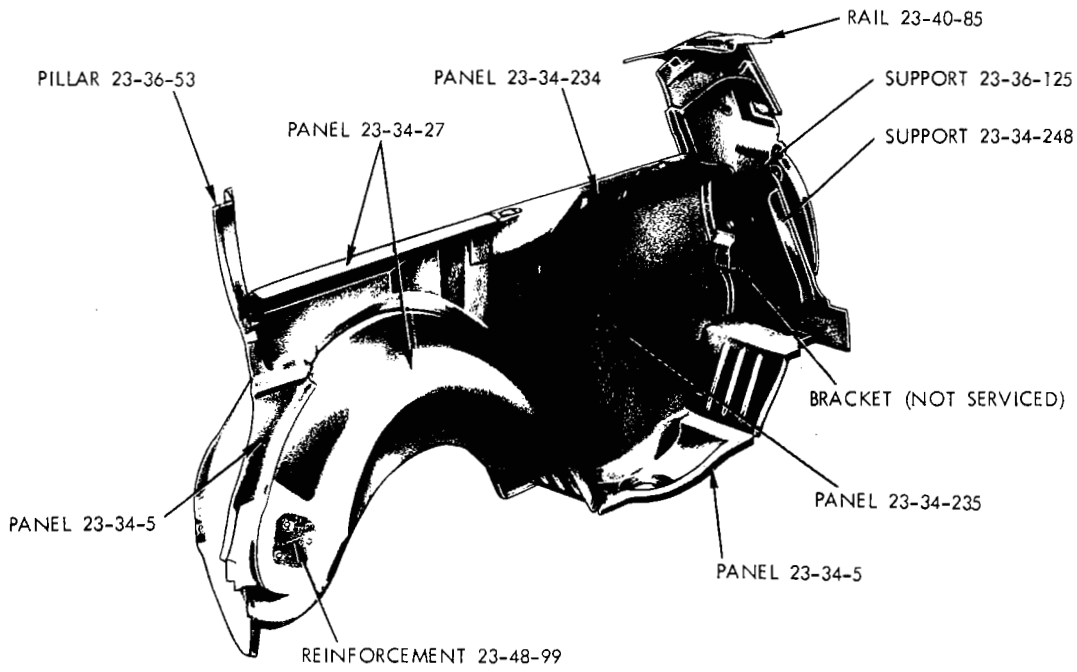

REAR QUARTER PANEL SPARE TIRE CARRIER - SATELLITE AND CORONET STATION WAGON (1971)

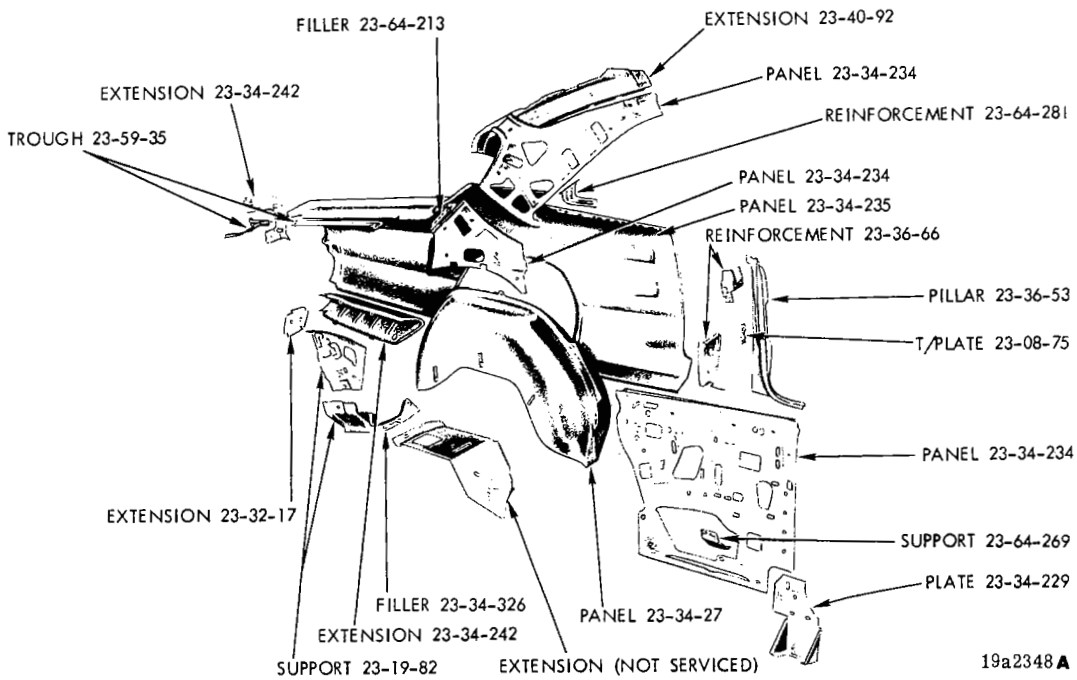

REAR QUARTER PANEL - BELVEDERE AND CORONET 2 DOOR HARDTOP

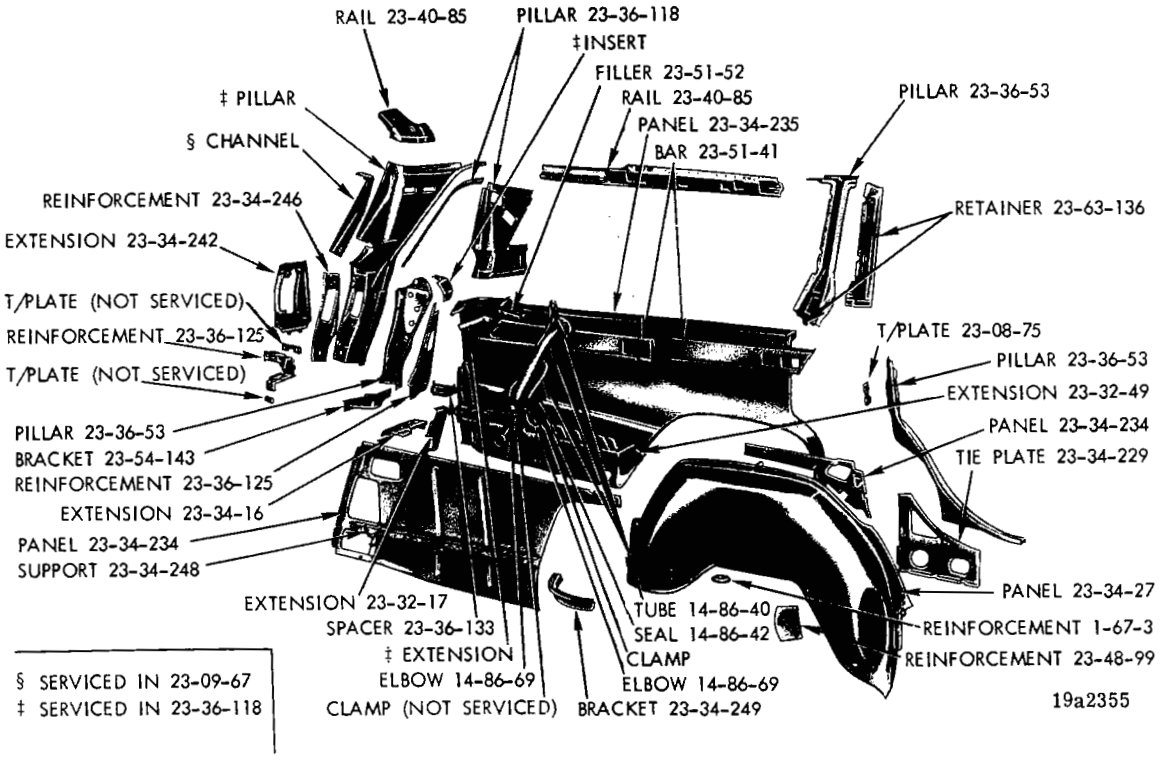

REAR QUARTER PANEL - BELVEDERE AND CORONET STATION WAGON

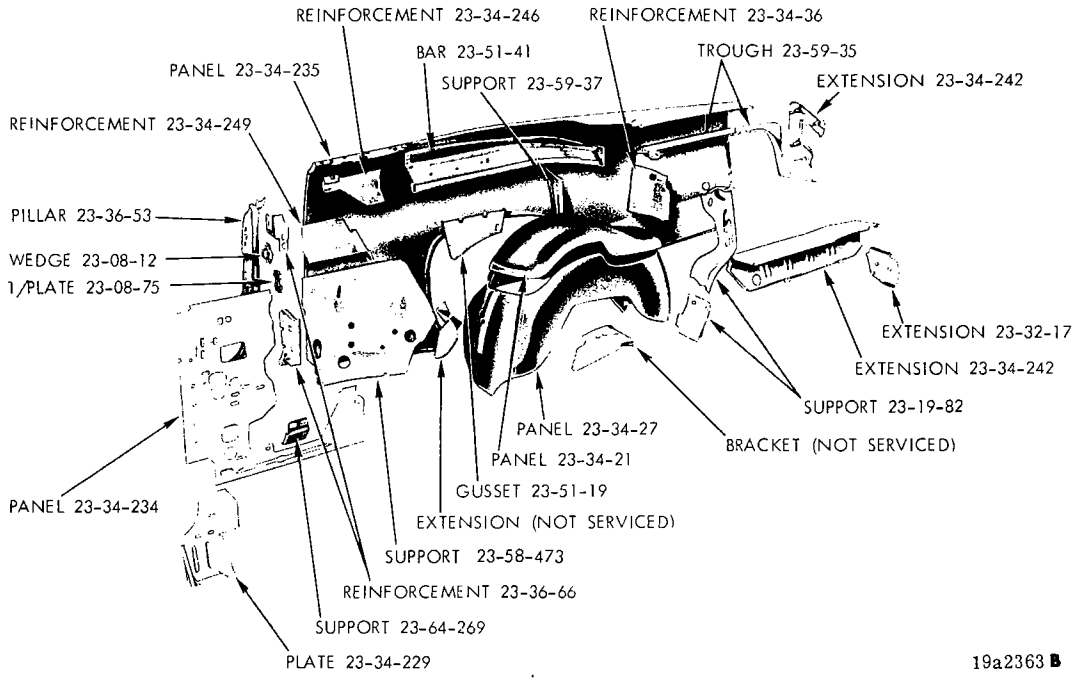

REAR QUARTER PANEL - BELVEDERE AND CORONET CONVERTIBLE COUPE

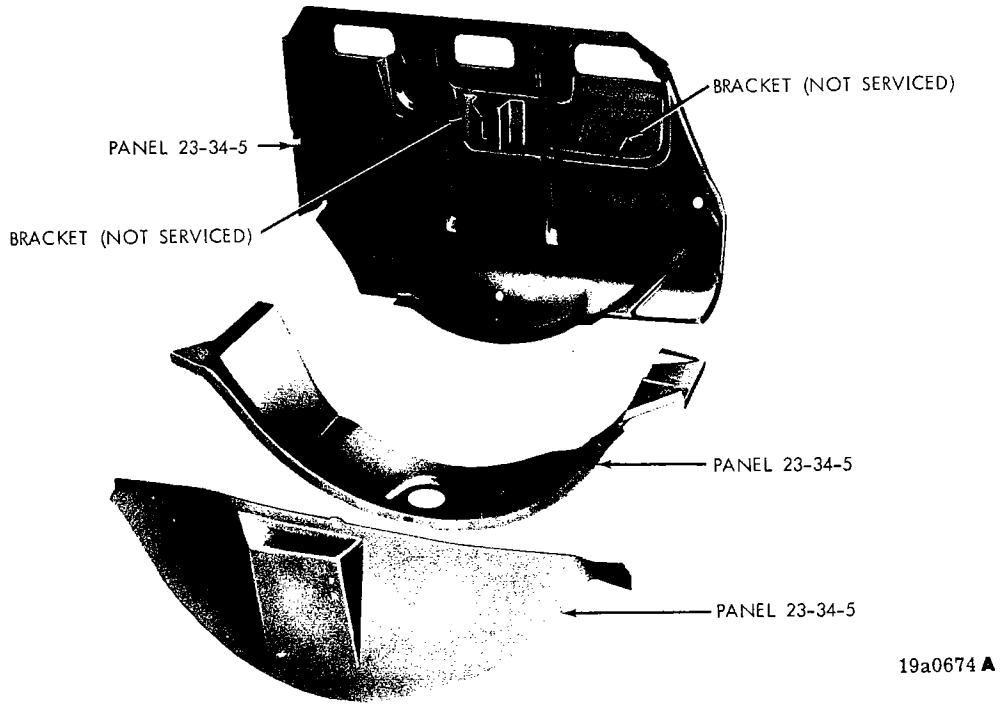

REAR QUARTER PANEL SPARE TIRE CARRIER - BELVEDERE AND CORONET STATION WAGON

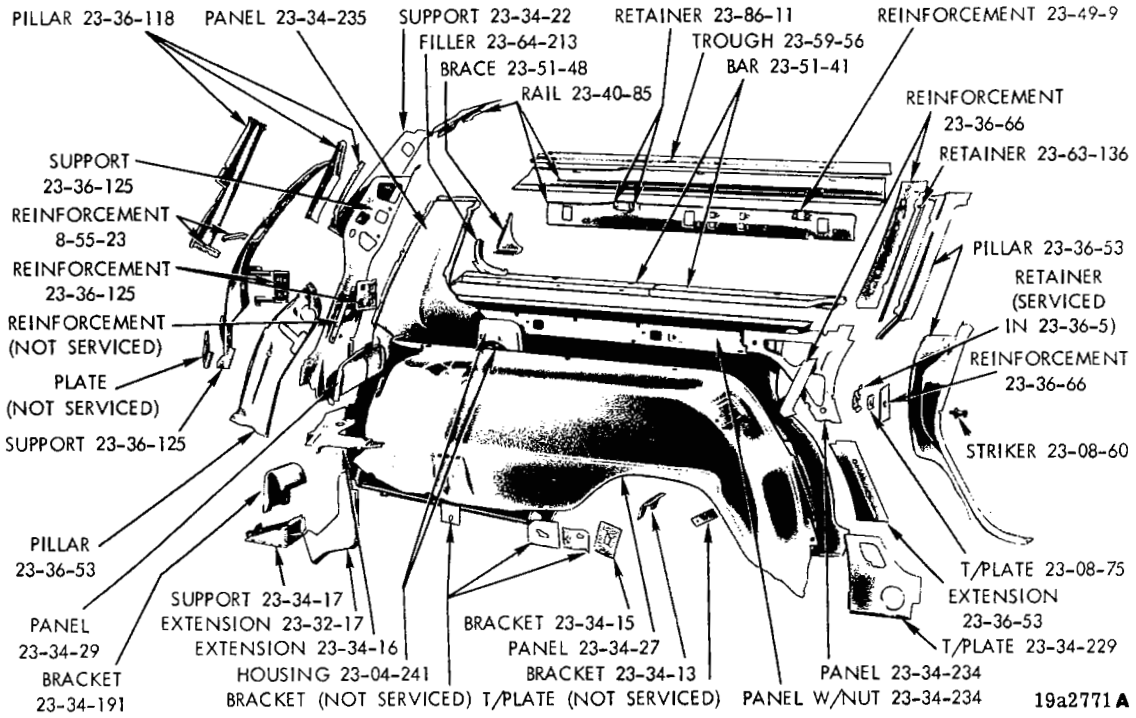

REAR QUARTER PANEL - PLYMOUTH, DODGE AND CHRYSLER STATION WAGON

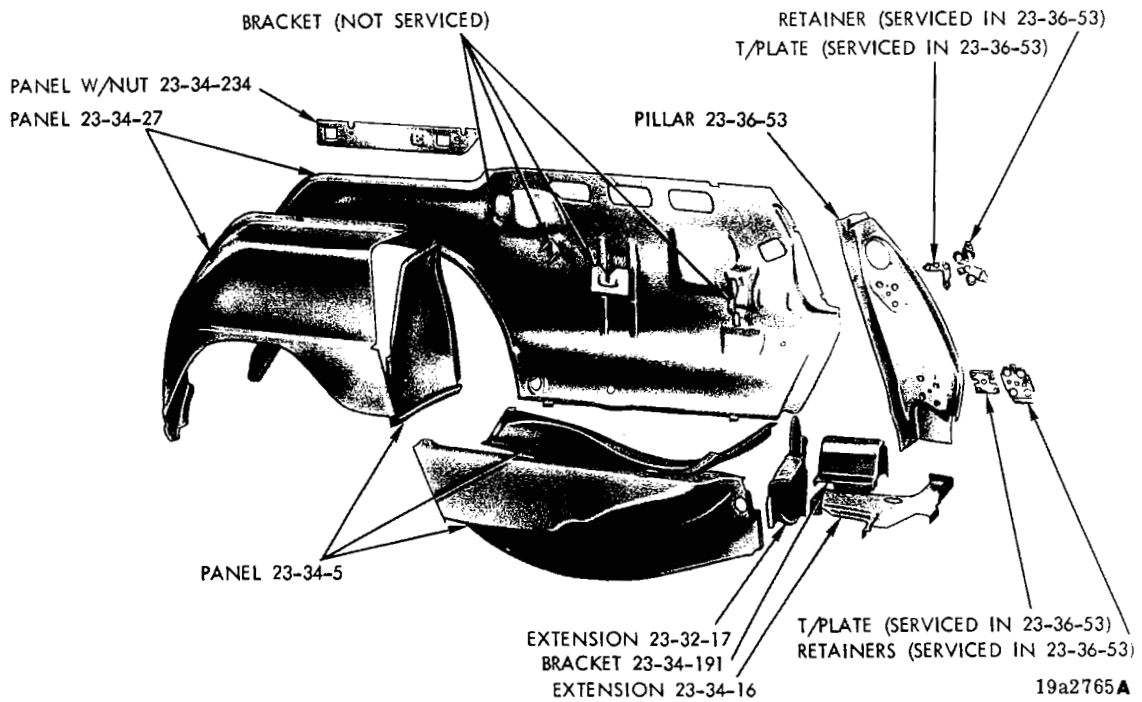

REAR QUARTER SPARE TIRE PANEL - PLYMOUTH, DODGE AND CHRYSLER STATION WAGON

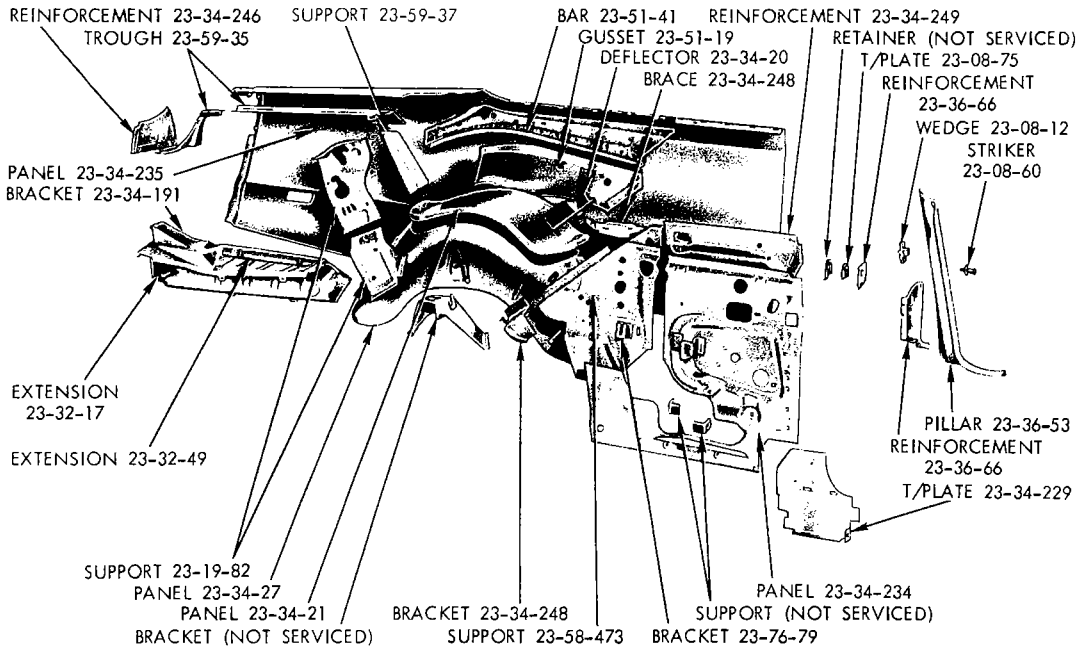

19a2763 **B**

REAR QUARTER PANEL - CHRYSLER CONVERTIBLE COUPE
(TYPICAL OF PLYMOUTH AND DODGE)

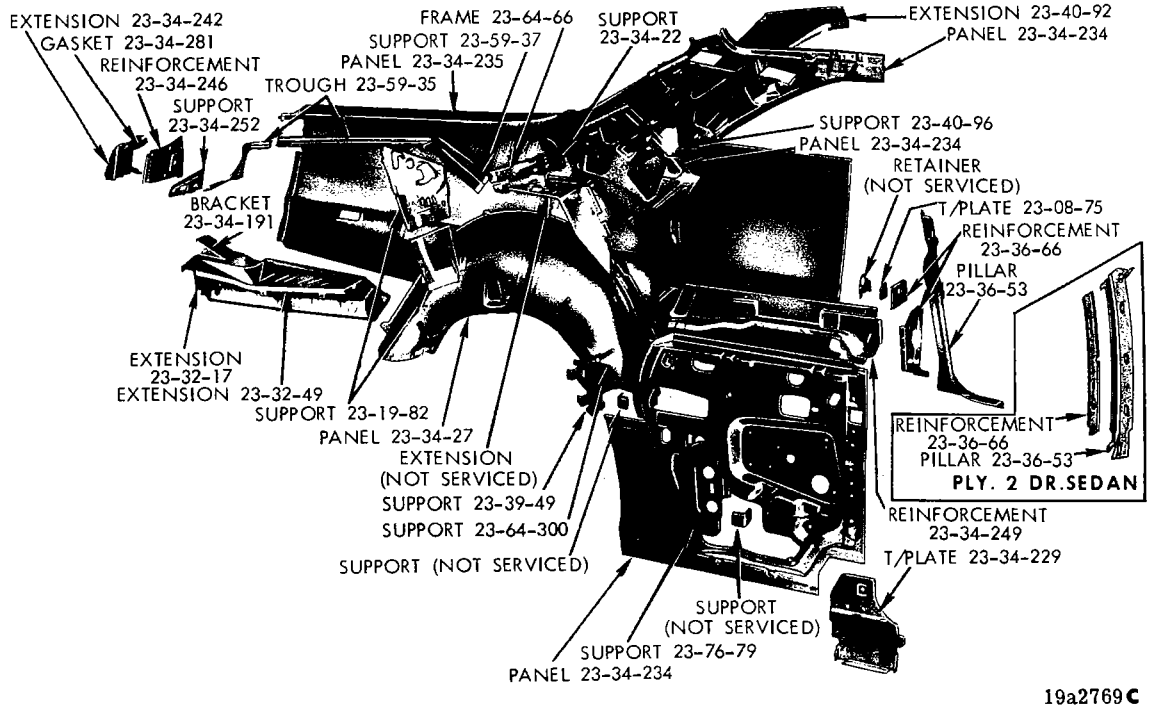

19a2769 **C**

REAR QUARTER PANEL - IMPERIAL 2 DOOR HARDTOP
(TYPICAL OF PLYMOUTH, DODGE AND CHRYSLER)

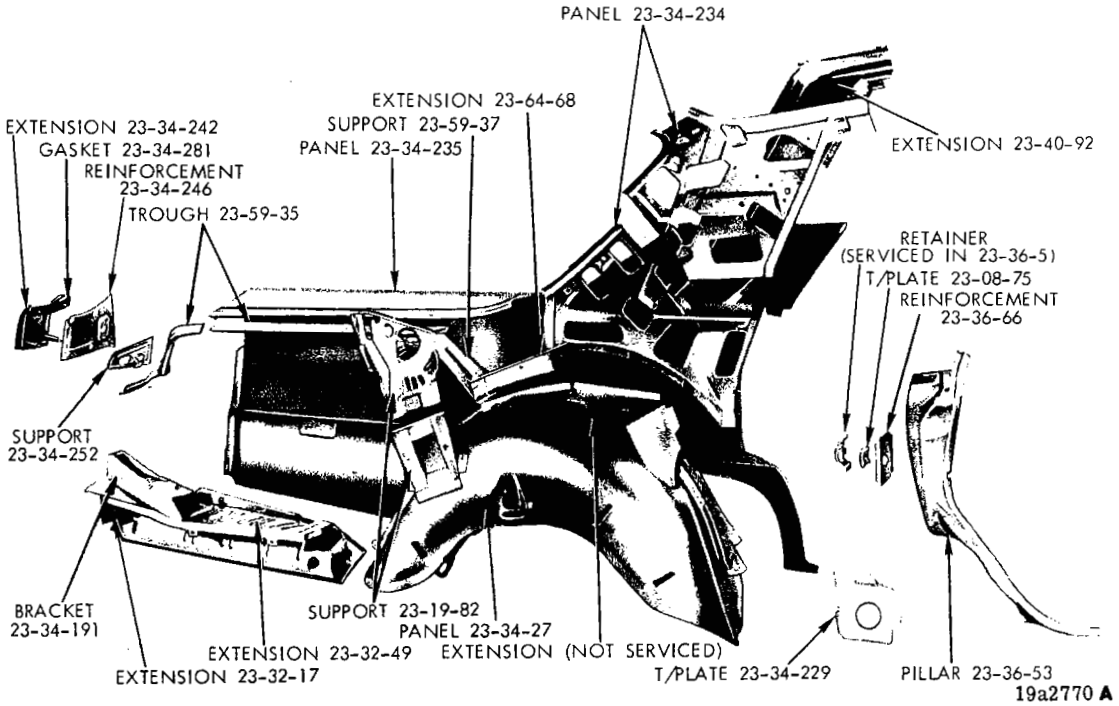

REAR QUARTER PANEL - IMPERIAL 4 DOOR HARDTOP
(TYPICAL OF PLYMOUTH, DODGE AND CHRYSLER 4 DOOR SEDAN AND 4 DOOR HARDTOP)

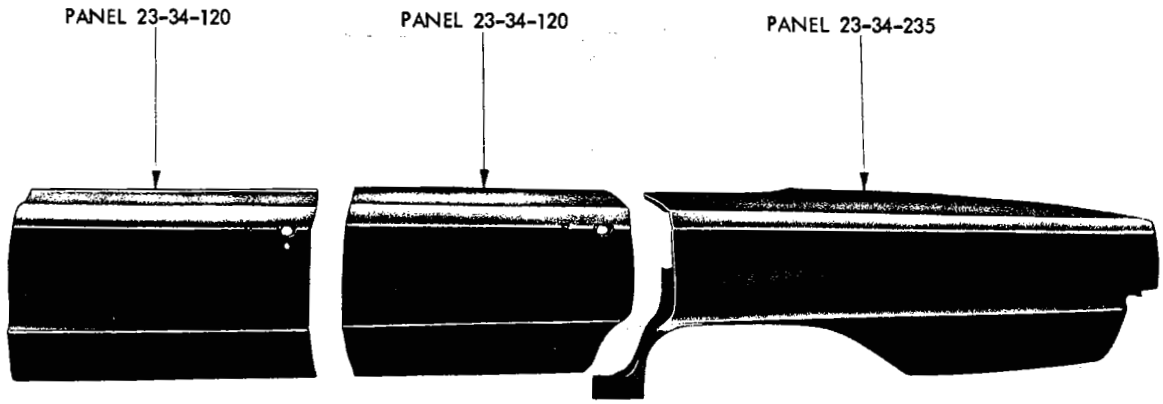

REPAIR PANELS

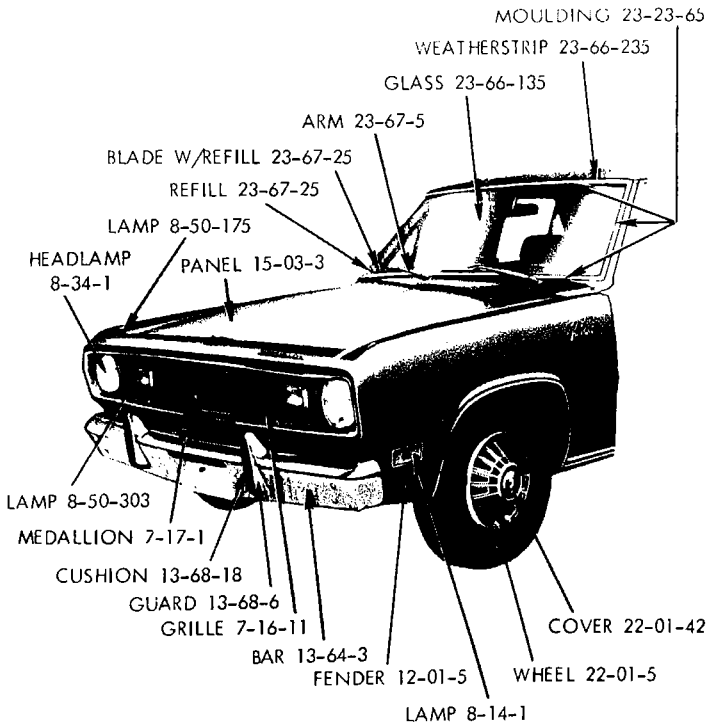

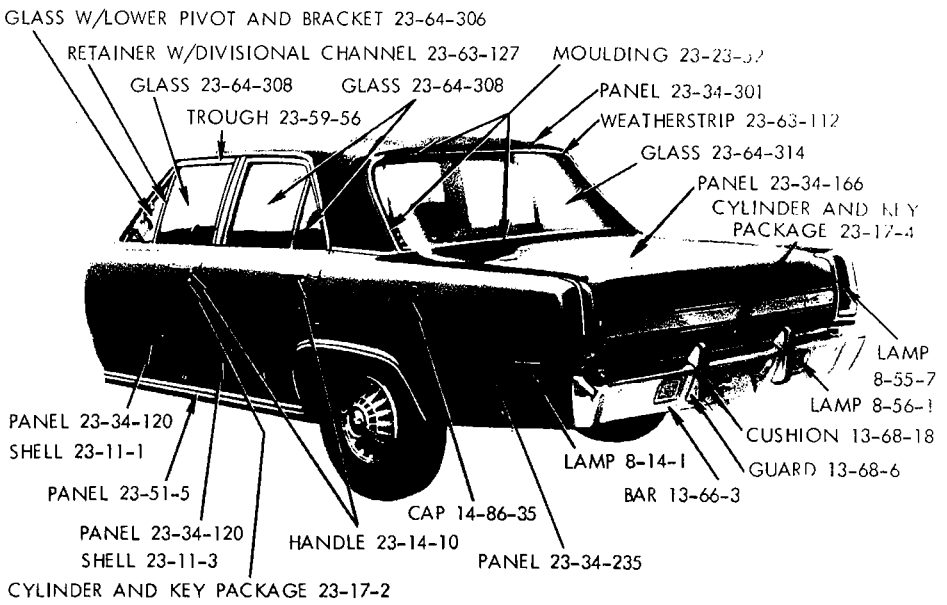

19a3133B

EXTERIOR VIEW - VALIANT V-L 4 DOOR SEDAN (CODED)

Printed in U.S.A.

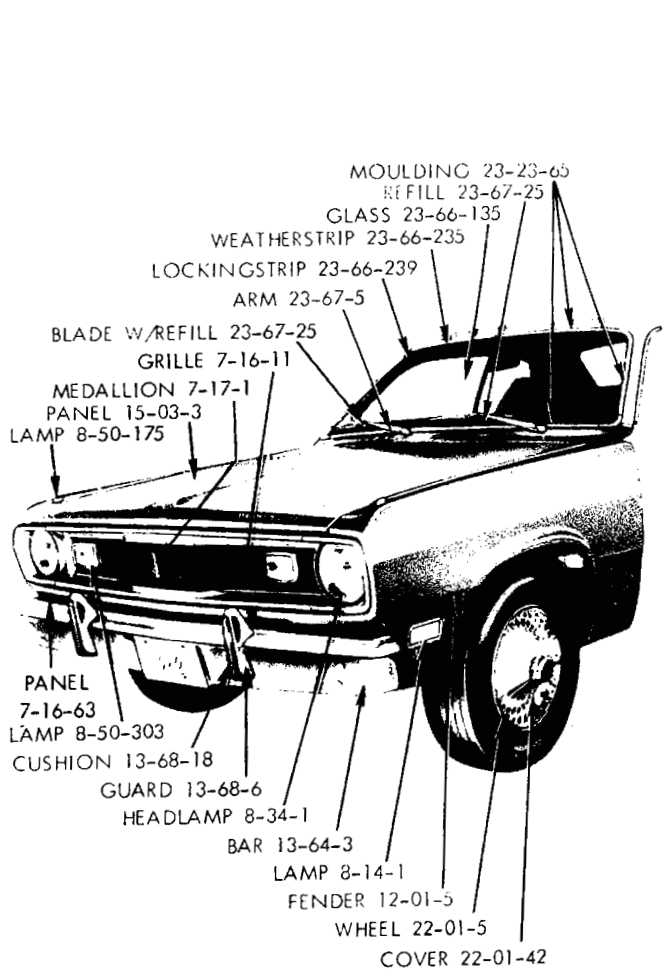

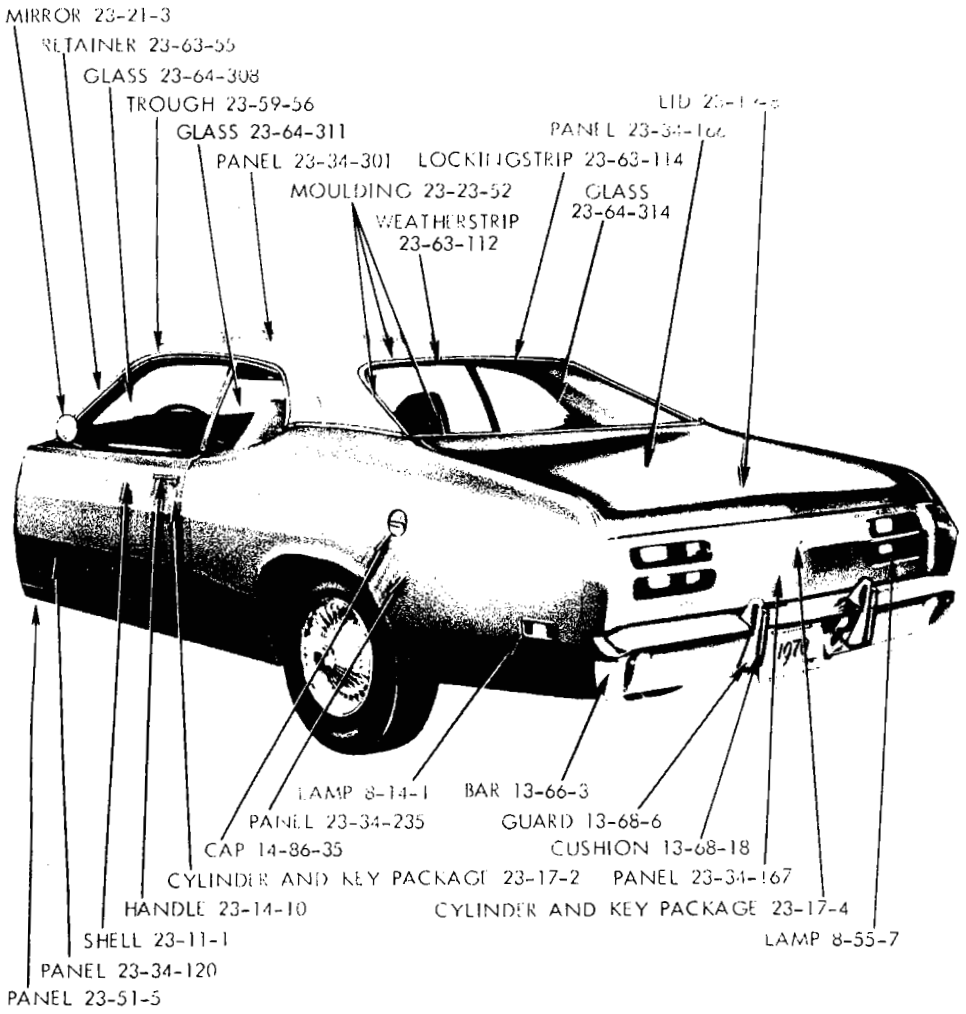

19a3098

EXTERIOR VIEW - VALIANT (DUSTER) V-L FASTBACK (CODED)

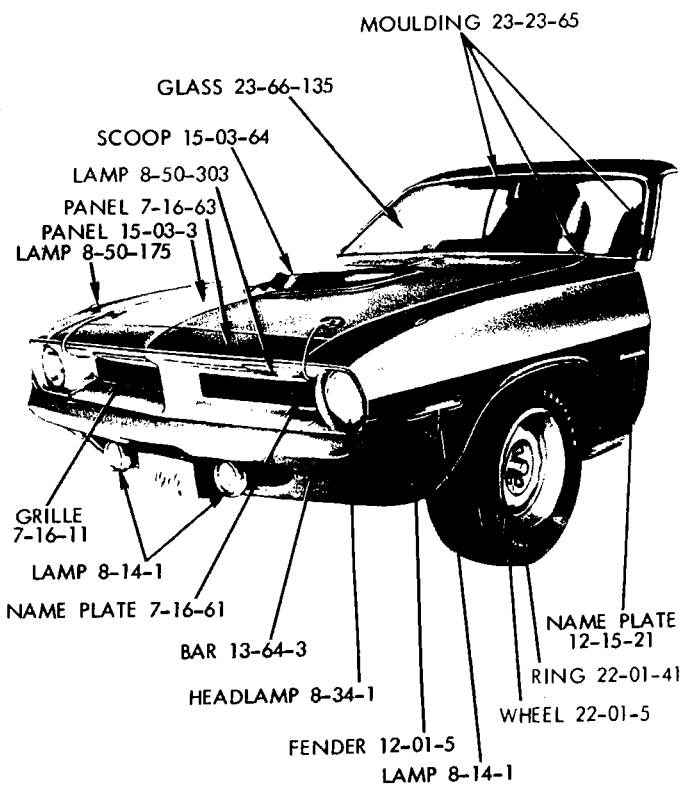

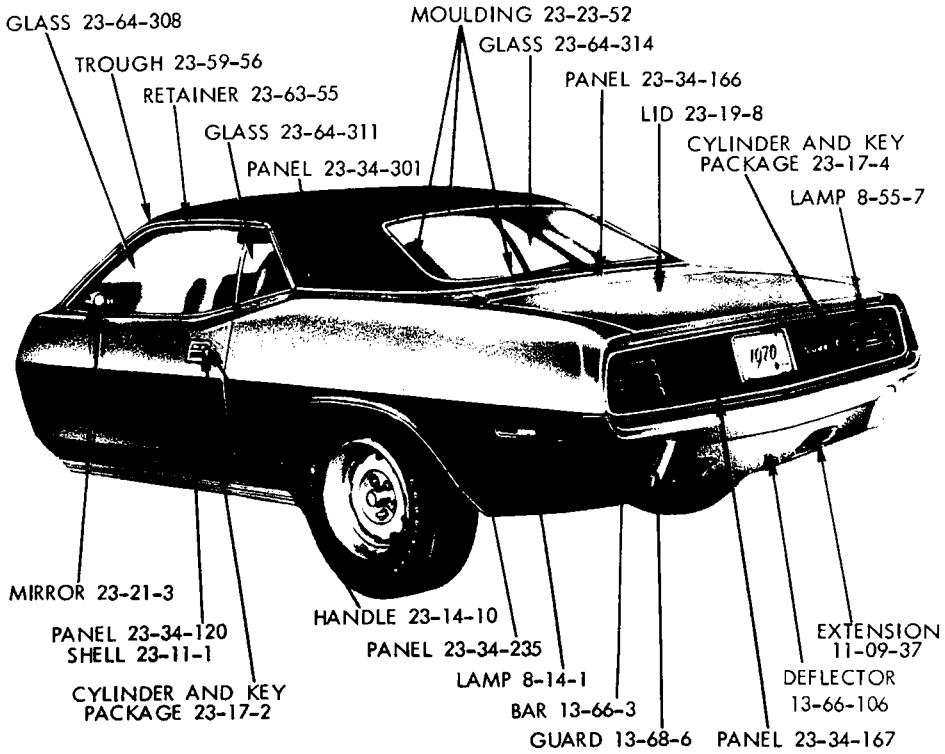

19a3079B

EXTERIOR VIEW - BARRACUDA (CUDA) B-S 2 DOOR HARDTOP (CODED)

Printed in U.S.A.

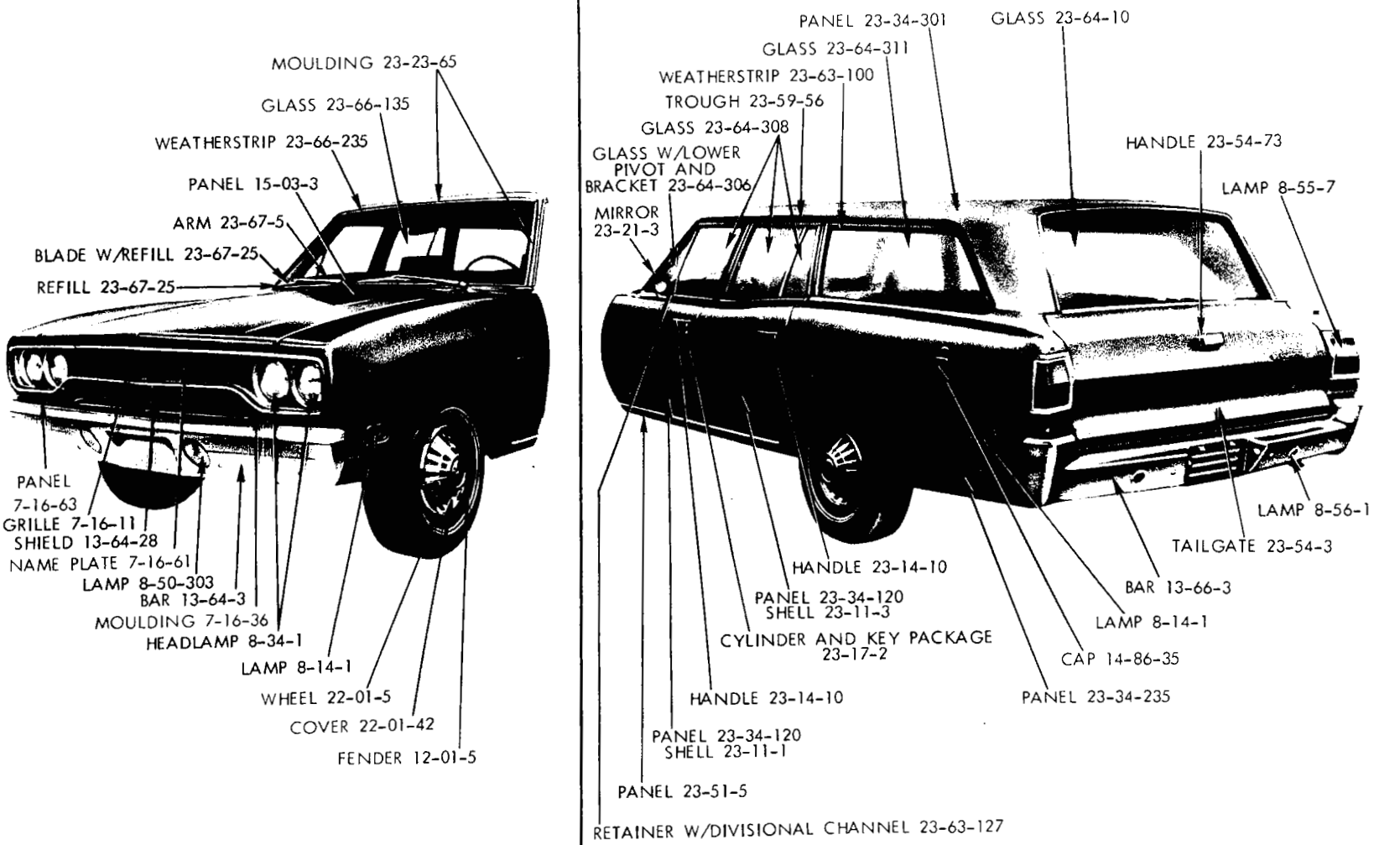

19a3139 **A**

EXTERIOR VIEW - BELVEDERE R-L STATION WAGON (CODED)

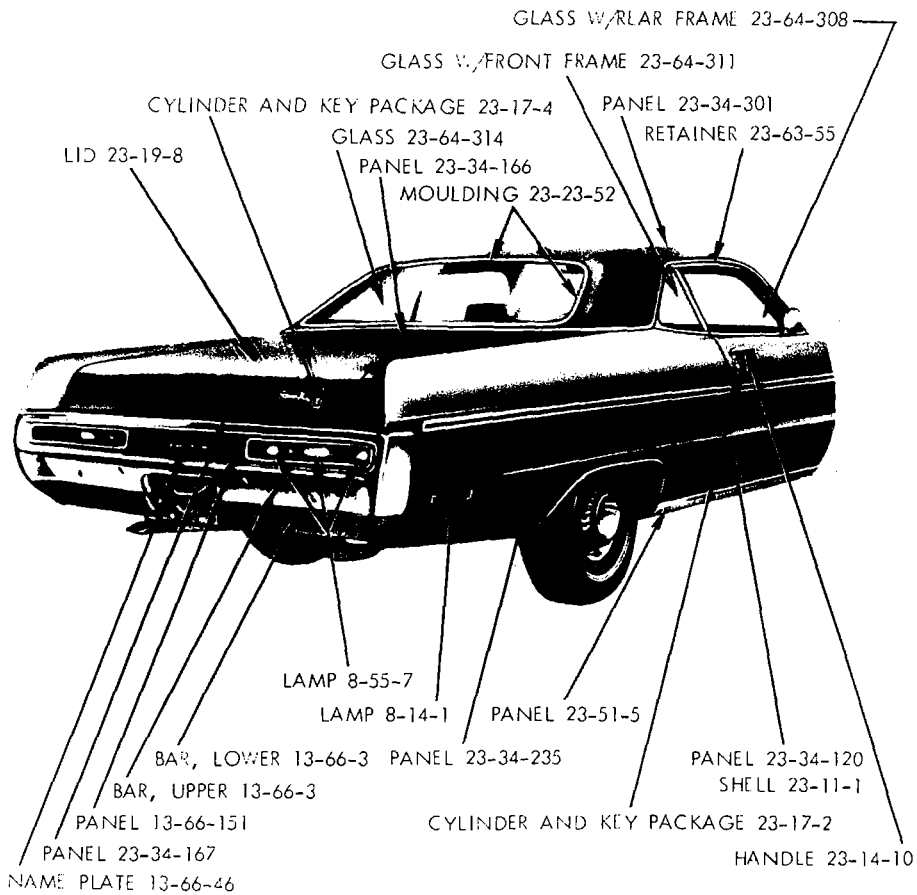

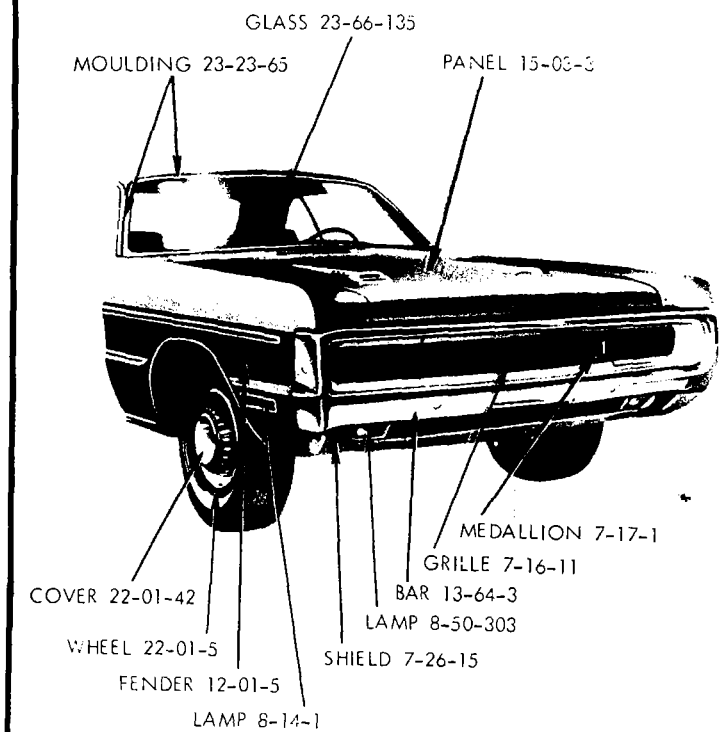

19a3140B

EXTERIOR VIEW - PLYMOUTH SPORT FURY P-H 2 DOOR HARDTOP (CODED)

Printed in U.S.A.

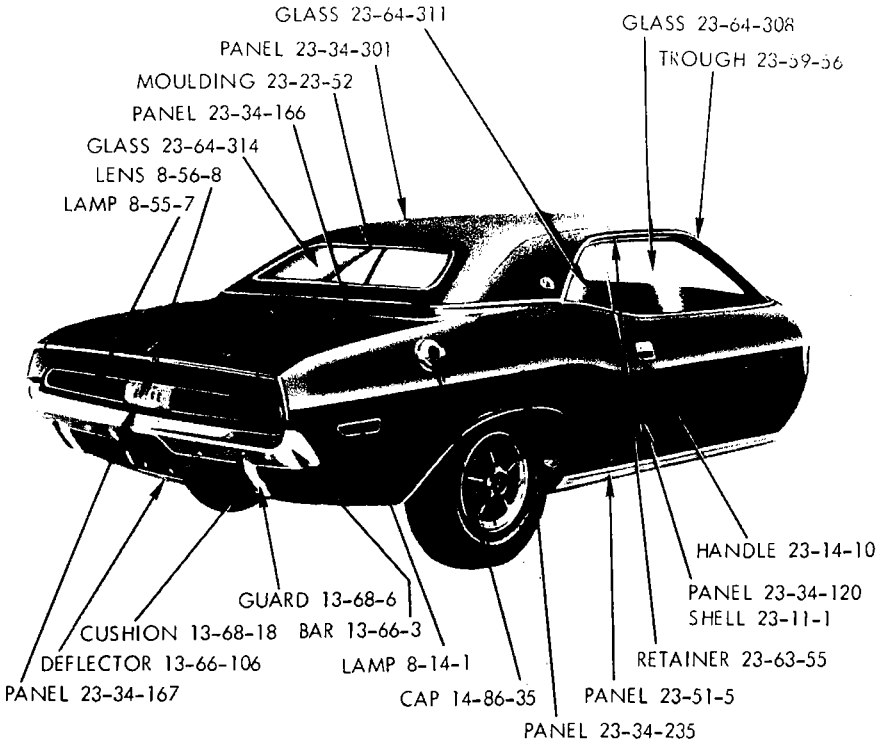

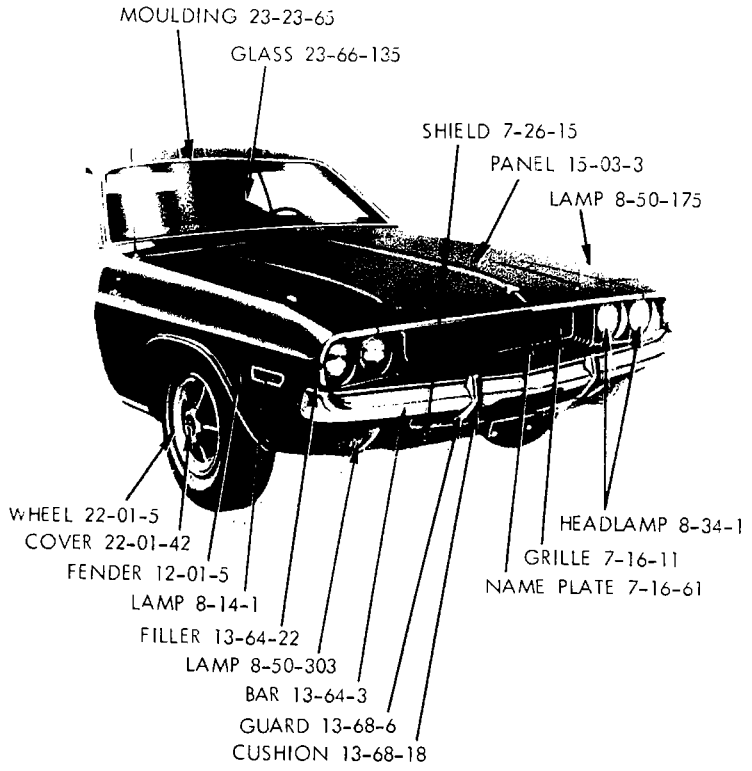

19a3131 **A**

EXTERIOR VIEW - CHALLENGER J-H 2 DOOR HARDTOP (CODED)

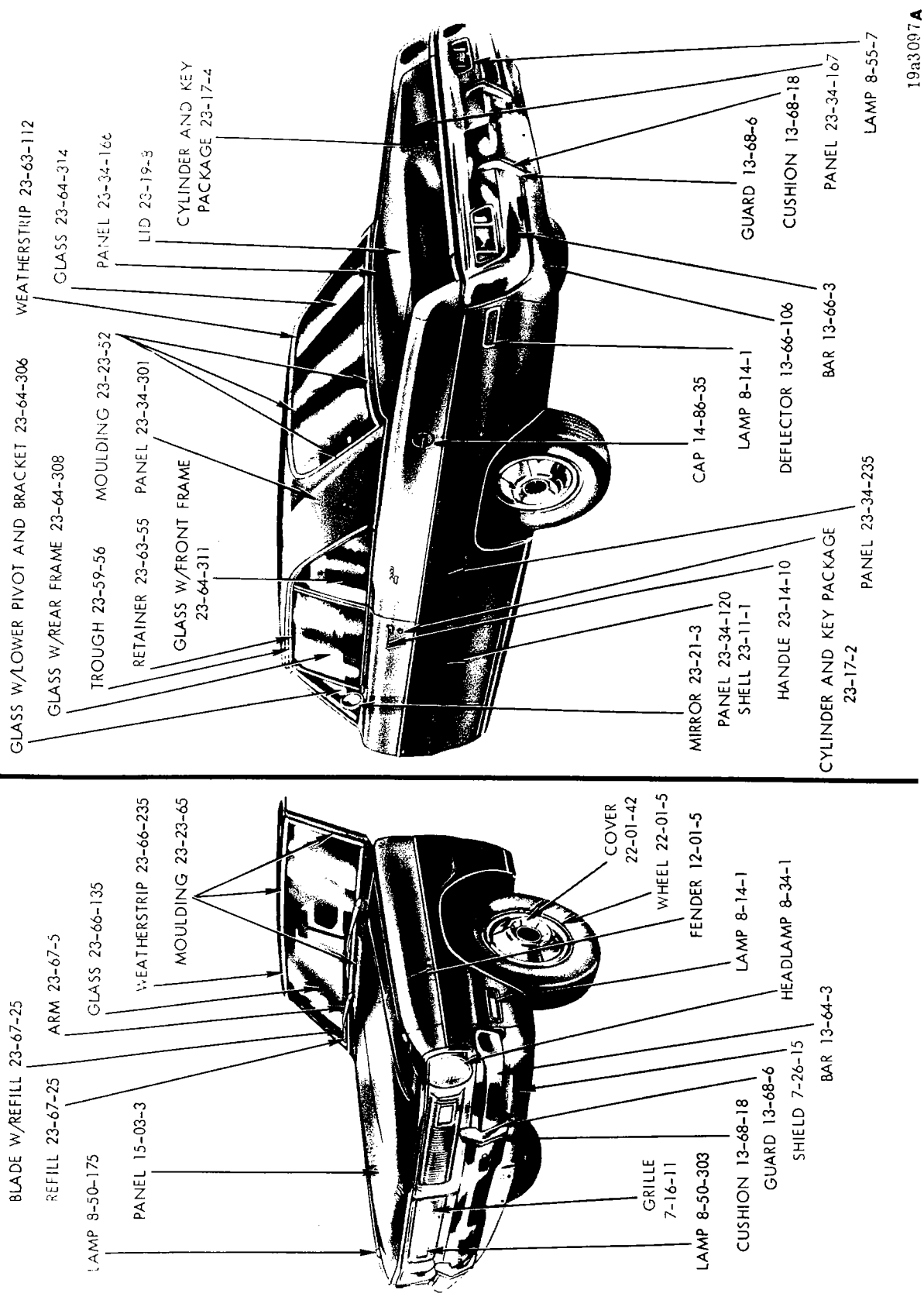

EXTERIOR VIEW - DART CUSTOM L-H 2 DOOR HARDTOP (CODED)

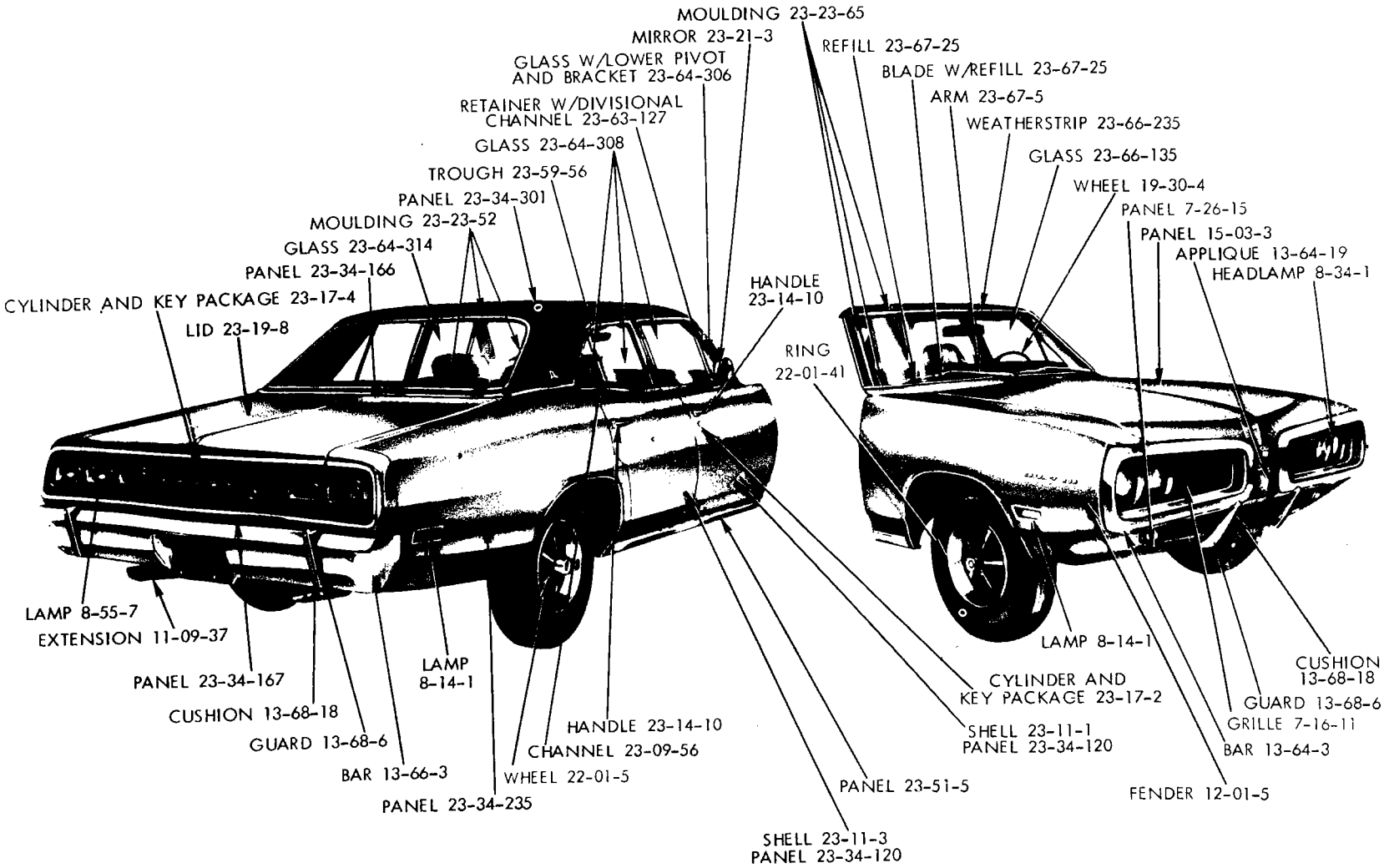

19a3070A

EXTERIOR VIEW - CORONET 500 W-P 4 DOOR SEDAN (CODED)

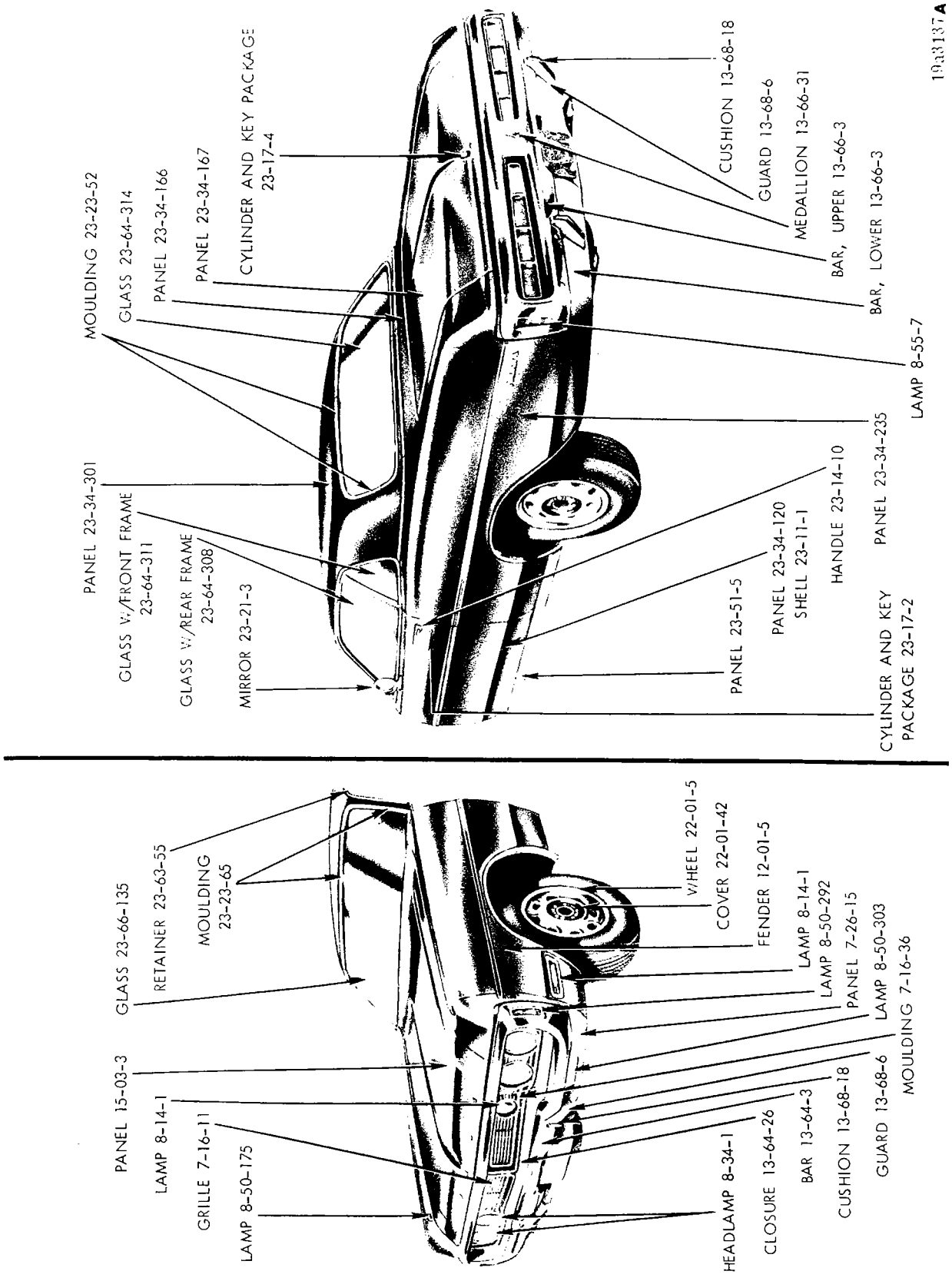

EXTERIOR VIEW - DODGE POLARA D-L 2 DOOR HARDTOP (CODED)

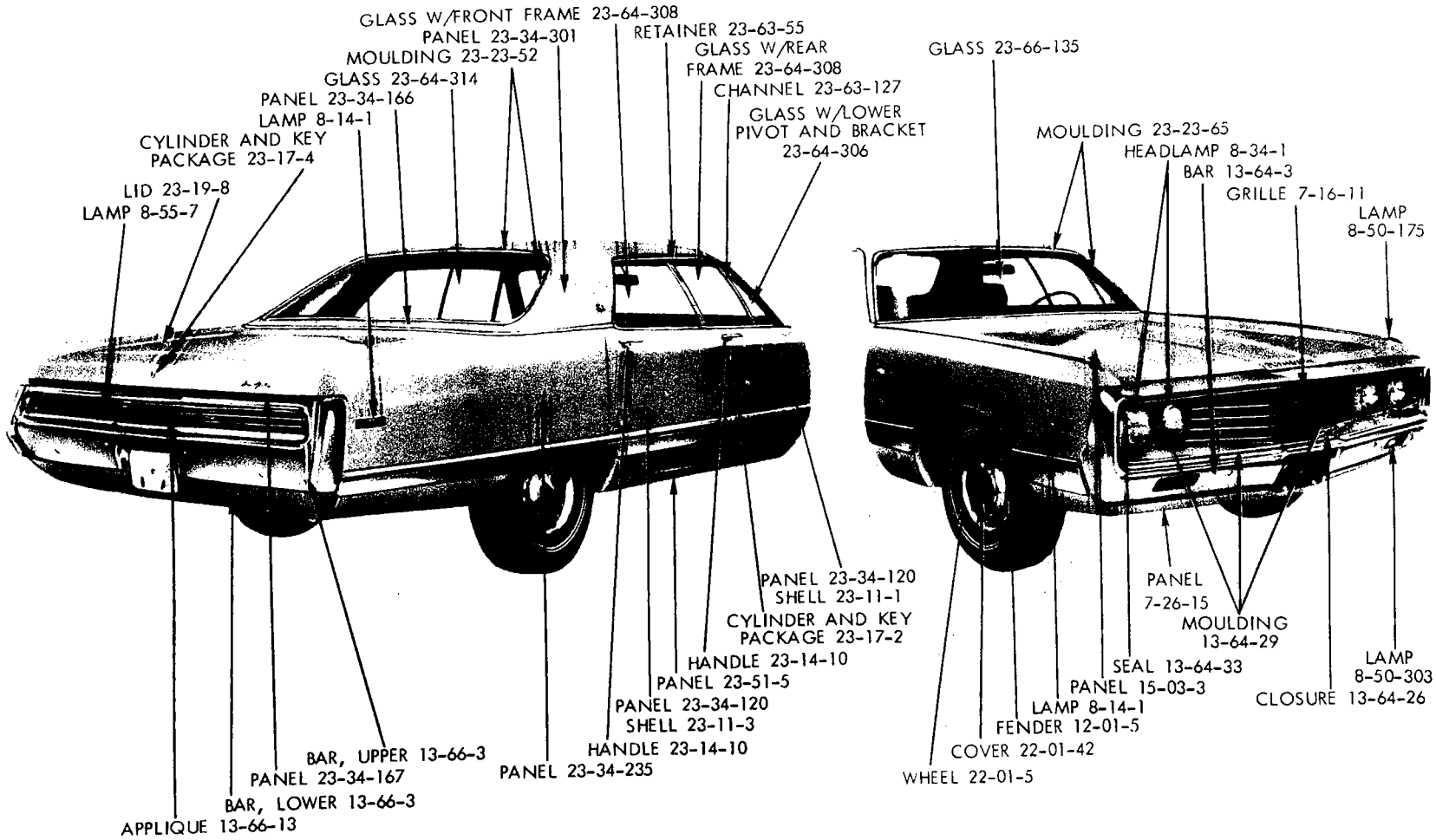

19a3138A

EXTERIOR VIEW - CHRYSLER NEW YORKER C-H 4 DOOR HARDTOP (CODED)

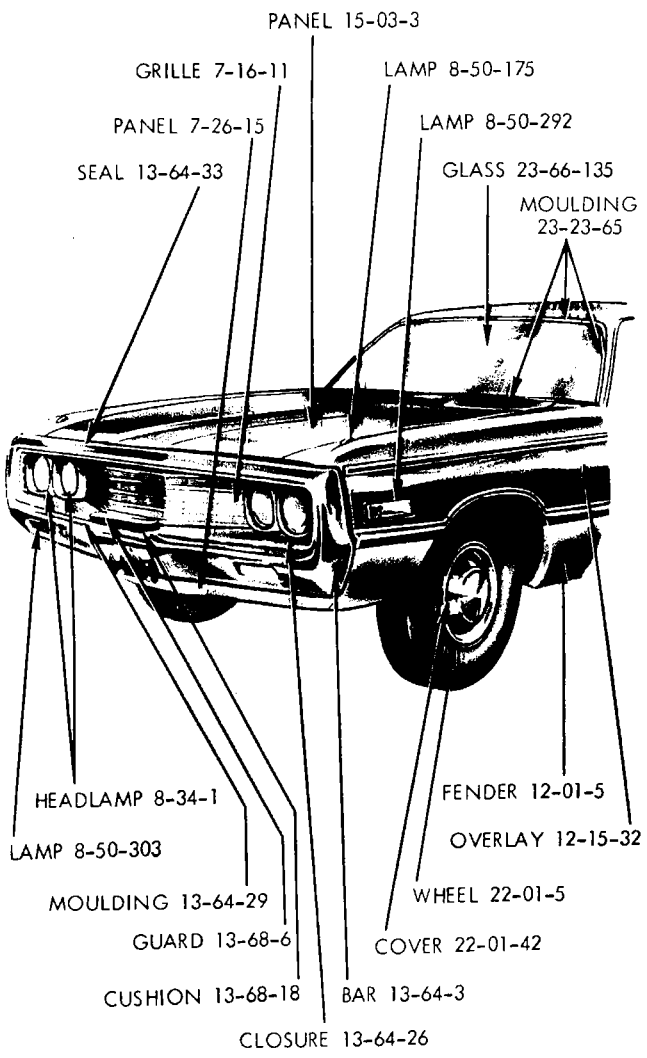

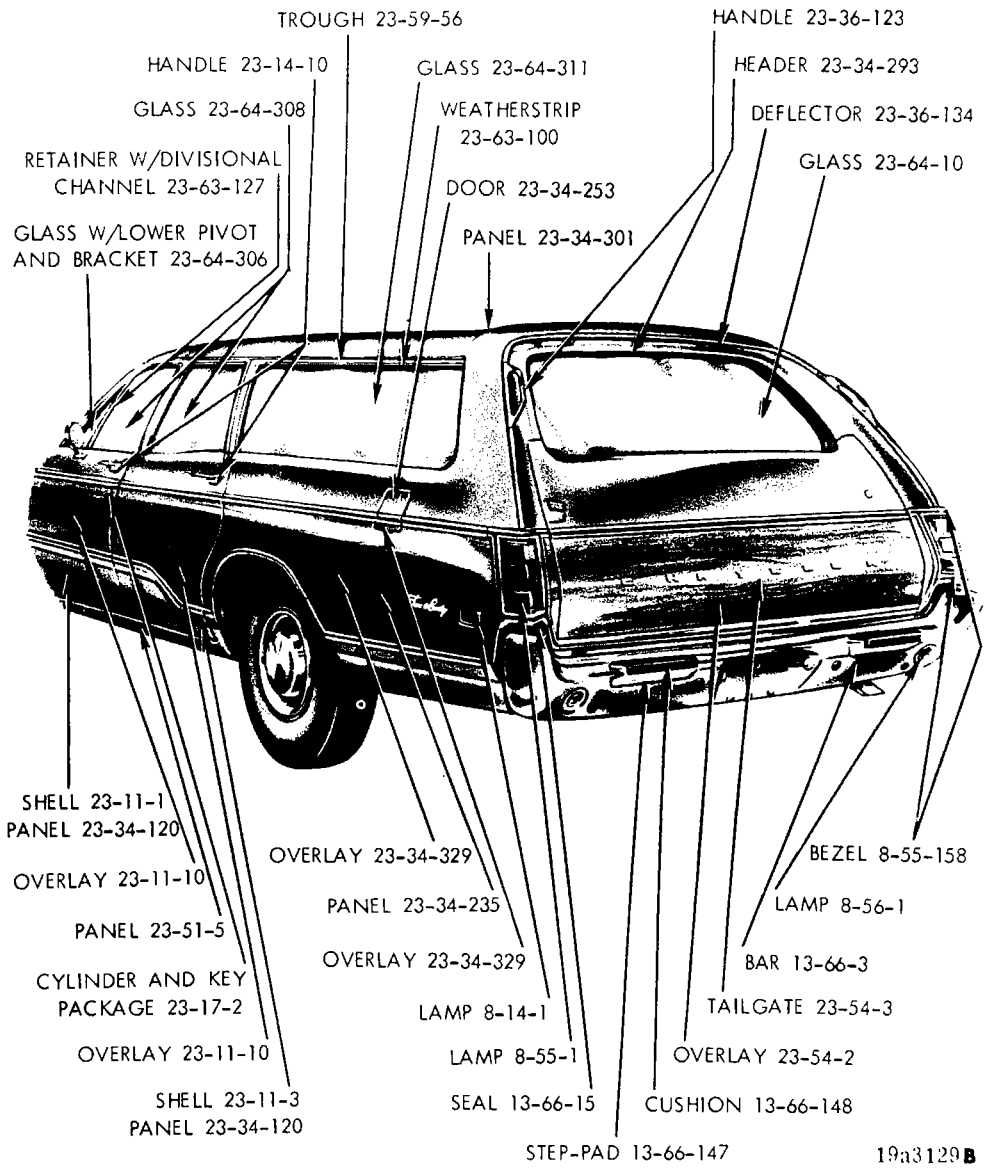

EXTERIOR VIEW - CHRYSLER TOWN AND COUNTRY C-P STATION WAGON (CODED)

Printed in U.S.A.

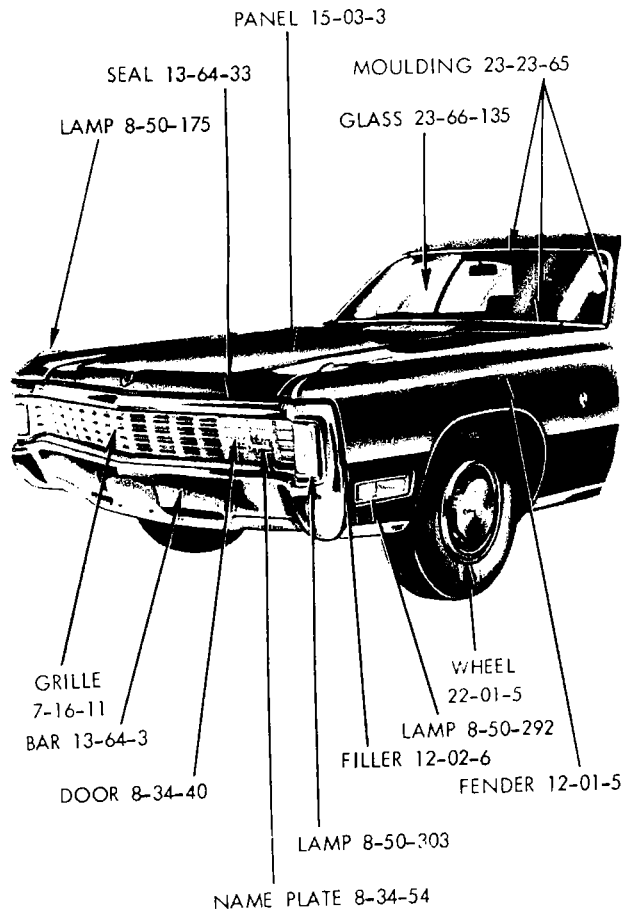

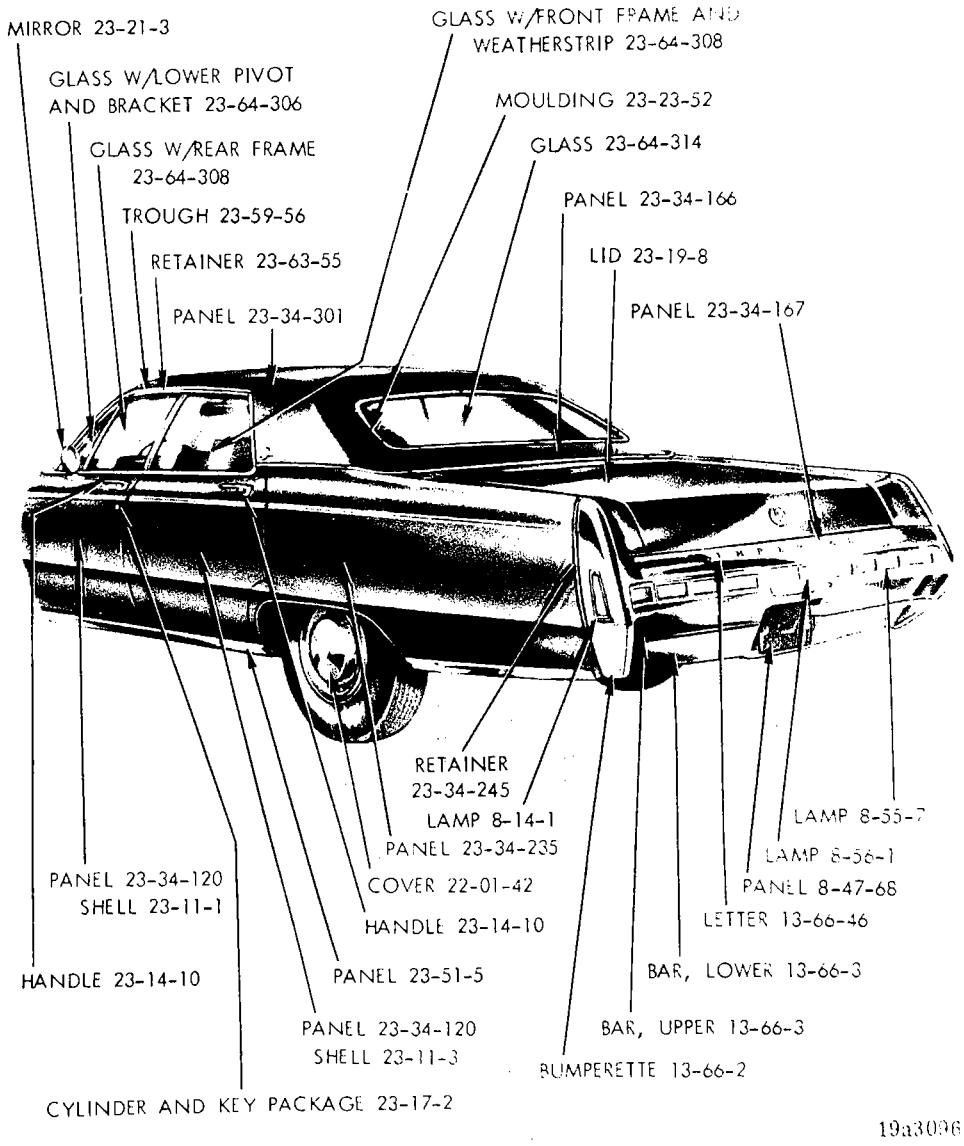

EXTERIOR VIEW - IMPERIAL LE BARON Y-M 4 DOOR HARDTOP (CODED)

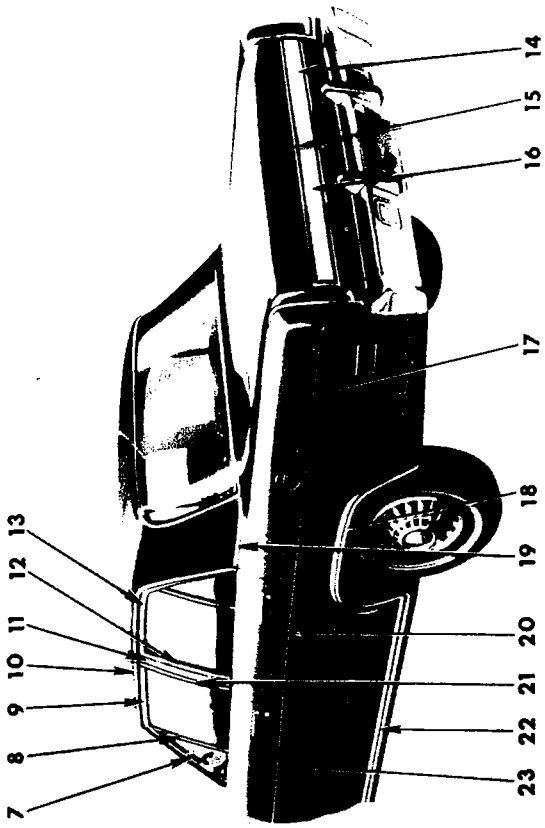

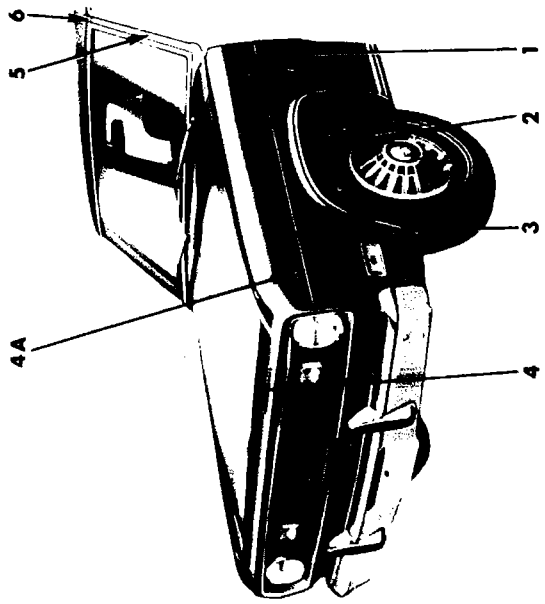

1970
EXTERIOR VIEW - VALIANT V-L 4 DOOR SEDAN

REF. NO.	QTY	PART NUMBER	DESCRIPTION
1	2	3504 077	NAME PLATE, Fender Side (12-15-21)
	2	6027 352	Nut
2	1	2807 896-7	MOULDING PACKAGE, Fender Wheel Opening (12-15-2)
	14	6024 271	Screw
3	2	3445 206	MOULDING, Fender Side (12-15-2)
4	1	2785 791	NAME PLATE, Hood Front (15-06-3)
	3	6027 552	Nut
4A	2	2579 612	ORNAMENT, Fender Side, "V-8" (12-15-21)
	4	6026 404	Nut
5	1	2783 024-5	MOULDING, Body Frt. Pillar Drain Trough (23-59-61)
	AR	---- ---	Spacer
6	2	2783 028	COVER, Roof Side Drain Trough Mldg. Joint (23-59-57)
7	1	2807 882-3	MOULDING PACKAGE, Body Frt. Plr. Trim, use w/Vinyl Roof or Two Tone Paint (23-23-14)
	2	6027 205	Screw
8	1	2663 434-5	MOULDING, Frt. Door Wdo. Opng. Frame, Frt. (23-23-32)
9	1	2663 440-1	MOULDING, Frt. Door Wdo. Opng. Frame, Upr. (23-23-32)
10	1	2783 026-7	MOULDING, Roof Side Drain Trough, w/o Vinyl Roof (23-59-61)
	AR	---- ---	Spacer
	1	2840 980-1	MOULDING, Roof Side Drain Trough, w/Vinyl Roof (23-59-61)
	AR	---- ---	Spacer
11	1	2807 920-1	MOULDING PACKAGE, Body Center Pillar Outside Finish (23-23-16)
	4	6024 271	Screw
12	1	2664 812-3	MOULDING, Rear Door Wdo. Opng. Frame, Frt. (23-23-33)
13	1	2664 814-5	MOULDING, Rear Door Wdo. Opng. Frame, Upr. and Rr. (23-23-33)
14	1	3445 250	NAME PLATE, Deck Lid, "Plymouth" (23-19-114)
15	1	2783 011	MEDALLION, Deck Lid (23-19-114)
	2	---- ---	Nut
	3	6024 713	Washer
16	1	2965 334	PANEL, Deck Lid Finish (23-23-30)
	8	116 000	Nut
	6	6002 898	Retainer
	4	6026 523	Nut
17	1	3445 212-3	MOULDING, Qtr. Panel Outside (23-23-39)
18	1	2807 618-9	MOULDING PACKAGE, Qtr. Outside Wheel Opng. (23-23-39)
19	1	2809 682-3	MOULDING PACKAGE, Qtr. Outside Belt, use w/Vinyl Roof or Two Tone Paint (23-23-39)
	6	6002 354	Fastener
20	1	3445 210-1	MOULDING, Rear Door (23-23-33)
21	1	2663 442-3	MOULDING, Frt. Door Wdo. Opng. Frame, Rear (23-23-32)
22	1	3514 074-5	MOULDING PACKAGE, Body Side Sill Outside (23-23-2)
	18	6002 840	Retainer
	2	6002 708	Retainer and Seal
	2	6026 523	Nut
23	2	3445 208	MOULDING, Frt. Door (23-23-32)

All Packages Include Attaching Parts

Part Type Code is Indicated in Parentheses

1970
EXTERIOR VIEW - VALIANT V-L 4 DOOR SEDAN

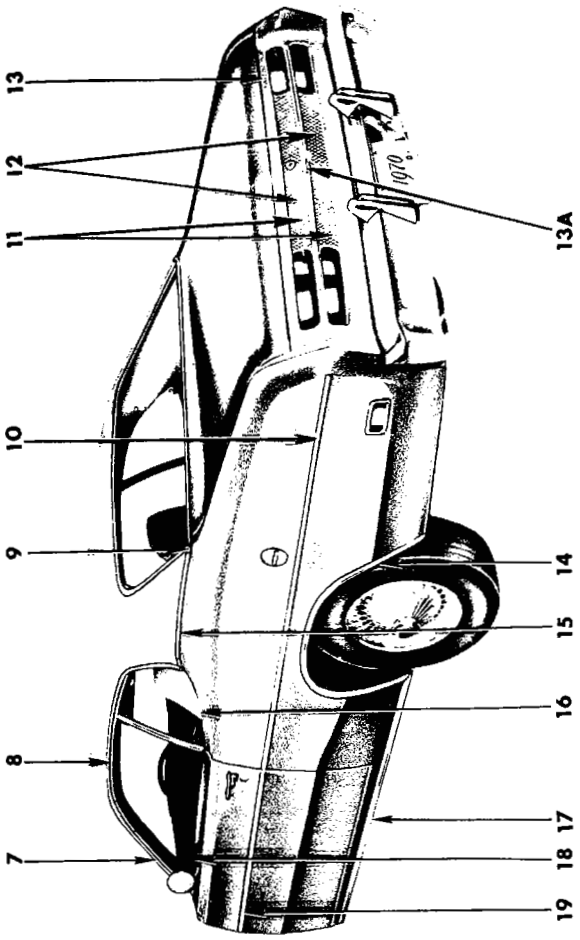

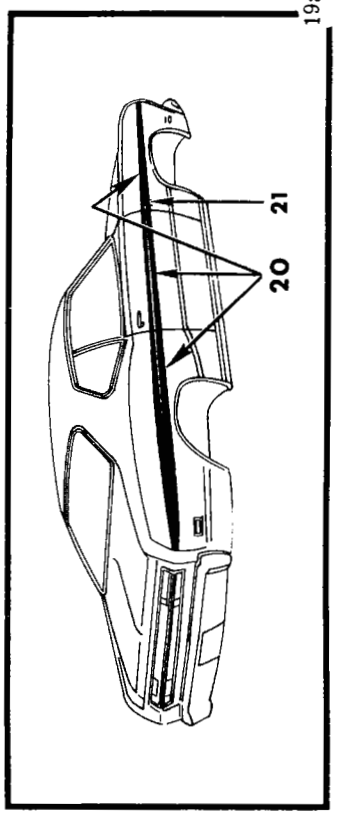

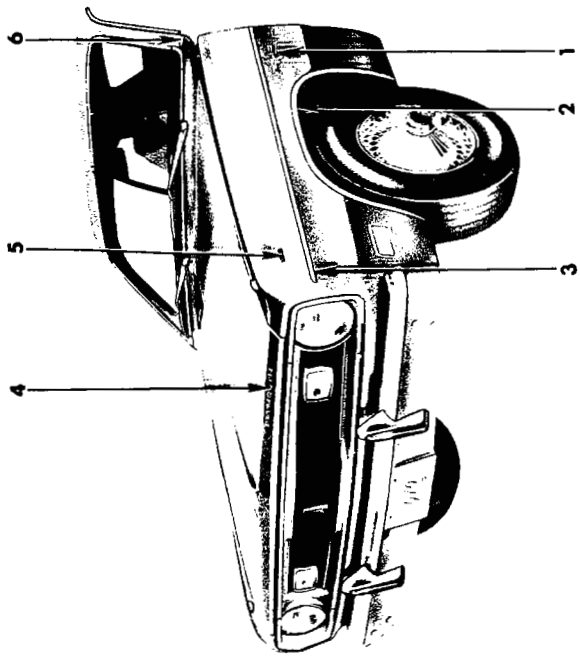

1970
EXTERIOR VIEW - VALIANT (DUSTER) V-L FASTBACK

REF. NO.	QTY	PART NUMBER	DESCRIPTION
1	2	3446 784	NAME PLATE, Fender Side (Valiant Sport Coupe) (12-15-21)
	8	6027 352	Nut
	2	3505 787	NAME PLATE, Fender Outside, "Valiant" (12-15-21)
	2	3505 742	DECAL, Fender Outside, "Duster" (12-15-21)
2	1	2807 896-7	MOULDING PACKAGE, Fender Wheel Opng. (12-15-2)
	7	6024 271	Screw
3	2	3445 206	MOULDING, Fender Side (12-15-2)
4	1	2785 791	NAME PLATE, Hood Front (15-06-3)
	3	6027 552	Nut
5	2	2579 612	ORNAMENT, Fender Side, "V-8" (12-15-21)
	4	6026 404	Nut
6	1	3549 196-7	MOULDING PACKAGE, Frt. Pillar Lwr., use w/Vinyl Roof or Two Tone Paint (23-23-14)
	2	9427 804	Screw
7	1	3444 930-1	MOULDING, Body Frt. Pillar Drain Trough, w/o Vinyl Roof (23-59-61)
	AR	---- ---	Spacer
	1	3445 932-3	MOULDING, Body Frt. Pillar Drain Trough, w/Vinyl Roof (23-59-61)
	AR	---- ---	Spacer
8	1	3444 932-3	MOULDING, Roof Side Drain Trough, w/o Vinyl Roof (23-59-61)
	AR	---- ---	Spacer
	1	3445 934-5	MOULDING, Roof Side Drain Trough, w/Vinyl Roof (23-59-61)
	AR	---- ---	Spacer
9	1	3514 060-1	MOULDING PACKAGE, Qtr. Outside Belt, Rear, use w/Vinyl Roof or Two Tone Paint (23-23-39)
	2	6023 898	Screw
10	2	3445 216	MOULDING, Qtr. Pnl. Outside (23-23-39)
11	1	3570 898	TAPE, Deck Opng. Lwr. Pnl., Lwr. (23-23-12)
	1	3570 897	TAPE, Deck Opng. Lwr. Pnl., Upr. (23-23-12)
12	1	3685 403	TAPE PACKAGE, Deck Opng. Upr. & Lwr. Pnl. (23-23-12)
13	1	3444 927	NAME PLATE, Deck Opng. Lwr. Pnl. Plymouth (23-34-184)
13A	1	3506 048	DECAL, Duster Dust Cloud, Deck Opening Lower Panel (23-34-184)
14	1	3419 768-9	MOULDING PACKAGE, Qtr. Outside Wheel Opng. (23-23-39)
	18	6024 271	Screw
15	1	3444 412-3	MOULDING, Qtr. Outside Belt, Frt., use w/Vinyl Roof or Two Tone Paint (23-23-39)
	4	6002 354	Retainer
	4	6002 297	Retainer
	4	9420 218	Nut
16	1	3444 410-1	MOULDING, Qtr. Wdo. Outside Belt (23-23-39)
	8	6003 013	Retainer
17	1	3514 074-5	MOULDING PACKAGE, Body Side Sill (23-23-2)
	18	6002 840	Retainer
	2	6002 708	Retainer and Seal
	2	6026 523	Nut
18	1	3444 408-9	MOULDING, Door Outside Belt (23-23-32)
	14	6003 013	Retainer
19	2	3445 214	MOULDING, Frt. Door Outside (23-23-32)
20	1	3570 906-7	TAPE, Fender Side, "Gold" (12-15-33)
	1	3570 908-9	TAPE, Door Outside, "Gold" (23-23-12)
	1	3570 902-3	TAPE, Qtr. Panel Outside, "Gold" (23-23-12)
	1	3685 378-9	TAPE PACKAGE, Body Side, Fender, Door, Qtr. Panel, "Gold" (23-23-12)
21	2	3570 896	DECAL, Fender Side, "Gold Duster" (12-15-21)

All Packages Include Attaching Parts

Part Type Code is Indicated in Parentheses

1970
EXTERIOR VIEW - VALIANT (DUSTER) V-L FASTBACK

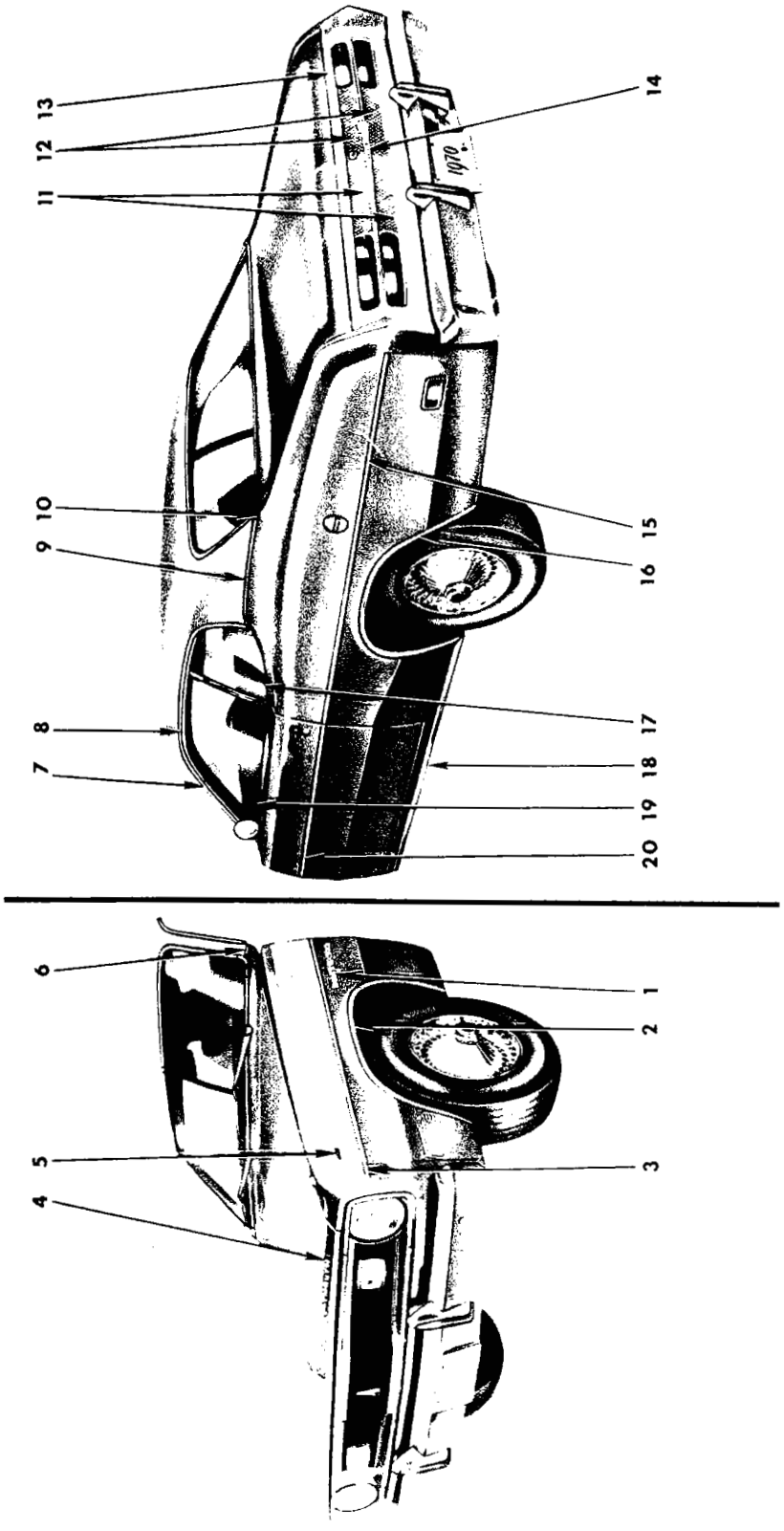

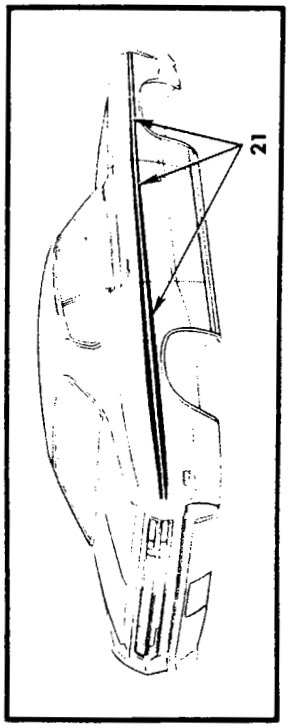

19a3175 A

1970
EXTERIOR VIEW - VALIANT (DUSTER 340) V-8 FAST BACK

REF. NO.	QTY	PART NUMBER	DESCRIPTION
1	1	3505 742	DECAL, Fender Side, "Duster" (12-15-21)
	1	3505 743	"340" (12-15-21)
	2	3505 787	NAME PLATE, Fender Outside, "Valiant" (12-15-21)
2	1	2807 896-7	MOULDING PACKAGE, Fender Wheel Opng. (12-15-2)
	7	6024 271	Screw
3	2	3445 206	MOULDING, Fndr. Side (12-15-2)
4	1	2785 791	NAME PLATE, Hood Frt. (15-06-3)
	3	6027 552	Nut
5	2	2579 612	ORNAMENT, Fender Side (V-8) (12-15-21)
	4	6026 404	Nut
6	1	3549 196-7	MOULDING PACKAGE, Frt. Plr. Lwr. w/Vinyl Roof or Two Tone Paint (23-23-14)
	2	9427 804	Screw
7	1	3444 930-1	MOULDING, Body Front Plr. Drain Trough, w/o Vinyl Roof (23-59-61)
	AR	---- ---	Spacer
	1	3445 932-3	MOULDING, Body Front Plr. Drain Trough w/Vinyl Roof (23-59-61)
	AR	---- ---	Spacer
8	1	3444 932-3	MOULDING, Roof Side Drain Trough, w/o Vinyl Roof (23-59-61)
	AR	---- ---	Spacer
	1	3445 934-5	MOULDING, Roof Side Drain Trough, w/Vinyl Roof (23-59-61)
	AR	---- ---	Spacer
9	1	3444 412-3	MOULDING, Qtr. Outside Belt, Frt. use w/Vinyl Roof or Two Tone Paint (23-23-39)
	4	6002 354	Retainer
	4	6002 297	Retainer
	4	9420 218	Nut
10	1	3514 060-1	MOULDING PACKAGE, Qtr. Outside Belt, Rear, use w/Vinyl Roof or Two Tone Paint (23-23-39)
	2	6023 898	Screw
11	1	3504 586	TAPE, Deck Opng. Lwr. Pnl., Lwr. (23-23-12)
	1	3444 883	TAPE, Deck Opng. Lwr. Pnl., Upr. (23-23-12)
12	1	3685 404	TAPE PACKAGE, Deck Opng. Upr. & Lwr. Pnl. (23-23-12)
13	1	3444 927	NAME PLATE, Deck Opening Lwr. Pnl. "Plymouth" (23-34-184)
14	1	3506 049	DECAL, Duster 340 Dust Cloud Deck Opng. Lwr. Pnl. (23-34-184)
15	2	3445 216	MOULDING, Qtr. Pnl. Outside (23-23-39)
16	1	3419 768-9	MOULDING PACKAGE, Qtr. Outside Wheel Opng. (23-23-39)
	18	6024 271	Screw
17	1	3444 410-1	MOULDING, Qtr. Wdo. Outside Belt (23-23-39)
	8	6003 013	Retainer
18	1	3514 074-5	MOULDING PACKAGE, Body Side Sill (23-23-2)
	18	6002 840	Retainer
	2	6002 708	Retainer and Seal
	2	6026 523	Nut
19	1	3444 408-9	MOULDING, Door Outside Belt (23-23-32)
	14	6003 013	Retainer
20	2	3445 214	MOULDING, Frt. Door Outside (23-23-32)
21	1	3444 542-3	TAPE, Fender Color Stripe, "Black" (12-15-33)
	1	3444 548-9	TAPE, Door Color Stripe, "Black" (23-23-12)
	1	3444 554-5	TAPE, Qtr. Pnl. Color Stripe, "Black" (23-23-12)
	1	3685 374-5	TAPE PACKAGE, Body Side, Fender, Door, Qtr. Panel, "Black" (23-23-12)

All Packages Include Attaching Parts

Part Type Code is Indicated in Parentheses

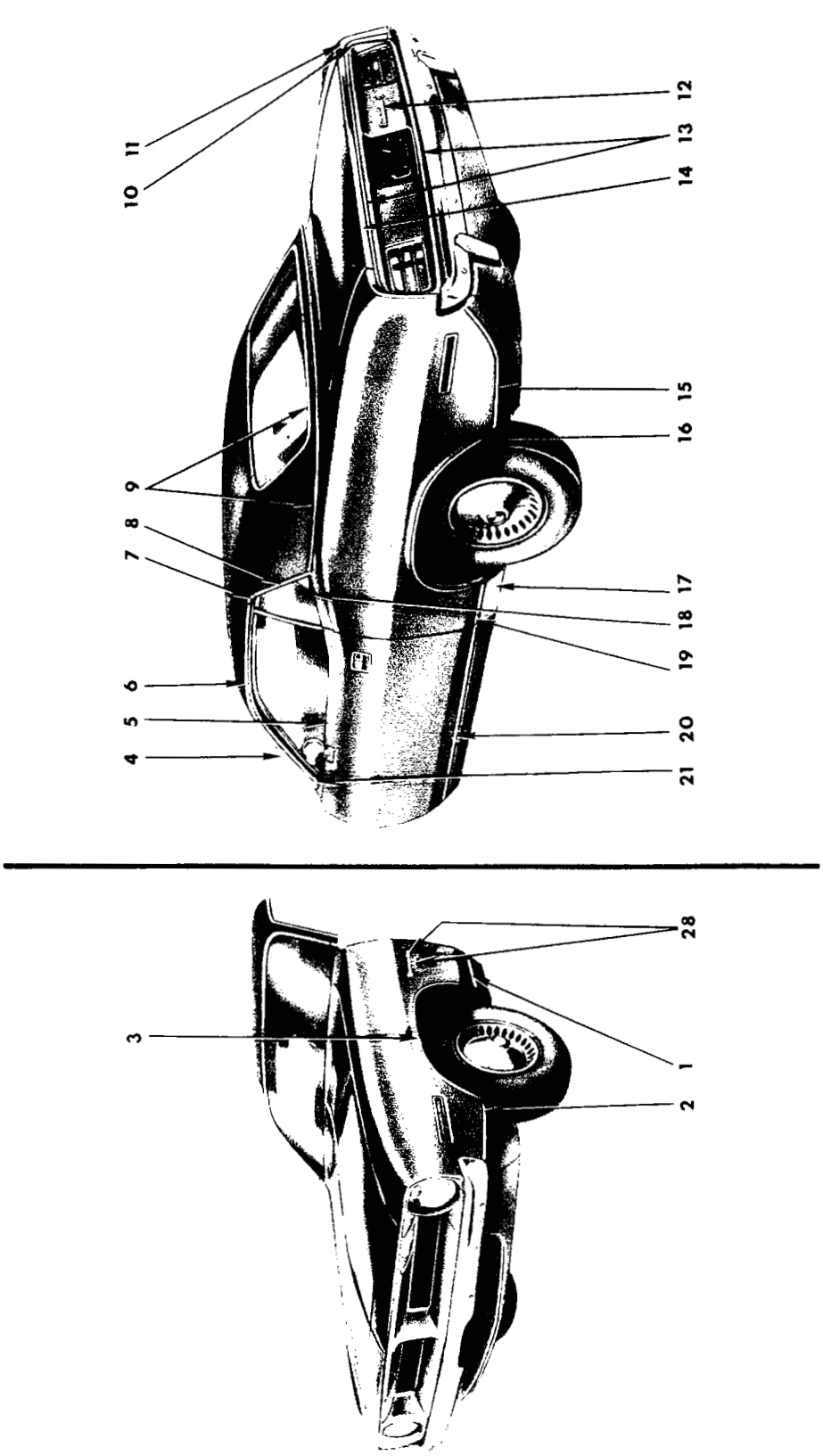

1970
EXTERIOR VIEW - BARRACUDA B-H 2 DOOR HARDTOP

REF. NO.	QTY	PART NUMBER	DESCRIPTION
1	AR	3505 955	TAPE, Fender Side Lower Rear, "Red and White" (12-15-33)
2	AR	3505 955	TAPE, Fender Side Lower Front, "Red and White" (12-15-33)
3	1	3419 702-3	MOULDING PACKAGE, Fender Wheel Opng. (12-15-2)
	9	6024 271	Screw
4	1	3419 906-7	MOULDING PACKAGE, Body Front Pillar Drain Trough (23-59-61)
	6	6028 721	Screw
5	1	3419 778-9	MOULDING PACKAGE, Door Outside Belt (23-23-32)
	14	6001 910	Retainer
	2	6002 162	Retainer
	2	6026 523	Nut
6	1	3549 190-1	MOULDING PACKAGE, Roof Side Drain Trough, Front (23-59-61)
	12	6028 721	Screw
7	1	3444 582-3	CAP, Roof Side Drain Trough Front to Rear Corner (23-59-57)
	2	6028 721	Screw
8	1	3549 192-3	MOULDING PACKAGE, Roof Side Drain Trough, Rear (23-59-61)
	4	6028 721	Screw
9	1	3419 782-3	MOULDING PACKAGE, Qtr. Outside Belt, use w/Vinyl Roof or Two Tone Paint (23-23-39)
	2	6002 957	Retainer
	12	---- ---	Retainer
	14	9420 276	Nut
10	1	3419 704-5	MOULDING PACKAGE, Deck Lid Opng. Lwr. Pnl. End (23-23-23)
	4	6001 432	Retainer w/Seal
	4	1839 995	Nut
11	1	3419 706-7	MOULDING PACKAGE, Qtr. Outside Rear (23-23-39)
	6	6002 885	Retainer w/Seal
	6	9420 867	Nut
12	1	2786 559	NAME PLATE, Deck Opng. Lwr. Pnl., "Barracuda" (23-34-184)
	3	9420 294	Nut
13	2	3419 708	MOULDING PACKAGE, Deck Opng. Lwr. Pnl. Upr. and Lwr. (23-23-23)
	6	---- ---	Retainer w/Seal
14	1	3419 701	MOULDING PACKAGE, Deck Lid (23-23-30)
	6	---- ---	Retainer w/Seal
15	AR	3505 955	TAPE, Qtr. Pnl. Outside, Rr., "Red and White" (23-23-12)
16	1	3419 784-5	MOULDING PACKAGE, Qtr. Outside Whl. Opng. (23-23-39)
	18	6024 271	Screw
17	1	3481 968-9	ORNAMENT, Qtr. Outside Pnl. Air Intake (23-34-238)
	4	9420 867	Nut
	4	---- ---	Screw
18	1	3419 780-1	MOULDING PACKAGE, Qtr. Wdo. Outside Belt, UP TO Type (23-23-39)
	6	6001 910	Retainer
	1	3620 324-5	MOULDING PACKAGE, Qtr. Outside Wdo. Belt, w/Attaching Tab, AFTER Type (23-23-39)
	2	6001 910	Retainer
	1	6028 721	Screw
19	AR	3505 955	TAPE, Qtr. Pnl. Outside, Frt., "Red and White" (23-23-12)
20	AR	3505 955	TAPE, Door Outside, "Red and White" (23-23-12)
21	1	3446 456-7	MOULDING, Body Frt. Pillar Lower (23-23-14)
	2	6028 674	Screw
22	1	3446 022-3	TAPE, Fender Side Color Stripe, "Red" (12-15-33)
	1	3446 024-5	"White"
	1	3446 026-7	"Blue"
	1	3446 028-9	"Black"
	1	3446 444-5	"Green"
23	1	3446 030-1	TAPE, Door Outside Color Stripe, "Red" (23-23-12)
	1	3446 032-3	"White"
	1	3446 034-5	"Blue"
	1	3446 036-7	"Black"
	1	3446 446-7	"Green"
24	1	3446 030-1	TAPE, Qtr. Pnl. Rr. Color Stripe, "Red" (23-23-12)
	1	3446 032-3	"White"
	1	3446 034-5	"Blue"
	1	3446 036-7	"Black"
	1	3446 446-7	"Green"
25	1	3446 406-7	MOULDING, Fender Side, "Red" (12-15-2)
	1	3446 408-9	"White"
	1	3446 410-1	"Blue"
	1	2965 354-5	"Black"
	1	3446 452-3	"Green"
26	2	2965 356	MOULDING, Door Outside, "Black" (23-23-32)
	2	3446 400	"Red"
	2	3446 402	"White"
	2	3446 404	"Brite Blue"
	2	3446 450	"Light Green"
27	1	2965 358-9	MOULDING, Qtr. Pnl. Outside, "Black" (23-23-39)
	1	3446 394-5	"Red"
	1	3446 396-7	"White"
	1	3446 398-9	"Brite Blue"
	1	3446 448-9	"Light Green"

CONTINUED ON NEXT PAGE

All Packages Include Attaching Parts

Part Type Code is Indicated in Parentheses

1970
EXTERIOR VIEW - BARRACUDA B-H 2 DOOR HARDTOP

REF. NO.	QTY	PART NUMBER	DESCRIPTION
28	2	2786 559	NAME PLATE, Fender Side, "Barracuda" (12-15-21)
	6	6026 095	Nut
	2	2949 240	NAME PLATE, Fender Side, "383" (12-15-21)
	2	6026 711	Seal
	4	6027 352	Nut w/Seal
	2	2579 804	NAME PLATE, Fender Side, "383 Four Barrel" (12-15-21)
	6	6026 404	Nut w/Seal
29	1	3570 520-1	TAPE, Frt. Fender Color Stripe, "Black" (12-15-33)
	1	3570 522-3	"White" (12-15-33)
	1	3570 528-9	TAPE, Door Color Stripe, "Black" (23-23-12)
	1	3570 530-1	"White" (23-23-12)
	1	3570 536-7	TAPE, Qtr. Pnl. Color Stripe, "Black" (23-23-12)
	1	3570 538-9	"White" (23-23-12)
	1	3685 386-7	TAPE PACKAGE, Body Side, Fender, Door, Qtr. Panel, "Black" (23-23-12)
	1	3685 388-9	"White" (23-23-12)

All Packages Include Attaching Parts

Part Type Code is Indicated in Parentheses

1970
EXTERIOR VIEW - BARRACUDA B-H 2 DOOR HARDTOP

NOTES

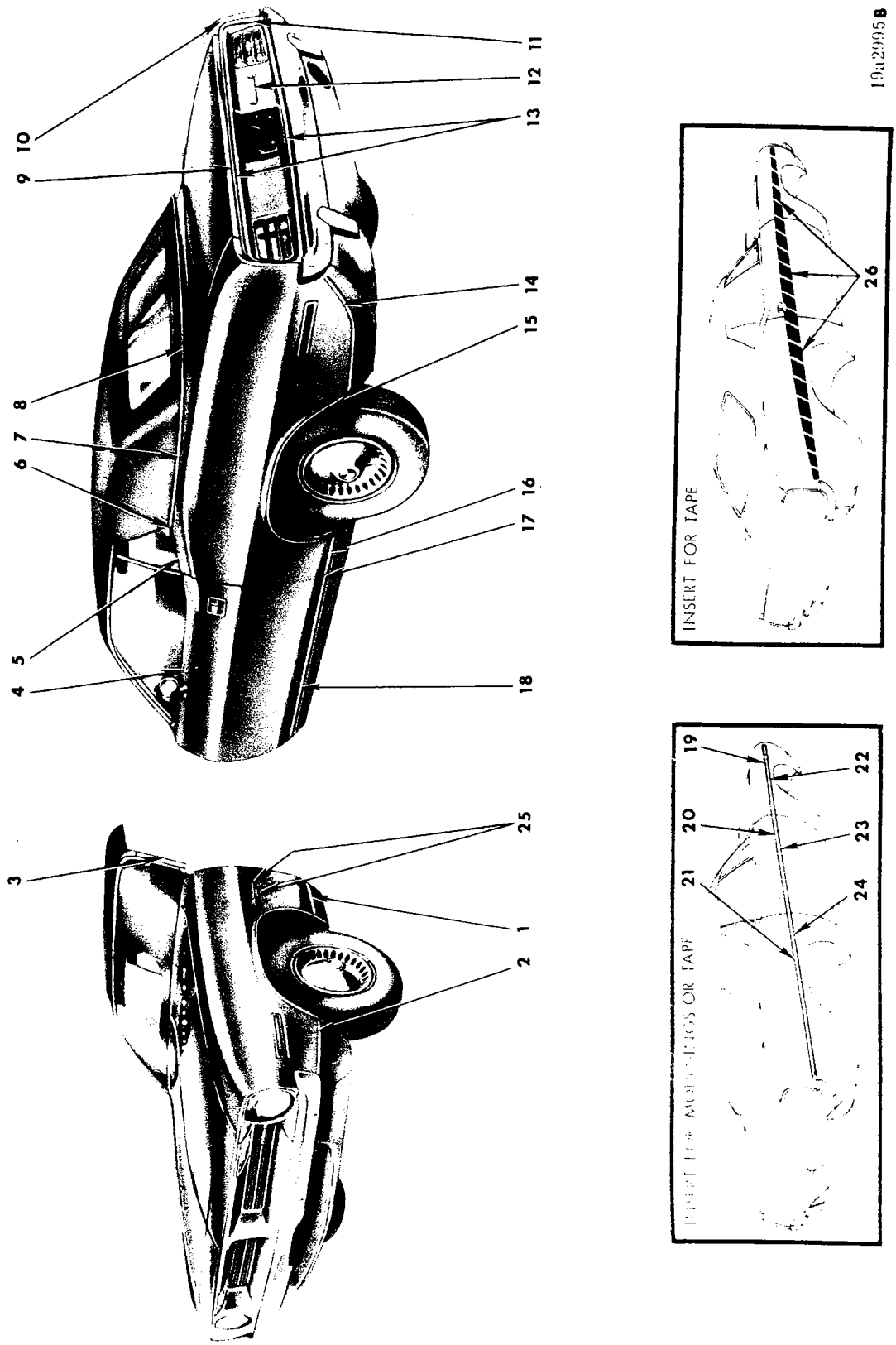

1970
EXTERIOR VIEW - BARRACUDA B-H CONVERTIBLE COUPE

REF. NO.	QTY	PART NUMBER	DESCRIPTION
1	AR	3505 955	TAPE, Fender Side Lower Rear, "Red and White" (12-15-33)
2	AR	3505 955	TAPE, Fender Side Lower Frt., "Red and White" (12-15-33)
3	1	3419 814-5	MOULDING PACKAGE, Body Frt. Upr. Plr. Outside Mldg. (23-23-14)
4	1	3419 778-9	MOULDING PACKAGE, Door Outside Belt (23-23-32)
	14	6001 910	Retainer
	2	6002 162	Retainer 2 6026 523 Nut
5	1	3419 770-1	MOULDING PACKAGE, Qtr. Outside Belt, Frt., w/Belt Mldg. (23-23-39)
	2	9414 752	Screw
6	1	3419 772-3	MOULDING PACKAGE, Qtr. Outside Belt, Frt., w/O Belt Mldg. (23-23-39)
	2	6002 852	Retainer
	2	9414 752	Screw
7	1	3419 774-5	MOULDING PACKAGE, Qtr. Outside Belt, Rear (23-23-39)
	2	9414 732	Screw
	10	6002 976	Retainer
	10	---- ---	Screw
8	1	3419 776	MOULDING PACKAGE, Deck Opng. Upr. Pnl. (23-23-31)
	9	6002 976	Retainer
	9	9429 605	Screw
9	1	3419 701	MOULDING PACKAGE, Deck Lid (23-23-30)
	6	---- ---	Retainer w/Seal
10	1	3419 706-7	MOULDING PACKAGE, Qtr. Outside Rear (23-23-39)
	6	6002 885	Retainer w/Seal
	6	9420 867	Nut
11	1	3419 704-5	MOULDING PACKAGE, Deck Opng. Lwr. Pnl End (23-23-23)
	4	6001 432	Retainer w/Seal
	4	1839 995	Nut
12	1	2786 559	NAME PLATE, Deck Opng. Lwr. Panel Barracuda (23-34-184)
	3	9420 294	Nut
13	2	3419 708	MOULDING PACKAGE, Deck Opng. Lwr. Panel Upr. & Lwr. (23-23-23)
	6	6002 873	Retainer w/Seal
14	AR	3505 955	TAPE, Qtr. Pnl. Rear, "Red and White" (23-23-12)
15	1	3419 784-5	MOULDING PACKAGE, Qtr. Outside Wheel Opening (23-23-39)
	18	6024 271	Screw
16	1	3481 968-9	ORNAMENT, Qtr. Outside Pnl. Air Intake (w/o Body Side Mldgs.) (23-34-334)
	4	9420 867	Nut
	4	---- ---	Screw
17	AR	3505 955	TAPE, Quarter Panel, Front, "Red and White" (23-23-12)
18	AR	3505 955	TAPE, Door Outside, "Red and White" (23-23-12)
19	1	3446 022-3	TAPE, Fender Side Color Stripe, "Red" (12-15-33)
	1	3446 024-5	"White"
	1	3446 026-7	"Blue"
	1	3446 028-9	"Black"
	1	3446 444-5	"Green"
20	1	3446 030-1	TAPE, Door Outside Color Stripe, "Red" (23-23-12)
	1	3446 032-3	"White"
	1	3446 034-5	"Blue"
	1	3446 036-7	"Black"
	1	3446 446-7	"Green"
21	1	3446 030-1	TAPE, Qtr. Pnl. Outside Stripe, "Red" (23-23-12)
	1	3446 032-3	"White"
	1	3446 034-5	"Blue"
	1	3446 036-7	"Black"
	1	3446 446-7	"Green"
22	1	2965 354-5	MOULDING, Fender Side, "Black" (12-15-2)
	1	3446 406-7	"Red"
	1	3446 408-9	"White"
	1	3446 410-1	"Blue"
	1	3446 452-3	"Green"
23	2	2965 356	MOULDING, Door Outside, "Black" (23-23-32)
	2	3446 400	"Red"
	2	3446 402	"White"
	2	3446 404	"Blue"
	2	3446 450	"Green"
24	1	2965 358-9	MOULDING, Qtr. Outside, "Black" (23-23-39)
	1	3446 394-5	"Red"
	1	3446 396-7	"White"
	1	3446 398-9	"Blue"
	1	3446 448-9	"Green"
25	2	2786 559	NAME PLATE, Fender Side, "Barracuda" (12-15-21)
	6	6026 095	Nut
	2	2949 240	NAME PLATE, Fender Side, "383"
	2	6026 711	Seal
	4	6027 352	Nut w/Seal
	2	2579 804	NAME PLATE, Fender Side, "383 Four Barrel"
	6	6026 404	Nut w/Seal
26	1	3570 520-1	TAPE, Frt. Fender Color Stripe, "Black" (12-15-33)
	1	3570 522-3	"White"
	1	3570 528-9	TAPE, Door Color Stripe, "Black" (23-23-12)
	1	3570 530-1	"White"
	1	3570 536-7	TAPE, Qtr. Pnl. Color Stripe, "Black" (23-23-12)
	1	3570 538-9	"White"
	1	3685 386-7	TAPE PACKAGE, Body Side, Fender, Door, Qtr. Panel, "Black" (23-23-12)
	1	3685 388-9	"White"

All Packages Include Attaching Parts

Part Type Code is Indicated in Parentheses

1970

EXTERIOR VIEW - BARRACUDA B-H CONVERTIBLE COUPE

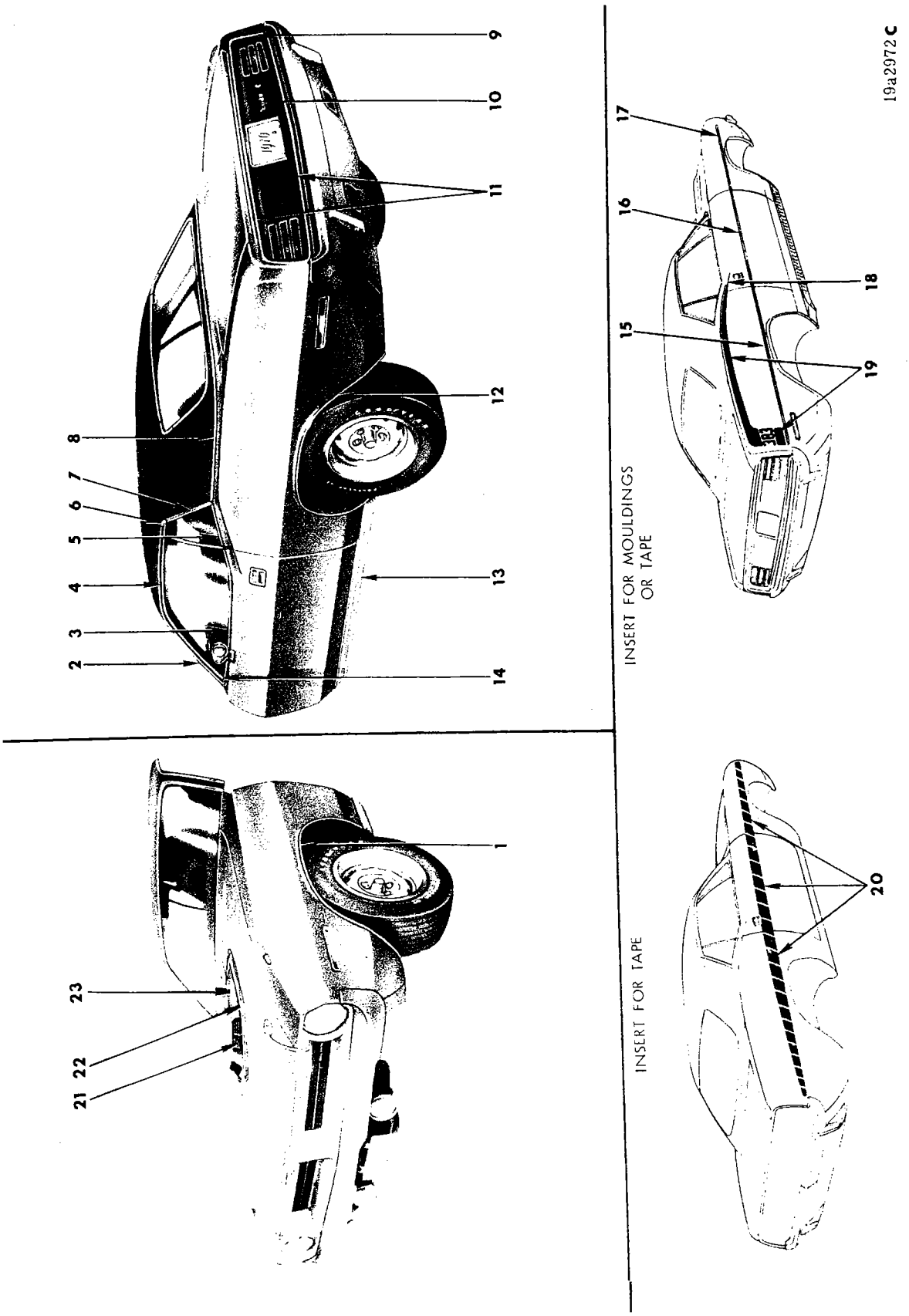

1970
EXTERIOR VIEW - BARRACUDA (CUDA) B-S 2 DOOR HARDTOP

REF. NO.	QTY	PART NUMBER	DESCRIPTION
1	1	3419 702-3	MOULDING PACKAGE, Fender w/Opening (12-15-2)
	9	6024 271	Screw
2	1	3419 906-7	MOULDING PACKAGE, Body Frt. Plr. Drain Trough (23-59-61)
	6	6028 721	Screw
3	1	3419 778-9	MOULDING PACKAGE, Door Outside Belt (23-23-32)
	14	6001 910	Retainer
	2	6002 162	Retainer
	2	6026 523	Nut
4	1	3549 190-1	MOULDING PACKAGE, Roof Side Drain Trough, Frt. (23-59-61)
	12	6028 721	Screw
5	1	3419 780-1	MOULDING PACKAGE, Qtr. Wdo. Outside Belt, UP TO Type (23-23-39)
	6	6001 910	Retainer
	1	3620 324-5	MOULDING PACKAGE, Qtr. Wdo. Outside Belt, w/Attaching Tab, AFTER Type (23-23-39)
	2	6001 910	Retainer
	1	6028 721	Screw
6	1	3444 582-3	CAP, Roof Side Drain Trough, Front to Rear Corner (23-59-57)
	2	6028 721	Screw
7	1	3549 192-3	MOULDING PACKAGE, Roof Side Drain Trough, Rear (23-59-61)
	4	6028 721	Screw
8	1	3419 782-3	MOULDING PACKAGE, Qtr. Outside Belt, use w/Vinyl Roof or Two Tone Paint (23-23-39)
	2	6002 957	Retainer
	14	9420 276	Nut
	12	---- ---	Retainer
9	1	3419 704-5	MOULDING PACKAGE, Deck Opng. Lwr. Pnl. End (23-23-23)
	4	6001 432	Retainer w/Seal
	4	1839 995	Nut
10	1	3446 960	NAME PLATE, Deck Opng. Lwr. Pnl., "Cuda" (23-34-184)
11	2	3419 708	MOULDING PACKAGE, Deck Opng. Lwr. Pnl., Upr. and Lwr. (23-23-23)
	6	---- ---	Retainer w/Seal
12	1	3419 784-5	MOULDING PACKAGE, Qtr. Outside Wheel Opening (23-23-39)
	18	6024 271	Screw
13	1	3549 646-7	MOULDING PACKAGE, Body Side Sill Outside (23-23-2)
	11	6024 271	Screw
	7	6002 769	Retainer
14	1	3446 456-7	MOULDING, Body Frt. Plr. Lwr., use w/Vinyl Roof (23-23-14)
	2	6028 674	Screw
15	1	2965 358-9	MOULDING, Qtr. Outside, "Black" (23-23-39)
	1	3446 394-5	"Brite Red"
	1	3446 396-7	"White"
	1	3446 398-9	"Brite Blue"
	1	3446 448-9	"Light Green"
16	2	2965 356	MOULDING, Door Outside, "Black" (23-23-32)
	2	3446 400	"Brite Red"
	2	3446 402	"White"
	2	3446 404	"Brite Blue"
	2	3446 450	"Light Green"
17	1	2965 354-5	MOULDING, Fender Side, "Black" (12-15-2)
	1	3446 406-7	"Brite Red"
	1	3446 408-9	"White"
	1	3446 410-1	"Brite Blue"
	1	3446 452-3	"Light Green"
18	1	3444 884-5	TAPE, Door Color Stripe (23-23-12)
19	1	3444 886-7	TAPE, Qtr. Pnl. Color Stripe, "383" (23-23-12)
	1	3444 888-9	"440"
	1	3444 890-1	"Hemi"
	1	3506 228-9	"340"
20	1	3570 520-1	TAPE, Frt. Fender Color Stripe, "Black" (12-15-33)
	1	3570 522-3	"White"
	1	3570 524-5	"Chartreuse"
	1	3570 526-7	"Magenta"
	1	3570 528-9	TAPE, Door Color Stripe, "Black" (23-23-12)
	1	3570 530-1	"White"
	1	3570 532-3	"Chartreuse"
	1	3570 534-5	"Magenta"
	1	3570 536-7	TAPE, Qtr. Pnl. Color Stripe, "Black" (23-23-12)
	1	3570 538-9	"White"
	1	3570 540-1	"Chartreuse"
	1	3570 542-3	"Magenta"
	1	3685 386-7	TAPE PACKAGE, Body Side, Fender, Door, Qtr. Panel, "Black" (23-23-12)
	1	3685 388-9	"White"
	1	3685 390-1	"Chartreuse"
	1	3685 392-3	"Magenta"
21	1	3418 660-1	GRILLE, Scoop Hood Carb. F/Air (15-03-15)
22	1	3514 076	MOULDING PACKAGE, Hood A/Cleaner Opng. (15-25-2)
	AR	120 614	Nut
23	1	3577 472	SCOOP, Hood Carb. F/Air (15-03-64)
**	2	2998 798	NAME PLATE, Hood, w/Air Carb., "Cuda 440-6 (15-06-3)
	2	3462 269	"Hemi Cuda"
	2	3577 361	"340 Four Barrel"
	2	3443 159	"Cuda 340"
	2	2998 796	"Cuda 383"

All Packages Include Attaching Parts

Part Type Code is Indicated in Parentheses

1970

EXTERIOR VIEW - BARRACUDA (CUDA) B-S 2 DOOR HARD TOP

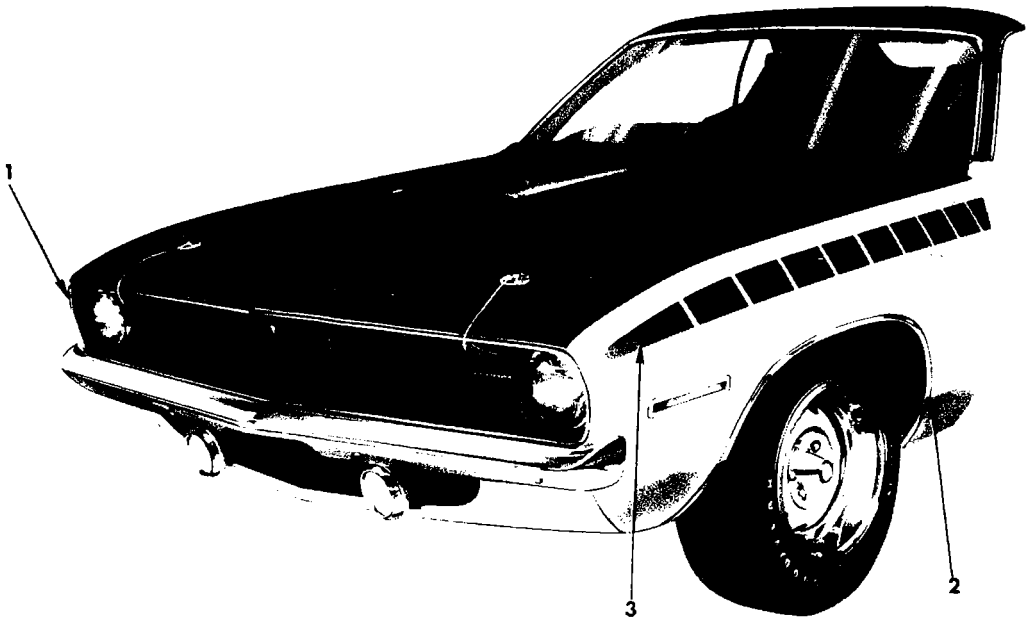

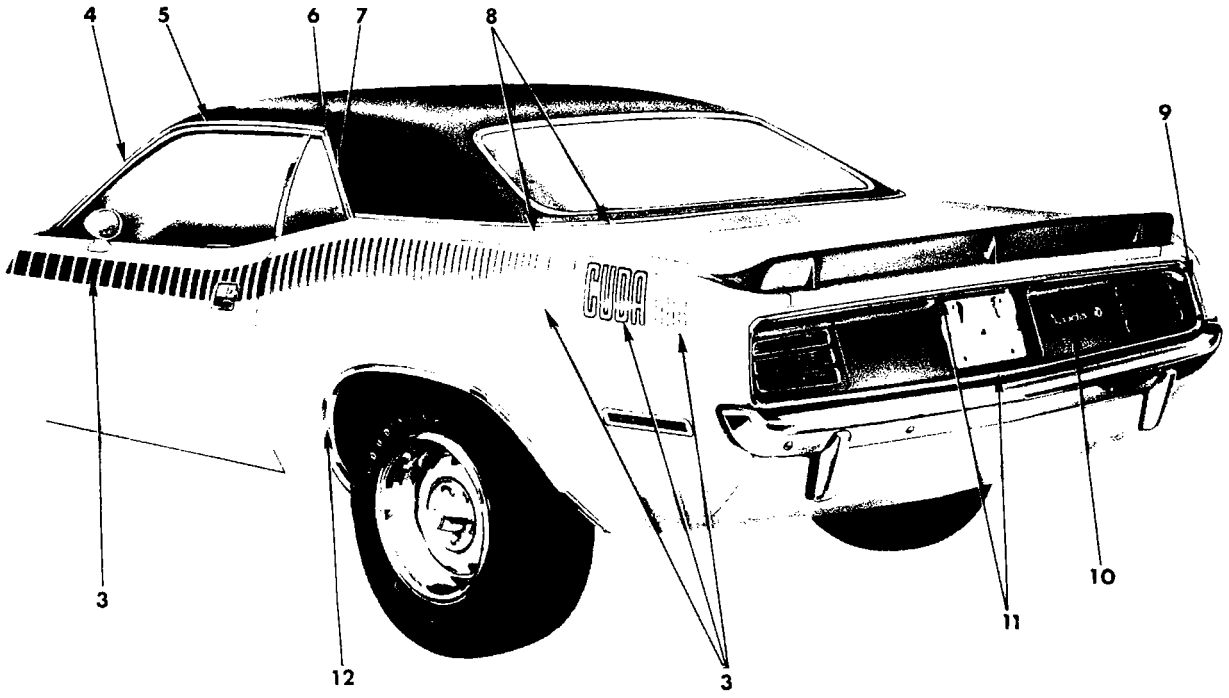

19a3360

1970
EXTERIOR VIEW - BARRACUDA (CUDA) (AAR) (TRANS-AM PROGRAM) B-S 2 DOOR HARDTOP

REF. NO.	QTY	PART NUMBER	DESCRIPTION
1	1	3443 214-5	MOULDING, Headlamp Bezel (8-34-42)
2	1	3419 702-3	MOULDING PACKAGE, Fender Wheel Opng. (12-15-2)
	18	6024 271	Screw
3	1	3570 556-7	TAPE, Fender Side Color Stripe, "Black" (12-15-33)
	1	3570 558-9	TAPE, Door Outside Color Stripe, "Black" (23-23-12)
	1	3570 560-1	TAPE, Qtr. Pnl. Outside Color Stripe and Rear Cuda, "Black" (23-23-12)
	1	3685 396-7	TAPE PACKAGE, Body Side, Fender, Door, Qtr. Panel, "Black" (23-23-12)
4	1	3419 906-7	MOULDING PACKAGE, Body Front Pillar Drain Trough (23-59-61)
	6	6028 721	Screw
5	1	3549 190-1	MOULDING PACKAGE, Roof Side Drain Trough, Front (23-59-61)
	12	6028 721	Screw
6	1	3444 582-3	CAP, Roof Side Drain Trough Front to Rear Corner (23-59-57)
	2	6028 721	Screw
7	1	3549 192-3	MOULDING PACKAGE, Roof Side Drain Trough, Rear (23-59-61)
	4	6028 721	Screw
8	1	3419 782-3	MOULDING PACKAGE, Qtr. Outside Belt, use w/Vinyl Roof (23-23-39)
	2	6002 957	Retainer
	14	9420 276	Nut
	12	---- ---	Retainer
9	1	3419 704-5	MOULDING PACKAGE, Deck Opng. Lwr. Pnl. End (23-23-23)
	4	6001 432	Retainer w/Seal
	4	1839 995	Nut
10	1	3446 960	NAME PLATE, Deck Opng. Lwr. Pnl., "Cuda" (23-23-184) (UP TO Approx. April 1)
	1	3570 071	NAME PLATE, Deck Opng. Lwr. Pnl., "Cuda" (23-34-184) (AFTER Approx. April 1)
11	2	3419 708	MOULDING PACKAGE, Deck Opng. Lwr. Pnl. Upr. and Lwr. (23-23-23)
	6	---- ---	Retainer and Seal
12	1	3419 784-5	MOULDING PACKAGE, Qtr. Outside Wheel Opening (23-23-39)
	18	6024 271	Screw

All Packages Include Attaching Parts

Part Type Code is Indicated in Parentheses

1970

EXTERIOR VIEW - BARRACUDA (CUDA) (AAR) (TRANS-AM PROGRAM) B-S 2 DOOR HARDTOP

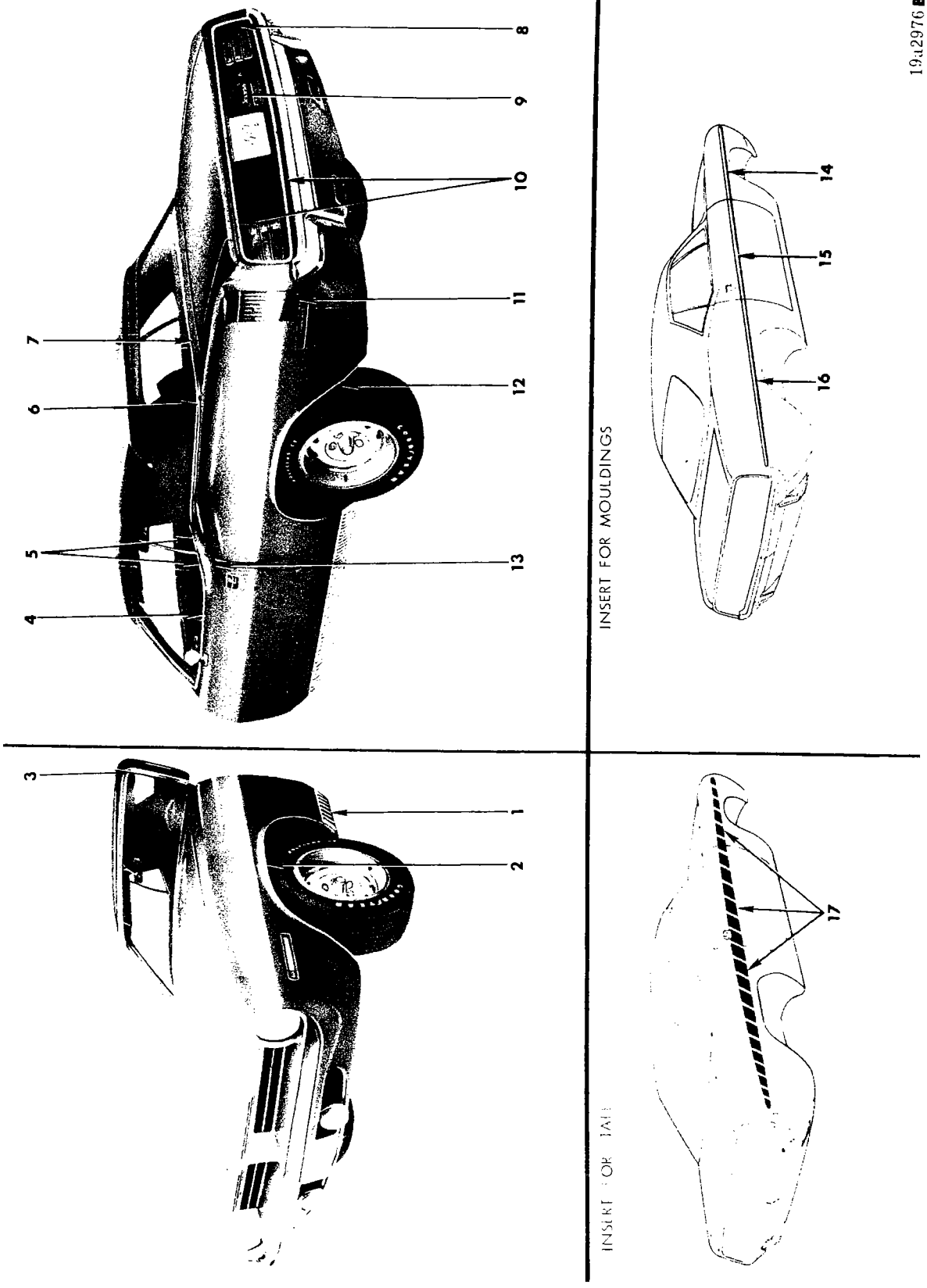

1970
EXTERIOR VIEW - BARRACUDA (CUDA) B-S CONVERTIBLE COUPE

REF. NO.	QTY	PART NUMBER	DESCRIPTION
1	1	3549 646-7	MOULDING PACKAGE, Body Side Sill Outside (23-23-2)
	11	6024 271	Screw
	7	6002 769	Retainer
2	1	3419 702-3	MOULDING PACKAGE, Fender w/Opening (12-15-2)
	9	6024 271	Screw
3	1	3419 814-5	MOULDING PACKAGE, Body Frt. Upr. Pillar Outside (23-23-14)
	2	3445 622	Spacer
4	1	3419 778-9	MOULDING PACKAGE, Door Outside Belt (23-23-32)
	14	6001 910	Retainer
	2	6002 162	Retainer
	2	6026 523	Nut
5	1	3419 772-3	MOULDING PACKAGE, Qtr. Outside Belt, Frt., use w/o Belt Mldg. (23-23-39)
	2	6002 852	Retainer
	2	9414 752	Screw
	1	3419 770-1	MOULDING PACKAGE, Qtr. Outside Belt, Frt., use w/Belt Mldg. (23-23-39)
	2	9414 752	Screw
6	1	3419 774-5	MOULDING PACKAGE, Qtr. Outside Belt, Rear (23-23-39)
	2	9414 732	Screw
	10	6002 976	Retainer
	10	---- ---	Screw
7	1	3419 776	MOULDING PACKAGE, Deck Opng. Upr. Pnl. (23-23-31)
	9	6002 976	Retainer
	9	---- ---	Screw
8	1	3419 704-5	MOULDING PACKAGE, Deck Opng. Lwr. Pnl. End (23-23-23)
	4	6001 432	Retainer w/Seal
	4	1839 995	Nut
9	1	3446 960	NAME PLATE, Deck Opng. Lwr. Pnl. Cuda (23-34-184)
10	2	3419 708	MOULDING PACKAGE, Deck Opng. Lwr. Pnl. Upr. and Lwr. (23-23-23)
	6	---- ---	Retainer and Seal
11	1	3444 886-7	TAPE, Qtr. Pnl. Color Stripe, "383" (23-23-12)
	1	3444 888-9	"440"
	1	3444 890-1	"Hemi"
	1	3506 228-9	"340"
12	1	3419 784-5	MOULDING PACKAGE, Qtr. Outside Whl. Opng. (23-23-39)
	18	6024 271	Screw
13	1	3444 884-5	TAPE, Door Outside Color Stripe (23-23-12)
14	1	2965 354-5	MOULDING, Fender Side, "Black" (12-15-2)
	1	3446 406-7	"Brite Red"
	1	3446 409-9	"White"
	1	3446 410-1	"Brite Blue"
	1	3446 452-3	"Light Green"
15	2	2965 356	MOULDING, Door Outside, "Black" (23-23-32)
	2	3446 400	"Brite Red"
	2	3446 402	"White"
	2	3446 404	"Brite Blue"
	2	3446 450	"Light Green"
16	1	2965 358-9	MOULDING, Qtr. Outside, "Black" (23-23-39)
	1	3446 394-5	"Brite Red"
	1	3446 396-7	"White"
	1	3446 398-9	"Brite Blue"
	1	3446 448-9	"Light Green"
17	1	3570 520-1	TAPE, Frt. Fender Color Stripe, "Black" (12-15-33)
	1	3570 522-3	"White"
	1	3570 524-5	"Chartreuse"
	1	3570 526-7	"Magenta"
	1	3570 528-9	TAPE, Door Color Stripe, "Black" (23-23-12)
	1	3570 530-1	"White"
	1	3570 532-3	"Chartreuse"
	1	3570 534-5	"Magenta"
	1	3570 536-7	TAPE, Qtr. Pnl. Color Stripe, "Black" (23-23-12)
	1	3570 538-9	"White"
	1	3570 540-1	"Chartreuse"
	1	3570 542-3	"Magenta"
	1	3685 386-7	TAPE PACKAGE, Body Side, Fender, Door, Qtr. Panel, "Black" (23-23-12)
	1	3685 388-9	"White"
	1	3685 390-1	"Chartreuse"
	1	3685 392-3	"Magenta"
**	2	2998 798	NAME PLATE, Hood Scoop, "Cuda 440-6" (15-06-3)
	2	2998 797	"Cuda 440"
	2	2998 796	"Cuda 383"
	2	3462 271	"Cuda 340"
	2	3443 159	"Cuda 340", w/Out F/Air

All Packages Include Attaching Parts

Part Type Code is Indicated in Parentheses

1970

EXTERIOR VIEW - BARRACUDA (CUDA) B-S CONVERTIBLE COUPE

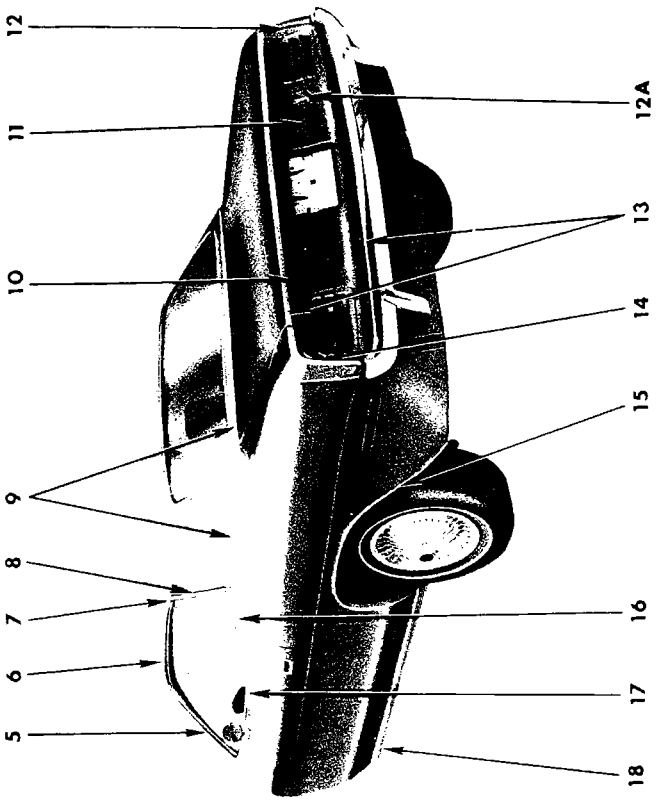

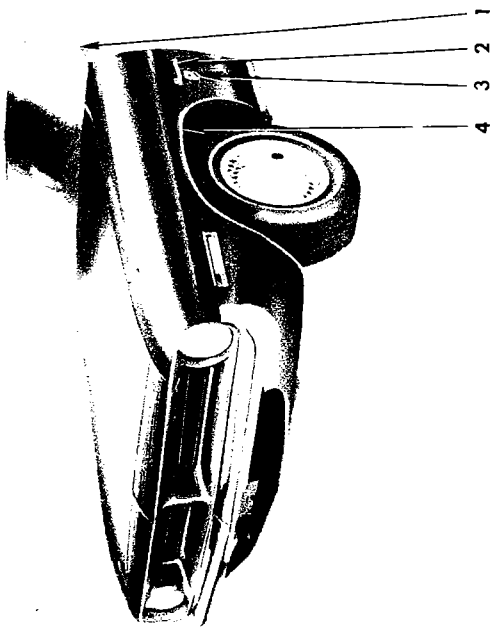

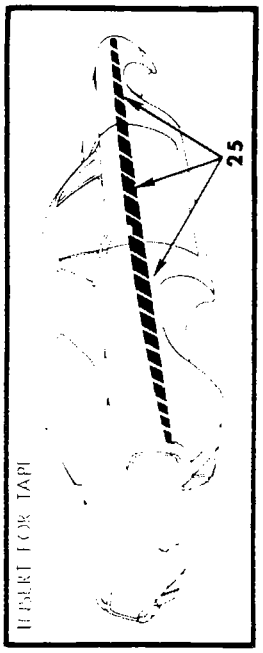

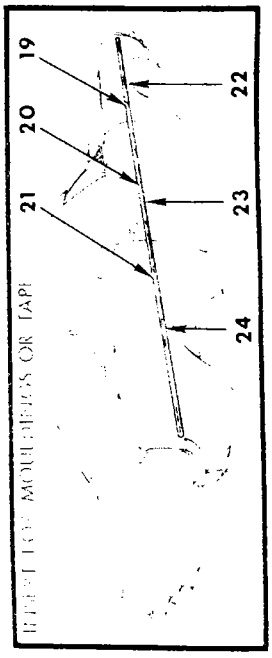

1970
EXTERIOR VIEW - BARRACUDA (GRAN COUPE) B-P 2 DOOR HARDTOP

REF. NO.	QTY	PART NUMBER	DESCRIPTION
1	1	3446 456-7	MOULDING PACKAGE, Body Frt. Pillar, Lwr., w/Vinyl Roof (23-23-14)
	2	6028 674	Screw
2	2	2786 559	NAME PLATE, Fender Side (12-15-21)
	6	6026 095	Nut
3	2	3504 075	NAME PLATE, Fender Side (12-15-21)
	4	6026 095	Nut
4	1	3419 702-3	MOULDING PACKAGE, Fender Wheel Opening (12-15-2)
	18	6028 545	Screw
5	1	3419 906-7	MOULDING PACKAGE, Body Frt. Pillar Drain Trough (23-59-61)
	6	6028 721	Screw
6	1	3549 190-1	MOULDING PACKAGE, Roof Side Drain Trough, Frt. (23-59-61)
7	1	3444 582-3	CAP, Roof Side Drain Trough (23-59-57)
	2	6028 721	Screw
8	1	3549 192-3	MOULDING PACKAGE, Roof Side Drain Trough, Rear (23-59-61)
	4	6028 721	Screw
9	1	3419 782-3	MOULDING PACKAGE, Qtr. Outside Belt, use w/Vinyl Roof or Two Tone Paint (23-23-39)
	2	6002 957	Retainer
	12	---- ---	Retainer
	14	9420 276	Nut
10	1	3419 701	MOULDING PACKAGE, Deck Lid (23-23-30)
	6	---- ---	Retainer w/Seal
11	1	2786 559	NAME PLATE, Deck Opng. Lwr. Pnl., "Barracuda" (23-34-184)
	3	9420 294	Nut
12	1	3419 704-5	MOULDING PACKAGE, Deck Opng. Lwr. Pnl. End (23-23-23)
	4	6001 432	Retainer w/Seal
	4	1839 995	Nut
12A	1	3454 767	MEDALLION, Deck Lid Lock Cyl. (23-17-19)
13	2	3419 708	MOULDING PACKAGE, Deck Opng. Lwr. Pnl., Upr. and Lwr. (23-23-23)
	6	---- ---	Retainer w/Seal
14	1	3419 706-7	MOULDING PACKAGE, Qtr. Outside Rear (23-23-39)
	6	6002 885	Retainer w/Seal
	6	9420 867	Nut
15	1	3419 784-5	MOULDING PACKAGE, Qtr. Outside Wheel Opening (23-23-39)
	18	6024 271	Screw
16	1	3419 780-1	MOULDING PACKAGE, Qtr. Wdo. Outside Belt, UP TO Type (23-23-39)
	6	6001 910	Retainer
	1	3620 324-5	MOULDING PACKAGE, Qtr. Outside Wdo. Belt, w/Attaching Tab, AFTER Type (23-23-39)
	2	6001 910	Retainer
	1	6028 721	Screw
17	1	3419 778-9	MOULDING PACKAGE, Door Outside Belt (23-23-32)
	14	6001 910	Retainer
	2	6002 162	Retainer
	2	6026 523	Nut
18	1	3419 786-7	MOULDING PACKAGE, Body Side Sill (23-23-2)
	14	6002 769	Retainer
	4	6024 271	Screw
19	1	2965 354-5	MOULDING, Fender Side, "Black" (12-15-2)
	1	3446 406-7	"Red"
	1	3446 408-9	"White"
	1	3446 410-1	"Blue"
	1	3446 452-3	"Green"
20	2	2965 356	MOULDING, Door Outside, "Black" (23-23-32)
	2	3446 400	"Red"
	2	3446 402	"White"
	2	3446 404	"Blue"
	2	3446 450	"Green"
21	1	2965 358-9	MOULDING, Qtr. Outside, "Black" (23-23-39)
	1	3446 394-5	"Red"
	1	3446 396-7	"White"
	1	3446 398-9	"Blue"
	1	3446 448-9	"Green"
22	1	3446 022-3	TAPE, Fender Side Frt. Color, "Red" (12-15-33)
	1	3446 024-5	"White"
	1	3446 026-7	"Blue"
	1	3446 028-9	"Black"
	1	3446 444-5	"Green"
23	1	3446 030-1	TAPE, Door Outside Color Stripe, "Red" (23-23-12)
	1	3446 032-3	"White"
	1	3446 034-5	"Blue"
	1	3446 036-7	"Black"
	1	3446 446-7	"Green"
24	1	3446 030-1	TAPE, Qtr. Pnl. Rear Color Stripe, "Red" (23-23-12)
	1	3446 032-3	"White"
	1	3446 034-5	"Blue"
	1	3446 036-7	"Black"
	1	3446 446-7	"Green"
25	1	3570 536-7	TAPE, Qtr. Pnl. Color Stripe, "Black" (23-23-12)
	1	3570 538-9	"White"
	1	3570 528-9	TAPE, Door Color Stripe, "Black" (23-23-12)
	1	3570 530-1	"White"
	1	3570 520-1	TAPE, Frt. Fender Color Stripe, "Black" (12-15-33)
	1	3570 522-3	"White"
	1	3385 386-7	TAPE PACKAGE, Body Side, Fender, Door, Qtr. Panel, "Black" (23-23-12)
	1	3685 388-9	"White"

All Packages Include Attaching Parts

Part Type Code is Indicated in Parentheses

1970
EXTERIOR VIEW - BARRACUDA (GRAN COUPE) B-P 2 DOOR HARDTOP

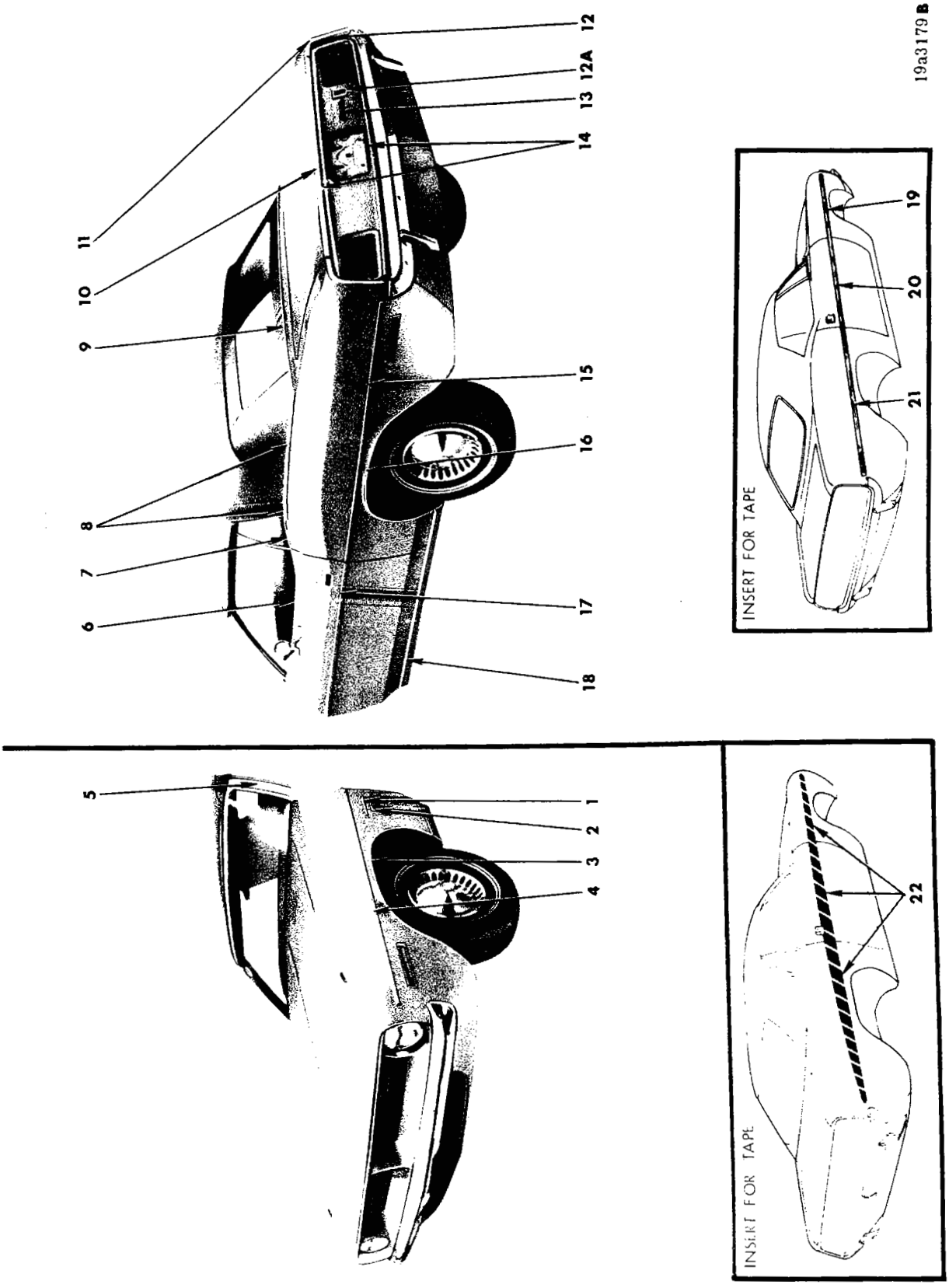

1970
EXTERIOR VIEW - BARRACUDA (GRAN COUPE) B-P CONVERTIBLE COUPE

REF. NO.	QTY	PART NUMBER	DESCRIPTION
1	2	2786 559	NAME PLATE, Fender Side (12-15-21)
	6	6026 095	Nut
2	2	3504 075	NAME PLATE, Fender Side (12-15-21)
	4	6026 095	Nut
3	1	3419 702-3	MOULDING PACKAGE, Fender Wheel Opening (12-15-2)
	18	6028 545	Screw
4	1	2965 354-5	MOULDING, Fender Side, "Black" (12-15-2)
	1	3446 406-7	"Red"
	1	3446 408-9	"White"
	1	3446 410-1	"Blue"
	1	3446 452-3	"Green"
5	1	3419 814-5	MOULDING PACKAGE, Body Frt. Upr. Plr. (23-23-14)
	2	3445 622	Spacer
6	1	3419 778-9	MOULDING PACKAGE, Door Outside Belt (23-23-32)
	14	6001 910	Retainer
	2	6002 162	Retainer
	2	6026 523	Nut
7	1	3419 770-1	MOULDING PACKAGE, Qtr. Outside Belt, Frt. (23-23-39)
	2	9414 756	Screw
8	1	3419 774-5	MOULDING PACKAGE, Qtr. Outside Belt, Rear (23-23-39)
	2	9414 732	Screw
	10	6002 976	Retainer
	10	---- ---	Screw
9	1	3419 776	MOULDING PACKAGE, Deck Opng. Upr. Pnl. (23-23-31)
	9	6002 976	Retainer
	9	9429 605	Screw
10	1	3419 701	MOULDING PACKAGE, Deck Lid (23-23-30)
	6	---- ---	Retainer w/Seal
11	1	3419 706-7	MOULDING PACKAGE, Qtr. Outside, Rear (23-23-39)
	6	6002 885	Retainer w/Seal
	6	9420 867	Nut
12	1	3419 704-5	MOULDING PACKAGE, Deck Opng. Lwr. Pnl. End (23-23-23)
	4	6001 432	Retainer w/Seal
	4	1839 995	Nut
12A	1	3454 767	MEDALLION, Deck Lid Lock Cyl. (23-17-19)
13	1	2786 559	NAME PLATE, Deck Opng. Lwr. Pnl. Barracuda (23-34-184)
	3	9420 294	Nut
14	2	3419 708	MOULDING PACKAGE, Deck Opng. Lwr. Pnl., Upr. and Lwr. (23-23-23)
	6	---- ---	Retainer w/Seal
15	1	2965 358-9	MOULDING, Qtr. Outside, "Black" (23-23-39)
	1	3446 394-5	"Red"
	1	3446 396-7	"White"
	1	3446 398-9	"Blue"
	1	3446 448-9	"Green"
16	1	3419 784-5	MOULDING PACKAGE, Qtr. Outside Wheel Opng. (23-23-39)
	18	6024 271	Screw
17	2	2965 356	MOULDING, Door Outside, "Black" (23-23-32)
	2	3446 400	"Red"
	2	3446 402	"White"
	2	3446 404	"Blue"
	2	3446 450	"Green"
18	1	3419 786-7	MOULDING PACKAGE, Body Side Sill (23-23-2)
	14	6002 769	Retainer
	4	6024 271	Screw
19	1	3446 022-3	TAPE, Fender Side, Color Stripe, "Red" (12-15-33)
	1	3446 024-5	"White"
	1	3446 026-7	"Blue"
	1	3446 028-9	"Black"
	1	3446 444-5	"Green"
20	1	3446 030-1	TAPE, Door Outside, Color Stripe, "Red" (23-23-12)
	1	3446 032-3	"White"
	1	3446 034-5	"Blue"
	1	3446 036-7	"Black"
	1	3446 446-7	"Green"
21	1	3446 030-1	TAPE, Qtr. Pnl. Rear, Color Stripe, "Red" (23-23-12)
	1	3446 032-3	"White"
	1	3446 034-5	"Blue"
	1	3446 036-7	"Black"
	1	3446 446-7	"Green"
22	1	3570 520-1	TAPE, Frt. Fender Color Stripe, "Black" (12-15-33)
	1	3570 522-3	"White"
	1	3570 528-9	TAPE, Door Color Stripe, "Black" (23-23-12)
	1	3570 530-1	"White"
	1	3570 536-7	TAPE, Qtr. Pnl. Color Stripe, "Black" (23-23-12)
	1	3570 538-9	"White"
	1	3685 386-7	TAPE PACKAGE, Body Side, Fender, Door, Qtr. Panel, "Black" (23-23-12)
	1	3685 388-9	"White"

All Packages Include Attaching Parts

Part Type Code is Indicated in Parentheses

1970

EXTERIOR VIEW - BARRACUDA (GRAN COUPE) B-P CONVERTIBLE COUPE

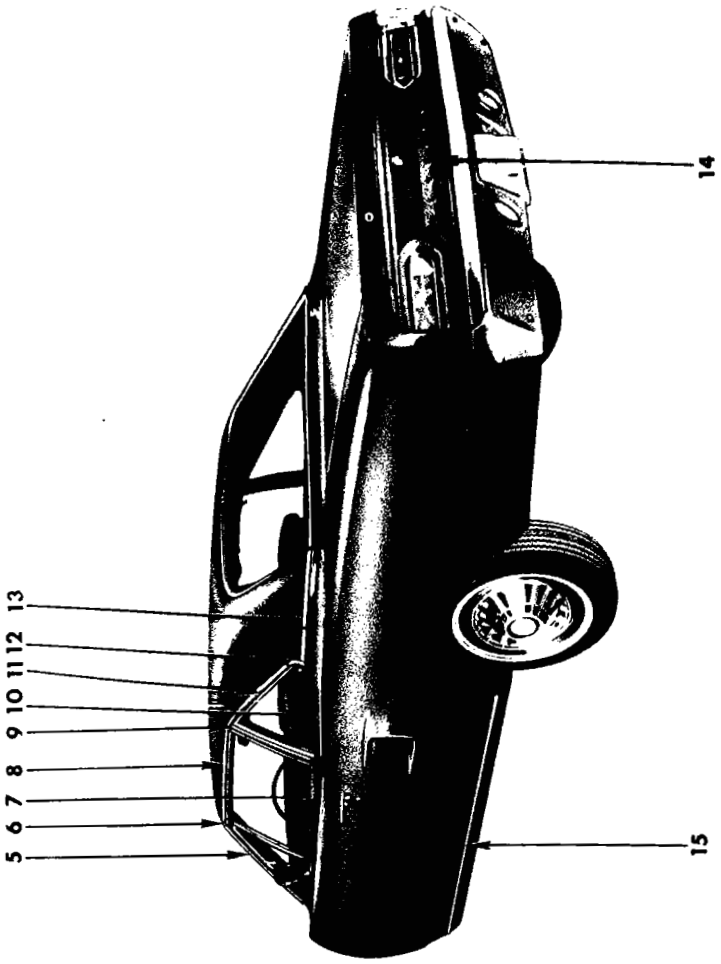

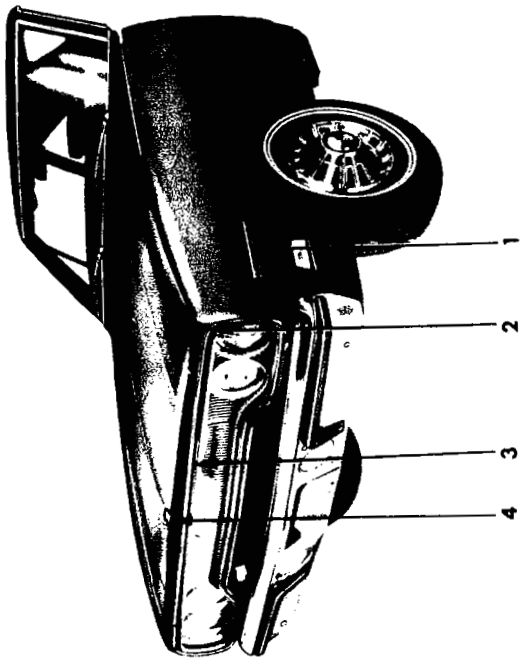

19a3151

1970
EXTERIOR VIEW - BELVEDERE R-L 2 DOOR SEDAN

REF. NO.	QTY	PART NUMBER	DESCRIPTION
1	2	2786 954	NAME PLATE, Fender Side (Belvedere) (12-15-21)
	6	6027 352	Nut
2	1	3443 108-9	MOULDING, Fender Frt. (12-15-2)
	6	6028 473	Rivet
3	1	3549 635	MOULDING PACKAGE, Hood Front (15-25-2)
	8	6024 271	Screw
4	1	2898 630	ORNAMENT, Hood Top (383-2 Bbl.) (15-03-18)
	1	2898 629	(383-4 Bbl.)
5	1	2840 280-1	MOULDING, Body Front Plr. Drain Trough, w/o Vinyl Roof (23-59-61)
	2	---- ---	Spacer
	1	2932 512-3	MOULDING PACKAGE, Body Front Pillar Drain Trough, w/Vinyl Roof (23-59-61)
	2	---- ---	Spacer
6	2	2783 028	COVER, Roof Side Drain Trough Mldg. Joint (23-59-57)
7	1	2932 098-9	MOULDING PACKAGE, Door Outside Belt (23-23-32)
	12	6002 549	Retainer
8	1	2840 282-3	MOULDING, Roof Side Drain Trough, w/o Vinyl Roof (23-59-61)
	6	---- ---	Spacer
	1	2841 504-5	MOULDING, Roof Side Drain Trough, w/Vinyl Roof (23-59-61)
	6	---- ---	Spacer
9	1	2840 894-5	MOULDING, Body Lock Upr. Pillar Outside (23-23-16)
10	1	2932 234-5	MOULDING PACKAGE, Qtr. Wdo. Outside Belt (23-23-73)
	2	6023 898	Screw
	8	6026 552	Nut
	8	9414 752	Screw
11	1	2840 702-3	MOULDING, Qtr. Wdo. Upr. Outside (23-23-73)
12	1	2932 536-7	CAP PACKAGE, Roof Side Drain Trough Mldg. End (23-59-57)
	2	6024 564	Screw
13	1	2932 270-1	MOULDING PACKAGE, Qtr. Outside Belt, use w/Vinyl Roof or Two Tone Paint (23-23-39)
	8	6002 558	Retainer
14	1	2528 974	NAME LETTER, Deck Opng. Lower Panel "P" (23-34-184)
	1	2528 975	"L"
	1	2528 976	"Y"
	1	2528 977	"M"
	1	2528 978	"O"
	1	2528 979	"U"
	1	2528 980	"T"
	1	2528 981	"H"
	16	9420 263	Nut
15	1	2932 268-9	MOULDING PACKAGE, Body Side Sill Outside (23-23-2)
	16	6001 910	Retainer
	2	6002 338	Retainer
	2	6026 523	Nut
	2	6024 403	Screw

All Packages Include Attaching Parts

Part Type Code is Indicated in Parentheses

1970

EXTERIOR VIEW - BELVEDERE R-L 2 DOOR SEDAN

19a3146A

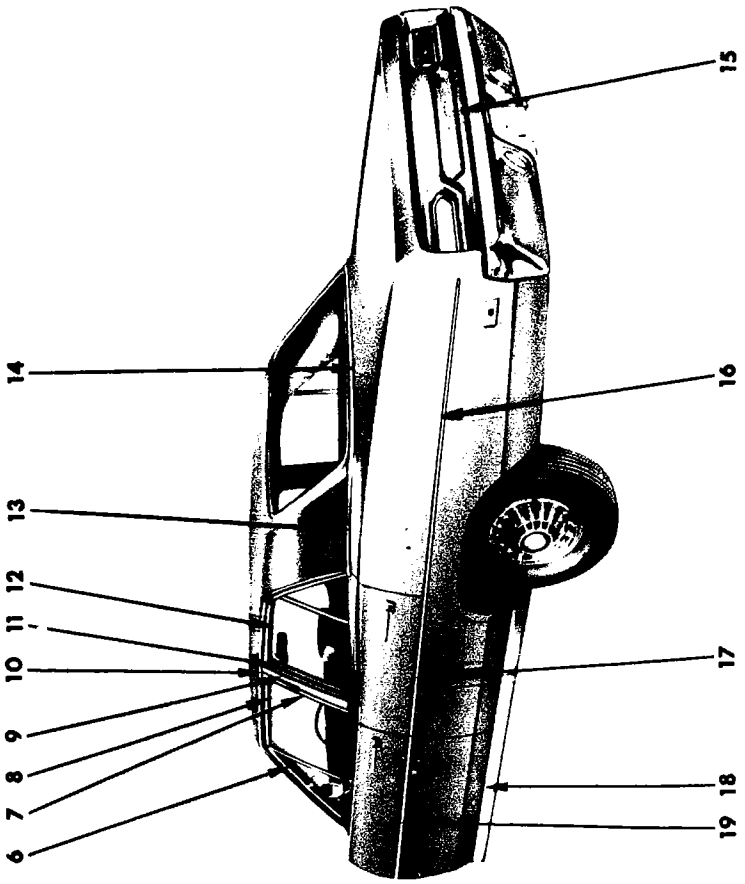

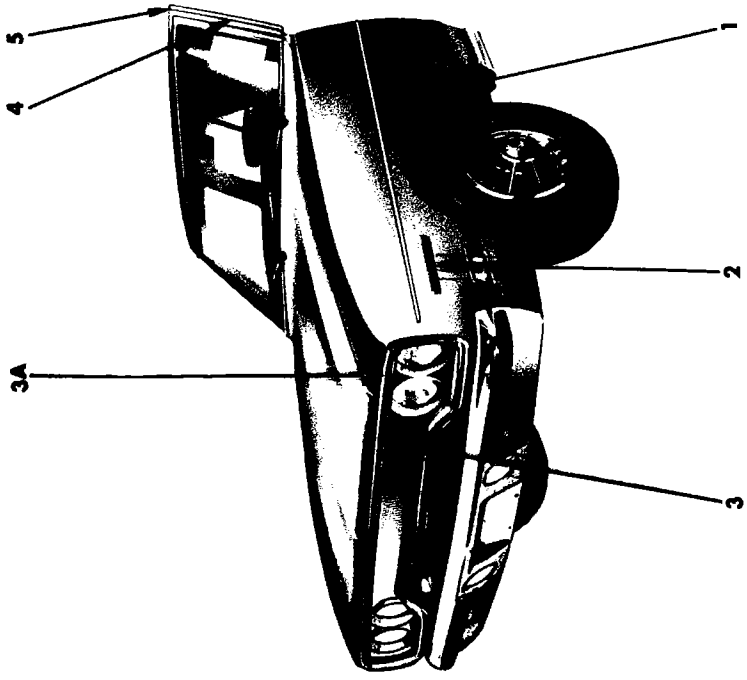

1970
EXTERIOR VIEW - BELVEDERE R-L 4 DOOR SEDAN

Printed in U.S.A.

REF. NO.	QTY	PART NUMBER	DESCRIPTION
1	2	3549 198	MOULDING PACKAGE, Fender Side, "Black" (12-15-2)
	2	3549 132	"Blue"
	2	3549 131	"Green"
	2	3549 130	"Burnt Orange"
	2	6024 142	Nut
	2	6006 496	Retainer
	6	6002 922	Retainer
2	2	2786 954	NAME PLATE, Fender Side (Belvedere) (12-15-21)
	6	6027 352	Nut
3	1	3549 635	MOULDING PACKAGE, Hood Front (15-25-2)
	8	6024 271	Screw
3A	1	3443 108-9	MOULDING, Fender Front (12-15-2)
	6	6028 473	Rivet
4	1	2840 274-5	MOULDING, Body Frt. Plr. Drain Trough, w/o Vinyl Roof (23-59-61)
	2	---- ---	Spacer
	1	2932 514-5	MOULDING PACKAGE, Body Frt. Plr. Drain Trough, w/Vinyl Roof (23-59-61)
	2	---- ---	Spacer
5	2	2783 028	COVER, Roof Side Drain Trough Mldg. Joint (23-59-57)
6	1	2570 750-1	MOULDING, Frt. Door Wdo. Opng. Frame, Frt. (23-23-32)
7	1	2570 754-5	MOULDING, Frt. Door Wdo. Opng. Frame, Rear (23-23-32)
8	1	2570 752-3	MOULDING, Frt. Door Wdo. Opng. Frame, Upr. (23-23-32)
9	1	2860 636-7	PANEL, Body Ctr. Plr. Outside Finish (23-23-16)
	8	6024 271	Screw
10	1	2840 276-7	MOULDING, Roof Side Drain Trough, w/o Vinyl Roof (23-59-61)
	6	---- ---	Spacer
	1	2841 508-9	MOULDING, Roof Side Drain Trough, w/Vinyl Roof (23-59-61)
	6	---- ---	Spacer
11	1	2570 914-5	MOULDING, Rr. Door Wdo. Opng. Frame, Frt. (23-23-33)
12	1	2811 438-9	MOULDING, Rr. Door Wdo. Opng. Frame, Upr. (23-23-33)
13	1	2932 252-3	MOULDING PACKAGE, Qtr. Outside Belt, use w/Vinyl Roof or Two Tone Paint (23-23-39)
	2	6002 558	Retainer and Seal
	6	6002 338	Retainer
	6	9420 867	Nut
14	1	2932 231	MOULDING PACKAGE, Deck Opng. Upr. Pnl., use w/Vinyl Roof or Two Tone Paint (23-23-31)
	6	6002 557	Retainer
15	1	2528 974	NAME LETTER, Deck Opng. Lower Panel "P" (23-34-184)
	1	2528 975	"L"
	1	2528 976	"Y"
	1	2528 977	"M"
	1	2528 978	"O"
	1	2528 979	"U"
	1	2528 980	"T"
	1	2528 981	"H"
	16	9420 263	Nut
16	1	3549 212-3	MOULDING PACKAGE, Qtr. Outside, "Black" (23-23-39)
	1	3549 218-9	"Blue"
	1	3549 216-7	"Green"
	1	3549 214-5	"Burnt Orange"
	6	6002 922	Retainer
	8	6006 496	Retainer w/Seal
	8	6024 152	Nut
17	2	3419 983	MOULDING PACKAGE, Rear Door Outside, "Black" (23-23-33)
	2	3549 610	"Blue"
	2	3549 609	"Green"
	2	3549 608	"Burnt Orange"
	2	6002 922	Retainer
	2	6002 162	Retainer
	2	6026 523	Nut
18	1	2932 268-9	MOULDING PACKAGE, Body Side Sill Outside (23-23-2)
	16	6001 910	Retainer
	2	6002 338	Retainer
	2	6026 523	Nut
	2	6024 403	Screw
19	2	3481 732	MOULDING PACKAGE, Frt. Door Outside, "Black" (23-23-32)
	2	3549 236	"Blue"
	2	3549 235	"Green"
	2	3549 234	"Burnt Orange"
	2	6002 162	Retainer
	2	6026 523	Nut
	3	6002 922	Retainer

All Packages Include Attaching Parts

Part Type Code is Indicated in Parentheses

1970
EXTERIOR VIEW - BELVEDERE R-L 4 DOOR SEDAN

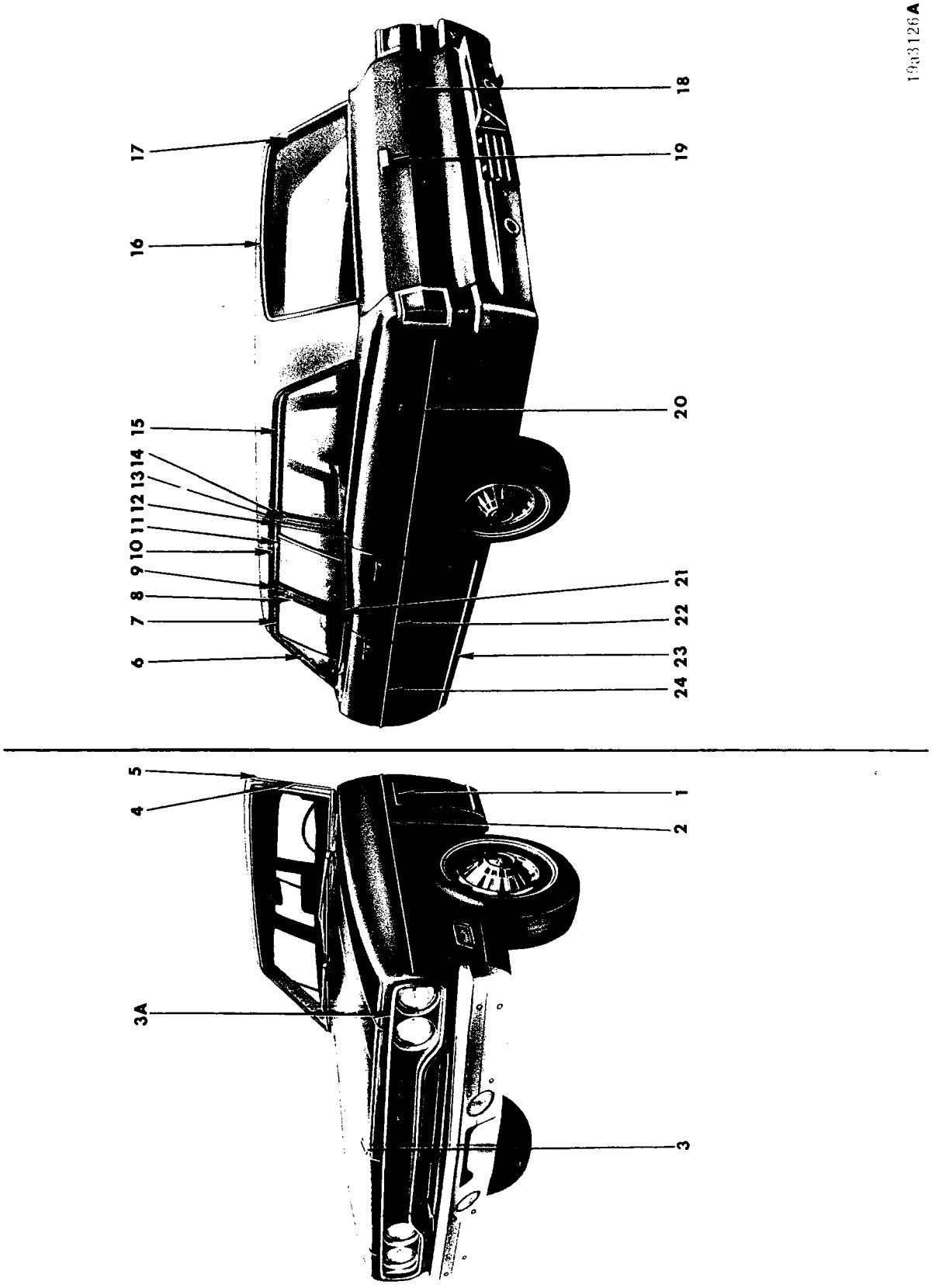

1970
EXTERIOR VIEW - BELVEDERE R-L STATION WAGON

REF. NO.	QTY	PART NUMBER	DESCRIPTION
1	2	2786 954	NAME PLATE, Fender Side (Belvedere) (12-15-21)
	6	6027 352	Nut
2	2	3549 198	MOULDING PACKAGE, Fender Side, "Black" (12-15-2)
	2	3549 132	"Blue"
	2	3549 131	"Green"
	2	3549 130	"Burnt Orange"
	2	6024 152	Nut
	2	6006 496	Retainer
	6	6002 922	Retainer
3	1	2998 630	ORNAMENT, Hood Top (383-2 BBL) (15-03-18)
	1	2998 629	(383-4 BBL)
	1	9420 253	Nut
3A	1	3443 108-9	MOULDING, Fender Front (12-15-2)
	6	6028 473	Rivet
4	1	2605 854-5	MOULDING, Body Frt. Plr. Drain Trough (23-59-61)
	2	---- ---	Spacer
5	2	2605 208	COVER, Roof Side Drain Trough (23-59-57)
6	1	2570 750-1	MOULDING, Frt. Door Wdo. Opng. Frame, Frt. (23-23-32)
7	1	2570 752-3	MOULDING, Frt. Door Wdo. Opng. Frame, Upr. (23-23-32)
8	1	2570 754-5	MOULDING, Frt. Door Wdo. Opng. Frame, Rr. (23-23-32)
9	1	2860 636-7	PANEL, Body Center Pillar Outside Finish (23-23-16)
10	1	2840 278-9	MOULDING, Roof Side Drain Trough (23-59-61)
	6	---- ---	Spacer
11	1	2588 466-7	MOULDING, Rr. Door Wdo. Opng. Frame, Upr. (23-23-33)
12	1	2811 446-7	MOULDING, Rr. Door Wdo. Opng. Frame, Rr. (23-23-33)
13	1	2860 638-9	MOULDING, Qtr. Pnl. Rr. Door Lock Pillar, Upr. (23-23-16)
	4	6024 271	Screw
14	1	2860 868-9	MOULDING, Qtr. Wdo. Outside, Frt., Stainless Steel (23-23-73)
	1	2811 764-5	MOULDING, Qtr. Wdo. Outside, Frt., Prime (23-23-73)
15	1	2860 866-7	MOULDING, Qtr. Wdo. Outside, Upr., Stainless Steel (23-23-73)
	1	2811 766-7	MOULDING, Qtr. Wdo. Outside, Upr., Prime (23-23-73)
16	1	2573 303	MOULDING, Roof Rear Tailgate Opng. (23-23-60)
17	1	3004 382-3	MOULDING, PACKAGE, Qtr. Pnl. Tailgate Upr. Pillar, Comp. (23-23-60
	2	6024 564	Screw
18	1	2785 791	NAME PLATE, Tailgate Outside Panel "Plymouth" (23-54-11)
	3	6027 553	Nut
19	1	2862 816	ORNAMENT, Tailgate Electric Wdo. Regulator Outside (23-54-11
	2	6024 291	Nut w/Washer
20	1	3481 762-3	MOULDING PACKAGE, Qtr. Pnl. Outside, "Black" (23-23-39)
	1	3549 246-7	"Green"
	1	3549 248-9	"Blue"
	1	3549 204-5	"Burnt Orange"
	8	6006 496	Retainer
	8	6002 922	Retainer 8 6027 625 Nut
21	1	2570 914-5	MOULDING, Rear Door Wdo. Opng. Frame, Frt. (23-23-33)
22	2	3419 983	MOULDING PACKAGE, Rear Door Outside, "Black" (23-23-33
	2	3549 610	"Blue"
	2	3549 609	"Green"
	2	3549 608	"Burnt Orange"
	2	6002 162	Retainer
	2	6026 523	Nut
	6	6002 922	Retainer
23	1	2932 268-9	MOULDING PACKAGE, Body Side Sill Outside (23-23-2)
	16	6001 910	Retainer
	2	6002 338	Retainer
	2	6026 523	Nut
	2	6024 403	Screw
24	2	3481 732	MOULDING PACKAGE, Frt. Door Outside, "Black" (23-23-32)
	2	3549 236	"Blue"
	2	3549 235	"Green"
	2	3549 234	"Burnt Orange"
	2	6002 162	Retainer
	2	6026 523	Nut
	2	6002 922	Retainer

All Packages Include Attaching Parts

Part Type Code is Indicated in Parentheses

1970
EXTERIOR VIEW - BELVEDERE R-L STATION WAGON

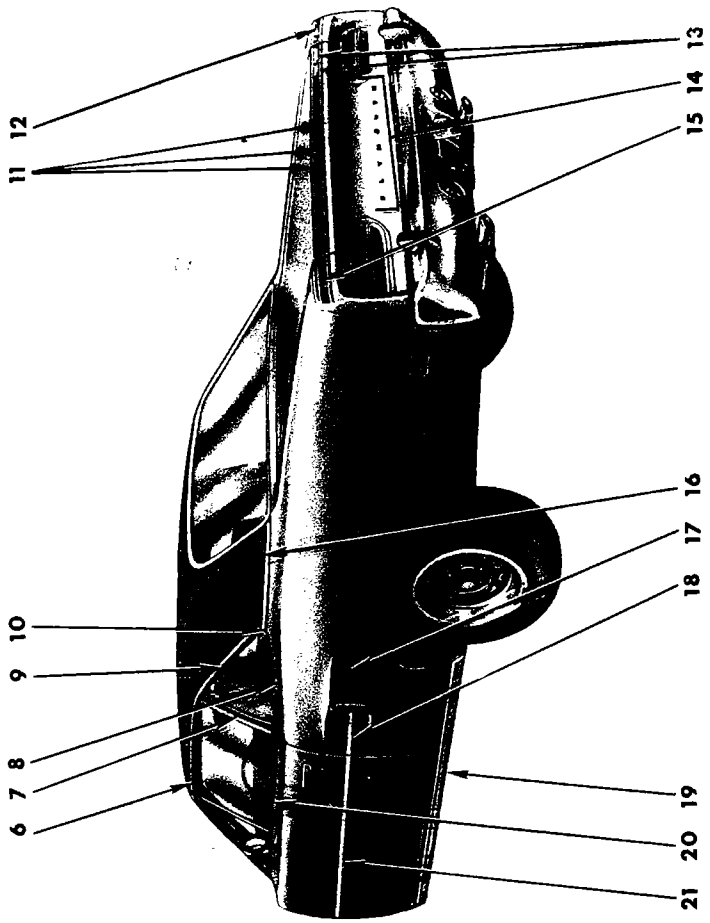

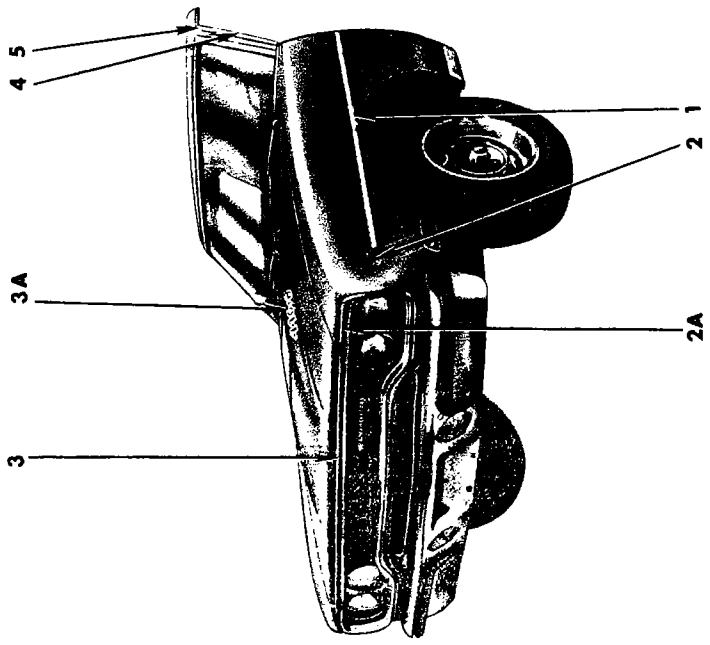

19a3104A

1970
EXTERIOR VIEW - BELVEDERE ROAD RUNNER R-M 2 DOOR SEDAN

REF. NO.	QTY	PART NUMBER	DESCRIPTION
1	1	3505 214-5	TAPE, Fender Side Dust Swirl (12-15-33)
2	1	2964 112-3	DECAL, Fdr., "Bird" (12-15-21)
	1	3505 138-9	"Bird", "Gold"
2A	1	3443 108-9	MOULDING, Fender Front (12-15-2)
	6	6028 473	Rivet
3	1	3549 635	MOULDING PACKAGE, Hood Front (15-25-2)
	8	6024 271	Screw
3A	2	2998 896	DECAL, Hood (15-03-18)
4	1	2840 280-1	MOULDING, Body Frt. Plr. Drain Trough, w/o Vinyl Roof (23-59-61)
	2	---- ---	Spacer
	1	2932 512-3	MOULDING PACKAGE, Body Frt. Plr. Drain Trough, w/Vinyl Roof (23-59-61)
	2	---- ---	Spacer
5	2	2783 028	COVER, Roof Side Drain Trough Mldg. Joint (23-59-57)
6	1	2840 282-3	MOULDING, Roof Side Drain Trough, w/o Vinyl Roof (23-59-61)
	6	---- ---	Spacer
	1	2841 504-5	MOULDING, Roof Side Drain Trough, w/Vinyl Roof (23-59-61)
	6	---- ---	Spacer
7	1	2840 894-5	MOULDING, Body Lock Upr. Pillar Outside (23-23-16)
	8	6024 271	Screw
8	1	2932 234-5	MOULDING PACKAGE, Qtr. Wdo. Outside Belt (23-23-73)
	2	6023 898	Screw
	8	6026 552	Nut
	8	9414 752	Screw
9	1	2840 702-3	MOULDING, Qtr. Wdo. Upr. Outside (23-23-73)
10	1	2932 536-7	CAP PACKAGE, Roof Side Drain Trough Mldg. End (23-59-57)
	2	6024 564	Screw
11	1	3444 894	TAPE, Deck Lid Color Stripe, "White" (23-23-12)
	1	3445 253	"Black"
	1	3505 142	"Gold"
12	1	2964 116	DECAL, Deck Lid, Bird (23-19-6)
13	1	2964 114	NAME PLATE, Deck Lid, "Road", use w/o Tape (23-19-114)
	1	3505 944	NAME PLATE, Deck Lid, "Road" (23-19-114)
	1	2964 115	NAME PLATE, Deck Lid, "Runner", use w/o Tape (23-19-114)
	1	3505 945	NAME PLATE, Deck Lid, "Runner" (23-19-114)
	2	9420 263	Nut
14	1	2528 974	NAME LETTER, Deck Opng. Lwr. Pnl., "P" (23-34-184)
	1	2528 975	"L"
	1	2528 976	"Y"
	1	2528 977	"M"
	1	2528 978	"O"
	1	2528 979	"U"
	1	2528 980	"T"
	1	2528 981	"H"
	16	9420 263	Nut
15	1	3444 892-3	TAPE, Qtr. Pnl. End Ext. Color, UP TO Type, "White" (23-23-12)
	1	3445 256-7	"Black"
	1	3505 140-1	"Gold"
	1	3569 545	TAPE, w/Decal, AFTER Type, "White"
	1	3569 544	"Black"
	1	3569 546	"Gold"
16	1	2932 270-1	MOULDING PACKAGE, Qtr. Outside Belt (23-23-39)
	8	6002 558	Retainer
17	2	2964 114	NAME PLATE, Qtr. Panel, Road (23-34-238)
	4	9420 263	Nut
	2	2964 115	NAME PLATE, Qtr. Panel, Runner (23-34-238)
	4	9420 263	Nut
18	1	3505 216-7	TAPE, Qtr. Outside Color, Dust Swirl (23-23-12)
19	1	2932 272-3	MOULDING PACKAGE, Body Side Sill Outside (23-23-2)
	18	6002 445	Retainer
	2	6002 577	Retainer
20	1	2932 098-9	MOULDING PACKAGE, Door Outside Belt (23-23-32)
	12	6002 549	Retainer
21	1	3504 916-7	TAPE, Door Outside Color, Dust Swirl (23-23-12)

All Packages Include Attaching Parts

Part Type Code is Indicated in Parentheses

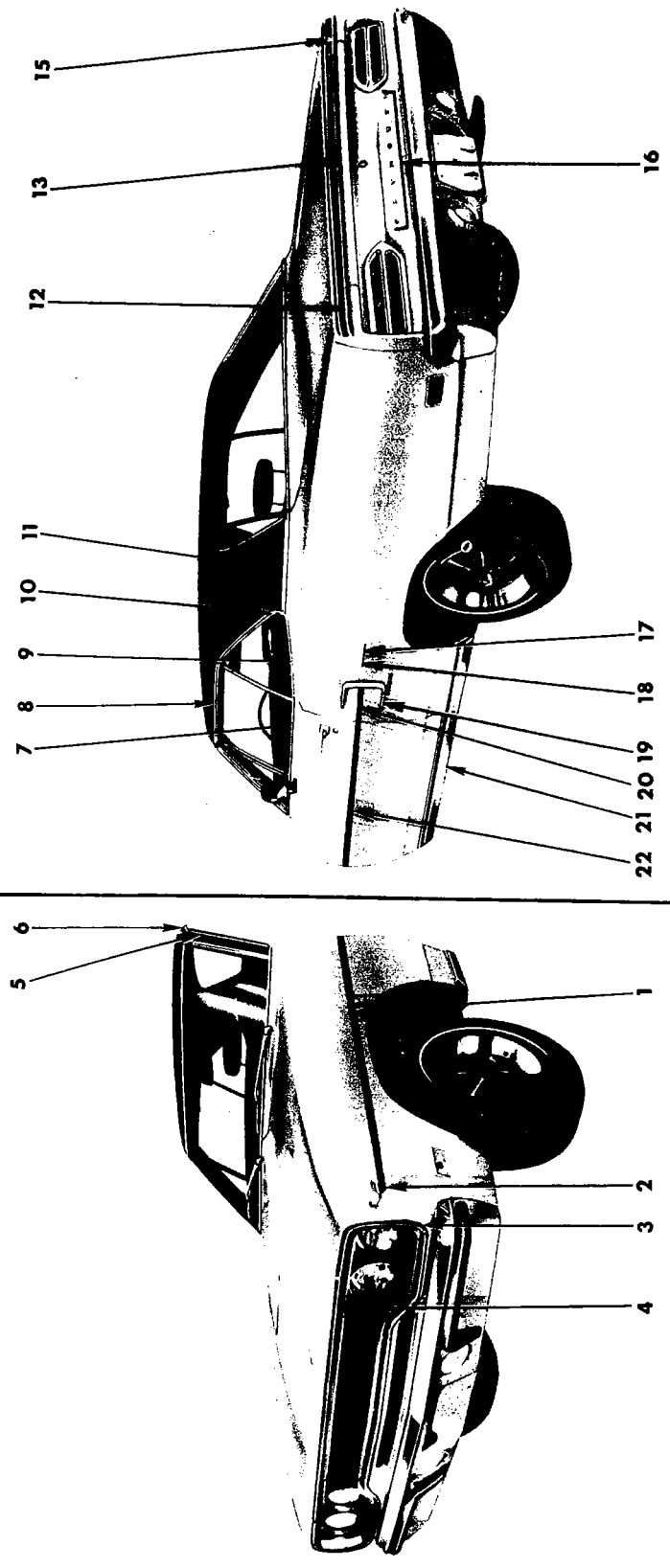

1970
EXTERIOR VIEW - BELVEDERE (ROAD RUNNER) R-M 2 DOOR HARDTOP

REF. NO.	QTY	PART NUMBER	DESCRIPTION
1	1	3505 214-5	TAPE, Fender Side Dust Swirl (12-15-33)
2	1	2964 112-3	DECAL, Fdr., "Bird" (12-15-21)
	1	3505 138-9	"Bird", "Gold"
3	1	3443 108-9	MOULDING, Fender Frt. (12-15-2)
	6	6028 473	Rivet
4	1	3549 635	MOULDING PACKAGE, Hood Front (15-25-2)
	8	6024 271	Screw
5	1	2840 280-1	MOULDING, Body Front Plr. Drain Trough, w/o Vinyl Roof (23-59-61)
	2	---- ---	Spacer
	1	2932 512-3	MOULDING PACKAGE, Body Front Pillar Drain Trough, w/Vinyl Roof (23-59-61)
	2	---- ---	Spacer
6	2	2783 028	COVER, Roof Side Drain Trough Mldg. Joint (23-59-57)
7	1	2932 096-7	MOULDING PACKAGE, Door Outside Belt (23-23-32)
	12	6002 549	Retainer
8	1	2840 282-3	MOULDING, Roof Side Drain Trough, w/o Vinyl Roof (23-59-61)
	6	---- ---	Spacer
	1	2841 504-5	MOULDING, Roof Side Drain Trough, w/Vinyl Roof (23-59-61)
	6	---- ---	Spacer
9	1	2932 232-3	MOULDING PACKAGE, Qtr. Wdo. Outside Belt (23-23-73)
	2	6023 898	Screw
	8	6026 552	J-Nut
	8	9414 752	Screw
10	1	2932 536-7	CAP PACKAGE, Roof Side Drain Trough Mldg. End (23-59-57)
	2	6024 564	Screw
11	1	2932 270-1	MOULDING PACKAGE, Qtr. Outside Belt (23-23-39)
	8	6002 558	Retainer
12	1	3444 892-3	TAPE, Qtr. Pnl. End Extension Color, UP TO Type, "White" (23-23-12)
	1	3445 256-7	"Black"
	1	3505 140-1	"Gold"
	1	3569 545	"White", w/Decal, AFTER Type
	1	3569 544	"Black", w/Decal, AFTER Type
	1	3569 546	"Gold", w/Decal, AFTER Type
13	1	3444 894	TAPE, Deck Lid Color Stripe, "White" (23-23-12)
	1	3445 253	"Black"
	1	3505 142	"Gold"
15	1	2964 116	DECAL, Deck Lid, "Bird" (23-19-6)
16	1	2528 974	NAME LETTER, Deck Opng. Lwr. Pnl. "P" (23-34-184)
	1	2528 975	"L"
	1	2528 976	"Y"
	1	2528 977	"M"
	1	2528 978	"O"
	1	2528 979	"U"
	1	2528 980	"T"
	1	2528 981	"H"
	16	9420 263	Nut
17	2	2964 115	NAME PLATE, Qtr. Panel, "Runner" (23-34-238)
	4	9420 263	Nut
18	2	2964 114	NAME PLATE, Quarter Panel, "Road" (23-34-238)
	4	9420 263	Nut
19	1	3444 954-5	ORNAMENT, Quarter Outside Louver (23-34-334)
	4	---- ---	Nut
20	1	3505 216-7	TAPE, Qtr. Outside Color, Dust Swirl (23-23-12)
21	1	2932 272-3	MOULDING PACKAGE, Body Side Sill Outside (23-23-2)
22	1	3504 916-7	TAPE, Door Outside Color, Dust Swirl (23-23-12)
**	1	2998 043	HOUSING, Hood Rear, w/Directional Ind. (15-03-87)
	1	3442 976	w/o Indicators
**	1	2998 656	NAME PLATE, Hood Housing Rear, "Hemi" (15-06-3)
	1	2998 657	"440"
	1	2998 658	"383"
**	1	2998 577	GASKET, Hood Housing Rear (15-03-67)
**	1	3403 658-9	LAMP ASSEMBLY, Hood Hsg. Rear, Directional Ind. (8-50-175)

All Packages Include Attaching Parts

Part Type Code is Indicated in Parentheses

1970

EXTERIOR VIEW - BELVEDERE (ROAD RUNNER) R-M 2 DOOR HARD TOP

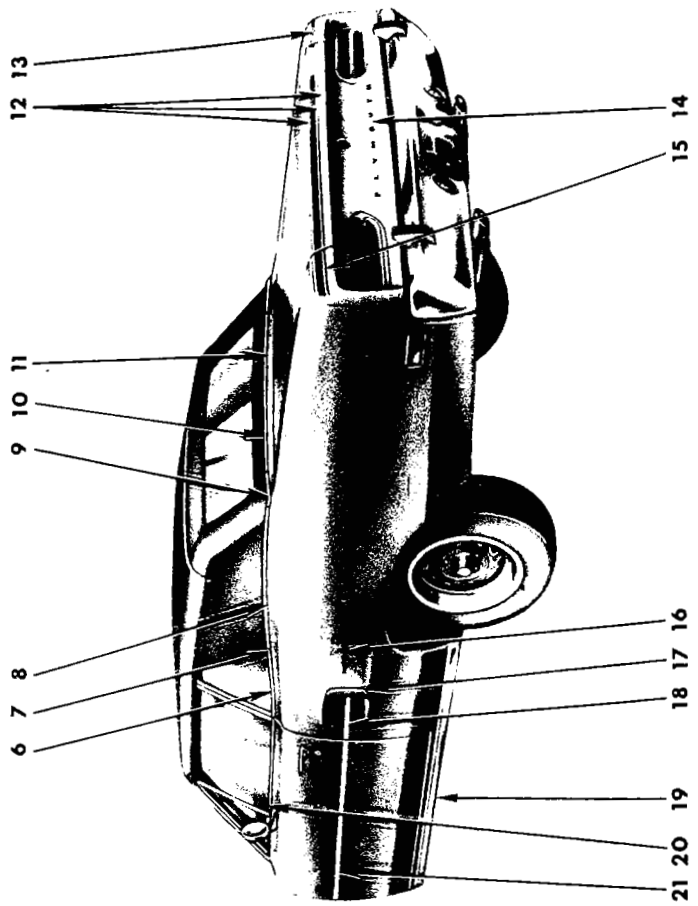

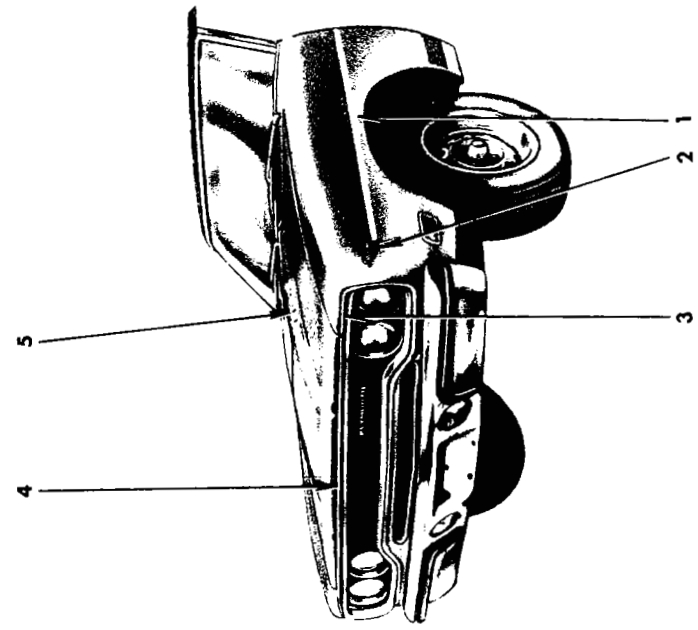

19a3176 A

1970
EXTERIOR VIEW - BELVEDERE ROAD RUNNER R-M CONVERTIBLE COUPE

REF. NO.	QTY	PART NUMBER	DESCRIPTION
1	1	3505 214-5	TAPE, Fender Side, "Dust Swirl" (12-15-33)
2	1	2964 112-3	DECAL, Fdr., "Bird" (12-15-21)
	1	3505 138-9	"Bird", "Gold"
3	1	3443 108-9	MOULDING, Fender Front (12-15-2)
	6	6028 473	Rivet
4	1	3549 635	MOULDING PACKAGE, Hood Front (15-25-2)
	8	6024 271	Screw
5	2	2998 896	DECAL, Hood Side (440-6) (15-03-18)
6	1	2932 274-5	MOULDING PACKAGE, Qtr. Wdo. Outside Belt, Frt. (23-23-39)
	6	6026 552	J-Nut
	6	9414 752	Screw
7	1	2932 256-7	MOULDING PACKAGE, Qtr. Outside Belt, Intermediate (23-23-39)
	4	6027 282	Screw
8	1	2932 254-5	MOULDING PACKAGE, Qtr. Outside Belt, Rr. (23-23-39)
	8	6002 497	Retainer
	8	9416 049	Screw
9	1	2932 186-7	MOULDING PACKAGE, Qtr. Outside Belt, Rr. Corner (23-23-39)
	6	---- ---	Screw
10	2	2932 089	MOULDING PACKAGE, Deck Opng. Upr. Pnl. (23-23-31)
	4	9416 049	Screw
	4	6002 497	Retainer
11	1	2841 642	COVER, Deck Opng. Upr. Pnl. Mldg. (23-23-41)
12	1	3444 894	TAPE, Deck Lid Color Stripe, "White" (23-23-12)
	1	3445 253	"Black"
	1	3505 142	"Gold"
13	1	2964 116	DECAL, Deck Lid, Bird (23-19-6)
14	1	2528 974	NAME LETTER, Deck Opening Lwr. Pnl., "P" (23-34-184)
	1	2528 975	"L"
	1	2528 976	"Y"
	1	2528 977	"M"
	1	2528 978	"O"
	1	2528 979	"U"
	1	2528 980	"T"
	1	2528 981	"H"
	16	9420 263	Nut
15	1	3444 892-3	TAPE, Qtr. Pnl. End Extension Color, "White", UP TO Type (23-23-12)
	1	3445 256-7	"Black"
	1	3505 140-1	"Gold"
	1	3569 545	"White", w/Decal, AFTER Type
	1	3569 544	"Black", w/Decal, AFTER Type
	1	3569 546	"Gold", w/Decal, AFTER Type
16	2	2964 114	NAME PLATE, Qtr. Panel, "Road" (23-34-238)
	4	9420 263	Nut
	2	2964 115	NAME PLATE, Qtr. Panel, "Runner" (23-34-238)
	4	9420 263	Nut
17	1	3444 954-5	ORNAMENT, Qtr. Outside Louver (23-34-334)
	4	---- ---	Nut
18	1	3505 216-7	TAPE, Qtr. Outside Color, "Dust Swirl" (23-23-12)
19	1	2932 272-3	MOULDING PACKAGE, Body Side Sill Outside (23-23-2)
	18	6002 445	Retainer
	2	6002 577	Retainer
20	1	2932 096-7	MOULDING PACKAGE, Door Outside Belt (23-23-32)
	12	6002 549	Retainer
21	1	3504 916-7	TAPE, Door Outside Color, "Dust Swirl" (23-23-12)

All Packages Include Attaching Parts

Part Type Code is Indicated in Parentheses

1970

EXTERIOR VIEW - BELVEDERE ROAD RUNNER R-M CONVERTIBLE COUPE

19A2191B

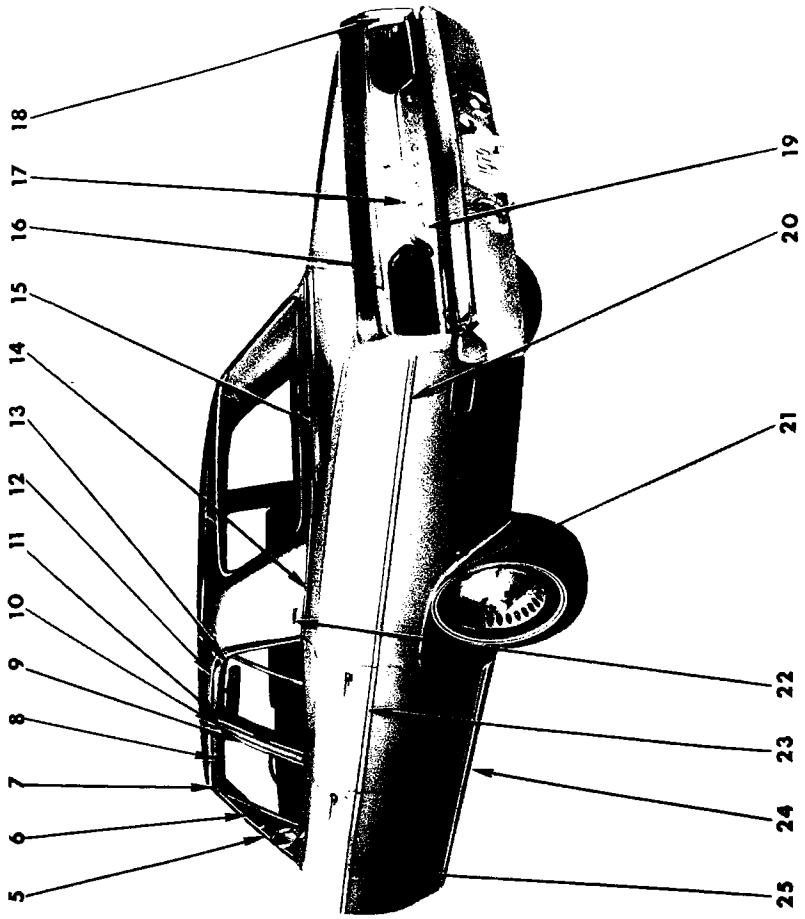

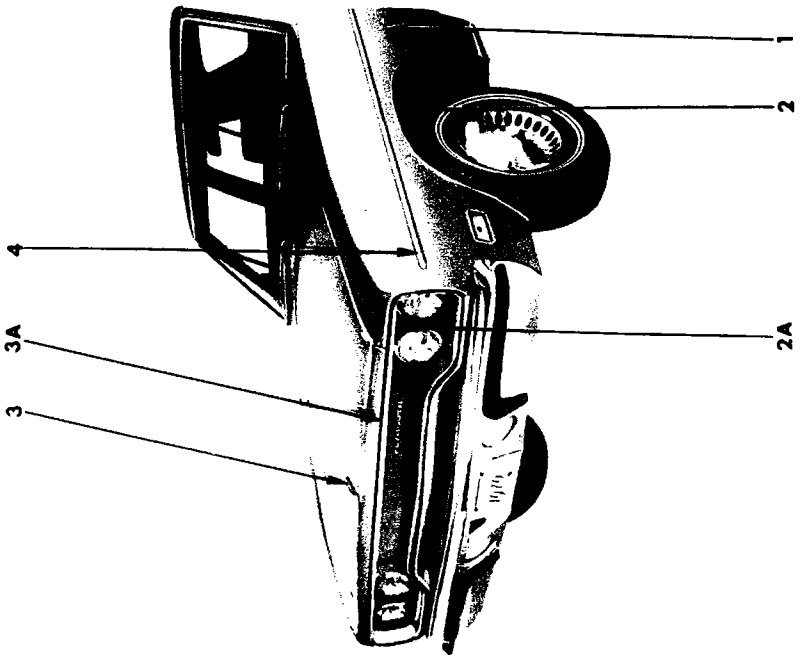

1970
EXTERIOR VIEW - BELVEDERE SATELLITE R-H 4 DOOR SEDAN

REF. NO.	QTY	PART NUMBER	DESCRIPTION
1	2	2902 789	NAME PLATE, Fender Side (Satellite) (12-15-21)
	4	6027 352	Nut
2	1	3419 902-3	MOULDING PACKAGE, Fender Opening (12-15-2)
	16	6028 545	Screw
2A	1	3443 108-9	MOULDING, Fender Front (12-15-2)
	6	6028 473	Rivet
3	1	2998 629	ORNAMENT, Hood Top (383-4 Bbl.) (15-03-18)
	1	2998 630	(383-2 Bbl.)
	1	9420 253	Nut
3A	1	3549 635	MOULDING PACKAGE, Hood Front (15-25-2)
	8	6024 271	Screw
4	2	3549 198	MOULDING PACKAGE, Fender Side, "Black" (12-15-2)
	2	3549 132	"Blue" 2 6006 496 Ret.
	2	3549 131	"Green" 6 6002 922 Ret.
	2	3549 130	"Orange" 2 6024 152 Nut
	1	3419 898-9	MOULDING PACKAGE, Fender Side, Lwr., Chrome, UP TO Type (12-15-2)
	1	3549 686-7	AFTER Type, Black Paint
5	1	2840 274-5	MOULDING, Body Frt. Pillar Drain Trough, w/o Vinyl Roof (23-59-61)
	2	---- ---	Spacer
	1	2932 514-5	MOULDING PACKAGE, Body Frt. Pillar Drain Trough, w/Vinyl Roof (23-59-61)
	2	---- ---	Spacer
6	1	2570 750-1	MOULDING, Frt. Door Wdo. Opng. Frame, Frt. (23-23-32)
7	2	2783 028	COVER, Roof Side Drain Trough Mldg. Joint (23-59-57)
8	1	2570 752-3	MOULDING, Frt. Door Wdo. Opng. Frame, Upr. (23-23-32)
9	1	2570 754-5	MOULDING, Frt. Door Wdo. Opng. Frame, Rr. (23-23-32)
10	1	2860 636-7	MOULDING, Body Center Pillar Outside Finish (23-23-16)
11	1	2570 914-5	MOULDING, Rear Door Wdo. Opng. Frame, Frt. (23-23-33)
12	1	2840 276-7	MOULDING, Roof Side Drain Trough, w/o Vinyl Roof (23-59-61)
	6	---- ---	Spacer
	1	2841 508-9	MOULDING, Roof Side Drain Trough, w/Vinyl Roof (23-59-61)
	6	---- ---	Spacer
13	1	2811 438-9	MOULDING, Rear Door Wdo. Opng. Frame, Upr. (23-23-33)
14	1	2932 252-3	MOULDING PACKAGE, Qtr. Outside Belt (23-23-39)
	2	6002 558	Retainer and Seal
	6	6002 338	Retainer
	6	9420 867	Nut
15	1	2932 231	MOULDING PACKAGE, Deck Opng. Upr. Pnl. (23-23-31)
	6	6002 557	Retainer
16	1	3481 719	MOULDING PACKAGE, Deck Lid Lwr. (23-23-30)
	9	6024 271	Screw
17	1	3481 722	MOULDING PACKAGE, Deck Opng. Lwr. Pnl. (23-23-23)
	8	6002 975	Retainer
18	1	3481 724-5	MOULDING PACKAGE, Qtr. Pnl. End Ext. Inner (23-23-39)
	6	6023 898	Screw
19	1	2528 974	NAME LETTER, Deck Opng. Lwr. Pnl., "P" (23-34-184)
	1	2528 975	"L"
	1	2528 976	"Y"
	1	2528 977	"M"
	1	2528 978	"O"
	1	2528 979	"U"
	1	2528 980	"T"
	1	2528 981	"H"
	16	9420 263	Nut
20	1	3419 934-5	MOULDING PACKAGE, Qtr. Outside, Chrome, UP TO Type (23-23-39)
	1	3549 692-3	MOULDING PACKAGE, Qtr. Outside, Black Paint, AFTER Type (23-23-39)
	14	6001 605	Retainer
	2	6024 152	Nut
	1	3549 212-3	MOULDING PACKAGE, Qtr. Outside, "Black" (23-23-39)
	1	3549 218-9	"Blue"
	1	3549 216-7	"Green"
	1	3549 214-5	"Burnt Orange"
	6	6002 922	Retainer
	8	6006 496	Retainer w/Seal
	8	6024 152	Nut
21	1	2932 262-3	MOULDING PACKAGE, Qtr. Outside Wheel Opening (23-23-39)
22	2	2965 769	NAME PLATE, Roof Side Mod Top, w/Vinyl Roof (23-34-238)
	4	9420 263	Nut

CONTINUED ON NEXT PAGE

All Packages include Attaching Parts

Part Type Code is Indicated in Parentheses

1970
EXTERIOR VIEW - BELVEDERE SATELLITE R-H 4 DOOR SEDAN

REF. NO.	QTY	PART NUMBER	DESCRIPTION
23	1	3549 632-3	MOULDING PACKAGE, Rear Door Outside, Chrome, UP TO Type (23-23-33)
	1	3549 688-9	MOULDING PACKAGE, Rear Door Outside, Black Paint, AFTER Type (23-23-33)
	6	6003 018	Retainer
	4	6002 993	Retainer
	4	6026 523	Nut
	2	3419 983	MOULDING PACKAGE, Rear Door Outside, "Black" (23-23-33)
	2	3549 610	"Blue"
	2	3549 609	"Green"
	2	3549 608	"Burnt Orange"
	2	6002 162	Retainer
	6	6002 922	Retainer
24	1	2932 272-3	MOULDING PACKAGE, Body Side Sill Outside (23-23-2)
	18	6002 445	Retainer
	2	6002 577	Retainer

REF. NO.	QTY	PART NUMBER	DESCRIPTION
25	1	3419 920-1	MOULDING PACKAGE, Frt. Door Outside, Chrome, UP TO Type (23-23-32)
	1	3549 690-1	MOULDING PACKAGE, Frt. Door Outside, Black Paint, AFTER Type (23-23-32)
	4	6002 993	Retainer
	8	6001 605	Retainer
	4	6026 523	Nut
	2	3481 732	MOULDING PACKAGE, Frt. Door Outside, "Black" (23-23-32)
	2	3549 236	"Blue"
	2	3549 235	"Green"
	2	3549 234	"Burnt Orange"
	2	6002 162	Retainer
	3	6002 922	Retainer
	2	6026 523	Nut

All Packages Include Attaching Parts

Part Type Code is Indicated in Parentheses

1970
EXTERIOR VIEW - BELVEDERE SATELLITE R-H 4 DOOR SEDAN

NOTES

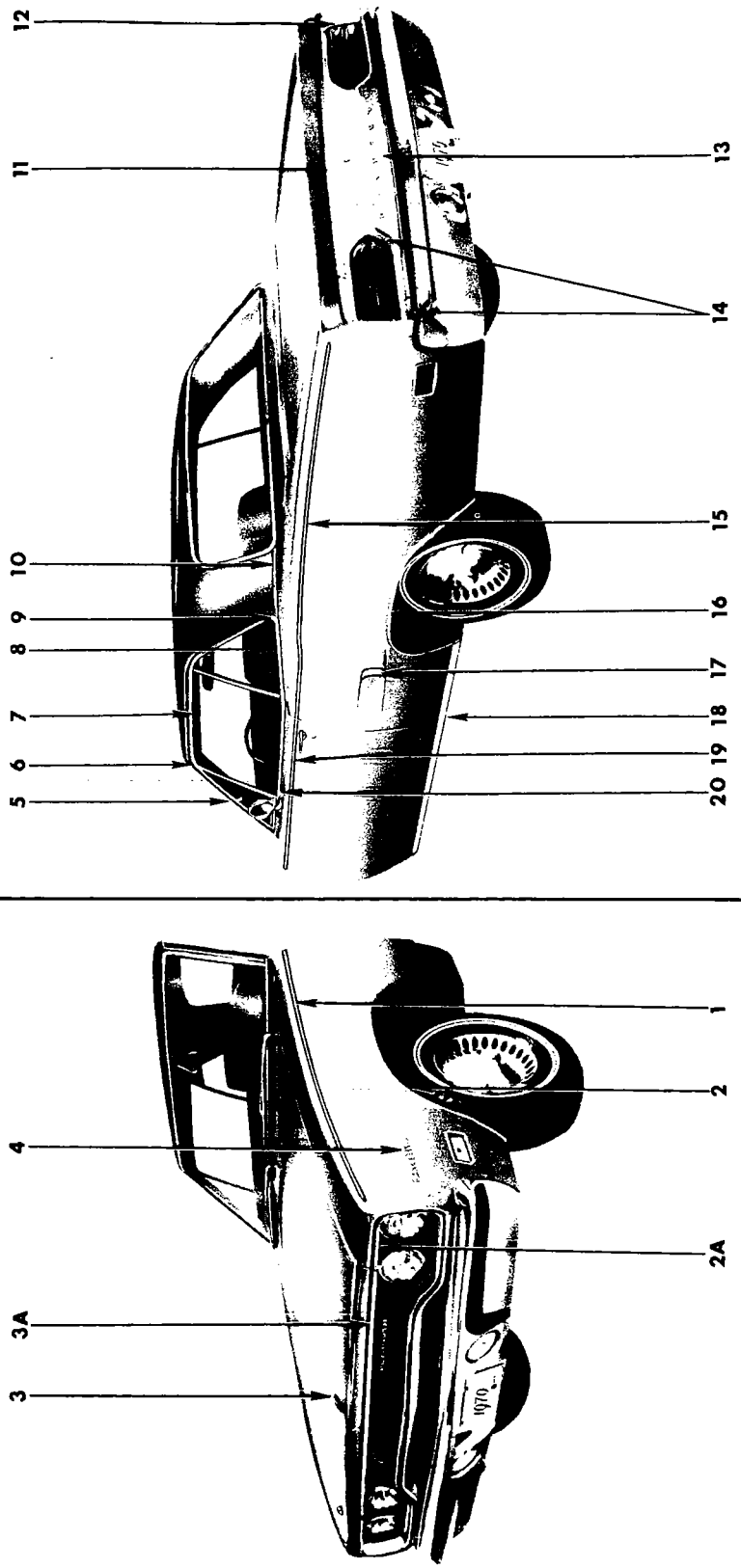

19a2992 A

1970
EXTERIOR VIEW - BELVEDERE SATELLITE R-H 2 DOOR HARDTOP

REF. NO.	QTY	PART NUMBER	DESCRIPTION
1	1	3419 900-1	MOULDING PACKAGE, Fender Side, Chrome, UP TO Type (12-15-2)
	1	3549 696-7	AFTER Type, Black Paint
	2	6001 660	Retainer 5 6003 016 Ret.
	1	6002 892	Retainer 2 6024 152 Nut
2	1	3419 902-3	MOULDING PACKAGE, Fender Wheel Opng. (12-15-2)
	16	6028 545	Screw
2A	1	3443 108-9	MOULDING, Fender Front (12-15-2)
	6	6028 473	Rivet
3	1	2998 630	ORNAMENT, Hood Top (383-2 Bbl.) (15-03-18)
	1	2998 629	(383-4 Bbl.)
	1	9420 253	Nut
3A	1	3549 635	MOULDING PACKAGE, Hood Front (15-25-2)
	8	6024 271	Screw
4	2	2902 789	NAME PLATE, Fender Side (Satellite) (12-15-21)
	4	6000 050	Clip
5	1	2840 280-1	MOULDING, Body Front Plr. Drain Trough, w/o Vinyl Roof (23-59-61)
	2	---- ---	Spacer
	1	2932 512-3	MOULDING PACKAGE, Body Frt. Pillar Drain Trough, w/Vinyl Roof (23-59-61)
	2	---- ---	Spacer
6	2	2783 028	COVER, Roof Side Drain Trough Mldg. Joint (23-59-57)
7	1	2840 282-3	MOULDING, Roof Side Drain Trough, w/o Vinyl Roof (23-59-61)
	6	---- ---	Spacer
	1	2841 504-5	MOULDING, Roof Side Drain Trough, w/Vinyl Roof (23-59-61)
	6	---- ---	Spacer
8	1	2932 232-3	MOULDING PACKAGE, Qtr. Wdo. Outside Belt (23-23-73)
	2	6023 898	Screw
	8	6026 552	J-Nut
	8	9414 752	Screw
9	1	2932 536-7	CAP PACKAGE, Roof Side Drain Trough Mldg. End (23-59-57)
	2	6024 564	Screw
10	1	2932 270-1	MOULDING PACKAGE, Qtr. Outside Belt, w/Vinyl Roof or Two Tone Paint (23-23-39)
	8	6002 558	Retainer
11	1	3481 719	MOULDING PACKAGE, Deck Lid Lwr. (23-23-30)
	9	6024 271	Screw
12	1	3481 724-5	MOULDING PACKAGE, Qtr. Pnl. End Extension Inner (23-23-39)
	6	6023 898	Screw
13	1	2528 974	NAME LETTER, Deck Opng. Lwr. Pnl. "P" (23-34-184)
	1	2528 975	"L"
	1	2528 976	"Y"
	1	2528 977	"M"
	1	2528 978	"O"
	1	2528 979	"U"
	1	2528 980	"T"
	1	2528 981	"H"
	16	9420 263	Nut
14	1	3481 722	MOULDING PACKAGE, Deck Opng. Lwr. Pnl. (23-23-23)
	8	6002 975	Retainer
15	1	3481 944-5	MOULDING PACKAGE, Qtr. Outside, Chrome, UP TO Type (23-23-39)
	1	3549 684-5	MOULDING PACKAGE, Qtr. Outside, Black Paint, AFTER Type (23-23-39)
	20	6001 428	Retainer
	2	6001 677	Retainer
	2	6024 152	Nut
16	1	2932 262-3	MOULDING PACKAGE, Qtr. Outside Whl. Opng. (23-23-39)
	14	6024 271	Screw
17	1	3444 954-5	ORNAMENT, Qtr. Outside Lower (23-34-334)
	4	---- ---	Nut
18	1	2932 272-3	MOULDING PACKAGE, Body Side Sill Outside (23-23-2)
	18	6002 445	Retainer
	2	6002 577	Retainer
19	1	3419 914-5	MOULDING PACKAGE, Door Outside, Chrome, UP TO Type (23-23-32)
	1	3549 682-3	MOULDING PACKAGE, Door Outside, Black Paint, AFTER Type (23-23-32)
	4	6001 677	Retainer
	4	6026 523	Nut
	10	6003 016	Retainer
20	1	2932 096-7	MOULDING PACKAGE, Door Outside Belt (23-23-32)
	12	6002 549	Retainer

All Packages Include Attaching Parts

Part Type Code is Indicated in Parentheses

1970
EXTERIOR VIEW - BELVEDERE SATELLITE R-H 2 DOOR HARD TOP

19a2993 A

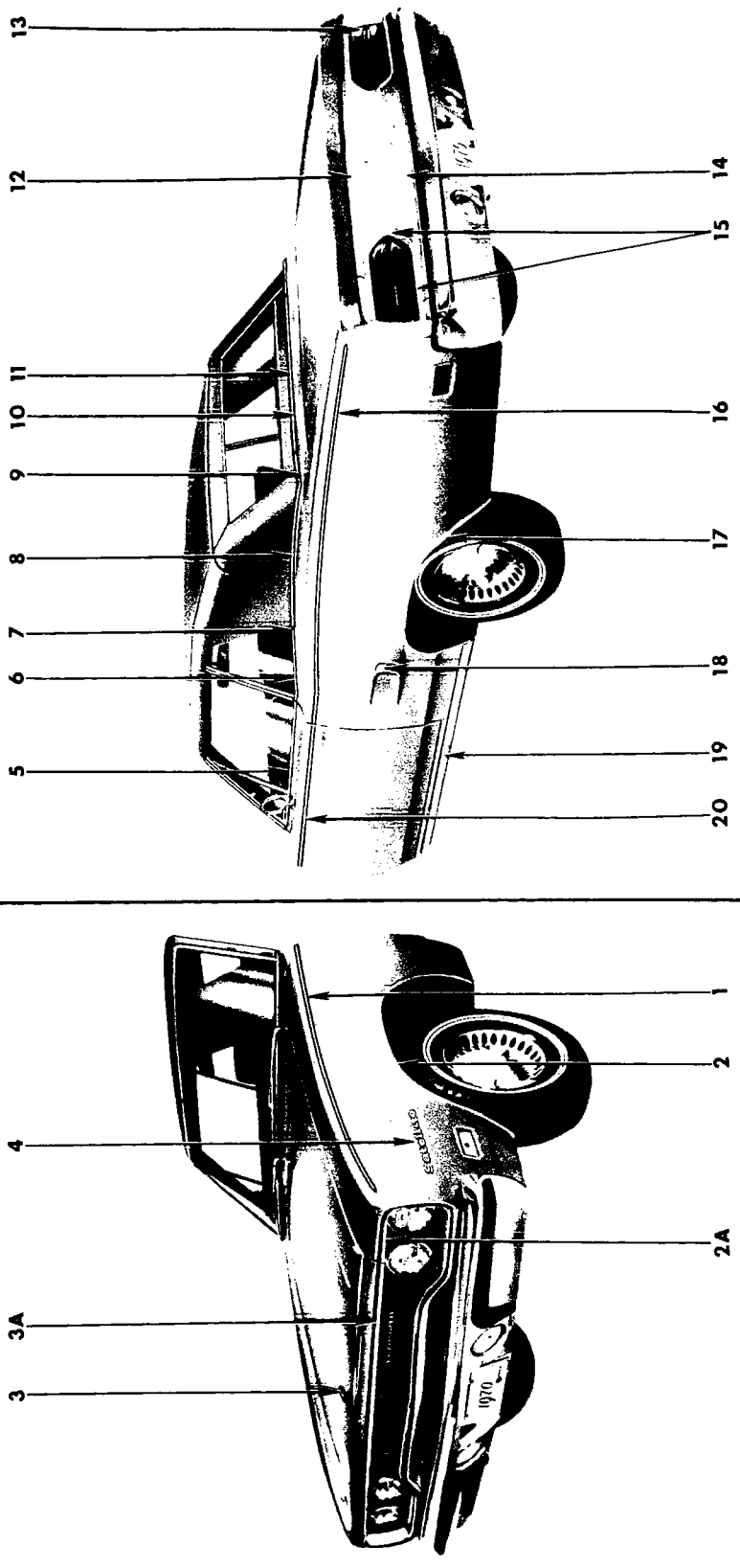

1970
EXTERIOR VIEW - BELVEDERE SATELLITE R-H CONVERTIBLE COUPE

REF. NO.	QTY	PART NUMBER	DESCRIPTION
1	1	3419 900-1	MOULDING PACKAGE, Fender Side, Chrome, UP TO Type (12-15-2)
	1	3549 696-7	AFTER Type, Black Paint
	2	6001 660	Retainer 5 6003 016 Ret.
	1	6002 892	Retainer 2 6024 152 Nut
2	1	3419 902-3	MOULDING PACKAGE, Fender Wheel Opng. (12-15-2)
	16	6028 545	Screw
2A	1	3443 108-9	MOULDING, Fender Front (12-15-2)
	6	6028 473	Rivet
3	1	2998 630	ORNAMENT, Hood Top (383-2 Bbl.) (15-03-18)
	1	2998 629	(383-4 Bbl.)
	1	9420 253	Nut
3A	1	3549 635	MOULDING PACKAGE, Hood Front (15-25-2)
	8	6024 271	Screw
4	2	2902 789	NAME PLATE, Fender Side (Satellite) (12-15-21)
	4	6000 050	Clip
5	1	2932 096-7	MOULDING PACKAGE, Door Outside Belt (23-23-32)
	12	6002 549	Retainer
6	1	2932 274-5	MOULDING PACKAGE, Qtr. Wdo. Outside Belt, Frt. (23-23-39)
	6	6026 552	J-Nut
	6	9414 752	Screw
7	1	2932 256-7	MOULDING PACKAGE, Qtr. Outside Belt, Intermediate (23-23-39)
	4	6027 282	Screw
8	1	2932 254-5	MOULDING PACKAGE, Qtr. Outside Belt, Rr. (23-23-39)
	8	6002 497	Retainer
	8	9416 049	Screw
9	1	2932 186-7	MOULDING PACKAGE, Qtr. Outside Belt, Rr. Corner (23-23-39)
	6	---- ---	Screw
10	2	2932 089	MOULDING PACKAGE, Deck Opng. Upr. Pnl. (23-23-31)
	4	9416 049	Screw
	4	6002 497	Retainer
11	1	2841 642	COVER, Deck Opng. Upr. Pnl. Mldg. (23-23-41)
12	1	3481 719	MOULDING PACKAGE, Deck Lid Lwr. (23-23-30)
	9	6024 271	Screw
13	1	3481 724-5	MOULDING PACKAGE, Qtr. Pnl. End Ext., Inner (23-23-39)
	6	6023 898	Screw
14	1	2528 974	NAME LETTER, Deck Opng. Lower Panel "P" (23-34-184)
	1	2528 975	"L"
	1	2528 976	"Y"
	1	2528 977	"M"
	1	2528 978	"O"
	1	2528 979	"U"
	1	2528 980	"T"
	1	2528 981	"H"
	16	9420 263	Nut
15	1	3481 722	MOULDING PACKAGE, Deck Opng. Lwr. Pnl. (23-23-23)
	8	6002 975	Retainer
16	1	3481 944-5	MOULDING PACKAGE, Qtr. Outside, Chrome, UP TO Type (23-23-39)
	1	3549 684-5	MOULDING PACKAGE, Qtr. Outside, Black Paint, AFTER Type (23-23-39)
	20	6001 428	Retainer
	2	6001 677	Retainer
	2	6024 152	Nut
17	1	2932 262-3	MOULDING PACKAGE, Qtr. Outside Whl. Opng. (23-23-39)
	14	6024 271	Screw
18	1	3444 954-5	ORNAMENT, Qtr. Outside Lwr. (23-34-334)
	4	---- ---	Nut
19	1	2932 272-3	MOULDING PACKAGE, Body Side Sill Outside (23-23-2)
	18	6002 445	Retainer
	2	6002 577	Retainer
20	1	3419 914-5	MOULDING PACKAGE, Door Outside, Chrome, UP TO Type (23-23-32)
	1	3549 682-3	MOULDING PACKAGE, Door Outside, Black Paint, AFTER Type (23-23-32)
	4	6001 677	Retainer
	4	6026 523	Nut
	10	6003 016	Retainer

All Packages Include Attaching Parts

Part Type Code is Indicated in Parentheses

1970

EXTERIOR VIEW - BELVEDERE SATELLITE R-H CONVERTIBLE COUPE

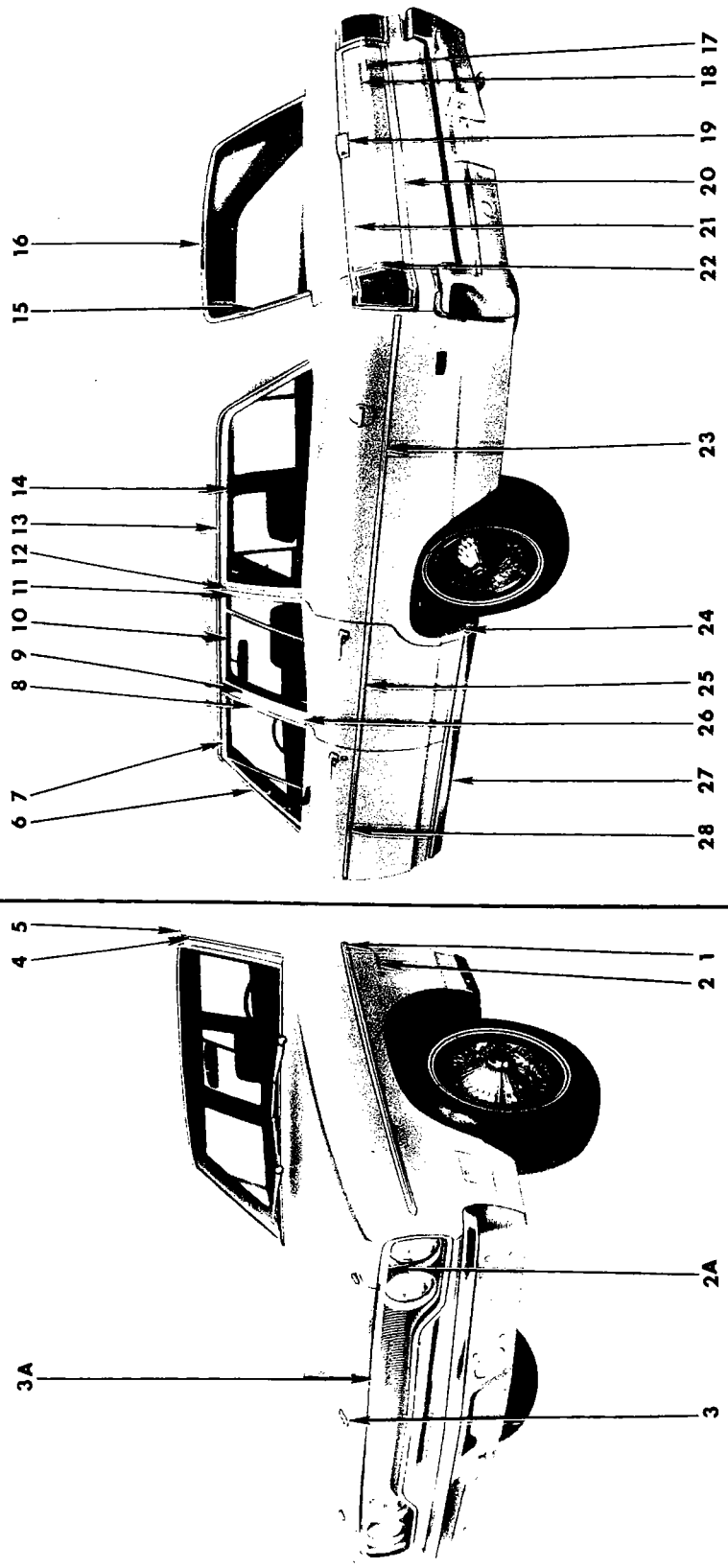

1970
EXTERIOR VIEW - BELVEDERE SATELLITE R-H STATION WAGON

REF. NO.	QTY	PART NUMBER	DESCRIPTION
1	1	3419 898-9	MOULDING PACKAGE, Fender Side, Chrome, UP TO Type (12-15-2)
	1	3549 686-7	MOULDING PACKAGE, Fender Side, AFTER Type, Black Paint (12-15-2)
	2	6001 660	Retainer
	1	6002 892	Retainer
	5	6003 018	Retainer 2 6024 152 Nut
	2	3549 198	MOULDING PACKAGE, Fender Side, "Black" (12-15-2)
	2	3549 132	"Blue"
	2	3549 131	"Green"
	2	3549 130	"Burnt Orange"
	2	6006 496	Retainer
	6	6002 922	Retainer 2 6024 152 Nut
2	2	2902 789	NAME PLATE, Fender Side (Satellite) (12-15-21)
	4	6027 352	Nut
2A	1	3443 108-9	MOULDING, Fender Front (12-15-2)
	6	6028 473	Rivet
3	1	2998 630	ORNAMENT, Hood Front (383-2 Bbl.) (15-03-18)
	1	2998 629	(383-4 Bbl.)
	1	9420 253	Nut
3A	1	3549 635	MOULDING PACKAGE, Hood Front (15-25-2)
	8	6024 271	Screw
4	1	2605 854-5	MOULDING, Body Frt. Plr. Drain Trough (23-59-61)
	2	---- ---	Spacer
5	2	2605 208	COVER, Roof Side Drain Trough (23-59-57)
6	1	2570 750-1	MOULDING, Frt. Door Wdo. Opng. Frame, Frt. (23-23-32)
7	1	2570 752-3	MOULDING, Frt. Door Wdo. Opng. Frame, Upr. (23-23-32)
8	1	2570 754-5	MOULDING, Frt. Door Wdo. Opng. Frame, Rr. (23-23-32)
9	1	2570 914-5	MOULDING, Rr. Door Wdo. Opng. Frame, Frt. (23-23-33)
10	1	2588 466-7	MOULDING, Rr. Door Wdo. Opng. Frame, Upr. (23-23-33)
11	1	2811 446-7	MOULDING, Rr. Door Wdo. Opng. Frame, Rr. (23-23-33)
12	1	2860 638-9	MOULDING, Qtr. Pnl. Rr. Door Lock Plr. Upr. (23-23-16)
	4	6024 271	Screw
13	1	2840 278-9	MOULDING, Roof Side Drain Trough (23-59-61)
	6	---- ---	Spacer
14	1	2860 866-7	MOULDING, Qtr. Wdo. Outside, Upr., Stainless Steel (23-23-73)
	1	2811 766-7	MOULDING, Qtr. Wdo. Outside, Upr., Prime (23-23-73)
15	1	3004 382-3	MOULDING PACKAGE, Qtr. Pnl. Tailgate Upr. Pillar, Comp. (23-23-60)
	2	6024 564	Screw
16	1	2573 303	MOULDING, Roof Rear T/Gate Opng. (23-23-60)
17	1	3445 169	NAME PLATE, Tailgate Outside Pnl., "Satellite" (23-54-11)
	2	9420 263	Nut
18	1	2785 791	NAME PLATE, Tailgate Outside Pnl., "Plymouth" (23-54-11)
	3	6027 553	Nut
19	1	2862 816	ORNAMENT, Tailgate Electric Wdo. Regulator Outside (23-54-11)
	2	6024 291	Nut w/Washer
20	1	3419 897	MOULDING PACKAGE, T/Gate Outside, Lwr. (23-23-61)
	2	6001 611	Retainer
	1	6001 660	Retainer
	1	---- ---	Nut
21	1	3419 912-3	MOULDING PACKAGE, T/Gate, Upr. (23-23-61)
	2	6001 660	Retainer
	1	6001 611	Retainer
	2	---- ---	Nut
22	1	3419 910-1	MOULDING PACKAGE, T/Gate Upr. & Lwr. End (23-23-61)
	4	6026 403	Nut
	4	6024 711	Seal
23	1	3481 762-3	MOULDING PACKAGE, Qtr. Pnl. Outside, "Black" (23-23-39)
	1	3549 246-7	"Green"
	1	3549 248-9	"Blue"
	1	3549 204-5	"Burnt Orange"
	8	6006 496	Retainer
	8	6002 922	Retainer 8 6027 625 Nut
	1	3419 936-7	MOULDING PACKAGE, Qtr. Outside, Chrome, UP TO Type (23-23-39)
	1	3549 694-5	MOULDING PACKAGE, Qtr. Outside, Black Paint, AFTER Type (23-23-39)
	18	6003 018	Retainer
	2	6002 993	Retainer
	2	6024 152	Nut
24	1	2860 868-9	MOULDING, Qtr. Wdo. Outside, Frt., Stainless Steel (23-23-73)
	1	2811 764-5	MOULDING, Qtr. Wdo. Outside, Frt., Prime (23-23-73)
25	1	3549 632-3	MOULDING PACKAGE, Rear Door Outside, Chrome, UP TO Type (23-23-33)
	1	3549 688-9	MOULDING PACKAGE, Rear Door Outside, Black Paint, AFTER Type (23-23-33)
	6	6003 018	Retainer
	2	6002 993	Retainer
	2	6026 523	Nut

CONTINUED ON NEXT PAGE

All Packages Include Attaching Parts

Part Type Code is Indicated in Parentheses

1970

EXTERIOR VIEW - BELVEDERE SATELLITE R-H STATION WAGON

REF. NO.	QTY	PART NUMBER	DESCRIPTION
25 Cont'd	2	3419 983	MOULDING PACKAGE, Rear Door Outside, "Black" (23-23-33)
	2	3549 610	"Blue"
	2	3549 609	"Green"
	2	3549 608	"Burnt Orange"
	2	6002 162	Retainer
	6	6002 922	Retainer
	2	6026 523	Nut
26	1	2860 636-7	PANEL, Body Center Pillar Outside Finish (23-23-16)
	8	6024 271	Screw
27	1	2932 272-3	MOULDING PACKAGE, Body Side Sill Outside (23-23-2)
	18	6002 445	Retainer
	2	6002 577	Retainer
28	2	3481 732	MOULDING PACKAGE, Frt. Door Outside, "Black" (23-23-32)
	2	3549 236	"Blue"
	2	3549 235	"Green"
	2	3549 234	"Burnt Orange"
	2	6002 162	Retainer
	3	6002 922	Retainer
	2	6026 523	Nut
	1	3419 920-1	MOULDING PACKAGE, Frt. Door Outside, Chrome, UP TO Type (23-23-32)
	1	3549 690-1	MOULDING PACKAGE, Frt. Door Outside, Black Paint, AFTER Type (23-23-32)
	4	6002 993	Retainer
	8	6001 605	Retainer
	4	6026 523	Nut

All Packages Include Attaching Parts

Part Type Code is Indicated in Parentheses

1970

EXTERIOR VIEW - BELVEDERE SATELLITE R-H STATION WAGON

NOTES

Printed in U.S.A.

December 1971.

19a3121A

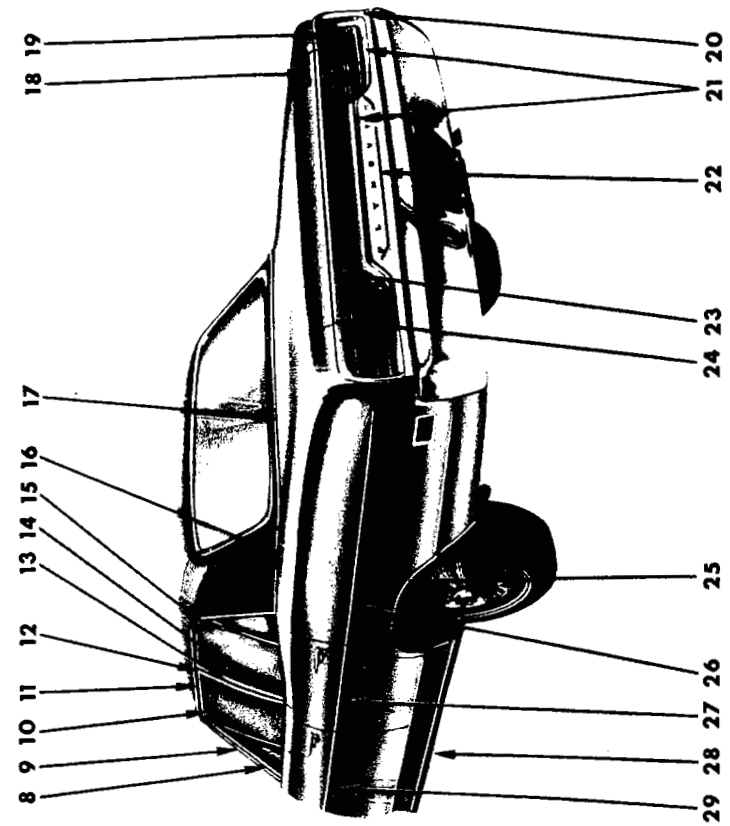

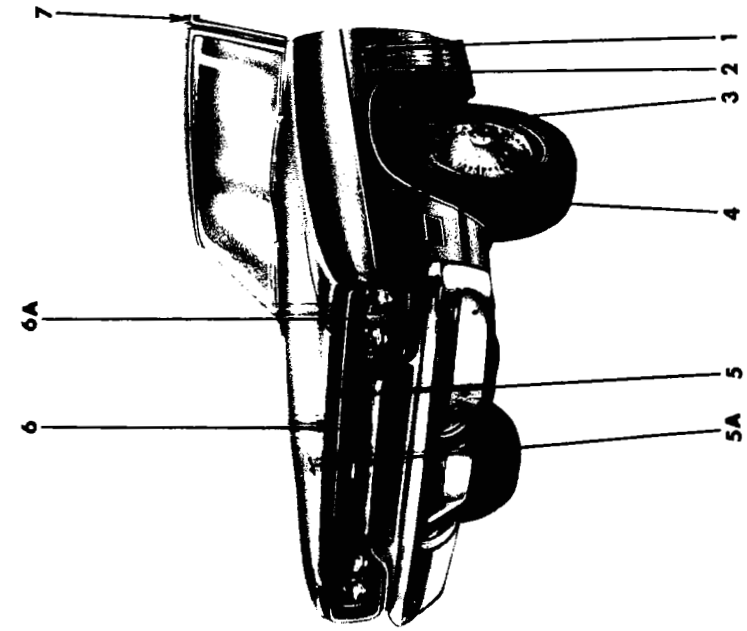

1970
EXTERIOR VIEW - BELVEDERE SPORT SATELLITE R-P 4 DOOR SEDAN

REF. NO.	QTY	PART NUMBER	DESCRIPTION
1	2	2902 789	NAME PLATE, Fender Side (Satellite) (12-15-21)
	4	6027 352	Nut
2	2	2902 788	NAME PLATE, Fender Side (Sport) (12-15-21)
	4	6027 352	Nut
3	1	3419 904-5	MOULDING PACKAGE, Fender Wheel Opng. (12-14-2)
	16	6028 545	Screw
4	2	3549 198	MOULDING PACKAGE, Fender Side, "Black" (12-15-2)
	2	3549 132	"Blue"
	2	3549 131	"Green"
	2	3549 130	"Burnt Orange"
	2	6006 496	Retainer
	6	6002 922	Retainer 2 6024 152 Nut
5	1	2998 042	NAME PLATE, Hood Front (15-06-3)
	3	9411 943	Nut
5A	1	2998 630	ORNAMENT, Hood Top (383-2 Bbl.) (15-03-18)
	1	2998 629	(383-4 Bbl.)
	1	9420 253	Nut
6	1	3549 635	MOULDING PACKAGE, Hood Front (15-25-2)
	8	6024 271	Screw
6A	1	3443 108-9	MOULDING, Fender Front (12-15-2)
	6	6028 473	Rivet
7	2	2783 028	COVER, Roof Side Drain Trough Mldg. Joint (23-59-57)
8	1	2570 750-1	MOULDING, Frt. Door Opng. Frame, Frt. (23-23-32)
9	1	2840 274-5	MOULDING, Body Frt. Pillar Drain Trough, w/o Vinyl Roof (23-59-61)
	2	---- ---	Spacer
	1	2932 514-5	MOULDING PACKAGE, Body Frt. Plr. Drain Trough, w/Vinyl Roof (23-59-61)
	2	---- ---	Spacer
10	1	2570 752-3	MOULDING, Frt. Door Wdo. Opng. Frame, Upr. (23-23-32)
11	1	2840 276-7	MOULDING, Roof Side Drain Trough, w/o Vinyl Roof (23-59-61)
	6	---- ---	Spacer
	1	2841 508-9	MOULDING, Roof Side Drain Trough, w/Vinyl Roof (23-59-61)
	6	---- ---	Spacer
12	1	2570 754-5	MOULDING, Frt. Door Wdo. Opng. Frame, Rr. (23-23-32)
13	1	2860 636-7	PANEL, Body Center Pillar Outside Finish (23-23-16)
	8	6024 271	Screw
14	1	2570 914-5	MOULDING, Rr. Door Wdo. Opng. Frame, Frt. (23-23-33)
15	1	2811 438-9	MOULDING, Rr. Door Wdo. Opng. Frame, Upr. (23-23-33)
16	1	2932 252-3	MOULDING PACKAGE, Qtr. Outside Belt, use w/Vinyl Roof or Two Tone Paint (23-23-39)
	2	6002 558	Retainer and Seal
	6	6002 338	Retainer
	6	9420 867	Nut
17	1	2932 231	MOULDING PACKAGE, Deck Opng. Upr. Pnl., use w/Vinyl Roof or Two Tone Paint (23-23-31)
	6	6002 557	Retainer
18	1	2965 261	NAME PLATE, Deck Lid, "Sport Satellite" (23-19-114)
19	1	3481 724-5	MOULDING PACKAGE, Qtr. Pnl. End Extension Inner (23-23-39)
	6	6023 898	Screw
20	1	3481 726-7	MOULDING PACKAGE, Qtr. Pnl. End Extension Outer (23-23-39)
	4	6003 000	Retainer
	4	6028 185	Nut
21	1	3481 722	MOULDING PACKAGE, Deck Opng. Lwr. Pnl. (23-23-23)
	8	6002 975	Retainer
22	1	2528 974	NAME LETTER, Deck Opng. Lwr. Pnl. "P" (23-34-184)
	1	2528 975	"L"
	1	2528 976	"Y"
	1	2528 977	"M"
	1	2528 978	"O"
	1	2528 979	"U"
	1	2528 980	"T"
	1	2528 981	"H"
	16	9420 263	Nut
23	1	3481 719	MOULDING PACKAGE, Deck Lid Lwr. (23-23-30)
	9	6024 271	Screw
24	1	3504 104	MOULDING PACKAGE, Deck Lid, Upr. (23-23-30)
	9	6024 271	Screw
25	1	3419 918-9	MOULDING PACKAGE, Qtr. Outside Wheel Opng. (23-23-39)
	10	6024 271	Screw
26	1	3549 212-3	MOULDING PACKAGE. Qtr. Outside, "Black" (23-23-39)
	1	3549 218-9	"Blue"
	1	3549 216-7	"Green"
	1	3549 214-5	"Burnt Orange"
	6	6002 922	Retainer
	8	6006 496	Retainer w/Seal
	8	6024 152	Nut

CONTINUED ON NEXT PAGE

All Packages Include Attaching Parts

Part Type Code is Indicated in Parentheses

1970

EXTERIOR VIEW - BELVEDERE SPORT SATELLITE R-P 4 DOOR SEDAN

REF. NO.	QTY	PART NUMBER	DESCRIPTION
27	2	3419 983	MOULDING PACKAGE, Rr. Door Outside, "Black" (23-23-33)
	2	3549 610	"Blue"
	2	3549 609	"Green"
	2	3549 608	"Burnt Orange"
	2	6002 922	Retainer
	2	6002 162	Retainer
	2	6026 523	Nut
28	1	3419 922-3	MOULDING PACKAGE, Body Side Sill (23-23-2)
	18	6002 840	Retainer
	2	6002 708	Retainer
	2	6024 152	Nut

REF. NO.	QTY	PART NUMBER	DESCRIPTION
29	2	3481 732	MOULDING PACKAGE, Frt. Door Outside, "Black" (23-23-32)
	2	3549 236	"Blue"
	2	3549 235	"Green"
	2	3549 234	"Burnt Orange"
	2	6002 162	Retainer
	2	6026 523	Nut
	3	6002 922	Retainer

All Packages Include Attaching Parts

Part Type Code is Indicated in Parentheses

1970

EXTERIOR VIEW - BELVEDERE SPORT SATELLITE R-P 4 DOOR SEDAN

NOTES

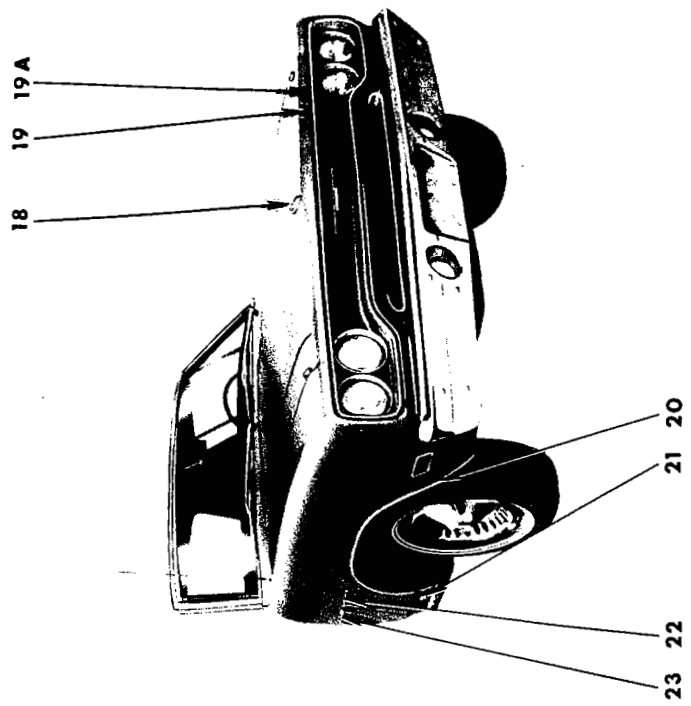

19a3122A

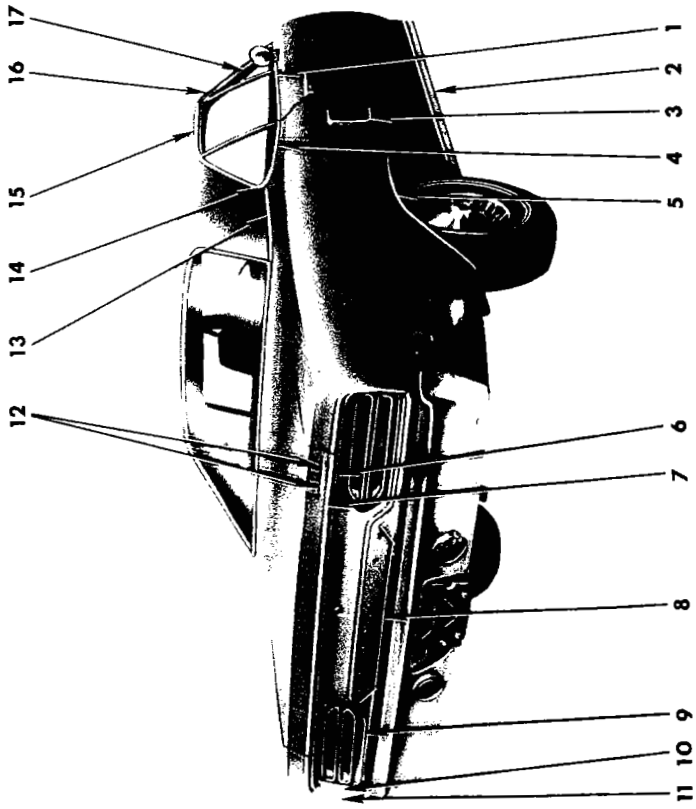

1970
EXTERIOR VIEW - BELVEDERE SPORT SATELLITE R-P 2 DOOR HARDTOP

REF. NO.	QTY	PART NUMBER	DESCRIPTION
1	1	2932 096-7	MOULDING PACKAGE, Door Outside Belt (23-23-32)
	12	6002 549	Retainer
2	1	3419 922-3	MOULDING PACKAGE, Body Side Sill (23-23-2)
	18	6002 840	Retainer
	2	6002 708	Retainer
	2	6024 152	Nut
3	1	3419 916-7	ORNAMENT PACKAGE, Qtr. Outside Louver (23-34-334)
	2	---- ---	Nut
	2	6002 994	Spacer
	2	6002 960	Spacer
	2	---- ---	Nut
4	1	2932 232-3	MOULDING PACKAGE, Qtr. Wdo. Outside Belt (23-23-73)
	2	6023 898	Screw
5	1	3419 918-9	MOULDING PACKAGE, Qtr. Outside Wheel Opng. (23-23-39)
	10	6024 271	Screw
6	1	3481 719	MOULDING PACKAGE, Deck Lid Lwr. (23-23-30)
	9	6024 271	Screw
7	1	3504 104	MOULDING, Deck Lid, upr. (23-23-30)
	9	6024 271	Screw
8	1	2528 974	NAME LETTER, Deck Opng. Lwr. Pnl, "P"
	1	2528 975	"L"
	1	2528 976	"Y"
	1	2528 977	"M"
	1	2528 978	"O"
	1	2528 979	"U"
	1	2528 980	"T"
	1	2528 981	"H"
	16	9420 263	Nut
9	1	3481 722	MOULDING PACKAGE, Deck Opng. Lwr. Pnl. (23-23-23)
	8	6002 975	Retainer
10	1	3481 724-5	MOULDING PACKAGE, Qtr. Pnl. End. Extension, Inner (23-23-39)
	6	6023 898	Screw
11	1	3481 726-7	MOULDING PACKAGE, Qtr. Pnl. End. Extension, Outer (23-23-39)
	4	6003 000	Retainer
	4	6028 185	Nut
12	1	2965 261	NAME PLATE, Deck Lid, "Sport Satellite"(23-19-114)
13	1	2932 270-1	MOULDING PACKAGE, Qtr. Outside Belt, w/Vinyl Roof or Two Tone Paint (23-23-39)
	8	6002 558	Retainer
14	1	2932 536-7	CAP PACKAGE, Roof Side Drain Trough Mldg. End (23-59-57)
	2	6024 564	Screw
15	1	2840 282-3	MOULDING, Roof Side Drain Trough, w/o Vinyl Roof (23-59-61)
	6	---- ---	Spacer
	1	2841 504-5	MOULDING, Roof Side Drain Trough, w/Vinyl Roof (23-59-61)
	6	---- ---	Spacer
16	2	2783 028	COVER, Roof Side Drain Trough Mldg. Joint (23-59-57)
17	1	2840 280-1	MOULDING, Body Frt. Plr. Drain Trough w/o Vinyl Roof (23-59-61)
	2	---- ---	Spacer
	1	2932 512-3	MOULDING PACKAGE, Body Frt. Plr. Drain Trough, w/Vinyl Roof (23-59-61)
	2	---- ---	Spacer
18	1	2898 630	ORNAMENT, Hood Top (383-2 Bbl.) (15-03-18)
	1	2998 629	(440-4 Bbl.)
	1	9420 253	Nut
19	1	2998 042	NAME PLATE, Hood Front (15-06-3)
	3	9411 943	Nut
19A	1	3549 635	MOULDING PACKAGE, Hood Front (15-25-2)
	8	6024 271	Screw
20	1	3419 904-5	MOULDING PACKAGE, Fender Wheel Opening (12-15-2)
	16	6028 545	Screw
21	1	2785 540	MEDALLION, Fender Side (12-15-21)
	1	6026 404	Nut
22	2	2902 789	NAME PLATE, Fender Side (Satellite) (12-15-21)
	4	6027 352	Nut
23	2	2902 788	NAME PLATE, Fender Side (Sport) (12-15-21)
	4	6027 352	Nut

All Packages Include Attaching Parts

Part Type Code is Indicated in Parentheses

1970

EXTERIOR VIEW - BELVEDERE SPORT SATELLITE R-P 2 DOOR HARD TOP

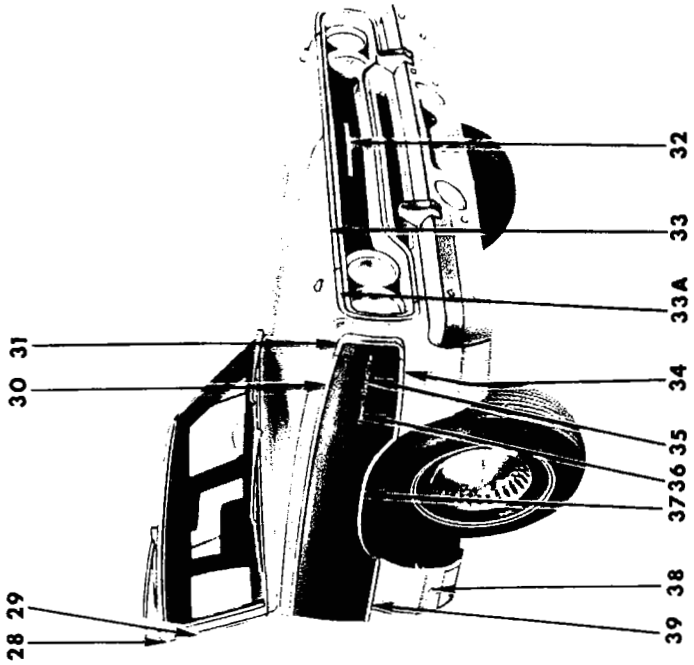

19a3148 **A**

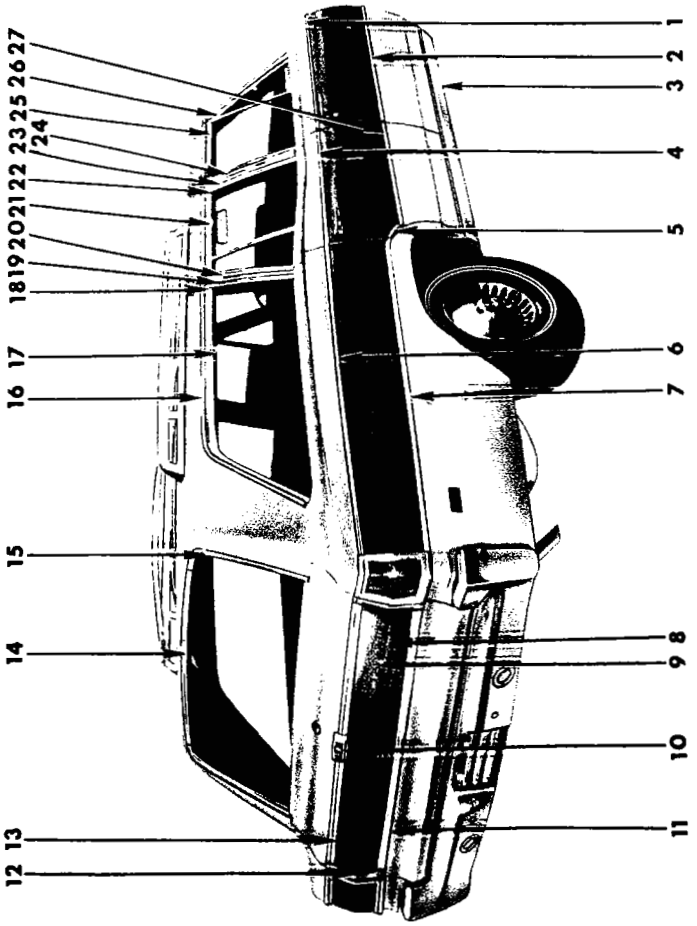

1970
EXTERIOR VIEW - BELVEDERE SPORT SATELLITE R-P STATION WAGON

REF. NO.	QTY	PART NUMBER	DESCRIPTION
1	1	2932 122-3	MOULDING PACKAGE, Frt. Door Outside, Upr. (23-23-32)
	12	6001 910	Retainer
	12	6024 271	Screw w/Sealer
	2	6002 162	Retainer
	2	6026 523	Nut
2	1	2932 236-7	MOULDING PACKAGE, Frt. Door Outside, Lwr. (23-23-32)
	4	6002 162	Retainer
	2	6026 523	Nut
	8	6001 910	Retainer
	8	6024 271	Screw w/Sealer
3	1	2932 272-3	MOULDING PACKAGE, Body Side Sill Outside (23-23-2)
	18	6002 445	Retainer
	2	6002 577	Retainer
4	1	3419 924-5	MOULDING PACKAGE, Rear Door Outside, Upr. (23-23-33)
	4	6002 162	Retainer
	4	6026 523	Nut
	6	6001 910	Retainer
5	1	3419 930-1	MOULDING PACKAGE, Rear Door Outside, Lwr. Rear (23-23-33)
	2	6027 639	Nut
	2	6024 271	Screw
6	1	3419 938-9	MOULDING PACKAGE, Qtr. Outside, Upr. (23-23-39)
	10	6001 910	Retainer
	8	6002 842	Retainer w/Seal
7	1	3419 932-3	MOULDING PACKAGE, Qtr. Outside, Lwr. (23-23-39)
	10	6001 910	Retainer
	8	6002 842	Retainer w/Seal
8	1	2964 860	NAME PLATE, Tailgate Outside Panel "Sport Satellite" (23-54-11)
	2	9420 263	Nut
9	1	2785 791	NAME PLATE, Tailgate Outside Panel "Plymouth" (23-54-11)
	3	6027 553	Nut
10	1	2862 816	ORNAMENT, Tailgate Electric Wdo. Regulator Outside (23-54-11)
	2	6024 291	Nut w/Washer
11	1	3419 897	MOULDING PACKAGE, Tailgate Outside, Lwr. (23-23-61)
	2	6001 611	Retainer
	1	6001 660	Retainer
	1	---- ---	Nut
12	1	3419 910-1	MOULDING PACKAGE, Tailgate Upr. and Lwr. End (23-23-61)
	4	6026 403	Nut
	4	6024 711	Seal
13	1	3419 912-3	MOULDING PACKAGE, Tailgate, Upr. (23-23-61)
	2	6001 660	Retainer
	2	---- ---	Nut
	1	6001 611	Retainer
14	1	2573 303	MOULDING, Roof Rear Tailgate Opng. (23-23-60)
15	1	3004 382-3	MOULDING PACKAGE, Qtr. Pnl. Tailgate Upr. Plr., Comp. (23-23-60)
	2	6024 564	Screw
16	1	2840 278-9	MOULDING, Roof Side Drain Trough (23-59-61)
	6	---- ---	Spacer
17	1	2860 866-7	MOULDING, Qtr. Wdo. Outside, Upr., Stainless Steel (23-23-73)
	1	2811 766-7	MOULDING, Qtr. Wdo. Outside, Upr. Prime (23-23-73)
18	1	2860 868-9	MOULDING, Qtr. Wdo. Outside, Frt., Stainless Steel (23-23-73)
	1	2811 764-5	MOULDING, Qtr. Wdo. Outside, Frt., Prime (23-23-73)
19	1	2860 638-9	MOULDING, Qtr. Pnl. Rear Door Lock Plr., Upr. (23-23-16)
	4	6024 271	Screw
20	1	2811 446-7	MOULDING, Rear Door Wdo. Opng. Frame, Rear (23-23-33)
21	1	2588 466-7	MOULDING, Rear Door Wdo. Opng. Frame, Upr. (23-23-33)
22	1	2570 914-5	MOULDING, Rear Door Wdo. Opng. Frame, Frt. (23-23-33)
23	1	2860 636-7	PANEL, Body Center Plr. Outside Finish (23-23-16)
	8	6024 271	Screw
24	1	2570 754-5	MOULDING, Frt. Door Wdo. Opng. Frame, Rear (23-23-32)
25	1	2570 754-3	MOULDING, Frt. Door Wdo. Opng. Frame, Upr. (23-23-32)
26	1	2570 750-1	MOULDING, Frt. Door Wdo. Opng. Frame, Frt. (23-23-32)
27	1	3419 928-9	MOULDING PACKAGE, Rear Door Outside, Lwr. Frt. (23-23-33)
	2	6002 162	Retainer
	2	6026 523	Nut
	6	6001 910	Retainer
	2	6024 271	Screw
28	2	2605 208	COVER, Roof Side Drain Trough (23-59-57)
29	1	2605 854-5	MOULDING, Body Front Plr. Drain Trough (23-59-61)
	2	---- ---	Spacer
30	1	3514 066-7	MOULDING PACKAGE, Fender Side Upper (12-15-2)
	2	6002 590	Clip
	6	6001 910	Retainer
	2	6024 271	Screw
31	1	2965 982-3	MOULDING, Fender Side Frt. (12-15-2)
	2	6024 271	Screw
32	1	2949 993	ORNAMENT (7-17-1)

All Packages Include Attaching Parts

Part Type Code is Indicated in Parentheses

1970

EXTERIOR VIEW - BELVEDERE - SPORT SATELLITE R-P STATION WAGON

REF. NO.	QTY	PART NUMBER	DESCRIPTION
33	1	3549 635	MOULDING PACKAGE, Hood Frt. (15-25-2)
	8	6024 271	Screw
33A	1	3443 108-9	MOULDING PACKAGE, Fender Front (12-15-2)
	6	6028 473	Rivet
34	1	3514 062-3	MOULDING PACKAGE, Fender Side Lwr. Frt. (12-15-2)
	2	6002 590	Clip
	2	6024 271	Screw
35	2	2902 789	NAME PLATE, Fender Side (Satellite) (12-15-21)
	3	6027 352	Nut
36	2	2902 788	NAME PLATE, Fender Side (Sport) (12-15-21)
	1	6000 050	Clip
37	1	2932 544	MOULDING PACKAGE, Fender Wheel Opening, Right (12-15-2)
	1	2932 543	MOULDING PACKAGE, Fender Wheel Opening, Left (12-15-2)
	8	6024 271	Screw
38	1	2785 540	MEDALLION, Fender Side (12-15-21)
39	1	2932 356-7	MOULDING PACKAGE, Fender Side Lower Rear (12-15-2)
	1	6002 590	Clip
	1	9420 867	Nut
	2	6001 910	Retainer

All Packages Include Attaching Parts

Part Type Code is Indicated in Parentheses

December 1971.

Printed in U.S.A.

NOTES

19a2973A

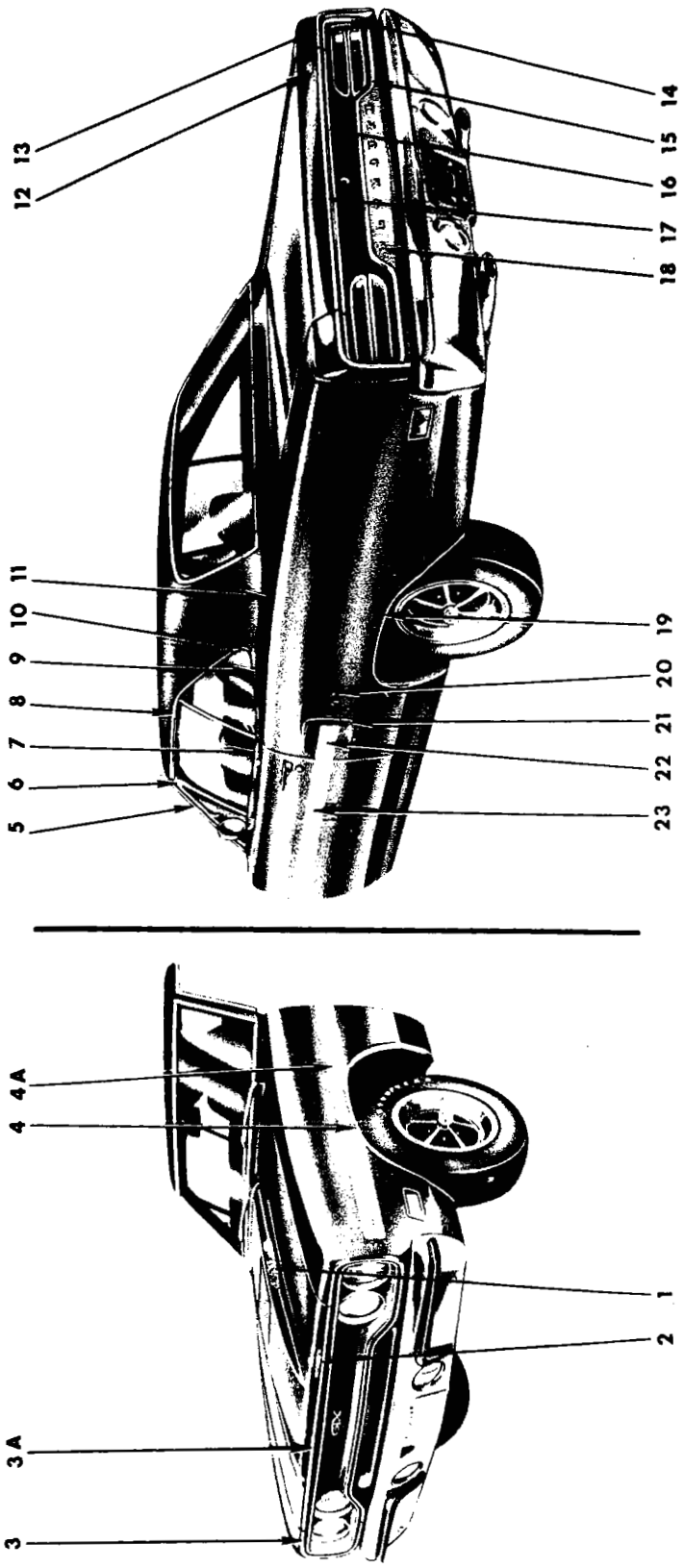

1970
EXTERIOR VIEW - BELVEDERE GTX R-S 2 DOOR HARDTOP

REF. NO.	QTY	PART NUMBER	DESCRIPTION
1	1	2998 896	DECAL, Hood (440-6) (15-03-18)
2	1	2998 042	NAME PLATE, Hood Front (15-06-3)
	3	9411 943	Nut
3	1	3443 108-9	MOULDING, Fender Frt. (12-15-2)
	6	6028 473	Rivet
3A	1	3549 635	MOULDING PACKAGE, Hood Front (15-25-2)
	8	6024 271	Screw
4	1	3419 902-3	MOULDING PACKAGE, Fender Wheel Opening (12-15-2)
	8	6024 271	Screw
4A	1	3504 108-9	TAPE, Fender Side Stripe, "White" (12-15-33)
	1	3504 110-1	"Black"
	1	3506 262-3	"Gold"
5	1	2840 280-1	MOULDING, Body Frt. Pillar Drain Trough, w/o Vinyl Roof (23-59-61)
	2	---- ---	Spacer
	1	2932 512-3	MOULDING PACKAGE, Body Frt. Pillar Drain Trough, w/Vinyl Roof (23-59-61)
	2	---- ---	Spacer
6	2	2783 028	COVER, Roof Side Drain Trough Mldg. Joint (23-59-57)
7	1	2932 096-7	MOULDING PACKAGE, Door Outside Belt (23-23-32)
	12	6002 549	Retainer
8	1	2840 282-3	MOULDING, Roof Side Drain Trough, w/o Vinyl Roof (23-59-61)
	6	---- ---	Spacer
	1	2841 504-5	MOULDING, Roof Side Drain Trough, w/Vinyl Roof (23-59-61)
	6	---- ---	Spacer
9	1	2932 232-3	MOULDING PACKAGE, Qtr. Wdo. Outside Belt (23-23-73)
	2	6023 898	Screw
	8	6026 552	J-Nut
	8	9414 752	Screw
10	1	2932 536-7	CAP PACKAGE, Roof Side Drain Trough Mldg. End (23-59-57)
	2	6024 564	Screw
11	1	2932 270-1	MOULDING PACKAGE, Qtr. Outside Belt (23-23-39)
	8	6002 558	Retainer
12	1	2840 214	NAME PLATE, Deck Lid, "GTX", UP TO Type (23-19-114)
	1	3506 363	NAME PLATE, Deck Lid, "GTX", AFTER Type (23-19-114)
	1	9420 263	Nut
13	1	3481 726-7	MOULDING PACKAGE, Qtr. Pnl. End Extension, Outer (23-23-39)
	4	6003 000	Retainer
	4	6028 185	Nut
14	1	3481 724-5	MOULDING PACKAGE, Qtr. Pnl. End Extension, Inner (23-23-39)
	6	6023 898	Screw
15	1	3481 722	MOULDING PACKAGE, Deck Opng. Lwr. Pnl. (23-23-23)
	8	6002 975	Retainer
16	1	3481 719	MOULDING PACKAGE, Deck Lid Lwr. (23-23-30)
	9	6024 271	Screw
17	1	3504 104	MOULDING, Deck Lid Upr. (23-23-30)
	9	6024 271	Screw
18	1	2528 974	NAME LETTER, Deck Opng. Lwr. Pnl., "P" (23-34-184)
	1	2528 975	"L"
	1	2528 976	"Y"
	1	2528 977	"M"
	1	2528 978	"O"
	1	2528 979	"U"
	1	2528 980	"T"
	1	2528 981	"H"
	16	9420 263	Nut
19	1	2932 262-3	MOULDING PACKAGE, Qtr. Outside Wheel Opening (23-23-39)
	14	6024 271	Screw
20	2	3504 289	NAME PLATE, Qtr. Panel, "GTX" (23-34-238)
21	1	3444 954-5	ORNAMENT, Qtr. Outside Louver (23-34-334)
	4	---- ---	Nut
22	2	3444 946	TAPE, Qtr. Panel Stripe, "White" (23-23-12)
	2	3445 230	"Black"
	2	3506 261	"Gold"
23	2	3444 945	TAPE, Door Stripe, "White" (23-23-12)
	2	3445 228	"Black"
	2	3506 260	"Gold"

All Packages Include Attaching Parts

Part Type Code is Indicated in Parentheses

1970

EXTERIOR VIEW - BELVEDERE GTX R-S 2 DOOR HARDTOP

19a3177

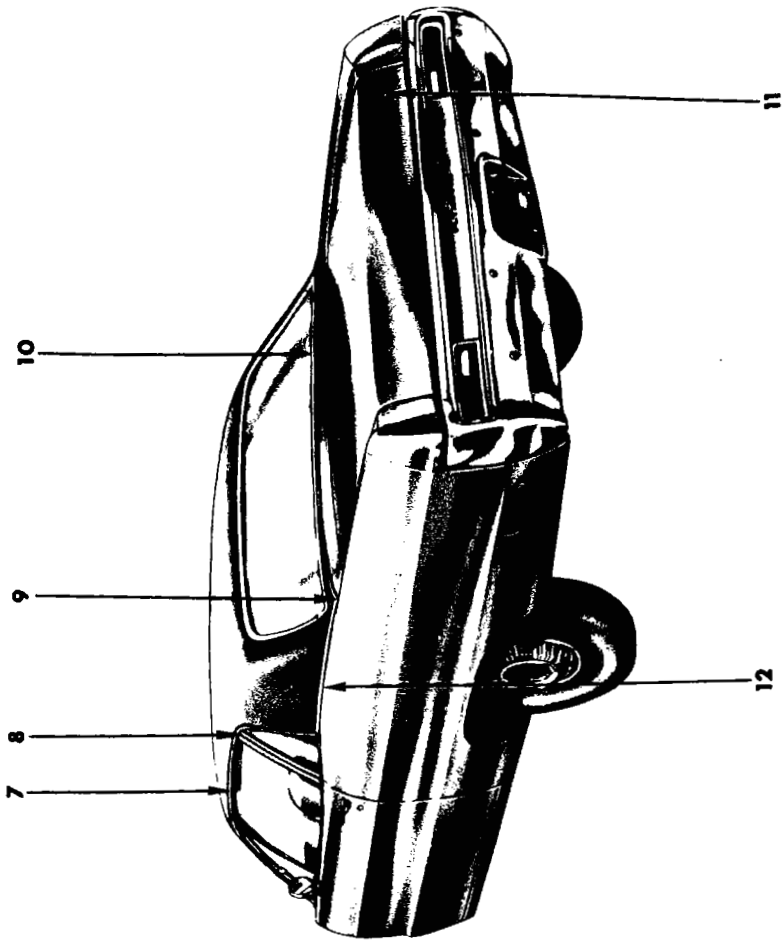

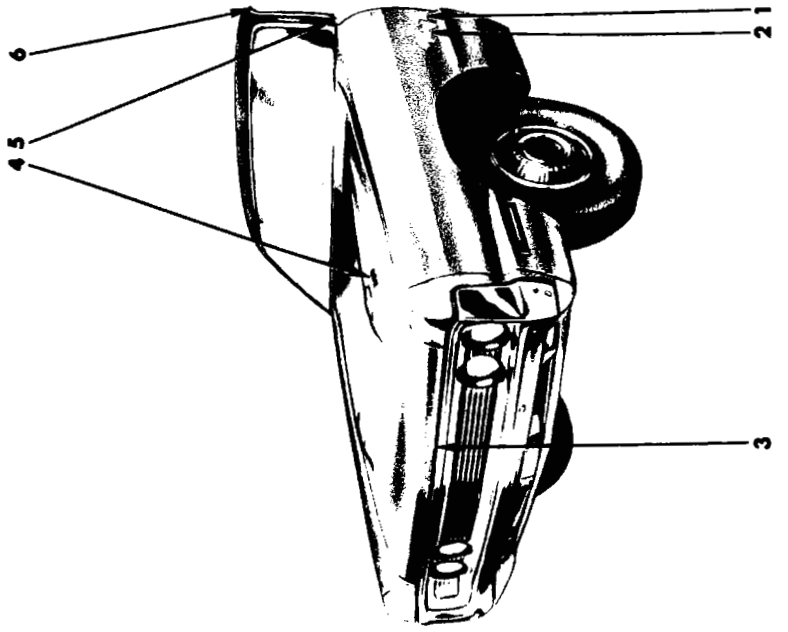

1970
EXTERIOR VIEW - PLYMOUTH FURY I P-E 2 DOOR SEDAN

Printed in U.S.A.

REF. NO.	QTY	PART NUMBER	DESCRIPTION
1	2	3504 153	NUMERAL, Fender Side (1) (12-15-21)
	2	6002 852	Retainer
2	2	3504 152	NAME PLATE, Fender Side (Fury) (12-15-21)
	2	6002 852	Retainer
3	1	2785 791	NAME PLATE, Hood Front (15-06-16)
	3	6027 552	Nut
4	2	2949 240	NAME PLATE, Hood Top (383) (5-06-16)
	2	2898 878	(440)
	4	9420 254	Nut
5	1	3419 482-3	MOULDING PACKAGE, Body Frt. Lwr. Pillar (23-23-14)
	2	6024 271	Screw
6	1	2933 600-1	MOULDING PACKAGE, Body Front Pillar Drain Trough (23-59-61)
	6	6027 459	Screw
7	1	3419 418-9	MOULDING PACKAGE, Roof Side Drain Trough, Front (23-59-61)
	4	6027 459	Screw
8	1	2933 590-1	MOULDING PACKAGE, Roof Side Drain Trough, Rear (23-59-61)
	4	6027 459	Screw
9	1	2933 578-9	MOULDING PACKAGE, Deck Opng. Upr. Pnl. Outer Corner, use w/Vinyl Roof or Two Tone Paint (23-23-31)
	4	6025 985	Screw
10	1	2933 570-1	MOULDING PACKAGE, Deck Opng. Upr. Pnl. (23-23-31)
	8	6002 920	Retainer
	8	9420 867	Nut
	8	6002 192	Fastener
11	1	3444 262	MEDALLION, Deck Lid Lock (23-17-19)
	2	6024 716	Washer
	2	---- ---	Nut
12	1	2933 894-5	MOULDING PACKAGE, Qtr. Outside Belt, use w/Vinyl Roof or Two Tone Paint (23-23-39)
	8	6002 192	Retainer
	6	6002 920	Retainer
	6	9420 867	Nut

All Packages Include Attaching Parts

Part Type Code is Indicated in Parentheses

1970
EXTERIOR VIEW - PLYMOUTH FURY 1 P-E 2 DOOR SEDAN

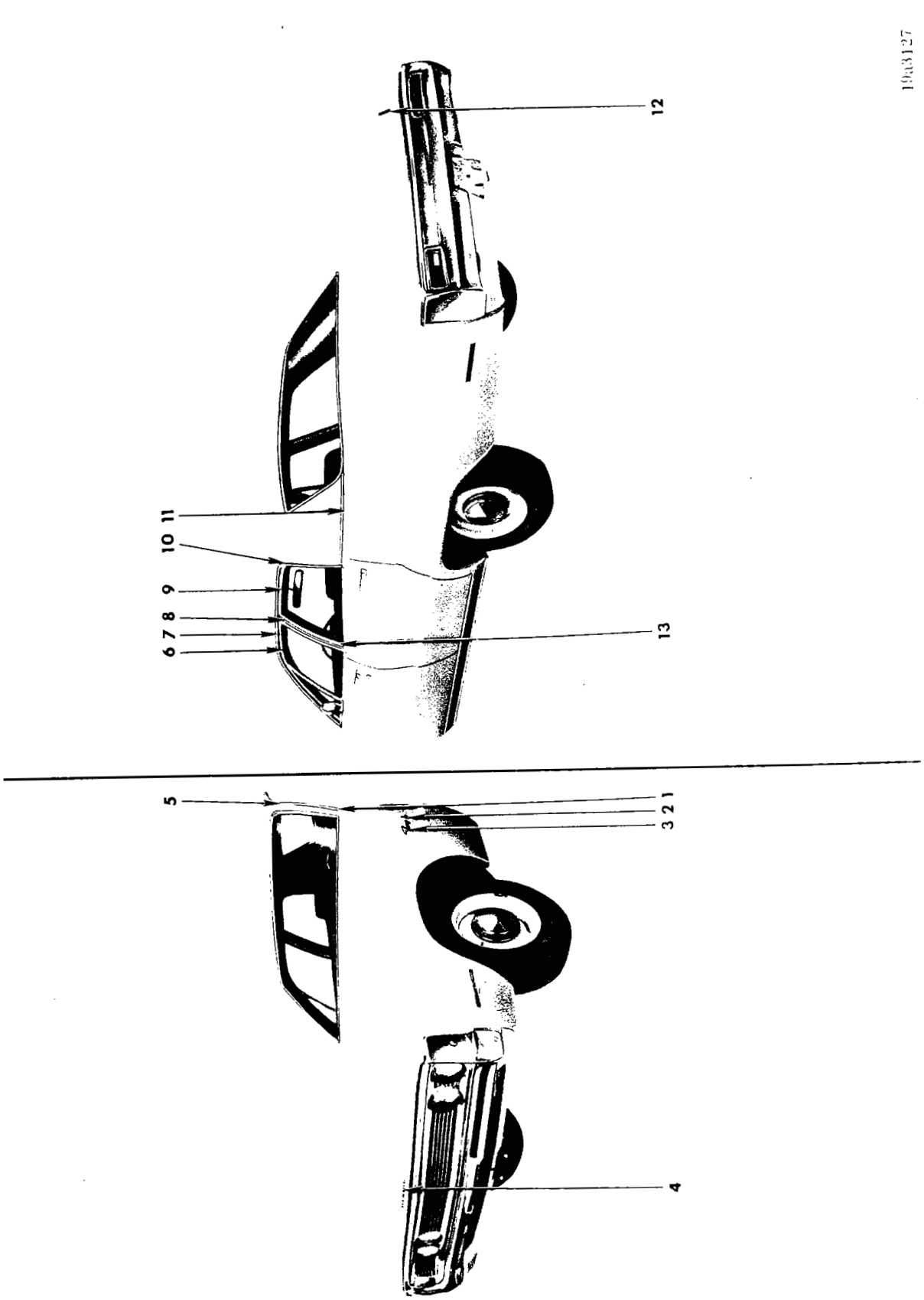

1970
EXTERIOR VIEW - PLYMOUTH FURY I P-E 4 DOOR SEDAN

REF. NO.	QTY	PART NUMBER	DESCRIPTION
1	1	3419 482-3	MOULDING PACKAGE, Body Frt. Lwr. Pillar (23-23-14)
	2	6024 271	Screw
2	2	3504 153	NUMERAL, Fender Side (I) (12-15-21)
	2	6002 852	Retainer
3	2	3504 152	NAME PLATE, Fender Side (Fury) (12-15-21)
	2	6002 852	Retainer
4	1	2998 870	NAME PLATE, Hood Front (15-06-3)
	3	6027 552	Nut
5	1	2933 568-9	MOULDING PACKAGE, Body Front Pillar Drain Trough (23-59-61)
	10	6027 459	Screw
6	1	2893 698-9	MOULDING, Frt. Door Wdo. Opng. Frame, Upr. (23-23-32)
7	1	3419 424-5	MOULDING PACKAGE, Roof Side Drain Trough, Front (23-59-61)
	10	6027 459	Screw
8	1	2893 700-1	MOULDING, Frt. Door Wdo. Opng. Frame, Rear (23-23-32)
9	1	2893 722-3	MOULDING, Rear Door Wdo. Opng. Frame, Upr. (23-23-33)
10	1	2933 586-7	MOULDING PACKAGE, Roof Side Drain Trough, Rear (23-59-61)
	6	6024 271	Screw
11	1	2933 566-7	MOULDING PACKAGE, Deck Opng. Upr. Pnl., use w/Vinyl Roof or Two Tone Paint (23-23-31)
	6	6002 920	Retainer
	6	9420 867	Nut
	8	6002 192	Fastener
12	1	3444 262	MEDALLION, Deck Lid Lock (23-17-19)
	2	6024 716	Washer
	2	---- ---	Nut
13	1	2893 700	MOULDING, Rear Door Wdo. Opng. Frame, Frt., Lt. (23-23-33)
	1	2893 701	MOULDING, Rear Door Wdo. Opng. Frame, Frt. Rt. (23-23-33)

All Packages Include Attaching Parts

Part Type Code is Indicated in Parentheses

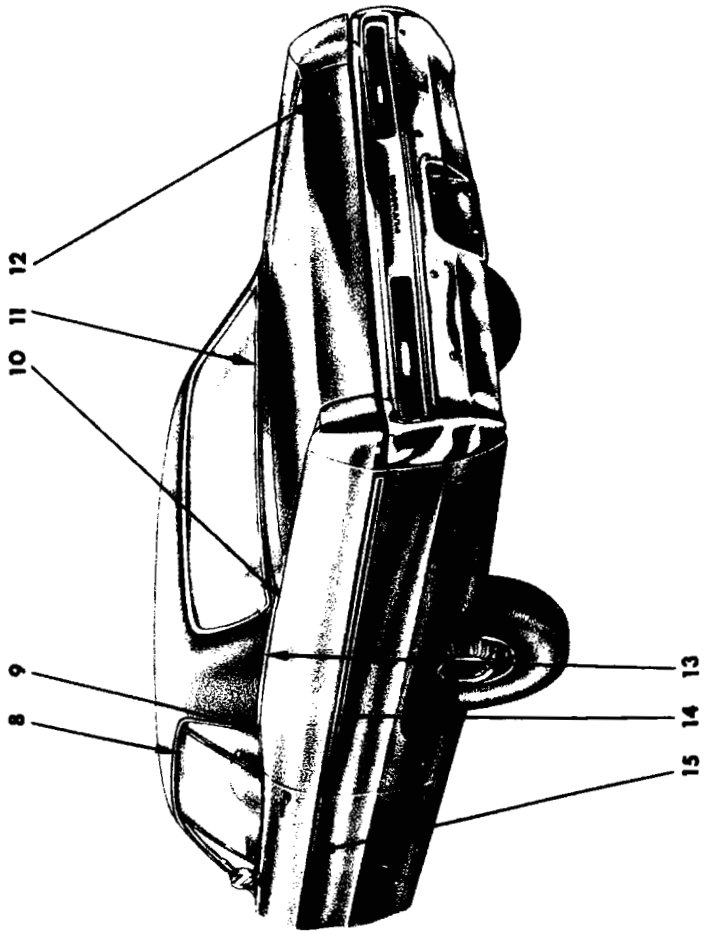

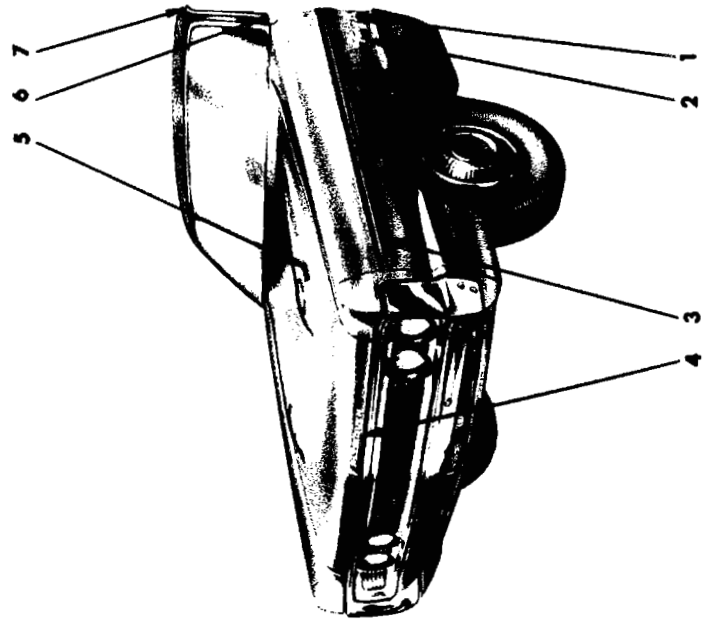

1970
EXTERIOR VIEW - PLYMOUTH FURY II P-L 2 DOOR SEDAN

REF. NO.	QTY	PART NUMBER	DESCRIPTION
1	2	3504 153	NUMERAL, Fender Side (12-15-21)
	4	6002 852	Retainer
2	2	3504 152	NAME PLATE, Fender Side (12-15-21)
	4	6002 852	Retainer
3	1	3481 998-9	MOULDING PACKAGE, Fender Side (12-15-2)
	3	6026 523	Nut
	3	6002 877	Retainer
	6	6002 002	Retainer
4	1	2785 791	NAME PLATE, Hood Front (15-06-3)
	3	6027 552	Nut
5	2	2949 240	NAME PLATE, Hood Side (15-06-3)
	4	9420 254	Nut
6	1	3419 482-3	MOULDING PACKAGE, Body Frt. Lwr. Pillar (23-23-14)
	2	6024 271	Screw
7	1	2933 600-1	MOULDING PACKAGE, Body Frt. Pillar Drain Trough (23-59-61)
	6	6027 459	Screw
8	1	#3419 418-9	MOULDING PACKAGE, Roof Side Drain Trough, Front (23-59-61)
	4	6027 459	Screw
9	1	2933 590-1	MOULDING PACKAGE, Roof Side Drain Trough, Rear (23-59-61)
	4	6027 459	Screw
10	1	2933 578-9	MOULDING PACKAGE, Deck Opng. Upr. Pnl. Outer Corner (23-23-31)
	4	6025 985	Screw
11	1	2933 570-1	MOULDING PACKAGE, Deck Opng. Upr. Pnl. (23-23-31)
	8	6002 920	Retainer
	8	9420 867	Nut
	8	6002 192	Fastener
12	1	3444 236	MEDALLION, Deck Lid Lock (23-17-19)
	2	6024 716	Washer
	2	---- ---	Nut
13	1	2933 894-5	MOULDING PACKAGE, Qtr. Outside Belt (23-23-39)
	8	6002 192	Retainer
	6	6002 920	Retainer
	6	9420 867	Nut
14	1	3419 734-5	MOULDING PACKAGE, Qtr. Outside (23-23-39)
	4	6002 884	Retainer
	4	6027 625	Nut
	20	6002 875	Retainer
15	1	3419 728-9	MOULDING PACKAGE, Door Outside (23-23-32)
	14	6003 002	Retainer
	2	6002 877	Retainer w/Seal
	2	6026 523	Nut

All Packages Include Attaching Parts

Part Type Code is Indicated in Parentheses

1970
EXTERIOR VIEW - PLYMOUTH FURY II P-L 2 DOOR SEDAN

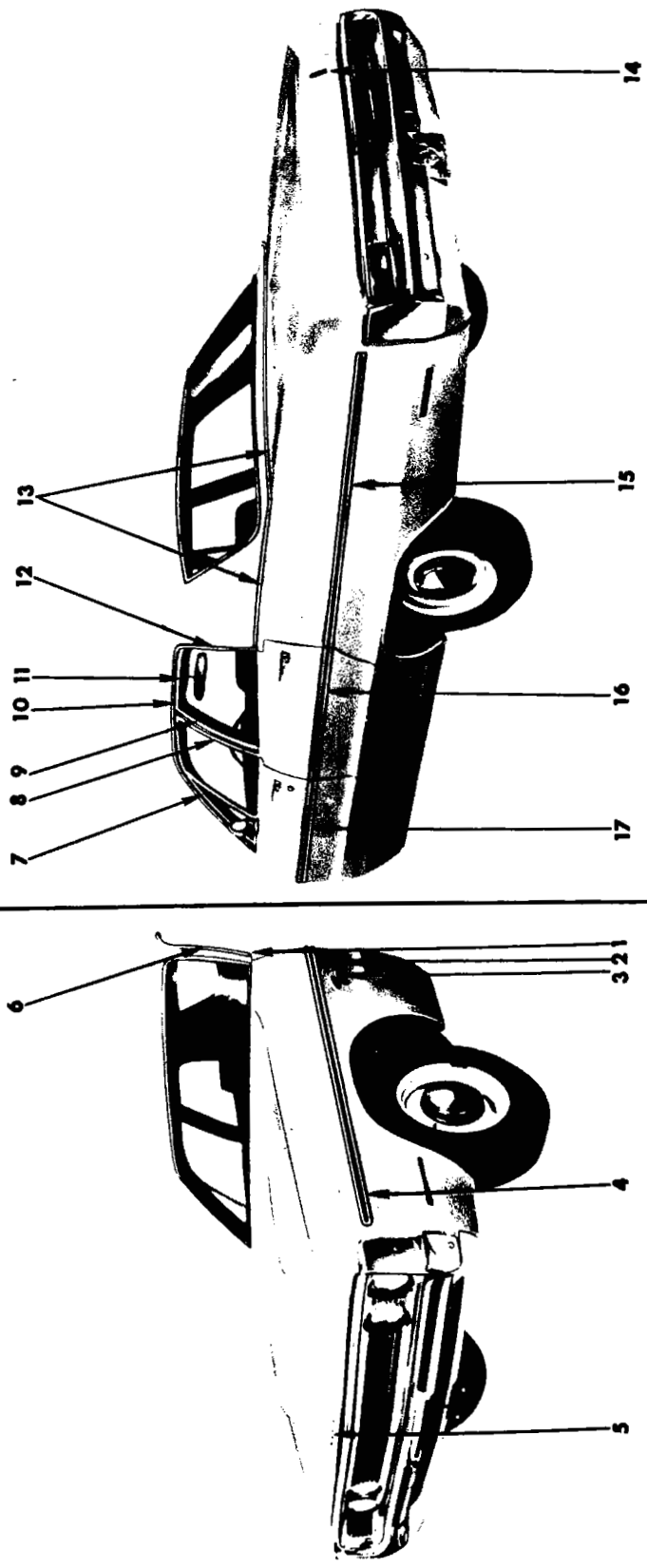

1970
EXTERIOR VIEW - PLYMOUTH FURY II P-L 4 DOOR SEDAN

REF. NO.	QTY	PART NUMBER	DESCRIPTION
1	1	3419 482-3	MOULDING PACKAGE, Body Frt. Lwr. Pillar (23-23-14)
	2	6024 271	Screw
2	2	3504 154	NUMERAL, Fender Side (12-15-21)
	4	6002 852	Retainer
3	2	3504 152	NAME PLATE, Fender Side (Fury (12-15-21)
	4	6002 852	Retainer
4	1	3481 998-9	MOULDING PACKAGE, Fender Side
	3	6026 523	Nut
	3	6002 877	Retainer
	6	6002 002	Retainer
5	1	2998 870	NAME PLATE, Hood Front (15-06-3)
	3	6027 552	Nut
6	1	2933 568-9	MOULDING PACKAGE, Body Front Pillar Drain Trough (23-59-61)
	10	6027 459	Screw
7	1	2893 698-9	MOULDING, Frt. Door Wdo. Opng. Frame, Upr. (23-23-32)
8	1	2893 700-1	MOULDING, Frt. Door Wdo. Opng. Frame, Rear (23-23-32)
9	1	2893 700	MOULDING, Rear Door Wdo. Opng. Frame, Frt., Lt. (23-23-33)
	1	2893 701	MOULDING, Rear Door Wdo. Opng. Frame, Frt., Rt. (23-23-33)
10	1	3419 424-5	MOULDING PACKAGE, Roof Side Drain Trough, Frt. (23-59-61)
	10	6027 459	Screw
11	1	2893 722-3	MOULDING, Rear Door Wdo. Opng. Frame, Upr. (23-23-33)
12	1	2933 586-7	MOULDING PACKAGE, Roof Side Drain Trough, Rr. (23-59-61)
	6	6024 271	Screw
13	1	2933 566-7	MOULDING PACKAGE, Deck Opng. Upr. Pnl., use w/Vinyl Roof or Two Tone Paint (23-23-31)
	6	6002 920	Retainer
	6	9420 867	Nut
	8	6002 192	Fastener
14	1	3444 263	MEDALLION, Deck Lid Lock (23-17-19)
	2	6024 716	Washer
	2	---- ---	Nut
15	1	3419 752-3	MOULDING PACKAGE, Qtr. Outside (23-23-39)
	14	6002 875	Retainer
	4	6002 884	Retainer
	4	6027 625	Nut
16	1	3419 750-1	MOULDING PACKAGE, Rear Door Outside (23-23-33)
	4	6002 877	Retainer
	4	6026 523	Nut
	8	6002 875	Retainer
17	1	3419 748-9	MOULDING PACKAGE, Frt. Door Outside (23-23-32)
	10	6002 875	Retainer
	2	6002 877	Retainer
	2	6026 523	Nut

All Packages Include Attaching Parts

Part Type Code is Indicated in Parentheses

1970
EXTERIOR VIEW - PLYMOUTH FURY II P-L 4 DOOR SEDAN

19a3158

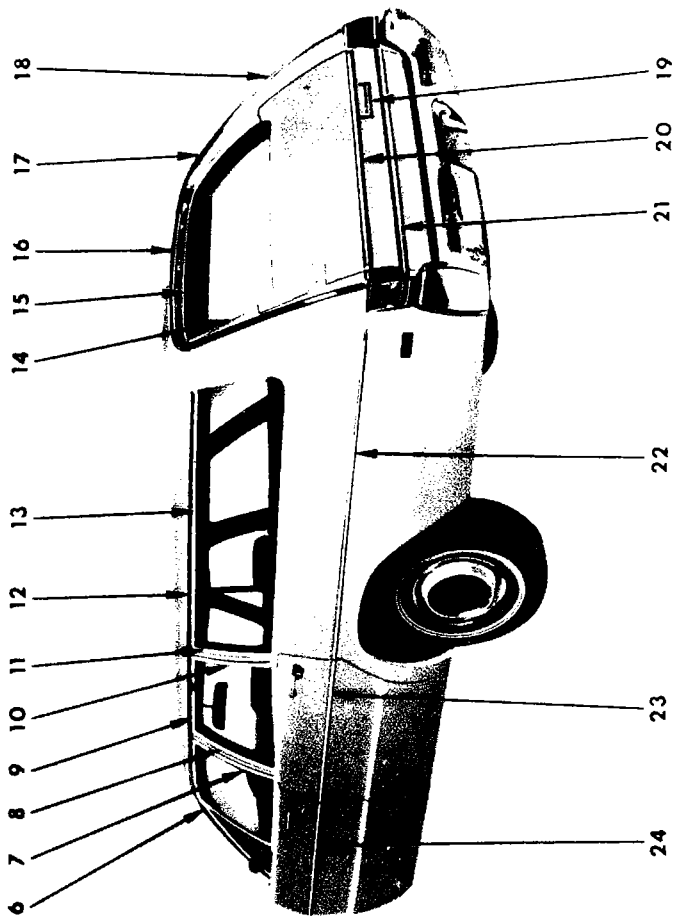

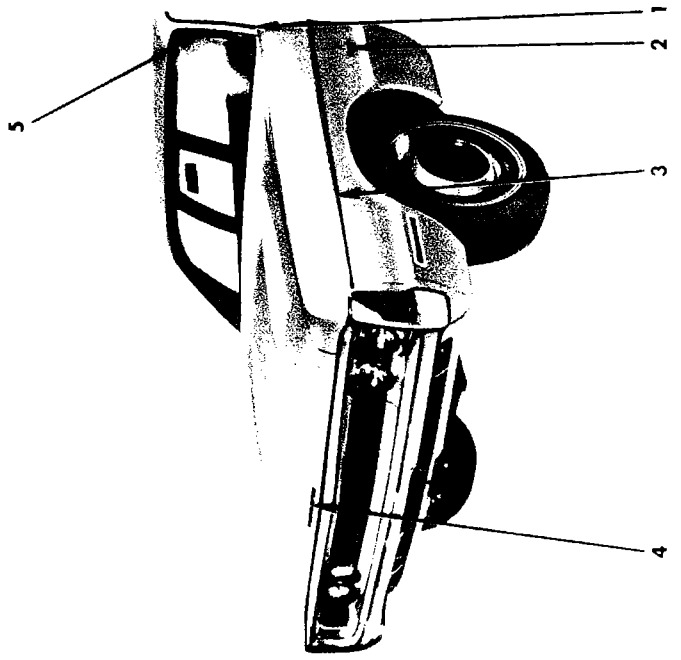

1970
EXTERIOR VIEW - PLYMOUTH FURY II P-L SUBURBAN

REF. NO.	QTY	PART NUMBER	DESCRIPTION
1	1	3419 482-3	MOULDING PACKAGE, Body Frt. Lwr. Plr. (23-23-14)
	2	6024 271	Screw
2	2	3446 765	NAME PLATE, Fender Side (Suburban) (12-15-21)
	2	6002 852	Retainer
3	1	3481 998-9	MOULDING PACKAGE, Fender Side (12-15-2)
	3	6026 523	Nut
	3	6002 877	Retainer
	6	6002 002	Retainer
4	1	2998 870	NAME PLATE, Hood Front (15-06-3)
	3	6027 552	Nut
5	1	2933 568-9	MOULDING PACKAGE, Body Front Pillar Drain Trough (23-59-61)
	10	6027 459	Screw
6	1	2893 698-9	MOULDING, Frt. Door Wdo. Opng. Frame, Upr. (23-23-32)
7	1	2893 700-1	MOULDING, Frt. Door Wdo. Opng. Frame, Rear (23-23-32)
8	1	2893 700	MOULDING, Rear Door Wdo. Opng. Frame, Frt., Lt. (23-23-33)
	1	2893 701	MOULDING, Rear Door Wdo. Opng. Frame, Frt., Rt. (23-23-33)
9	1	2893 724-5	MOULDING, Rear Door Wdo. Opng. Frame, Upr. (23-23-33)
10	1	2893 728-9	MOULDING, Rear Door Wdo. Opng. Frame, Rear (23-23-33)
11	1	2893 256-7	MOULDING, Qtr. Wdo. Outside, Frt., Prime (23-23-73)
	1	2894 870-1	MOULDING, Qtr. Wdo. Outside, Frt., Finish (23-23-73)
12	1	3419 450-1	MOULDING PACKAGE, Roof Side Drain Trough (23-59-61)
	12	6024 659	Screw
13	1	2893 258-9	MOULDING, Qtr. Wdo. Outside, Upr., Prime (23-23-73)
	1	2894 872-3	MOULDING, Qtr. Wdo. Outside, Upr., Finish (23-23-73)
14	1	2894 442-3	MOULDING, Qtr. Pnl. Outside Tailgate Plr., Upr. Tailgate Opng., Prime (23-23-60)
15	1	2894 445	MOULDING, Roof Pnl. Outside Tailgate Opng. Upr., Prime (23-23-60)
16	1	2894 418	MOULDING, Roof Rear Air Deflector, Center (23-23-60)
17	1	2894 416-7	MOULDING, Roof Rear Air Deflector, End (23-23-60)
18	1	3440 476-7	MOULDING PACKAGE, Qtr. Pnl. Outside Tailgate Plr., Upr., w/o Assist Handles (23-23-60)
	1	3440 478-9	MOULDING, Qtr. Pnl. Outside Tailgate Plr. Upr., use w/Assist Handles (23-23-60)
19	1	2785 791	NAME PLATE, Tailgate Outside Panel "Plymouth" (23-54-11)
	3	---- ---	Nut
20	1	2933 472	MOULDING PACKAGE, Tailgate Outside, Upr. (23-23-61)
	2	6002 779	Retainer
	2	6026 523	Nut
21	1	2933 471	MOULDING PACKAGE, Tailgate Outside, Lwr. (23-23-61)
	2	6026 523	Nut
	2	6002 779	Retainer
22	1	3419 764-5	MOULDING PACKAGE, Qtr. Outside (23-23-39)
	16	6002 875	Retainer
23	1	3419 750-1	MOULDING PACKAGE, Rear Door Outside (23-23-33)
	4	6002 877	Retainer
	4	6026 523	Nut
	8	6002 875	Retainer
24	1	3419 748-9	MOULDING PACKAGE, Frt. Door Outside (23-23-32)
	10	6002 875	Retainer
	2	6002 877	Retainer
	2	6026 523	Nut

All Packages Include Attaching Parts

Part Type Code is Indicated in Parentheses

1970
EXTERIOR VIEW - PLYMOUTH FURY II P-L SUBURBAN

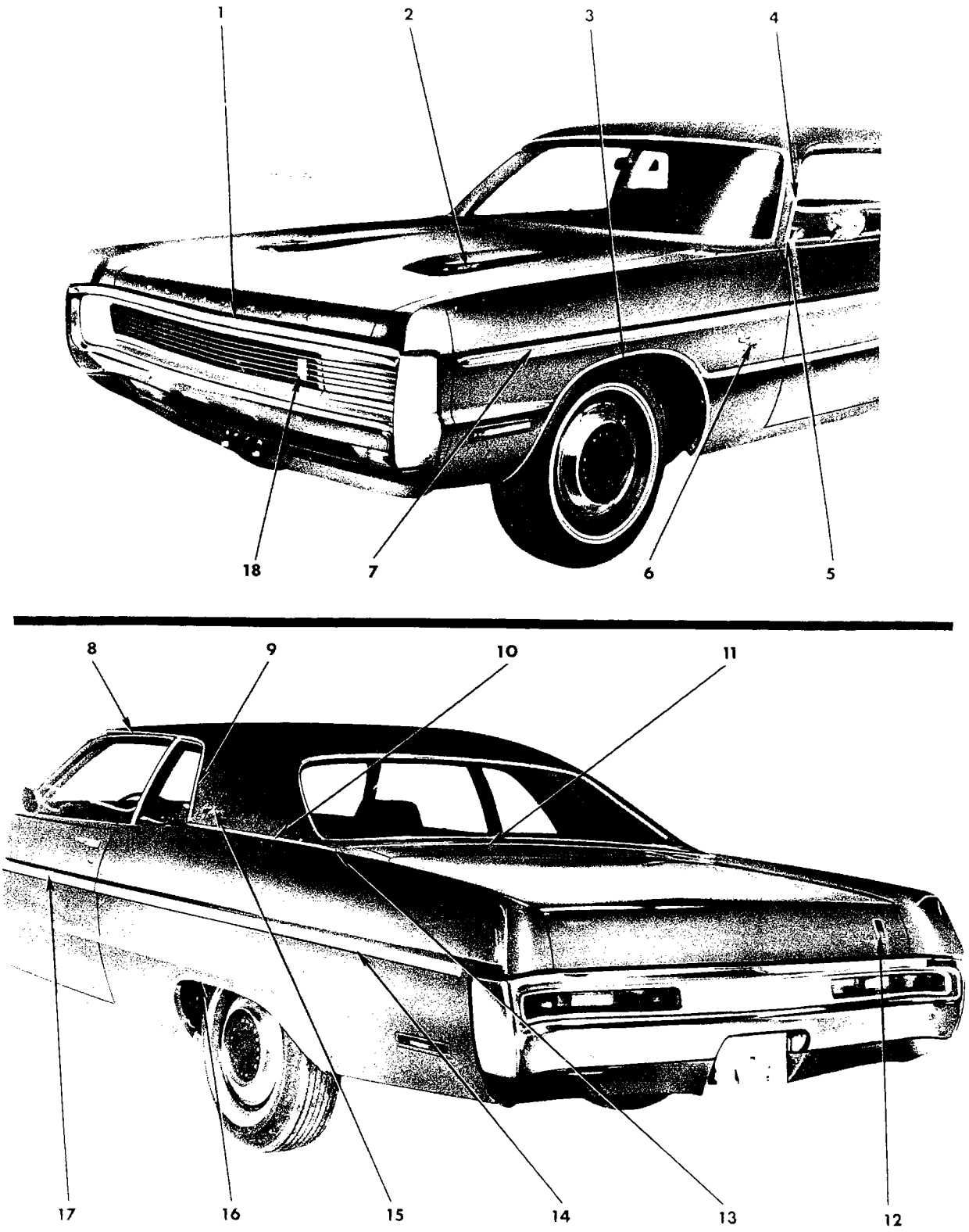

1970
EXTERIOR VIEW - PLYMOUTH FURY P-L (GRAN COUPE) 2 DOOR SEDAN

REF. NO.	QTY	PART NUMBER	DESCRIPTION
1	1	2528 974	LETTER "P", Hood Front Name (15-06-16)
	1	2528 975	"L"
	1	2602 277	"Y"
	1	2528 977	"M"
	1	2528 978	"O"
	1	2528 979	"U"
	1	2528 980	"T"
	1	2602 282	"H"
2	2	2949 240	NAME PLATE, Hood Top (383) (15-06-3)
	2	2898 878	(440)
	4	9420 254	Nut
3	1	3419 718-9	MOULDING PACKAGE, Fender Wheel Opening (12-15-2)
	7	6024 271	Screw
4	1	2933 600-1	MOULDING PACKAGE, Body Front Pillar Drain Trough (23-59-61)
	6	6027 459	Screw
5	1	3419 482-3	MOULDING PACKAGE, Body Frt. Lwr. Pillar (23-23-14)
	2	6024 271	Screw
6	2	3504 152	NAME PLATE, Fender Side (12-15-21)
	4	6002 852	Retainer
7	1	3419 722-3	MOULDING PACKAGE, Fender Side, "Black" (12-15-2)
	1	3549 182-3	"Tan"
	1	3549 184-5	"Citron Gold"
	1	3549 186-7	"Green"
	1	3549 188-9	"Blue"
	2	116 000	Nut
	1	6026 523	Nut
	2	6002 367	Retainer
	5	6003 004	Retainer
	1	6001 949	Retainer
8	1	3579 102-3	MOULDING PACKAGE, Roof Side Drain Trough, Front (23-59-61)
	10	6024 271	Screw
9	1	2933 590-1	MOULDING PACKAGE, Roof Side Drain Trough, Rear (23-59-61)
	4	6027 459	Screw
10	1	2933 894-5	MOULDING PACKAGE, Qtr. Outside Belt, use w/Vinyl Roof or Two Tone Paint (23-23-39)
	8	6002 192	Retainer
	6	6002 920	Retainer
	6	9420 867	Nut
11	1	2933 570-1	MOULDING PACKAGE, Deck Opng. Upr. Pnl., use w/Vinyl Roof or Two Tone Paint (23-23-31)
	8	6002 920	Retainer
	8	9420 867	Nut
	8	6002 192	Fastener
12	1	3569 529	MEDALLION, Deck Lid Lock, "Gran Coupe" (23-17-19)
	2	6024 716	Washer
	2	---- ---	Nut
13	1	2933 578-9	MOULDING PACKAGE, Deck Opng. Upr. Pnl. Outer Corner, use w/Vinyl Roof or Two Tone Paint (23-23-31)
	4	6025 985	Screw
14	1	3481 984-5	MOULDING PACKAGE, Qtr. Outside, "Black" (23-23-39)
	1	3549 150-1	"Tan"
	1	3549 152-3	"Citron Gold"
	1	3549 154-5	"Green"
	1	3549 156-7	"Blue"
	22	---- ---	Retainer
	2	6000 705	Retainer
	2	6027 625	Nut
15	2	3569 537	NAME PLATE, Qtr. Panel, Gran Coupe (23-34-238)
	2	9420 263	Nut
16	1	3419 736-7	MOULDING PACKAGE, Qtr. Outside Wheel Opening (23-23-39)
	12	6024 271	Screw
17	1	3481 978-9	MOULDING PACKAGE, Door Outside, "Black" (23-23-32)
	1	3549 158-9	"Tan"
	1	3549 160-1	"Citron Gold"
	1	3549 162-3	"Green"
	1	3549 164-5	"Blue"
	2	6001 948	Retainer
	2	6026 523	Nut
	14	---- ---	Retainer
18	1	3443 270	MEDALLION (7-17-1)

All Packages Include Attaching Parts

Part Type Code is Indicated in Parentheses

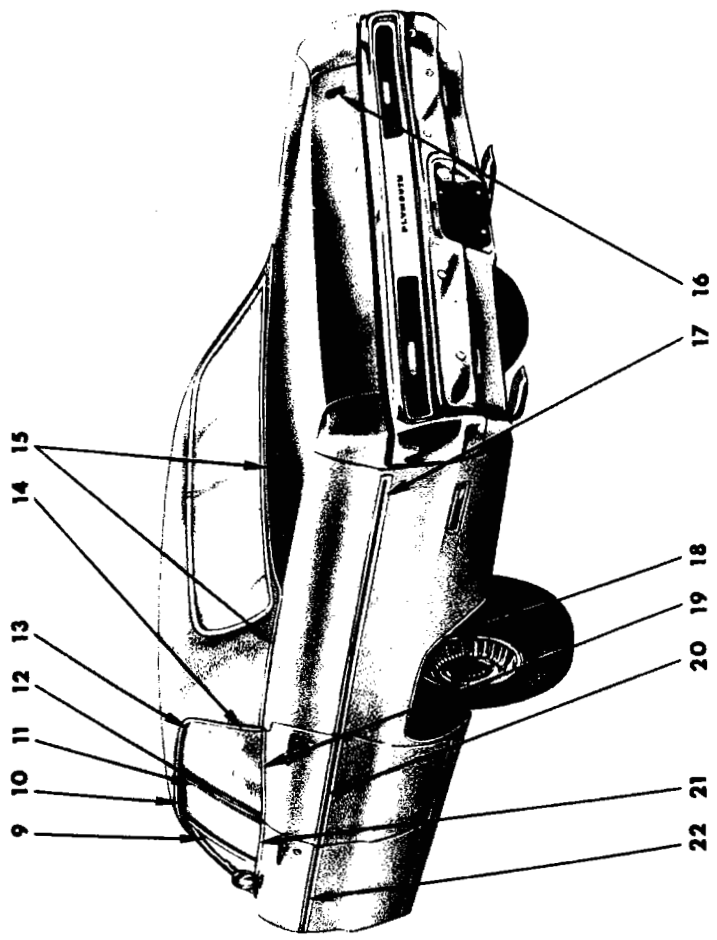

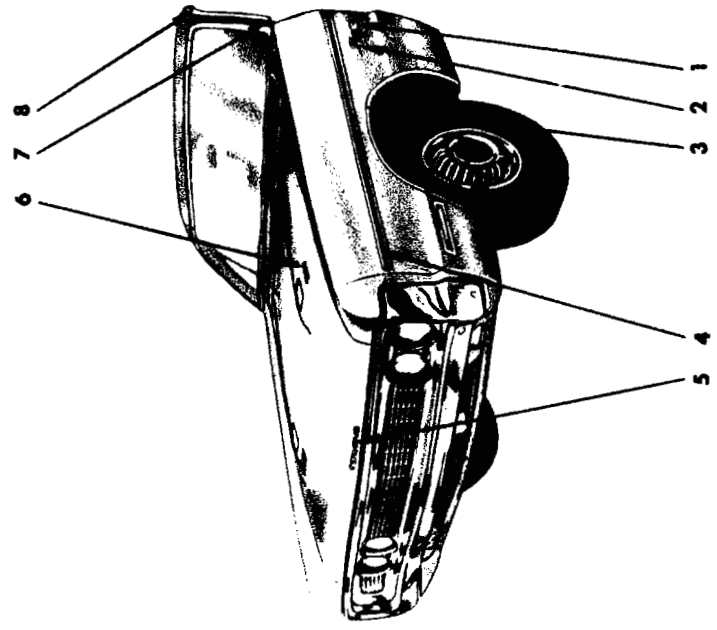

19a2875

1970
EXTERIOR VIEW - PLYMOUTH FURY III P-M 4 DOOR SEDAN

REF. NO.	QTY	PART NUMBER	DESCRIPTION
1	2	3504 155	NUMERAL, Fender Side (12-15-21)
	4	6002 852	Retainer
2	2	3504 152	NAME PLATE, Fender Side (12-15-21)
	4	6002 852	Retainer
3	1	3419 718-9	MOULDING PACKAGE, Fender Wheel Opening (12-15-2)
	7	6024 271	Screw
4	1	3419 722-3	MOULDING PACKAGE, Fender Side, "Black" (12-15-2)
	1	3549 182-3	"Tan"
	1	3549 184-5	"Citron Gold"
	1	3549 186-7	"Green"
	1	3549 188-9	"Blue"
	2	116 000	Nut
	1	6026 523	Nut
	2	6002 367	Retainer
	5	6003 004	Retainer
	1	6001 949	Retainer
5	1	2785 791	NAME PLATE, Hood Front (Plymouth) (15-06-3)
	3	6027 552	Nut
6	2	2949 240	NAME PLATE, Hood (383) (15-06-3)
	4	9420 254	Nut
7	1	3419 482-3	MOULDING PACKAGE, Body Frt. Lwr. Pillar (23-23-14)
	2	6024 271	Screw
8	1	2933 568-9	MOULDING PACKAGE, Body Frt. Pillar Drain Trough (23-59-61)
	10	6027 459	Screw
9	1	2893 698-9	MOULDING, Frt. Door Wdo. Opng. Frame, Upr. (23-23-32)
10	1	#3419 424-5	MOULDING PACKAGE, Roof Side Drain Trough, Front (23-59-61)
	10	6027 459	Screw
11	1	2893 700-1	MOULDING, Frt. Door Wdo. Opng. Frame, Rear (23-23-32)
12	1	2893 700	MOULDING, Rear Door Wdo. Opng. Frame, Frt., Lt. (23-23-33)
	1	2893 701	MOULDING, Rear Door Wdo. Opng. Frame, Frt., Rt.
13	1	2893 722-3	MOULDING, Rear Door Wdo. Opng. Frame, Upr. (23-23-33)
14	1	2933 586-7	MOULDING PACKAGE, Roof Side Drain Trough, Rear (23-59-61)
	6	6024 271	Screw
15	1	2933 566-7	MOULDING PACKAGE, Deck Opng. Upr. Pnl., use w/Vinyl Roof or Two Tone Paint (23-23-31)
	8	6002 192	Fastener
	8	6002 920	Retainer
	8	9420 867	Nut
16	1	3444 264	MEDALLION, Deck Lid Lock (23-17-19)
	2	6024 716	Washer
	2	---- ---	Nut
17	1	3481 986-7	MOULDING PACKAGE, Qtr. Outside, "Black" (23-23-39)
	1	3549 142-3	"Tan"
	1	3549 144-5	"Citron Gold"
	1	3549 146-7	"Green"
	1	3549 148-9	"Blue"
	16	---- ---	Retainer
	2	6000 705	Retainer
	2	6027 625	Nut
18	1	3419 736-7	MOULDING PACKAGE, Qtr. Outside Whl. Opng. (23-23-39)
	12	6024 271	Screw
19	1	2933 766-7	MOULDING PACKAGE, Rear Door Outside Belt (23-23-32)
	10	6002 782	Retainer and Seal
20	1	3481 982-3	MOULDING PACKAGE, Rear Door Outside, "Black" (23-23-33)
	1	3549 174-5	"Tan"
	1	3549 176-7	"Citron Gold"
	1	3549 178-9	"Green"
	1	3549 180-1	"Blue"
	8	---- ---	Retainer
	4	6001 949	Retainer 4 6026 523 Nut
21	1	2933 764-5	MOULDING PACKAGE, Frt. Door Outside Belt (23-23-32)
	10	6002 782	Retainer and Seal
22	1	3481 980-1	MOULDING PACKAGE, Frt. Door Outside, "Black" (23-23-32)
	1	3549 166-7	"Tan"
	1	3549 168-9	"Citron Gold"
	1	3549 170-1	"Green"
	1	3549 172-3	"Blue"
	10	---- ---	Retainer
	2	6001 949	Retainer
	2	6026 523	Nut

All Packages Include Attaching Parts

Part Type Code is Indicated in Parentheses

1970

EXTERIOR VIEW - PLYMOUTH FURY III P-M 4 DOOR SEDAN

19a3119

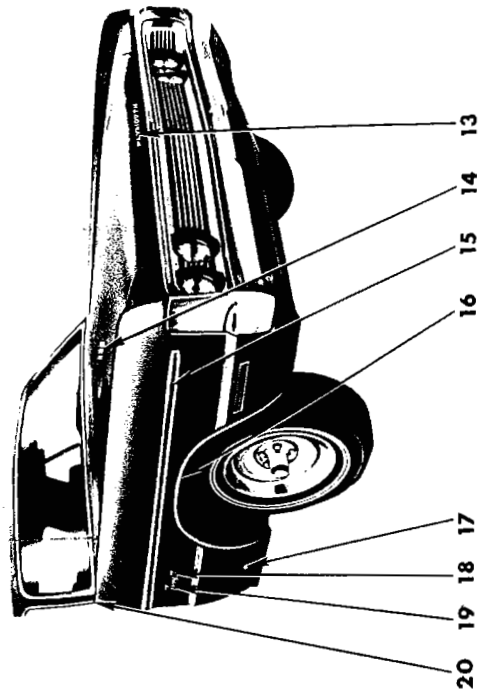

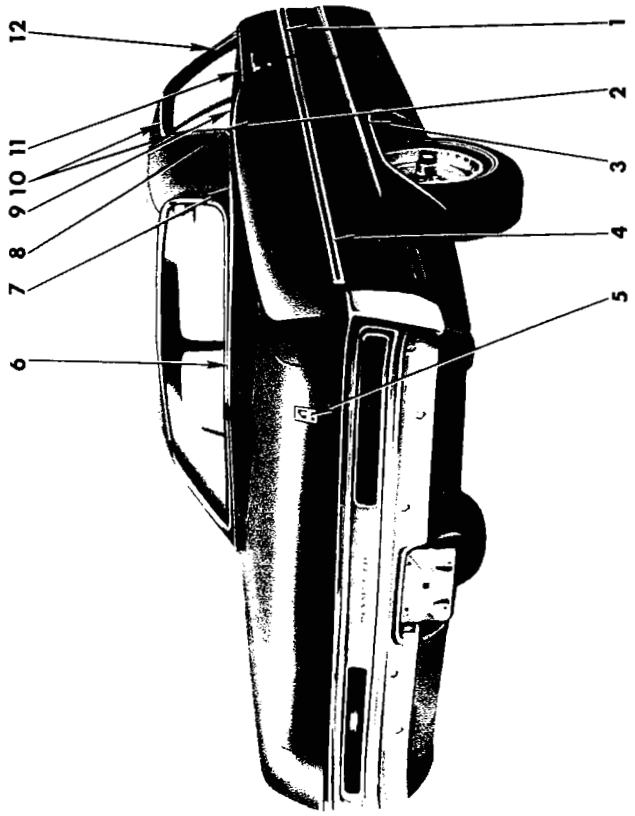

1970
EXTERIOR VIEW - PLYMOUTH FURY III P-M 2 DOOR HARDTOP

REF. NO.	QTY	PART NUMBER	DESCRIPTION
1	1	3481 978-9	MOULDING PACKAGE, Door Outside, "Black" (23-23-32)
	1	3549 158-9	"Tan"
	1	3549 160-1	"Citron Gold"
	1	3549 162-3	"Green"
	1	3549 164-5	"Blue"
	2	6001 948	Retainer
	14	---- ---	Retainer
	2	6026 523	Nut
2	1	2933 624-5	MOULDING PACKAGE, Qtr. Outside Belt to Drip, use w/Vinyl Roof or Two Tone Paint (23-23-39)
	4	6025 985	Screw
3	1	3419 736-7	MOULDING PACKAGE, Qtr. Outside Wheel Opening (23-23-39)
	12	6024 271	Screw
4	1	3481 984-5	MOULDING PACKAGE, Qtr. Outside, "Black" (23-23-39)
	1	3549 150-1	"Tan"
	1	3549 152-3	"Cirton Gold"
	1	3549 154-5	"Green"
	1	3549 156-7	"Blue"
	22	---- ---	Retainer
	2	6000 705	Retainer
	2	6027 625	Nut
5	1	3444 264	MEDALLION, Deck Lid Lock (23-17-19)
	2	6024 716	Washer
	2	---- ---	Nut
6	1	3419 026	MOULDING PACKAGE, Deck Opng. Upr. Pnl., use w/Vinyl Roof or Two Tone Paint (23-23-31)
	4	6002 192	Fastener
	3	6002 920	Retainer
	6	9420 867	Nut
7	1	3419 028-9	MOULDING PACKAGE, Deck Opng. Upr. Pnl. Side, use w/Vinyl Roof, or Two Tone Paint, w/o Belt Mldg. (23-23-31)
	6	6002 192	Fastener
	1	3419 030-1	MOULDING PACKAGE, Deck Opng. Upr. Pnl. Side, use w/Vinyl Roof or Two Tone Paint, w/Belt Mldg. (23-23-31)
	6	6002 192	Fastener
	6	6002 920	Retainer
	6	9420 867	Nut
8	1	3419 032-3	MOULDING PACKAGE, Roof Side Drain Trough, Rr. Extension (Not Used w/Belt Mldgs., Vinyl Roof or Two Tone Paint) (23-59-61)
	2	6027 459	Screw
9	1	2933 614-5	MOULDING PACKAGE, Qtr. Outside Belt, use w/Vinyl Roof or Two Tone Paint (23-23-39)
	6	6002 782	Retainer and Seal
	2	6025 985	Screw
	1	2933 626-7	MOULDING PACKAGE, Qtr. Outside Belt, use w/o Vinyl Roof or Two Tone Paint (23-23-39)
	2	6027 459	Screw
	6	6002 782	Retainer and Seal
10	1	3419 416-7	MOULDING PACKAGE, Roof Side Drain Trough, Frt. and Rr. (23-59-61)
	4	6027 459	Screw
11	1	2933 722-3	MOULDING PACKAGE, Door Outside Belt (23-23-32)
	10	6002 782	Retainer and Seal
12	1	2933 602-3	MOULDING PACKAGE, Body Front Pillar Drain Trough (23-59-61)
	6	6027 459	Screw
13	1	2998 870	NAME PLATE, Hood Front (15-06-3)
	3	6027 552	Nut
14	2	2949 240	NAME PLATE, Hood (383 (15-06-3)
	4	9420 254	Nut
15	1	3419 722-3	MOULDING PACKAGE, Fender Side, "Black" (12-15-2)
	1	3549 182-3	"Tan"
	1	3549 184-5	"Citron Gold"
	1	3549 186-7	"Green"
	1	3549 188-9	"Blue"
	2	116 000	Nut
	1	6026 523	Nut
	2	6002 367	Retainer
	5	6003 004	Retainer
	1	6001 949	Retainer
16	1	3419 718-9	MOULDING PACKAGE, Fender Wheel Opening (12-15-2)
	7	6024 271	Screw
17	1	2785 540	MEDALLION, Fender Side (12-15-21)
	1	6026 404	Nut
18	2	3504 155	NUMERAL, Fender Side (12-15-21)
	4	6002 852	Retainer
19	2	3504 152	NAME PLATE, Fender Side (12-15-21)
	4	6002 852	Retainer
20	1	3419 482-3	MOULDING PACKAGE, Body Frt. Lwr. Pillar (23-23-14)
	2	6024 271	Screw

All Packages Include Attaching Parts

Part Type Code is Indicated in Parentheses

1970

EXTERIOR VIEW - PLYMOUTH FURY III P-M 2 DOOR HARD TOP

19a2842

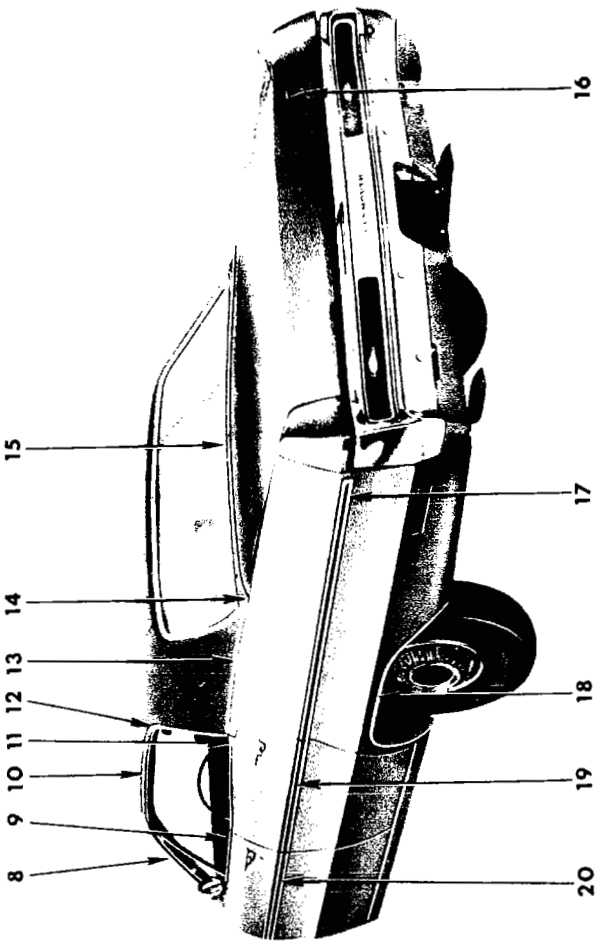

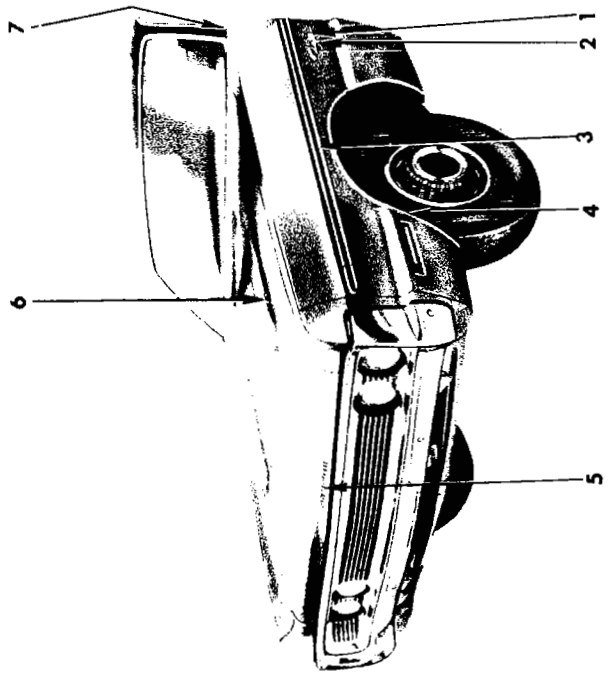

1970
EXTERIOR VIEW - PLYMOUTH FURY III P-M 4 DOOR HARDTOP

REF. NO.	QTY	PART NUMBER	DESCRIPTION
1	2	3504 155	NUMERAL, Fender Side (12-15-21)
	4	6002 852	Retainer
2	2	3504 152	NAME PLATE, Fender Side (12-15-21)
	4	6002 852	Retainer
3	1	3419 722-3	MOULDING PACKAGE, Fender Side, "Black" (12-15-2)
	1	3549 182-3	"Medium Tan"
	1	3549 184-5	"Medium Citron Gold"
	1	3549 186-7	"Light Green"
	1	3549 188-9	"Brite Blue"
	3	6026 523	Nut
	2	6002 367	Retainer
	5	6003 004	Retainer
	1	6001 949	Retainer
4	1	3419 718-9	MOULDING PACKAGE, Fender Wheel Opening (12-15-2)
	7	6024 271	Screw
5	1	2785 791	NAME PLATE, Hood Front (15-06-3)
	3	6027 552	Nut
6	2	2949 240	NAME PLATE, Hood Side (15-06-3)
	4	9420 254	Nut
7	1	3419 482-3	MOULDING PACKAGE, Body Frt. Lwr. Pillar (23-23-14)
	2	6024 271	Screw
8	1	2933 600-1	MOULDING PACKAGE, Body Frt. Pillar Drain Trough (23-59-61)
	6	6027 459	Screw
9	1	2933 764-5	MOULDING PACKAGE, Front Door o/s Belt (23-23-32)
	10	6002 782	Retainer and Seal
10	1	#3419 418-9	MOULDING PACKAGE, Roof Side Drain Trough, Front (23-59-61)
	4	6027 459	Screw
11	1	2933 766-7	MOULDING PACKAGE, Rr. Outside Belt (23-23-33)
	10	6002 782	Retainer and Seal
12	1	2933 588-9	MOULDING PACKAGE, Roof Side Drain Trough, Rear (23-59-61)
	4	6027 459	Screw
13	1	3419 044-5	MOULDING PACKAGE, Qtr. Outside Belt, use w/Vinyl or Two Tone Paint (23-23-39)
	8	6002 192	Fastener
	8	6002 920	Retainer
	8	9420 867	Nut
14	1	2933 578-9	MOULDING PACKAGE, Deck Opng. Upr. Panel Outer Corner, use w/Vinyl Roof or Two Tone Paint (23-23-31)
	4	6025 985	Screw
15	1	2933 570-1	MOULDING PACKAGE, Deck Opng. Upr. Panel, use w/Vinyl Roof or Two Tone Paint (23-23-31)
	8	6002 920	Retainer
	8	9420 867	Nut
	8	6002 192	Fastener
16	1	3444 264	MEDALLION, Deck Lid Lock (23-17-19)
	2	6024 716	Washer
	2	---- ---	Nut
17	1	3481 986-7	MOULDING PACKAGE, Qtr. Outside, "Black" (23-23-39)
	1	3549 142-3	"Tan"
	1	3549 144-5	"Citron Gold"
	1	3549 146-7	"Green"
	1	3549 148-9	"Blue"
	2	6000 705	Retainer
	2	6027 625	Nut
	16	---- ---	Retainer
18	1	3419 736-7	MOULDING PACKAGE, Qtr. Outside Wheel Opening (23-23-39)
	12	6024 271	Screw
19	1	3481 982-3	MOULDING PACKAGE, Rr. Door Outside, "Black" (23-23-33)
	1	3549 174-5	"Medium Tan"
	1	3549 176-7	"Medium Citron Gold Met."
	1	3549 178-9	"Light Green"
	1	3549 180-1	"Brite Light Blue"
	8	---- ---	Retainer
	4	6026 523	Nut
	4	6001 949	Retainer
20	1	3481 980-1	MOULDING PACKAGE, Front Door Outside, "Black" (23-23-32)
	1	3549 166-7	"Tan"
	1	3549 168-9	"Citron Gold"
	1	3549 170-1	"Green"
	1	3549 172-3	"Blue"
	10	---- ---	Retainer
	2	6001 949	Retainer
	2	6026 523	Nut

All Packages Include Attaching Parts

Part Type Code is Indicated in Parentheses

1970

EXTERIOR VIEW - PLYMOUTH FURY III P-M 4 DOOR HARDTOP

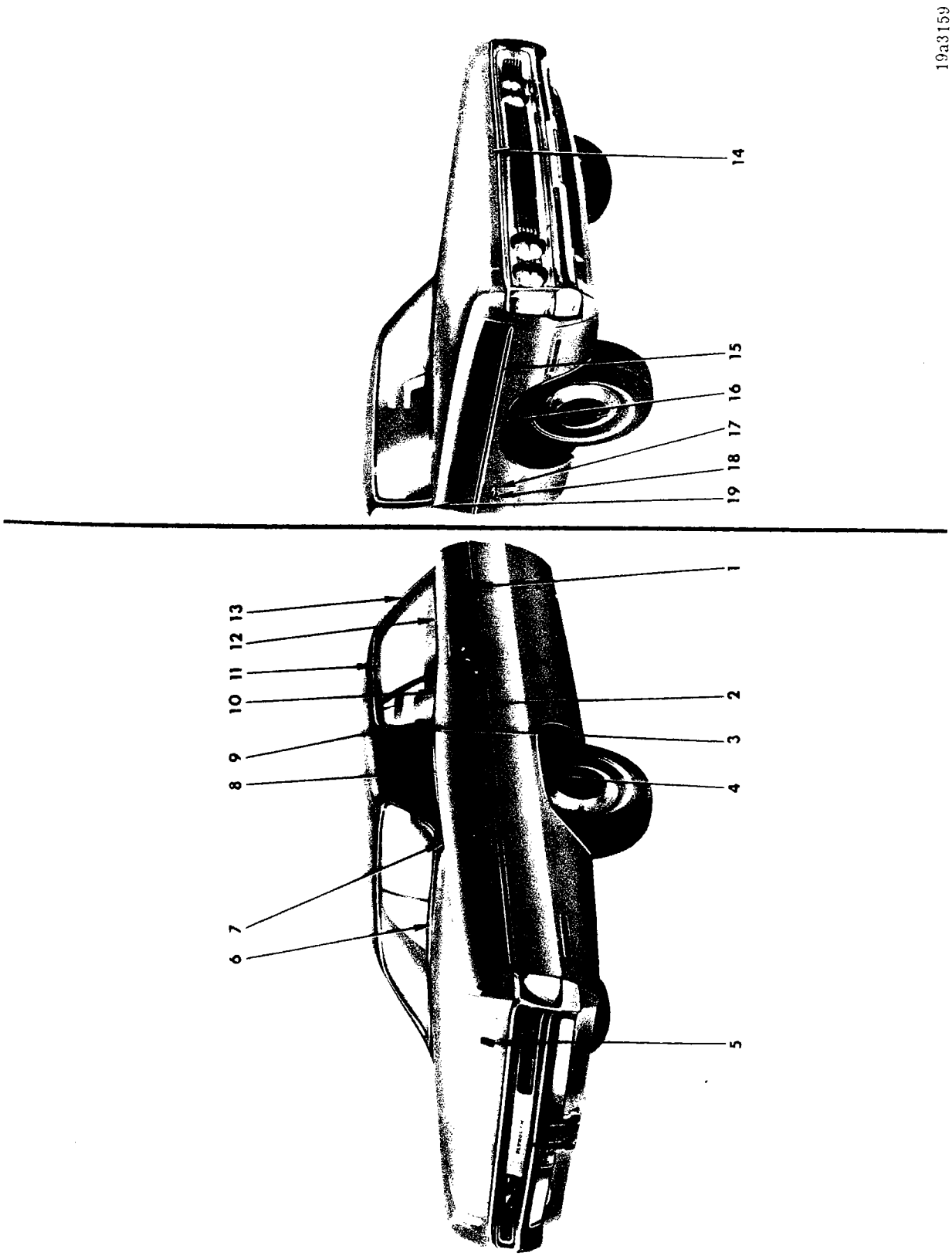

1970
EXTERIOR VIEW - PLYMOUTH FURY III P-M FAST BACK

Printed in U.S.A.

REF. NO.	QTY	PART NUMBER	DESCRIPTION
1	1	3481 978-9	MOULDING PACKAGE, Door Outside, "Black" (23-23-32)
	1	3549 158-9	"Tan"
	1	3549 160-1	"Citron Gold"
	1	3549 162-3	"Green"
	1	3549 164-5	"Blue"
	2	6001 948	Retainer
	2	6026 523	Nut
	14	---- ---	Retainer
2	1	3481 984-5	MOULDING PACKAGE, Qtr. Outside, "Black" (23-23-39)
	1	3549 150-1	"Tan"
	1	3549 152-3	"Citron Gold"
	1	3549 154-5	"Green"
	1	3549 156-7	"Blue"
	22	---- ---	Retainer
	2	6000 705	Retainer
	2	6027 625	Nut
3	1	2933 590-1	MOULDING PACKAGE, Roof Side Drain Trough, Rear (23-59-61)
	4	6027 459	Screw
4	1	3419 736-7	MOULDING PACKAGE, Qtr. Outside Wheel Opening (23-23-39)
	12	6024 271	Screw
5	1	3444 264	MEDALLION, Deck Lid Lock (23-17-19)
	2	6024 716	Washer
6	1	2933 570-1	MOULDING PACKAGE, Deck Opening Upper Panel, w/Vinyl Roof or Two Tone Paint (23-23-31)
	8	6002 920	Retainer
	8	9420 867	Nut
	8	6002 192	Fastener
7	1	2933 578-9	MOULDING PACKAGE, Deck Opening Upper Panel, Outer Corner, w/Vinyl Roof or Two Tone Paint (23-23-31)
	4	6025 985	Screw
8	1	2933 894-5	MOULDING PACKAGE, Qtr. Outside Belt, w/Vinyl Roof or Two Tone Paint (23-23-39)
	8	6002 192	Retainer
	6	6002 920	Retainer
	6	9420 867	Nut
9	1	3419 414-5	MOULDING PACKAGE, Qtr. Outside Belt to Drain Trough (23-23-39)
	4	9417 984	Screw
10	1	2933 614-5	MOULDING PACKAGE, Qtr. Outside Belt (23-23-39)
	6	6002 782	Retainer and Seal
	2	6025 985	Screw
11	1	3419 418-9	MOULDING PACKAGE, Roof Side Drain Trough, Front (23-59-61)
	4	6027 459	Screw
12	1	2933 722-3	MOULDING PACKAGE, Door Outside Belt (23-23-32)
	10	6002 782	Retainer and Seal
13	1	2933 600-1	MOULDING PACKAGE, Body Front Plr. Drain Trough (23-59-61)
	6	6027 459	Screw
14	1	2998 870	NAME PLATE, Hood Front (15-06-3)
	3	6027 552	Nut
15	1	3419 722-3	MOULDING PACKAGE, Fender Side (Black) (12-15-2)
	1	3549 182-3	"Tan"
	1	3549 184-5	"Citron Gold"
	1	3549 186-7	"Green"
	1	3549 188-9	"Blue"
	2	116 000	Nut
	1	6026 523	Nut
	1	6001 949	Retainer
	2	6002 367	Retainer
	5	6003 004	Retainer
16	1	3419 718-9	MOULDING PACKAGE, Fender Wheel Opng. (12-15-2)
	7	6024 271	Screw
17	2	3504 155	NUMERAL, Fender Side (12-15-21)
	4	6002 852	Retainer
18	2	3504 152	NAME PLATE, Fender Side (Fury)(12-15-21)
	4	6002 852	Retainer
19	1	3419 482-3	MOULDING PACKAGE, Body Frt. Lwr. Plr. (23-23-14)
	2	6024 271	Screw

All Packages Include Attaching Parts

Part Type Code is Indicated in Parentheses

1970

EXTERIOR VIEW - PLYMOUTH FURY III P-M FAST BACK

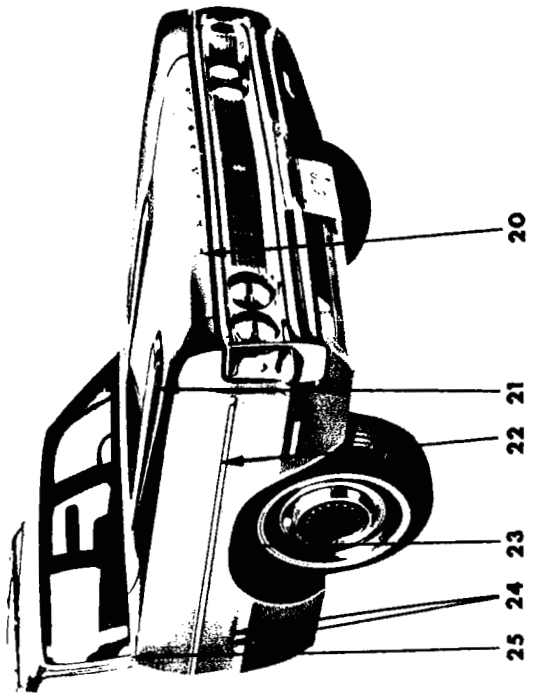

19a3180

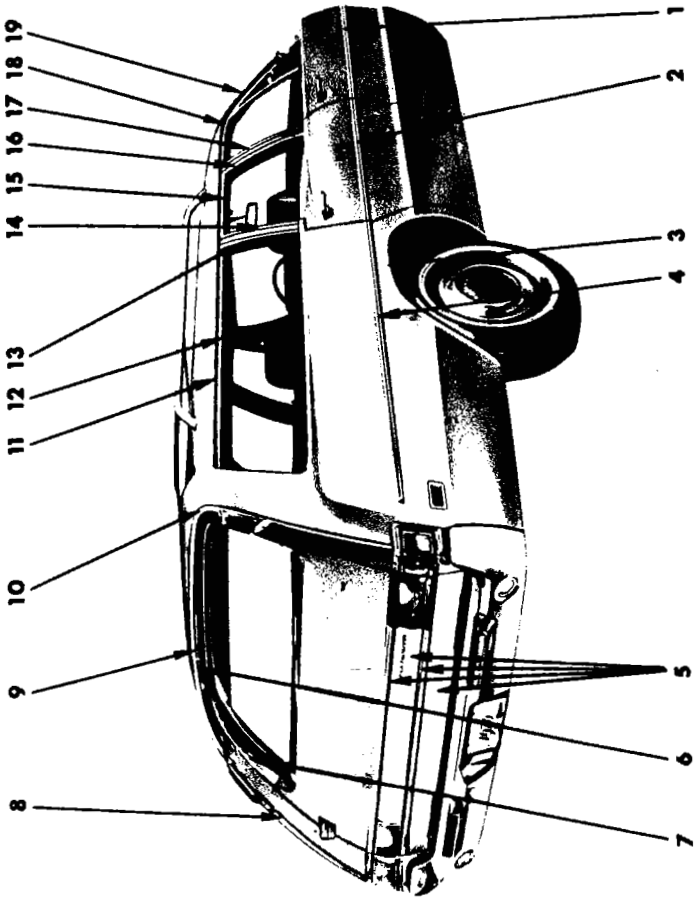

1970
EXTERIOR VIEW - PLYMOUTH FURY III P-M CUSTOM STATION WAGON

REF. NO.	QTY	PART NUMBER	DESCRIPTION
1	1	3481 980-1	MOULDING PACKAGE, Frt. Door Outside, "Black" (23-23-32)
	1	3549 166-7	"Tan"
	1	3549 168-9	"Citron Gold"
	1	3549 170-1	"Green"
	1	3549 172-3	"Blue"
	10	---- ---	Retainer
	2	6001 949	Retainer
	2	6026 523	Nut
2	1	3481 982-3	MOULDING PACKAGE, Rear Door Outside, "Black" (23-23-33)
	1	3549 174-5	"Tan"
	1	3549 176-7	"Citron Gold"
	1	3549 178-9	"Green"
	1	3549 180-1	"Blue"
	8	---- ---	Retainer
	4	6026 523	Nut
	4	6001 949	Retainer
3	1	2933 774-5	MOULDING PACKAGE, Qtr. Outside Wheel Opng. (23-23-39)
	12	6024 271	Screw
4	1	3419 850-1	MOULDING PACKAGE, Qtr. Outside, "Black" (23-23-39)
	1	3549 134-5	"Tan"
	1	3549 136-7	"Citron Gold"
	1	3549 138-9	"Green"
	1	3549 140-1	"Blue"
	22	6003 004	Retainer
5	1	3444 923	PANEL and NAME PLATE, Tailgate Outside Finish (23-23-77)
	5	6002 781	Retainer
	AR	---- ---	Rivet
6	1	2894 445	MOULDING, Roof Pnl. Outside Tailgate Opng. Upr., Prime (23-23-60)
7	1	2894 442-3	MOULDING, Qtr. Pnl. Outside Tailgate Plr., Upr. Tailgate Opng., Prime (23-23-60)
8	1	3440 476-7	MOULDING PACKAGE, Qtr. Pnl. Outside Tailgate Plr., Upr., w/o Assist Handles (23-23-60)
	1	3440 478-9	MOULDING, Qtr. Pnl. Outside Tailgate Plr. Upr., use w/Assist Handles (23-23-60)
9	1	2894 418	MOULDING, Roof Rear Air Deflector, Center (23-23-60)
10	1	2894 416-7	MOULDING, Roof Rear Air Deflector, End (23-23-60)
11	1	3419 450-1	MOULDING PACKAGE, Roof Side Drain Trough (23-59-61)
	12	6024 659	Screw
12	1	2893 258-9	MOULDING, Qtr. Wdo. Outside, Upr., Prime (23-23-73)
	1	2894 872-3	MOULDING, Qtr. Wdo. Outside, Upr., Finish (23-23-73)
13	1	2893 256-7	MOULDING, Qtr. Wdo. Outside, Frt., Prime (23-23-73)
	1	2894 870-1	MOULDING, Qtr. Wdo. Outside, Frt., Finish (23-23-73)
14	1	2893 728-9	MOULDING, Rear Door Wdo. Opng. Frame, Rear (23-23-33)
15	1	2893 724-5	MOULDING, Rear Door Wdo. Opng. Frame, Upr. (23-23-33)
16	1	2893 700	MOULDING, Rear Door Wdo. Opng. Frame, Frt., Lt. (23-23-33)
	1	2893 701	MOULDING, Rear Door Wdo. Opng. Frame, Frt., Rt. (23-23-33)
17	1	2893 700-1	MOULDING, Frt. Door Wdo Opng. Frame, Rear (23-23-32)
18	1	2893 698-9	MOULDING, Frt. Door Wdo. Opng. Frame, Upr. (23-23-32)
19	1	2933 568-9	MOULDING PACKAGE, Body Front Pillar Drain Trough (23-59-61)
	10	6027 459	Screw
20	1	2528 974	NAME LETTER "P", Hood Front (15-06-16)
	1	2528 975	"L"
	1	2602 277	"Y" 1 2528 979 "U"
	1	2528 977	"M" 1 2528 980 "T"
	1	2528 978	"O" 1 2602 282 "H"
21	2	2949 240	NAME PLATE, Hood Top (383) (15-06-3)
	4	9420 254	Nut
22	1	3419 722-3	MOULDING PACKAGE, Fender Side, "Black" (12-15-2)
	1	3549 182-3	"Tan"
	1	3549 184-5	"Citron Gold"
	1	3549 186-7	"Green"
	1	3549 188-9	"Blue"
	1	6001 949	Retainer
	2	6002 367	Retainer 1 6026 523 Nut
	5	6003 004	Retainer 2 116 000 Nut
23	1	2933 286-7	MOULDING PACKAGE, Fender Wheel Opng. (12-15-2)
	7	6024 271	Screw
24	2	3446 764	NAME PLATE, Fender Side (Custom Suburban) (12-15-21)
	6	6002 852	Retainer
25	1	3419 482-3	MOULDING PACKAGE, Body Frt. Lwr. Plr. (23-23-14)
	2	6024 271	Screw

All Packages Include Attaching Parts

Part Type Code is Indicated in Parentheses

1970

EXTERIOR VIEW - PLYMOUTH FURY III P-M CUSTOM STATION WAGON

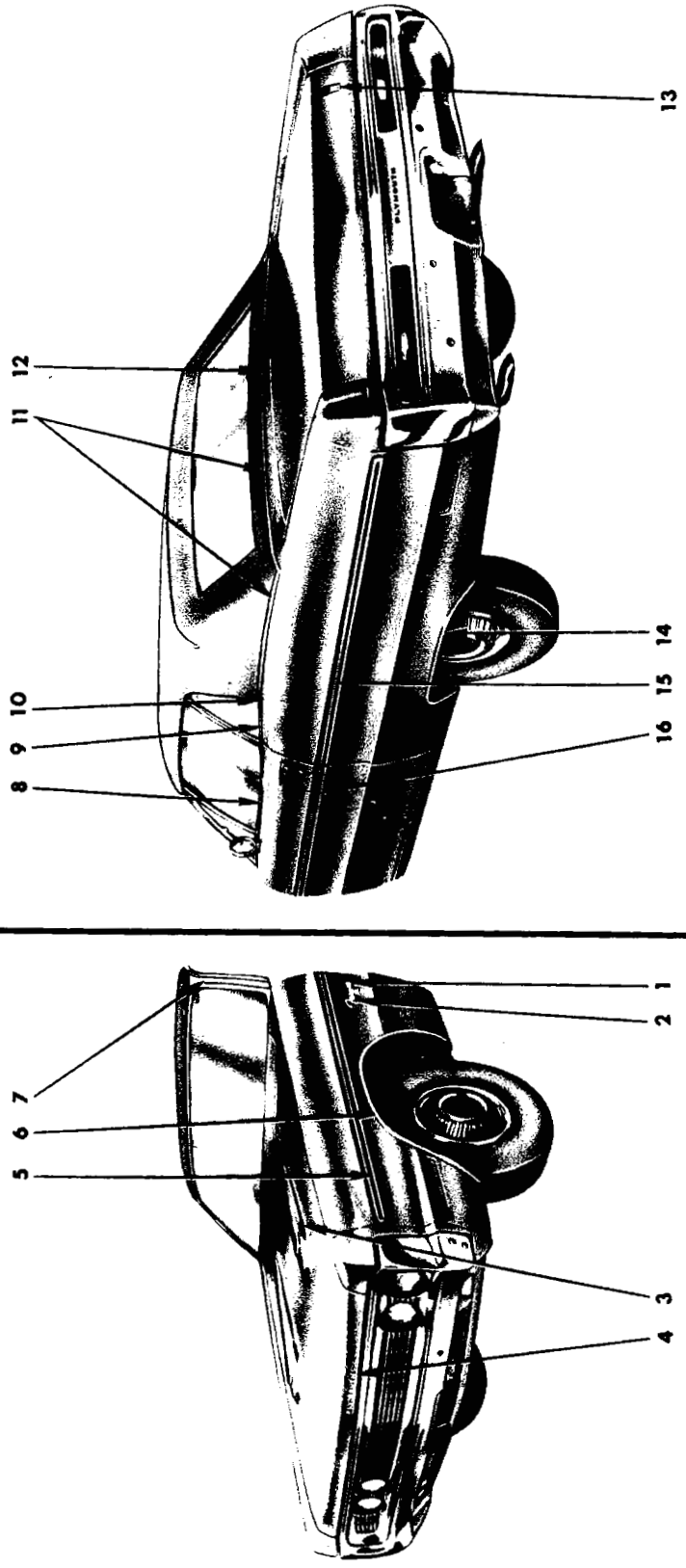

1970
EXTERIOR VIEW - PLYMOUTH FURY III P-M CONVERTIBLE COUPE

REF. NO.	QTY	PART NUMBER	DESCRIPTION
1	2	3504 155	NUMERAL, Fender Side (12-15-21)
	4	6002 852	Retainer
2	2	3504 152	NAME PLATE, Fender Side (12-15-21)
	4	6002 852	Retainer
3	2	2949 240	NAME PLATE, Hood (383) (15-06-3)
	4	9420 254	Nut
4	1	2785 791	NAME PLATE, Hood Front (Plymouth) (15-06-3)
	3	6027 552	Nut
5	1	3419 722-3	MOULDING PACKAGE, Fender Side, "Black" (12-15-2)
	1	3549 182-3	"Tan"
	1	3549 184-5	"Citron Gold"
	1	3549 186-7	"Green"
	1	3549 188-9	"Blue"
	2	116 000	Nut
	1	6026 523	Nut
	2	6002 367	Retainer
	5	6003 004	Retainer
	1	6001 949	Retainer
6	1	3419 718-9	MOULDING PACKAGE, Fender Wheel Opening (12-15-2)
	7	6024 271	Screw
7	1	2901 018-9	MOULDING, Body Frt. Upr. Pillar Outside (23-23-14)
8	1	2933 722-3	MOULDING PACKAGE, Door Outside Belt (23-23-32)
	10	6002 782	Retainer and Seal
9	1	2933 754-5	MOULDING PACKAGE, Qtr. Outside Belt, Frt. (23-23-39)
	6	6002 782	Retainer and Seal
10	1	3419 042-3	MOULDING PACKAGE, Qtr. Outside Belt, Intermediate (23-23-39)
	2	9420 928	Screw
11	1	2933 756-7	MOULDING PACKAGE, Qtr. Outside Belt, Rear (23-23-39)
	24	9428 567	Screw
12	1	2901 178	COVER, Qtr. Outside Belt Rear Mldg. Joint (23-23-41)
13	1	3444 264	MEDALLION, Deck Lid Lock (23-17-19)
	2	6024 716	Washer
	2	---- ---	Nut
14	1	3419 736-7	MOULDING PACKAGE, Qtr. Outside Wheel Opening (23-23-39)
	12	6024 271	Screw
15	1	3481 984-5	MOULDING PACKAGE, Qtr. Outside, "Black" (23-23-39)
	1	3549 150-1	"Tan"
	1	3549 152-3	"Citron Gold"
	1	3549 154-5	"Green"
	1	3549 156-7	"Blue"
	22	---- ---	Retainer
	2	6000 705	Retainer
	2	6027 625	Nut
16	1	3481 978-9	MOULDING PACKAGE, Door Outside, "Black" (23-23-32)
	1	3549 158-9	"Tan"
	1	3549 160-1	"Citron Gold"
	1	3549 162-3	"Green"
	1	3549 164-5	"Blue"
	2	6001 948	Retainer
	2	6026 523	Nut
	14	6002 865	Retainer

All Packages Include Attaching Parts

Part Type Code is Indicated in Parentheses

1970

EXTERIOR VIEW - PLYMOUTH FURY III P-M CONVERTIBLE COUPE

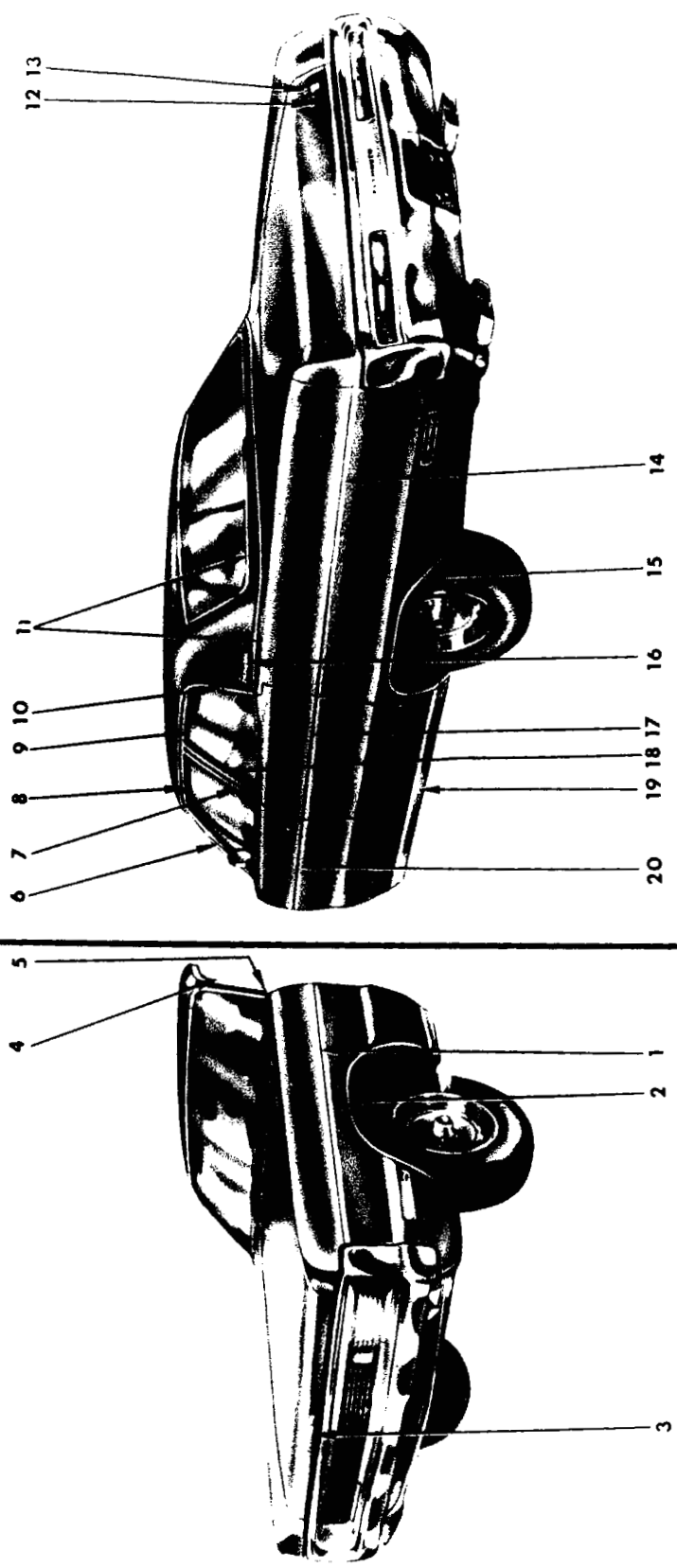

1970
EXTERIOR VIEW - PLYMOUTH SPORT FURY P-H 4 DOOR SEDAN

REF. NO.	QTY	PART NUMBER	DESCRIPTION
1	1	3419 722-3	MOULDING PACKAGE, Fender Side, "Black" (12-15-2)
	1	3549 182-3	"Tan"
	1	3549 184-5	"Citron Gold"
	1	3549 186-7	"Green"
	1	3549 188-9	"Blue"
	1	6026 523	Nut
	2	116 000	Nut
	1	6001 949	Retainer
	2	6002 367	Retainer
	5	6003 004	Retainer
2	1	3419 718-9	MOULDING PACKAGE, Fender Wheel Opening (12-15-2)
	14	6028 545	Screw
3	1	2998 870	NAME PLATE, Hood Front (15-06-3)
	3	6027 552	Nut
4	1	2933 568-9	MOULDING PACKAGE, Body Frt. Plr. Drain Trough (23-59-61)
	10	6027 459	Screw
5	1	3419 482-3	MOULDING PACKAGE, Body Frt. Lwr. Pillar (23-23-14)
	2	6024 271	Screw
6	1	2893 698-9	MOULDING, Frt. Door Wdo. Opng. Frame, Upr. (23-23-32)
7	1	2893 700-1	MOULDING, Frt. Door Wdo. Opng. Frame, Rear (23-23-32)
8	1	3419 424-5	MOULDING PACKAGE, Roof Side Drain Trough, Frt. (23-59-61)
	10	6027 459	Screw
9	1	2893 722-3	MOULDING, Rear Door Wdo. Opng. Frame, Upr. (23-23-33)
10	1	2933 586-7	MOULDING PACKAGE, Roof Side Drain Trough, Rear (23-59-61)
	6	6024 271	Screw
11	1	2933 566-7	MOULDING PACKAGE, Deck Opng. Upr. Pnl., use w/Vinyl Roof (23-23-31)
	6	6002 920	Retainer
	6	9420 867	Nut
	8	6002 192	Fastener
12	1	3445 168	NAME PLATE, Deck Lid, "Sport Fury" (23-19-114)
13	1	3444 265	MEDALLION, Deck Lid Lock (23-17-19)
	2	6024 716	Washer
	2	---- ---	Nut
14	1	3481 986-7	MOULDING PACKAGE, Qtr. Outside, "Black" (23-23-39)
	1	3549 142-3	"Tan"
	1	3549 144-5	"Gold"
	1	3549 146-7	"Green"
	1	3549 148-9	"Blue"
	2	6000 705	Retainer
	2	6027 625	Nut
	16	6003 004	Retainer
15	1	3419 736-7	MOULDING PACKAGE, Qtr. Outside Wheel Opng. (23-23-39)
	12	6024 271	Screw
16	2	3504 323	NAME PLATE, Quarter Outside Brougham (23-34-238)
	4	9420 263	Nut
17	1	3481 982-3	MOULDING PACKAGE, Rear Door Outside, "Black" (23-23-33)
	1	3549 174-5	"Tan"
	1	3549 176-7	"Gold"
	1	3549 178-9	"Green"
	1	3549 180-1	"Blue"
	8	6003 004	Retainer
	4	6026 523	Nut
	4	6001 949	Retainer
18	1	2893 700	MOULDING, Rear Door Wdo. Opng. Frame, Frt., Lt. (23-23-33)
	1	2893 701	MOULDING, Rear Door Wdo. Opng. Frame, Frt., Rt.
19	1	3419 826-7	MOULDING PACKAGE, Body Side Sill (23-23-2)
	24	6024 271	Screw
	18	6002 601	Retainer
	2	6026 760	Screw
20	1	3481 980-1	MOULDING PACKAGE, Frt. Door Outside, "Black" (23-23-32)
	1	3549 166-7	"Tan"
	1	3549 168-9	"Gold"
	1	3549 170-1	"Green"
	1	3549 172-3	"Blue"
	10	6003 004	Retainer
	2	6001 949	Retainer
	2	6026 523	Nut

All Packages Include Attaching Parts

Part Type Code is Indicated in Parentheses

1970
EXTERIOR VIEW - PLYMOUTH SPORT FURY P-H 4 DOOR SEDAN

19a3118

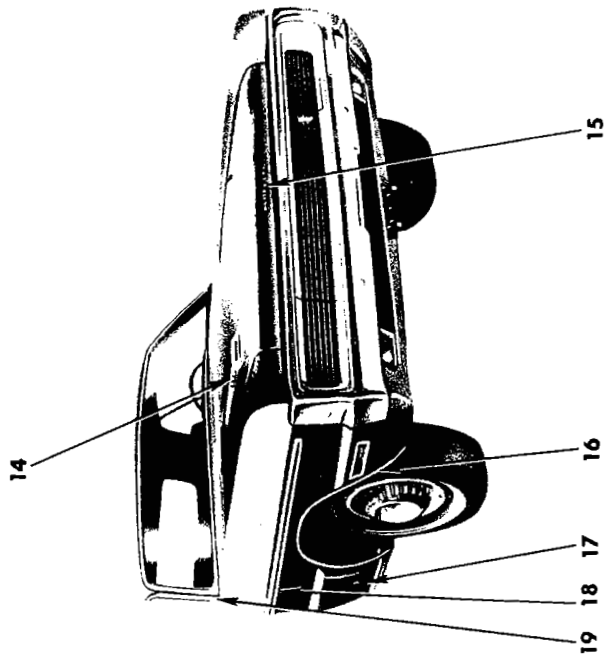

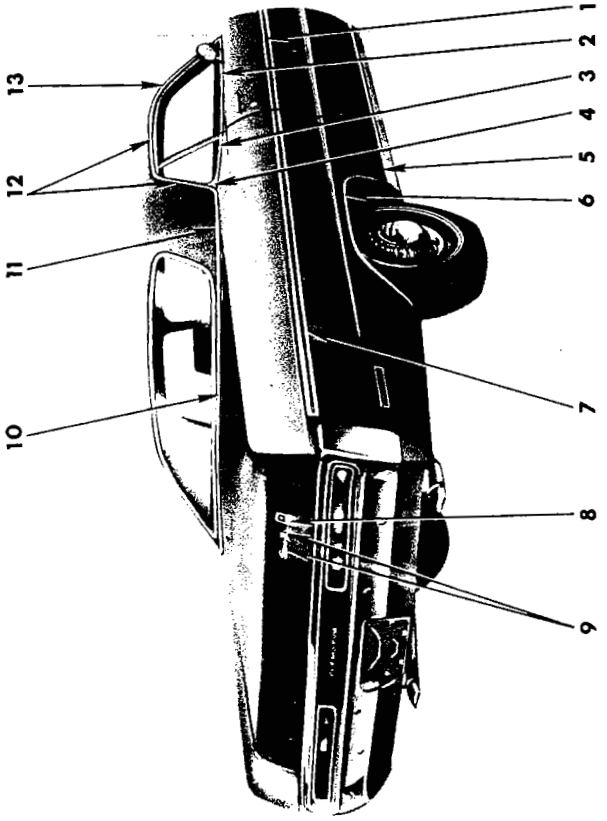

1970
EXTERIOR VIEW - PLYMOUTH SPORT FURY P-H 2 DOOR HARDTOP

REF. NO.	QTY	PART NUMBER	DESCRIPTION
1	1	3481 978-9	MOULDING PACKAGE, Door Outside, "Black" (23-23-32)
	1	3549 158-9	"Tan"
	1	3549 160-1	"Citron Gold"
	1	3549 162-3	"Green"
	1	3549 164-5	"Blue"
	2	6001 948	Retainer
	2	6026 523	Nut
	14	---- ---	Retainer
2	1	2933 722-3	MOULDING PACKAGE, Door Outside Belt (23-23-32)
	10	6002 782	Retainer and Seal
3	1	2933 614-5	MOULDING PACKAGE, Qtr. Outside Belt, use w/Vinyl Roof or Two Tone Paint (23-23-39)
	6	6002 782	Retainer and Seal
	2	6025 985	Screw
	1	2933 626-7	MOULDING PACKAGE, Qtr. Outside Belt, use w/o Vinyl Roof or Two Tone Paint (23-23-39)
	2	6027 459	Screw
	6	6002 782	Retainer and Seal
4	1	2933 624-5	MOULDING PACKAGE, Qtr. Outside Belt to Drip, use w/Vinyl Roof or Two Tone Paint (23-23-39)
	4	6025 985	Screw
5	1	3419 826-7	MOULDING PACKAGE, Body Side Sill (23-23-2)
	24	6024 271	Screw
	18	6002 601	Retainer
	2	6026 760	Screw
6	1	3419 736-7	MOULDING PACKAGE, Qtr. Outside Wheel Opening (23-23-39)
	12	6024 271	Screw
7	1	3481 984-5	MOULDING PACKAGE, Qtr. Outside, "Black" (23-23-39)
	1	3549 150-1	"Tan"
	1	3549 152-3	"Citron Gold"
	1	3549 154-5	"Green"
	1	3549 156-7	"Blue"
	22	---- ---	Retainer
	2	6000 705	Retainer
	2	6027 625	Nut
8	1	3444 265	MEDALLION, Deck Lid Lock (23-17-19)
	2	6024 716	Washer
	2	---- ---	Nut
9	1	3445 168	NAME PLATE, Deck Lid, "Sport Fury" (23-19-114)
10	1	3419 026	MOULDING PACKAGE, Deck Opng. Upr. Pnl., use w/Vinyl Roof or Two Tone Paint (23-23-31)
	4	6002 192	Fastener
	3	6002 920	Retainer
	6	9420 867	Nut
11	1	3419 030-1	MOULDING PACKAGE, Deck Opng. Upr. Pnl. Side use w/Vinyl Roof or Two Tone Paint (23-23-31)
	6	6002 192	Fastener
	6	6002 920	Retainer
	6	9420 867	Nut
12	1	3419 416-7	MOULDING PACKAGE, Roof Side Drain Trough Front and Rear (23-59-61)
	4	6027 459	Screw
13	1	2933 602-3	MOULDING PACKAGE, Body Front Pillar Drain Trough (23-59-61)
	6	6027 459	Screw
14	2	2898 878	NAME PLATE, Hood Top (15-06-3)
	4	9420 254	Nut
15	1	2785 791	NAME PLATE, Hood Front (15-06-3)
	3	6027 552	Nut
16	1	3419 718-9	MOULDING PACKAGE, Fender Wheel Opening (12-15-2)
	7	6024 271	Screw
17	1	2785 540	MEDALLION, Fender Side (12-15-21)
	1	6026 404	Nut
18	1	3419 722-3	MOULDING PACKAGE, Fender Side, "Black" (12-15-2)
	1	3549 182-3	"Tan"
	1	3549 184-5	"Citron Gold"
	1	3549 186-7	"Green"
	1	3549 188-9	"Blue"
	2	116 000	Nut
	1	6026 523	Nut
	2	6002 367	Retainer
	5	6003 004	Retainer
	1	6001 949	Retainer
19	1	3419 482-3	MOULDING PACKAGE, Body Frt. Lwr. Pillar (23-23-14)
	2	6024 271	Screw

All Packages Include Attaching Parts

Part Type Code is Indicated in Parentheses

1970

EXTERIOR VIEW - PLYMOUTH SPORT FURY P-H 2 DOOR HARD TOP

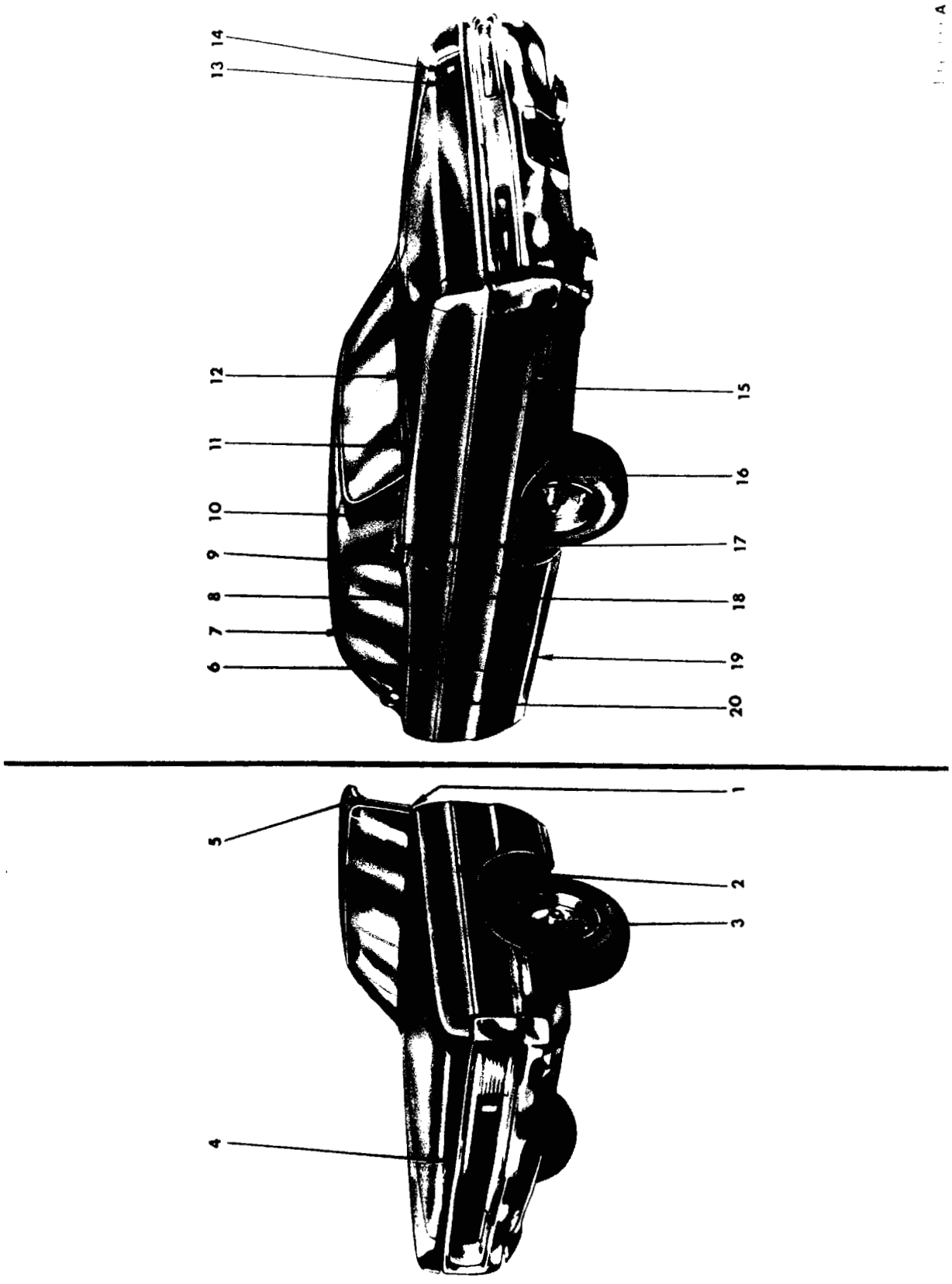

1970
EXTERIOR VIEW - PLYMOUTH SPORT FURY P-H 4 DOOR HARDTOP

REF. NO.	QTY	PART NUMBER	DESCRIPTION
1	1	3419 482-3	MOULDING PACKAGE, Body Frt. Lwr. Plr. (23-23-14)
	2	6024 271	Screw
2	1	3419 722-3	MOULDING PACKAGE, Fender Side, "Black" (12-15-2)
	1	3549 182-3	"Tan"
	1	3549 184-5	"Citron Gold"
	1	3549 186-7	"Green"
	1	3549 188-9	"Blue"
	1	6026 523	Nut
	2	116 000	Nut
	1	6001 949	Retainer
	2	6002 367	Retainer
	5	6003 004	Retainer
3	1	3419 718-9	MOULDING PACKAGE, Fender Wheel Opening (12-15-2)
	14	6028 545	Screw
4	1	2998 870	NAME PLATE, Hood Front (15-06-3)
	3	6027 552	Screw
5	1	2933 600-1	MOULDING PACKAGE, Body Front Pillar Drain Trough (23-59-61)
	6	6027 459	Screw
6	1	2933 764-5	MOULDING PACKAGE, Frt. Door Outside Belt (23-23-32)
	10	6002 782	Retainer and Seal
7	1	3419 418-9	MOULDING PACKAGE, Roof Side Drain Trough, Front (23-59-61)
	4	6027 459	Screw
8	1	2933 766-7	MOULDING PACKAGE, Rear Door Outside Belt (23-23-33)
	10	6002 782	Retainer w/Seal
9	1	2933 588-9	MOULDING PACKAGE, Roof Side Drain Trough, Rear (23-59-61)
	4	6027 459	Screw
10	1	3419 044-5	MOULDING PACKAGE, Qtr. Outside Belt, use w/Vinyl Roof or Two Tone Paint (23-23-39)
	8	6002 192	Fastener
	8	6002 920	Retainer 8 9420 867 Nut
11	1	2933 578-9	MOULDING PACKAGE, Deck Opng. Upr. Pnl. Outer Corner, use w/Vinyl Roof or Two Tone Paint (23-23-31)
	4	6025 985	Screw
12	1	2933 570-1	MOULDING PACKAGE, Deck Opng. Upr. Pnl., use w/Vinyl Roof or Two Tone Paint (23-23-31)
	8	6002 920	Retainer 8 9420 867 Nut
	8	6002 192	Fastener
13	1	3445 168	NAME PLATE, Deck Lid, "Sport Fury" (23-19-114)
14	1	3444 265	MEDALLION, Deck Lid Lock (23-17-19)
	2	6024 716	Washer
	2	---- ---	Nut
15	1	3481 986-7	MOULDING PACKAGE, Qtr. Outside, "Black" (23-23-39)
	1	3549 142-3	"Tan"
	1	3549 144-5	"Gold"
	1	3549 146-7	"Green"
	1	3549 148-9	"Blue"
	2	6000 705	Retainer
	2	6027 625	Nut
	16	6003 004	Retainer
16	1	3419 736-7	MOULDING PACKAGE, Qtr. Outside Wheel Opng. (23-23-39)
	12	6024 271	Screw
17	2	3504 323	NAME PLATE, Quarter Outside Brougham (23-34-238)
	4	9420 263	Nut
18	1	3481 982-3	MOULDING PACKAGE, Rear Door Outside, "Black" (23-23-33)
	1	3549 174-5	"Tan"
	1	3549 176-7	"Gold"
	1	3549 178-9	"Green"
	1	3549 180-1	"Blue"
	8	6003 004	Retainer
	4	6026 523	Nut
	4	6001 949	Retainer
19	1	3419 826-7	MOULDING PACKAGE, Body Side Sill (23-23-2)
	24	6024 271	Screw
	18	6002 601	Retainer
	2	6026 760	Screw
20	1	3481 980-1	MOULDING PACKAGE, Frt. Door Outside, "Black" (23-23-32)
	1	3549 166-7	"Tan"
	1	3549 168-9	"Gold"
	1	3549 170-1	"Green"
	1	3549 172-3	"Blue"
	10	6003 004	Retainer
	2	6001 949	Retainer
	2	6026 523	Nut

All Packages Include Attaching Parts

Part Type Code is Indicated in Parentheses

1970

EXTERIOR VIEW - PLYMOUTH SPORT FURY P-H 4 DOOR HARD TOP

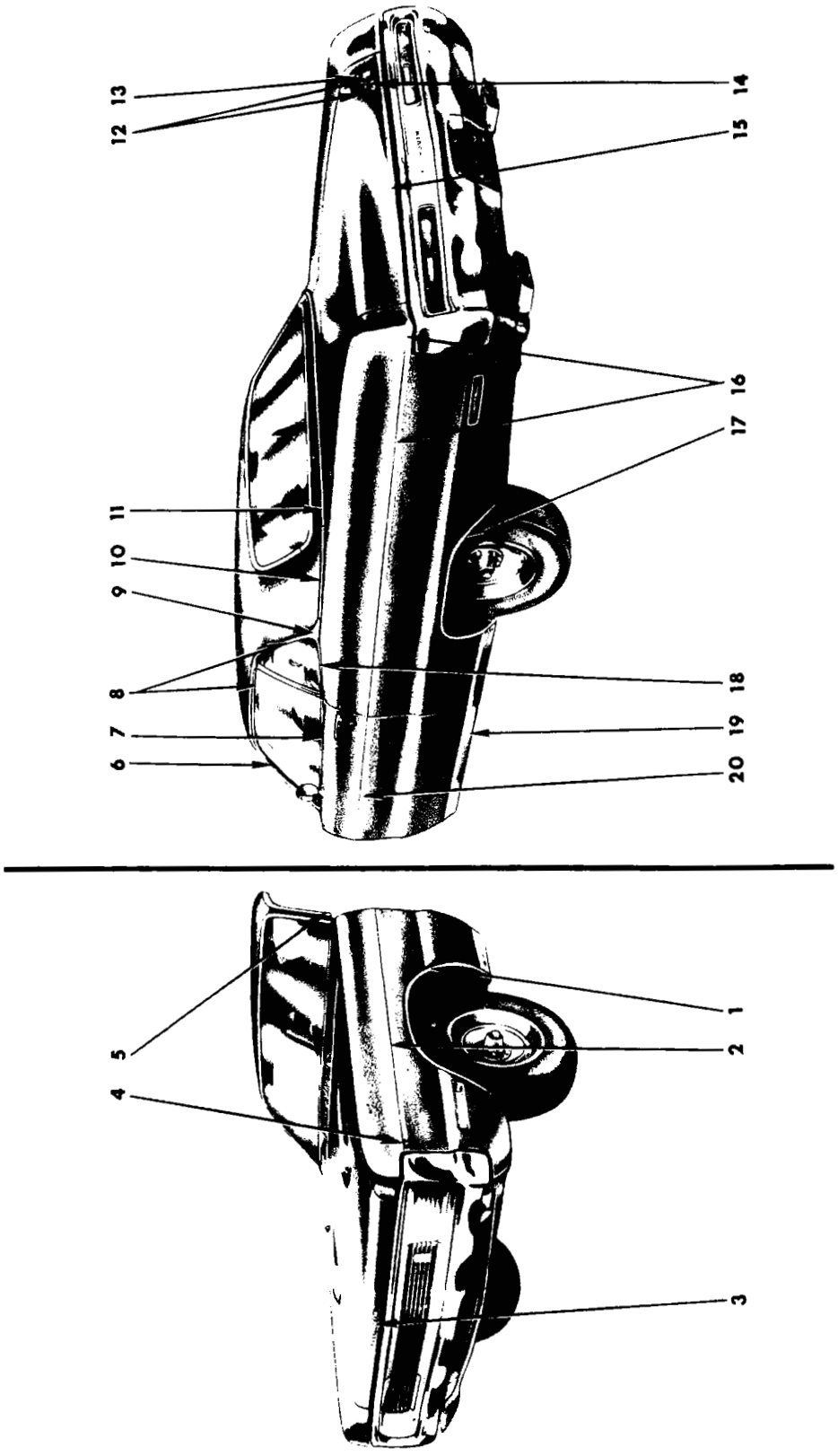

1970
EXTERIOR VIEW - PLYMOUTH SPORT FURY (GT) P-H 2 DOOR HARDTOP

REF. NO.	QTY	PART NUMBER	DESCRIPTION
1	1	3419 718-9	MOULDING PACKAGE, Fender Wheel Opening (12-15-2)
	14	6028 545	Screw
2	AR	3506 059	TAPE, Fender Side, "Black" (12-15-33)
	AR	3506 058	"Orange"
	AR	3506 060	"White"
3	1	2785 791	NAME PLATE, Hood Front (15-06-3)
	3	6027 552	Nut
4	2	3504 558	DECAL, Fender Side, "GT", White (12-15-21)
	2	3505 901	"Orange"
	2	3504 560	"Black"
	2	3504 564	DECAL, Fender Side, S/23, "White" (12-15-21)
	2	3505 900	"Orange"
	2	3504 566	"Black"
5	1	3419 482-3	MOULDING PACKAGE, Body Frt. Lwr. Plr. (23-23-14)
	2	6024 271	Screw
6	1	2933 602-3	MOULDING PACKAGE, Body Frt. Plr. Drain Trough (23-59-61)
	6	6027 459	Screw
7	1	2933 722-3	MOULDING PACKAGE, Door Outside Belt (23-23-32)
	10	6002 782	Retainer and Seal
8	1	3419 416-7	MOULDING PACKAGE, Roof Side Drain Trough, Frt. and Rr. (23-59-61)
	4	6027 459	Screw
9	1	2933 624-5	MOULDING PACKAGE, Qtr. Outside Belt to Drip, use w/Vinyl Roof or Two Tone Paint (23-23-39)
	4	6025 985	Screw
10	1	3419 030-1	MOULDING PACKAGE, Deck Opng. Upr. Pnl. Side use w/Vinyl Roof or Two Tone Paint (23-23-31)
	6	6002 192	Fastener
	6	6002 920	Retainer
	6	9420 867	Nut
11	1	3419 026	MOULDING PACKAGE, Deck Opng. Upr. Pnl., use w/Vinyl Roof or Two Tone Paint (23-23-31)
	4	6002 192	Fastener
	3	6002 920	Retainer
	6	9420 867	Nut
12	1	3445 168	NAME PLATE, Deck Lid, "Sport Fury" (23-19-114)
13	1	3444 265	MEDALLION, Deck Lid Lock (23-17-19)
	2	6024 716	Washer
	2	---- ---	Nut
14	1	3504 558	DECAL, Deck Lid, "GT", "White" (23-19-6)
	1	3504 559	"Red"
	1	3504 560	"Black"
	1	3504 564	DECAL, Deck Lid, "S/23", "White" (23-19-6)
	1	3504 565	"Red"
	1	3504 566	"Black"
15	AR	3506 059	TAPE, Deck Lid Reflective, "Black" (23-23-12)
	AR	3506 058	"Orange"
	AR	3506 060	"White"
16	AR	3506 059	TAPE, Qtr. Outside Reflective, "Black" (23-23-12)
	AR	3506 058	"Orange"
	AR	3506 060	"White"
17	1	3419 736-7	MOULDING PACKAGE, Qtr. Outside Wheel Opening (23-23-39)
	12	6024 271	Screw
18	1	2933 626-7	MOULDING PACKAGE, Qtr. Outside Belt, use w/o Vinyl Roof or Two Tone Paint (23-23-39)
	2	6027 459	Screw
	6	6002 782	Retainer and Seal
	1	2933 614-5	MOULDING PACKAGE, Qtr. Outside Belt, use w/Vinyl Roof or Two Tone Paint (23-23-39)
	6	6002 782	Retainer and Seal
	2	6025 985	Screw
19	1	3419 826-7	MOULDING PACKAGE, Body Side Sill (23-23-2)
20	AR	3506 059	TAPE, Door Outside Reflective, "Black" (23-23-12)
	AR	3506 058	"Orange"
	AR	3506 060	"White"
21	2	3443 062	NUMERAL, Hood Side, "Black" (15-06-16)
	2	3443 061	"Orange"
	2	3443 060	"White"
22	1	3443 070-1	TAPE, Hood Top, "Black" (15-03-69)
	1	3443 068-9	"Orange"
	1	3443 066-7	"White"

All Packages Include Attaching Parts

Part Type Code is Indicated in Parentheses

1970

EXTERIOR VIEW - PLYMOUTH SPORT FURY (GT) P-H 2 DOOR HARD TOP

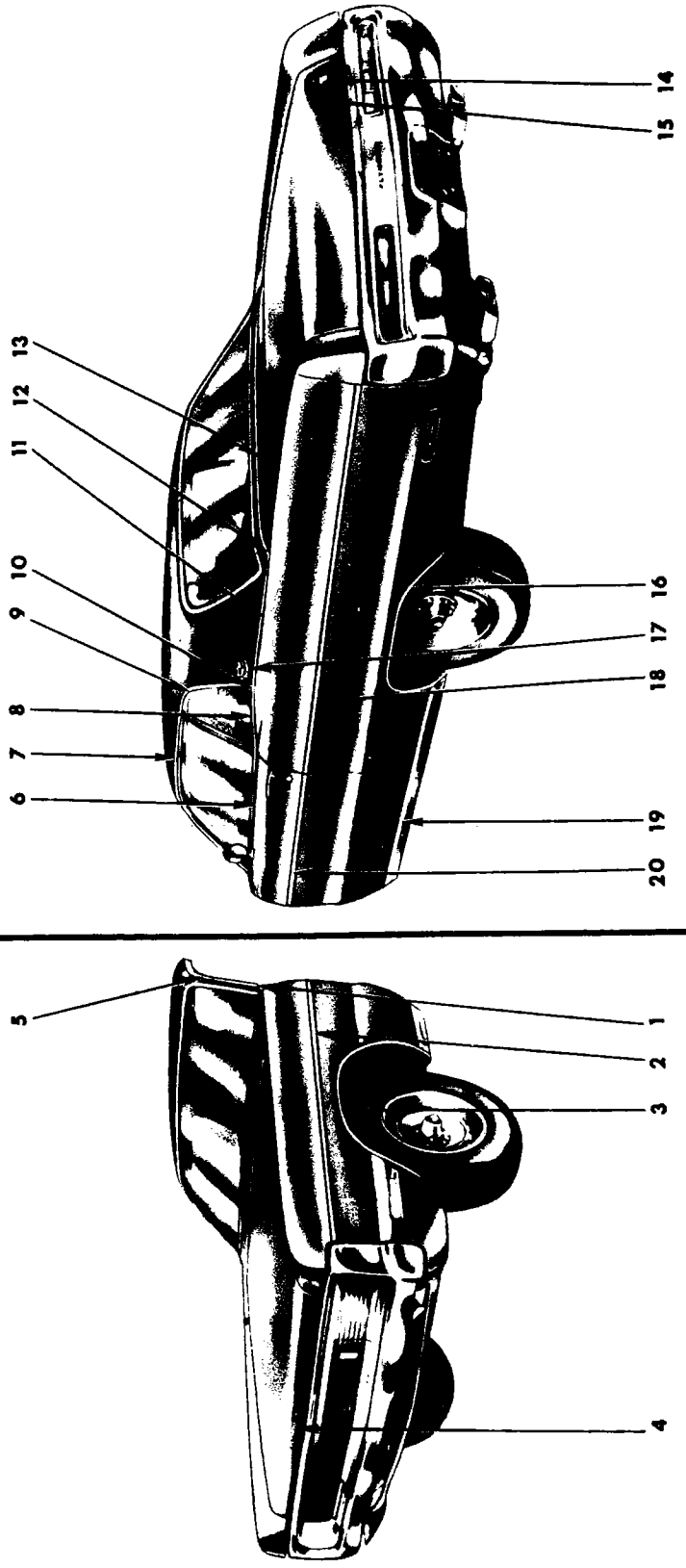

1970
EXTERIOR VIEW - PLYMOUTH SPORT FURY P-H FAST BACK

REF. NO.	QTY	PART NUMBER	DESCRIPTION
1	1	3419 482-3	MOULDING PACKAGE, Body Frt. Lwr. Plr. (23-23-14)
	2	6024 271	Screw
2	1	3419 722-3	MOULDING PACKAGE, Fender Side, "Black" (12-15-2)
	1	3549 182-3	"Tan"
	1	3549 184-5	"Citron Gold"
	1	3549 186-7	"Green"
	1	3549 188-9	"Blue"
	2	116 000	Nut
	1	6026 523	Nut
	1	6001 949	Retainer
	2	6002 367	Retainer
	5	6003 004	Retainer
3	1	3419 718-9	MOULDING PACKAGE, Fender Wheel Opng. (12-15-2)
	14	6028 545	Screw
4	1	2998 870	NAME PLATE, Hood Front (15-06-3)
	3	6027 552	Nut
5	1	2933 600-1	MOULDING PACKAGE, Body Front Pillar Drain Trough (23-59-61)
	6	6027 459	Screw
6	1	2937 722-3	MOULDING PACKAGE, Door Outside Belt (23-23-32)
	10	6002 782	Retainer and Seal
7	1	3419 418-9	MOULDING PACKAGE, Roof Side Drain Trough, Front (23-59-61)
	4	6027 459	Screw
8	1	3419 414-5	MOULDING PACKAGE, Qtr. Outside Belt (23-23-39)
	6	6002 782	Retainer and Seal
	2	6025 985	Screw
9	1	2933 590-1	MOULDING PACKAGE, Roof Side Drain Trough, Rear (23-59-61)
	4	6027 459	Screw
10	1	3419 414-5	MOULDING PACKAGE, Qtr. Outside Belt to Drain Trough (23-23-39)
	4	9417 984	Screw
11	1	2933 894-5	MOULDING PACKAGE, Qtr. Outside Belt, w/Vinyl Roof or Two Tone Paint (23-23-39)
	8	6002 192	Retainer
	6	6002 920	Retainer
	6	9420 867	Nut
12	1	2933 578-9	MOULDING PACKAGE, Deck Opng. Upr. Pnl. Outer Corner, w/Vinyl Roof or Two Tone Paint (23-23-31)
	4	6025 985	Screw
13	1	2933 570-1	MOULDING PACKAGE, Deck Opng. Upr. Pnl., w/Vinyl Roof or Two Tone Paint (23-23-31)
	8	6002 920	Retainer
	8	9420 867	Nut
	8	6002 192	Fastener
14	1	3444 265	MEDALLION, Deck Lid Lock Lock (23-17-19)
	2	6024 716	Washer
	2	---- ---	Nut
15	1	3445 168	NAME PLATE, Deck Lid, "Sport Fury" (23-19-114)
16	1	3419 736-7	MOULDING PACKAGE, Qtr. Outside Wheel Opening (23-23-39)
	12	6024 271	Screw
17	2	3504 323	NAME PLATE, Quarter Outside, Brougham (23-34-238)
	4	9420 263	Nut
18	1	3481 984-5	MOULDING PACKAGE, Qtr. Outside, "Black" (23-23-39)
	1	3549 150-1	"Tan"
	1	3549 152-3	"Citron Gold"
	1	3549 154-5	"Green"
	1	3549 156-7	"Blue"
	22	---- ---	Retainer
	2	6000 705	Retainer
	2	6027 625	Nut
19	1	3419 826-7	MOULDING PACKAGE, Body Side Sill (23-23-2)
	24	6024 271	Screw
	18	6002 601	Retainer
	2	6026 760	Screw
20	1	3481 978-9	MOULDING PACKAGE, Door Outside, "Black" (23-23-32)
	1	3549 158-9	"Tan"
	1	3549 160-1	"Citron Gold"
	1	3549 162-3	"Green"
	1	3549 164-5	"Blue"
	2	6001 948	Retainer
	2	6026 523	Nut
	14	---- ---	Retainer

All Packages Include Attaching Parts

Part Type Code is Indicated in Parentheses

1970

EXTERIOR VIEW - PLYMOUTH SPORT FURY P-H FASTBACK

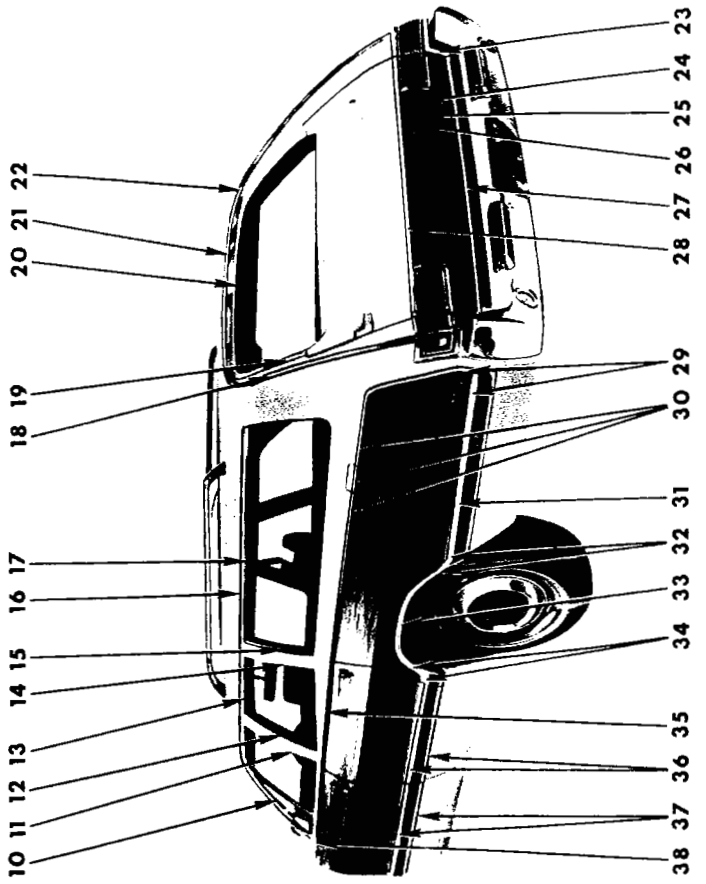

1970
EXTERIOR VIEW - PLYMOUTH P-H SPORT SUBURBAN

REF. NO.	QTY	PART NUMBER	DESCRIPTION
1	1	3419 482-3	MOULDING PACKAGE, Body Frt. Lwr. Plr. (23-23-14)
	2	6024 271	Screw
2	2	3446 766	NAME PLATE, Fender Side (Sport Suburban)(12-15-21)
	4	6002 852	Retainer
3	1	3419 724-5	MOULDING PACKAGE, Fndr. Side Rear and Wheel Opng. (12-15-2)
	3	6002 739	Retainer
	1	6025 985	Screw
	8	6024 271	Screw
4	1	3419 726-7	MOULDING PACKAGE, Fndr. Side Lwr. Frt.(12-15-2)
	2	6027 466	Nut
	1	6024 271	Screw
5	1	3419 824-5	MOULDING PACKAGE, Fndr. Side Upr. Rr. (12-15-2)
	1	6026 523	Nut
	1	6002 280	Retainer
	6	6002 773	Retainer
	1	6025 985	Screw
6	2	2949 240	NAME PLATE, Hood Top (383) (15-06-3)
	2	2998 878	(440)
	4	9420 254	Nut
7	1	3419 822-3	MOULDING PACKAGE, Fndr. Side Upr. Frt. (12-15-2)
	1	6027 466	Nut
8	1	2998 870	NAME PLATE, Hood Front (15-06-3)
	3	6027 552	Nut
9	1	2933 568-9	MOULDING PACKAGE, Body Front Pillar Drain Trough (23-59-61)
	10	6027 459	Screw
10	1	2893 698-9	MOULDING, Frt. Door Wdo. Opng. Frame, Upr. (23-23-32)
11	1	2893 700-1	MOULDING, Frt. Door Wdo. Opng. Frame, Rr. (23-23-32)
12	1	2893 700	MOULDING, Rr. Door Wdo. Opng. Frame, Frt., Lt. (23-23-33)
	1	2893 701	MOULDING, Rr. Door Wdo. Opng. Frame, Frt., Rt. (23-23-33)
13	1	2893 724-5	MOULDING, Rr. Door Wdo. Opng. Frame, Upr. (23-23-33)
14	1	2893 728-9	MOULDING, Rr. Door Wdo. Opng. Frame, Rr. (23-23-33)
15	1	2893 256-7	MOULDING, Qtr. Wdo. Outside, Frt., Prime (23-23-73)
	1	2894 870-1	MOULDING, Qtr. Wdo. Outside, Frt., Finish (23-23-73)
16	1	3419 450-1	MOULDING PACKAGE, Roof Side Drain Trough (23-59-61)
	12	6024 659	Screw
17	1	2893 258-9	MOULDING, Qtr. Wdo. Outside, Upr. Prime (23-23-73)
	1	2894 872-3	MOULDING, Qtr. Wdo. Outside, Upr., Finish (23-23-73)
18	1	2933 622-3	MOULDING PACKAGE, Qtr. Pnl. Outside Tailgate Plr., w/o Assist Handle (23-23-60)
	1	2933 618-9	MOULDING PACKAGE, Qtr. Outside Plr. Upr., use w/Assist Handles (23-23-60)
	4	6002 665	Spacer
19	1	2894 442-3	MOULDING, Qtr. Pnl. Outside Tailgate Plr., Upr. Tailgate Opng., Prime (23-23-60)
20	1	2894 445	MOULDING, Roof Pnl. Outside Tailgate Opng. Upr., Prime (23-23-60)
21	1	2894 418	MOULDING, Roof Rear Air Deflector, Center (23-23-60)
22	1	2894 416-7	MOULDING, Roof Rear Air Deflector, End (23-23-60)
23	1	3419 746-7	MOULDING PACKAGE, Qtr. Pnl. End Extension (23-23-39)
	4	---- ---	Nut w/Sealer
24	1	3446 054	NAME PLATE, Tailgate Outside Panel, "Suburban" (23-54-11)
	2	---- ---	Nut
25	1	3445 987	NAME PLATE, Tailgate Outside Panel, "Sport" (23-54-11)
	2	---- ---	Nut
26	1	2785 791	NAME PLATE, Tailgate Outside Panel "Plymouth" (23-54-11)
	3	---- ---	Nut
27	1	3419 767	MOULDING PACKAGE, Tailgate, Lwr. (23-23-61)
	6	6002 435	Retainer
	6	6024 271	Screw
28	1	3419 766	MOULDING PACKAGE, Tailgate, Upr. (23-23-61)
	5	6002 435	Retainer
	5	6024 271	Screw
29	1	3419 762-3	MOULDING PACKAGE, Qtr. Outside Lwr., Rear (23-23-39)
	2	6025 985	Screw
30	1	2933 788	MOULDING PACKAGE, Qtr. Outside Upr., Rt. (23-23-39)
	9	6002 773	Retainer
	1	2933 787	MOULDING PACKAGE, Qtr. Outside Upr., Lt. (23-23-39)
	5	6002 599	Retainer
	1	2933 789	MOULDING PACKAGE, Qtr. Pnl. Fuel Filler Door, Lt. (23-23-39)
	2	6002 280	Retainer
	2	6026 523	Nut
	1	2933 786	MOULDING PACKAGE, Qtr. Outside, Rr., Lt. (23-23-39)
	2	6002 599	Retainer

All Packages Include Attaching Parts

Part Type Code is Indicated in Parentheses

REF. NO.	QTY	PART NUMBER	DESCRIPTION
31	1	3481 970-1	MOULDING PACKAGE, Qtr. Outside Lwr., Frt. (23-23-39)
	8	6002 739	Retainer
	8	6024 271	Screw
32	1	3419 760-1	MOULDING PACKAGE, Qtr. Outside Wheel Opng., Rear (23-23-39)
	4	6024 271	Screw
33	1	3419 758-9	MOULDING PACKAGE, Qtr. Outside Wheel Opng. (23-23-39)
	4	6025 985	Screw
	8	6024 271	Screw
34	1	3419 756-7	MOULDING PACKAGE, Qtr. Outside Wheel Opng., Frt. (23-23-39)
	4	6024 271	Screw

All Packages Include Attaching Parts

REF. NO.	QTY	PART NUMBER	DESCRIPTION
35	1	2933 782-3	MOULDING PACKAGE, Rear Door, Upr. (23-23-33)
	4	6002 280	Retainer
	4	6026 523	Nut
	6	6002 599	Retainer
36	1	3419 846-7	MOULDING PACKAGE, Rear Door Outside, Lwr. (23-23-33)
	4	6002 743	Retainer
	8	6026 523	Nut
	4	6002 739	Retainer
	4	6024 271	Screw
37	1	3419 844-5	MOULDING PACKAGE, Frt. Door Outside, Lwr. (23-23-32)
	8	6002 739	Retainer
	8	6024 271	Screw
	2	6002 743	Retainer
	4	6026 523	Nut
38	1	2933 776-7	MOULDING PACKAGE, Frt. Door, Upr. (23-23-32)
	2	6002 280	Retainer
	2	6026 523	Nut

All Packages Include Attaching Parts

December 1971. Printed in U.S.A.

NOTES

19a2840C

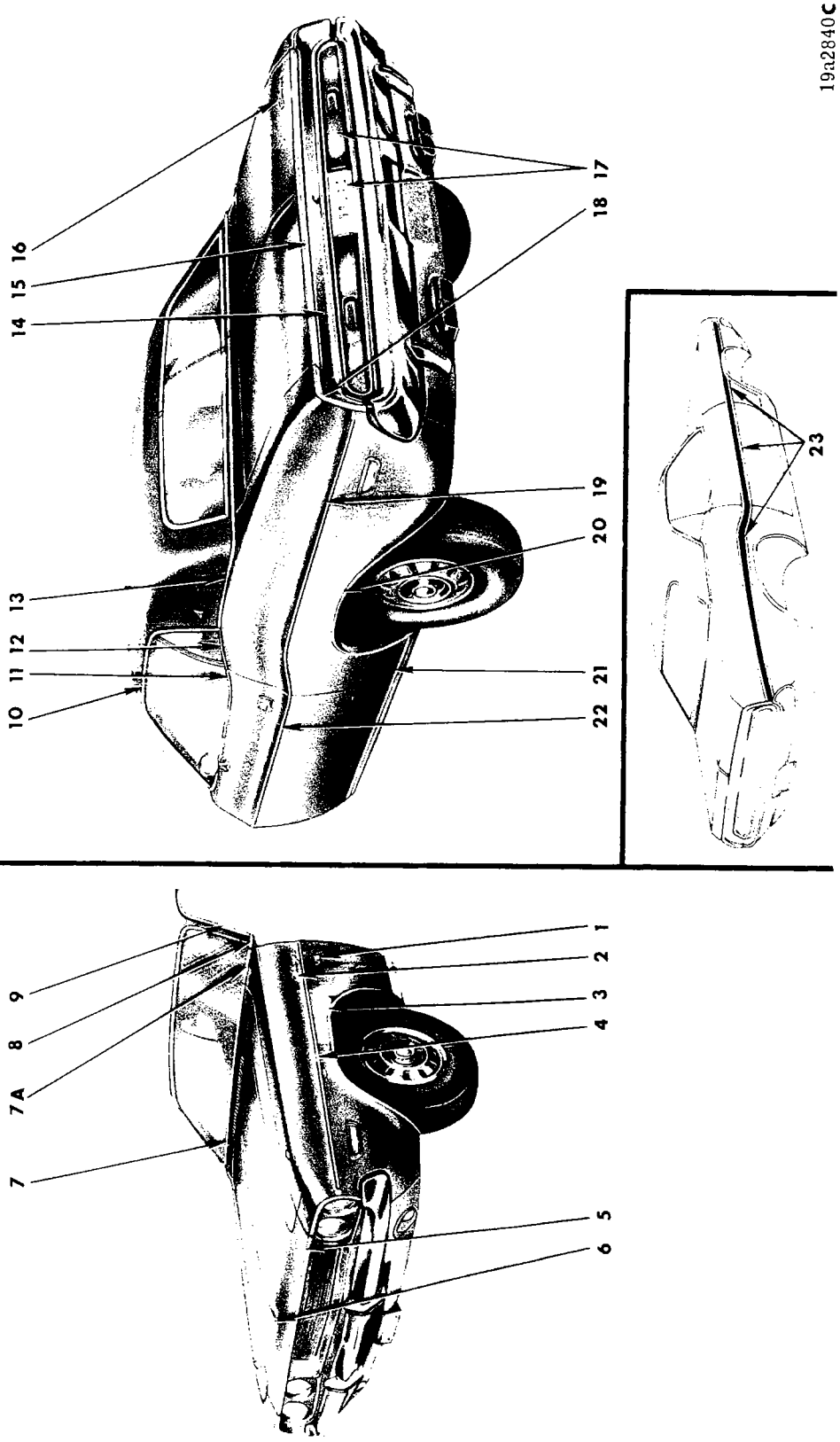

1970
EXTERIOR VIEW - CHALLENGER J-H 2 DOOR HARDTOP

REF. NO.	QTY	PART NUMBER	DESCRIPTION
1	2	2579 748	ORNAMENT, Fender Side (V-8) (12-15-21)
	4	6026 404	Nut
2	2	3444 938	NAME PLATE, Fender Side, "Challenger" (12-15-21)
	6	6026 404	Nut
	2	3504 233	"383-4 Barrel"
	6	6027 352	Nut w/Seal
3	1	3419 710-1	MOULDING PACKAGE, Fender Whl. Opng. (12-15-2)
	6	6024 271	Screw
4	1	3419 812-3	MOULDING PACKAGE, Fender Side, "Black" (12-15-2)
	1	3549 124-5	"Blue"
	1	3549 126-7	"Green"
	2	6000 709	Retainer
	7	6002 922	Retainer 2 9420 867 Nut
5	1	3549 699	MOULDING PACKAGE, Hood Front (15-25-2)
	8	9420 867	Nut
	8	6002 170	Retainer
6	1	2449 932	MEDALLION, Hood Front (15-03-18)
	2	9420 263	Nut
7	1	2949 474	MOULDING, Hood Top Rear (15-25-2)
7A	1	2998 644-5	MOULDING, Fender Rear (12-15-2)
8	1	3446 456-7	MOULDING, Body Frt. Pillar, Lwr. (23-23-14)
	2	6028 674	Screw
9	1	3419 906-7	MOULDING PACKAGE, Body Frt. Plr. Drain Trough (23-59-61)
	6	6028 721	Screw
10	1	3549 194-5	MOULDING PACKAGE, Roof Side Drain Trough (23-59-61)
	10	6028 721	Screw
11	1	3549 648-9	MOULDING PACKAGE, Door Outside Belt (23-23-32)
	2	6028 755	Retainer
	2	6003 011	Retainer
	2	6003 010	Retainer
	6	6003 012	Retainer
	2	6003 009	Retainer
	2	6003 014	Screw
	2	116 000	Nut
12	1	2965 404-5	MOULDING, Qtr. Wdo. Outside Belt (23-23-39)
13	1	2965 408-9	MOULDING, Qtr. Outside Belt, w/Vinyl Roof or Two Tone Paint (23-23-39)
	24	6002 297	Retainer
	4	6002 957	Retainer 28 9420 276 Nut
	1	3514 058-9	MOULDING PACKAGE, Qtr. Outside Belt (Formal Roof Pkg.)(23-23-39)
	14	6002 985	Retainer 14 6028 302 Nut
14	1	3444 175	PANEL, Deck Opng. Lwr. Finish (23-23-28)
	7	6028 013	Screw
	6	6002 974	Retainer 6 9420 218 Nut
15	1	3419 709	MOULDING PACKAGE, Deck Lid Outside (23-23-30)
	7	6026 523	Nut
	7	6002 885	Retainer
16	1	3444 938	NAME PLATE, Deck Lid, "Challenger" (23-19-114)
	1	3612 501	DECAL, Deck Lid, "Deputy" (23-19-6)
17	1	3420 581	LENS PACKAGE, Back-Up Lamp (8-56-8)
18	1	3419 712-3	MOULDING PACKAGE, Qtr. Rear (23-23-39)
	6	6026 532	Nut
	6	6002 885	Retainer
19	1	3419 796-7	MOULDING PACKAGE, Qtr. Outside, "Black" (23-23-39)
	1	3549 112-3	"Blue"
	1	3549 114-5	"Green"
	20	6002 922	Retainer
	2	6000 709	Retainer
	2	6024 152	Nut
20	1	3419 790-1	MOULDING PACKAGE, Qtr. Outside Wheel Opening (23-23-39)
	16	6024 271	Screw
21	1	3419 792-3	MOULDING PACKAGE, Body Side Sill (23-23-2)
	2	6002 977	Retainer
	2	9420 867	Nut
	7	6002 930	Retainer
	2	6026 760	Screw
22	1	3419 794-5	MOULDING PACKAGE, Door Outside, "Black" (23-23-32)
	1	3549 118-9	"Blue"
	1	3549 120-1	"Green"
	4	6002 162	Retainer
	4	6026 523	Nut
	14	6002 922	Retainer
23	1	2965 944-5	TAPE, Qtr. Pnl. Color Stripe, "Red" (23-23-12)
	1	2965 948-9	"White"
	1	2965 950-1	"Black"
	1	3506 076-7	"Blue"
	1	3506 078-9	"Green"
	1	2965 952-3	TAPE, Door Color Stripe, "Red" (23-23-12)
	1	2965 954-5	"White"
	1	2965 956-7	"Black"
	1	3506 088-9	"Blue"
	1	3506 090-1	"Green"
	1	3570 582-3	TAPE, Fender Color Stripe, w/o R/T Letters, "Red" (12-15-33)
	1	3570 578-9	"White"
	1	3570 580-1	"Black"
	1	3570 584-5	"Blue"
	1	3570 586-7	"Green"
	1	3685 462-3	TAPE PACKAGE, Body Side, Fender, Door, Qtr. Panel, "Red" (23-23-12)
	1	3685 468-9	"White"
	1	3685 466-7	"Black"
	1	3685 460-1	"Blue"
	1	3685 456-7	"Green"

All Packages Include Attaching Parts

Part Type Code is Indicated in Parentheses

1970

EXTERIOR VIEW - CHALLENGER J-H 2 DOOR HARDTOP



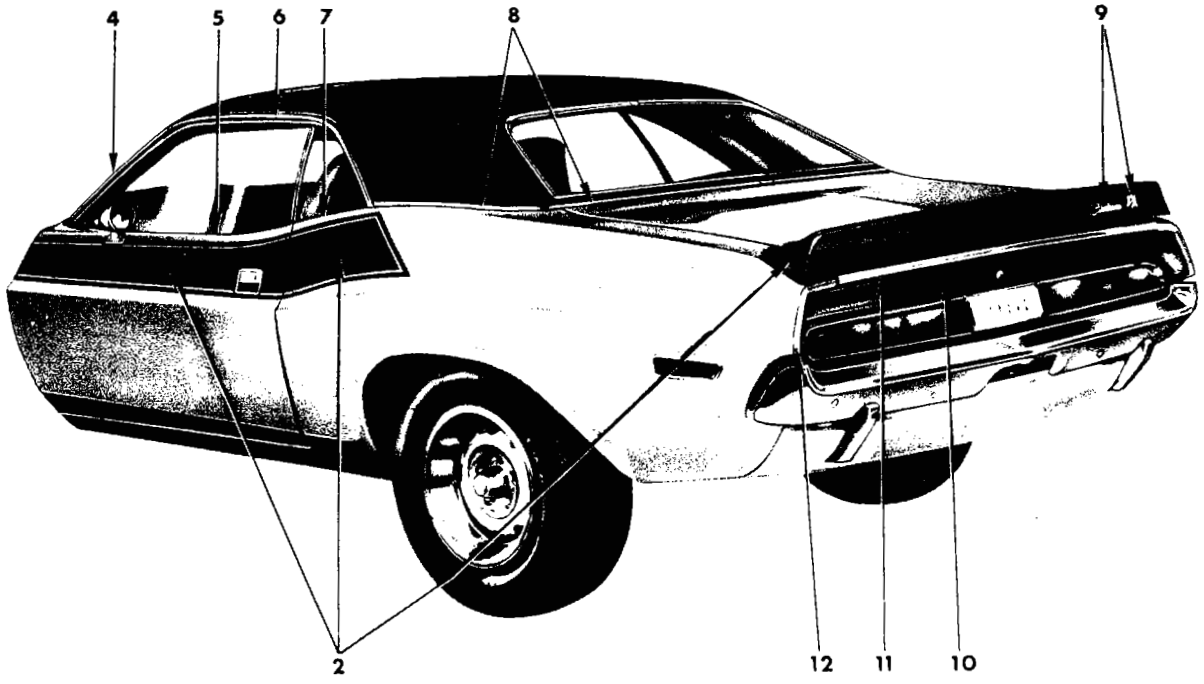

19a3370 **A**

1970
EXTERIOR VIEW - CHALLENGER J-H 2 DOOR HARDTOP (TRANS-AM)

REF. NO.	QTY	PART NUMBER	DESCRIPTION
1	1	3420 000	MOULDING PACKAGE, Hood Front (15-25-2)
	8	441 239	Nut
	8	6002 320	Retainer
2	1	3570 548-9	TAPE, Fender Color Stripe, "Black" (12-15-33)
	1	3570 718-9	TAPE, Qtr. Pnl. Color Stripe, Rear, "Black" (23-23-12)
	1	3570 552-3	Frt., "Black" (23-23-12)
	1	3570 550	TAPE, Door Outside Color Stripe Rt., "Black", w/ Rear View Mirror (23-23-12)
	1	3570 551	Lt., "Black", w/ Rear View Mirror (23-23-12)
	1	3570 544	Rt., "Black", w/o Mirror (23-23-12)
	1	3685 400-1	TAPE PACKAGE, Body Side, Fender, Door, Qtr. Panel, w/ Mirror (23-23-12)
	2	3685 398	w/o Mirror (23-23-12)
3	1	3570 554-5	DECAL, Fender Side, "340 Six Pack", "Black" (12-15-21)
4	1	3419 906-7	MOULDING PACKAGE, Body Front Pillar Drain Trough (23-59-61)
	6	6028 721	Screw
5	1	3549 648-9	MOULDING PACKAGE, Door Outside Belt (23-23-32)
	2	6028 755	Retainer
	2	6003 011	Retainer
	2	6003 010	Retainer
	6	6003 012	Retainer
	2	6003 009	Retainer
	2	6003 014	Screw
	2	116 000	Nut
6	1	3549 194-5	MOULDING PACKAGE, Roof Side Drain Trough (23-59-61)
	10	6028 721	Screw
7	1	2965 404-5	MOULDING, Qtr. Wdo. Outside Belt (23-23-39)
8	1	2965 408-9	MOULDING, Qtr. Outside Belt, w/ Vinyl Roof or Two Tone Paint (23-23-39)
	24	6002 297	Retainer
	28	9420 278	Nut
	4	6002 957	Retainer
9	1	3612 451	DECAL, Deck Spoiler, "Challenger T/A" (23-19-6)
10	1	3444 175	PANEL, Deck Lid Lwr. Finish (23-23-28)
	7	6028 013	Screw
	6	6002 974	Retainer
	6	9420 218	Nut
11	1	3419 709	MOULDING PACKAGE, Deck Lid Outside (23-23-30)
	7	6026 523	Nut
	7	6002 885	Retainer
12	1	3419 712-3	MOULDING PACKAGE, Qtr. Panel, Rear (23-23-39)
	6	6026 532	Nut
	6	6002 885	Retainer

All Packages Include Attaching Parts

Part Type Code is Indicated in Parentheses

1970

EXTERIOR VIEW - CHALLENGER J-H 2 DOOR HARDTOP (TRANS-AM)

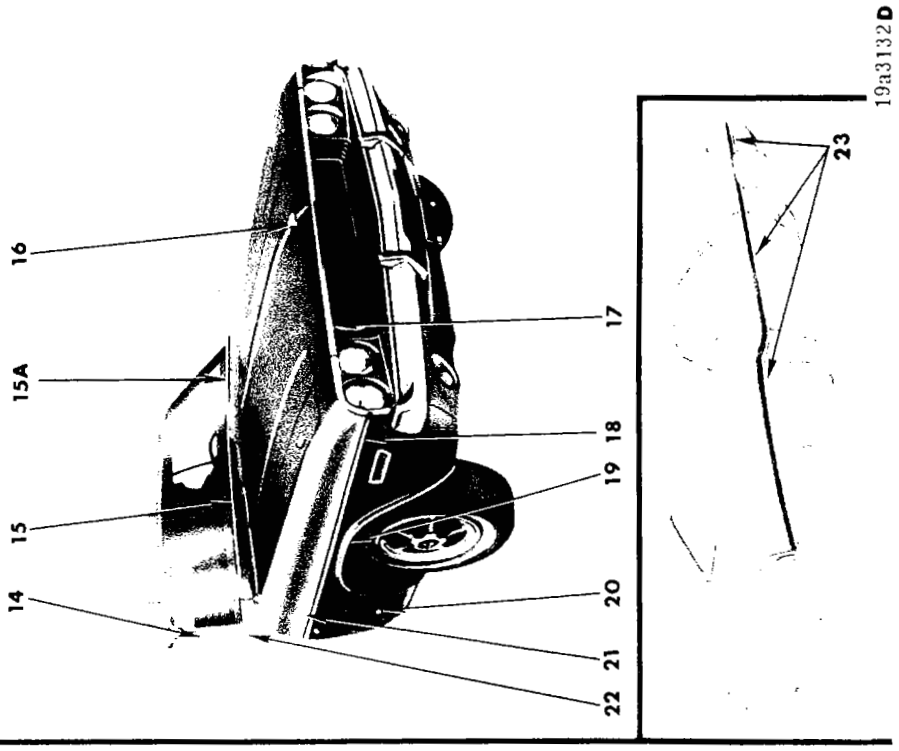

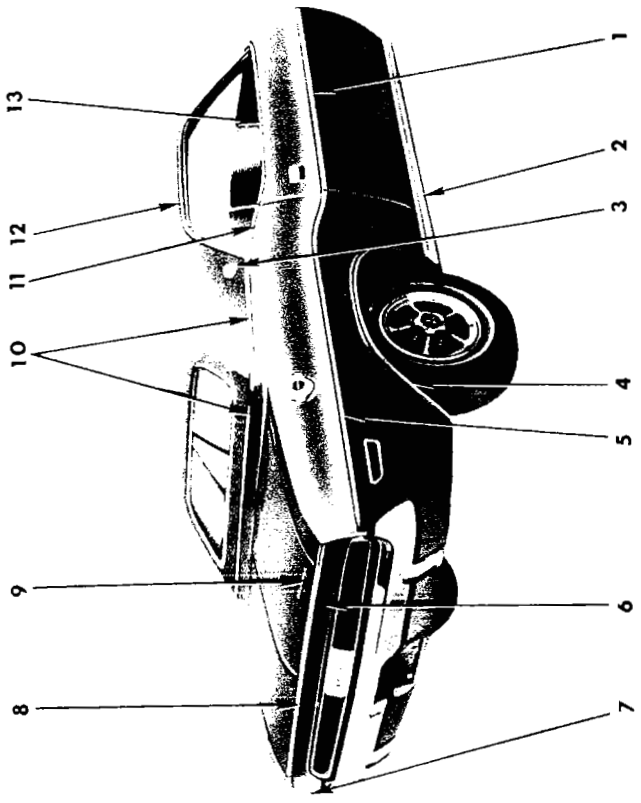

1970
EXTERIOR VIEW - CHALLENGER J-H FAST BACK

REF. NO.	QTY	PART NUMBER	DESCRIPTION
1	1	3419 794-5	MOULDING PACKAGE, Door Outside, "Black" (23-23-32)
	1	3549 118-9	"Blue"
	1	3549 120-1	"Green"
	4	6002 162	Retainer
	4	6026 523	Nut
	14	6002 922	Retainer
2	1	3419 792-3	MOULDING PACKAGE, Body Side Sill (23-23-2)
	2	6002 977	Retainer
	2	9420 867	Nut
	7	6002 930	Retainer
	2	6026 760	Screw
3	2	3446 801	MEDALLION, Qtr. Outside (23-34-334)
4	1	3419 790-1	MOULDING PACKAGE, Qtr. Outside Wheel Opng. (23-23-39)
	16	6024 271	Screw
5	1	3419 796-7	MOULDING PACKAGE, Qtr. Outside, "Black" (23-23-39)
	1	3549 112-3	"Blue"
	1	3549 114-5	"Green"
	20	6002 922	Retainer
	2	6000 709	Retainer
	2	6024 152	Nut
6	1	3444 175	PANEL, Deck Opng. Lwr. Finish (23-23-28)
	7	6028 013	Screw
	6	6002 974	Retainer
	6	9420 218	Nut
7	1	3419 712-3	MOULDING PACKAGE, Qtr. Outside Rear (23-23-39)
	6	6026 532	Nut
	6	6002 885	Retainer
8	1	3419 709	MOULDING PACKAGE, Deck Lid Outside (23-23-30)
	7	6026 523	Nut
	7	6002 885	Retainer
9	1	3444 938	NAME PLATE, Deck Lid, "Challenger" (23-19-114)
10	1	3514 058-9	MOULDING PACKAGE, Qtr. Outside Belt, use w/Vinyl Roof, Formal Roof Pkg. (23-23-39)
	14	6028 302	Nut
	14	6002 985	Retainer
11	1	2965 404-5	MOULDING, Qtr. Wdo. Outside Belt (23-23-39)
12	1	3549 194-5	MOULDING PACKAGE, Roof Side Drain Trough (23-59-61)
	10	6028 721	Screw
13	1	3549 648-9	MOULDING PACKAGE, Door Outside Belt (23-23-32)
	2	6028 755	Retainer
	2	6003 011	Retainer
	2	6003 010	Retainer 2 6003 014 Screw
	2	6003 009	Retainer 2 116 000 Nut
	6	6003 012	Retainer
14	1	3419 906-7	MOULDING PACKAGE, Body Front Pillar Drain Trough (23-59-61)
	6	6028 721	Screw
15	1	2949 474	MOULDING, Hood Rear
15A	1	2998 644-5	MOULDING, Fender Rear (12-15-2)
16	1	2449 932	MEDALLION, Hood Front (15-03-18)
	2	9420 263	Nut
17	1	3549 699	MOULDING PACKAGE, Hood Front (15-25-2)
	8	441 239	Nut
	8	6002 170	Screw
18	1	3419 812-3	MOULDING PACKAGE, Fender Side, "Black" (12-15-2)
	1	3549 124-5	"Blue"
	1	3549 126-7	"Green"
	2	6000 709	Retainer
	7	6002 922	Retainer 2 9420 867 Nut
19	1	3419 710-1	MOULDING PACKAGE, Fender Wheel Opng. (12-15-2)
	6	6024 271	Screw
20	1	2785 540	MEDALLION, Fender Side (12-15-21)
	1	6026 404	Nut
21	2	3444 938	NAME PLATE, Fender Side, "Challenger" (12-15-21)
	6	6026 404	Nut
	2	3504 233	"383-4 Barrel"
	6	6027 352	Nut w/Seal
22	1	3446 456-7	MOULDING, Body Frt. Plr., Lwr., use w/Vinyl Roof (23-23-14)
	2	6028 674	Screw
23	1	3570 582-3	TAPE, Fender Color Stripe, w/o R/T Letters, "Red" (12-15-33)
	1	3570 578-9	"White"
	1	3570 580-1	"Black"
	1	3570 584-5	"Blue"
	1	3570 586-7	"Green"
	1	2965 952-3	TAPE, Door Color Stripe, "Red" (23-23-12)
	1	2965 954-5	"White"
	1	2965 956-7	"Black"
	1	3506 088-9	"Blue"
	1	3506 090-1	"Green"
	1	2965 944-5	TAPE, Qtr. Pnl. Color Stripe, "Red" (23-23-12)
	1	2965 948-9	"White"
	1	2965 950-1	"Black"
	1	3506 076-7	"Blue"
	1	3506 078-9	"Green"
	1	3685 462-3	TAPE PACKAGE, Body Side, Fender, Door, Qtr. Panel, "Red" (23-23-12)
	1	3685 468-9	"White"
	1	3685 466-7	"Black"
	1	3685 460-1	"Blue"
	1	3685 456-7	"Green"

All Packages Include Attaching Parts

Part Type Code is Indicated in Parentheses

1970

EXTERIOR VIEW - CHALLENGER J-H FAST BACK

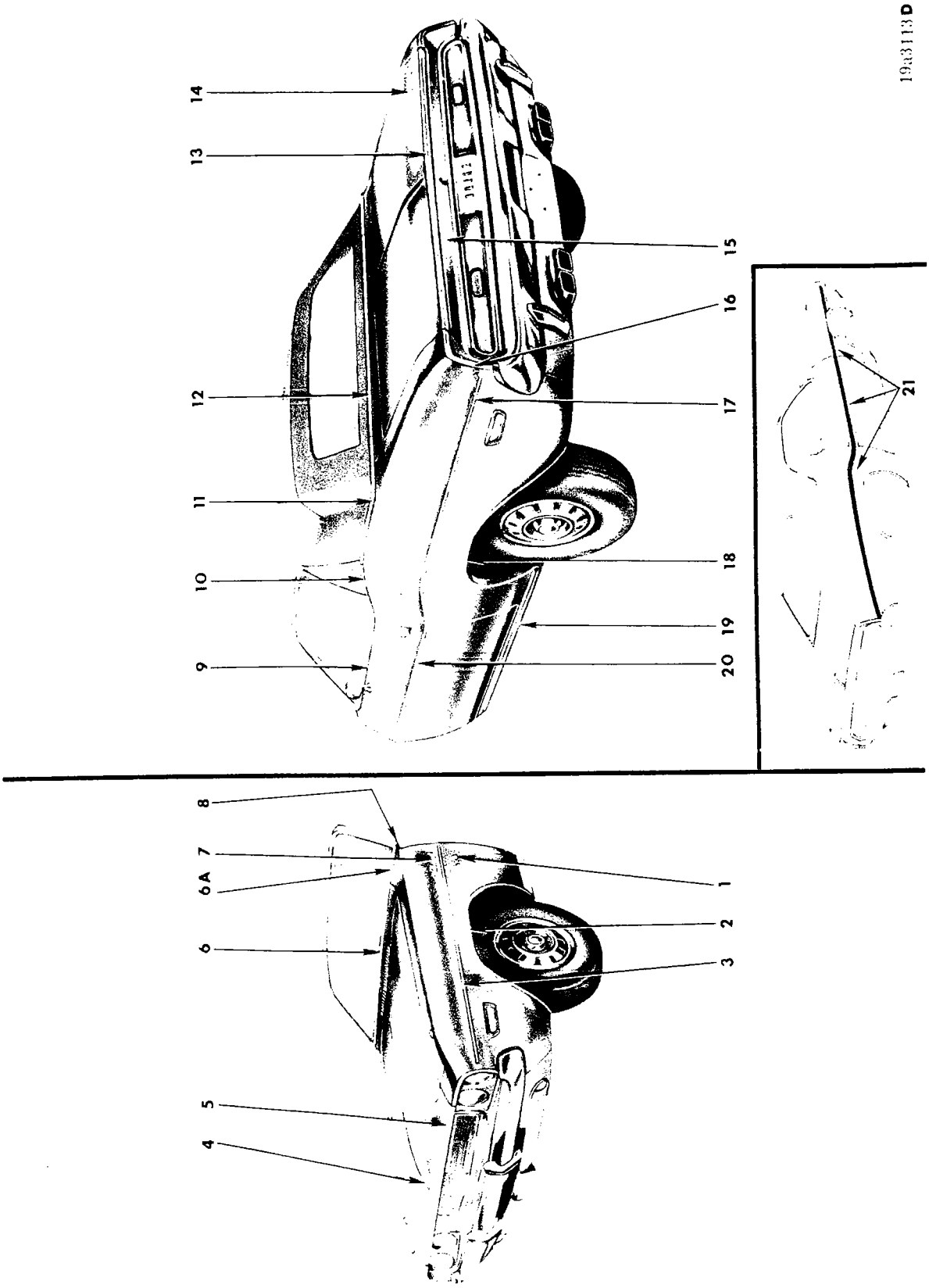

1970
EXTERIOR VIEW - CHALLENGER J-H CONVERTIBLE COUPE

REF. NO.	QTY	PART NUMBER	DESCRIPTION
1	2	2579 748	ORNAMENT, Fender Side (V-8) (12-15-21)
	4	6026 404	Nut
2	1	3419 710-1	MOULDING PACKAGE, Fender Wheel Opening (12-15-2)
	16	6028 545	Screw
3	1	3419 812-3	MOULDING PACKAGE, Fender Side, "Black" (12-15-2)
	1	3549 124-5	"Blue"
	1	3549 126-7	"Green"
	2	6000 709	Retainer
	7	6002 922	Retainer 2 9420 867 Nut
4	1	2449 932	MEDALLION, Hood Front (15-03-18)
	2	9420 263	Nut
5	1	3549 699	MOULDING PACKAGE, Hood Front (15-25-2)
	8	6002 170	Retainer 8 441 239 Nut
6	1	2949 474	MOULDING, Hood Rear (15-25-2)
6A	1	2998 644-5	MOULDING, Fender Rear (12-15-2)
7	2	3444 938	NAME PLATE, Fender Side, "Challenger" (12-15-21)
	6	6026 404	Nut
	2	3504 233	"383-4 Barrel"
	6	6027 352	Nut w/Seal
8	1	3419 814-5	MOULDING PACKAGE, Body Frt. Upr. Pillar Outside (23-23-14)
	2	3445 622	Spacer
9	1	3549 648-9	MOULDING PACKAGE, Door Outside Belt (23-23-32)
	2	6003 014	Screw
	2	6028 755	Retainer
	2	6003 011	Retainer
	2	6003 010	Retainer
	6	6003 012	Retainer
	2	116 000	Nut
	2	6003 009	Retainer
10	1	3481 720-1	MOULDING PACKAGE, Qtr. Outside Belt, Frt., use w/Belt Mldg. (23-23-39)
	2	9414 752	Screw
	1	3419 798-9	MOULDING PACKAGE, Qtr. Outside Belt, Frt., use w/o Belt Mldg. (23-23-39)
	2	9414 732	Screw
11	1	3419 800-1	MOULDING PACKAGE, Qtr. Outside Belt Rr. (23-23-39)
	2	9414 732	Screw
12	1	3419 777	MOULDING PACKAGE, Deck Opng. Upr. Pnl. (23-23-31)
	8	6002 976	Retainer
	8	---- ---	Screw w/Washer
13	1	3419 709	MOULDING PACKAGE, Deck Lid Outside (23-23-30)
	7	6026 523	Nut
	7	6002 885	Retainer
14	1	3444 938	NAME PLATE, Deck Lid, "Challenger" (23-19-114)
15	1	3444 175	PANEL, Deck Opng. Lwr. Finish (23-23-28)
	7	6028 013	Screw
	6	6002 974	Retainer
	6	9420 218	Nut
16	1	3419 712-3	MOULDING PACKAGE, Qtr. Outside Rear (23-23-39)
	6	6026 532	Nut
	6	6002 885	Retainer
17	1	3419 796-7	MOULDING PACKAGE, Qtr. Outside, "Black" (23-23-39)
	1	3549 112-3	"Blue"
	1	3549 114-5	"Green"
	20	6002 922	Retainer
	2	6000 709	Retainer
	2	6024 152	Nut
18	1	3419 790-1	MOULDING PACKAGE, Qtr. Outside Wheel Opng. (23-23-39)
	16	6024 271	Screw
19	1	3419 792-3	MOULDING PACKAGE, Body Side Sill (23-23-2)
	2	6002 977	Retainer 2 9420 867 Nut
	7	6002 930	Retainer 2 6026 760 Screw
20	1	3419 794-5	MOULDING PACKAGE, Door Outside, "Black" (23-23-32)
	1	3549 118-9	"Blue"
	1	3549 120-1	"Green"
	14	6002 922	Retainer
	4	6002 162	Retainer 4 6026 523 Nut
21	1	3570 582-3	TAPE, Fender Color Stripe, w/o R/T Letters, "Red" (12-15-33)
	1	3570 578-9	"White"
	1	3570 580-1	"Black"
	1	3570 584-5	"Blue"
	1	3570 586-7	"Green"
	1	2965 952-3	TAPE, Door Color Stripe, "Red" (23-23-12)
	1	2965 954-5	"White"
	1	2965 956-7	"Black"
	1	3506 088-9	"Blue"
	1	3506 090-1	"Green"
	1	2965 944-5	TAPE, Qtr. Pnl. Color Stripe, "Red" (23-23-12)
	1	2965 948-9	"White"
	1	2965 950-1	"Black"
	1	3506 076-7	"Blue"
	1	3506 078-9	"Green"
	1	3685 462-3	TAPE PACKAGE, Body Side, Fender, Door, Qtr. Panel, "Red" (23-23-12)
	1	3685 468-9	"White"
	1	3685 466-7	"Black"
	1	3685 460-1	"Blue"
	1	3685 456-7	"Green"

All Packages Include Attaching Parts

Part Type Code is Indicated in Parentheses

1970

EXTERIOR VIEW - CHALLENGER J-H CONVERTIBLE COUPE

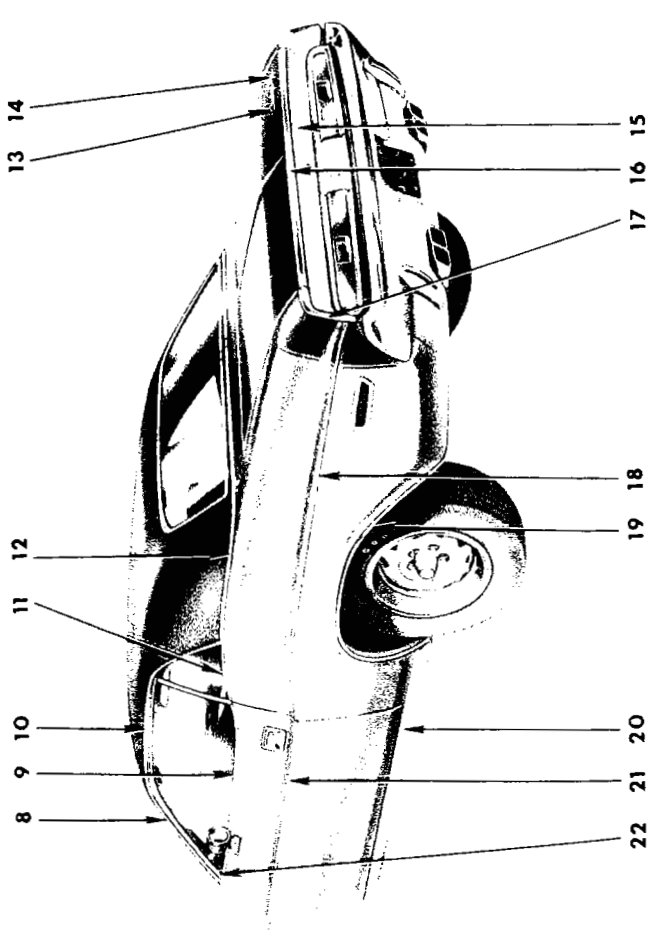

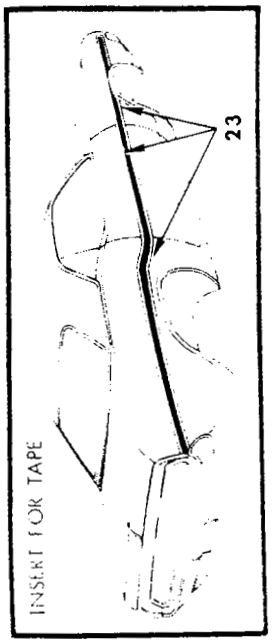

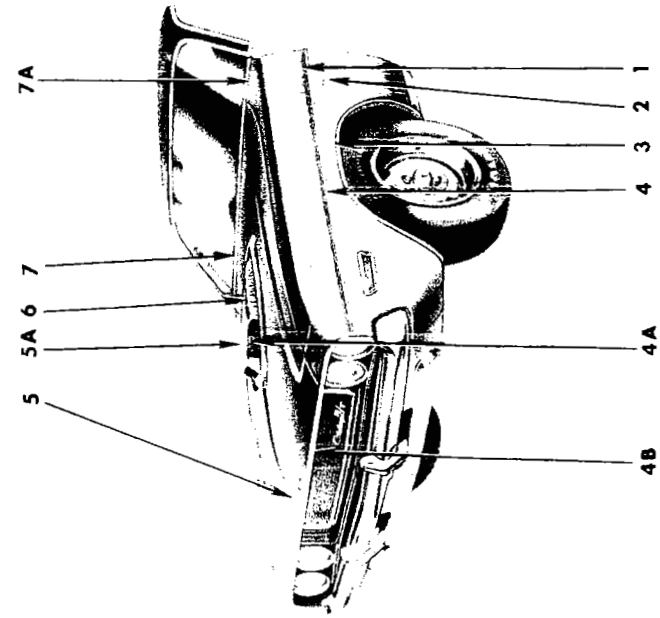

19a2971C

1970
EXTERIOR VIEW - CHALLENGER RT J-S 2 DOOR HARDTOP

REF. NO.	QTY	PART NUMBER	DESCRIPTION
1	2	3444 938	NAME PLATE, Fender Side, "Challenger" (12-15-21)
	6	6026 404	Nut
2	2	3445 223	NAME PLATE, Fender Side (12-15-21)
	4	6026 404	Nut
3	1	3419 710-1	MOULDING PACKAGE, Fender Wheel Opng. (12-15-2)
	6	6024 271	Screw
4	1	3419 812-3	MOULDING PACKAGE, Fender Side, "Black" (12-15-2)
	1	3549 124-5	"Blue"
	1	3549 126-7	"Green"
	2	9420 867	Nut
	2	6000 709	Retainer
	7	6002 922	Retainer
4A	1	3418 660-1	GRILLE, Hood Scoop Carb. F/Air (15-03-15)
4B	1	3549 699	MOULDING, Hood Front (15-25-2)
5	2	2579 655	LETTER "D", Hood Front (15-06-16)
	1	2998 231	"O"
	1	2579 657	"G"
	1	2579 658	"E"
	10	6024 254	Nut
5A	1	3577 472	SCOOP, Hood Carb. F/Air (15-06-64)
6	1	3443 247	NAME PLATE, Hood, "340-4 Barrel" (15-06-3)
	2	2998 801	"383 Magnum"
	2	2998 800	"426 Hemi"
	2	2998 804	"440-6 Pack"
	1	3462 491-2	NAME PLATE, "440" (15-06-3)
	1	3462 489 Lt.	"426 Hemi"
	1	3462 490 Rt.	"426 Hemi"
	3	9420 276	Nut
7	1	2949 474	MOULDING, Hood Top Rear (15-25-2)
7A	1	2998 644-5	MOULDING, Fender Rear (12-15-2)
8	1	3419 906-7	MOULDING PACKAGE, Body Frt. Plr. Drain Trough (23-59-61)
	6	6028 721	Screw
9	1	3549 648-9	MOULDING PACKAGE, Door Outside Belt (23-23-32)
	2	6028 755	Retainer
	2	6003 011	Retainer
	2	6003 010	Retainer
	6	6003 012	Retainer
	2	6003 009	Retainer
	2	6003 014	Screw
	2	116 000	Nut
10	1	3549 194-5	MOULDING PACKAGE, Roof Side Drain Trough (23-59-61)
	10	6028 721	Screw
11	1	2965 404-5	MOULDING, Qtr. Wdo. Outside Belt (23-23-39)
12	1	2954 408-9	MOULDING, Qtr. Outside Belt, use w/Vinyl Roof or Two Tone Paint, w/o Formal Roof Pkg. (23-23-39)
	24	6002 297	Retainer
	4	6002 957	Retainer
	28	9420 276	Nut
	1	3514 058-9	MOULDING PACKAGE, Qtr. Outside Belt, w/Formal Roof (23-23-39)
	14	6002 985	Retainer
	14	6028 302	Nut
13	1	3444 938	NAME PLATE, Deck Lid, "Challenger" (23-19-114)
14	1	3445 223	NAME PLATE, Deck Lid, "R/T" (23-19-114)
15	1	3444 175	PANEL, Deck Opng. Lwr. Finish (23-23-28)
	7	6028 013	Screw
	6	6002 974	Retainer
	6	9420 218	Nut
16	1	3419 709	MOULDING PACKAGE, Deck Lid Outside (23-23-30)
	7	6026 523	Nut
	7	6002 885	Retainer
17	1	3419 712-3	MOULDING PACKAGE, Qtr. Outside Rear (23-23-39)
	6	6026 532	Nut
	6	6002 885	Retainer
18	1	3419 796-7	MOULDING PACKAGE, Qtr. Outside, "Black" (23-23-39)
	1	3549 112-3	"Blue"
	1	3549 114-5	"Green"
	20	6002 922	Retainer
	2	6000 709	Retainer
	2	6024 152	Nut
19	1	3419 790-1	MOULDING PACKAGE, Qtr. Outside Wheel Opening (23-23-39)
	16	6024 271	Screw
20	1	3419 792-3	MOULDING PACKAGE, Body Side Sill (23-23-2)
	2	6002 977	Retainer
	2	9420 867	Nut
	7	6002 930	Retainer
	2	6026 760	Screw
21	1	3419 794-5	MOULDING PACKAGE, Door Outside, "Black" (23-23-32)
	1	3549 118-9	"Blue"
	1	3549 120-1	"Green"
	4	6002 162	Retainer
	4	6026 523	Nut
	14	6002 932	Retainer
22	1	3446 456	MOULDING, Body Frt. Pillar Lwr. (23-23-141)
	2	6028 674	Screw

CONTINUED ON NEXT PAGE

All Packages Include Attaching Parts

Part Type Code is Indicated in Parentheses

1970
EXTERIOR VIEW - CHALLENGER RT J-S 2 DOOR HARDTOP

REF. NO.	QTY	PART NUMBER	DESCRIPTION
23	1	2965 958-9	TAPE, Fender Color Stripe, "Red" (12-15-33)
	1	2965 960-1	"White"
	1	2965 962-3	"Black"
	1	3506 092-3	"Blue"
	1	3506 720-1	"Chartreuse"
	1	3570 726-7	"Magenta"
	1	3506 094-5	"Green"
	1	2965 952-3	TAPE, Door Color Stripe, "Red" (23-23-12)
	1	2965 954-5	"White"
	1	2965 956-7	"Black"
	1	3506 088-9	"Blue"
	1	3506 090-1	"Green"
	1	3570 722-3	"Chartreuse"
	1	3570 728-9	"Magenta"
23 Cont'd	1	2965 944-5	TAPE, Qtr. Panel Color Stripe, "Red" (23-23-12)
	1	2965 948-9	"White"
	1	2965 950-1	"Black"
	1	3506 076-7	"Blue"
	1	3506 078-9	"Green"
	1	3570 724-5	"Chartreuse"
	1	3570 730-1	"Magenta"
	1	3685 480-1	TAPE PACKAGE, Body Side, Fender, Door, Qtr. Panel, "Red" (23-23-12)
	1	3685 476-7	"White"
	1	3685 482-3	"Black"
	1	3685 474-5	"Blue"
	1	3685 470-1	"Green"
	1	3685 454-5	"Chartreuse"
	1	3685 450-1	"Magenta"

All Packages Include Attaching Parts

Part Type Code is Indicated in Parentheses

1970
EXTERIOR VIEW - CHALLENGER RT J-S 2 DOOR HARDTOP

NOTES

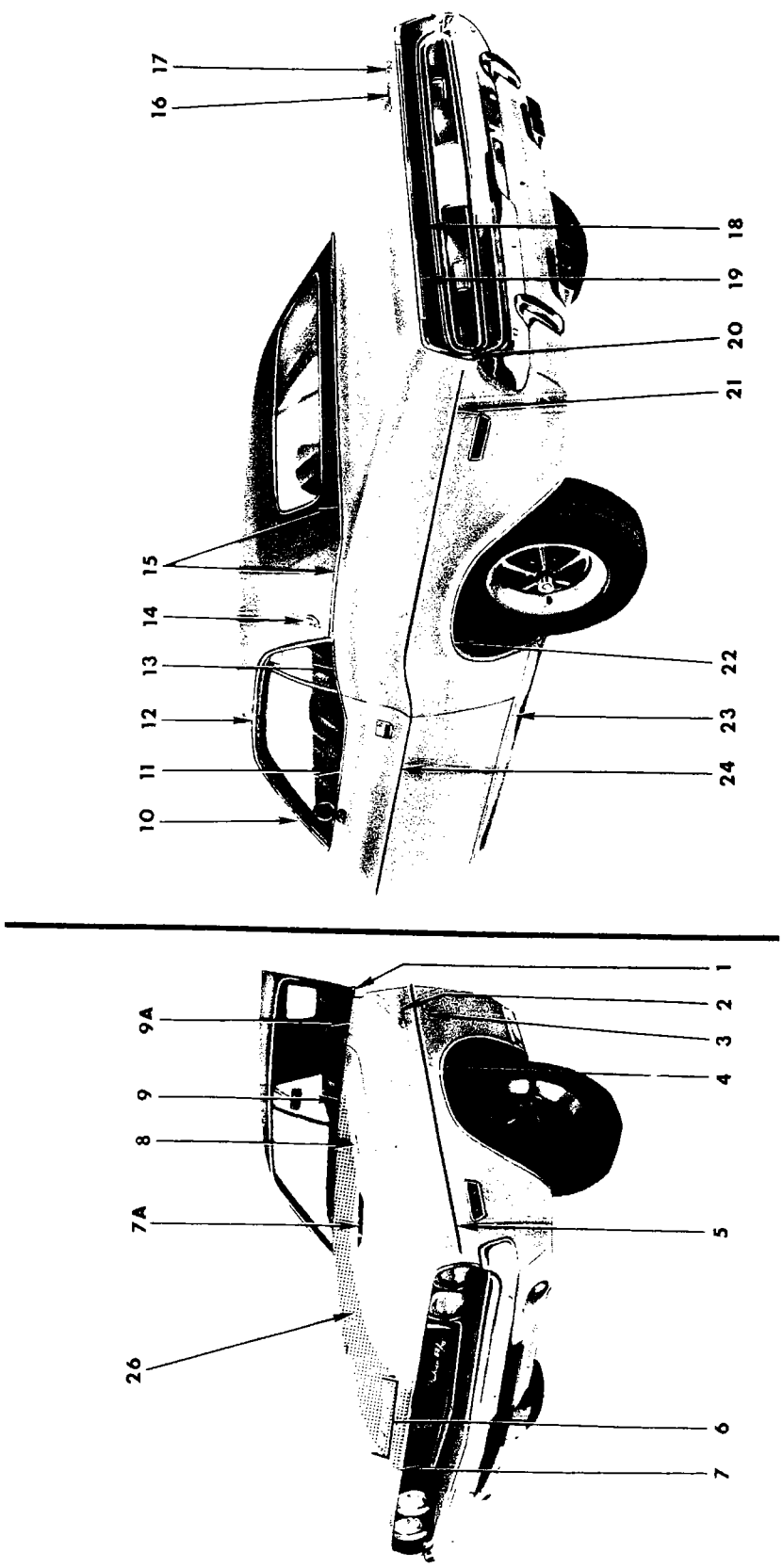

19a3141C

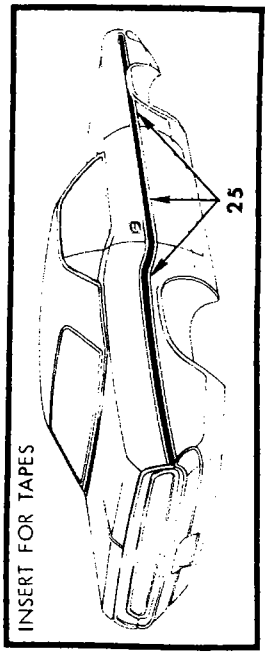

1970
EXTERIOR VIEW - CHALLENGER R/T J-S FAST BACK

REF. NO.	QTY	PART NUMBER	DESCRIPTION
1	1	3446 456-7	MOULDING, Body Frt. Pillar, Lwr. (23-23-14)
	2	6028 674	Screw
2	2	3444 938	NAME PLATE, Fender Side (Challenger) (12-15-21)
	6	6026 404	Nut
3	2	3445 223	NAME PLATE, Fender Side (R/T)(12-15-21)
	4	6026 404	Nut
4	1	3419 710-1	MOULDING PACKAGE, Fender Wheel Opening (12-15-2)
	6	6024 271	Screw
5	1	3419 812-3	MOULDING PACKAGE, Fender Side, "Black" (12-15-2)
	1	3549 124-5	"Blue"
	1	3549 126-7	"Green"
	2	9420 867	Nut
	2	6000 709	Retainer
	7	6002 922	Retainer
6	2	2579 655	LETTER "D", Hood (15-06-16)
	1	2998 231	"O"
	1	2579 657	"G"
	1	2579 658	"E"
	10	9420 254	Nut
7	1	3549 699	MOULDING PACKAGE, Hood Front (15-25-2)
	8	441 239	Nut
	8	6002 170	Retainer
7A	1	2998 182-3	ORNAMENT, Hood Top Side (15-06-3)
8	2	2998 800	NAME PLATE, Hood, "426 Hemi" (15-06-3)
	2	2998 801	"383 Magnum"
	2	2998 802	"440 Magnum"
	2	2998 804	"440 Six Pack"
	AR	6002 852	Retainer
9	1	2949 474	MOULDING, Hood Rr. (15-25-2)
9A	1	2998 644-5	MOULDING, Fender Rr. (12-15-2)
10	1	3419 906-7	MOULDING PACKAGE, Body Frt. Plr. Drain Trough (23-59-61)
	6	6028 721	Screw
11	1	3549 648-9	MOULDING PACKAGE, Door Outside Belt (23-23-32)
	2	6003 014	Screw
	2	6028 755	Retainer
	2	6003 011	Retainer
	2	6003 010	Retainer
	6	6003 012	Retainer
	2	116 000	Nut
	2	6003 009	Retainer
12	1	3549 194-5	MOULDING PACKAGE, Roof Side Drain Trough (23-59-61)
	10	6028 721	Screw
13	1	2965 404-5	MOULDING, Qtr. Wdo. Outside Belt (23-23-39)
14	2	3446 801	MEDALLION, Qtr. Outside (23-34-334)
15	1	3514 058-9	MOULDING PACKAGE, Qtr. Outside Belt, w/Vinyl Roof, w/Formal Roof Pkg. (23-23-39)
	14	6002 985	Retainer 14 6028 302 Nut
16	1	3444 938	NAME PLATE, Deck Lid, "Challenger" (23-19-114)
17	1	3445 223	NAME PLATE, Deck Lid, "R/T" (23-19-114)
18	1	3444 175	PANEL, Deck Opng. Lwr. Finish (23-23-28)
	6	6002 974	Retainer
	7	6028 013	Screw 6 9420 218 Nut
19	1	3419 709	MOULDING PACKAGE, Deck Lid Outside (23-23-30)
	7	6002 885	Retainer 7 6026 523 Nut
20	1	3419 712-3	MOULDING PACKAGE, Qtr. Outside, Rear (23-23-39)
	6	6002 885	Retainer 6 6026 532 Nut
21	1	3419 796-7	MOULDING PACKAGE, Qtr. Outside, "Black" (23-23-39)
	1	3549 112-3	"Blue"
	1	3549 114-5	"Green"
	20	6002 922	Retainer
	2	6000 709	Retainer 2 6024 152 Nut
22	1	3419 790-1	MOULDING PACKAGE, Qtr. Outside Whl. Opng. (23-23-39)
	16	6024 271	Screw
23	1	3419 792-3	MOULDING PACKAGE, Body Side Sill (23-23-2)
	2	6002 977	Retainer 2 9420 867 Nut
	7	6002 930	Retainer 2 6026 760 Screw
24	1	3419 794-5	MOULDING PACKAGE, Door Outside, "Black" (23-23-32)
	1	3549 118-9	"Blue"
	1	3549 120-1	"Green"
	4	6002 162	Retainer
	14	6002 932	Retainer 4 6026 523 Nut
25	1	2965 958-9	TAPE, Fender Color Stripe, "Red" (23-15-33)
	1	2965 960-1	"White"
	1	2965 962-3	"Black"
	1	3506 092-3	"Blue"
	1	3506 094-5	"Green"
	1	3570 720-1	"Chartreuse"
	1	3570 726-7	"Magenta"
	1	2965 952-3	TAPE, Door Outside Color Stripe, "Red" (23-23-12)
	1	2965 954-5	"White"
	1	2965 956-7	"Black"
	1	3506 088-9	"Blue"
	1	3506 090-1	"Green"
	1	3570 722-3	"Chartreuse"
	1	3570 728-9	"Magenta"
	1	2965 944-5	TAPE, Qtr. Pnl. Color Stripe, "Red" (23-23-12)
	1	2965 948-9	"White"
	1	2965 950-1	"Black"
	1	3506 076-7	"Blue"
	1	3506 078-9	"Green"
	1	3570 724-5	"Chartreuse"
	1	3570 730-1	"Magenta"
	1	3685 480-1	TAPE PACKAGE, Body Side, Door, Fender, Qtr. Panel, "Red" (23-23-12)
	1	3685 476-7	"White"
	1	3685 482-3	"Black"
	1	3685 474-5	"Blue"
	1	3685 470-1	"Green"
	1	3685 454-5	"Chartreuse"
	1	3685 450-1	"Magenta"
26	1	3443 512	TAPE, Hood (15-03-69)

All Packages Include Attaching Parts

Part Type Code is Indicated in Parentheses

1970

EXTERIOR VIEW - CHALLENGER R/T J-S FAST BACK

19a2975B

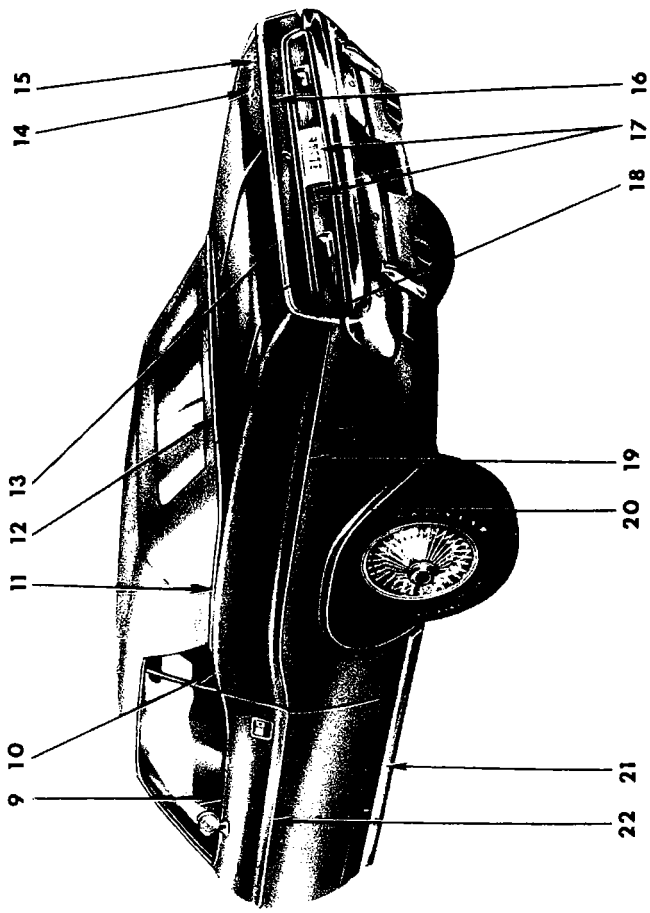

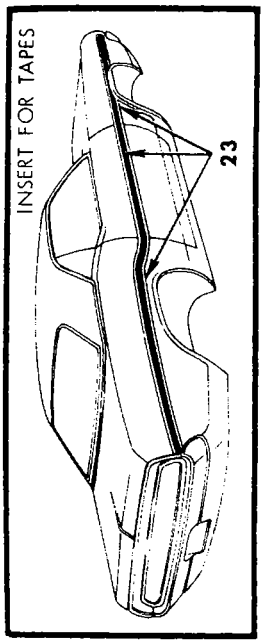

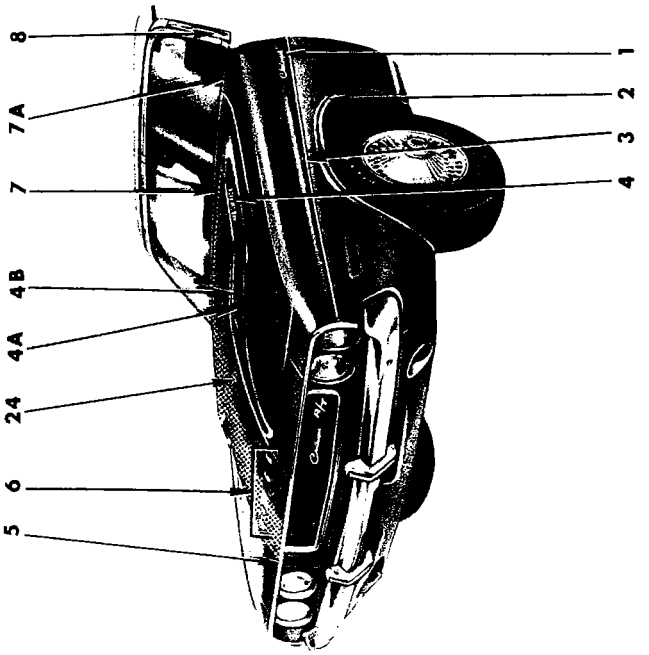

1970
EXTERIOR VIEW - CHALLENGER RT J-S CONVERTIBLE COUPE

REF. NO.	QTY	PART NUMBER	DESCRIPTION
1	2	3444 938	NAME PLATE, Fender Side, "Challenger" (12-15-21)
	6	6026 404	Nut
2	1	3419 710-1	MOULDING PACKAGE, Fender Wheel Opening (12-15-2)
	6	6024 271	Screw
3	1	3419 812-3	MOULDING PACKAGE, Fender Side, "Black" (12-15-2)
	1	3549 124-5	"Blue"
	1	3549 126-7	"Green"
	2	6000 709	Retainer
	7	6002 922	Retainer
	2	9420 867	Nut
4	2	2998 804	NAME PLATE, Hood Side (15-06-3)
	6	6002 852	Retainer
4A	1	2998 182	ORNAMENT, Hood Top (15-06-3)
4B	1	2998 180-1	PANEL, Hood Top Ornament Closure (15-03-83)
5	1	3549 699	MOULDING PACKAGE, Hood Front (15-25-2)
	8	6002 170	Retainer 8 9420 867 Nut
6	2	2579 655	LETTER "D", Hood Front (15-06-16)
	1	2998 231	"O"
	1	2579 657	"G"
	1	2579 658	"E"
	10	9420 254	Nut
7	1	2949 474	MOULDING, Hood Rr. (15-25-2)
7A	1	2998 644-5	MOULDING, Fender Rr. (12-15-2)
8	1	3419 814-5	MOULDING PACKAGE, Body Frt. Upr. Pillar (23-23-14)
	2	3445 622	Spacer
9	1	3549 648-9	MOULDING PACKAGE, Door Outside Belt (23-23-32)
	2	6028 755	Retainer
	2	6003 011	Retainer 2 6003 009 Ret.
	2	6003 010	Retainer 2 6003 014 Screw
	6	6003 012	Retainer 2 116 000 Nut
10	1	3481 720-1	MOULDING PACKAGE, Qtr. Outside Belt, Frt., use w/Belt Mldg. (23-23-39)
	2	9414 752	Screw
	1	3419 798-9	MOULDING PACKAGE, Qtr. Outside Belt, Frt., use w/o Belt Mldg. (23-23-39)
	2	9414 732	Screw
11	1	3419 800-1	MOULDING PACKAGE, Qtr. Outside Belt, Rr. (23-23-39)
	2	9414 732	Screw
12	1	3419 777	MOULDING PACKAGE, Deck Opng. Upr. Pnl. (23-23-31)
	8	6002 976	Retainer
	8	---- ---	Screw w/Washer
13	1	3419 709	MOULDING PACKAGE, Deck Lid Outside (23-23-30)
	7	6002 885	Retainer 7 6026 523 Nut
14	1	3444 938	NAME PLATE, Deck Lid, "Challenger" (23-19-114)
15	1	3445 223	NAME PLATE, Deck Lid, "R/T" (23-19-114)
16	1	3444 175	PANEL, Deck Opng. Lwr. Finish (23-23-28)
	6	6002 974	Retainer
	7	6028 013	Screw 6 9420 218 Nut
17	1	3420 581	LENS PACKAGE, Back-Up Lamp (8-56-8)
18	1	3419 712-3	MOULDING PACKAGE, Qtr. Outside Rear (23-23-39)
	6	6002 885	Retainer 6 6026 532 Nut
19	1	3419 796-7	MOULDING PACKAGE, Qtr. Outside, "Black" (23-23-39)
	1	3549 112-3	"Blue"
	1	3549 114-5	"Green"
	20	6002 922	Retainer
	2	6000 709	Retainer 2 6024 152 Nut
20	1	3419 790-1	MOULDING PACKAGE, Qtr. Outside Whl. Opng. (23-23-39)
	16	6024 271	Screw
21	1	3419 792-3	MOULDING PACKAGE, Body Side Sill (23-23-2)
	2	6002 977	Retainer 2 9420 867 Nut
	7	6002 930	Retainer 2 6026 760 Screw
22	1	3419 794-5	MOULDING PACKAGE, Door Outside, "Black" (23-23-32)
	1	3549 118-9	"Blue"
	1	3549 120-1	"Green"
	14	6002 922	Retainer
	4	6002 162	Retainer 4 6026 523 Nut
23	1	2965 958-9	TAPE, Fender Color Stripe, "Red" (12-15-33)
	1	2965 960-1	"White"
	1	2965 962-3	"Black"
	1	3506 092-3	"Blue"
	1	3506 094-5	"Green"
	1	3570 720-1	"Chartreuse"
	1	3570 726-7	"Magenta"
	1	2965 952-3	TAPE, Door Color Stripe, "Red" (23-23-12)
	1	2965 954-5	"White"
	1	2965 956-7	"Black"
	1	3506 088-9	"Blue"
	1	3506 090-1	"Green"
	1	3570 722-3	"Chartreuse"
	1	3570 728-9	"Magenta"
	1	2965 944-5	TAPE, Qtr. Pnl. Color Stripe, "Red" (23-23-12)
	1	2965 948-9	"White"
	1	2965 950-1	"Black"
	1	3506 076-7	"Blue"
	1	3506 078-9	"Green"
	1	3570 724-5	"Chartreuse"
	1	3570 730-1	"Magenta"
	1	3685 480-1	TAPE PACKAGE, Body Side, Fender, Door, Qtr. Panel, "Red" (23-23-12)
	1	3685 476-7	"White"
	1	3685 482-3	"Black"
	1	3685 474-5	"Blue"
	1	3685 470-1	"Green"
	1	3685 454-5	"Chartreuse"
	1	3685 450-1	"Magenta"
24	1	3443 512	TAPE, Hood (15-03-69)

All Packages Include Attaching Parts

Part Type Code is Indicated in Parentheses

1970

EXTERIOR VIEW - CHALLENGER RT J-S CONVERTIBLE COUPE

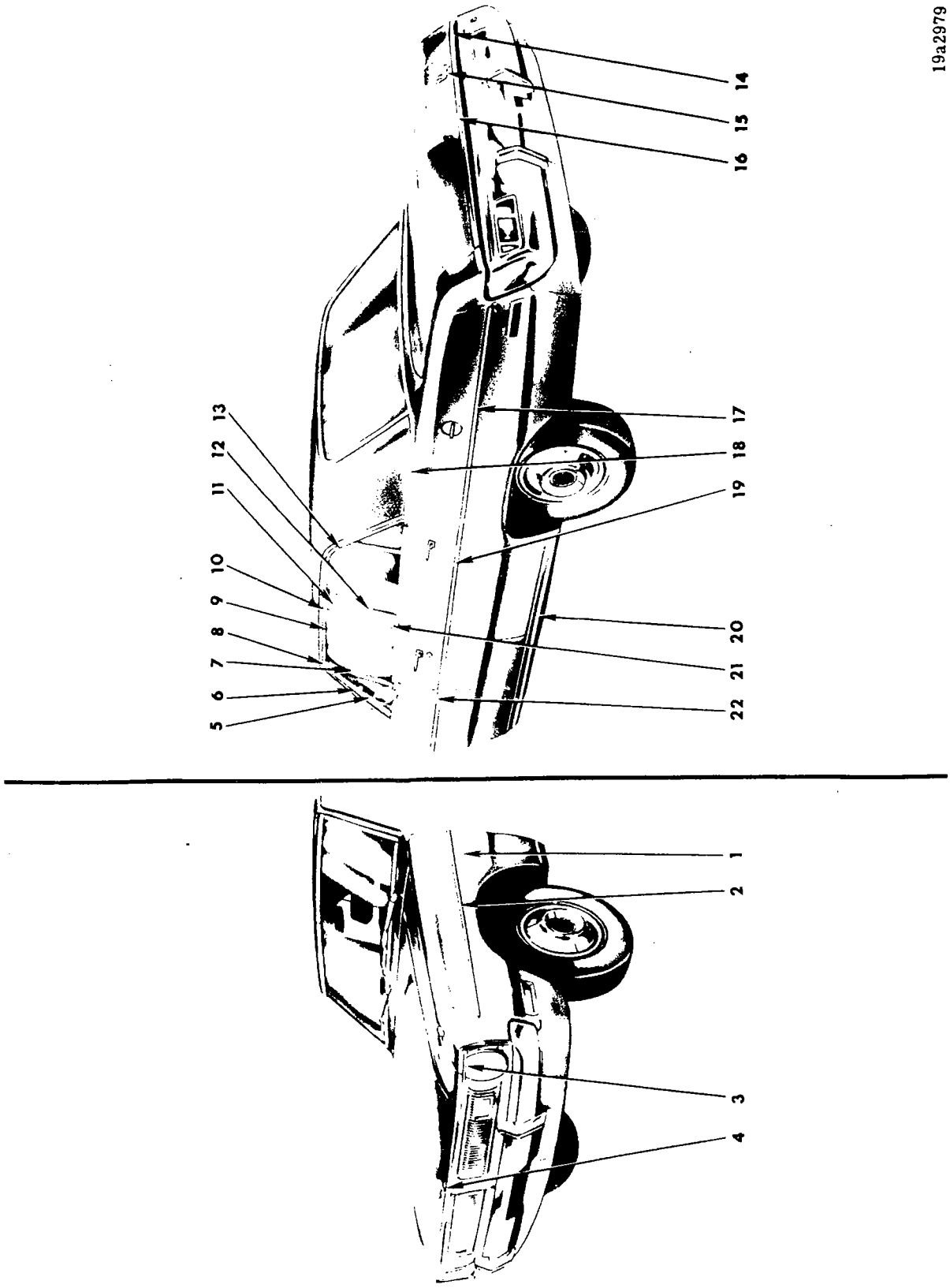

1970
EXTERIOR VIEW - DART L-L 4 DOOR SEDAN

REF. NO.	QTY	PART NUMBER	DESCRIPTION
1	2	2901 894	NAME PLATE, Fender Side (Dart) (12-15-21)
	6	6027 352	Nut
2	2	3481 711	MOULDING PACKAGE, Fender Side (12-15-2)
	2	9420 867	Nut
	1	6002 818	Retainer
	1	6002 013	Retainer
	5	6001 880	Retainer
3	1	3549 630-1	MOULDING PACKAGE, Fender Front (12-15-2)
	6	9429 022	Screw
4	1	2998 302	NAME PLATE, Hood Front (15-06-3)
	4	9420 254	Nut
5	1	2807 882-3	MOULDING PACKAGE, Body Frt. Pillar Trim, use w/Two Tone Paint (23-23-14)
	2	6027 205	Screw
6	1	2783 024-5	MOULDING, Body Front Pillar Drain Trough (23-59-61)
	AR	---- ---	Spacer
7	1	2663 434-5	MOULDING, Frt. Door Wdo. Opng. Frame, Frt. (23-23-32)
8	2	2783 028	COVER, Roof Side Drain Trough Mldg. Joint (23-59-57)
9	1	2663 440-1	MOULDING, Frt. Door Wdo. Opng. Frame, Upr. (23-23-32)
10	1	2783 026-7	MOULDING, Roof Side Drain Trough, w/o Vinyl Roof (23-59-61)
	AR	---- ---	Spacer
	1	2840 980-1	MOULDING, Roof Side Drain Trough, w/Vinyl Roof (23-59-61)
	AR	---- ---	Spacer
11	1	2807 920-1	MOULDING PACKAGE, Body Center Pillar Outside Finish (23-23-16)
	4	6024 271	Screw
12	1	2664 812-3	MOULDING, Rear Door Wdo. Opng. Frame, Frt. (23-23-33)
13	1	2664 814-5	MOULDING, Rear Door Wdo. Opng. Frame, Upr. and Rear (23-23-33)
14	1	3481 780-1	MOULDING PACKAGE, Qtr. Pnl. End Extension (23-23-39)
	6	6028 537	Screw
15	1	3504 199	NAME PLATE, Deck Lid, "Dodge" (23-19-114)
	1	6024 701	Seal
	1	6002 852	Retainer
16	1	3481 718	MOULDING PACKAGE, Deck Lid (23-23-30)
	8	6002 967	Retainer
17	1	3481 778-9	MOULDING PACKAGE, Qtr. Outside (23-23-39)
	14	6001 880	Retainer
	2	6002 402	Retainer
	2	6024 679	Nut
18	1	2809 684-5	MOULDING PACKAGE, Qtr. Outside Belt, use w/Two Tone Paint (23-23-39)
	2	6002 507	Retainer w/Seal
	6	6002 192	Screw w/Seal
19	1	3004 264-5	MOULDING PACKAGE, Rear Door Outside (23-23-33)
	4	6026 523	Nut
	4	6001 836	Retainer
	6	6001 880	Retainer
20	2	2807 906	MOULDING PACKAGE, Body Side Sill (23-23-2)
	8	6001 428	Retainer and Seal
	2	6026 760	Screw
21	1	2663 442-3	MOULDING, Frt. Door Wdo. Opng. Frame, Rear (23-23-32)
22	2	3004 262	MOULDING PACKAGE, Frt. Door Outside (23-23-32)
	2	6001 836	Retainer
	2	6026 523	Nut
	4	6001 880	Retainer

All Packages Include Attaching Parts

Part Type Code is Indicated in Parentheses

1970

EXTERIOR VIEW - DART L-L 4 DOOR SEDAN

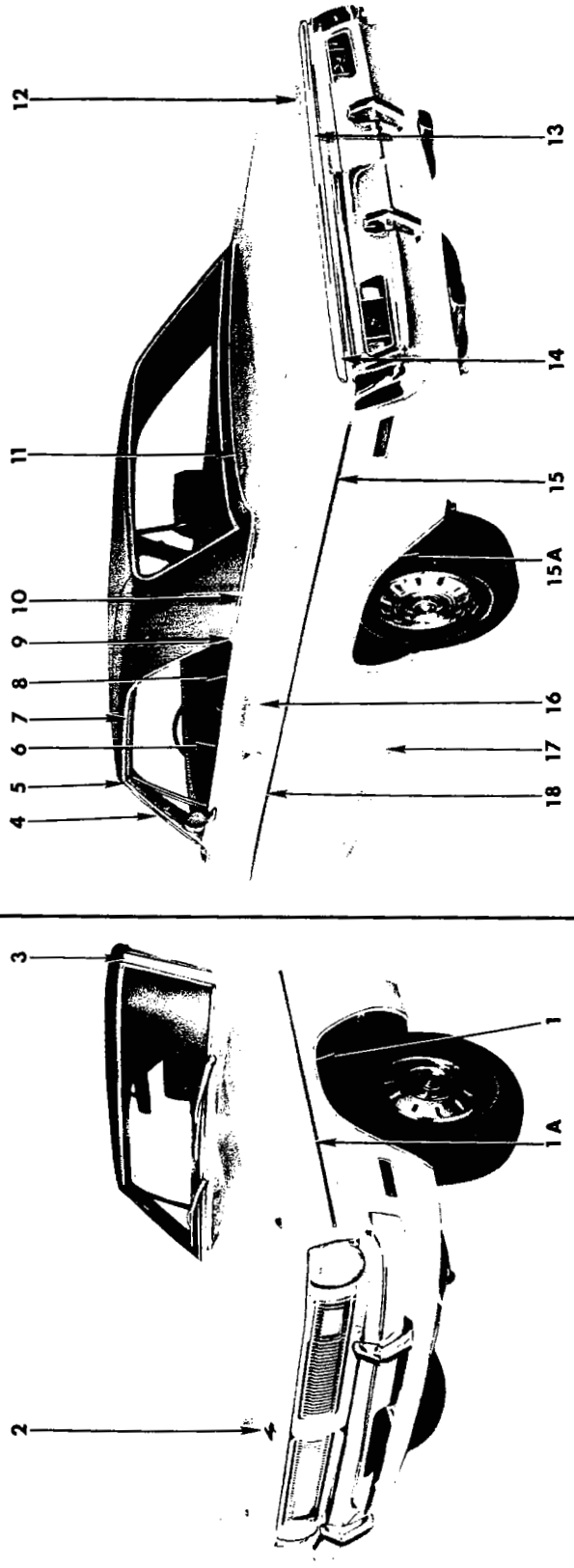

1970
EXTERIOR VIEW - DART (SWINGER) L-L 2 DOOR HARDTOP

REF. NO.	QTY	PART NUMBER	DESCRIPTION
1	1	2807 766-7	MOULDING PACKAGE, Fender Wheel Opening (12-15-2)
	8	6024 271	Screw
1A	1	3481 716-7	MOULDING PACKAGE, Fender Side (12-15-2)
	2	9420 867	Nut
	2	6000 709	Retainer
	6	6002 922	Retainer
2	1	2786 482	NAME PLATE, Hood Front (15-06-3)
	4	9420 254	Nut
3	1	2807 882-3	MOULDING PACKAGE, Body Frt. Plr. Trim, use w/Vinyl Roof or Two Tone Paint (23-23-14)
	2	6027 205	Screw
4	1	2783 018-9	MOULDING, Body Frt. Pillar Outside (23-59-61)
	AR	---- ---	Spacer
5	2	2783 028	COVER, Roof Side Drain Trough Mldg. Joint (23-59-57)
6	1	3004 244-5	MOULDING PACKAGE, Door Outside Belt (23-23-32)
	14	6002 398	Retainer and Seal
7	1	2783 020-1	MOULDING, Roof Side Drain Trough, w/o Vinyl Roof (23-59-61)
	AR	---- ---	Spacer
	1	2840 982-3	MOULDING, Roof Side Drain Trough, w/Vinyl Roof (23-59-61)
8	1	3004 242-3	MOULDING PACKAGE, Qtr. Outside Belt, Frt. (23-23-39)
	8	6002 398	Retainer and Seal
9	1	3004 246-7	MOULDING PACKAGE, Qtr. Outside Belt, Rr. (23-23-39)
	2	6023 898	Screw w/Seal
10	1	2807 700-1	MOULDING PACKAGE, Roof Outside Belt (23-23-42)
	2	6023 898	Screw
	6	6002 192	Fastener
	2	6002 297	Retainer w/Seal
	2	9420 276	Nut
11	1	2807 702-3	MOULDING PACKAGE, Deck Opng. Upr. Pnl. Use w/Two Tone Paint and Vinyl Roof (23-23-31)
	7	6002 297	Retainer and Seal
	9	9415 250	Nut
12	1	3504 199	NAME PLATE, Deck Lid, "Dodge" (23-19-114)
	1	6024 701	Seal
	1	6002 852	Retainer
13	1	3481 718	MOULDING PACKAGE, Deck Lid (23-23-30)
	8	6002 967	Retainer
	8	6026 523	Nut
14	1	3481 780-1	MOULDING PACKAGE, Qtr. Pnl. End Extension (23-23-39)
	6	6028 537	Screw
15	1	3481 776-7	MOULDING PACKAGE, Qtr. Outside (23-23-39)
	10	6002 922	Retainer
	4	6000 709	Retainer
	4	6024 679	Nut
15A	1	2932 594-5	MOULDING PACKAGE, Qtr. Outside Whl. Opng. (23-23-39)
	16	6024 271	Screw
16	2	3445 985	NAME PLATE, Qtr. Outside, Dart (23-34-238)
	4	9420 263	Nut
	2	3446 861	NAME PLATE, Qtr. Outside Pnl., Swinger (23-34-238)
	6	9420 263	Nut
17	2	2807 906	MOULDING PACKAGE, Body Side Sill (23-23-2)
	8	6001 428	Retainer and Seal
	2	6026 760	Screw
18	1	3481 774-5	MOULDING PACKAGE, Door Outside (23-23-32)
	6	6002 922	Retainer
	4	6002 162	Retainer
	4	6026 523	Nut

All Packages Include Attaching Parts

Part Type Code is Indicated in Parentheses

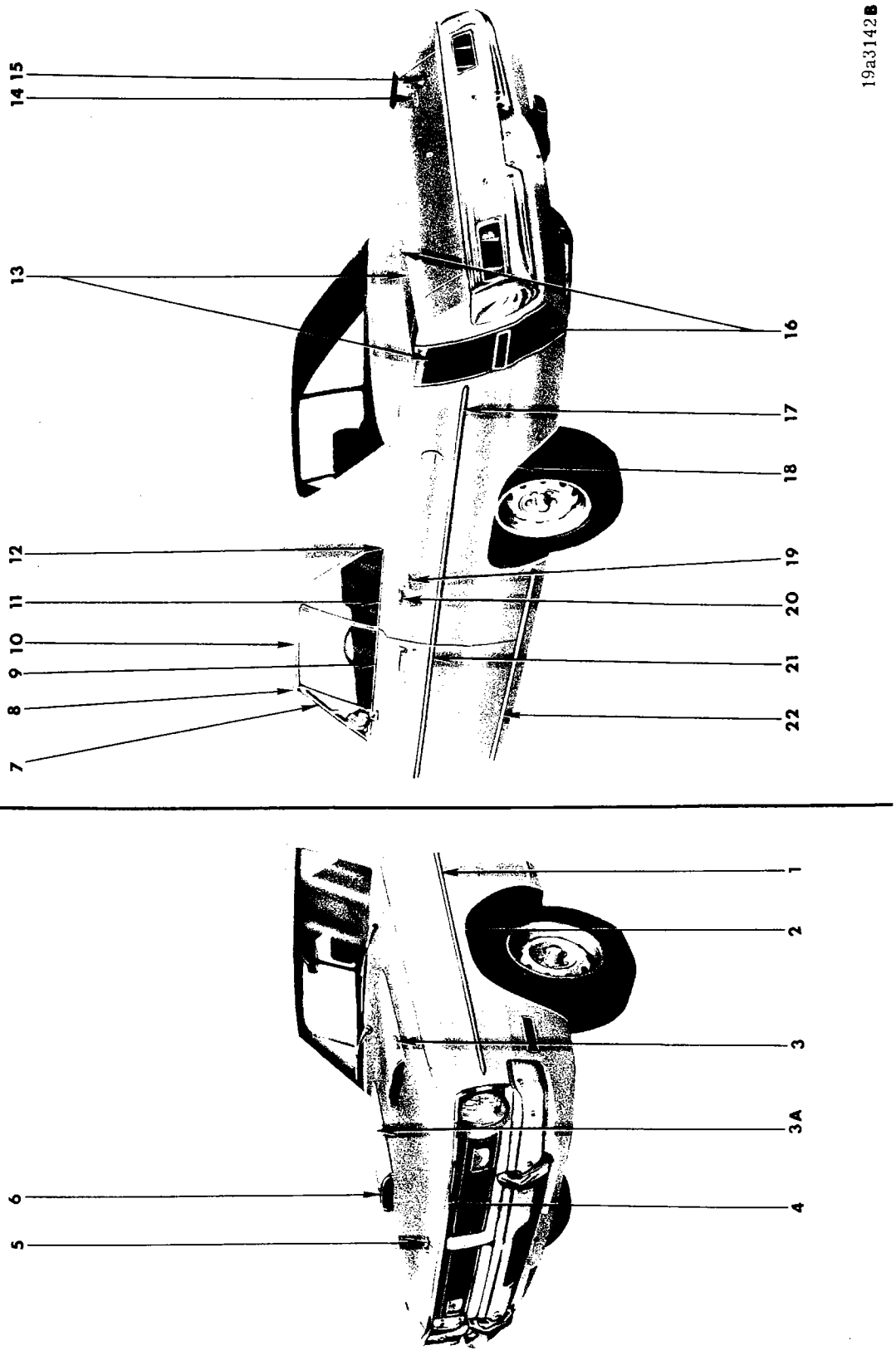

1970
EXTERIOR VIEW - DART (SWINGER 340) L-M 2 DOOR HARDTOP

REF. NO.	QTY	PART NUMBER	DESCRIPTION
1	1	3481 716-7	MOULDING PACKAGE, Fender Side (12-15-2)
	2	6000 709	Retainer
	6	6002 922	Retainer 2 9420 867 Nut
2	1	2807 766-7	MOULDING PACKAGE, Fender Wheel Opening (12-15-2)
	8	6024 271	Screw
3	2	2998 880	NAME PLATE, Hood Air Scoop (340) (15-06-3)
	4	9411 943	Nut
3A	1	3443 130-1	ORNAMENT, Hood Scoop (15-03-64)
4	1	3481 911	MOULDING PACKAGE, Hood Front (15-25-2)
	9	9428 267	Screw
5	1	2998 302	NAME PLATE, Hood Front (15-06-3)
	4	9420 254	Nut
6	1	2949 146-7	BEZEL, Hood Air Scoop (15-03-18)
	4	6026 906	Nut
	4	6026 627	Screw
7	1	2783 018-9	MOULDING, Body Front Pillar Drain Trough (23-59-61)
	AR	---- ---	Spacer
8	2	2783 028	COVER, Roof Side Drain Trough Mldg. Joint (23-59-57)
9	1	3004 244-5	MOULDING PACKAGE, Door Outside Belt (23-23-32)
	14	6002 398	Retainer and Seal
10	1	2783 020-1	MOULDING, Roof Side Drain Trough, w/o Vinyl Roof (23-59-61)
	AR	---- ---	Spacer
	1	2840 982-3	MOULDING, Roof Side Drain Trough, w/Vinyl Roof (23-59-61)
	AR	---- ---	Spacer
11	1	3004 242-3	MOULDING PACKAGE, Qtr. Outside Belt, Frt. (23-23-39)
	8	6002 398	Retainer and Seal
12	1	3004 246-7	MOULDING PACKAGE, Qtr. Outside Belt, Rear (23-23-39)
	2	6023 898	Screw w/Seal
13	1	3504 604	TAPE, Deck Lid Color Stripe, "White" (23-23-12)
	1	3504 605	"Black"
	1	3504 606	"Red"
	1	3506 096	"Blue"
	1	3506 097	"Green"
	1	3504 614-5	TAPE, Qtr. Pnl. Color Stripe, "White" (23-23-12)
	1	3504 616-7	"Black"
	1	3504 618-9	"Red"
	1	3506 098-9	"Blue"
	1	3506 100-1	"Green"
14	1	3445 985	NAME PLATE, Deck Lid, "Dart" (23-19-114)
	2	---- ---	Nut
	2	---- ---	Seal
15	1	3505 330	NAME PLATE, Deck Lid, "Swinger" (23-19-114)
	1	---- ---	Nut
	1	---- ---	Seal
	3	6002 852	Retainer
16	1	3685 380	TAPE PACKAGE, Body Side, Fender, Door, Qtr. Panel, "White" (23-23-12)
	1	3685 381	"Black"
	1	3685 382	"Red"
	1	3685 383	"Blue"
	1	3685 384	"Green"
17	1	3481 776-7	MOULDING PACKAGE, Qtr. Outside (23-23-39)
	10	6002 922	Retainer
	4	6000 709	Retainer
	4	6024 679	Nut
18	1	2932 594-5	MOULDING PACKAGE, Qtr. Outside Wheel Opening (23-23-39)
	16	6024 271	Screw w/Seal
19	2	3446 861	NAME PLATE, Qtr. Outside Panel, "Swinger"
	6	9420 263	Nut
20	2	3445 985	NAME PLATE, Qtr. Outside, "Dart" (23-34-238)
	4	9420 263	Nut
21	1	3481 774-5	MOULDING PACKAGE, Door Outside (23-23-32)
	6	6002 922	Retainer
	4	6002 162	Retainer
	4	6026 523	Nut
22	2	2807 906	MOULDING PACKAGE, Body Side Sill (23-23-2)
	8	6001 428	Retainer and Seal
	2	6026 760	Screw

All Packages Include Attaching Parts

Part Type Code is Indicated in Parentheses

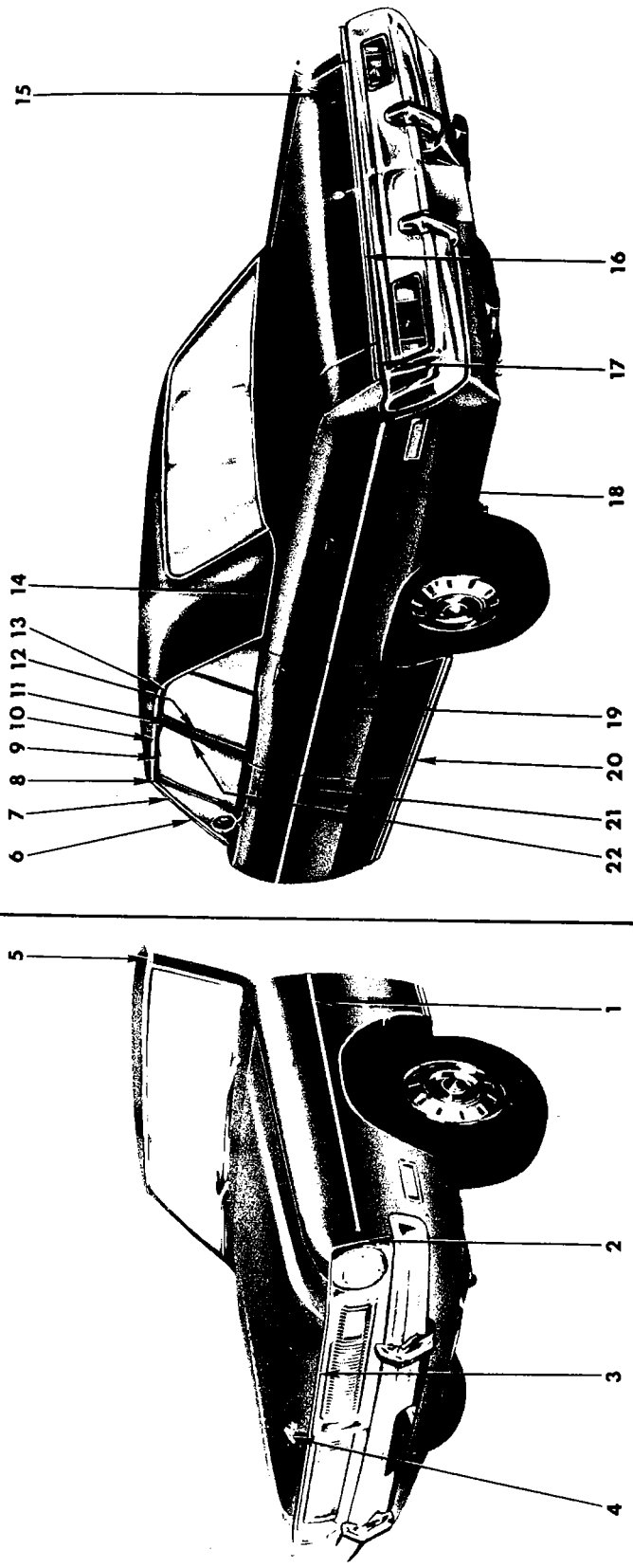

1970
EXTERIOR VIEW - DART CUSTOM L-H 4 DOOR SEDAN

REF. NO.	QTY	PART NUMBER	DESCRIPTION
1	1	2933 508-9	MOULDING PACKAGE, Fender Side (12-15-2)
	2	6026 523	Nut
	2	6002 691	Retainer
	8	6002 693	Retainer
	2	6002 637	Retainer
2	1	3549 630-1	MOULDING PACKAGE, Fender Front (12-15-2)
	6	9429 022	Screw
3	1	3481 911	MOULDING PACKAGE, Hood Front (15-25-2)
	9	9428 267	Screw
4	1	2786 482	NAME PLATE, Hood Front (15-06-3)
	4	9420 254	Nut
5	1	2807 882-3	MOULDING PACKAGE, Body Frt. Pillar Trim, use w/Vinyl Roof or Two Tone Paint (23-23-14)
	2	6027 205	Screw
6	1	2783 024-5	MOULDING, Body Front Pillar Drain Trough (23-59-61)
	AR	---- ---	Spacer
7	1	2663 434-5	MOULDING, Frt. Door Wdo. Opng. Frame, Frt. (23-23-32)
8	2	2783 028	COVER, Roof Side Drain Trough Mldg. Joint (23-59-57)
9	1	2663 440-1	MOULDING, Frt. Door Wdo. Opng. Frame, Upr. (23-23-32)
10	1	2783 026-7	MOULDING, Roof Side Drain Trough, w/o Vinyl Roof (23-59-61)
	AR	---- ---	Spacer
	1	2840 980-1	MOULDING, Roof Side Drain Trough, w/Vinyl Roof (23-59-61)
	AR	---- ---	Spacer
11	1	2807 920-1	MOULDING PACKAGE, Body Center Pillar Outside Finish (23-23-16)
	4	6024 271	Screw
12	1	2664 812-3	MOULDING, Rear Door Wdo. Opng. Frame, Frt. (23-23-33)
13	1	2664 814-5	MOULDING, Rear Door Wdo. Opng. Frame, Upr. and Rear (23-23-33)
14	1	2809 684-5	MOULDING PACKAGE, Qtr. Outside Belt, use w/Vinyl Roof or Two Tone Paint (23-23-39)
	2	6002 507	Retainer, w/Seal
	6	6002 192	Screw, w/Seal
15	1	3504 199	NAME PLATE, Deck Lid, "Dodge" (23-19-114)
	1	6024 701	Seal
	1	6002 852	Retainer
16	1	3481 718	MOULDING PACKAGE, Deck Lid (23-23-30)
	8	6002 967	Retainer
	8	6026 523	Nut
17	1	3481 780-1	MOULDING PACKAGE, Qtr. Pnl. End Extension (23-23-39)
	6	6028 537	Screw
18	1	3514 006-7	MOULDING and Rear End CAP PACKAGE, Qtr. Outside (23-23-39)
	14	6002 587	Retainer
	2	6002 381	Retainer
19	1	2933 924-5	MOULDING PACKAGE, Rear Door Outside (23-23-33)
	4	6002 637	Retainer
	4	6026 523	Nut
	4	6002 692	Retainer
	4	6002 693	Retainer
	4	6024 271	Screw
	4	6002 690	Retainer
20	2	2807 906	MOULDING PACKAGE, Body Side Sill (23-23-2)
	8	6001 428	Retainer and Seal
	2	6026 760	Screw
21	2	2933 522	MOULDING PACKAGE, Door Outside (23-23-32)
	2	6002 637	Retainer
	2	6026 523	Nut
	4	6002 693	Retainer
	4	6024 271	Screw
22	1	2663 442-3	MOULDING, Frt. Door Wdo. Opng. Frame, Rear (23-23-32)

All Packages Include Attaching Parts

Part Type Code is Indicated in Parentheses

1970
EXTERIOR VIEW - DART CUSTOM L-H 4 DOOR SEDAN

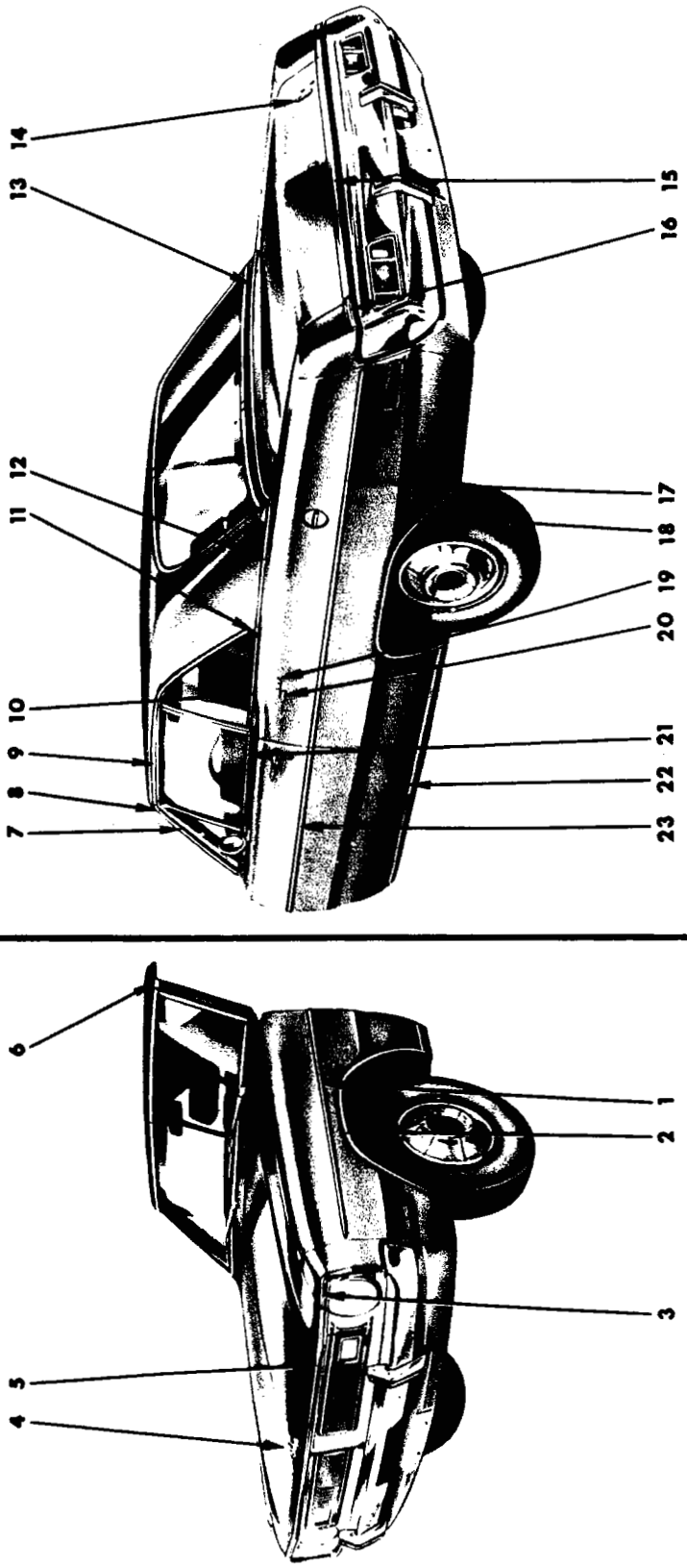

1970
EXTERIOR VIEW - DART CUSTOM L-H 2 DOOR HARDTOP

REF. NO.	QTY	PART NUMBER	DESCRIPTION
1	1	3481 716-7	MOULDING PACKAGE, Fender Side (12-15-2)
	2	6000 709	Retainer
	6	6002 922	Retainer 2 9420 867 Nut
2	1	2807 766-7	MOULDING PACKAGE, Fender Wheel Opening (12-15-2)
	8	6024 271	Screw
3	1	3549 630-1	MOULDING PACKAGE, Fender Frt. (12-15-2)
	6	9429 022	Screw
4	1	2998 302	NAME PLATE, Hood Frt. (15-06-3)
	4	9420 254	Nut
5	1	3481 911	MOULDING PACKAGE, Hood Frt. (15-25-2)
	9	9428 267	Screw
6	1	2807 882-3	MOULDING PACKAGE, Body Frt. Plr. Trim (23-23-14)
	2	6027 205	Screw
7	1	2783 018-9	MOULDING, Body Frt. Plr. Drain Trough (23-59-61)
	AR	---- ---	Spacer
8	2	2783 028	COVER, Roof Side Drain Trough Mldg. Joing (23-59-57)
9	1	2783 020-1	MOULDING, Roof Side Drain Trough, w/o Vinyl Roof (23-59-61)
	AR	---- ---	Spacer
	1	2840 982-3	MOULDING, Roof Side Drain Trough w/Vinyl Roof (23-59-61)
10	1	3004 242-3	MOULDING PACKAGE, Qtr. Outside Belt, Frt. (23-23-39)
	8	6002 398	Retainer and Seal
11	1	3004 246-7	MOULDING PACKAGE, Qtr. Outside Belt, Rr. (23-23-39)
	2	6023 898	Screw w/Seal
12	1	2807 700-1	MOULDING PACKAGE, Roof Outside Belt w/Two Tone Paint or Vinyl Roof (23-23-42)
	2	6023 898	Screw
	6	6002 192	Fastener
	2	6002 297	Retainer w/Seal
	2	9420 276	Nut
13	1	2807 702-3	MOULDING PACKAGE, Deck Opng. Upr. Pnl, use w/Two Tone Paint or Vinyl Roof (23-23-31)
	7	6002 297	Retainer w/Seal
	9	9415 250	Nut
14	1	3504 199	NAME PLATE, Deck Lid, "Dodge" (23-19-114)
	1	6024 701	Seal
	1	6002 852	Retainer
15	1	3481 718	MOULDING PACKAGE, Deck Lid (23-23-30)
	8	6002 967	Retainer
	8	6026 523	Nut
16	1	3481 780-1	MOULDING PACKAGE, Qtr. Pnl. End Extension (23-23-39)
	6	6028 537	Screw
17	1	3481 776-7	MOULDING PACKAGE, Qtr. Outside (23-23-39)
	10	6002 922	Retainer
	4	6000 709	Retainer
	4	6024 679	Nut
18	1	2932 594-5	MOULDING PACKAGE, Qtr. Outside Wheel Opng. (23-23-39)
	16	6024 271	Screw w/Seal
19	2	3445 985	NAME PLATE, Qtr. Outside Dart (23-34-238)
	4	9420 263	Nut
20	2	3445 986	NAME PLATE, Qtr. Outside Custom (23-34-238)
	4	9420 263	Nut
21	1	3004 244-5	MOULDING PACKAGE, Door Outside Belt (23-23-32)
	14	6002 398	Retainer and Seal
22	2	2807 906	MOULDING PACKAGE, Body Side Sill (23-23-2)
	8	6001 428	Retainer and Seal
	2	6026 760	Screw
23	1	3481 774-5	MOULDING PACKAGE, Door Outside (23-23-32)
	6	6002 922	Retainer
	4	6002 162	Retainer
	4	6026 523	Nut

All Packages Include Attaching Parts

Part Type Code is Indicated in Parentheses

1970

EXTERIOR VIEW - DART CUSTOM L-H 2 DOOR HARD TOP

19a3095

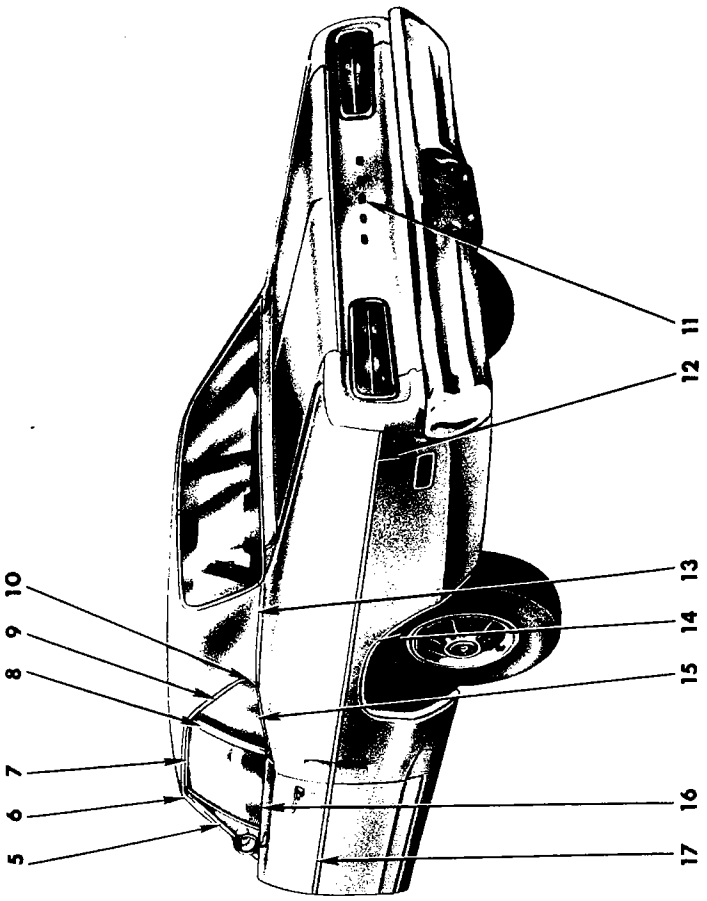

1970
EXTERIOR VIEW - CORONET DELUXE W-L 2 DOOR SEDAN

REF. NO.	QTY	PART NUMBER	DESCRIPTION
1	2	3419 870	MOULDING PACKAGE, Fender Side (Black) (12-15-2)
	2	3549 220	"Green"
	2	3549 221	"Blue"
	2	6027 625	Nut
	2	6002 496	Retainer
	3	6002 922	Retainer
2	1	3419 868-9	MOULDING PACKAGE, Fender Wheel Opng. (12-15-2)
	14	6028 545	Screw
3	2	2901 751	NAME PLATE, Fender Side (12-15-21)
	4	6027 352	Nut
4	2	2579 701	ORNAMENT, Fender Side (12-15-21)
	4	6027 352	Nut
5	1	2840 280-1	MOULDING, Body Front Pillar Drain Trough, w/o Vinyl Roof (23-59-61)
	2	---- ---	Spacer
	1	2932 512-3	MOULDING PACKAGE, Body Front Pillar Drain Trough, w/Vinyl Roof (23-59-61)
	2	---- ---	Spacer
6	2	2783 028	COVER, Roof Side Drain Trough Mldg. Joint (23-59-57)
7	1	2840 282-3	MOULDING, Roof Side Drain Trough, w/o Vinyl Roof (23-59-61)
	6	---- ---	Spacer
	1	2841 504-5	MOULDING, Roof Side Drain Trough, w/Vinyl Roof (23-59-61)
	6	---- ---	Spacer
8	1	2840 894-5	MOULDING, Body Lock Upr. Pillar Outside (23-23-16)
9	1	2841 362-3	MOULDING, Qtr. Wdo. Upr. Outside (23-23-73)
10	1	2840 884-5	CAP, Roof Side Drain Trough Mldg. End (23-59-57)
	2	6028 674	Screw
11	1	2840 324	NAME LETTER, Deck Opng. Lwr. Pnl. "D" (23-34-184)
	1	2840 325	"O"
	1	3446 454	"D"
	1	2840 326	"G"
	1	2840 327	"E"
	10	9420 263	Nut
12	1	3481 764-5	MOULDING PACKAGE, Qtr. Outside, "Black" (23-23-39)
	1	3549 604-5	"Green"
	1	3549 606-7	"Blue"
	12	6002 922	Retainer
	4	6026 523	Nut
	4	6002 162	Retainer
	2	3445 408	Spacer
13	1	2932 118-9	MOULDING PACKAGE, Qtr. Outside Belt, use w/Vinyl Roof or Two Tone Paint (23-23-39)
	6	6002 065	Retainer
14	1	2932 112-3	MOULDING PACKAGE, Qtr. Outside Wheel Opng. (23-23-39)
	16	6024 271	Screw w/Sealer
15	1	2932 106-7	MOULDING and T/PLATE PACKAGE, Qtr. Wdo. Outside Belt (23-23-73)
	2	6023 898	Screw
	8	6026 552	J-Nut
	8	9414 752	Screw
16	1	2932 098-9	MOULDING PACKAGE, Door Outside Belt (23-23-32)
	12	6002 549	Retainer
17	2	3481 759	MOULDING PACKAGE, Door Outside, "Black" (23-23-32)
	2	3549 226	"Green"
	2	3549 227	"Blue"
	2	6026 523	Nut
	2	6002 162	Retainer
	4	6002 922	Retainer

All Packages Include Attaching Parts

Part Type Code is Indicated in Parentheses

1970

EXTERIOR VIEW - CORONET DELUXE W-L 2 DOOR SEDAN

19a3099

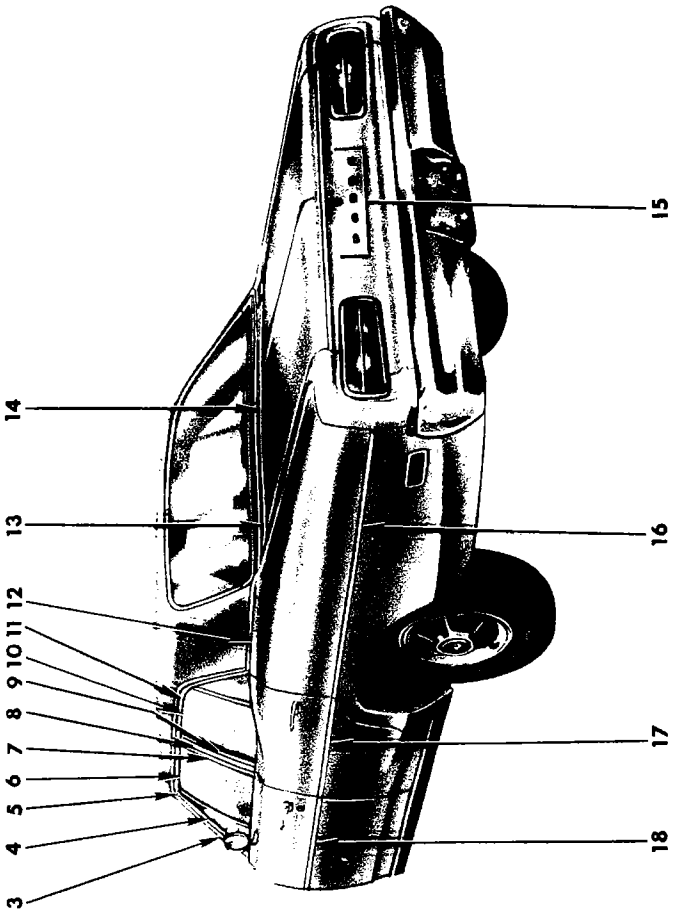

1970
EXTERIOR VIEW - CORONET DELUXE W-L 4 DOOR SEDAN

REF. NO.	QTY	PART NUMBER	DESCRIPTION
1	2	3419 870	MOULDING PACKAGE, Fender Side, "Black" (12-15-2)
	2	3549 220	"Green"
	2	3549 221	"Blue"
	2	6027 625	Nut
	2	6006 496	Retainer
	3	6002 922	Retainer
	2	3549 634	MOULDING PACKAGE, Fender Side (12-15-2)
	4	6002 602	Clip
	6	6026 523	Nut
	6	6002 604	Retainer
2	2	2901 751	NAME PLATE, Fender Side (Coronet) (12-15-21)
	4	6027 352	Nut
3	1	2840 274-5	MOULDING, Body Front Plr. Drain Trough, w/o Vinyl Roof (23-59-61)
	2	---- ---	Spacer
	1	2932 514-5	MOULDING PACKAGE, Body Front Plr. Drain Trough, w/Vinyl Roof (23-59-61)
	2	---- ---	Spacer
4	1	2570 750-1	MOULDING, Frt. Door Wdo. Opng. Frame, Frt. (23-23-32)
5	2	2783 028	COVER, Roof Side Drain Trough Mldg. Joint (23-59-57)
6	1	2570 752-3	MOULDING, Frt. Door Wdo. Opng. Frame, Upr. (23-23-32)
7	1	2570 754-5	MOULDING, Frt. Door Wdo. Opng. Frame, Rear (23-23-32)
8	1	2860 636-7	PANEL, Body Center Plr. Outside Finish (23-23-16)
	8	6024 271	Screw
9	1	2570 914-5	MOULDING, Rear Door Wdo. Opng. Frame, Frt. (23-23-33)
10	1	2811 438-9	MOULDING, Rear Door Wdo. Opng. Frame, Upr. (23-23-33)
11	1	2840 276-7	MOULDING, Roof Side Drain Trough, w/o Vinyl Roof (23-59-61)
	6	---- ---	Spacer
	1	2841 508-9	MOULDING, Roof Side Drain Trough, w/Vinyl Roof (23-59-61)
	6	---- ---	Spacer
12	1	2932 130-1	MOULDING PACKAGE, Qtr. Outside Belt, use w/Two Tone Paint (23-23-39)
	2	9414 752	Screw
	6	---- ---	Nut
	6	6024 702	Washer
13	1	2932 140-1	MOULDING PACKAGE, Deck Opng. Upr. Pnl., use w/Two Tone Paint (23-23-31)
	4	6002 065	Retainer
	4	6002 338	Retainer
	4	9420 867	Nut
14	1	2841 610	COVER, Deck Opng. Upr. Pnl. Joint Cover, use w/Two Tone Paint (23-23-41)
15	1	2840 324	NAME LETTER, Deck Opng. Lower Panel "D" (23-34-184)
	1	2840 325	"O"
	1	3446 454	"D"
	1	2840 326	"G"
	1	2840 327	"E"
	10	9420 263	Nut
16	1	3481 762-3	MOULDING PACKAGE, Qtr. Pnl. Outside, "Black" (23-23-39)
	1	3549 246-7	"Green"
	1	3549 248-9	"Blue"
	8	6002 922	Retainer
	8	6006 496	Retainer
	8	6027 625	Nut
	2	2933 871	MOULDING PACKAGE, Qtr. Outside (23-23-39)
	3	6002 604	Retainer
	3	6024 152	Nut
	4	6002 871	Retainer
	4	6024 271	Screw
17	2	3549 230	MOULDING PACKAGE, Rr. Dr. Outside (23-23-33)
	6	6002 602	Retainer
	4	6002 604	Retainer Stud and Seal
	4	6026 523	Nut
	2	3549 228	MOULDING PACKAGE, Rear Door Outside, "Black" (23-23-33)
	2	3549 223	"Green"
	2	3549 224	"Blue"
	2	6002 162	Retainer
	2	6026 523	Nut
	2	6002 922	Retainer
18	2	2933 836	MOULDING PACKAGE, Frt. Door Outside (23-23-32)
	2	6002 604	Retainer
	2	6026 523	Nut
	3	6002 871	Retainer
	3	6024 271	Screw
	2	3481 732	MOULDING PACKAGE, Frt. Door Outside, "Black" (23-23-32)
	2	3549 235	"Green"
	2	3549 236	"Blue"
	2	6002 162	Retainer
	2	6026 523	Nut
	3	6002 922	Retainer

All Packages Include Attaching Parts

Part Type Code is Indicated in Parentheses

1970

EXTERIOR VIEW - CORONET DELUXE W-L 4 DOOR SEDAN

19a3147B

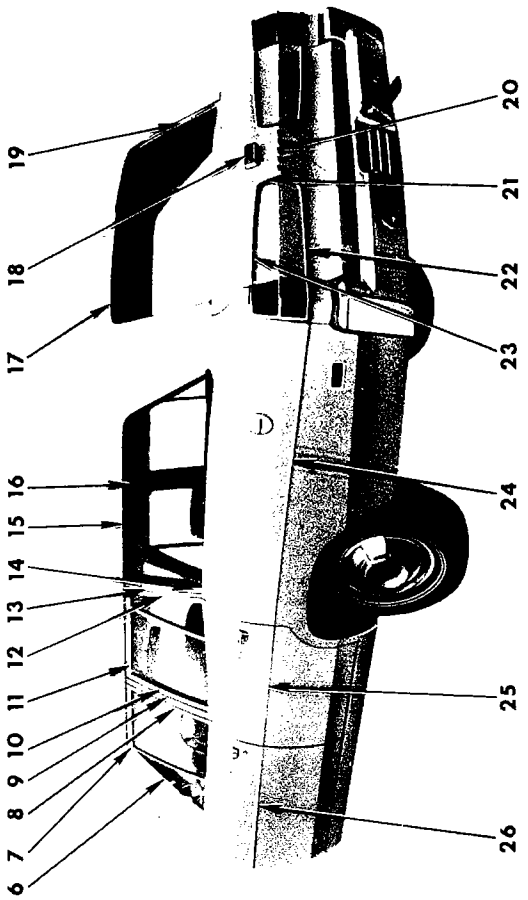

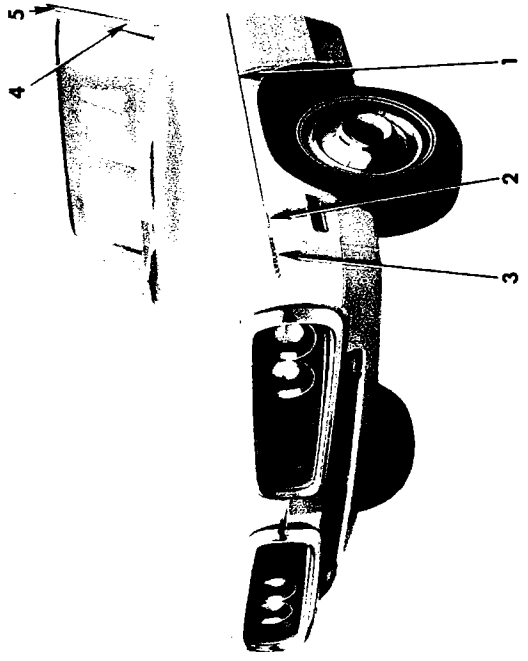

1970
EXTERIOR VIEW - CORONET DELUXE W-L STATION WAGON

REF. NO.	QTY	PART NUMBER	DESCRIPTION
1	2	3419 870	MOULDING PACKAGE, Fender Side, "Black" (12-15-2)
	2	3549 220	"Green"
	2	3549 221	"Blue"
	2	3549 634	MOULDING PACKAGE, Fender Side (12-15-2)
	2	6006 496	Retainer 2 6027 625 Nut
	3	6002 922	Retainer
2	2	2579 701	ORNAMENT, Fender Side (Deluxe) (12-15-21)
	4	6027 353	Nut
3	2	2901 751	NAME PLATE, Fender Side (Coronet) (12-15-21)
	4	6027 352	Nut
4	1	2605 854-5	MOULDING, Body Frt. Pillar Drain Trough (23-59-61)
	2	---- ---	Spacer
5	2	2605 208	COVER, Roof Side Drain Trough (23-59-57)
6	1	2570 750-1	MOULDING, Frt. Door Wdo. Opng. Frame, Frt. (23-23-32)
7	1	2570 752-3	MOULDING, Frt. Door Wdo. Opng. Frame, Upr. (23-23-32)
8	1	2570 754-5	MOULDING, Frt. Door Wdo. Opng. Frame, Rr. (23-23-32)
9	1	2860 636-7	PANEL, Body Center Pillar Outside Finish (23-23-16)
	8	6024 271	Screw
10	1	2570 914-5	MOULDING, Rear Door Wdo. Opng. Frame, Frt. (23-23-33)
11	1	2588 466-7	MOULDING, Rear Door Wdo. Opng. Frame, Upr. (23-23-33)
12	1	2811 446-7	MOULDING, Rear Door Wdo. Opng. Frame, Rr. (23-23-33)
13	1	2860 638-9	MOULDING, Qtr. Pnl. Rear Door Lock Pillar, Upr. (23-23-16)
	4	6024 271	Screw
14	1	2860 868-9	MOULDING, Qtr. Wdo. Outside, Frt., Stainless Steel (23-23-73)
	1	2811 764-5	MOULDING, Qtr. Wdo. Outside, Frt., Prime (23-23-73)
15	1	2840 278-9	MOULDING, Roof Side Drain Trough (23-59-61)
	6	---- ---	Spacer
16	1	2860 866-7	MOULDING, Qtr. Wdo. Outside, Upr., Stainless Steel (23-23-73)
	1	2811 766-7	MOULDING, Qtr. Wdo. Outside, Upr., Prime (23-23-73)
17	1	2573 303	MOULDING, Roof Rear Tailgate Opng. (23-23-60)
18	1	2862 816	ORNAMENT, Tailgate Electric Wdo. Regulator Outside (23-54-11)
	2	6024 291	Nut w/Washer
19	1	3004 382-3	MOULDING PACKAGE, Qtr. Pnl. Tailgate, Upr. Pillar, Comp. (23-23-60)
	2	6024 564	Screw
20	2	2963 990	LETTER "D", Tailgate (23-54-11)
	1	2963 991	"O"
	1	2963 993	"G"
	1	2963 994	"E"
	10	9420 263	Nut
21	1	3419 998-9	MOULDING PACKAGE, Tailgate, Upr. and Lwr. End (23-23-61)
	4	9420 621	Nut
22	1	3514 022-3	MOULDING PACKAGE, Tailgate Outside, Lwr. (23-23-61)
	4	9420 867	Nut
	4	6006 446	Retainer
23	1	3514 024-5	MOULDING PACKAGE, Tailgate Outside, Upr. (23-23-61)
	4	6006 446	Retainer
	4	9420 867	Nut
	2	6001 977	Retainer
24	2	3481 758	MOULDING PACKAGE, Qtr. Outside (23-23-39)
	14	6002 602	Retainer
	1	3481 762-3	MOULDING PACKAGE, Qtr. Outside, "Black" (23-23-39)
	1	3549 246-7	"Green"
	1	3549 248-9	"Blue"
	8	6006 496	Retainer
	8	6027 625	Nut
	18	6002 922	Retainer
25	2	3549 229	MOULDING PACKAGE, Rear Door Outside, "Black" (23-23-33)
	2	3549 609	"Green"
	2	3549 610	"Blue"
	2	6002 162	Retainer
	2	6026 523	Nut
	2	6002 922	Retainer
	2	3549 231	MOULDING PACKAGE, Rear Door Outside (23-23-33)
	6	6002 602	Retainer
	4	6002 604	Retainer w/Stud
	4	6026 523	Nut
26	2	2933 836	MOULDING PACKAGE, Frt. Door Outside (23-23-32)
	2	6002 604	Retainer
	2	6026 523	Nut
	3	6002 871	Retainer
	3	6024 271	Screw
	2	3481 732	MOULDING PACKAGE, Frt. Door Outside, "Black" (23-23-32)
	2	3549 235	"Green"
	2	3549 236	"Blue"
	2	6002 162	Retainer
	2	6026 523	Nut
	3	6002 922	Retainer

All Packages Include Attaching Parts

Part Type Code is Indicated in Parentheses

1970

EXTERIOR VIEW - CORONET DELUXE W-L STATION WAGON

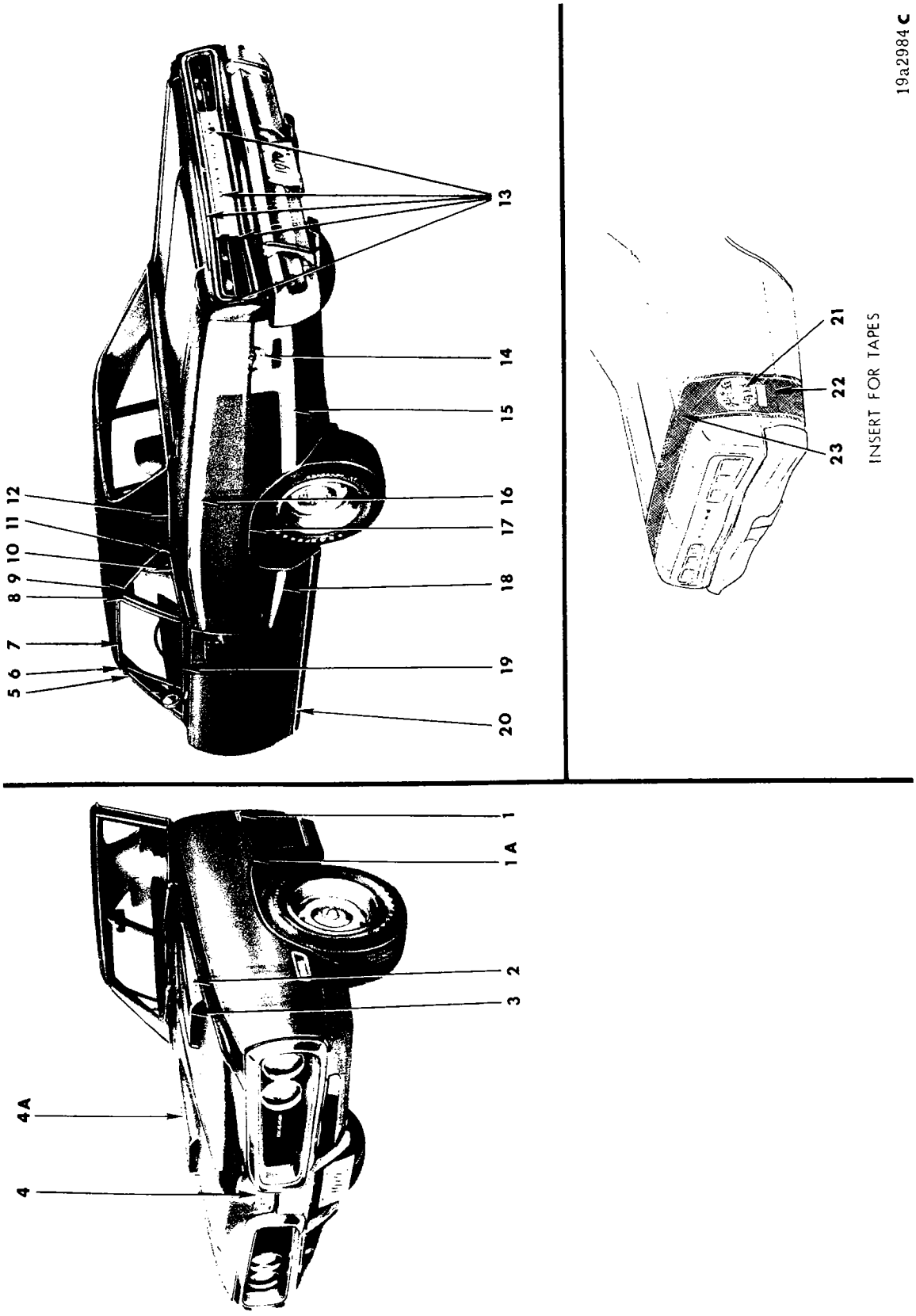

1970
EXTERIOR VIEW - CORONET SUPER BEE W-M 2 DOOR SEDAN

REF. NO.	QTY	PART NUMBER	DESCRIPTION
1	2	3444 957	NAME PLATE, Fender Side, "383 Magnum" (12-15-21)
	4	6027 352	Nut
	2	2785 558	NAME PLATE, Fender Side, "Hemi" (12-15-21)
	AR	6002 852	Retainer
1A	1	3419 868-9	MOULDING PACKAGE, Fender Wheel Opening (12-15-2)
	14	6028 545	Screw
2	2	2998 749	NAME PLATE, Hood Air Scoop, "Super Bee" (15-06-3)
	2	2898 876	"Hemi"
	2	2898 878	"440"
	2	2949 240	"383"
	4	9420 254	Nut
3	1	2949 146-7	BEZEL, Hood Air Scoop (15-03-18)
	4	6026 906	Nut
	4	6026 627	Screw
4	1	2998 065	ORNAMENT, Hood Front (15-06-6)
4A	1	3443 130-1	ORNAMENT, Hood Scoop (15-03-64)
5	1	2840 280-1	MOULDING, Body Front Pillar Drain Trough, w/o Vinyl Roof (23-59-61)
	2	---- ---	Spacer
	1	2932 512-3	MOULDING PACKAGE, Body Front Pillar Drain Trough, w/Vinyl Roof (23-59-61)
	2	---- ---	Spacer
6	2	2783 028	COVER, Roof Side Drain Trough Mldg. Joint (23-59-57)
7	1	2840 282-3	MOULDING, Roof Side Drain Trough, w/o Vinyl Roof (23-59-61)
	6	---- ---	Spacer
	1	2841 504-5	MOULDING, Roof Side Drain Trough, w/Vinyl Roof (23-59-61)
	6	---- ---	Spacer
8	1	2840 894-5	MOULDING, Body Lock Upr. Pillar Outside (23-23-16)
	8	6024 271	Screw
9	1	2841 362-3	MOULDING, Qtr. Wdo. Upr. Outside (23-23-73)
10	1	2932 106-7	MOULDING PACKAGE, Qtr. Wdo. Outside Belt (23-23-73)
	2	6023 898	Screw
	8	6026 552	J-Nut
	8	9414 752	Screw
11	1	2840 884-5	CAP, Roof Side Drain Trough Mldg. End (23-59-57)
	2	6028 674	Screw
12	1	2932 118-9	MOULDING PACKAGE, Qtr. Outside Belt, use w/Vinyl Roof or Two Tone Paint (23-23-39)
	6	6002 065	Retainer
13	1	2965 254	PANEL, Deck Opng. Lwr. Finish (23-23-28)
	13	6002 895	Retainer
	13	6028 399	Nut
	2	6003 006	Retainer
	2	6028 399	Nut
	15	6024 745	Seal
14	1	2842 952-3	DECAL, Qtr. Pnl. Super Bee, (White) (23-34-334)
	1	2842 940-1	DECAL, Qtr. Pnl. Super Bee, (Black) (23-34-334)
15	1	3445 284-5	TAPE, Qtr. Pnl. Lwr. Rr., (White" (23-23-12)
	1	3445 286-7	"Red"
	1	3445 288-9	"Black"
	1	3445 290-1	"Blue"
	1	3445 292-3	"Green"
16	1	3445 274-5	TAPE, Qtr. Pnl. Stripe Upr., "White" (23-23-12)
	1	3445 276-7	"Red"
	1	3445 278-9	"Black"
	1	3445 280-1	"Blue"
	1	3445 282-3	"Green"
17	1	2932 112-3	MOULDING PACKAGE, Qtr. Outside Wheel Opng. (23-23-39)
	16	6024 271	Screw w/Sealer
18	1	3445 294-5	TAPE, Qtr. Pnl. Lwr. Frt., "White" (23-23-12)
	1	3445 296-7	"Red"
	1	3445 298-9	"Black"
	1	3445 300-1	"Blue"
	1	3445 302-3	"Green"
19	1	2932 098-9	MOULDING PACKAGE, Door Outside Belt (23-23-32)
	12	6002 549	Retainer
20	1	2932 180-1	MOULDING PACKAGE, Body Side Sill Outside (23-23-2)
	2	6002 443	Retainer
	2	116 000	Nut
	18	6002 445	Retainer
21	1	2842 952-3	DECAL, Qtr. Pnl., Super Bee, (White) (23-34-334)
	1	2842 940-1	DECAL, Qtr. Pnl., Super Bee, (Black) (23-34-334)
22	1	3446 006-7	TAPE, Qtr. Pnl. Transverse Color Stripe, "Red" (23-23-12)
	1	3446 008-9	"White"
	1	3446 010-1	"Black"
	1	3446 216-7	"Blue"
	1	3446 218-9	"Green"
23	1	3446 003	TAPE, Deck Lid Transverse Color Stripe, "Red" (23-23-12)
	1	3446 004	"White"
	1	3446 005	"Black"
	1	3446 214	"Blue"
	1	3446 215	"Green"

All Packages Include Attaching Parts

Part Type Code is Indicated in Parentheses

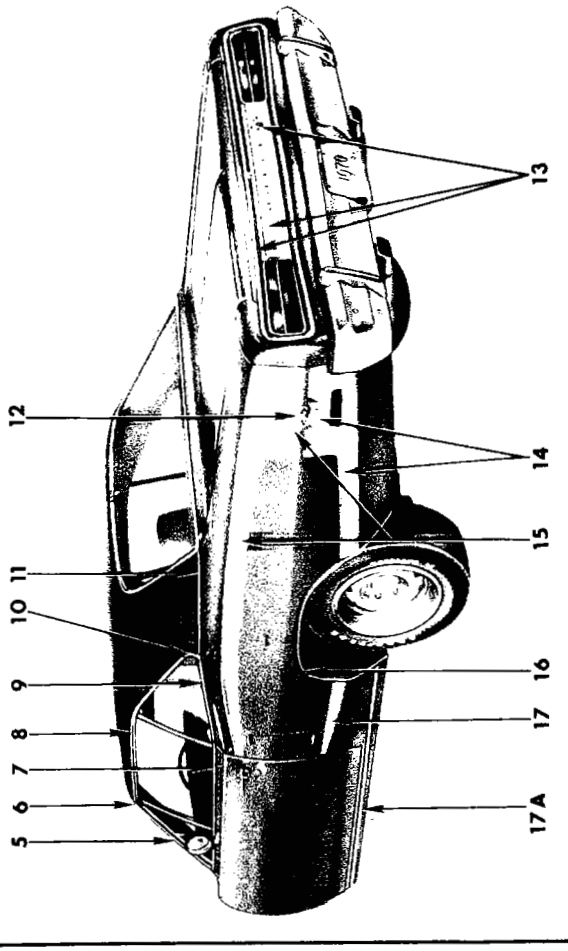

INSERT FOR TAPES

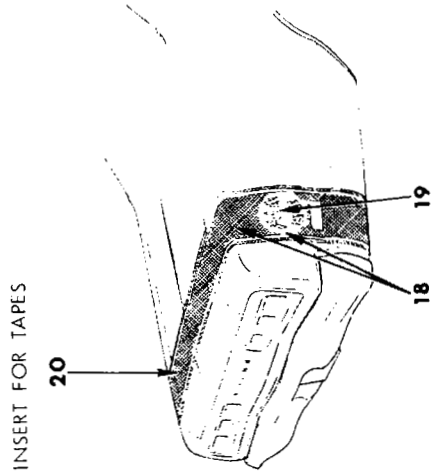

19a2983C

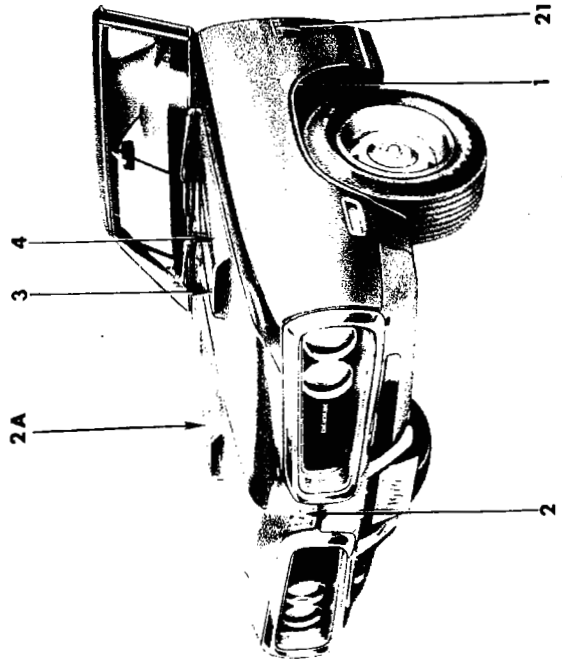

1970
EXTERIOR VIEW - CORONET SUPER BEE W-M 2 DOOR HARDTOP

REF. NO.	QTY	PART NUMBER	DESCRIPTION
1	1	3419 868-9	MOULDING PACKAGE, Fender Wheel Opening (12-15-2)
	14	6028 545	Screw
2	1	2998 065	ORNAMENT, Hood Front (15-06-6)
	2	9420 254	Nut
2A	1	3443 130-1	ORNAMENT, Hood Scoop (15-03-64)
3	1	2949 146-7	BEZEL, Hood Air Scoop (15-03-18)
	4	6026 906	Nut
	4	6026 627	Screw
4	2	2998 749	NAME PLATE, Hood Air Scoop, "Super Bee" (15-06-3)
	2	2898 876	"Hemi"
	2	2898 878	"440"
	2	2949 240	"383"
5	1	2840 280-1	MOULDING, Body Frt. Pillar Drain Trough, w/o Vinyl Roof (23-59-61)
	2	---- ---	Spacer
	1	2932 512-3	MOULDING PACKAGE, Body Front Pillar Drain Trough, w/Vinyl Roof (23-59-61)
	2	---- ---	Spacer
6	2	2783 028	COVER, Roof Side Drain Trough Mldg. Joint (23-59-57)
7	1	2932 096-7	MOULDING PACKAGE, Door Outside Belt (23-23-32)
	12	6002 549	Retainer
8	1	2840 282-3	MOULDING, Roof Side Drain Trough, w/o Vinyl Roof (23-59-61)
	6	---- ---	Spacer
	1	2841 504-5	MOULDING, Roof Side Drain Trough, w/Vinyl Roof (23-59-61)
	6	---- ---	Spacer
9	1	2932 108-9	MOULDING PACKAGE, Qtr. Wdo. Outside Belt (23-23-73)
	8	6026 552	J-Nut
	8	9414 752	Screw
	8	6023 898	Screw
10	1	2840 884-5	CAP, Roof Side Drain Trough Mldg. End (23-59-57)
	2	6028 674	Screw
11	1	2932 118-9	MOULDING PACKAGE, Qtr. Outside Belt, use w/Vinyl Roof or Two Tone Paint (23-23-39)
	6	6002 065	Retainer
12	1	2842 940-1	DECAL, Qtr. Pnl. Super Bee (Black) (23-34-334)
	1	2842 952-3	DECAL, Qtr. Pnl. Super Bee (White) (23-34-334)
13	1	2965 254	PANEL, Deck Opng. Lwr. Finish (23-23-28)
	13	6002 895	Retainer
	13	6028 399	Nut
14	1	3445 284-5	TAPE, Qtr. Pnl. Lwr. Rear, "White" (23-23-12)
	1	3445 286-7	"Red"
	1	3445 288-9	"Black"
	1	3445 290-1	"Blue"
	1	3445 292-3	"Green"
15	1	3445 274-5	TAPE, Qtr. Pnl. Upr., "White" (23-23-12)
	1	3445 276-7	"Red"
	1	3445 278-9	"Black"
	1	3445 280-1	"Blue"
	1	3445 282-3	"Green"
16	1	2932 112-3	MOULDING PACKAGE, Qtr. Outside Wheel Opng. (23-23-39)
	16	6024 271	Screw w/Sealer
17	1	3445 294-5	TAPE, Qtr. Pnl. Lwr. Frt., "White" (23-23-12)
	1	3445 296-7	"Red"
	1	3445 298-9	"Black"
	1	3445 300-1	"Blue"
	1	3445 302-3	"Green"
17A	1	2932 180-1	MOULDING PACKAGE, Body Side Sill Outside (23-23-2)
	2	6002 443	Retainer
	2	116 000	Nut
	18	6002 445	Retainer
18	1	3446 006-7	TAPE, Qtr. Pnl. Transverse Color Stripe, "Red" (23-23-12)
	1	3446 008-9	"White"
	1	3446 010-1	"Black"
	1	3446 216-7	"Blue"
	1	3446 218-9	"Green"
19	1	2842 940-1	DECAL, Qtr. Pnl., Super Bee (Black) (23-34-334)
	1	2842 952-3	DECAL, Qtr. Pnl., Super Bee (White) (23-34-334)
20	1	3446 003	TAPE, Deck Lid Transverse Color Stripe, "Red" (23-23-12)
	1	3446 004	"White"
	1	3446 005	"Black"
	1	3446 214	"Blue"
	1	3446 215	"Green"
21	2	3444 957	NAME PLATE, Fender Side, "383 Magnum" (12-15-21)
	4	6027 352	Nut
	2	2785 558	NAME PLATE, Fender Side, "Hemi" (12-15-21)
	AR	6002 852	Retainer

All Packages Include Attaching Parts

Part Type Code is Indicated in Parentheses

1970

EXTERIOR VIEW - CORONET SUPER BEE W-M 2 DOOR HARD TOP

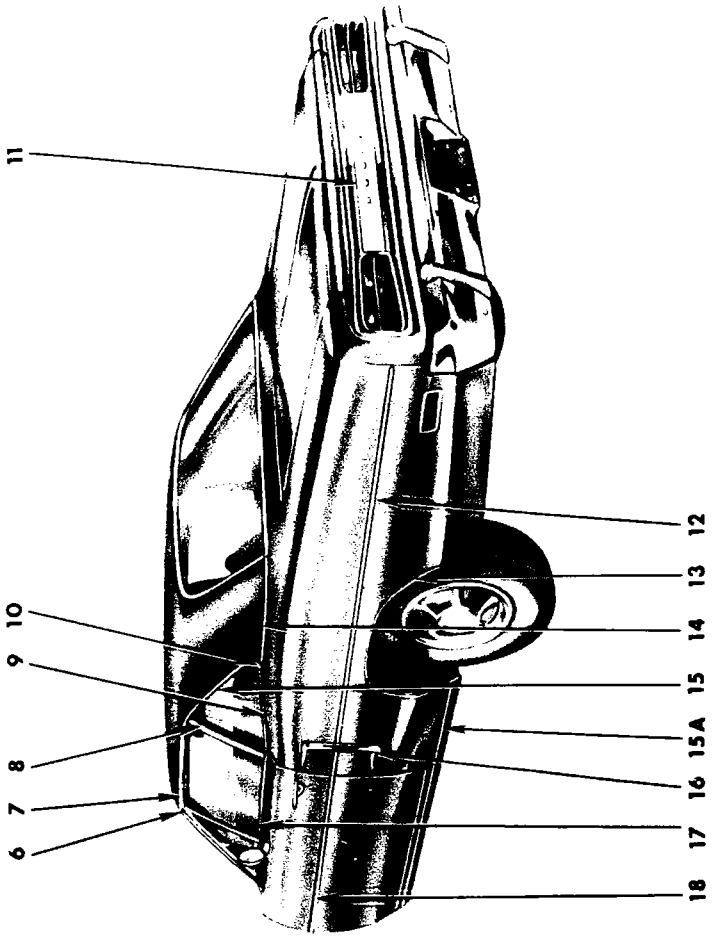

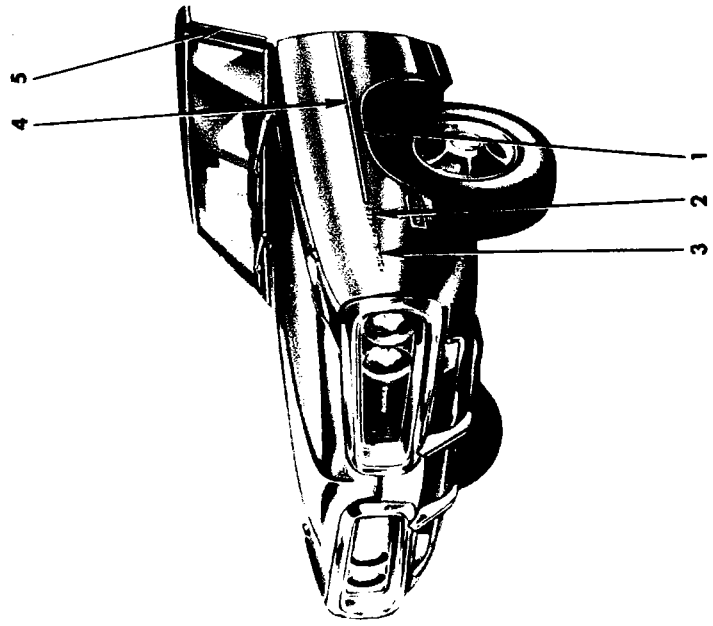

1970
EXTERIOR VIEW - CORONET 440 W-H 2 DOOR SEDAN

REF. NO.	QTY	PART NUMBER	DESCRIPTION
1	1	3419 868-9	MOULDING PACKAGE, Fender Wheel Opng. (12-15-2)
	14	6028 545	Screw
2	2	2901 810	NUMERALS, Fender Side (440) (12-15-21)
	4	6027 352	Nut
3	2	2901 751	NAME PLATE, Fender Side (Coronet) (12-15-21)
	4	6027 352	Nut
4	2	3419 870	MOULDING PACKAGE, Fender Side, "Black" (12-15-2)
	2	3549 220	"Green"
	2	3549 221	"Blue"
	2	6027 625	Nut
	2	6006 496	Retainer
	3	6002 922	Retainer
5	1	2840 280-1	MOULDING, Body Front Pillar Drain Trough, w/o Vinyl Roof (23-59-61)
	2	---- ---	Spacer
	1	2932 512-3	MOULDING PACKAGE, Body Front Pillar Drain Trough w/Vinyl Roof (23-59-61)
	2	---- ---	Spacer
6	2	2783 028	COVER, Roof Side Drain Trough Mldg. Joint (23-59-57)
7	1	2840 282-3	MOULDING, Roof Side Drain Trough, w/o Vinyl Roof (23-59-61)
	6	---- ---	Spacer
	1	2841 504-5	MOULDING, Roof Side Drain Trough, w/Vinyl Roof (23-59-61)
	6	---- ---	Spacer
8	1	2840 894-5	MOULDING, Body Lock Upr. Pillar Outside (23-23-16)
	8	6024 271	Screw
9	1	2932 106-7	MOULDING and T/PLATE PACKAGE, Qtr. Wdo. Outside Belt (23-23-73)
	2	6023 898	Screw
	8	6026 552	J-Nut
	8	9414 752	Screw
10	1	2840 884-5	CAP, Roof Side Drain Trough Mldg. End (23-59-57)
	2	6028 674	Screw
11	1	2965 256	PANEL, Deck Opng. Lwr. Finish (23-23-28)
	13	6002 895	Retainer
	13	6028 399	Nut
12	1	3481 764-5	MOULDING PACKAGE, Qtr. Outside, "Black" (23-23-39)
	1	3549 604-5	"Green"
	1	3549 606-7	"Blue"
	12	6002 922	Retainer
	4	6026 523	Nut
	4	6002 162	Retainer
	2	3445 408	Spacer
13	1	2932 112-3	MOULDING PACKAGE, Qtr. Outside Wheel Opng. (23-23-39)
	16	6024 271	Screw w/Sealer
14	1	2932 118-9	MOULDING PACKAGE, Qtr. Outside Belt, use w/Vinyl Roof or Two Tone Paint (23-23-39)
	6	6002 065	Retainer
15	1	2841 362-3	MOULDING, Qtr. Wdo. Upr. Outside (23-23-73)
15A	1	2932 180-1	MOULDING PACKAGE, Body Side Sill Outside (23-23-2)
	2	6002 443	Retainer
	18	6002 445	Retainer 2 116 000 Nut
16	1	3444 770-1	ORNAMENT, Qtr. Outside Louver (w/o Body Side Mldgs.) (23-34-334)
	6	9420 294	Nut
17	1	2932 098-9	MOULDING PACKAGE, Door Outside Belt (23-23-32)
	12	6002 549	Retainer
18	2	3481 759	MOULDING PACKAGE, Door Outside, "Black" (23-23-32)
	2	3549 226	"Green"
	2	3549 227	"Blue"
	2	6026 523	Nut
	2	6002 162	Retainer
	4	6002 922	Retainer

All Packages Include Attaching Parts

Part Type Code is Indicated in Parentheses

1970

EXTERIOR VIEW - CORONET 440 W-H 2 DOOR SEDAN

19a2982 **A**

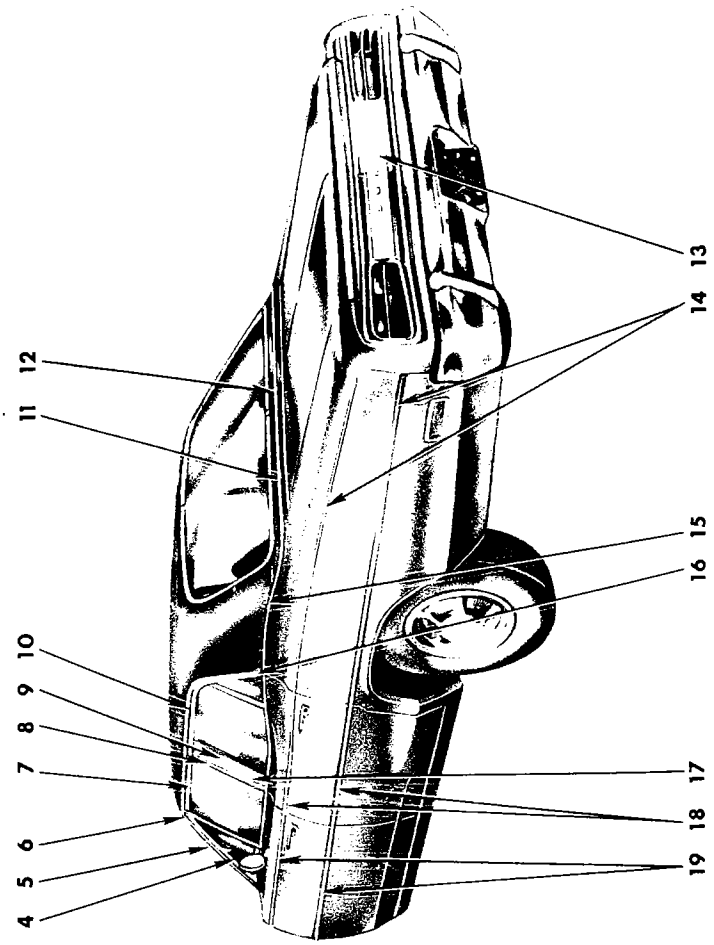

1970
EXTERIOR VIEW - CORONET 440 W-H 4 DOOR SEDAN

REF. NO.	QTY	PART NUMBER	DESCRIPTION
1	2	3419 870	MOULDING PACKAGE, Fender Side, Lwr., "Black" (12-15-2)
	2	3549 220	"Green"
	2	3549 221	"Blue"
	2	6027 625	Nut
	2	6006 496	Retainer
	3	6002 922	Retainer
	1	3419 860-1	MOULDING PACKAGE, Fender Side, Upr. (12-15-2)
	2	9420 218	Nut
	2	6006 496	Retainer
	2	6002 842	Retainer
	12	6001 880	Retainer
2	2	2901 810	NUMERALS, Fender Side (440) (12-15-21)
	4	6027 352	Nut
3	2	2901 751	NAME PLATE, Fender Side (Coronet)(12-15-21)
	4	6027 352	Nut
4	1	2570 750-1	MOULDING, Frt. Door Wdo. Opng. Frame, Frt. (23-23-32)
5	1	2840 274-5	MOULDING, Body Front Pillar Drain Trough, w/o Vinyl Roof (23-59-61)
	2	---- ---	Spacer
	1	2932 514-5	MOULDING PACKAGE, Body Front Pillar Drain Trough, w/Vinyl Roof (23-59-61)
	2	---- ---	Spacer
6	2	2783 028	COVER, Roof Side Drain Trough Mldg. Joint (23-59-57)
7	1	2570 752-3	MOULDING, Frt. Door Wdo. Opng. Frame, Upr. (23-23-32)
8	1	2570 754-5	MOULDING, Frt. Door Wdo. Opng. Frame, Rear (23-23-32)
9	1	2570 914-5	MOULDING, Rear Door Wdo. Opng. Frame, Frt. (23-23-33)
10	1	2840 276-7	MOULDING, Roof Side Drain Trough, w/o Vinyl Roof (23-59-61)
	6	---- ---	Spacer
	1	2841 508-9	MOULDING, Roof Side Drain Trough, w/Vinyl Roof (23-59-61)
	6	---- ---	Spacer
11	1	2932 140-1	MOULDING PACKAGE, Deck Opng. Upr. Pnl., use w/Vinyl Roof or Two Tone Paint (23-23-31)
	4	6002 065	Retainer
	4	6002 338	Retainer
	4	9420 867	Nut
12	1	2841 610	COVER, Deck Opng. Upr. Pnl. Mldg. Joint, use w/Vinyl Roof or Two Tone Paint (23-23-41)
13	1	2965 256	PANEL, Deck Opng. Lwr. Finish (23-23-28)
	13	6002 895	Retainer
	13	6028 399	Nut
14	1	3481 762-3	MOULDING PACKAGE, Qtr. Pnl. Outside, Lwr. "Black" (23-23-39)
	1	3549 246-7	"Green"
	1	3549 248-9	"Blue"
	8	6002 922	Retainer
	8	6006 496	Retainer
	8	6027 625	Nut
	1	3481 756-7	MOULDING PACKAGE, Qtr. Outside, Upr. (23-23-39)
	2	6024 152	Nut
	2	6006 496	Retainer
	16	6001 880	Retainer
15	1	2932 130-1	MOULDING PACKAGE, Qtr. Outside Belt, use w/Vinyl Roof or Two Tone Paint (23-23-39)
	2	9414 752	Screw
	6	---- ---	Nut
	6	6024 702	Washer
16	1	2811 438-9	MOULDING, Rear Door Wdo. Opng. Frame, Upr. (23-23-33)
17	1	2860 636-7	PANEL, Body Center Plr. Outside Finish (23-23-16)
	8	6024 271	Screw
18	1	3481 730-1	MOULDING PACKAGE, Rr. Dr. Outside, Upr. (23-23-33)
	2	6002 458	Retainer
	2	6026 523	Nut
	8	6001 880	Retainer
	2	3549 228	MOULDING PACKAGE, Rr. Door Outside, Lwr., "Black" (23-23-33)
	2	3549 223	"Green"
	2	3549 224	"Blue"
	2	6002 162	Retainer
	2	6026 523	Nut
	2	6002 922	Retainer
19	1	3481 728-9	MOULDING PACKAGE, Frt. Dr. Outside, Upr. (23-23-32)
	2	6002 458	Retainer
	2	6026 523	Nut
	8	6001 880	Retainer
	2	3481 732	MOULDING PACKAGE, Frt. Door Outside, Lwr., "Black" (23-23-32)
	2	3549 235	"Green"
	2	3549 236	"Blue"
	2	6002 162	Retainer
	2	6026 523	Nut
	3	6002 922	Retainer

All Packages Include Attaching Parts

Part Type Code is Indicated in Parentheses

19a2980A

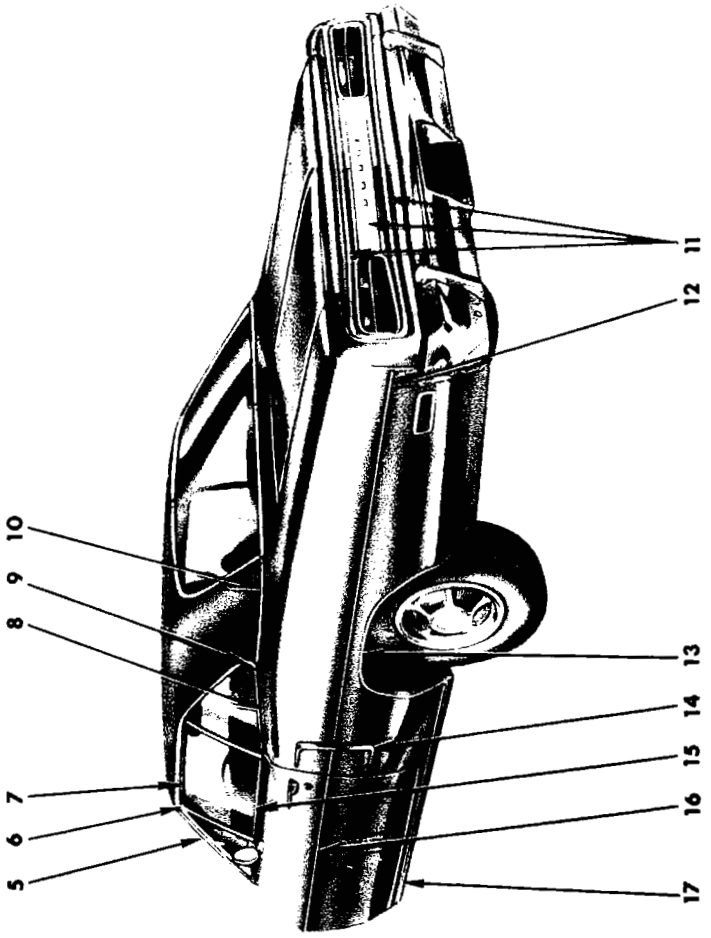

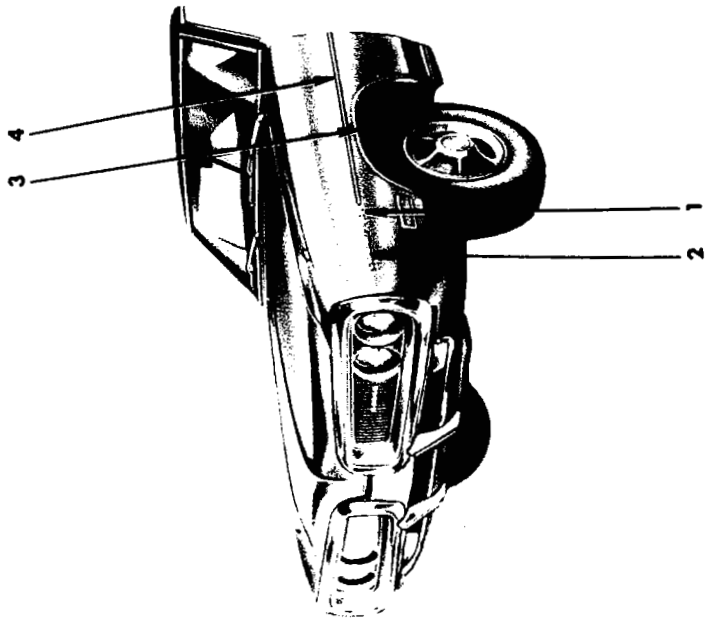

1970
EXTERIOR VIEW - CORONET 440 W-H 2 DOOR HARDTOP

REF. NO.	QTY	PART NUMBER	DESCRIPTION
1	2	2901 810	NUMERAL, Fender Side (440) (12-15-21)
	4	6027 352	Nut
2	2	2901 751	NAME PLATE, Fender Side (Coronet) (12-15-21)
	4	6027 352	Nut
3	1	3419 868-9	MOULDING PACKAGE, Fender Wheel Opening (12-15-2)
	14	6027 545	Screw
4	2	3419 870	MOULDING PACKAGE, Fender Side, "Black" (12-15-2)
	2	3549 220	"Green"
	2	3549 221	"Blue"
	2	6002 825	Clip
	2	9420 867	Nut
	2	6002 822	Retainer
	2	6006 496	Retainer
5	1	2840 280-1	MOULDING, Body Frt. Pillar Drain Trough, w/o Vinyl Roof (23-59-61)
	2	---- ---	Spacer
	1	2932 512-3	MOULDING PACKAGE, Body Frt. Pillar Drain Trough, w/Vinyl Roof (23-59-61)
	2	---- ---	Spacer
6	2	2783 028	COVER, Roof Side Drain Trough Mldg. Joint (23-59-57)
7	1	2840 282-3	MOULDING, Roof Side Drain Trough, w/o Vinyl Roof (23-59-61)
	6	---- ---	Spacer
	1	2841 504-5	MOULDING, Roof Side Drain Trough, w/Vinyl Roof (23-59-61)
	6	---- ---	Spacer
8	1	2932 108-9	MOULDING PACKAGE, Qtr. Wdo. Outside Belt (23-23-73)
	8	6026 552	J-Nut
	8	9414 752	Screw
	8	6023 898	Screw
9	1	2840 884-5	CAP, Roof Side Drain Trough Mldg. End (23-59-57)
	2	6028 674	Screw
10	1	2932 118-9	MOULDING PACKAGE, Qtr. Outside Belt, use w/Vinyl Roof or Two Tone Paint (23-23-39)
	6	6002 065	Retainer
11	1	2965 256	PANEL, Deck Opng. Lwr. Finish (23-23-28)
	13	6002 895	Retainer
	13	6028 399	Nut
12	1	3481 764-5	MOULDING PACKAGE, Qtr. Outside, "Black" (23-23-39)
	1	3549 604-5	"Green"
	1	3549 606-7	"Blue"
	12	6002 922	Retainer
	4	6026 523	Nut
	4	6002 162	Retainer
	2	3445 408	Spacer
13	1	2932 112-3	MOULDING PACKAGE, Qtr. Outside Whl. Opng. (23-23-39)
	16	6024 271	Screw w/Sealer
14	1	3444 770-1	ORNAMENT, Qtr. Outside Louvre (used w/o Body Side Mldgs.) (23-34-334)
	6	9420 294	Nut
15	1	2932 096-7	MOULDING PACKAGE, Door Outside Belt (23-23-32)
	12	6002 549	Retainer
16	2	3481 759	MOULDING PACKAGE, Door Outside, "Black" (23-23-32)
	2	3549 226	"Green"
	2	3549 227	"Blue"
	2	6026 523	Nut
	2	6002 162	Retainer
	4	6002 922	Retainer
17	1	2932 180-1	MOULDING PACKAGE, Body Side Sill Outside (23-23-2)
	2	6002 443	Retainer
	2	116 000	Nut
	18	6002 445	Retainer

All Packages Include Attaching Parts

Part Type Code is Indicated in Parentheses

1970
EXTERIOR VIEW - CORONET 440 W-H 2 DOOR HARDTOP

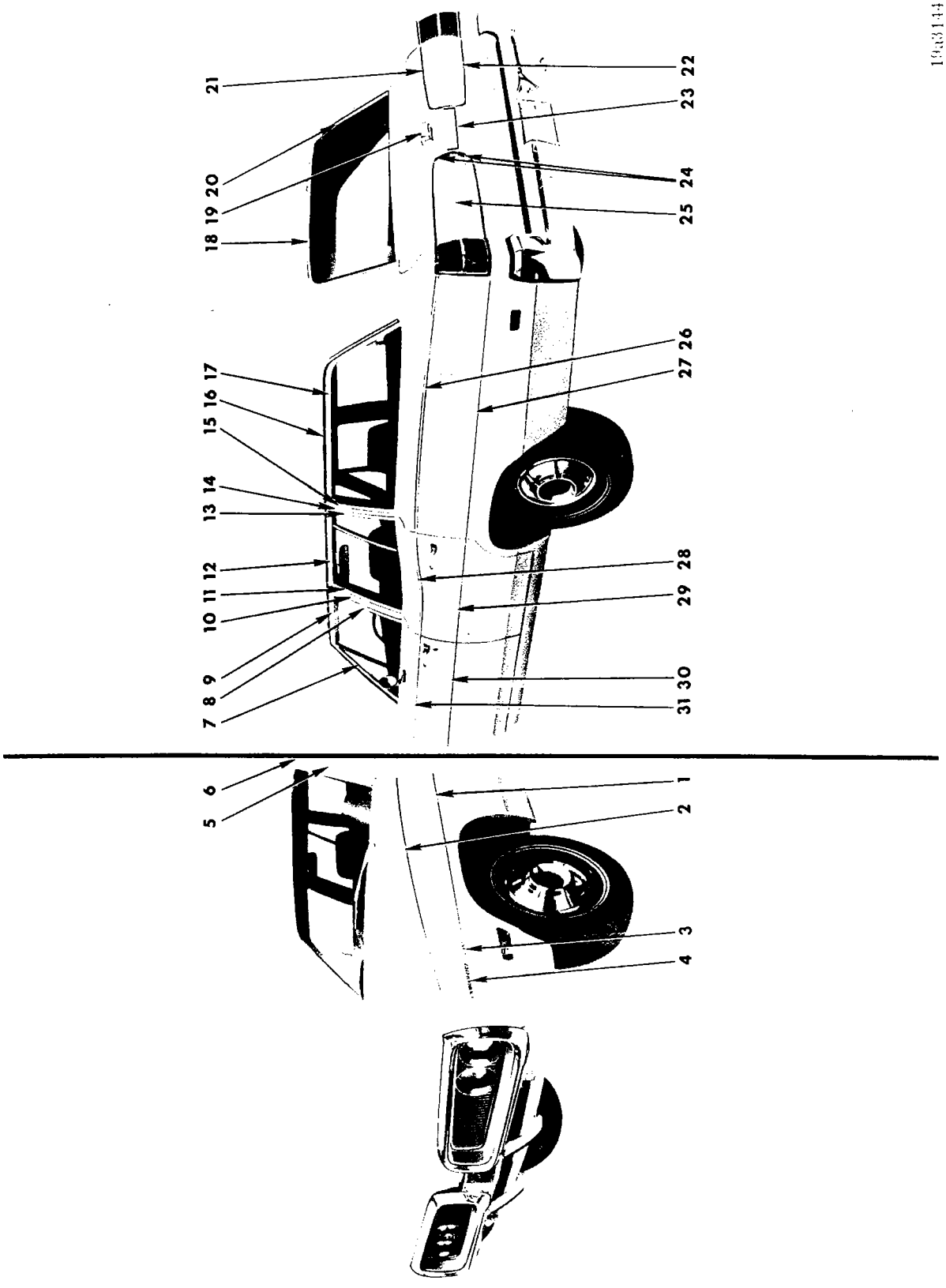

1970
EXTERIOR VIEW - CORONET 440 W-H STATION WAGON

REF. NO.	QTY	PART NUMBER	DESCRIPTION
1	2	3419 870	MOULDING PACKAGE, Fender Side, "Black" (12-15-2)
	2	3549 220	"Green"
	2	3549 221	"Blue"
	2	6027 625	Nut
	2	6006 496	Retainer
	3	6002 922	Retainer
2	1	3419 860-1	MOULDING PACKAGE, Fender Side (12-15-2)
	2	9420 218	Nut
	2	6006 496	Retainer
	2	6002 842	Retainer
	12	6001 880	Retainer
3	2	2901 810	NUMERALS, Fender Side (440) (12-15-21)
	4	6027 352	Nut
4	2	2901 751	NAME PLATE, Fender Side (Coronet) (12-15-21)
	4	6027 352	Nut
5	1	2605 854-5	MOULDING, Body Front Plr. Drain Trough (23-59-61)
	2	---- ---	Spacer
6	2	2605 208	COVER, Roof Side Drain Trough (23-59-57)
7	1	2570 750-1	MOULDING, Frt. Door Wdo. Opng. Frame, Frt. (23-23-32)
8	1	2570 754-5	MOULDING, Frt. Door Wdo. Opng. Frame, Rr. (23-23-32)
9	1	2570 752-3	MOULDING, Frt. Door Wdo. Opng. Frame, Upr. (23-23-32)
10	1	2860 636-7	PANEL, Body Center Pillar Outside Finish (23-23-16)
	8	6024 271	Screw
11	1	2570 914-5	MOULDING, Rear Door Wdo. Opng. Frame, Frt. (23-23-33)
12	1	2588 466-7	MOULDING, Rear Door Wdo. Opng. Frame, Upr. (23-23-33)
13	1	2811 446-7	MOULDING, Rear Door Wdo. Opng. Frame, Rear (23-23-33)
14	1	2860 638-9	MOULDING, Qtr. Pnl. Rear Door Lock Plr. Upr. (23-23-16)
	4	6024 271	Screw
15	1	2860 868-9	MOULDING, Qtr. Wdo. Outside, Frt. Stainless Steel (23-23-73)
	1	2811 764-5	MOULDING, Qtr. Wdo. Outside, Frt., Prime (23-23-73)
16	1	2840 278-9	MOULDING, Roof Side Drain Trough (23-59-61)
	6	---- ---	Spacer
17	1	2860 866-7	MOULDING, Qtr. Wdo. Outside, Upr., Stainless Steel (23-23-73)
	1	2811 766-7	MOULDING, Qtr. Wdo. Outside, Upr., Prime (23-23-73)
18	1	2573 303	MOULDING, Roof Rear T/Gate Opng. (23-23-60)
19	1	2862 816	ORNAMENT, Tailgate Electric Wdo. Regulator Outside (23-54-11)
	2	6024 291	Nut w/Washer
20	1	3004 382-3	MOULDING PACKAGE, Qtr. Pnl. Tailgate, Upr. Plr., Comp. (23-23-60)
	2	6024 564	Screw
21	1	3514 024-5	MOULDING PACKAGE, T/Gate Outside, Upr. (23-23-61)
	4	6006 446	Retainer
	4	9420 867	Nut
	2	6001 977	Retainer
22	1	3514 022-3	MOULDING PACKAGE, T/Gate Outside, Lwr. (23-23-61)
	4	9420 867	Nut
	4	6006 446	Retainer
23	2	2963 990	LETTER "D" Tailgate (23-54-11)
	1	2963 991	"O"
	1	2963 993	"G"
	1	2963 994	"E"
	10	9420 263	Nut
24	1	3419 998-9	MOULDING PACKAGE, T/Gate, Upr. and Lwr. End (23-23-61)
	4	9420 621	Nut
25	1	3419 994-5	MOULDING PACKAGE, T/Gate Outside, Center (23-23-61)
	4	9420 621	Nut
	4	6027 639	Nut
26	1	3481 754-5	MOULDING PACKAGE, Qtr. Outisde (23-23-39)
	16	6001 880	Retainer
27	1	3481 762-3	MOULDING PACKAGE, Qtr. Outside, "Black" (23-23-39)
	1	3549 246-7	"Green"
	1	3549 248-9	"Blue"
	8	6006 496	Retainer
	8	6027 625	Nut
	18	6002 922	Retainer
28	1	3481 738-9	MOULDING PACKAGE, Rr. Door Outside (23-23-33)
	8	6001 880	Retainer
	2	6002 218	Retainer
	2	6026 523	Nut
29	2	3549 229	MOULDING PACKAGE, Rr. Door Outside, "Black" (23-23-33)
	2	3549 609	"Green"
	2	3549 610	"Blue"
	2	6002 162	Retainer
	2	6026 523	Nut
	2	6002 922	Retainer
30	2	3481 732	MOULDING PACKAGE, Frt. Door Outside, "Black" (23-23-32)
	2	3549 235	"Green"
	2	3549 236	"Blue"
	2	6002 162	Retainer
	3	6002 922	Retainer
	2	6026 523	Nut
31	1	3481 728-9	MOULDING PACKAGE, Frt. Door Outside (23-23-32)
	2	6002 458	Retainer
	8	6001 880	Retainer
	2	6026 523	Nut

All Packages Include Attaching Parts

Part Type Code is Indicated in Parentheses

1970
EXTERIOR VIEW - CORONET 440 W-H STATION WAGON

19a2870

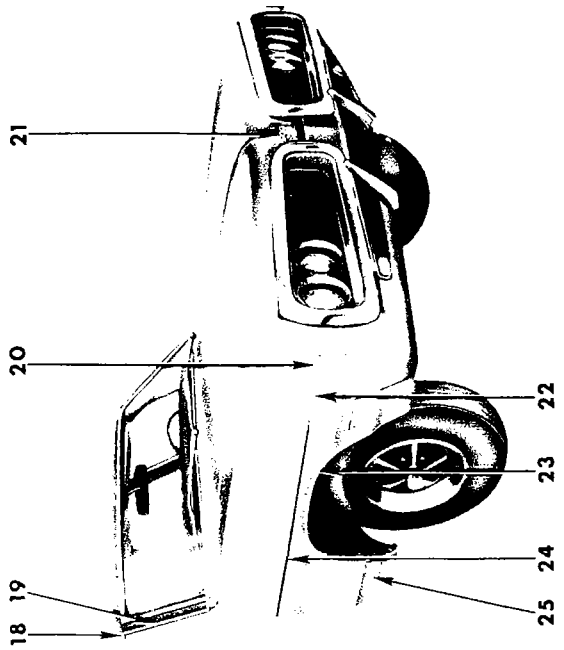

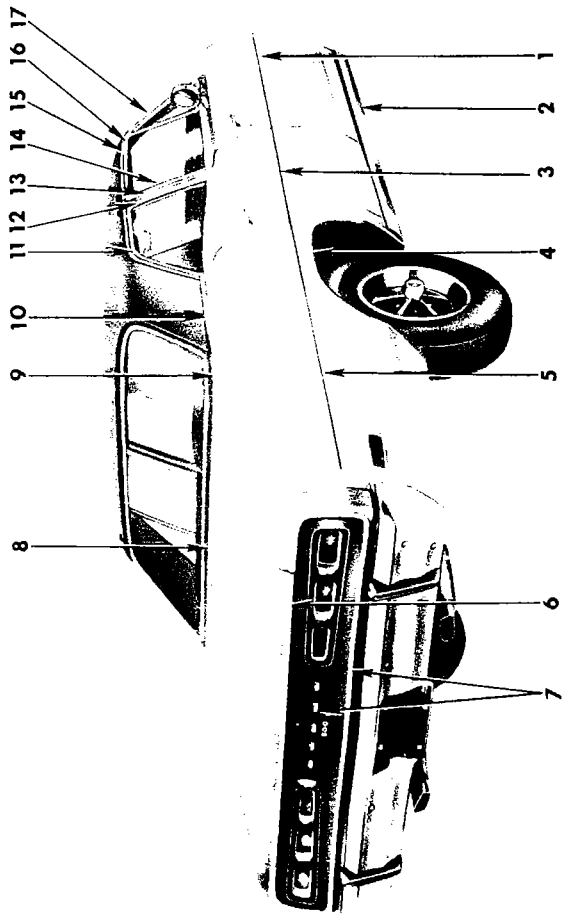

1970
EXTERIOR VIEW - CORONET 500 W-P 4 DOOR SEDAN

REF. NO.	QTY	PART NUMBER	DESCRIPTION
1	2	3481 732	MOULDING PACKAGE, Frt. Door Outside, "Black" (23-23-32)
	2	3549 235	"Green"
	2	3549 236	"Blue"
	2	6002 162	Retainer 2 6026 523 Nut
	3	6002 922	Retainer
2	1	2932 150-1	MOULDING PACKAGE, Body Side Sill Outside (23-23-02)
	18	6002 445	Retainer
	2	6002 443	Retainer 2 116 000 Nut
3	2	3549 228	MOULDING PACKAGE, Rear Door Outside, "Black" (23-23-33)
	2	3549 223	"Green"
	2	3549 224	"Blue"
	2	6002 162	Retainer 2 6026 523 Nut
	2	6002 922	Retainer
4	1	2932 114-5	MOULDING PACKAGE, Qtr. Outside Wheel Opng. (23-23-39)
	16	6024 271	Screw w/Sealer
5	1	3481 762-3	MOULDING PACKAGE, Qtr. Outside, "Black" (23-23-39)
	1	3549 246-7	"Green"
	1	3549 248-9	"Blue"
	8	6002 922	Retainer
	8	6006 496	Retainer 8 6027 625 Nut
6	1	3481 766	MOULDING PACKAGE, Deck Lid (23-23-30)
	6	6024 271	Screw
7	1	2965 258	PANEL, Deck Opng. Lwr. Finish (23-23-28)
	7	6002 896	Retainer 7 6024 152 Nut
	6	6024 271	Screw
8	1	2841 610	COVER, Deck Opng. Upr. Pnl. Mldg. Joint (23-23-41)
9	1	2932 140-1	MOULDING PACKAGE, Deck Opng. Upr. Pnl., use w/Vinyl Roof and Two Tone Paint
	4	6002 065	Retainer
	4	6002 338	Retainer 4 9420 867 Nut
10	1	2932 130-1	MOULDING PACKAGE, Qtr. Outside Belt (23-23-39)
	2	9414 752	Screw 6 ---- --- Nut
	6	6024 702	Washer
11	1	2811 438-9	MOULDING, Rr. Door Wdo. Opng. Frame, Upr. (23-23-33)
12	1	2570 914-5	MOULDING, Rr. Door Wdo. Opng. Frame, Frt. (23-23-33)
13	1	2860 636-7	MOULDING, Body Center Plr. Outside Finish (23-23-16)
	8	6024 271	Screw
14	1	2570 754-5	MOULDING, Frt. Door Wdo. Opng. Frame, Rr. (23-23-32)
15	1	2840 276-7	MOULDING, Roof Side Drain Trough, w/o Vinyl Roof (23-59-61)
	6	---- ---	Spacer
	1	2841 508-9	MOULDING, Roof Side Drain Trough, w/Vinyl Roof (23-59-61)
	6	---- ---	Spacer
16	1	2570 752-3	MOULDING, Frt. Door Wdo. Opng. Frame, Upr. (23-23-32)
17	1	2570 750-1	MOULDING, Frt. Door Wdo. Opng. Frame, Frt. (23-23-32)
18	2	2783 028	COVER, Roof Side Drain Trough Mldg. Joint (23-59-57)
19	1	2840 274-5	MOULDING, Body Front Plr. Drain Trough, w/o Vinyl Roof (23-59-61)
	2	---- ---	Spacer
	1	2932 514-5	MOULDING PACKAGE, Body Front Pillar Drain Trough, w/Vinyl Roof (23-59-61)
	2	---- ---	Spacer
20	2	2901 811	NUMERAL, Fender Side (500 (12-15-21)
	4	6027 352	Nut
21	1	2998 062	NUMERAL, Hood Front (500) (15-06-3)
	2	9420 254	Nut
22	2	2901 751	NAME PLATE, Fender Side (Coronet) (12-15-21)
	4	6027 352	Nut
23	1	3419 868-9	MOULDING PACKAGE, Fender Wheel Opening (12-15-2)
	14	6028 545	Screw
24	2	3419 870	MOULDING PACKAGE, Fender Side, "Black" (12-15-2)
	2	3549 220	"Green"
	2	3549 221	"Blue"
	2	6002 825	Clip
	2	9420 867	Nut
	2	6002 822	Retainer
	2	6006 496	Retainer
25	1	2785 540	MEDALLION, Fender Side (12-15-21)
	1	6026 404	Nut

All Packages Include Attaching Parts

Part Type Code is Indicated in Parentheses

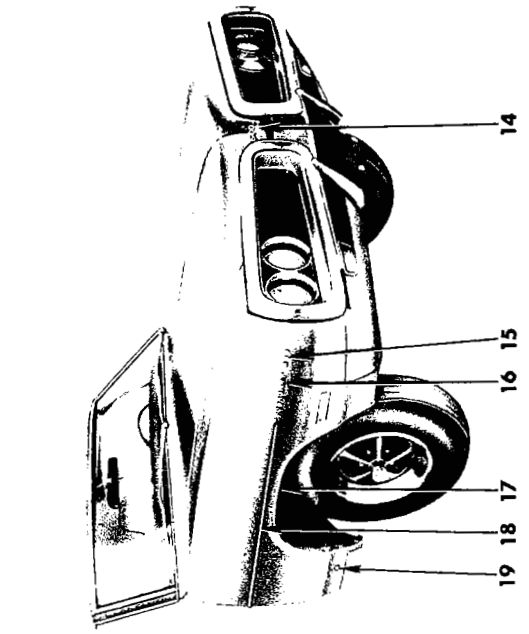

19a2837

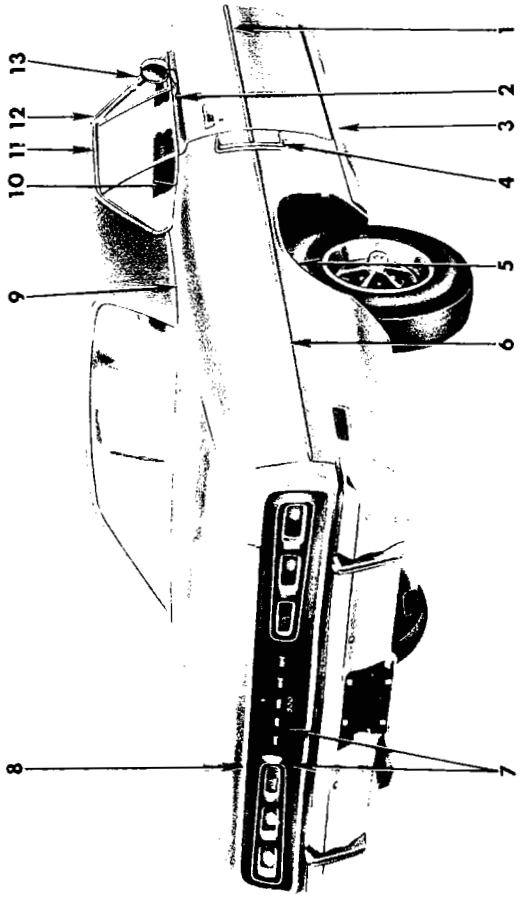

1970
EXTERIOR VIEW - CORONET 500 W-P 2 DOOR HARDTOP

REF. NO.	QTY	PART NUMBER	DESCRIPTION
1	2	3481 759	MOULDING PACKAGE, Door Outside "Black" (23-23-32)
	2	3549 226	"Green"
	2	3549 227	"Blue"
	2	6026 523	Nut
	2	6002 162	Retainer
	4	6002 922	Retainer
2	1	2932 096-7	MOULDING PACKAGE, Door Outside Belt (23-23-32)
	12	6002 549	Retainer
3	1	2932 180-1	MOULDING PACKAGE, Body Side Sill Outside (23-23-2)
	2	6002 443	Retainer
	2	116 000	Nut
	18	6002 445	Retainer
4	1	3444 950-1	ORNAMENT, Qtr. Outside Lower (23-34-334)
	6	9420 294	Nut
5	1	2932 112-3	MOULDING PACKAGE, Qtr. Outside Wheel Opng. (23-23-39)
	16	6024 271	Screw w/Sealer
6	1	3481 764-5	MOULDING PACKAGE, Qtr. Outside, "Black" (23-23-39)
	1	3549 604-5	"Green"
	1	3549 606-7	"Blue"
	12	6002 922	Retainer
	4	6026 523	Nut
	4	6002 162	Retainer
	2	3445 408	Spacer
7	1	2965 258	PANEL, Deck Opng. Lwr. Finish (23-23-28)
	7	6002 896	Retainer
	7	6024 152	Nut
	6	6024 271	Screw
8	1	3481 766	MOULDING PACKAGE, Deck Lid (23-23-30)
	6	6024 271	Screw
9	1	2932 118-9	MOULDING PACKAGE, Qtr. Outside Belt, use w/Vinyl Roof or Two Tone Paint (23-23-39)
	6	6002 065	Retainer
10	1	2932 108-9	MOULDING PACKAGE, Qtr. Wdo. Outside Belt (23-23-73)
	8	6026 552	J-Nut
	8	9414 752	Screw
	2	6023 898	Screw
11	1	2840 282-3	MOULDING, Roof Side Drain Trough, w/o Vinyl Roof (23-59-61)
	6	---- ---	Spacer
	1	2841 504-5	MOULDING, Roof Side Drain Trough, w/Vinyl Roof (23-59-61)
	6	---- ---	Spacer
12	2	2783 028	COVER, Roof Side Drain Trough Mldg. Joint (23-59-57)
13	1	2840 280-1	MOULDING, Body Front Plr. Drain Trough, w/o Vinyl Roof (23-59-61)
	2	---- ---	Spacer
	1	2932 512-3	MOULDING PACKAGE, Body Front Pillar Drain Trough, w/Vinyl Roof (23-59-61)
	2	---- ---	Spacer
14	1	2998 062	NUMERAL, Hood Front (500) (15-06-3)
	2	9420 254	Nut
15	2	2901 811	NUMERAL, Fender Side (500) (12-15-21)
	4	6027 352	Nut
16	2	2901 751	NAME PLATE, Fender Side (Coronet) (12-15-21)
	4	6027 352	Nut
17	1	3419 868-9	MOULDING PACKAGE, Fender Wheel Opening (12-15-2)
18	2	3419 870	MOULDING PACKAGE, Fender Side (Black) (12-15-2)
	2	3549 220	"Green"
	2	3549 221	"Blue"
	2	6002 825	Clip
	2	9420 867	Nut
	2	6002 822	Retainer
	2	6006 496	Retainer
19	1	2785 540	MEDALLION, Fender Side (12-15-21)
	1	6026 404	Nut

All Packages Include Attaching Parts

Part Type Code is Indicated in Parentheses

19a2871

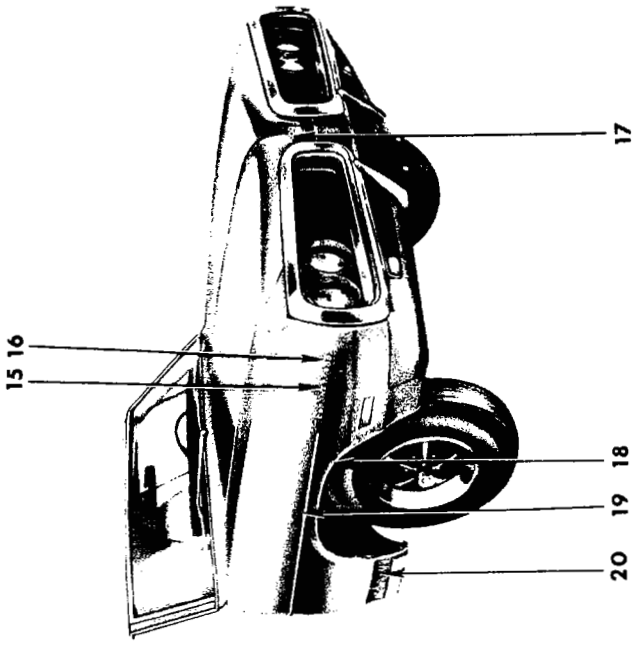

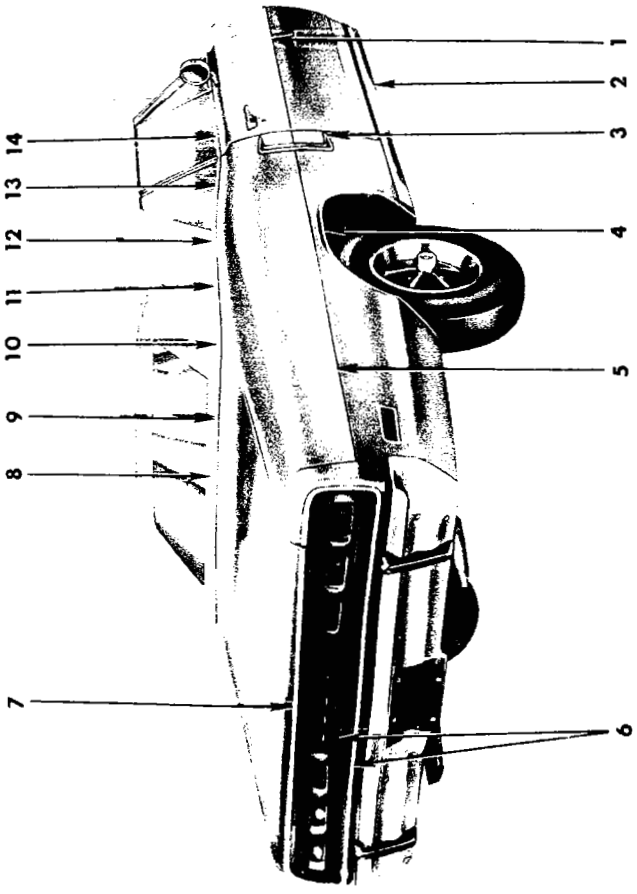

1970
EXTERIOR VIEW - CORONET 500 W-P CONVERTIBLE COUPE

REF. NO.	QTY	PART NUMBER	DESCRIPTION
1	2	3481 759	MOULDING PACKAGE, Door Outside, "Black" (23-23-32)
	2	3549 226	"Green"
	2	3549 227	"Blue"
	2	6006 523	Nut
	2	6002 162	Retainer
	4	6002 922	Retainer
2	1	2932 180-1	MOULDING PACKAGE, Body Side Sill Outside (23-23-2)
	2	6002 443	Retainer
	2	116 000	Nut
	18	6002 445	Retainer
3	1	3444 950-1	ORNAMENT, Qtr. Outside Louver (w/o Body Side Mldgs.) (23-34-334)
	6	9420 294	Nut
4	1	2932 112-3	MOULDING PACKAGE, Qtr. Outside Wheel Opng. (23-23-39)
	16	6024 271	Screw w/Sealer
5	1	3481 764-5	MOULDING PACKAGE, Qtr. Outside, "Black" (23-23-39)
	1	3549 604-5	"Green"
	1	3549 606-7	"Blue"
	12	6002 922	Retainer
	4	6026 523	Nut
	4	6002 162	Retainer
	2	3445 408	Spacer
6	1	2965 258	PANEL, Deck Opng. Lwr. Finish (23-23-23)
	7	6002 896	Retainer
	7	6024 152	Nut
	6	6024 271	Screw
7	1	3481 766	MOULDING PACKAGE, Deck Lid (23-23-30)
	6	6024 271	Screw
8	1	2841 642	COVER, Deck Opng. Upr. Pnl. Mldg. (23-23-41)
9	2	2932 089	MOULDING PACKAGE, Deck Opng. Upr. Pnl. (23-23-31)
	4	9416 049	Screw
	4	6002 497	Retainer
10	1	2932 186-7	MOULDING PACKAGE, Qtr. Outside Belt, Rr. Corner (23-23-39)
	6	---- ---	Screw
11	1	2932 188-9	MOULDING PACKAGE, Qtr. Outside Belt. Rr. (23-23-39)
	8	9416 049	Screw
	8	6002 497	Retainer
12	1	2932 192-3	MOULDING PACKAGE, Qtr. Outside Belt, Intermediate (23-23-39)
	4	6027 282	Screw
13	1	2932 190-1	MOULDING PACKAGE, Qtr. Wdo. Outside Belt (23-23-39)
	6	6026 552	J-Nut
	6	9414 752	Screw
14	1	2932 096-7	MOULDING PACKAGE, Door Outside Belt (23-23-32)
	12	6002 549	Retainer
15	2	2901 751	NAME PLATE, Fender Side (Coronet) (12-15-21)
	4	6027 352	Nut
16	2	2901 811	NUMERAL, Fender Side (500) (12-15-21)
	4	6027 352	Nut
17	1	2998 062	NUMERAL, Hood Front (500) (15-06-3)
	2	9420 254	Nut
18	1	3419 868-9	MOULDING PACKAGE, Fender Wheel Opening (12-15-2)
	14	6028 545	Screw
19	2	3419 870	MOULDING PACKAGE, Fender Side, "Black" (12-15-2)
	2	3549 220	"Green"
	2	3549 221	"Blue"
	2	6002 825	Clip
	2	9420 867	Nut
	2	6002 822	Retainer
	2	6006 496	Retainer
20	1	2785 540	MEDALLION, Fender Side (12-15-21)
	1	6026 404	Nut

All Packages Include Attaching Parts

Part Type Code is Indicated in Parentheses

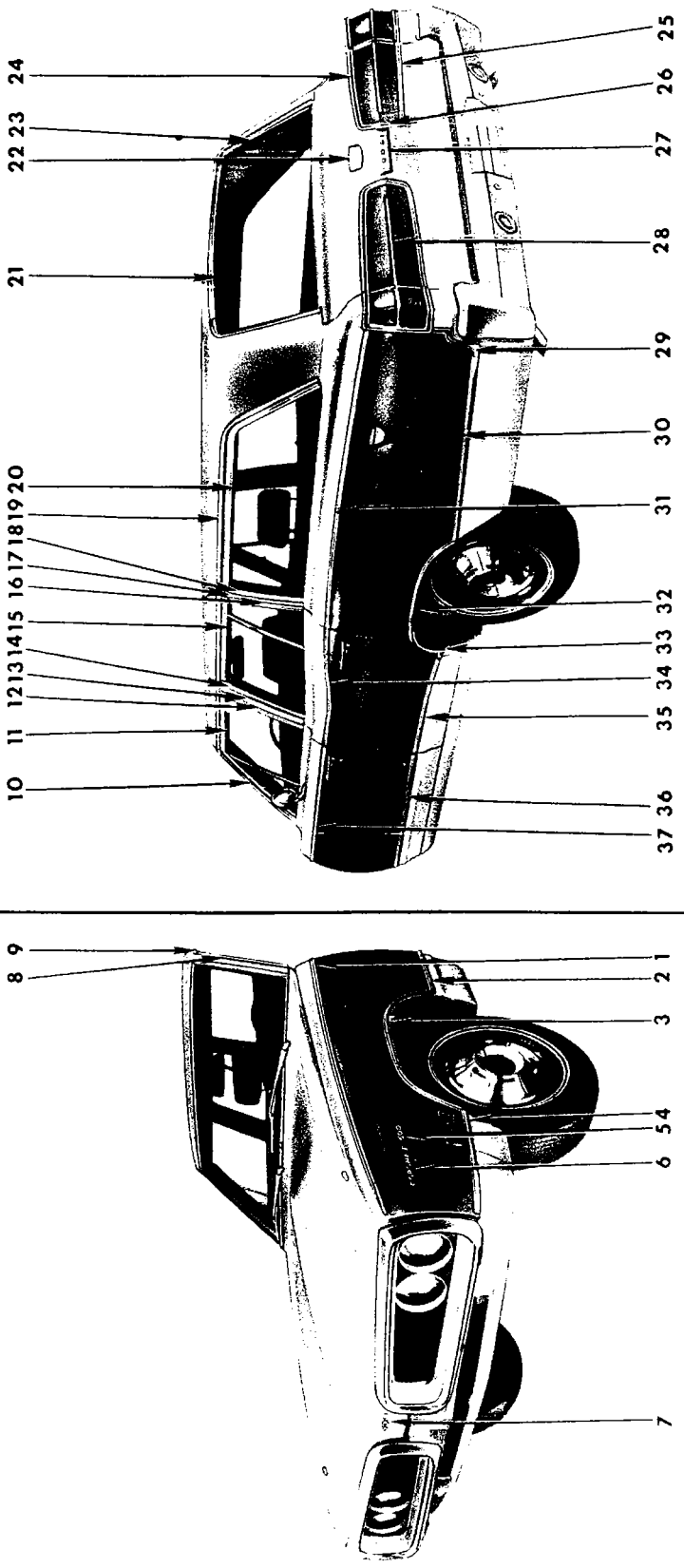

19a3145

1970
EXTERIOR VIEW - CORONET 500 W-P STATION WAGON

REF. NO.	QTY	PART NUMBER	DESCRIPTION
1	1	3419 860-1	MOULDING PACKAGE, Fender Side Upper (12-15-2)
	2	9420 218	Nut
	2	6006 496	Retainer
	2	6002 842	Retainer
	12	6001 880	Retainer
2	1	3419 866-7	MOULDING PACKAGE, Fender Side Lower Rear (12-15-2)
	1	6024 679	Nut
	1	6006 496	Retainer
	2	6001 880	Retainer
3	1	3419 864-5	MOULDING PACKAGE, Fender Wheel Opening (12-15-2)
	6	6024 271	Screw
4	1	3419 862-3	MOULDING PACKAGE, Fender Side Lower Frt. (12-15-2)
	4	6024 679	Nut
	4	6006 496	Retainer
5	2	2901 811	NUMERAL, Fender Side (500) (12-15-21)
	4	6027 352	Nut
6	2	2901 751	NAME PLATE, Fender Side (Coronet) (12-15-21)
	4	6027 352	Nut
7	1	2998 062	NUMERAL, Hood Front (500) (15-06-3)
	2	9420 254	Nut
8	1	2605 854-5	MOULDING, Body Front Pillar Drain Trough (23-59-61)
	2	---- ---	Spacer
9	2	2605 208	COVER, Roof Side Drain Trough (23-59-57)
10	1	2570 750-1	MOULDING, Frt. Door Wdo. Opng. Frame, Frt. (23-23-32)
11	1	2570 752-3	MOULDING, Frt. Door Wdo. Opng. Frame, Upr. (23-23-32)
12	1	2570 754-5	MOULDING, Frt. Door Wdo. Opng. Frame, Rear (23-23-32)
13	1	2860 636-7	PANEL, Body Center Pillar Outside Finish (23-23-16)
	8	6024 271	Screw
14	1	2570 914-5	MOULDING, Rear Door Wdo. Opng. Frame, Frt. (23-23-33)
15	1	2588 466-7	MOULDING, Rear Door Wdo. Opng. Frame, Upr. (23-23-33)
16	1	2811 446-7	MOULDING, Rear Door Wdo. Opng. Frame, Rear (23-23-33)
17	1	2860 638-9	MOULDING, Qtr. Pnl. Rear Door Lock Plr., Upr. (23-23-16)
	4	6024 271	Screw
18	1	2860 868-9	MOULDING, Qtr. Wdo. Outside, Frt., Stainless Steel (23-23-73)
19	1	2840 278-9	MOULDING, Roof Side Drain Trough (23-59-61)
	6	---- ---	Spacer
20	1	2860 866-7	MOULDING, Qtr. Wdo. Outside, Upr., Stainless Steel (23-23-73)
21	1	2573 303	MOULDING, Roof Rear Tailgate Opng. (23-23-60)
22	1	2862 816	ORNAMENT, Tailgate Electric Wdo. Regulator Outside (23-54-11)
	2	6024 291	Nut w/Washer
23	1	3004 382-3	MOULDING PACKAGE, Qtr. Pnl. Tailgate Upr. Pillar, Comp. (23-23-60)
	2	6024 564	Screw
24	1	3514 024-5	MOULDING PACKAGE, Tailgate Outside, Upr. (23-23-61)
	4	6006 446	Retainer
	4	9420 867	Nut
	2	6001 977	Retainer
25	1	3514 022-3	MOULDING PACKAGE, Tailgate Outside, Lwr. (23-23-61)
	4	9420 867	Nut
	4	6006 446	Retainer
26	1	3419 998-9	MOULDING PACKAGE, Tailgate, Upr. and Lwr. End (23-23-61)
	4	9420 621	Nut
27	2	2963 990	LETTER "D" Tailgate (23-54-11)
	1	2963 991	"O"
	1	2963 993	"G"
	1	2963 994	"E"
	10	9420 263	Nut
28	1	3419 994-5	MOULDING PACKAGE, Tailgate Outside, Center (23-23-61)
	4	9420 621	Nut
	4	6027 639	Nut
29	1	3514 054-5	MOULDING PACKAGE, Qtr. Outside, Rear, Rear (23-23-39)
	2	6024 271	Screw
	2	---- ---	Nut
30	1	3481 746-7	MOULDING PACKAGE, Qtr. Outside, Lwr., Rear (23-23-39)
	6	6001 880	Retainer
	4	6002 892	Retainer
31	1	3481 754-5	MOULDING PACKAGE, Qtr. Outside (23-23-39)
	16	6001 880	Retainer
32	1	3481 752-3	MOULDING PACKAGE, Qtr. Outside Wheel Opng. (23-23-39)
	12	6024 271	Screw

All Packages Include Attaching Parts

Part Type Code is Indicated in Parentheses

1970

EXTERIOR VIEW - CORONET 500 W-P STATION WAGON

REF. NO.	QTY	PART NUMBER	DESCRIPTION
33	1	3481 744-5	MOULDING PACKAGE, Qtr. Outside, Lwr., Frt. (23-23-39)
	2	6024 271	Screw
	2	---- ---	Nut
34	1	3481 738-9	MOULDING PACKAGE, Rear Door Outside (23-23-33)
	8	6001 880	Retainer
	2	6002 218	Retainer
	2	6026 523	Nut
35	1	3481 740-1	MOULDING PACKAGE, Rear Door Outside, Lwr. (23-23-33)
	8	6001 880	Retainer
	2	6002 218	Retainer
	2	6026 523	Nut
36	1	3481 734-5	MOULDING PACKAGE, Frt. Door Outside (23-23-32)
	10	6001 880	Retainer
	2	6002 218	Retainer
	2	6026 523	Nut
37	1	3481 728-9	MOULDING PACKAGE, Frt. Door Outside (23-23-32)
	2	6002 458	Retainer
	2	6026 523	Nut
	8	6001 880	Retainer

All Packages Include Attaching Parts

Part Type Code is Indicated in Parentheses

NOTES

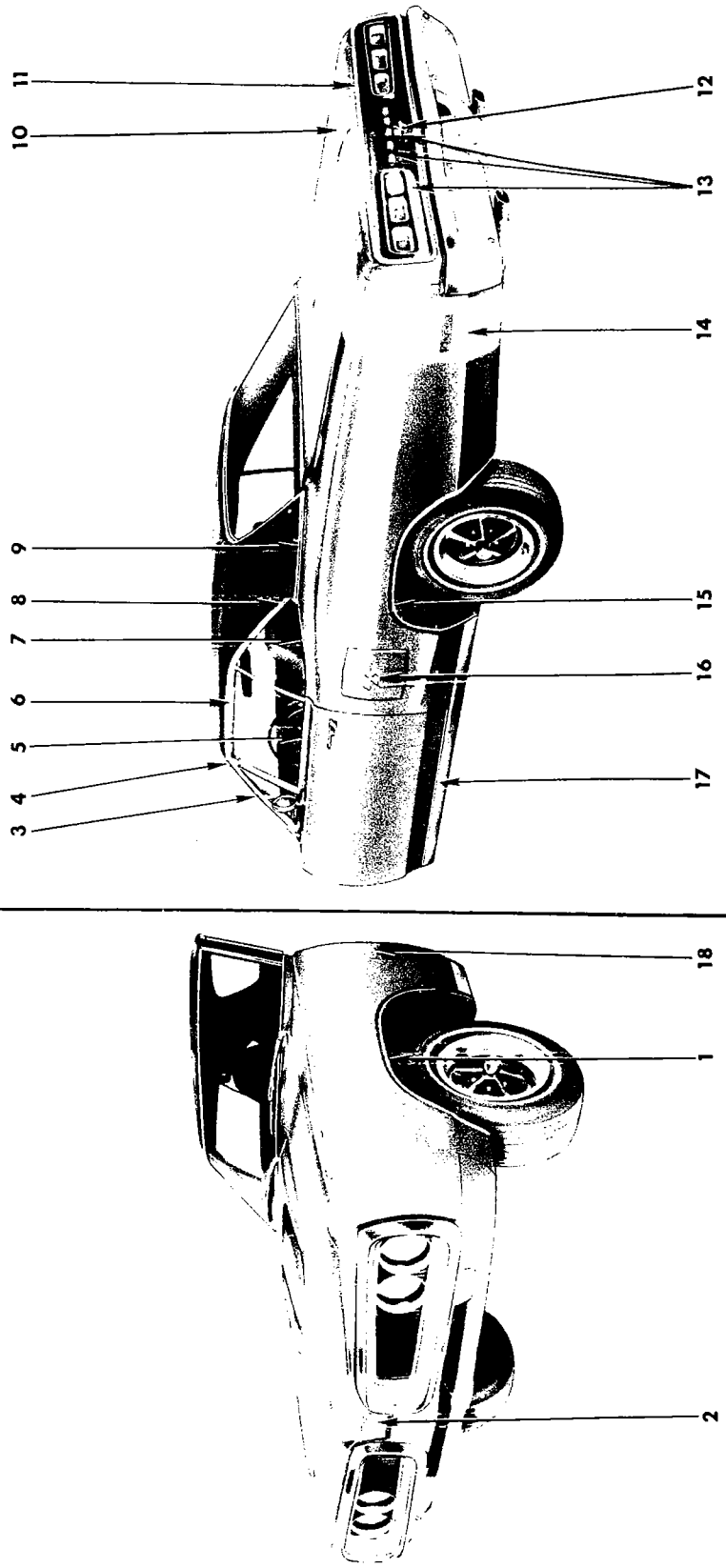

19a3157A

1970
EXTERIOR VIEW - CORONET R/T W-S 2 DOOR HARDTOP

REF. NO.	QTY	PART NUMBER	DESCRIPTION
1	1	3419 868-9	MOULDING PACKAGE, Fender Wheel Opening (12-15-2)
	14	6028 545	Screw
2	1	2998 066	ORNAMENT, Hood (R/T) (15-03-18)
	2	9420 254	Nut
3	1	2840 280-1	MOULDING, Body Frt. Pillar Drain Trough, w/o Vinyl Roof (23-59-61)
	2	---- ---	Spacer
	1	2932 512-3	MOULDING PACKAGE, Body Frt. Pillar Drain Trough, w/Vinyl Roof (23-59-61)
	2	---- ---	Spacer
4	2	2783 028	COVER, Roof Side Drain Trough Mldg. Joint (23-59-57)
5	1	2932 096-7	MOULDING PACKAGE, Door Outside Belt (23-23-32)
	12	6002 549	Retainer
6	1	2840 282-3	MOULDING, Roof Side Drain Trough, w/o Vinyl Roof (23-59-61)
	6	---- ---	Spacer
	1	2841 504-5	MOULDING, Roof Side Drain Trough, w/Vinyl Roof (23-59-61)
	6	---- ---	Spacer
7	1	2932 108-9	MOULDING and T/PLATE PACKAGE, Qtr. Wdo. Outside Belt (23-23-73)
	8	6026 552	J-Nut
	8	9414 752	Screw
	2	6023 898	Screw
8	1	2840 884-5	CAP, Roof Side Drain Trough Mldg. End (23-59-57)
	2	6028 674	Screw
9	1	2932 118-9	MOULDING PACKAGE, Qtr. Outside Belt, w/Vinyl Roof or Two Tone Paint (23-23-39)
	6	6002 065	Retainer
10	1	3446 003	TAPE, Deck Lid Transverse Color Stripe, "Red" (23-23-12)
	1	3446 004	"White"
	1	3446 005	"Black"
	1	3446 214	"Blue"
	1	3446 215	"Green"
11	1	3481 766	MOULDING PACKAGE, Deck Lid (23-23-30)
	6	6024 271	Screw
12	1	3444 609	NAME PLATE, Deck Opening Lower Finish Panel Rt. (23-34-184)
13	1	2965 259	PANEL, Deck Opng. Lwr. Finish (23-23-28)
	6	6027 413	Screw
	7	6001 615	Seal
	7	6002 896	Retainer
	7	6024 152	Nut
14	1	3446 012-3	TAPE, Qtr. Pnl. Transverse Color Stripe, "Red" (23-23-12)
	1	3446 014-5	"White"
	1	3446 016-7	"Black"
	1	3446 220-1	"Blue"
	1	3446 222-3	"Green"
15	1	2932 112-3	MOULDING PACKAGE, Qtr. Outside Whl. Opng. (23-23-39)
	16	6024 271	Screw w/Sealer
16	1	3446 052-3	ORNAMENT, Qtr. Outside Louver (23-34-334)
	6	9420 218	Nut
	2	3445 919	NAME PLATE, Qtr. Outside Ornament (23-34-238)
	4	9420 218	Nut
17	1	2932 180-1	MOULDING PACKAGE, Body Side Sill Outside (23-23-2)
	2	6002 443	Retainer
	2	116 000	Nut
	18	6002 445	Retainer
18	2	2785 558	NAME PLATE, Fender Side, "Hemi" (12-15-21)
	AR	6002 852	Retainer

All Packages Include Attaching Parts

Part Type Code is Indicated in Parentheses

1970

EXTERIOR VIEW - CORONET R/T W-S 2 DOOR HARD TOP

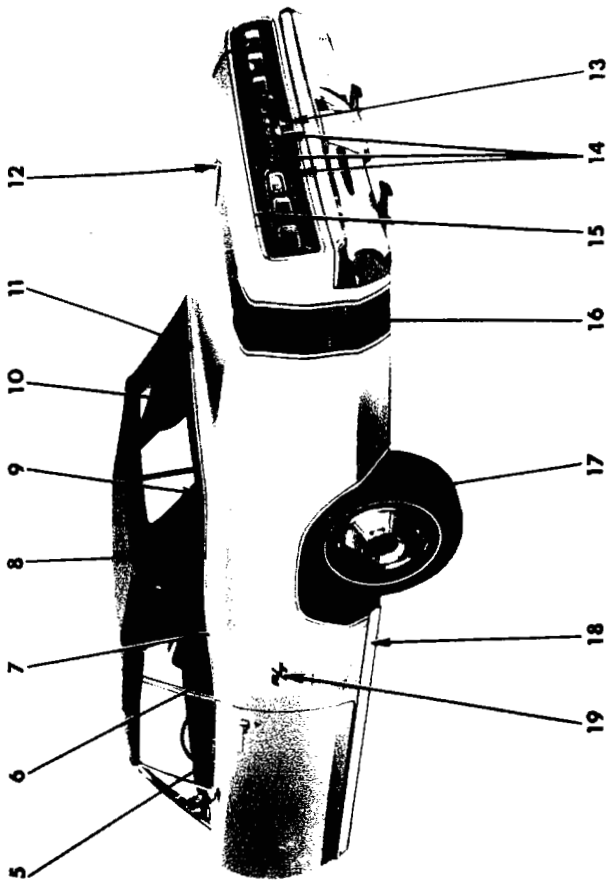

19a3150 A

1970
EXTERIOR VIEW - CORONET R/T W-S CONVERTIBLE COUPE

REF. NO.	QTY	PART NUMBER	DESCRIPTION
1	1	3419 868-9	MOULDING PACKAGE, Fender Wheel Opening (12-15-2)
	14	6028 545	Screw
2	1	2998 066	ORNAMENT, Hood (R/T) (15-03-18)
	2	9420 254	Nut
3	1	2962 504	BUMPER, Front, Center (13-64-3)
	4	6025 063	Screw and Washer
	4	118 615	Nut
	2	6028 249	Bolt
	2	6025 020	Nut
4	1	2962 544-5	FILLER (13-64-22)
5	1	2932 096-7	MOULDING PACKAGE, Door Outside Belt (23-23-32)
	12	6002 549	Retainer
6	1	2932 190-1	MOULDING PACKAGE, Qtr. Wdo. Outside Belt, Frt. (23-23-39)
	6	6026 552	J-Nut
	6	9414 752	Screw
7	1	2932 192-3	MOULDING PACKAGE, Qtr. Outside Belt, Intermediate (23-23-39)
	4	6027 282	Screw
8	1	2932 188-9	MOULDING PACKAGE, Qtr. Outside Belt, Rear (23-23-39)
	8	9416 049	Screw
	8	6002 497	Retainer
9	1	2932 186-7	MOULDING PACKAGE, Qtr. Outside Belt, Rear Corner (23-23-39)
	6	---- ---	Screw
10	2	2932 089	MOULDING PACKAGE, Deck Opng. Upr. Pnl. (23-23-31)
	4	9416 049	Screw
	4	6002 497	Retainer
11	1	2841 642	COVER, Deck Opng. Upr. Pnl. Mldg. (23-23-41)
12	1	3446 003	TAPE, Deck Lid Transverse Color Stripe, "Red" (23-23-12)
	1	3446 004	"White"
	1	3446 005	"Black"
	1	3446 214	"Blue"
	1	3446 215	"Green"
13	1	3444 609	NAME PLATE, Deck Opng. Lwr. Finish Panel Rt. (23-34-184)
14	1	2965 259	PANEL, Deck Opng. Lwr. Finish (23-23-28)
	6	6027 413	Screw
	7	6001 615	Seal
	7	6002 896	Retainer
	7	6024 152	Nut
15	1	3481 766	MOULDING PACKAGE, Deck Lid (23-23-30)
	6	6024 271	Screw
16	1	3446 012-3	TAPE, Qtr. Pnl. Transverse Color Stripe, "Red" (23-23-12)
	1	3446 014-5	"White"
	1	3446 016-7	"Black"
	1	3446 220-1	"Blue"
	1	3446 222-3	"Green"
17	1	2932 112-3	MOULDING PACKAGE, Qtr. Outside Whl. Opng. (23-23-39)
	16	6024 271	Screw w/Sealer
18	1	2932 180-1	MOULDING PACKAGE, Body Side Sill Outside (23-23-2)
	2	6002 443	Retainer
	2	116 000	Nut
	18	6002 445	Retainer
19	1	3446 052-3	ORNAMENT, Qtr. Outside Louver (23-34-334)
	6	9420 218	Nut
	2	3445 919	NAME PLATE, Qtr. Outside Ornament (23-34-238)
	4	9420 218	Nut
20	2	2785 558	NAME PLATE, Fender Side, "Hemi" (12-15-21)
	AR	6002 852	Retainer

All Packages Include Attaching Parts

Part Type Code is Indicated in Parentheses

1970

EXTERIOR VIEW - CORONET R/T W-S CONVERTIBLE COUPE

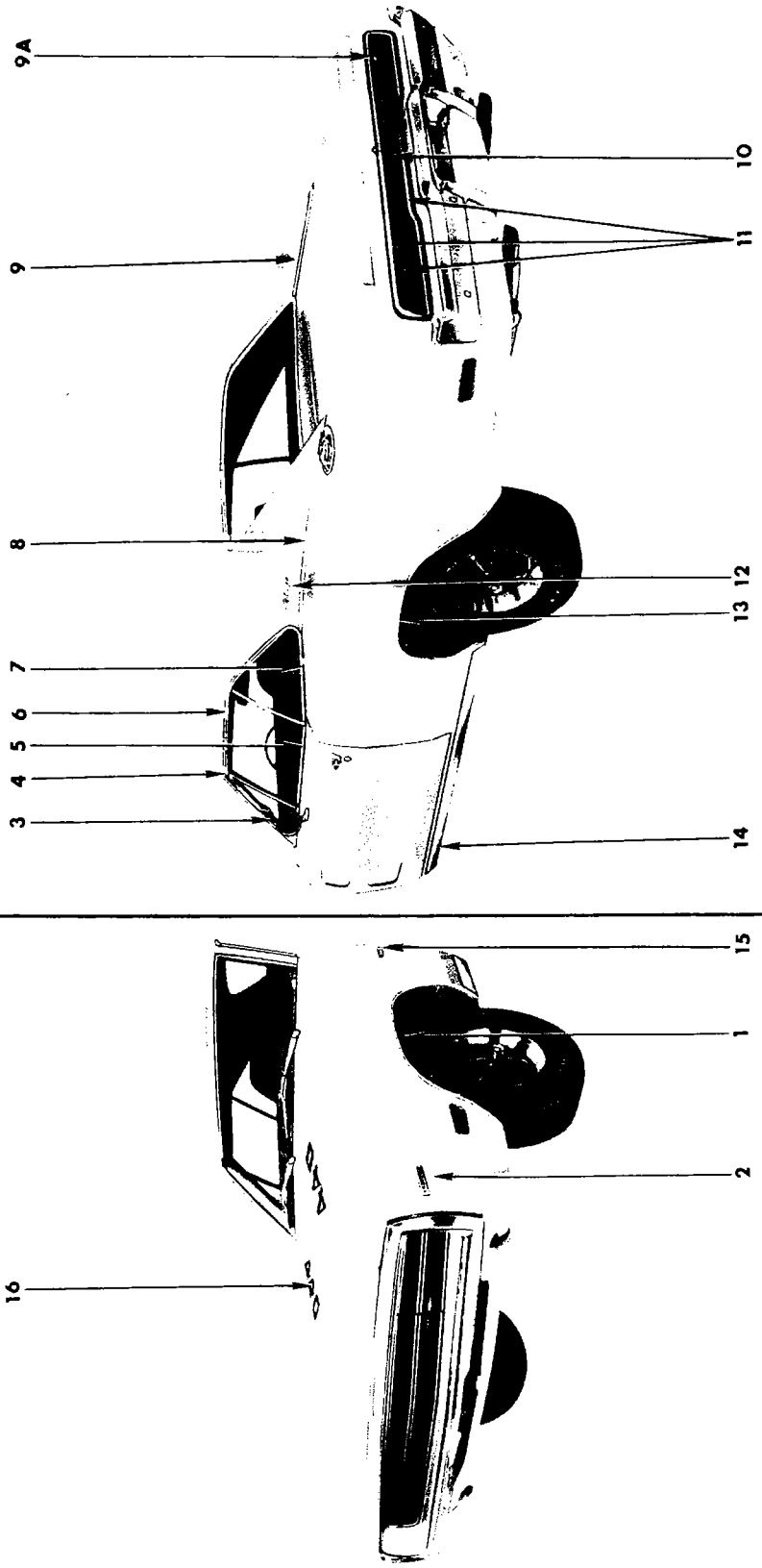

19a3156C

1970
EXTERIOR VIEW - CHARGER 500 W-P FAST BACK

REF. NO.	QTY	PART NUMBER	DESCRIPTION
1	1	3004 370-1	MOULDING PACKAGE, Fender Wheel Opening (12-15-2)
	8	6024 271	Screw
2	2	3506 192	NAME PLATE, Fender Side, "Hemi" (12-15-21)
	6	6027 352	Nut
3	1	2840 280-1	MOULDING, Body Front Plr. Drain Trough, w/o Vinyl Roof (23-59-61)
	2	---- ---	Spacer
	1	2932 512-3	MOULDING PACKAGE, Body Front Pillar Drain Trough, w/Vinyl Roof (23-59-61)
	2	---- ---	Spacer
4	2	2783 028	COVER, Roof Side Drain Trough Mldg. Joint (23-59-57)
5	1	2932 094-5	MOULDING PACKAGE, Door Outside Belt (23-23-32)
	2	6002 570	Clip
	2	6002 571	Clip
	2	6002 572	Clip
	2	6002 573	Clip
	2	6002 574	Clip
	4	6002 575	Clip
6	1	2840 282-3	MOULDING, Roof Side Drain Trough, w/o Vinyl Roof (23-59-61)
	6	---- ---	Spacer
	1	2841 504-5	MOULDING, Roof Side Drain Trough, w/Vinyl Roof (23-59-61)
	6	---- ---	Spacer
7	1	2932 104-5	MOULDING and T/PLATE PACKAGE, Qtr. Wdo. Outside Belt (23-23-73)
	8	6026 552	J-Nut
	8	9414 752	Screw
	2	6023 898	Screw
8	1	2932 100-1	MOULDING PACKAGE, Qtr. Outside Belt, w/Vinyl Roof (23-23-39)
	6	6002 065	Retainer
	4	6002 338	Retainer
	4	9420 867	Nut
9	1	2932 102-3	MOULDING PACKAGE, Qtr. Outside Belt to Rear Wdo. (23-23-39)
	6	---- ---	Nut w/Seal
9A	1	3505 338	NAME PLATE, Deck Opng. Lwr. Pnl., 500 (23-34-184)
10	1	2902 306	NAME PLATE, Deck Opng. Lwr. Pnl., "Charger" (23-34-184)
	3	9420 291	Nut
11	1	3482 000	PANEL, Deck Lwr. Finish, use w/Dodge Spec. Trim Pkg. (23-23-28)
	1	3505 750	PANEL, Deck Opng. Lwr. Finish, w/o Charger Spec. Value Pkg. and Dodge Spec. Trim Pkg. (23-23-28)
	17	6002 984	Retainer
	17	6028 399	Nut
12	1	2841 886-7	NAME PLATE, Qtr. Outside, Charger (23-34-238)
	4	9420 263	Nut
	2	2782 966	MEDALLION, Roof Side "Special Edition" (23-34-334)
	4	6025 463	Seal
	4	---- ---	Nut
13	1	2932 110-1	MOULDING PACKAGE, Qtr. Outside Whl. Opng. (23-23-39)
	16	6024 271	Screw w/Seal
14	1	2933 914-5	MOULDING PACKAGE, Body Side Sill Outside (23-23-2)
	30	6002 750	Retainer
	2	6002 443	Retainer
	2	116 000	Nut
	2	6026 221	Screw
15	2	2785 558	NAME PLATE, Fender Side, "Hemi" (12-15-21)
	AR	6002 852	Retainer
16	1	3443 334	DECAL, Hood, "440" (15-03-18)

All Packages Include Attaching Parts

Part Type Code is Indicated in Parentheses

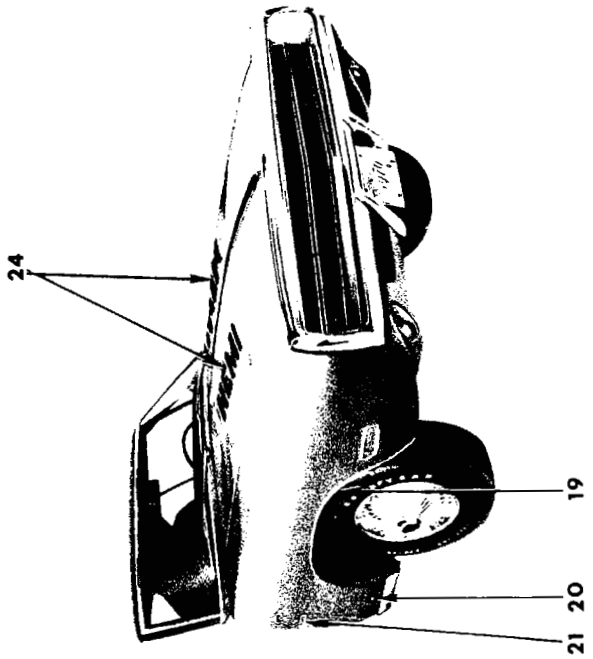

19a2974B

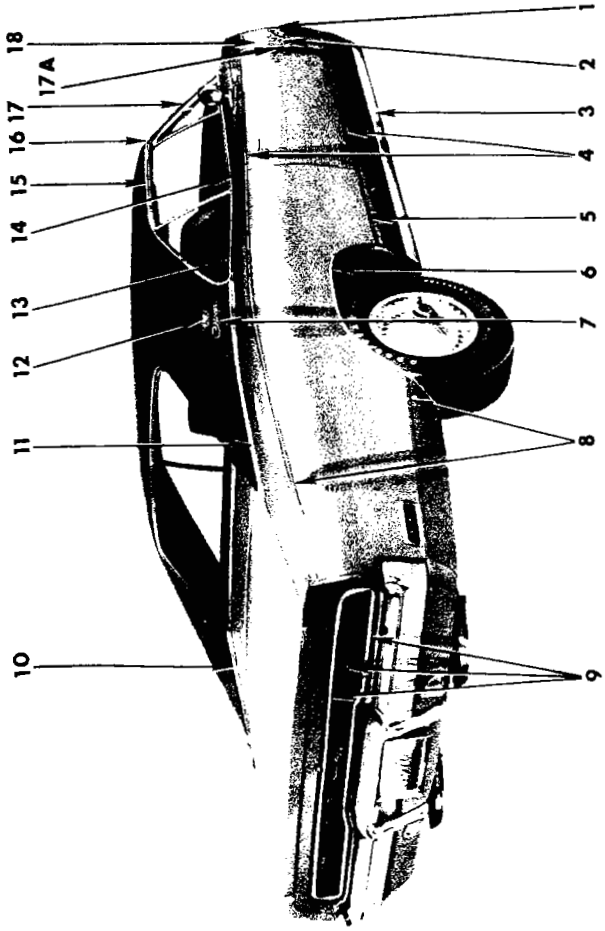

INSERT FOR TAPES

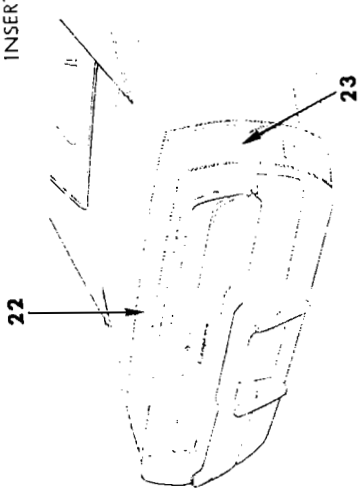

1970
EXTERIOR VIEW - CHARGER R/T W-S FAST BACK

REF. NO.	QTY	PART NUMBER	DESCRIPTION
1	1	3444 560-1	TAPE, Body Side, Upr. and Lwr. End Stripe, "Red" (23-23-12)
	1	3444 562-3	"White"
	1	3444 564-5	"Black"
	1	3506 224-5	"Blue"
	1	3506 226-7	"Green"
2	2	3445 919	NAME PLATE, Door Outside Ornament (23-11-21)
3	1	2933 914-5	MOULDING PACKAGE, Body Side Sill Outside (23-23-2)
	30	6002 750	Retainer
	2	6002 443	Retainer
	2	116 000	Nut
	2	6026 221	Screw
4	2	3446 612	TAPE, Door and Qtr. Pnl. Color Stripe, "White" (23-23-12)
	2	3446 613	"Red"
	2	3446 614	"Black"
	2	3505 952	"Green"
	2	3505 953	"Blue"
5	2	3446 612	TAPE, Door and Qtr. Pnl. Color Stripe, "White" (23-23-12)
	2	3446 613	"Red"
	2	3446 614	"Black"
	2	3505 952	"Green"
	2	3505 953	"Blue"
6	1	2932 110-1	MOULDING PACKAGE, Qtr. Outside Wheel Opening (23-23-39)
	16	6024 271	Screw w/Seal
7	1	2841 886-7	NAME PLATE, Qtr. Outside, "Charger" (used w/o Special Edition Medallion) (23-34-238)
	4	9420 263	Nut
8	2	3446 612	TAPE, Door and Qtr. Pnl. Color Stripe, "White" (23-23-12)
	2	3446 613	"Red"
	2	3446 614	"Black"
	2	3505 952	"Green"
	2	3505 953	"Blue"
9	1	3481 954	PANEL, Deck Lwr. Finish (23-23-28)
	17	6002 984	Retainer
	17	6028 399	Nut
10	1	2932 102-3	MOULDING PACKAGE, Qtr. Outside Belt to Rr. Wdo., use w/Vinyl Roof (23-23-39)
	6	---- ---	Nut w/Seal
11	1	2932 100-1	MOULDING PACKAGE, Qtr. Outside Belt, use w/Vinyl Roof (23-23-39)
	6	6002 065	Retainer
	4	6002 338	Retainer
	4	9420 867	Nut
12	2	2782 966	MEDALLION, Roof Side (Special Edition) (23-34-334)
	4	6025 463	Seal
	4	---- ---	Nut
13	1	2932 104-5	MOULDING PACKAGE, Qtr. Wdo. Outside Belt (23-23-73)
	8	6026 552	J-Nut
	8	9414 752	Screw
	2	6023 898	Screw
14	1	2932 094-5	MOULDING PACKAGE, Door Outside Belt (23-23-32)
	2	6002 570	Clip
	2	6002 571	Clip
	2	6002 572	Clip
	2	6002 573	Clip
	2	6002 574	Clip
	4	6002 575	Clip
15	1	2840 282-3	MOULDING, Roof Side Drain Trough, w/o Vinyl Roof (23-59-61)
	6	---- ---	Spacer
	1	2841 504-5	MOULDING, Roof Side Drain Trough, w/Vinyl Roof (23-59-61)
	6	---- ---	Spacer
16	2	2783 028	COVER, Roof Side Drain Trough Mldg. Joint (23-59-57)
17	1	2840 280-1	MOULDING, Body Front Pillar Drain Trough, w/o Vinyl Roof (23-59-61)
	2	---- ---	Spacer
	1	2932 512-3	MOULDING PACKAGE, Body Front Pillar Drain Trough, w/Vinyl Roof (23-59-61)
	2	---- ---	Spacer
17A	1	3569 476-7	INSERT, Door Outside Ornament (23-11-22)
18	1	3446 060-1	ORNAMENT, Door Outside, Prime (23-11-21)
	6	9420 218	Nut
19	1	3004 370-1	MOULDING PACKAGE, Fender Wheel Opening (12-15-2)
	14	6028 545	Screw
20	1	2785 540	MEDALLION, Fender Side (12-15-21)
	1	6026 404	Nut
21	2	2785 558	NAME PLATE, Fender Side, "Hemi" (12-15-21)
	AR	6002 852	Retainer
22	1	3446 000	TAPE, Deck Lid Transverse Color Stripe, "Red" (23-23-12)
	1	3446 001	"White"
	1	3446 002	"Black"
	1	3446 224	"Blue"
	1	3446 225	"Green"
23	1	3445 994-5	TAPE, Qtr. Pnl. Transverse Color Stripe, "Red" (23-23-12)
	1	3445 996-7	"White"
	1	3445 998-9	"Black"
	1	3446 226-7	"Blue"
	1	3446 228-9	"Green"
24	1	3443 467	DECAL, Hood, "Hemi" (15-03-18)

All Packages Include Attaching Parts

Part Type Code is Indicated in Parentheses

1970
EXTERIOR VIEW - CHARGER R/T W-S FAST BACK

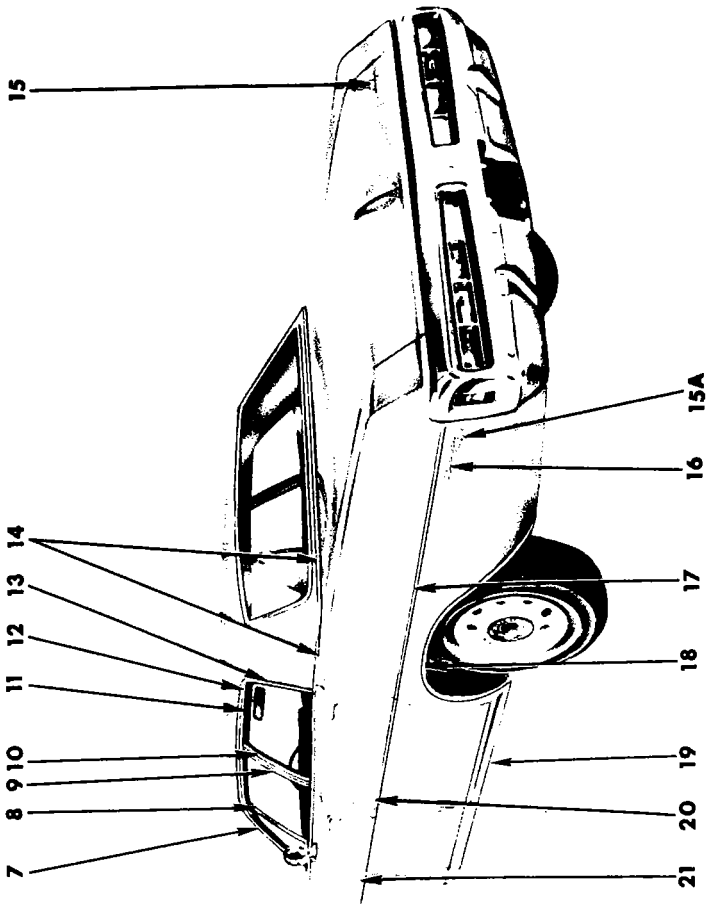

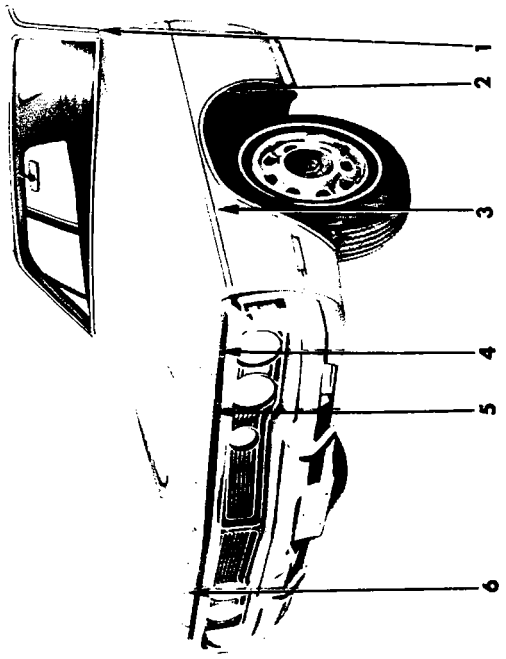

1970
EXTERIOR VIEW - DODGE POLARA D-L 4 DOOR SEDAN

REF. NO.	QTY	PART NUMBER	DESCRIPTION
1	1	3419 482-3	MOULDING PACKAGE, Body Frt., Lwr. Pillar (23-23-14)
	2	6024 271	Screw
2	1	2933 266-7	MOULDING PACKAGE, Fender Wheel Opening (12-15-2)
	7	6024 271	Screw
3	2	3514 126	MOULDING PACKAGE, Fender Side, "Black" (12-15-2)
	2	3514 127	"Blue"
	2	3514 128	"Green"
	2	3514 130	"Tan"
	2	3549 653	"Red"
	2	6026 523	Nut
	6	6002 981	Retainer
	2	6002 983	Retainer
	6	6024 271	Screw
4	1	3514 070-1	MOULDING PACKAGE, Fender Frt. Extension (12-15-2)
	5	9417 981	Screw
5	1	3419 950	MOULDING PACKAGE, Hood Frt. (15-25-2)
	8	6024 271	Screw
6	1	2998 274	LETTER, Hood Front "D" (15-06-16)
	1	2998 275	"O"
	1	2998 467	"D"
	1	2998 276	"G"
	1	2998 277	"E"
	10	9420 254	Nut
7	1	2933 568-9	MOULDING PACKAGE, Body Frt. Pillar Drain Trough (23-59-61)
	10	6027 459	Screw
8	1	2893 698-9	MOULDING, Frt. Door Wdo. Opng. Frame, Upr. (23-23-32)
9	1	2893 700-1	MOULDING, Frt. Door Wdo. Opng. Frame, Rear (23-23-32)
10	1	2893 700	MOULDING, Rear Door Wdo. Opng. Frame, Frt., Lt. (23-23-33)
	1	2893 701	MOULDING, Rear Door Wdo. Opng. Frame, Frt., Rt. (23-23-33)
11	1	2893 722-3	MOULDING, Rear Door Wdo. Opng. Frame, Upr. (23-23-33)
12	1	#3419 424-5	MOULDING PACKAGE, Roof Side Drain Trough, Frt. (23-59-61)
	10	6027 459	Screw
13	1	2933 586-7	MOULDING PACKAGE, Roof Side Drain Trough, Rear (23-59-61)
	6	6024 271	Screw
14	1	2933 594-5	MOULDING PACKAGE, Deck Opng. Upr. Pnl., use w/Vinyl Roof or Two Tone Paint (23-23-31)
	10	6027 459	Screw
15	1	2965 502	NAME PLATE, Deck Lid, "Dodge" (23-19-114)
15A	2	2842 795	NAME PLATE, Qtr. Outside, Custom (23-34-238)
	2	6027 352	Nut
16	2	2902 300	NAME PLATE, Qtr. Outside, Polara (23-34-238)
	6	6002 852	Retainer
17	1	3514 132-3	MOULDING PACKAGE, Qtr. Outside Pnl., "Black" (23-23-39)
	1	3514 134-5	"Blue"
	1	3514 136-7	"Green"
	1	3514 140-1	"Tan"
	1	3549 656-7	"Red"
	14	6002 981	Retainer 14 6024 271 Screw
	2	6002 983	Retainer 2 6024 152 Nut
18	1	3514 078-9	MOULDING PACKAGE, Qtr. Outside Whl. Opng. (23-23-39)
	14	6024 271	Screw
19	1	2933 802-3	MOULDING PACKAGE, Body Side Sill (23-23-2)
	16	6002 601	Retainer
	26	6024 271	Screw 2 6028 057 Screw
20	1	3514 094-5	MOULDING PACKAGE, Rear Door Outside, "Black" (23-23-33)
	1	3514 096-7	"Blue"
	1	3514 098-9	"Green"
	1	3549 636-7	"Tan"
	1	3514 100-1	"Red"
	4	6002 983	Retainer
	6	6002 981	Retainer
	6	6024 271	Screw 4 6026 523 Nut
21	2	3514 090	MOULDING PACKAGE, Door Outside, "Black" (23-23-32)
	2	3514 091	"Blue"
	2	3514 092	"Green"
	2	3549 108	"Tan"
	2	3514 093	"Red"
	2	6002 983	Retainer
	2	6026 523	Nut
	3	6002 981	Retainer
	3	6024 271	Screw

All Packages Include Attaching Parts

Part Type Code is Indicated in Parentheses

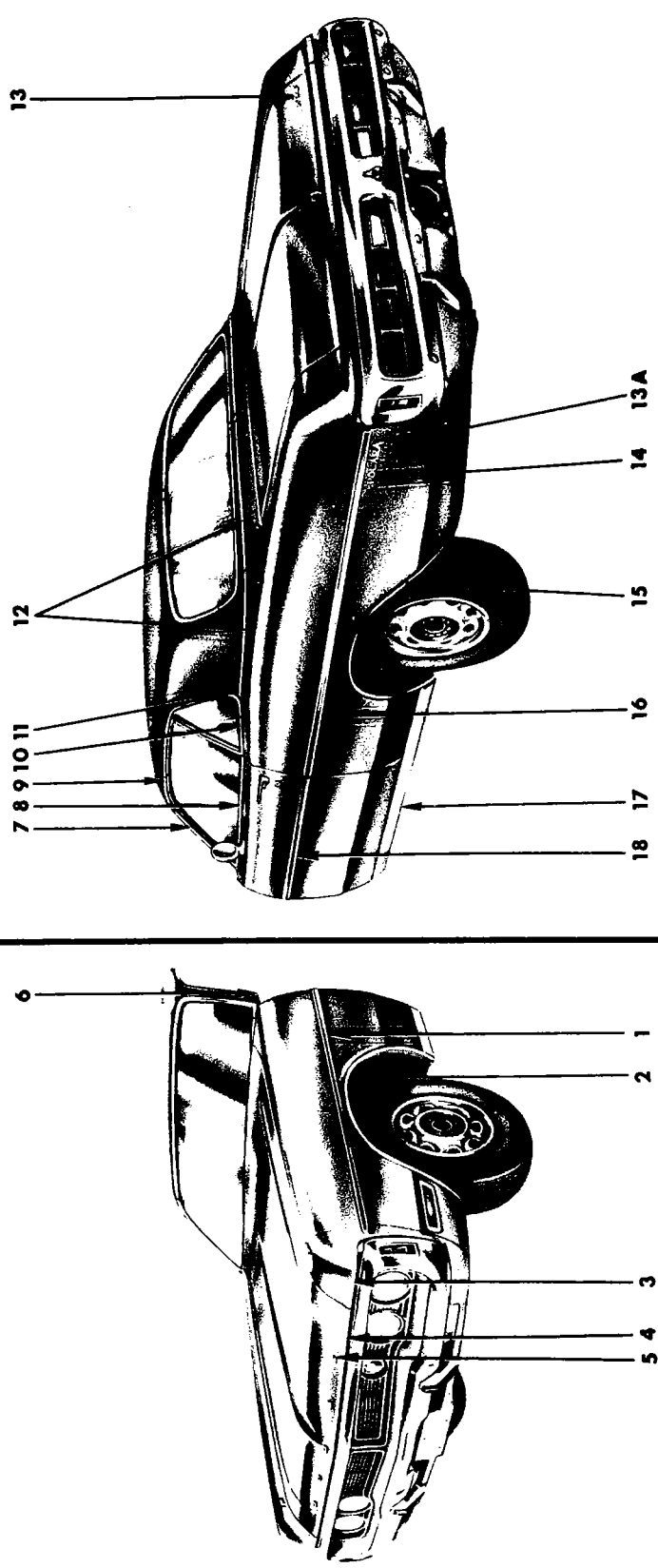

1970
EXTERIOR VIEW - DODGE POLARA D-L 2 DOOR HARDTOP

REF. NO.	QTY	PART NUMBER	DESCRIPTION
1	2	3514 126	MOULDING PACKAGE, Fender Side, "Black" (12-15-2)
	2	3514 127	"Blue"
	2	3514 128	"Green"
	2	3514 130	"Tan"
	2	3549 653	"Red"
	2	6026 523	Nut
	2	6002 983	Retainer
	6	6002 981	Retainer
	6	6024 271	Screw
2	1	2933 266-7	MOULDING PACKAGE, Fender, w/Opening (12-15-2)
	7	6024 271	Screw
3	1	3514 070-1	MOULDING PACKAGE, Fender Front Extension (12-15-2)
	5	9417 981	Screw
4	1	3419 950	MOULDING PACKAGE, Hood Front (15-25-2)
	8	6024 271	Screw
5	1	2998 274	LETTER, Hood Front "D" (15-06-16)
	1	2998 275	"O"
	1	2998 467	"D"
	1	2998 276	"G"
	1	2998 277	"E"
	10	9420 254	Nut
6	1	3419 482-3	MOULDING PACKAGE, Body Frt. Lwr., Pillar (23-23-14)
	2	6024 271	Screw
7	1	2933 602-3	MOULDING PACKAGE, Body Frt. Pillar Drain, Trough (23-59-61)
	6	6027 459	Screw
8	1	2933 722-3	MOULDING PACKAGE, Door Outside Belt (23-23-32)
	10	6002 782	Retainer and Seal
9	1	#3419 416-7	MOULDING PACKAGE, Roof Side Drain Trough, Front and Rear (23-59-61)
	4	6027 459	Screw
10	1	2933 610-1	MOULDING PACKAGE, Qtr. Outside Belt (23-23-39)
	6	6002 782	Retainer and Seal
11	1	3419 032-3	MOULDING PACKAGE, Roof Side Drain Trough, Rear Extension (Not used w/Belt Mldg.) UP TO Approx. Nov. 15, 1969 (23-59-61)
	2	6027 459	Screw
	1	3549 680-1	MOULDING PACKAGE, Roof Side Drain Trough, Rear Extension (Not used w/Belt Mldg.) AFTER Approx. Nov. 15, 1969 (23-59-61)
	2	6024 271	Screw
12	1	2933 612-3	MOULDING PACKAGE, Deck Opng. Upr. Pnl., use w/Vinyl Roof or Two Tone Paint (23-23-31)
	6	6002 920	Retainer
	8	6002 912	Fastener 6 9420 867 Nut
13	1	2965 502	NAME PLATE, Deck Lid, "Dodge" (23-19-114)
13A	2	2842 795	NAME PLATE, Qtr. Outside, "Custom"
	2	6027 352	Nut
14	2	2902 300	NAME PLATE, Qtr. Outside, "Polara" (23-34-238)
	6	6002 852	Retainer
15	1	3514 078-9	MOULDING PACKAGE, Qtr. Outside Whl. Opng. (23-23-39)
	14	6024 271	Screw
16	2	3514 142	MOULDING PACKAGE, Qtr. Pnl. Outside, "Black" (23-23-39)
	2	3514 143	"Blue"
	2	3514 144	"Green"
	2	3514 146	"Tan"
	2	3549 658	"Red"
	1	6002 983	Retainer 1 6024 152 Nut
	10	6002 981	Retainer 10 6024 271 Screw
17	1	2933 802-3	MOULDING PACKAGE, Body Side Sill (23-23-2)
	16	6002 601	Retainer
	26	6024 271	Screw
	2	6028 057	Screw
18	2	3514 118	MOULDING PACKAGE, Door O/Side "Black" (23-23-32)
	2	3514 119	"Blue"
	2	3514 120	"Green"
	2	3549 110	"Tan"
	2	3514 121	"Red"
	2	6002 983	Retainer
	2	6026 523	Nut
	4	6002 981	Retainer
	4	6024 271	Screw

All Packages Include Attaching Parts

Part Type Code is Indicated in Parentheses

1970

EXTERIOR VIEW - DODGE POLARA D-L 2 DOOR HARDTOP

19a2865 A

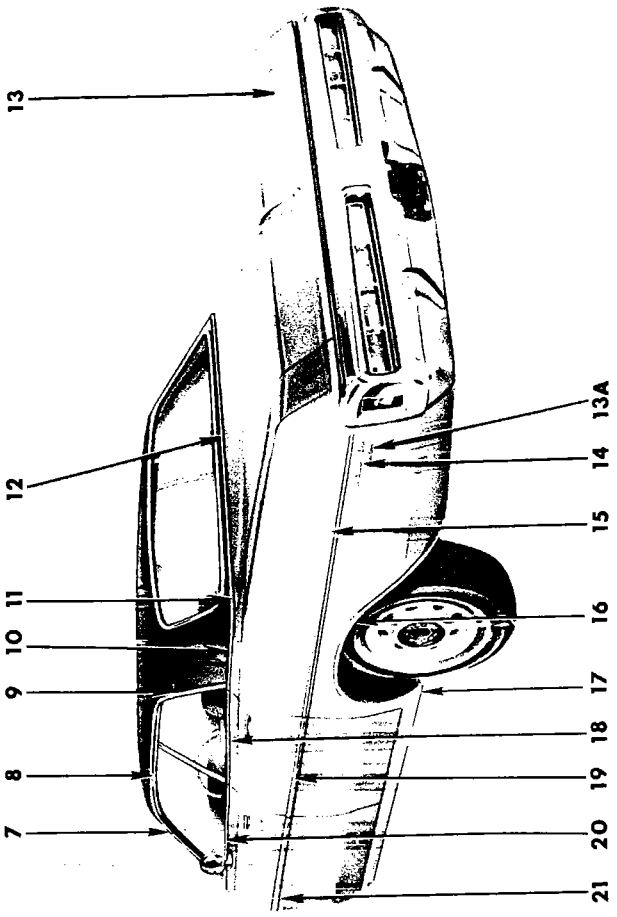

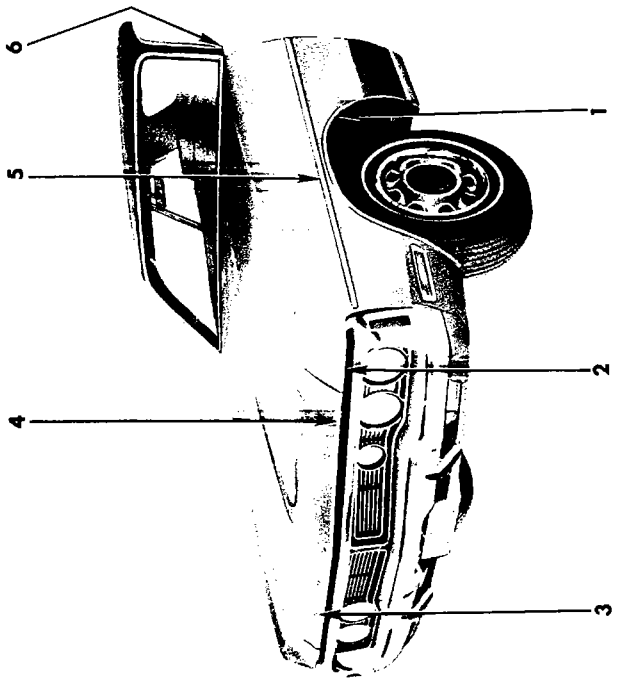

1970
EXTERIOR VIEW - DODGE POLARA D-L 4 DOOR HARDTOP

REF. NO.	QTY	PART NUMBER	DESCRIPTION
1	1	2933 266-7	MOULDING PACKAGE, Fender Wheel Opening (12-15-2)
	7	6024 271	Screw
2	1	3514 070-1	MOULDING PACKAGE, Fender Front Extension (12-15-2)
	5	9417 981	Screw
3	1	2998 274	LETTER, "D", Hood Front (15-06-16)
	1	2998 275	"O"
	1	2998 467	"D"
	1	2998 276	"G"
	1	2998 277	"E"
	10	9420 254	Nut
4	1	3419 950	MOULDING PACKAGE, Hood Front (15-25-2)
	8	6024 271	Screw
5	2	3514 126	MOULDING PACKAGE, Fender Side, "Black" (12-15-2)
	2	3514 127	"Blue"
	2	3514 128	"Green"
	2	3514 130	"Tan"
	2	3549 653	"Red"
	2	6026 523	Nut
	6	6002 981	Retainer
	2	6002 983	Retainer
	6	6024 271	Screw
6	1	3419 482-3	MOULDING PACKAGE, Body Frt. Lwr. Pillar (23-23-14)
	2	6024 271	Screw
7	1	2933 600-1	MOULDING PACKAGE, Body Front Pillar Drain Trough (23-59-61)
	6	6027 459	Screw
8	1	#3419 418-9	MOULDING PACKAGE, Roof Side Drain Trough, Front (23-59-61)
	4	6027 459	Screw
9	1	2933 588-9	MOULDING PACKAGE, Roof Side Drain Trough, Rear (23-59-61)
	4	6027 459	Screw
10	1	2933 596-7	MOULDING PACKAGE, Qtr. Outside Belt, use w/Vinyl Roof or Two Tone Paint (23-23-39)
	8	6002 920	Retainer
	8	9420 867	Nut
	8	6002 192	Fastener
11	1	2933 606-7	MOULDING PACKAGE, Deck Opng. Upr. Pnl. Outer Corner, use w/Vinyl Roof or Two Tone Paint (23-23-31)
	4	6025 985	Screw
12	1	2933 608-9	MOULDING PACKAGE, Deck Opng. Upr. Pnl., use w/Vinyl Roof or Two Tone Paint (23-23-31)
	8	6002 920	Retainer
	8	9420 867	Nut
	8	6002 192	Fastener
13	1	2965 502	NAME PLATE, Deck Lid, "Dodge" (23-19-114)
13A	2	2842 795	NAME PLATE, Qtr. Outside, "Custom" (23-34-238)
	2	6027 352	Nut
14	2	2902 300	NAME PLATE, Qtr. Outside, "Polara" (23-34-238)
	6	6002 852	Retainer
15	1	3514 132-3	MOULDING PACKAGE, Qtr. Outside Pnl., "Black" (23-23-39)
	1	3514 134-5	"Blue"
	1	3514 136-7	"Green"
	1	3514 140-1	"Tan"
	1	3549 656-7	"Red"
	14	6002 981	Retainer
	14	6024 271	Screw
	2	6002 983	Retainer 2 6024 152 Nut
16	1	3514 078-9	MOULDING PACKAGE, Qtr. Outside Wheel Opng. (23-23-39)
	14	6024 271	Screw
17	1	2933 802-3	MOULDING PACKAGE, Body Side Sill (23-23-2)
	16	6002 601	Retainer
	26	6024 271	Screw
18	1	2933 912-3	MOULDING PACKAGE, Rear Door Outside Belt (23-23-33)
	10	6002 782	Retainer
19	1	3514 094-5	MOULDING PACKAGE, Rear Door Outside, "Black" (23-23-33)
	1	3514 096-7	"Blue"
	1	3514 098-9	"Green"
	1	3549 636-7	"Tan"
	1	3514 100-1	"Red"
	4	6002 983	Retainer
	4	6026 523	Nut
	6	6002 981	Retainer
	6	6024 271	Screw
20	1	2933 764-5	MOULDING PACKAGE, Door Outside Belt (23-23-32)
	10	6002 782	Retainer and Seal
21	2	3514 090	MOULDING PACKAGE, Front Door Outside, "Black" (23-23-32)
	2	3514 091	"Blue"
	2	3514 092	"Green"
	2	3549 108	"Tan"
	2	3514 093	"Red"
	2	6002 983	Retainer
	2	6026 523	Nut
	3	6002 981	Retainer
	3	6024 271	Screw

All Packages Include Attaching Parts

Part Type Code is Indicated in Parentheses

1970

EXTERIOR VIEW - DODGE POLARA D-L 4 DOOR HARDTOP

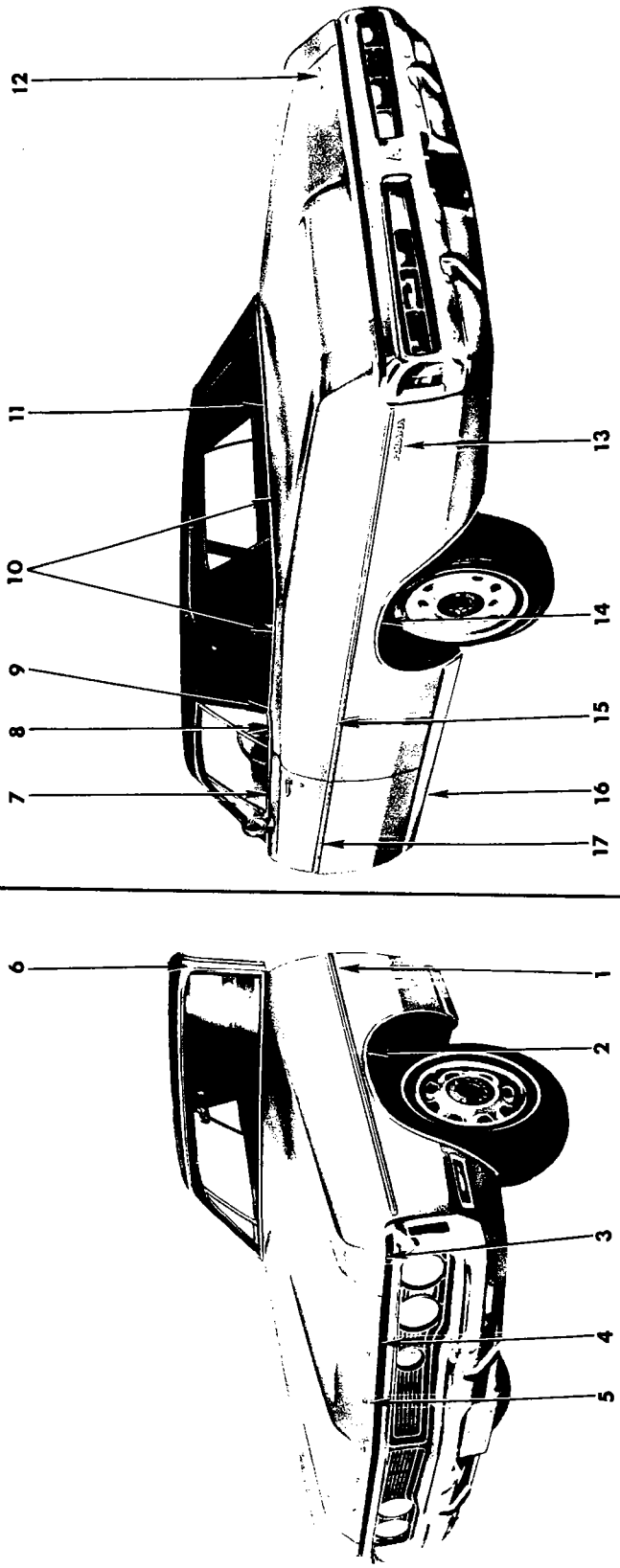

19a2867

1970
EXTERIOR VIEW - DODGE POLARA D-L CONVERTIBLE COUPE

REF. NO.	QTY	PART NUMBER	DESCRIPTION
1	2	3514 126	MOULDING PACKAGE, Fender Side, "Black" (12-15-2)
	2	3514 127	"Blue"
	2	3514 128	"Green"
	2	3514 130	"Tan"
	2	3549 653	"Red"
	2	6026 523	Nut
	2	6002 983	Retainer
	6	6002 981	Retainer
	6	6024 271	Screw
2	1	2933 266-7	MOULDING PACKAGE, Fender w/Opening (12-15-2)
	7	6024 271	Screw
3	1	3514 070-1	MOULDING PACKAGE, Fender Front Extension (12-15-2)
	5	9417 981	Screw
4	1	3419 950	MOULDING PACKAGE, Hood Front (15-25-2)
	8	6024 271	Screw
5	1	2998 274	LETTER, "D", Hood Front (15-06-16)
	1	2998 275	"O"
	1	2998 467	"D"
	1	2998 276	"G"
	1	2998 277	"E"
	10	9420 254	Nut
6	1	2901 018-9	MOULDING, Body Frt. Upr. Pillar Outside (23-23-14)
7	1	2933 722-3	MOULDING PACKAGE, Door Outside Belt (23-23-32)
	10	6002 782	Retainer and Seal
8	1	2933 754-5	MOULDING PACKAGE, Qtr. Outside Belt, Frt. (23-23-39)
	6	6002 782	Retainer and Seal
9	1	2933 874-5	MOULDING PACKAGE, Qtr. Outside Belt, Intermediate (23-23-39)
	2	9420 928	Screw
	4	6002 782	Retainer and Seal
10	1	2933 876-7	MOULDING PACKAGE, Qtr. Outside Belt, Rr. (23-23-39)
	24	6002 735	Retainer
	24	---- ---	Screw
11	1	2901 178	COVER, Qtr. Outside Belt Rr. Mldg. Joint (23-23-41)
12	1	2965 502	NAME PLATE, Deck Lid, "Dodge" (23-19-114)
13	2	2902 300	NAME PLATE, Qtr. Outside Polara (23-34-238)
	6	6002 852	Retainer
14	1	3514 078-9	MOULDING PACKAGE, Qtr. Outside Wheel Opng. (23-23-39)
	14	6024 271	Screw
15	2	3514 142	MOULDING PACKAGE, Qtr. Pnl. Outside, "Black" (23-23-39)
	2	3514 143	"Blue"
	2	3514 144	"Green"
	2	3514 146	"Tan"
	2	3549 658	"Red"
	1	6002 983	Retainer
	1	6024 152	Nut
	10	6002 981	Retainer
	10	6024 271	Screw
16	1	2933 702-3	MOULDING PACKAGE, Body Side Sill (23-23-2)
	16	6002 601	Retainer
	26	6024 271	Screw
	2	6028 057	Screw
17	2	3514 118	MOULDING PACKAGE, Door Outside "Black" (23-23-32)
	2	3514 119	"Blue"
	2	3514 120	"Green"
	2	3549 110	"Tan"
	2	3514 121	"Red"
	2	6002 983	Retainer
	2	6026 523	Nut
	4	6002 981	Retainer
	4	6024 271	Screw

All Packages Include Attaching Parts

Part Type Code is Indicated in Parentheses

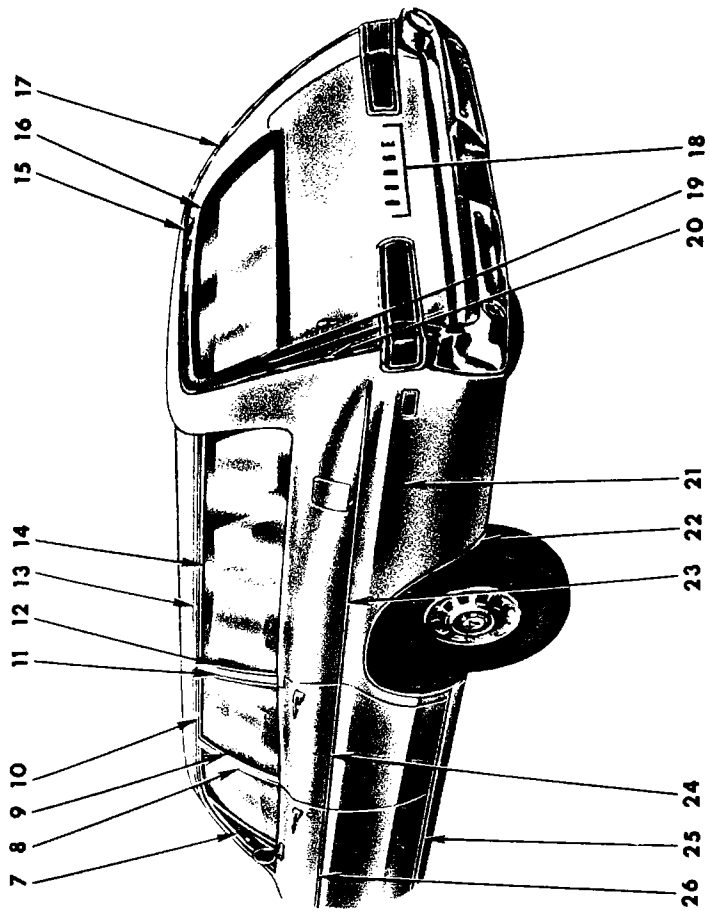

19a3168

1970
EXTERIOR VIEW - DODGE POLARA D-L STATION WAGON

REF. NO.	QTY	PART NUMBER	DESCRIPTION
1	2	3514 126	MOULDING PACKAGE, Fender Side (Black) (12-15-2)
	2	3514 127	"Blue"
	2	3514 128	"Green"
	2	3514 130	"Tan"
	2	3549 653	"Red"
	12	6003 132	Retainer
	4	6002 983	Retainer
2	1	2932 266-7	MOULDING PACKAGE, Fender Wheel Opening (12-15-2)
	14	6028 545	Screw
3	1	3419 950	MOULDING PACKAGE, Hood Front (15-25-2)
	8	152 334	Screw
4	1	2998 274	LETTER "D" Hood Front (15-06-16)
	1	2998 275	"O"
	1	2998 467	"D", Center
	1	2998 276	"G"
	1	2998 277	"E"
	10	9420 254	Nut
5	1	3419 482-3	MOULDING PACKAGE, Body Frt. Lwr. Plr. (23-23-14)
	2	6024 271	Screw
6	1	2933 568-9	MOULDING PACKAGE, Body Front Pillar Drain Trough (23-59-61)
	10	6027 459	Screw
7	1	2893 698-9	MOULDING, Frt. Door Wdo. Opng. Frame, Upr. (23-23-32)
8	1	2893 700-1	MOULDING, Frt. Door Wdo. Opng. Frame, Rear (23-23-32)
9	1	2893 700	MOULDING, Rear Door Wdo. Opng. Frame, Frt. Lt. (23-23-33)
	1	2893 701	MOULDING, Rear Door Wdo. Opng. Frame, Frt., Rt. (23-23-33)
10	1	2893 724-5	MOULDING, Rear Door Wdo. Opng. Frame, Upr. (23-23-33)
11	1	2893 728-9	MOULDING, Rear Door Wdo. Opng. Frame, Rear (23-23-33)
12	1	2893 256-7	MOULDING, Qtr. Wdo. Outside, Frt., Prime (23-23-73)
	1	2894 870-1	MOULDING, Qtr. Wdo. Outside, Frt., Finish (23-23-73)
13	1	3419 450-1	MOULDING PACKAGE, Roof Side Drain Trough (23-59-61)
	12	6024 659	Screw
14	1	2893 258-9	MOULDING, Qtr. Wdo. Outside, Upr., Prime (23-23-73)
	1	2894 872-3	MOULDING, Qtr. Wdo. Outside, Upr., Finish (23-23-73)
15	1	2894 418	MOULDING, Roof Rear Air Deflector Center (23-23-60)
16	1	2894 445	MOULDING, Roof Pnl. Outside Tailgate Opng. Upr., Prime (23-23-60)
17	1	2894 416-7	MOULDING, Roof Rear Air Deflector, End (23-23-60)
18	2	2964 732	LETTER "D", Tailgate Outside Pnl. (23-54-11)
	1	2964 733	"O"
	1	2964 734	"G"
	1	2964 735	"E"
	10	6000 050	Clip
19	1	2894 442-3	MOULDING, Qtr. Pnl. Outside Tailgate Plr. Upr. Tailgate Opng., Prime (23-23-60)
20	1	3440 778-9	MOULDING, Qtr. Pnl. Outside Tailgate Plr., Upr., w/o Assist Handles (23-23-60)
	1	3440 736-7	MOULDING, Qtr. Pnl. Outside Tailgate Plr. Upr., use w/Assist Handles (23-23-60)
21	2	3504 096	NAME PLATE, Quarter Outside Panel "Polara" (23-34-238)
22	1	3419 436-7	MOULDING PACKAGE, Qtr. Outside Wheel Opng. (23-23-39)
	16	6024 271	Screw
23	1	3514 110-1	MOULDING PACKAGE, Qtr. Outside Pnl., "Black" (23-23-39)
	1	3514 112-3	"Blue"
	1	3514 114-5	"Green"
	1	3549 102-3	"Tan"
	1	3514 116-7	"Red"
	2	6026 523	Nut
	2	6002 983	Retainer
	16	6002 981	Retainer
	16	6024 271	Screw
24	1	3514 094-5	MOULDING PACKAGE, Rear Door Outside, "Black" (23-23-33)
	1	3514 096-7	"Blue"
	1	3514 098-9	"Green"
	1	3549 636-7	"Tan"
	1	3514 100-1	"Red"
	4	6002 983	Retainer
	4	6026 523	Nut
	6	6002 981	Retainer
	6	6024 271	Screw
25	1	3514 046-7	MOULDING PACKAGE, Body Side Sill (23-23-2)
	16	6002 601	Retainer
	10	---- ---	Screw
	4	6028 057	Screw
26	2	3514 090	MOULDING PACKAGE, Frt. Door Outside, "Black" (23-23-32)
	2	3514 091	"Blue"
	2	3514 092	"Green"
	2	3549 108	"Tan"
	2	3514 093	"Red"
	2	6002 983	Retainer
	2	6026 523	Nut
	3	6002 981	Retainer
	3	6024 271	Screw

All Packages Include Attaching Parts

Part Type Code is Indicated in Parentheses

1970

EXTERIOR VIEW - DODGE POLARA D-L STATION WAGON

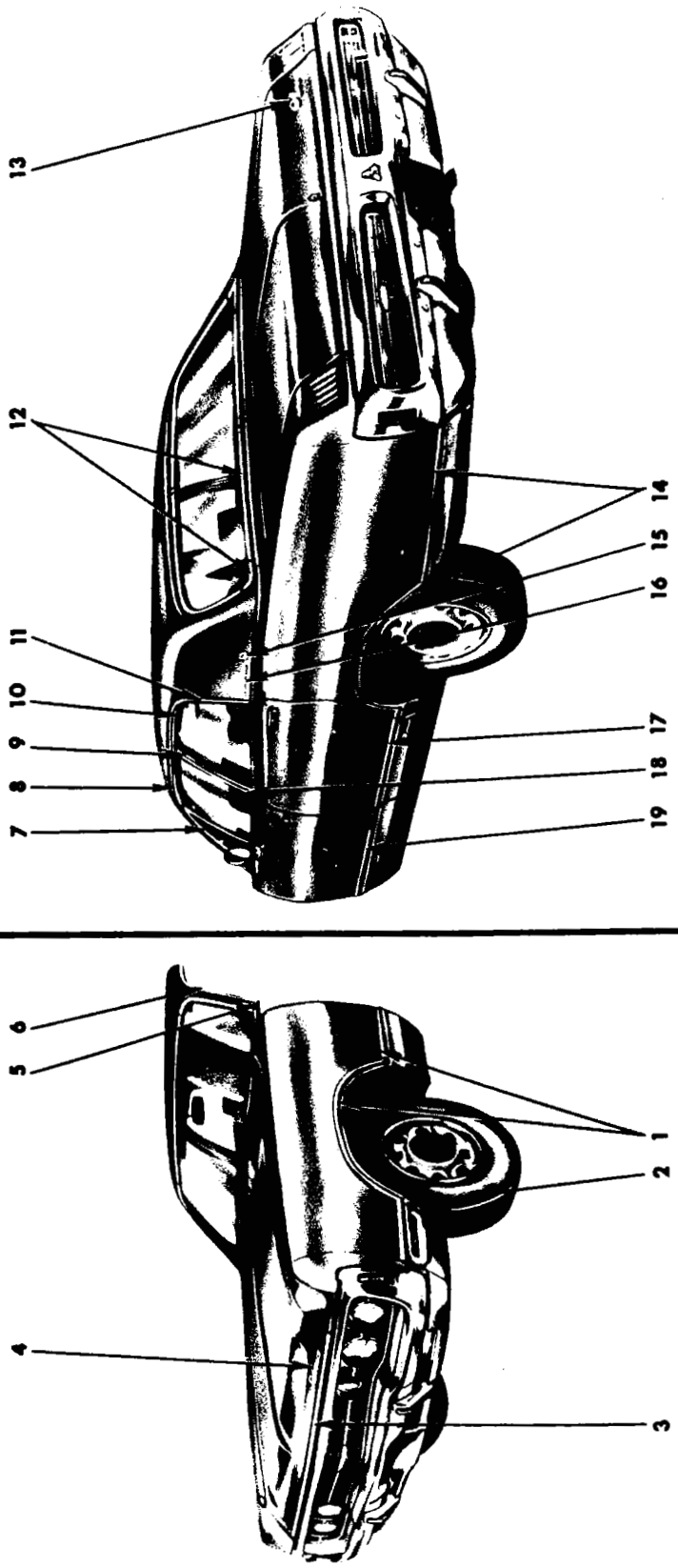

1970
EXTERIOR VIEW - DODGE MONACO D-H 4 DOOR SEDAN

REF. NO.	QTY	PART NUMBER	DESCRIPTION
1	1	3514 008-9	MOULDING PACKAGE, Lwr. Rear and Wheel Opng. (12-15-2)
	6	6002 902	Retainer
	12	6028 545	Screw
2	1	3514 014-5	MOULDING PACKAGE, Fndr. Side Front, w/o Cornering Lamp (12-15-2)
	1	3514 016-7	MOULDING PACKAGE, Fndr. Side Front, w/Cornering Lamp
	2	9419 784	Nut
	2	6028 545	Screw
	2	6028 614	Screw
3	1	3419 950	MOULDING PACKAGE, Hood Front (15-25-2)
	8	152 334	Screw
4	1	2998 529	NAME PLATE, Hood Front (Monaco) (15-06-3)
5	1	3419 482-3	MOULDING PACKAGE, Body Frt. Lwr. Pillar (23-23-14)
	2	6024 271	Screw
6	1	2933 568-9	MOULDING PACKAGE, Body Front Pillar Drain Trough (23-59-61)
	10	6027 459	Screw
7	1	2893 698-9	MOULDING, Frt. Door Wdo. Opng. Frame, Upr. (23-23-32)
8	1	3419 424-5	MOULDING PACKAGE, Roof Side Drain Trough, Frt. (23-59-61)
	10	6027 459	Screw
9	1	2893 700	MOULDING, Rr. Door Wdo. Opng. Frame, Frt., Lt. (23-23-33)
	1	2893 701	MOULDING, Rr. Door Wdo. Opng. Frame, Frt., Rt. (23-23-33)
10	1	2893 722-3	MOULDING, Rr. Door Wdo. Opng. Frame, Upr. (23-23-33)
11	1	2933 586-7	MOULDING PACKAGE, Roof Side Drain Trough, Rear (23-59-61)
	6	6024 271	Screw
12	1	2933 594-5	MOULDING PACKAGE, Deck Opng. Upr. Pnl., w/Vinyl Roof or Two Tone Paint (23-23-31)
	10	6027 459	Screw
13	1	2965 503	NAME PLATE, Deck Lid, "Monaco" (23-19-114)
	3	9420 263	Nut
14	1	3514 072-3	MOULDING PACKAGE, Qtr. Outside Pnl. (23-23-39)
	16	6024 271	Screw
	6	6002 902	Retainer
	2	6028 614	Screw
15	2	2965 487	MEDALLION, Quarter Outside Brougham (23-34-334)
	4	9420 263	Nut
16	2	3504 323	NAME PLATE, Quarter Outside "Brougham" (23-34-238)
	4	9420 263	Nut
17	1	3514 044-5	MOULDING PACKAGE, Rr. Door Outside (23-23-33)
	8	6002 902	Retainer
	8	6024 271	Screw
	4	6026 523	Nut
	2	6002 998	Retainer
18	1	2893 700-1	MOULDING, Frt. Door Wdo. Opng. Frame, Rear (23-23-32)
19	1	3514 042-3	MOULDING PACKAGE, Frt. Door Outside (23-23-32)
	2	6002 998	Retainer
	2	6026 523	Nut
	10	6002 902	Retainer
	10	6024 271	Screw

All Packages Include Attaching Parts

Part Type Code is Indicated in Parentheses

1970
EXTERIOR VIEW - DODGE MONACO D-H 4 DOOR SEDAN

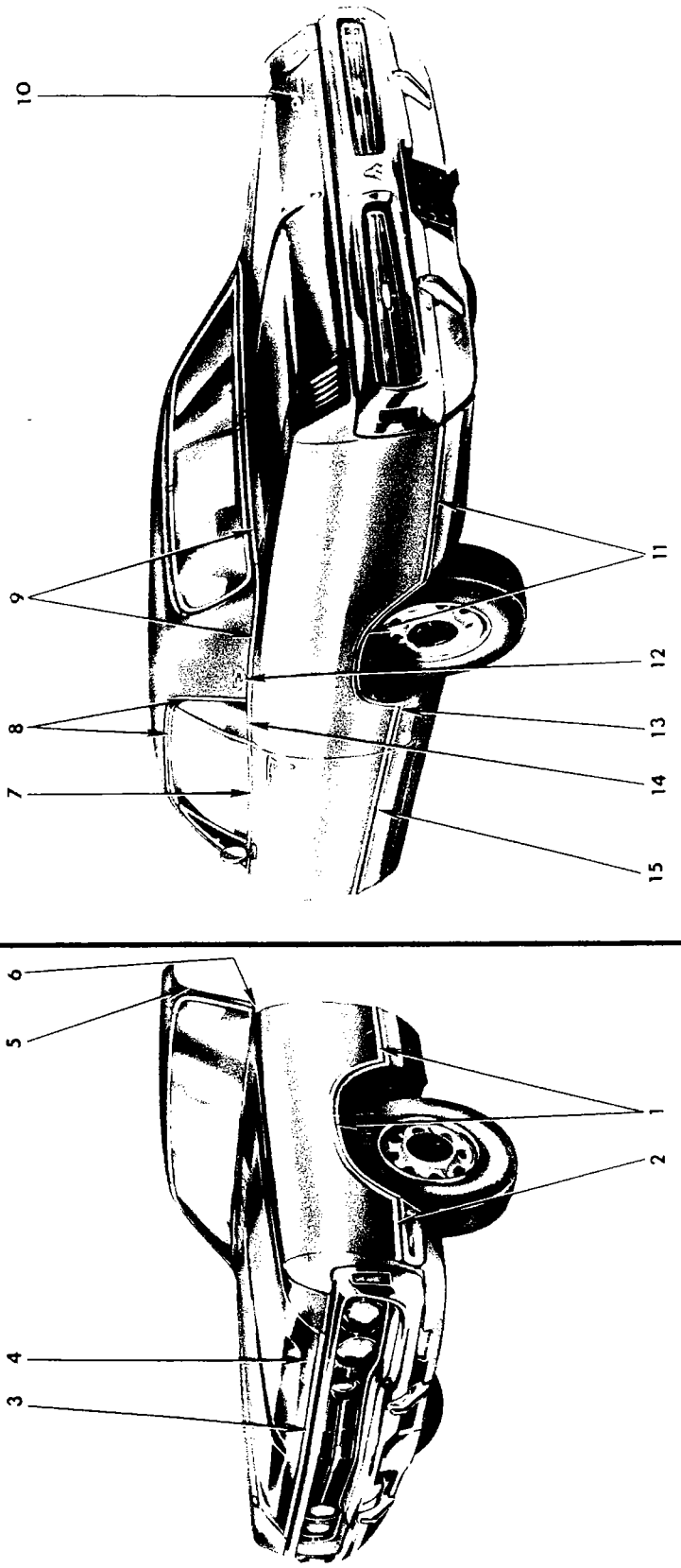

1970
EXTERIOR VIEW - DODGE MONACO D-H 2 DOOR HARDTOP

REF. NO.	QTY	PART NUMBER	DESCRIPTION
1	1	3514 008-9	MOULDING PACKAGE, Fender Rear Lower and Wheel Opening (12-15-2)
	6	6002 902	Retainer
	12	6028 545	Screw
2	1	3514 014-5	MOULDING PACKAGE, Fender Side Front (w/o Cornering Lamps) (12-15-2)
	1	3514 016-7	MOULDING PACKAGE, Fender Side Front (w/Cornering Lamps)
	1	9419 784	Nut
	1	6028 614	Screw
3	1	3419 950	MOULDING PACKAGE, Hood Front (15-25-2)
	8	152 334	Screw
4	1	2998 529	NAME PLATE, Hood Front (Monaco) (15-06-3)
5	1	2933 602-3	MOULDING PACKAGE, Body Front Pillar Drain Trough (23-59-61)
	6	6027 459	Screw
6	1	3419 482-3	MOULDING PACKAGE, Body Frt. Lwr. Pillar (23-23-14)
	2	6024 271	Screw
7	1	2933 722-3	MOULDING PACKAGE, Door Outside Belt (23-23-32)
	10	6002 782	Retainer w/Seal
8	1	3419 416-7	MOULDING PACKAGE, Roof Side Drain Trough, Front and Rear (23-59-61)
	4	6027 459	Screw
9	1	2933 612-3	MOULDING PACKAGE, Deck Opng. Upr. Pnl., use w/Vinyl Roof or Two Tone Paint (23-23-31)
	6	6002 920	Retainer
	6	9420 867	Nut
	8	6002 192	Fastener
10	1	2965 503	NAME PLATE, Deck Lid, "Monaco" (23-19-114)
	3	9420 263	Nut
11	1	3514 040-1	MOULDING PACKAGE, Qtr. Outside Rear and Wheel Opng. (23-23-39)
	6	6002 902	Retainer
	2	6028 614	Screw
	10	6028 545	Screw
12	2	2965 473	MEDALLION, Quarter Outside Monaco Crest (23-34-334)
	4	9420 263	Nut
13	1	3514 036-7	MOULDING PACKAGE, Qtr. Outside, Frt. (23-23-39)
	8	6002 902	Retainer
14	1	2933 610-1	MOULDING and T/PLATE PACKAGE, Qtr. Outside Belt (23-23-39)
	6	6002 782	Retainer and Seal
15	1	3514 032-3	MOULDING PACKAGE, Door Outside (23-23-32)
	14	6002 902	Retainer
	4	6026 523	Nut
	2	6002 998	Retainer w/Stud and Seal

All Packages Include Attaching Parts

Part Type Code is Indicated in Parentheses

1970

EXTERIOR VIEW - DODGE MONACO D-H 2 DOOR HARD TOP

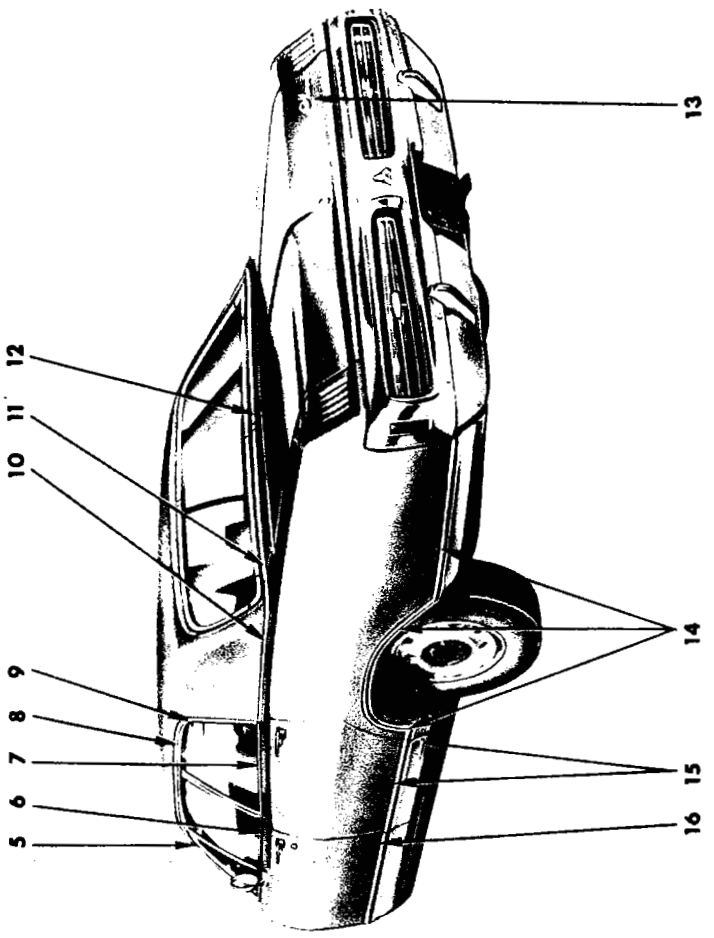

1970
EXTERIOR VIEW - DODGE MONACO D-H 4 DOOR HARDTOP

REF. NO.	QTY	PART NUMBER	DESCRIPTION
1	1	3514 008-9	MOULDING PACKAGE, Fender and Whl. Opng. (12-15-2)
	6	6002 902	Retainer
	12	6028 545	Screw
2	1	3514 014-5	MOULDING PACKAGE, Fender Side Front (12-15-2)
	1	3514 016-7	MOULDING PACKAGE, Fender Side Front, w/Cornering Lamp (12-15-2)
	1	---- ---	Nut
	1	6028 614	Screw
3	1	3419 950	MOULDING PACKAGE, Hood Front (15-25-2)
	8	6024 271	Screw
4	1	3419 482-3	MOULDING PACKAGE, Body Frt. Lwr. Pillar (23-23-14)
	2	6024 271	Screw
5	1	2933 600-1	MOULDING PACKAGE, Body Frt. Pillar Drain Trough (23-59-61)
	6	6027 459	Screw
6	1	2933 764-5	MOULDING PACKAGE, Frt. Door Outside Belt (23-23-32)
	10	6002 782	Retainer and Seal
7	1	2933 912-3	MOULDING PACKAGE, Rr. Door Outside Belt (23-23-33)
	10	6002 782	Retainer
8	1	#3419 418-9	MOULDING PACKAGE, Roof Side Drain Trough, Front (23-59-61)
	4	6027 459	Screw
9	1	2933 588-9	MOULDING PACKAGE, Roof Side Drain Trough, Rear (23-59-61)
	4	6027 459	Screw
10	1	2933 596-7	MOULDING PACKAGE, Qtr. Outside Belt, use w/Vinyl Roof or Two Tone Paint (23-23-39)
	8	6002 920	Retainer
	8	9420 867	Nut
	8	6002 192	Fastener
11	1	2933 606-7	MOULDING PACKAGE, Deck Opng. Upr. Pnl. Outer Corner (23-23-31)
	4	6025 985	Screw
12	1	2933 608-9	MOULDING PACKAGE, Deck Opng. Upr. Pnl. (23-23-31)
	8	6002 920	Retainer
	8	9420 867	Nut
	8	6002 192	Fastener
13	1	2965 503	NAME PLATE, Deck Lid, "Monaco" (23-19-114)
	3	9420 263	Nut
14	1	3514 072-3	MOULDING PACKAGE, Qtr. Outside Panel (23-23-39)
	16	6024 271	Screw
	6	6002 902	Retainer
	2	6028 614	Screw
15	1	3514 044-5	MOULDING PACKAGE, Rear Door Outside (23-23-33)
	8	6002 902	Retainer
	8	6024 271	Screw
	4	6026 523	Nut
	2	6002 998	Retainer
16	1	3514 042-3	MOULDING PACKAGE, Front Door Outside (23-23-32)
	2	6002 998	Retainer
	2	6026 523	Nut
	10	6002 902	Retainer
	10	6024 271	Screw

All Packages Include Attaching Parts

Part Type Code is Indicated in Parentheses

1970

EXTERIOR VIEW - DODGE MONACO D-H 4 DOOR HARDTOP

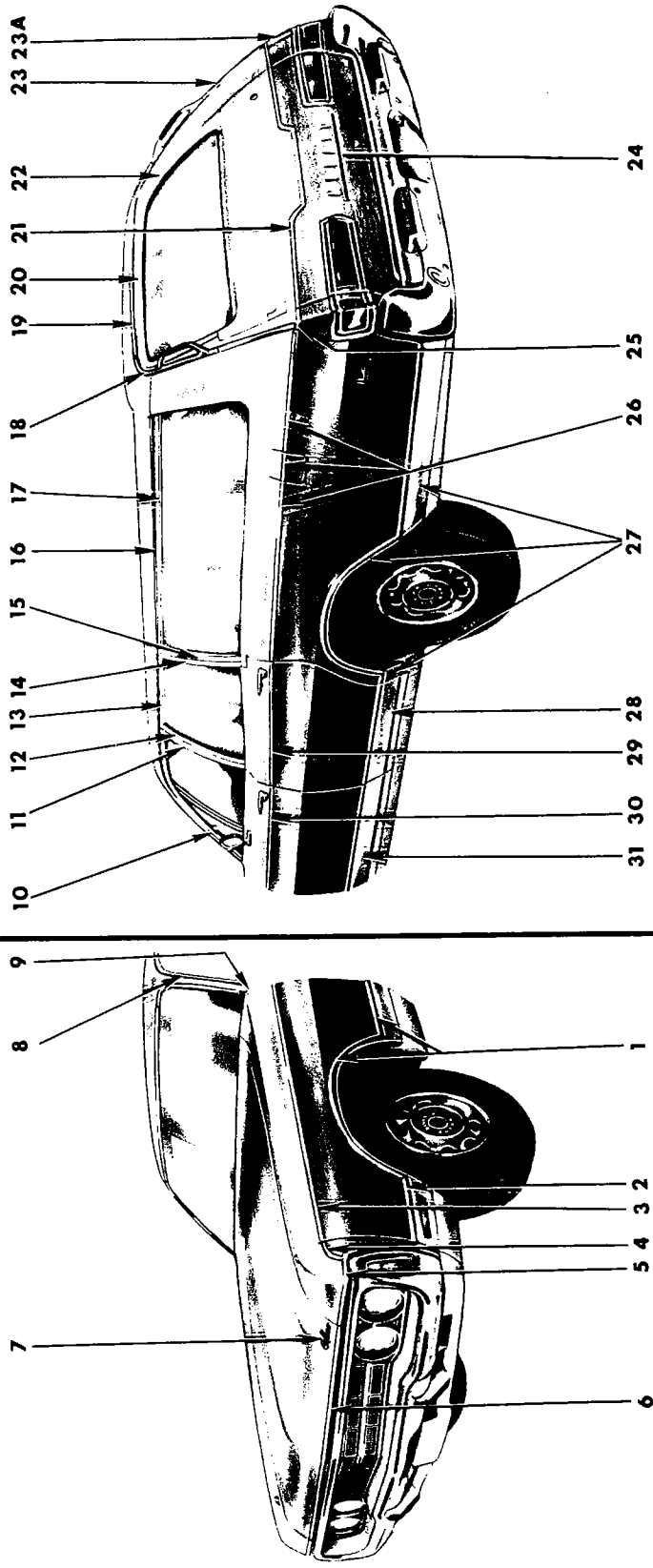

1970
EXTERIOR VIEW - DODGE MONACO D-H STATION WAGON

REF. NO.	QTY	PART NUMBER	DESCRIPTION
1	1	3514 008-9	MOULDING PACKAGE, Fender Lower Rear and Wheel Opening (12-15-2)
	6	6002 902	Retainer
	12	6028 545	Screw
2	1	3514 014-5	MOULDING PACKAGE, Fender Lower Front, w/o Cornering Lamp (12-15-2)
	1	3514 016-7	MOULDING PACKAGE, Fender Lower Front, w/Cornering Lamp (12-15-2)
	1	---- ---	Nut
	1	6028 614	Screw
3	1	2933 896-7	MOULDING PACKAGE, Fender Upper (12-15-2)
	7	6002 628	Retainer
4	1	3481 972-3	MOULDING PACKAGE, Fender Upper Front (12-15-2)
	1	9420 621	Nut
	1	6025 985	Screw
5	1	3514 070-1	MOULDING PACKAGE, Fender Frt. Extension (12-15-2)
	4	152 335	Screw
	6	9431 768	Screw
6	1	3419 950	MOULDING PACKAGE, Hood Front (15-25-2)
	8	6024 271	Screw
7	1	2998 529	NAME PLATE, Hood Front (Monaco) (15-06-3)
8	1	2933 568-9	MOULDING PACKAGE, Body Front Pillar Drain Trough (23-59-61)
9	1	3419 482-3	MOULDING PACKAGE, Body Frt. Lwr. Pillar (23-23-14)
	2	6024 271	Screw
10	1	2893 698-9	MOULDING, Frt. Door Wdo. Opng. Frame, Upr. (23-23-32)
11	1	2893 700-1	MOULDING, Frt. Door Wdo. Opng. Frame, Rear (23-23-32)
12	1	2893 700	MOULDING, Rear Door Wdo. Opng. Frame, Frt., Lt. (23-23-33)
	1	2893 701	MOULDING, Rear Door Wdo. Opng. Frame, Frt., Rt. (23-23-33)
13	1	2893 724-5	MOULDING, Rear Door Wdo. Opng. Frame, Upr. (23-23-33)
14	1	2893 728-9	MOULDING, Rear Door Wdo. Opng. Frame, Rear (23-23-33)
15	1	2893 256-7	MOULDING, Qtr. Wdo. Outside, Frt., Prime (23-23-73)
	1	2894 870-1	MOULDING, Qtr. Wdo. Outside, Frt., Finish (23-23-73)
16	1	3419 450-1	MOULDING PACKAGE, Roof Side Drain Trough (23-59-61)
	12	6024 659	Screw
17	1	2893 258-9	MOULDING, Qtr. Wdo. Outside, Upr. Prime (23-23-73)
	1	2894 872-3	MOULDING, Qtr. Wdo. Outside, Upr. Finish (23-23-73)
18	1	2894 416-7	MOULDING, Roof Rear Air Deflector, End (23-23-60)
19	1	2894 418	MOULDING, Roof Rear Air Deflector, Center (23-23-60)
20	1	2894 445	MOULDING, Roof Pnl. Outside Tailgate Opng., Upr., Prime (23-23-60)
21	1	2933 470	MOULDING PACKAGE, Tailgate Outside (23-23-61)
	7	6002 773	Retainer
	2	6026 523	Nut
	2	6002 162	Retainer
22	1	2894 442-3	MOULDING, Qtr. Pnl. Outside Tailgate Pillar, Upr., Tailgate Opng., Prime (23-23-60)
23	1	2933 620-1	MOULDING PACKAGE, Qtr. Pnl. Outside Tailgate Plr., Upr., w/o Assist Handles (23-23-60)
	4	6002 665	Spacer
	1	2933 616-7	MOULDING PACKAGE, Qtr. Pnl. Outside Tailgate Plr., Upr., Short, w/Assist Handles (23-23-60)
	4	6002 665	Spacer
23A	1	3499 666-7	MOULDING, Qtr. Pnl. Outside Tailgate Pillar Lwr. (23-23-60)
24	1	2964 736	LETTER "M", Tailgate Outside Panel (23-54-11)
	2	2964 733	"O"
	1	2964 738	"N"
	1	2964 739	"A"
	1	2964 740	"C"
	12	6000 050	Clip
25	1	2933 838-9	MOULDING PACKAGE, Qtr. Outside Rear Extension (23-23-39)
	4	6023 898	Screw
26	1	2933 832	MOULDING PACKAGE, Qtr. Outside, Upr., Rt. (23-23-39)
	7	6002 628	Retainer
	1	2933 833	MOULDING PACKAGE, Qtr. Outside, Frt., Upr., Lt. (23-23-39)
	5	6002 628	Retainer
	1	2933 835	MOULDING PACKAGE, Qtr. Fuel Filler Door, Lt. (23-23-39)
	1	6002 162	Retainer
	1	6026 523	Nut
	1	2933 837	MOULDING PACKAGE, Qtr. Outside, Rear, Upr., Lt. (23-23-39)
	3	6002 628	Retainer

All Packages Include Attaching Parts

Part Type Code is Indicated in Parentheses

REF. NO.	QTY	PART NUMBER	DESCRIPTION
27	1	3514 048-9	MOULDING PACKAGE, Qtr. Outside (23-23-39)
	18	6024 271	Screw
28	1	3514 044-5	MOULDING PACKAGE, Rear Door Outside (23-23-33)
	8	6002 902	Retainer
	8	6024 271	Screw
	4	6026 523	Nut
	2	6002 998	Retainer
29	1	2933 830-1	MOULDING PACKAGE, Rear Door Outside, Upr. (23-23-33)
	6	6002 628	Retainer
	4	6002 162	Retainer
	4	6026 523	Nut
30	1	2933 828-9	MOULDING PACKAGE, Frt. Door Outside, Upr. (23-23-32)
	8	6002 773	Retainer
	2	6002 162	Retainer
	2	6026 523	Nut
31	1	3514 042-3	MOULDING PACKAGE, Frt. Door Outside (23-23-32)
	2	6002 998	Retainer
	2	6026 523	Nut
	10	6002 902	Retainer
	10	6024 271	Screw

All Packages Include Attaching Parts

Part Type Code is Indicated in Parentheses

NOTES

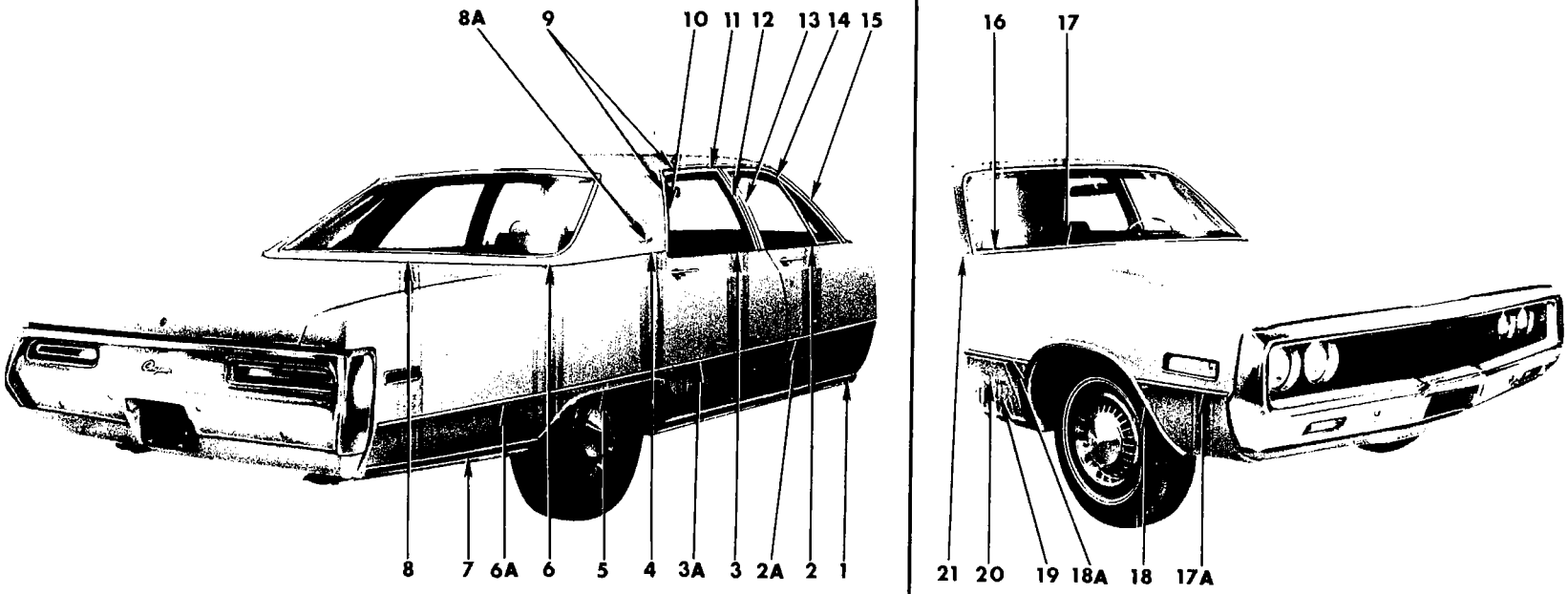

19a3064 **A**

1970
EXTERIOR VIEW - CHRYSLER NEWPORT C-E 4 DOOR SEDAN

REF. NO.	QTY	PART NUMBER	DESCRIPTION
1	2	3481 901	MOULDING PACKAGE, Body Side Sill (23-23-2)
	9	6002 850	Retainer
	9	6024 271	Screw
2	1	3419 434-5	MOULDING PACKAGE, Frt. Door Outside Belt (23-23-32)
	14	6002 713	Clip
2A	2	3506 068	MOULDING, Frt. Door Outside (23-23-32)
3	1	2933 464-5	MOULDING and T/PLATE PACKAGE, Rr. Door Outside Belt Frt. to Rr. (23-23-33)
	16	6002 713	Retainer
3A	2	3506 068	MOULDING, Rear Door Outside (23-23-33)
4	1	3419 314-5	MOULDING PACKAGE, Qtr. Outside Belt, Frt., Argent, use w/Vinyl Roof or Two Tone Paint (23-23-39)
	2	---- ---	Nut
	8	---- ---	Fastener
	2	---- ---	Retainer
5	1	3481 932-3	MOULDING PACKAGE, Qtr. Outside Wnl. Opng. (23-23-39)
	10	6024 271	Screw
6	1	3419 316-7	MOULDING PACKAGE, Qtr. Outside Belt, Rr., Argent, use w/Vinyl Roof or Two Tone Paint (23-23-39)
	4	6023 898	Screw
	2	---- ---	Seal
	2	---- ---	Nut
6A	2	3506 068	MOULDING, Qtr. Pnl. Outside (23-23-39)
7	1	3481 936-7	MOULDING PACKAGE, Qtr. Outside, Rr. (23-23-39)
	2	---- ---	Screw
	4	6024 271	Screw
	4	6002 850	Retainer
8	1	3419 318-9	MOULDING PACKAGE, Deck Opng. Upr. Pnl., Argent, use w/Vinyl Roof or Two Tone Paint (23-23-31)
	8	6002 709	Retainer
	8	9426 925	Nut w/Seal
8A	2	3505 788	NAME PLATE, Qtr. Outside, Newport (23-34-238)
	4	9420 263	Nut
9	1	3419 390-1	MOULDING PACKAGE, Roof Side Drain Trough, Frt. and Rear (23-59-61)
	16	6027 459	Screw
10	1	2893 712-3	MOULDING, Rear Door Wdo. Opng. Frame, Rear (23-23-33)
11	1	2893 708-9	MOULDING, Rear Door Wdo. Opng. Frame, Upr. (23-23-33)
12	1	2893 700	MOULDING, Rear Door Wdo. Opng. Frame, Frt., Lt. (23-23-33)
	1	2893 701	MOULDING, Rear Door Wdo. Opng. Frame, Frt., Rt.
13	1	2893 700-1	MOULDING, Frt. Door Wdo. Opng. Frame, Rear (23-23-32)
14	1	2893 698-9	MOULDING, Frt. Door Wdo. Opng. Frame, Upr. (23-23-32)
15	1	2933 568-9	MOULDING PACKAGE, Body Front Pillar Drain Trough (23-59-61)
	10	6027 459	Screw
16	1	2949 488-9	MOULDING, Fender Hood Extension (12-15-2)
17	1	2898 828	MOULDING, Hood Top Rr. (15-25-2)
17A	1	3506 068	MOULDING, Fender (12-15-2)
18	1	3481 782-3	MOULDING PACKAGE, Fender Wnl. Opng. (12-15-2)
	8	6024 271	Screw
18A	1	3506 068	MOULDING, Fender (12-15-2)
19	1	2785 540	MEDALLION, Fender Side (12-15-21)
	1	6026 404	Nut
20	2	3505 033	NAME PLATE, Fender Side (12-15-21)
	AR	6002 852	Retainer
21	1	3419 482-3	MOULDING PACKAGE, Frt. Lwr. Pillar (23-23-14)
	2	6024 271	Screw

All Packages Include Attaching Parts

Part Type Code is Indicated in Parentheses

1970
EXTERIOR VIEW - CHRYSLER NEWPORT C-E 4 DOOR SEDAN

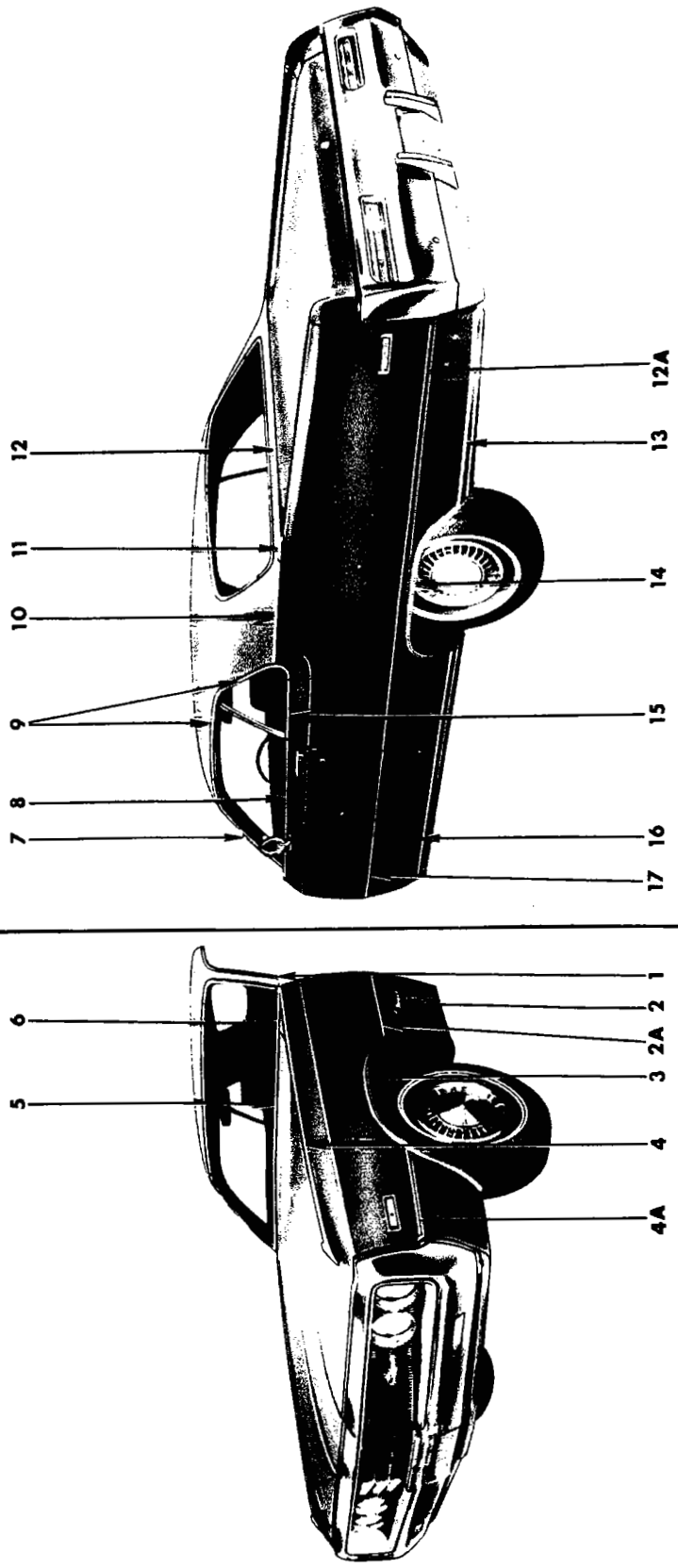

1970
EXTERIOR VIEW - CHRYSLER NEWPORT C-E 2 DOOR HARDTOP

REF. NO.	QTY	PART NUMBER	DESCRIPTION
1	1	3419 482-3	MOULDING PACKAGE, Body Frt. Lwr. Plr. (23-23-14)
	2	6024 271	Screw
2	2	3505 033	NAME PLATE, Fender Side (Newport) (12-15-21)
	2	6002 852	Retainer
2A	2	3506 068	MOULDING, Fender Rear (12-15-2)
3	1	3481 782-3	MOULDING PACKAGE, Fender Wheel Opening (12-15-2)
	8	6024 271	Screw
4	1	2933 334-5	MOULDING PACKAGE, Fender Peak (12-15-2)
	9	6002 713	Clip
4A	2	3506 068	MOULDING, Fender Front (12-15-2)
5	1	2898 828	MOULDING, Hood Top Rear (15-25-2)
6	1	2949 488-9	MOULDING, Fender Hood Extension (12-15-2)
7	1	2933 602-3	MOULDING PACKAGE, Body Frt. Plr. Drain Trough (23-59-61)
	6	6027 459	Screw
8	1	3419 428-9	MOULDING PACKAGE, Door Outside Belt, w/Turn Indicator Fender Hood Mtg. (23-23-32)
	1	3419 430-1	MOULDING PACKAGE, Door Outside Belt, w/o Turn Indicator Fender Hood Mtg. (23-23-32)
	16	6002 713	Clip
9	1	3419 388-9	MOULDING PACKAGE, Roof Side Drain Trough, Frt. and Rear (23-59-61)
	6	6027 459	Screw
10	1	3419 310-1	MOULDING PACKAGE, Qtr. Outside Belt, Frt., Argent, w/Vinyl Roof or Two Tone Paint (23-23-39)
	4	6002 297	Retainer
	4	---- ---	Nut w/Seal
	6	6002 192	Fastener
11	1	3419 312-3	MOULDING PACKAGE, Qtr. Outside Belt, Rear, Argent, w/Vinyl Roof or Two Tone Paint (23-23-39)
	4	6023 898	Screw
	2	---- ---	Nut w/Seal
12	1	3419 320-1	MOULDING PACKAGE, Deck Opng. Upr. Pnl., Argent, w/Vinyl Roof or Two Tone Paint (23-23-31)
	14	6002 709	Retainer
	14	9426 925	Nut
12A	2	3506 068	MOULDING, Qtr. Pnl. Outside (23-23-39)
13	1	3481 936-7	MOULDING PACKAGE, Qtr. Outside Rear (23-23-39)
	2	---- ---	Screw
	4	6024 271	Screw
	4	6002 850	Retainer
14	1	3481 932-3	MOULDING PACKAGE, Qtr. Outside Whl. Opng. (23-23-39)
	10	6024 271	Screw
15	1	2933 374-5	MOULDING PACKAGE, Qtr. Wdo. Outside Belt (23-23-39)
	4	6027 459	Screw
16	2	3481 901	MOULDING PACKAGE, Body Side Sill (23-23-2)
	9	6002 850	Retainer
	9	6024 271	Screw
17	2	3506 068	MOULDING, Door Outside (23-23-32)

All Packages Include Attaching Parts

Part Type Code is Indicated in Parentheses

1970

EXTERIOR VIEW - CHRYSLER NEWPORT C-E 2 DOOR HARD TOP

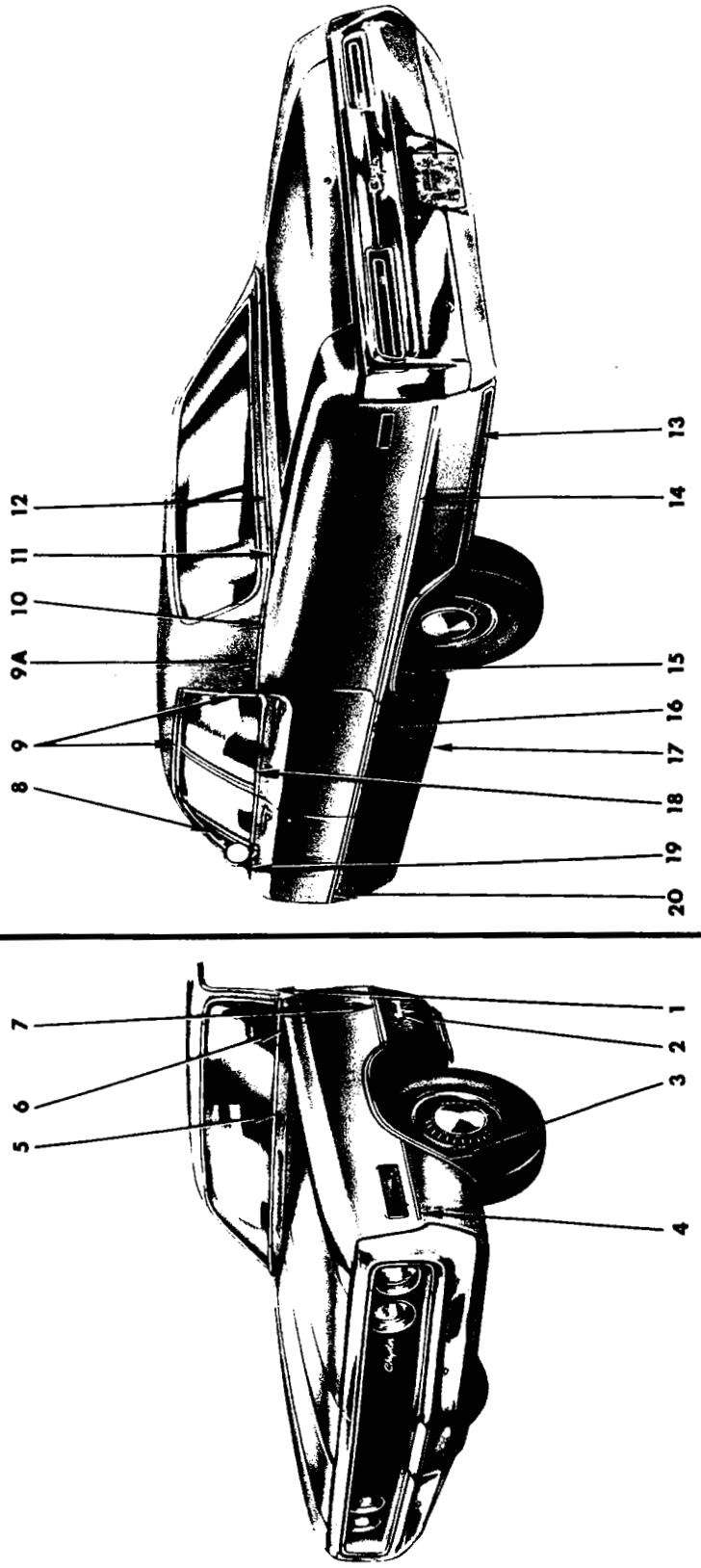

1970
EXTERIOR VIEW - CHRYSLER NEWPORT C-E 4 DOOR HARDTOP

REF. NO.	QTY	PART NUMBER	DESCRIPTION
1	1	3419 482-3	MOULDING PACKAGE, Frt. Lwr. Pillar (23-23-14)
	2	6024 271	Screw
2	2	3505 033	NAME PLATE, Fender Side (12-15-21)
	6	6002 852	Retainer
3	1	3481 782-3	MOULDING PACKAGE, Fender Wheel Opening (12-15-2)
	8	6024 271	Screw
4	2	3506 068	MOULDING, Fender Front (12-15-2)
5	1	2898 828	MOULDING, Hood Top Rear (15-25-2)
6	1	2949 488-9	MOULDING, Fender Hood Extension (12-15-2)
7	2	3506 068	MOULDING, Fender Rear (12-15-2)
8	1	2933 600-1	MOULDING PACKAGE, Body Frt. Plr. Drain Trough (23-59-61)
	6	6027 459	Screw
9	1	3419 386-7	MOULDING PACKAGE, Roof Side Drain Trough, Frt. and Rear (23-59-61)
	8	6027 459	Screw
9A	2	3505 788	NAME PLATE, Qtr. Outside, Newport (23-34-238)
	4	9420 263	Nut
10	1	3419 314-5	MOULDING PACKAGE, Qtr. Outside Belt, Frt., Argent, use w/Vinyl Roof or Two Tone Paint (23-23-39)
	2	---- ---	Nut
	8	---- ---	Fastener
	2	---- ---	Retainer
11	1	3419 316-7	MOULDING PACKAGE, Qtr. Outside Belt, Rr., Argent, use w/Vinyl Roof or Two Tone Paint (23-23-39)
	4	6023 898	Screw
	2	---- ---	Seal
	2	---- ---	Nut
12	1	3419 318-9	MOULDING PACKAGE, Deck Opng. Upr. Pnl., Argent, use w/Two Tone Paint or Vinyl Roof (23-23-31)
	8	6002 709	Retainer
	8	9426 925	Nut w/Seal
13	1	3481 936-7	MOULDING PACKAGE, Qtr. Outside Rr. (23-23-39)
	2	---- ---	Screw
	4	6024 271	Screw
	4	6002 850	Retainer
14	2	3506 068	MOULDING, Qtr. Pnl. Outside (23-23-39)
15	1	3481 932-3	MOULDING PACKAGE, Qtr. Outside Whl. Opng. (23-23-39)
	10	6024 271	Screw
16	2	3506 068	MOULDING, Rear Door Outside (23-23-33)
17	2	3481 901	MOULDING PACKAGE, Body Side Sill (23-23-2)
	9	6002 850	Retainer
	9	6024 271	Screw
18	1	2933 464-5	MOULDING and T/PLATE PACKAGE, Rr. Door Outside Belt Frt. to Rr. (23-23-33)
	16	6002 713	Retainer
19	1	3419 432-3	MOULDING PACKAGE, Frt. Door Outside Belt, w/Fndr. Hood Mtg. (23-23-32)
	1	3419 434-5	MOULDING PACKAGE, Frt. Door Outside Belt, w/o Fndr. Hood Mtg. (23-23-32)
	14	6002 713	Clip
20	2	3506 068	MOULDING, Frt. Door Outside (23-23-32)

All Packages Include Attaching Parts

Part Type Code is Indicated in Parentheses

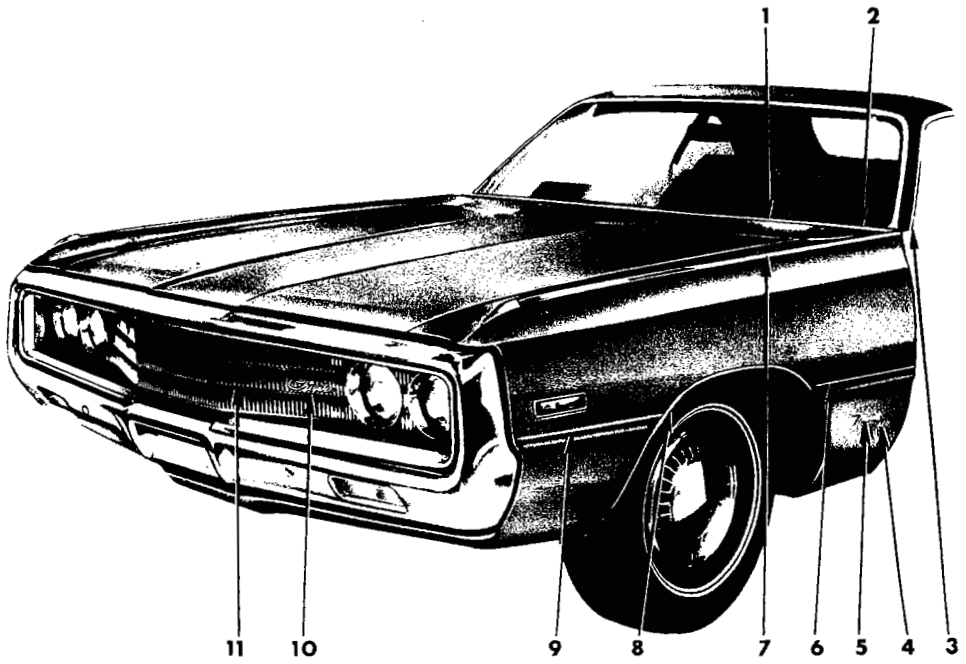

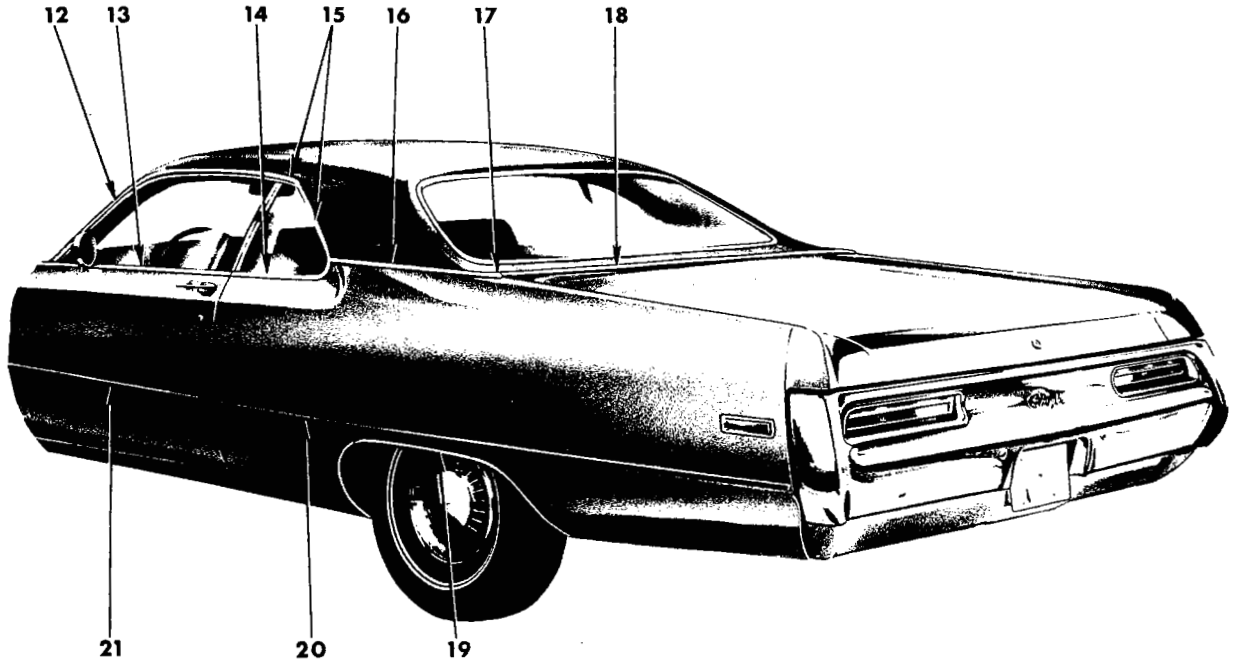

19a3338

1970
EXTERIOR VIEW - CHRYSLER NEWPORT (440) C-E 2 DOOR HARDTOP

REF. NO.	QTY	PART NUMBER	DESCRIPTION
1	1	2898 828	MOULDING, Hood Top Rear (15-25-2)
2	1	2949 488-9	MOULDING, Fender Hood Extension (12-15-21)
3	1	3419 482-3	MOULDING PACKAGE, Body Frt. Lwr. Pillar (23-23-14)
	2	6024 271	Screw
4	2	3570 343	NUMERAL, Fender Side (440) (12-15-21)
	2	6002 852	Retainer
5	2	3570 342	NAME PLATE, Fender Side (Newport) (12-15-21)
	2	6002 852	Retainer
6	AR	3506 068	MOULDING, Fender Side Rear (12-15-2)
7	1	2933 334-5	MOULDING PACKAGE, Fender Peak (12-15-2)
	9	6002 713	Clip
8	1	3514 056-7	MOULDING PACKAGE, Fender Wheel Opening (12-15-2)
	16	6024 271	Screw
9	AR	3506 068	MOULDING, Fender Side Front (12-15-2)
10	1	---- ---	NAME PLATE (Serviced in 7-16-11)
11	1	2949 683	GRILLE, Radiator (7-16-11)
12	1	2933 602-3	MOULDING PACKAGE, Body Front Pillar Drain Trough (23-59-61)
	6	6027 459	Screw
13	1	3419 428-9	MOULDING PACKAGE, Door Outside Belt, w/Turn Indicator Fender Hood Mtg. (23-23-32)
	1	3419 430-1	MOULDING PACKAGE, Door Outside Belt, w/o Turn Indicator Fender Hood Mtg. (23-23-32)
	16	6002 713	Clip
14	1	2933 374-5	MOULDING PACKAGE, Qtr. Wdo. Outside Belt (23-23-39)
	4	6027 459	Screw
15	1	3419 388-9	MOULDING PACKAGE, Roof Side Drain Trough, Front and Rear (23-59-61)
	6	6027 459	Screw
16	1	3419 310-1	MOULDING PACKAGE, Qtr. Outside Belt, Frt., Argent, w/Vinyl Roof or Two Tone Paint (23-23-39)
	4	6002 297	Retainer
	4	---- ---	Fastener
	6	6002 192	Fastener
17	1	3419 312-3	MOULDING PACKAGE, Qtr. Outside Belt, Rear, Argent, w/Vinyl Roof or Two Tone Paint (23-23-39)
	4	6023 898	Screw
	2	---- ---	Nut w/Seal
18	1	3419 320-1	MOULDING PACKAGE, Deck Opng. Upr. Pnl., Argent, w/Vinyl Roof or Two Tone Paint (23-23-31)
	14	6002 709	Retainer
	14	9426 925	Nut
19	1	3514 080-1	MOULDING PACKAGE, Qtr. Outside Wheel Opng. (23-23-39)
	12	9420 867	Nut w/Seal
20	2	3506 068	MOULDING, Qtr. Pnl. Outside (23-23-39)
21	2	3506 068	MOULDING, Door Outside (23-23-32)

All Packages Include Attaching Parts

Part Type Code is Indicated in Parentheses

1970
EXTERIOR VIEW - CHRYSLER NEWPORT (440) C-E 2 DOOR HARDTOP

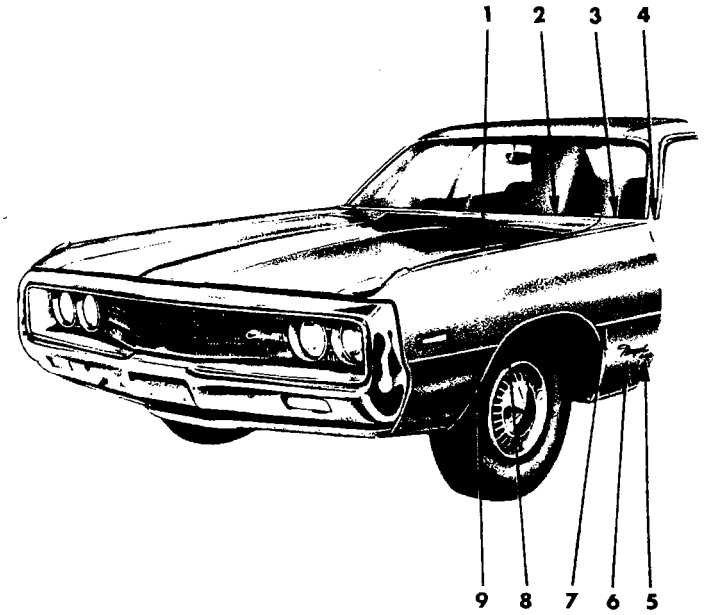

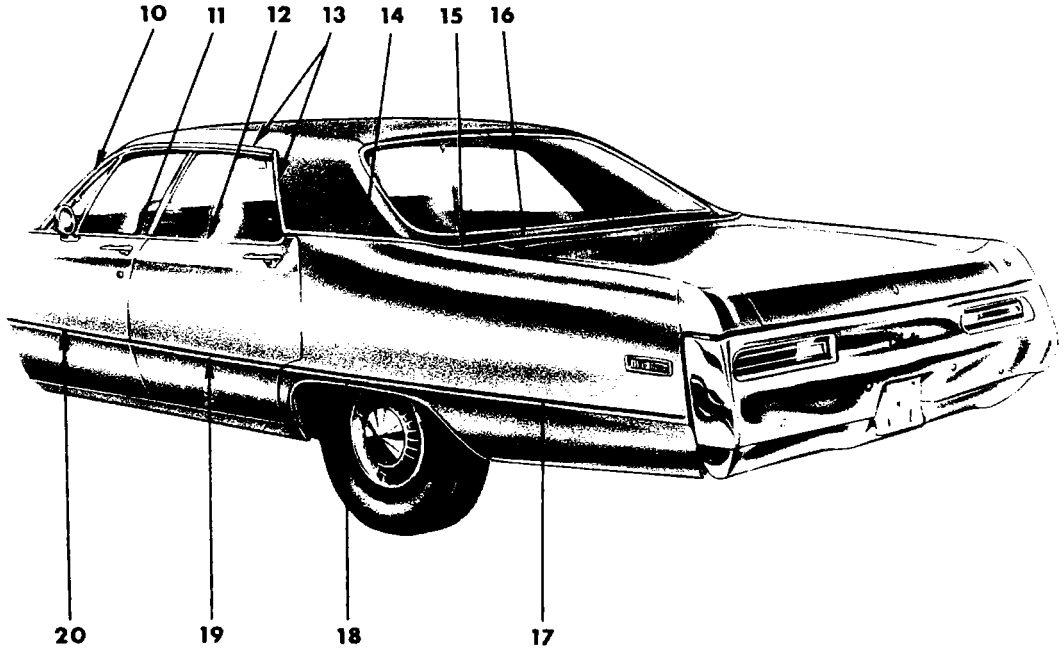

19a3355

1970
EXTERIOR VIEW - CHRYSLER NEWPORT (440) C-E 4 DOOR HARDTOP

REF. NO.	QTY	PART NUMBER	DESCRIPTION
1	1	2933 334-5	MOULDING PACKAGE, Fender Peak (12-15-2)
	9	6002 713	Clip
2	1	2898 828	MOULDING, Hood Top Rear (15-25-2)
3	1	2949 488-9	MOULDING, Fender Hood Extension (12-15-2)
4	1	3419 482-3	MOULDING PACKAGE, Frt. Lwr. Pillar (23-23-14)
	2	6024 271	Screw
5	2	3570 343	NUMERAL, Fender Side, "440" (12-15-21)
	2	6002 852	Retainer
6	2	3570 342	NAME PLATE, Fender Side, "Newport" (12-15-21)
	2	6002 852	Retainer
7	2	3506 068	MOULDING, Fender Side, Rear (12-15-2)
8	1	3514 056-7	MOULDING PACKAGE, Fender Wheel Opng. (12-15-2)
	16	6024 271	Screw
9	2	3506 068	MOULDING, Fender Side, Front (12-15-2)
10	1	2933 600-1	MOULDING PACKAGE, Body Front Pillar Drain Trough (23-59-61)
	6	6027 459	Screw
11	1	3419 432-3	MOULDING PACKAGE, Frt. Door Outside Belt, w/ Fndr. Hood Mtg. (23-23-32)
	1	3419 434-5	MOULDING PACKAGE, Frt. Door Outside Belt, w/o Fndr. Hood Mtg. (23-23-32)
	14	6002 713	Clip
12	1	2933 464-5	MOULDING and T/PLATE PACKAGE, Rear Door Outside Belt Frt. to Rear (23-23-33)
	16	6002 713	Retainer
13	1	3419 386-7	MOULDING PACKAGE, Roof Side Drain Trough, Front and Rear (23-59-61)
	8	6027 459	Screw
14	1	3419 314-5	MOULDING PACKAGE, Qtr. Outside Belt, Frt., Argent, use w/Vinyl Roof or Two Tone Paint (23-23-39)
	2	---- ---	Nut
	8	---- ---	Fastener
	2	---- ---	Retainer
15	1	3419 316-7	MOULDING PACKAGE, Qtr. Outside Belt, Rear, Argent, use w/Vinyl Roof or Two Tone Paint (23-23-39)
	4	6023 898	Screw
	2	---- ---	Seal
	2	---- ---	Nut
16	1	3419 318-9	MOULDING PACKAGE, Deck Opng. Upr. Pnl., Argent, use w/Vinyl Roof or Two Tone Paint (23-23-31)
	8	6002 709	Retainer
	8	9426 925	Nut w/Seal
17	2	3506 068	MOULDING, Qtr. Pnl. Outside (23-23-39)
18	1	3514 080-1	MOULDING PACKAGE, Qtr. Outside Whl. Opng. (23-23-39)
	12	9420 867	Nut w/Seal
19	2	3506 068	MOULDING, Rear Door Outside (23-23-33)
20	2	3506 068	MOULDING, Frt. Door Outside (23-23-32)

All Packages Include Attaching Parts

Part Type Code is Indicated in Parentheses

1970

EXTERIOR VIEW - CHRYSLER NEWPORT (440) C-E 4 DOOR HARDTOP

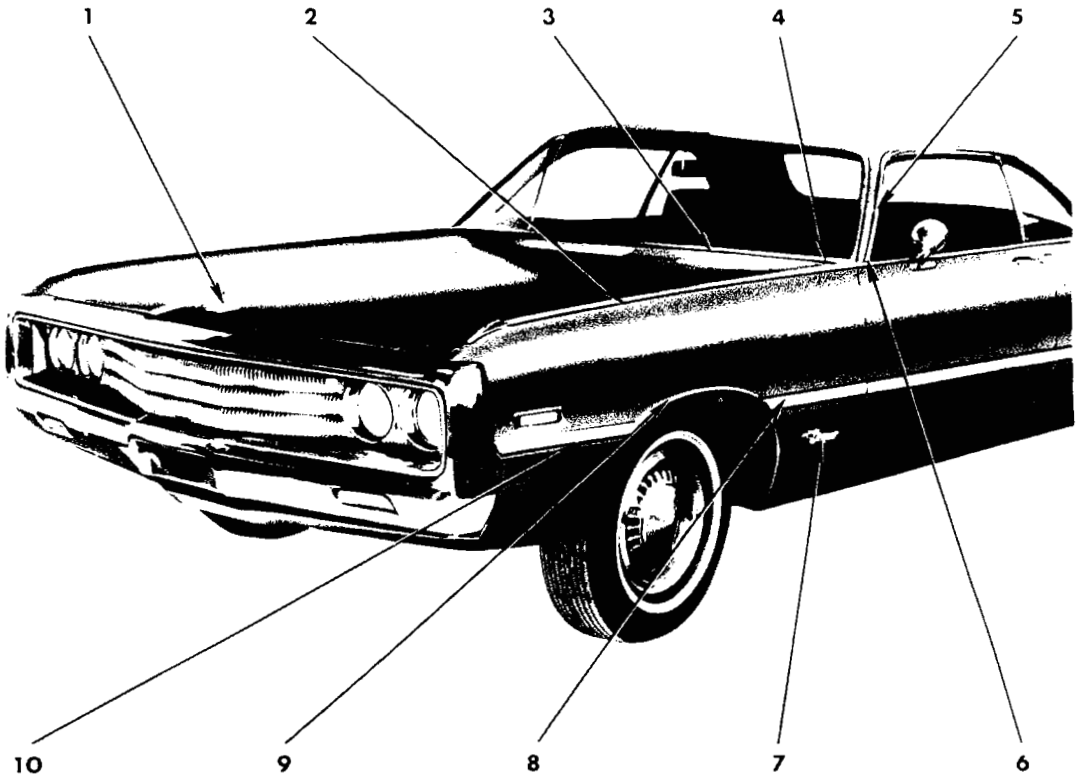

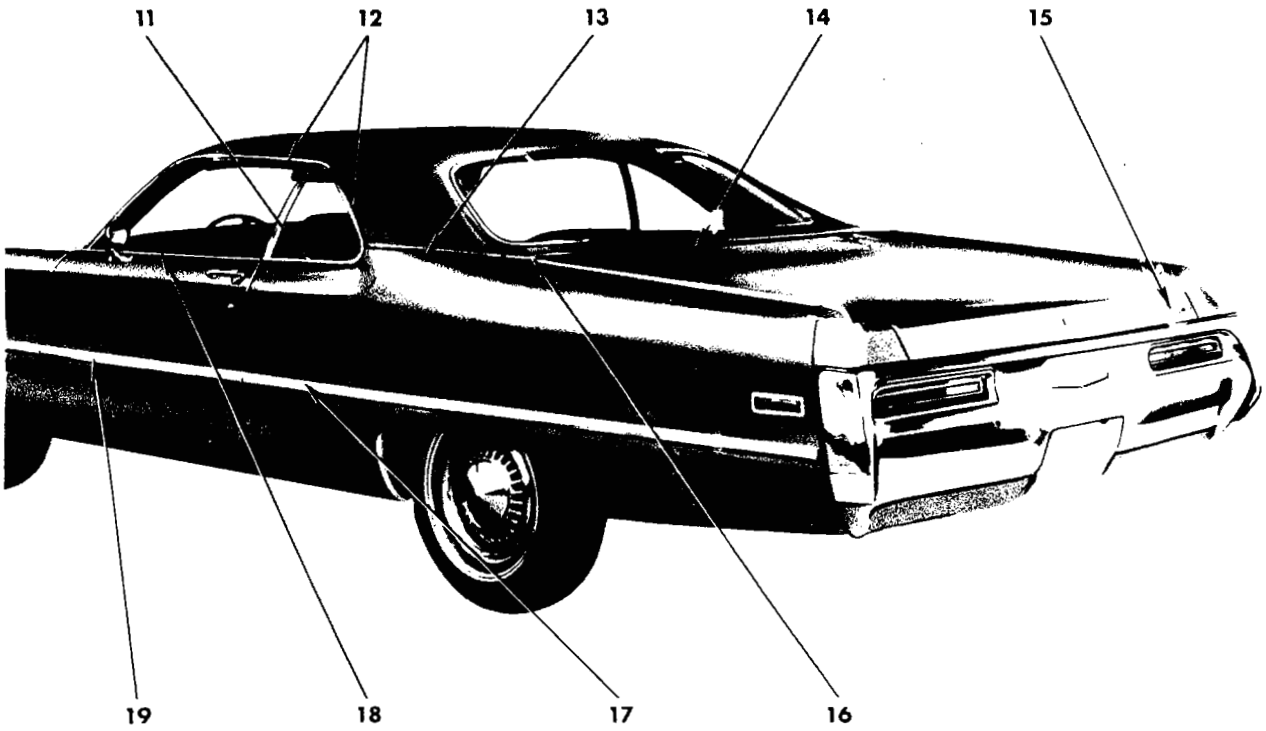

19a3327

1970
EXTERIOR VIEW - CHRYSLER NEWPORT C-E 2 DOOR HARDTOP (SPRING SPECIAL)

REF. NO.	QTY	PART NUMBER	DESCRIPTION
1	1	3443 537	MEDALLION, Hood Front (15-03-18)
2	1	2933 334-5	MOULDING PACKAGE, Fender Peak (12-15-2)
	18	6002 713	Clip
3	1	2898 828	MOULDING, Hood Top Rear (15-25-2)
4	1	2949 488-9	MOULDING, Fender Hood Extension (12-15-2)
5	1	2933 602-3	MOULDING PACKAGE, Body Front Pillar Drain Trough (23-59-61)
	6	6027 459	Screw
6	1	3419 482-3	MOULDING PACKAGE, Body Frt. Lwr. Pillar (23-23-14)
	2	6024 271	Screw
7	2	3570 342	NAME PLATE, Fender Side (Newport) (12-15-21)
	4	6002 852	Retainer
8	1	3579 090-1	MOULDING PACKAGE, Fender Side Rear (12-15-2)
	4	6026 523	Nut
	4	6002 765	Retainer
	2	6002 767	Retainer
9	1	2933 342-3	MOULDING PACKAGE, Fender Wheel Opening (12-15-2)
	16	6028 545	Screw
10	1	3579 092-3	MOULDING PACKAGE, Fender Front (12-15-2)
	4	6026 523	Nut
	4	6002 765	Retainer
	2	6002 814	Retainer
11	1	2933 374-5	MOULDING PACKAGE, Qtr. Wdo. Outside Belt (23-23-39)
	4	6027 459	Screw
12	1	3419 388-9	MOULDING PACKAGE, Roof Side Drain Trough, Front and Rear (23-59-61)
	6	6027 459	Screw
13	1	3419 310-1	MOULDING PACKAGE, Qtr. Outside Belt, Frt., Argent, w/Vinyl Roof or Two Tone Paint (23-23-39)
	1	3579 126-7	MOULDING PACKAGE, Qtr. Outside Belt, Frt., Gold, w/Vinyl Roof or Two Tone Paint (23-23-39)
	4	6002 297	Retainer
	4	---- ---	Nut w/Seal
	6	6002 192	Fastener
14	1	3419 320-1	MOULDING PACKAGE, Deck Opng. Upr. Pnl., Argent, w/Vinyl Roof or Two Tone Paint (23-23-31)
	1	3579 134-5	MOULDING PACKAGE, Deck Opng. Upr. Pnl., Gold, w/Vinyl Roof or Two Tone Paint (23-23-31)
	14	6002 709	Retainer
	14	9426 925	Nut
15	1	3445 251	NAME PLATE, Deck Lid Outside, "Chrysler"
	AR	6002 852	Retainer
16	1	3419 312-3	MOULDING PACKAGE, Qtr. Outside Belt, Rear, Argent, w/Vinyl Roof or Two Tone Paint (23-23-39)
	1	3579 128-9	MOULDING PACKAGE, Qtr. Outside Belt, Rear, Gold, w/Vinyl Roof or Two Tone Paint (23-23-39)
	4	6023 898	Screw
	2	---- ---	Nut w/Seal
17	1	3579 094-5	MOULDING PACKAGE, Qtr. Outside (23-23-39)
	22	6002 767	Retainer
	2	6002 787	Retainer
	2	6027 625	Nut
18	1	3419 428-9	MOULDING PACKAGE, Door Outside Belt, w/Turn Indicator Fender Hood Mtg. (23-23-32)
	1	3419 430-1	MOULDING PACKAGE, Door Outside Belt, w/o Turn Indicator Fender Hood Mtg. (23-23-32)
	16	6002 713	Clip
19	2	3579 098	MOULDING PACKAGE, Door Outside (23-23-32)
	10	6002 767	Retainer
	2	6002 765	Retainer

All Packages Include Attaching Parts

Part Type Code is Indicated in Parentheses

1970

EXTERIOR VIEW - CHRYSLER NEWPORT C-E 2 DOOR HARDTOP (SPRING SPECIAL)

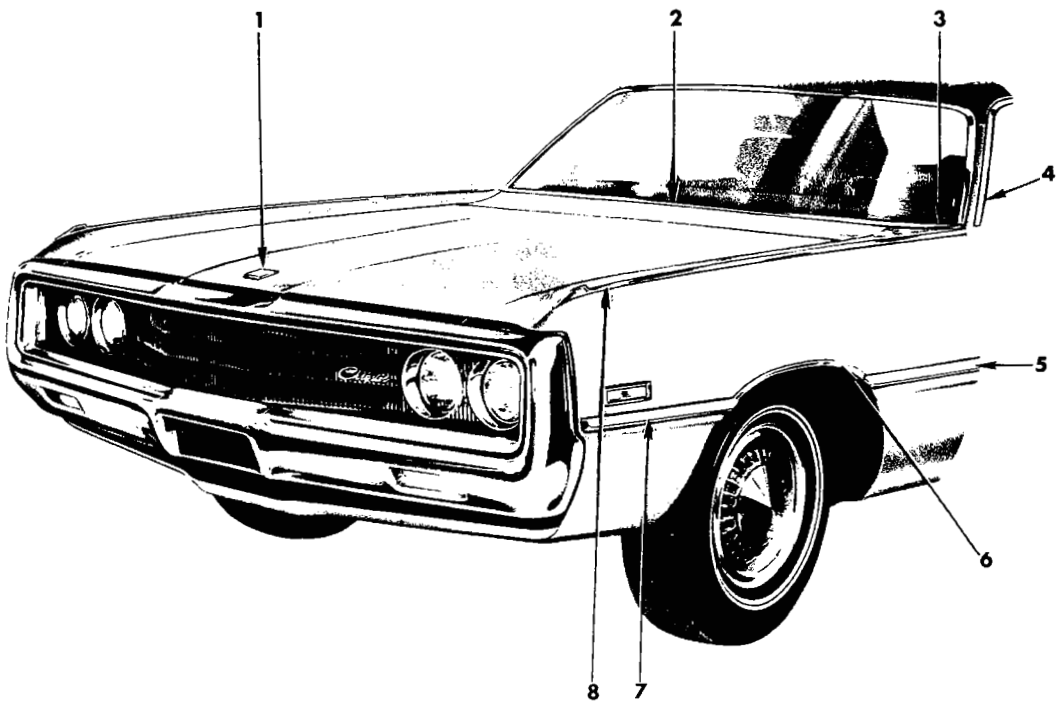

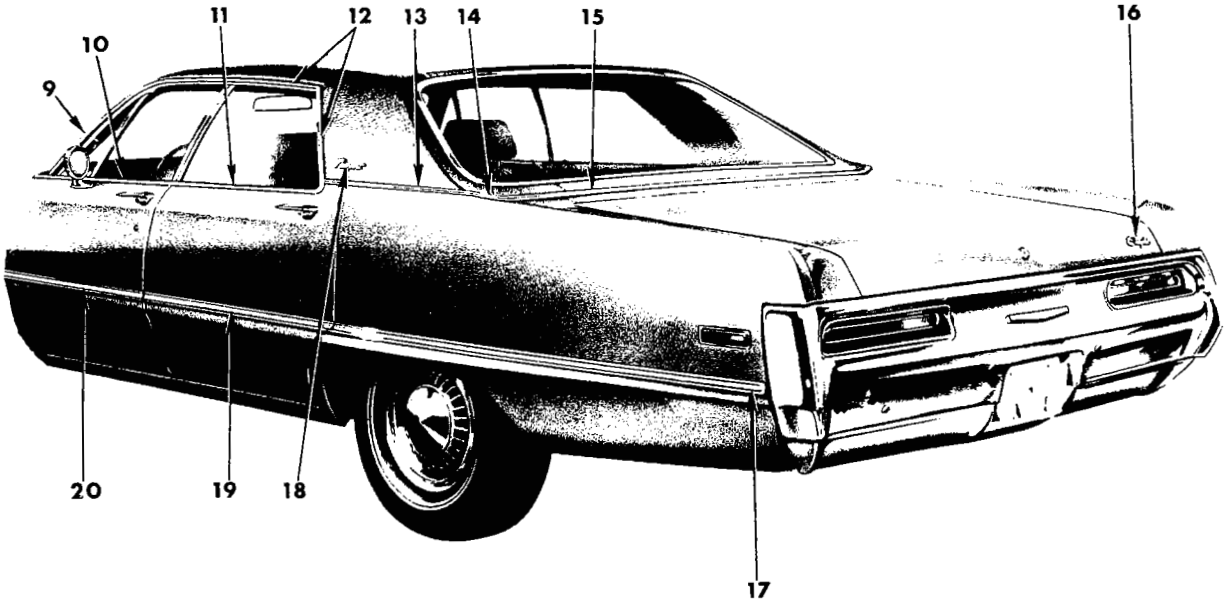

19a3326

1970
EXTERIOR VIEW - CHRYSLER NEWPORT C-E 4 DOOR HARDTOP (SPRING SPECIAL)

REF. NO.	QTY	PART NUMBER	DESCRIPTION
1	1	3443 537	MEDALLION, Hood (15-03-18)
2	1	2898 828	MOULDING, Hood Top Rear (15-25-2)
3	1	2949 488-9	MOULDING, Fender Hood Extension (12-15-2)
4	1	3419 482-3	MOULDING PACKAGE, Frt. Lwr. Pillar (23-23-14)
	2	6024 271	Screw
5	1	3579 090-1	MOULDING PACKAGE, Fender Side Rear (12-15-2)
	2	6002 767	Retainer
6	1	2933 342-3	MOULDING PACKAGE, Fender Wheel Opening (12-15-2)
	16	6028 545	Screw
7	1	3579 092-3	MOULDING PACKAGE, Fender Side Front (12-15-2)
	4	6026 523	Nut
	4	6002 765	Retainer
8	1	2933 334-5	MOULDING PACKAGE, Fender Peak (12-15-2)
	18	6002 713	Clip
9	1	2933 600-1	MOULDING PACKAGE, Body Frt. Pillar Drain Trough (23-59-61)
	6	6027 459	Screw
10	1	3419 432-3	MOULDING PACKAGE, Frt. Door Outside Belt, w/Fender Hood Mtg. (23-23-32)
	1	3419 434-5	MOULDING PACKAGE, Frt. Door Outside Belt, w/o Fender Hood Mtg. (23-23-32)
	14	6002 713	Clip
11	1	2933 464-5	MOULDING and T/PLATE PACKAGE, Rear Door Outside Belt Frt. to Rear (23-23-33)
	16	6002 713	Retainer
12	1	3419 386-7	MOULDING PACKAGE, Roof Side Drain Trough, Front and Rear (23-59-61)
	8	6027 459	Screw
13	1	3419 314-5	MOULDING PACKAGE, Qtr. Outside Belt, Frt., Argent, use w/Vinyl Roof or Two Tone Paint (23-23-39)
	1	3579 130-1	MOULDING PACKAGE, Qtr. Outside Belt, Frt., Gold, use w/Vinyl Roof or Two Tone Paint (23-23-39)
	2	---- ---	Retainer
	2	---- ---	Nut
	8	---- ---	Fastener
14	1	3419 316-7	MOULDING PACKAGE, Qtr. Outside Belt, Rear, Argent, use w/Vinyl Roof or Two Tone Paint (23-23-39)
	1	3579 132-3	MOULDING PACKAGE, Qtr. Outside Belt, Rear, Gold, use w/Vinyl Roof or Two Tone Paint (23-23-39)
	4	6023 898	Screw
	2	---- ---	Seal
	2	---- ---	Nut
15	1	3419 318-9	MOULDING PACKAGE, Deck Opng. Upr. Pnl., Argent, use w/Vinyl Roof or Two Tone Paint (23-23-31)
	1	3579 136-7	MOULDING PACKAGE, Deck Opng. Upr. Pnl., Gold, use w/Vinyl Roof or Two Tone Paint (23-23-31)
	8	6002 709	Retainer
	8	9426 925	Nut w/Seal
16	1	3445 251	NAME PLATE, Deck Lid Outside, "Chrysler" (23-19-114)
	AR	6002 852	Retainer
17	1	3579 096-7	MOULDING PACKAGE, Qtr. Outside (23-23-39)
	16	6002 767	Retainer
	2	6002 787	Retainer
	2	6027 625	Nut
18	2	3505 788	NAME PLATE, Qtr. Outside, "Newport" (23-34-238)
	4	9420 263	Nut
19	1	3579 100-1	MOULDING PACKAGE, Rear Door Outside (23-23-33)
	6	6002 767	Retainer
	4	6002 765	Retainer
	4	6026 523	Nut
20	2	3579 099	MOULDING PACKAGE, Frt. Door Outside (23-23-32)
	8	6002 767	Retainer
	2	6002 765	Retainer
	2	6026 523	Nut

All Packages Include Attaching Parts

Part Type Code is Indicated in Parentheses

1970

EXTERIOR VIEW - CHRYSLER NEWPORT C-E 4 DOOR HARDTOP (SPRING SPECIAL)

19a3075A

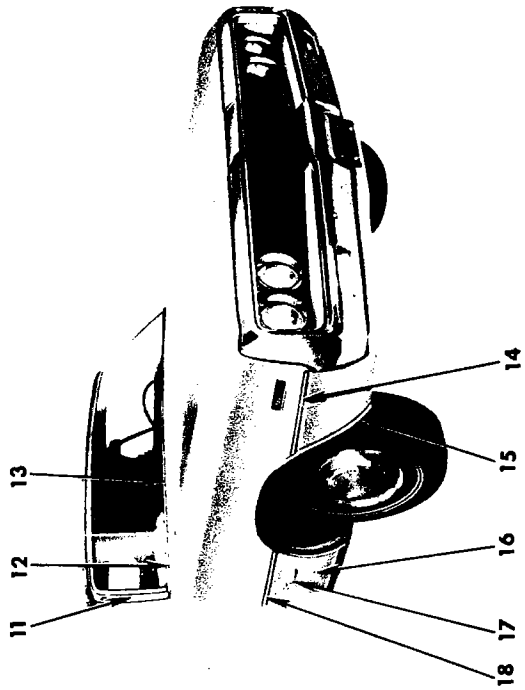

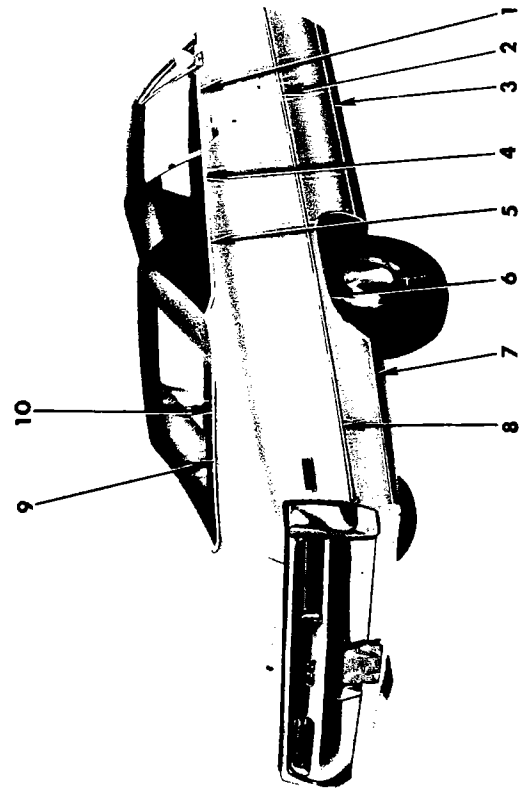

1970
EXTERIOR VIEW - CHRYSLER NEWPORT C-E CONVERTIBLE COUPE

REF. NO.	QTY	PART NUMBER	DESCRIPTION
1	1	3419 428-9	MOULDING PACKAGE, Door Outside Belt, w/Fender Hood Mtg. (23-23-32)
	1	3419 430-1	MOULDING PACKAGE, Door Outside Belt, w/o Fender Hood Mtg. (23-23-32)
	16	6002 713	Clip
2	2	3506 068	MOULDING PACKAGE, Door Outside (23-23-32)
3	2	3481 901	MOULDING PACKAGE, Body Side Sill (23-23-2)
	9	6002 850	Retainer
	9	6024 271	Screw
4	1	2933 936-7	MOULDING PACKAGE, Qtr. Outside Belt Frt. (23-23-39)
	2	6027 282	Screw
5	1	2933 932-3	MOULDING PACKAGE, Qtr. Outside Belt, Rr. (23-23-39)
	16	---- ---	Screw
6	1	3481 932-3	MOULDING PACKAGE, Qtr. Outside Whl. Opng. (23-23-39)
	10	6024 271	Screw
7	1	3481 936-7	MOULDING PACKAGE, Qtr. Outside Rear (23-23-39)
	2	---- ---	Screw
	4	6024 271	Screw
	4	6002 850	Retainer
8	2	3506 068	MOULDING, Qtr. Pnl. Outside (23-23-39)
9	1	2901 180	COVER, Deck Opng. Upr. Pnl. Joint Mldg. (23-23-41)
10	2	2933 934	MOULDING PACKAGE, Deck Opng. Upr. Pnl. (23-23-31)
	10	6002 734	Retainer
	10	---- ---	Screw
11	1	2901 018-9	MOULDING, Body Frt. Upr. Pillar Outside (23-23-14)
12	1	2949 488-9	MOULDING, Fender Hood Extension (12-15-2)
13	1	2898 828	MOULDING, Hood Top Rear (15-25-2)
14	2	3506 068	MOULDING, Fender Front (12-15-2)
15	1	3481 782-3	MOULDING PACKAGE, Fender Whl. Opng. (12-15-2)
	8	6024 271	Screw
16	1	2785 540	MEDALLION, Fender Side (12-15-2)
	1	6026 404	Nut
17	2	3505 033	NAME PLATE, Fender Side (12-65-21)
	AR	6002 852	Retainer
18	2	3506 068	MOULDING, Fender Rear (12-15-2)

All Packages Include Attaching Parts

Part Type Code is Indicated in Parentheses

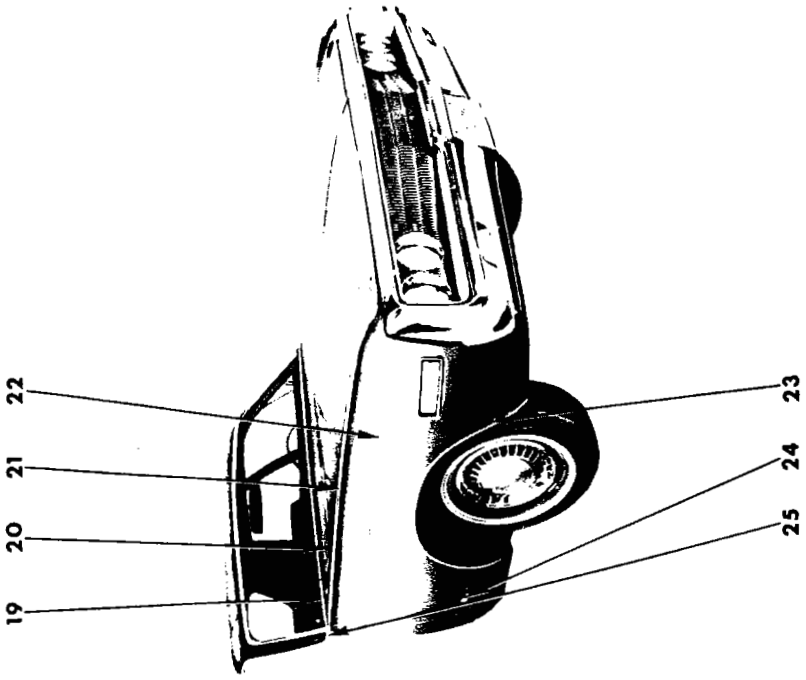

19a2990

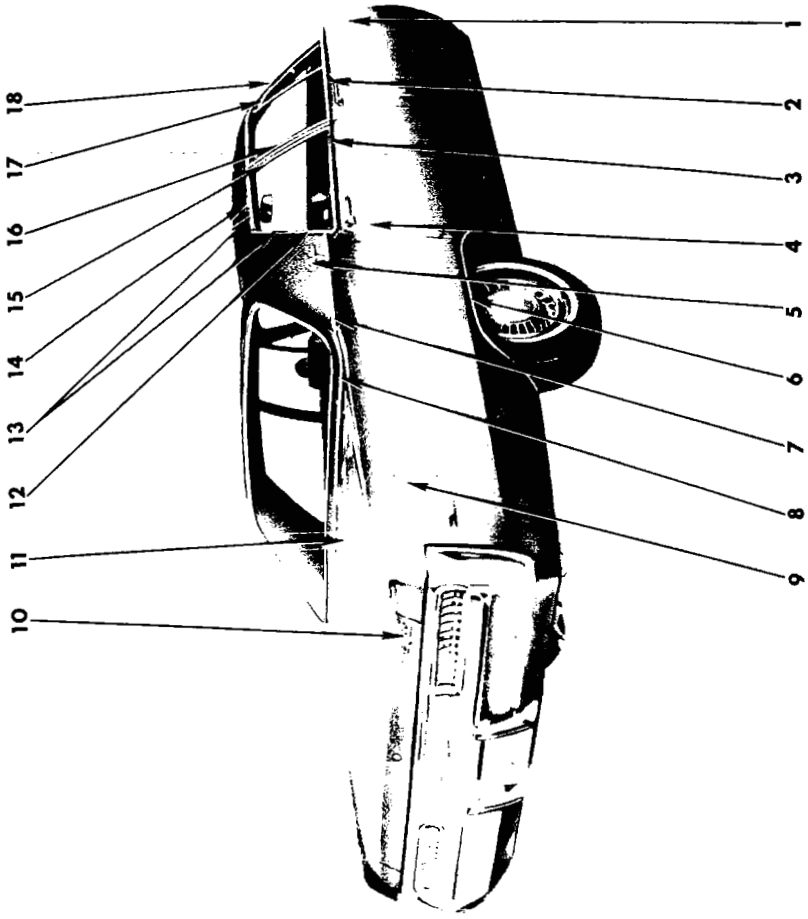

1970
EXTERIOR VIEW - CHRYSLER NEWPORT CUSTOM C-L 4 DOOR SEDAN

REF. NO.	QTY	PART NUMBER	DESCRIPTION
1	1	3481 988-9	MOULDING PACKAGE, Frt. Door Outside (23-23-32)
	4	6002 867	Retainer
	4	6002 868	Retainer
	4	6002 870	Retainer
	4	6026 523	Nut
2	1	3419 432-3	MOULDING PACKAGE, Frt. Door Outside Belt, w/Turn Indicator Fndr. Hood Mtg. (23-23-32)
	1	3419 434-5	MOULDING PACKAGE, Frt. Door Outside Belt, w/o Turn Indicator Fndr. Hood Mtg. (23-23-32)
	14	6002 713	Clip
3	1	2933 464-5	MOULDING and T/PLATE PACKAGE, Rr. Dr. Outside Belt Frt. to Rr. (23-23-33)
	16	6002 713	Retainer
4	1	3481 990-1	MOULDING PACKAGE, Rr. Door Outside (23-23-33)
	4	6002 870	Retainer
	6	6026 523	Nut
	6	6002 868	Retainer
	2	6002 879	Retainer
5	2	2964 803	NAME PLATE, Qtr. Outside Newport Custom (23-34-238)
	4	9420 263	Nut
6	1	3514 080-1	MOULDING PACKAGE, Qtr. Wheel Opng. (23-23-39)
	12	9420 867	Nut w/Seal
7	1	3419 314-5	MOULDING PACKAGE, Qtr. Outside Belt, Frt. Argent, use w/Vinyl Roof or Two Tone Paint (23-23-39)
	2	---- ---	Retainer
	2	---- ---	Nut
	8	---- ---	Fastener
8	1	3419 316-7	MOULDING PACKAGE, Qtr. Outside Belt, Rear Argent, use w/Vinyl Roof or Two Tone Paint (23-23-39)
	4	6023 898	Screw
	2	---- ---	Seal
	2	---- ---	Nut
9	1	3481 938-9	MOULDING PACKAGE, Qtr. Outside (23-23-39)
	8	6002 868	Retainer
	6	6002 314	Retainer
	2	6002 970	Retainer
10	1	3445 251	NAME PLATE, Deck Lid O/S, "Chrysler" (23-19-114)
	AR	6002 852	Retainer
11	1	3419 318-9	MOULDING PACKAGE, Deck Opng. Upr. Pnl. Argent, use w/Vinyl Roof or Two Tone Paint (23-23-31)
	8	6002 709	Retainer
	8	9426 925	Nut w/Seal
12	1	2893 712-3	MOULDING, Rr. Door Wdo. Opng. Frame, Rear (23-23-33)
13	1	3419 390-1	MOULDING PACKAGE, Roof Side Drain Trough, Frt. and Rr. (23-59-61)
	16	6027 459	Screw
14	1	2893 708-9	MOULDING, Rr. Door Wdo. Opng. Frame, Upr. (23-23-33)
15	1	2893 700	MOULDING, Rr. Door Wdo. Opng. Frame, Frt., Lt. (23-23-33)
	1	2893 701	MOULDING, Rr. Door Wdo. Opng. Frame, Frt. Rt. (23-23-33)
16	1	2893 700-1	MOULDING, Frt. Door Wdo. Opng. Frame, Rr. (23-23-32)
17	1	2893 698-9	MOULDING, Frt. Door Wdo. Opng. Frame, Upr. (23-23-32)
18	1	2933 568-9	MOULDING PACKAGE, Body Frt. Plr. Drain Trough (23-59-61)
	10	6027 459	Screw
19	1	2949 488-9	MOULDING, Fender Hood Extension (12-15-2)
20	1	2898 828	MOULDING, Hood Top Rear (15-25-2)
21	1	2933 334-5	MOULDING PACKAGE, Fender Peak (12-15-2)
22	1	3481 786-7	MOULDING PACKAGE, Fender Side (12-15-2)
	6	9420 218	Nut
	6	6001 569	Retainer
	10	6003 125	Retainer
23	1	3514 056-7	MOULDING PACKAGE, Fender Whl. Opng. (12-15-2)
	16	6028 545	Screw
24	1	2785 540	MEDALLION, Fender Side (12-15-21)
	1	6026 404	Nut
25	1	3419 482-3	MOULDING PACKAGE, Body Frt. Lwr. Pillar (23-23-14)
	2	6024 271	Screw

All Packages Include Attaching Parts

Part Type Code is Indicated in Parentheses

1970

EXTERIOR VIEW - CHRYSLER NEWPORT CUSTOM C-L 4 DOOR SEDAN

19a2989

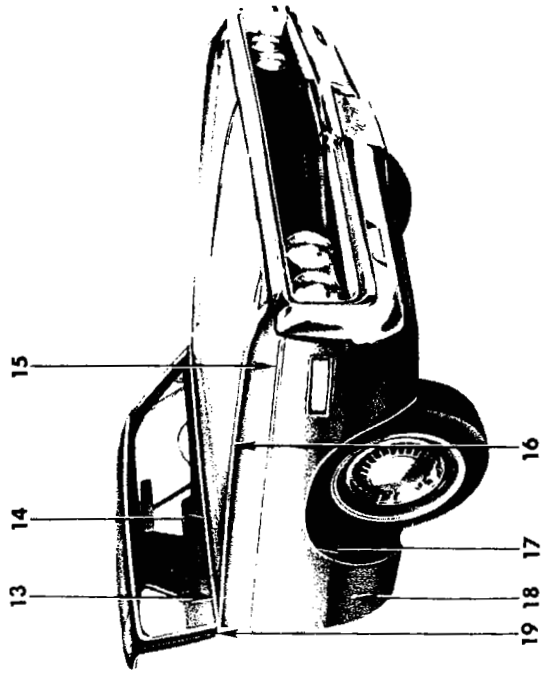

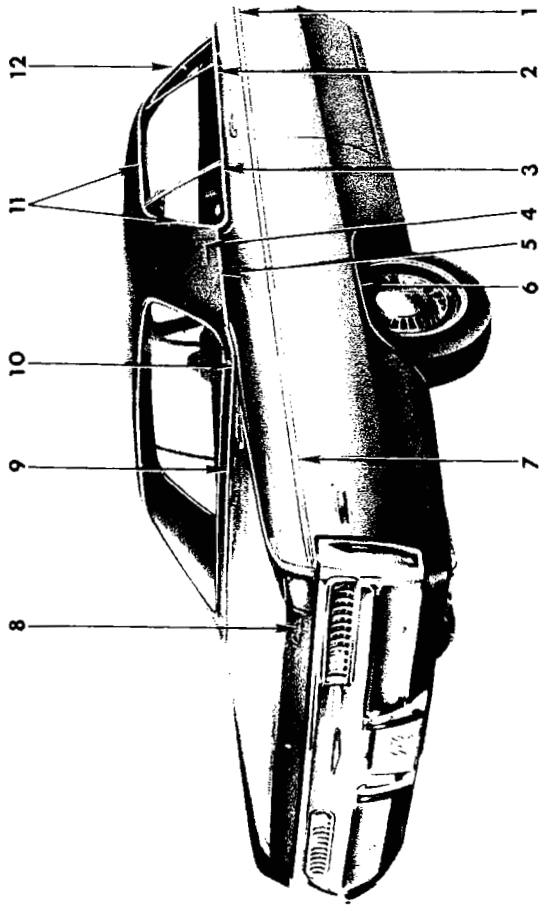

1970
EXTERIOR VIEW - CHRYSLER NEWPORT CUSTOM C-L 2 DOOR HARDTOP

REF. NO.	QTY	PART NUMBER	DESCRIPTION
1	1	3481 912-3	MOULDING PACKAGE, Door Outside (23-23-32)
	4	6002 867	Retainer
	6	6002 868	Retainer
	2	6002 870	Retainer
	2	6026 523	Nut
2	1	3419 428-9	MOULDING PACKAGE, Door Outside Belt, w/Turn Indicator Fender Hood Mtg. (23-23-32)
	1	3419 430-1	MOULDING PACKAGE, Door Outside Belt, w/Turn Indicator Fender Hood Mtg. (23-23-32)
	16	6002 713	Clip
3	1	2933 374-5	MOULDING PACKAGE, Qtr. Wdo. Outside Belt(23-23-39)
	4	6027 459	Screw
4	1	3444 194-5	NAME PLATE, Qtr. Outside Newport Custom (23-34-238
	4	9420 263	Nut
5	1	3419 310-1	MOULDING PACKAGE, Outside Belt, Frt. Argent, w/Vinyl Roof or Two Tone Paint (23-23-39)
	4	6002 297	Retainer
	4	9420 254	Nut w/Seal
	6	6002 192	Fastener
6	1	3514 080-1	MOULDING PACKAGE, Qtr. Outside Wheel Opng. (23-23-39)
	12	9420 867	Nut w/Seal
7	1	3481 922-3	MOULDING PACKAGE, Qtr. Outside (23-23-39)
	6	6002 314	Retainer
	6	6027 625	Nut
	2	6002 970	Retainer
	14	6002 868	Retainer
8	1	3445 251	NAME PLATE, Deck Lid Outside, "Chrysler" (23-19-114)
	AR	6002 852	Retainer
9	1	3419 320-1	MOULDING PACKAGE, Deck Opng. Upr. Pnl.. Argent, w/Vinyl Roof or Two Tone Paint (23-23-31)
	14	6002 709	Retainer
	14	9426 925	Nut
10	1	3419 312-3	MOULDING PACKAGE, Qtr. Outside Belt, Rear, Argent, w/Vinyl Roof or Two Tone Paint (23-23-39)
	4	6023 898	Screw
	2	---- ---	Nut w/Seal
11	1	3419 388-9	MOULDING PACKAGE; Roof Side Drain Trough, Front and Rear (23-59-61)
	6	6027 459	Screw
12	1	2933 602-3	MOULDING PACKAGE, Body Front Pillar Drain Trough (23-59-61)
	6	6027 459	Screw
13	1	2949 488-9	MOULDING, Fender Hood Extension (12-15-2)
14	1	2898 828	MOULDING, Hood Top Rear (15-25-2)
15	1	3481 786-7	MOULDING PACKAGE, Fender Side (12-15-2)
	6	9420 218	Nut
	6	6001 569	Retainer
	10	6003 125	Retainer
16	1	2933 334-5	MOULDING PACKAGE, Fender Peak (12-15-2)
	18	6002 713	Clip
17	1	3514 056-7	MOULDING PACKAGE, Fender Wheel Opening (12-15-2)
	16	6028 545	Screw
18	1	2785 540	MEDALLION, Fender Side (12-15-21)
	1	6026 404	Nut
19	1	3419 482-3	MOULDING PACKAGE, Body Frt. Lwr. Pillar (23-23-14)
	2	6024 271	Screw

All Packages Include Attaching Parts

Part Type Code is Indicated in Parentheses

19a2988

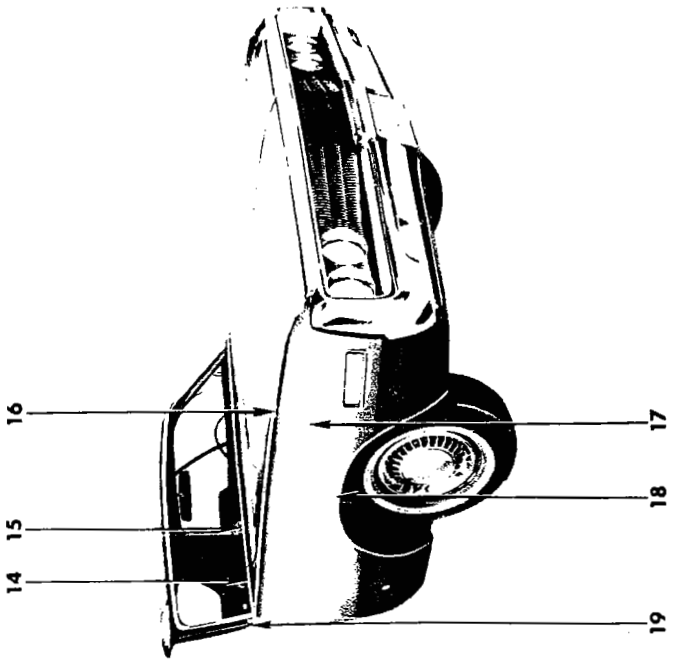

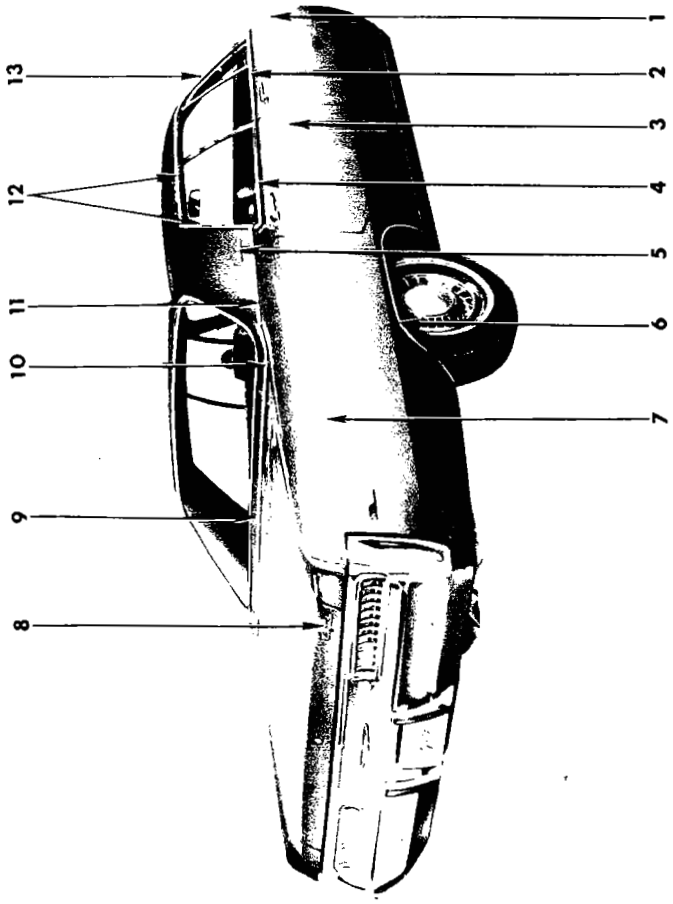

1970
EXTERIOR VIEW - CHRYSLER NEWPORT CUSTOM C-L 4 DOOR HARDTOP

REF. NO.	QTY	PART NUMBER	DESCRIPTION
1	1	3481 988-9	MOULDING PACKAGE, Frt. Door Outside (23-23-32)
	4	6002 867	Retainer
	4	6002 868	Retainer
	4	6002 870	Retainer
	4	6026 523	Nut
2	1	3419 432-3	MOULDING PACKAGE, Frt. Door Outside Belt, use w/Turn Indicator, Fender Hood Mtg. (23-23-32)
	1	3419 434-5	MOULDING PACKAGE, Frt. Door Outside Belt, use w/o Turn Indicator, Fender Hood Mtg. (23-23-32)
	14	6002 713	Clip
3	1	3481 990-1	MOULDING PACKAGE, Rear Door Outside (23-23-33)
	4	6002 870	Retainer
	6	6026 523	Nut
	6	6002 868	Retainer
	2	6002 879	Retainer
4	1	2933 464-5	MOULDING and T/PLATE PACKAGE, Rear Door Outside Belt Frt. to Rear (23-23-33)
	16	6002 713	Retainer
5	1	3444 194-5	NAME PLATE, Qtr. Outside Newport Custom (23-34-238)
	4	9420 263	Nut
6	1	3514 080-1	MOULDING PACKAGE, Qtr. Outside Wheel Opng. (23-23-39)
	12	9420 867	Nut w/Seal
7	1	3481 938-9	MOULDING PACKAGE, Qtr. Outside (23-23-39)
	8	6002 868	Retainer
	6	6002 314	Retainer
	2	6002 970	Retainer
8	1	3445 251	NAME PLATE, Deck Lid Outside, "Chrysler" (23-19-114)
	AR	6002 852	Retainer
9	1	3419 318-9	MOULDING PACKAGE, Deck Opng. Upt. Pnl., Argent, use w/Vinyl Roof or Two Tone Paint (23-23-31)
	8	6002 709	Retainer
	8	9426 925	Nut w/Seal
10	1	3419 316-7	MOULDING PACKAGE, Qtr. Outside Rear, Argent, use w/Vinyl Roof or Two Tone Paint (23-23-39)
	4	6023 898	Screw
	2	---- ---	Seal
	2	---- ---	Nut
11	1	3419 314-5	MOULDING PACKAGE, Qtr. Outside Belt Frt., Argent use w/Vinyl Roof or Two Tone Paint (23-23-39)
	2	---- ---	Retainer
	2	---- ---	Nut
	8	---- ---	Fastener
12	1	3419 386-7	MOULDING PACKAGE, Roof Side Drain Trough, Front and Rear (23-59-61)
	8	6027 459	Screw
13	1	2933 600-1	MOULDING PACKAGE, Body Front Pillar Drain Trough (23-59-61)
	6	6027 459	Screw
14	1	2949 488-9	MOULDING, Fender Hood Extension (12-15-2)
15	1	2898 828	MOULDING, Hood Top Rear (15-25-2)
16	1	2933 334-5	MOULDING PACKAGE, Fender Peak (12-15-2)
	9	6002 713	Clip
17	1	3481 786-7	MOULDING PACKAGE, Fender Side (12-15-2)
	3	9420 867	Nut
18	1	3514 056-7	MOULDING PACKAGE, Fender w/Opening (12-15-2)
	8	6024 271	Screw
19	1	3419 482-3	MOULDING PACKAGE, Body Frt. Lwr. Pillar (23-23-14)
	2	6024 271	Screw

All Packages Include Attaching Parts

Part Type Code is Indicated in Parentheses

1970

EXTERIOR VIEW - CHRYSLER NEWPORT CUSTOM C-L 4 DOOR HARD TOP

19a3074A

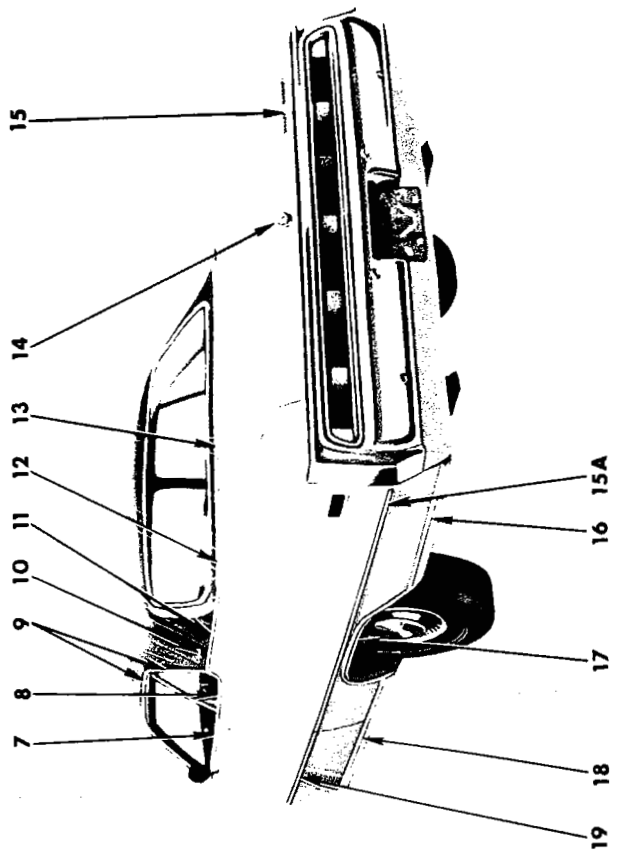

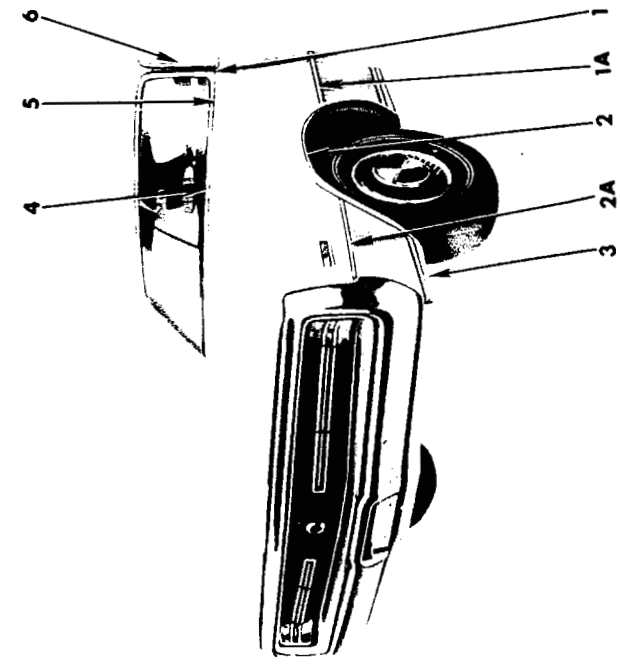

1970
EXTERIOR VIEW - CHRYSLER 300 C-M 2 DOOR HARDTOP

REF. NO.	QTY	PART NUMBER	DESCRIPTION
1	1	3419 482-3	MOULDING PACKAGE, Body Frt. Lwr. Pillar (23-23-14)
	2	6024 271	Screw
1A	2	3506 068	MOULDING, Fender Rear (12-15-2)
2	1	3481 784-5	MOULDING PACKAGE, Fender Wheel Opng. (12-15-2)
	8	6024 271	Screw
2A	2	3506 068	MOULDING, Fender Front (12-15-2)
3	1	3481 788-9	MOULDING PACKAGE, Fender Side Front (12-15-2)
	3	6002 601	Retainer
	6	6024 271	Screw
4	1	2898 828	MOULDING, Hood Top Rear (15-25-2)
5	1	2949 488-9	MOULDING, Fender Hood Extension (12-15-2)
6	1	2933 602-3	MOULDING PACKAGE, Body Frt. Pillar Drain Trough (23-59-61)
	6	6027 459	Screw
7	1	3419 428-9	MOULDING PACKAGE, Door Outside Belt, use w/Turn Indicator, Fender Hood Mtg. (23-23-32)
	1	3419 430-1	MOULDING PACKAGE, Door Outside Belt, use w/o Turn Indicator, Fender Hood Mtg. (23-23-32)
	16	6002 713	Clip
8	1	2933 374-5	MOULDING PACKAGE, Qtr. Wdo. Outside Belt (23-23-39)
	4	6027 459	Screw
9	1	3419 388-9	MOULDING PACKAGE, Roof Side Drain Trough, Front and Rear (23-59-61)
	6	6027 459	Screw
10	1	3444 196-7	NAME PLATE, Qtr. Outside, Chrysler (23-34-238)
	4	9420 263	Nut
11	1	3419 310-1	MOULDING PACKAGE, Qtr. Outside Belt, Frt., Argent, use w/Vinyl Roof or Two Tone Paint (23-23-39)
	4	6002 297	Retainer
	4	---- ---	Nut w/Seal
	6	6002 192	Fastener
12	1	3419 312-3	MOULDING PACKAGE, Qtr. Outside Belt, Rr., Argent, use w/Vinyl Roof or Two Tone Paint (23-23-39)
	4	6023 898	Screw
	2	---- ---	Nut w/Seal
13	1	3419 320-1	MOULDING PACKAGE, Deck Opng. Upr. Pnl., Argent, use w/Vinyl Roof or Two Tone Paint (23-23-31)
	14	6002 709	Retainer
	14	9426 925	Nut
14	1	2964 861	MEDALLION, Deck Lid Lock Cylinder (23-17-19)
	2	---- ---	Nut w/Seal
15	1	3444 169	NAME PLATE, Deck Lid, "Three" (23-19-114)
	4	6002 852	Retainer
	1	3444 170	NAME PLATE, Deck Lid, "Hundred" (23-19-114)
15A	2	3506 068	MOULDING, Qtr. Pnl. Outside (23-23-39)
16	1	3481 934-5	MOULDING PACKAGE, Qtr. Outside, Rear (23-23-39)
	6	6024 271	Screw
	10	6002 601	Retainer
	2	---- ---	Screw
17	1	3481 930-1	MOULDING PACKAGE, Qtr. Outside Whl. Opng. (23-23-39)
	10	6024 271	Screw
18	2	3481 910	MOULDING PACKAGE, Body Side Sill (23-23-2)
	9	6002 611	Retainer
	9	6024 271	Screw
19	2	3506 068	MOULDING, Door Outside (23-23-32)

All Packages Include Attaching Parts

Part Type Code is Indicated in Parentheses

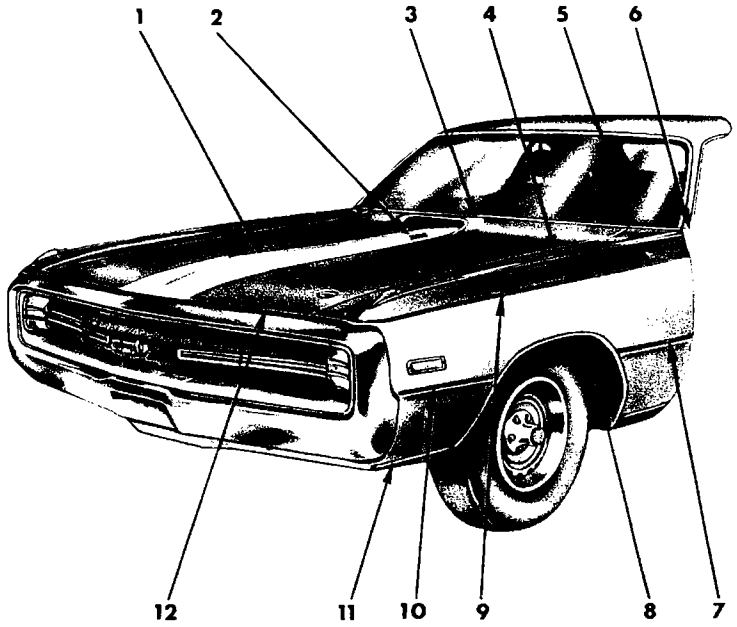

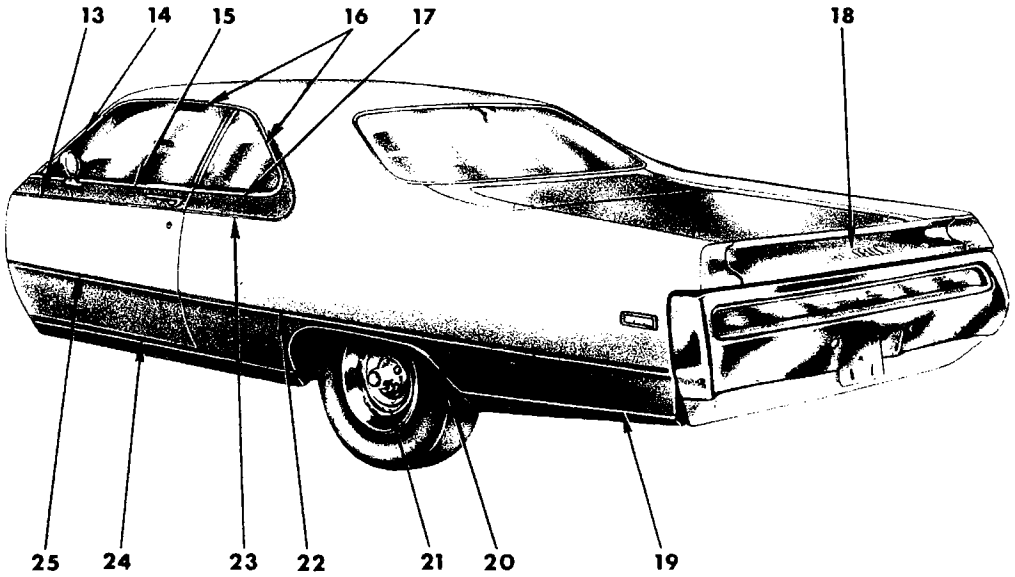

19a3373

1970

EXTERIOR VIEW - CHRYSLER 300H (HURST) C-M 2 DOOR HARDTOP

REF. NO.	QTY	PART NUMBER	DESCRIPTION
1	1	3571 222	TAPE, Hood Top (15-03-69)
2	2	3571 248	MEDALLION, Hood (15-06-6)
3	1	2898 828	MOULDING, Hood Top Rear (15-25-2)
4	1	2933 334-5	MOULDING PACKAGE, Fender Outside Peak (12-15-2)
	18	6002 713	Clip
5	1	2949 488-9	MOULDING, Fender Hood Extension Rear (12-15-2)
6	1	3419 482-3	MOULDING PACKAGE, Body Frt. Lwr. Pillar (23-23-14)
	2	6024 271	Screw
7	1	3571 244-5	TAPE, Frt. Fender, Lwr., Rear (12-15-33)
8	1	3481 784-5	MOULDING PACKAGE, Fender Wheel Opng. (12-15-2)
	8	6024 271	Screw
9	1	3571 224-5	TAPE, Frt. Fender, Upr. (12-15-33)
10	1	3571 246-7	TAPE, Frt. Fender, Lwr., Front (12-15-33)
11	1	3481 788-9	MOULDING PACKAGE, Fender Side Front (12-15-2)
	3	6002 601	Retainer
	6	6024 271	Screw
12	1	3571 220-1	TAPE, Hood Front (15-03-69)
13	2	3571 365	TAPE, Door Outside, Upr. (23-23-12)
14	1	2933 602-3	MOULDING PACKAGE, Body Front Pillar Drain Trough (23-59-61)
	6	6027 459	Screw
15	1	3419 428-9	MOULDING PACKAGE, Door Outside Belt, use w/Turn Indicator, Fender Hood Mtg. (23-23-32)
	1	3419 430-1	MOULDING PACKAGE, Door Outside Belt, use w/o Turn Indicator, Fender Hood Mtg. (23-23-32)
	16	6002 713	Clip
16	1	3419 388-9	MOULDING PACKAGE, Roof Side Drain Trough, Front and Rear (23-59-61)
	6	6027 459	Screw
17	1	2933 374-5	MOULDING PACKAGE, Qtr. Wdo. Outside Belt (23-23-39)
	4	6027 459	Screw
18	1	2898 838	NAME LETTER, Deck Lid, "C" (23-19-114)
	1	2898 839	"H"
	2	2898 840	"R"
	1	2898 841	"Y"
	1	2898 842	"S"
	1	2898 843	"L"
	1	2898 844	"E"
	8	9420 254	Nut
19	1	3481 934-5	MOULDING PACKAGE, Qtr. Outside, Lwr. Rear (23-23-39)
	6	6024 271	Screw
	10	6002 601	Retainer
	2	---- ---	Screw
20	1	3481 930-1	MOULDING PACKAGE, Qtr. Outside Wheel Opng. (23-23-39)
	10	6024 271	Screw
21	4	3571 252	DECAL, Wheel (22-01-43)
22	2	3571 250	TAPE, Rear Qtr. Outside, Lwr. (23-23-12)
23	1	3571 228-9	TAPE, Rear Qtr. Outside, Upr. (23-23-12)
24	2	3481 910	MOULDING PACKAGE, Body Side Sill (23-23-2)
	9	6002 611	Retainer
	9	6024 271	Screw
25	2	3571 366	TAPE, Door Outside, Lwr. (23-23-12)

All Packages Include Attaching Parts

Part Type Code is Indicated in Parentheses

1970
EXTERIOR VIEW - CHRYSLER 300H (HURST) C-M 2 DOOR HARDTOP

19a3065

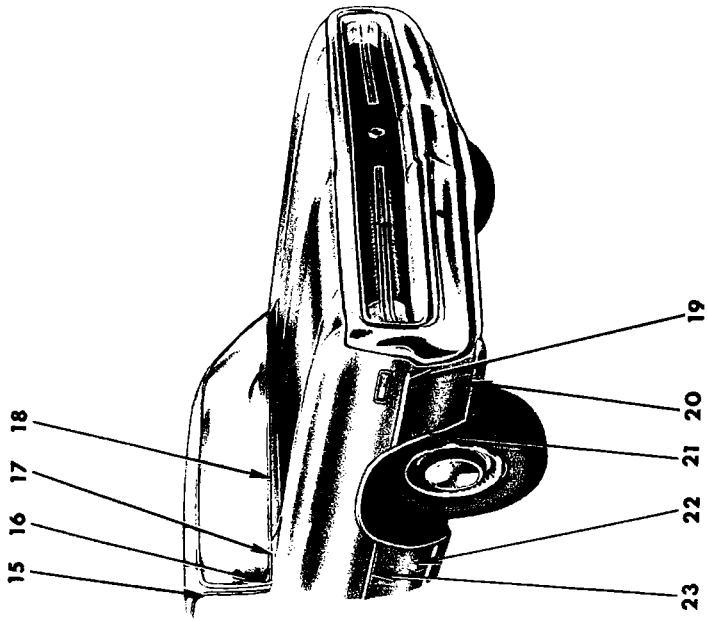

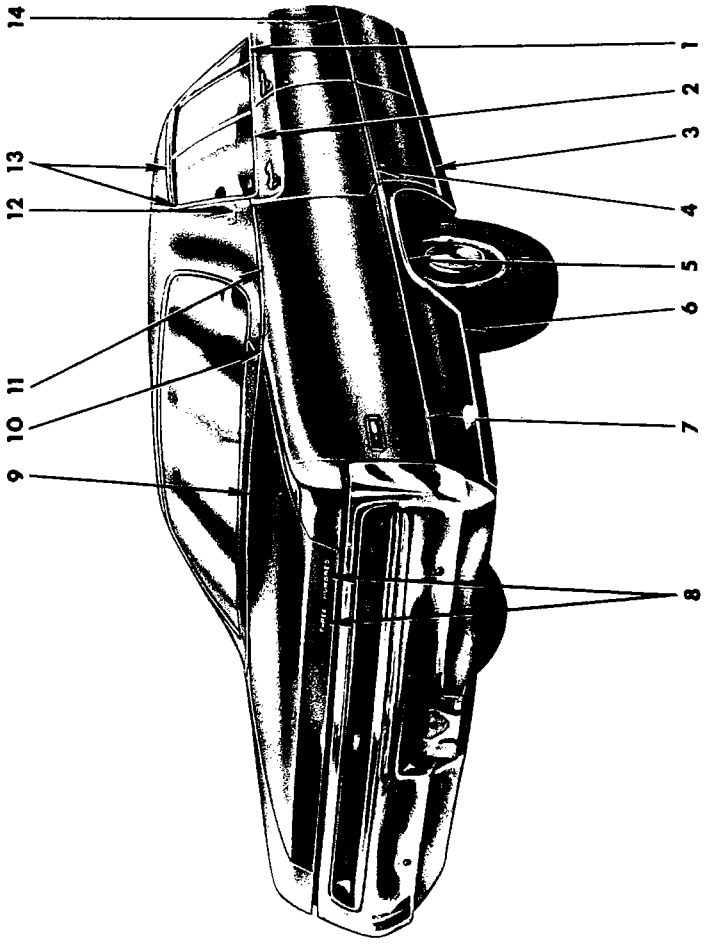

1970
EXTERIOR VIEW - CHRYSLER 300 C-M 4 DOOR HARDTOP

REF. NO.	QTY	PART NUMBER	DESCRIPTION
1	1	3419 432-3	MOULDING PACKAGE, Frt. Door Outside Belt, w/Fndr. Hood Mtg. (23-23-32)
	1	3419 434-5	MOULDING PACKAGE, Frt. Door Outside Belt, w/o Fndr. Hood Mtg. (23-23-32)
	14	6002 713	Clip
2	1	2933 464-5	MOULDING and T/PLATE PACKAGE, Rear Door Outside Belt Frt. to Rr. (23-23-33)
	16	6002 713	Retainer
3	2	3481 910	MOULDING PACKAGE, Body Side Sill (23-23-2)
	9	6002 611	Retainer
	9	6024 271	Screw
4	2	3506 068	MOULDING, Rear Door Outside (23-23-33)
5	1	3481 930-1	MOULDING PACKAGE, Qtr. Outside Whl. Opng. (23-23-39)
	10	6024 271	Screw
6	1	3481 934-5	MOULDING PACKAGE, Qtr. Outside Rear (23-23-39)
	6	6024 271	Screw
	10	6002 601	Retainer
	2	---- ---	Screw
7	2	3506 068	MOULDING, Qtr. Pnl. Outside (23-23-39)
8	1	3444 169	NAME PLATE, Deck Lid, "Three" (23-19-114)
	4	6002 852	Retainer
	1	3444 170	NAME PLATE, Deck Lid, "Hundred" (23-19-114)
9	1	3419 318-9	MOULDING PACKAGE, Deck Opng. Upr. Pnl., Argent, use w/Two Tone Paint or Vinyl Roof (23-23-31)
	8	6002 709	Retainer
	8	9426 925	Nut w/Seal
10	1	3419 316-7	MOULDING PACKAGE, Qtr. Outside Belt, Rr., Argent, use w/Vinyl Roof or Two Tone Paint (23-23-39)
	4	6023 898	Screw
	2	---- ---	Seal
	2	---- ---	Nut
11	1	3419 314-5	MOULDING PACKAGE, Qtr. Outside Belt Frt., Argent, use w/Vinyl Roof or Two Tone Paint (23-23-39)
	2	---- ---	Nut
	8	---- ---	Fastener
	2	---- ---	Retainer
12	1	3444 196-7	NAME PLATE, Qtr. Outside, Chrysler (23-34-238)
	4	9420 263	Nut
13	1	3419 386-7	MOULDING PACKAGE, Roof Side Drain Trough, Frt. and Rear (23-59-61)
14	2	3506 068	MOULDING, Frt. Door Outside (23-23-32)
15	1	2933 600-1	MOULDING PACKAGE, Body Front Plr. Drain Trough (23-59-61)
	6	6027 459	Screw
16	1	3419 482-3	MOULDING PACKAGE, Frt. Lwr. Pillar (23-23-14)
	2	6024 271	Screw
17	1	2949 488-9	MOULDING, Fender Hood Extension (12-15-2)
18	1	2898 828	MOULDING, Hood Top Rear (15-25-2)
19	2	3506 068	MOULDING, Fender Front (12-15-2)
20	1	3481 788-9	MOULDING PACKAGE, Fender Side Frt. (12-15-2)
	3	6002 601	Retainer
	6	6024 271	Screw
21	1	3481 784-5	MOULDING PACKAGE, Fender Whl. Opng. (12-15-2)
	8	6024 271	Screw
22	1	2785 540	MEDALLION, Fender Side (12-15-21)
	1	6026 404	Nut
23	2	3506 068	MOULDING, Fender Rear (12-15-2)

All Packages Include Attaching Parts

Part Type Code is Indicated in Parentheses

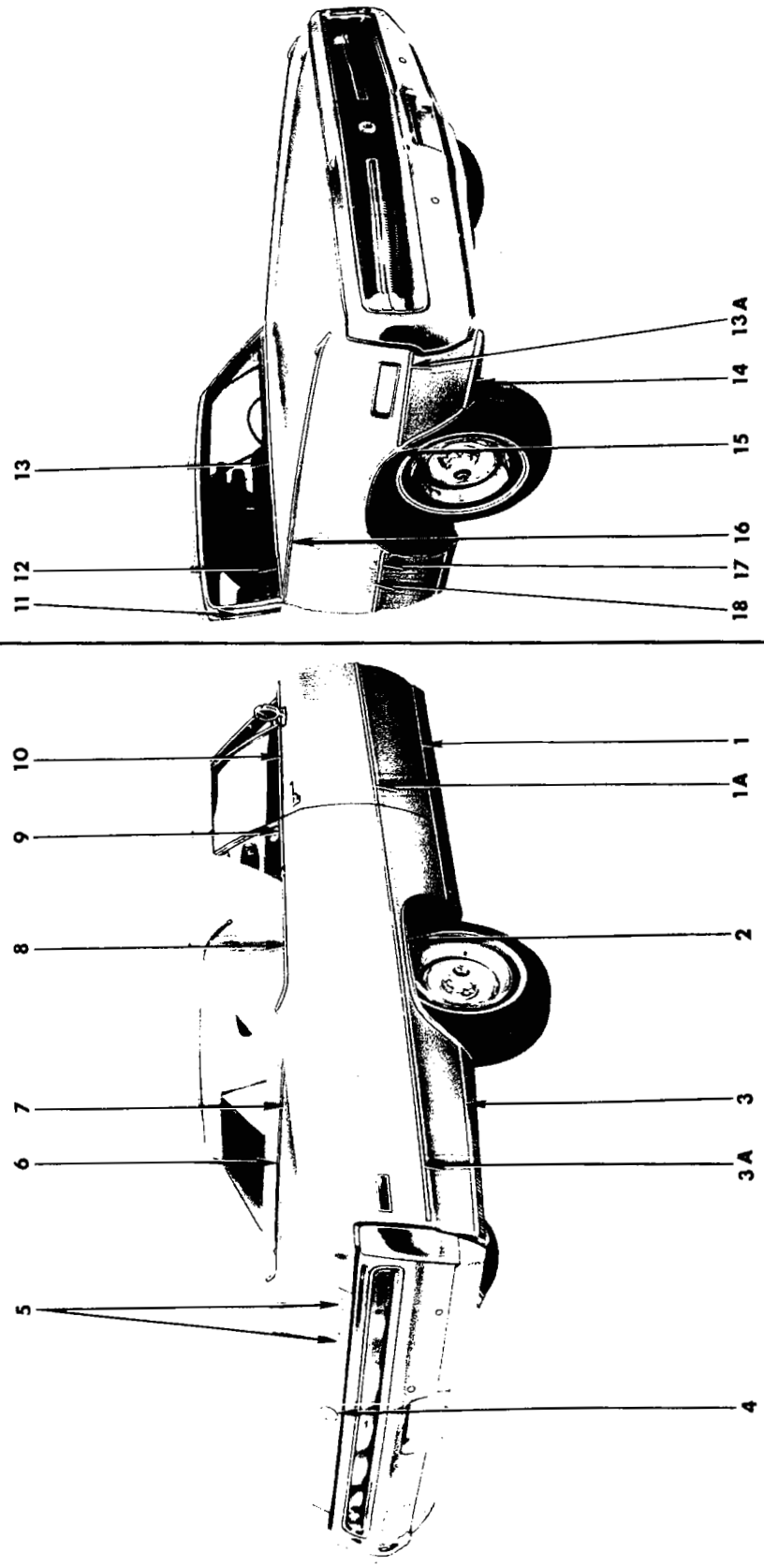

1970
EXTERIOR VIEW - CHRYSLER 300 C-M CONVERTIBLE COUPE

REF. NO.	QTY	PART NUMBER	DESCRIPTION
1	2	3481 910	MOULDING PACKAGE, Body Side Sill (23-23-2)
	9	6002 611	Retainer
	9	6024 271	Screw
1A	2	3506 068	MOULDING, Door Outside (23-23-32)
2	1	3481 930-1	MOULDING PACKAGE, Qtr. Outside Whl. Opng. (23-23-39)
	10	6024 271	Screw
3	1	3481 934-5	MOULDING PACKAGE, Qtr. Outside, Rear (23-23-39)
	6	6024 271	Screw
	10	6002 601	Retainer
	2	---- ---	Screw
3A	2	3506 068	MOULDING, Qtr. Pnl. Outside (23-23-39)
4	1	2964 861	MEDALLION, Deck Lid Lock Cylinder (23-17-19)
	2	---- ---	Nut w/Seal
5	1	3444 169	NAME PLATE, Deck Lid, "Three" (23-19-114)
	1	3444 170	NAME PLATE, Deck Lid, "Hundred" (23-19-114)
	4	6002 852	Retainer
6	1	2901 180	COVER, Deck Opng. Upr. Pnl. Mldg. Joint (23-23-41)
7	2	2933 934	MOULDING PACKAGE, Deck Opng. Upr. Pnl. (23-23-31)
	10	6002 734	Retainer
	10	---- ---	Screw
8	1	2933 932-3	MOULDING PACKAGE, Qtr. Outside Belt, Rr. (23-23-39)
	16	---- ---	Screw
9	1	2933 936-7	MOULDING PACKAGE, Qtr. Outside Belt, Frt. (23-23-39)
	2	6027 282	Screw
10	1	3419 428-9	MOULDING PACKAGE, Door Outside Belt, w/Turn Indicator Fender Hood Mtg. (23-23-32)
	1	3419 430-1	MOULDING PACKAGE, Door Outside Belt, w/o Turn Indicator Fender Hood Mtg. (23-23-32)
	16	6002 713	Clip
11	1	2901 018-9	MOULDING, Body Frt. Upr. Plr. Outside (23-23-14)
12	1	2949 488-9	MOULDING, Fender Hood Extension (12-15-2)
13	1	2898 828	MOULDING, Hood Top Rear (15-25-2)
13A	2	3506 068	MOULDING, Fender Front (12-15-2)
14	1	3481 788-9	MOULDING PACKAGE, Fender Side Front (12-15-2)
	3	6002 601	Retainer
	6	6024 271	Screw
15	1	3481 784-5	MOULDING PACKAGE, Fender Wheel Opng. (12-15-2)
	8	6024 271	Screw
16	1	2933 334-5	MOULDING PACKAGE, Fender Peak (12-15-2)
	9	6002 713	Clip
17	2	3506 068	MOULDING, Fender Rear (12-15-2)
18	2	3444 181	NAME PLATE, Fender Side, "Chrysler" (12-15-21)
	AR	6002 852	Retainer

All Packages Include Attaching Parts

Part Type Code is Indicated in Parentheses

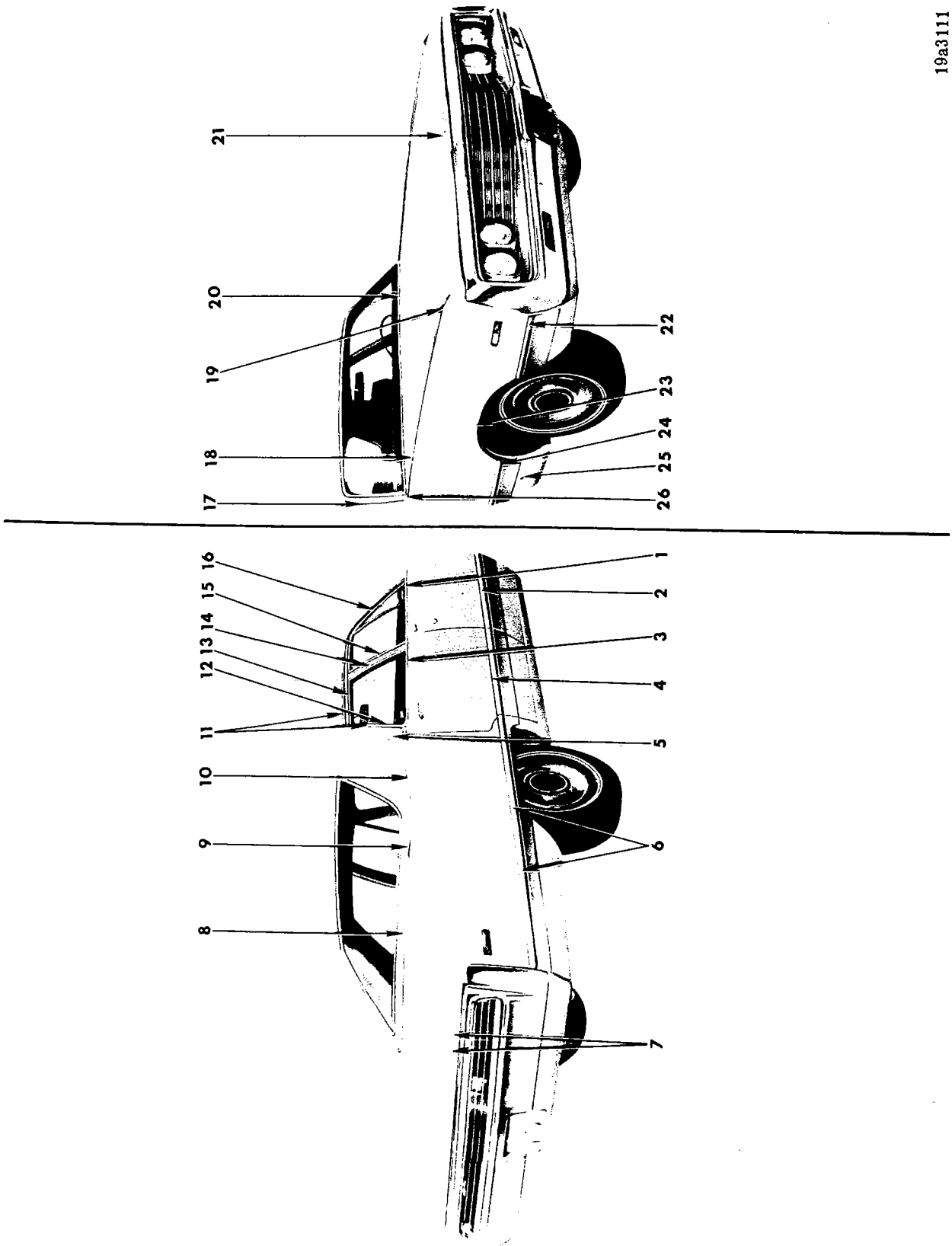

1970
EXTERIOR VIEW - CHRYSLER NEW YORKER C-H 4 DOOR SEDAN

REF. NO.	QTY	PART NUMBER	DESCRIPTION
1	1	3419 432-3	MOULDING PACKAGE, Frt. Door Outside Belt, w/Turn Indicator, Fndr. Hood Mtg. (23-23-32)
	14	6002 713	Clip
2	1	3481 992-3	MOULDING PACKAGE, Frt. Door Outside (23-23-32)
	24	6002 927	Retainer
	24	6024 271	Screw
	2	6002 992	Retainer
	2	6026 523	Nut
3	1	2933 464-5	MOULDING and T/PLATE PACKAGE, Rear Door Outside Belt Frt. to Rear (23-23-33)
	16	6002 713	Retainer
4	1	3481 994-5	MOULDING PACKAGE, Rear Door Outside (23-23-33)
	20	6002 927	Retainer
	20	6024 271	Screw
	2	6002 992	Retainer
	2	6026 523	Nut
5	2	2964 806	MEDALLION, Quarter Outside (23-34-334)
	2	9420 263	Nut
6	1	3514 084-5	MOULDING and SUPPORT PACKAGE, Qtr. Outside (23-23-39)
	16	6002 927	Retainer
	16	6024 271	Screw
	2	6028 614	Screw
7	1	2964 809	NAME PLATE, Deck Lid, "New Yorker" (23-19-114)
8	1	3419 318-9	MOULDING PACKAGE, Deck Opng. Upr. Pnl., Argent, w/Vinyl Roof or Two Tone Paint (23-23-31)
	8	6002 709	Retainer
	8	9426 925	Nut w/Seal
9	1	3419 316-7	MOULDING PACKAGE, Qtr. Outside Belt, Rr. Argent, w/Vinyl Roof or Two Tone Paint (23-23-39)
	4	6023 898	Screw
	2	---- ---	Seal
	2	---- ---	Nut
10	1	3419 314-5	MOULDING PACKAGE, Qtr. Outside Belt, Frt. Argent, w/Vinyl Roof or Two Tone Paint (23-23-39)
	2	---- ---	Retainer
	2	---- ---	Nut
	8	---- ---	Fastener
11	1	3419 390-1	MOULDING PACKAGE, Roof Side Drain Trough, Frt. and Rear (23-59-61)
	16	6027 459	Screw
12	1	2893 712-3	MOULDING, Rr. Door Wdo. Opng. Frame, Rear (23-23-33)
13	1	2893 708-9	MOULDING, Rr. Door Wdo. Opng. Frame, Upr. (23-23-33)
14	1	2893 700	MOULDING, Rr. Door Wdo. Opng. Frame, Frt., Lt. (23-23-33)
	1	2893 701	MOULDING, Rr. Door Wdo. Opng. Frame, Frt., Rt. (23-23-33)
15	1	2893 700-1	MOULDING, Frt. Door Wdo. Opng. Frame, Rr. (23-23-32)
16	1	2893 698-9	MOULDING, Frt. Door Wdo. Opng. Frame, Upr. (23-23-32)
17	1	2933 568-9	MOULDING PACKAGE, Body Frt. Plr. Drain Trough (23-59-61)
	10	6027 459	Screw
18	1	2949 488-9	MOULDING, Fender Hood Extension (12-15-2)
19	1	2933 334-5	MOULDING PACKAGE, Fender Peak (12-15-2)
	18	6002 713	Clip
20	1	2898 828	MOULDING, Hood Top Rear (15-25-2)
21	1	2898 838	LETTER "C", Hood Front (15-06-16)
	1	2898 839	"H"
	2	2898 840	"R"
	1	2898 841	"Y"
	1	2898 842	"S"
	1	2898 843	"L"
	1	2898 844	"E"
	8	9420 254	Nut
22	1	3481 790-1	MOULDING PACKAGE, Fender Side Front (12-15-2)
	5	6027 466	Nut
	2	6024 271	Screw
23	1	3481 792-3	MOULDING PACKAGE, Fender Wheel Opng. (12-15-2)
	8	6028 545	Screw
24	1	3481 794-5	MOULDING PACKAGE, Fender Side Rear (12-15-2)
	12	6002 927	Clip
	4	6028 545	Screw
25	1	2785 540	MEDALLION, Fender Side (12-15-21)
26	1	3419 482-3	MOULDING PACKAGE, Body Frt. Lwr. Pillar (23-23-14)
	2	6024 271	Screw

All Packages Include Attaching Parts

Part Type Code is Indicated in Parentheses

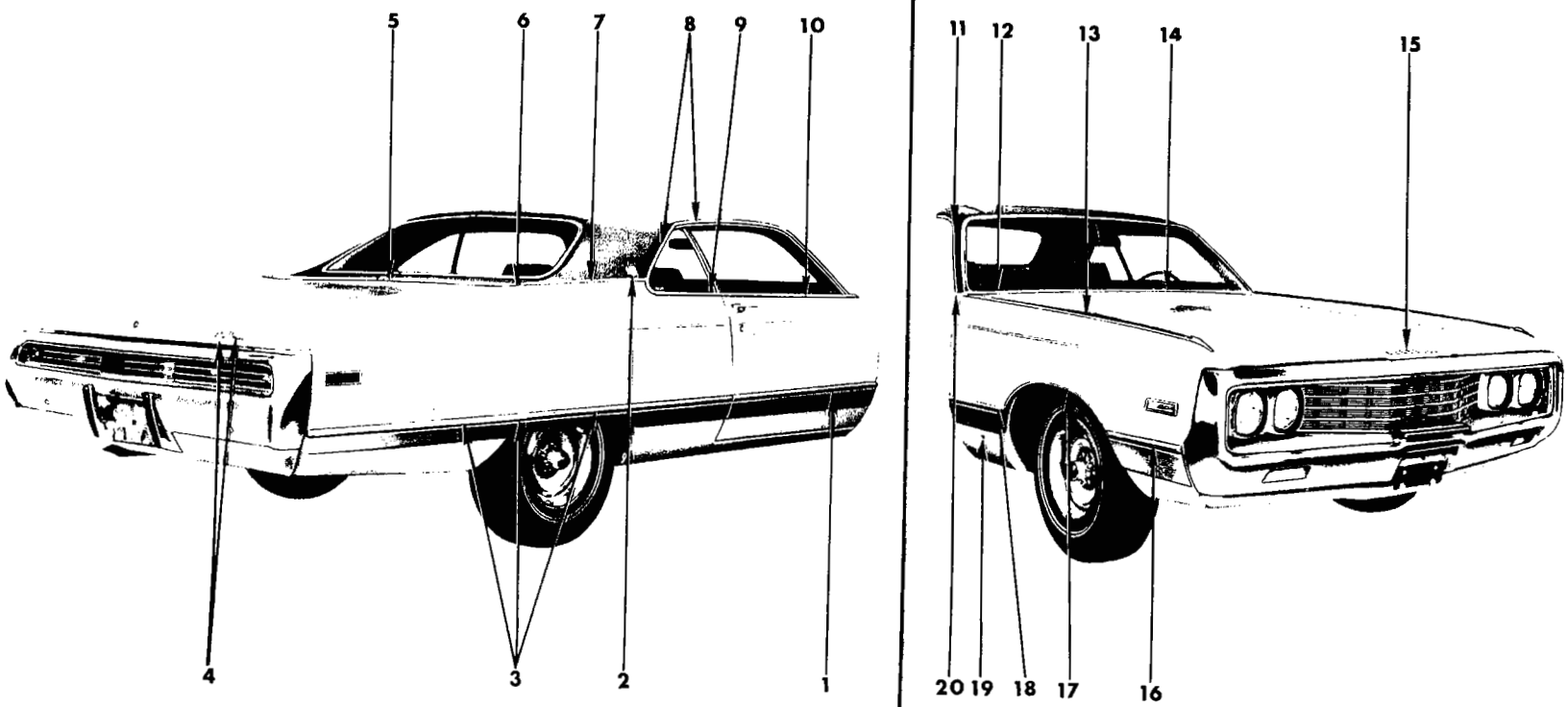

19a3110

1970
EXTERIOR VIEW - CHRYSLER NEW YORKER C-H 2 DOOR HARDTOP

REF. NO.	QTY	PART NUMBER	DESCRIPTION
1	1	3481 914-5	MOULDING PACKAGE, Door Outside (23-23-32)
	32	6002 927	Retainer
	32	6024 271	Screw
	2	6002 992	Retainer
	2	6026 523	Nut
2	2	2964 806	MEDALLION, Quarter Outside (23-34-334)
	2	9420 263	Nut
3	1	3514 082-3	MOULDING and SUPPORT PACKAGE, Qtr. Outside (23-23-39)
	26	6002 927	Retainer
	26	6024 271	Screw
4	1	2964 809	NAME PLATE, Deck Lid, "New Yorker" (23-19-114)
5	1	3419 320-1	MOULDING PACKAGE, Deck Opng. Upr. Pnl., Argent, w/Vinyl Roof or Two Tone Paint (23-23-31)
	14	6002 709	Retainer
	14	9426 925	Nut
6	1	3419 312-3	MOULDING PACKAGE, Qtr. Outside Belt Rear, Argent, w/Vinyl Roof or Two Tone Paint (23-23-39)
	4	6023 898	Screw
	2	9420 293	Nut w/Seal
7	1	3419 310-1	MOULDING PACKAGE, Qtr. Outside Belt, Frt., Argent, w/Vinyl Roof or Two Tone Paint (23-23-39)
	4	6002 297	Retainer
	4	---- ---	Nut w/Seal
	6	6002 192	Fastener
8	1	3419 388-9	MOULDING PACKAGE, Roof Side Drain Trough, Frt. and Rear (23-59-61)
9	1	2933 374-5	MOULDING PACKAGE, Qtr. Wdo. Outside Belt (23-23-39)
	4	6027 459	Screw
10	1	3419 428-9	MOULDING PACKAGE, Door Outside Belt w/Turn Indicator Fndr. Hood Mtg. (23-23-32)
	16	6002 713	Clip
11	1	2933 602-3	MOULDING PACKAGE, Body Front Pillar Drain Trough (23-59-61)
	6	6027 459	Screw
12	1	2949 488-9	MOULDING, Fender Hood Extension (12-15-2)
13	1	2933.334-5	MOULDING PACKAGE, Fender Peak (12-15-2)
	18	6002 713	Clip
14	1	2898 828	MOULDING, Hood Top Rear (15-25-2)
15	1	2898 838	LETTER "C", Hood Front Name (15-06-16)
	1	2898 839	"H"
	2	2898 840	"R"
	1	2898 841	"Y"
	1	2898 842	"S"
	1	2898 843	"L"
	1	2898 844	"E"
	8	9420 254	Nut
16	1	3481 790-1	MOULDING PACKAGE, Fender Side Front (12-15-2)
	5	6027 466	Nut
	2	6024 271	Screw
17	1	3481 792-3	MOULDING PACKAGE, Fender Wheel Opening (12-15-2)
	8	6028 545	Screw
18	1	3481 794-5	MOULDING PACKAGE, Fender Side Rear (12-15-2)
	12	6002 927	Clip
	4	6028 545	Screw
19	1	2785 540	MEDALLION, Fender Side (12-15-21)
	1	6026 404	Nut
20	1	3419 482-3	MOULDING PACKAGE, Body Frt. Lwr. Pillar (23-23-14)
	2	6024 271	Screw

All Packages Include Attaching Parts

Part Type Code is Indicated in Parentheses

1970

EXTERIOR VIEW - CHRYSLER NEW YORKER C-H 2 DOOR HARD TOP

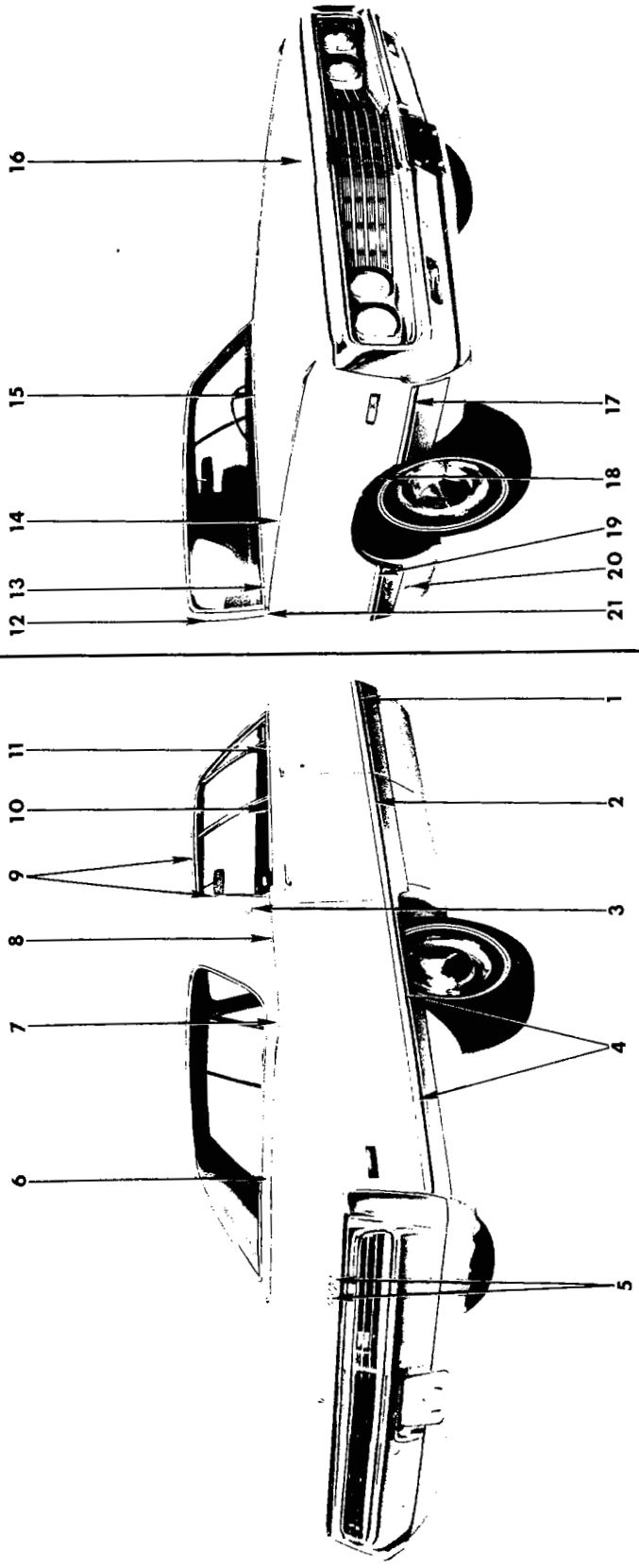

1970
EXTERIOR VIEW - CHRYSLER NEW YORKER C-H 4 DOOR HARDTOP

REF. NO.	QTY	PART NUMBER	DESCRIPTION
1	1	3481 992-3	MOULDING PACKAGE, Frt. Door Outside (23-23-32)
	24	6002 927	Retainer
	24	6024 271	Screw
	2	6002 992	Retainer
	2	6026 523	Nut
2	1	3481 994-5	MOULDING PACKAGE, Rr. Door Outside (23-23-33)
	20	6002 927	Retainer
	20	6024 271	Screw
	2	6002 992	Retainer
	2	6026 523	Nut
3	2	2964 806	MEDALLION, Qtr. Outside (23-34-334)
	2	9420 263	Nut
4	1	3514 084-5	MOULDING and SUPPORT PACKAGE, Qtr. Outside (23-23-39)
	16	6002 927	Retainer
	16	6024 271	Screw
	2	6028 614	Screw
5	1	2964 809	NAME PLATE, Deck Lid, "New Yorker" (23-19-114)
6	1	3419 318-9	MOULDING PACKAGE, Deck Opng. Upr. Pnl. Argent, w/Vinyl Roof or Two Tone Paint (23-23-31)
	8	6002 709	Retainer
	8	9426 925	Nut w/Seal
7	1	3419 316-7	MOULDING PACKAGE, Qtr. Outside Belt, Rr., Argent, w/Vinyl Roof or Two Tone Paint (23-23-39)
	4	6023 898	Screw
	2	---- ---	Seal
	2	---- ---	Nut
8	1	3419 314-5	MOULDING PACKAGE, Qtr. Outside Belt, Frt., Argent w/Vinyl Roof or Two Tone Paint (23-23-39)
	2	---- ---	Retainer
	2	---- ---	Nut
	8	---- ---	Fastener
9	1	3419 386-7	MOULDING PACKAGE, Roof Side Drain Trough, Frt. and Rear (23-59-61)
	8	6027 459	Screw
10	1	2933 464-5	MOULDING and T/PLATE, Rear Door Outside Belt Frt. to Rear (23-23-33)
	16	6002 713	Retainer
11	1	3419 432-3	MOULDING PACKAGE, Frt. Door Outside Belt w/Turn Indicator, Fndr. Hood Mtg. (23-23-32)
	14	6002 713	Clip
12	1	2933 600-1	MOULDING PACKAGE, Body Front Pillar Drain Trough (23-59-61)
	6	6027 459	Screw
13	1	2949 488-9	MOULDING, Fender Hood Extension (12-15-2)
14	1	2933 334-5	MOULDING PACKAGE, Fender Peak (12-15-2)
	18	6002 713	Clip
15	1	2898 828	MOULDING, Hood Top Rear (15-25-2)
16	1	2898 838	LETTER "C", Hood Front Name (15-06-16)
	1	2898 839	"H"
	2	2898 840	"R"
	1	2898 841	"Y"
	1	2898 842	"S"
	1	2898 843	"L"
	1	2898 844	"E"
	8	9420 254	Nut
17	1	3481 790-1	MOULDING PACKAGE, Fender Side Front (12-15-2)
	5	6027 466	Nut
	2	6024 271	Screw
18	1	3481 792-3	MOULDING PACKAGE, Fender Wheel Opening (12-15-2)
	8	6028 545	Screw
19	1	3481 794-5	MOULDING PACKAGE, Fender Side Rear (12-15-2)
	12	6002 927	Clip
	4	6028 545	Screw
20	1	2785 540	MEDALLION, Fender Side (12-15-21)
	1	6026 404	Nut

All Packages Include Attaching Parts

Part Type Code is Indicated in Parentheses

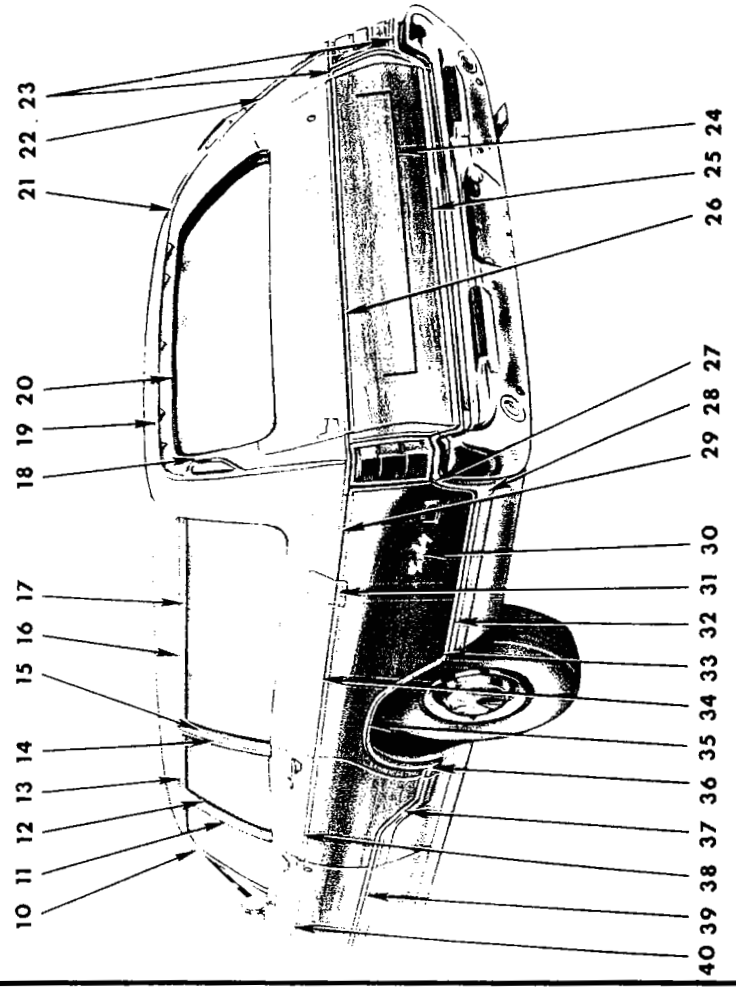

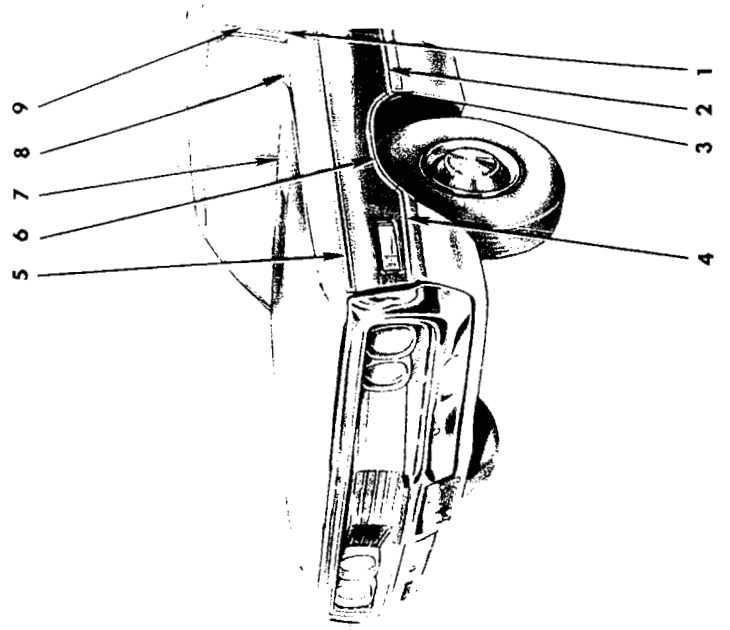

19a3128

1970
EXTERIOR VIEW - CHRYSLER TOWN AND COUNTRY C-P STATION WAGON

REF. NO.	QTY	PART NUMBER	DESCRIPTION
1	1	3419 482-3	MOULDING PACKAGE, Body Frt. Lwr. Plr. (23-23-14)
	2	6024 271	Screw
2	1	3481 906-7	MOULDING PACKAGE, Fndr. Side Lwr. Rr. (12-15-2)
	3	6002 720	Retainer
3	1	3481 904-5	MOULDING PACKAGE, Fndr. Wheel Opening Rear (12-15-2)
	1	9420 293	Nut
4	1	3481 796-7	MOULDING PACKAGE, Fndr. Side Lwr. Front (12-15-2)
	3	6027 466	Nut
5	1	3481 798-9	MOULDING PACKAGE, Fndr. Side Upper (12-15-2)
	2	9420 219	Nut
	2	6002 487	Retainer
	7	6002 726	Retainer
6	1	3481 902-3	MOULDING PACKAGE, Fndr. Wheel Opening (12-15-2)
	3	6024 271	Screw
7	1	2998 828	MOULDING, Hood Top Rear (15-25-2)
8	1	2949 488-9	MOULDING, Fender Hood Extension (12-15-2)
9	1	2933 568-9	MOULDING PACKAGE, Body Front Pillar Drain Trough (23-59-61)
	10	6027 459	Screw
10	1	2893 698-9	MOULDING, Frt. Door Wdo. Opng. Frame, Upr. (23-23-32)
11	1	2893 700-1	MOULDING, Frt. Door Wdo. Opng. Frame, Rear (23-23-32)
12	1	2893 700	MOULDING, Rear Door Wdo. Opng. Frame, Frt., Lt. (23-23-33)
	1	2893 701	MOULDING, Rear Door Wdo. Opng. Frame, Frt., Rt. (23-23-33)
13	1	2893 724-5	MOULDING, Rear Door Wdo. Opng. Frame, Upr. (23-23-33)
14	1	2893 728-9	MOULDING, Rear Door Wdo. Opng. Frame, Rear (23-23-33)
15	1	2893 256-7	MOULDING, Qtr. Wdo. Outside, Frt., Prime (23-23-73)
	1	2894 870-1	MOULDING, Qtr. Wdo. Outside, Frt., Finish (23-23-73)
16	1	3419 450-1	MOULDING PACKAGE, Roof Side Drain Trough (23-59-61)
	12	6024 659	Screw
17	1	2893 258-9	MOULDING, Qtr. Wdo. Outside, Upr., Prime (23-23-73)
	1	2894 872-3	MOULDING, Qtr. Wdo. Outside, Upr., Finish (23-23-73)
18	1	2894 442-3	MOULDING, Qtr. Pnl. Outside Tailgate Pillar Upr. Tailgate Opng., Prime (23-23-60)
19	1	2894 418	MOULDING, Roof Rear Air Deflector, Center (23-23-60)
20	1	2894 445	MOULDING, Roof Pnl. Outside Tailgate Opng. Upr. Prime (23-23-60)
21	1	2894 416-7	MOULDING, Roof Rear Air Deflector, End (23-23-60)
22	1	3419 066-7	MOULDING PACKAGE, Qtr. Pnl. Outside Tailgate Pillar Upr., Short, use w/Assist Handles (23-23-60)
	8	6002 665	Spacer
	1	2894 592-3	MOULDING, Qtr. Pnl. Outside Tailgate Pillar Upr., use w/o Assist Handles (23-23-60)
23	1	3403 494-5	BEZEL, Tail, Stop and Turn Signal Lamp (8-55-158)
24	1	3446 166	LETTER "C", Tailgate Outside Panel, UP TO Dec. 8, 1969 (23-54-11)
	1	3446 167	"H"
	2	3446 168	"R"
	1	3446 169	"Y"
	1	3446 170	"S"
	1	3446 171	"L"
	1	3446 172	"E"
	8	9420 291	Nut
	1	3506 271	LETTER "C", Tailgate Outside Panel, AFTER Dec. 8, 1969 (23-54-11)
	1	3506 272	"H"
	2	3506 273	"R"
	1	3506 274	"Y"
	1	3506 275	"S"
	1	3506 276	"L"
	1	3506 277	"E"
25	1	3481 770	MOULDING PACKAGE, Tailgate, Lwr. (23-23-61)
	2	6002 487	Retainer
	2	6026 523	Nut
	5	6002 436	Retainer
	5	6024 271	Screw
26	1	3481 767	MOULDING PACKAGE, Tailgate, Upr. (23-23-61)
	1	6002 487	Retainer
	1	6026 523	Nut
	5	6002 726	Retainer
27	1	3579 054-5	MOULDING PACKAGE, Qtr. Outside Rear, Lwr. (23-23-39)
28	1	3579 052-3	MOULDING PACKAGE, Qtr. Outside Lwr., Rear (23-23-39)

CONTINUED ON NEXT PAGE

All Packages Include Attaching Parts

Part Type Code is Indicated in Parentheses

1970

EXTERIOR VIEW - CHRYSLER TOWN and COUNTRY C-P STATION WAGON

REF. NO.	QTY	PART NUMBER	DESCRIPTION
29	1	3481 955	MOULDING PACKAGE, Qtr. Outside Upr. Rear, Lt. (23-23-39)
	1	6002 724	Retainer
	10	6002 726	Retainer
30	2	3446 749	NAME PLATE, Qtr. Panel, Town & Country (23-34-238)
	6	6002 852	Retainer
31	1	3481 957	MOULDING PACKAGE, Qtr. Outside Fuel Filler Door, Lt. (23-23-39)
	2	6002 487	Retainer
	2	6024 679	Nut
32	1	3481 962-3	MOULDING PACKAGE, Qtr. Outside Lwr., Frt. (23-23-39)
	10	6002 914	Retainer
33	1	3481 966-7	MOULDING PACKAGE, Qtr. Outside Wheel Opng., Rear (23-23-39)
	2	6024 271	Screw
34	1	3481 952	MOULDING PACKAGE, Qtr. Outside Upr. Rt. (23-23-39)
	9	6002 726	Retainer
	1	3481 953	MOULDING PACKAGE, Qtr. Outside Upr. Frt., Lt. (23-23-39)
	10	6002 726	Retainer
	1	6002 724	Retainer
35	1	3481 964-5	MOULDING PACKAGE, Qtr. Outside Wheel Opng. (23-23-39)
	18	6024 271	Screw
36	1	3481 976-7	MOULDING PACKAGE, Qtr. Outside Wheel Opng., Frt. (23-23-39)
	2	6024 271	Screw
	2	6002 534	Clip
37	1	3481 960-1	MOULDING PACKAGE, Rear Door Outside, Lwr. (23-23-33)
	2	6002 763	Retainer
	6	6026 523	Nut
	2	6002 720	Retainer
	4	6002 909	Retainer
38	1	3481 950-1	MOULDING PACKAGE, Rear Door Outside, Upr. (23-23-33)
	6	6002 726	Retainer
	4	6002 487	Retainer
	4	6026 523	Nut
39	1	3481 958-9	MOULDING PACKAGE, Frt. Door Outside, Lwr. (23-23-32)
	2	6002 763	Retainer
	2	6026 523	Nut
	10	6002 720	Retainer
40	1	3481 948-9	MOULDING PACKAGE, Frt. Door Outside, Upr. (23-23-32)
	10	6002 726	Retainer
	2	6002 487	Retainer
	2	6026 523	Nut

All Packages Include Attaching Parts

Part Type Code is Indicated in Parentheses

NOTES

19a3130◀

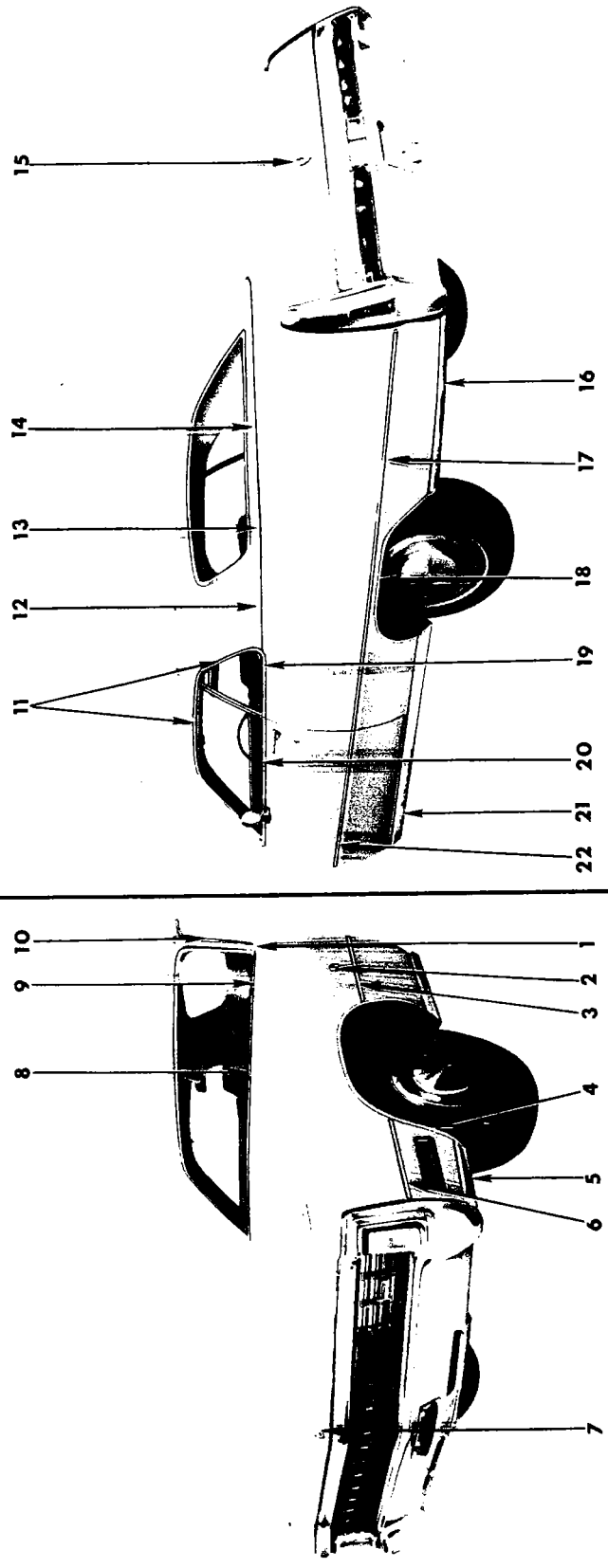

1970
EXTERIOR VIEW - IMPERIAL CROWN Y-L 2 DOOR HARDTOP

REF. NO.	QTY	PART NUMBER	DESCRIPTION
1	1	3419 482-3	MOULDING PACKAGE, Body Frt. Lwr. Plr. (23-23-14)
	2	6024 271	Screw
2	2	3505 035	MEDALLION, Fender Side (12-15-21)
	1	6002 852	Retainer
3	2	3506 068	MOULDING, Fender Side Rear (12-15-2)
4	1	3419 852-3	MOULDING PACKAGE, Fender Wheel Opng. (12-15-2)
	14	6028 545	Screw
5	1	3481 974-5	PANEL PACKAGE, Fender Side Front (12-15-2)
	3	6027 466	Nut
6	2	3506 068	MOULDING, Fender Side Front (12-15-2)
7	1	2898 836	ORNAMENT, Hood Front (15-03-18)
	1	9420 278	Nut
8	1	2898 828	MOULDING, Hood Top Rear (15-25-2)
9	1	2949 488-9	MOULDING, Fender Hood Extension (12-15-2)
10	1	2933 602-3	MOULDING PACKAGE, Body Frt. Pillar Drain Trough (23-59-61)
	6	6027 459	Screw
11	1	3419 388-9	MOULDING PACKAGE, Roof Side Drain Trough, Frt. and Rear (23-59-61)
	6	6027 459	Screw
12	1	2933 300-1	MOULDING PACKAGE, Qtr. Outside Belt Frt., "Black" (23-23-39)
	1	2933 302-3	"White"
	1	2933 304-5	"Green"
	1	2933 306-7	"Champagne"
	6	6002 192	Fastener
	2	6002 297	Retainer
	2	---- ---	Nut
	4	6023 898	Screw
13	1	2933 312-3	MOULDING PACKAGE, Qtr. Outside Belt Rear, "Black" (23-23-39)
	1	2933 314-5	"White"
	1	2933 316-7	"Green"
	1	2933 318-9	"Champagne"
	2	---- ---	Nut
14	1	2933 358-9	MOULDING PACKAGE, Deck Opng. Upr. Panel, "Black" (23-23-31)
	1	2933 360-1	"White"
	1	2933 362-3	"Green"
	1	2933 364-5	"Champagne"
	8	6002 709	Retainer
	8	9426 925	Nut w/Seal
15	1	2945 391	MEDALLION, Deck Lid Lock Cylinder (23-17-19)
16	1	2901 494-5	PANEL, Qtr. Outside Rear Finish (23-23-85)
	10	6002 601	Retainer
	6	6028 674	Screw
17	2	3506 068	MOULDING, Qtr. Pnl. Outside (23-23-39)
18	1	3419 012-3	MOULDING PACKAGE, Qtr. Outside Whl. Opng. (23-23-39)
	10	6024 271	Screw
19	1	2933 374-5	MOULDING PACKAGE, Qtr. Wdo. Outside Belt, w/Filler (23-23-39)
	4	6027 459	Screw
20	1	3419 430-1	MOULDING PACKAGE, Door Outside Belt (23-23-32)
	16	6002 713	Clip
21	1	3481 940-1	MOULDING PACKAGE, Pnl. Body Side Sill Outside Finish (23-23-2)
	4	6026 221	Screw
	18	6002 611	Retainer
	18	6024 271	Screw
22	2	3506 068	MOULDING, Door Outside (23-23-32)

All Packages Include Attaching Parts

Part Type Code is Indicated in Parentheses

19a3120A

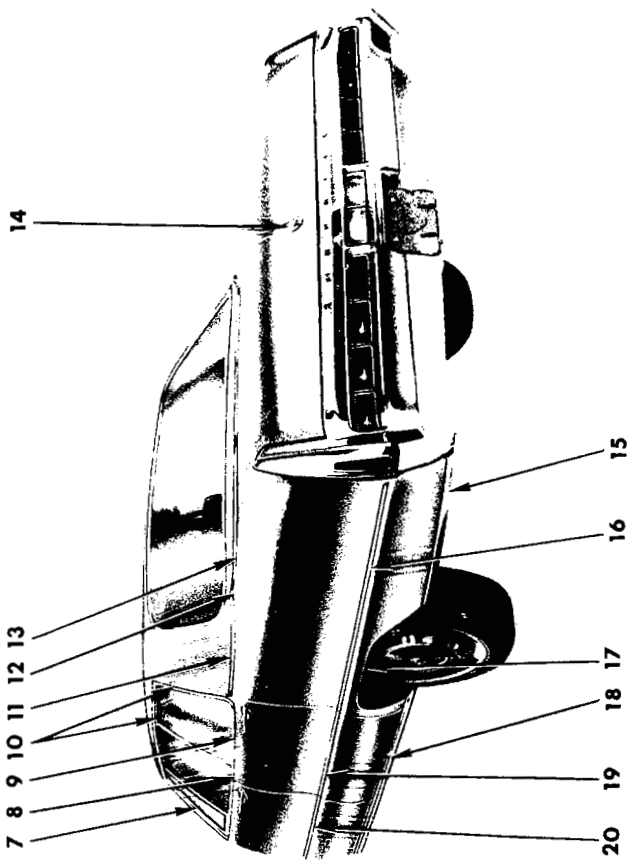

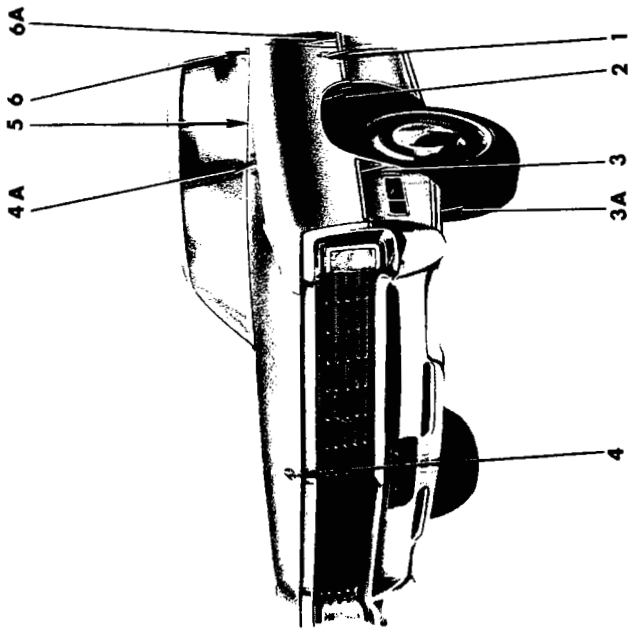

1970
EXTERIOR VIEW - IMPERIAL CROWN Y-L 4 DOOR HARDTOP

REF. NO.	QTY	PART NUMBER	DESCRIPTION
1	2	3505 035	MEDALLION, Fender Side (12-15-21)
	2	6002 852	Retainer
2	1	3419 852	MOULDING PACKAGE, Fender Wheel Opening (12-15-2)
	14	6028 545	Screw
3	2	3506 068	MOULDING, Fender Side Front (12-15-2)
3A	1	3481 974-5	PANEL PACKAGE, Fender Side Front (12-15-2)
	3	6027 466	Nut
4	1	2898 836	ORNAMENT, Hood Front (15-06-6)
	1	9420 278	Nut
4A	1	2898 828	MOULDING, Hood Top Rear (15-25-2)
5	1	2949 488-9	MOULDING, Fender Hood Extension (12-15-2)
6	1	3419 482-3	MOULDING PACKAGE, Body Frt. Lwr. Plr. (23-23-14)
	2	6024 271	Screw
6A	2	3506 068	MOULDING, Fender Side Rear (12-15-2)
7	1	2933 600-1	MOULDING PACKAGE, Body Frt. Pillar Drain Trough (23-59-61)
	6	6027 459	Screw
8	1	3419 434-5	MOULDING PACKAGE, Frt. Door Outside Belt (23-23-32)
	14	6002 713	Clip
9	1	2933 464-5	MOULDING PACKAGE, Rear Door Outside Belt Frt. to Rear (23-23-33)
	16	6002 713	Retainer
10	1	3419 386-7	MOULDING PACKAGE, Roof Side Drain Trough, Front and Rear (23-59-61)
	8	6027 459	Screw
11	1	2933 378-9	MOULDING PACKAGE, Qtr. Outside Belt Frt., "Black" (23-23-39)
	1	2933 380-1	"White"
	1	2933 382-3	"Green"
	1	2933 384-5	"Champagne"
	4	6002 297	Retainer
	4	---- ---	Nut
	4	6023 898	Screw
	8	6002 192	Fastener
12	1	2933 392-3	MOULDING PACKAGE, Qtr. Outside Belt Rear, "Black" (23-23-39)
	1	2933 394-5	"White"
	1	2933 396-7	"Green"
	1	2933 398-9	"Champagne"
	2	---- ---	Nut w/Seal
13	1	2933 418-9	MOULDING PACKAGE, Deck Opng. Upr. Pnl., "Black" (23-23-31)
	1	2933 420-1	"White"
	1	2933 422-3	"Green"
	1	2933 424-5	"Champagne"
	8	6002 709	Retainer
	8	9426 925	Nut w/Seal
14	1	2945 391	MEDALLION, Deck Lid Lock Cylinder (23-17-19)
15	1	2901 494-5	PANEL, Qtr. Outside Rear Finish (23-23-85)
	10	6002 601	Retainer
	6	6028 674	Screw
16	2	3506 068	MOULDING, Qtr. Pnl. Outside (23-23-39)
17	1	3419 012-3	MOULDING PACKAGE, Qtr. Outside Whl. Opng. (23-23-39)
	10	6024 271	Screw
18	1	3481 940-1	MOULDING PACKAGE, Panel Body Side Sill Outside Finish (23-23-2)
	4	6026 221	Screw
	18	6002 611	Retainer
	18	6024 271	Screw
19	2	3506 068	MOULDING, Rear Door Outside (23-23-33)
20	2	3506 068	MOULDING, Frt. Door Outside (23-23-32)

All Packages Include Attaching Parts

Part Type Code is Indicated in Parentheses

1970

EXTERIOR VIEW - IMPERIAL CROWN Y-L 4 DOOR HARD TOP

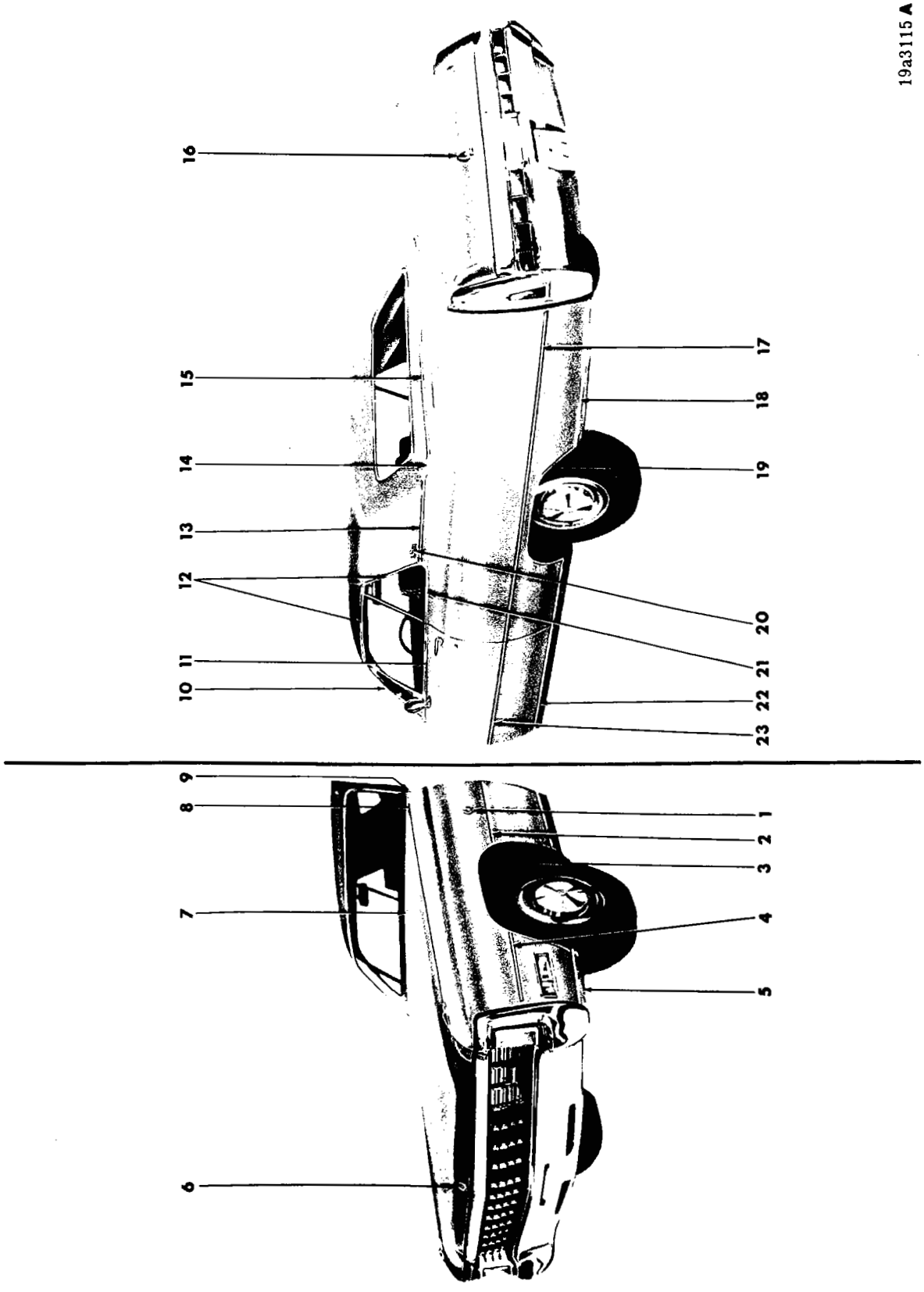

1970
EXTERIOR VIEW - IMPERIAL LE BARON Y-M 2 DOOR HARDTOP

REF. NO.	QTY	PART NUMBER	DESCRIPTION
1	2	3505 035	MEDALLION, Fender Side (12-15-21)
	2	6002 852	Retainer
2	2	3506 068	MOULDING, Fender Side Rear (12-15-2)
3	1	3419 852-3	MOULDING PACKAGE, Fender Whl. Opng. (12-15-2)
	14	6028 545	Screw
4	2	3506 068	MOULDING, Fender Side Frt. (12-15-2)
5	1	3481 974-5	PANEL PACKAGE, Fender Side Front (12-15-2)
6	1	2898 836	ORNAMENT, Hood Frt. (15-03-18)
	1	9420 278	Nut
7	1	2898 828	MOULDING, Hood Top Rear (15-25-2)
8	1	2949 488-9	MOULDING, Fender Hood Extension (12-15-2)
9	1	3419 482-3	MOULDING PACKAGE, Body Frt. Lwr. Plr. (23-23-14)
	2	6024 271	Screw
10	1	2933 602-3	MOULDING PACKAGE, Body Frt. Plr. Drain Trough (23-59-61)
	6	6027 459	Screw
11	1	3419 430-1	MOULDING PACKAGE, Door Outside Belt (23-23-32)
	16	6002 713	Clip
12	1	3419 388-9	MOULDING PACKAGE, Roof Side Drain Trough, Front and Rear (23-59-61)
	6	6027 459	Screw
13	1	2933 300-1	MOULDING PACKAGE, Qtr. Outside Belt Frt., "Black" (23-23-39)
	1	2933 302-3	"White"
	1	2933 304-5	"Green"
	1	2933 306-7	"Champagne"
	1	2933 308-9	"Blue"
	1	2933 310-1	"Walnut"
	6	6002 192	Fastener
	2	6002 297	Retainer
	2	---- ---	Nut
	4	6023 898	Screw
14	1	2933 312-3	MOULDING PACKAGE, Qtr. Outside Belt Rear, "Black" (23-23-39)
	1	2933 314-5	"White"
	1	2933 316-7	"Green"
	1	2933 318-9	"Champagne"
	1	2933 320-1	"Blue"
	1	2933 322-3	"Walnut"
	2	---- ---	Nut
15	1	2933 358-9	MOULDING PACKAGE, Deck Opng. Upr. Pnl., "Black" (23-23-31)
	1	2933 360-1	"White"
	1	2933 362-3	"Green"
	1	2933 364-5	"Champagne"
	1	2933 366-7	"Blue"
	1	2933 368-9	"Walnut"
	8	6002 709	Retainer
	8	9426 925	Nut w/Seal
16	1	2945 391	MEDALLION, Deck Lid Lock Cyl. (23-17-19)
17	2	3506 068	MOULDING, Qtr. Pnl. Outside (23-23-39)
18	1	2901 494-5	PANEL, Qtr. Outside Rear Finish (23-23-85)
	10	6002 601	Retainer
	6	6028 674	Screw
19	1	3419 012-3	MOULDING PACKAGE, Qtr. Outside Whl. Opng. (23-23-39)
	10	6024 271	Screw
20	2	3504 322	NAME PLATE, Qtr. Outside Pnl., Le Baron (23-34-238)
	4	9420 263	Nut
21	1	2933 374-5	MOULDING PACKAGE, Qtr. Wdo. Outside Belt, w/Filler (23-23-39)
	4	6027 459	Screw
22	1	3481 940-1	MOULDING PACKAGE, Panel Body Side Sill Outside Finish (23-23-2)
	4	6026 221	Screw
	18	6002 611	Retainer
	18	6024 271	Screw
23	2	3506 068	MOULDING, Door Outside (23-23-32)

All Packages Include Attaching Parts

Part Type Code is Indicated in Parentheses

1970

EXTERIOR VIEW - IMPERIAL Le BARON Y-M 2 DOOR HARD TOP

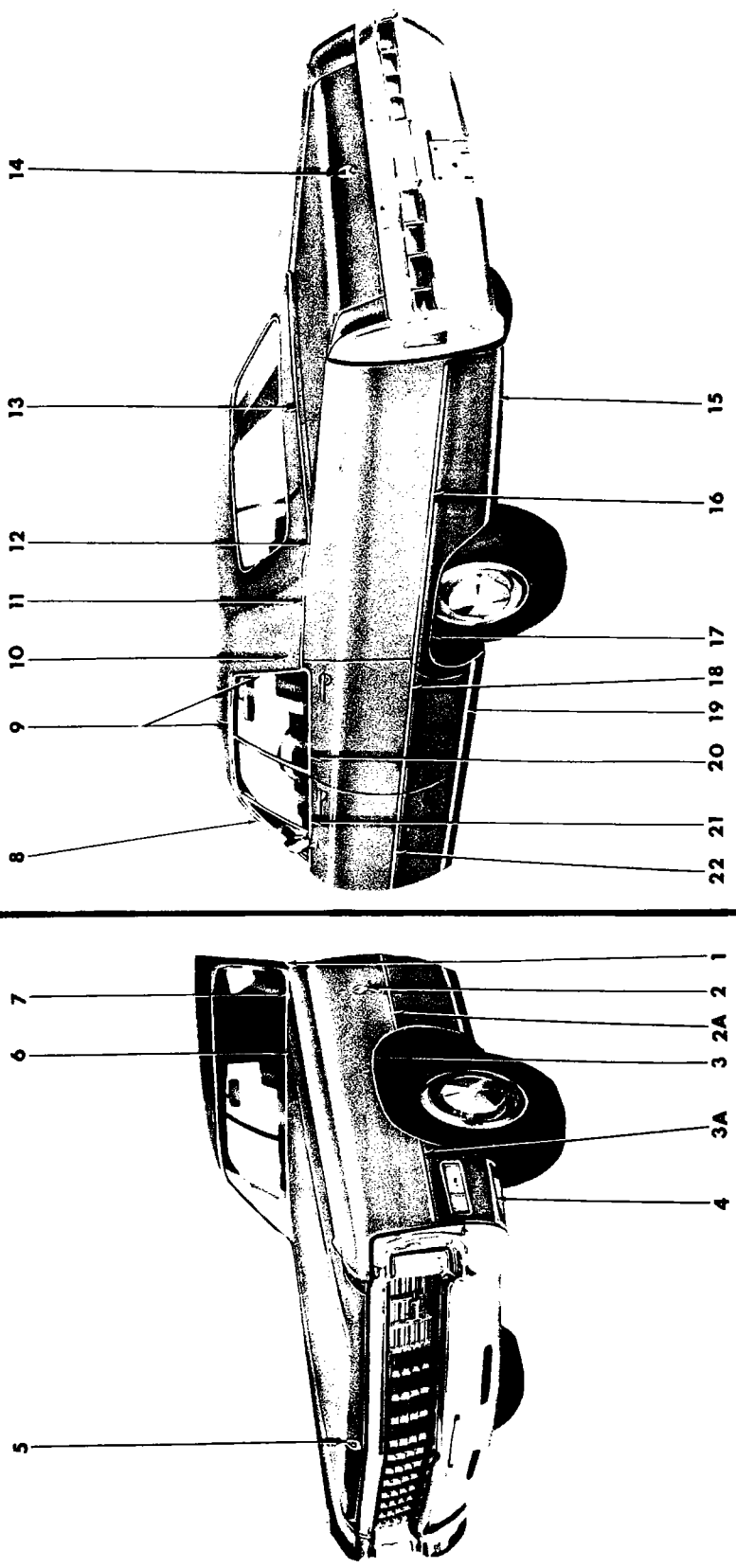

1970
EXTERIOR VIEW - IMPERIAL LE BARON Y-M 4 DOOR HARDTOP

REF. NO.	QTY	PART NUMBER	DESCRIPTION
1	1	3419 482-3	MOULDING PACKAGE, Body Frt. Lwr. Pillar (23-23-14)
	2	6024 271	Screw
2	2	3505 035	MEDALLION, Fender Side (12-15-21)
	1	6002 852	Nut
2A	2	3506 068	MOULDING, Fender Side Rear (12-15-2)
3	1	3419 852-3	MOULDING PACKAGE, Fender Wheel Opening (12-15-2)
	14	6028 545	Screw
3A	2	3506 068	MOULDING, Fender Side Front (12-15-2)
4	1	3481 974-5	PANEL PACKAGE, Fender Front (12-15-2)
	3	6027 466	Nut
5	1	2898 836	ORNAMENT, Hood Front (15-03-18)
	1	9420 278	Nut
6	1	2898 828	MOULDING, Hood Top Rear (15-25-2)
7	1	2949 488-9	MOULDING, Fender Hood Extension (12-15-2)
8	1	2933 600-1	MOULDING PACKAGE, Body Frt. Pillar Drain Trough (23-59-61)
	6	6027 459	Screw
9	1	3419 386-7	MOULDING PACKAGE, Roof Side Drain Trough, Front and Rear (23-59-61)
	8	6027 459	Screw
10	2	3504 322	NAME PLATE, Qtr. Outside, Le Baron (23-34-238)
	4	9420 263	Nut
11	1	2933 378-9	MOULDING PACKAGE, Qtr. Outside Belt, Frt., "Black" (23-23-39)
	1	2933 380-1	"White"
	1	2933 382-3	"Green"
	1	2933 384-5	"Champagne"
	1	2933 386-7	"Blue"
	1	2933 388-9	"Walnut"
	4	6002 297	Retainer
	4	---- ---	Nut
	4	6023 898	Screw
	8	6002 192	Fastener
12	1	2933 392-3	MOULDING PACKAGE, Qtr. Outside Belt, Rear, "Black" (23-23-39)
	1	2933 394-5	"White"
	1	2933 396-7	"Green"
	1	2933 398-9	"Champagne"
	1	2933 400-1	"Blue"
	1	2933 402-3	"Walnut"
	2	---- ---	Nut w/Seal
13	1	2933 418-9	MOULDING PACKAGE, Deck Opng. Upr. Pnl., "Black" (23-23-31)
	1	2933 420-1	"White"
	1	2933 422-3	"Green"
	1	2933 424-5	"Champagne"
	1	2933 426-7	"Blue"
	1	2933 428-9	"Walnut"
	8	6002 709	Retainer
	8	9426 925	Nut w/Seal
14	1	2945 391	MEDALLION, Deck Lid Lock Cylinder (23-17-19)
15	1	2901 494-5	PANEL, Qtr. Outside Rear Finish (23-23-85)
	10	6002 601	Retainer
	6	6028 674	Screw
16	2	3506 068	MOULDING, Qtr. Pnl. Outside (23-23-39)
17	1	3419 012-3	MOULDING PACKAGE, Qtr. Outside Wheel Opng. (23-23-39)
	10	6024 271	Screw
18	2	3506 068	MOULDING, Rear Door Outside (23-23-33)
19	1	3481 940-1	MOULDING PACKAGE, Body Side Sill Outside (23-23-2)
	4	6026 221	Screw
	18	6002 611	Retainer
	18	6024 271	Screw
20	1	2933 464-5	MOULDING PACKAGE, Rear Door Outside Belt Frt. to Rear (23-23-33)
	16	6002 713	Retainer
21	1	3419 434-5	MOULDING PACKAGE, Door Outside Belt (23-23-32)
	14	6002 713	Clip
22	2	3506 068	MOULDING, Frt. Door Outside (23-23-32)

All Packages Include Attaching Parts

Part Type Code is Indicated in Parentheses

1970
EXTERIOR VIEW - IMPERIAL LE BARON Y-M 4 DOOR HARDTOP

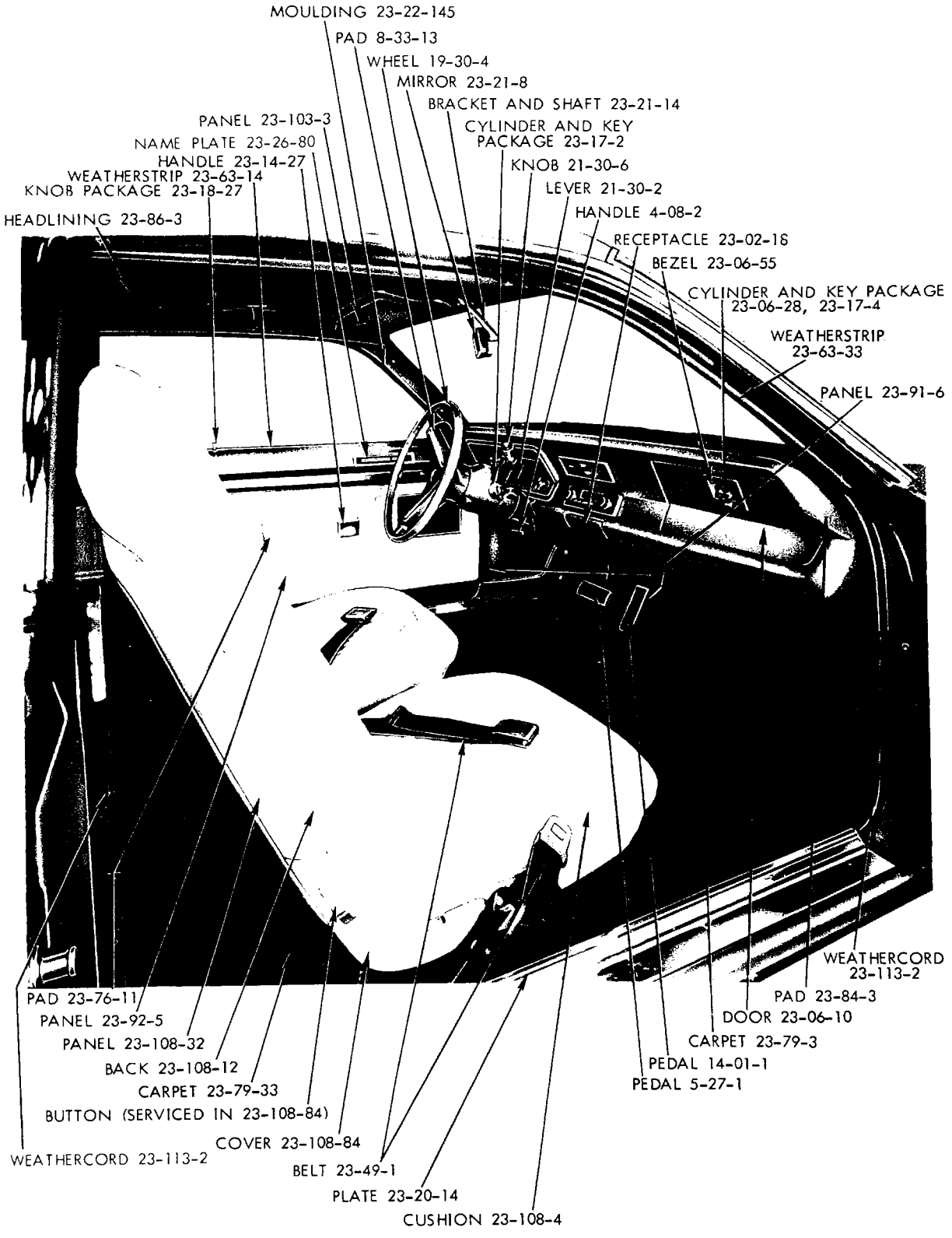

19a3043**A**

1970
FRONT INTERIOR - VALIANT (DUSTER) V-L FAST BACK



1970
REAR INTERIOR - VALIANT (DUSTER) V-L FAST BACK

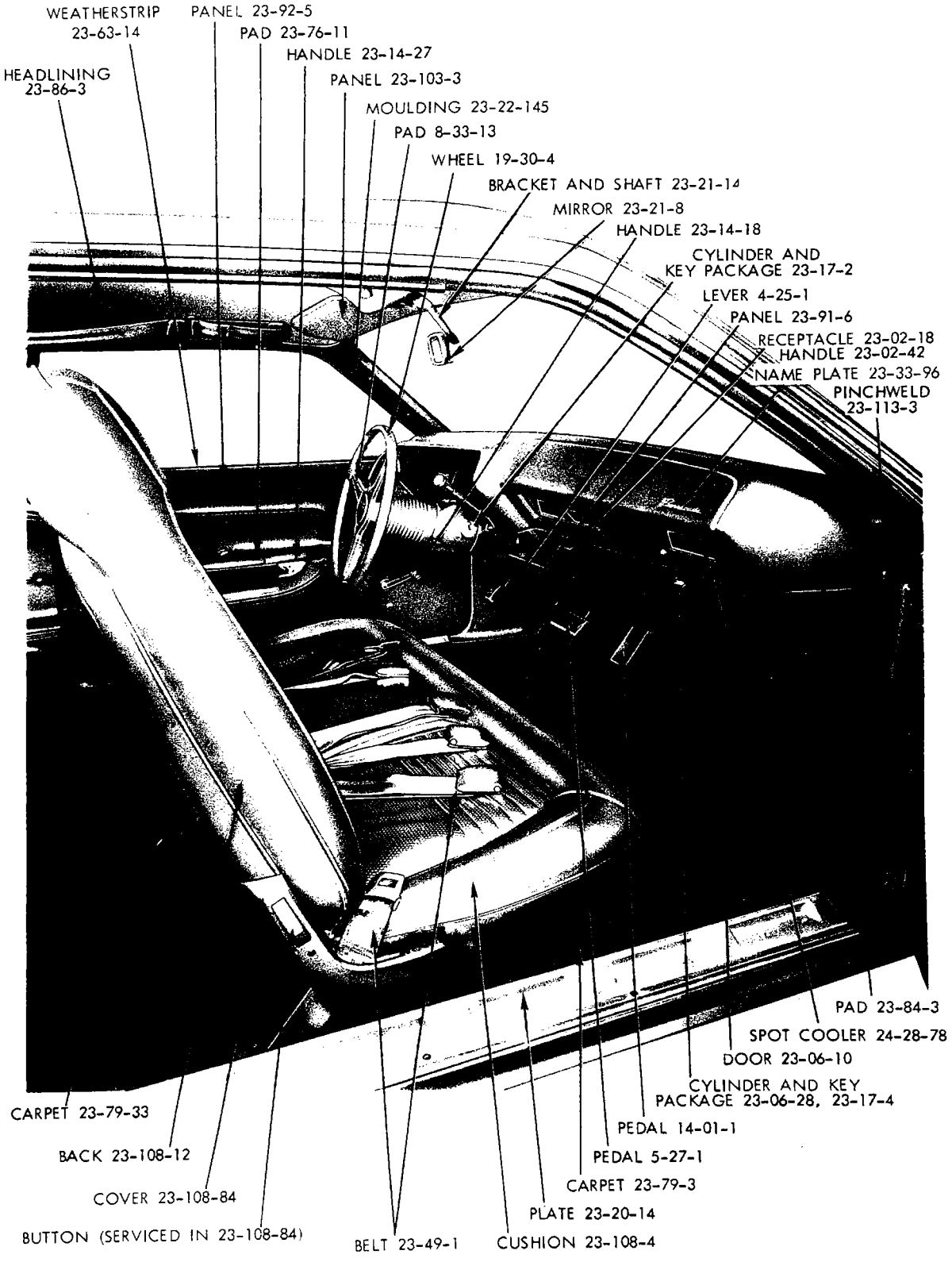

19a3042C

1970
FRONT INTERIOR - BARRACUDA B-H 2 DOOR HARDTOP

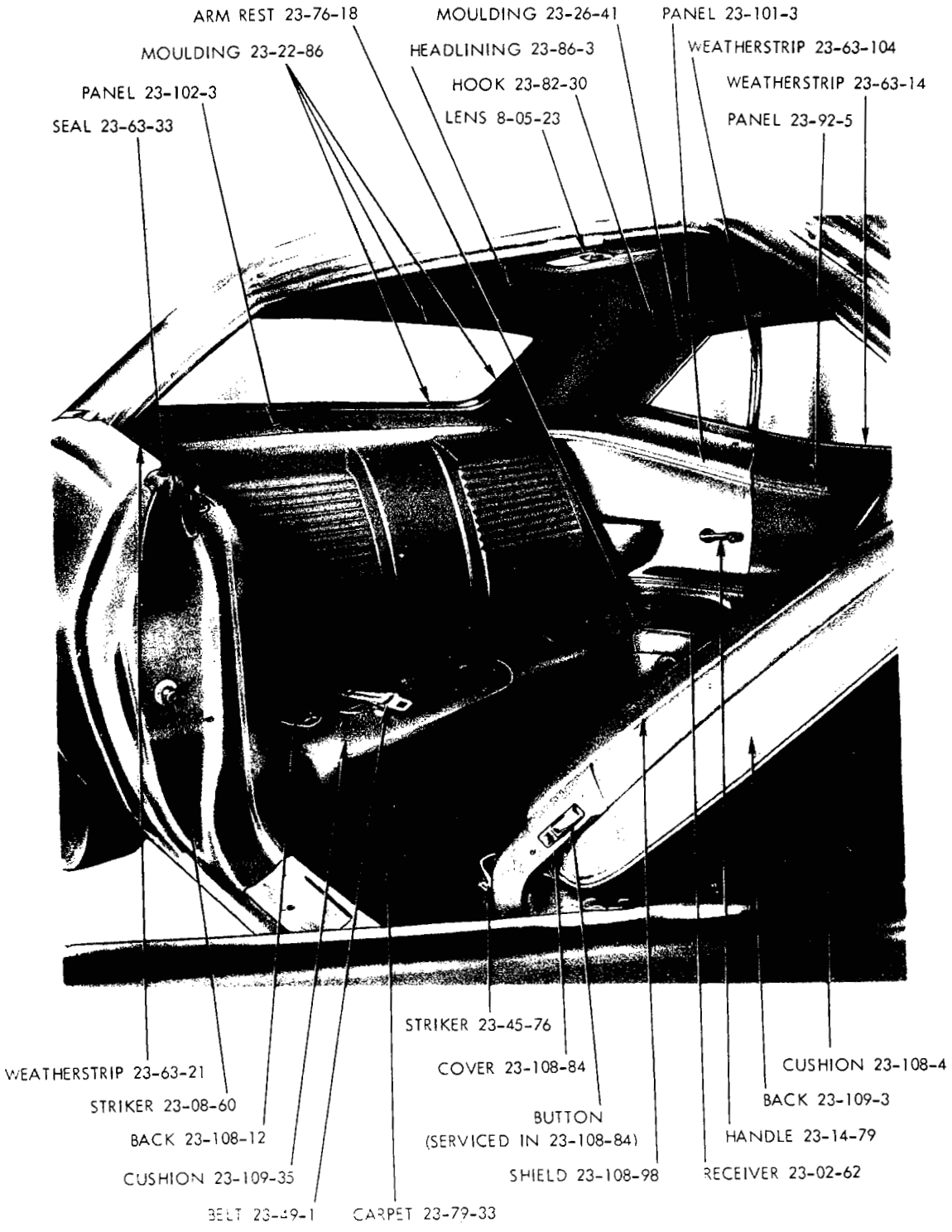

19a3026A

1970
REAR INTERIOR - BARRACUDA B-H 2 DOOR HARDTOP

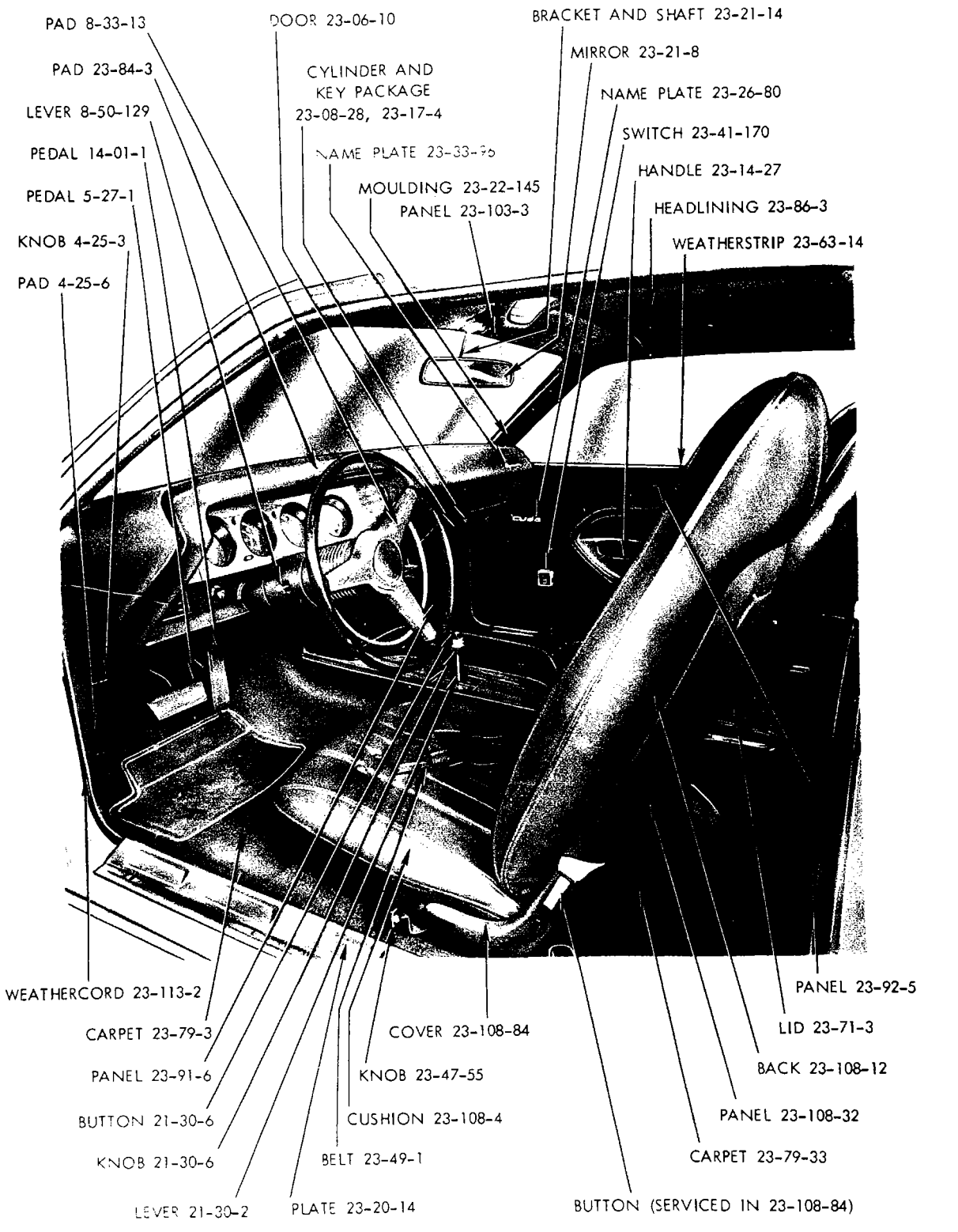

19a3033

1970
FRONT INTERIOR - BARRACUDA (CUDA) B-S 2 DOOR HARDTOP



19a3019

1970
REAR INTERIOR - BARRACUDA (CUDA) B-S 2 DOOR HARDTOP

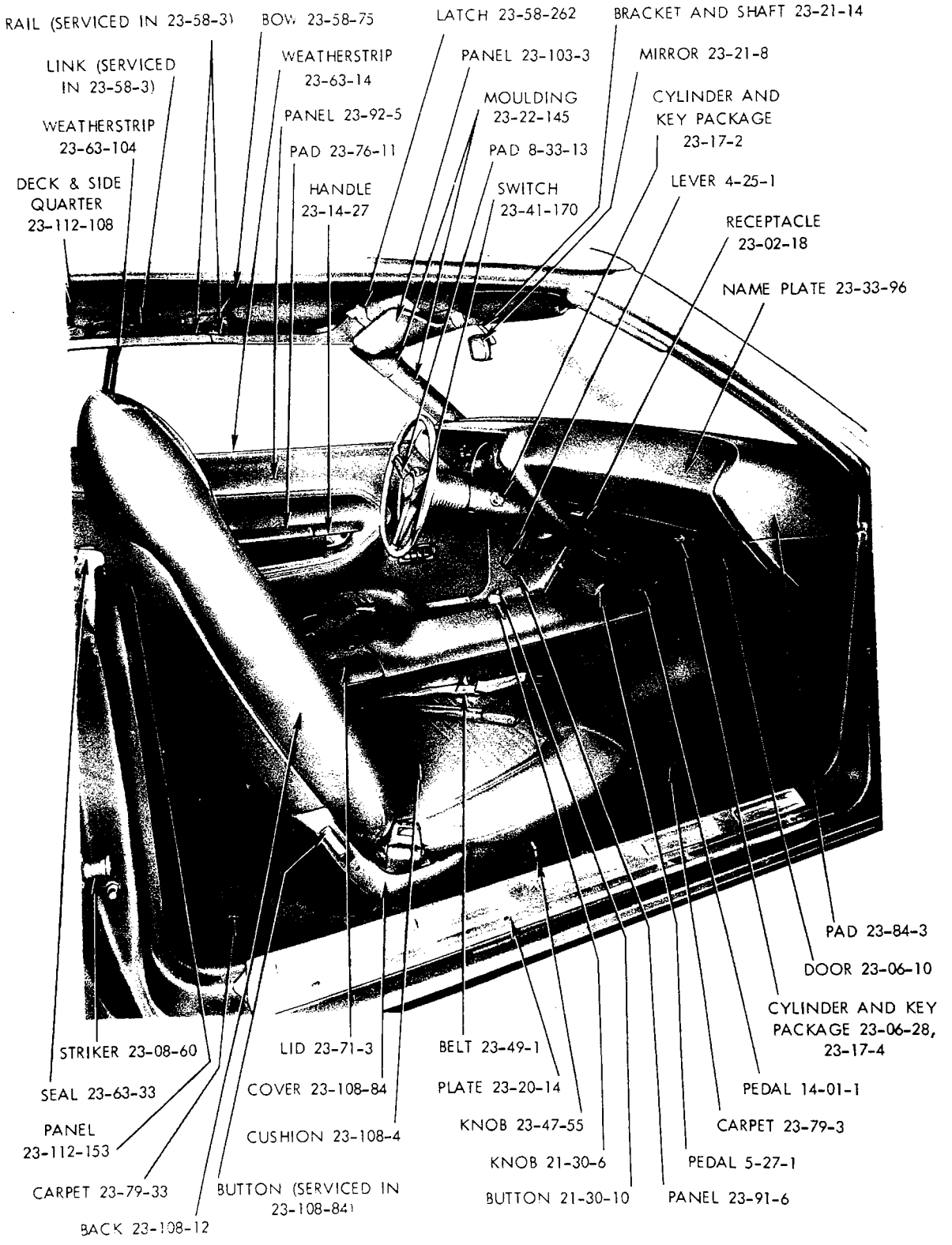

19a3041C

1970
FRONT INTERIOR - BARRACUDA (CUDA) B-S CONVERTIBLE COUPE (WITH CONSOLE)

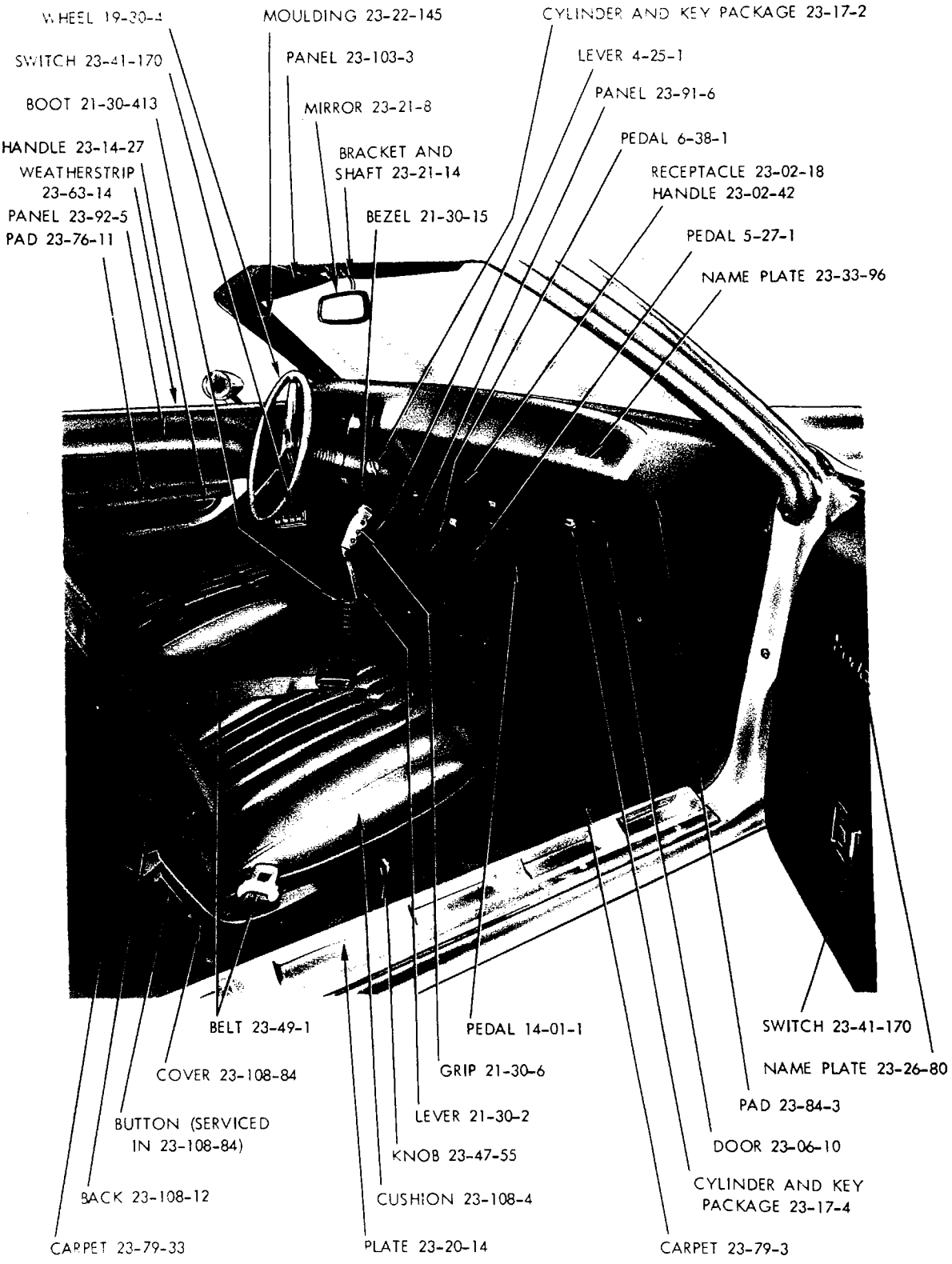

19a3109B

1970
FRONT INTERIOR - BARRACUDA (CUDA) B-S CONVERTIBLE COUPE

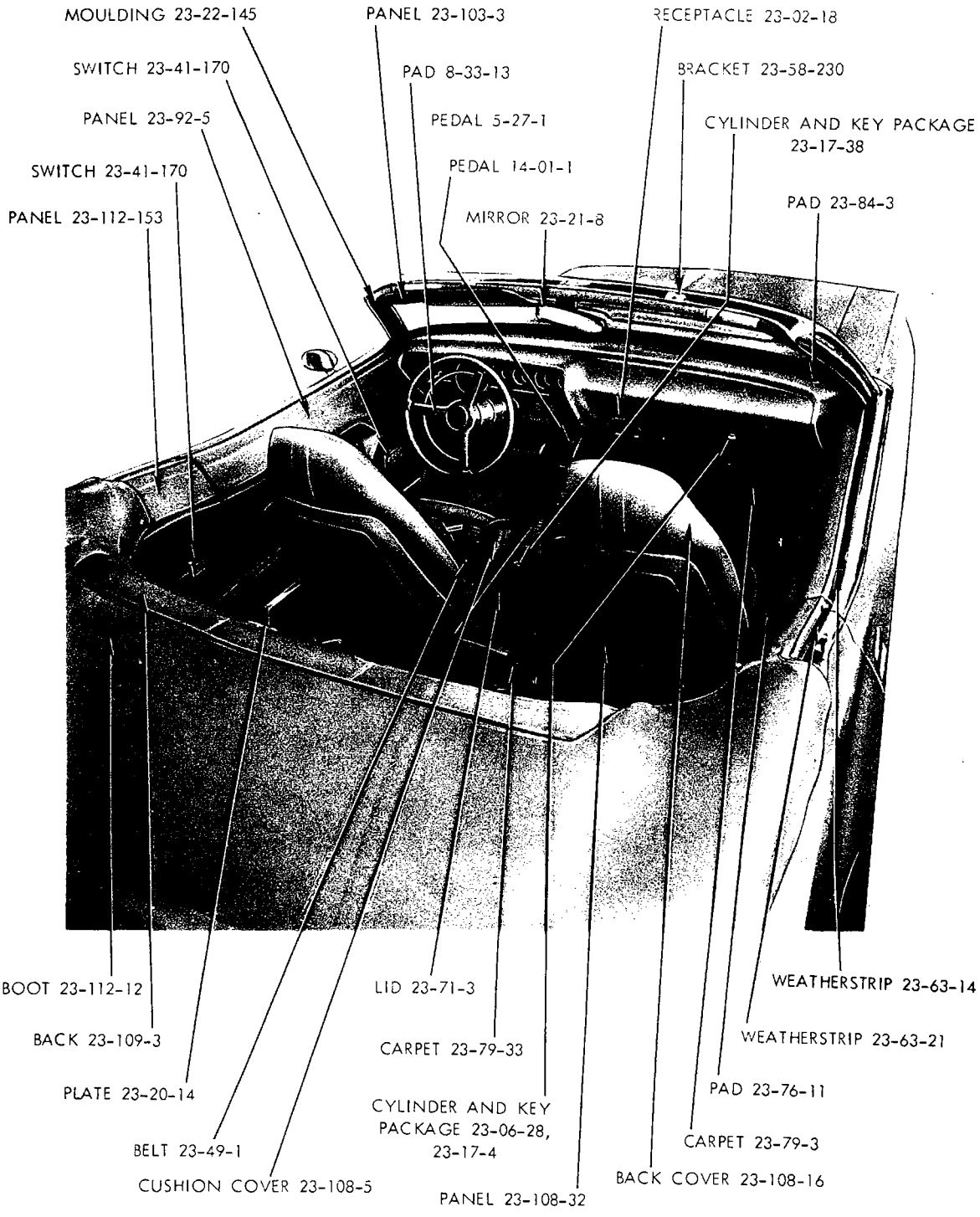

19a3029B

INTERIOR VIEW - BARRACUDA (CUDA) B-S CONVERTIBLE COUPE (WITH OPEN TOP)

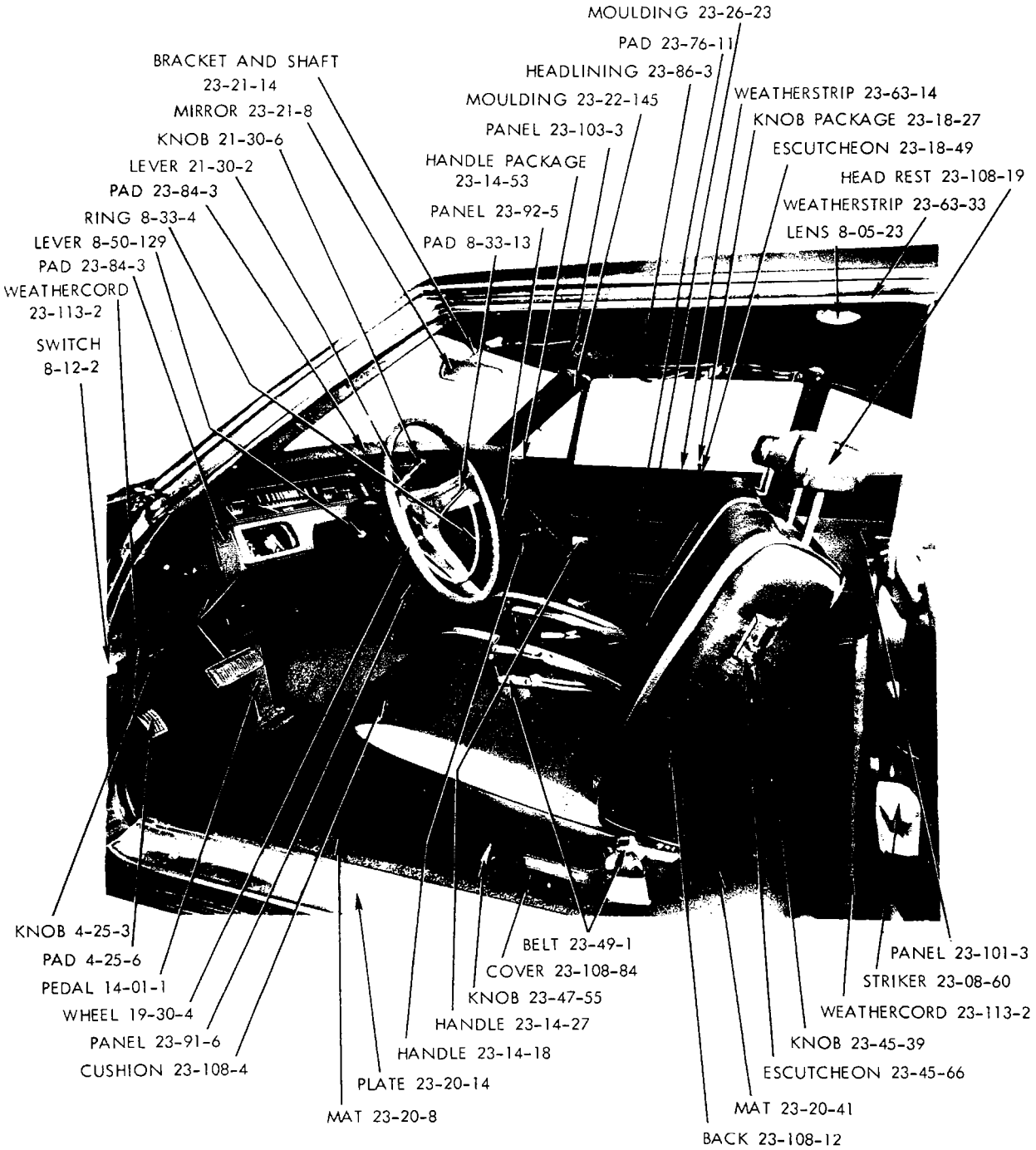

19a3164 **A**

1970
FRONT INTERIOR - BELVEDERE R-L 2 DOOR SEDAN

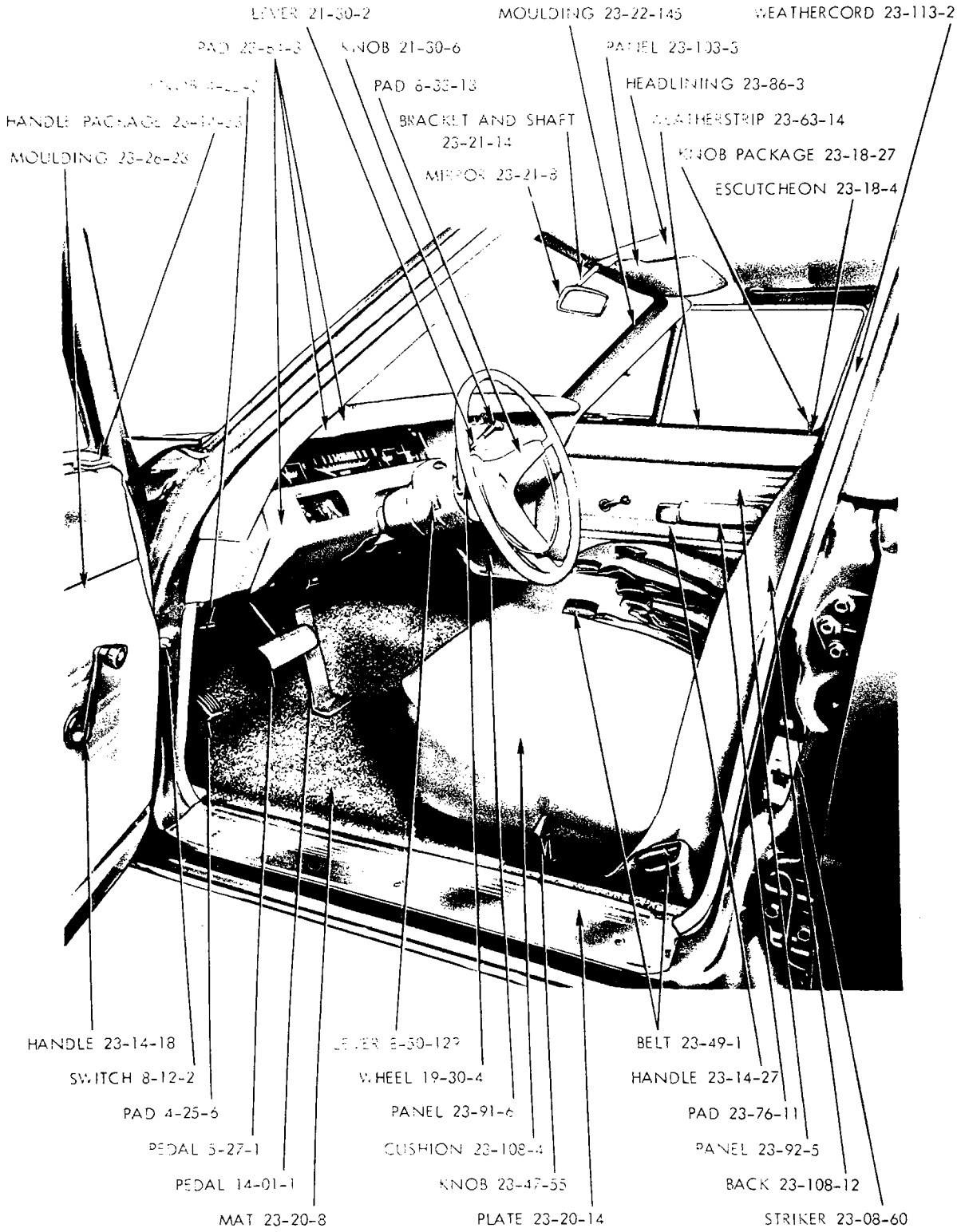

19a3167A

1970
FRONT INTERIOR - BELVEDERE R-L 4 DOOR SEDAN



19a3153

1970
REAR INTERIOR - BELVEDERE R-L 4 DOOR SEDAN

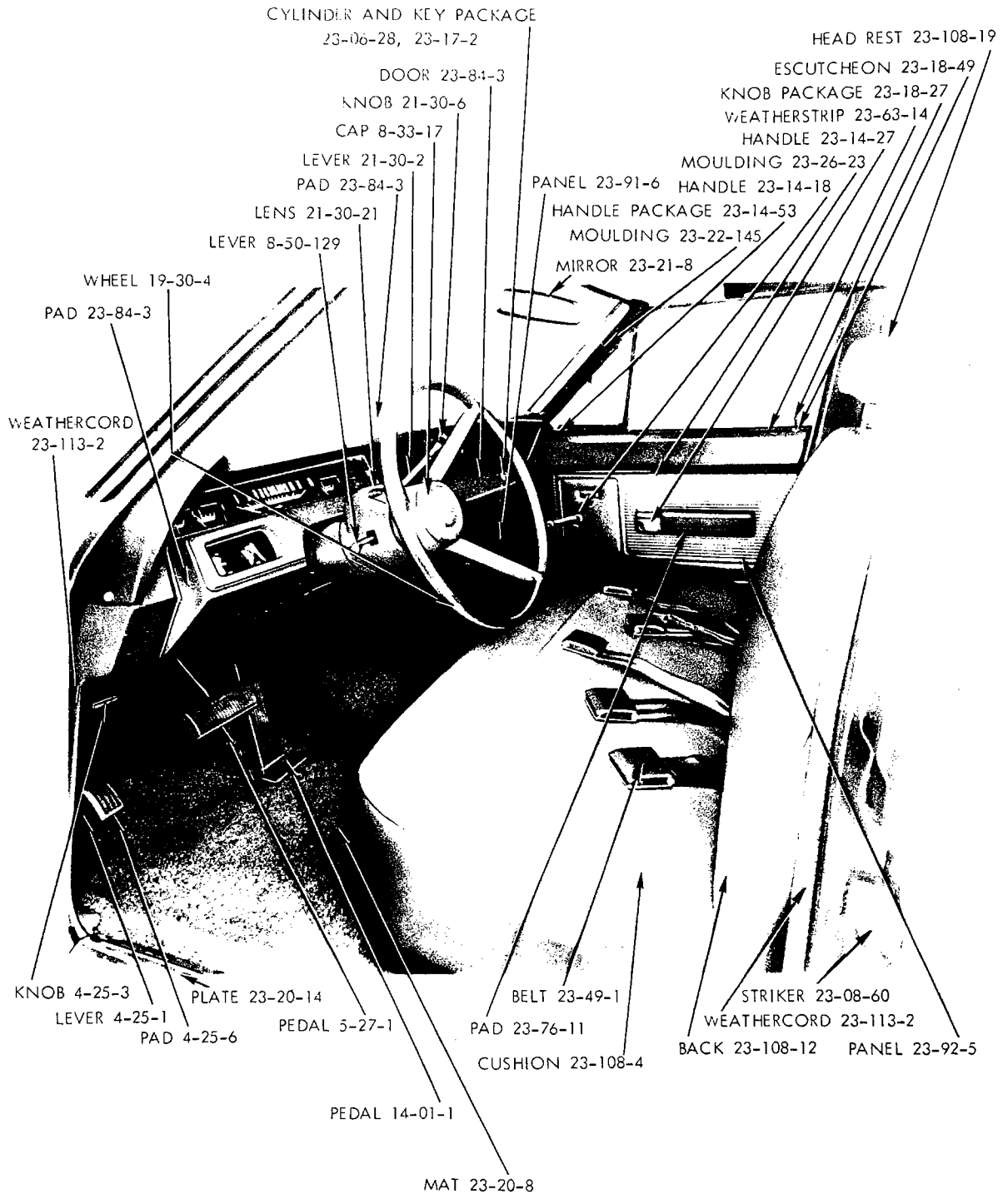

19a3123A

1970
FRONT INTERIOR - BELVEDERE R-L STATION WAGON

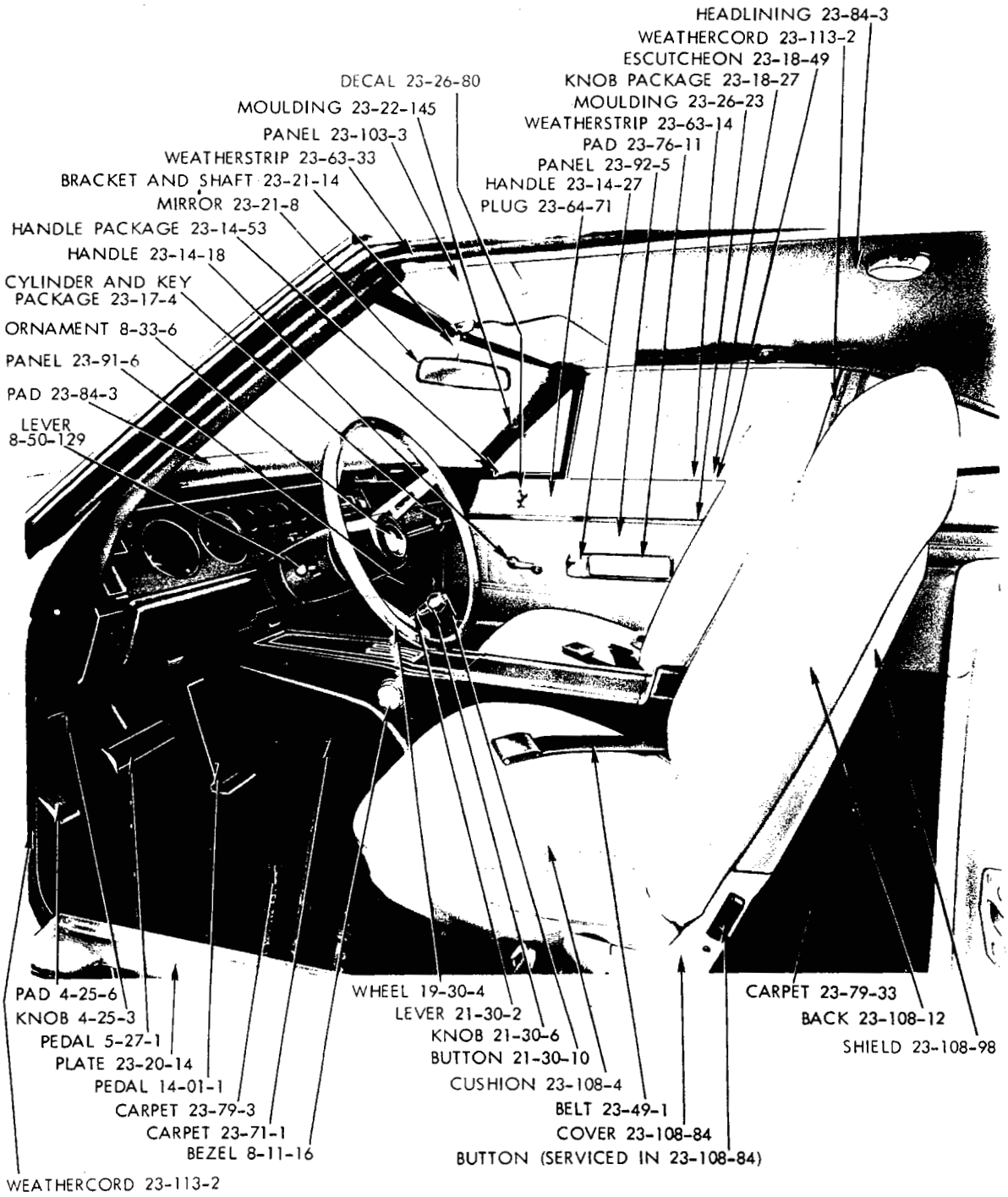

19a3108 **A**

1970
FRONT INTERIOR - BELVEDERE ROAD RUNNER R-M 2 DOOR SEDAN

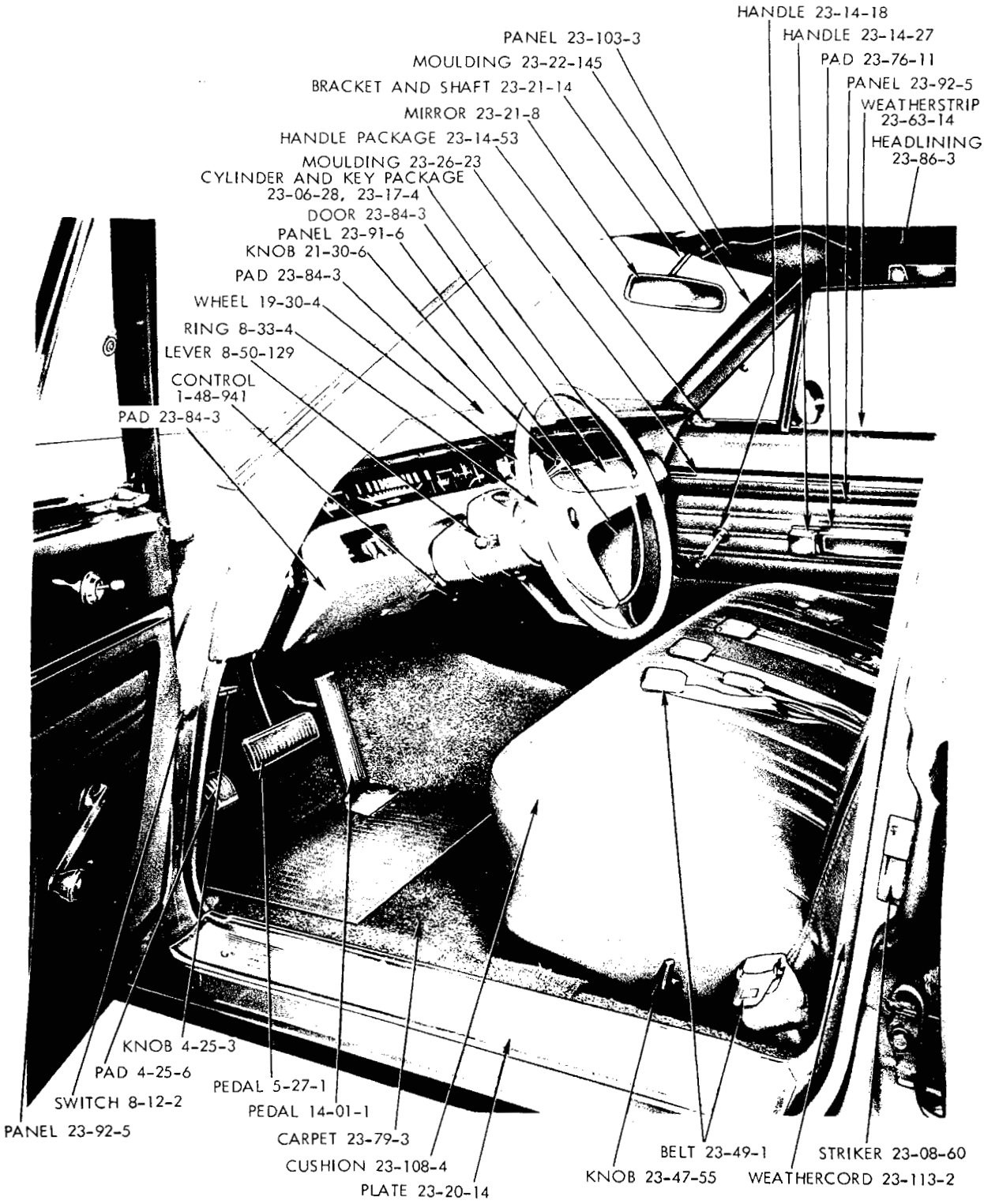

19a3040 **A**

1970
FRONT INTERIOR - BELVEDERE SATELLITE R-H 4 DOOR SEDAN



19a3025

1970
REAR INTERIOR - BELVEDERE SATELLITE R-H 4 DOOR SEDAN

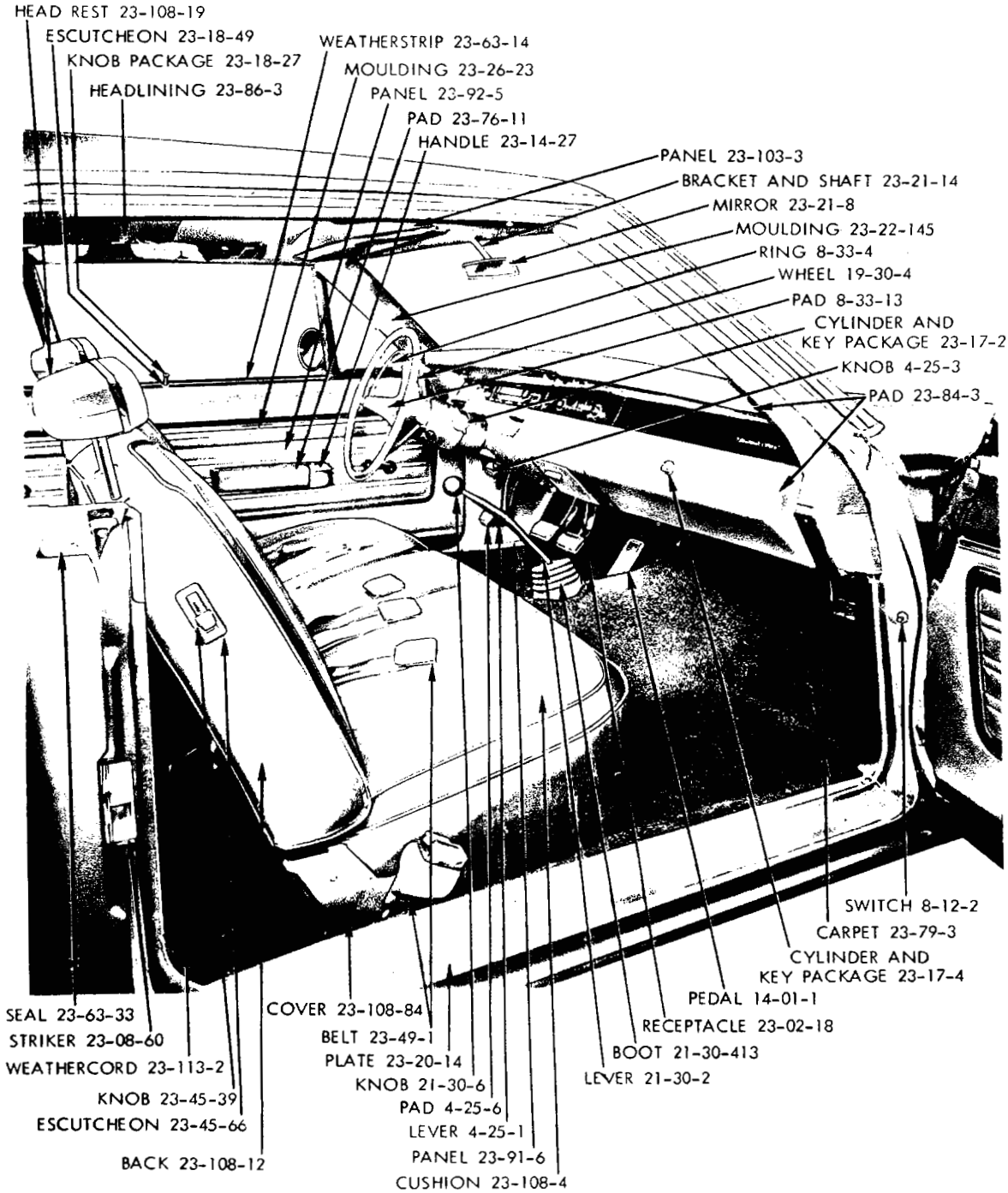

19a3163

1970
FRONT INTERIOR - BELVEDERE SATELLITE R-H 2 DOOR HARDTOP

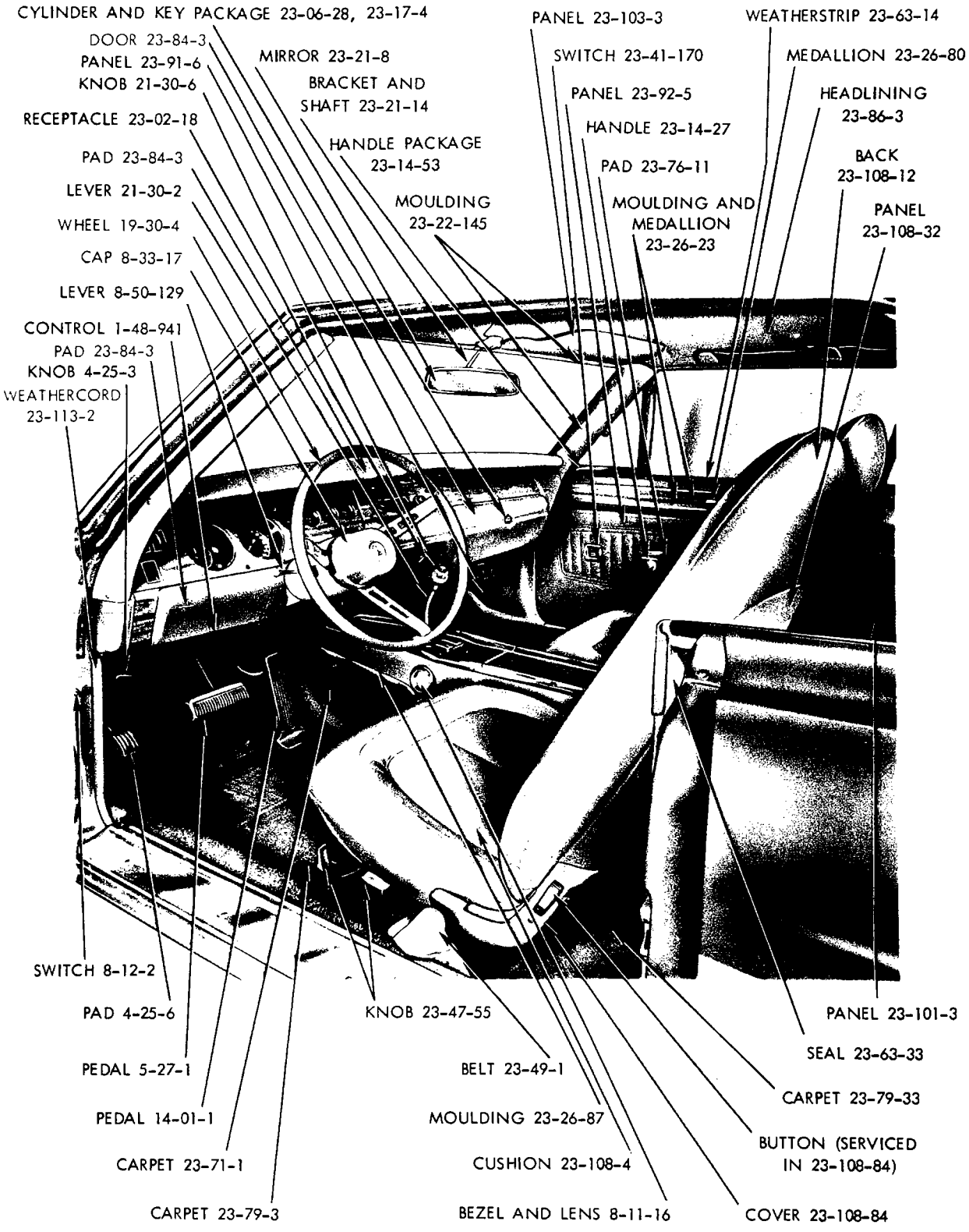

19a3034 A

1970
FRONT INTERIOR - BELVEDERE GTX R-S 2 DOOR HARDTOP

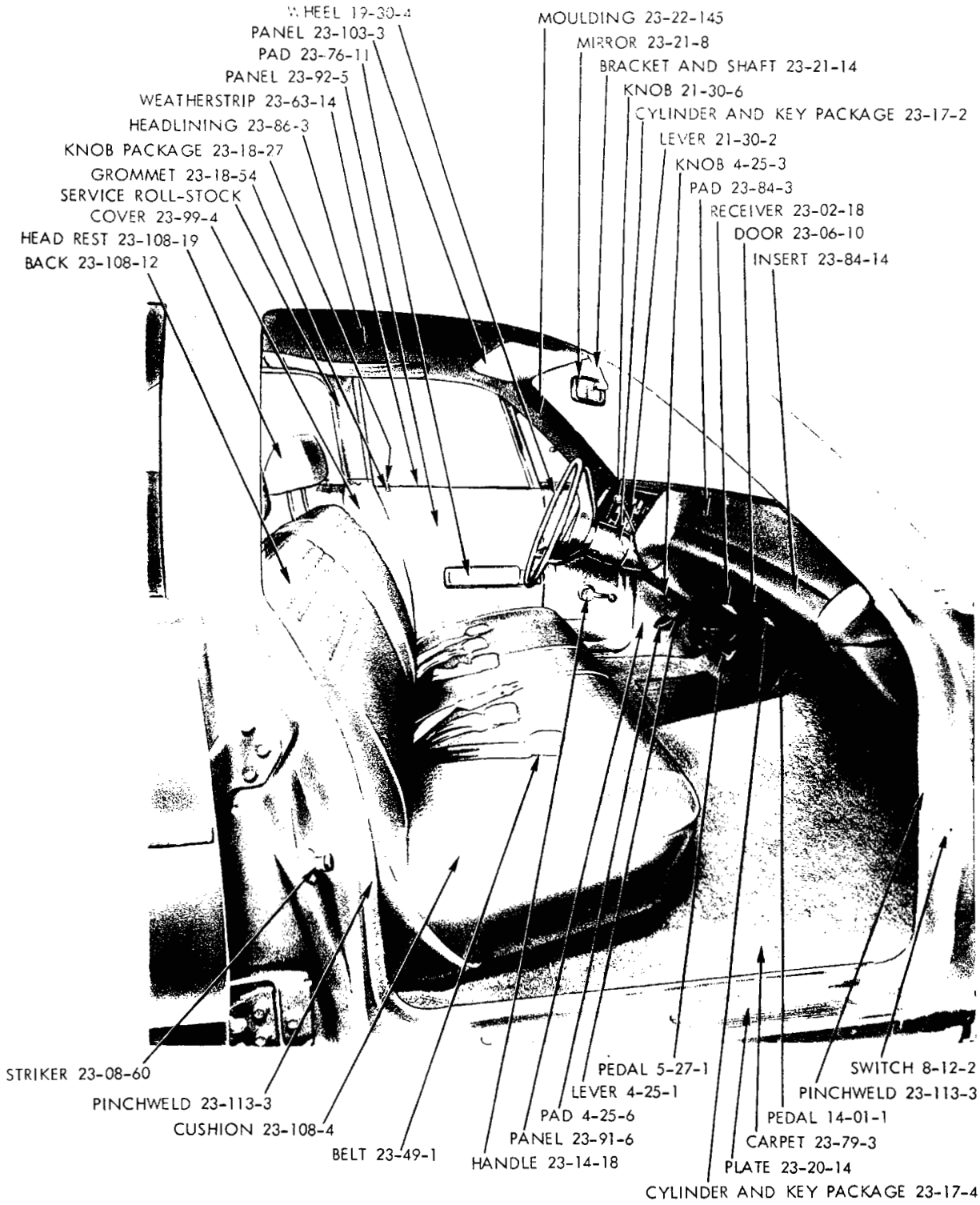

19a3275

1970
FRONT INTERIOR - PLYMOUTH FURY II P-L 4 DOOR SEDAN



19a3267

1970
REAR INTERIOR - PLYMOUTH FURY II P-L 4 DOOR SEDAN

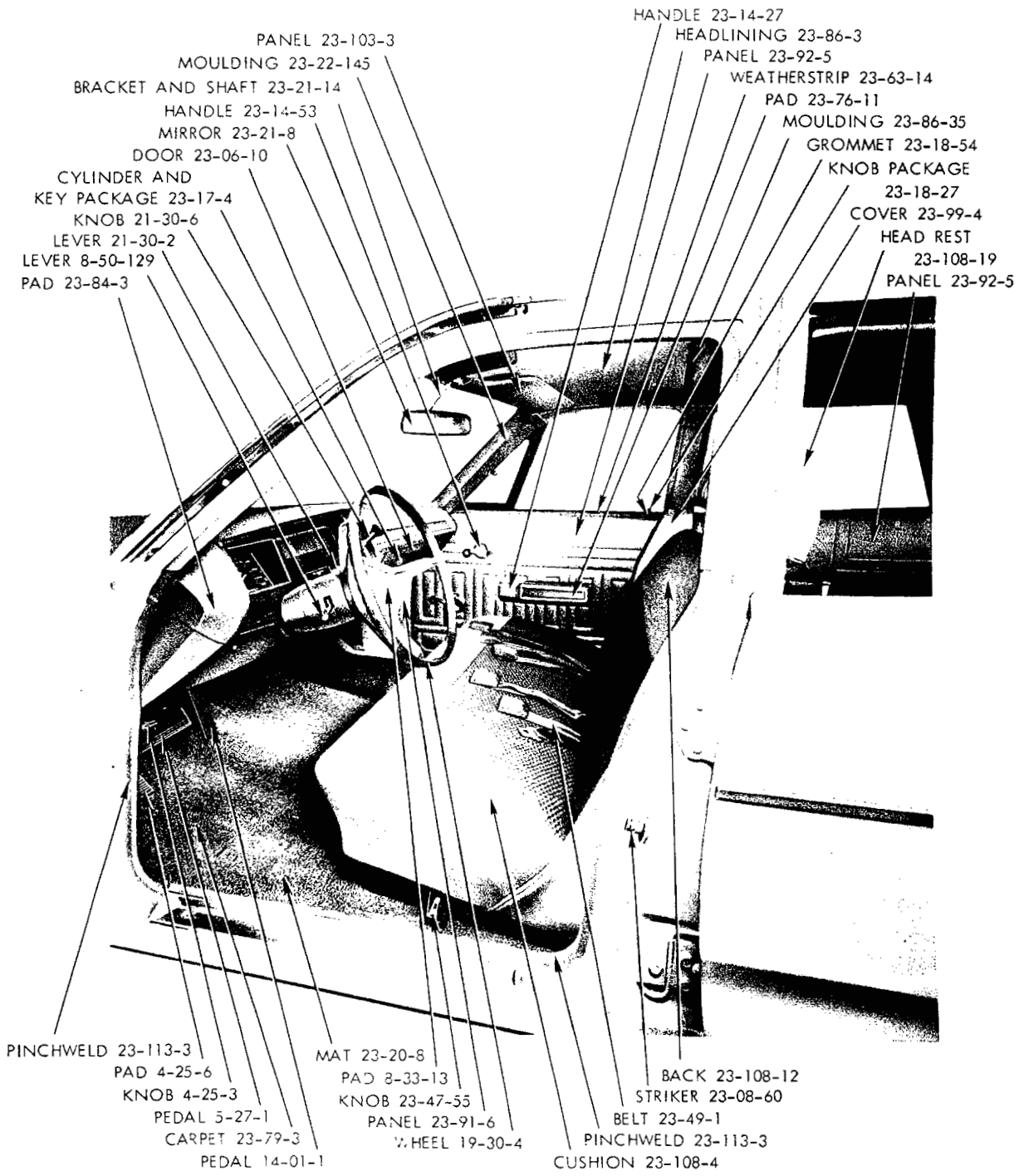

19a3171

1970
FRONT INTERIOR - PLYMOUTH FURY II P-L SUBURBAN

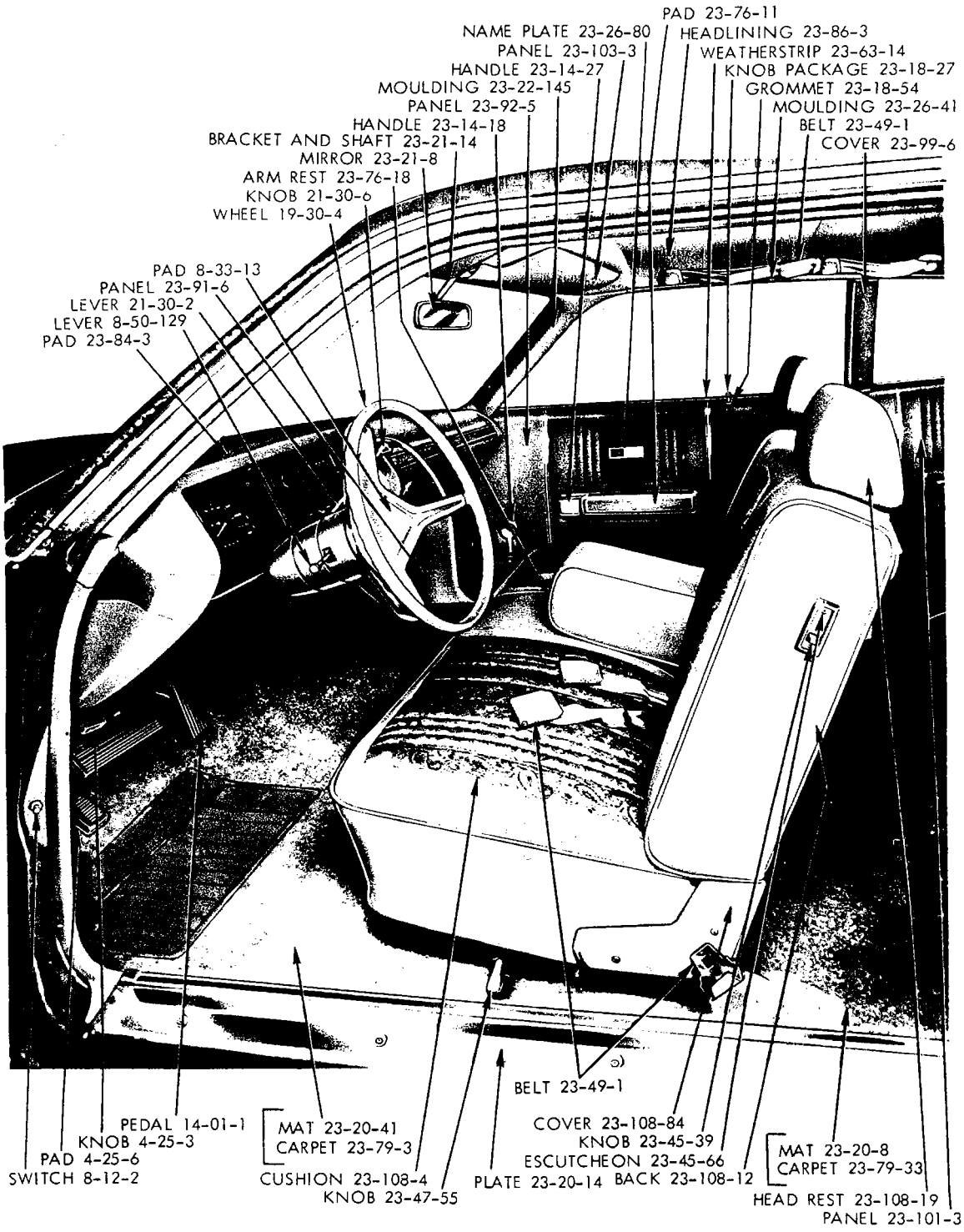

19a3298

1970
FRONT INTERIOR - PLYMOUTH FURY P-L (GRAN COUPE) 2 DOOR SEDAN

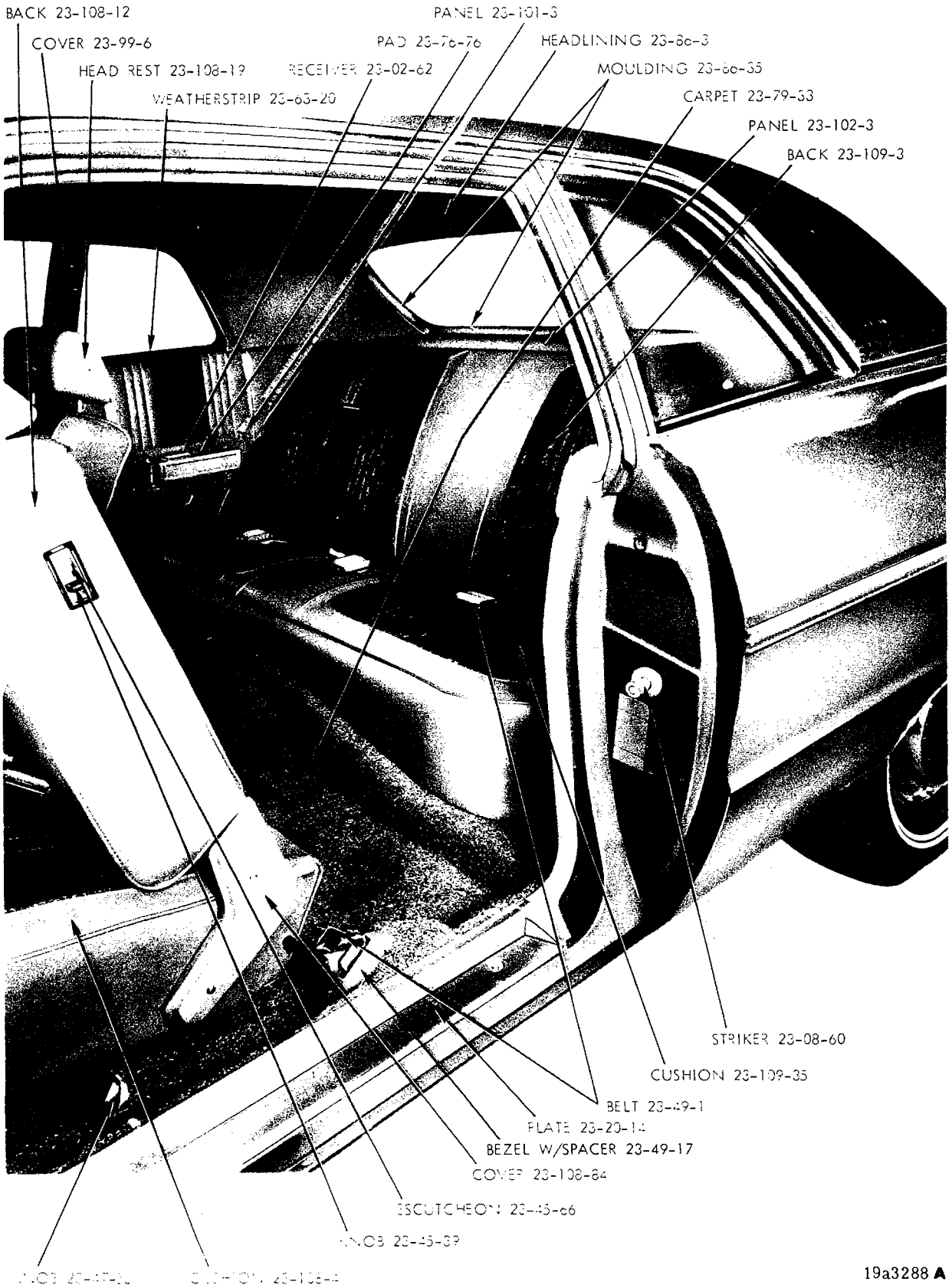

1970
REAR INTERIOR - PLYMOUTH FURY P-L (GRAN COUPE) 2 DOOR SEDAN

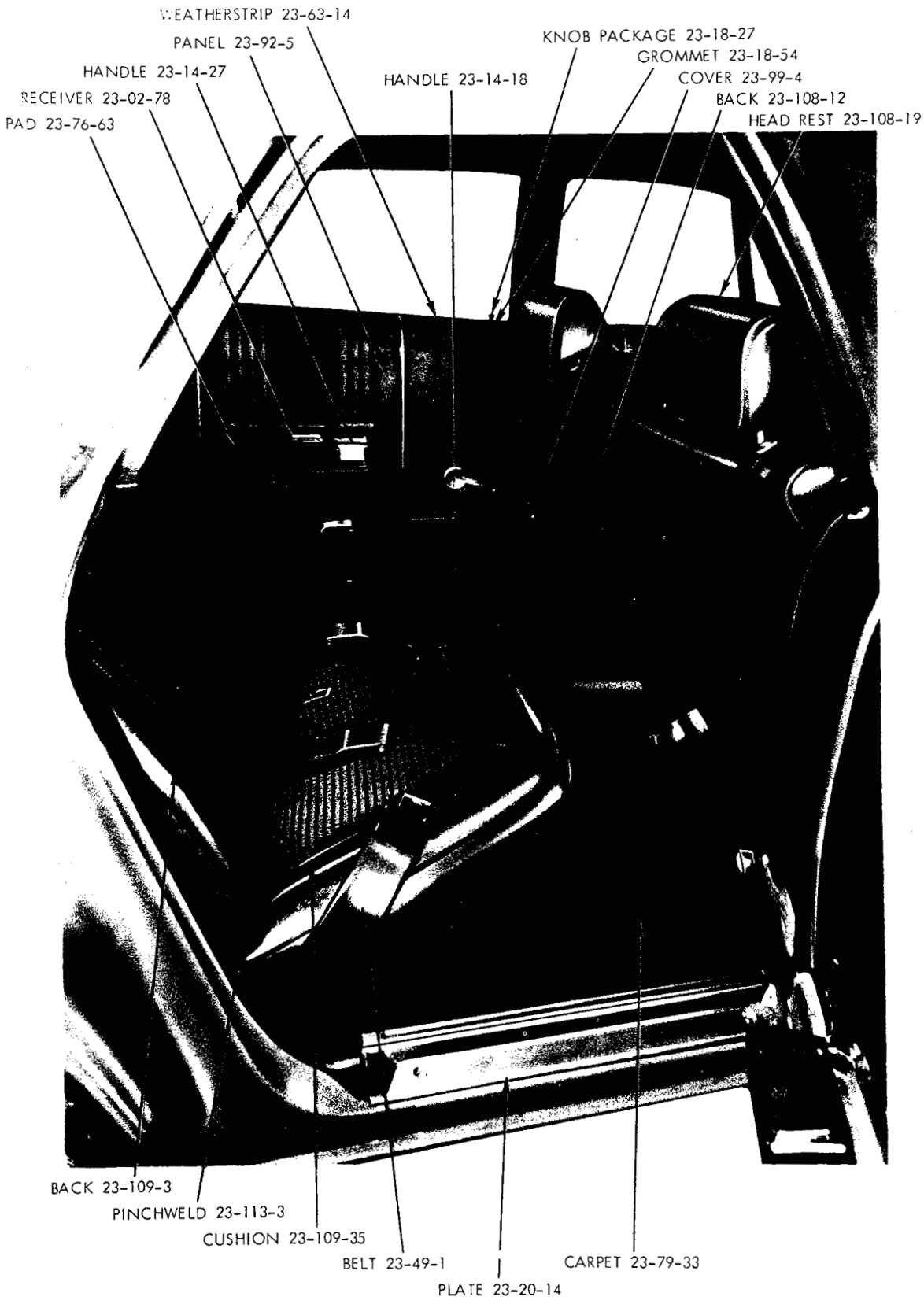

19a3266

1970
REAR INTERIOR - PLYMOUTH FURY III P-M 4 DOOR SEDAN

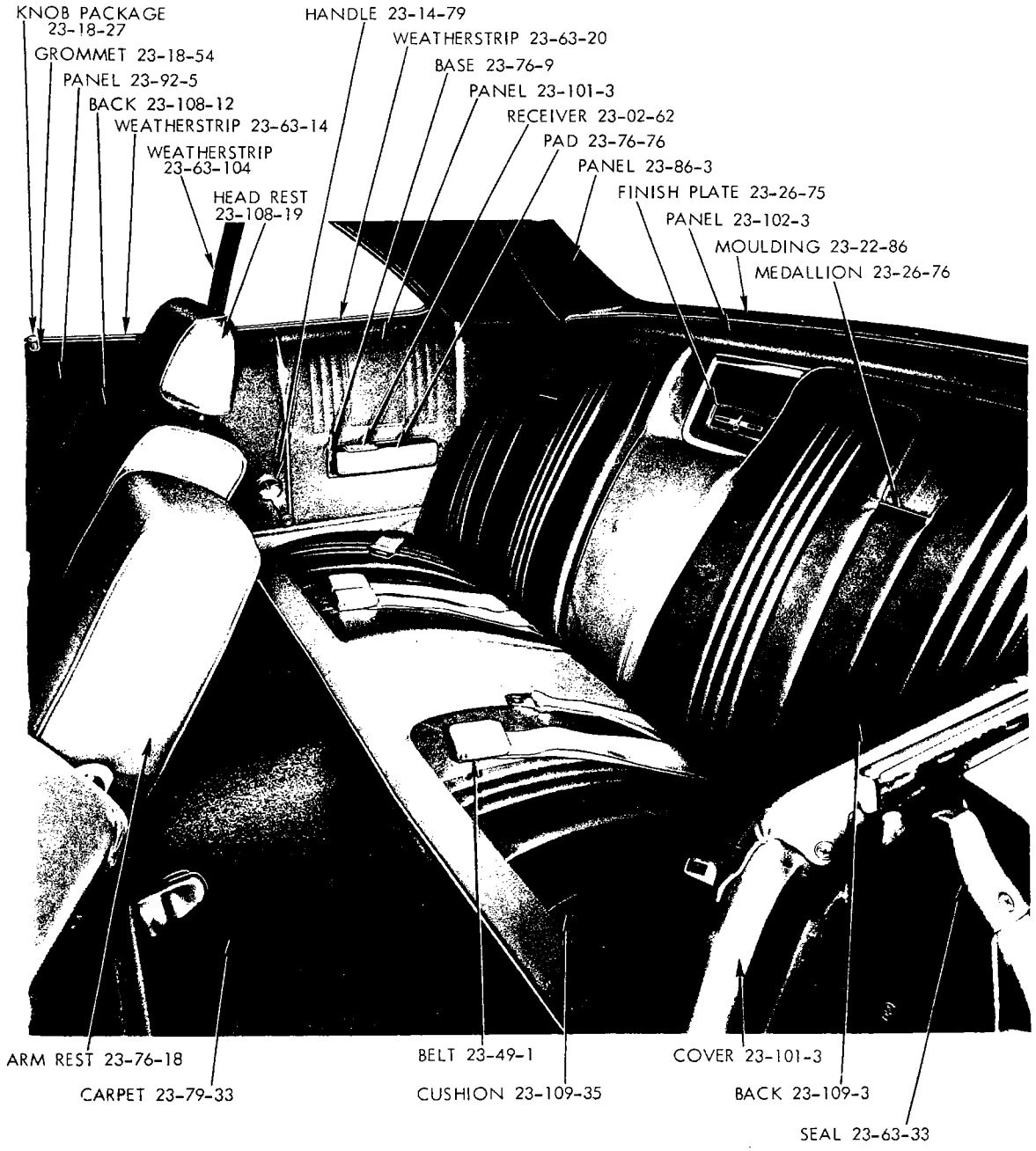

19a3105

1970
REAR INTERIOR - PLYMOUTH FURY III P-M 2 DOOR HARDTOP

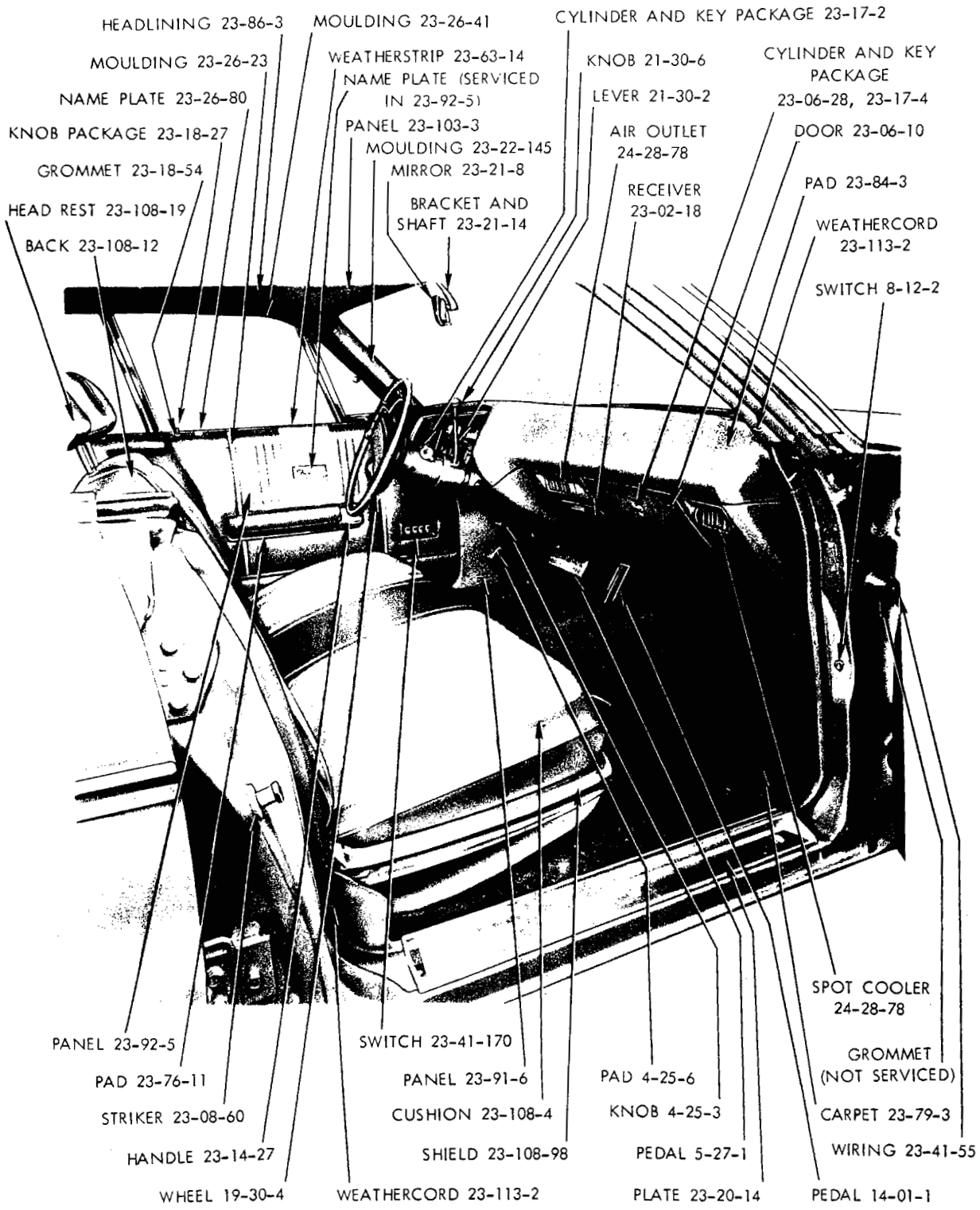

19a2848A

1970
FRONT INTERIOR - PLYMOUTH FURY III P-M 4 DOOR HARDTOP

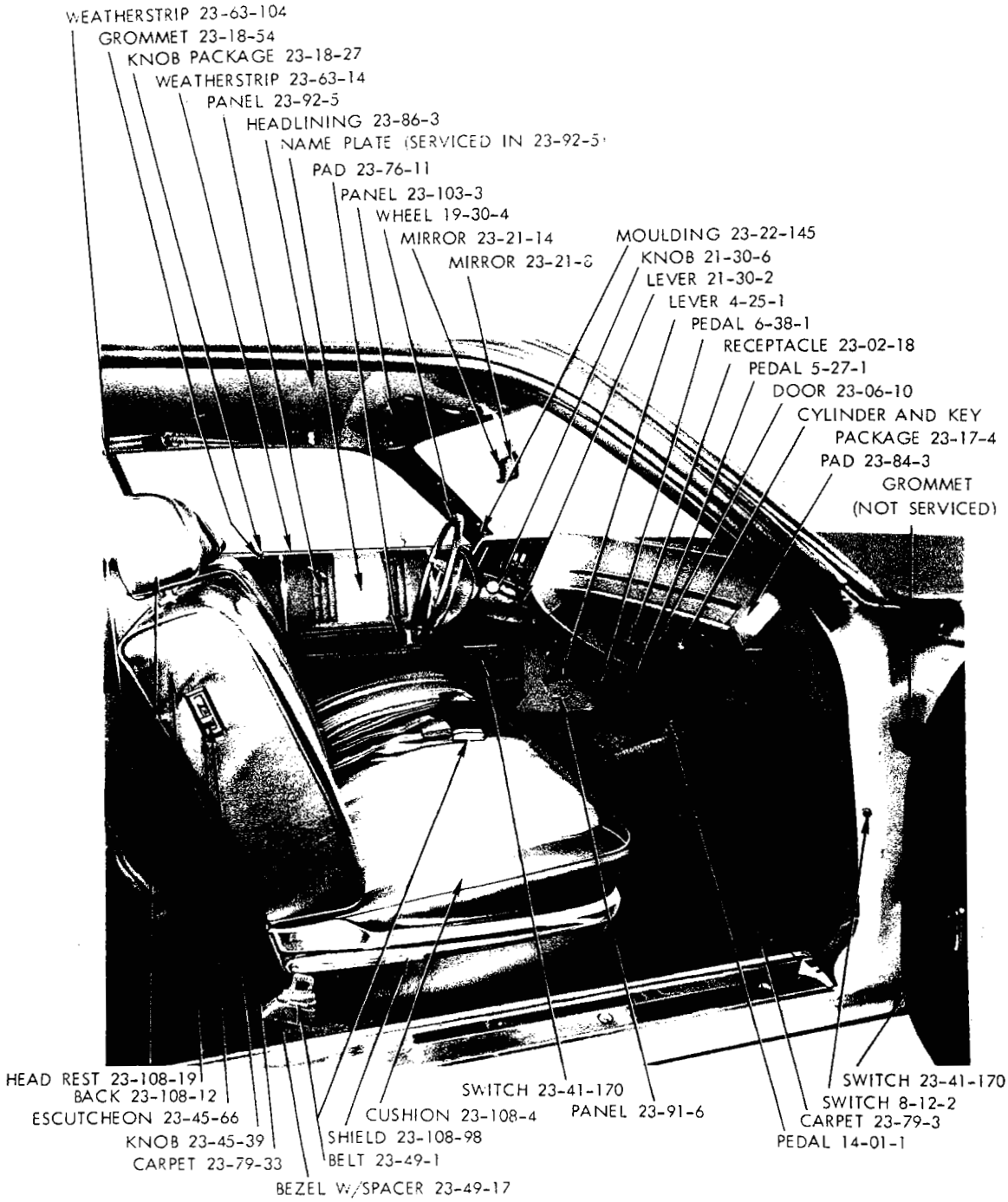

19a3172 B

1970
FRONT INTERIOR - PLYMOUTH FURY III P-M FAST BACK



19a31ee B

1970
REAR INTERIOR - PLYMOUTH FURY III P-M FAST BACK

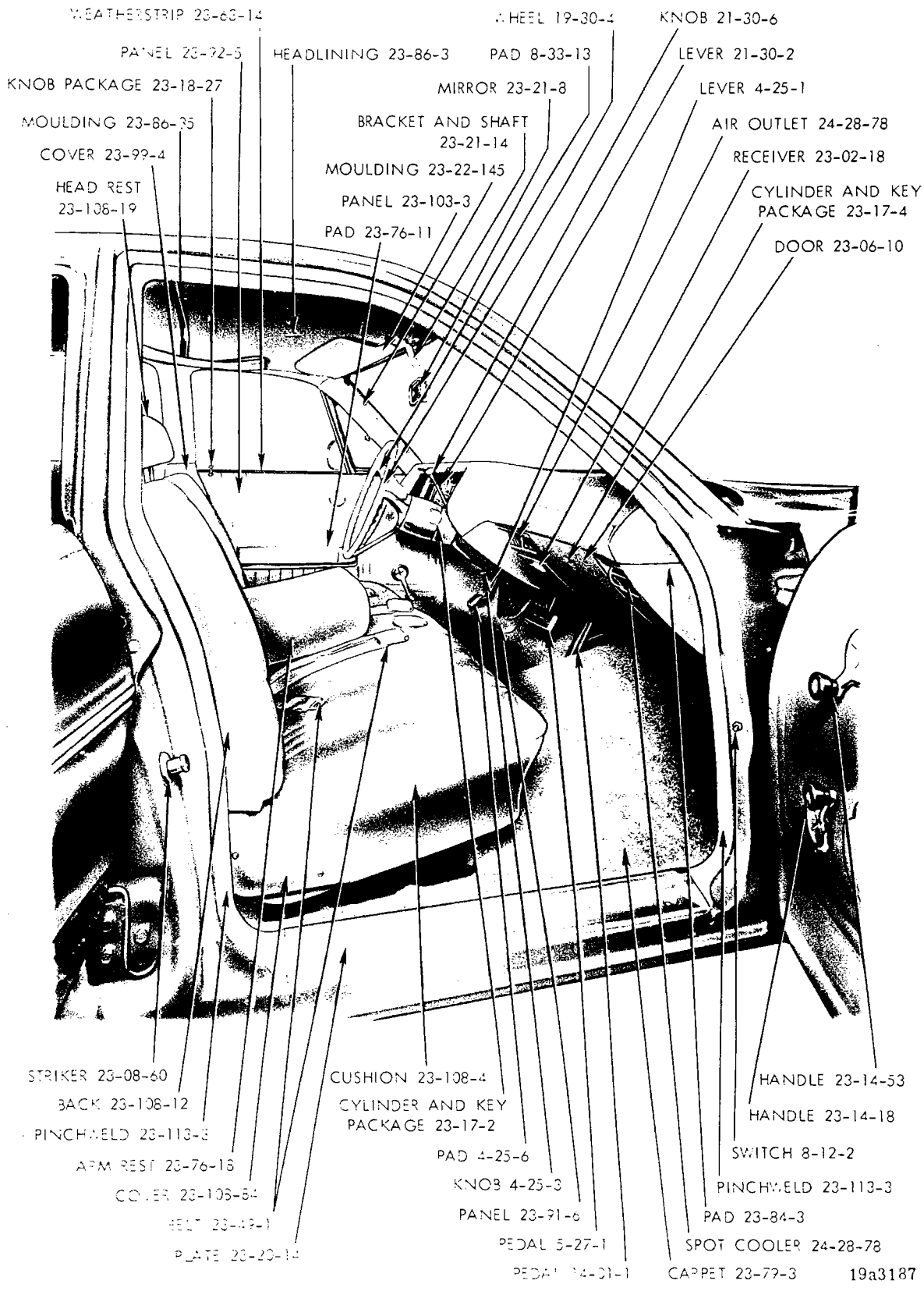

1970
FRONT INTERIOR - PLYMOUTH FURY III P-M CUSTOM SUBURBAN

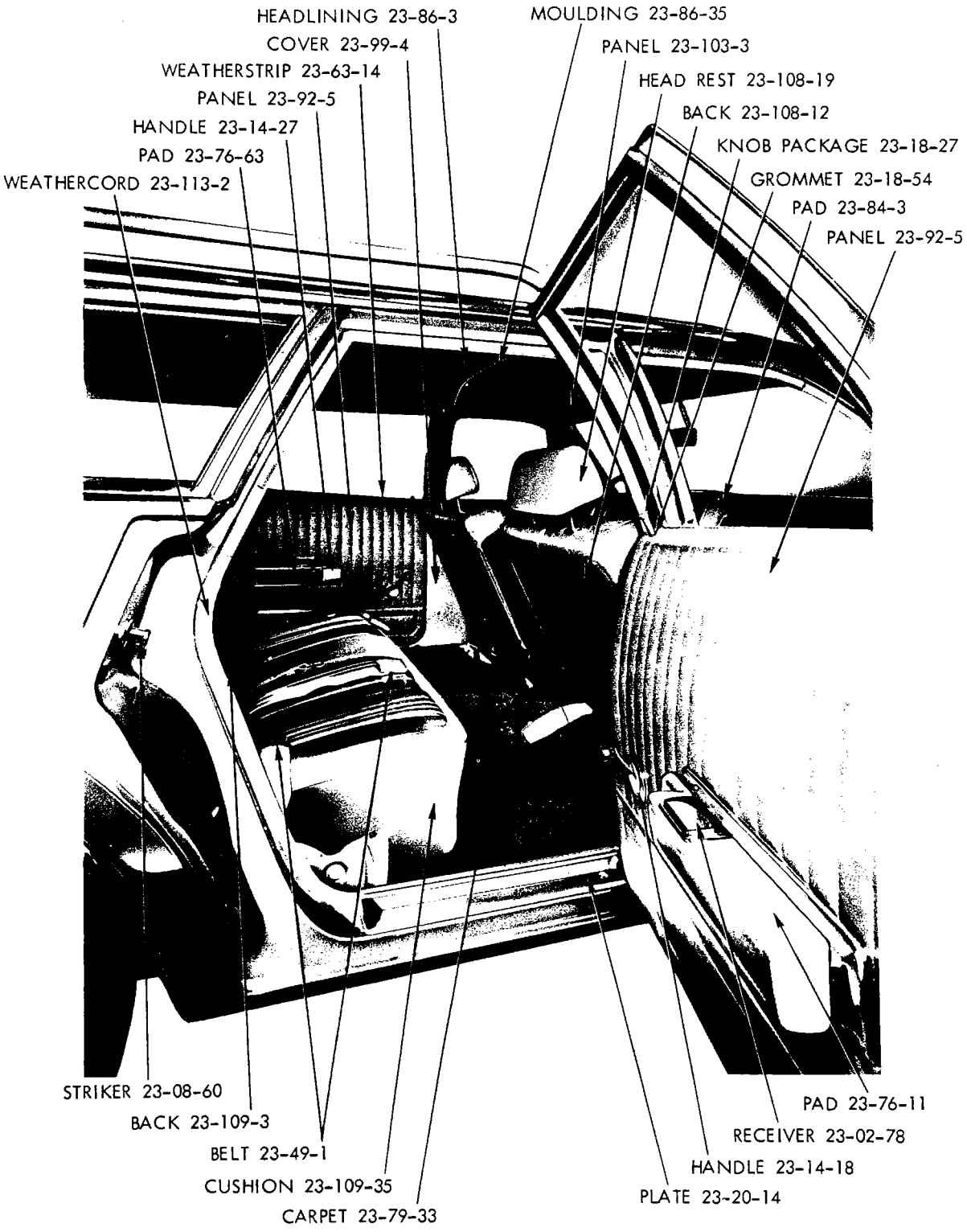

19a3186

1970
REAR INTERIOR - PLYMOUTH FURY III P-M CUSTOM SUBURBAN

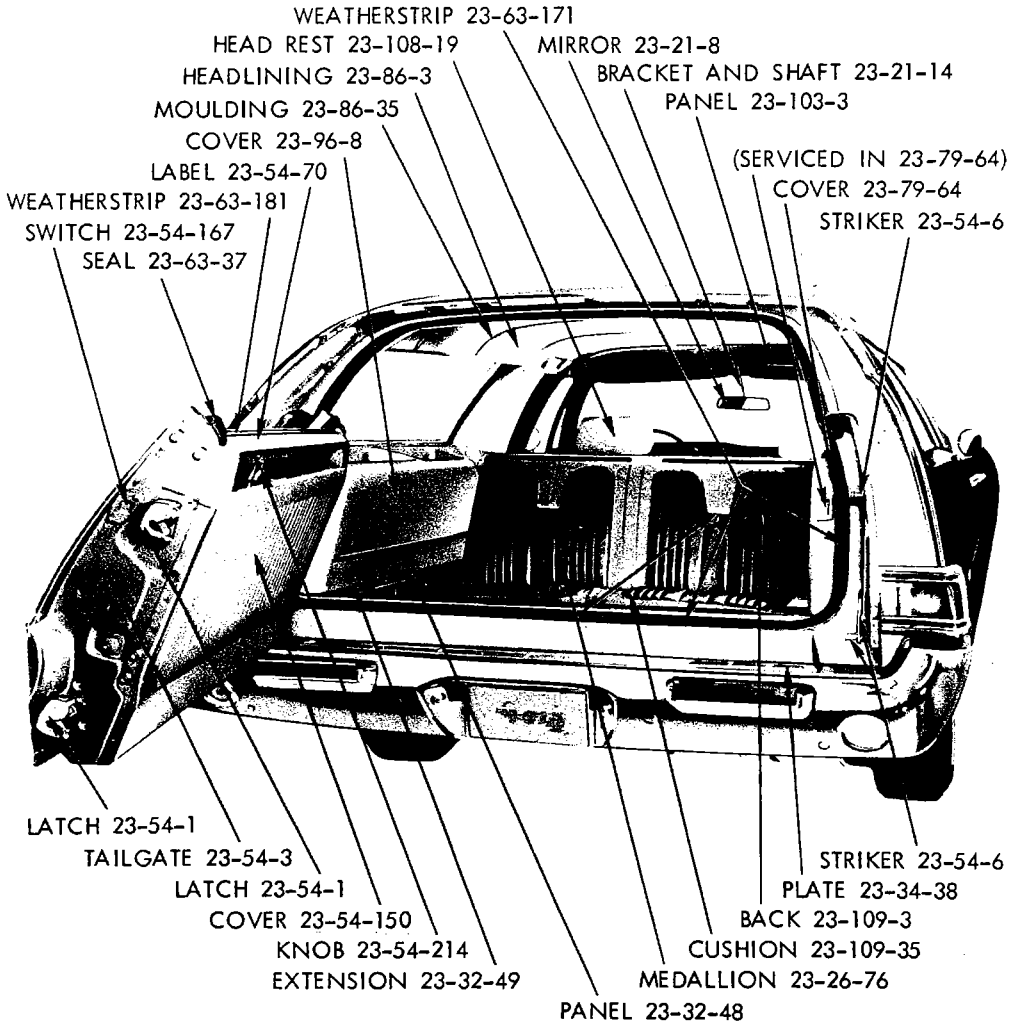

19a3185

1970

REAR INTERIOR VIEW - PLYMOUTH FURY III P-M CUSTOM SUBURBAN (3 SEATER)

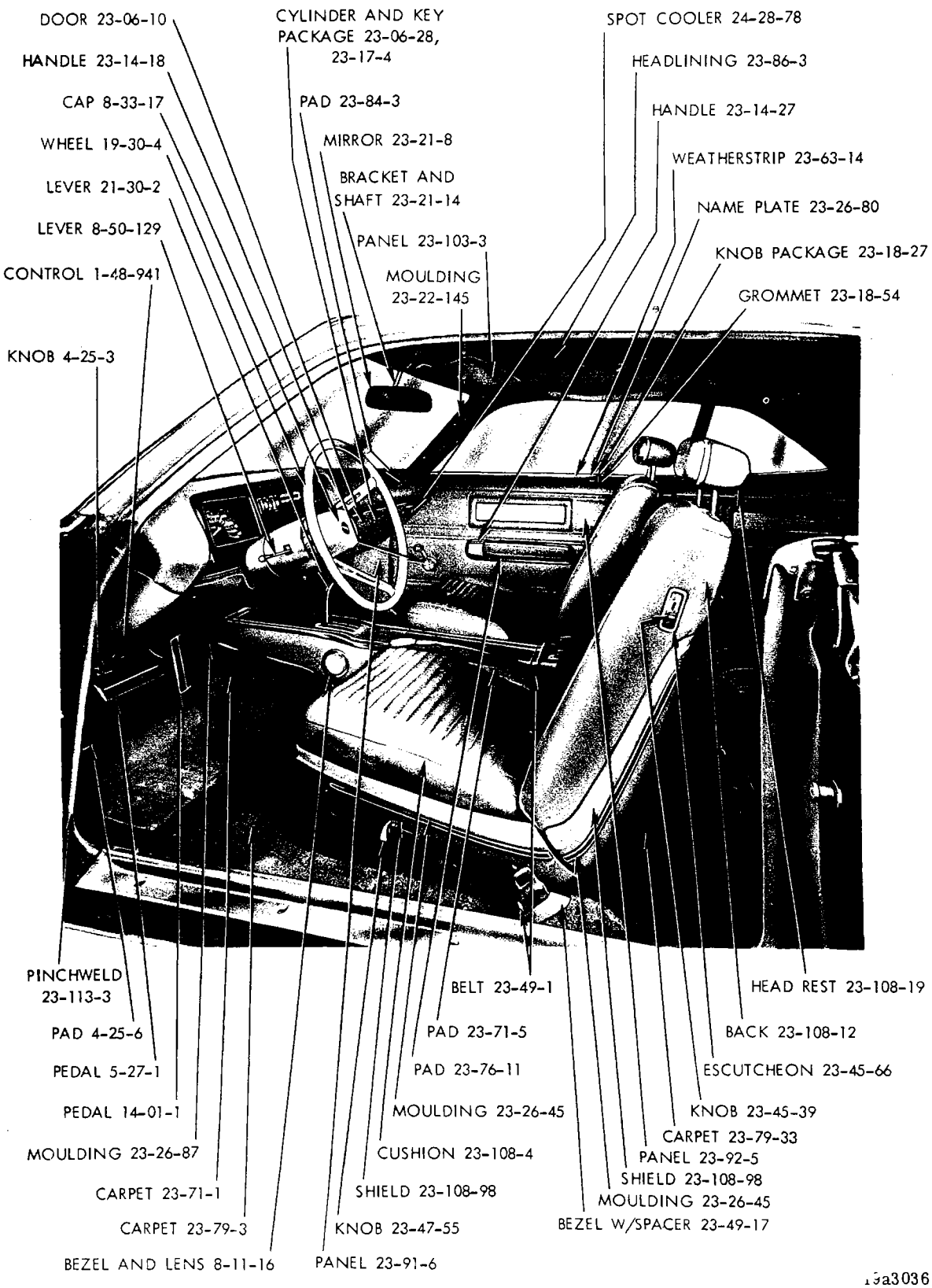

19a3036A

1970
FRONT INTERIOR - PLYMOUTH SPORT FURY (GT) P-H 2 DOOR HARDTOP

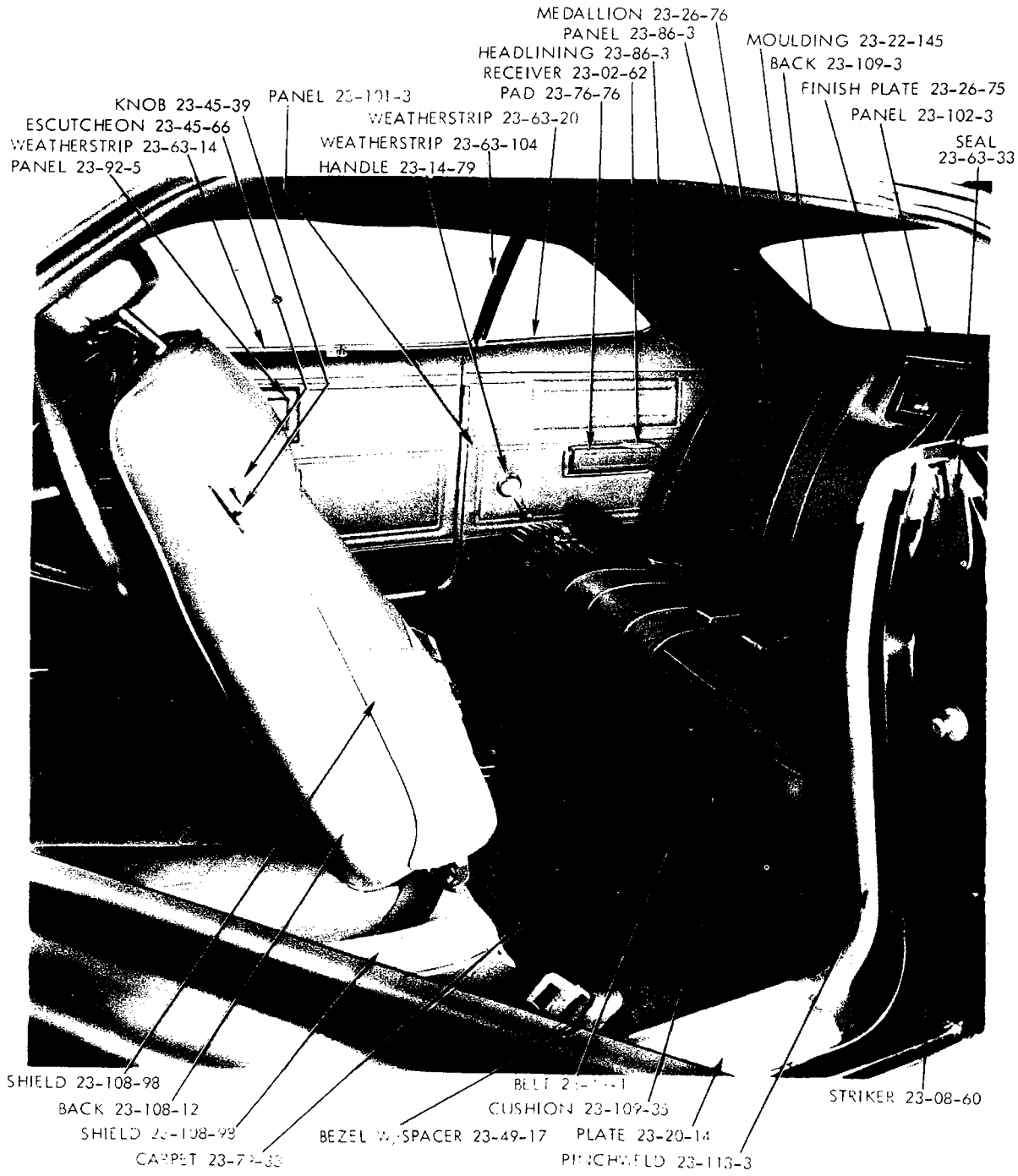

19a3021 **A**

1970

REAR INTERIOR - PLYMOUTH SPORT FURY (GT) P-H 2 DOOR HARDTOP

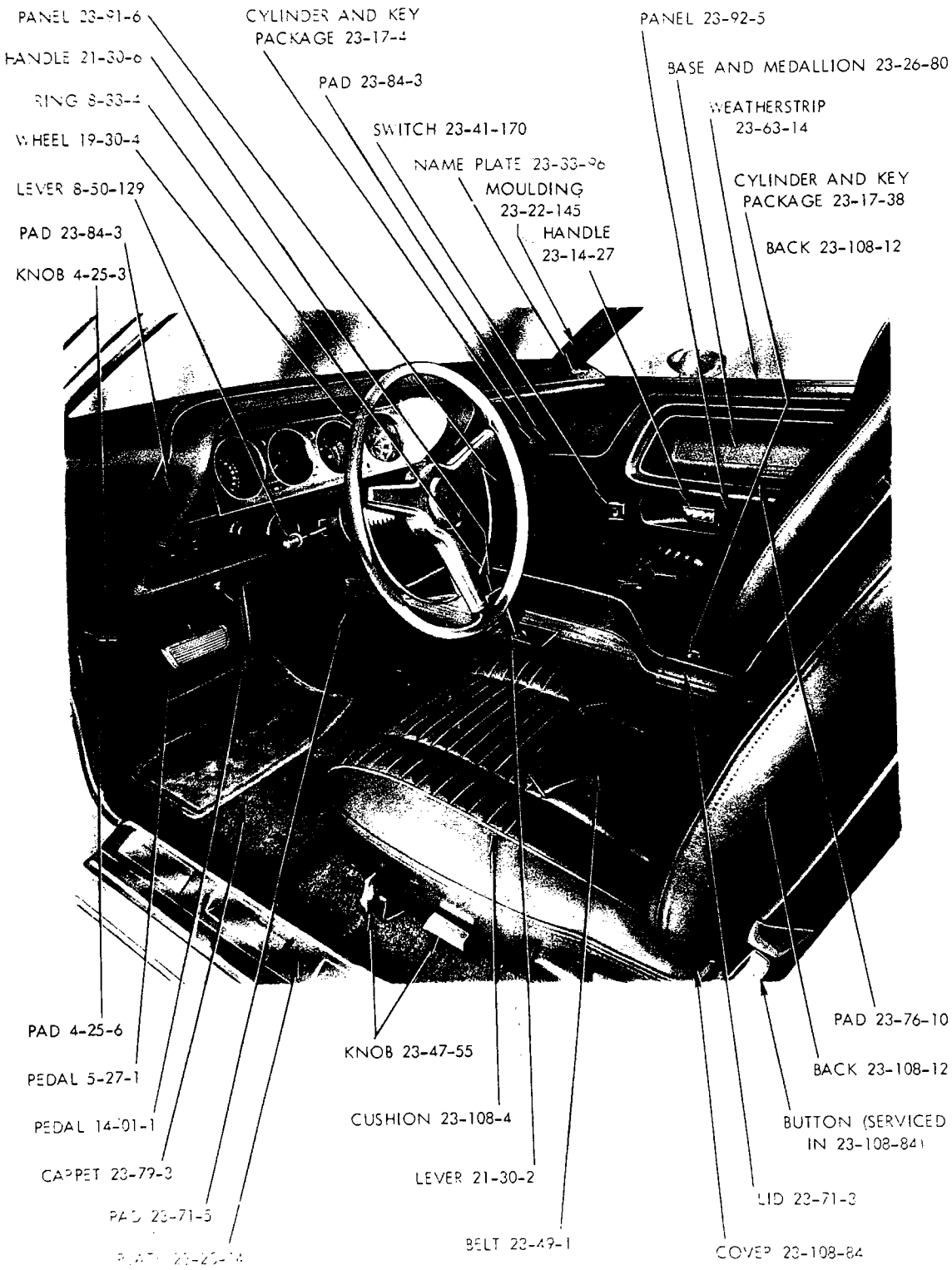

19a3030B

1970
FRONT INTERIOR - CHALLENGER J-H 2 DOOR HARDTOP

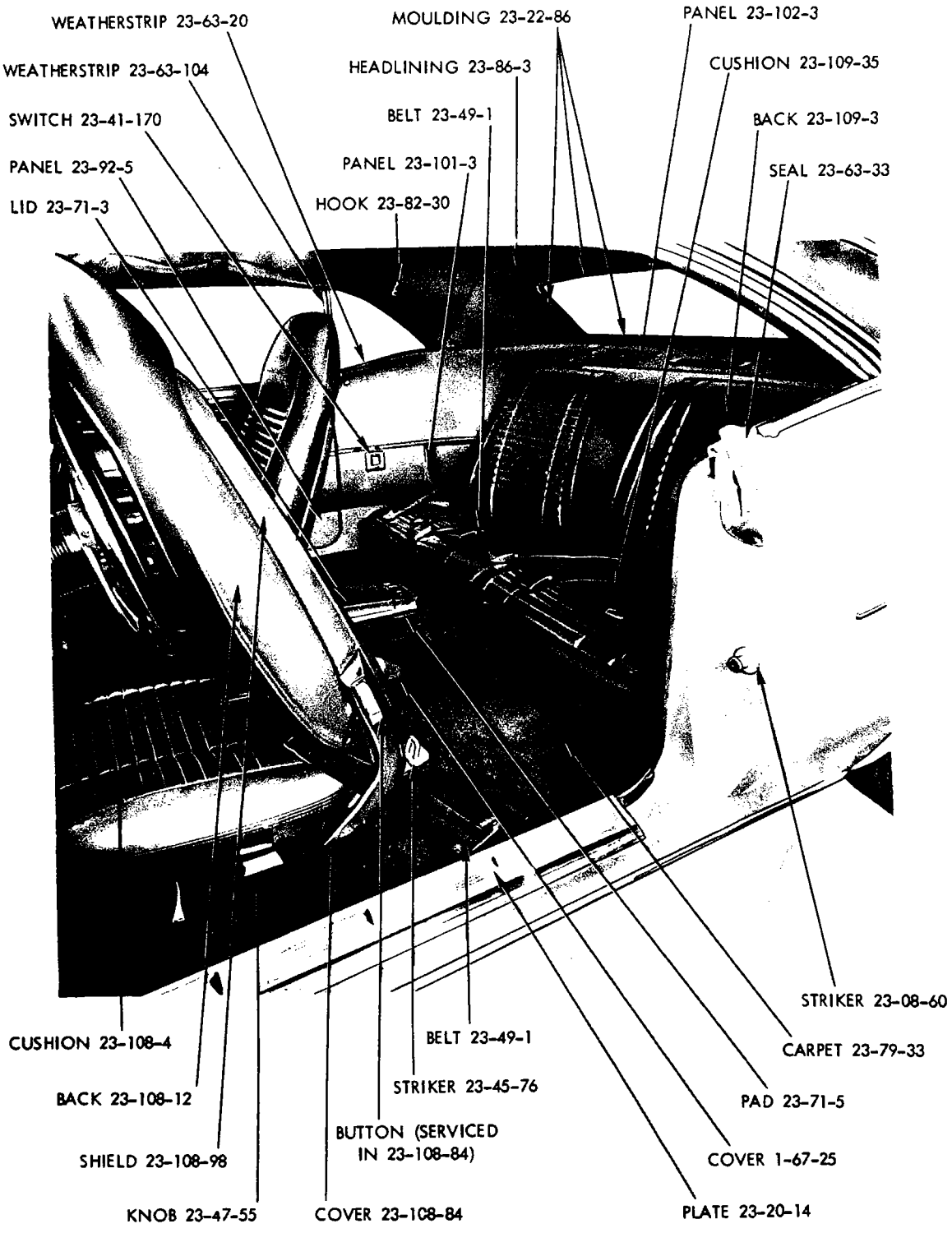

19a3017

1970
REAR INTERIOR - CHALLENGER J-H 2 DOOR HARDTOP

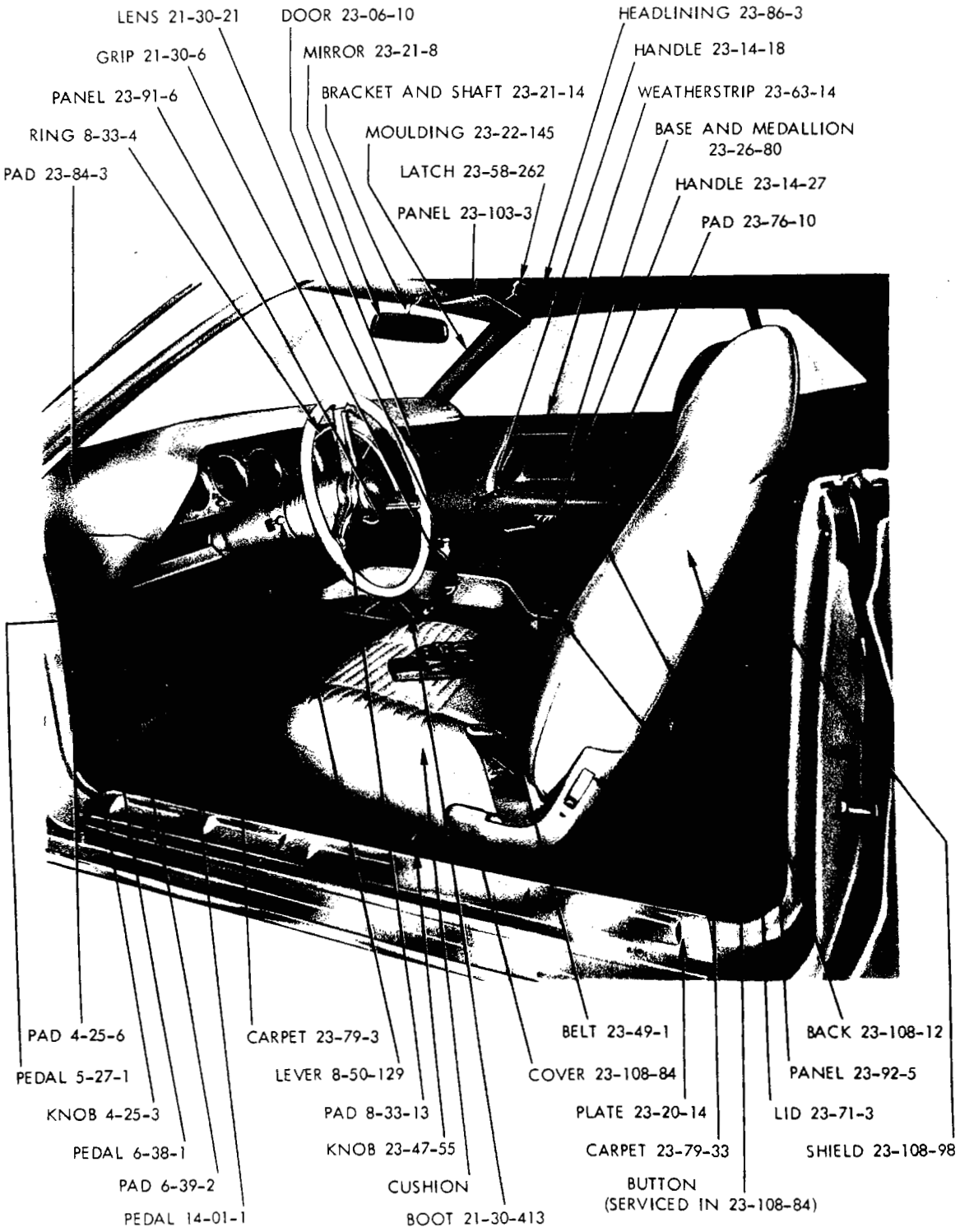

19a3039▲

1970
FRONT INTERIOR - CHALLENGER R/T J-S CONVERTIBLE COUPE

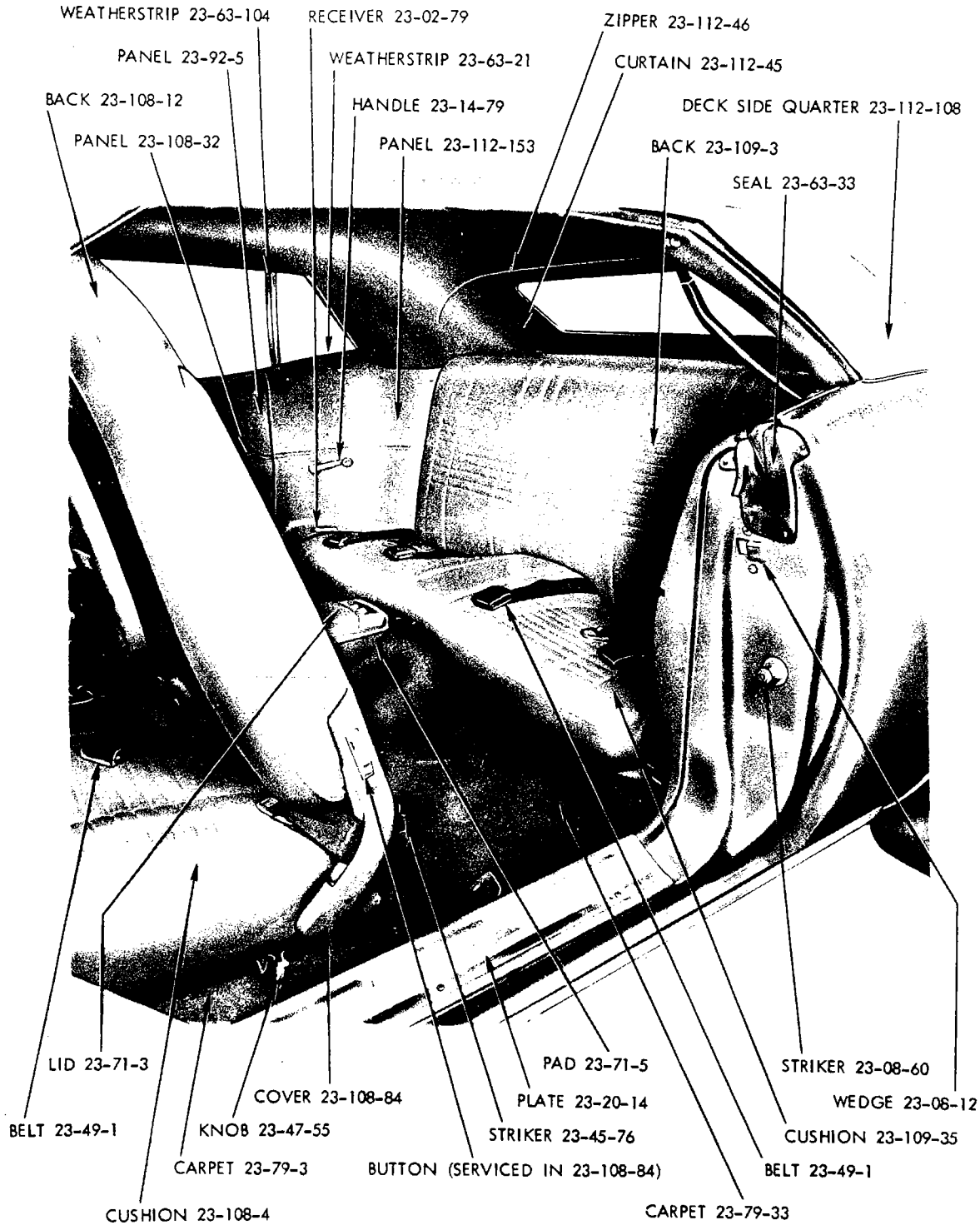

19a3024

1970
REAR INTERIOR - CHALLENGER R/T J-S CONVERTIBLE COUPE

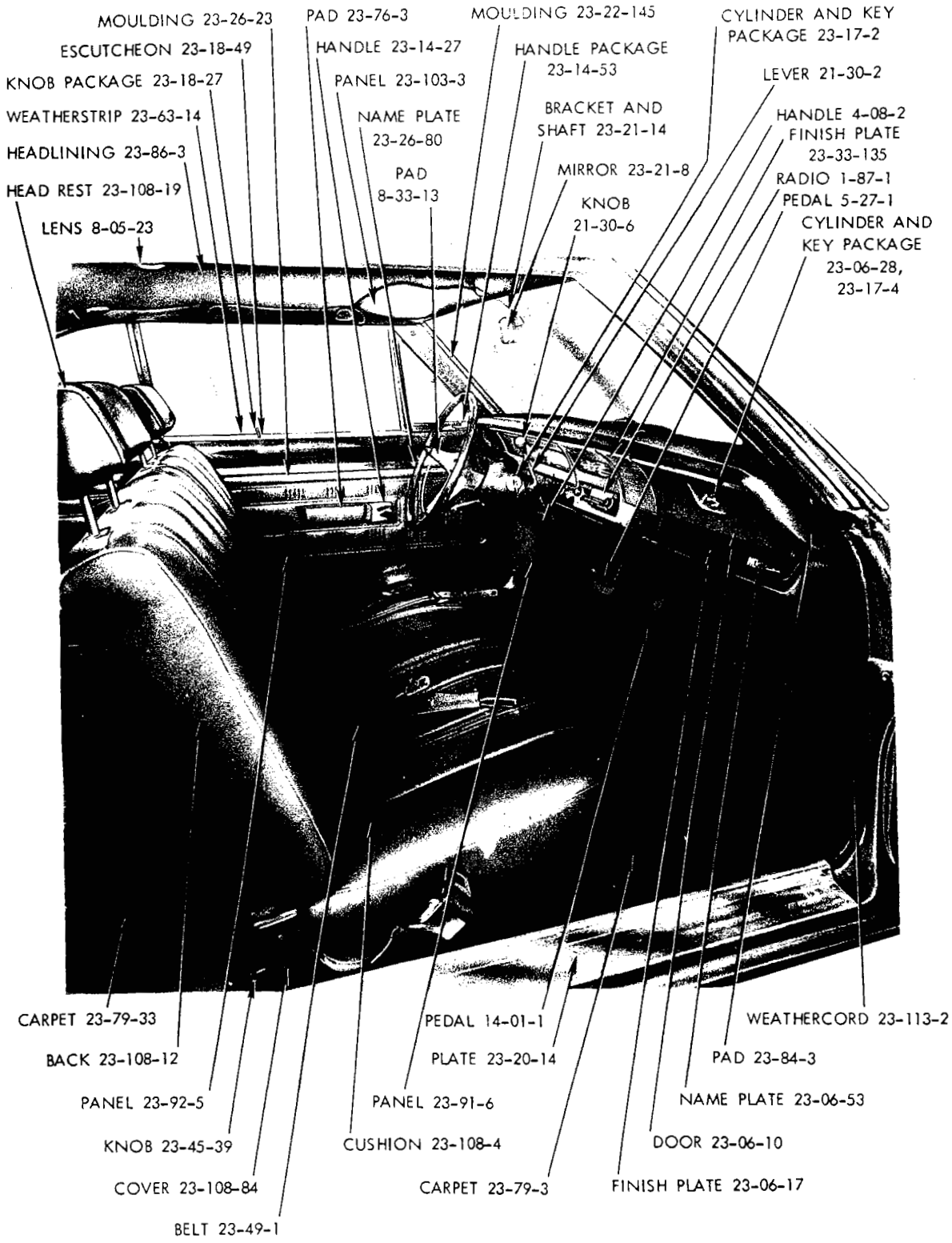

19a3044 A

1970
FRONT INTERIOR - DART CUSTOM L-H 2 DOOR HARDTOP

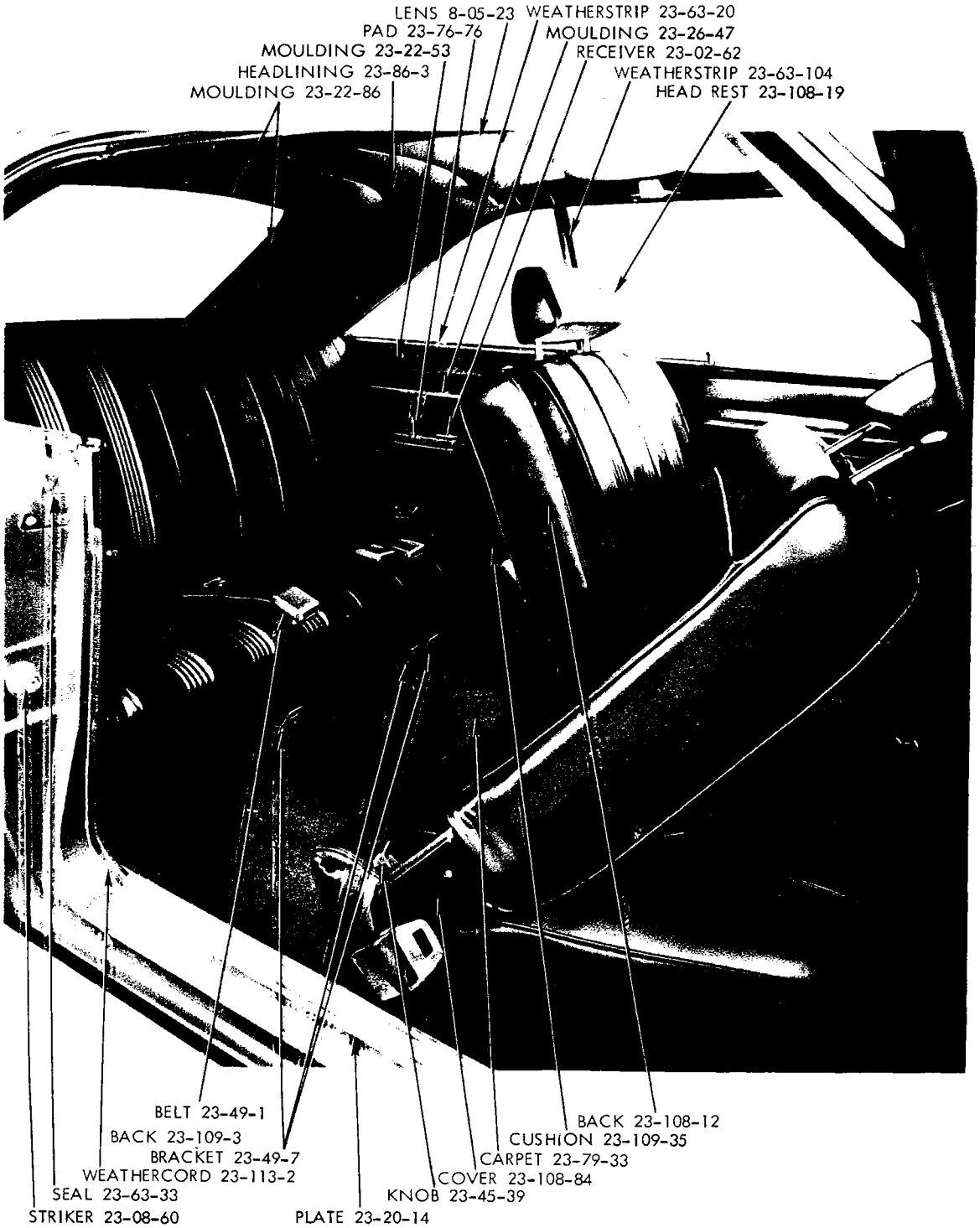

19a3028

1970
REAR INTERIOR - DART CUSTOM L-H 2 DOOR HARDTOP

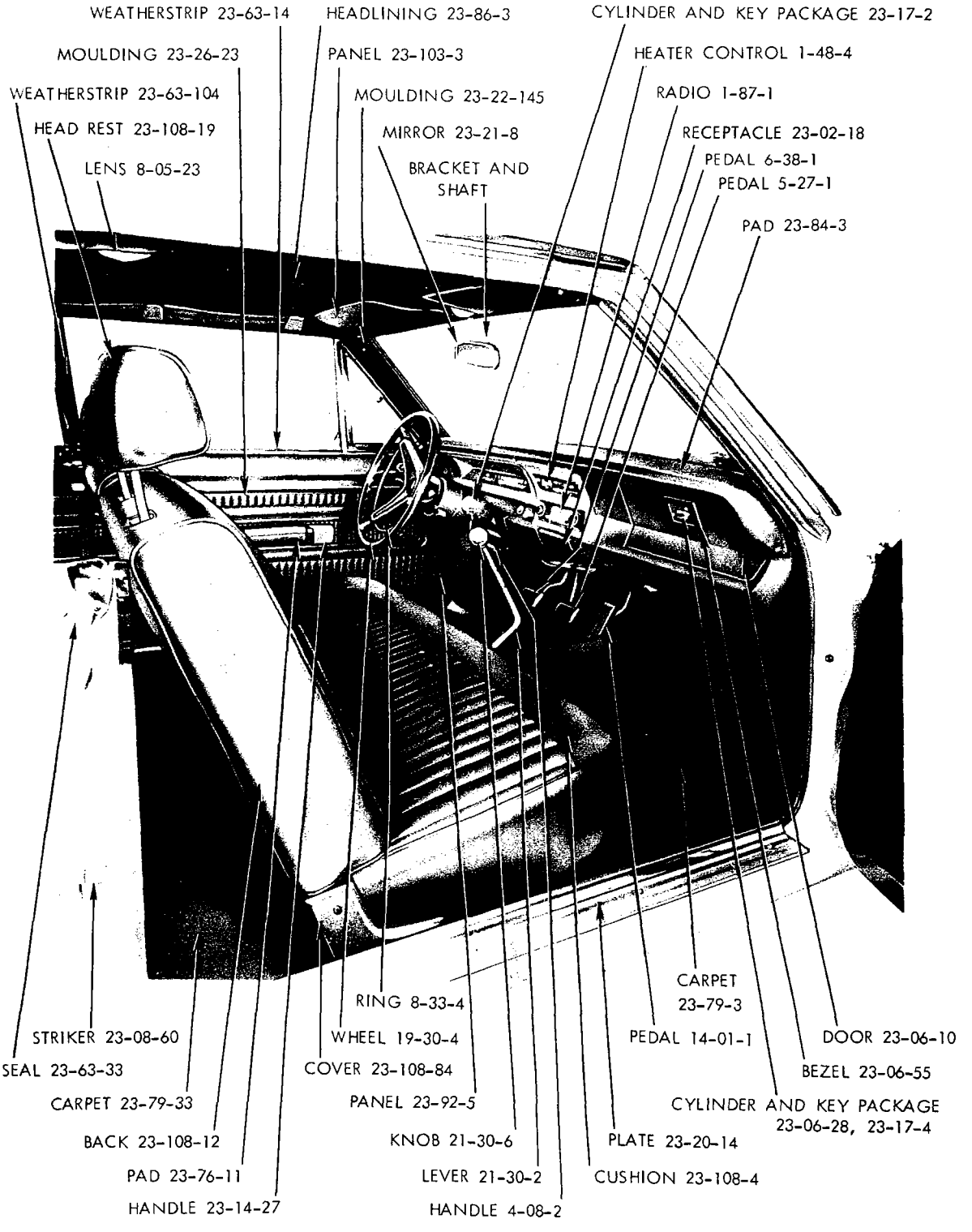

19a2836 A

1970
FRONT INTERIOR - DART (SWINGER 340) L-M 2 DOOR HARDTOP

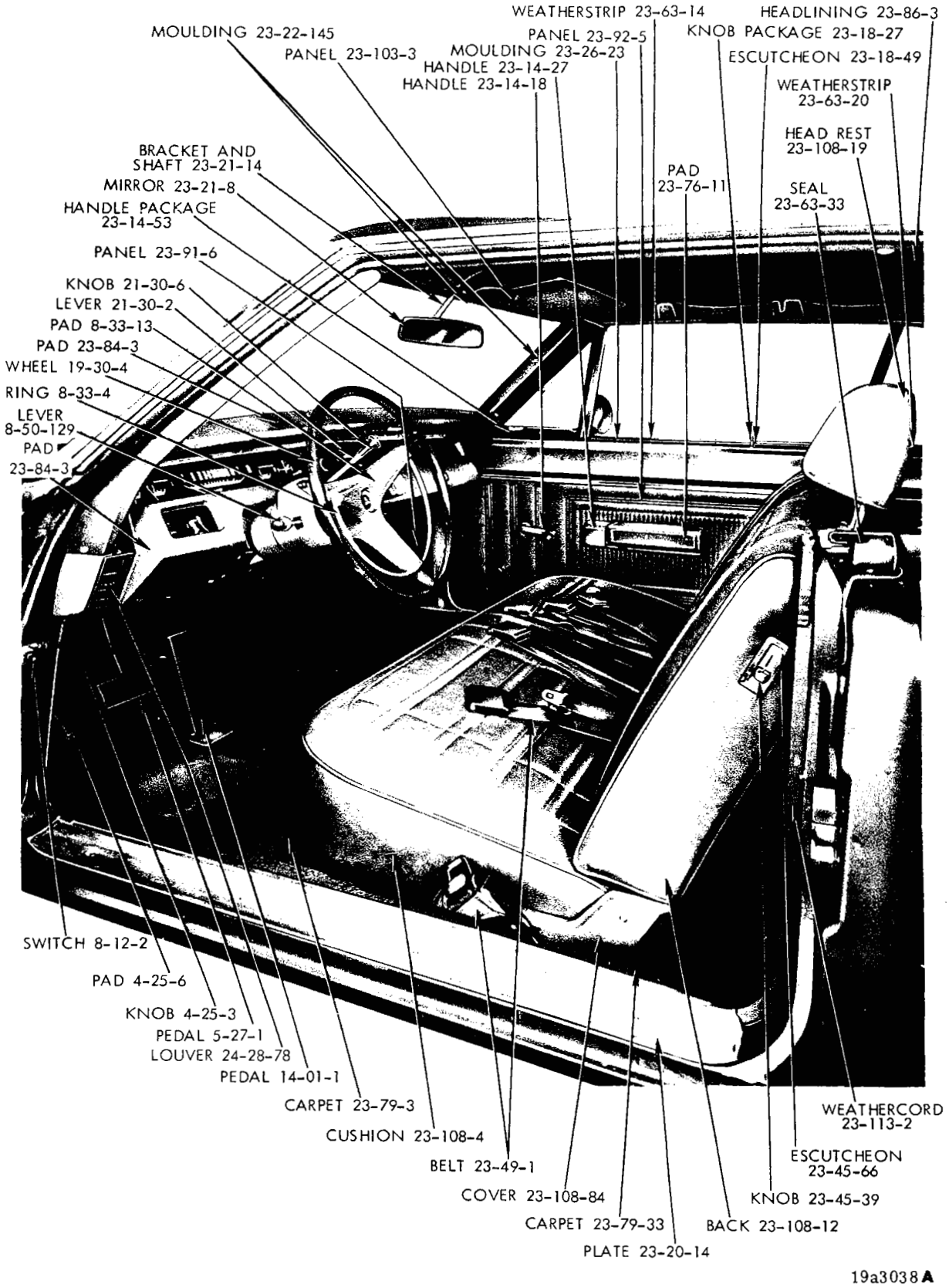

1970
FRONT INTERIOR - CORONET 440 W-H 2 DOOR HARDTOP



19a3023

1970
REAR INTERIOR - CORONET 440 W-H 2 DOOR HARDTOP



1970
FRONT INTERIOR - CORONET 500 W-P 2 DOOR HARDTOP

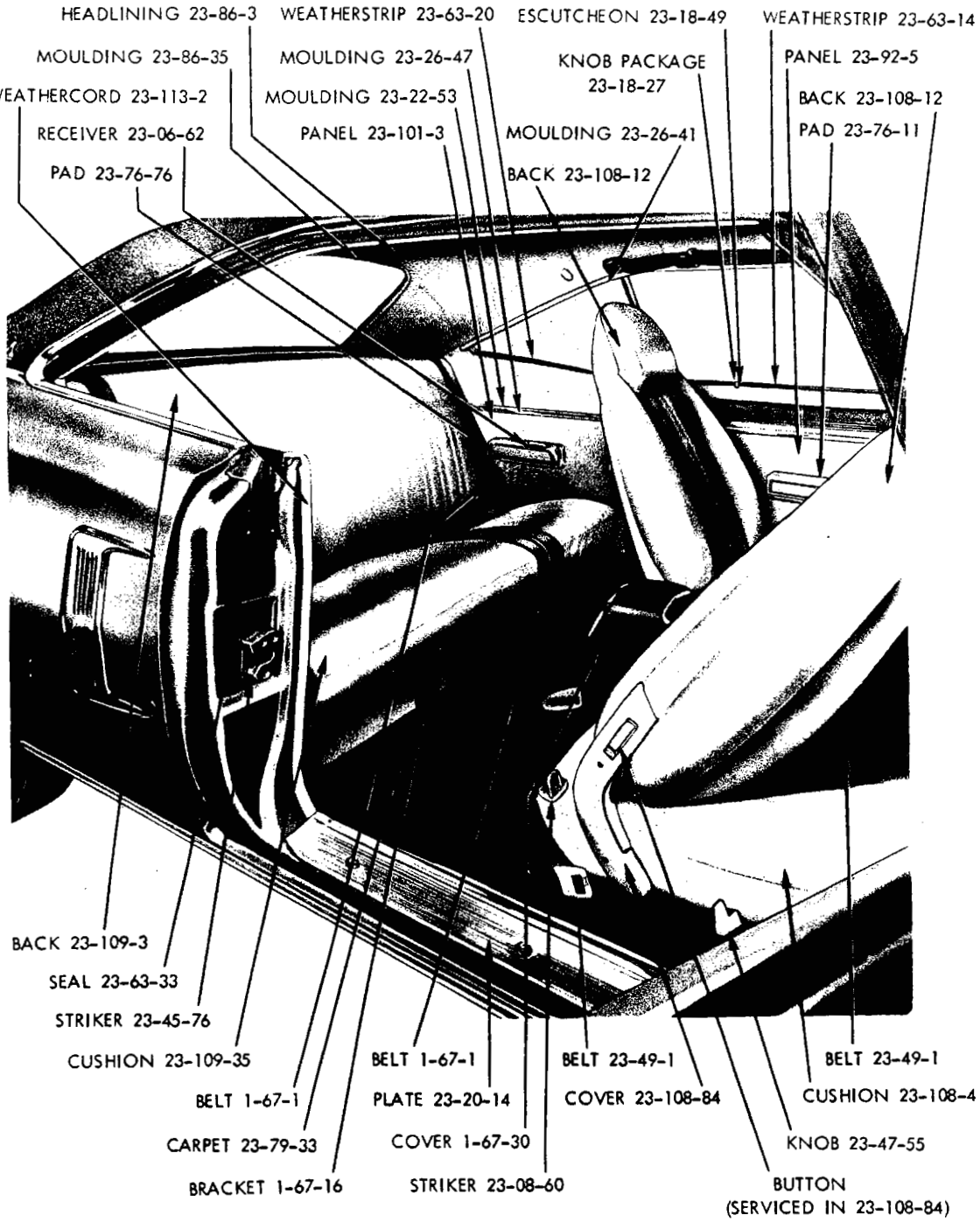
HEADLINING 23-86-3
WEATHERSTRIP 23-63-20
ESCUTCHEON 23-18-49
WEATHERSTRIP 23-63-14
MOULDING 23-86-35
MOULDING 23-26-47
KNOB PACKAGE 23-18-27
PANEL 23-92-5
WEATHERCORD 23-113-2
MOULDING 23-22-53
BACK 23-108-12
RECEIVER 23-06-62
PANEL 23-101-3
MOULDING 23-26-41
PAD 23-76-11
PAD 23-76-76
BACK 23-108-12
BACK 23-109-3
SEAL 23-63-33
STRIKER 23-45-76
CUSHION 23-109-35
BELT 1-67-1
BELT 1-67-1
BELT 23-49-1
BELT 23-49-1
CARPET 23-79-33
PLATE 23-20-14
COVER 23-108-84
CUSHION 23-108-4
BRACKET 1-67-16
COVER 1-67-30
KNOB 23-47-55
STRIKER 23-08-60
BUTTON (SERVICED IN 23-108-84)

19a2844

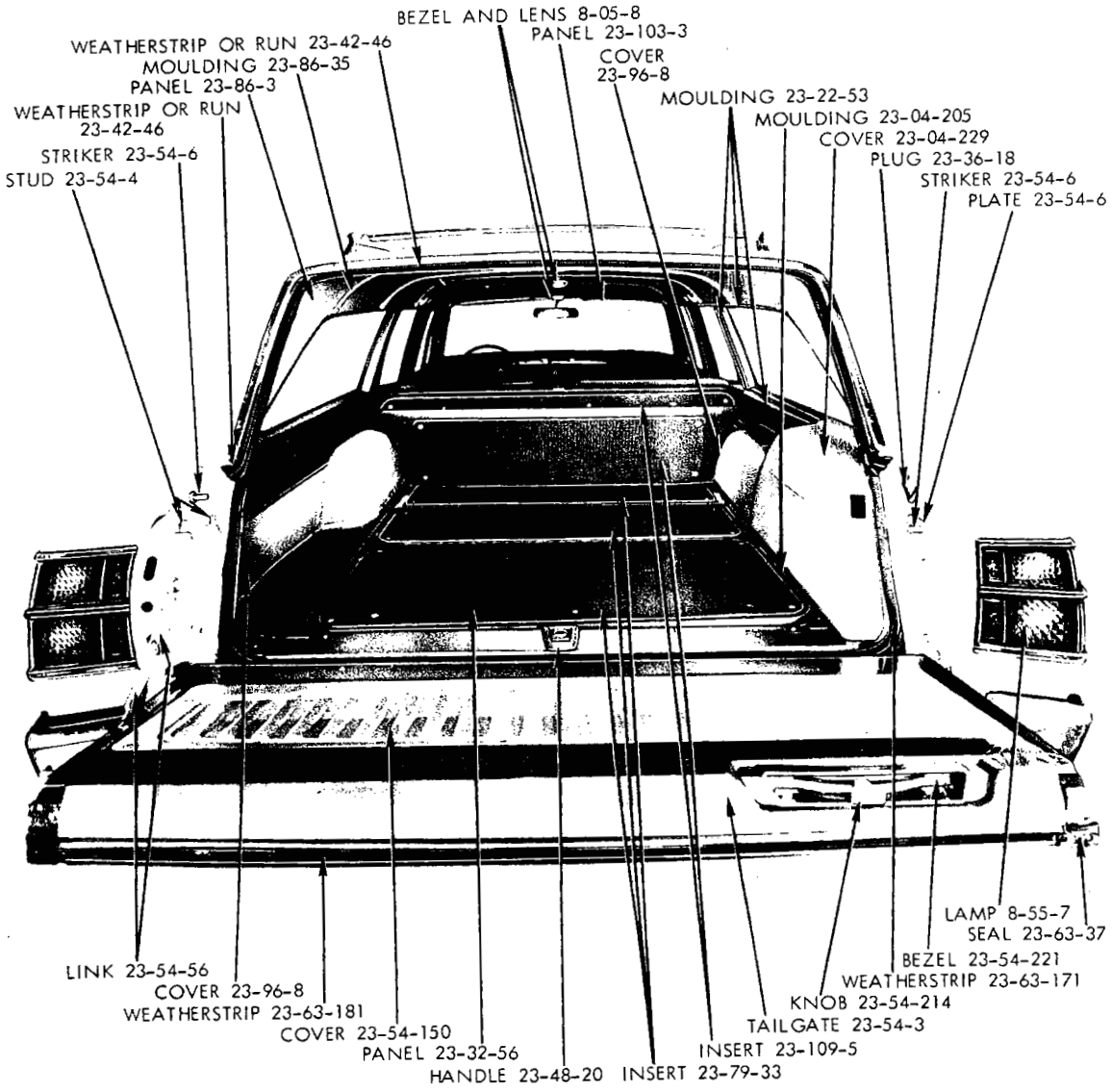

19a2622 A

1970

REAR INTERIOR - CORONET 500 W-P STATION WAGON

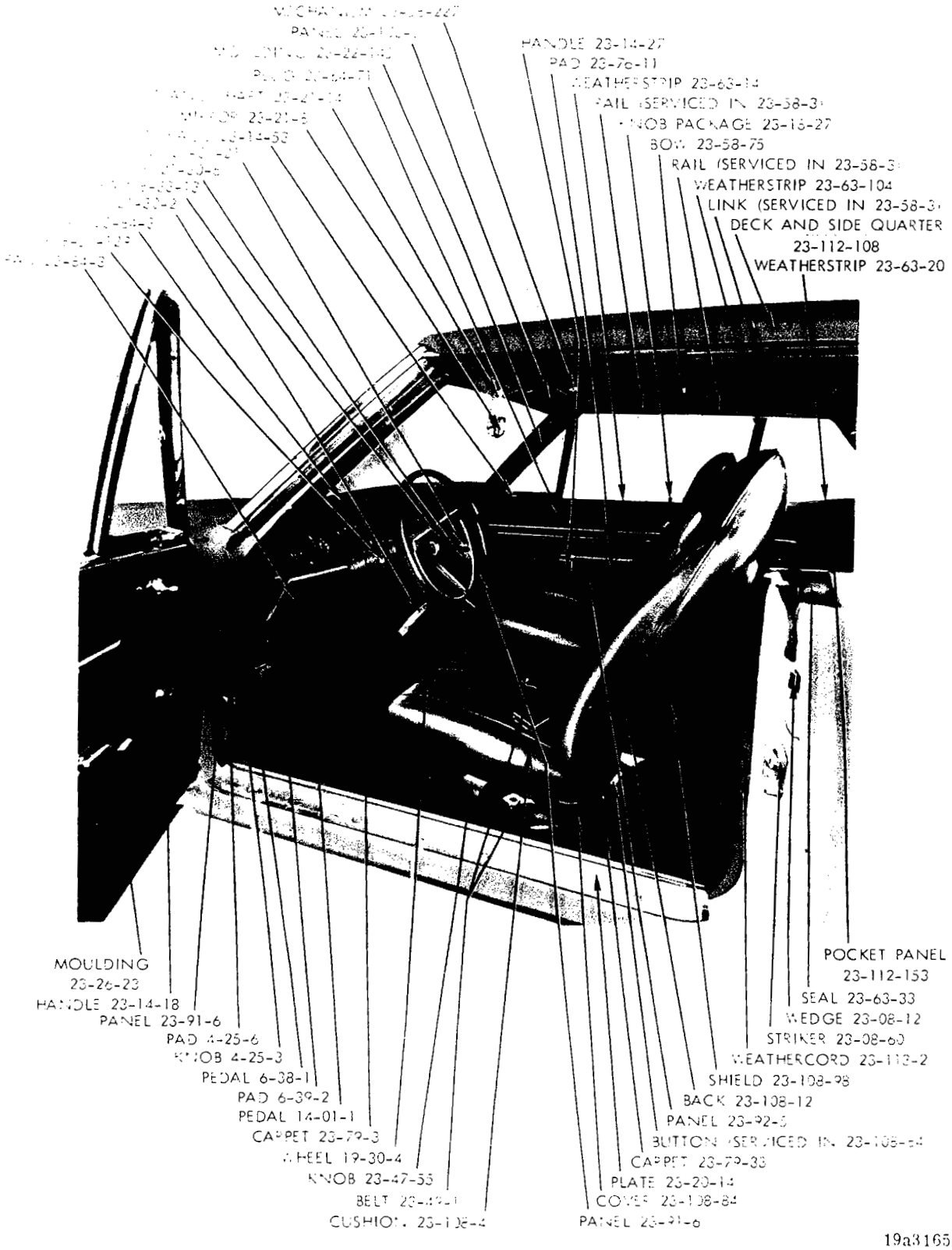

19a8165

1970
FRONT INTERIOR - CORONET R/T W-S CONVERTIBLE COUPE

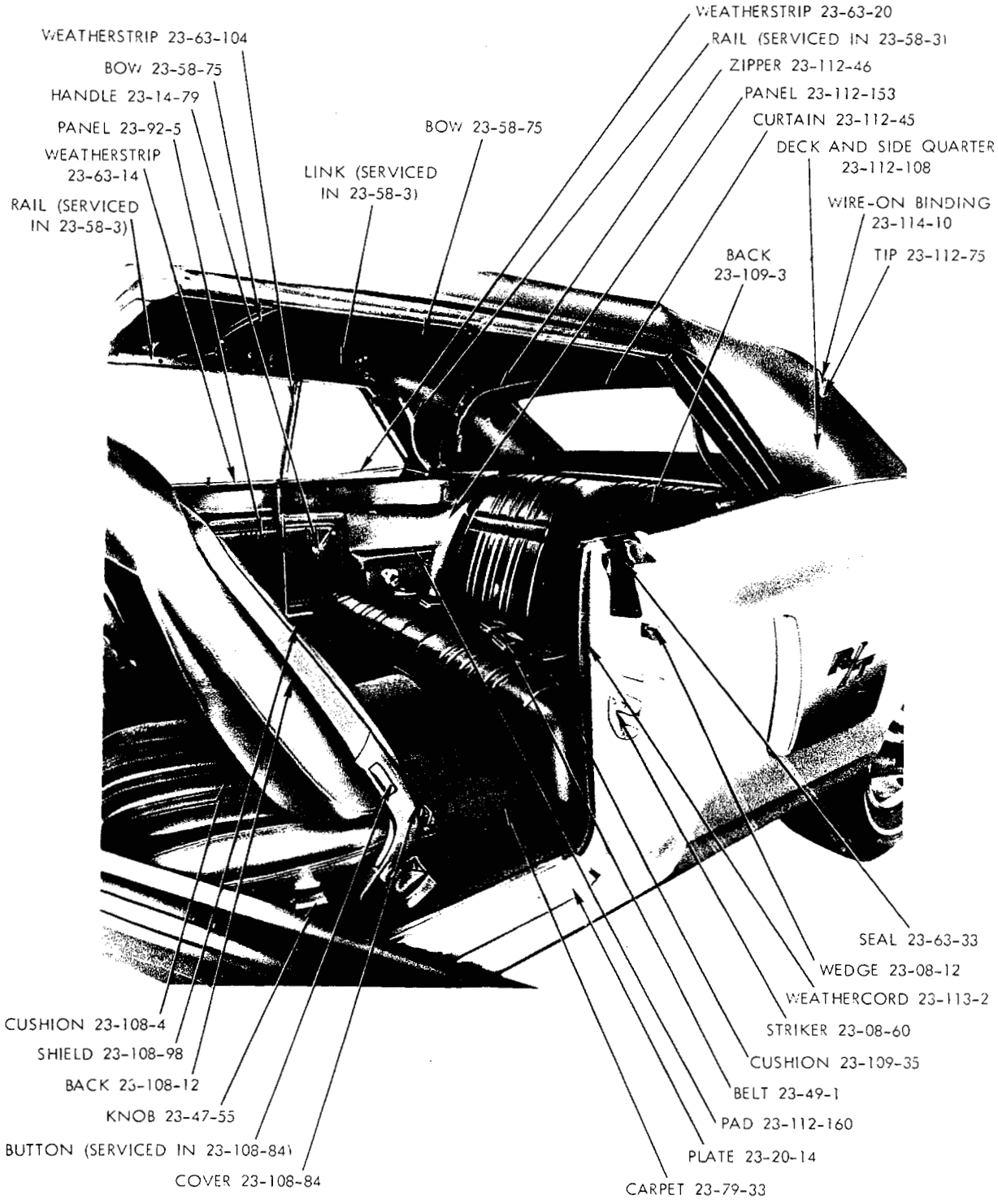

1983102

1970
REAR INTERIOR - CORONET R/T W-S CONVERTIBLE COUPE

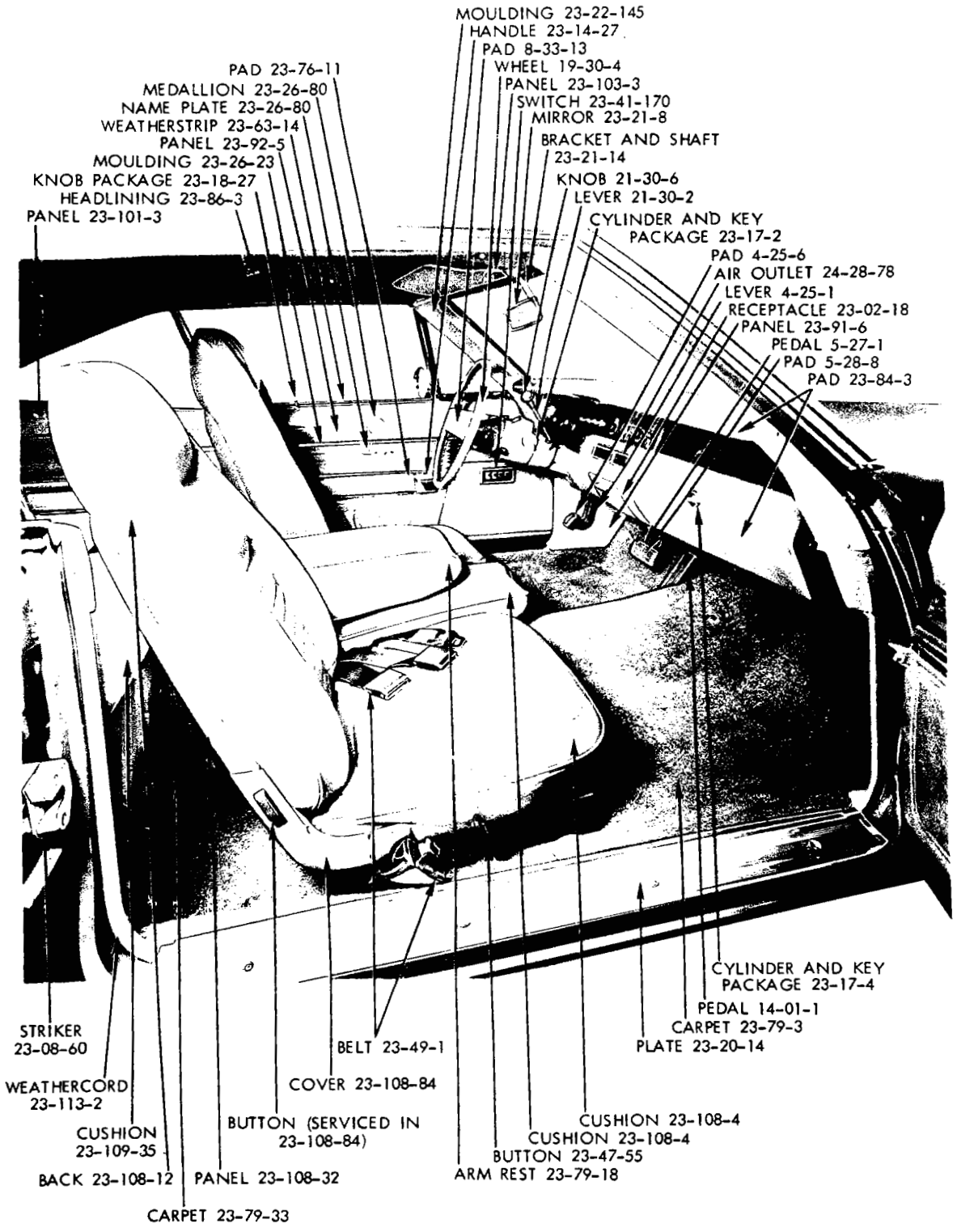
MOULDING 23-22-145
HANDLE 23-14-27
PAD 8-33-13
WHEEL 19-30-4
PANEL 23-103-3
SWITCH 23-41-170
MIRROR 23-21-8
BRACKET AND SHAFT 23-21-14
KNOB 21-30-6
LEVER 21-30-2
CYLINDER AND KEY PACKAGE 23-17-2
PAD 4-25-6
AIR OUTLET 24-28-78
LEVER 4-25-1
RECEPTACLE 23-02-18
PANEL 23-91-6
PEDAL 5-27-1
PAD 5-28-8
PAD 23-84-3
PAD 23-76-11
MEDALLION 23-26-80
NAME PLATE 23-26-80
WEATHERSTRIP 23-63-14
PANEL 23-92-5
MOULDING 23-26-23
KNOB PACKAGE 23-18-27
HEADLINING 23-86-3
PANEL 23-101-3
CYLINDER AND KEY PACKAGE 23-17-4
PEDAL 14-01-1
CARPET 23-79-3
PLATE 23-20-14
STRIKER 23-08-60
BELT 23-49-1
WEATHERCORD 23-113-2
COVER 23-108-84
CUSHION 23-109-35
BUTTON (SERVICED IN 23-108-84)
CUSHION 23-108-4
CUSHION 23-108-4
BUTTON 23-47-55
BACK 23-108-12
PANEL 23-108-32
ARM REST 23-79-18
CARPET 23-79-33

19a3154

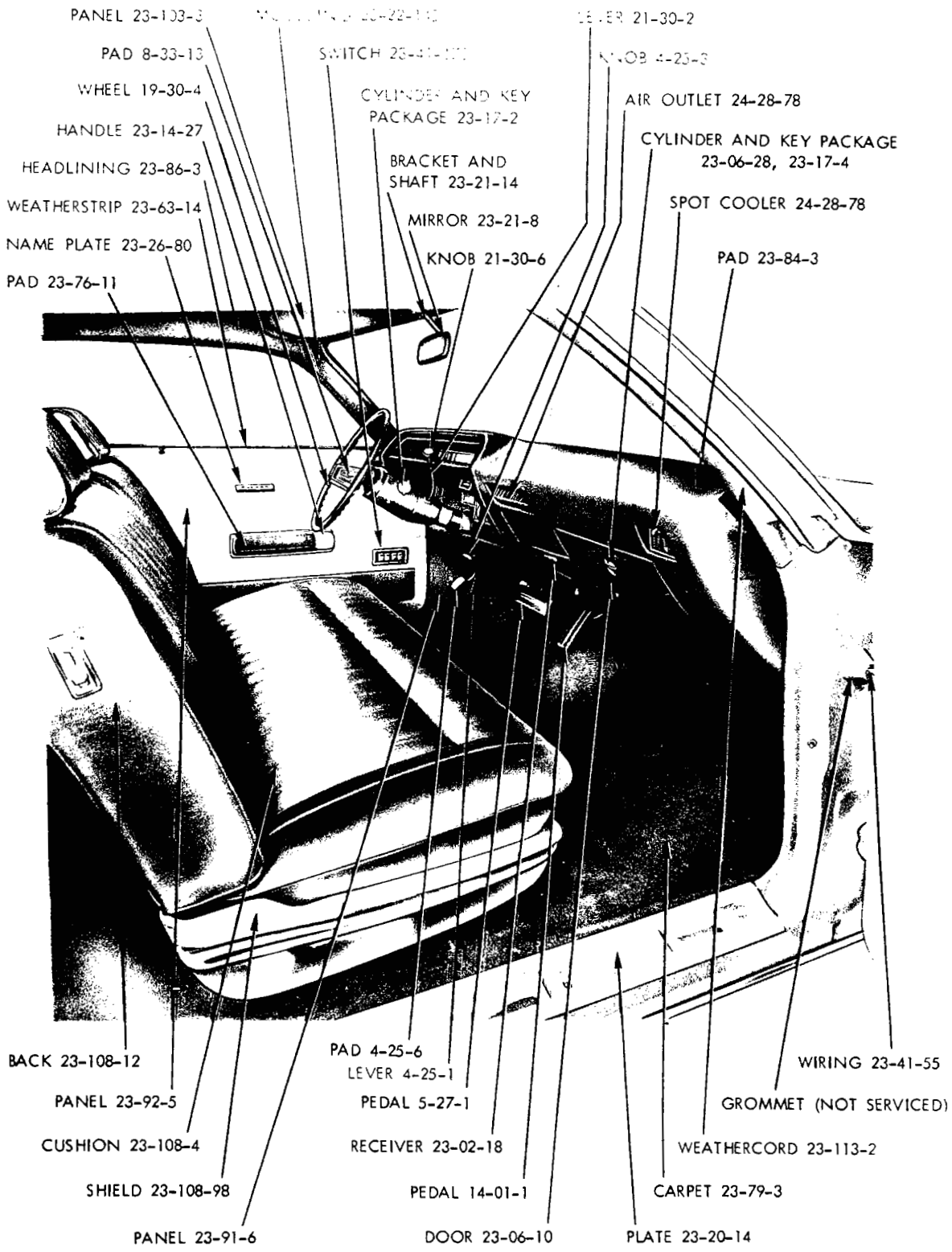

19a2835

1970
FRONT INTERIOR - DODGE POLARA D-L 2 DOOR HARDTOP

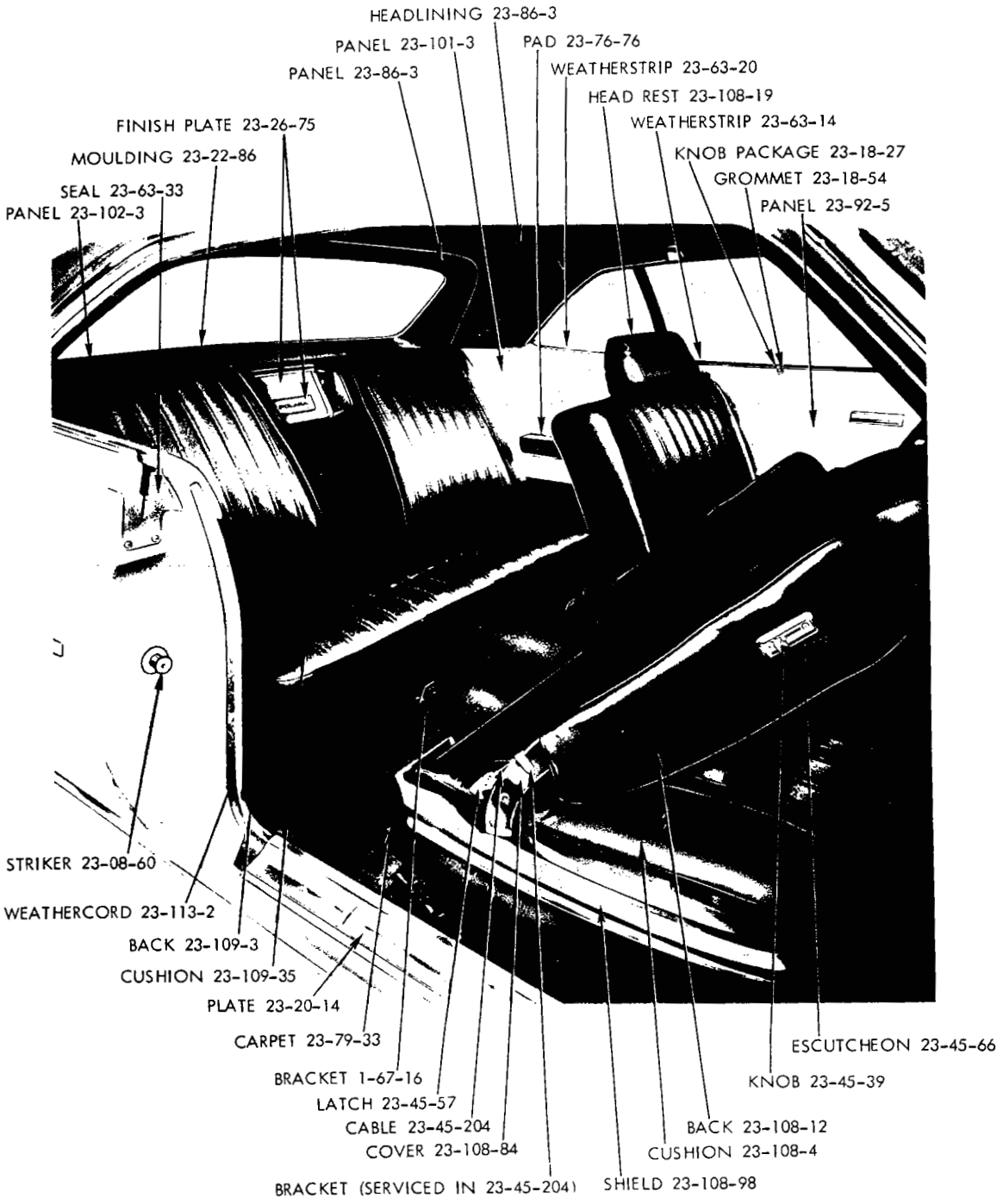

15a2845

1970
REAR INTERIOR - DODGE POLARA D-L 2 DOOR HARDTOP

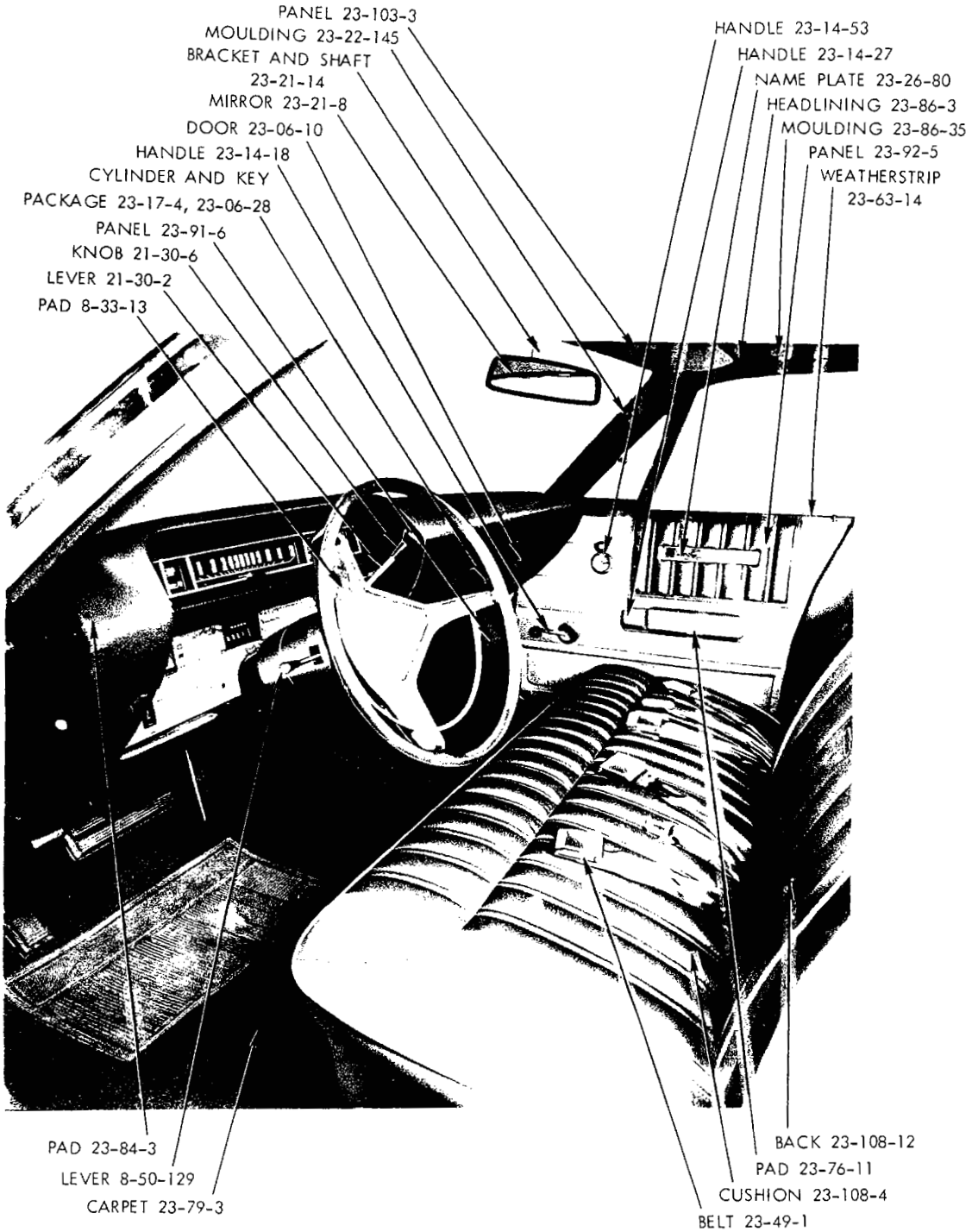

19a3184

1970
FRONT INTERIOR - DODGE POLARA D-L STATION WAGON

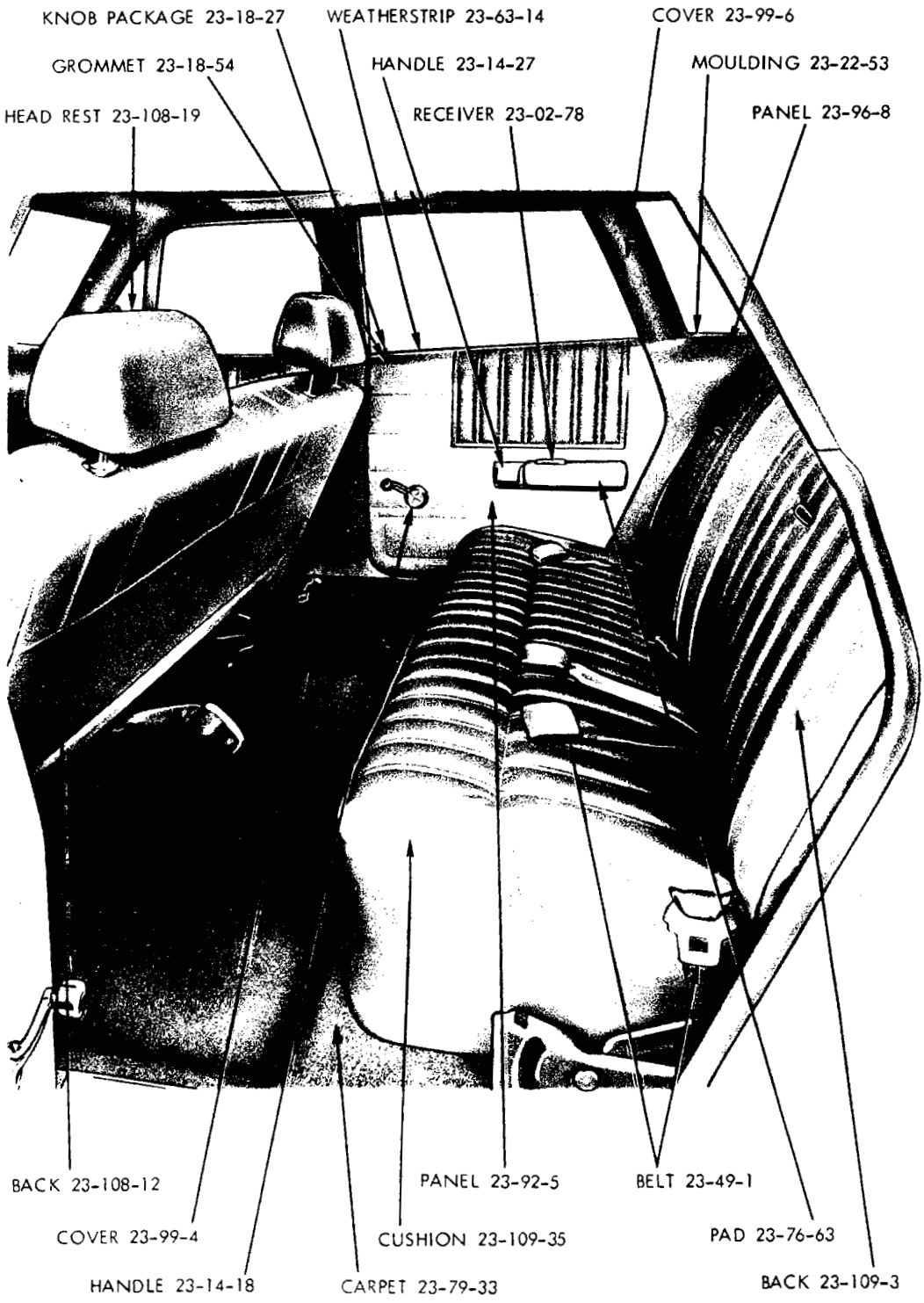

19a3183

1970
REAR INTERIOR - DODGE POLARA D-L STATION WAGON

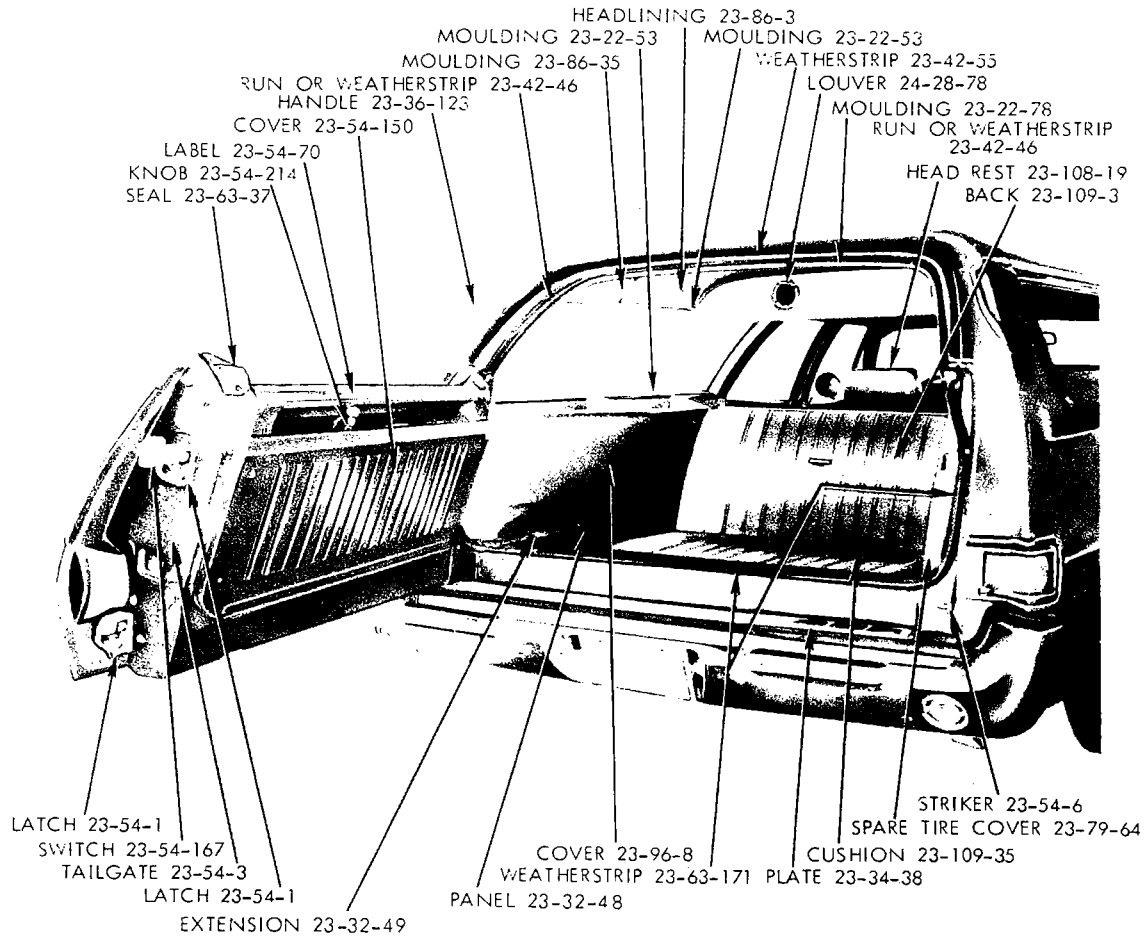

19a2530 B

1970
REAR INTERIOR VIEW - DODGE POLARA WAGON (3 SEATER)



19a2531 B

1970
SIDE INTERIOR VIEW - DODGE POLARA D-L STATION WAGON

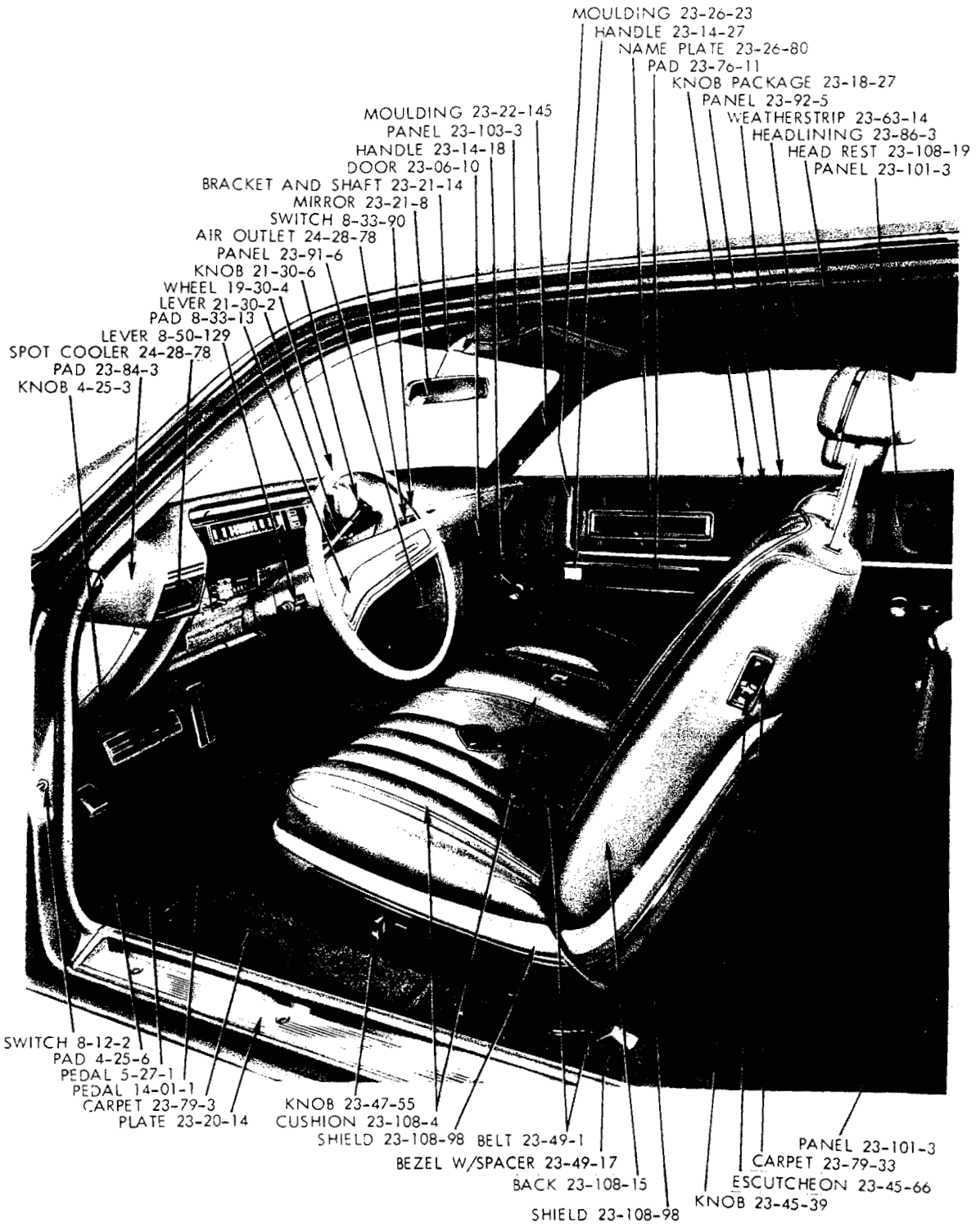

19a3260A

1970
FRONT INTERIOR - DODGE MONACO D-H 2 DOOR HARDTOP



19a5251

1970
REAR INTERIOR - DODGE MONACO D-H 2 DOOR HARDTOP

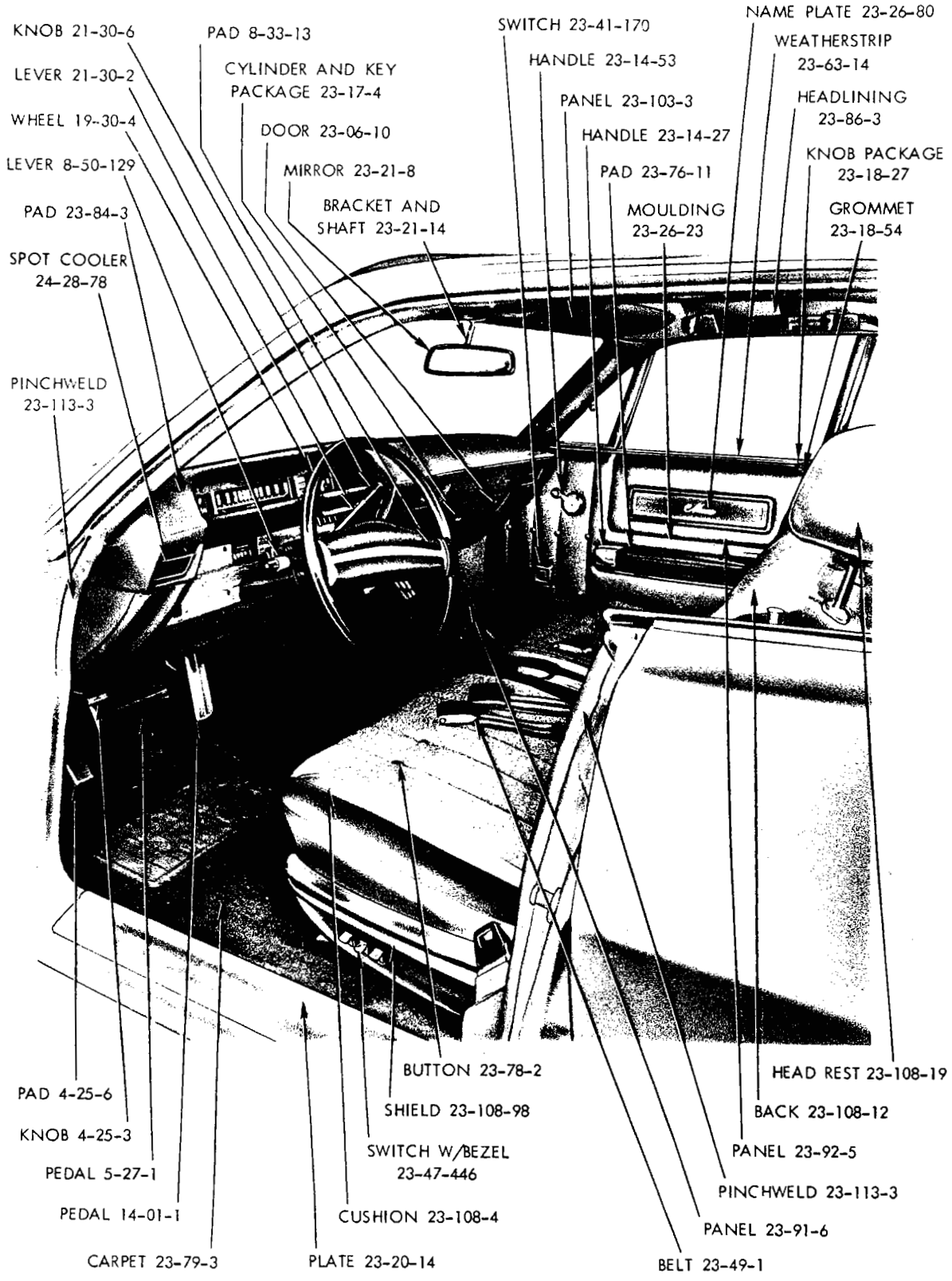

19a3032 **A**

1970
FRONT INTERIOR - DODGE MONACO D-H 4 DOOR HARDTOP

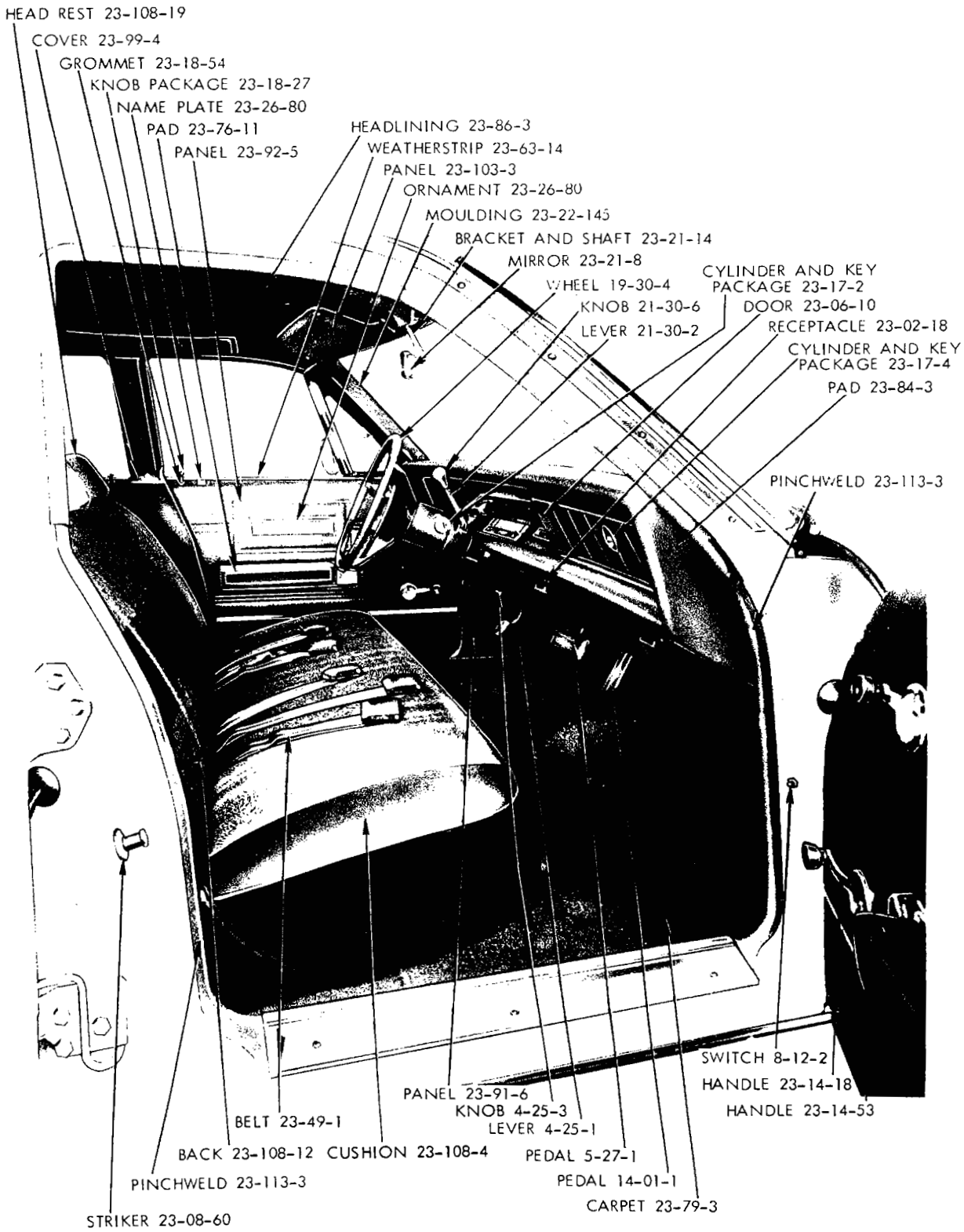

19a3066A

1970
FRONT INTERIOR - CHRYSLER NEWPORT C-E 4 DOOR SEDAN

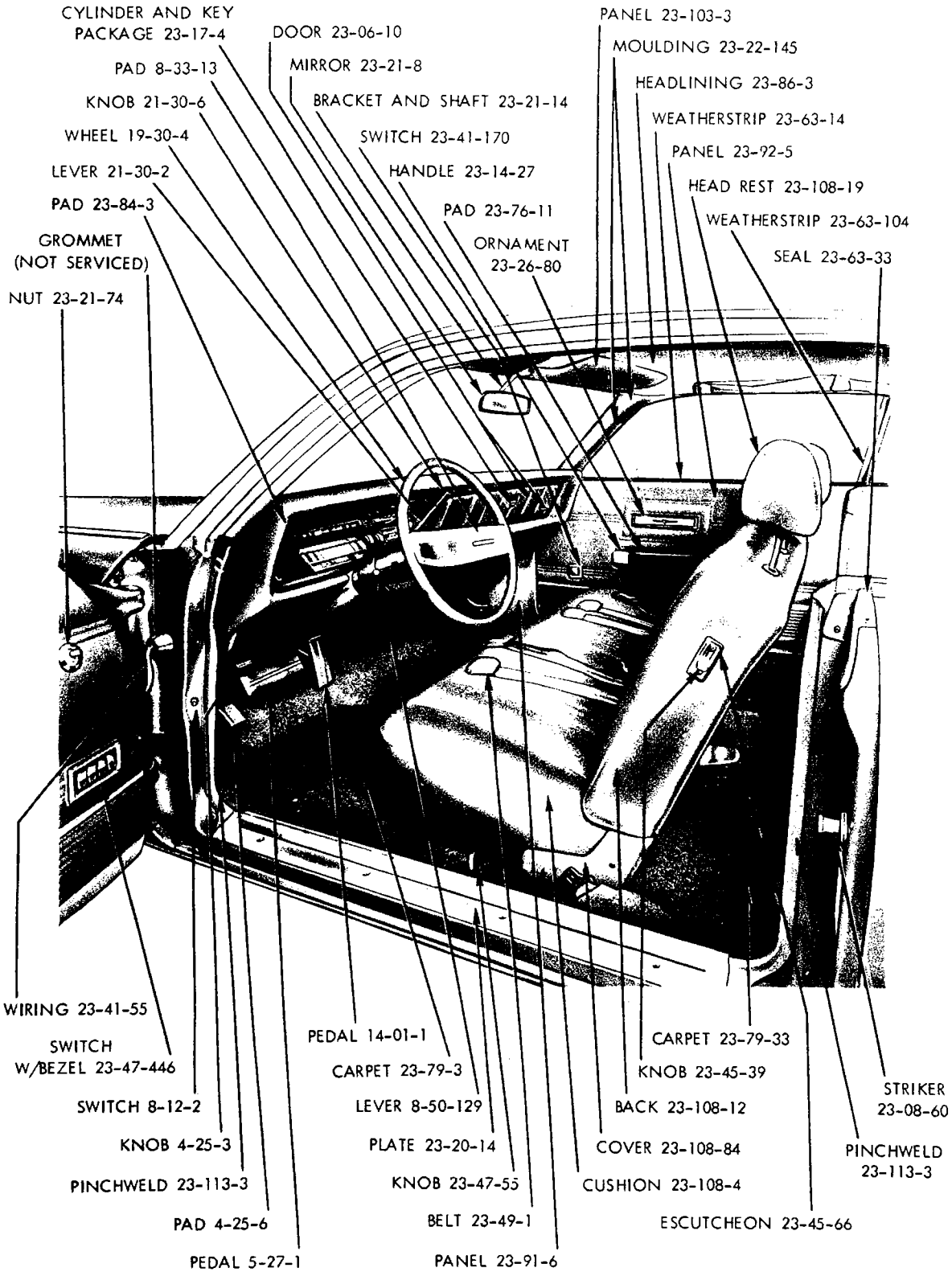

19a3174

1970
FRONT INTERIOR - CHRYSLER NEWPORT C-E 2 DOOR HARDTOP

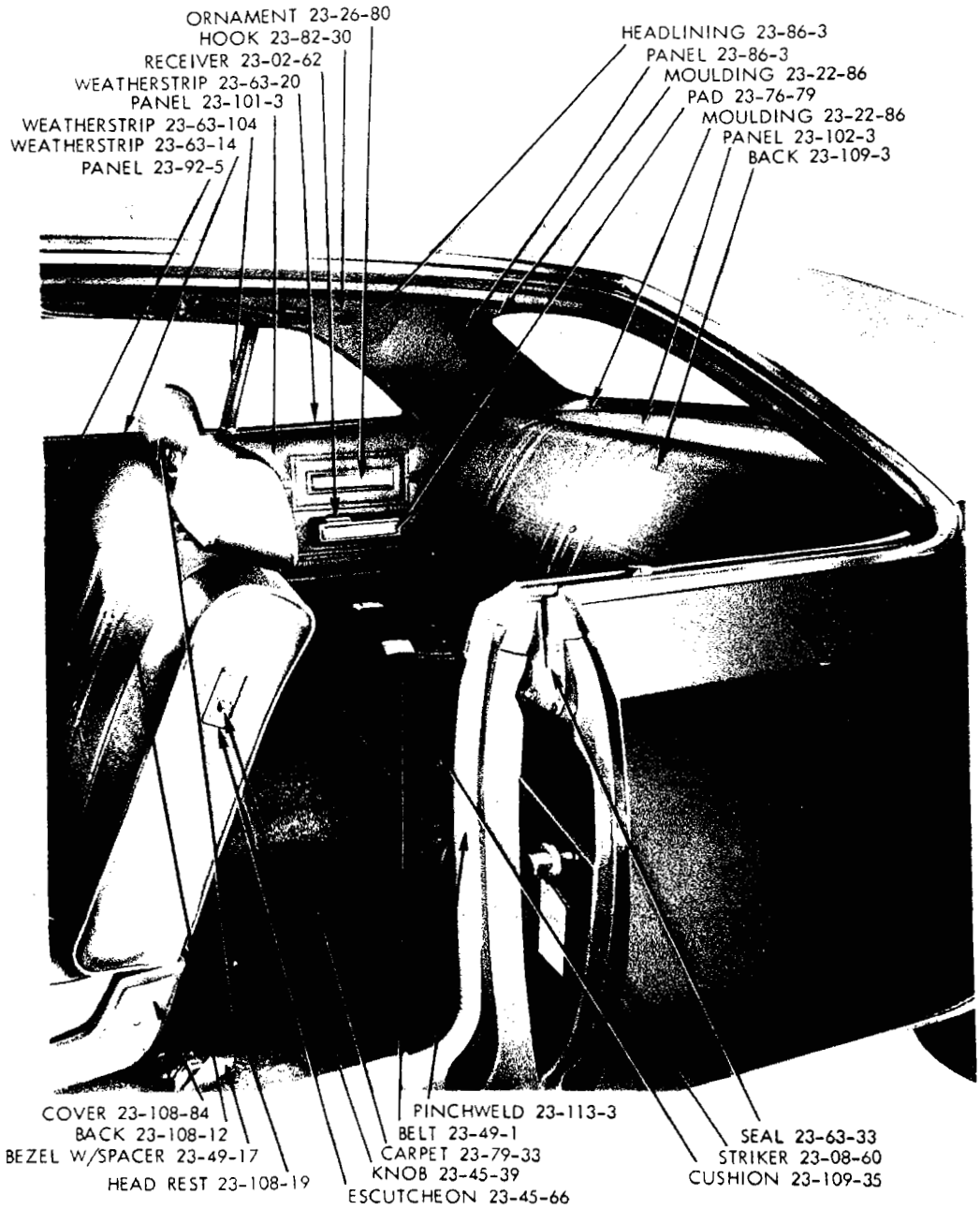

19a3172A

1970
REAR INTERIOR - CHRYSLER NEWPORT C-E 2 DOOR HARDTOP

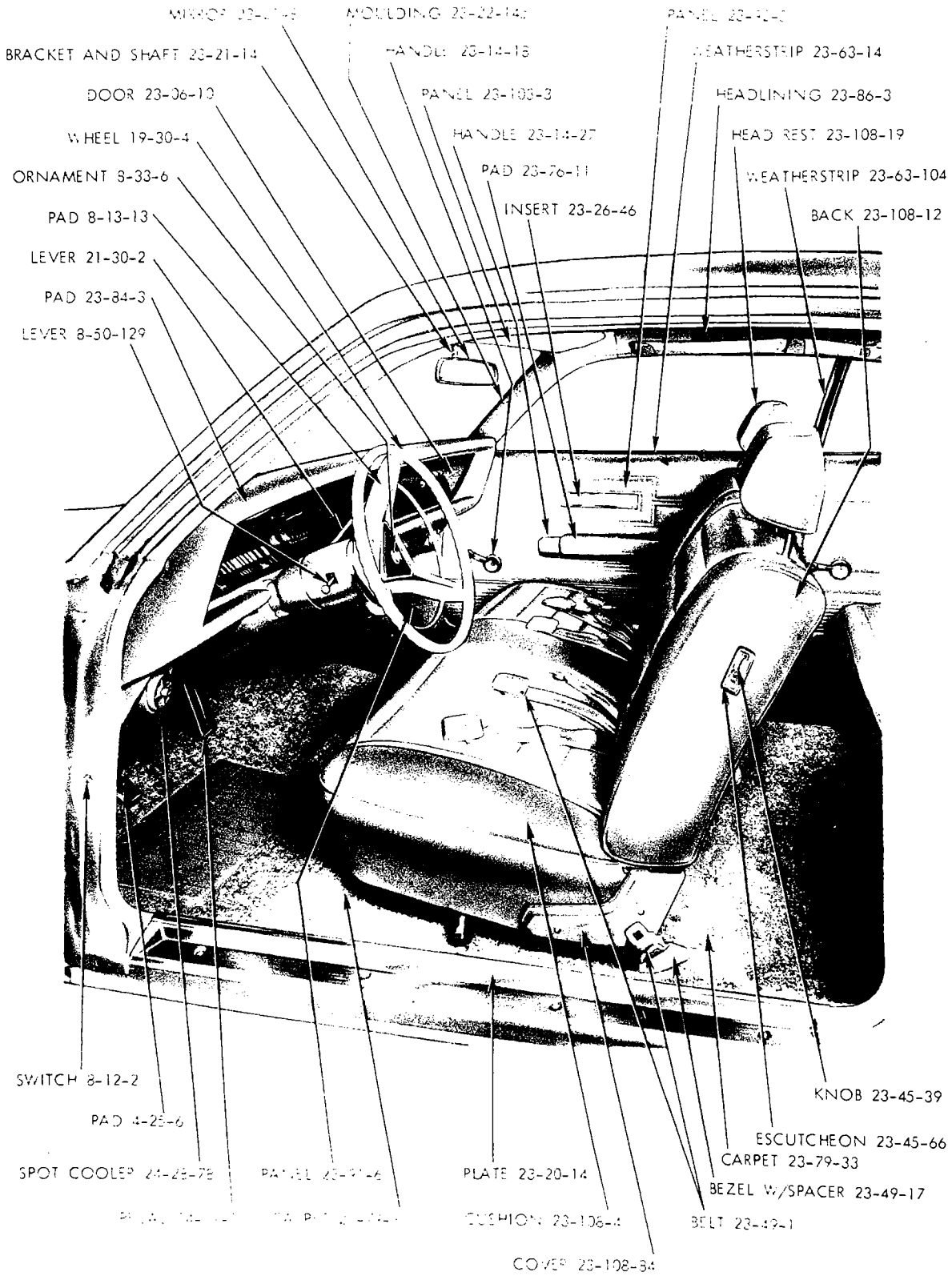

19a3340 **A**

1970
FRONT INTERIOR - CHRYSLER NEWPORT C-E 2 DOOR HARDTOP (SPRING SPECIAL)

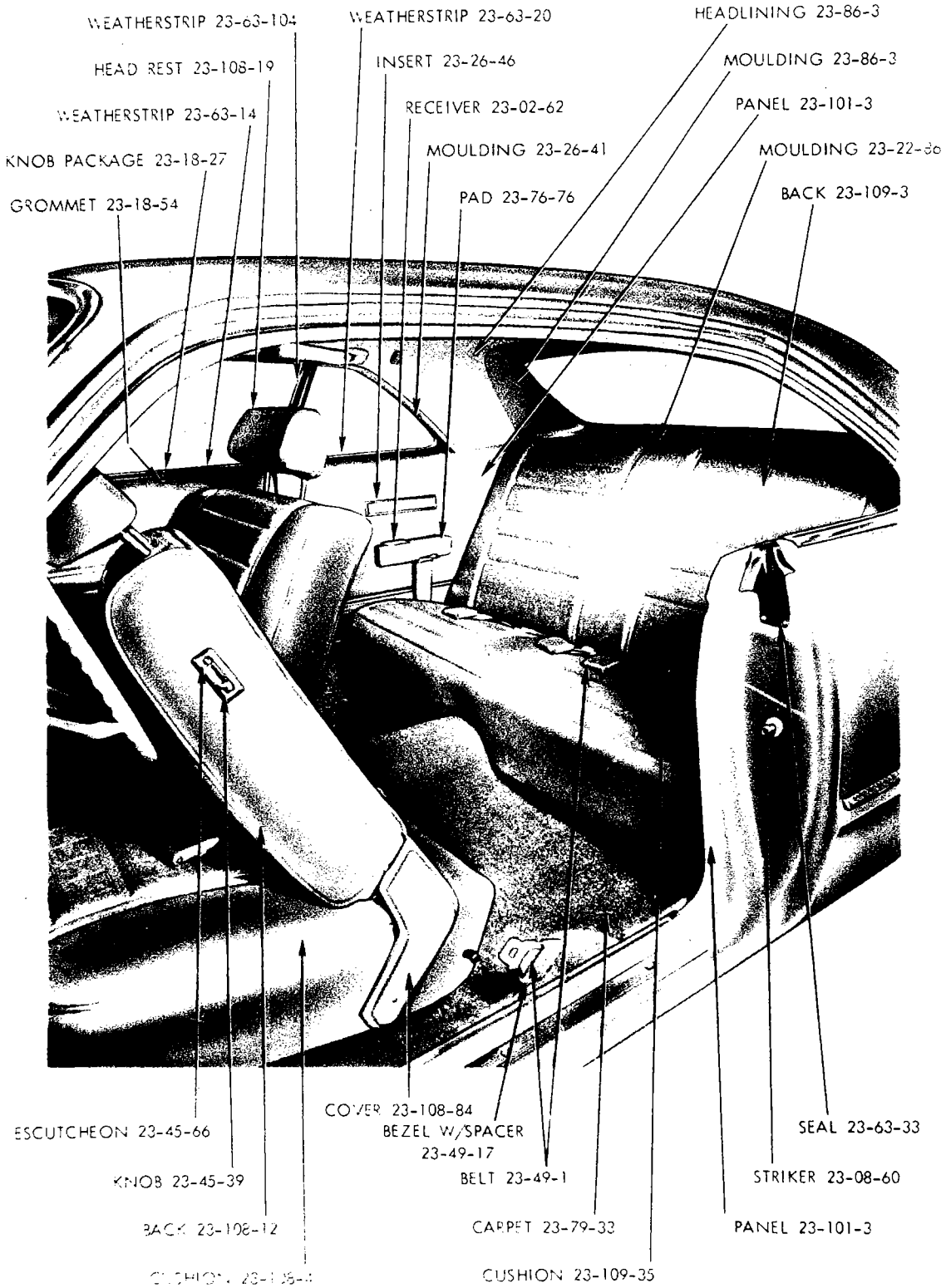

19a3339 **A**

1970
REAR INTERIOR - CHRYSLER NEWPORT C-E 2 DOOR HARDTOP (SPRING SPECIAL)

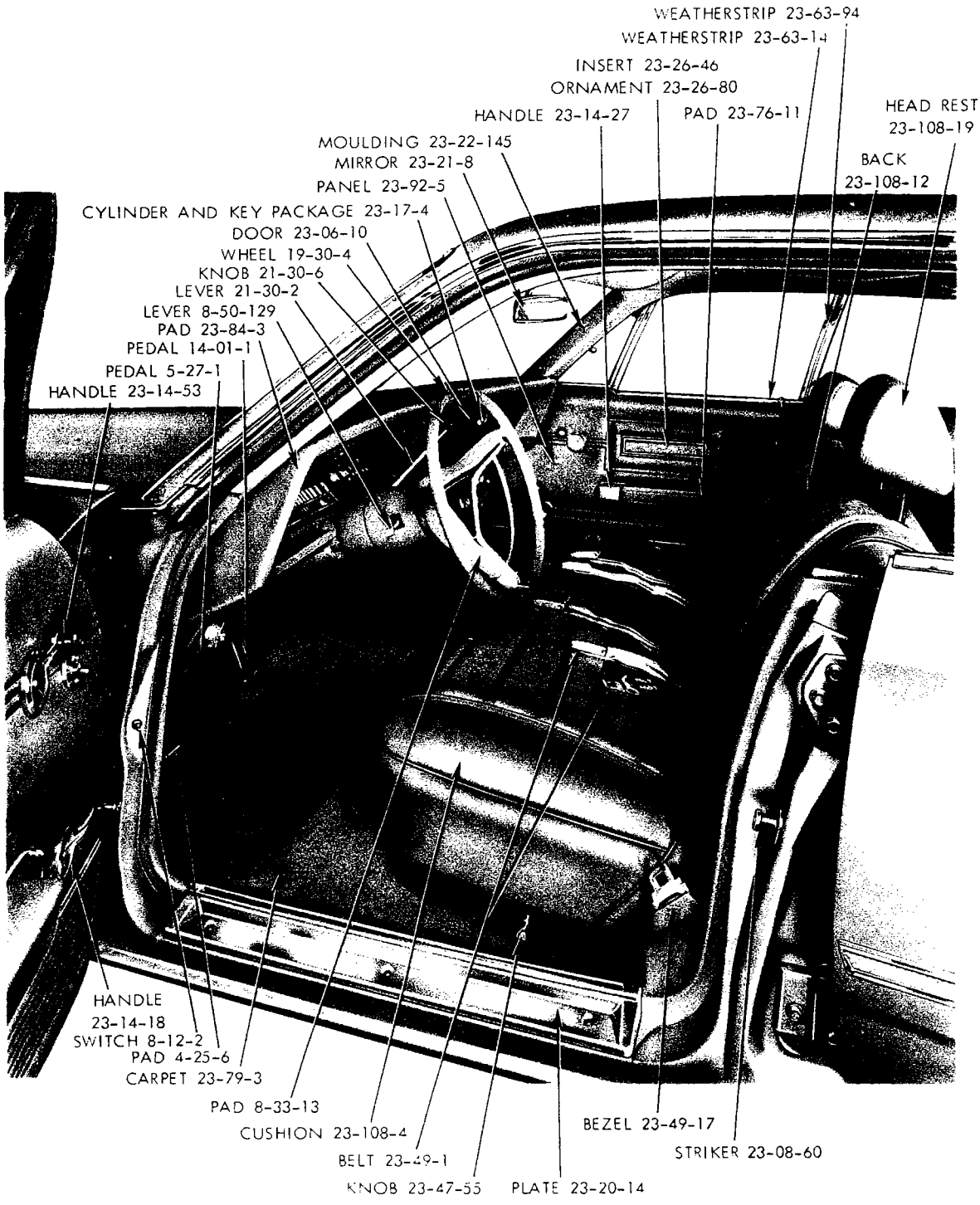

19a3352 A

1970
FRONT INTERIOR - CHRYSLER NEWPORT C-E 4 DOOR HARDTOP (SPRING SPECIAL)

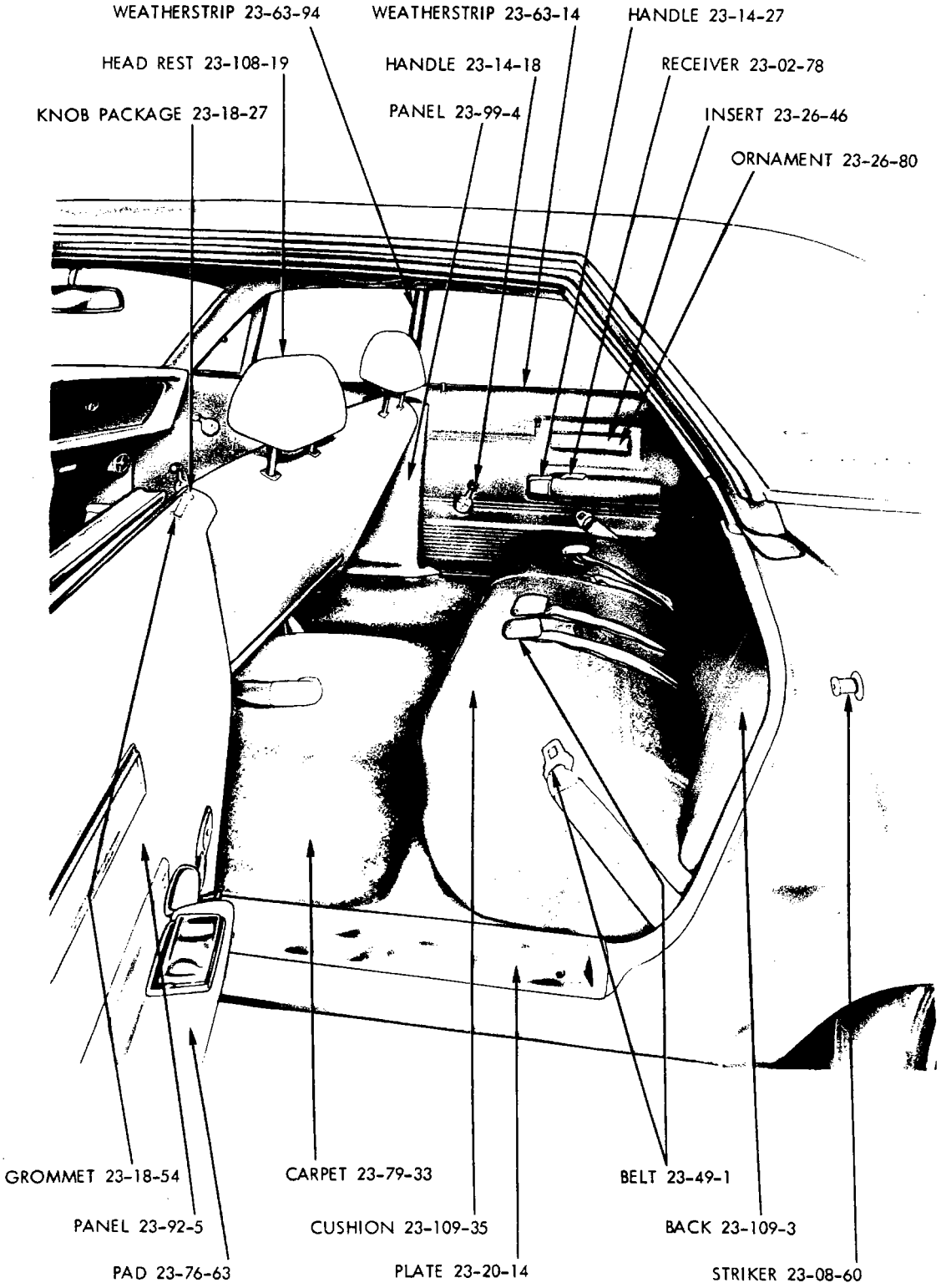

19a335C

1970
REAR INTERIOR - CHRYSLER NEWPORT C-E 4 DOOR HARDTOP (SPRING SPECIAL)

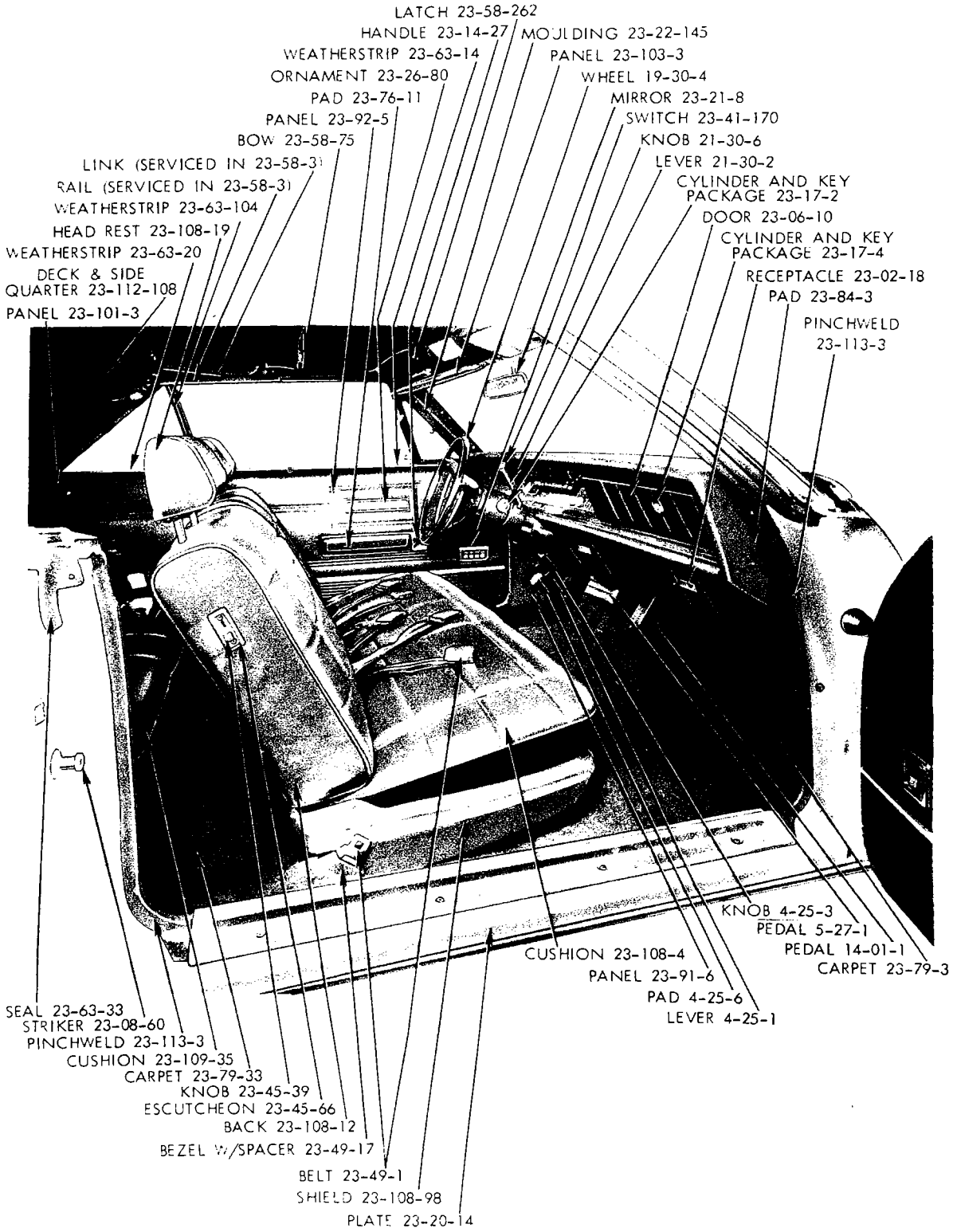

19a3078B

1970
FRONT INTERIOR - CHRYSLER NEWPORT C-E CONVERTIBLE COUPE

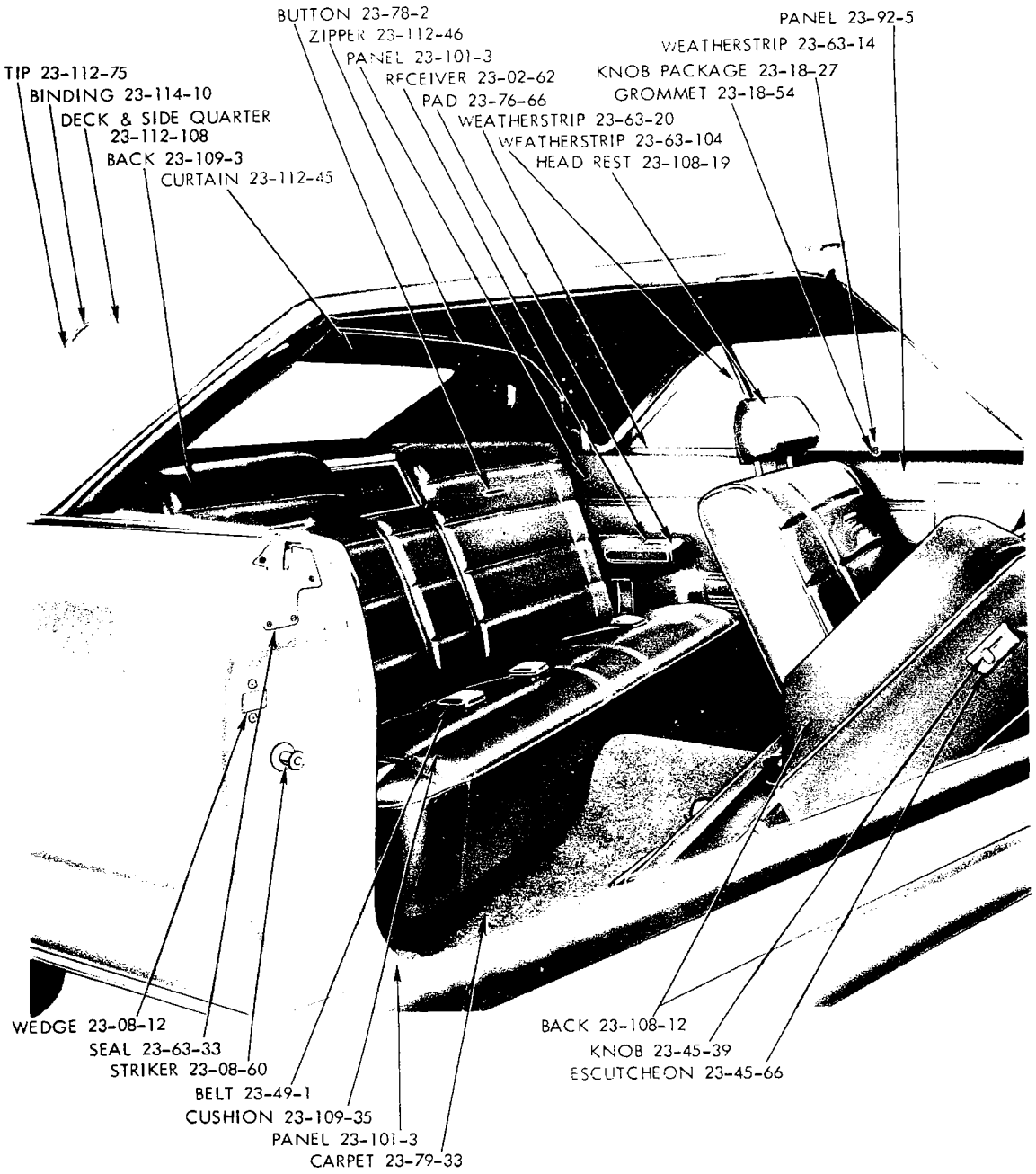
BUTTON 23-78-2
ZIPPER 23-112-46
PANEL 23-101-3
RECEIVER 23-02-62
PAD 23-76-66
WEATHERSTRIP 23-63-20
WEATHERSTRIP 23-63-104
HEAD REST 23-108-19
PANEL 23-92-5
WEATHERSTRIP 23-63-14
KNOB PACKAGE 23-18-27
GROMMET 23-18-54
TIP 23-112-75
BINDING 23-114-10
DECK & SIDE QUARTER 23-112-108
BACK 23-109-3
CURTAIN 23-112-45
WEDGE 23-08-12
SEAL 23-63-33
STRIKER 23-08-60
BELT 23-49-1
CUSHION 23-109-35
PANEL 23-101-3
CARPET 23-79-33
BACK 23-108-12
KNOB 23-45-39
ESCUTCHEON 23-45-66

19a3076

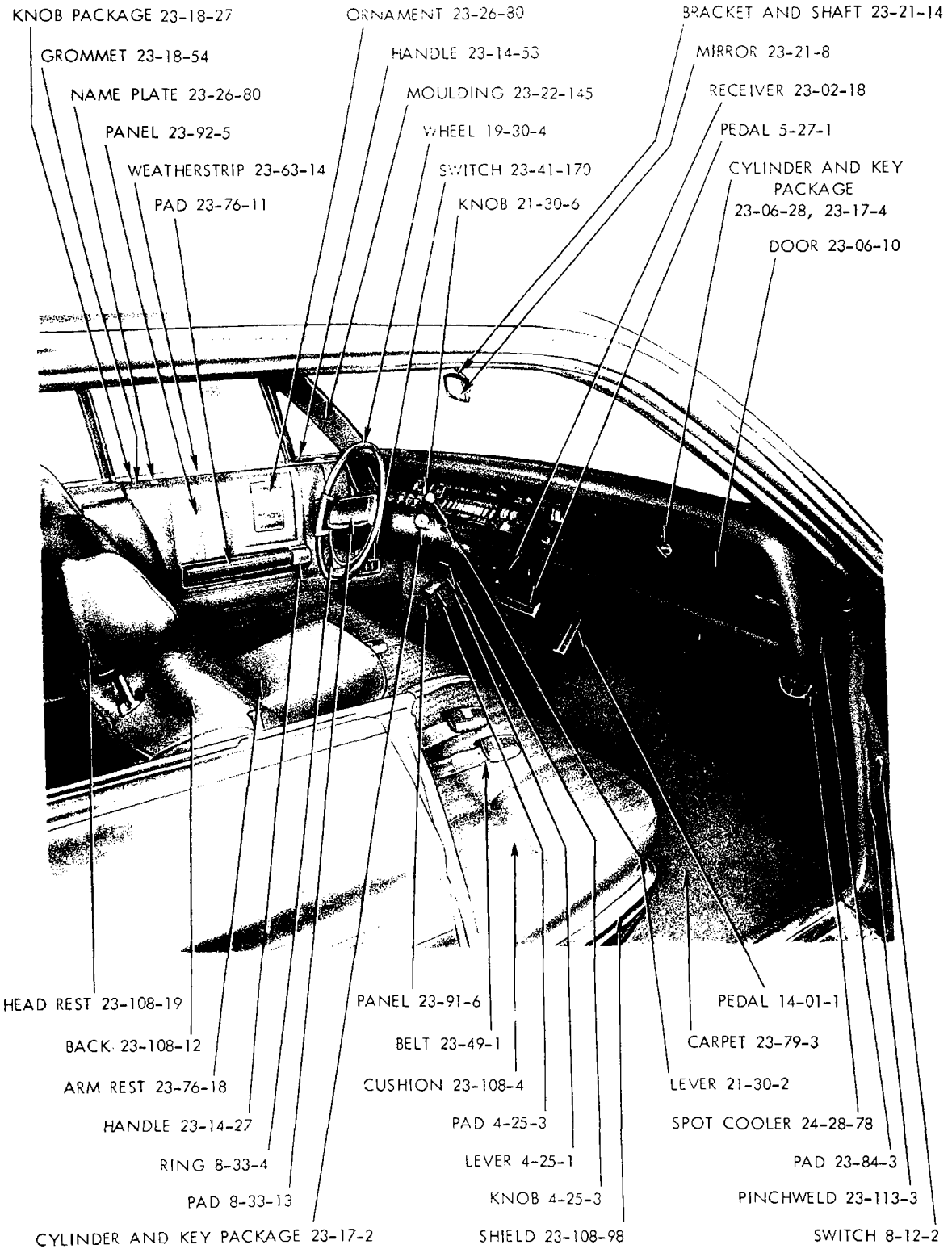

19a3035

1970
FRONT INTERIOR - CHRYSLER NEWPORT CUSTOM C-L 4 DOOR HARDTOP

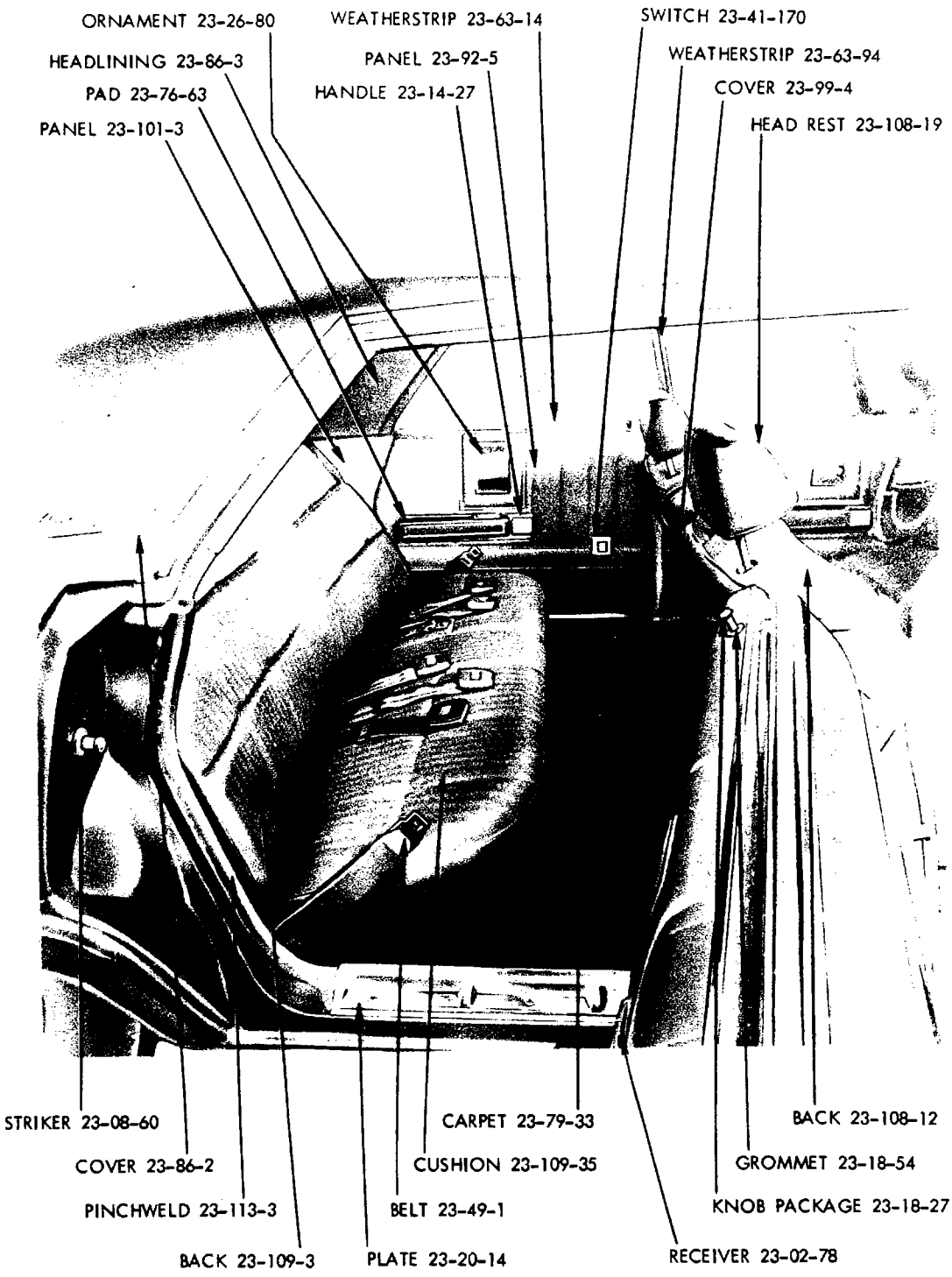

19a3020

1970
REAR INTERIOR - CHRYSLER NEWPORT CUSTOM C-L 4 DOOR HARDTOP

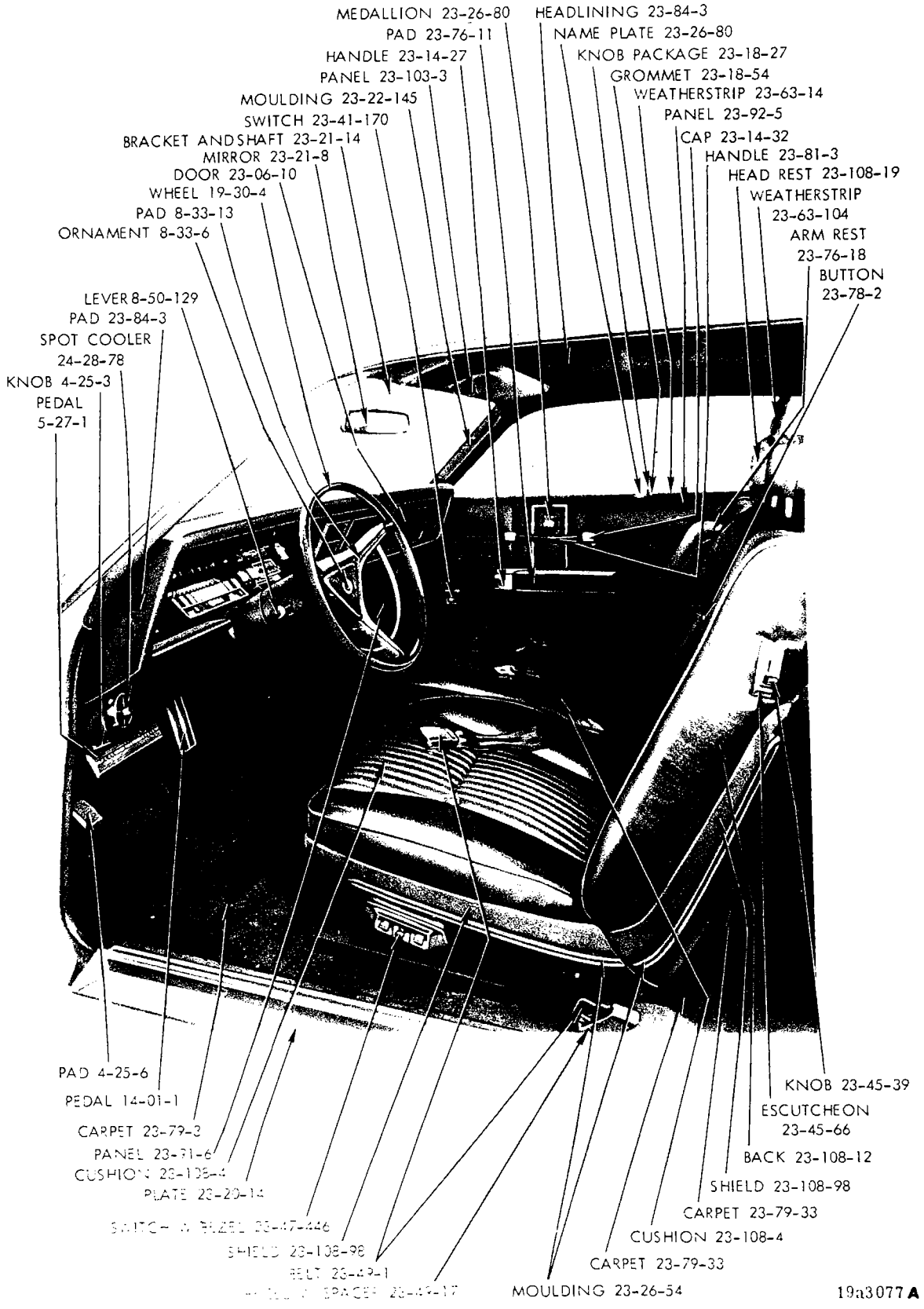

1970
FRONT INTERIOR - CHRYSLER 300 C-M 2 DOOR HARDTOP

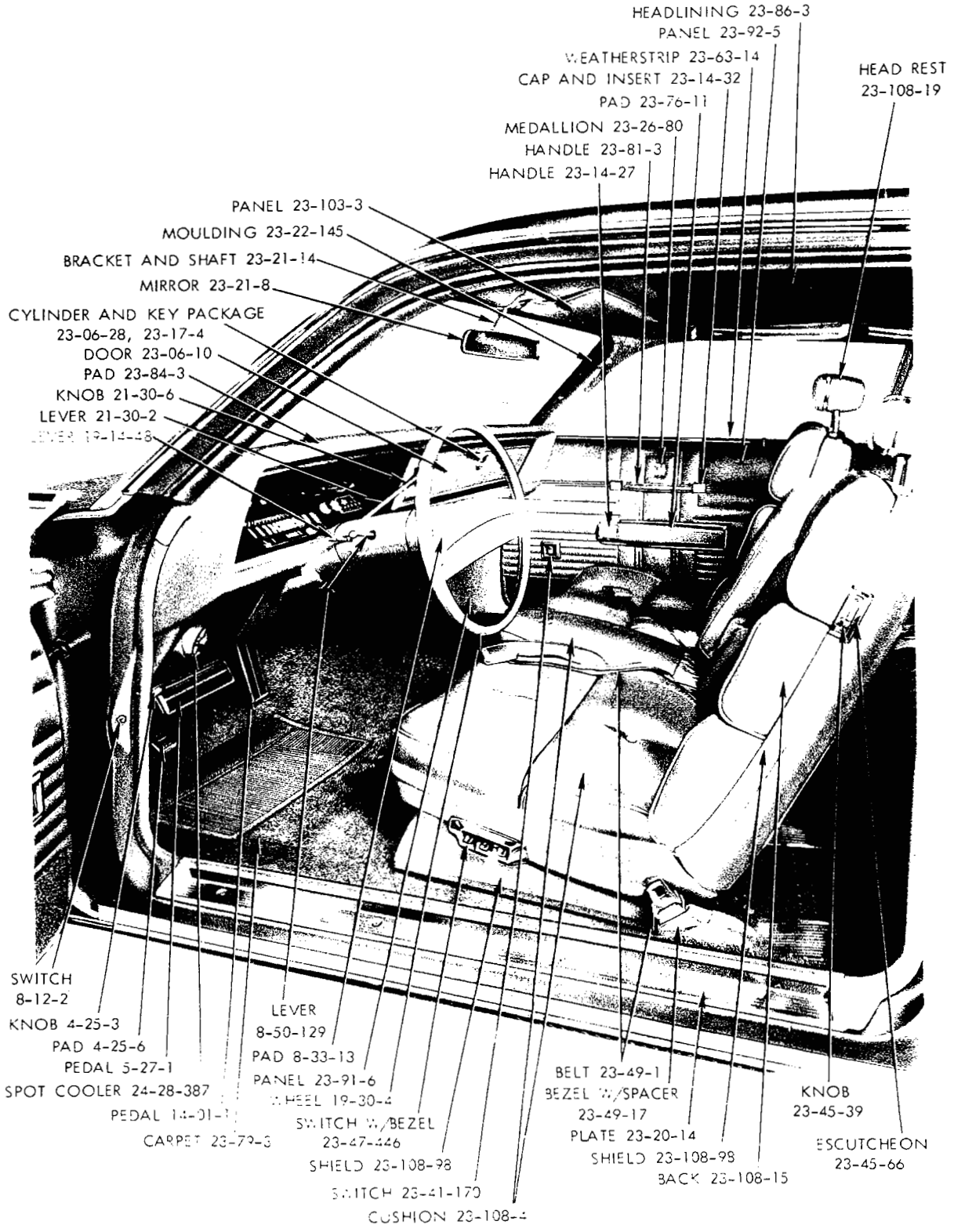

19a3353 **A**

1970
FRONT INTERIOR - CHRYSLER 300H C-M 2 DOOR HARDTOP

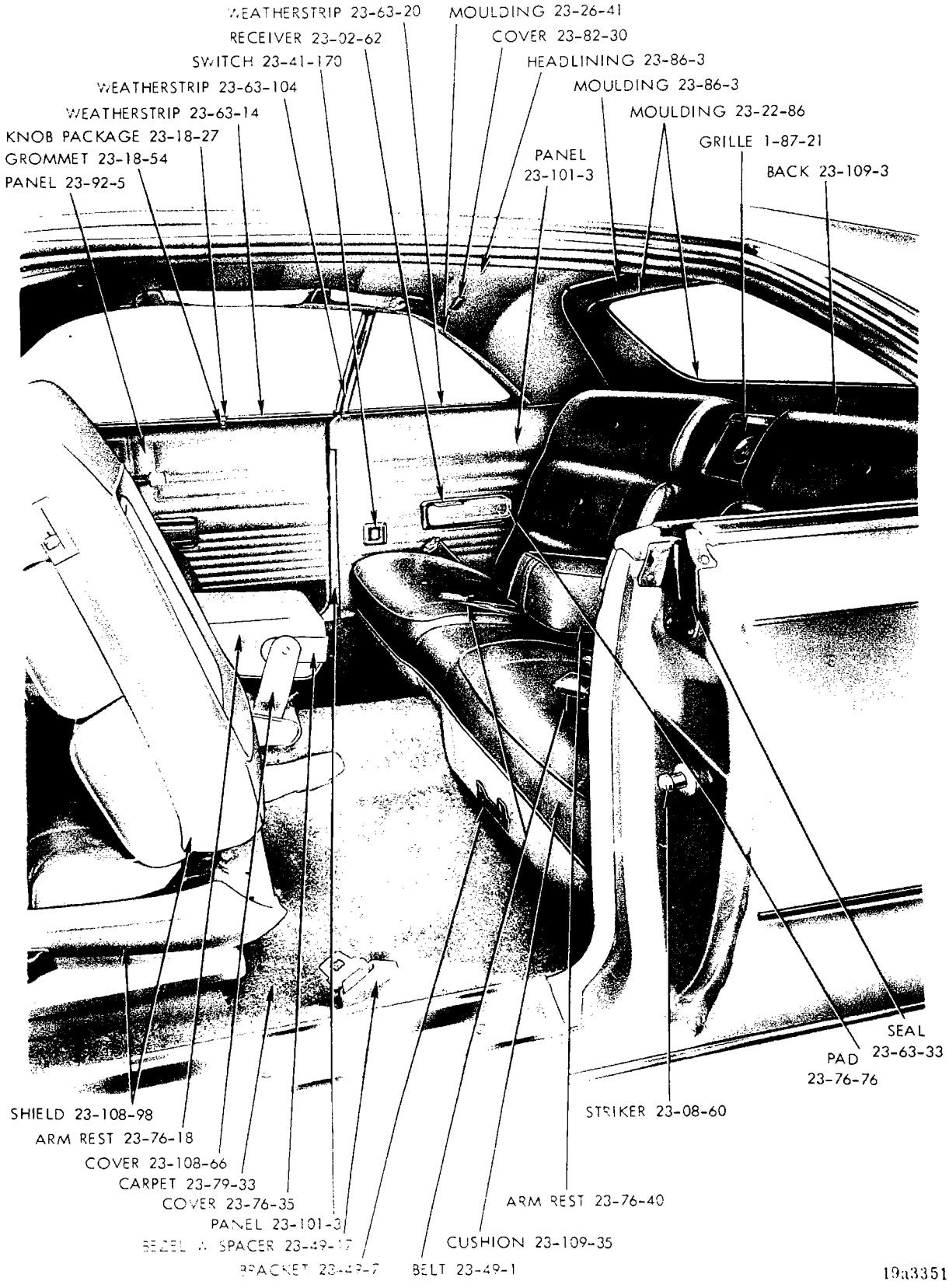

1970
REAR INTERIOR - CHRYSLER 300H C-M 2 DOOR HARDTOP

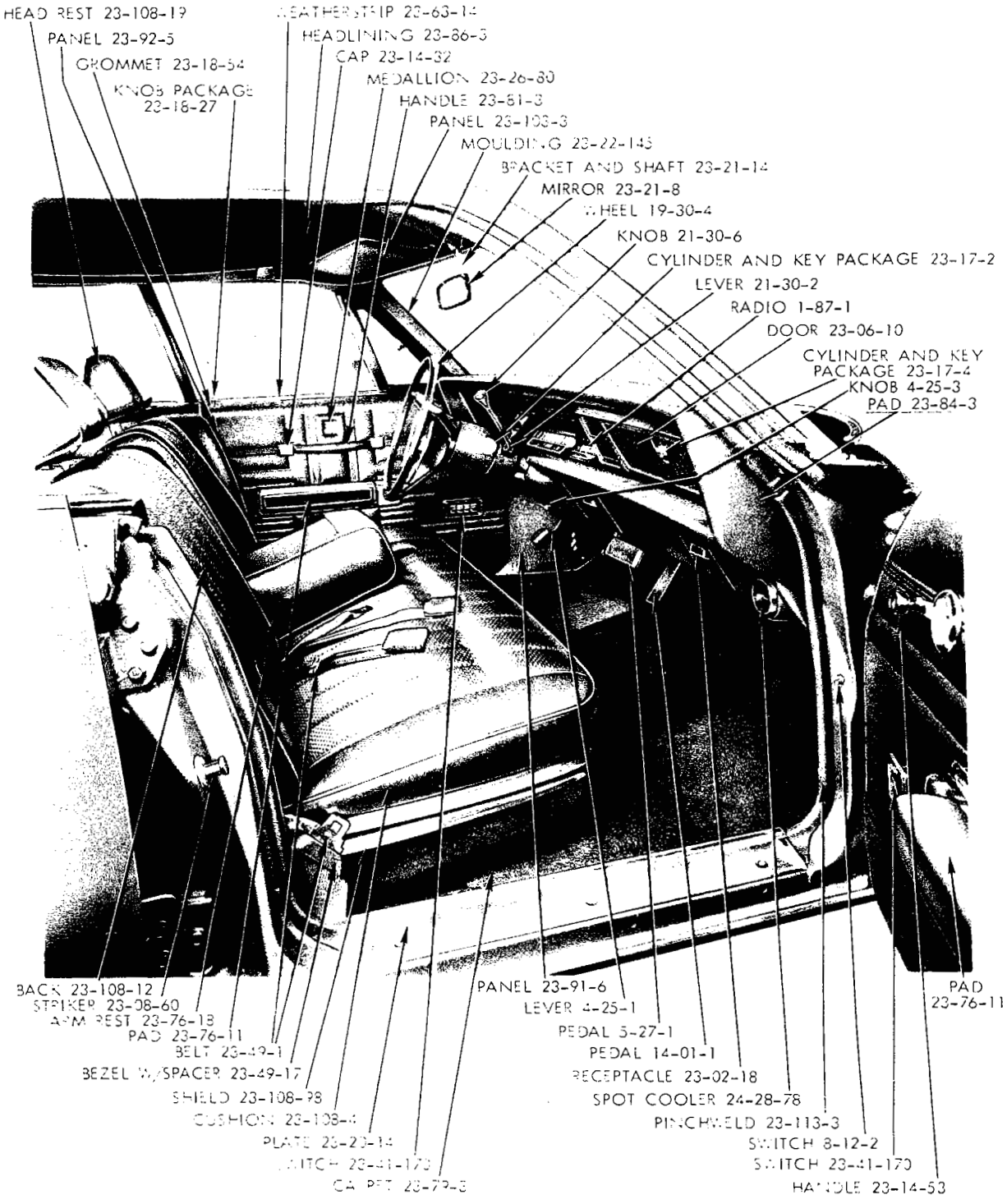

19a3067 **A**

1970
FRONT INTERIOR - CHRYSLER 300 C-M 4 DOOR HARDTOP

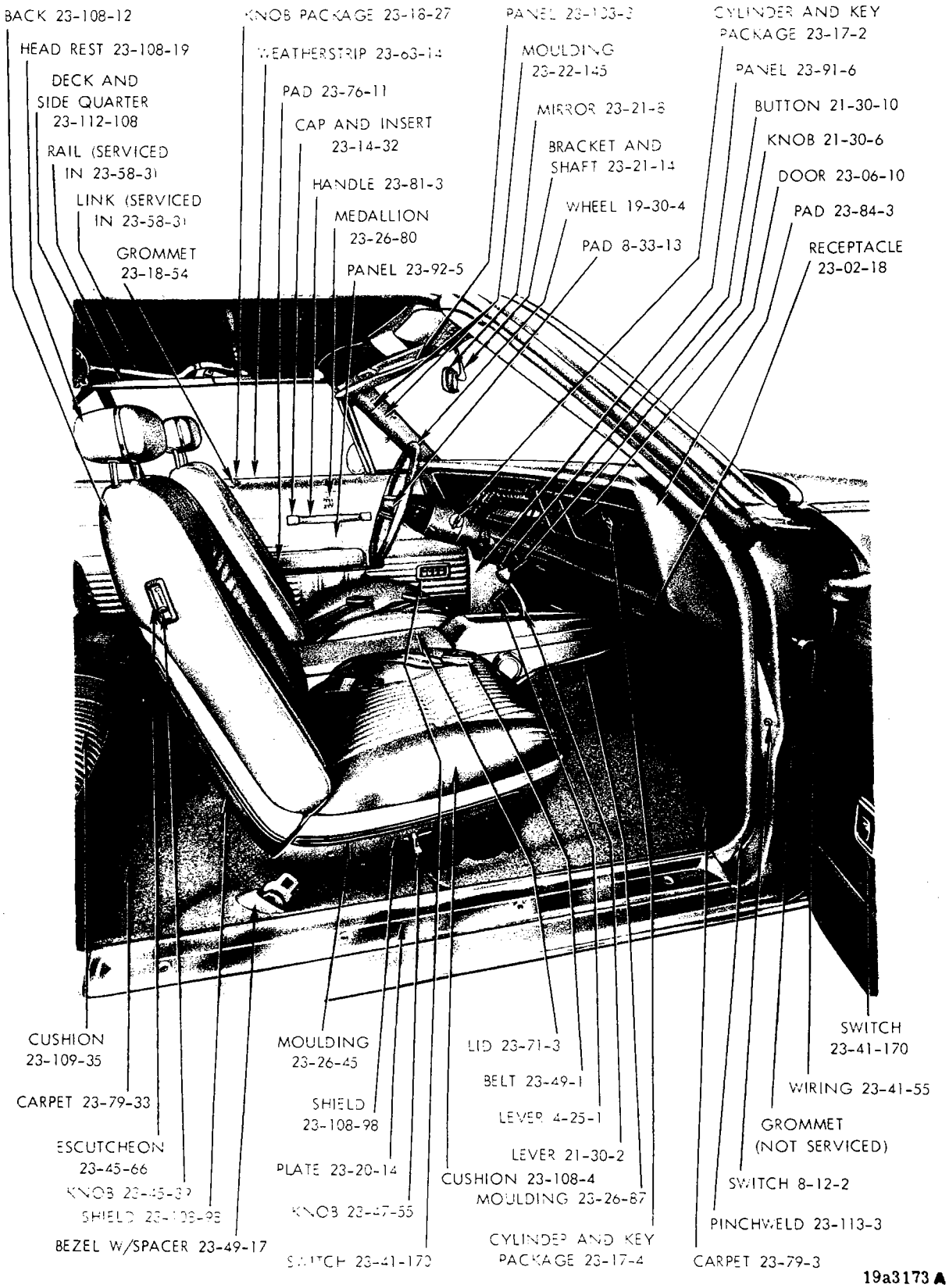

1970
FRONT INTERIOR - CHRYSLER 300 C-M CONVERTIBLE COUPE

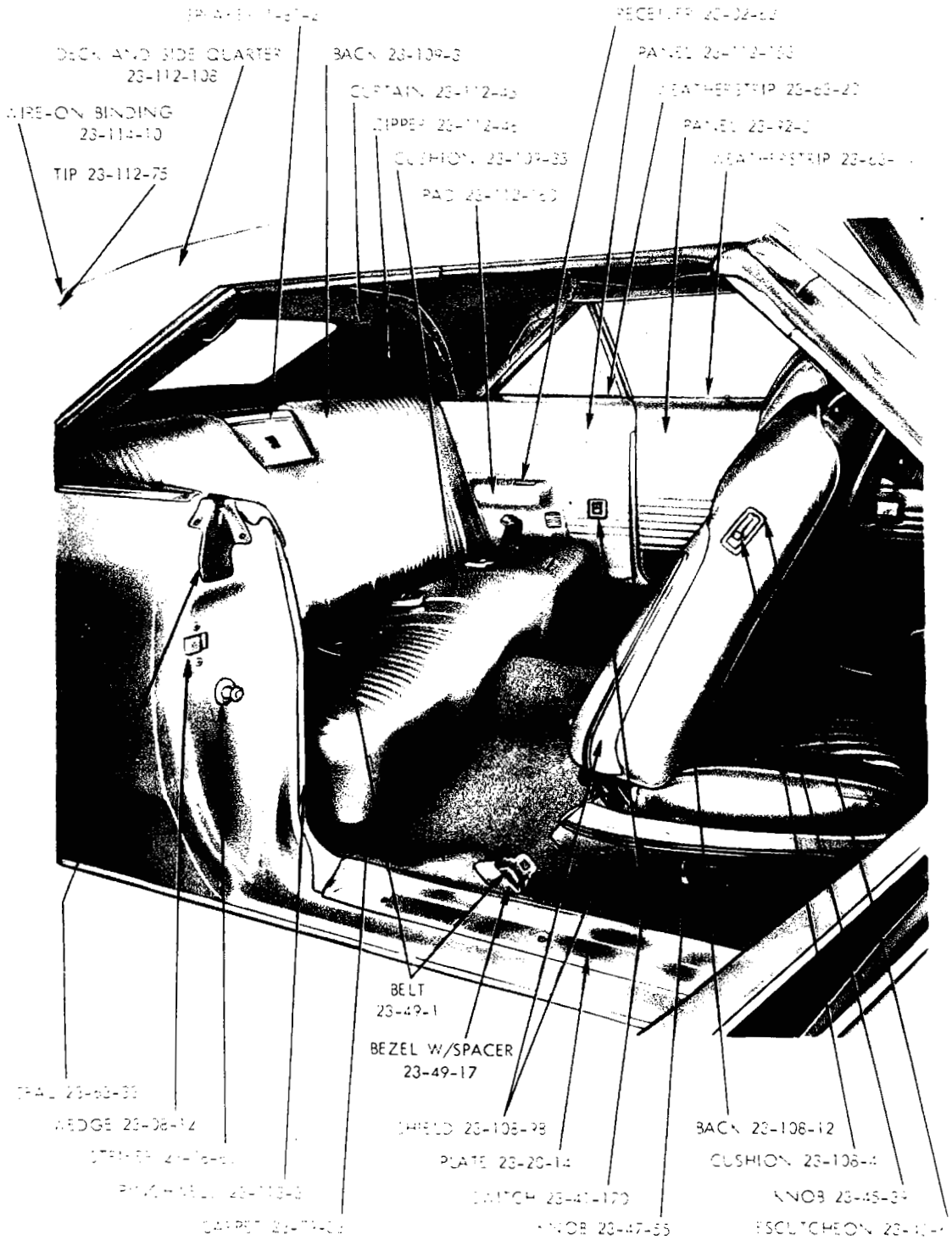

19a310-A

1970
REAR INTERIOR - CHRYSLER 300 C-M CONVERTIBLE COUPE

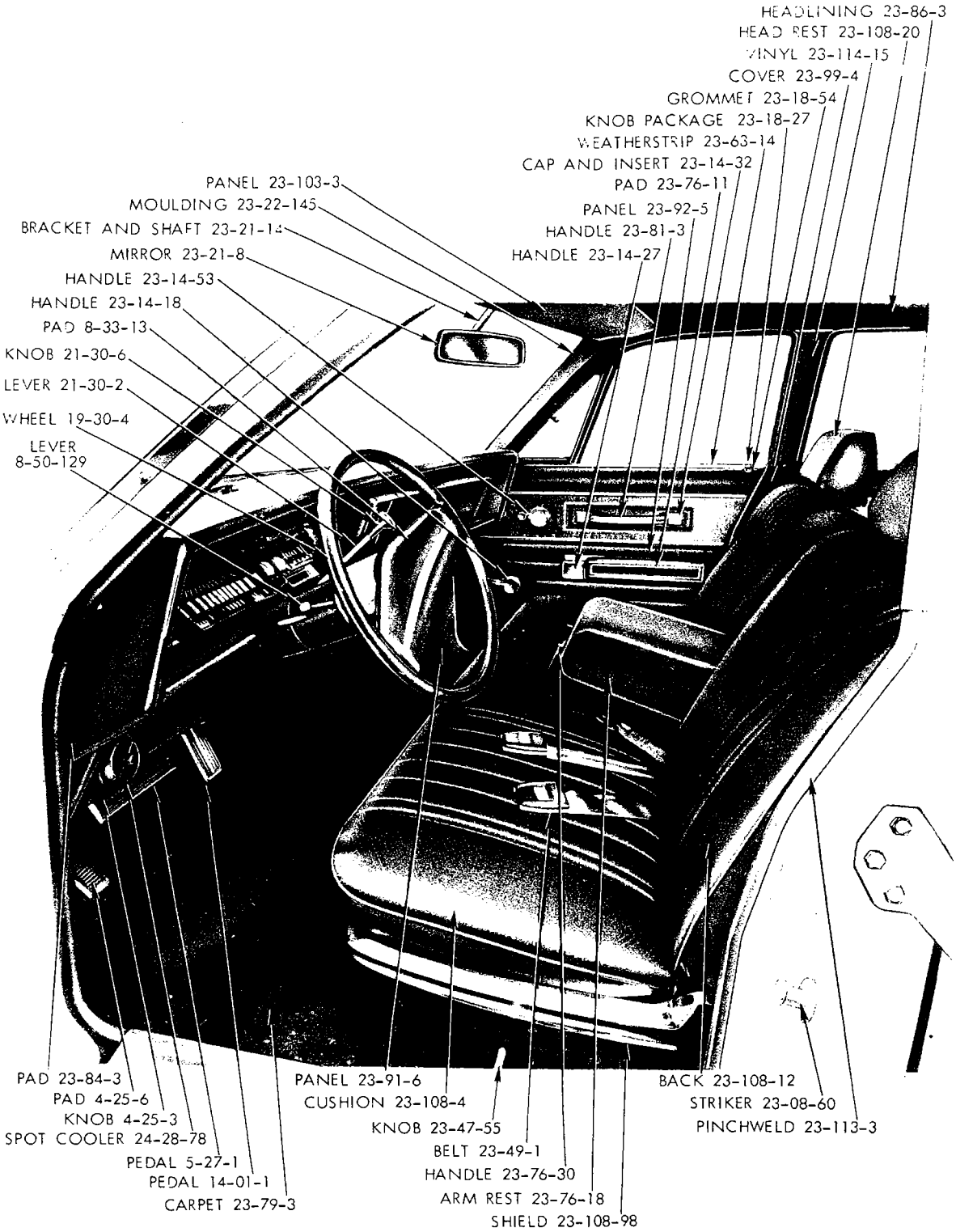

19a3106

1970
FRONT INTERIOR - CHRYSLER NEW YORKER C-H 4 DOOR SEDAN

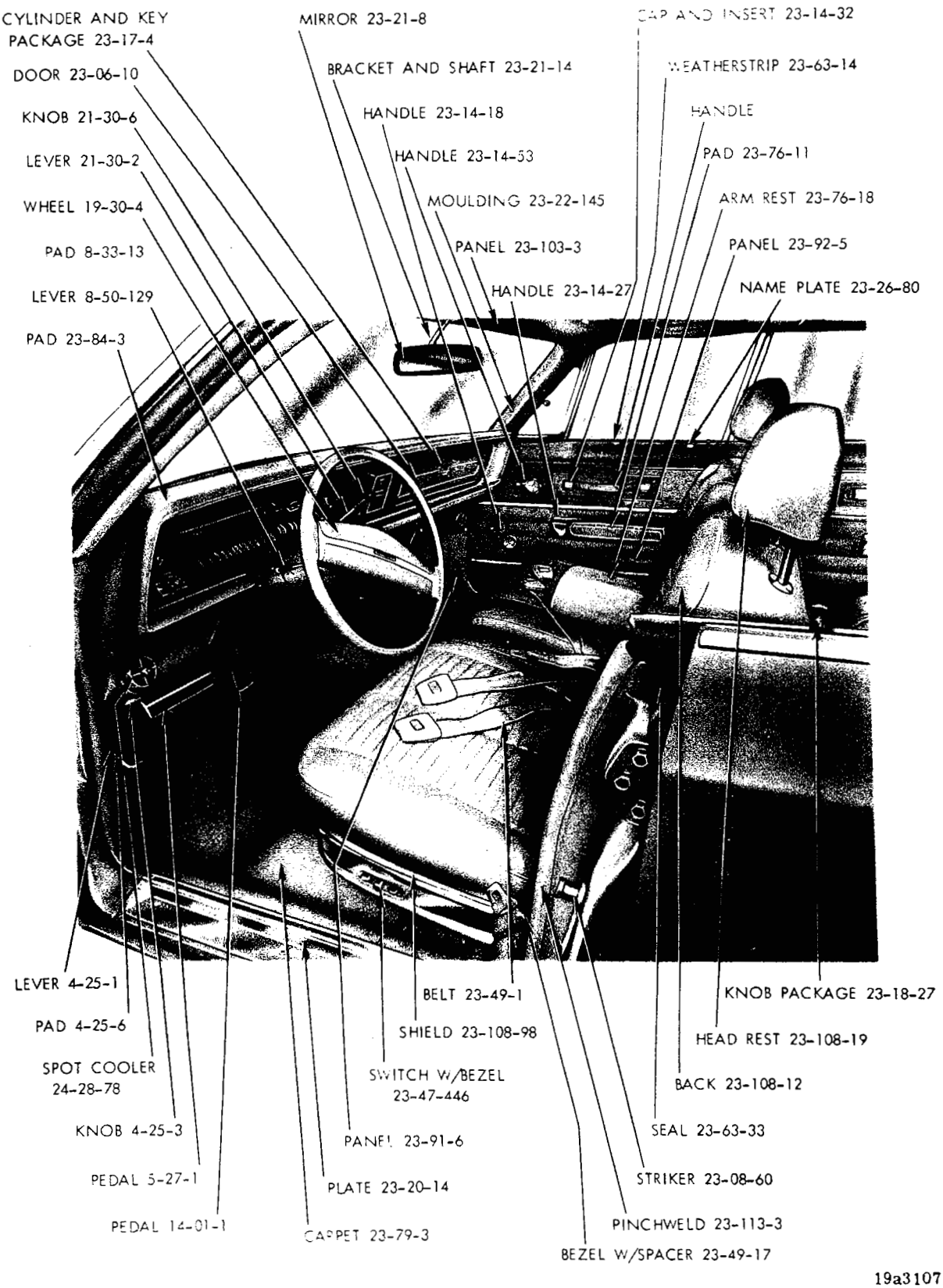

19a3107▲

FRONT INTERIOR - CHRYSLER NEW YORKER C-H 4 DOOR HARDTOP

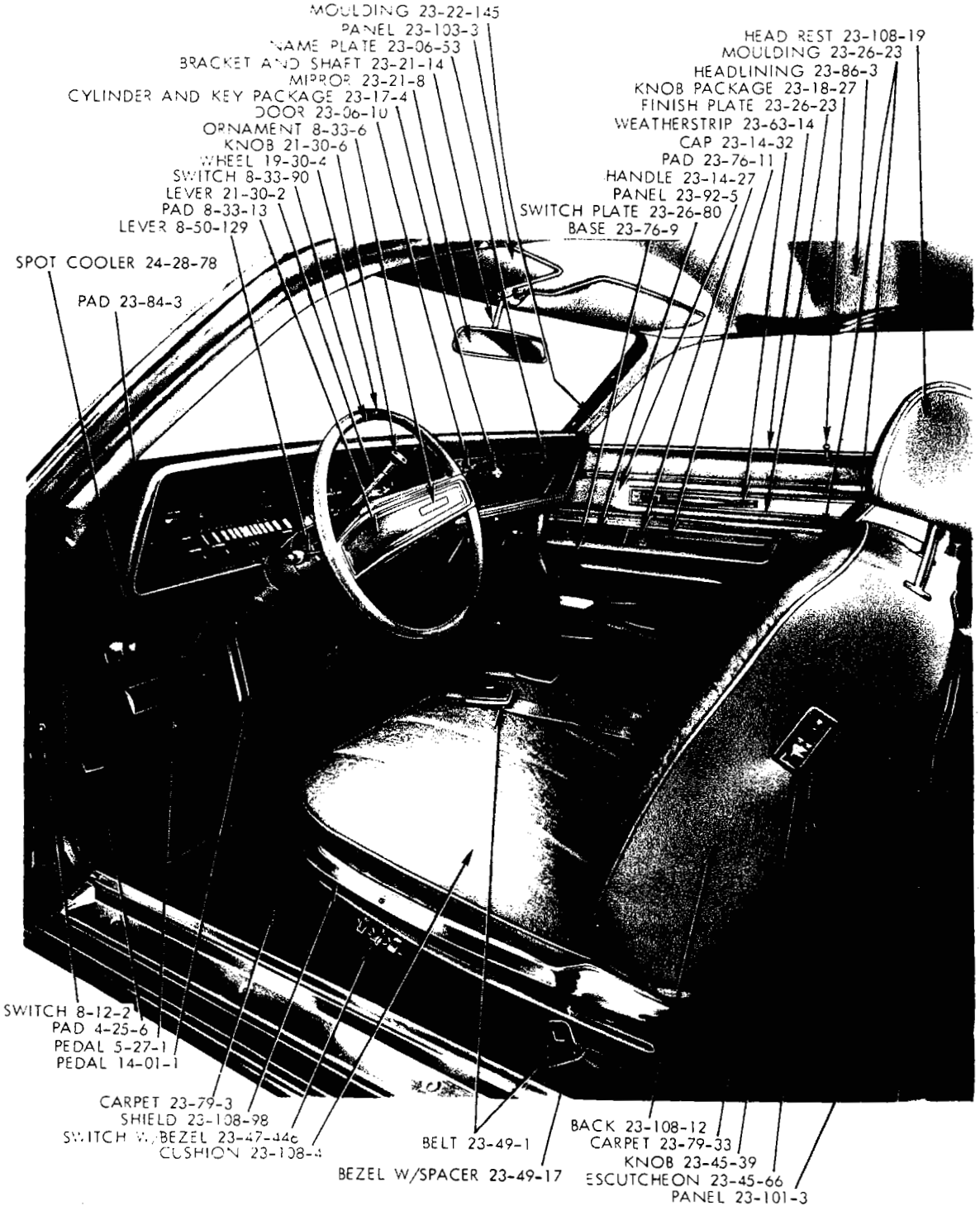

19a3259A

1970
FRONT INTERIOR - IMPERIAL CROWN Y-L 2 DOOR HARDTOP

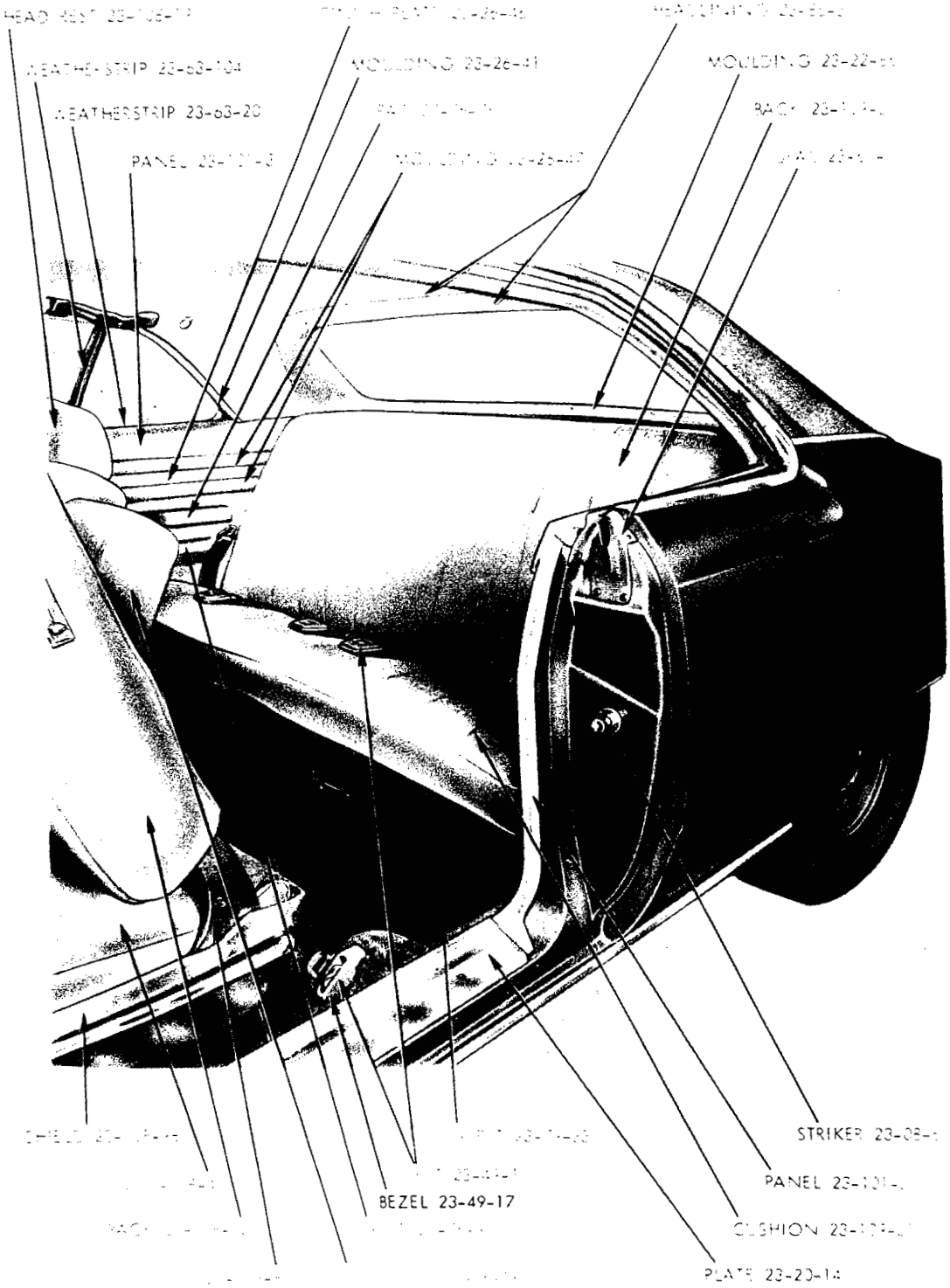

19a3[illegible] A

1970
REAR INTERIOR - IMPERIAL CROWN Y-L 2 DOOR HARDTOP

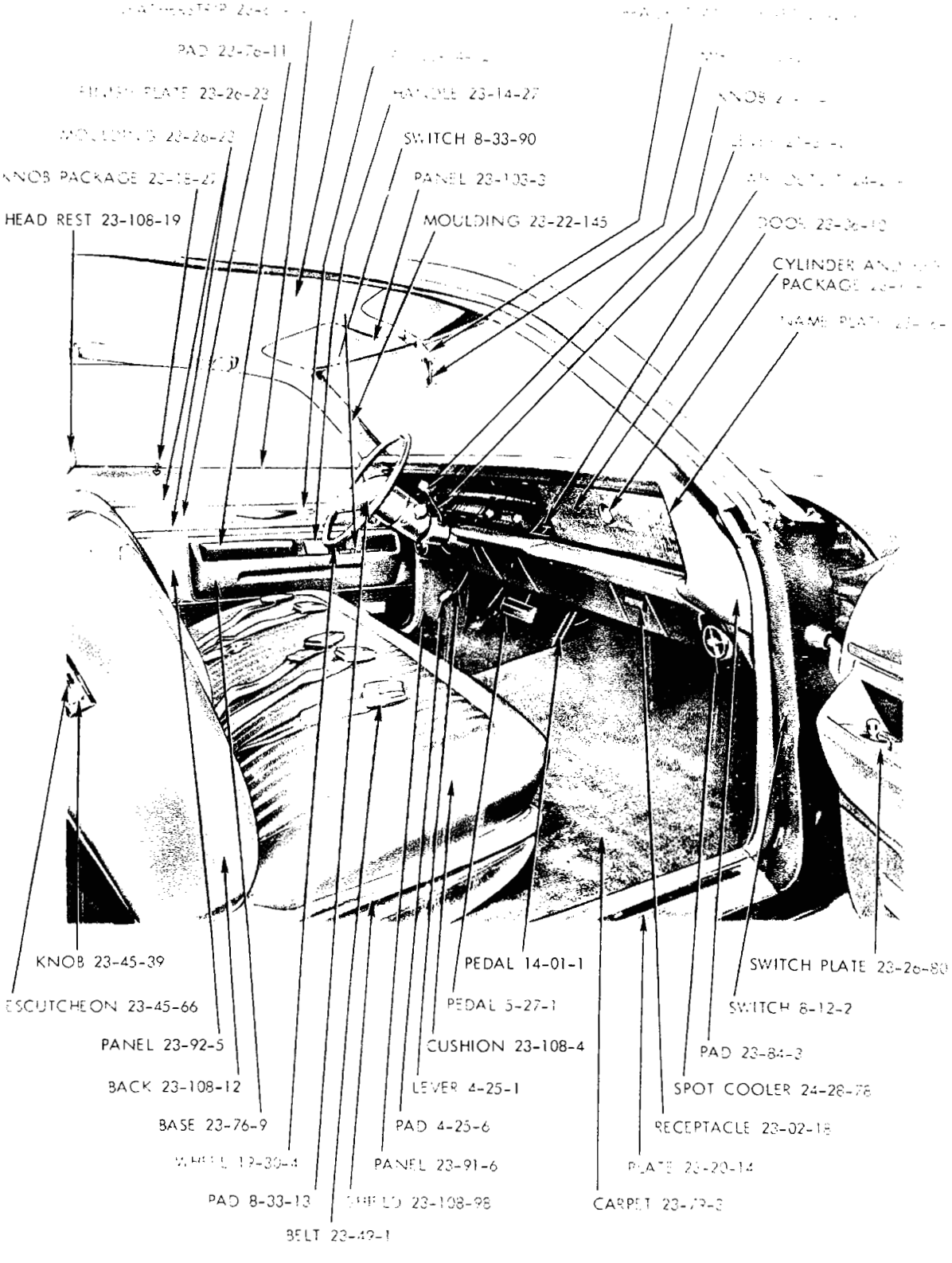

1970
FRONT INTERIOR - IMPERIAL LE BARON Y-M 2 DOOR HARDTOP

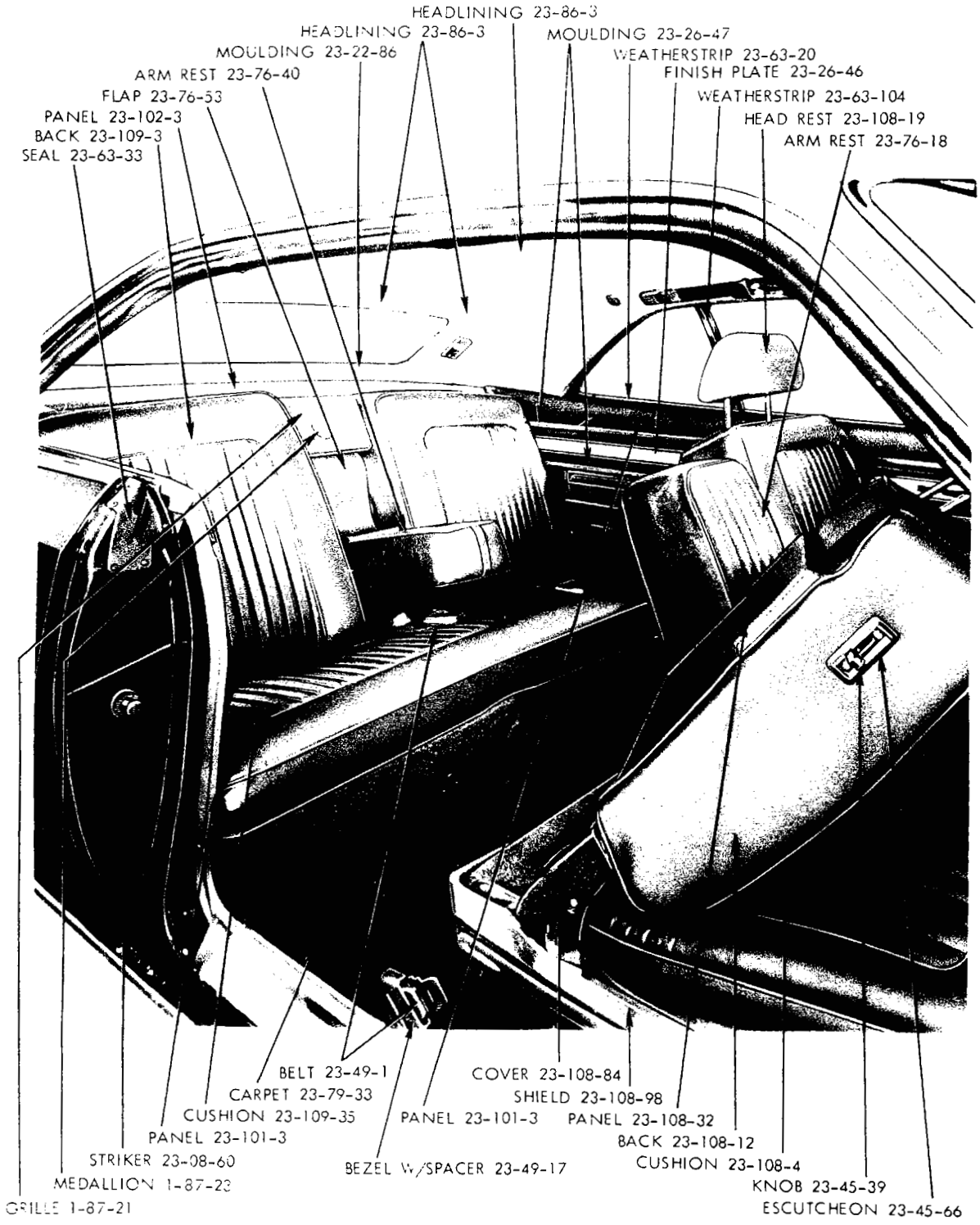

19a3250 A

1970
REAR INTERIOR - IMPERIAL LE BARON Y-M 2 DOOR HARDTOP

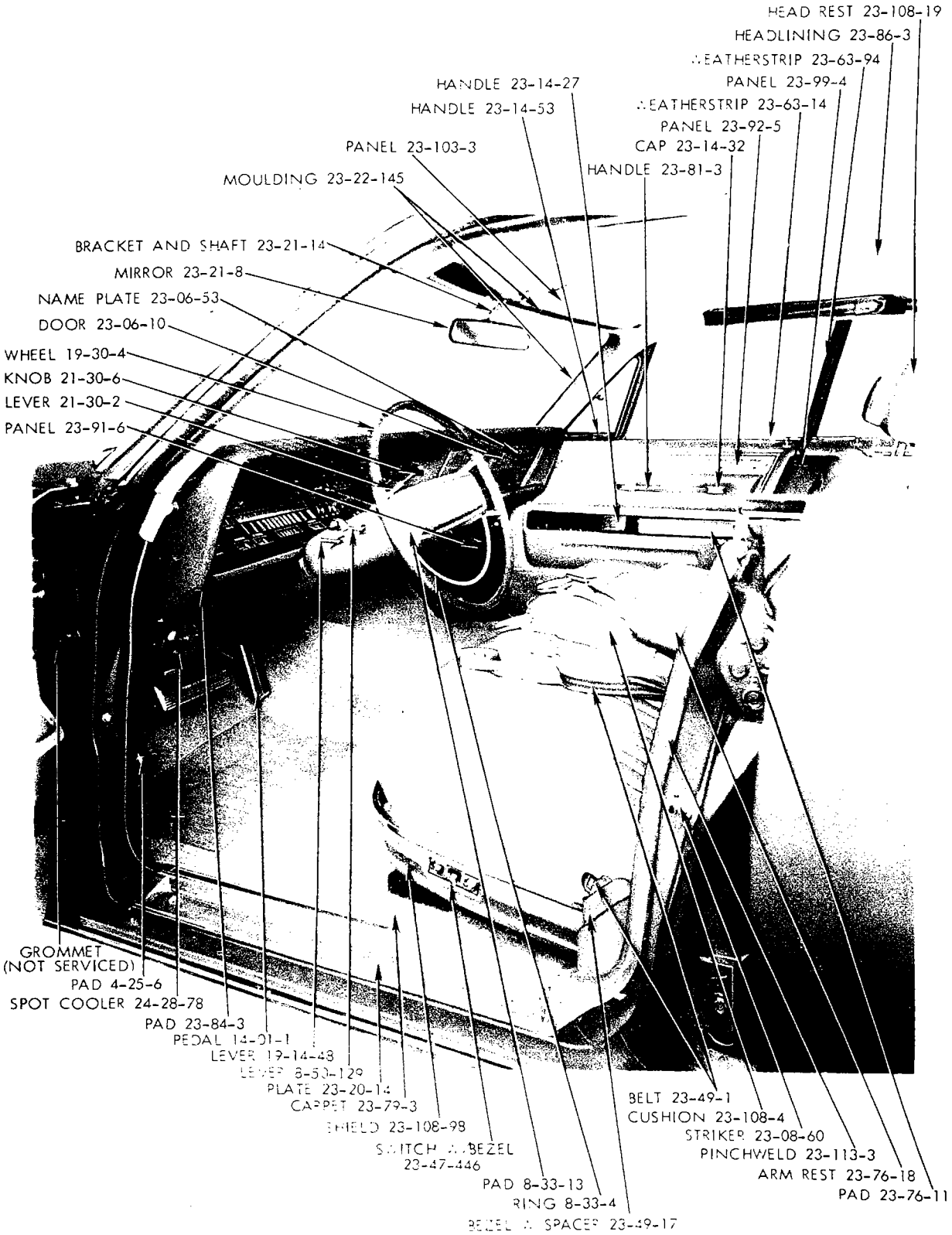

9a3031 **A**

1970

FRONT INTERIOR - IMPERIAL LE BARON Y-M 4 DOOR HARDTOP

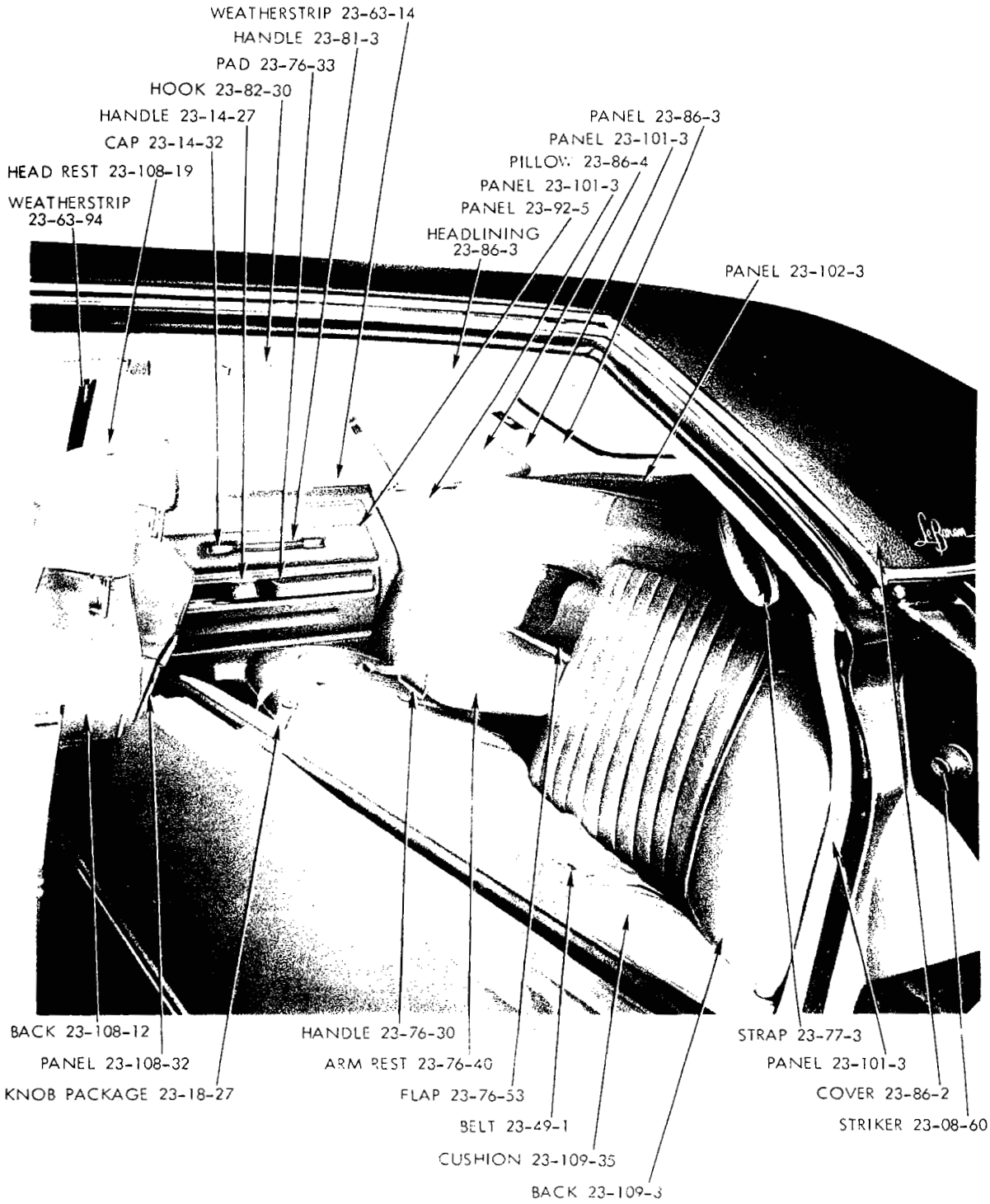

19a3018

1970

REAR INTERIOR - IMPERIAL LE BARON Y-M 4 DOOR HARDTOP

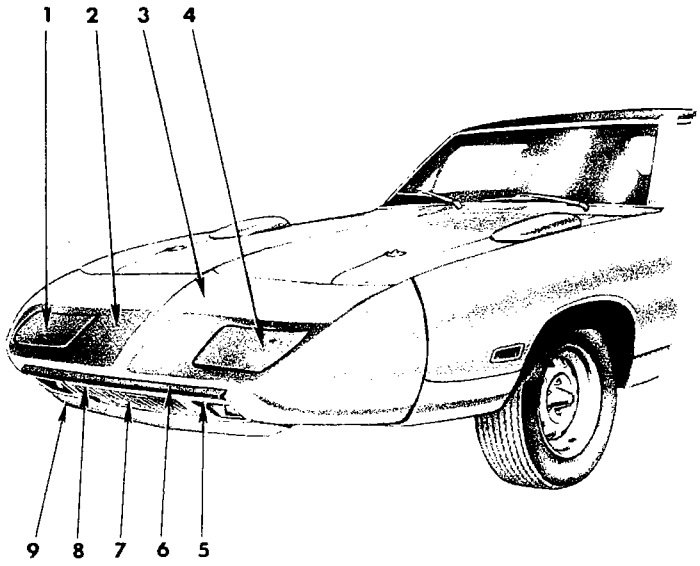

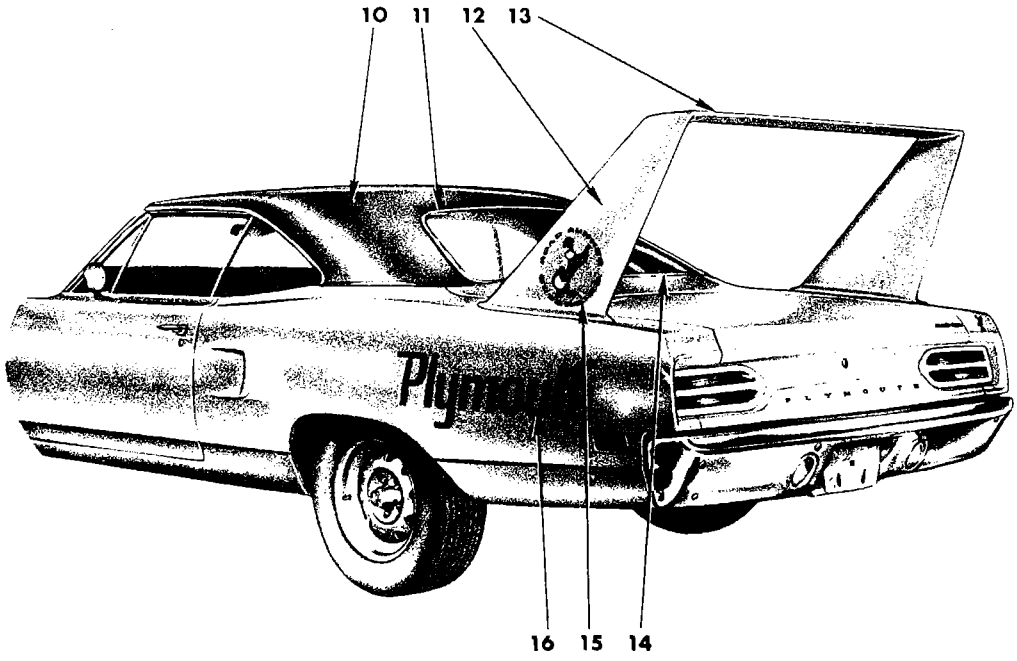

19a3316

EXTERIOR VIEW - SUPERBIRD (1970)

REF. NO.	PART NUMBER	DESCRIPTION
1	3571 170-1	DECAL
2	3571 178-9	DECAL
3	3571 101	NOSE CONE, Complete
3	3571 192	NOSE CONE (Sheet Metal only)
5	3571 146-7	FRAME
6	3571 174	RUB STRIP
7	3571 156	PANEL
8	3571 157	FRAME
9	3412 616	SPOILER
10	3571 110	VINYL ROOF BLACK
11	3571 106-7	MOULDING
12	3571 138-9	VERTICAL STABILIZER
13	3571 137	HORIZONTAL STABILIZER
14	3571 108-9	MOULDING
15	3571 142	DECAL BLACK
15	3571 143	DECAL WHITE
16	3571 114	DECAL BLACK
16	3571 128	DECAL WHITE

ADDITIONAL PARTS LIST (Not Illustrated)

QTY.	PART NUMBER	DESCRIPTION
1	3412 150-1	MLDG., W/S O/Side Finish
1	3412 644	CAR JACK, Front Wheel
1	3412 645	HANDLE, Car Jack Front Wheel
1	3412 652	BRACKET, Frt. License Plate Mtg.
10	3412 684	BOLT, Nose Cone
2	3412 687	CAP SCREW, Stabilizer Attaching
8	3412 693	POP, Rivet
2	3412 698	SEAL, Yoke to Radiator
1	3412 764-5	HEADLAMP, Door
1	3412 784-5	VERTICAL FIN, Support Front
1	3412 790-1	VERTICAL FIN, Support Rear
1	3571 103	HEADLINING, Black
1	3571 104	SHELF, Trim Panel Black
1	3571 105	MOULDING, Rr. Wdo. Flex one Piece
1	3571 112-3	MOULDING, Vinyl Roof Trim Rr. Side
1	3571 116-7	ANGLE SUPPORT, Rr. Wdo. Upr. Corner
1	3571 118	ANGLE SUPPORT, Rr. Wdo. Upper
1	3571 119	REINFORCEMENT, Rr. Wdo. Upper
1	3571 121	GLASS, Rear Window Clear
14	3571 123	J-NUT, Rod Grille Att. P & T Frame
1	3571 126-7	RETAINER, Rr. Wdo. H/Lining Side
1	3571 134-5	REINF. PLATE WING, Vert. Stabilizer
2	3571 136	INSULATOR, Vertical Stabilizer
1	3571 141	HOOD
2	3571 144	VERTICAL FIN, Support Angle Brkt.
2	9409 682	PIN STABILIZER, Angle Limiting
1	3571 149	YOKE, Extension Plate
2	3571 153	BRACKET, Headlamp Hsg. Pivot
1	3571 165	PANEL, Roof Ext.
1	3571 169	WIRING, Bulkhead to Rad. Yoke
1	3571 181	PANEL, Bulkhead Upper Closure
1	3571 182-3	RETAINER, Rear H/Lining Upper
1	3571 185	BRACKET, Oil Cooler Mtg., Hemi Eng. Only
1	3571 188	BRACKET, Jack Towage
1	3571 194-5	MOULDING, Qtr. O/Side Belt
2	3571 196	BRACKET, Deck Lid Hinge Stop
4	3571 199	SPACER, Park & T/Signal Mtg.
1	9427 741	WELD BOLT, Jack Hold Down
1	2889 965	BRKT. & VALVE, H/Lamp Vac. Tank
1	3412 766-7	COMPARTMENT, H/Lamp Hsg. (Partial)
1	3004 113	SWITCH, Headlamp
1	2864 029	SWITCH, Headlamp Door Actuator
1	3403 092-3	LAMP, Park and Turn Signal
1	3784 EX9	CAP, Rr. Wdo. I/Side Mldg. Trim Joint

EXTERIOR VIEW - SUPERBIRD (1970)

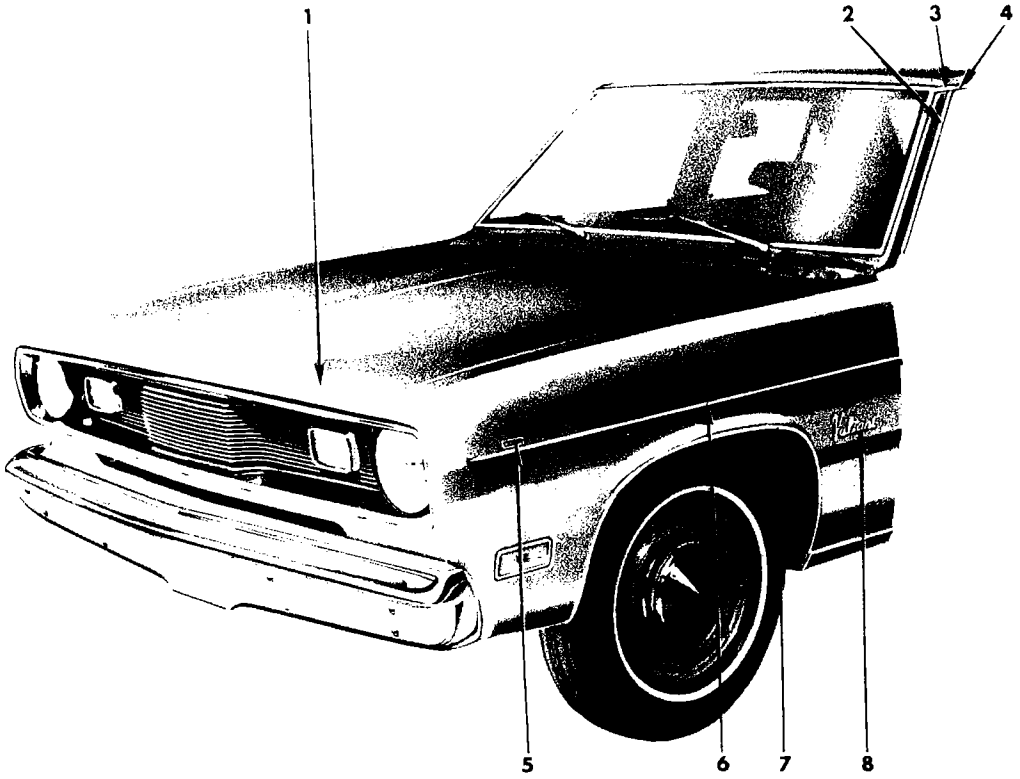

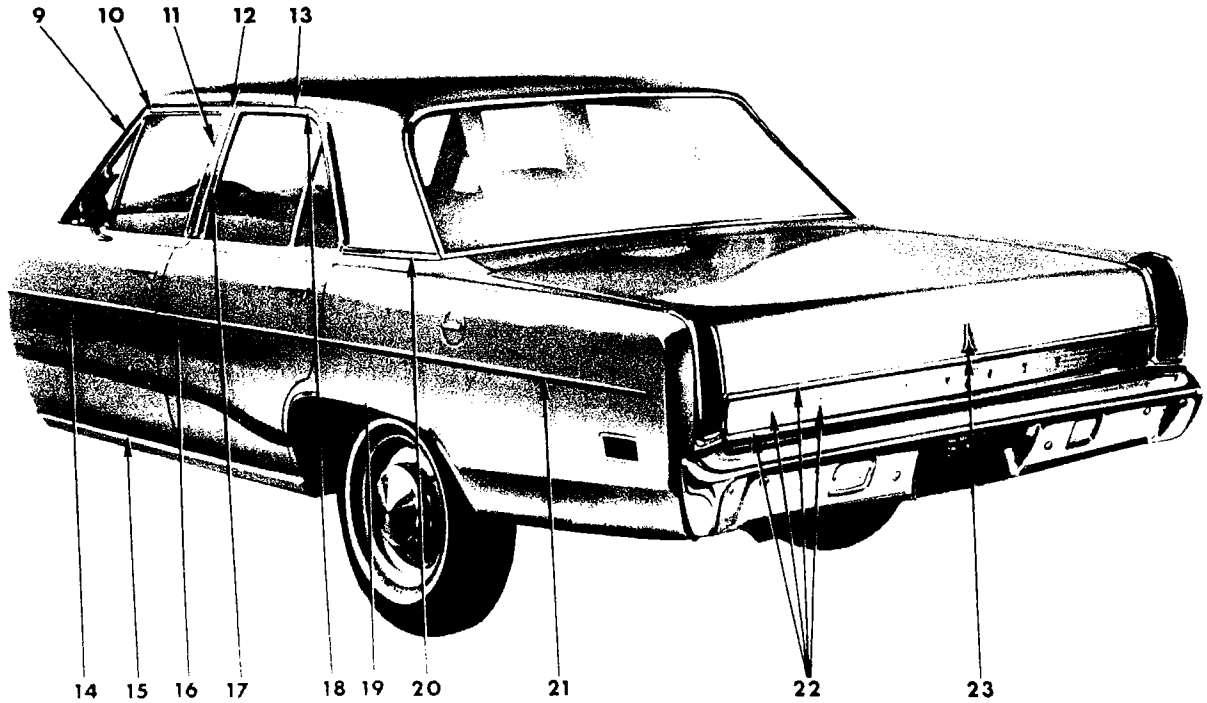

19a3595A

1971
EXTERIOR VIEW - VALIANT V-L 4 DOOR SEDAN

REF. NO.	QTY	PART NUMBER	DESCRIPTION
1	1	2785 791	NAME PLATE, Hood Front (15-06-3)
	3	6027 552	Nut
2	1	2783 024-5	MOULDING, Body Front Pillar Drain Trough (23-59-61)
	AR	---- ---	Spacer
3	1	2807 882-3	MOULDING PACKAGE, Body Front Pillar Trim, use w/Vinyl Roof or Two Tone Paint (23-23-14)
	2	9431 737	Screw
4	2	2783 028	COVER, Roof Side Drain Trough Mldg. Joint (23-59-57)
5	2	2579 612	ORNAMENT, Fender Side, "V-Eight" (12-15-21)
	4	6026 404	Nut w/Seal
6	1	3570 148-9	MOULDING, Fender Side, Black, Up to Sept. 1, 1970 (12-15-2)
	1	3570 150-1	Gold, Up to Sept. 1, 1970 (12-15-2)
	1	3570 152-3	Green, Up to Sept. 1, 1970 (12-15-2)
	2	3613 830	MOULDING, Fender Side, Black, After Sept. 1, 1970 (12-15-2)
	2	3613 832	Gold, After Sept. 1, 1970 (12-15-2)
	2	3613 834	Green, After Sept. 1, 1970 (12-15-2)
	AR	3613 507	TAPE, Fender, Green (Above and Below Mldg.) (12-15-33)
	AR	3613 508	Black (Above and Below Mldg.) (12-15-33)
	AR	3613 506	Gold (Above and Below Mldg.) (12-15-33)
7	1	2807 896-7	MOULDING PACKAGE, Fender Outside Wheel Opening (12-15-2)
	14	6028 545	Screw
8	2	3504 077	NAME PLATE, Fender Side, "Valiant" (12-15-21)
	6	6027 352	Nut w/Seal
9	1	2663 434-5	MOULDING, Frt. Door Wdo. Opng. Frame, Frt. (23-23-32)
10	1	2663 440-1	MOULDING, Frt. Door Wdo. Opng. Frame, Upr. (23-23-32)
11	1	2663 442-3	MOULDING, Frt. Door Wdo. Opng. Frame, Rr. (23-23-32)
12	1	2807 920-1	MOULDING PACKAGE, Body Center Pillar Outside Finish (23-23-16)
	4	6024 271	Screw
13	1	2783 026-7	MOULDING, Roof Side Drain Trough, w/o Vinyl Roof (23-59-61)
	AR	---- ---	Spacer
	1	2840 980-1	MOULDING, Roof Side Drain Trough, w/Vinyl Roof (23-59-61)
	AR	---- ---	Spacer
14	2	3570 173	MOULDING, Front Door, Black, Up to Sept. 1, 1970 (23-23-32)
	2	3570 174	Gold, Up to Sept. 1, 1970 (23-23-32)
	2	3570 175	Green, Up to Sept. 1, 1970 (23-23-32)
	2	3613 830	MOULDING, Frt. Door, Black, After Sept. 1, 1970 (23-23-32)
	2	3613 832	Gold, After Sept. 1, 1970 (23-23-32)
	2	3613 834	Green, After Sept. 1, 1970 (23-23-32)
	AR	3613 507	TAPE, Frt. Door, Green (Above and Below Mldg.) (23-23-12)
	AR	3613 508	Black (Above and Below Mldg.) (23-23-12)
	AR	3613 506	Gold (Above and Below Mldg.) (23-23-12)
15	1	3514 074-5	MOULDING PACKAGE, Body Side Sill (23-23-2)
	18	6002 437	Retainer
	2	6002 708	Retainer
16	1	3570 180-1	MOULDING, Rear Door, Black, Up to Sept. 1, 1970 (23-23-33)
	1	3570 182-3	Gold, Up to Sept. 1, 1970 (23-23-33)
	1	3570 184-5	Green, Up to Sept. 1, 1970 (23-23-33)
	2	3613 830	MOULDING, Rear Door, Black, After Sept. 1, 1970 (23-23-33)
	2	3613 832	Gold, After Sept. 1, 1970 (23-23-33)
	2	3613 834	Green, After Sept. 1, 1970 (23-23-33)
	AR	3613 507	TAPE, Rear Door, Green (Above and Below Mldg.) (23-23-12)
	AR	3613 508	Black (Above and Below Mldg.) (23-23-12)
	AR	3613 506	Gold (Above and Below Mldg.) (23-23-12)
17	1	2664 812-3	MOULDING, Rear Door Wdo. Opng. Frame, Frt. (23-23-33)
18	1	2664 814-5	MOULDING, Rear Door Wdo. Opng. Frame, Upr. and Rear (23-23-33)
19	1	2807 618-9	MOULDING PACKAGE, Qtr. Outside Wheel Opening (23-23-39)
	16	6028 545	Screw
20	1	2809 682-3	MOULDING PACKAGE, Qtr. Outside Belt, use w/Vinyl Roof or Two Tone Paint (23-23-39)
	6	6003 241	Retainer

CONTINUED ON NEXT PAGE

All Packages Include Attaching Parts

Part Type Code is Indicated in Parentheses

1971
EXTERIOR VIEW - VALIANT V-L 4 DOOR SEDAN

REF. NO.	QTY	PART NUMBER	DESCRIPTION
21	1	3570 164-5	MOULDING, Qtr. Outside, Black, Up to Sept. 1, 1970 (23-23-39)
	1	3570 166-7	Gold, Up to Sept. 1, 1970 (23-23-39)
	1	3570 168-9	Green, Up to Sept. 1, 1970 (23-23-39)
	2	3613 830	MOULDING, Qtr. Pnl., Black, After Sept. 1, 1970 (23-23-39)
	2	3613 832	Gold, After Sept. 1, 1970 (23-23-39)
	2	3613 834	Green, After Sept. 1, 1970 (23-23-39)
	AR	3613 507	TAPE, Qtr. Pnl., Green (Above and Below Mldg.) (23-23-12)
	AR	3613 508	Black (Above and Below Mldg.) (23-23-12)
	AR	3613 506	Gold (Above and Below Mldg.) (23-23-12)
22	1	3505 404	PANEL, Deck Lid Finish (23-23-28)
	8	441 239	Nut
	4	6002 671	Retainer w/Seal
	4	6026 523	Nut
23	1	2783 011	MEDALLION, Deck Lid, use w/o Deck Lid Ornamentation Treatment (23-19-114)
	2	9420 254	Nut
	3	6024 713	Washer

All Packages Include Attaching Parts

Part Type Code is Indicated in Parentheses

1971
EXTERIOR VIEW - VALIANT V-L 4 DOOR SEDAN

NOTES

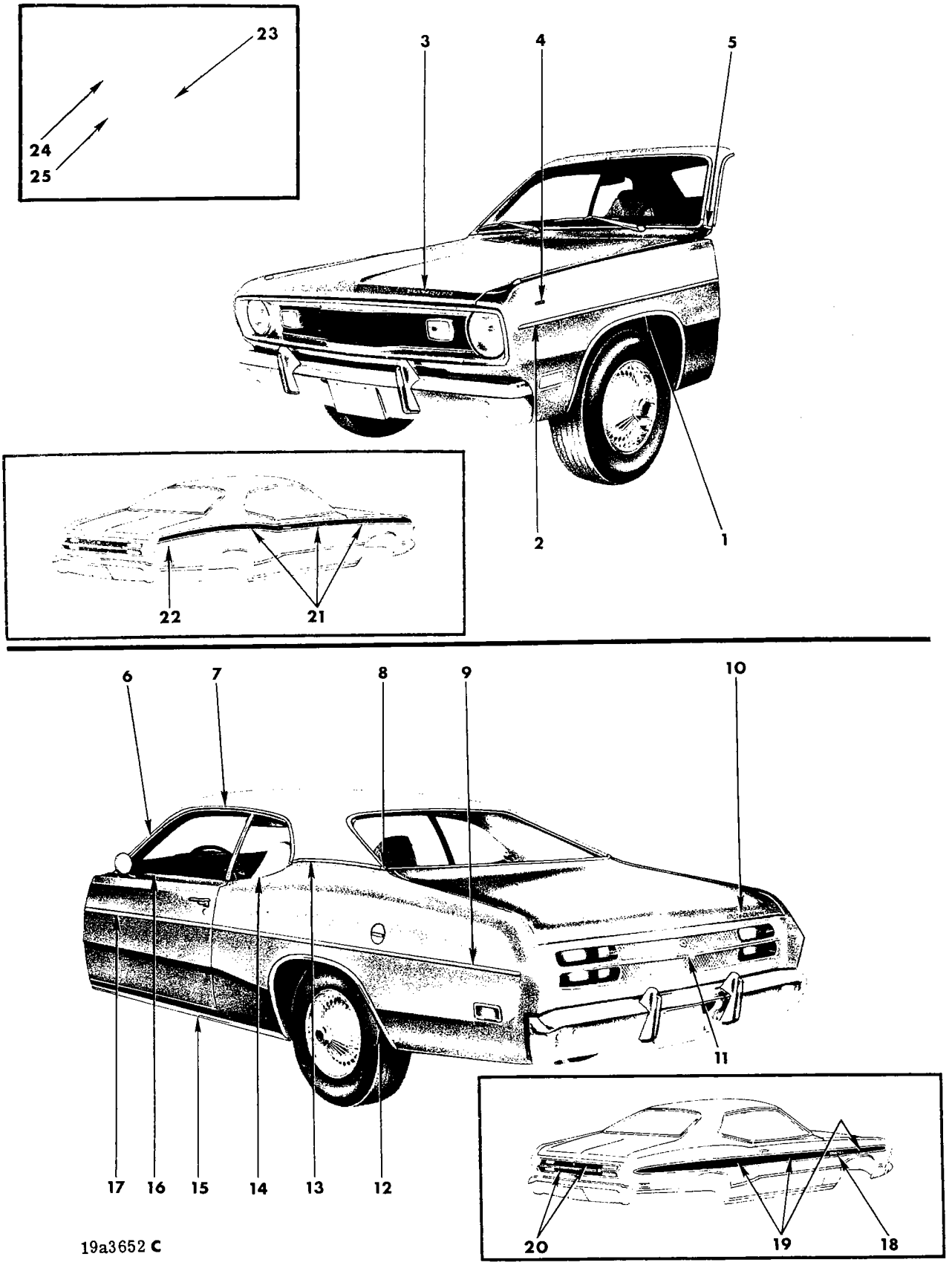

1971
EXTERIOR VIEW - VALIANT (DUSTER) V-L FASTBACK

REF. NO.	QTY	PART NUMBER	DESCRIPTION
1	1	2807 896-7	MOULDING PACKAGE, Fender Outside Whl. Opng. (12-15-2)
	14	6028 545	Screw
2	1	3570 148-9	MOULDING, Fender Side, Black, Up to Sept. 1, 1970 (12-15-2)
	1	3570 150-1	Gold, Up to Sept. 1, 1970 (12-15-2)
	1	3570 152-3	Green, Up to Sept. 1, 1970 (12-15-2)
	2	3613 830	MOULDING, Fender Side, Black, After Sept. 1, 1970 (12-15-2)
	2	3613 832	Gold, After Sept. 1, 1970 (12-15-2)
	2	3613 834	Green, After Sept. 1, 1970 (12-15-2)
	AR	3613 507	TAPE, Fender, Green (Above and Below Mldg.)(12-15-33)
	AR	3613 508	Black (Above and Below Mldg.) (12-15-33)
	AR	3613 506	Gold (Above and Below Mldg.) (12-15-33)
3	1	2785 791	NAME PLATE, Hood Front, "Plymouth" (15-06-3)
	3	6027 552	Nut
4	2	2579 612	ORNAMENT, Fender Side, "V-Eight" (12-15-21)
	4	6026 404	Nut w/Seal
5	1	3549 196-7	MOULDING PACKAGE, Body Frt. Pillar, Lwr., use w/Vinyl Roof or Two Tone Paint (23-23-14)
	2	9431 737	Screw
6	1	3444 930-1	MOULDING, Body Frt. Pillar Drain Trough, w/o Vinyl Roof (23-59-61)
	AR	---- ---	Spacer
	1	3445 932-3	MOULDING, Body Frt. Pillar Drain Trough, w/Vinyl Roof (23-59-61)
	AR	---- ---	Spacer
7	1	3444 932-3	MOULDING, Roof Side Drain Trough, w/o Vinyl Roof (23-59-61)
	AR	---- ---	Spacer
	1	3445 934-5	MOULDING, Roof Side Drain Trough, w/Vinyl Roof (23-59-61)
	AR	---- ---	Spacer
8	1	3514 060-1	MOULDING PACKAGE, Qtr. Outside Belt, Rear, use w/Vinyl Roof or Two Tone Paint (23-23-39)
	2	9427 804	Screw
9	1	3570 190-1	MOULDING, Qtr. Pnl. Outside, Black, Up to Sept. 1, 1970 (23-23-39)
	1	3570 192-3	Gold, Up to Sept. 1, 1970 (23-23-39)
	1	3570 194-5	Green, Up to Sept. 1, 1970 (23-23-39)
9 Cont'd	2	3613 830	MOULDING, Qtr. Pnl., Black, After Sept. 1, 1970 (23-23-39)
	2	3613 832	Gold, After Sept. 1, 1970 (23-23-39)
	2	3613 834	Green, After Sept. 1, 1970 (23-23-39)
	AR	3613 507	TAPE, Qtr., Green (Above and Below Mldg.)(23-23-12)
	AR	3613 508	Black (Above and Below Mldg.) (23-23-12)
	AR	3613 506	Gold (Above and Below Mldg.) (23-23-12)
10	1	3444 927	NAME PLATE, Deck Lid, "Plymouth" (23-19-114)
11	1	3506 048	DECAL, Deck Opng. Lwr. Pnl., "Duster Dust Cloud" (23-34-184)
12	1	3419 768-9	MOULDING PACKAGE, Qtr. Outside Wheel Opening (23-23-39)
	18	6028 545	Screw
13	1	3444 412-3	MOULDING, Qtr. Outside Belt, Frt., use w/Vinyl Roof or Two Tone Paint (23-23-39)
	4	6002 354	Retainer
	4	9420 218	Nut
	4	6002 297	Retainer
14	1	3444 410-1	MOULDING, Qtr. Wdo. Outside Belt (23-23-39)
	8	6003 013	Retainer
15	1	3514 074-5	MOULDING PACKAGE, Body Side Sill (23-23-2)
	18	6002 437	Retainer
	2	6002 708	Retainer
16	1	3444 408-9	MOULDING, Door Outside Belt (23-23-32)
	14	6002 398	Retainer
17	2	3570 157	MOULDING, Door, Black, Up to Sept. 1, 1970 (23-23-32)
	2	3570 158	Gold, Up to Sept. 1, 1970 (23-23-32)
	2	3570 159	Green, Up to Sept. 1, 1970 (23-23-32)
	2	3613 830	MOULDING, Door, Black, After Sept. 1, 1970 (23-23-32)
	2	3613 832	Gold, After Sept. 1, 1970 (23-23-32)
	2	3613 834	Green, After Sept. 1, 1970 (23-23-32)
	AR	3613 507	TAPE, Door, Green (Above and Below Mldg.) (23-23-12)
	AR	3613 508	Black (Above and Below Mldg.) (23-23-12)
	AR	3613 506	Gold (Above and Below Mldg.) (23-23-12)

CONTINUED ON NEXT PAGE

All Packages Include Attaching Parts

Part Type Code is Indicated in Parentheses

1971
EXTERIOR VIEW - VALIANT (DUSTER) V-L FASTBACK

REF. NO.	QTY	PART NUMBER	DESCRIPTION
18	2	3505 742	DECAL, Fender Side Tape, "Duster" (12-15-21)
19	1	3612 510-1	TAPE, Fender Side, Black, Up to Dec. 1, 1970 (12-15-33)
	1	3612 708-9	White (12-15-33)
	1	3613 534-5	Black, After Dec. 1, 1970 (12-15-33)
	1	3612 508-9	TAPE, Door, Black, Up to Dec. 1, 1970 (23-23-12)
	1	3612 700-1	White (23-23-12)
	1	3613 532-3	Black, After Dec. 1, 1970 (23-23-12)
	1	3612 506-7	TAPE, Qtr. Pnl., Black, Up to Dec. 1, 1970 (23-23-12)
	1	3612 692-3	White (23-23-12)
	1	3613 530-1	Black, After Dec. 1, 1970 (23-23-12)
	1	3685 294-5	TAPE PACKAGE, Body Side, Fender, Door, Qtr. Panel, Black, Up to Dec. 1, 1970 (23-23-12)
	1	3685 210-1	White (23-23-12)
	1	3685 208-9	Black, After Dec. 1, 1970 (23-23-12)
20	1	3613 058	TAPE, Deck Opng. Lwr. Pnl., Upr., Black (23-23-12)
	1	3613 059	White (23-23-12)
	1	3613 060	TAPE, Deck Opng. Lwr. Pnl., Lwr., Black (23-23-12)
	1	3613 061	White (23-23-12)
	1	3685 244	TAPE PACKAGE, Deck Opng. Upr. & Lwr. Pnl., Black (23-23-12)
	1	3685 245	White (23-23-12)
21	1	3680 200-1	TAPE, Fender Side, Black (12-15-33)
	1	3613 064-5	White (12-15-33)
	1	3680 202-3	TAPE, Door, Black (23-23-12)
	1	3613 068-9	White (23-23-12)
	1	3613 622-3	TAPE, Qtr. Pnl., Black (23-23-12)
	1	3613 624-5	White (23-23-12)
	1	3685 316-7	TAPE PACKAGE, Body Side, Door, Fender, Qtr. Panel, Black (23-23-12)
	1	3685 318-9	White (23-23-12)
22	1	3680 104-5	DECAL, Qtr. Pnl., "Twister", White (23-34-334)
	1	3680 102-3	Black (23-34-334)
23	1	3574 023	TAPE, Hood Center, Black (15-03-69)
24	1	3574 026-7	TAPE, Cowl (15-03-69)
25	1	3574 024-5	TAPE, Hood Side (15-03-69)
**	1	3685 558	TAPE PACKAGE, Hood, Cowl (15-03-69)
**	1	3443 841	DECAL, Hood, "340 Wedge" (15-03-18)
**	1	3443 130-1	ORNAMENT, Hood Scoop (15-03-64)
**	1	2949 146-7	BEZEL, Hood Scoop (15-03-18)

All Packages Include Attaching Parts

Part Type Code is Indicated in Parentheses

NOTES

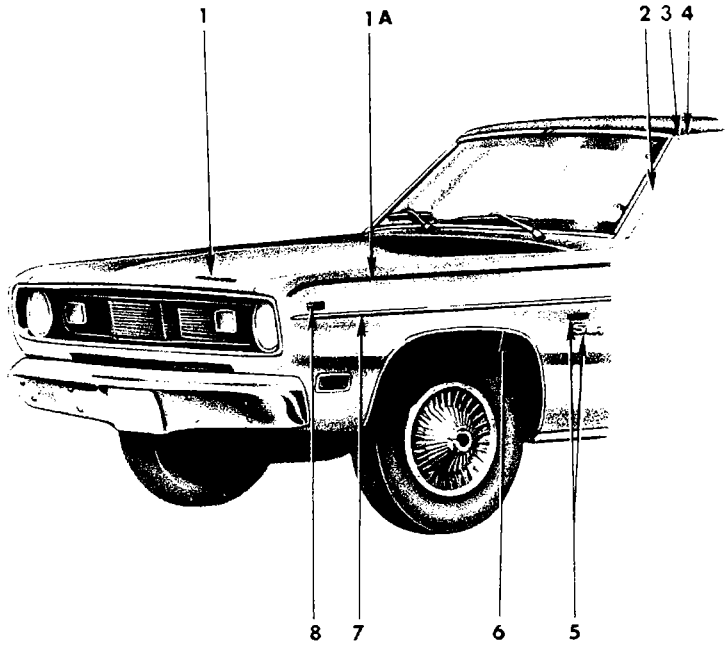

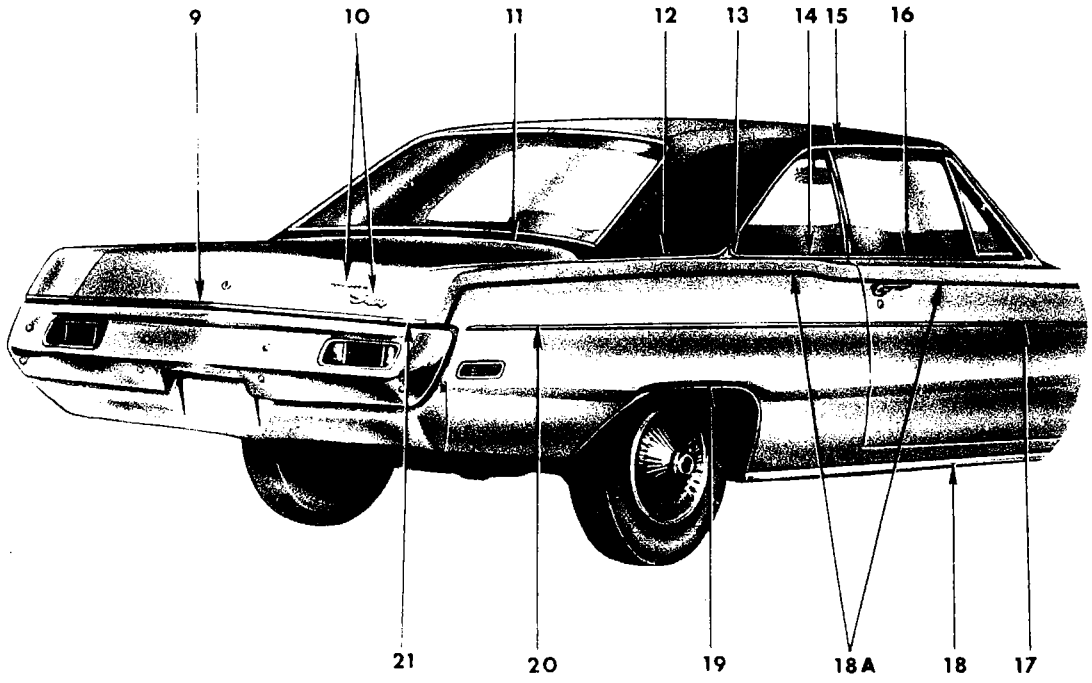

19a3703A

1971
EXTERIOR VIEW - VALIANT CUSTOM (SCAMP) V-H 2 DOOR HARDTOP

REF. NO.	QTY	PART NUMBER	DESCRIPTION
1	1	2785 791	NAME PLATE, Hood (15-06-3)
	3	6027 552	Nut
1A	AR	3612 953	TAPE, Fender, Blue, 3/16" Wide (12-15-33)
	AR	3612 954	Green, 3/16" Wide (12-15-33)
	AR	3612 955	Gold, 3/16" Wide (12-15-33)
	AR	3612 956	Black, 3/16" Wide (12-15-33)
	AR	3612 957	White, 3/16" Wide (12-15-33)
	AR	3613 637	Blue, 1/8" Wide (12-15-33)
	AR	3613 507	Green, 1/8" Wide (12-15-33)
	AR	3613 506	Gold, 1/8" Wide (12-15-33)
	AR	3613 508	Black, 1/8" Wide (12-15-33)
	AR	3613 636	White, 1/8" Wide (12-15-33)
	NOTE: The above parts are 100 inch Rolls, order by Rolls.		
2	1	2783 018-9	MOULDING, Body Front Pillar Drain Trough (23-59-61)
	AR	---- ---	Spacer
3	1	2807 882-3	MOULDING PACKAGE, Body Frt. Pillar Trim (23-23-14)
	2	9431 737	Screw
4	2	2783 028	COVER, Roof Side Drain Trough Mldg. Joint (23-59-57)
5	2	3505 787	NAME PLATE, Fender Side, "Valiant" (12-15-21)
	4	6027 352	Nut w/Seal
	2	3680 038	NAME PLATE, Fender Side, "Valiant", After Jan. 1, 1971 (12-15-21)
	4	6002 852	Retainer
	2	3613 632	DECAL, Fender Side, "Scamp" (12-15-21)
6	1	2807 896-7	MOULDING PACKAGE, Fender Wheel Opening (12-15-2)
	14	6028 545	Screw
7	1	3570 148-9	MOULDING, Fender Side, Black, Up to Sept. 1, 1970 (12-15-2)
	1	3570 150-1	Gold, Up to Sept. 1, 1970
	1	3570 152-3	Green, Up to Sept. 1, 1970
	2	3613 830	MOULDING, Fender Side, Black, After Sept. 1, 1970 (12-15-2)
	2	3613 832	Gold, After Sept. 1, 1970
	2	3613 834	Green, After Sept. 1, 1970
	AR	3613 507	TAPE, Fender, Green (Above and Below Mldg.)(12-15-33)
	AR	3613 508	Black (Above and Below Mldg.) (12-15-33)
	AR	3613 506	Gold (Above and Below Mldg.) (12-15-33)
8	2	2579 612	ORNAMENT, Fender Side, "V-Eight" (12-15-21)
	4	6026 404	Nut w/Seal
9	1	3481 718	MOULDING PACKAGE, Deck Lid (23-23-30)
	8	6002 967	Retainer 8 6026 523 Nut
10	2	3613 632	DECAL, Deck Lid, "Scamp" (23-19-6)
	1	3444 927	NAME PLATE, Deck Lid, "Plymouth" (23-19-114)
11	1	2807 702-3	MOULDING PACKAGE, Deck Opng. Upr. Pnl. (23-23-31)
	7	6002 297	Retainer w/Seal
	9	9415 250	Nut
12	1	2807 700-1	MOULDING PACKAGE, Roof Outside Belt (23-23-42)
	6	6002 192	Fastener 2 9420 276 Nut
	2	6002 297	Retainer w/Seal
	2	6023 898	Screw
13	1	3004 246-7	MOULDING PACKAGE, Qtr. Outside Belt, Rear (23-23-39)
	2	9427 804	Screw
14	1	3004 242-3	MOULDING PACKAGE, Qtr. Outside Belt, Frt. (23-23-39)
	8	6002 398	Retainer
15	1	2783 020-1	MOULDING, Roof Side Drain Trough, w/o Vinyl Roof (23-59-61)
	AR	---- ---	Spacer
	1	2840 982-3	MOULDING, Roof Side Drain Trough, w/Vinyl Roof (23-59-61)
	AR	---- ---	Spacer
16	1	3004 244-5	MOULDING PACKAGE, Door Outside Belt (23-23-32)
	14	6002 398	Retainer
17	2	3570 157	MOULDING, Door, Black, Up to Sept. 1, 1970 (23-23-32)
	2	3570 158	Gold, Up to Sept. 1, 1970 (23-23-32)
	2	3570 159	Green, Up to Sept. 1, 1970 (23-23-32)
	2	3613 830	MOULDING, Door, Black, After Sept. 1, 1970 (23-23-32)
	2	3613 832	Gold, After Sept. 1, 1970 (23-23-32)
	2	3613 834	Green, After Sept. 1, 1970 (23-23-32)
	AR	3613 507	TAPE, Door, Green (Above and Below Mldg.) (23-23-12)
	AR	3613 508	Black (Above and Below Mldg.) (23-23-12)
	AR	3613 506	Gold (Above and Below Mldg.) (23-23-12)
18	2	3620 512	MOULDING PACKAGE, Body Side Sill (23-23-2)
	18	6002 437	Retainer
	18	6024 271	Screw 1 6002 708 Nut
18A	-	---- ---	TAPE, Door and Qtr. Pnl. (Refer to Ref. 1A)
19	1	2932 594-5	MOULDING PACKAGE, Qtr. Outside Wheel Opening (23-23-39)
	16	6028 545	Screw
20	1	3570 190-1	MOULDING, Qtr. Pnl. Outside, Black, Up to Sept. 1, 1970 (23-23-39)
	1	3570 192-3	Gold, Up to Sept. 1, 1970 (23-23-39)
	1	3570 194-5	Green, Up to Sept. 1, 1970 (23-23-39)
	2	3613 830	MOULDING, Qtr. Pnl., Black, After Sept. 1, 1970 (23-23-39)
	2	3613 832	Gold, After Sept. 1, 1970 (23-23-39)
	2	3613 834	Green, After Sept. 1, 1970 (23-23-39)
	AR	3613 507	TAPE, Qtr., Green (Above and Below Mldg.) (23-23-12)
	AR	3613 508	Black (Above and Below Mldg.) (23-23-12)
	AR	3613 506	Gold (Above and Below Mldg.) (23-23-12)
21	1	3481 780-1	MOULDING PACKAGE, Qtr. Pnl. End Extension (23-23-39)
	3	6028 537	Screw

1971
EXTERIOR VIEW - VALIANT CUSTOM (SCAMP) V-H 2 DOOR HARDTOP

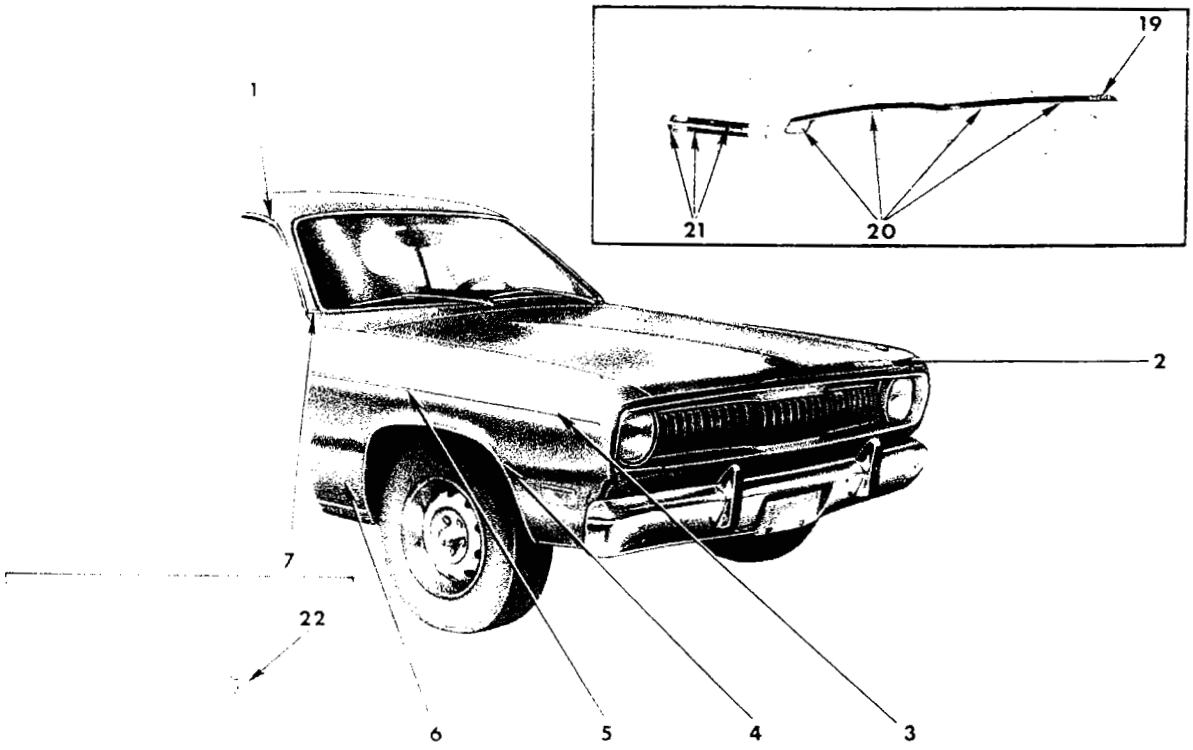

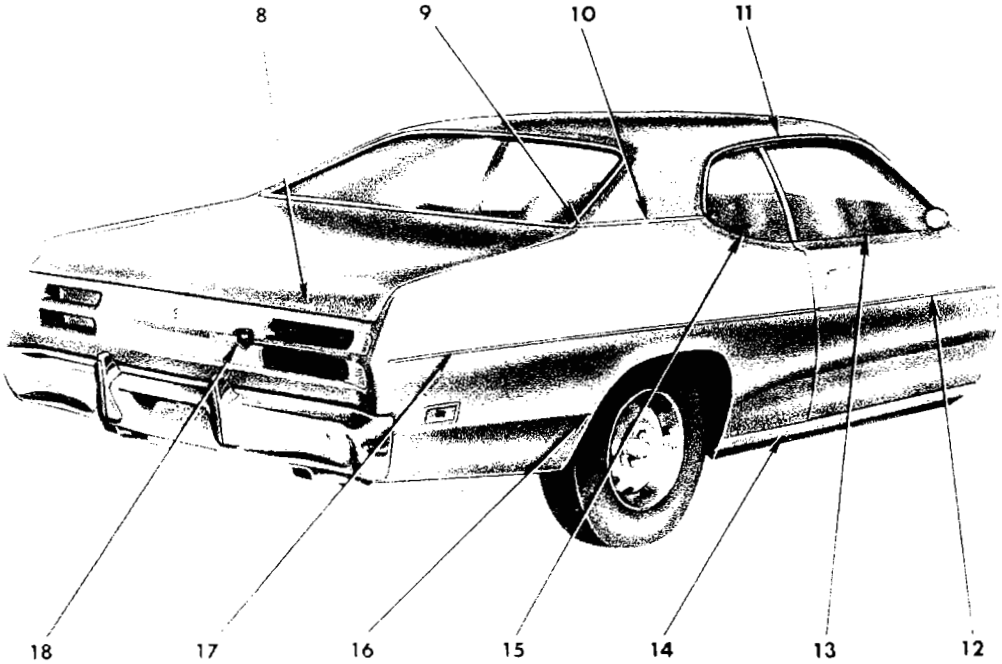

19a3511C

1971
EXTERIOR VIEW - VALIANT (DUSTER 340) V-S FASTBACK

REF. NO.	QTY	PART NUMBER	DESCRIPTION
1	1	3444 930-1	MOULDING, Body Front Pillar Drain Trough, w/o Vinyl Roof (23-59-61)
	1	3445 932-3	MOULDING, Body Front Pillar Drain Trough, w/Vinyl Roof (23-59-61)
2	1	2785 791	NAME PLATE, Hood Front, "Plymouth" (15-06-3)
	3	6027 552	Nut
3	2	2579 612	ORNAMENT, Fender Side, "V-Eight" (12-15-21)
	4	6026 404	Nut w/Seal
4	1	2807 896-7	MOULDING PACKAGE, Fender Outside Wheel Opening (12-15-2)
	14	6028 545	Screw
5	1	3570 148-9	MOULDING, Fender Side, Black, Up to Sept. 1, 1970 (12-15-2)
	1	3570 150-1	Gold, Up to Sept. 1, 1970 (12-15-2)
	1	3570 152-3	Green, Up to Sept. 1, 1970 (12-15-2)
	2	3613 830	MOULDING, Fender Side, Black, After Sept. 1, 1970 (12-15-2)
	2	3613 832	Gold, After Sept. 1, 1970 (12-15-2)
	2	3613 834	Green, After Sept. 1, 1970 (12-15-2)
	AR	3613 507	TAPE, Fender, Green (Above and Below Mldg.)(12-15-33)
	AR	3613 508	Black (Above and Below Mldg.) (12-15-33)
	AR	3613 506	Gold (Above and Below Mldg.) (12-15-33)
6	1	2785 540	MEDALLION, Fender Side, Rt., Pentastar (12-15-21)
7	1	3549 196-7	MOULDING PACKAGE, Body Frt. Pillar, Lwr., use w/Vinyl Roof or Two Tone Paint (23-23-14)
	2	9431 737	Screw
8	1	3444 927	NAME PLATE, Deck Lid, "Plymouth" (23-19-114)
9	1	3514 060-1	MOULDING PACKAGE, Qtr. Outside Belt, Rear, use w/Vinyl Roof or Two Tone Paint (23-23-39)
	2	9427 804	Screw
10	1	3444 412-3	MOULDING, Qtr. Outside Belt, Frt., use w/Vinyl Roof or Two Tone Paint (23-23-39)
	4	6002 354	Retainer
	4	9420 218	Nut
	4	6002 297	Retainer
11	1	3444 932-3	MOULDING, Roof Side Drain Trough, w/o Vinyl Roof (23-59-61)
	1	3445 934-5	MOULDING, Roof Side Drain Trough, w/Vinyl Roof (23-59-61)
12	2	3570 157	MOULDING, Door, Black, Up to Sept. 1, 1970 (23-23-32)
	2	3570 158	Gold, Up to Sept. 1, 1970 (23-23-32)
	2	3570 159	Green, Up to Sept. 1, 1970 (23-23-32)
	2	3613 830	MOULDING, Door, Black, After Sept. 1, 1970 (23-23-32)
	2	3613 832	Gold, After Sept. 1, 1970 (23-23-32)
	2	3613 834	Green, After Sept. 1, 1970 (23-23-32)
	AR	3613 507	TAPE, Door, Green (Above and Below Mldg.) (23-23-12)
	AR	3613 508	Black (Above and Below Mldg.) (23-23-12)
	AR	3613 506	Gold (Above and Below Mldg.) (23-23-12)
13	1	3444 408-9	MOULDING, Door Outside Belt (23-23-32)
	14	6002 398	Retainer
14	1	3514 074-5	MOULDING PACKAGE, Body Side Sill (23-23-2)
	18	6002 437	Retainer
	2	6002 708	Retainer
15	1	3444 410-1	MOULDING, Qtr. Wdo. Outside Belt (23-23-39)
	8	6003 013	Retainer
16	1	3419 768-9	MOULDING PACKAGE, Qtr. Outside Wheel Opening (23-23-39)
	18	6028 545	Screw
17	1	3570 190-1	MOULDING, Qtr. Pnl. Outside, Black, Up to Sept. 1, 1970 (23-23-39)
	1	3570 192-3	Gold, Up to Sept. 1, 1970 (23-23-39)
	1	3570 194-5	Green, Up to Sept. 1, 1970 (23-23-39)
	2	3613 830	MOULDING, Qtr. Pnl., Black, After Sept. 1, 1970 (23-23-39)
	2	3613 832	Gold, After Sept. 1, 1970 (23-23-39)
	2	3613 834	Green, After Sept. 1, 1970 (23-23-39)
	AR	3613 507	TAPE, Qtr., Green (Above and Below Mldg.) (23-23-12)
	AR	3613 508	Black (Above and Below Mldg.) (23-23-12)
	AR	3613 506	Gold (Above and Below Mldg.) (23-23-12)

CONTINUED ON NEXT PAGE

All Packages Include Attaching Parts

Part Type Code is Indicated in Parentheses

1971
EXTERIOR VIEW - VALIANT (DUSTER 340) V-S FASTBACK

REF. NO.	QTY	PART NUMBER	DESCRIPTION
18	1	3506 049	NAME PLATE, Deck Opng. Lwr. Pnl., "Duster Dust Cloud" (23-34-184)
19	2	3505 742	DECAL, Fender Side Tape, "Duster" (12-15-21)
	2	3505 743	DECAL, Fender Side Panel, "340" (12-15-21)
20	1	3613 062-3	TAPE, Fender Side, Black (12-15-33)
	1	3613 064-5	White (12-15-33)
	1	3613 066-7	TAPE, Door, Black (23-23-12)
	1	3613 068-9	White (23-23-12)
	1	3613 070-1	TAPE, Qtr. Pnl., Black (23-23-12)
	1	3613 072-3	White (23-23-12)
	1	3685 238-9	TAPE PACKAGE, Body Side, Fender, Door, Qtr. Panel, Black (23-23-12)
	1	3685 240-1	White (23-23-12)
21	1	3613 058	TAPE, Deck Opng. Lwr. Pnl., Upr., Black (23-23-12)
	1	3613 059	White (23-23-12)
	1	3613 060	TAPE, Deck Opng. Lwr. Pnl., Lwr., Black (23-23-12)
	1	3613 061	White (23-23-12)
	1	3685 244	TAPE PACKAGE, Deck Opng. Upr. & Lwr. Pnl., Black (23-23-12)
	1	3685 245	White (23-23-12)
22	1	3443 841	DECAL, Hood, "340 Wedge" (15-03-18)

All Packages Include Attaching Parts

Part Type Code is Indicated in Parentheses

1971
EXTERIOR VIEW - VALIANT (DUSTER 340) V-S FASTBACK

NOTES

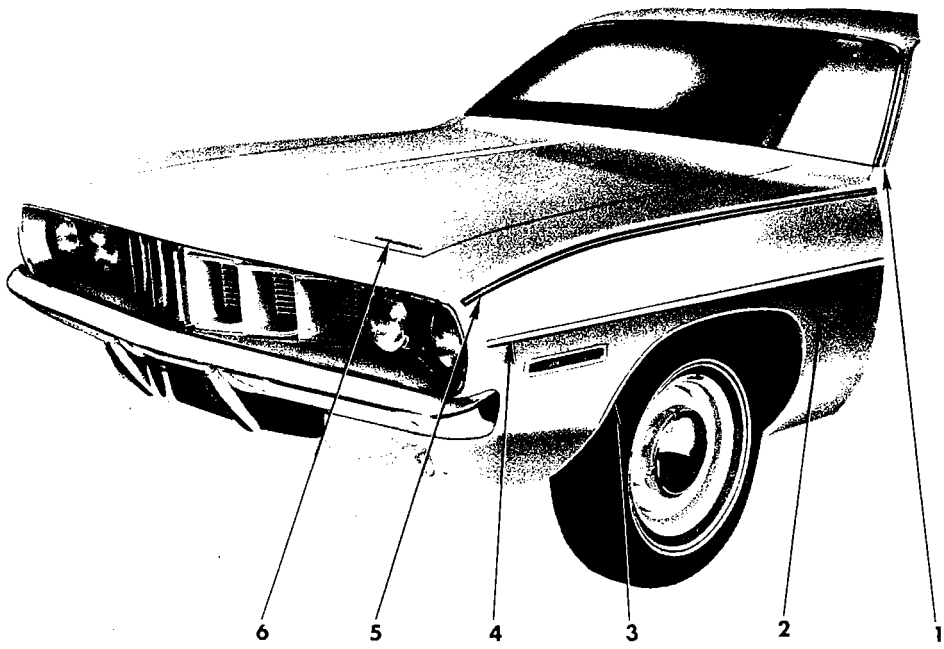

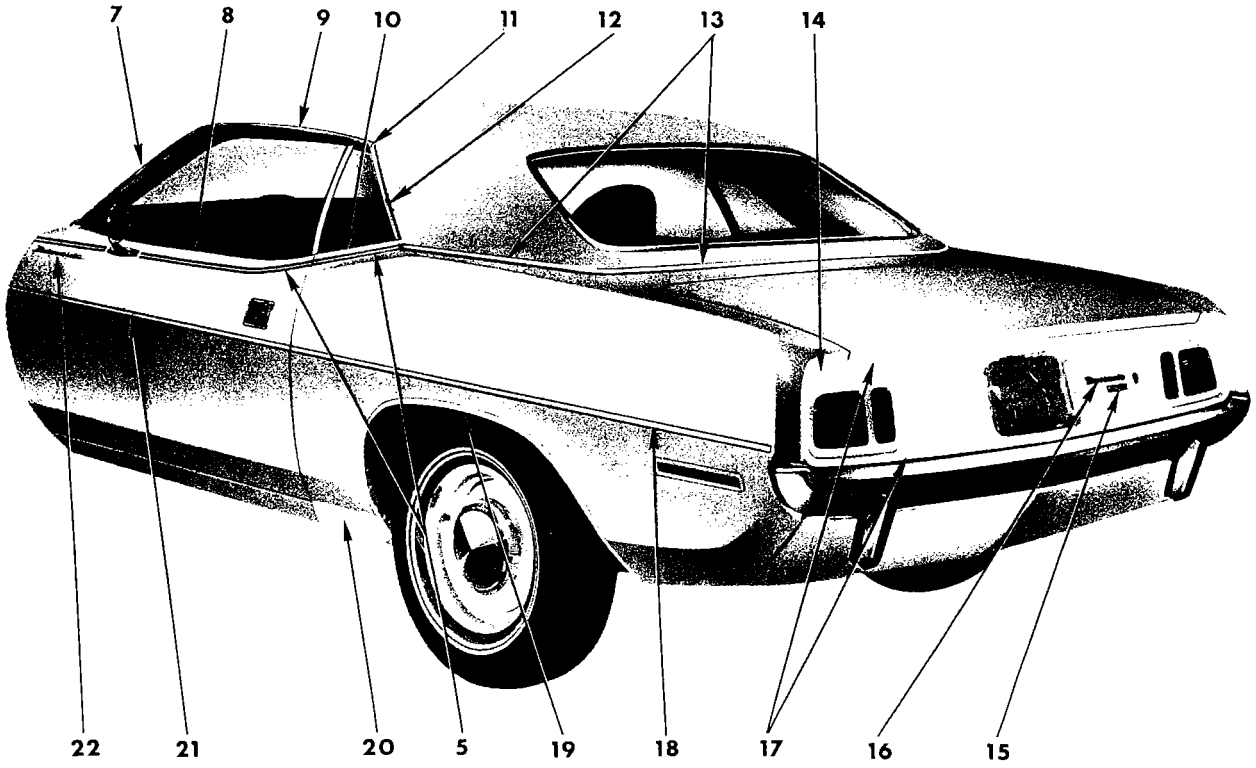

19a3634 **A**

1971
EXTERIOR VIEW - BARRACUDA B-H 2 DOOR HARDTOP

REF. NO.	QTY	PART NUMBER	DESCRIPTION
1	1	3446 456-7	MOULDING, Body Frt. Pillar, Lwr. (23-23-14)
	2	6028 674	Screw
2	2	2949 240	NAME PLATE, Fender Side, "383" (12-15-21)
	4	6027 352	Nut w/Seal
	2	6026 711	Seal
	2	2579 804	ORNAMENT, Fender Side, "383 Four Barrel" (12-15-21)
	6	6026 404	Nut
3	1	3419 702-3	MOULDING PACKAGE, Fender Wheel Opng. (12-15-2)
	18	6028 545	Screw
4	1	2965 354-5	MOULDING, Fender Side, Black, Up to Sept. 1, 1970 (12-15-2)
	1	3570 702-3	Green, Up to Sept. 1, 1970 (12-15-2)
	1	3570 704-5	Gold, Up to Sept. 1, 1970 (12-15-2)
	2	3613 830	MOULDING, Fender Side, Black, After Sept. 1, 1970 (12-15-2)
	2	3613 832	Gold, After Sept. 1, 1970 (12-15-2)
	2	3613 834	Green, After Sept. 1, 1970 (12-15-2)
	AR	3613 507	TAPE, Fender, Green (Above and Below Mldg.)(12-15-33)
	AR	3613 508	Black (Above and Below Mldg.) (12-15-33)
	AR	3613 506	Gold (Above and Below Mldg.) (12-15-33)
5	1	3569 610-1	TAPE, Fender Side Color Stripe, White (12-15-33)
	1	3569 612-3	Black (12-15-33)
	1	3569 614-5	Gold (12-15-33)
	1	3569 616-7	Green (12-15-33)
	1	3569 618-9	Blue (12-15-33)
	1	3569 666-7	TAPE, Qtr. Pnl. Color Stripe, White (23-23-12)
	1	3569 668-9	Black (23-23-12)
	1	3569 670-1	Gold (23-23-12)
	1	3569 672-3	Green (23-23-12)
	1	3569 674-5	Blue (23-23-12)
	1	3613 194	TAPE, Door Outside, Rt., Black (23-23-12)
	1	3613 195	Rt., White (23-23-12)
	1	3613 196	Rt., Gold (23-23-12)
	1	3613 197	Rt., Green (23-23-12)
	1	3613 198	Rt., Blue (23-23-12)
	1	3613 199	Lt. Frt., Black (23-23-12)
	1	3613 200	Lt. Frt., White (23-23-12)
	1	3613 201	Lt. Frt., Gold (23-23-12)
	1	3613 202	Lt. Frt., Green (23-23-12)
	1	3613 203	Lt. Frt., Blue (23-23-12)
	1	3613 204	Lt. Rear, Black (23-23-12)
	1	3613 205	Lt. Rear, White (23-23-12)
	1	3613 206	Lt. Rear, Gold (23-23-12)
	1	3613 207	Lt. Rear, Green (23-23-12)
	1	3613 208	Lt. Rear, Blue (23-23-12)
5 Cont'd	1	3685 190-1	TAPE PACKAGE, Body Side, Fender, Qtr. Pnl., White (23-23-12)
	1	3685 188-9	Black (23-23-12)
	1	3685 194-5	Gold (23-23-12)
	1	3685 196-7	Green (23-23-12)
	1	3685 192-3	Blue (23-23-12)
	1	3685 188	TAPE PACKAGE, Body Side, Door, Rt., Black (23-23-12)
	1	3685 190	Rt., White (23-23-12)
	1	3685 194	Rt., Gold (23-23-12)
	1	3685 196	Rt., Green (23-23-12)
	1	3685 192	Rt., Blue (23-23-12)
	1	3685 189	Lt. Frt., Black (23-23-12)
	1	3685 191	Lt. Frt., White (23-23-12)
	1	3685 195	Lt. Frt., Gold (23-23-12)
	1	3685 197	Lt. Frt., Green (23-23-12)
	1	3685 193	Lt. Frt., Blue (23-23-12)
	1	3685 189	Lt. Rear, Black (23-23-12)
	1	3685 191	Lt. Rear, White (23-23-12)
	1	3685 195	Lt. Rear, Gold (23-23-12)
	1	3685 197	Lt. Rear, Green (23-23-12)
	1	3685 193	Lt. Rear, Blue (23-23-12)
6	1	2998 042	NAME PLATE, Hood (15-06-3)
	3	9411 943	Nut
7	1	3419 906-7	MOULDING PACKAGE, Body Front Pillar Drain Trough (23-59-61)
	6	6028 721	Screw
8	1	3419 778-9	MOULDING PACKAGE, Door Outside Belt (23-23-32)
	2	6003 134	Retainer
	2	116 000	Nut
	14	6003 133	Retainer
9	1	3549 190-1	MOULDING PACKAGE, Roof Side Drain Trough, Front (23-59-61)
	12	6028 721	Screw
10	1	3620 324-5	MOULDING PACKAGE, Qtr. Wdo. Outside Belt (23-23-39)
	2	6001 910	Retainer
	1	6028 721	Screw
11	1	3444 582-3	CAP, Roof Side Drain Trough, Front to Rear Corner (23-59-57)
	2	6028 721	Screw

CONTINUED ON NEXT PAGE

All Packages Include Attaching Parts

Part Type Code is Indicated in Parentheses

1971
EXTERIOR VIEW - BARRACUDA B-H 2 DOOR HARDTOP

REF. NO.	QTY	PART NUMBER	DESCRIPTION
12	1	3549 192-3	MOULDING PACKAGE, Roof Side Drain Trough, Rear (23-59-61)
	4	6028 721	Screw
13	1	3419 782-3	MOULDING PACKAGE, Qtr. Outside Belt (23-23-39)
	10	6003 241	Retainer
	10	6026 581	Stud
	4	6002 957	Retainer
	4	9420 291	Nut
14	1	3419 704-5	MOULDING PACKAGE, Deck Opng. Lwr. Pnl. End (23-23-23)
	2	6003 022	Retainer w/Seal
	2	1839 995	Nut
15	1	3570 075	NAME PLATE, Deck Opening Lwr. Pnl., "By Plymouth" (23-34-184)
	2	9420 263	Nut
16	1	3505 456	NAME PLATE, Deck Opening Lwr. Pnl., "Barracuda" (23-34-184)
	3	9420 263	Nut
17	2	3419 708	MOULDING PACKAGE, Deck Opng. Lwr. Pnl., Upr. and Lwr. (23-23-23)
	6	6002 873	Retainer w/Seal
	1	6002 891	Retainer
18	1	2965 358-9	MOULDING, Qtr. Outside, Black, Up to Sept. 1, 1970 (23-23-39)
	1	3570 714-5	Green, Up to Sept. 1, 1970 (23-23-39)
	1	3570 716-7	Gold, Up to Sept. 1, 1970 (23-23-39)
	2	3613 830	MOULDING, Qtr. Pnl., Black, After Sept. 1, 1970 (23-23-39)
	2	3613 832	Gold, After Sept. 1, 1970 (23-23-39)
	2	3613 834	Green, After Sept. 1, 1970 (23-23-39)
	AR	3613 507	TAPE, Qtr., Green (Above and Below Mldg.) (23-23-12)
	AR	3613 508	Black (Above and Below Mldg.) (23-23-12)
	AR	3613 506	Gold (Above and Below Mldg.) (23-23-12)
19	1	3419 784-5	MOULDING PACKAGE, Qtr. Outside Wheel Opening (23-23-39)
	18	6028 545	Screw
20	1	3481 968-9	ORNAMENT, Qtr. Outside Pnl. Air Intake (23-34-334)
	4	9420 867	Nut
	4	---- ---	Screw
21	2	2965 356	MOULDING, Door, Black, Up to Sept. 1, 1970 (23-23-32)
	2	3570 708	Green, Up to Sept. 1, 1970 (23-23-32)
	2	3570 710	Gold, Up to Sept. 1, 1970 (23-23-32)
	2	3613 830	MOULDING, Door, Black, After Sept. 1, 1970 (23-23-32)
	2	3613 832	Gold, After Sept. 1, 1970 (23-23-32)
	2	3613 834	Green, After Sept. 1, 1970 (23-23-32)
	AR	3613 507	TAPE, Door, Green (Above and Below Mldg.) (23-23-12)
	AR	3613 508	Black (Above and Below Mldg.) (23-23-12)
	AR	3613 506	Gold (Above and Below Mldg.) (23-23-12)
22	2	3505 456	NAME PLATE, Door Outside, "Barracuda" (23-11-21)

All Packages Include Attaching Parts

Part Type Code is Indicated in Parentheses

1971
EXTERIOR VIEW - BARRACUDA B-H 2 DOOR HARDTOP

NOTES

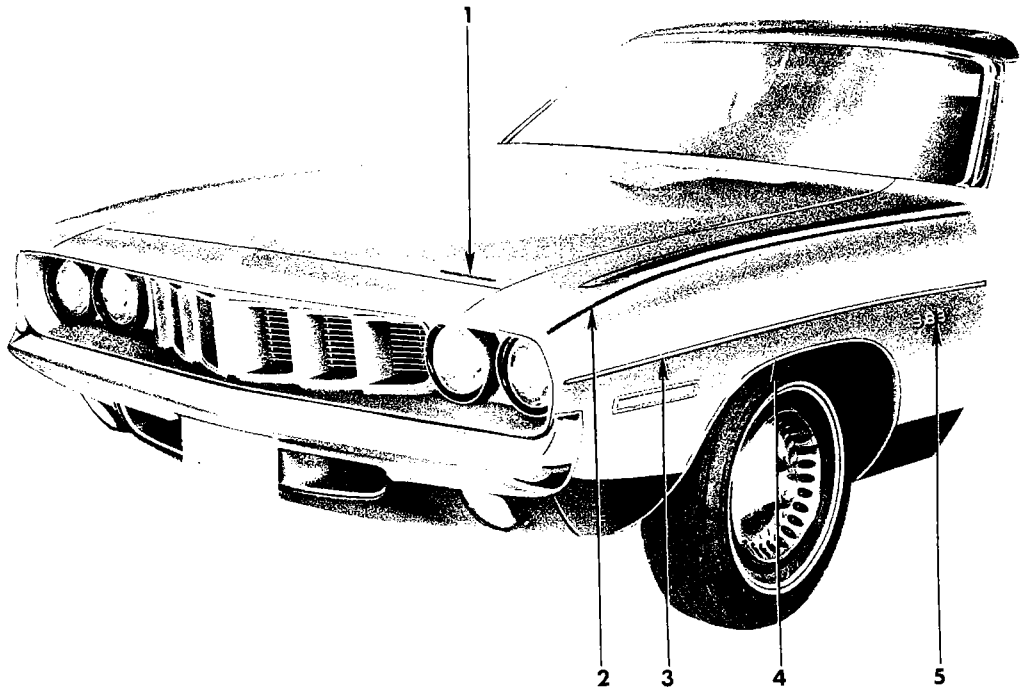

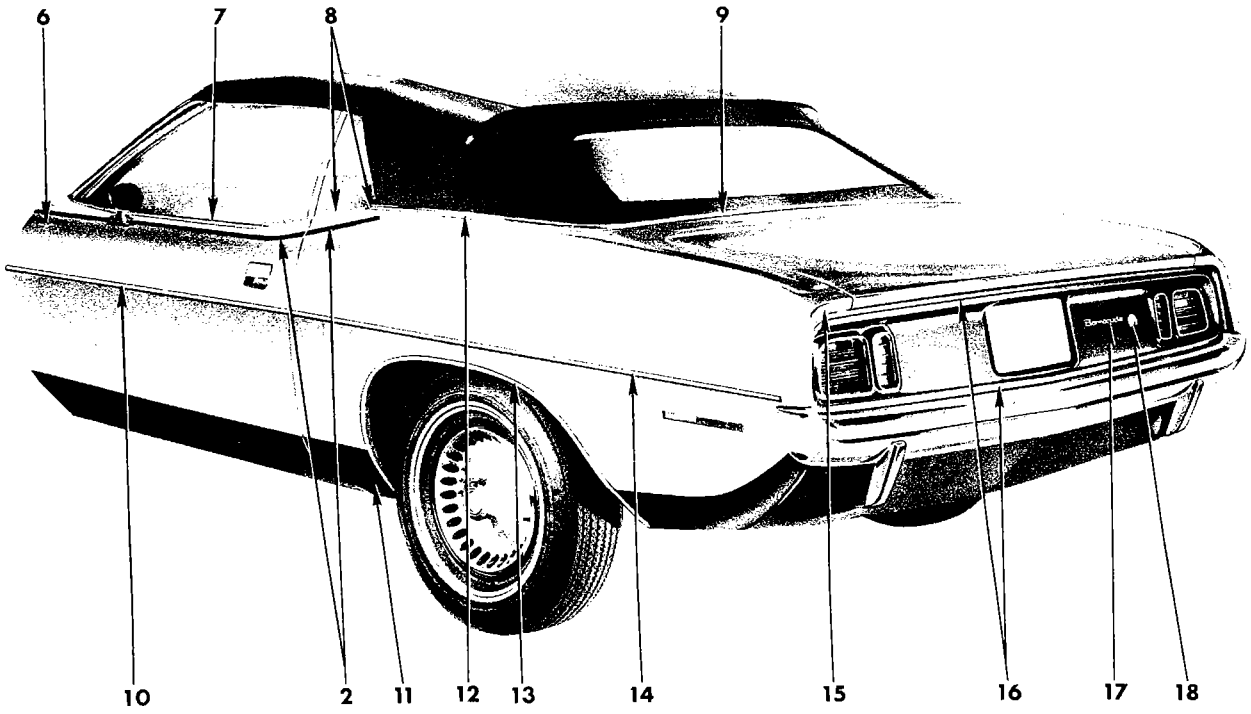

19a3580 **A**

1971
EXTERIOR VIEW - BARRACUDA B-H CONVERTIBLE COUPE

REF. NO.	QTY	PART NUMBER	DESCRIPTION
1	1	2998 042	NAME PLATE, Hood (15-06-3)
	3	9411 943	Nut
2	1	3569 610-1	TAPE, Fender Side Color Stripe, White (12-15-33)
	1	3569 612-3	Black (12-15-33)
	1	3569 614-5	Gold (12-15-33)
	1	3569 616-7	Green (12-15-33)
	1	3569 618-9	Blue (12-15-33)
	1	3613 194	TAPE, Door Outside, Rt., Black (23-23-12)
	1	3613 195	Rt., White (23-23-12)
	1	3613 196	Rt., Gold (23-23-12)
	1	3613 197	Rt., Green (23-23-12)
	1	3613 198	Rt., Blue (23-23-12)
	1	3613 199	Lt. Frt., Black (23-23-12)
	1	3613 200	Lt. Frt., White (23-23-12)
	1	3613 201	Lt. Frt., Gold (23-23-12)
	1	3613 202	Lt. Frt., Green (23-23-12)
	1	3613 203	Lt. Frt., Blue (23-23-12)
	1	3613 204	Lt. Rear, Black (23-23-12)
	1	3613 205	Lt. Rear, White (23-23-12)
	1	3613 206	Lt. Rear, Gold (23-23-12)
	1	3613 207	Lt. Rear, Green (23-23-12)
	1	3613 208	Lt. Rear, Blue (23-23-12)
	1	3569 666-7	TAPE, Qtr. Pnl. Color Stripe, White (23-23-12)
	1	3569 668-9	Black (23-23-12)
	1	3569 670-1	Gold (23-23-12)
	1	3569 672-3	Green (23-23-12)
	1	3569 674-5	Blue (23-23-12)
	1	3685 190-1	TAPE PACKAGE, Body Side, Fender, Door, Qtr. Panel, White (23-23-12)
	1	3685 188-9	Black (23-23-12)
	1	3685 194-5	Gold (23-23-12)
	1	3685 196-7	Green (23-23-12)
	1	3685 192-3	Blue (23-23-12)
3	1	2965 354-5	MOULDING, Fender Side, Black, Up to Sept. 1, 1970 (12-15-2)
	1	3570 702-3	Green, Up to Sept. 1, 1970
	1	3570 704-5	Gold, Up to Sept. 1, 1970
	2	3613 830	MOULDING, Fender Side, Black, After Sept. 1, 1970 (12-15-2)
	2	3613 832	Gold, After Sept. 1, 1970
	2	3613 834	Green, After Sept. 1, 1970
	AR	3613 507	TAPE, Fender, Green (Above and Below Mldg.) (12-15-33)
	AR	3613 508	Black (Above and Below Mldg.)
	AR	3613 506	Gold (Above and Below Mldg.)
4	1	3419 702-3	MOULDING PACKAGE, Fender Wheel Opng. (12-15-2)
	18	6028 545	Screw
5	2	2949 240	NAME PLATE, Fender Side, "383" (12-15-21)
	4	6027 352	Nut w/Seal
	2	6026 711	Seal
	2	2579 804	ORNAMENT, Fender Side, "383 Four Barrel" (12-15-21)
	6	6026 404	Nut
6	2	3505 456	NAME PLATE, Door Outside, "Barracuda" (23-11-21)
7	1	3419 778-9	MOULDING PACKAGE, Door Outside Belt (23-23-32)
	2	6003 134	Retainer
	14	6003 133	Retainer 2 116 000 Nut
8	1	3419 770-1	MOULDING PACKAGE, Qtr. Outside Belt, Frt., use w/Belt Mldg. (23-23-39)
	2	9418 464	Screw 2 9420 276 Nut
	1	3419 772-3	MOULDING PACKAGE, Qtr. Outside Belt, Frt., use w/o Belt Mldg. (23-23-39)
	2	9418 464	Screw
9	1	3419 776	MOULDING PACKAGE, Deck Opng. Upr. Pnl. (23-23-31)
	9	6003 130	Retainer
10	2	2965 356	MOULDING, Door, Black, Up to Sept. 1, 1970 (23-23-32)
	2	3570 708	Green, Up to Sept. 1, 1970
	2	3570 710	Gold, Up to Sept. 1, 1970
	2	3613 830	MOULDING, Door, Black, After Sept. 1, 1970 (23-23-32)
	2	3613 832	Gold, After Sept. 1, 1970
	2	3613 834	Green, After Sept. 1, 1970
	AR	3613 507	TAPE, Door, Green (Above and Below Mldg.) (23-23-12)
	AR	3613 508	Black (Above and Below Mldg.)
	AR	3613 506	Gold (Above and Below Mldg.)
11	1	3481 968-9	ORNAMENT, Qtr. Outside Pnl. Air Intake (23-34-334)
	4	---- ---	Screw 4 9420 867 Nut
12	1	3419 774-5	MOULDING PACKAGE, Qtr. Outside Belt, Rr. (23-23-39)
	12	6002 976	Retainer 12 9429 605 Screw
13	1	3419 784-5	MOULDING PACKAGE, Qtr. Outside Wheel Opening (23-23-39)
	18	6028 545	Screw
14	1	2965 358-9	MOULDING, Qtr. Outside, Black, Up to Sept. 1, 1970 (23-23-39)
	1	3570 714-5	Green, Up to Sept. 1, 1970
	1	3570 716-7	Gold, Up to Sept. 1, 1970
	2	3613 830	MOULDING, Qtr. Pnl., Black, After Sept. 1, 1970 (23-23-39)
	2	3613 832	Gold, After Sept. 1, 1970
	2	3613 834	Green, After Sept. 1, 1970
	AR	3613 507	TAPE, Qtr., Green (Above and Below Mldg.) (23-23-12)
	AR	3613 508	Black (Above and Below Mldg.)
	AR	3613 506	Gold (Above and Below Mldg.)
15	1	3419 704-5	MOULDING PACKAGE, Deck Opng. Lwr. Pnl. End (23-23-23)
	2	6003 022	Retainer w/Seal
	2	1839 995	Nut
16	2	3419 708	MOULDING PACKAGE, Deck Opng. Lwr. Pnl., Upr. and Lwr. (23-23-23)
	6	6002 873	Retainer w/Seal
	1	6002 891	Retainer
17	1	3505 456	NAME PLATE, Deck Opng. Lwr. Pnl., "Barracuda" (23-34-184)
	3	9420 263	Nut
18	1	3570 075	NAME PLATE, Deck Opng. Lwr. Pnl., "By Plymouth" (23-34-184)
	2	9420 263	Nut
**	1	3514 076	MOULDING PACKAGE, Hood A/Clnr. Opng. (15-25-2)

All Packages Include Attaching Parts

Part Type Code is Indicated in Parentheses

1971

EXTERIOR VIEW - BARRACUDA B-H CONVERTIBLE COUPE

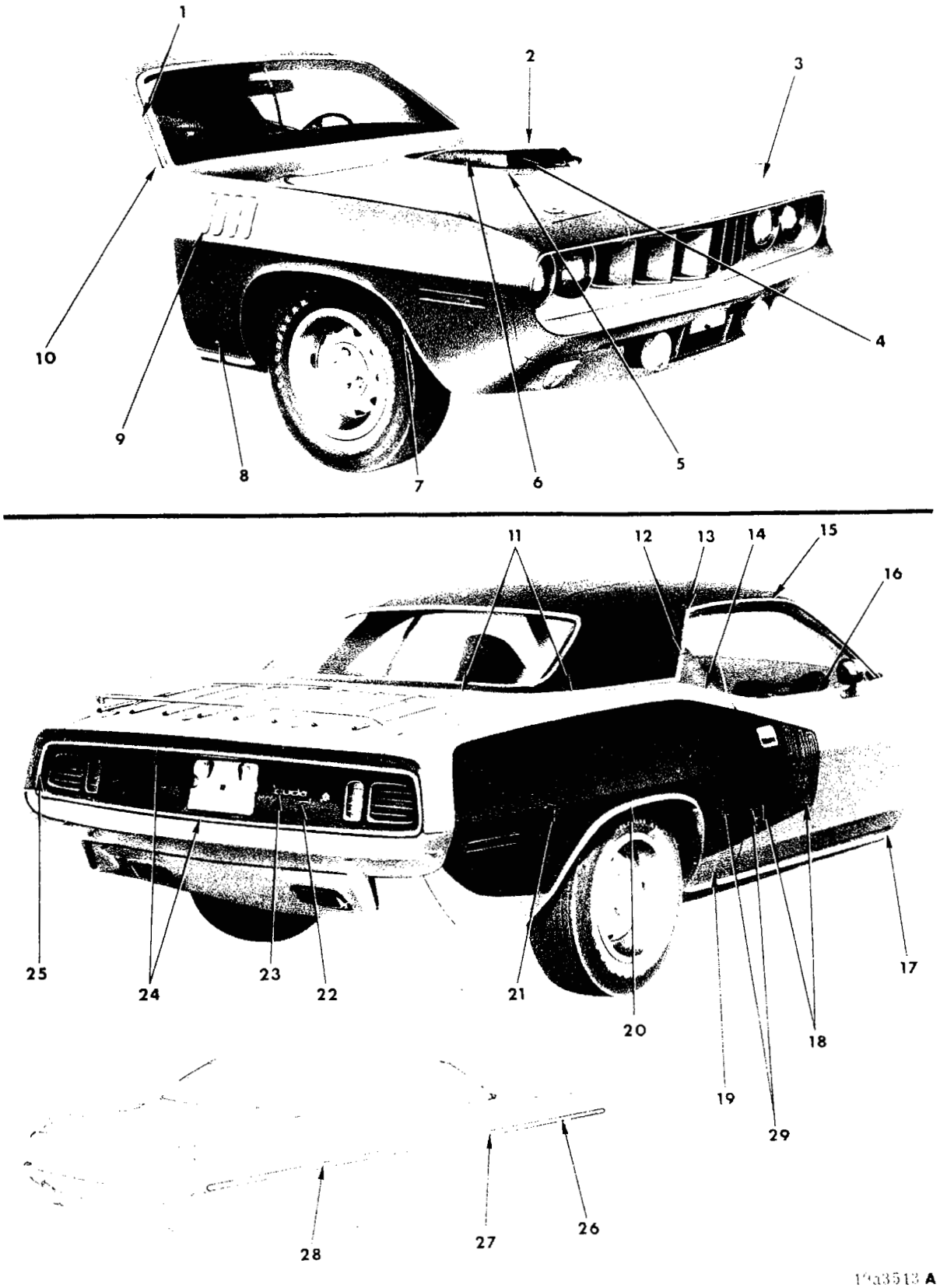

1971
EXTERIOR VIEW - BARRACUDA (CUDA) B-S 2 DOOR HARDTOP

REF. NO.	QTY	PART NUMBER	DESCRIPTION
1	1	3419 906-7	MOULDING PACKAGE, Body Front Pillar Drain Trough (23-59-61)
	6	6028 721	Screw
2	1	3577 472	SCOOP, Hood Carb. F/Air (15-03-64)
3	1	2998 042	NAME PLATE, Hood, "Plymouth" (15-06-3)
	3	9411 943	Nut
4	1	3418 660-1	GRILLE, Hood Scoop Carb. F/Air (15-03-15)
	4	6028 683	Screw 4 6026 935 Nut
5	1	3514 076	MOULDING PACKAGE, Hood Air Cleaner Opng. (15-25-2)
	14	6028 951	Nut and Washer
6	2	3462 271	NAME PLATE, Hood Scoop, "Cuda 340" (15-06-3)
	2	2998 796	"Cuda 383" (15-06-3)
	2	2998 798	"Cuda 440-6" (15-06-3)
	2	3577 361	"340-Four Barrel" (15-06-3)
	2	3443 159	"Cuda 340" (w/o F/Air)
7	1	3419 702-3	MOULDING PACKAGE, Fender Wheel Opng. (12-15-2)
	18	6028 545	Screw
8	1	2785 540	MEDALLION, Fender Side, Rt., Pentastar (12-15-21)
9	8	3505 460	ORNAMENT, Fender Side Louver (12-15-21)
	4	3506 414	Retainer
	16	6027 466	Nut
10	1	3446 456-7	MOULDING, Body Frt. Pillar, Lwr. (23-23-14)
	2	6028 674	Screw
11	1	3419 782-3	MOULDING PACKAGE, Qtr. Outside Belt (23-23-39)
	10	6003 241	Retainer
	10	6026 581	Stud
	4	6002 957	Retainer
	4	9420 291	Nut
12	1	3549 192-3	MOULDING PACKAGE, Roof Side Drain Trough, Rear (23-59-61)
	4	6028 721	Screw
13	1	3444 582-3	CAP, Roof Side Drain Trough, Front to Rear Corner (23-59-57)
	2	6028 721	Screw
14	1	3620 324-5	MOULDING PACKAGE, Qtr. Wdo. Outside Belt (23-23-39)
	2	6001 910	Retainer
	1	6028 721	Screw
15	1	3549 190-1	MOULDING PACKAGE, Roof Side Drain Trough, Front (23-59-61)
	12	6028 721	Screw
16	1	3419 778-9	MOULDING PACKAGE, Door Outside Belt (23-23-32)
	2	6003 134	Retainer
	2	116 000	Nut
	14	6003 133	Retainer
17	2	3579 148	MOULDING PACKAGE, Body Side Sill (23-23-2)
	7	6003 201	Retainer
	7	6024 271	Screw
	2	6028 939	Screw
18	1	3569 710-1	DECAL, Door, "340", Black (23-11-15)
	1	3569 706-7	"340", White (23-11-15)
	1	3569 716-7	"383", Black (23-11-15)
	1	3569 712-3	"383", White (23-11-15)
	1	3569 722-3	"440", Black (23-11-15)
	1	3569 718-9	"440", White (23-11-15)
	1	3569 728-9	"Hemi", Black (23-11-15)
	1	3569 724-5	"Hemi", White (23-11-15)
19	1	3481 968-9	ORNAMENT, Qtr. Outside Pnl. Air Intake (23-34-334)
	4	9420 867	Nut
	4	---- ---	Screw
20	1	3419 784-5	MOULDING PACKAGE, Qtr. Outside Wheel Opening (23-23-39)
	18	6028 545	Screw
21	1	3569 734-5	OVERLAY, Qtr. Outside Pnl., Black (23-34-329)
	1	3569 730-1	White (23-34-329)
22	1	3570 075	NAME PLATE, Deck Opening Lwr. Panel, "By Plymouth" (23-34-184)
	2	9420 263	Nut
23	1	3570 071	NAME PLATE, Deck Opening Lwr. Pnl., "Cuda" (23-34-184)
24	2	3419 708	MOULDING PACKAGE, Deck Opng. Lwr. Pnl., Upr. and Lwr. (23-23-23)
	6	6002 873	Retainer w/Seal
	1	6002 891	Retainer
25	1	3419 704-5	MOULDING PACKAGE, Deck Opng. Lwr. Pnl. End (23-23-23)
	2	6003 022	Retainer w/Seal
	2	1839 995	Nut
26	1	2965 354-5	MOULDING, Fender Side, Black, Up to Sept. 1, 1970 (12-15-2)
	1	3570 702-3	Green, Up to Sept. 1, 1970
	1	3570 704-5	Gold, Up to Sept. 1, 1970
	2	3613 830	MOULDING, Fender Side, Black, After Sept. 1, 1970 (12-15-2)
	2	3613 832	Gold, After Sept. 1, 1970
	2	3613 834	Green, After Sept. 1, 1970
	AR	3613 507	TAPE, Fender, Green (Above and Below Mldg.)(12-15-33)
	AR	3613 508	Black (Above and Below Mldg.) (12-15-33)
	AR	3613 506	Gold (Above and Below Mldg.) (12-15-33)

CONTINUED ON NEXT PAGE

All Packages Include Attaching Parts

Part Type Code is Indicated in Parentheses

REF. NO.	QTY	PART NUMBER	DESCRIPTION
27	2	2965 356	MOULDING, Door, Black, Up to Sept. 1, 1970 (23-23-32)
	2	3570 708	Green, Up to Sept. 1, 1970 (23-23-32)
	2	3570 710	Gold, Up to Sept. 1, 1970 (23-23-32)
	2	3613 830	MOULDING, Door, Black, After Sept. 1, 1970 (23-23-32)
	2	3613 832	Gold, After Sept. 1, 1970 (23-23-32)
	2	3613 834	Green, After Sept. 1, 1970 (23-23-32)
	AR	3613 507	TAPE, Door, Green (Above and Below Mldg.) (23-23-12)
	AR	3613 508	Black (Above and Below Mldg.) (23-23-12)
	AR	3613 506	Gold (Above and Below Mldg.) (23-23-12)
28	1	2965 358-9	MOULDING, Qtr. Outside, Black, Up to Sept. 1, 1970 (23-23-39)
	1	3570 714-5	Green, Up to Sept. 1, 1970 (23-23-39)
	1	3570 716-7	Gold, Up to Sept. 1, 1970 (23-23-39)
	2	3613 830	MOULDING, Qtr. Pnl., Black, After Sept. 1, 1970 (23-23-39)
	2	3613 832	Gold, After Sept. 1, 1970 (23-23-39)
	2	3613 834	Green, After Sept. 1, 1970 (23-23-39)
	AR	3613 507	TAPE, Qtr., Green (Above and Below Mldg.) (23-23-12)
	AR	3613 508	Black (Above and Below Mldg.) (23-23-12)
	AR	3613 506	Gold (Above and Below Mldg.) (23-23-12)
29	1	3685 406-7	TAPE and DECAL PACKAGE, Door, Qtr. Pnl., "340", White (23-11-15)
	1	3685 410-1	"340", Black (23-11-15)
	1	3685 412-3	"383", White (23-11-15)
	1	3685 416-7	"383", Black (23-11-15)
	1	3685 418-9	"440", White (23-11-15)
	1	3685 422-3	"440", Black (23-11-15)
	1	3685 424-5	"Hemi", White (23-11-15)
	1	3685 428-9	"Hemi", Black (23-11-15)

All Packages Include Attaching Parts

Part Type Code is Indicated in Parentheses

1971
EXTERIOR VIEW - BARRACUDA (CUDA) B-S 2 DOOR HARDTOP

NOTES

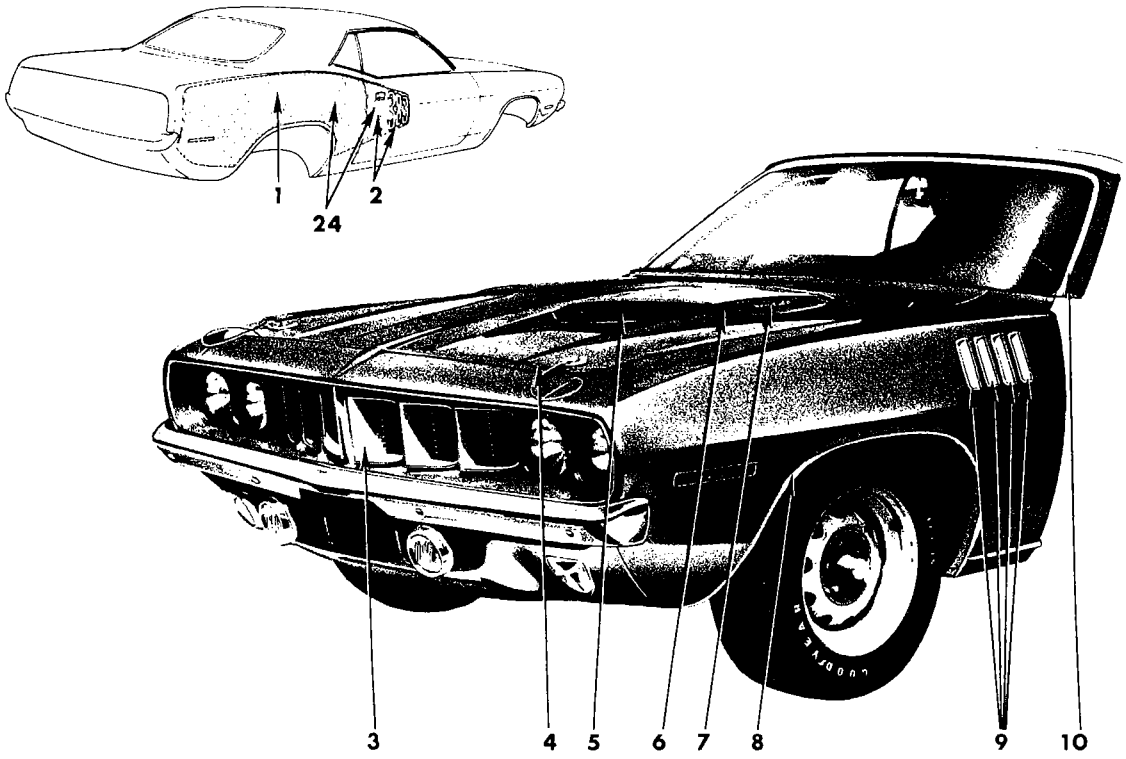

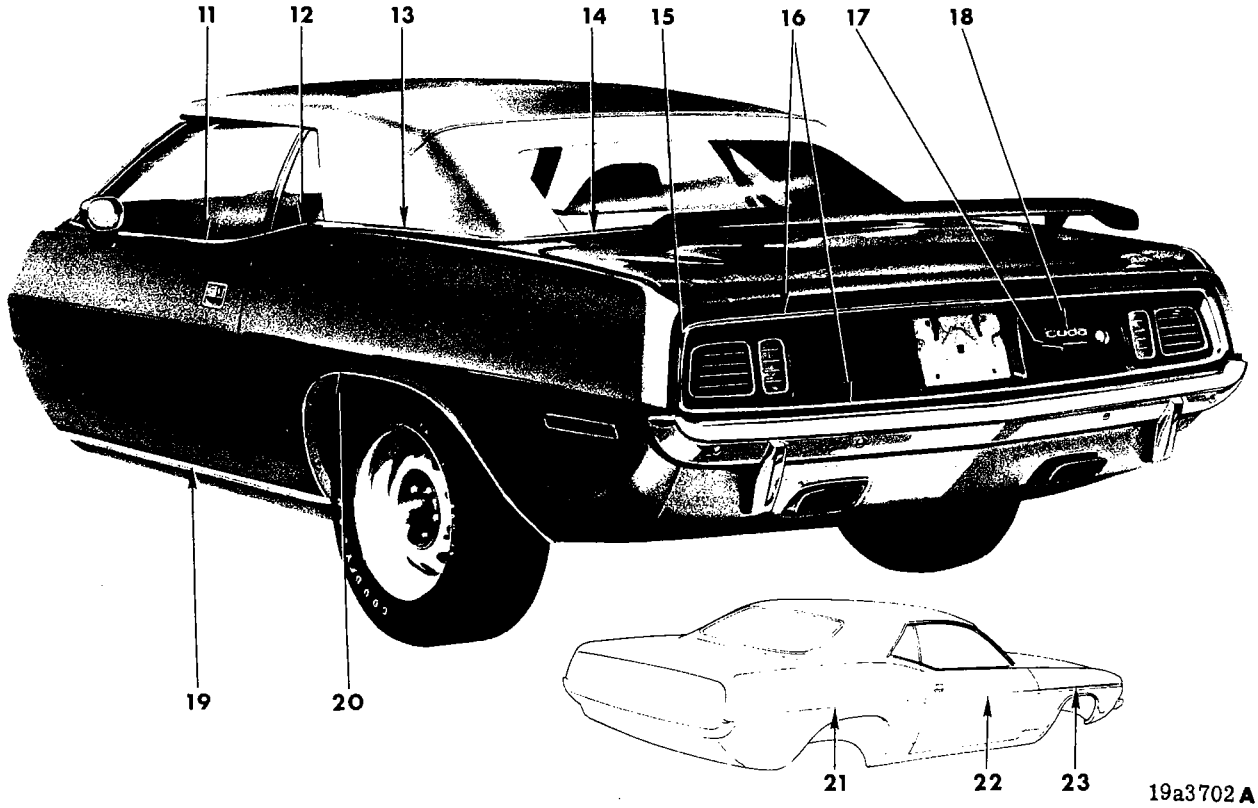

1971
EXTERIOR VIEW - BARRACUDA (CUDA) B-S CONVERTIBLE COUPE

REF. NO.	QTY	PART NUMBER	DESCRIPTION
1	1	3569 734-5	OVERLAY, Qtr. Outside Pnl., Black (23-34-329)
	1	3569 730-1	White (23-34-329)
2	1	3569 710-1	DECAL, Door, 340, Black (23-11-15)
	1	3569 706-7	340, White (23-11-15)
	1	3569 716-7	383, Black (23-11-15)
	1	3569 712-3	383, White (23-11-15)
	1	3569 722-3	440, Black (23-11-15)
	1	3569 718-9	440, White (23-11-15)
	1	3569 728-9	Hemi, Black (23-11-15)
	1	3569 724-5	Hemi, White (23-11-15)
3	1	3442 647	GRILLE, Painted Tex. Argent (7-16-11)
	1	3443 587	Painted GW3, Bright White (7-16-11)
	1	3443 589	Painted EV2, Tor. Red (7-16-11)
	1	3443 593	Painted GB5, Bright Blue (7-16-11)
	1	3443 597	Painted GF7, Med. Yellow-Green Metallic (7-16-11)
	1	3443 599	Painted GK6, Med. Bronze Met. (7-16-11)
	1	3443 601	Painted FE5, Red (7-16-11)
	1	3573 611	Painted FJ6, Avocado (7-16-11)
	1	3573 612	Painted GY3, Citron Yella (7-16-11)
	1	3573 613	Painted FC7, Plum Met. (7-16-11)
4	1	2998 042	NAME PLATE, Hood (15-06-3)
	3	9411 943	Nut
5	1	2998 212-3	TEXTURE, Hood Top Ornament (15-03-79)
	4	6028 683	Screw
6	1	2998 034-5	ORNAMENT, Hood Top (15-03-18)
	12	9420 293	Nut
	12	6026 029	Washer
7	2	3443 159	NAME PLATE, Hood Scoop, "Cuda 340" (15-06-3)
	2	2998 796	"Cuda 383" (15-06-3)
	2	2998 798	"Cuda 440-6" (15-06-3)
8	1	3419 702-3	MOULDING PACKAGE, Fender Wheel Opng. (12-15-2)
	18	6028 545	Screw
9	8	3505 460	ORNAMENT, Fender Side Louver (12-15-21)
	4	3506 414	Retainer
	16	6027 466	Nut
10	1	3419 814-5	MOULDING PACKAGE, Body Frt. Upr. Pillar (23-23-14)
	2	6002 688	Retainer Screw & Seal
	2	3445 622	Spacer
11	1	3419 778-9	MOULDING PACKAGE, Door Outside Belt (23-23-32)
	2	6003 134	Retainer
	2	116 000	Nut
	14	6003 133	Retainer
12	1	3419 770-1	MOULDING PACKAGE, Qtr. Outside Belt, Frt. (23-23-39)
	2	9420 276	Nut
	2	9418 464	Screw
13	1	3419 774-5	MOULDING PACKAGE, Qtr. Outside Belt, Rr. (23-23-39)
	12	6002 976	Retainer
	12	9429 605	Screw
14	1	3419 776	MOULDING PACKAGE, Deck Opng. Upr. Pnl. (23-23-31)
	9	6003 130	Retainer
15	1	3419 704-5	MOULDING PACKAGE, Deck Opng. Lwr. Pnl. End (23-23-23)
	2	6003 022	Retainer w/Seal
	2	1839 995	Nut
16	2	3419 708	MOULDING PACKAGE, Deck Opng. Lwr. Pnl., Upr. and Lwr. (23-23-23)
	6	6002 873	Retainer w/Seal
	1	6002 891	Retainer
17	1	3570 075	NAME PLATE, Deck Opening Lower Panel, "By Plymouth" (23-34-184)
	2	9420 263	Nut
18	1	3570 071	NAME PLATE, Deck Opening Lower Panel, "Cuda" (23-34-184)
19	2	3579 148	MOULDING PACKAGE, Body Side Sill (23-23-2)
	7	6003 201	Retainer
	7	6024 271	Screw
	2	6028 939	Screw
20	1	3419 784-5	MOULDING PACKAGE, Qtr. Outside Wheel Opening (23-23-39)
	18	6028 545	Screw
21	1	2965 358-9	MOULDING, Qtr. Outside, Black, Up to Sept. 1, 1970 (23-23-39)
	1	3570 714-5	Green, Up to Sept. 1, 1970 (23-23-39)
	1	3570 716-7	Gold, Up to Sept. 1, 1970 (23-23-39)
	2	3613 830	MOULDING, Qtr. Pnl., Black, After Sept. 1, 1970 (23-23-39)
	2	3613 832	Gold, After Sept. 1, 1970 (23-23-39)
	2	3613 834	Green, After Sept. 1, 1970 (23-23-39)
	AR	3613 507	TAPE, Qtr., Green (Above and Below Mldg.)(23-23-12)
	AR	3613 508	Black (Above and Below Mldg.) (23-23-12)
	AR	3613 506	Gold (Above and Below Mldg.) (23-23-12)

CONTINUED ON NEXT PAGE

All Packages Include Attaching Parts

Part Type Code is Indicated in Parentheses

REF. NO.	QTY	PART NUMBER	DESCRIPTION
22	2	2965 356	MOULDING, Door, Black, Up to Sept. 1, 1970 (23-23-32)
	2	3570 708	Green, Up to Sept. 1, 1970 (23-23-32)
	2	3570 710	Gold, Up to Sept. 1, 1970 (23-23-32)
	2	3613 830	MOULDING, Door, Black, After Sept. 1, 1970 (23-23-32)
	2	3613 832	Gold, After Sept. 1, 1970 (23-23-32)
	2	3613 834	Green, After Sept. 1, 1970 (23-23-32)
	AR	3613 507	TAPE, Door, Green (Above and Below Mldg.) (23-23-12)
	AR	3613 508	Black (Above and Below Mldg.) (23-23-12)
	AR	3613 506	Gold (Above and Below Mldg.) (23-23-12)
23	1	2965 354-5	MOULDING, Fender Side, Black, Up to Sept. 1, 1970 (12-15-2)
	1	3570 702-3	Green, Up to Sept. 1, 1970 (12-15-2)
	1	3570 704-5	Gold, Up to Sept. 1, 1970 (12-15-2)
	2	3613 830	MOULDING, Fender Side, Black, After Sept. 1, 1970 (12-15-2)
	2	3613 832	Gold, After Sept. 1, 1970 (12-15-2)
	2	3613 834	Green, After Sept. 1, 1970 (12-15-2)
	AR	3613 507	TAPE, Fender, Green (Above and Below Mldg.)(12-15-33)
	AR	3613 508	Black (Above and Below Mldg.) (12-15-33)
	AR	3613 506	Gold (Above and Below Mldg.) (12-15-33)
24	1	3685 406-7	TAPE and DECAL PACKAGE, Door, Qtr. Pnl., "340", White (23-11-15)
	1	3685 410-1	"340", Black (23-11-15)
	1	3685 412-3	"383", White (23-11-15)
	1	3685 416-7	"383", Black (23-11-15)
	1	3685 418-9	"440", White (23-11-15)
	1	3685 422-3	"440", Black (23-11-15)
	1	3685 424-5	"Hemi", White (23-11-15)
	1	3685 428-9	"Hemi", Black (23-11-15)

All Packages Include Attaching Parts

Part Type Code is Indicated in Parentheses

1971
EXTERIOR VIEW - BARRACUDA (CUDA) B-S CONVERTIBLE COUPE

NOTES

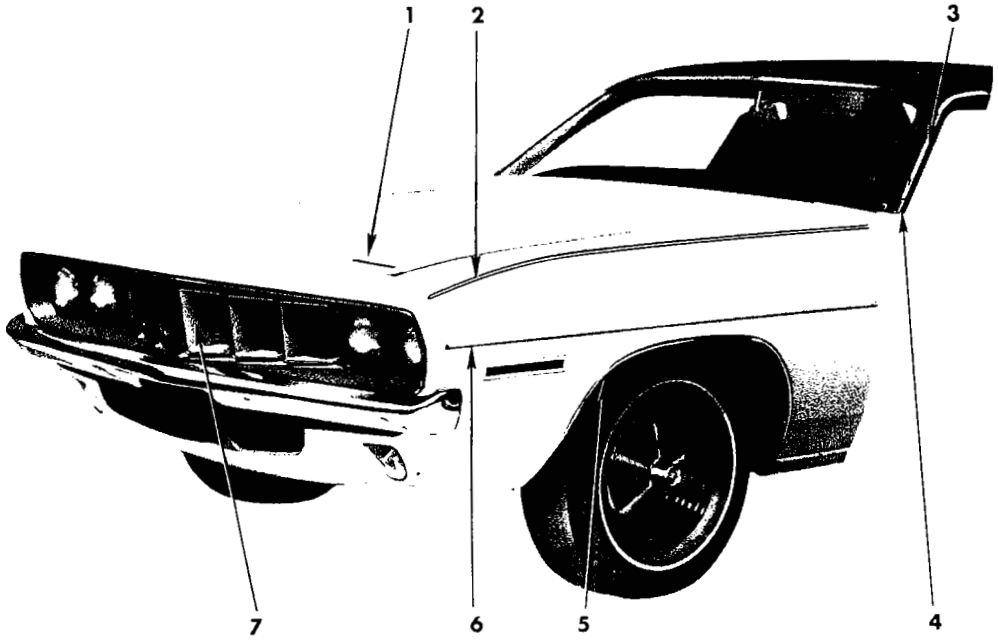

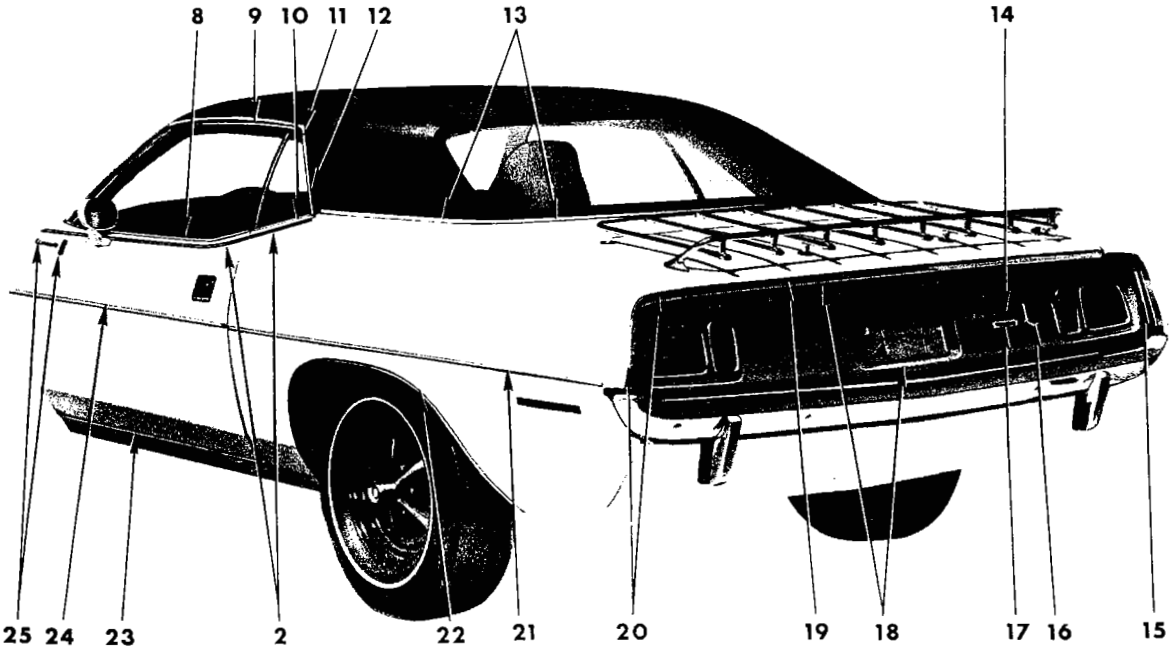

19a3701 **A**

1971
EXTERIOR VIEW - BARRACUDA (GRAN COUPE) B-P 2 DOOR HARDTOP

REF. NO.	QTY	PART NUMBER	DESCRIPTION
1	1	2998 042	NAME PLATE, Hood Front (15-06-3)
	3	9411 943	Nut
2	1	3569 610-1	TAPE, Fender Side Color Stripe, White (12-15-33)
	1	3569 612-3	Black (12-15-33)
	1	3569 614-5	Gold (12-15-33)
	1	3569 616-7	Green (12-15-33)
	1	3569 618-9	Blue (12-15-33)
	1	3569 666-7	TAPE, Qtr. Pnl. Color Stripe, White (23-23-12)
	1	3569 668-9	Black (23-23-12)
	1	3569 670-1	Gold (23-23-12)
	1	3569 672-3	Green (23-23-12)
	1	3569 674-5	Blue (23-23-12)
	1	3613 194	TAPE, Door Outside, Rt., Black (23-23-12)
	1	3613 195	Rt., White (23-23-12)
	1	3613 196	Rt., Gold (23-23-12)
	1	3613 197	Rt., Green (23-23-12)
	1	3613 198	Rt., Blue (23-23-12)
	1	3613 199	Lt. Frt., Black (23-23-12)
	1	3613 200	Lt. Frt., White (23-23-12)
	1	3613 201	Lt. Frt., Gold (23-23-12)
	1	3613 202	Lt. Frt., Green (23-23-12)
	1	3613 203	Lt. Frt., Blue (23-23-12)
	1	3613 204	Lt. Rear, Black (23-23-12)
	1	3613 205	Lt. Rear, White (23-23-12)
	1	3613 206	Lt. Rear, Gold (23-23-12)
	1	3613 207	Lt. Rear, Green (23-23-12)
	1	3613 208	Lt. Rear, Blue (23-23-12)
	1	3685 190-1	TAPE PACKAGE, Body Side, Fender, Door, Qtr. Panel, White (23-23-12)
	1	3685 188-9	Black (23-23-12)
	1	3685 194-5	Gold (23-23-12)
	1	3685 196-7	Green (23-23-12)
	1	3685 192-3	Blue (23-23-12)
3	1	3419 906-7	MOULDING PACKAGE, Body Front Pillar Drain Trough (23-59-61)
	6	6028 721	Screw
4	1	3446 456-7	MOULDING, Body Frt. Pillar, Lwr. (23-23-14)
	2	6028 674	Screw
5	1	3419 702-3	MOULDING PACKAGE, Fender Wheel Opng. (12-15-2)
	18	6028 545	Screw
6	1	2965 354-5	MOULDING, Fender Side, Black, Up to Sept. 1, 1970 (12-15-2)
	1	3570 702-3	Green, Up to Sept. 1, 1970 (12-15-2)
	1	3570 704-5	Gold, Up to Sept. 1, 1970 (12-15-2)
	2	3613 830	MOULDING, Fender Side, Black, After Sept. 1, 1970 (12-15-2)
	2	3613 832	Gold, After Sept. 1, 1970 (12-15-2)
	2	3613 834	Green, After Sept. 1, 1970 (12-15-2)
	AR	3613 507	TAPE, Fender, Green (Above and Below Mldg.)(12-15-33)
	AR	3613 508	Black (Above and Below Mldg.) (12-15-33)
	AR	3613 506	Gold (Above and Below Mldg.) (12-15-33)
7	1	3442 647	GRILLE (7-16-11)
8	1	3419 778-9	MOULDING PACKAGE, Door Outside Belt (23-23-32)
	2	6003 134	Retainer
	2	116 000	Nut
	14	6003 133	Retainer
9	1	3549 190-1	MOULDING PACKAGE, Roof Side Drain Trough, Front (23-59-61)
	12	6028 721	Screw
10	1	3620 324-5	MOULDING PACKAGE, Qtr. Wdo. Outside Belt (23-23-39)
	2	6001 910	Retainer
	1	6028 721	Screw
11	1	3444 582-3	CAP, Roof Side Drain Trough (23-59-57)
	2	6028 721	Screw
12	1	3549 192-3	MOULDING PACKAGE, Roof Side Drain Trough, Rear (23-59-61)
	4	6028 721	Screw
13	1	3419 782-3	MOULDING PACKAGE, Qtr. Outside Belt (23-23-39)
	10	6003 241	Retainer
	10	6026 581	Stud
	4	6002 957	Retainer
	4	9420 291	Nut
14	1	3505 456	NAME PLATE, Deck Opening Lower Panel, "Barracuda" (23-34-184)
	3	9420 263	Nut
15	1	3419 704-5	MOULDING PACKAGE, Deck Opng. Lwr. Pnl. End (23-23-23)
	2	6003 022	Retainer w/Seal
	2	1839 995	Nut
16	1	3454 767	MEDALLION, Deck Lid Lock Cyl. (23-17-19)
17	1	3570 075	NAME PLATE, Deck Opening Lower Panel, "By Plymouth" (23-34-184)
	2	9420 263	Nut
18	1	3419 708	MOULDING PACKAGE, Deck Opng. Lwr. Pnl., Upr. and Lwr. (23-23-23)
	6	6002 873	Retainer w/Seal
	1	6002 891	Retainer
19	1	3419 701	MOULDING PACKAGE, Deck Lid (23-23-30)
	6	---- ---	Retainer w/Seal
20	1	3419 706-7	MOULDING PACKAGE, Qtr. Outside, Rear (23-23-39)
	6	6002 885	Retainer w/Seal
	6	9420 867	Nut

CONTINUED ON NEXT PAGE

All Packages Include Attaching Parts

Part Type Code is Indicated in Parentheses

REF. NO.	QTY	PART NUMBER	DESCRIPTION
21	1	2965 358-9	MOULDING, Qtr. Outside, Black, Up to Sept. 1, 1970 (23-23-39)
	1	3570 714-5	Green, Up to Sept. 1, 1970 (23-23-39)
	1	3570 716-7	Gold, Up to Sept. 1, 1970 (23-23-39)
	2	3613 830	MOULDING, Qtr. Pnl., Black, After Sept. 1, 1970 (23-23-39)
	2	3613 832	Gold, After Sept. 1, 1970 (23-23-39)
	2	3613 834	Green, After Sept. 1, 1970 (23-23-39)
	AR	3613 507	TAPE, Qtr., Green (Above and Below Mldg.) (23-23-12)
	AR	3613 508	Black (Above and Below Mldg.) (23-23-12)
	AR	3613 506	Gold (Above and Below Mldg.) (23-23-12)
22	1	3419 784-5	MOULDING PACKAGE, Qtr. Outside Wheel Opening (23-23-39)
	18	6028 545	Screw
23	1	3579 146-7	MOULDING PACKAGE, Body Side Sill (23-23-2)
	2	9416 444	Screw
	7	6003 199	Retainer
24	2	2965 356	MOULDING, Door, Black, Up to Sept. 1, 1970 (23-23-32)
	2	3570 708	Green, Up to Sept. 1, 1970 (23-23-32)
	2	3570 710	Gold, Up to Sept. 1, 1970 (23-23-32)
	2	3613 830	MOULDING, Door, Black, After Sept. 1, 1970 (23-23-32)
	2	3613 832	Gold, After Sept. 1, 1970 (23-23-32)
	2	3613 834	Green, After Sept. 1, 1970 (23-23-32)
	AR	3613 507	TAPE, Door, Green (Above and Below Mldg.) (23-23-12)
	AR	3613 508	Black (Above and Below Mldg.) (23-23-12)
	AR	3613 506	Gold (Above and Below Mldg.) (23-23-12)
25	2	3505 456	NAME PLATE, Door Outside, "Barracuda" (23-11-21)
	2	3505 457	MEDALLION, Door Outside, "Crest" (23-11-21)
**	1	3514 076	MOULDING PACKAGE, Hood A/Clnr. Opng. (15-25-2)

All Packages Include Attaching Parts

Part Type Code is Indicated in Parentheses

1971
EXTERIOR VIEW - BARRACUDA (GRAN COUPE) B-P 2 DOOR HARDTOP

NOTES

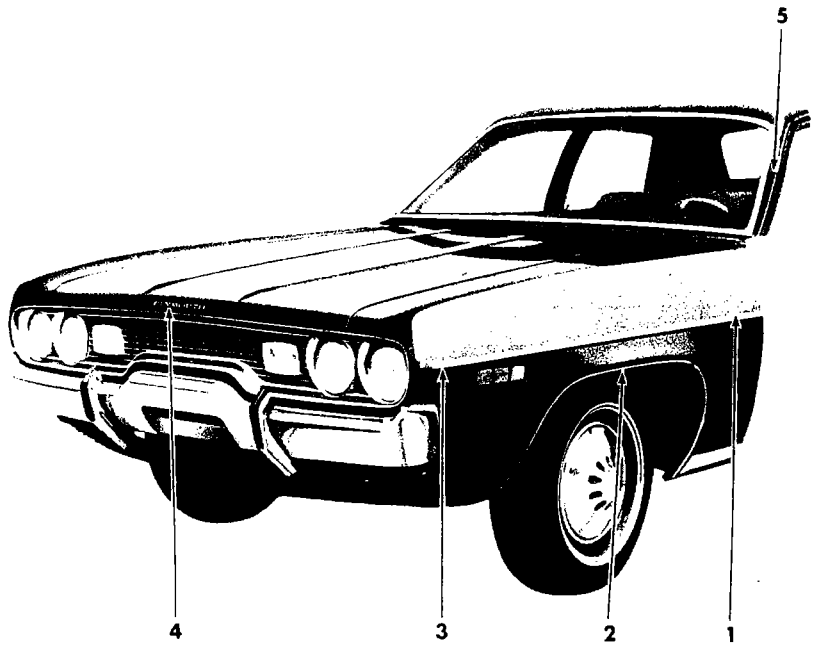

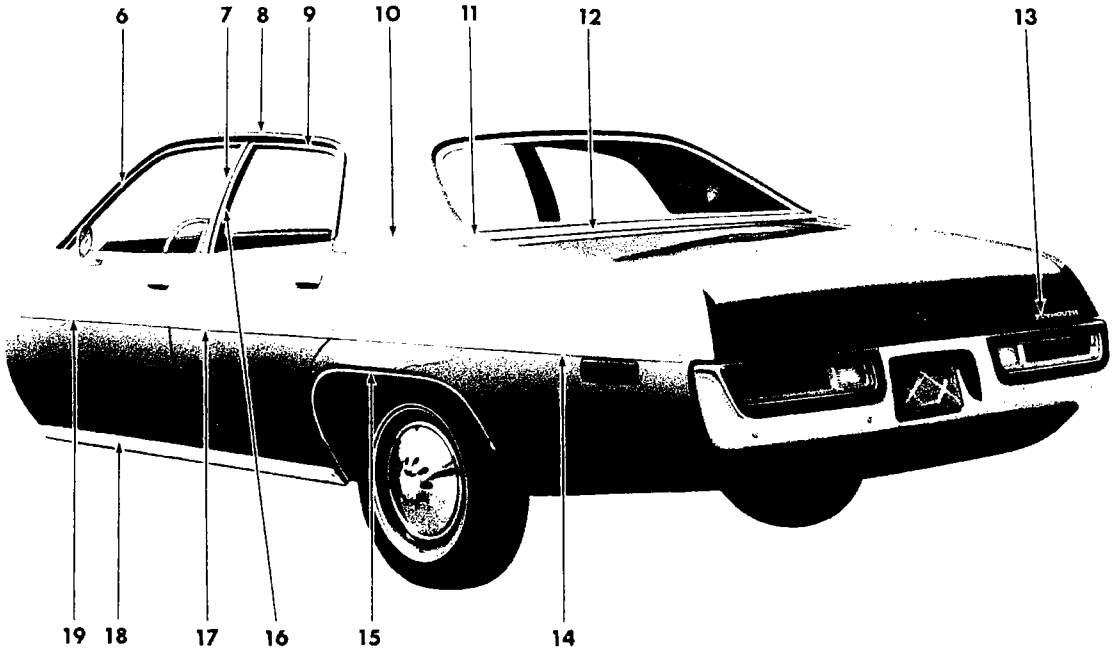

19a3653

1971
EXTERIOR VIEW - SATELLITE R-L 4 DOOR SEDAN

REF. NO.	QTY	PART NUMBER	DESCRIPTION
1	2	3505 020	NAME PLATE, Fender Side, "Satellite" (12-15-21)
2	1	3579 314-5	MOULDING PACKAGE, Fender Wheel Opng. (12-15-2)
	8	6024 271	Screw
3	1	3579 308-9	MOULDING PACKAGE, Fender Side, Black (12-15-2)
	2	6002 938	Retainer
	2	6026 523	Nut
	5	6002 291	Retainer
	5	6024 271	Screw
4	1	2785 791	NAME PLATE, Hood Front (15-06-3)
	3	6027 552	Nut
5	1	3504 840-1	MOULDING, Body Front Pillar Drain Trough, w/o Vinyl Roof (23-59-61)
	1	3504 842-3	MOULDING, Body Front Pillar Drain Trough, w/Vinyl Roof (23-59-61)
6	1	3439 712-3	MOULDING, Frt. Door Wdo. Opng. Frame, Frt. (23-23-32)
7	1	3439 716-7	MOULDING, Frt. Door Wdo. Opng. Frame, Rr. (23-23-32)
8	1	3445 118-9	MOULDING, Roof Side Drain Trough, w/o Vinyl Roof (23-59-61)
	1	3504 844-5	MOULDING, Roof Side Drain Trough, w/Vinyl Roof (23-59-61)
9	1	3440 032-3	MOULDING, Rear Door Wdo. Opng. Frame, Upr. (23-23-33)
10	1	3579 330-1	MOULDING and CAP PACKAGE, Qtr. Outside Belt, Frt. (23-23-39)
	3	6003 133	Retainer
	3	6024 271	Screw
11	1	3579 332-3	MOULDING PACKAGE, Qtr. Outside Belt, Rr. (23-23-39)
	2	6023 898	Screw
	1	---- ---	Nut
12	1	3579 334-5	MOULDING PACKAGE, Deck Opng. Upr. Pnl. (23-23-31)
	4	6003 133	Retainer
	4	6024 271	Screw
	2	6023 898	Screw
13	1	3445 250	NAME PLATE, Deck Lid, "Plymouth" (23-19-114)
14	1	3579 338-9	MOULDING PACKAGE, Qtr. Outside, Black (23-23-39)
	6	6024 271	Screw
	6	6002 291	Retainer
	2	6001 915	Clip
	2	6024 152	Nut
15	1	3579 340-1	MOULDING PACKAGE, Qtr. Outside Whl. Opng. (23-23-39)
	8	6024 271	Screw
16	1	3440 030-1	MOULDING, Rear Door Wdo. Opng. Frame, Frt. (23-23-33)
17	1	3579 328-9	MOULDING PACKAGE, Rear Door, Black (23-23-33)
	2	6026 523	Nut
	2	6002 938	Retainer
	3	6024 271	Screw
	3	6002 291	Retainer
18	2	3579 150	MOULDING PACKAGE, Body Side Sill (23-23-2)
	1	6002 977	Retainer
	7	6003 194	Retainer
	7	6024 271	Screw
19	1	3579 326-7	MOULDING PACKAGE, Frt. Door, Black (23-23-32)
	2	6002 938	Retainer
	2	6026 523	Nut
	3	6024 271	Screw
	3	6002 291	Retainer

All Packages Include Attaching Parts

Part Type Code is Indicated in Parentheses

1971
EXTERIOR VIEW - SATELLITE R-L 4 DOOR SEDAN

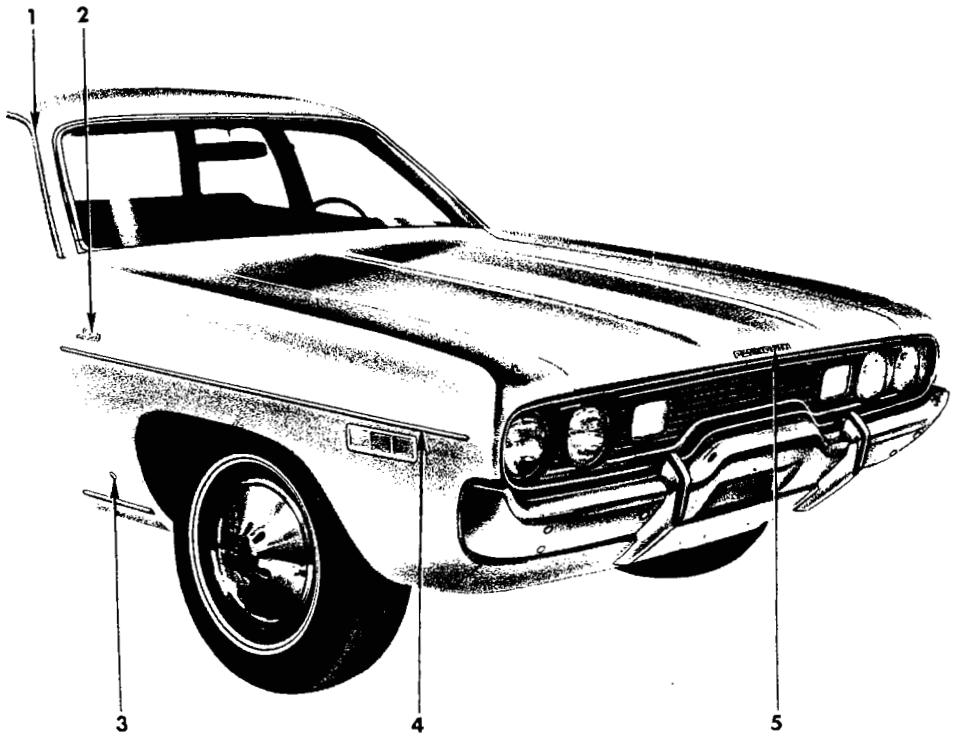

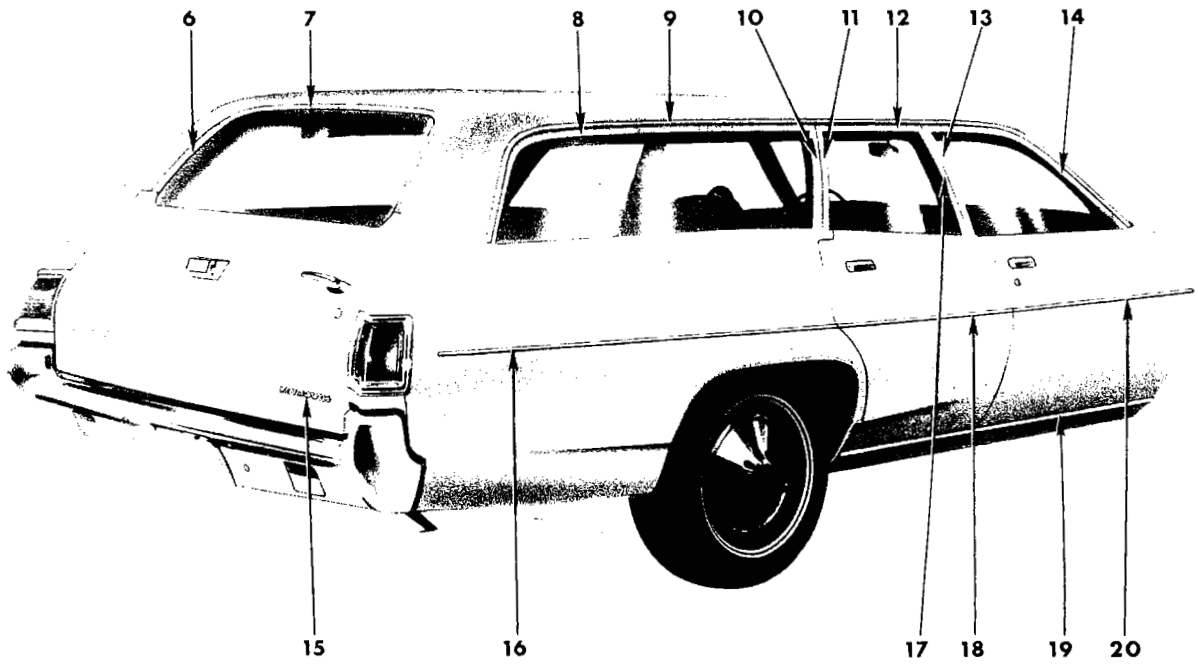

19a3536

1971
EXTERIOR VIEW - SATELLITE R-L STATION WAGON

REF. NO.	QTY	PART NUMBER	DESCRIPTION
1	1	3504 840-1	MOULDING, Body Front Pillar Drain Trough (23-59-61)
2	2	3505 020	NAME PLATE, Fender Side, "Satellite" (12-15-21)
3	1	2785 540	MEDALLION, Fender Side, Rt., Pentastar (12-15-21)
4	1	3579 308-9	MOULDING PACKAGE, Fender Side, Black (12-15-2)
	2	6002 938	Retainer
	2	6026 523	Nut
	5	6002 291	Retainer
	5	6024 271	Screw
5	1	2785 791	NAME PLATE, Hood Front (15-06-3)
	3	6027 552	Nut
6	1	3440 194-5	MOULDING, Qtr. Pnl. Tailgate Pillar Upr. Outside, Galv. Steel (23-23-60)
	4	9414 732	Screw
7	1	3440 120	MOULDING, Roof Pnl. Outside Tailgate Opng., Upr., Galv. Steel (23-23-60)
	6	9414 732	Screw
8	1	3620 082-3	MOULDING PACKAGE, Qtr. Wdo. Outside, Upr. and Rear, Stainless Steel (23-23-73)
	1	3620 088-9	MOULDING PACKAGE, Qtr. Wdo. Outside, Upr. and Rear, Galv. Steel (23-23-73)
	10	6003 238	Retainer
	10	6024 271	Screw
9	1	3504 848-9	MOULDING, Roof Side Drain Trough (23-59-61)
10	1	3620 084-5	MOULDING PACKAGE, Qtr. Wdo. Outside, Frt., Stainless Steel (23-23-73)
	1	3620 086-7	MOULDING PACKAGE, Qtr. Wdo. Outside, Frt., Galv. Steel (23-23-73)
	3	6024 271	Screw
11	1	3440 036-7	MOULDING, Rear Door Wdo. Opng. Frame, Rr. (23-23-33)
12	1	3440 034-5	MOULDING, Rear Door Wdo. Opng. Frame, Upr. (23-23-33)
13	1	3439 716-7	MOULDING, Frt. Door Wdo. Opng. Frame, Rr. (23-23-32)
14	1	3439 712-3	MOULDING, Frt. Door Wdo. Opng. Frame, Frt. (23-23-32)
15	1	3445 250	NAME PLATE, Tailgate Outside Panel, "Plymouth" (23-54-11)
16	1	3620 072-3	MOULDING PACKAGE, Qtr. Outside, Black (23-23-39)
	18	6002 291	Retainer
	18	6026 581	Stud
17	1	3440 030-1	MOULDING, Rear Door Wdo. Opng. Frame, Frt. (23-23-33)
18	1	3579 328-9	MOULDING PACKAGE, Rear Door, Black (23-23-33)
	2	6002 938	Retainer
	3	6002 291	Retainer
	2	6026 523	Nut
	3	6024 271	Screw
19	2	3579 150	MOULDING PACKAGE, Body Side Sill (23-23-2)
	1	6002 977	Retainer
	7	6003 194	Retainer
	7	6024 271	Screw
20	1	3579 326-7	MOULDING PACKAGE, Frt. Door, Black (23-23-32)
	2	6002 238	Retainer
	3	6002 291	Retainer
	3	6024 271	Screw
	2	6026 523	Nut

All Packages Include Attaching Parts

Part Type Code is Indicated in Parentheses

1971
EXTERIOR VIEW - SATELLITE R-L STATION WAGON

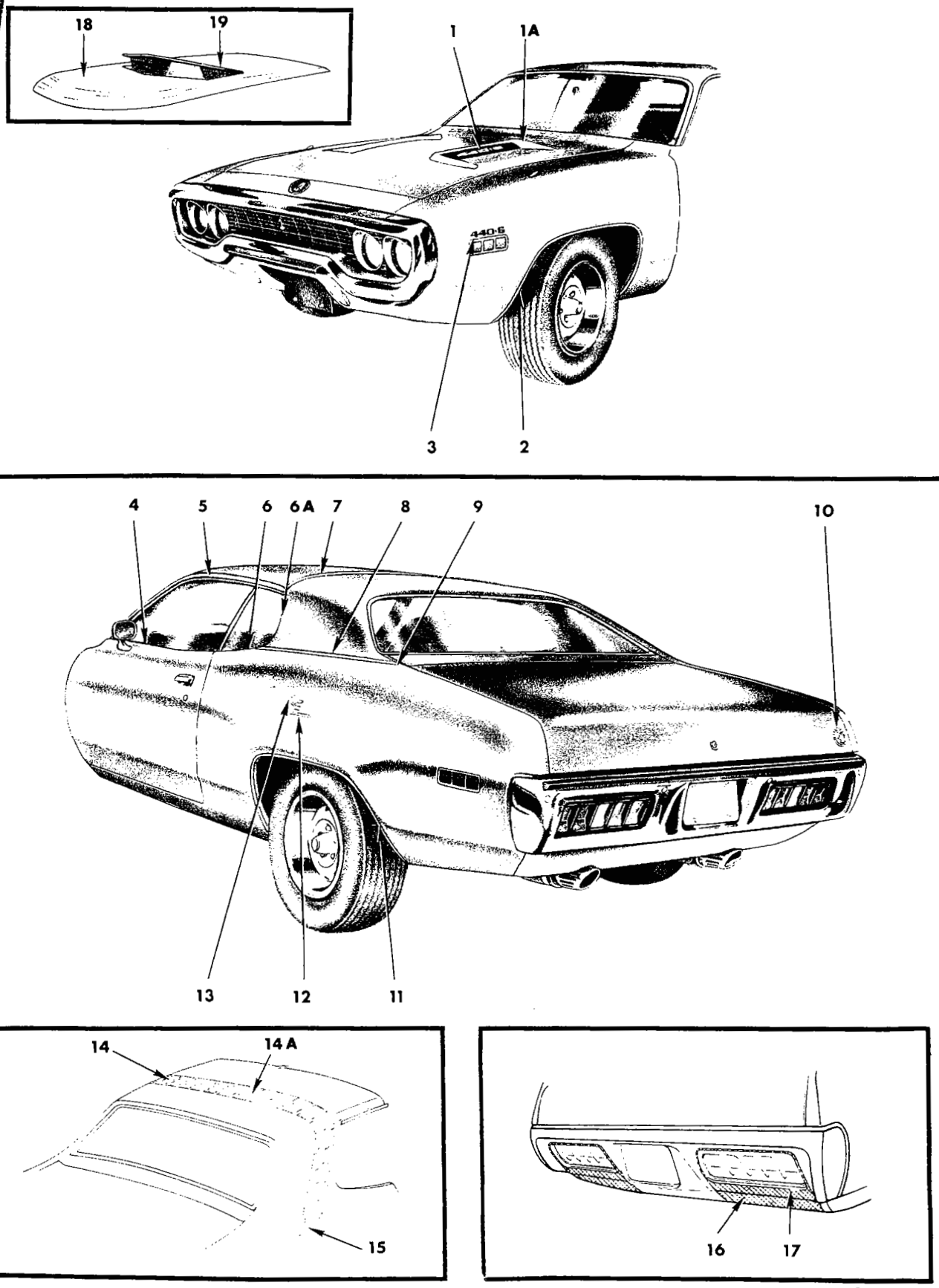

19a3597 **B**

1971
EXTERIOR VIEW - ROAD RUNNER R-M 2 DOOR HARDTOP

REF. NO.	QTY	PART NUMBER	DESCRIPTION
1	2	3443 514	DECAL, Hood, "440-6" (15-03-18)
	2	3573 678	"340" (15-03-18)
	2	3442 888	"383" (15-03-18)
	2	3442 951	"440" (15-03-18)
1A	1	3443 442-3	ORNAMENT, Hood Top (15-03-18)
2	1	3579 304-5	MOULDING PACKAGE, Fender Wheel Opng. (12-15-2)
	8	6024 271	Screw
3	2	3613 098	DECAL, Fender Side, "340", White (12-15-21)
	2	3613 099	"340", Black (12-15-21)
	2	3569 828	"383", White (12-15-21)
	2	3569 829	"383", Black (12-15-21)
	2	3569 830	"440", White (12-15-21)
	2	3569 831	"440", Black (12-15-21)
	2	3569 832	"440-6", White (12-15-21)
	2	3569 833	"440-6", Black (12-15-21)
	2	3569 834	"Hemi", White (12-15-21)
	2	3569 835	"Hemi", Black (12-15-21)
4	1	3579 356-7	MOULDING PACKAGE, Door Outside Belt (23-23-32)
	4	6003 133	Retainer
	4	6024 271	Screw
	1	6001 836	Retainer
	1	6026 523	Nut
5	1	3504 832-3	MOULDING, Roof Side Drain Trough, w/o Vinyl Roof (23-59-61)
	1	3504 834-5	MOULDING, Roof Side Drain Trough, w/Vinyl Roof (23-59-61)
6	1	3579 350-1	MOULDING PACKAGE, Qtr. Wdo. Outside Rear to Belt (23-23-39)
	2	6003 133	Retainer
	1	6003 252	Retainer
	1	6003 251	Retainer
6A	1	3621 580-1	MOULDING PACKAGE, Qtr. Outside, Rear, use w/o Belt Mldg. (23-23-39)
	2	6003 251	Retainer w/Seal
	2	6003 252	Retainer w/Seal
	2	9414 752	Screw
7	1	3579 361	MOULDING PACKAGE, Roof Outside Transverse, Black, Up to Dec. 1, 1970 (23-23-42)
	1	3570 656	MOULDING, Roof Outside Transverse, Green, Up to Dec. 1, 1970 (23-23-42)
	1	3570 657	Gold, Up to Dec. 1, 1970 (23-23-42)
	1	3570 658	White, Up to Dec. 1, 1970 (23-23-42)
	3	6003 133	Retainer
	3	6024 271	Screw
	1	9420 867	Screw
	1	6002 920	Retainer
7 Cont'd	1	3621 561	MOULDING PACKAGE, Roof Outside Transverse, Black, Rt. and Lt., After Dec. 1, 1970 (23-23-42)
	1	3621 562	Green, Rt. and Lt., After Dec. 1, 1970 (23-23-42)
	1	3621 563	Gold, Rt. and Lt., After Dec. 1, 1970 (23-23-42)
	1	3621 564	White, Rt. and Lt., After Dec. 1, 1970 (23-23-42)
	2	6002 920	Retainer Stud & Seal
	2	9420 867	Nut
	6	6003 241	Retainer
8	1	3579 354-5	MOULDING PACKAGE, Qtr. Outside Belt, Frt., use w/Vinyl Roof or Two Tone Paint (23-23-39)
	3	6003 133	Retainer
	3	6024 271	Screw
9	1	3579 352-3	MOULDING PACKAGE, Qtr. Outside Belt, Rear, use w/Vinyl Roof or Two Tone Paint (23-23-39)
	1	6023 898	Screw
	1	---- ---	Nut
10	1	3570 028	DECAL, Deck Lid, "Bird" (23-19-6)
11	1	3579 344-5	MOULDING PACKAGE, Qtr. Outside Wheel Opening (23-23-39)
	8	6024 271	Screw
12	2	3505 944	NAME PLATE, Qtr. Panel, "Road" (23-34-238)
	2	3505 945	"Runner" (23-34-238)
	AR	6002 852	Retainer
13	1	2964 112-3	DECAL, Qtr. Panel, "Bird" (23-34-334)
14	1	3569 818 Rt.	TAPE and DECAL, Roof Transverse, White (23-34-334)
	1	3613 015 Lt.	White (23-34-334)
	1	3569 822 Rt.	Gold (23-34-334)
	1	3613 011 Lt.	Gold (23-34-334)
	1	3569 820 Rt.	Black (23-34-334)
	1	3613 013 Lt.	Black (23-34-334)
	1	3613 872-3	White (For Repairs) (23-34-334)
	1	3613 874-5	Gold (For Repairs) (23-34-334)
	1	3613 870-1	Black (For Repairs) (23-34-334)
14A	1	3569 812	TAPE, Roof Transverse, White (23-34-334)
	1	3569 813	Black (23-34-334)
	1	3569 814	Gold (23-34-334)
15	1	2964 112-3	DECAL, Roof Transverse Color Tape, "Bird" (23-34-334)
16	1	3569 566-7	TAPE, Rear Stone Deflector, Black (13-66-106)
17	1	3569 564-5	TAPE, Rear Bumper, Black (13-66-49)
18	1	3443 458	ORNAMENT, Hood (Bubble) less Door-Fiber Glass, w/F/Air (15-03-18)
19	2	3443 515	DECAL, "Air Grabber", Top of F/Air Door (15-03-18)
	1	3443 630-1	"Air Grabber" (Teeth) Side of F/Air Door (15-03-18)

NOTE: After April prod. cars use 3685 280

All Packages Include Attaching Parts

Part Type Code is Indicated in Parentheses

1971

EXTERIOR VIEW - ROAD RUNNER R-M 2 DOOR HARDTOP

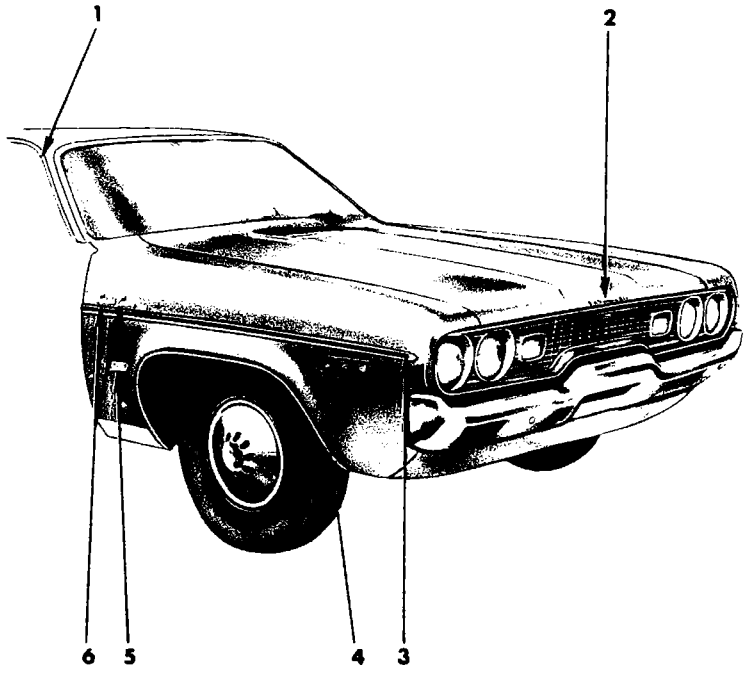

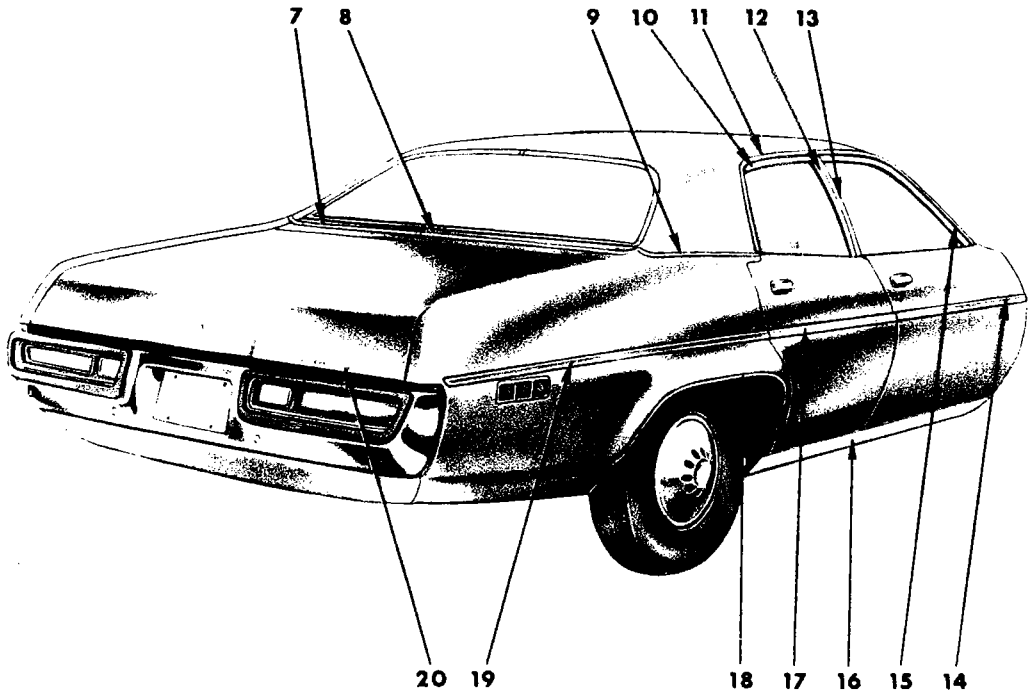

19a3476

1971
EXTERIOR VIEW - SATELLITE CUSTOM R-H 4 DOOR SEDAN

REF. NO.	QTY	PART NUMBER	DESCRIPTION
1	1	3504 840-1	MOULDING, Body Frt. Pillar Drain Trough, w/o Vinyl Roof (23-59-61)
	1	3504 842-3	MOULDING, Body Frt. Pillar Drain Trough, w/Vinyl Roof (23-59-61)
2	1	2785 791	NAME PLATE, Hood Front (15-06-3)
	3	9420 278	Nut
3	1	3579 306-7	MOULDING PACKAGE, Fender Side (12-15-2)
	1	3579 308-9	Black (12-15-2)
	1	3579 634-5	Green (12-15-2)
	1	3579 636-7	Blue (12-15-2)
	1	3579 638-9	Gold (12-15-2)
	1	3579 640-1	White (12-15-2)
	2	6002 938	Retainer
	5	6002 291	Retainer 2 6026 523 Nut
	5	6024 271	Screw
4	1	3579 314-5	MOULDING PACKAGE, Fender Wheel Opng. (12-15-2)
	8	6024 271	Screw
5	2	2579 804	ORNAMENT, Fender Side, "383 4 Barrel" (12-15-21)
	6	6026 404	Nut
6	1	3505 020	NAME PLATE, Fender Side, "Satellite" (12-15-21)
	1	3506 496	NAME PLATE, Fender Side, "Custom" (12-15-21)
	1	2785 540	MEDALLION, Fender Side, Rt., Pentastar (12-15-21)
7	1	3579 334-5	MOULDING PACKAGE, Deck Opng. Upr. Pnl., use w/Vinyl Roof or Two Tone Paint (23-23-31)
	4	6003 133	Retainer
	4	6024 271	Screw
	2	6023 898	Screw
8	1	3579 332-3	MOULDING PACKAGE, Qtr. Outside Belt, Rear, use w/Vinyl Roof or Two Tone Paint (23-23-39)
	2	6023 898	Screw
	1	---- ---	Nut
9	1	3579 330-1	MOULDING and CAP PACKAGE, Qtr. Outside Belt, Frt., use w/Vinyl Roof or Two Tone Paint (23-23-39)
	3	6003 133	Retainer
	3	6024 271	Screw
10	1	3440 032-3	MOULDING, Rear Door Wdo. Opng. Frame, Upr. (23-23-33)
11	1	3445 118-9	MOULDING, Roof Side Drain Trough, w/o Vinyl Roof (23-59-61)
	1	3504 844-5	MOULDING, Roof Side Drain Trough, w/Vinyl Roof (23-59-61)
12	1	3440 030-1	MOULDING, Rear Door Wdo. Opng. Frame, Frt. (23-23-33)
13	1	3439 716-7	MOULDING, Frt. Door Wdo. Opng. Frame, Rr. (23-23-32)
14	1	3579 322-3	MOULDING PACKAGE, Frt. Door Outside (23-23-32)
	1	3579 326-7	Black (23-23-32)
	1	3579 642-3	Green (23-23-32)
	1	3579 644-5	Blue (23-23-32)
	1	3579 646-7	Gold (23-23-32)
	1	3579 648-9	White (23-23-32)
	2	6002 938	Retainer 2 6026 523 Nut
	3	6024 271	Screw
	3	6002 291	Retainer
15	1	3439 712-3	MOULDING, Frt. Door Wdo. Opng. Frame, Frt. (23-23-32)
16	1	3579 348-9	MOULDING PACKAGE, Body Side Sill (23-23-2)
	1	6002 977	Retainer
	1	9420 867	Nut
	7	6024 271	Screw
	7	6003 194	Retainer
	1	6026 760	Screw
17	1	3579 324-5	MOULDING PACKAGE, Rear Door Outside (23-23-33)
	1	3579 328-9	Black (23-23-33)
	1	3579 650-1	Green (23-23-33)
	1	3579 652-3	Blue (23-23-33)
	1	3579 654-5	Gold (23-23-33)
	1	3579 656-7	White (23-23-33)
	2	6002 938	Retainer 2 6026 523 Nut
	3	6024 271	Screw
	3	6002 291	Retainer
18	1	3579 340-1	MOULDING PACKAGE, Qtr. Outside Whl. Opng. (23-23-39)
	8	6024 271	Screw
19	1	3579 336-7	MOULDING PACKAGE, Qtr. Outside (23-23-39)
	1	3579 338-9	Black (23-23-39)
	1	3579 702-3	Green (23-23-39)
	1	3579 704-5	Blue (23-23-39)
	1	3579 706-7	Gold (23-23-39)
	1	3579 708-9	White (23-23-39)
	5	6002 291	Retainer
	5	6024 271	Screw 2 6001 915 Clip
	2	6024 271	Screw
	1	6003 012	Retainer
20	1	3445 250	NAME PLATE, Deck Lid, "Plymouth" (23-19-114)

All Packages Include Attaching Parts

Part Type Code is Indicated in Parentheses

1971
EXTERIOR VIEW - SATELLITE CUSTOM R-H 4 DOOR SEDAN

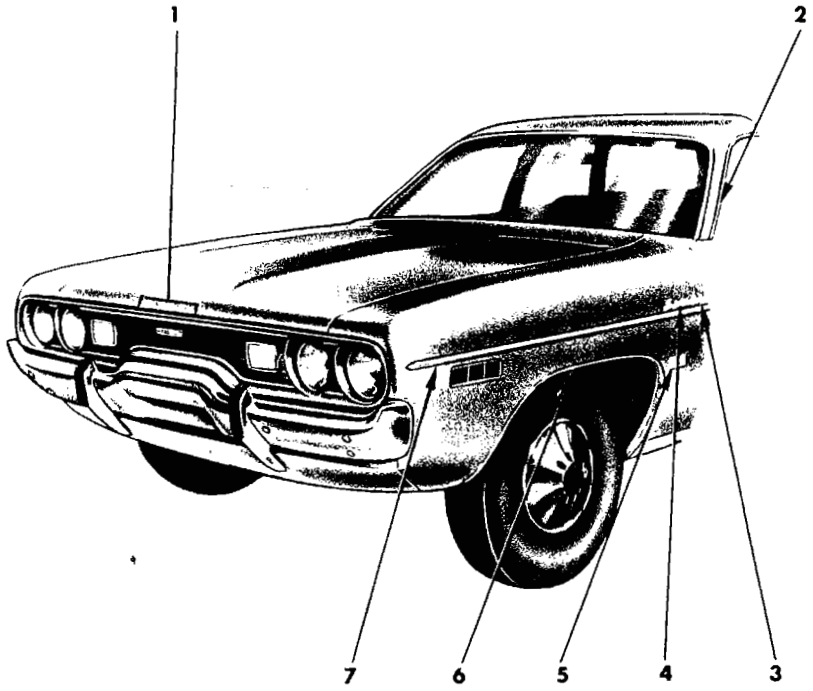

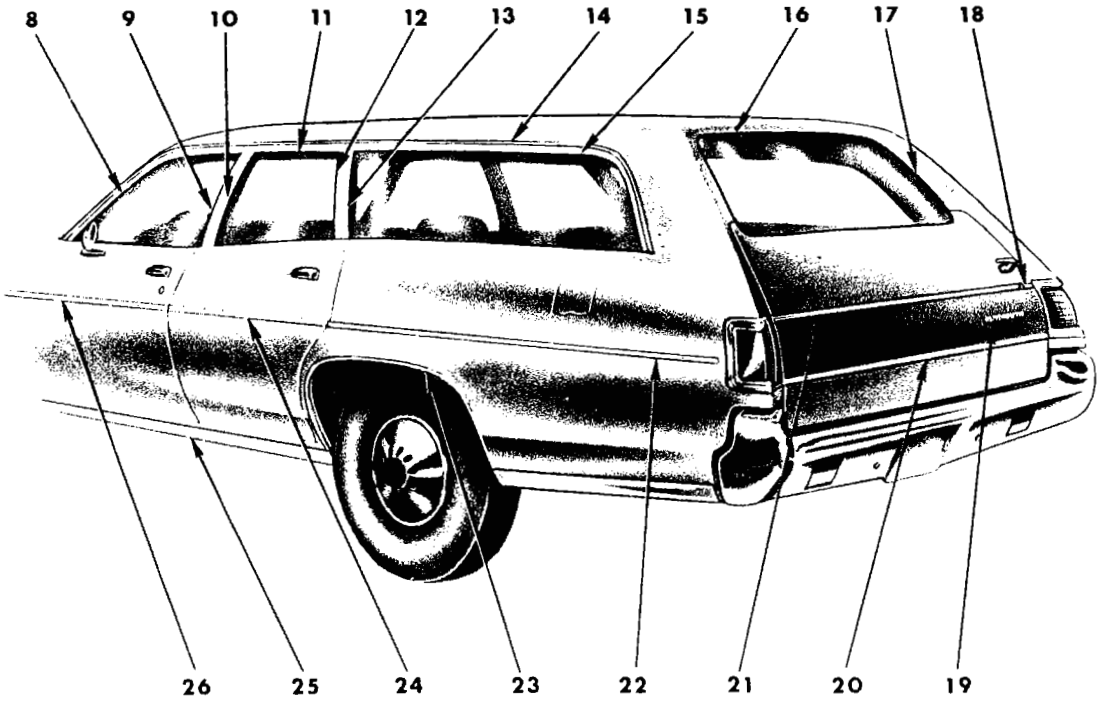

19a3000

1971
EXTERIOR VIEW - SATELLITE CUSTOM R-H STATION WAGON

REF. NO.	QTY	PART NUMBER	DESCRIPTION
1	1	2785 791	NAME PLATE, Hood Front, "Plymouth" (15-06-3)
	3	6027 552	Nut
2	1	3504 840-1	MOULDING, Body Front Pillar Drain Trough (23-59-61)
3	2	3506 496	NAME PLATE, Fender Side, "Custom" (12-15-21)
4	2	3505 020	NAME PLATE, Fender Side, "Satellite" (12-15-21)
5	2	2579 804	ORNAMENT, Fender Side, "383 Four Barrel" (12-15-21)
	6	6026 404	Nut
6	1	3579 314-5	MOULDING PACKAGE, Fender Wheel Opng. (12-15-2)
	8	6024 271	Screw
7	1	3579 306-7	MOULDING PACKAGE, Fender Side (12-15-2)
	2	6002 938	Retainer 2 6026 523 Nut
	5	6002 291	Retainer 5 6024 271 Screw
	1	3579 308-9	MOULDING PACKAGE, Fender Side, Black (12-15-2)
	1	3579 634-5	Green (12-15-2)
	1	3579 636-7	Blue (12-15-2)
	1	3579 638-9	Gold (12-15-2)
	1	3579 640-1	White (12-15-2)
	5	6002 291	Retainer 5 6024 271 Screw
8	1	3439 712-3	MOULDING, Frt. Door Wdo. Opng. Frame, Frt. (23-23-32)
9	1	3439 716-7	MOULDING, Frt. Door Wdo. Opng. Frame, Rr. (23-23-32)
10	1	3440 030-1	MOULDING, Rear Door Wdo. Opng. Frame, Frt. (23-23-33)
11	1	3440 034-5	MOULDING, Rear Door Wdo. Opng. Frame, Upr. (23-23-33)
12	1	3440 036-7	MOULDING, Rear Door Wdo. Opng. Frame, Rr. (23-23-33)
13	1	3620 084-5	MOULDING PACKAGE, Qtr. Wdo. Outside, Frt., Stainless Steel (23-23-73)
	3	6024 271	Screw
	1	3620 086-7	MOULDING PACKAGE, Qtr. Wdo. Outside, Frt., Galv. Steel (23-23-73)
	3	6024 271	Screw
14	1	3504 848-9	MOULDING, Roof Side Drain Trough (23-59-61)
15	1	3620 082-3	MOULDING PACKAGE, Qtr. Wdo. Outside, Upr. and Rear, Stainless Steel (23-23-73)
	10	6003 238	Retainer 10 6024 271 Screw
	1	3620 088-9	MOULDING PACKAGE, Qtr. Wdo. Outside, Upr. and Rear, Galv. Steel (23-23-73)
	10	6003 238	Retainer 10 6024 271 Screw
16	1	3440 120	MOULDING, Roof Pnl. Outside Tailgate Opng., Upr. (23-23-60)
	3	9414 732	Screw
17	2	3440 194	MOULDING, Qtr. Pnl. Outside Pillar, Upr. (23-23-60)
	2	9414 732	Screw
18	1	3579 360	MOULDING PACKAGE, Tailgate Outside Upr. Outer (23-23-61)
	1	6026 403	Nut
19	1	3445 250	NAME PLATE, Tailgate Outside Pnl., "Plymouth" (23-54-11)
20	1	3620 260	MOULDING PACKAGE, Tailgate Outside Lwr. (23-23-61)
	8	6003 132	Retainer 8 6024 271 Screw
21	1	3579 359	MOULDING PACKAGE, Tailgate Outside Upr. (23-23-61)
	3	6003 132	Retainer 3 6024 271 Screw
22	1	3620 070-1	MOULDING PACKAGE, Qtr. Outside (23-23-39)
	18	6002 291	Retainer 18 6026 581 Stud
	1	3620 076-7	MOULDING PACKAGE, Qtr. Outside, Gold (23-23-39)
	1	3620 078-9	Blue (23-23-39)
	1	3620 080-1	Green (23-23-39)
	1	3620 072-3	Black (23-23-39)
	1	3620 074-5	White (23-23-39)
	18	6002 291	Retainer 18 6026 581 Stud
23	1	3579 394-5	MOULDING PACKAGE, Qtr. Outside Whl. Opening (23-23-39)
	8	6024 271	Screw
24	1	3579 324-5	MOULDING PACKAGE, Rear Door (23-23-33)
	2	6002 938	Retainer 2 6026 523 Nut
	3	6002 291	Retainer 3 6024 271 Screw
	1	3579 328-9	MOULDING PACKAGE, Rear Door, Black (23-23-33)
	1	3579 650-1	Green (23-23-33)
	1	3579 652-3	Blue (23-23-33)
	1	3579 654-5	Gold (23-23-33)
	1	3579 656-7	White (23-23-33)
	2	6002 938	Retainer 3 6024 271 Screw
	3	6002 291	Retainer 2 6026 523 Nut
25	1	3579 348-9	MOULDING PACKAGE, Body Side Sill Outside (23-23-2)
	1	6002 977	Retainer 1 9420 867 Nut
	7	6003 194	Retainer 7 6024 271 Screw
	1	6026 760	Screw
26	1	3579 322-3	MOULDING PACKAGE, Front Door (23-23-32)
	2	6002 938	Retainer 2 6026 523 Nut
	3	6002 291	Retainer 3 6024 271 Screw
	1	3579 326-7	MOULDING PACKAGE, Front Door, Black (23-23-32)
	1	3579 642-3	Green (23-23-32)
	1	3579 644-5	Blue (23-23-32)
	1	3579 646-7	Gold (23-23-32)
	1	3579 648-9	White (23-23-32)
	2	6002 238	Retainer
	3	6002 291	Retainer
	3	6024 271	Screw
	2	6026 523	Nut

All Packages Include Attaching Parts

Part Type Code is Indicated in Parentheses

1971
EXTERIOR VIEW - SATELLITE CUSTOM R-H STATION WAGON

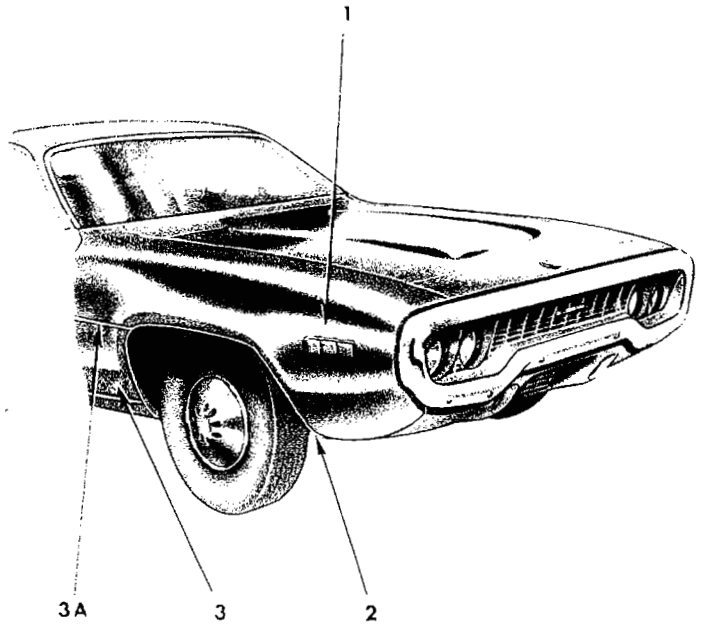

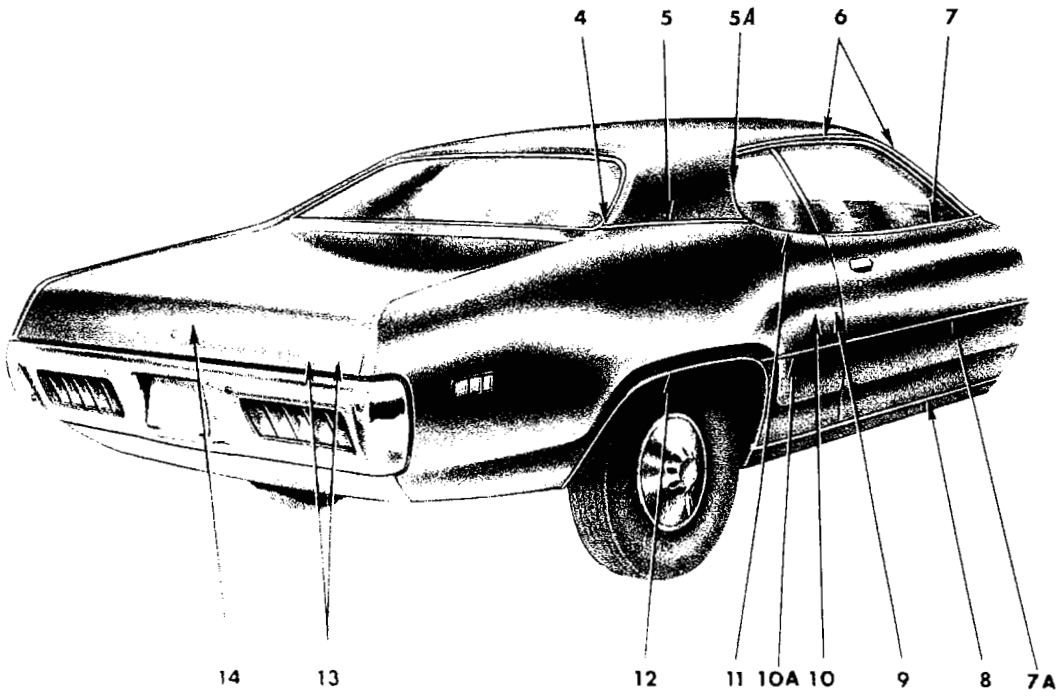

NOTE: R-L 2 Dr. Sedan Ornamentation same as R-H 2 Dr. Hardtop

1971
EXTERIOR VIEW - SATELLITE SEBRING R-H 2 DOOR HARDTOP

REF. NO.	QTY	PART NUMBER	DESCRIPTION
1	2	3569 828	DECAL, Fender Side, "383" White (12-15-21)
	2	3569 829	"383" Black (12-15-21)
	2	3613 098	"340" White (12-15-21)
	2	3613 099	"340" Black (12-15-21)
2	1	3579 304-5	MOULDING PACKAGE, Fender Wheel Opng. (12-15-2)
	8	6024 271	Screw
3	1	2785 540	MEDALLION, Fender Side, Rt., Pentastar (12-15-21)
3A	1	3613 658-9	MOULDING, Fender Side (12-15-2)
4	1	3579 352-3	MOULDING PACKAGE, Qtr. Outside Belt, Rr., use w/Vinyl Roof or Two Tone Paint (23-23-39)
	1	6023 898	Screw
	1	---- ---	Nut
5	1	3579 354-5	MOULDING PACKAGE, Qtr. Outside Belt, Frt., use w/Vinyl Roof or Two Tone Paint (23-23-39)
	3	6003 133	Retainer
	3	6024 271	Screw
5A	1	3621 580-1	MOULDING PACKAGE, Qtr. Outside, Rear, use w/o Belt Mldg. (23-23-39)
	2	6003 251	Retainer w/Seal
	2	6003 252	Retainer w/Seal
	2	9414 752	Screw
6	1	3504 832-3	MOULDING, Roof Side Drain Trough, w/o Vinyl Roof (23-59-61)
	1	3504 834-5	MOULDING, Roof Side Drain Trough, w/Vinyl Roof (23-59-61)
7	1	3579 356-7	MOULDING PACKAGE, Door Outside Belt (23-23-32)
	4	6003 133	Retainer
	4	6024 271	Screw
	1	6001 836	Retainer
	1	6026 523	Nut
7A	2	3613 662	MOULDING, Door (23-23-32)
8	2	3579 123	MOULDING PACKAGE, Body Side Sill (23-23-2)
	1	6002 977	Retainer
	7	6003 194	Retainer
	7	6024 271	Screw
9	2	3612 859	NAME PLATE, Quarter Outside Sebring (23-34-238)
10	2	3505 020	NAME PLATE, Quarter Outside Satellite (23-34-238)
10A	1	3613 660-1	MOULDING, Qtr. Panel (23-23-39)
11	1	3579 350-1	MOULDING PACKAGE, Qtr. Wdo. Outside Rear to Belt (23-23-39)
	2	6003 133	Retainer
	1	6003 252	Retainer
	1	6003 251	Retainer
12	1	3579 344-5	MOULDING PACKAGE, Qtr. Outside Wheel Opening (23-23-39)
	8	6024 271	Screw
13	1	3505 020	NAME PLATE, Deck Lid, "Satellite" (23-19-114)
	1	3612 859	"Sebring" (23-19-114)
14	1	3445 250	NAME PLATE, Deck Lid, "Plymouth" (23-19-114)

All Packages Include Attaching Parts

Part Type Code is Indicated in Parentheses

1971
EXTERIOR VIEW - SATELLITE SEBRING R-H 2 DOOR HARDTOP

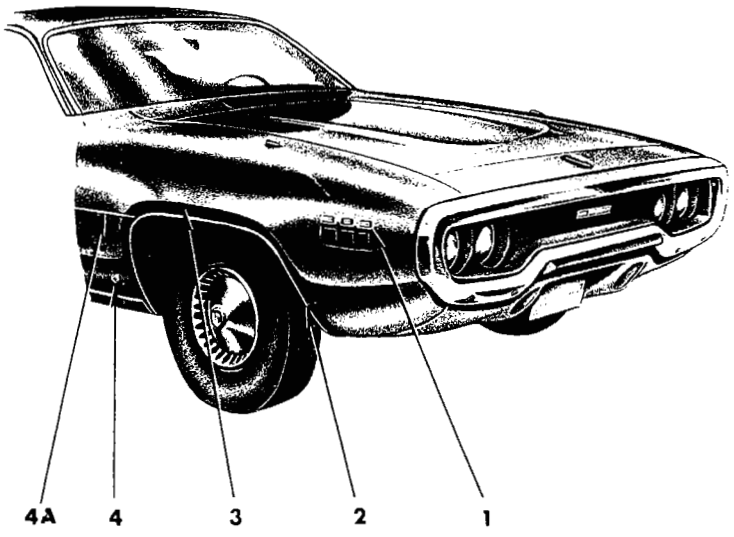

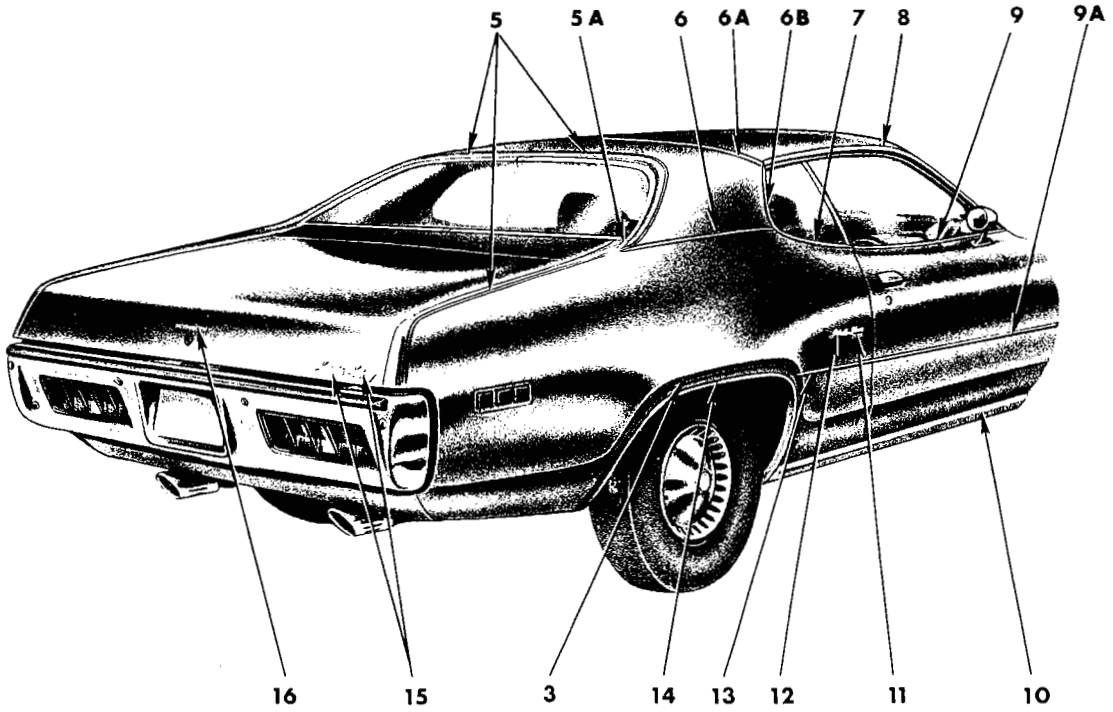

19a3598C

1971
EXTERIOR VIEW - SATELLITE SEBRING "PLUS" R-P 2 DOOR HARDTOP

REF. NO.	QTY	PART NUMBER	DESCRIPTION
1	2	3569 828	DECAL, Fender Side, "383", White (12-15-21)
	2	3569 829	"383", Black (12-15-21)
2	1	3579 304-5	MOULDING PACKAGE, Fender Wheel Opng. (12-15-2)
	8	6024 271	Screw
3	1	3570 008-9	TAPE, Fender Wheel Opng. Color Stripe, White (12-15-33)
	1	3570 010-1	Black (12-15-33)
	1	3570 012-3	Green (12-15-33)
	1	3612 834-5	Blue (12-15-33)
	1	3570 014-5	TAPE, Qtr. Pnl. Wheel Opng. Color Stripe, White (23-23-12)
	1	3570 016-7	Black (23-23-12)
	1	3570 018-9	Green (23-23-12)
	1	3612 836-7	Blue (23-23-12)
	1	3685 174-5	TAPE PACKAGE, Body Side, Fender, Qtr. Pnl., Wheel Opng., White (23-23-12)
	1	3685 172-3	Black (23-23-12)
	1	3685 178-9	Green (23-23-12)
	1	3685 176-7	Blue (23-23-12)
4	1	2785 540	MEDALLION, Fender Side, Rt., Pentastar (12-15-21)
4A	1	3613 658-9	MOULDING, Fender Side (12-15-2)
5	AR	3612 953	TAPE, Qtr. Pnl., Roof, Dark Blue, 3/16" Wide, Up to Dec. 1, 1970 (23-23-12)
	AR	3613 526	Light Blue, 3/16" Wide, After to Dec. 1, 1970 (23-23-12)
	AR	3612 954	Dark Green, 3/16" Wide, Up to Dec. 1, 1970 (23-23-12)
	AR	3613 525	Light Green, 3/16" Wide, After Dec. 1, 1970 (23-23-12)
	AR	3612 955	Gold, 3/16" Wide (23-23-12)
	AR	3612 956	Black, 3/16" Wide (23-23-12)
	AR	3612 957	White, 3/16" Wide (23-23-12)
	AR	3613 637	Blue, 1/8" Wide (23-23-12)
	AR	3613 507	Green, 1/8" Wide (23-23-12)
	AR	3613 636	White, 1/8" Wide (23-23-12)
	AR	3613 508	Black, 1/8" Wide (23-23-12)
	AR	3613 506	Gold, 1/8" Wide (23-23-12)
	NOTE: The above parts are 100 inch Rolls, order by Rolls.		
5A	1	3579 352-3	MOULDING PACKAGE, Qtr. Outside Belt, Rear, use w/Vinyl Roof or Two Tone Paint (23-23-39)
	1	6023 898	Screw
	1	---- ---	Nut
6	1	3579 354-5	MOULDING PACKAGE, Qtr. Outside Belt, Frt., use w/Vinyl Roof or Two Tone Paint (23-23-39)
	3	6003 133	Retainer
	3	6024 271	Screw
6A	1	3579 361	MOULDING PACKAGE, Roof Outside Transverse, Black, Up to Dec. 1, 1970, Up to Type (23-23-42)
	1	3570 656	Green, Up to Dec. 1, 1970, Up to Type (23-23-42)
6A Cont'd	1	3570 657	Gold, Up to Dec. 1, 1970, Up to Type (23-23-42)
	1	3570 658	White, Up to Dec. 1, 1970, Up to Type (23-23-42)
	3	6003 133	Retainer
	3	6024 271	Screw
	1	9420 867	Screw
	1	6002 920	Retainer
	1	3621 561	MOULDING PACKAGE, Roof Outside Transverse, Black, Rt. and Lt., After Dec. 1. 1970 (23-23-42)
	1	3621 562	Green, Rt. and Lt., After Dec. 1, 1970 (23-23-42)
	1	3621 563	Gold, Rt. and Lt., After Dec. 1, 1970 (23-23-42)
	1	3621 564	White, Rt. and Lt., After Dec. 1, 1970 (23-23-42)
	2	6002 920	Retainer, Stud and Seal
	6	6003 241	Retainer 2 9420 867 Nut
6B	1	3621 580-1	MOULDING PACKAGE, Qtr. Outside, Rear, use w/o Belt Mldg. (23-23-39)
	2	6003 251	Retainer w/Seal
	2	6003 252	Retainer w/Seal
	2	9414 752	Screw
7	1	3579 350-1	MOULDING PACKAGE, Qtr. Wdo. Outside Rear to Belt (23-23-39)
	2	6003 133	Retainer
	1	6003 252	Retainer 1 6003 251 Ret.
8	1	3504 832-3	MOULDING, Roof Side Drain Trough, w/o Vinyl Roof (23-59-61)
	1	3504 834-5	MOULDING, Roof Side Drain Trough, w/Vinyl Roof (23-59-61)
9	1	3579 356-7	MOULDING PACKAGE, Door Outside Belt (23-23-32)
	4	6003 133	Retainer 4 6024 271 Screw
	1	6001 836	Retainer 1 6026 523 Nut
9A	2	3613 662	MOULDING, Door (23-23-32)
10	1	3579 342-3	MOULDING PACKAGE, Body Side Sill (23-23-2)
	1	6002 977	Retainer
	7	6003 194	Retainer 1 9420 867 Nut
	7	6024 271	Screw 1 6026 760 Screw
11	2	3612 863	NAME PLATE, Qtr. Outside Panel, "Sebring Plus" (23-34-238)
12	2	3505 020	NAME PLATE, Qtr. Outside, "Satellite" (23-34-238)
13	1	3613 660-1	MOULDING, Qtr. Panel (23-23-32)
14	1	3579 344-5	MOULDING PACKAGE, Qtr. Outside Wheel Opng. (23-23-39)
	8	6024 271	Screw
15	1	3505 020	NAME PLATE, Deck Lid, "Satellite" (23-19-114)
	1	3612 859	"Sebring" (23-19-114)
16	1	3445 250	NAME PLATE, Deck Lid, "Plymouth" (23-19-114)

All Packages Include Attaching Parts

Part Type Code is Indicated in Parentheses

1971
EXTERIOR VIEW - SATELLITE SEBRING "PLUS" R-P 2 DOOR HARDTOP

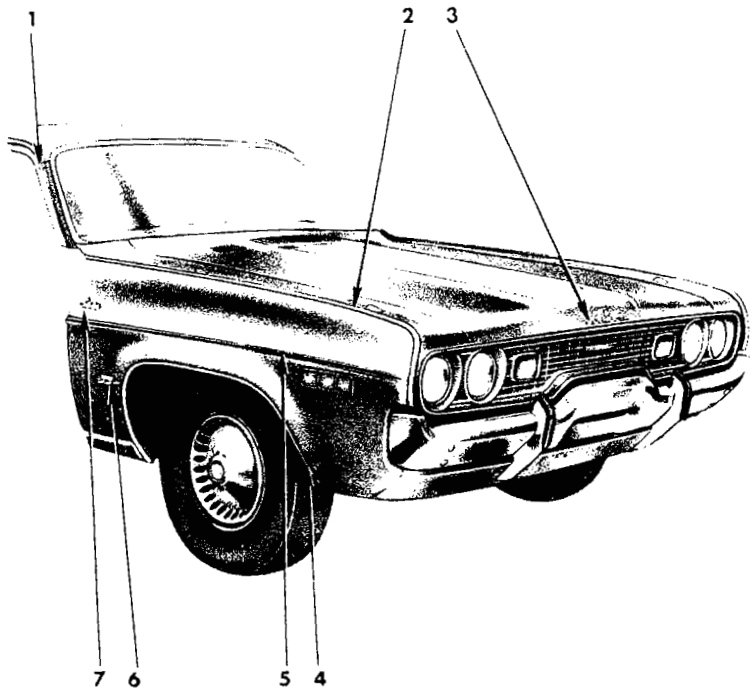

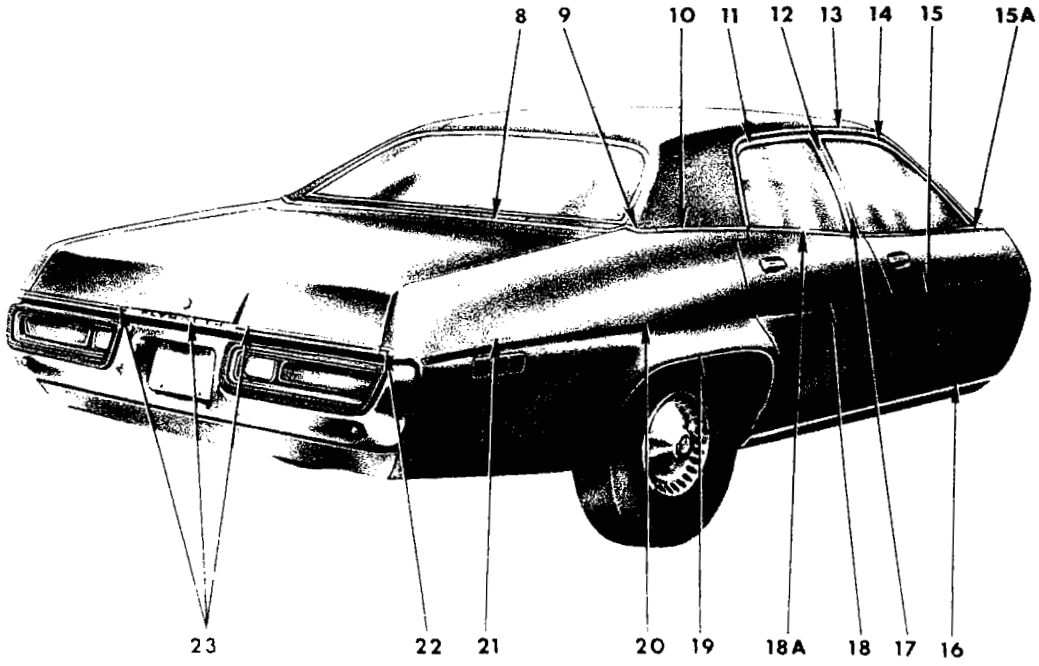

19a3475 **A**

1971
EXTERIOR VIEW - SATELLITE BROUGHAM R-P 4 DOOR SEDAN

REF. NO.	QTY	PART NUMBER	DESCRIPTION
1	1	3504 840-1	MOULDING, Body Frt. Pillar Drain Trough, w/o Vinyl Roof (23-59-61)
	1	3504 842-3	MOULDING, Body Frt. Pillar Drain Trough, w/Vinyl Roof (23-59-61)
2	1	3579 310-1	MOULDING PACKAGE, Fender Peak (12-15-2)
	10	6003 190	Retainer
3	1	2785 791	NAME PLATE, Hood Front (15-06-3)
	3	9420 278	Nut
4	1	3579 314-5	MOULDING PACKAGE, Fender Wheel Opng. (12-15-2)
	8	6024 271	Screw
5	1	3579 308-9	MOULDING PACKAGE, Fender Side, Black (12-15-2)
	1	3579 634-5	Green (12-15-2)
	1	3579 636-7	Blue (12-15-2)
	1	3579 638-9	Gold (12-15-2)
	1	3579 640-1	White (12-15-2)
	2	6002 938	Retainer 2 6026 523 Nut
	5	6002 291	Retainer
	5	6024 271	Screw
6	2	2579 804	ORNAMENT, Fender Side, "383 4 Barrel" (12-15-21)
	6	6026 404	Nut
7	2	3505 020	NAME PLATE, Fender Side, "Satellite" (12-15-21)
	1	2785 540	MEDALLION, Fender Side, Rt., Pentastar (12-15-21)
8	1	3579 334-5	MOULDING PACKAGE, Deck Opng. Upr. Pnl., use w/Vinyl Roof or Two Tone Paint (23-23-31)
	4	6003 133	Retainer
	4	6024 271	Screw
	2	6023 898	Screw
9	1	3579 332-3	MOULDING PACKAGE, Qtr. Outside Belt, Rear, use w/Vinyl Roof or Two Tone Paint (23-23-39)
	2	6023 898	Screw
	1	---- ---	Nut
10	1	3579 330-1	MOULDING and CAP PACKAGE, Qtr. Outside Belt, Frt., use w/Vinyl Roof or Two Tone Paint (23-23-39)
	3	6003 133	Retainer
	3	6024 271	Screw
11	1	3440 032-3	MOULDING, Rear Door Wdo. Opng. Frame, Upr. (23-23-33)
12	1	3440 030-1	MOULDING, Rear Door Wdo. Opng. Frame, Frt. (23-23-33)
13	1	3445 118-9	MOULDING, Roof Side Drain Trough, w/o Vinyl Roof (23-59-61)
	1	3504 844-5	MOULDING, Roof Side Drain Trough, w/Vinyl Roof (23-59-61)
14	1	3439 712-3	MOULDING, Frt. Door Wdo. Opng. Frame, Frt. (23-23-32)
15	1	3579 326-7	MOULDING PACKAGE, Frt. Door, Black (23-23-32)
	1	3579 642-3	Green (23-23-32)
	1	3579 644-5	Blue (23-23-32)
	1	3579 646-7	Gold (23-23-32)
	1	3579 648-9	White (23-23-32)
	2	6002 938	Retainer 2 6026 523 Nut
	3	6024 271	Screw
	3	6002 291	Retainer
15A	1	3579 320-1	MOULDING PACKAGE, Frt. Door Outside Peak (23-23-32)
	1	6003 192	Retainer, Rt.
	1	6003 193	Retainer, Lt.
	5	6003 190	Retainer
16	1	3579 348-9	MOULDING PACKAGE, Body Side Sill (23-23-2)
	1	6002 977	Retainer
	1	9420 867	Nut
	7	6024 271	Screw
	7	6003 194	Retainer
	1	6026 760	Screw
17	1	3439 716-7	MOULDING, Frt. Door Wdo. Opng. Frame, Rr. (23-23-32)
18	1	3579 328-9	MOULDING PACKAGE, Rear Door, Black (23-23-33)
	1	3579 650-1	Green (23-23-33)
	1	3579 652-3	Blue (23-23-33)
	1	3579 654-5	Gold (23-23-33)
	1	3579 656-7	White (23-23-33)
	2	6002 938	Retainer 2 6026 523 Nut
	3	6024 271	Screw
	3	6002 291	Retainer
18A	2	3579 574	MOULDING PACKAGE, Rear Door Outside Peak (23-23-33)
	5	6003 190	Retainer
19	1	3579 340-1	MOULDING PACKAGE, Qtr. Outside Wheel Opening (23-23-39)
	8	6024 271	Screw
20	1	3579 338-9	MOULDING PACKAGE, Qtr. Outside, Black (23-23-39)
	1	3579 702-3	Green (23-23-39)
	1	3579 704-5	Blue (23-23-39)
	1	3579 706-7	Gold (23-23-39)
	1	3579 708-9	White (23-23-39)
	5	6002 291	Retainer 5 6024 271 Screw
	2	6001 915	Clip
	2	6024 152	Nut
	1	6003 012	Retainer
21	2	2964 634	NAME PLATE, Qtr. Outside, "Brougham" (23-34-238)
	4	6027 352	Nut
22	1	3505 012-3	MOULDING, Qtr. Outside Rr., End (23-23-39)
23	1	3579 358	MOULDING PACKAGE, Deck Lid Lwr. (23-23-30)
	9	6002 013	Retainer
	9	6026 523	Nut

All Packages Include Attaching Parts

Part Type Code is Indicated in Parentheses

1971
EXTERIOR VIEW - SATELLITE BROUGHAM R-P 4 DOOR SEDAN

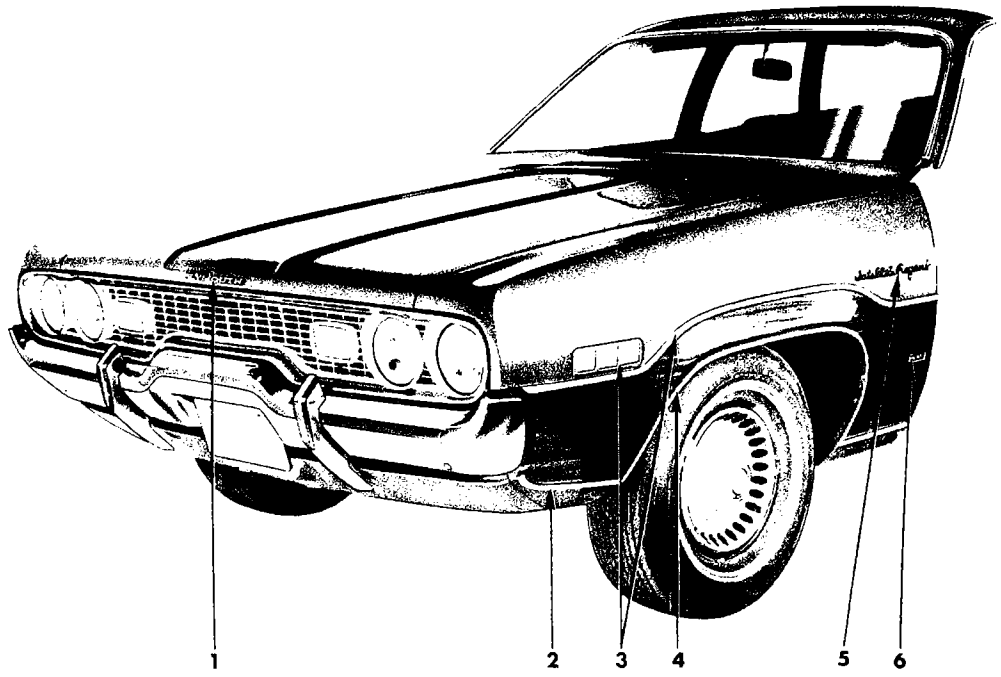

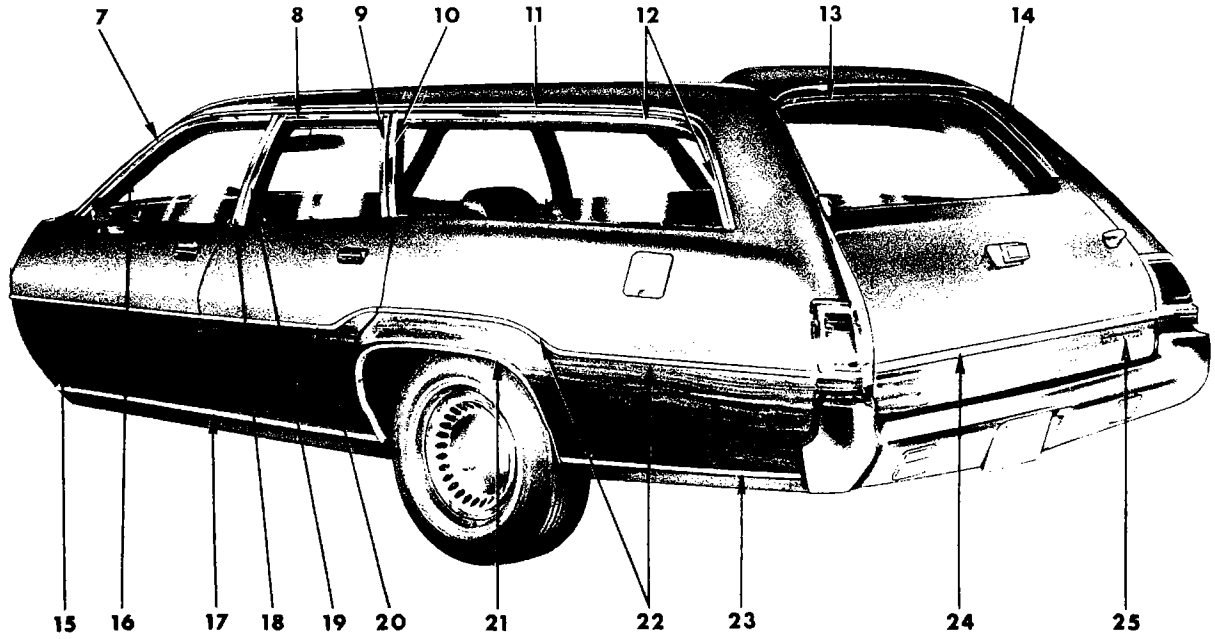

19a3489

1971
EXTERIOR VIEW - SATELLITE REGENT R-P STATION WAGON

REF. NO.	QTY	PART NUMBER	DESCRIPTION
1	1	2785 791	NAME PLATE, Hood Front (15-06-3)
	3	9420 278	Nut
2	1	3579 318-9	MOULDING PACKAGE, Fender Side, Lwr. (12-15-2)
	1	6002 871	Retainer
	1	6024 271	Screw
	2	6002 920	Retainer
	2	6024 679	Nut
3	1	3579 312-3	MOULDING PACKAGE, Fender Side, Upr. (12-15-2)
	2	6002 920	Retainer
	2	6024 679	Nut
	7	6002 871	Retainer
	7	6024 271	Screw
4	1	3579 316-7	MOULDING PACKAGE, Fender Side Whl. Opng. (12-15-2)
	8	6024 271	Screw
5	2	3505 020	NAME PLATE, Fender Side, "Satellite" (12-15-21)
	2	3612 858	NAME PLATE, Fender Side, "Regent" (12-15-21)
6	2	2579 804	ORNAMENT, Fender Side, "383 4 Barrel" (12-15-21)
	3	6026 404	Nut
	1	2785 540	MEDALLION, Fender Side, Rt., Pentastar (12-15-21)
7	1	3504 840-1	MOULDING, Body Front Pillar Drain Trough (23-59-61)
8	1	3440 034-5	MOULDING, Rear Door Wdo. Opng. Frame, Upr. (23-23-33)
9	1	3440 036-7	MOULDING, Rear Door Wdo. Opng. Frame, Rr. (23-23-33)
10	1	3620 084-5	MOULDING PACKAGE, Qtr. Wdo. Outside, Frt. (23-23-73)
	3	6024 271	Screw
11	1	3504 848-9	MOULDING, Roof Side Drain Trough (23-59-61)
12	1	3620 082-3	MOULDING PACKAGE, Qtr. Wdo. Outside, Upr. & Rear (23-23-73)
	10	6003 238	Retainer
	10	6024 271	Screw
13	1	3440 120	MOULDING, Roof Pnl. Outside Tailgate Opng. Upr., Prime (23-23-60)
	3	9414 732	Screw
14	2	3440 194	MOULDING, Qtr. Pnl. Tailgate Pillar, Upr. (23-23-60)
	2	9414 732	Screw
15	1	3579 586-7	MOULDING PACKAGE, Frt. Door Outside (23-23-32)
	6	6002 871	Retainer
	6	6024 271	Screw
	1	6002 604	Retainer
	1	6026 523	Nut
16	1	3439 712-3	MOULDING, Frt. Door Wdo. Opng. Frame, Frt. (23-23-32)
17	2	3579 555	MOULDING PACKAGE, Body Side Sill (23-23-2)
	16	6002 729	Retainer
	16	6024 271	Screw
	2	6024 403	Screw
18	1	3439 716-7	MOULDING, Frt. Door Wdo. Opng. Frame, Rr. (23-23-32)
19	1	3440 030-1	MOULDING, Rear Door Wdo. Opng. Frame, Frt. (23-23-33)
20	1	3579 398-9	MOULDING PACKAGE, Rear Door Outside (23-23-39)
	3	6024 271	Screw
	3	6002 871	Retainer
	2	6002 604	Retainer
	2	6026 523	Nut
21	1	3579 396-7	MOULDING PACKAGE, Qtr. Outside Whl. Opng. (23-23-39)
	8	6024 271	Screw
22	1	3620 258-9	MOULDING PACKAGE, Qtr. Outside, Upr. (23-23-39)
	10	6002 871	Retainer
	10	6024 271	Screw
23	2	3579 383	MOULDING PACKAGE, Qtr. Outside, Lwr. (23-23-39)
	6	6002 871	Retainer
	6	6024 271	Screw
24	1	3620 260	MOULDING PACKAGE, Tailgate Outside, Lwr. (23-23-61)
	8	6003 132	Retainer
	8	6024 271	Screw
25	1	3445 250	NAME PLATE, Tailgate Outside Panel, "Plymouth" (23-54-11)

All Packages Include Attaching Parts

Part Type Code is Indicated in Parentheses

1971

EXTERIOR VIEW - SATELLITE REGENT R-P STATION WAGON

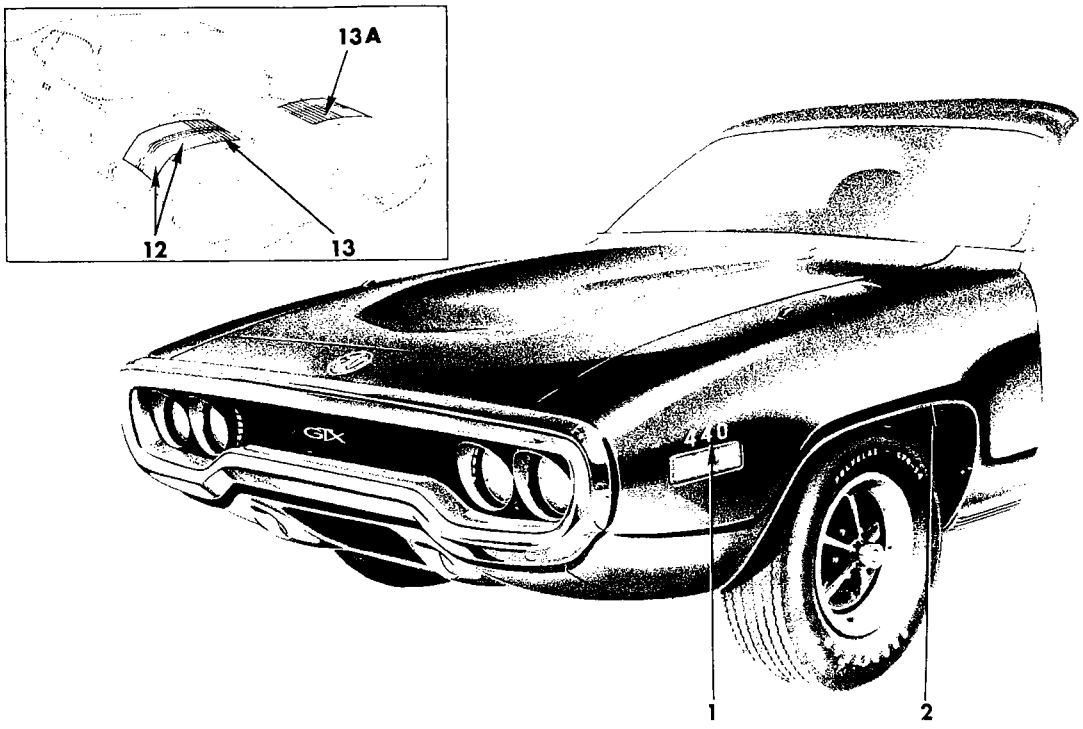

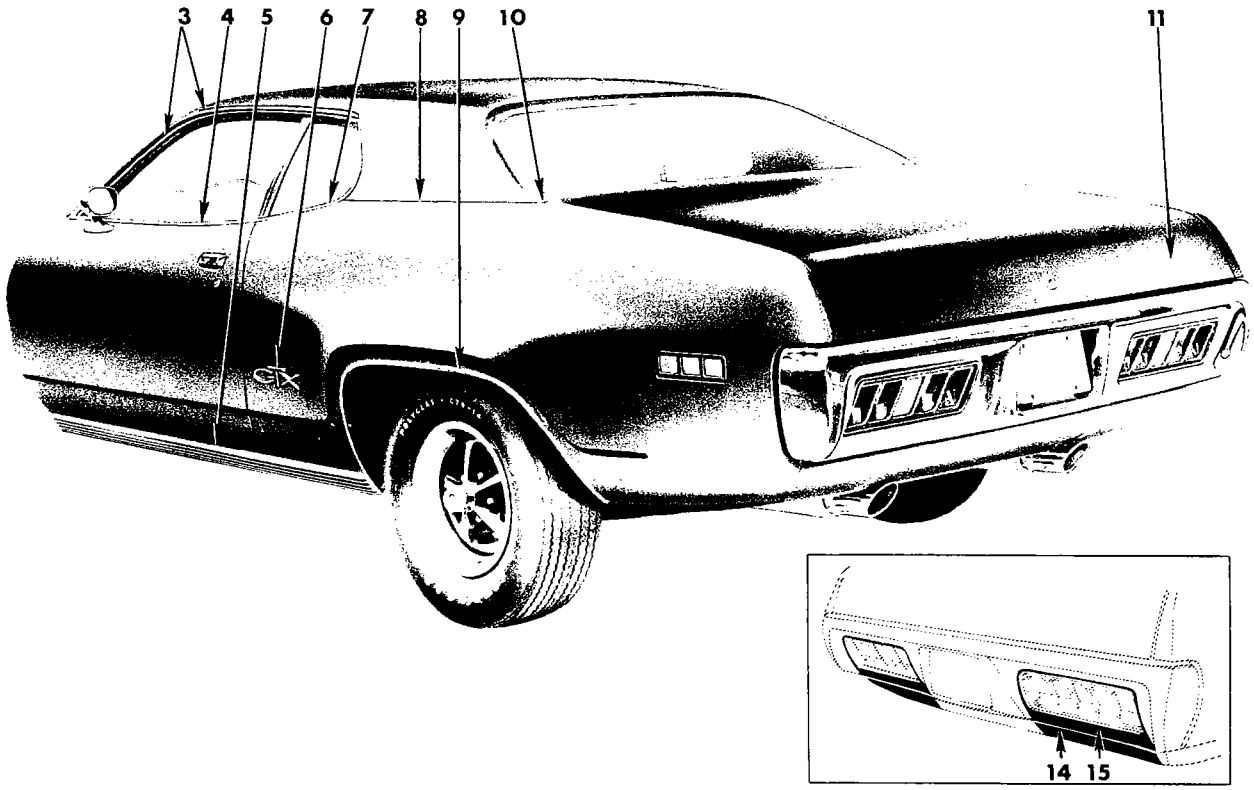

19a3537 **A**

1971
EXTERIOR VIEW - GTX R-S 2 DOOR HARDTOP

REF. NO.	QTY	PART NUMBER	DESCRIPTION
1	2	3569 830	DECAL, Fender Side, "440", White (12-15-21)
	2	3569 831	"440", Black (12-15-21)
	2	3569 832	"440-6", White (12-15-21)
	2	3569 833	"440-6", Black (12-15-21)
	2	3569 834	"Hemi", White (12-15-21)
	2	3569 835	"Hemi", Black (12-15-21)
2	1	3579 304-5	MOULDING PACKAGE, Fender Wheel Opng. (12-15-2)
	8	6024 271	Screw
3	1	3504 832-3	MOULDING, Roof Side Drain Trough, w/o Vinyl Roof (23-59-61)
	1	3504 834-5	MOULDING, Roof Side Drain Trough, w/Vinyl Roof (23-59-61)
4	1	3579 356-7	MOULDING PACKAGE, Door Outside Belt (23-23-32)
	4	6003 133	Retainer
	4	6024 271	Screw
	1	6001 836	Retainer
	1	6026 523	Nut
5	1	3620 096-7	MOULDING PACKAGE, Body Side Sill (23-23-2)
	14	6003 194	Retainer
	2	9420 218	Nut
	2	6002 977	Retainer
	2	6026 760	Screw
	10	6028 675	Screw
6	2	3504 289	NAME PLATE, Qtr. Panel, "GTX" (23-34-238)
7	1	3579 350-1	MOULDING PACKAGE, Qtr. Wdo. Outside Rear to Belt (23-23-39)
	2	6003 133	Retainer
	1	6003 252	Retainer
	1	6003 251	Retainer
8	1	3579 354-5	MOULDING PACKAGE, Qtr. Outside Belt, Frt., use w/Vinyl Roof or Two Tone Paint (23-23-39)
	3	6003 133	Retainer
	3	6024 271	Screw
9	1	3579 344-5	MOULDING PACKAGE, Qtr. Outside Wheel Opng. (23-23-39)
	8	6024 271	Screw
10	1	3579 352-3	MOULDING PACKAGE, Qtr. Outside Belt, Rear, use w/Vinyl Roof or Two Tone Paint (23-23-39)
	1	6023 898	Screw
	1	---- ---	Nut
11	1	3569 536	DECAL, Deck Lid, "Plymouth GTX" (23-19-6)
12	1	3570 418-9	TAPE, Fender Transverse Color, White (12-15-33)
	1	3570 420-1	Black (12-15-33)
	1	3570 422-3	Gold (12-15-33)
	1	3685 256	TAPE PACKAGE, Fender, White (12-15-33)
	1	3685 254	Black (12-15-33)
	1	3685 258	Gold (12-15-33)
13	2	3443 552	DECAL, Hood Outer Stripes, White (15-03-18)
	2	3443 550	Black (15-03-18)
	2	3443 551	Gold (15-03-18)
13A	2	3443 549	TAPE, Hood Louver Inner, "Hash Marks" (15-03-18)
14	1	3569 566-7	TAPE, Rear Stone Deflector, Black (13-66-106)
15	1	3569 564-5	TAPE, Rear Bumper, Black (13-66-49)

All Packages Include Attaching Parts

Part Type Code is Indicated in Parentheses

1971
EXTERIOR VIEW - GTX R-S 2 DOOR HARDTOP

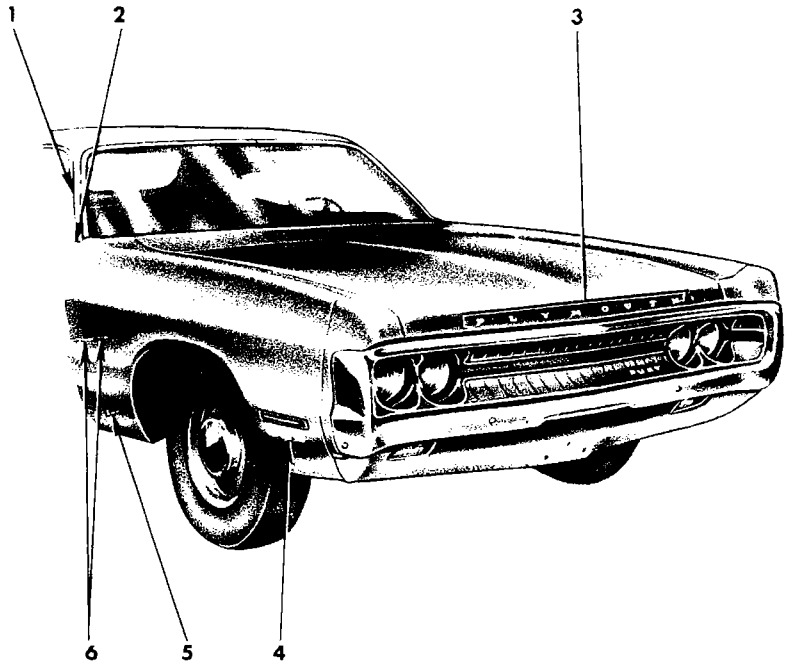

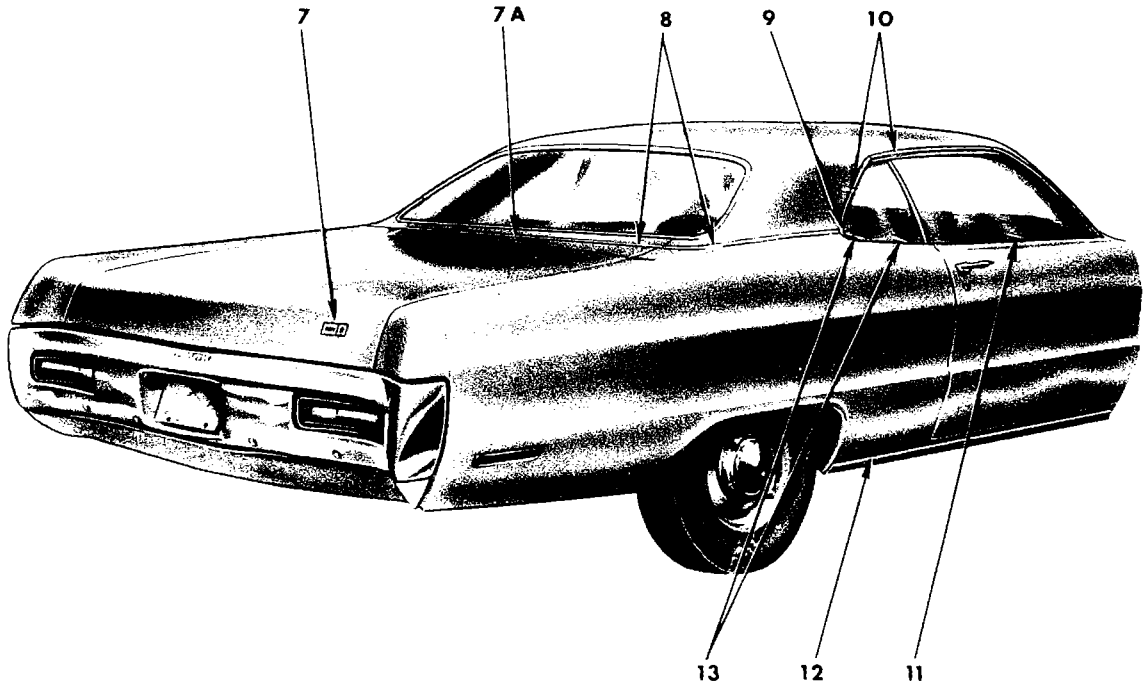

19a3645 A

1971
EXTERIOR VIEW - PLYMOUTH FURY I P-E 2 DOOR SEDAN

REF. NO.	QTY	PART NUMBER	DESCRIPTION
1	1	2933 602-3	MOULDING PACKAGE, Body Front Pillar Drain Trough, Up to approx. June 1, 1971 (23-59-61)
	6	6024 271	Screw
	1	3683 304-5	MOULDING PACKAGE, Body Front Pillar Drain Trough, After approx. June 1, 1971 (23-59-61)
	6	6024 271	Screw
2	1	3419 482-3	MOULDING PACKAGE, Body Frt. Lwr. Pillar (23-23-14)
	1	6028 674	Screw
3	1	2528 974	NAME LETTER "P", Hood Front (15-06-16)
	1	2528 975	"L"
	1	2528 976	"Y"
	1	2528 977	"M"
	1	2528 978	"O"
	1	2528 979	"U"
	1	2528 980	"T"
	1	2528 981	"H"
	16	9420 254	Nut
4	2	3612 450	NAME PLATE, Fender Side, "360" (12-15-21)
	2	2949 240	"383" (12-15-21)
	2	2898 878	"440" (12-15-21)
	4	9420 291	Nut
5	1	2785 540	MEDALLION, Fender Side, Rt., Pentastar (12-15-21)
6	2	3504 152	NAME PLATE, Fender Side, "Fury" (12-15-21)
	2	3504 153	"I" (12-15-21)
7	1	3568 564	MEDALLION, Deck Lid Lock (23-17-19)
	2	9420 278	Nut
7A	1	3419 026	MOULDING PACKAGE, Deck Opng. Upr. Pnl., use w/Vinyl Roof or Two Tone Paint (23-23-31)
	2	6002 192	Fastener
	3	6002 920	Fastener
	3	9420 867	Nut
8	1	3419 028-9	MOULDING PACKAGE, Deck Opng. Upr. Pnl. Side, use w/Vinyl Roof or Two Tone Paint, w/o Belt Mldgs. (23-23-31)
	3	6002 192	Fastener
	1	3419 030-1	MOULDING PACKAGE, Deck Opng. Upr. Pnl. Side, use w/Vinyl Roof or Two Tone Paint, w/Belt Mldgs. (23-23-31)
	3	6002 192	Fastener
	3	6002 920	Fastener
	3	9420 867	Nut
9	1	3419 032-3	MOULDING PACKAGE, Roof Side Drain Trough, Rear Extension (Not Used w/Belt Mldgs., Vinyl Roof or Two Tone Paint) (23-59-61)
	2	6024 271	Screw
10	1	3579 598-9	MOULDING PACKAGE, Roof Side Drain Trough, Front and Rear (23-59-61)
	4	6024 271	Screw
11	1	2933 722-3	MOULDING PACKAGE, Door Outside Belt (23-23-32)
	6	6002 782	Retainer
12	1	3419 826-7	MOULDING PACKAGE, Body Side Sill (23-23-2)
	5	6028 545	Screw
	8	6002 601	Retainer
	1	---- ---	Screw
13	1	2933 626-7	MOULDING and T/PLATE PACKAGE, Qtr. Outside Belt, use w/o Vinyl or Two Tone Paint (23-23-39)
	3	6002 782	Retainer
	1	6027 459	Screw
	1	2933 614-5	MOULDING PACKAGE, Qtr. Outside Belt, use w/Vinyl or Two Tone Paint (23-23-39)
	3	6002 782	Retainer
	1	6025 985	Screw
	1	2933 624-5	MOULDING PACKAGE, Qtr. Outside Belt to Drip, use w/Vinyl or Two Tone Paint (23-23-39)
	2	6025 985	Screw

All Packages Include Attaching Parts

Part Type Code is Indicated in Parentheses

1971
EXTERIOR VIEW - PLYMOUTH FURY I P-E 2 DOOR SEDAN

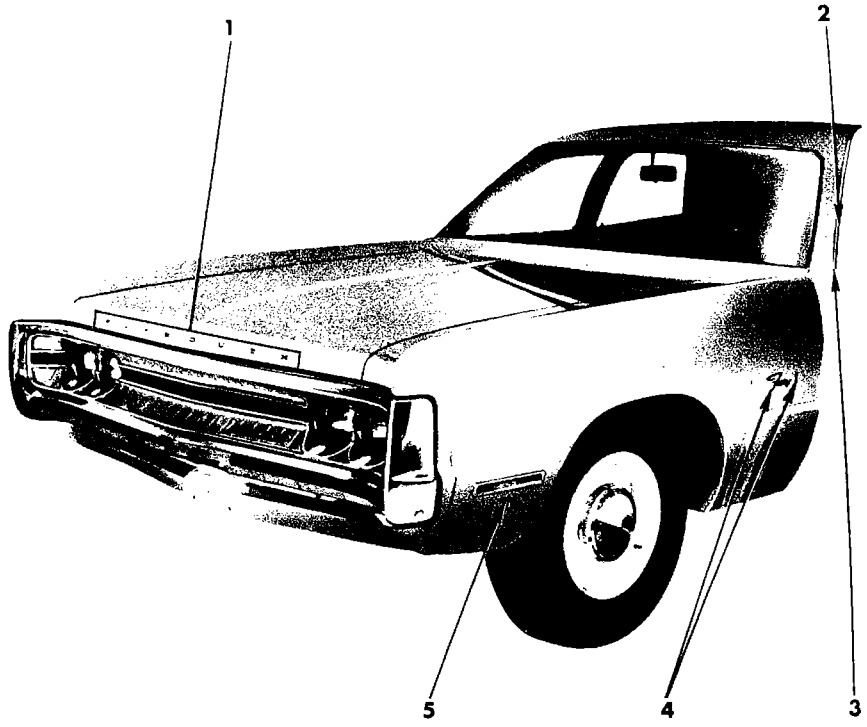

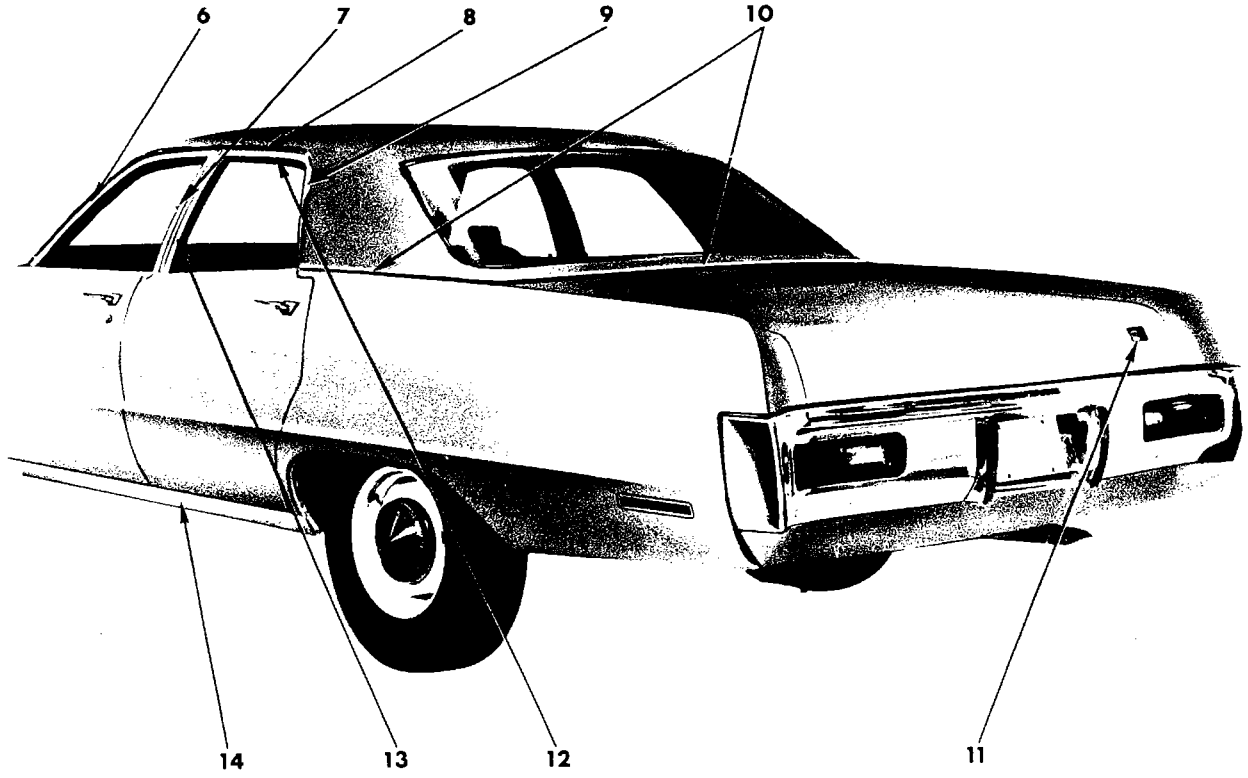

19a3638

1971
EXTERIOR VIEW - PLYMOUTH FURY I P-E 4 DOOR SEDAN

REF. NO.	QTY	PART NUMBER	DESCRIPTION
1	1	2528 974	LETTER "P", Hood Front Name (15-06-16)
	1	2528 975	"L"
	1	2528 976	"Y"
	1	2528 977	"M"
	1	2528 978	"O"
	1	2528 979	"U"
	1	2528 980	"T"
	1	2528 981	"H"
	16	9420 254	Nut
2	1	2933 568-9	MOULDING PACKAGE, Body Front Pillar Drain Trough (23-59-61)
	10	6024 271	Screw
3	1	3419 482-3	MOULDING PACKAGE, Body Frt. Lwr. Pillar (23-23-14)
	1	6028 674	Screw
4	2	3504 152	NAME PLATE, Fender Side, "Fury" (12-15-21)
	2	3504 153	"I" (12-15-21)
5	2	3612 450	NAME PLATE, Fender Side, "360" (12-15-21)
	2	2949 240	"383" (12-15-21)
	2	2898 878	"440" (12-15-21)
	4	9420 291	Nut
6	1	2893 698-9	MOULDING, Frt. Door Wdo. Opng. Frame, Upr. (23-23-32)
7	1	2893 700-1	MOULDING, Frt. Door Wdo. Opng. Frame, Rr. (23-23-32)
8	1	3419 424-5	MOULDING PACKAGE, Roof Side Drain Trough, Front (23-59-61)
	10	6024 271	Screw
9	1	2933 586-7	MOULDING PACKAGE, Roof Side Drain Trough, Rear (23-59-61)
	8	6024 271	Screw
10	1	2933 566-7	MOULDING PACKAGE, Deck Opng. Upr. Pnl. (23-23-31)
	3	6002 920	Retainer
	3	9420 867	Nut
	4	6002 192	Fastener
11	1	3568 564	MEDALLION, Deck Lid (23-17-19)
12	1	2893 722-3	MOULDING, Rear Door Wdo. Opng. Frame, Upr. (23-23-33)
13	1	2893 700	MOULDING, Rear Door Wdo. Opng. Frame, Frt., Lt. (23-23-33)
	1	2893 701	MOULDING, Rear Door Wdo. Opng. Frame, Frt., Rt. (23-23-33)
14	1	3419 826-7	MOULDING PACKAGE, Body Side Sill (23-23-2)
	5	6028 545	Screw
	8	6002 601	Retainer
	1	---- ---	Screw

All Packages Include Attaching Parts

Part Type Code is Indicated in Parentheses

1971
EXTERIOR VIEW - PLYMOUTH FURY I P-E 4 DOOR SEDAN

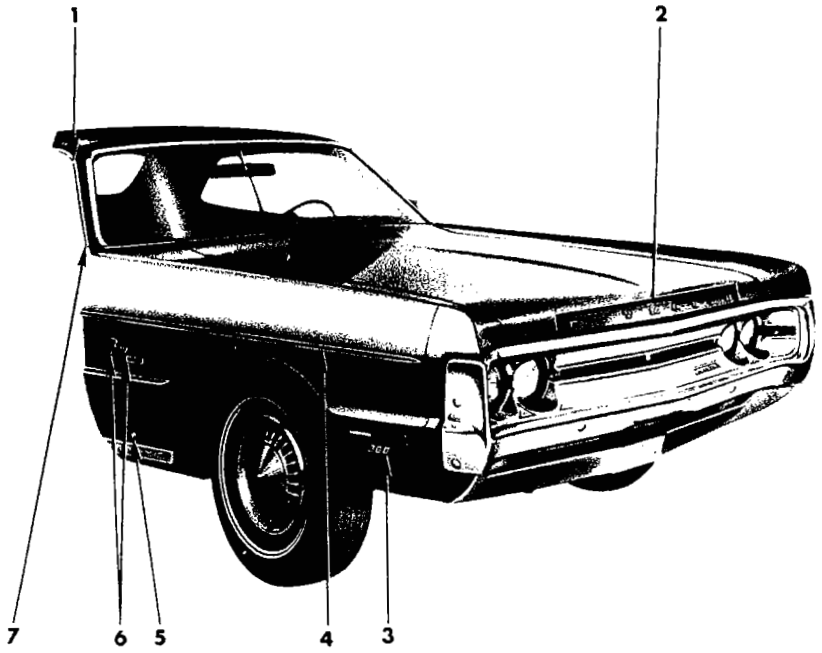

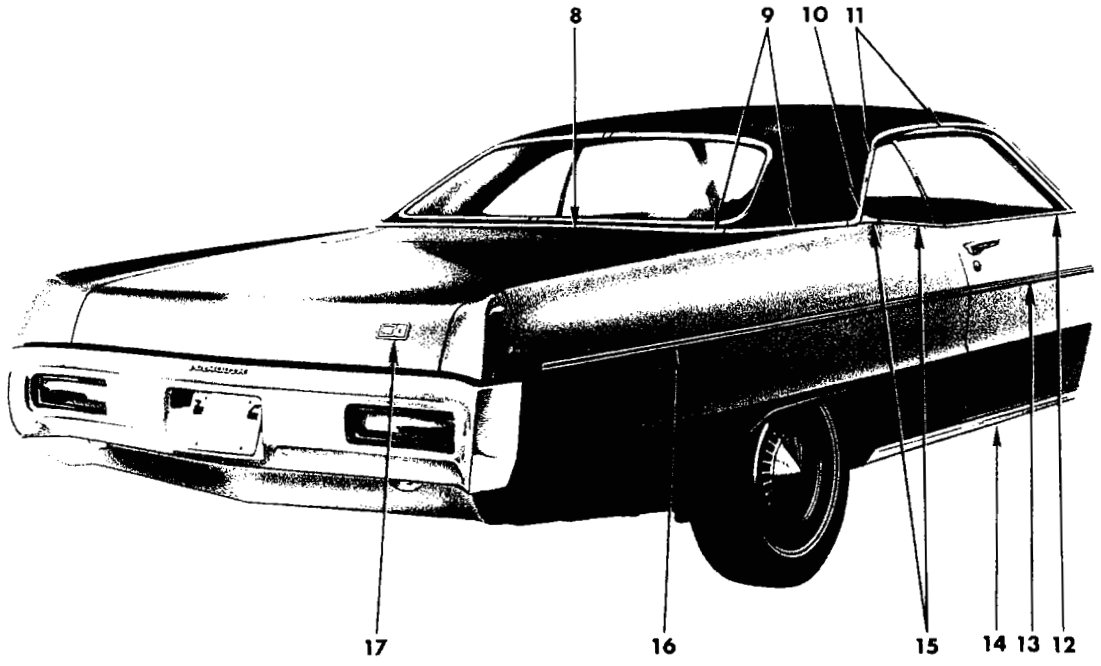

19a3765

1971
EXTERIOR VIEW - PLYMOUTH FURY P-E (CUSTOM SPRING SPECIAL) 2 DOOR SEDAN

REF. NO.	QTY	PART NUMBER	DESCRIPTION
1	1	2933 602-3	MOULDING PACKAGE, Body Front Pillar Drain Trough, Up to approx. June 1, 1971 (23-59-61)
	6	6024 271	Screw
	1	3683 304-5	MOULDING PACKAGE, Body Front Pillar Drain Trough, After approx. June 1, 1971 (23-59-61)
	6	6024 271	Screw
2	1	2528 974	NAME LETTER "P", Hood Front (15-06-16)
	1	2528 975	"L"
	1	2528 976	"Y"
	1	2528 977	"M"
	1	2528 978	"O"
	1	2528 979	"U"
	1	2528 980	"T"
	1	2528 981	"H"
	16	9420 254	Nut
3	2	3612 450	NAME PLATE, Fender Side, "360" (12-15-21)
	2	2949 240	"383" (12-15-21)
	2	2898 878	"440" (12-15-21)
	4	9420 291	Nut
4	2	3620 366	MOULDING PACKAGE, Fender Side, Black (12-15-2)
	1	6006 496	Retainer
	1	6003 134	Retainer
	2	6029 259	Nut
	6	6003 133	Retainer
	6	6024 271	Screw
5	1	2785 540	MEDALLION, Fender Side, Rt., Pentastar (12-15-21)
6	2	3504 152	NAME PLATE, Fender Side, "Fury" (12-15-21)
	2	3613 498	"Custom" (12-15-21)
	2	3613 499	DECAL, Fender Side, "Custom" (12-15-21)
7	1	3419 482-3	MOULDING PACKAGE, Body Frt. Lwr. Pillar (23-23-14)
	1	6028 674	Screw
8	1	3419 026	MOULDING PACKAGE, Deck Opng. Upr. Pnl., use w/Vinyl Roof or Two Tone Paint (23-23-31)
	2	6002 192	Fastener
	3	6002 920	Fastener
	3	9420 867	Nut
9	1	3419 028-9	MOULDING PACKAGE, Deck Opng. Upr. Pnl. Side, use w/Vinyl Roof or Two Tone Paint, w/o Belt Mldgs. (23-23-31)
	3	6002 192	Fastener
	1	3419 030-1	MOULDING PACKAGE, Deck Opng. Upr. Pnl. Side, use w/Vinyl Roof or Two Tone Paint, w/Belt Mldgs. (23-23-31)
	3	6002 192	Fastener
	3	6002 920	Fastener
	3	9420 867	Nut
10	1	3419 032-3	MOULDING PACKAGE, Roof Side Drain Trough, Rear Extension (Not used w/Belt Mldgs., Vinyl Roof or Two Tone Paint) (23-59-61)
	2	6024 271	Screw
11	1	3579 598-9	MOULDING PACKAGE, Roof Side Drain Trough, Front and Rear (23-59-61)
	4	6024 271	Screw
12	1	2933 722-3	MOULDING PACKAGE, Door Outside Belt (23-23-32)
	6	6002 782	Retainer
13	2	3620 243	MOULDING PACKAGE, Door Outside, Black (23-23-32)
	7	6003 133	Retainer
	7	6024 271	Screw
	1	6003 134	Retainer
	1	6029 259	Nut
14	1	3419 826-7	MOULDING PACKAGE, Body Side Sill (23-23-2)
	5	6028 545	Screw
	8	6002 601	Retainer
	1	---- ---	Screw
15	1	2933 626-7	MOULDING and T/PLATE PACKAGE, Qtr. Outside Belt, use w/o Vinyl Roof or Two Tone Paint (23-23-39)
	3	6002 782	Retainer
	1	6027 459	Screw
	1	2933 614-5	MOULDING PACKAGE, Qtr. Outside Belt, use w/Vinyl Roof or Two Tone Paint (23-23-39)
	3	6002 782	Retainer
	1	6025 985	Screw
	1	2933 624-5	MOULDING PACKAGE, Qtr. Outside Belt to Drip, use w/Vinyl Roof or Two Tone Paint (23-23-39)
	2	6025 985	Screw
16	2	3621 555	MOULDING PACKAGE, Qtr. Outside, Black (23-23-39)
	9	6003 002	Retainer w/Seal
	4	6002 884	Retainer w/Seal
	4	6024 152	Nut
	2	6000 709	Retainer w/Seal
	10	6003 133	Retainer
17	1	3613 490	MEDALLION, Deck Lid Lock, "Fury" (23-17-19)
	2	9420 278	Nut

All Packages Include Attaching Parts

Part Type Code is Indicated in Parentheses

1971
EXTERIOR VIEW - PLYMOUTH FURY P-E (CUSTOM SPRING SPECIAL) 2 DOOR SEDAN

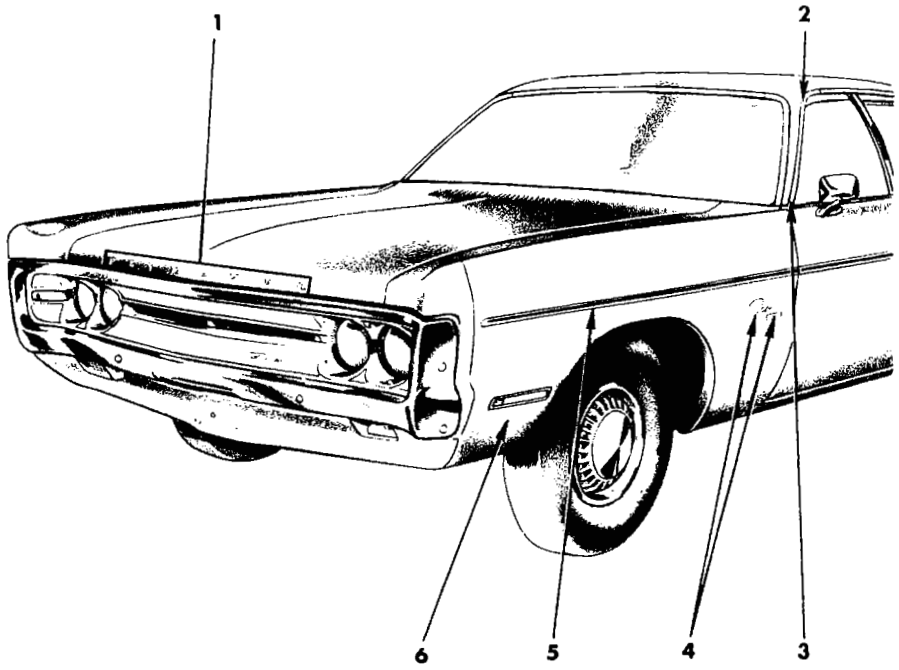

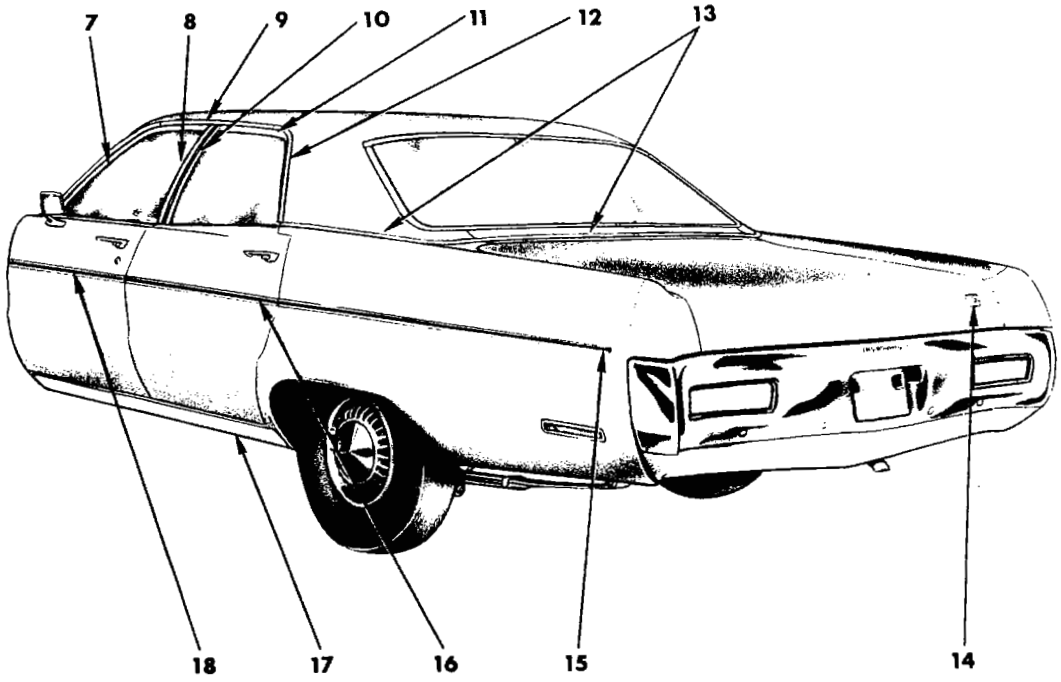

19a3766

1971
EXTERIOR VIEW - PLYMOUTH FURY P-E (CUSTOM SPRING SPECIAL) 4 DOOR SEDAN

REF. NO.	QTY	PART NUMBER	DESCRIPTION
1	1	2528 974	NAME PLATE, "P", Hood Front (15-06-16)
	1	2528 975	"L"
	1	2528 976	"Y"
	1	2528 977	"M"
	1	2528 978	"O"
	1	2528 979	"U"
	1	2528 980	"T"
	1	2528 981	"H"
	16	9420 254	Nut
2	1	2933 568-9	MOULDING PACKAGE, Body Front Pillar Drain Trough (23-59-61)
	10	6024 271	Screw
3	1	3419 482-3	MOULDING PACKAGE, Body Frt. Lwr. Pillar (23-23-14)
	1	6028 674	Screw
4	2	3504 152	NAME PLATE, Fender Side, "Fury" (12-15-21)
	2	3613 498	"Custom" (12-15-21)
	2	3613 499	DECAL, Fender Side, "Custom" (12-15-21)
5	2	3620 366	MOULDING PACKAGE, Fender Side, Black (12-15-2)
	1	6006 496	Retainer
	2	6029 259	Nut
	1	6003 134	Retainer
	6	6003 133	Retainer
	6	6024 271	Screw
6	2	3612 450	NAME PLATE, Fender Side, "360" (12-15-21)
	2	2949 240	"383" (12-15-21)
	2	2898 878	"440" (12-15-21)
	4	9420 291	Nut
7	1	2893 698-9	MOULDING, Frt. Door Wdo. Opng. Frame, Upr. (23-23-32)
8	1	2893 700-1	MOULDING, Frt. Door Wdo. Opng. Frame, Rr. (23-23-32)
9	1	3419 424-5	MOULDING PACKAGE, Roof Side Drain Trough, Front (23-59-61)
	10	6024 271	Screw
10	1	2893 700	MOULDING, Rear Door Wdo. Opng. Frame, Frt., Lt. (23-23-33)
	1	2893 701	MOULDING, Rear Door Wdo. Opng. Frame, Frt., Rt. (23-23-33)
11	1	2893 722-3	MOULDING, Rear Door Wdo. Opng. Frame, Upr. (23-23-33)
12	1	2933 586-7	MOULDING PACKAGE, Roof Side Drain Trough, Rear (23-59-61)
	8	6024 271	Screw
13	1	2933 566-7	MOULDING PACKAGE, Deck Opng. Upr. Pnl. (23-23-31)
	3	6002 920	Retainer
	3	9420 867	Nut
	4	6002 192	Fastener
14	1	3613 490	MEDALLION, Deck Lid Lock, "Fury" (23-17-19)
	2	9420 278	Nut
15	2	3621 550	MOULDING PACKAGE, Qtr. Outside, Black (23-23-39)
	2	6000 709	Retainer
	2	6024 152	Nut
	14	6003 133	Retainer
	14	6024 271	Screw
16	2	3621 551	MOULDING PACKAGE, Rear Door, Black (23-23-33)
	3	6003 133	Retainer
	3	6024 271	Screw
	2	6002 162	Retainer
	2	6029 259	Nut
17	1	3419 826-7	MOULDING PACKAGE, Body Side Sill (23-23-2)
	5	6028 545	Screw
	8	6002 601	Retainer
	1	---- ---	Screw
18	2	3620 242	MOULDING PACKAGE, Frt. Door, Black (23-23-32)
	5	6003 133	Retainer
	5	6024 271	Screw
	1	6003 134	Retainer
	1	6029 259	Nut

All Packages Include Attaching Parts

Part Type Code is Indicated in Parentheses

1971
EXTERIOR VIEW - PLYMOUTH FURY P-E (CUSTOM SPRING SPECIAL) 4 DOOR SEDAN

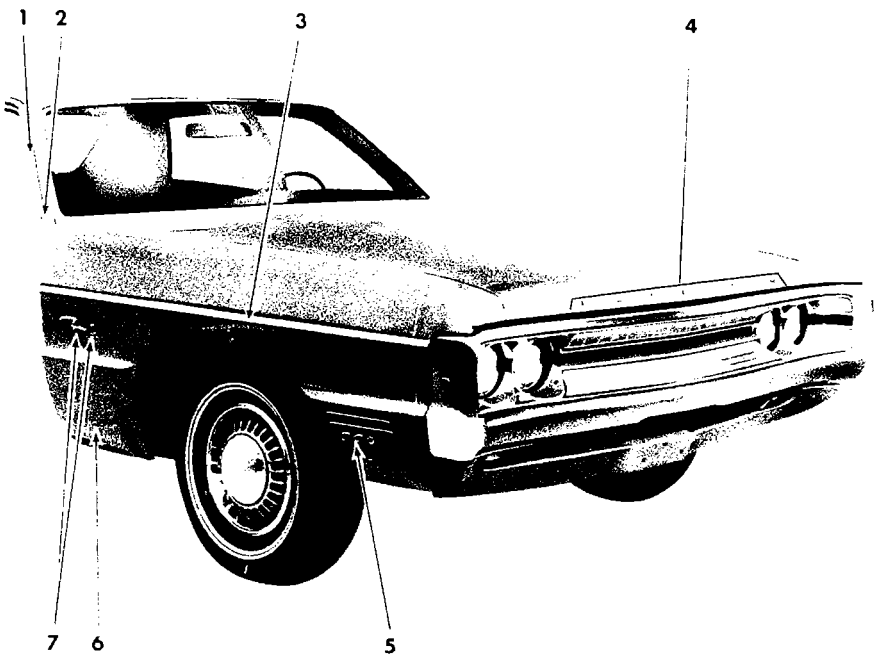

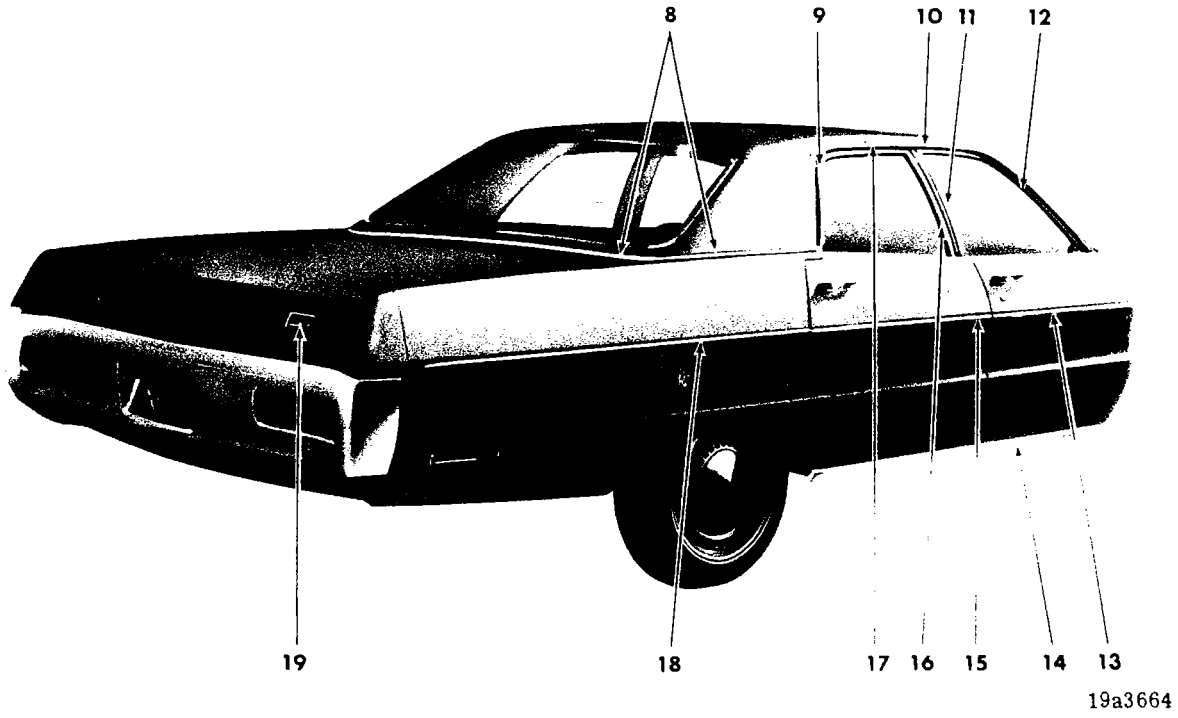

1971
EXTERIOR VIEW - PLYMOUTH FURY II P-L 4 DOOR SEDAN

REF. NO.	QTY	PART NUMBER	DESCRIPTION
1	1	2933 568-9	MOULDING PACKAGE, Body Front Pillar Drain Trough (23-59-61)
	10	6024 271	Screw
2	1	3419 482-3	MOULDING PACKAGE, Body Frt. Lwr. Pillar (23-23-14)
	1	6028 674	Screw
3	1	3481 998-9	MOULDING PACKAGE, Fender Side (12-15-2)
	4	6002 877	Retainer and Seal
	4	9419 784	Nut
	10	6003 002	Retainer
	2	6029 259	Nut
4	1	2528 794	LETTER "P", Hood Front (15-06-16)
	1	2528 975	"L"
	1	2528 976	"Y"
	1	2528 977	"M"
	1	2528 978	"O"
	1	2528 979	"U"
	1	2528 980	"T"
	1	2528 981	"H"
	16	9420 254	Nut
5	2	3612 450	NAME PLATE, Fender Side, "360" (12-15-21)
	2	2949 240	"383" (12-15-21)
	2	2898 878	"440" (12-15-21)
	4	9420 291	Nut
6	1	2785 540	MEDALLION, Fender Side, Rt., Pentastar (12-15-21)
7	2	3504 152	NAME PLATE, Fender Side, "Fury" (12-15-21)
	2	3504 154	"II" (12-15-21)
8	1	2933 594-5	MOULDING PACKAGE, Deck Opng. Upr. Pnl. (23-23-31)
	6	9426 926	Nut
	6	6002 920	Retainer
	9	6002 192	Fastener
9	1	2933 586-7	MOULDING PACKAGE, Roof Side Drain Trough, Rear (23-59-61)
	8	6024 271	Screw
10	1	3419 424-5	MOULDING PACKAGE, Roof Side Drain Trough, Front (23-59-61)
	10	6024 271	Screw
11	1	2893 700-1	MOULDING, Frt. Door Wdo. Opng. Frame, Rr. (23-23-32)
12	1	2893 698-9	MOULDING, Frt. Door Wdo. Opng. Frame, Upr. (23-23-32)
13	1	3419 748-9	MOULDING PACKAGE, Frt. Door (23-23-32)
	10	6003 002	Retainer
	2	6002 877	Retainer
	2	6029 259	Nut
14	1	3419 826-7	MOULDING PACKAGE, Body Side Sill (23-23-2)
	5	6028 545	Screw
	8	6002 601	Retainer
	1	---- ---	Screw
15	1	3419 750-1	MOULDING PACKAGE, Rear Door (23-23-33)
	6	6003 002	Retainer
	4	6002 877	Retainer
	4	6029 259	Nut
16	1	2893 700	MOULDING, Rear Door Wdo. Opng. Frame, Frt., Lt. (23-23-33)
	1	2893 701	MOULDING, Rear Door Wdo. Opng. Frame, Frt., Rt. (23-23-33)
17	1	2893 722-3	MOULDING, Rear Door Wdo. Opng. Frame, Upr. (23-23-33)
18	1	3419 752-3	MOULDING PACKAGE, Qtr. Outside (23-23-39)
	7	6002 875	Retainer
	2	6002 884	Retainer
	2	6027 625	Nut
19	1	3568 566	MEDALLION, Deck Lid Lock (23-17-19)
	2	9420 278	Nut

All Packages Include Attaching Parts

Part Type Code is Indicated in Parentheses

1971
EXTERIOR VIEW - PLYMOUTH FURY II P-L 4 DOOR SEDAN

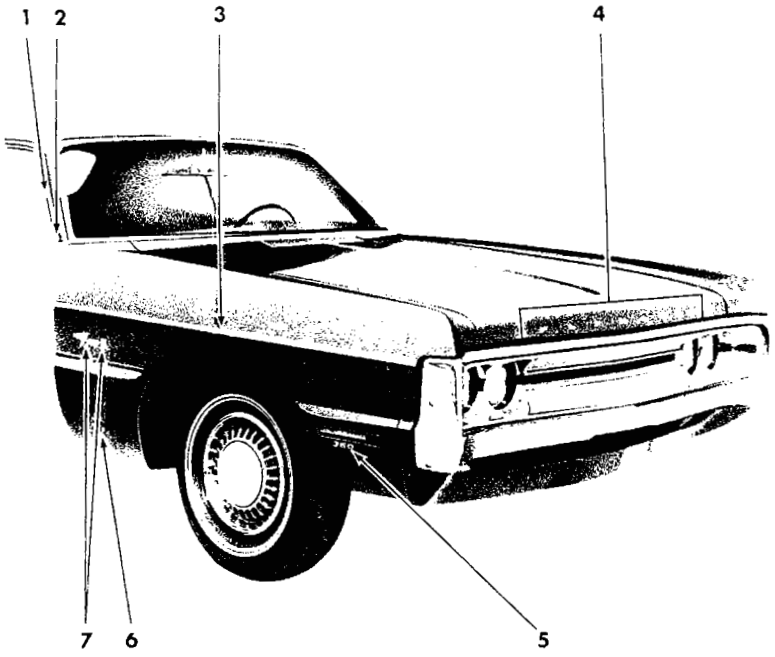

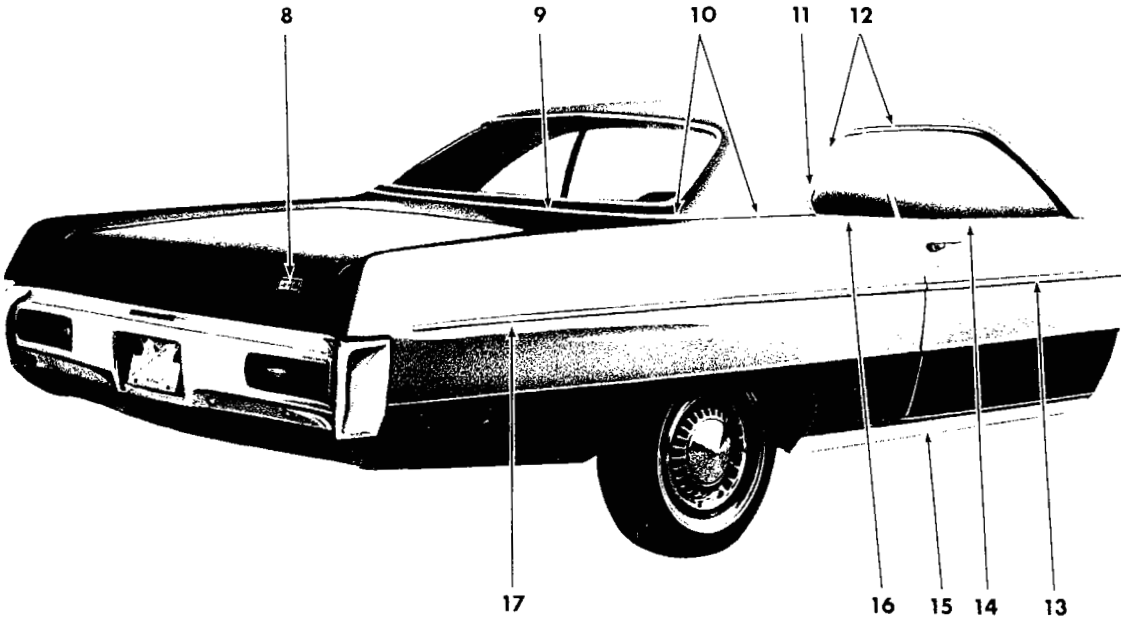

19a3663

1971
EXTERIOR VIEW - PLYMOUTH FURY II P-L 2 DOOR HARDTOP

REF. NO.	QTY	PART NUMBER	DESCRIPTION
1	1	2933 602-3	MOULDING PACKAGE, Body Front Pillar Drain Trough, Up to approx. June 1, 1971 (23-59-61)
	6	6024 271	Screw
	1	3683 304-5	MOULDING PACKAGE, Body Front Pillar Drain Trough, After approx. June 1, 1971
	6	6024 271	Screw
2	1	3419 482-3	MOULDING PACKAGE, Body Frt. Lwr. Pillar (23-23-14)
	1	6028 674	Screw
3	1	3481 998-9	MOULDING PACKAGE, Fender Side (12-15-2)
	4	6002 877	Retainer and Seal
	10	6003 002	Retainer
	4	9419 784	Nut
4	1	2528 974	LETTER "P", Hood Front (15-06-16)
	1	2528 975	"L"
	1	2528 976	"Y"
	1	2528 977	"M"
	1	2528 978	"O"
5	2	3612 450	NAME PLATE, Fender Side, "360" (12-15-21)
	2	2949 240	"383" (12-15-21)
	2	2898 878	"440" (12-15-21)
	4	9420 291	Nut
6	1	2785 540	MEDALLION, Fender Side, Rt., Pentastar (12-15-21)
7	2	3504 152	NAME PLATE, Fender Side, "Fury" (12-15-21)
	2	3504 154	"II" (12-15-21)
8	1	3568 566	MEDALLION, Deck Lid Lock (23-17-19)
	2	9420 278	Nut
9	1	3419 026	MOULDING PACKAGE, Deck Opng. Upr. Pnl. (23-23-31)
	3	6002 192	Fastener
	3	6002 920	Fastener
	3	9420 867	Nut
10	1	3419 028-9	MOULDING PACKAGE, Deck Opng. Upr. Pnl., Side, use w/Vinyl Roof, w/o Belt Mldgs. (23-23-31)
	1	3419 030-1	MOULDING PACKAGE, Deck Opng. Upr. Pnl., Side, use w/Vinyl Roof or Two Tone Paint, w/Belt Mldgs. (23-23-39)
	3	6002 192	Fastener
	3	6002 920	Fastener
	3	9420 867	Nut
11	1	3419 032-3	MOULDING PACKAGE, Roof Side Drain Trough, Rear Extension (Not used w/Belt Mldgs., Vinyl Roof or Two Tone Paint) (23-59-61)
	2	6024 271	Screw
12	1	3579 598-9	MOULDING PACKAGE, Roof Side Drain Trough, Front and Rear (23-59-61)
	4	6024 271	Screw
13	1	3419 728-9	MOULDING PACKAGE, Door (23-23-32)
	7	6003 002	Retainer
	1	6002 877	Retainer w/Seal
	1	6026 523	Nut
14	1	2933 722-3	MOULDING PACKAGE, Door Outside Belt (23-23-32)
	6	6002 782	Retainer
15	1	3419 826-7	MOULDING PACKAGE, Body Side Sill (23-23-2)
	5	6028 545	Screw
	8	6002 601	Retainer
	1	---- ---	Screw
16	1	2933 614-5	MOULDING PACKAGE, Qtr. Outside Belt, use w/Vinyl Roof or Two Tone Paint (23-23-39)
	3	6002 782	Retainer
	1	6025 985	Screw
	1	2933 626-7	MOULDING and T/PLATE PACKAGE, Qtr. Outside Belt, use w/o Vinyl Roof or Two Tone Paint (23-23-39)
	3	6002 782	Retainer
	1	6027 459	Screw
17	1	3419 734-5	MOULDING PACKAGE, Qtr. Outside (23-23-39)
	2	6002 884	Retainer
	2	6027 625	Nut
	10	6002 875	Retainer

All Packages Include Attaching Parts

Part Type Code is Indicated in Parentheses

1971
EXTERIOR VIEW - PLYMOUTH FURY II P-L 2 DOOR HARDTOP

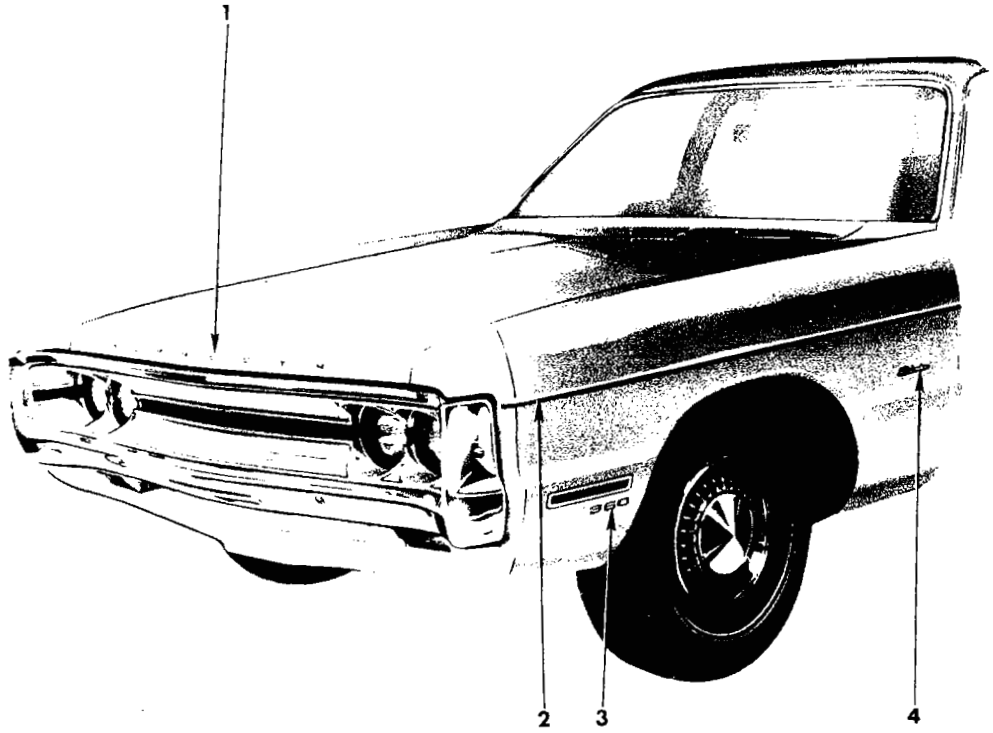

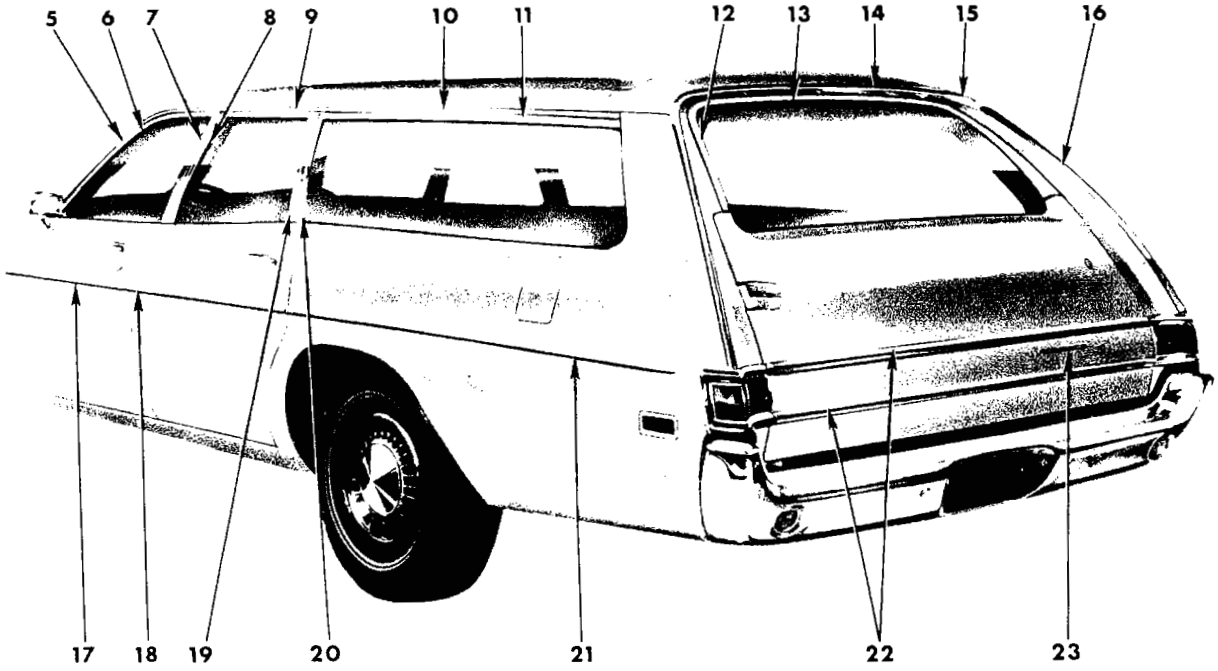

19a3594

1971
EXTERIOR VIEW - PLYMOUTH P-L SUBURBAN

REF. NO.	QTY	PART NUMBER	DESCRIPTION
1	1	2528 974	LETTER "P", Hood Front (15-06-16)
	1	2528 975	"L"
	1	2528 976	"Y"
	1	2528 977	"M"
	1	2528 978	"O"
	1	2528 979	"U"
	1	2528 980	"T"
	1	2528 981	"H"
	16	9420 254	Nut
2	1	3481 998-9	MOULDING PACKAGE, Fender Side (12-15-2)
	4	6002 877	Retainer and Seal
	4	9419 784	Nut
	10	6003 002	Retainer
	2	6029 259	Nut
3	2	3612 450	NAME PLATE, Fender Side, "360" (12-15-21)
	2	2949 240	"383" (12-15-21)
	2	2898 878	"440" (12-15-21)
	4	9420 291	Nut
4	2	3446 765	NAME PLATE, Fender Side, "Suburban" (12-15-21)
5	1	2933 568-9	MOULDING PACKAGE, Body Front Pillar Drain Trough (23-59-61)
	10	6024 271	Screw
6	1	2893 698-9	MOULDING, Frt. Door Wdo. Opng. Frame, Upr. (23-23-32)
7	1	2893 700-1	MOULDING, Frt. Door Wdo. Opng. Frame, Rr. (23-23-32)
8	1	2893 700	MOULDING, Rear Door Wdo. Opng. Frame, Frt., Lt. (23-23-33)
	1	2893 701	MOULDING, Rear Door Wdo. Opng. Frame, Frt., Rt. (23-23-33)
9	1	2893 724-5	MOULDING, Rear Door Wdo. Opng. Frame, Upr. (23-23-33)
10	1	3419 450-1	MOULDING PACKAGE, Roof Side Drain Trough (23-59-61)
	12	6024 271	Screw
11	1	2893 258-9	MOULDING, Qtr. Wdo. Outside, Upr., Prime (23-23-73)
	1	2894 872-3	MOULDING, Qtr. Wdo. Outside, Upr., Finish (23-23-73)
12	1	2894 442-3	MOULDING, Qtr. Pnl. Outside Tailgate Pillar, Upr. Tailgate Opng., Prime (23-23-60)
13	1	2894 445	MOULDING, Roof Pnl. Outside Tailgate Opng., Upr., Prime (23-23-60)
14	1	2894 418	MOULDING, Roof Rear Air Deflector, Center (23-23-60)
15	1	2894 416-7	MOULDING, Roof Rear Air Deflector, End (23-23-60)
16	1	3440 476-7	MOULDING, Qtr. Pnl. Outside Tailgate Pillar, Upr., w/o Assist Handles (23-23-60)
	1	3440 478-9	MOULDING, Qtr. Pnl. Outside Tailgate Pillar, Upr., w/Assist Handles (23-23-60)
17	1	3419 748-9	MOULDING PACKAGE, Frt. Door (23-23-32)
	10	6003 002	Retainer
	2	6002 877	Retainer
	2	6029 259	Nut
18	1	3419 750-1	MOULDING PACKAGE, Rear Door (23-23-33)
	6	6003 002	Retainer
	4	6002 877	Retainer
	4	6029 259	Nut
19	1	2893 728-9	MOULDING, Rear Door Wdo. Opng. Frame, Rr. (23-23-33)
20	1	2893 256-7	MOULDING, Qtr. Wdo. Outside, Frt., Prime (23-23-73)
	1	2894 870-1	MOULDING, Qtr. Wdo. Outside, Frt., Finish (23-23-73)
21	1	3419 764-5	MOULDING PACKAGE, Qtr. Outside (23-23-39)
	16	6003 002	Retainer
22	2	2933 471	MOULDING PACKAGE, Tailgate Outside, Upr. and Lwr. (23-23-61)
	AR	6002 779	Retainer
	AR	6029 259	Nut
	AR	6002 780	Retainer
23	1	2785 791	NAME PLATE, Tailgate Outside Panel, "Plymouth" (23-54-11)
	3	---- ---	Nut

All Packages Include Attaching Parts

Part Type Code is Indicated in Parentheses

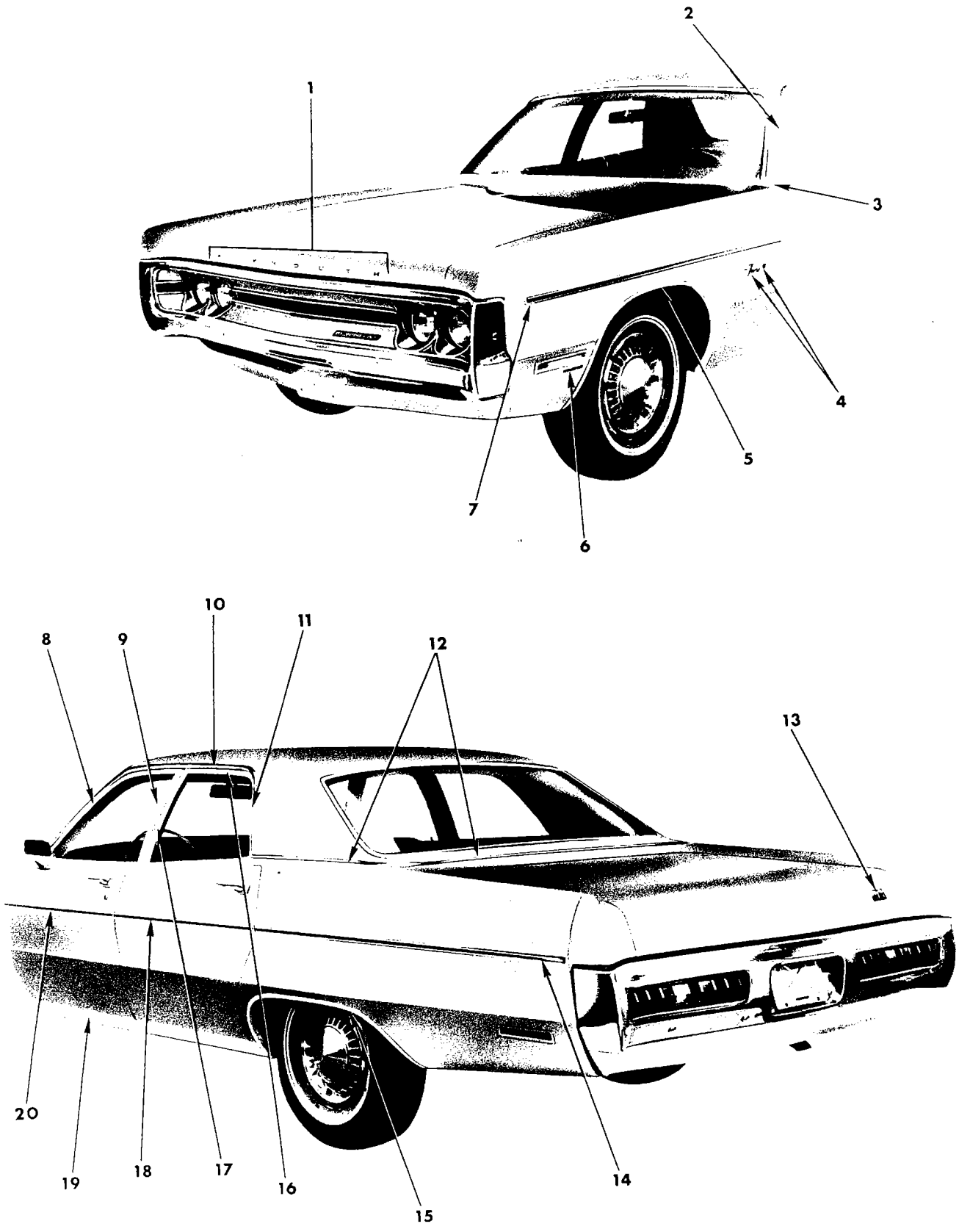

1971
EXTERIOR VIEW - PLYMOUTH FURY III P-M 4 DOOR SEDAN

REF. NO.	QTY	PART NUMBER	DESCRIPTION
1	1	2528 974	LETTER "P", Hood Front (15-06-16)
	1	2528 975	"L"
	1	2528 976	"Y"
	1	2528 977	"M"
	1	2528 978	"O"
	1	2528 979	"U"
	1	2528 980	"T"
	1	2528 981	"H"
	16	9420 254	Nut
2	1	2933 568-9	MOULDING PACKAGE, Body Front Pillar Drain Trough (23-59-61)
	10	6024 271	Screw
3	1	3419 482-3	MOULDING PACKAGE, Body Frt. Lwr. Pillar (23-23-14)
	1	6028 674	Screw
4	2	3504 152	NAME PLATE, Fender Side, "Fury" (12-15-21)
	2	3504 155	NUMERAL, Fender Side, "III" (12-15-21)
5	1	3419 718-9	MOULDING PACKAGE, Fender Wheel Opng. (12-15-2)
	7	6028 545	Screw
6	2	3612 450	NAME PLATE, Fender Side, "360" (12-15-21)
	2	2949 240	"383" (12-15-21)
	2	2898 878	"440" (12-15-21)
	4	9420 291	Nut
7	1	3620 350-1	MOULDING PACKAGE, Fender, Black (12-15-2)
	1	3620 352-3	Blue (12-15-2)
	1	3620 354-5	Green (12-15-2)
	1	3620 356-7	Gold (12-15-2)
	1	3620 358-9	White (12-15-2)
	2	6003 161	Retainer
	2	6029 259	Nut
	6	6003 159	Retainer
	6	6024 271	Screw
8	1	2893 698-9	MOULDING, Frt. Door Wdo. Opng. Frame, Upr. (23-23-32)
9	1	2893 700-1	MOULDING, Frt. Door Wdo. Opng. Frame, Rr. (23-23-32)
10	1	3419 424-5	MOULDING PACKAGE, Roof Side Drain Trough, Front (23-59-61)
	10	6024 271	Screw
11	1	2933 586-7	MOULDING PACKAGE, Roof Side Drain Trough, Rear (23-59-61)
	8	6024 271	Screw
12	1	2933 566-7	MOULDING PACKAGE, Deck Opng. Upr. Pnl. (23-23-31)
	3	6002 920	Retainer
	3	9420 867	Nut
	4	6002 192	Fastener
13	1	3568 567	MEDALLION, Deck Lid Lock (23-17-19)
	2	9420 278	Nut
14	1	3620 432-3	MOULDING PACKAGE, Qtr. Outside, Black (23-23-39)
	1	3620 434-5	Blue (23-23-39)
	1	3620 436-7	Green (23-23-39)
	1	3620 438-9	Gold (23-23-39)
	1	3620 440-1	White (23-23-39)
	7	6003 159	Retainer
	7	6024 271	Screw
	1	6003 161	Retainer
	1	6027 625	Nut
15	1	3419 736-7	MOULDING PACKAGE, Qtr. Outside Wheel Opening (23-23-39)
	6	6028 545	Screw
	1	3419 740-1	MOULDING PACKAGE, Qtr. Outside Wheel Opening Panel (23-23-39)
	6	6023 247	Screw
16	1	2893 722-3	MOULDING, Rear Door Wdo. Opng. Frame, Upr. (23-23-33)
17	1	2893 700	MOULDING, Rear Door Wdo. Opng. Frame, Frt., Lt. (23-23-33)
	1	2893 701	MOULDING, Rear Door Wdo. Opng. Frame, Frt., Rt. (23-23-33)
18	1	3620 412-3	MOULDING PACKAGE, Rear Door, Black (23-23-33)
	1	3620 414-5	Blue (23-23-33)
	1	3620 416-7	Green (23-23-33)
	1	3620 418-9	Gold (23-23-33)
	1	3620 420-1	White (23-23-33)
	2	6003 161	Retainer
	2	6029 259	Nut
	3	6003 159	Retainer
	3	6024 271	Screw
19	1	3419 826-7	MOULDING PACKAGE, Body Side Sill (23-23-2)
	5	6028 545	Screw
	8	6002 601	Retainer
	1	---- ---	Screw
20	1	3620 392-3	MOULDING PACKAGE, Frt. Door, Black (23-23-32)
	1	3620 394-5	Blue (23-23-32)
	1	3620 396-7	Green (23-23-32)
	1	3620 398-9	Gold (23-23-32)
	1	3620 400-1	White (23-23-32)
	1	6003 161	Retainer
	1	6029 259	Nut
	6	6003 159	Retainer
	6	6024 271	Screw

All Packages Include Attaching Parts

Part Type Code is Indicated in Parentheses

1971
EXTERIOR VIEW - PLYMOUTH FURY III P-M 4 DOOR SEDAN

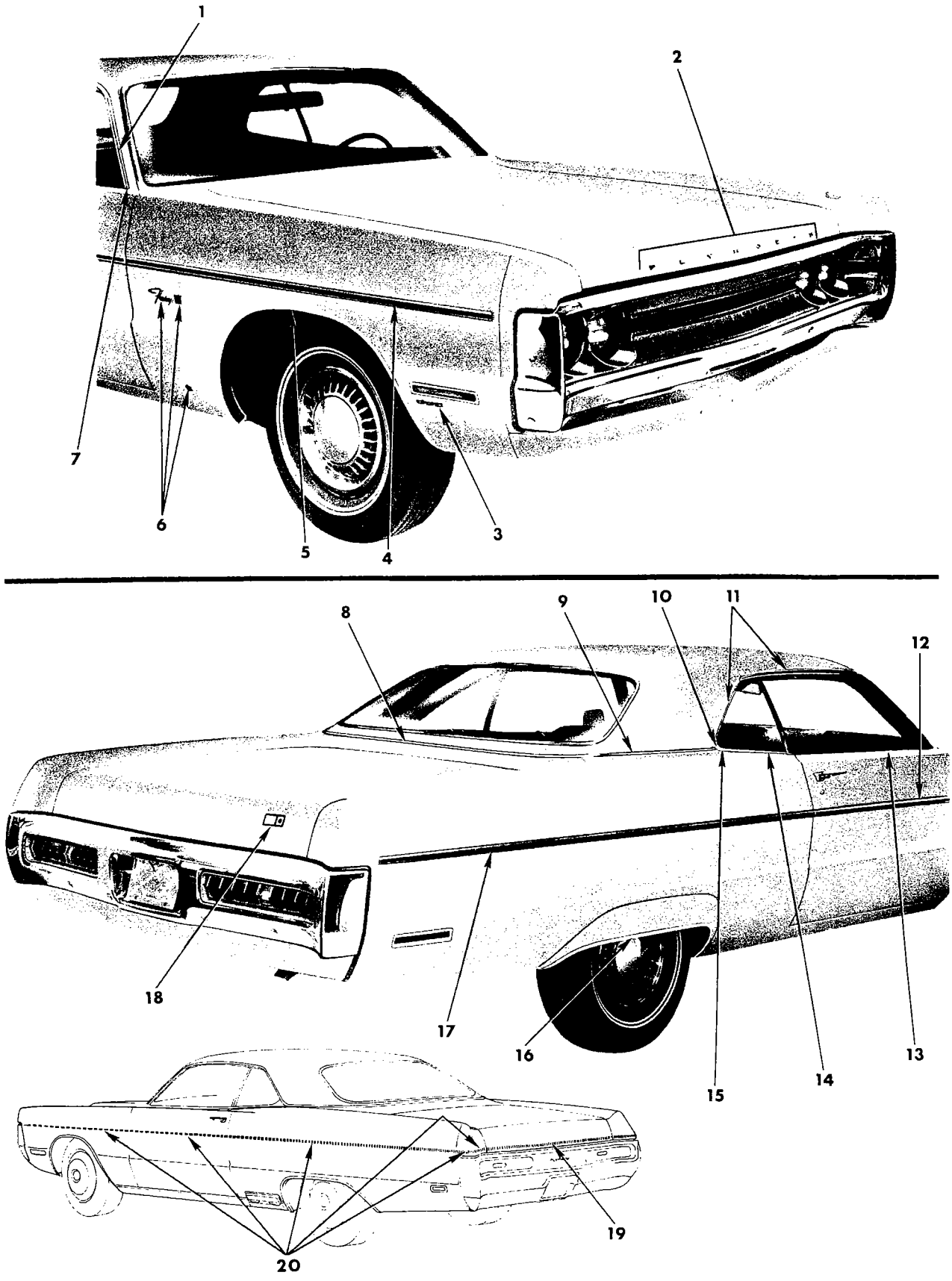

1971
EXTERIOR VIEW - PLYMOUTH FURY III P-M 2 DOOR HARDTOP

REF. NO.	QTY	PART NUMBER	DESCRIPTION
1	1	2933 602-3	MOULDING PACKAGE, Body Front Pillar Drain Trough, Up to approx. June 1, 1971 (23-59-61)
	6	6024 271	Screw
	1	3683 304-5	MOULDING PACKAGE, Body Front Pillar Drain Trough, After approx. June 1, 1971 (23-59-61)
	6	6024 271	Screw
2	1	2528 974	LETTER "P", Hood Front (15-06-16)
	1	2528 975	"L"
	1	2528 976	"Y"
	1	2528 977	"M"
	1	2528 978	"O"
	1	2528 979	"U"
	1	2528 980	"T"
	1	2528 981	"H"
	16	9420 254	Nut
3	2	3612 450	NAME PLATE, Fender Side, "360" (12-15-21)
	2	2949 240	"383" (12-15-21)
	2	2898 878	"440" (12-15-21)
	4	9420 291	Nut
4	1	3620 350-1	MOULDING PACKAGE, Fender, Black (12-15-2)
	1	3620 352-3	Blue (12-15-2)
	1	3620 354-5	Green (12-15-2)
	1	3620 356-7	Gold (12-15-2)
	1	3620 358-9	White (12-15-2)
	2	6003 161	Retainer
	6	6003 159	Retainer
	2	6029 259	Nut
	6	6024 271	Screw
5	1	3419 718-9	MOULDING PACKAGE, Fender Wheel Opng. (12-15-2)
	7	6028 545	Screw
6	2	3504 152	NAME PLATE, Fender Side, "Fury" (12-15-21)
	2	3504 155	"III" (12-15-21)
	1	2785 540	MEDALLION, Fender Side, Rt., Pentastar (12-15-21)
7	1	3419 482-3	MOULDING PACKAGE, Body Frt. Lwr. Pillar (23-23-14)
	1	6028 674	Screw
8	1	3419 026	MOULDING PACKAGE, Deck Opng. Upr. Pnl., use w/Vinyl Roof or Two Tone Paint (23-23-31)
	2	6002 192	Fastener
	3	6002 920	Fastener
	3	9420 867	Nut
9	1	3419 028-9	MOULDING PACKAGE, Deck Opng. Upr. Pnl., Side, use w/Vinyl Roof, w/o Belt Mldgs. (23-23-31)
	3	6002 192	Fastener
	1	3419 030-1	MOULDING PACKAGE, Deck Opng. Upr. Pnl., Side, use w/Vinyl Roof or Two Tone Paint, w/Belt Mldgs. (23-23-31)
	3	6002 192	Fastener
	3	6002 920	Fastener
	3	9420 867	Nut
10	1	3419 032-3	MOULDING PACKAGE, Roof Side Drain Trough, Rear Extension (Not used w/Belt Mldgs., Vinyl Roof or Two Tone Paint) (23-59-61)
	2	6024 271	Screw
11	1	3579 598-9	MOULDING PACKAGE, Roof Side Drain Trough, Front and Rear (23-59-61)
	4	6024 271	Screw
12	1	3620 322-3	MOULDING PACKAGE, Door, Black (23-23-32)
	1	3620 306-7	Blue (23-23-32)
	1	3620 308-9	Green (23-23-32)
	1	3620 310-1	Gold (23-23-32)
	1	3620 312-3	White (23-23-32)
	1	6003 161	Retainer
	6	6003 159	Retainer
	1	6029 259	Nut
	6	6024 271	Screw
13	1	2933 722-3	MOULDING PACKAGE, Door Outside Belt (23-23-32)
	6	6002 782	Retainer
14	1	2933 614-5	MOULDING PACKAGE, Qtr. Outside Belt, use w/Vinyl Roof or Two Tone Paint (23-23-39)
	3	6002 782	Retainer
	1	6025 985	Screw
	1	2933 626-7	MOULDING and T/PLATE PACKAGE, Qtr. Outside Belt, use w/o Vinyl Roof or Two Tone Paint (23-23-39)
	3	6002 782	Retainer
	1	6027 459	Screw
15	1	2933 624-5	MOULDING PACKAGE, Qtr. Outside Belt to Drip, use w/Vinyl Roof or Two Tone Paint (23-23-39)
	2	6025 985	Screw
16	1	3419 736-7	MOULDING PACKAGE, Qtr. Outside Wheel Opening (23-23-39)
	6	6028 545	Screw
	1	3419 740-1	MOULDING PACKAGE, Qtr. Outside Wheel Opng. Panel (23-23-39)
	6	6023 247	Screw
17	1	3620 382-3	MOULDING PACKAGE, Qtr., Black (23-23-39)
	1	3620 384-5	Blue (23-23-39)
	1	3620 386-7	Green (23-23-39)
	1	3620 390-1	Gold (23-23-39)
	1	3620 388-9	White (23-23-39)
	6	6003 159	Retainer
	1	6003 161	Retainer
	6	6024 271	Screw
	1	6027 625	Nut

CONTINUED ON NEXT PAGE

All Packages Include Attaching Parts

Part Type Code is Indicated in Parentheses

1971
EXTERIOR VIEW - PLYMOUTH FURY III P-M 2 DOOR HARDTOP

REF. NO.	QTY	PART NUMBER	DESCRIPTION
18	1	3568 567	MEDALLION, Deck Lid Lock (23-17-19)
	2	9420 278	Nut
19	1	3612 684	TAPE, Deck Lid Color Stripe, White (23-23-12)
	1	3612 685	Gold (23-23-12)
	1	3612 686	Black (23-23-12)
	1	3685 160	TAPE PACKAGE, Deck Lid, White (23-23-12)
	1	3685 161	Gold (23-23-12)
	1	3685 159	Black (23-23-12)
20	1	3612 838-9	TAPE, Qtr. Ext. Rear Color Stripe, White (23-23-12)
	1	3612 840-1	Gold (23-23-12)
	1	3612 842-3	Black (23-23-12)
	1	3612 672-3	TAPE, Qtr. Color Stripe, White (23-23-12)
	1	3612 674-5	Gold (23-23-12)
	1	3612 676-7	Black (23-23-12)
	2	3612 666	TAPE, Door Color Stripe, White (23-23-12)
	2	3612 667	Gold (23-23-12)
	2	3612 668	Black (23-23-12)
	1	3612 654-5	TAPE, Frt. Fender Color Stripe, White (12-15-33)
	1	3612 656-7	Gold (12-15-33)
	1	3612 658-9	Black (12-15-33)
	1	3685 154-5	TAPE PACKAGE, Body Side, Fender, Door, Qtr. Panel, White (23-23-12)
	1	3685 156-7	Gold (23-23-12)
	1	3685 150-1	Black (23-23-12)

All Packages Include Attaching Parts

Part Type Code is Indicated in Parentheses

1971
EXTERIOR VIEW - PLYMOUTH FURY III P-M 2 DOOR HARDTOP

NOTES

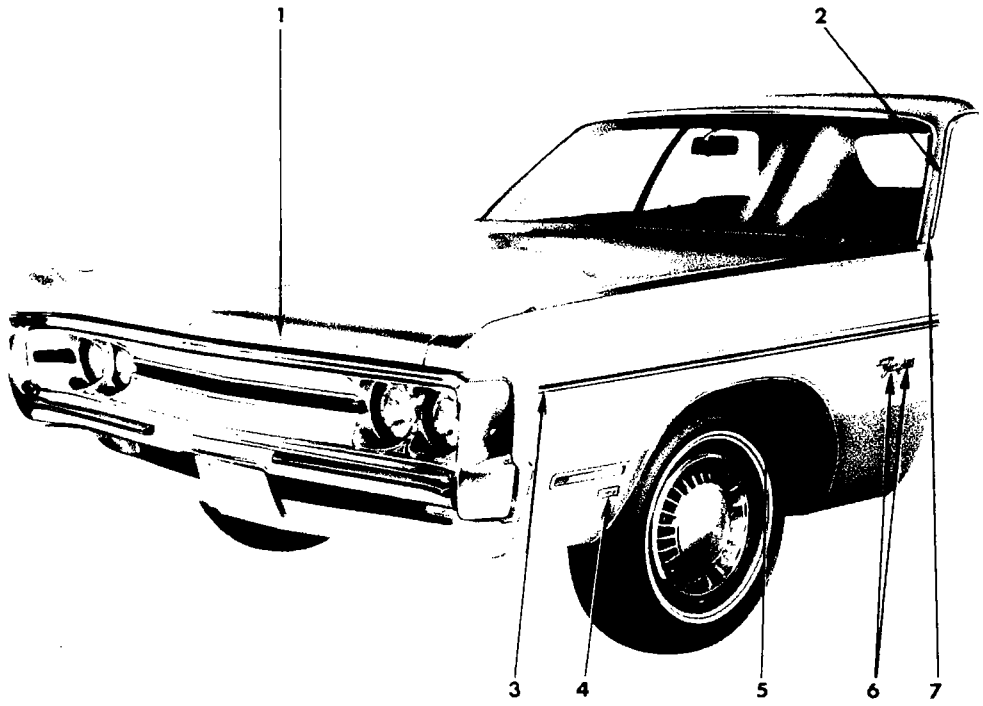

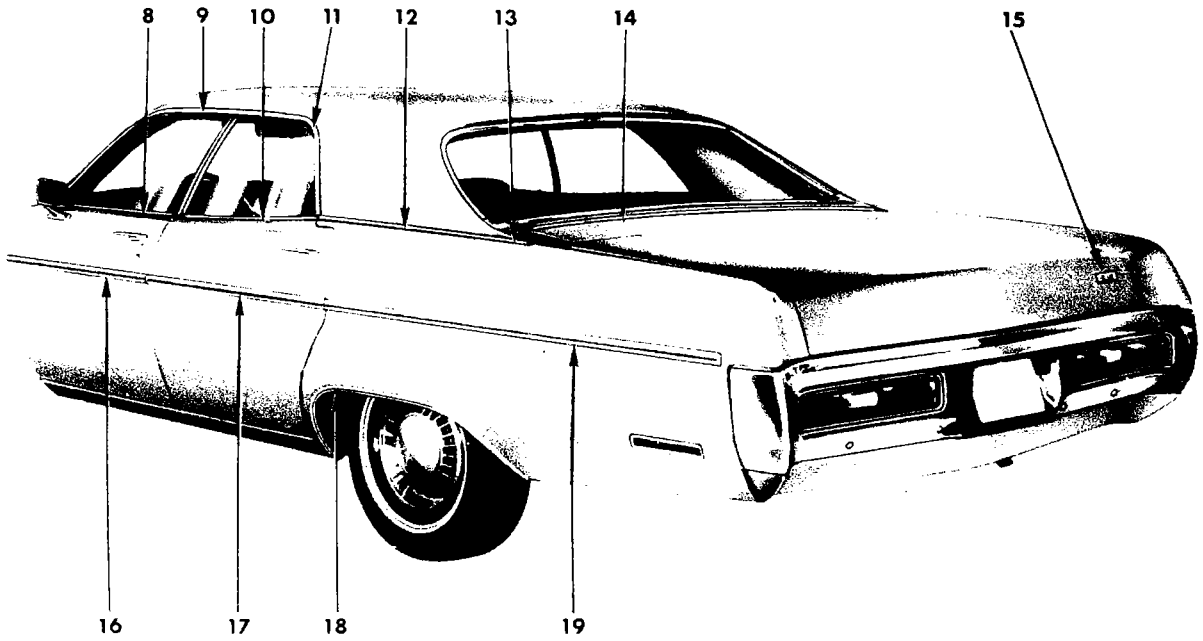

19a3509A

1971
EXTERIOR VIEW - PLYMOUTH FURY III P-M 4 DOOR HARDTOP

REF. NO.	QTY	PART NUMBER	DESCRIPTION
1	1	2528 974	LETTER "P", Hood (15-06-16)
	1	2528 975	"L" 1 2528 979 "U"
	1	2528 976	"Y" 1 2528 980 "T"
	1	2528 977	"M" 1 2528 981 "H"
	1	2528 978	"O" 16 9420 254 Nut
2	1	2933 600-1	MOULDING PACKAGE, Body Front Pillar Drain Trough, Up to approx. June 1, 1971 (23-59-61)
	6	6024 271	Screw
	1	3685 124-5	MOULDING PACKAGE, Body Front Pillar Drain Trough, After approx. June 1, 1971 (23-59-61)
	10	6024 271	Screw
3	1	3620 350-1	MOULDING PACKAGE, Fender, Black (12-15-2)
	1	3620 352-3	Blue (12-15-2)
	1	3620 354-5	Green (12-15-2)
	1	3620 356-7	Gold (12-15-2)
	1	3620 358-9	White (12-15-2)
	2	6003 161	Retainer 2 6029 259 Nut
	6	6003 159	Retainer 6 6024 271 Screw
4	2	3612 450	NAME PLATE, Fender Side, "340" (12-15-21)
	2	2949 240	NAME PLATE, Fender Side, "383" (12-15-21)
	2	2898 878	NAME PLATE, Fender Side, "440" (12-15-21)
	4	9420 291	Nut
5	1	3419 718-9	MOULDING PACKAGE, Fender Wheel Opng. (12-15-2)
	7	6028 545	Screw
6	2	3504 152	NAME PLATE, Fender Side, "Fury" (12-15-21)
	2	3504 155	NAME PLATE, Fender Side, "III" (12-15-21)
	1	2785 540	MEDALLION, Fender Side, Rt., Pentastar (12-15-21)
7	1	3419 482-3	MOULDING PACKAGE, Body Frt. Lwr. Pillar (23-23-14)
	1	6028 674	Screw
8	1	2933 764-5	MOULDING PACKAGE, Frt. Door Outside Belt (23-23-32)
	10	6002 782	Retainer
9	1	3579 102-3	MOULDING PACKAGE, Roof Side Drain Trough, Front, Up to approx. June 1, 1971 (23-59-61)
	4	6024 271	Screw
	1	3683 306-7	MOULDING PACKAGE, Roof Side Drain Trough, Front, After approx. June 1, 1971 (23-59-61)
	4	6024 271	Screw
10	1	2933 766-7	MOULDING PACKAGE, Rear Door Outside Belt (23-23-33)
	5	6002 782	Retainer
11	1	2933 588-9	MOULDING PACKAGE, Roof Side Drain Trough, Rear, Up to approx. June 1, 1971 (23-59-61)
	4	6024 271	Screw
	1	3683 308-9	MOULDING PACKAGE, Roof Side Drain Trough, Rear, After approx. June 1, 1971 (23-59-61)
	6	6024 271	Screw
12	1	3419 044-5	MOULDING PACKAGE, Qtr. Outside Belt, use w/Vinyl Roof or Two Tone Paint (23-23-39)
	4	6002 192	Fastener
	4	6002 920	Retainer
	4	9420 867	Nut
13	1	2933 578-9	MOULDING PACKAGE, Deck Opng. Upr. Pnl. Outer Corner, use w/Vinyl Roof or Two Tone Paint (23-23-31)
	1	9420 294	Nut
14	1	2933 570-1	MOULDING PACKAGE, Deck Opng. Upr. Pnl., use w/Vinyl Roof or Two Tone Paint (23-23-31)
	4	6002 920	Retainer
	4	9420 867	Nut
	4	6002 192	Fastener
15	1	3568 567	MEDALLION, Deck Lid Lock (23-17-19)
	2	6024 716	Washer
	2	9420 278	Nut
16	1	3620 392-3	MOULDING PACKAGE, Frt. Door, Black (23-23-32)
	1	3620 394-5	Blue (23-23-32)
	1	3620 396-7	Green (23-23-32)
	1	3620 398-9	Gold (23-23-32)
	1	3620 400-1	White (23-23-32)
	1	6003 161	Retainer
	1	6029 259	Nut
	5	6001 159	Retainer
	5	6024 271	Screw
17	1	3620 412-3	MOULDING PACKAGE, Rear Door, Black (23-23-33)
	1	3620 414-5	Blue (23-23-33)
	1	3620 416-7	Green (23-23-33)
	1	3620 418-9	Gold (23-23-33)
	1	3620 420-1	White (23-23-33)
	2	6003 161	Retainer
	2	6029 259	Nut
	3	6003 159	Retainer
	3	6024 271	Screw
18	1	3419 740-1	MOULDING PACKAGE, Qtr. Outside Wheel Opng. Pnl. (23-23-39)
	6	6023 247	Screw
	1	3419 736-7	MOULDING PACKAGE, Qtr. Outside Wheel Opening (23-23-39)
	6	6028 545	Screw
19	1	3620 432-3	MOULDING PACKAGE, Qtr. Outside, Black (23-23-39)
	1	3620 434-5	Blue (23-23-39)
	1	3620 436-7	Green (23-23-39)
	1	3620 438-9	Gold (23-23-39)
	1	3620 440-1	White (23-23-39)
	7	6003 159	Retainer
	7	6024 271	Screw
	1	6003 161	Retainer
	1	6027 625	Nut

All Packages Include Attaching Parts

Part Type Code is Indicated in Parentheses

1971

EXTERIOR VIEW - PLYMOUTH FURY III P-M 4 DOOR HARDTOP

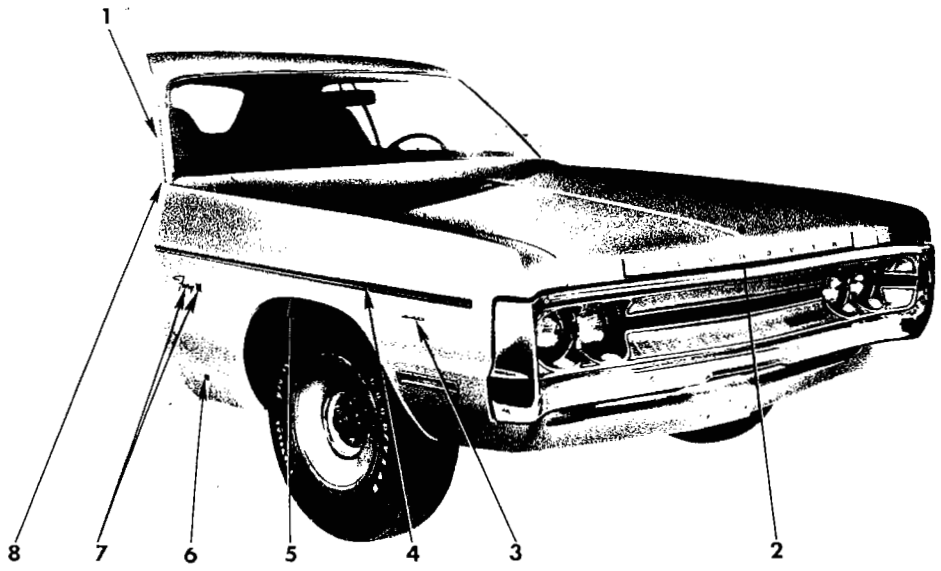

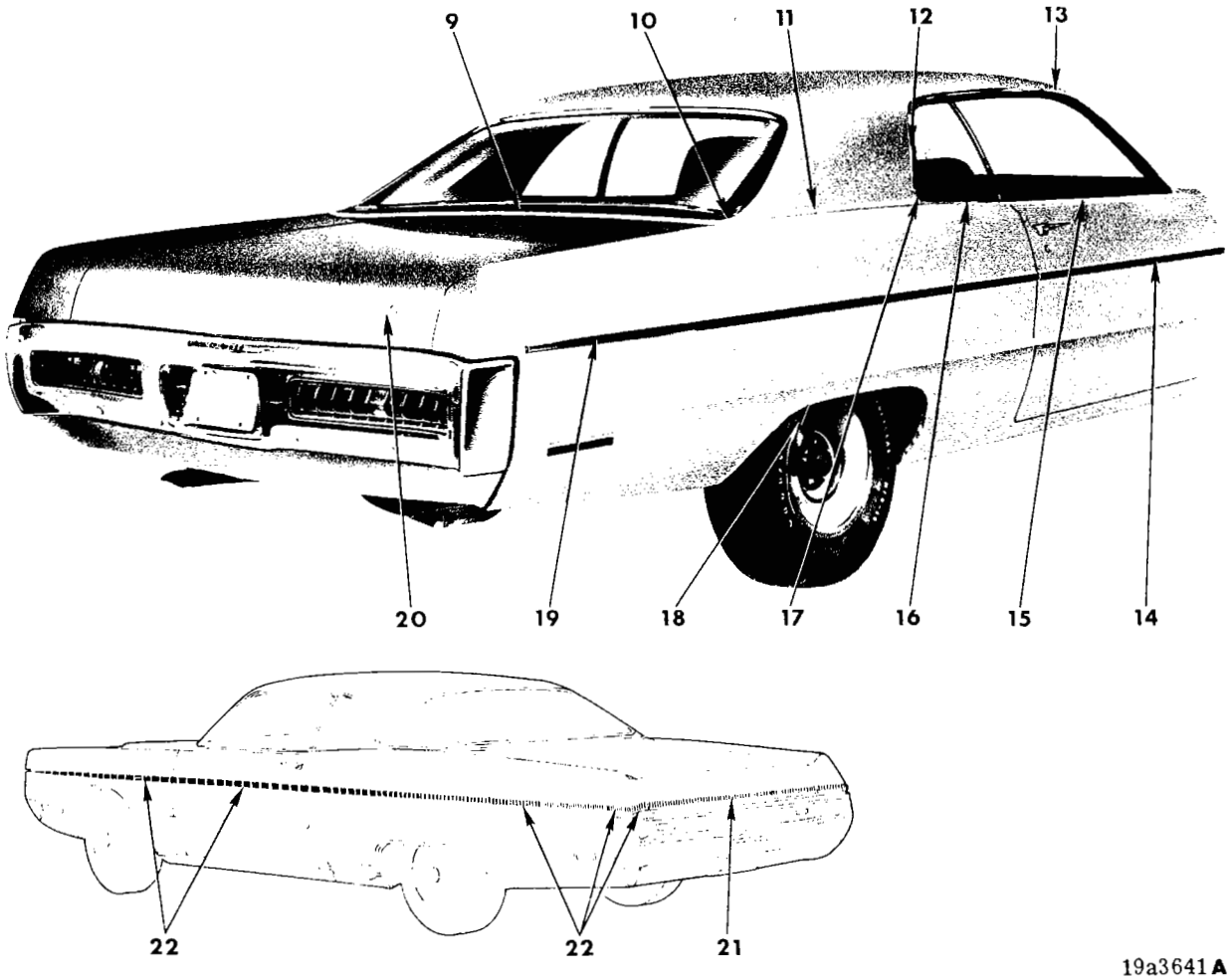

1971
EXTERIOR VIEW - PLYMOUTH FURY III P-M FASTBACK

REF. NO.	QTY	PART NUMBER	DESCRIPTION
1	1	2933 600-1	MOULDING PACKAGE, Body Front Pillar Drain Trough, Up to approx. June 1, 1971 (23-59-61)
	6	6024 271	Screw
	1	3685 124-5	MOULDING PACKAGE, Body Front Pillar Drain Trough, After approx. June 1, 1971 (23-59-61)
	10	6024 271	Screw
2	1	2528 974	NAME LETTER "P", Hood Front (15-06-16)
	1	2528 975	"L" 1 2528 979 "U"
	1	2528 976	"Y" 1 2528 980 "T"
	1	2528 977	"M" 1 2528 981 "H"
	1	2528 978	"O" 16 9420 254 Nut
3	2	3612 450	NAME PLATE, Fender Side, "360" (12-15-21)
	2	2949 240	"383" (12-15-21)
	2	2898 878	"440" (12-15-21)
	4	9420 291	Nut
4	1	3620 350-1	MOULDING PACKAGE, Fender Side, Black (12-15-2)
	1	3620 352-3	Blue (12-15-2)
	1	3620 354-5	Green (12-15-2)
	1	3620 356-7	Gold (12-15-2)
	1	3620 358-9	White (12-15-2)
	2	6003 161	Retainer 2 6029 259 Nut
	6	6003 159	Retainer 6 6024 271 Screw
5	1	3419 718-9	MOULDING PACKAGE, Fender Wheel Opng. (12-15-2)
	7	6028 545	Screw
6	1	2785 540	MEDALLION, Fender Side, Rt., Pentastar (12-15-21)
7	2	3504 152	NAME PLATE, Fender Side, "Fury" (12-15-21)
	2	3504 155	NUMERAL, Fender Side, "III" (12-15-21)
8	1	3419 482-3	MOULDING PACKAGE, Body Frt. Lwr. Pillar (23-23-14)
	1	6028 674	Screw
9	1	2933 570-1	MOULDING PACKAGE, Deck Opng. Upr. Pnl. (23-23-31)
	4	6002 920	Retainer
	4	6002 192	Fastener 4 9420 867 Nut
10	1	2933 578-9	MOULDING PACKAGE, Deck Opng. Upr. Pnl. Outer Corner (23-23-31)
	1	9420 294	Nut
11	1	2933 894-5	MOULDING PACKAGE, Qtr. Outside Belt (23-23-39)
	AR	6002 192	Fastener
	AR	6002 920	Retainer AR 9426 926 Nut
12	1	2933 590-1	MOULDING PACKAGE, Roof Side Drain Trough, Rear (23-59-61)
	4	6024 271	Screw
13	1	3579 102-3	MOULDING PACKAGE, Roof Side Drain Trough, Front, Up to approx. June 1, 1971 (23-59-61)
	4	6024 271	Screw
	1	3683 306-7	MOULDING PACKAGE, Roof Side Drain Trough, Front, After approx. June 1, 1971 (23-59-61)
	4	6024 271	Screw
14	1	3620 322-3	MOULDING PACKAGE, Door, Black (23-23-32)
	1	3620 306-7	Blue (23-23-32)
	1	3620 308-9	Green (23-23-32)
	1	3620 310-1	Gold (23-23-32)
	1	3620 312-3	White (23-23-32)
	1	6003 161	Retainer 1 6029 259 Nut
	6	6003 159	Retainer 6 6024 271 Screw
15	1	2933 722-3	MOULDING PACKAGE, Door Outside Belt (23-23-32)
	6	6002 782	Retainer
16	1	2933 614-5	MOULDING PACKAGE, Qtr. Outside Belt (23-23-39)
	3	6002 782	Retainer 1 6025 985 Screw
17	1	3419 414-5	MOULDING PACKAGE, Qtr. Outside Belt to Drain Trough (23-23-39)
	4	9427 804	Screw
18	1	3419 736-7	MOULDING PACKAGE, Qtr. Outside Whl. Opng. (23-23-39)
	6	6028 545	Screw
19	1	3620 382-3	MOULDING PACKAGE, Qtr. Outside, Black (23-23-39)
	1	3620 384-5	Blue (23-23-39)
	1	3620 386-7	Green (23-23-39)
	1	3620 390-1	Gold (23-23-39)
	1	3620 388-9	White (23-23-39)
	6	6003 159	Retainer 6 6024 271 Screw
	1	6003 161	Retainer 1 6027 625 Nut
20	1	3568 567	MEDALLION, Deck Lid Lock (23-17-19)
	2	9420 278	Nut
21	1	3612 684	TAPE, Deck Lid Stripe, White (23-23-12)
	1	3612 685	Gold (23-23-12)
	1	3612 686	Black (23-23-12)
	1	3685 160	TAPE PACKAGE, Deck Lid, White (23-23-12)
	1	3685 161	Gold (23-23-12)
	1	3685 159	Black (23-23-12)
22	1	3612 838-9	TAPE, Qtr. Pnl. Ext. Rear Stripe, White (23-23-12)
	1	3612 840-1	Gold (23-23-12)
	1	3612 842-3	Black (23-23-12)
	1	3612 672-3	TAPE, Qtr. Pnl. Stripe, White (23-23-12)
	1	3612 674-5	Gold (23-23-12)
	1	3612 676-7	Black (23-23-12)
	2	3612 666	TAPE, Door Stripe, White (23-23-12)
	2	3612 667	Gold (23-23-12)
	2	3612 668	Black (23-23-12)
	1	3612 654-5	TAPE, Fender Stripe, White (12-15-33)
	1	3612 656-7	Gold (12-15-33)
	1	3612 658-9	Black (12-15-33)
	1	3685 154-5	TAPE PACKAGE, Body Side, Fender, Door, Qtr. Panel, White (23-23-12)
	1	3685 156-7	Gold (23-23-12)
	1	3685 150-1	Black (23-23-12)

1971
EXTERIOR VIEW - PLYMOUTH FURY III P-M FASTBACK

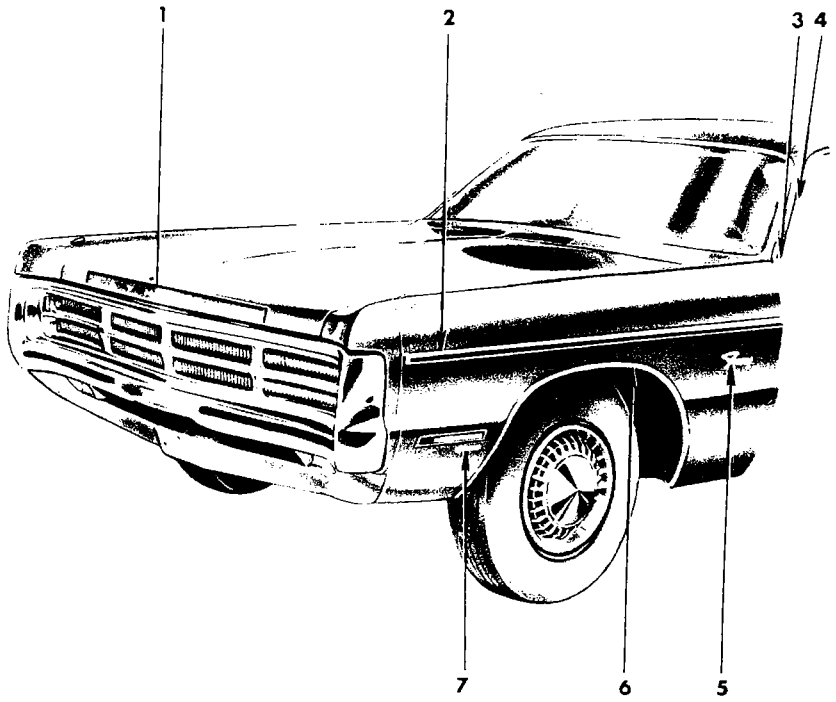

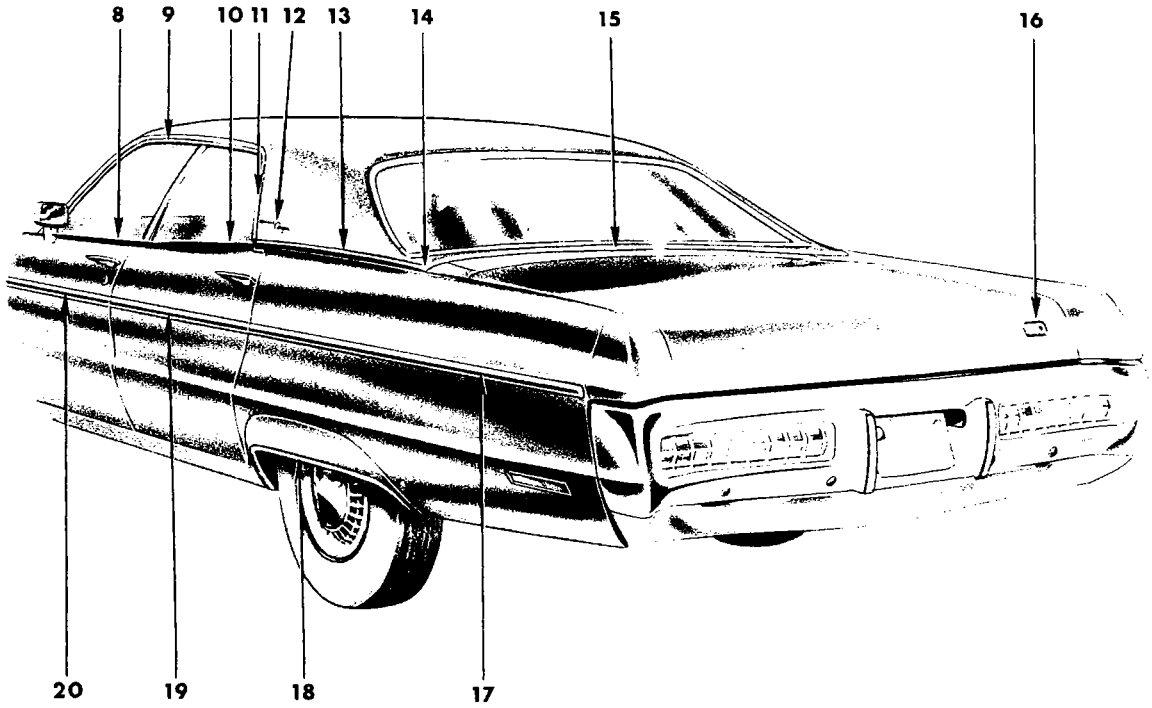

19a375o

1971
EXTERIOR VIEW - PLYMOUTH FURY P-M (GRAN COUPE) 4 DOOR HARDTOP

REF. NO.	QTY	PART NUMBER	DESCRIPTION
1	1	2528 974	LETTER "P", Hood (15-06-16)
	1	2528 975	"L"
	1	2528 976	"Y"
	1	2528 977	"M"
	1	2528 978	"O"
	1	2528 979	"U"
	1	2528 980	"T"
	1	2528 981	"H"
	16	9420 254	Nut
2	1	3620 546-7	MOULDING PACKAGE, Fender Side, Tan (12-15-2)
	2	6003 161	Retainer
	2	6029 259	Nut
	6	6003 159	Retainer
	6	6024 271	Screw
3	1	3419 482-3	MOULDING PACKAGE, Body Frt. Lwr. Pillar (23-23-14)
	1	6028 674	Screw
4	1	2933 600-1	MOULDING PACKAGE, Body Front Pillar Drain Trough, Up to approx. June 1, 1971 (23-59-61)
	6	6024 271	Screw
	1	3685 124-5	MOULDING PACKAGE, Body Front Pillar Drain Trough, After approx. June 1, 1971 (23-59-61)
	10	6024 271	Screw
5	2	3504 152	NAME PLATE, Fender Side, "Fury" (12-15-21)
6	1	3419 718-9	MOULDING PACKAGE, Fender Wheel Opng. (12-15-2)
	7	6028 545	Screw
7	2	3612 450	NAME PLATE, Fender Side, "360" (12-15-21)
	2	2949 240	"383" (12-15-21)
	2	2898 878	"440" (12-15-21)
	4	9420 291	Nut
8	1	2933 764-5	MOULDING PACKAGE, Frt. Door Outside Belt (23-23-32)
	10	6002 782	Retainer
9	1	3579 102-3	MOULDING PACKAGE, Roof Side Drain Trough, Front, Up to approx. June 1, 1971 (23-59-61)
	4	6024 271	Screw
	1	3683 306-7	MOULDING PACKAGE, Roof Side Drain Trough, Front, After approx. June 1, 1971
	4	6024 271	Screw
10	1	2933 766-7	MOULDING PACKAGE, Rear Door Outside Belt (23-23-33)
	5	6002 782	Retainer
11	1	2933 588-9	MOULDING PACKAGE, Roof Side Drain Trough, Rear, Up to approx. June 1, 1971 (23-59-61)
	4	6024 271	Screw
	1	3683 308-9	MOULDING PACKAGE, Roof Side Drain Trough, Rear, After approx. June 1, 1971 (23-59-61)
	6	6024 271	Screw
12	2	3569 537	NAME PLATE, Qtr. Panel, "Gran Coupe" (23-34-238)
	2	9420 263	Nut
13	1	3419 044-5	MOULDING PACKAGE, Qtr. Outside Belt, use w/Vinyl Roof or Two Tone Paint (23-23-39)
	4	6002 192	Fastener
	4	6002 920	Retainer
	4	9420 867	Nut
14	1	2933 578-9	MOULDING PACKAGE, Deck Opng. Upr. Pnl. Outer Corner, use w/Two Tone Paint or Vinyl Roof (23-23-31)
	1	9420 294	Nut
15	1	2933 570-1	MOULDING PACKAGE, Deck Opng. Upr. Pnl., use w/Vinyl Roof or Two Tone Paint (23-23-31)
	4	6002 920	Retainer
	4	9420 867	Nut
	4	6002 192	Fastener
16	1	3613 688	MEDALLION, Deck Lid Lock, "Gran Coupe" (23-17-19)
	2	9420 278	Nut
17	1	3620 540-1	MOULDING PACKAGE, Qtr. Outside, Tan (23-23-39)
	7	6003 159	Retainer
	7	6024 271	Screw
	1	6003 161	Retainer
	1	6027 625	Nut
18	1	3419 740-1	MOULDING PACKAGE, Qtr. Outside Wheel Opening Panel (23-23-39)
	6	6023 247	Screw
	1	3419 736-7	MOULDING PACKAGE, Qtr. Outside Wheel Opening (23-23-39)
	6	6028 545	Screw
19	1	3620 542-3	MOULDING PACKAGE, Rear Door, Tan (23-23-33)
	2	6003 161	Retainer
	2	6029 259	Nut
	3	6003 159	Retainer
	3	6024 271	Screw
20	1	3620 544-5	MOULDING PACKAGE, Frt. Door, Tan (23-23-32)
	1	6003 161	Retainer
	1	6029 259	Nut
	5	6001 159	Retainer
	5	6024 271	Screw

All Packages Include Attaching Parts
Part Type Code is Indicated in Parentheses

1971
EXTERIOR VIEW - PLYMOUTH FURY P-M (GRAN COUPE) 4 DOOR HARDTOP

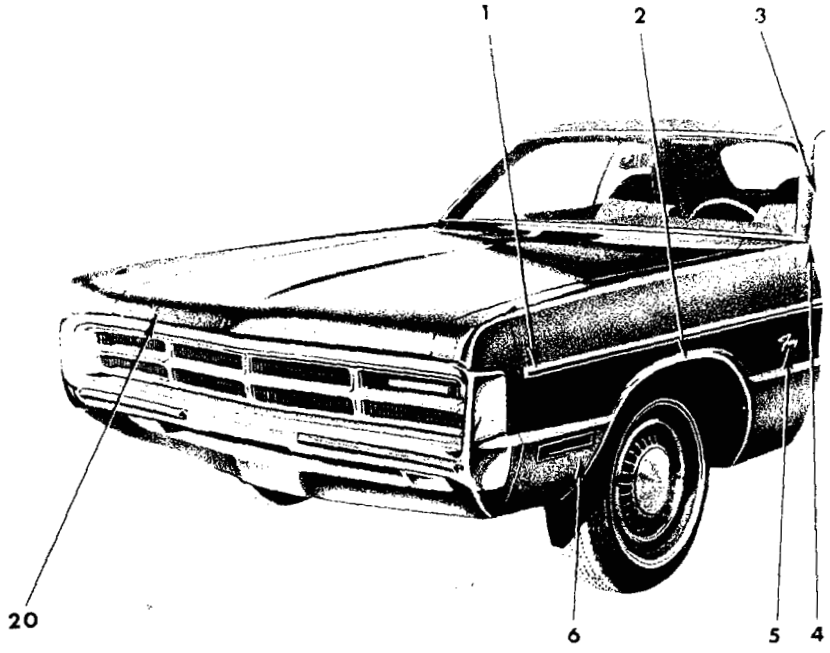

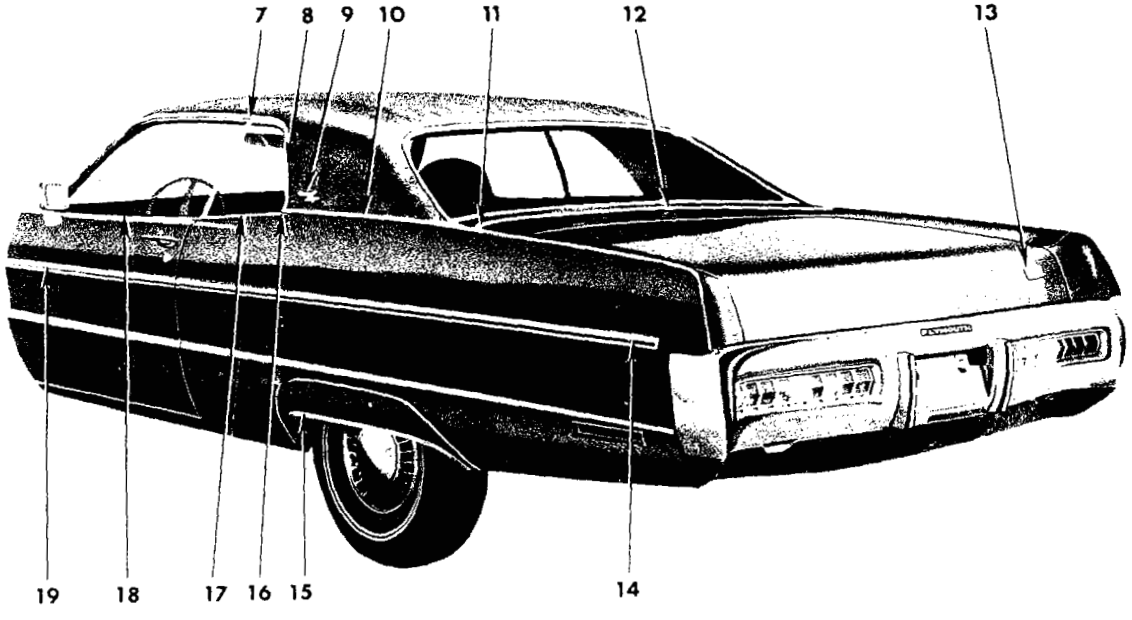

1971
EXTERIOR VIEW - PLYMOUTH FURY P-M (GRAN COUPE) FASTBACK

REF. NO.	QTY	PART NUMBER	DESCRIPTION
1	1	3620 546-7	MOULDING PACKAGE, Fender Side, Tan (12-15-2)
	2	6003 161	Retainer
	2	6029 259	Nut
	6	6003 159	Retainer
	6	6024 271	Screw
2	1	3419 718-9	MOULDING PACKAGE, Fender Wheel Opng. (12-15-2)
	7	6028 545	Screw
3	1	2933 600-1	MOULDING PACKAGE, Body Front Pillar Drain Trough, Up to approx. June 1, 1971 (23-59-61)
	6	6024 271	Screw
	1	3685 124-5	MOULDING PACKAGE, Body Front Pillar Drain Trough, After approx. June 1, 1971 (23-59-61)
	10	6024 271	Screw
4	1	3419 482-3	MOULDING PACKAGE, Body Frt. Lwr. Pillar (23-23-14)
	1	6028 674	Screw
5	2	3504 152	NAME PLATE, Fender Side, "Fury" (12-15-21)
6	2	3612 450	NAME PLATE, Fender Side, "360" (12-15-21)
	2	2949 240	"383" (12-15-21)
	2	2898 878	"440" (12-15-21)
	4	9420 291	Nut
7	1	3579 102-3	MOULDING PACKAGE, Roof Side Drain Trough, Front (23-59-61)
	4	6024 271	Screw
8	1	2933 590-1	MOULDING PACKAGE, Roof Side Drain Trough, Rear (23-59-61)
	4	6024 271	Screw
9	2	3569 537	NAME PLATE, Qtr. Panel, "Gran Coupe" (23-34-334)
	2	9420 263	Nut
10	1	2933 894-5	MOULDING PACKAGE, Qtr. Outside Belt (23-23-39)
	AR	6002 192	Fastener
	AR	6002 920	Retainer
	AR	9426 926	Nut
11	1	2933 578-9	MOULDING PACKAGE, Deck Opng. Upr. Pnl. Outer Corner (23-23-31)
	1	9420 294	Nut
12	1	2933 570-1	MOULDING PACKAGE, Deck Opng. Upr. Pnl. (23-23-31)
	4	6002 920	Retainer
	4	9420 867	Nut
	4	6002 192	Fastener
13	1	3613 688	MEDALLION, Deck Lid Lock, "Gran Coupe" (23-17-19)
	2	9420 278	Nut
14	1	3620 536-7	MOULDING PACKAGE, Qtr. Outside, Tan (23-23-39)
	6	6003 159	Retainer
	6	6024 271	Screw
	1	6003 161	Retainer
	1	6027 625	Nut
15	1	3419 736-7	MOULDING PACKAGE, Qtr. Outside Wheel Opening (23-23-39)
	6	6028 545	Screw
	1	3419 740-1	MOULDING PACKAGE, Qtr. Outside Wheel Opng. Pnl. (23-23-39)
	6	6023 247	Screw
16	1	3419 414-5	MOULDING PACKAGE, Qtr. Outside Belt to Drain Trough (23-23-39)
	4	9427 804	Screw
17	1	2933 614-5	MOULDING PACKAGE, Qtr. Outside Belt (23-23-39)
	3	6002 782	Retainer
	1	6025 985	Screw
18	1	2933 722-3	MOULDING PACKAGE, Door Outside Belt (23-23-32)
	6	6002 782	Retainer
19	1	3620 538-9	MOULDING PACKAGE, Door Outside, Tan (23-23-32)
	1	6003 161	Retainer
	1	6029 259	Nut
	6	6003 159	Retainer
	6	6024 271	Screw
20	1	2528 974	LETTER "P", Hood (15-06-16)
	1	2528 975	"L"
	1	2528 976	"Y"
	1	2528 977	"M"
	1	2528 978	"O"
	1	2528 979	"U"
	1	2528 980	"T"
	1	2528 981	"H"
	16	9420 254	Nut

All Packages Include Attaching Parts

Part Type Code is Indicated in Parentheses

1971
EXTERIOR VIEW - PLYMOUTH FURY P-M (GRAN COUPE) FASTBACK

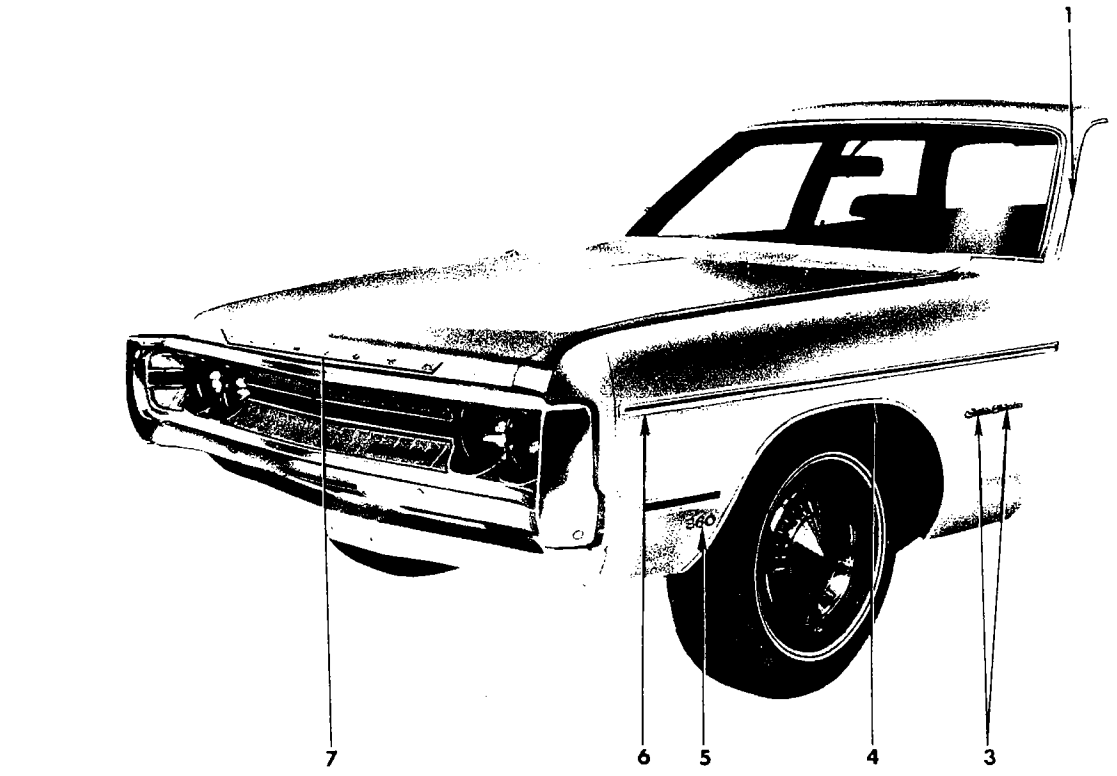

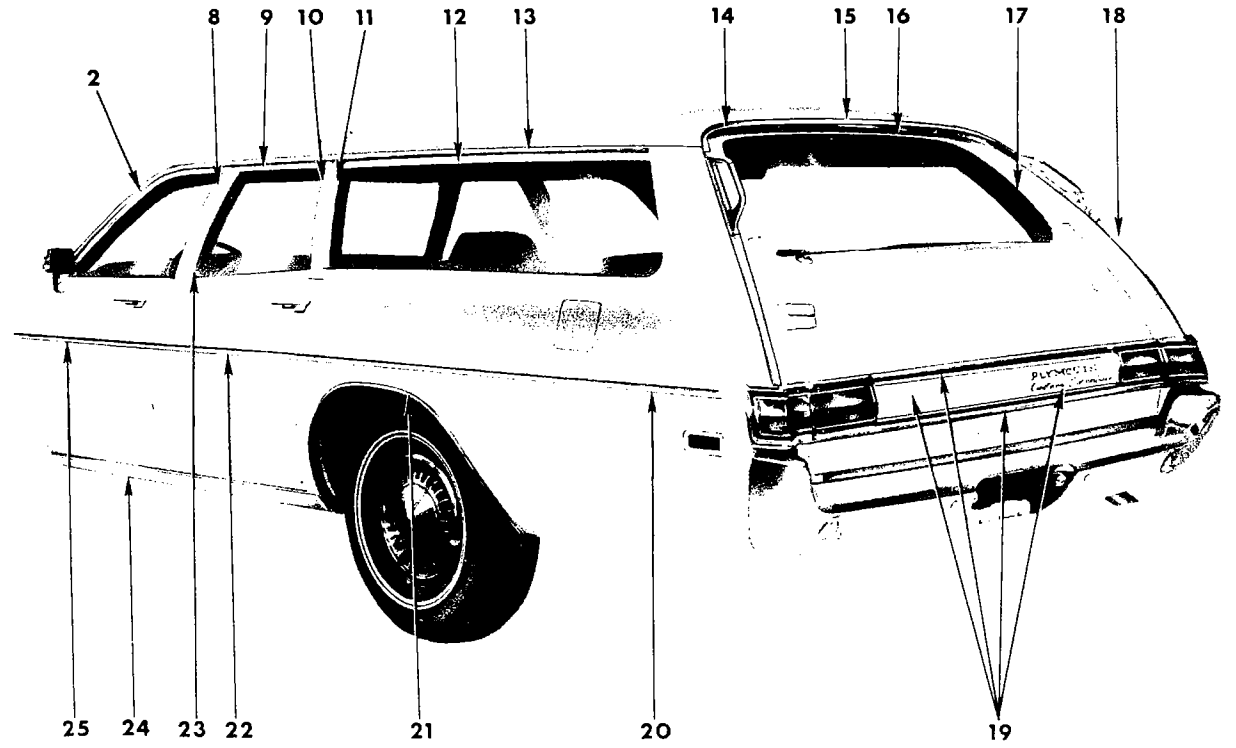

19a3642

1971
EXTERIOR VIEW - PLYMOUTH P-M CUSTOM SUBURBAN

REF. NO.	QTY	PART NUMBER	DESCRIPTION
1	1	2933 568-9	MOULDING PACKAGE, Body Front Pillar Drain Trough (23-59-61)
	10	6024 271	Screw
2	1	2893 698-9	MOULDING, Frt. Door Wdo. Opng. Frame, Upr. (23-23-32)
3	2	3446 764	NAME PLATE, Fender Side, "Custom Suburban" (12-15-21)
4	1	2933 286-7	MOULDING PACKAGE, Fender Wheel Opng. (12-15-2)
	14	6028 545	Screw
5	2	3612 450	NAME PLATE, Fender Side, "360" (12-15-21)
	2	2949 240	"383" (12-15-21)
	2	2898 878	"440" (12-15-21)
	4	9420 291	Nut
6	1	3620 350-1	MOULDING PACKAGE, Fender, Black (12-15-2)
	1	3620 352-3	Blue (12-15-2)
	1	3620 354-5	Green (12-15-2)
	1	3620 356-7	Gold (12-15-2)
	1	3620 358-9	White (12-15-2)
	2	6003 161	Retainer
	2	6029 259	Nut
	6	6003 159	Retainer
	6	6024 271	Screw
7	1	2528 974	NAME LETTER "P", Hood Front (15-06-16)
	1	2528 975	"L"
	1	2528 976	"Y"
	1	2528 977	"M"
	1	2528 978	"O"
	1	2528 979	"U"
	1	2528 980	"T"
	1	2528 981	"H"
	16	9420 254	Nut
8	1	2893 700-1	MOULDING, Frt. Door Wdo. Opng. Frame, Rr. (23-23-32)
9	1	2893 724-5	MOULDING, Rear Door Wdo. Opng. Frame, Upr. (23-23-33)
10	1	2893 728-9	MOULDING, Rear Door Wdo. Opng. Frame, Rr. (23-23-33)
11	1	2893 256-7	MOULDING, Qtr. Wdo. Outside, Frt., Prime (23-23-73)
	1	2894 870-1	MOULDING, Qtr. Wdo. Outside, Frt., Finish (23-23-73)
12	1	2893 258-9	MOULDING, Qtr. Wdo. Outside, Upr., Prime (23-23-73)
	1	2894 872-3	MOULDING, Qtr. Wdo. Outside, Upr., Finish (23-23-73)
13	1	3419 450-1	MOULDING PACKAGE, Roof Side Drain Trough (23-59-61)
	12	6024 271	Screw
14	1	2894 416-7	MOULDING, Roof Rear Air Deflector, End (23-23-60)
15	1	2894 418	MOULDING, Roof Rear Air Deflector, Center (23-23-60)
16	1	2894 445	MOULDING, Roof Pnl. Outside Tailgate Opng., Upr., Prime (23-23-60)
17	1	2894 442-3	MOULDING, Qtr. Pnl. Outside Tailgate Pillar, Upr., Tailgate Opng. Prime (23-23-60)
18	1	3440 476-7	MOULDING, Qtr. Pnl. Outside Tailgate Pillar, Upr., use w/o Assist Handles (23-23-60)
	1	3440 478-9	MOULDING, Qtr. Pnl. Outside Tailgate Pillar, Upr., use w/Assist Handles (23-23-60)
19	1	3570 964	PANEL, Tailgate Outside Finish and Name Plate (23-23-77)
	5	6002 781	Retainer
20	1	3620 464-5	MOULDING PACKAGE, Qtr. Outside, Black (23-23-39)
	1	3620 466-7	Blue (23-23-39)
	1	3620 468-9	Green (23-23-39)
	1	3620 472-3	Gold (23-23-39)
	1	3620 470-1	White (23-23-39)
	8	6003 159	Retainer
	9	6024 271	Screw
21	1	2933 774-5	MOULDING PACKAGE, Qtr. Outside Wheel Opening (23-23-39)
	14	6028 545	Screw
22	1	3620 412-3	MOULDING PACKAGE, Rear Door, Black (23-23-33)
	1	3620 414-5	Blue (23-23-33)
	1	3620 416-7	Green (23-23-33)
	1	3620 418-9	Gold (23-23-33)
	1	3620 420-1	White (23-23-33)
	2	6003 161	Retainer
	2	6029 259	Nut
	3	6003 159	Retainer
	3	6024 271	Screw
23	1	2893 700	MOULDING, Rear Door Wdo. Opng. Frame, Frt., Lt. (23-23-33)
	1	2893 701	MOULDING, Rear Door Wdo. Opng. Frame, Frt., Rt. (23-23-33)
24	1	3419 826-7	MOULDING PACKAGE, Body Side Sill (23-23-2)
	5	6028 545	Screw
	8	6002 601	Retainer
	1	---- ---	Screw
25	1	3620 392-3	MOULDING PACKAGE, Frt. Door, Black (23-23-32)
	1	3620 394-5	Blue (23-23-32)
	1	3620 396-7	Green (23-23-32)
	1	3620 398-9	Gold (23-23-32)
	1	3620 400-1	White (23-23-32)
	1	6003 161	Retainer
	1	6029 259	Nut
	6	6003 159	Retainer
	6	6024 271	Screw

All Packages Include Attaching Parts

Part Type Code is Indicated in Parentheses

1971
EXTERIOR VIEW - PLYMOUTH P-M CUSTOM SUBURBAN

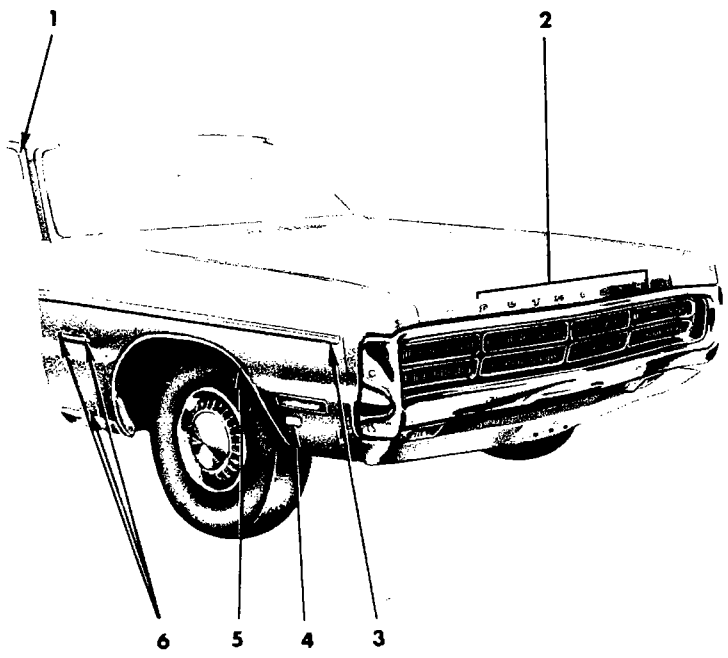

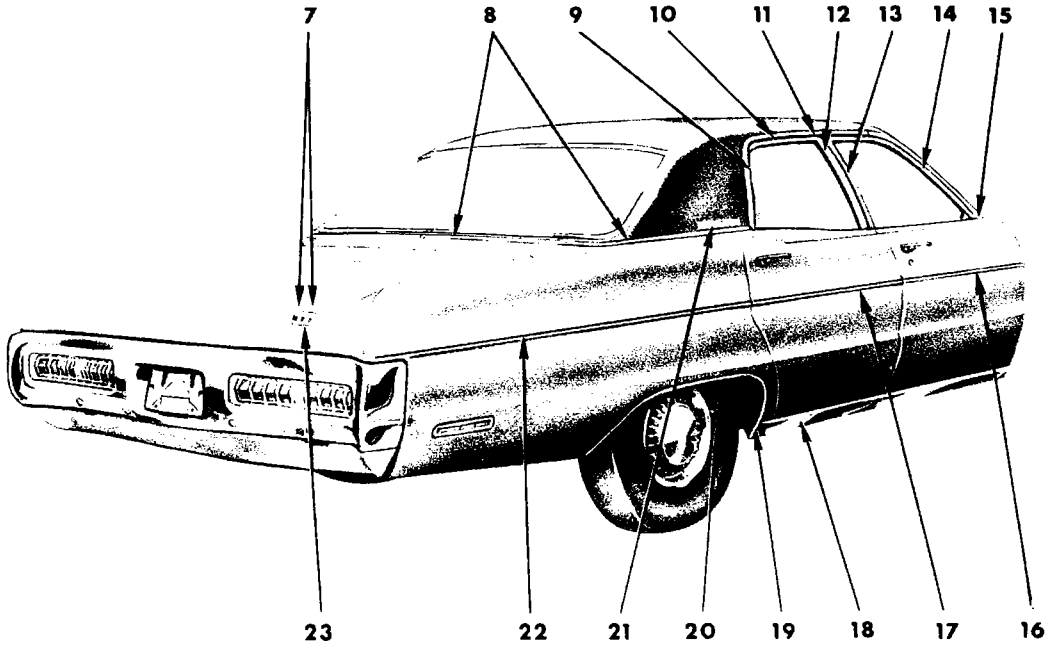

19a3586

1971
EXTERIOR VIEW - PLYMOUTH SPORT FURY P-H 4 DOOR SEDAN

REF. NO.	QTY	PART NUMBER	DESCRIPTION
1	1	2933 568-9	MOULDING PACKAGE, Body Front Pillar Drain Trough (23-59-61)
	10	6024 271	Screw
2	1	2528 974	LETTER "P", Hood Front Name (15-06-16)
	1	2528 975	"L"
	1	2528 976	"Y"
	1	2528 977	"M"
	1	2528 978	"O"
	1	2528 979	"U"
	1	2528 980	"T"
	1	2528 981	"H"
	16	9420 254	Nut
3	1	3620 340-1	MOULDING PACKAGE, Fender Side, Black (12-15-2)
	1	3620 342-3	Blue (12-15-2)
	1	3620 344-5	Green (12-15-2)
	1	3620 346-7	Gold (12-15-2)
	1	3620 348-9	White (12-15-2)
	2	6003 161	Retainer
	2	6029 259	Nut
	6	6003 159	Retainer
	6	6024 271	Screw
4	2	3612 450	NAME PLATE, Fender Side, "340" (12-15-21)
	2	2949 240	"383" (12-15-21)
	2	2898 878	"440" (12-15-21)
	4	9420 291	Nut
5	1	3419 718-9	MOULDING PACKAGE, Fender Wheel Opng. (12-15-2)
	7	6028 545	Screw
6	2	3612 458	NAME PLATE, Fender Side, "Sport Fury" (12-15-21)
	1	2785 540	MEDALLION, Fender Side, Rt., Pentastar (12-15-21)
7	1	3569 970	NAME PLATE, Rear Deck, "Sport" (23-19-114)
	1	3569 971	"Fury" (23-19-114)
8	1	2933 566-7	MOULDING PACKAGE, Deck Opng. Upr. Pnl., use w/ Vinyl Roof or Two Tone Paint (23-23-31)
	3	6002 920	Retainer
	3	9420 867	Nut
	4	6002 192	Fastener
9	1	2933 586-7	MOULDING PACKAGE, Roof Side Drain Trough, Rear (23-59-61)
	8	6024 271	Screw
10	1	2893 722-3	MOULDING PACKAGE, Rear Door Wdo. Opng. Frame, Upr. (23-23-33)
11	1	3419 424-5	MOULDING PACKAGE, Roof Side Drain Trough, Front (23-59-61)
	10	6024 271	Screw
12	1	2893 700	MOULDING, Rear Door Wdo. Opng. Frame, Frt., Lt. (23-23-33)
	1	2893 701	MOULDING, Rear Door Wdo. Opng. Frame, Frt., Rt. (23-23-33)
13	1	2893 700-1	MOULDING, Frt. Door Wdo. Opng. Frame, Rr. (23-23-32)
14	1	2893 698-9	MOULDING, Frt. Door Wdo. Opng. Frame, Upr. (23-23-32)
15	1	3419 482-3	MOULDING PACKAGE, Body Frt. Lwr. Pillar (23-23-14)
	1	6028 674	Screw
16	1	3620 402-3	MOULDING PACKAGE, Frt. Door, Black (23-23-32)
	1	3620 404-5	Blue (23-23-32)
	1	3620 406-7	Green (23-23-32)
	1	3620 408-9	Gold (23-23-32)
	1	3620 410-1	White (23-23-32)
	1	6003 161	Retainer
	1	6029 259	Nut
	5	6003 159	Retainer
	5	6024 271	Screw
17	1	3620 422-3	MOULDING PACKAGE, Rear Door, Black (23-23-33)
	1	3620 424-5	Blue (23-23-33)
	1	3620 426-7	Green (23-23-33)
	1	3620 428-9	Gold (23-23-33)
	1	3620 430-1	White (23-23-33)
	2	6003 161	Retainer
	2	6029 259	Nut
	3	6003 159	Retainer
	3	6024 271	Screw
18	1	3419 826-7	MOULDING PACKAGE, Body Side Sill (23-23-2)
	5	6028 545	Screw
	8	6002 601	Retainer
	1	---- ---	Screw
19	1	3419 742-3	MOULDING PACKAGE, Qtr. Outside Wheel Opng. Pnl., Frt., use w/ Wheel House Opng. Skirt (23-23-39)
	AR	6023 247	Screw
20	1	3419 744-5	MOULDING PACKAGE, Qtr. Outside Wheel Opng. Pnl., Rear, use w/ Wheel House Opng. Skirt (23-23-39)
	6	6023 247	Screw
	1	3419 736-7	MOULDING PACKAGE, Qtr. Outside Wheel Opng., use w/o Wheel House Opng. Skirt (23-23-39)
	6	6028 545	Screw
21	2	3504 323	NAME PLATE, Qtr. Outside, "Brougham" (23-34-238)
	2	9420 293	Nut
22	1	3620 442-3	MOULDING PACKAGE, Qtr. Outside, Black (23-23-39)
	1	3620 444-5	Blue (23-23-39)
	1	3620 446-7	Green (23-23-39)
	1	3620 448-9	Gold (23-23-39)
	1	3620 450-1	White (23-23-39)
	7	6003 159	Retainer
	7	6024 271	Screw
	1	6003 161	Retainer
	1	6027 625	Nut
23	1	3568 568	MEDALLION, Deck Lid Lock (23-17-19)
	2	6024 716	Washer
	2	9420 278	Nut

All Packages Include Attaching Parts

Part Type Code is Indicated in Parentheses

1971
EXTERIOR VIEW - PLYMOUTH SPORT FURY P-H 4 DOOR SEDAN

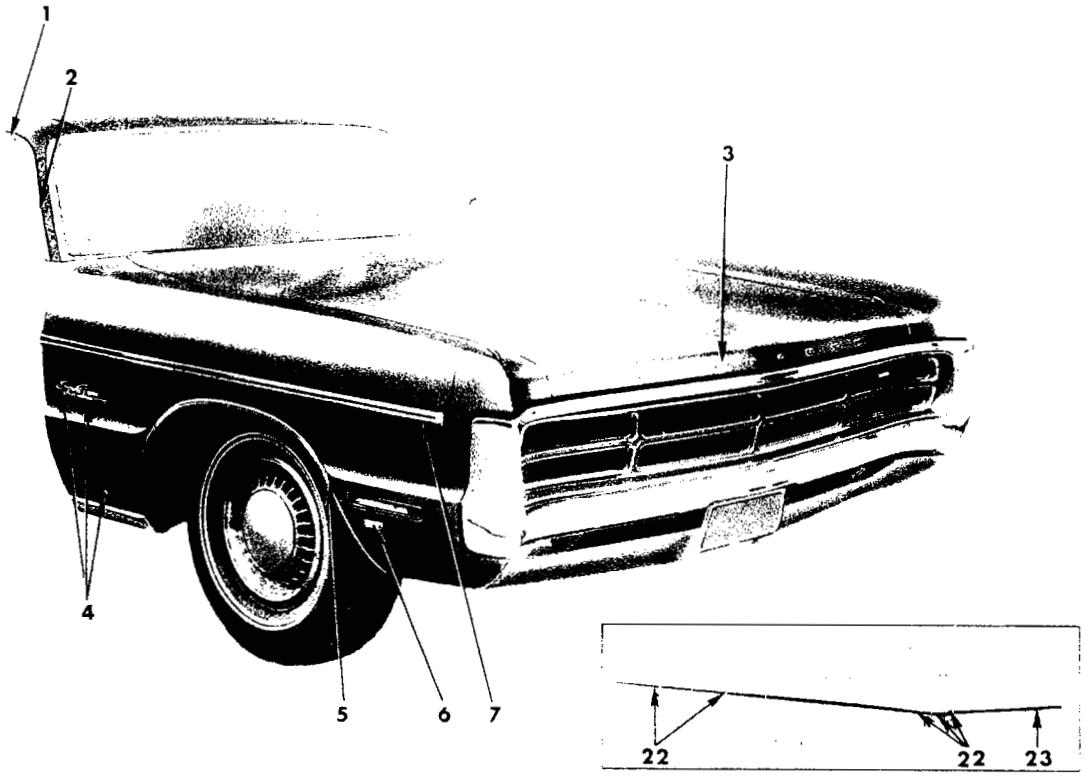

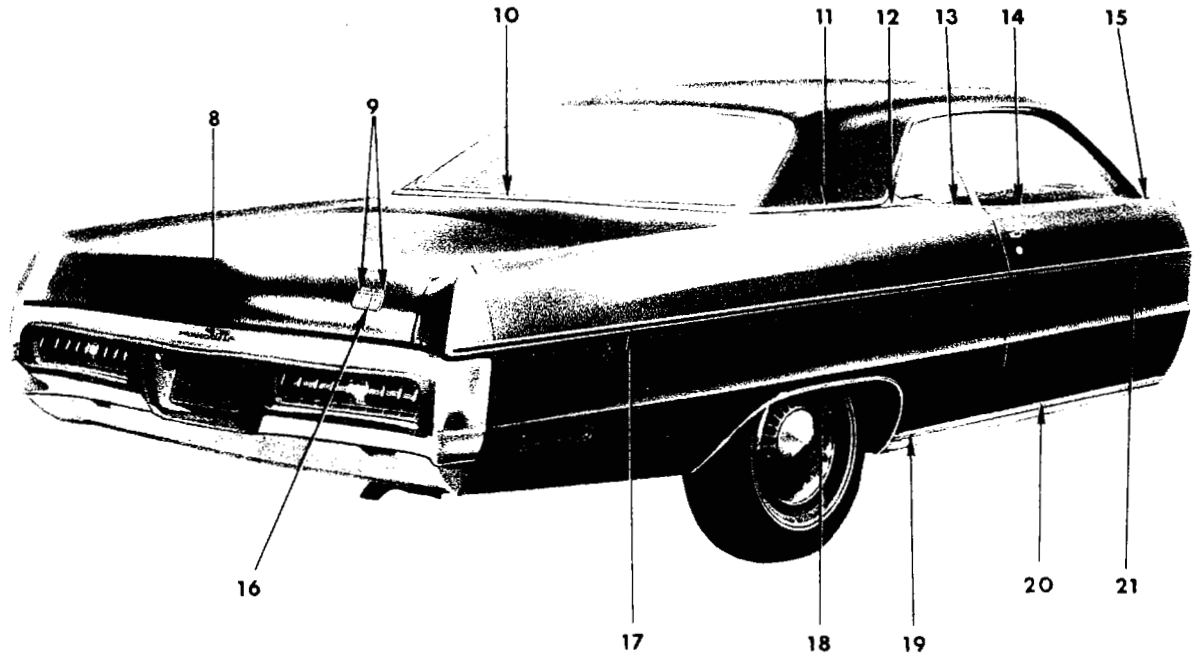

19a3510 **A**

1971
EXTERIOR VIEW - PLYMOUTH SPORT FURY P-H 2 DOOR HARDTOP

REF. NO.	QTY	PART NUMBER	DESCRIPTION
1	1	3579 598-9	MOULDING PACKAGE, Roof Side Drain Trough, Front and Rear (23-59-61)
	4	6024 271	Screw
2	1	2933 602-3	MOULDING PACKAGE, Body Front Pillar Drain Trough, Up to approx. June 1, 1971 (23-59-61)
	6	6024 271	Screw
	1	3683 304-5	MOULDING PACKAGE, Body Front Pillar Drain Trough, After approx. June 1, 1971 (23-59-61)
	6	6024 271	Screw
3	1	2528 974	LETTER "P", Hood (15-06-16)
	1	2528 975	"L"
	1	2528 976	"Y"
	1	2528 977	"M"
	1	2528 978	"O"
	1	2528 979	"U"
	1	2528 980	"T"
	1	2528 981	"H"
	16	9420 254	Nut
4	2	3612 458	NAME PLATE, Fender Side, "Sport Fury" (12-15-21)
	1	2785 540	MEDALLION, Fender Side, Rt., Pentastar (12-15-21)
5	1	3419 718-9	MOULDING PACKAGE, Fender Wheel Opng. (12-15-2)
	7	6028 545	Screw
6	2	3612 450	NAME PLATE, Fender Side, "360" (12-15-21)
	2	2949 240	"383" (12-15-21)
	2	2898 878	"440" (12-15-21)
	4	9420 291	Nut
7	1	3620 340-1	MOULDING PACKAGE, Fender, Black (12-15-2)
	1	3620 342-3	Blue (12-15-2)
	1	3620 344-5	Green (12-15-2)
	1	3620 346-7	Gold (12-15-2)
	1	3620 348-9	White (12-15-2)
	2	6003 161	Retainer
	6	6003 159	Retainer
	2	6029 259	Nut
	6	6024 271	Screw
8	1	3464 582	NAME PLATE (13-66-46)
	3	6027 466	Cap Nut
9	1	3569 970	NAME PLATE, Rear Deck, "Sport" (23-19-114)
	1	3569 971	"Fury" (23-19-114)
10	1	3419 026	MOULDING PACKAGE, Deck Opng. Upr. Pnl., use w/Vinyl Roof or Two Tone Paint (23-23-31)
	2	6002 192	Fastener
	3	6002 920	Fastener
	3	9420 867	Nut
11	1	3419 028-9	MOULDING PACKAGE, Deck Opng. Upr. Pnl. Side, w/Vinyl Roof, w/o Belt Mldg. (23-23-31)
	3	6002 192	Fastener
	1	3419 030-1	MOULDING PACKAGE, Deck Opng. Upr. Pnl. Side, w/Vinyl Roof or Two Tone Paint, w/Belt Mldg. (23-23-31)
	3	6002 192	Fastener
	3	6002 920	Fastener
	3	9420 867	Nut
12	1	2933 624-5	MOULDING PACKAGE, Qtr. Outside Belt to Drip, use w/Vinyl Roof or Two Tone Paint (23-23-39)
	2	6025 985	Screw
13	1	2933 614-5	MOULDING PACKAGE, Qtr. Outside Belt, use w/Vinyl Roof or Two Tone Paint (23-23-39)
	3	6002 782	Retainer
	1	6025 985	Screw
	1	2933 626-7	MOULDING and T/PLATE PACKAGE, Qtr. Outside Belt, use w/o Vinyl Roof or Two Tone Paint (23-23-39)
	3	6002 782	Retainer
	1	6027 459	Screw
14	1	2933 722-3	MOULDING PACKAGE, Door Outside Belt (23-23-32)
	6	6002 782	Retainer
15	1	3419 482-3	MOULDING PACKAGE, Body Frt. Lwr. Pillar (23-23-14)
	1	6028 674	Screw
16	1	3568 568	MEDALLION, Deck Lid Lock (23-17-19)
	2	6024 716	Washer
	2	9420 278	Nut
17	1	3620 370-1	MOULDING PACKAGE, Qtr. Outside, Black (23-23-39)
	1	3620 372-3	Blue (23-23-39)
	1	3620 374-5	Green (23-23-39)
	1	3620 376-7	Gold (23-23-39)
	1	3620 378-9	White (23-23-39)
	10	6003 159	Retainer
	10	6024 271	Screw
	1	6003 161	Retainer
	1	6027 625	Nut
18	1	3419 744-5	MOULDING PACKAGE, Qtr. Outside Wheel Opng. Pnl., Rear, use w/Wheel House Opng. Skirt (23-23-39)
	6	6023 247	Screw
	1	3419 736-7	MOULDING PACKAGE, Qtr. Outside Wheel Opng., use w/o Wheel House Opng. Skirt (23-23-39)
	6	6028 545	Screw
19	1	3419 742-3	MOULDING PACKAGE, Qtr. Outside Wheel Opng. Pnl., Frt., use w/Wheel House Opng. Skirt (23-23-39)
	AR	6023 247	Screw
20	1	3419 826-7	MOULDING PACKAGE, Body Side Sill (23-23-2)
	5	6028 545	Screw
	8	6002 601	Retainer
	1	---- ---	Screw

CONTINUED ON NEXT PAGE

All Packages Include Attaching Parts

Part Type Code is Indicated in Parentheses

REF. NO.	QTY	PART NUMBER	DESCRIPTION
21	1	3620 380-1	MOULDING PACKAGE, Door Outside, Black (23-23-32)
	1	3620 314-5	Blue (23-23-32)
	1	3620 316-7	Green (23-23-32)
	1	3620 318-9	Gold (23-23-32)
	1	3620 320-1	White (23-23-32)
	1	6003 161	Retainer
	1	6029 259	Nut
	6	6003 159	Retainer
	6	6024 271	Screw
22	1	3612 654-5	TAPE, Frt. Fender Color Stripe, White (12-15-33)
	1	3612 656-7	Gold (12-15-33)
	1	3612 658-9	Black (12-15-33)
	2	3612 666	TAPE, Door Color Stripe, White (23-23-12)
	2	3612 667	Gold (23-23-12)
	2	3612 668	Black (23-23-12)
	1	3612 672-3	TAPE, Qtr. Pnl. Color Stripe, White (23-23-12)
	1	3612 674-5	Gold (23-23-12)
	1	3612 676-7	Black (23-23-12)
22 Cont'd	1	3612 838-9	TAPE, Qtr. Extension Color Stripe, White (23-23-12)
	1	3612 840-1	Gold (23-23-12)
	1	3612 842-3	Black (23-23-12)
	1	3685 154-5	TAPE PACKAGE, Body Side, Fender, Door, Qtr. Panel, White (23-23-12)
	1	3685 156-7	Gold (23-23-12)
	1	3685 150-1	Black (23-23-12)
23	1	3612 684	TAPE, Deck Lid Color Stripe, White (23-23-12)
	1	3612 685	Gold (23-23-12)
	1	3612 686	Black (23-23-12)
	1	3685 160	TAPE PACKAGE, Deck Lid, White (23-23-12)
	1	3685 161	Gold (23-23-12)
	1	3685 159	Black (23-23-12)

All Packages Include Attaching Parts

Part Type Code is Indicated in Parentheses

1971
EXTERIOR VIEW - PLYMOUTH SPORT FURY P-H 2 DOOR HARDTOP

NOTES

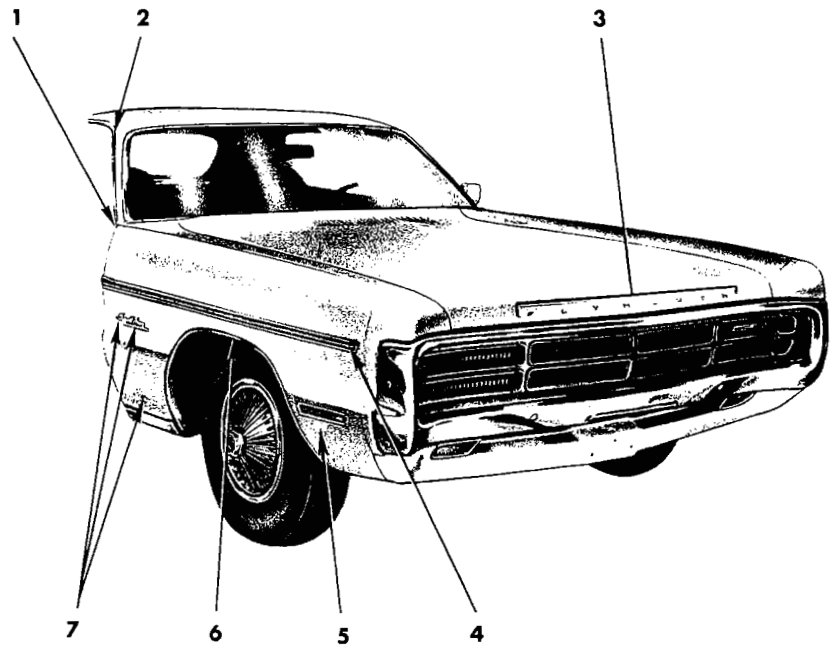

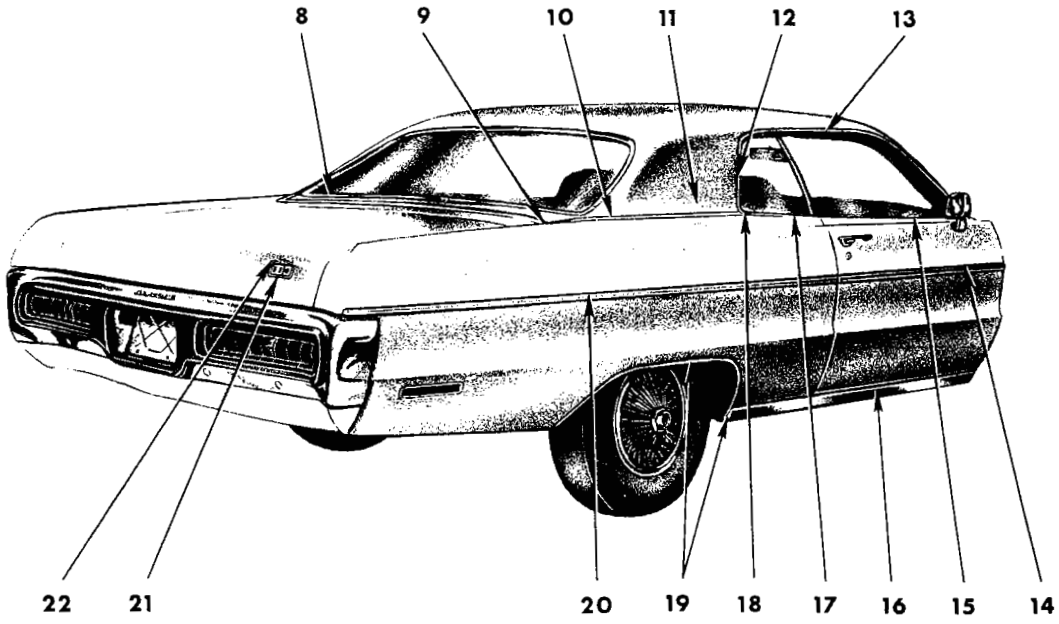

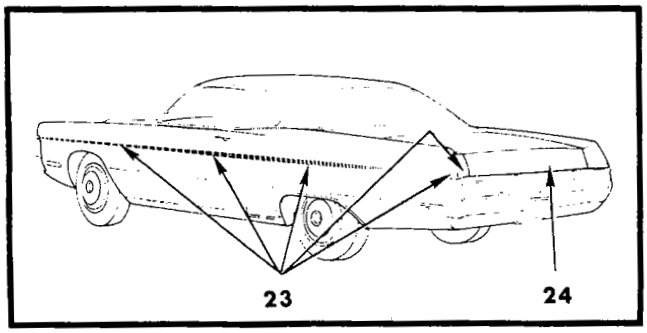

19a3589A

1971
EXTERIOR VIEW - PLYMOUTH SPORT FURY P-H FASTBACK

REF. NO.	QTY	PART NUMBER	DESCRIPTION
1	1	3419 482-3	MOULDING PACKAGE, Body Frt. Lwr. Pillar (23-23-14)
	1	6028 674	Screw
2	1	2933 600-1	MOULDING PACKAGE, Body Front Pillar Drain Trough, Up to approx. June 1, 1971 (23-59-61)
	6	6024 271	Screw
	1	3685 124-5	MOULDING PACKAGE, Body Front Pillar Drain Trough, After approx. June 1, 1971 (23-59-61)
	10	6024 271	Screw
3	1	2528 974	LETTER "P", Hood Front (15-06-16)
	1	2528 975	"L"
	1	2528 976	"Y"
	1	2528 977	"M"
	1	2528 978	"O"
	1	2528 979	"U"
	1	2528 980	"T"
	1	2528 981	"H"
	16	9420 254	Nut
4	1	3620 340-1	MOULDING PACKAGE, Fender, Black (12-15-2)
	1	3620 342-3	Blue (12-15-2)
	1	3620 344-5	Green (12-15-2)
	1	3620 346-7	Gold (12-15-2)
	1	3620 348-9	White (12-15-2)
	2	6003 161	Retainer
	2	6029 259	Nut
	6	6003 159	Retainer
	6	6024 271	Screw
5	2	3612 450	NAME PLATE, Fender Side, "360" (12-15-21)
	2	2949 240	"383" (12-15-21)
	2	2898 878	"440" (12-15-21)
	4	9420 291	Nut
6	1	3419 718-9	MOULDING PACKAGE, Fender Wheel Opng. (12-15-2)
	7	6028 545	Screw
7	1	3612 458	NAME PLATE, Fender Side, "Sport Fury" (12-15-21)
	1	2785 540	MEDALLION, Fender Side, Rt., Pentastar (12-15-21)
8	1	2933 570-1	MOULDING PACKAGE, Deck Opng. Upr. Pnl. (23-23-31)
	4	6002 920	Retainer
	4	9420 867	Nut
	4	6002 192	Fastener
9	1	2933 578-9	MOULDING PACKAGE, Deck Opng. Upr. Pnl. Outer Corner (23-23-31)
	1	9420 294	Nut
10	1	2933 894-5	MOULDING PACKAGE, Qtr. Outside Belt (23-23-39)
	AR	6002 192	Fastener
	AR	6002 920	Retainer
	AR	9426 926	Nut
11	2	3504 323	NAME PLATE, Qtr. Outside, "Brougham" (23-34-238)
	2	9420 293	Nut
12	1	2933 590-1	MOULDING PACKAGE, Roof Side Drain Trough, Rear (23-59-61)
	4	6024 271	Screw
13	1	3579 102-3	MOULDING PACKAGE, Roof Side Drain Trough, Front, Up to approx. June 1, 1971 (23-59-61)
	4	6024 271	Screw
	1	3683 306-7	MOULDING PACKAGE, Roof Side Drain Trough, Front, After approx. June 1, 1971 (23-59-61)
	4	6024 271	Screw
14	1	3620 380-1	MOULDING PACKAGE, Door, Black (23-23-32)
	1	3620 314-5	Blue (23-23-32)
	1	3620 316-7	Green (23-23-32)
	1	3620 318-9	Gold (23-23-32)
	1	3620 320-1	White (23-23-32)
	1	6003 161	Retainer
	1	6029 259	Nut
	6	6003 159	Retainer
	6	6024 271	Screw
15	1	2933 722-3	MOULDING PACKAGE, Door Outside Belt (23-23-32)
	6	6002 782	Retainer
16	1	3419 826-7	MOULDING PACKAGE, Body Side Sill (23-23-2)
	5	6028 545	Screw
	8	6002 601	Retainer
	1	---- ---	Screw
17	1	2933 614-5	MOULDING PACKAGE, Qtr. Outside Belt (23-23-39)
	3	6002 782	Retainer
	1	6025 985	Screw
18	1	3419 414-5	MOULDING PACKAGE, Qtr. Outside Belt to Drain Trough (23-23-39)
	4	9427 804	Screw
19	1	3419 736-7	MOULDING PACKAGE, Qtr. Outside Wheel Opng., w/o Skirts (23-23-39)
	6	6028 545	Screw
	1	3419 742-3	MOULDING PACKAGE, Qtr. Outside Wheel Opng. Pnl., Frt., w/Skirts (23-23-39)
	1	3419 744-5	MOULDING PACKAGE, Qtr. Outside Wheel Opng. Pnl., Rr., w/Skirts (23-23-39)
	AR	6023 247	Screw
20	1	3620 370-1	MOULDING PACKAGE, Qtr. Outside, Black (23-23-39)
	1	3620 372-3	Blue (23-23-39)
	1	3620 374-5	Green (23-23-39)
	1	3620 376-7	Gold (23-23-39)
	1	3620 378-9	White (23-23-39)
	10	6003 159	Retainer
	10	6024 271	Screw
	1	6003 161	Retainer
	1	6027 625	Nut

All Packages Include Attaching Parts

Part Type Code is Indicated in Parentheses

CONTINUED ON NEXT PAGE

1971

EXTERIOR VIEW - PLYMOUTH SPORT FURY P-H FASTBACK

REF. NO.	QTY	PART NUMBER	DESCRIPTION
21	1	3568 568	MEDALLION, Deck Lid Lock (23-17-19)
	2	9420 278	Nut
22	1	3569 970	NAME PLATE, Rear Deck, "Sport" (23-19-114)
	1	3569 971	"Fury" (23-19-114)
23	1	3612 654-5	TAPE, Frt. Fender Color Stripe, White (12-15-33)
	1	3612 656-7	Gold (12-15-33)
	1	3612 658-9	Black (12-15-33)
	2	3612 666	TAPE, Door Color Stripe, White (23-23-12)
	2	3612 667	Gold (23-23-12)
	2	3612 668	Black (23-23-12)
	1	3612 672-3	TAPE, Qtr. Color Stripe, White (23-23-12)
	1	3612 674-5	Gold (23-23-12)
	1	3612 676-7	Black (23-23-12)
	1	3612 838-9	TAPE, Qtr. Ext. Rear Color Stripe, White (23-23-12)
	1	3612 840-1	Gold (23-23-12)
	1	3612 842-3	Black (23-23-12)
	1	3685 154-5	TAPE PACKAGE, Body Side, Fender, Door, Qtr. Panel, White (23-23-12)
	1	3685 156-7	Gold (23-23-12)
	1	3685 150-1	Black (23-23-12)
24	1	3612 684	TAPE, Deck Lid Color Stripe, White (23-23-12)
	1	3612 685	Gold (23-23-12)
	1	3612 686	Black (23-23-12)
	1	3685 160	TAPE PACKAGE, Deck Lid, White (23-23-12)
	1	3685 161	Gold (23-23-12)
	1	3685 159	Black (23-23-12)

All Packages Include Attaching Parts

Part Type Code is Indicated in Parentheses

1971
EXTERIOR VIEW - PLYMOUTH SPORT FURY P-H FASTBACK

NOTES

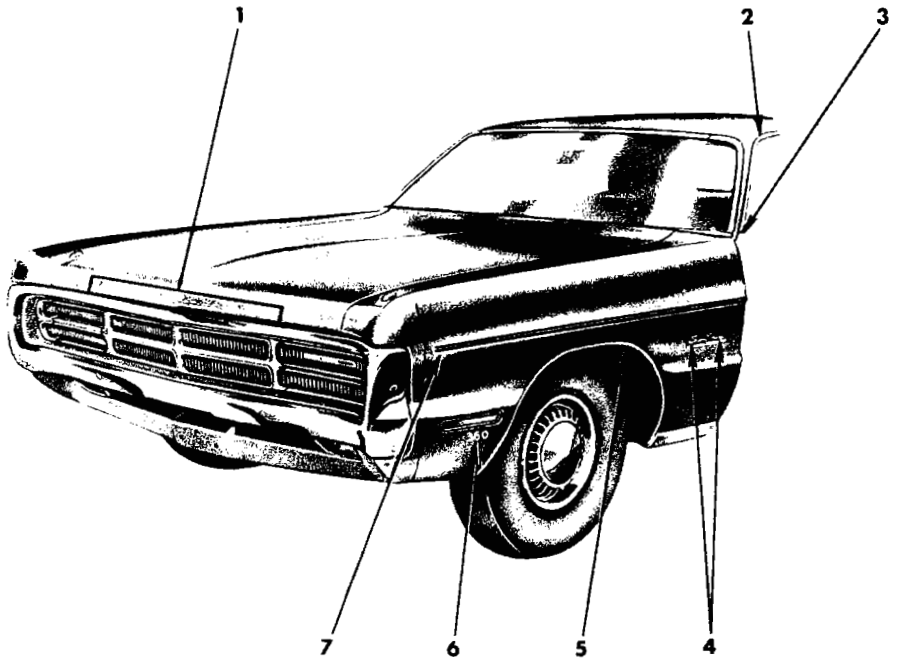

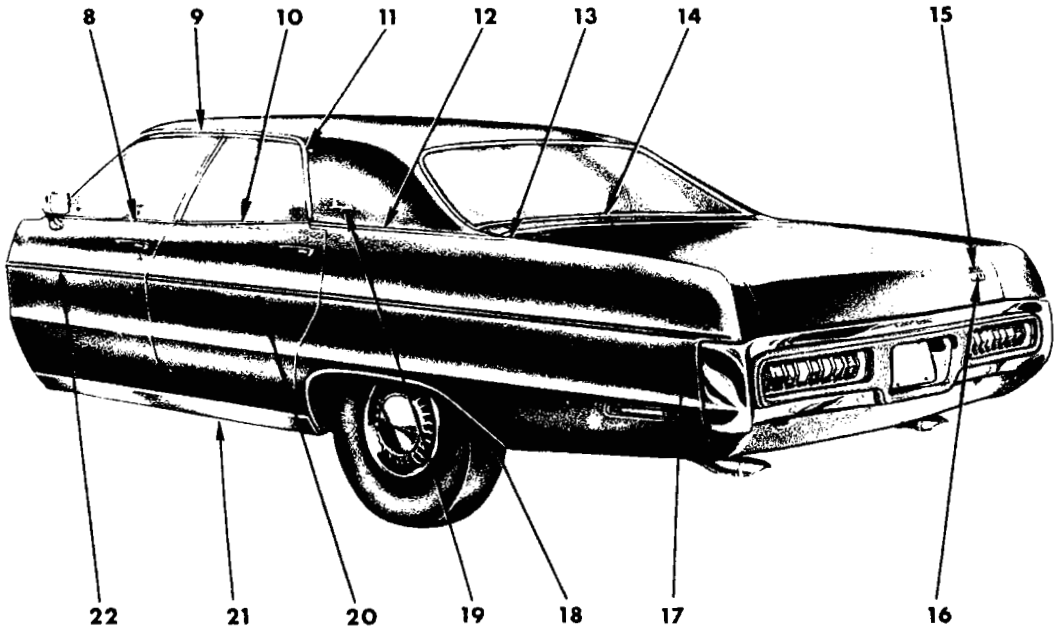

19a3649

1971
EXTERIOR VIEW - PLYMOUTH SPORT FURY P-H 4 DOOR HARDTOP

REF. NO.	QTY	PART NUMBER	DESCRIPTION
1	1	2528 974	NAME LETTER "P", Hood Front (15-06-16)
	1	2528 975	"L"
	1	2528 976	"Y"
	1	2528 977	"M"
	1	2528 978	"O"
	1	2528 979	"U"
	1	2528 980	"T"
	1	2528 981	"H"
	16	9420 254	Nut
2	1	2933 600-1	MOULDING PACKAGE, Body Front Pillar Drain Trough, Up to approx. June 1, 1971 (23-59-61)
	6	6024 271	Screw
	1	3685 124-5	MOULDING PACKAGE, Body Front Pillar Drain Trough, After approx. June 1, 1971 (23-59-61)
	10	6024 271	Screw
3	1	3419 482-3	MOULDING PACKAGE, Body Frt. Lwr. Pillar (23-23-14)
	1	6028 674	Screw
4	2	3612 458	NAME PLATE, Fender Side, "Sport Fury" (12-15-21)
5	1	3419 718-9	MOULDING PACKAGE, Fender Wheel Opng. (12-15-2)
	7	6028 545	Screw
6	2	3612 450	NAME PLATE, Fender Side, "360" (12-15-21)
	2	2949 240	"383" (12-15-21)
	2	2898 878	"440" (12-15-21)
	4	9420 291	Nut
7	1	3620 340-1	MOULDING PACKAGE, Fender, Black (12-15-2)
	1	3620 342-3	Blue (12-15-2)
	1	3620 344-5	Green (12-15-2)
	1	3620 346-7	Gold (12-15-2)
	1	3620 348-9	White (12-15-2)
	2	6003 161	Retainer
	2	6029 259	Nut
	6	6003 159	Retainer
	6	6024 271	Screw
8	1	2933 764-5	MOULDING PACKAGE, Frt. Door Belt (23-23-32)
	10	6002 782	Retainer
9	1	3579 102-3	MOULDING PACKAGE, Roof Side Drain Trough, Front, Up to approx. June 1, 1971 (23-59-61)
	4	6024 271	Screw
	1	3683 306-7	MOULDING PACKAGE, Roof Side Drain Trough, Front, After approx. June 1, 1971 (23-59-61)
	4	6024 271	Screw
10	1	2933 766-7	MOULDING PACKAGE, Rear Door Belt (23-23-33)
	5	6002 782	Retainer
11	1	2933 588-9	MOULDING PACKAGE, Roof Side Drain Trough, Rear, Up to approx. June 1, 1971 (23-59-61)
	4	6024 271	Screw
	1	3683 308-9	MOULDING PACKAGE, Roof Side Drain Trough, Rear, After approx. June 1, 1971 (23-59-61)
	6	6024 271	Screw
12	1	3419 044-5	MOULDING PACKAGE, Qtr. Outside Belt (23-23-39)
	4	6002 192	Fastener
	4	6002 920	Retainer
	4	9420 867	Nut
13	1	2933 578-9	MOULDING PACKAGE, Deck Opng. Upr. Pnl. Outer Corner (23-23-31)
	1	9420 294	Nut
14	1	2933 570-1	MOULDING PACKAGE, Deck Opng. Upr. Pnl. (23-23-31)
	4	6002 920	Retainer
	4	9420 867	Nut
	4	6002 912	Fastener
15	1	3569 970	NAME PLATE, Deck Lid, "Sport" (23-19-114)
	1	3569 971	"Fury" (23-19-114)
16	1	3568 568	MEDALLION, Deck Lid Lock (23-17-19)
	2	9420 278	Nut
17	1	3620 442-3	MOULDING PACKAGE, Qtr. Outside, Black (23-23-39)
	1	3620 444-5	Blue (23-23-39)
	1	3620 446-7	Green (23-23-39)
	1	3620 448-9	Gold (23-23-39)
	1	3620 450-1	White (23-23-39)
	7	6003 159	Retainer
	7	6024 271	Screw
	1	6003 161	Retainer
	1	6027 625	Nut
18	1	3419 736-7	MOULDING PACKAGE, Qtr. Outside Wheel Opening (23-23-39)
	6	6028 545	Screw
	1	3419 742-3	MOULDING PACKAGE, Qtr. Outside Wheel Opening Pnl., Frt. (23-23-39)
	AR	6023 247	Screw
	1	3419 744-5	MOULDING PACKAGE, Qtr. Outside Wheel Opening Pnl., Rear (23-23-39)
	6	6023 247	Screw
19	2	3504 323	NAME PLATE, Qtr. Outside, "Brougham" (23-34-238)
	2	9420 293	Nut

CONTINUED ON NEXT PAGE

All Packages Include Attaching Parts

Part Type Code is Indicated in Parentheses

REF. NO.	QTY	PART NUMBER	DESCRIPTION
20	1	3620 422-3	MOULDING PACKAGE, Rear Door, Black (23-23-33)
	1	3620 424-5	Blue (23-23-33)
	1	3620 426-7	Green (23-23-33)
	1	3620 428-9	Gold (23-23-33)
	1	3620 430-1	White (23-23-33)
	2	6003 161	Retainer
	2	6029 259	Nut
	3	6003 159	Retainer
	3	6024 271	Screw
21	1	3419 826-7	MOULDING PACKAGE, Body Side Sill (23-23-2)
	5	6028 545	Screw
	8	6002 601	Retainer
	1	---- ---	Screw

REF. NO.	QTY	PART NUMBER	DESCRIPTION
22	1	3620 402-3	MOULDING PACKAGE, Frt. Door, Black (23-23-32)
	1	3620 404-5	Blue (23-23-32)
	1	3620 406-7	Green (23-23-32)
	1	3620 408-9	Gold (23-23-32)
	1	3620 410-1	White (23-23-32)
	1	6003 161	Retainer
	1	6029 259	Nut
	5	6003 159	Retainer
	5	6024 271	Screw

All Packages Include Attaching Parts

Part Type Code is Indicated in Parentheses

1971
EXTERIOR VIEW - PLYMOUTH SPORT FURY P-H 4 DOOR HARDTOP

NOTES

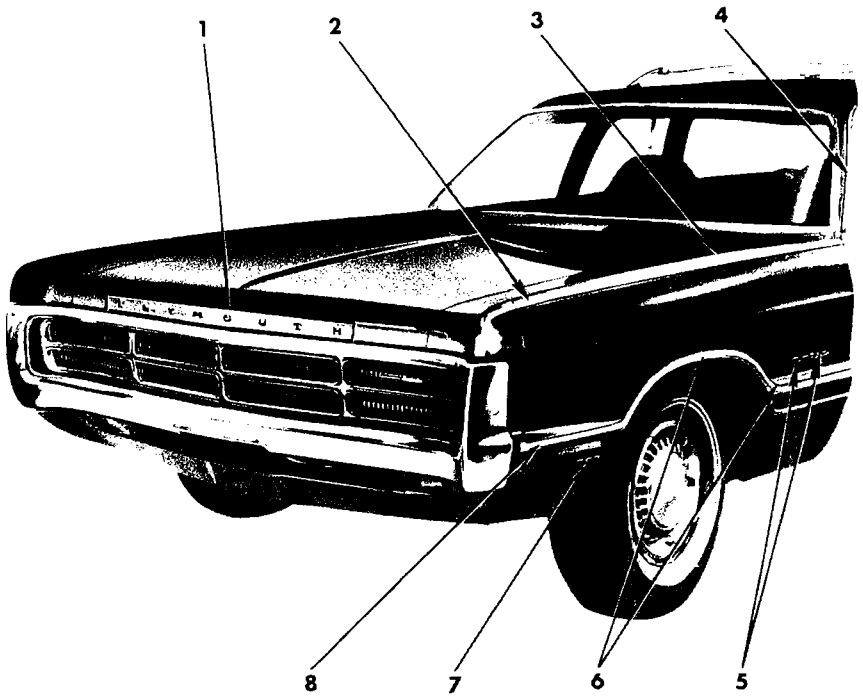

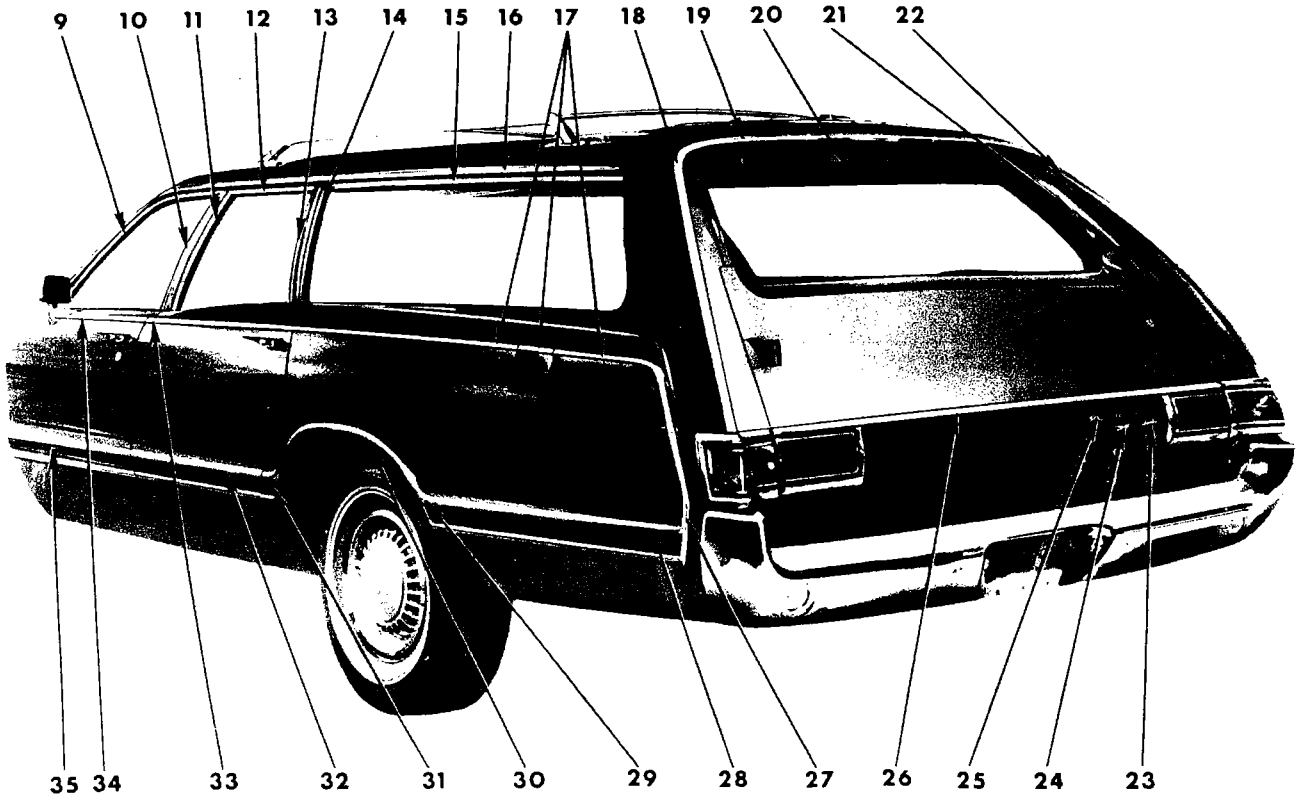

19a3651

1971
EXTERIOR VIEW - PLYMOUTH P-H SPORT SUBURBAN

REF. NO.	QTY	PART NUMBER	DESCRIPTION
1	1	2528 974	NAME LETTER "P", Hood Front (15-06-16)
	1	2528 975	"L"
	1	2528 976	"Y"
	1	2528 977	"M"
	1	2528 978	"O"
	1	2528 979	"U"
	1	2528 980	"T"
	1	2528 981	"H"
	16	9420 254	Nut
2	1	3419 822-3	MOULDING PACKAGE, Fender Side, Upr. Front (12-15-2)
	2	6027 177	Screw
	2	6026 166	Nut
	2	6028 866	Screw
3	1	3419 824-5	MOULDING PACKAGE, Fender Side, Upr. Rear (12-15-2)
	1	6026 523	Nut
	1	6002 280	Retainer
	6	6002 773	Retainer
	1	6025 985	Screw
4	1	2933 568-9	MOULDING PACKAGE, Body Front Pillar Drain Trough (23-59-61)
	10	6024 271	Screw
5	2	3446 766	NAME PLATE, Fender Side, "Sport Suburban" (12-15-21)
	4	6002 852	Retainer
6	1	3620 360-1	MOULDING PACKAGE, Fender Side, Lower Rear and Wheel Opening, Black (12-15-2)
	1	6025 985	Screw
	9	6024 271	Screw
	3	6002 739	Retainer
7	2	3612 450	NAME PLATE, Fender Side, "360" (12-15-21)
	2	2949 240	"383" (12-15-21)
	2	2898 878	"440" (12-15-21)
	4	9420 291	Nut
8	1	3419 726-7	MOULDING PACKAGE, Fender Side, Lower Front (12-15-2)
	2	6027 466	Nut
	1	6024 271	Screw
9	1	2893 698-9	MOULDING, Frt. Door Wdo. Opng. Frame, Upr. (23-23-32)
10	1	2893 700-1	MOULDING, Frt. Door Wdo. Opng. Frame, Rr. (23-23-32)
11	1	2893 700	MOULDING, Rear Door Wdo. Opng. Frame, Frt., Lt. (23-23-33)
	1	2893 701	MOULDING, Rear Door Wdo. Opng. Frame, Frt., Rt. (23-23-33)
12	1	2893 724-5	MOULDING, Rear Door Wdo. Opng. Frame, Upr. (23-23-33)
13	1	2893 728-9	MOULDING, Rear Door Wdo. Opng. Frame, Rr. (23-23-33)
14	1	2893 256-7	MOULDING, Qtr. Wdo. Outside, Frt., Prime (23-23-73)
	1	2894 870-1	MOULDING, Qtr. Wdo. Outside, Frt., Finish (23-23-73)
15	1	2893 258-9	MOULDING, Qtr. Wdo. Outside, Upr., Prime (23-23-73)
	1	2894 872-3	MOULDING, Qtr. Wdo. Outside, Upr., Finish (23-23-73)
16	1	3419 450-1	MOULDING PACKAGE, Roof Side Drain Trough (23-59-61)
	12	6024 271	Screw
17	1	2933 788	MOULDING PACKAGE, Qtr. Outside, Upr., Rt. (23-23-39)
	9	6002 773	Retainer
	1	2933 787	MOULDING PACKAGE, Qtr. Outside, Upr., Lt. (23-23-39)
	5	6002 599	Retainer
	1	2933 789	MOULDING PACKAGE, Qtr. Fuel Filler Door, Lt. (23-23-39)
	2	6002 280	Retainer
	2	6026 523	Nut
	1	2933 786	MOULDING PACKAGE, Qtr. Outside, Rear, Lt. (23-23-39)
	2	6002 599	Retainer
18	1	2894 416-7	MOULDING, Roof Rear Air Deflector, End (23-23-60)
19	1	2894 418	MOULDING, Roof Rear Air Deflector, Center (23-23-60)
20	1	2894 445	MOULDING, Roof Pnl. Outside Tailgate Opng., Upr., Prime (23-23-60)
21	1	2894 442-3	MOULDING, Qtr. Pnl. Outside Tailgate Pillar, Upr., Tailgate Opng., Prime (23-23-60)
22	1	3440 476-7	MOULDING, Qtr. Pnl. Outside Tailgate Pillar, Upr., use w/o Assist Handles (23-23-60)
	1	3440 478-9	MOULDING, Qtr. Pnl. Outside Tailgate Pillar, Upr., use w/Assist Handles (23-23-60)
23	1	3446 054	NAME PLATE, Tailgate Outside Panel, "Suburban" (23-54-11)
	2	---- ---	Nut
24	1	3445 987	NAME PLATE, Tailgate Outside Panel, "Sport" (23-54-11)
	2	---- ---	Nut
25	1	2785 791	NAME PLATE, Tailgate Outside Panel, "Plymouth" (23-54-11)
	3	---- ---	Nut
26	1	3419 766	MOULDING PACKAGE, Tailgate, Upr. (23-23-61)
	5	6002 435	Retainer
27	1	3620 462-3	MOULDING PACKAGE, Qtr. Outside, Lwr., Rear, Black (23-23-39)
	2	6023 898	Retainer
28	1	3620 460-1	MOULDING PACKAGE, Qtr. Outside, Lwr., Frt., Black (23-23-39)
	4	6002 739	Retainer
	4	6024 271	Screw

CONTINUED ON NEXT PAGE

All Packages Include Attaching Parts

Part Type Code is Indicated in Parentheses

1971
EXTERIOR VIEW - PLYMOUTH P-H SPORT SUBURBAN

REF. NO.	QTY	PART NUMBER	DESCRIPTION
29	1	3620 458-9	MOULDING PACKAGE, Qtr. Outside Wheel Opng., Rear, Black (23-23-39)
	2	6023 898	Screw
	2	6024 271	Screw
30	1	3419 758-9	MOULDING PACKAGE, Qtr. Outside Wheel Opening (23-23-39)
	8	6028 545	Screw
31	1	3620 456-7	MOULDING PACKAGE, Qtr. Outside Wheel Opng., Frt., Black (23-23-39)
	2	6024 271	Screw
32	1	3620 454-5	MOULDING PACKAGE, Rear Door, Lwr., Black (23-23-33)
	2	6002 739	Retainer
	2	6002 741	Retainer
	2	6029 259	Nut
33	1	2933 782-3	MOULDING PACKAGE, Rear Door, Upr. Rear (23-23-33)
	4	6029 259	Nut
	4	6002 280	Retainer
	6	6002 773	Retainer
34	1	2933 776-7	MOULDING PACKAGE, Frt. Door, Upr., UP TO Type (23-23-32)
	8	6002 773	Retainer
	2	6002 280	Retainer
	2	6029 259	Nut
	1	3620 508	MOULDING PACKAGE, Frt. Door Upr. Frt., Lt., use w/o Remote Control Mirror, AFTER Type (23-23-32)
	1	3620 509	MOULDING PACKAGE, Frt. Door Upr. Rear, Lt., use w/o Remote Control Mirror, AFTER Type (23-23-32)
	1	6002 245	Retainer
	2	6002 599	Retainer
	1	3620 510	MOULDING PACKAGE, Frt. Door Upr. Frt., Lt., use w/Remote Control Mirror, AFTER Type (23-23-32)
	1	3620 511	MOULDING PACKAGE, Frt. Door Upr. Rear, Lt., use w/Remote Control Mirror, AFTER Type (23-23-32)
	1	6002 245	Retainer
	2	6002 599	Retainer
35	1	3620 452-3	MOULDING PACKAGE, Frt. Door, Lwr., Black (23-23-32)
	5	6002 739	Retainer
	1	6002 741	Retainer
	1	6029 259	Nut

All Packages Include Attaching Parts

Part Type Code is Indicated in Parentheses

1971
EXTERIOR VIEW - PLYMOUTH P-H SPORT SUBURBAN

NOTES

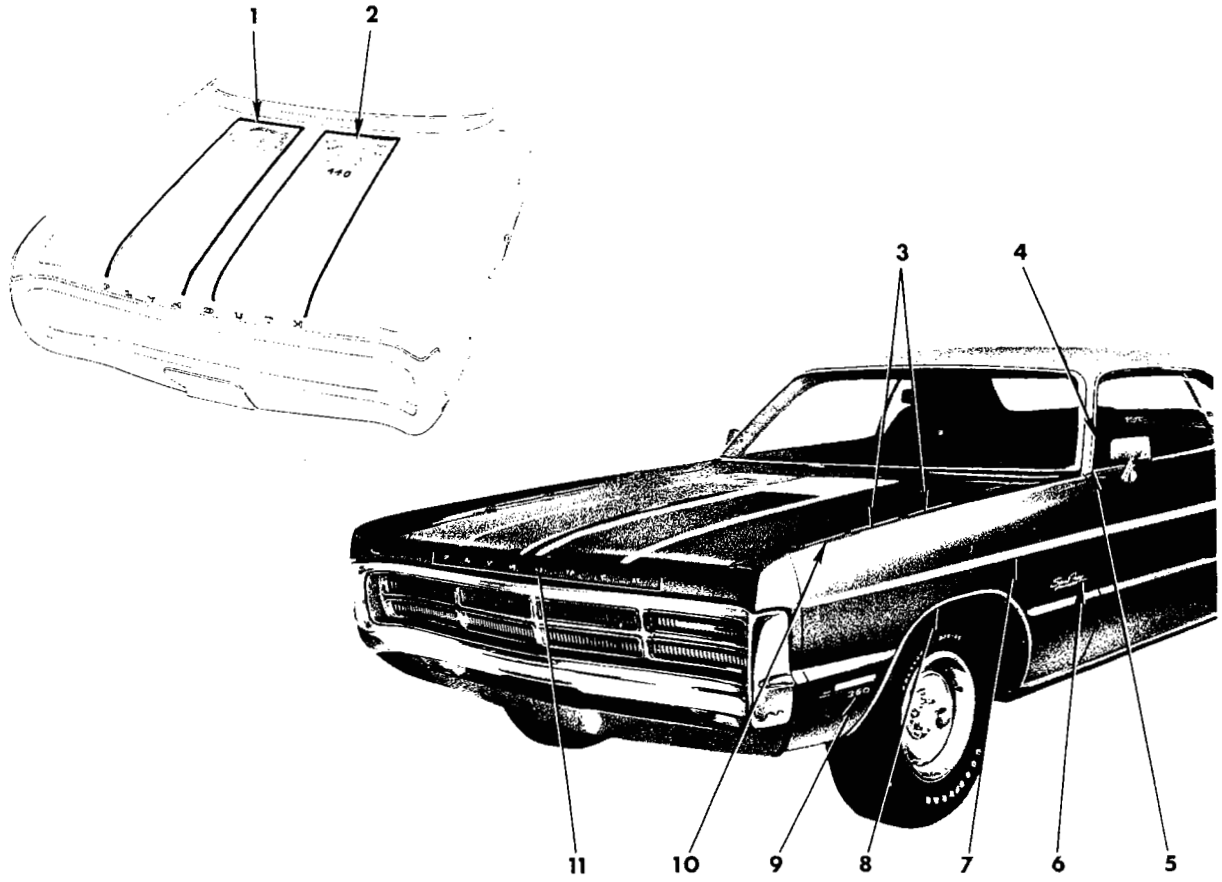

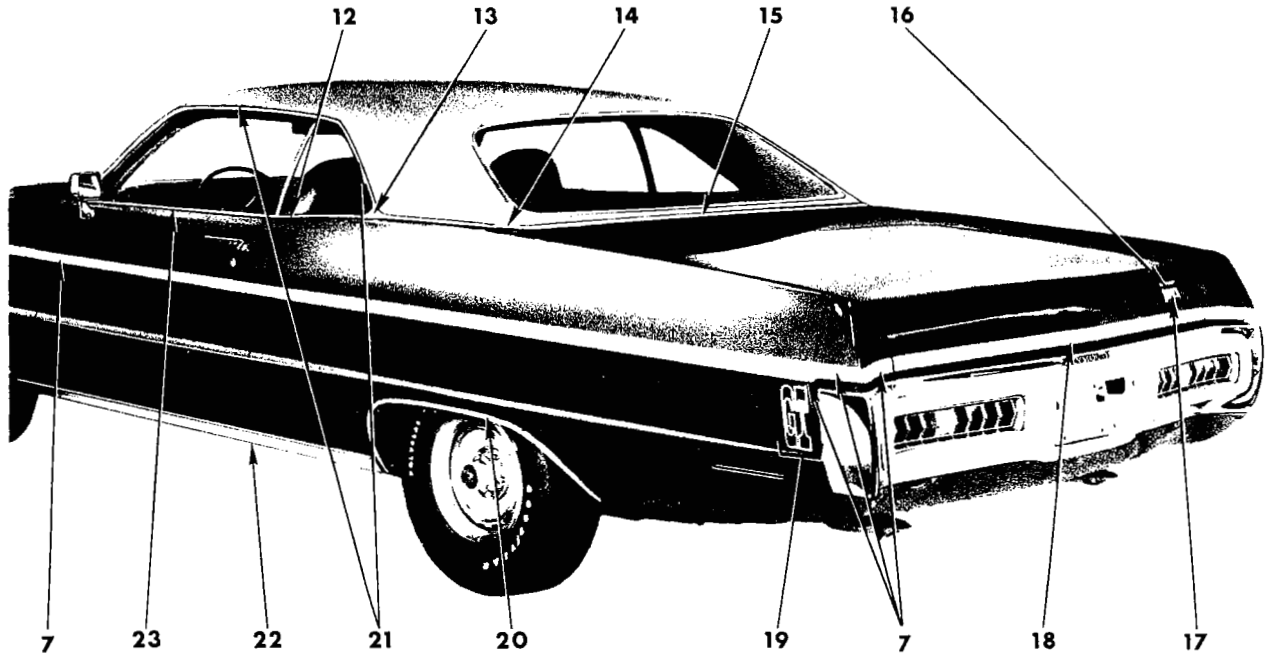

19a3665 A

1971
EXTERIOR VIEW - PLYMOUTH SPORT FURY (GT) P-P 2 DOOR HARDTOP

REF. NO.	QTY	PART NUMBER	DESCRIPTION
1	1	3443 836	TAPE, Hood, Rt., "G", Black (15-03-69)
	1	3573 638	Gold (15-03-69)
	1	3573 640	White (15-03-69)
2	1	3443 837	TAPE, Hood, Lt., "T-440", Black (15-03-69)
	1	3573 639	"T-440", Gold (15-03-69)
	1	3573 641	"T-440", White (15-03-69)
	1	3443 895	"T-440 6 Bbl.", Black
	1	3573 643	"T-440 6 Bbl.", Gold
	1	3573 645	"T-440 6 Bbl.", White
3	2	3570 330	LOUVER, Front Fender, Center (12-15-21)
	2	3570 331	Rear (12-15-21)
	4	9420 278	Nut
4	1	2933 602-3	MOULDING PACKAGE, Body Front Pillar Drain Trough, Up to approx. June 1, 1971 (23-59-61)
	6	6024 271	Screw
	1	3683 304-5	MOULDING PACKAGE, Body Front Pillar Drain Trough, After approx. June 1, 1971 (23-59-61)
	6	6024 271	Screw
5	1	3419 482-3	MOULDING PACKAGE, Body Frt. Lwr. Pillar (23-23-14)
	1	6028 674	Screw
6	2	3612 458	NAME PLATE, Fender Side, "Sport Fury" (12-15-21)
7	1	3612 654-5	TAPE, Fender Stripe, White (12-15-33)
	1	3612 656-7	Gold (12-15-33)
	1	3612 658-9	Black (12-15-33)
	1	3612 838-9	TAPE, Qtr. Pnl. Extension Rear Stripe, White (23-23-12)
	1	3612 840-1	Gold (23-23-12)
	1	3612 842-3	Black (23-23-12)
	1	3612 672-3	TAPE, Qtr. Pnl. Stripe, White (23-23-12)
	1	3612 674-5	Gold (23-23-12)
	1	3612 676-7	Black (23-23-12)
	2	3612 666	TAPE, Door Stripe, White (23-23-12)
	2	3612 667	Gold (23-23-12)
	2	3612 668	Black (23-23-12)
	1	3685 154-5	TAPE PACKAGE, Body Side, Fender, Door, Qtr. Panel, White (23-23-12)
	1	3685 156-7	Gold (23-23-12)
	1	3685 150-1	Black (23-23-12)
8	1	3419 718-9	MOULDING PACKAGE, Fender Wheel Opng. (12-15-2)
	7	6028 545	Screw
9	2	3612 450	NAME PLATE, Fender Side, "360" (12-15-21)
	2	2949 240	"383" (12-15-21)
	2	2898 878	"440" (12-15-21)
	4	9420 291	Nut
10	2	3479 187	LAMP and LOUVER, Turn Signal Indicator (8-50-175)
11	1	2528 974	LETTER "P", Hood Front (15-06-16)
	1	2528 975	"L"
	1	2528 976	"Y"
	1	2528 277	"M"
	1	2528 278	"O"
	1	2528 279	"U"
	1	2528 280	"T"
	1	2528 281	"H"
	16	9420 254	Nut
12	1	2933 614-5	MOULDING PACKAGE, Qtr. Outside Belt, use w/Vinyl Roof or Two Tone Paint (23-23-39)
	3	6002 782	Retainer
	1	6025 985	Screw
	1	2933 626-7	MOULDING and T/PLATE PACKAGE, Qtr. Outside Belt, use w/o Vinyl Roof or Two Tone Paint (23-23-39)
	3	6002 782	Retainer
	1	6027 459	Screw
13	1	2933 624-5	MOULDING PACKAGE, Qtr. Outside Belt to Drip, use w/Vinyl Roof or Two Tone Paint (23-23-39)
	2	6025 985	Screw
14	1	3419 030-1	MOULDING PACKAGE, Deck Opng. Upr. Pnl. Side (23-23-31)
	3	6002 192	Fastener
	3	6002 920	Fastener 3 9420 867 Nut
15	1	3419 026	MOULDING PACKAGE, Deck Opng. Upr. Pnl. (23-23-31)
	2	6002 192	Fastener
	3	6002 920	Fastener 3 9420 867 Nut
16	1	3569 970	NAME PLATE, Deck Lid, "Sport" (23-19-114)
	1	3569 971	"Fury" (23-19-114)
17	1	3568 591	MEDALLION, Deck Lid Lock, "GT" (23-17-19)
	2	9420 278	Nut
18	2	3612 684	TAPE, Deck Lid Stripe, White (23-23-12)
	2	3612 685	Gold (23-23-12)
	2	3612 686	Black (23-23-12)
	2	3685 160	TAPE PACKAGE, Deck Lid, White (23-23-12)
	2	3685 161	Gold (23-23-12)
	2	3685 159	Black (23-23-12)
19	1	3613 120-1	DECAL, Qtr. Outside Panel, "GT", Black (23-34-334)
	1	3613 122-3	White (23-34-334)
	1	3613 118-9	Gold (23-34-334)
20	1	3419 736-7	MOULDING PACKAGE, Qtr. Outside Wheel Opening (23-23-39)
	6	6028 545	Screw
21	1	3579 598-9	MOULDING PACKAGE, Roof Side Drain Trough, Front and Rear (23-59-61)
	4	6024 271	Screw
22	1	3419 826-7	MOULDING PACKAGE, Body Side Sill (23-23-2)
	5	6028 545	Screw
	8	6002 601	Retainer
	1	---- ---	Screw
23	1	2933 722-3	MOULDING PACKAGE, Door Outside Belt (23-23-32)
	6	6002 782	Retainer

All Packages Include Attaching Parts

Part Type Code is Indicated in Parentheses

1971

EXTERIOR VIEW - PLYMOUTH SPORT FURY (GT) P-P 2 DOOR HARDTOP

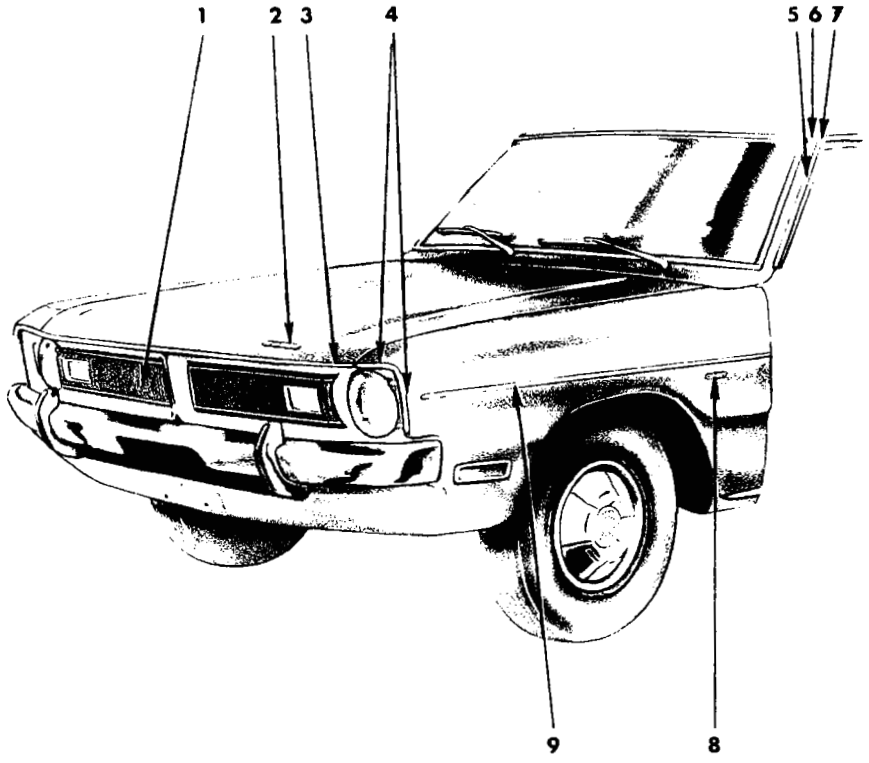

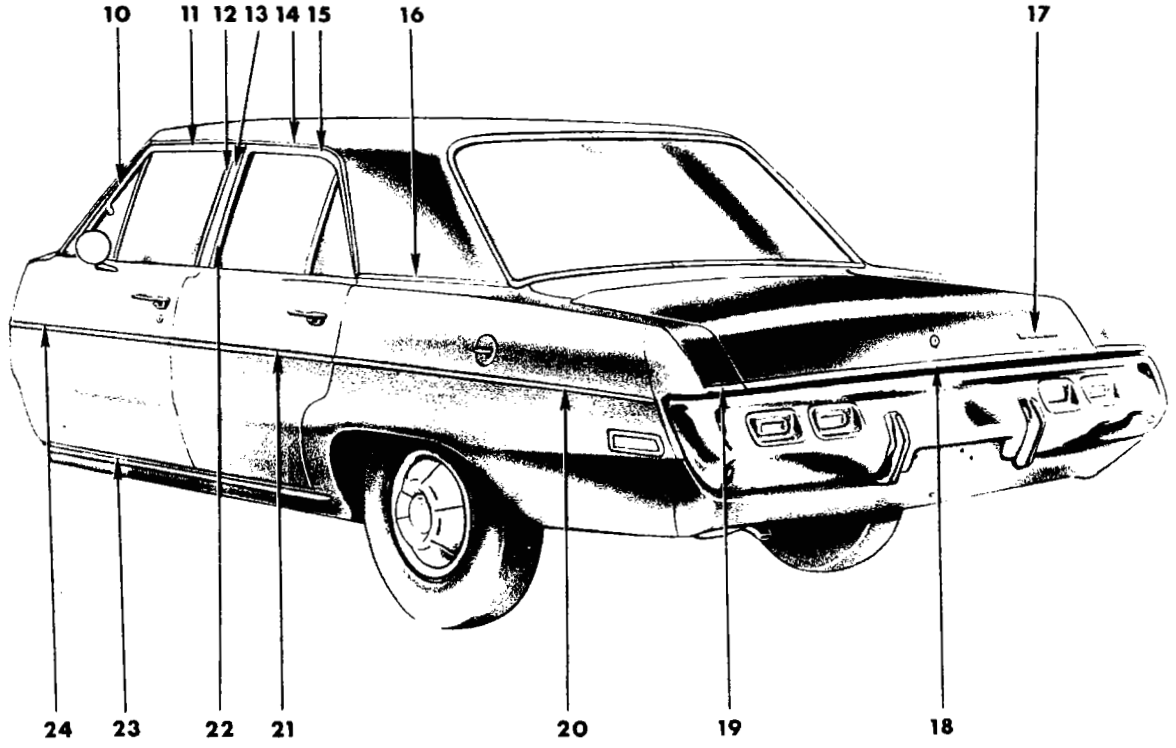

19a3659

1971
EXTERIOR VIEW - DART L-L 4 DOOR SEDAN

REF. NO.	QTY	PART NUMBER	DESCRIPTION
1	1	3442 005	GRILLE, Radiator (7-16-11)
2	1	2965 502	NAME PLATE, Hood Front (15-06-3)
3	1	3481 911	MOULDING PACKAGE, Hood Front (15-25-2)
	9	9428 267	Screw
4	1	3549 630-1	MOULDING PACKAGE, Fender, Frt. (12-15-2)
	6	9429 022	Screw
5	1	2783 024-5	MOULDING, Body Front Pillar Drain Trough (23-59-61)
	AR	---- ---	Spacer
6	1	2807 882-3	MOULDING PACKAGE, Body Frt. Pillar Trim (23-23-14)
	2	9431 737	Screw
7	2	2783 028	COVER, Roof Side Drain Trough Mldg. Joint (23-59-57)
8	2	3505 419	NAME PLATE, Fender Side, "Dart" (12-15-21)
	AR	6002 852	Retainer
9	1	3481 716-7	MOULDING PACKAGE, Fender Side, Black (12-15-2)
	6	6002 922	Retainer
	2	6000 709	Retainer
	2	9420 867	Nut
	2	3613 830	MOULDING, Fender Side, Black, After Sept. 1, 1970 (12-15-2)
	2	3613 832	Gold, After Sept. 1, 1970 (12-15-2)
	2	3613 834	Green, After Sept. 1, 1970 (12-15-2)
	AR	3613 506	TAPE, Fender, Gold (Above and Below Mldg.)(12-15-33)
	AR	3613 507	Green (Above and Below Mldg.) (12-15-33)
	AR	3613 508	Black (Above and Below Mldg.) (12-15-33)
10	1	2663 434-5	MOULDING, Frt. Door Wdo. Opng. Frame, Frt. (23-23-32)
11	1	2663 440-1	MOULDING, Frt. Door Wdo. Opng. Frame, Upr. (23-23-32)
12	1	2663 442-3	MOULDING, Frt. Door Wdo. Opng. Frame, Rr. (23-23-32)
13	1	2807 920-1	MOULDING PACKAGE, Body Center Pillar (23-23-16)
	4	6024 271	Screw
14	1	2783 026-7	MOULDING, Roof Side Drain Trough, w/o Vinyl Roof (23-59-61)
	AR	---- ---	Spacer
	1	2840 980-1	MOULDING, Roof Side Drain Trough, w/Vinyl Roof (23-59-61)
	AR	---- ---	Spacer
15	1	2664 814-5	MOULDING, Rear Door Wdo. Opng. Frame, Upr. and Rear (23-23-33)
16	1	2809 684-5	MOULDING PACKAGE, Qtr. Outside Belt (23-23-39)
	3	6002 192	Fastener
	2	6002 507	Retainer
17	1	3505 433	NAME PLATE, Deck Lid, "Dodge" (23-19-114)
18	1	3481 718	MOULDING PACKAGE, Deck Lid
	8	6002 967	Retainer w/Seal
	8	6026 523	Nut
19	1	3481 780-1	MOULDING PACKAGE, Qtr. Pnl. End Ext. (23-23-39)
	3	6028 537	Screw
20	1	3579 388-9	MOULDING PACKAGE, Qtr. Outside, Black (23-23-39)
	7	6002 922	Retainer
	1	6000 709	Retainer
	1	6024 679	Nut
	2	3613 830	MOULDING, Qtr. Pnl., Black, After Sept. 1, 1970 (23-23-39)
	2	3613 832	Gold, After Sept. 1, 1970 (23-23-39)
	2	3613 834	Green, After Sept. 1, 1970 (23-23-39)
	AR	3613 506	TAPE, Qtr., Gold (Above and Below Mldg.) (23-23-12)
	AR	3613 507	Green (Above and Below Mldg.) (23-23-12)
	AR	3613 508	Black (Above and Below Mldg.) (23-23-12)
21	1	3579 140-1	MOULDING PACKAGE, Rear Door, Black (23-23-33)
	3	6002 922	Retainer
	2	6002 162	Retainer
	2	3613 830	MOULDING, Rear Door, Black, After Sept. 1, 1970 (23-23-33)
	2	3613 832	Gold, After Sept. 1, 1970 (23-23-33)
	2	3613 834	Green, After Sept. 1, 1970 (23-23-33)
	AR	3613 506	TAPE, Rear Door, Gold (Above and Below Mldg.)(23-23-12)
	AR	3613 507	Green (Above and Below Mldg.) (23-23-12)
	AR	3613 508	Black (Above and Below Mldg.) (23-23-12)
22	1	2664 812-3	MOULDING, Rear Door Wdo. Opng. Frame, Frt. (23-23-33)
23	2	2807 906	MOULDING PACKAGE, Body Side Sill (23-23-2)
	8	6001 428	Retainer
	2	6026 760	Screw
24	1	3579 582-3	MOULDING PACKAGE, Frt. Door, Black (23-23-32)
	5	6002 922	Retainer
	1	6002 162	Retainer
	1	6026 523	Nut
	2	3613 830	MOULDING, Frt. Door, Black, After Sept. 1, 1970 (23-23-32)
	2	3613 832	Gold, After Sept. 1, 1970 (23-23-32)
	2	3613 834	Green, After Sept. 1, 1970 (23-23-32)
	AR	3613 506	TAPE, Frt. Door, Gold (Above and Below Mldg.)(23-23-12)
	AR	3613 507	Green (Above and Below Mldg.) (23-23-12)
	AR	3613 508	Black (Above and Below Mldg.) (23-23-12)

All Packages Include Attaching Parts

Part Type Code is Indicated in Parentheses

1971
EXTERIOR VIEW - DART L-L 4 DOOR SEDAN

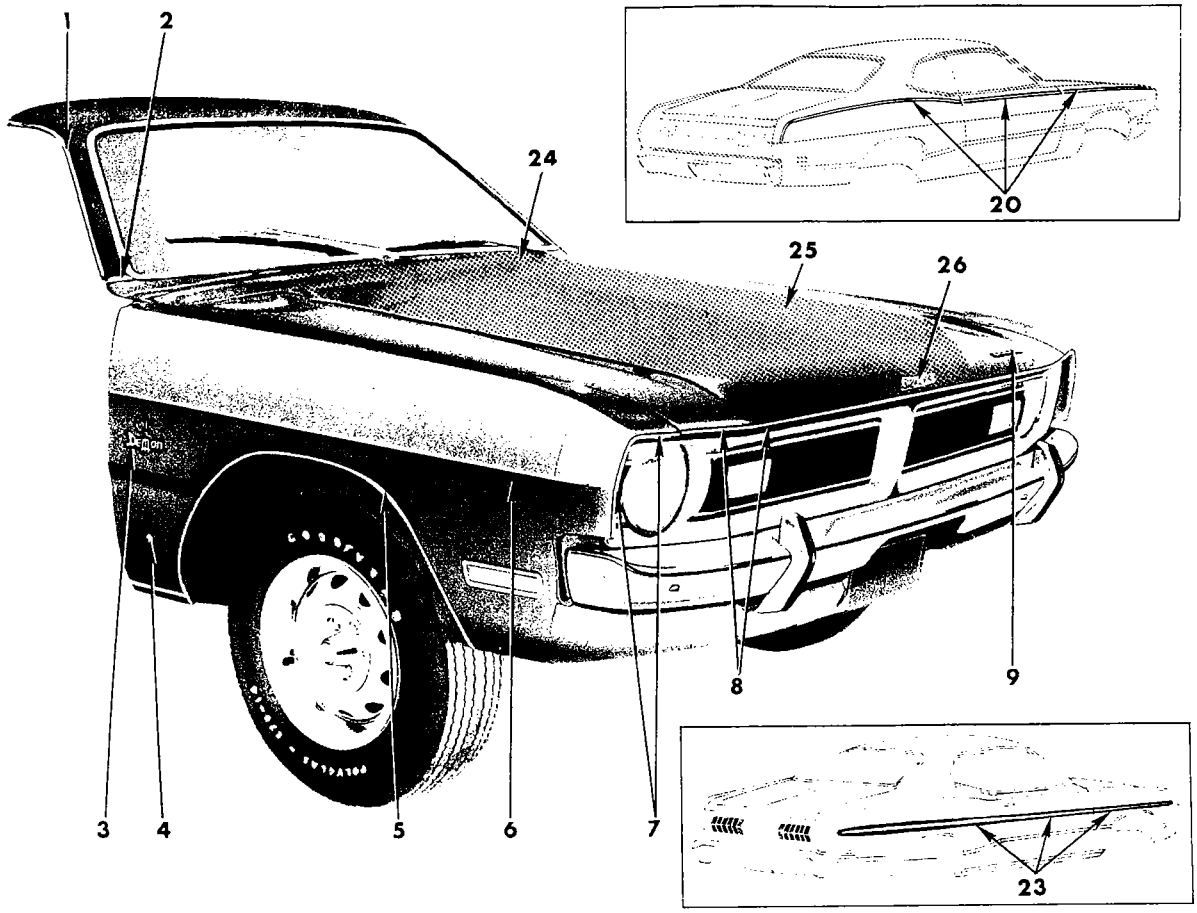

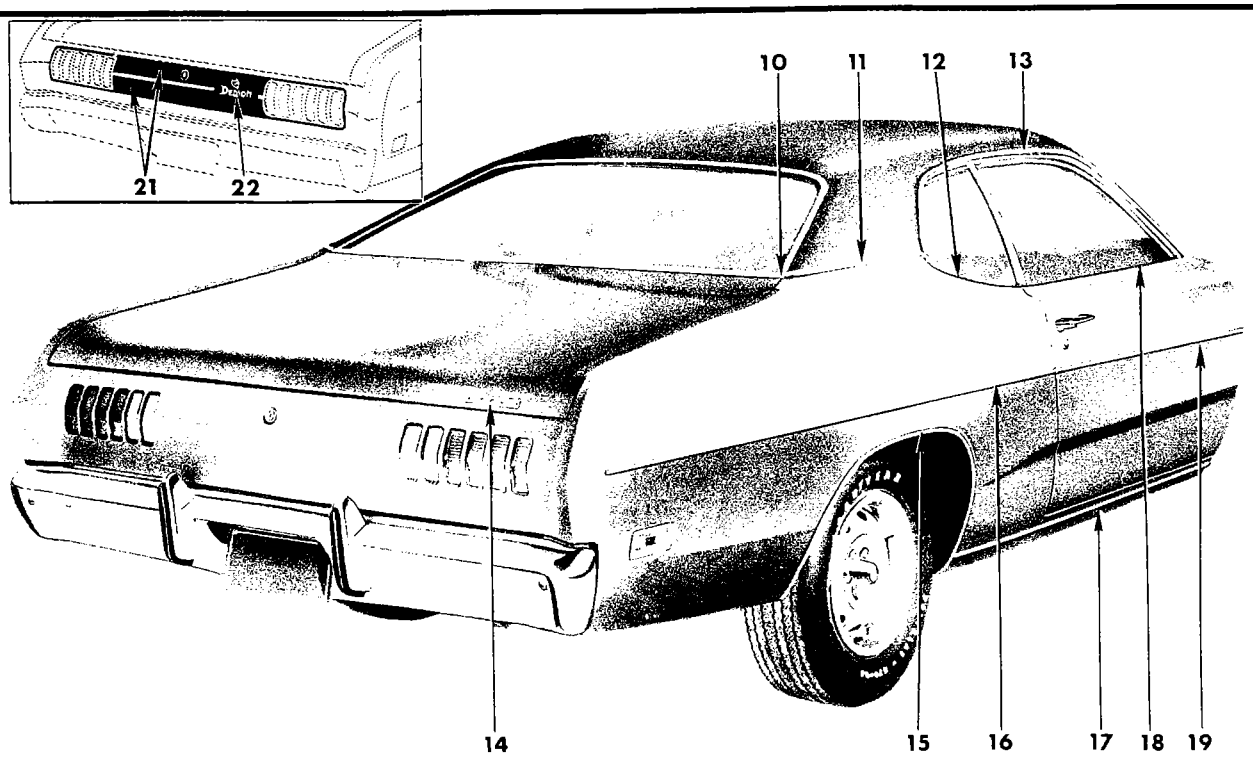

19a3523 B

1971
EXTERIOR VIEW - DART (DEMON) L-L FASTBACK

REF. NO.	QTY	PART NUMBER	DESCRIPTION
1	1	3444 930-1	MOULDING, Body Front Pillar Drain Trough, w/o Vinyl Roof (23-59-61)
	AR	---- ---	Spacer
	1	3445 932-3	MOULDING, Body Front Pillar Drain Trough, w/Vinyl Roof (23-59-61)
	AR	---- ---	Spacer
2	1	3549 196-7	MOULDING PACKAGE, Body Front Pillar Lwr., use w/Vinyl Roof or Two Tone Paint (23-23-14)
	2	9431 737	Screw
3	2	3613 359	DECAL, Fender Side, "Demon" (12-15-21)
4	1	2785 540	MEDALLION, Fender Side, Rt., Pentastar (12-15-21)
5	1	2807 766-7	MOULDING PACKAGE, Fender Wheel Opng. (12-15-2)
	16	6028 545	Screw
6	1	3620 100-1	MOULDING PACKAGE, Fender Side, Black, Up to Sept. 1, 1970 (12-15-2)
	1	3620 102-3	Gold, Up to Sept. 1, 1970 (12-15-2)
	1	3620 104-5	Green, Up to Sept. 1, 1970 (12-15-2)
	2	116 000	Nut
	2	6000 709	Retainer and Seal
	5	6003 133	Retainer
	5	6024 271	Screw
	2	3613 830	MOULDING, Fender Side, Black, After Sept. 1, 1970 (12-15-2)
	2	3613 832	Gold, After Sept. 1, 1970 (12-15-2)
	2	3613 834	Green, After Sept. 1, 1970 (12-15-2)
	AR	3613 507	TAPE, Fender, Green (Above and Below Mldg.)(12-15-33)
	AR	3613 508	Black (Above and Below Mldg.) (12-15-33)
	AR	3613 506	Gold (Above and Below Mldg.) (12-15-33)
7	1	3549 630-1	MOULDING PACKAGE, Fender Front (12-15-2)
	6	9429 022	Screw
8	1	3481 911	MOULDING PACKAGE, Hood Front (15-25-2)
	9	9428 267	Screw
9	1	2965 502	NAME PLATE, Hood Front (15-06-3)
10	1	3514 060-1	MOULDING PACKAGE, Qtr. Outside Belt, Rr. (23-23-39)
	2	9427 804	Screw
11	1	3444 412-3	MOULDING, Qtr. Outside Belt, Front (23-23-39)
	4	6002 354	Retainer
	4	9420 218	Nut
	4	6001 596	Retainer
12	1	3444 410-1	MOULDING, Qtr. Wdo. Outside Belt (23-23-39)
13	1	3444 932-3	MOULDING, Roof Side Drain Trough, w/o Vinyl Roof (23-59-61)
	AR	---- ---	Spacer
	1	3445 934-5	MOULDING, Roof Side Drain Trough, w/Vinyl Roof (23-59-61)
	AR	---- ---	Spacer
14	1	2965 502	NAME PLATE, Deck Lid, "Dodge" (23-19-114)
15	1	3419 768-9	MOULDING PACKAGE, Qtr. Outside Wheel Opening (23-23-39)
	18	6028 545	Screw
16	1	3570 190-1	MOULDING, Qtr. Outside, Black, Up to Sept. 1, 1970 (23-23-39)
	1	3570 192-3	Gold, Up to Sept. 1, 1970 (23-23-39)
	1	3570 194-5	Green, Up to Sept. 1, 1970 (23-23-39)
	2	3613 830	MOULDING, Qtr. Pnl., Black, After Sept. 1, 1970 (23-23-39)
	2	3613 832	Gold, After Sept. 1, 1970 (23-23-39)
	2	3613 834	Green, After Sept. 1, 1970 (23-23-39)
	AR	3613 507	TAPE, Qtr., Green (Above and Below Mldg.) (23-23-12)
	AR	3613 508	Black (Above and Below Mldg.) (23-23-12)
	AR	3613 506	Gold (Above and Below Mldg.) (23-23-12)
17	2	3506 036	MOULDING, Body Side Sill (23-23-2)
	16	6003 141	Retainer
	4	6029 403	Screw
	4	6028 680	Screw
18	1	3444 408-9	MOULDING, Door Outside Belt (23-23-32)
	14	6002 398	Retainer
19	2	3570 157	MOULDING, Door Outside, Black, Up to Sept. 1, 1970 (23-23-32)
	2	3570 158	Gold, Up to Sept. 1, 1970 (23-23-32)
	2	3570 159	Green, Up to Sept. 1, 1970 (23-23-32)
	2	3613 830	MOULDING, Door, Black, After Sept. 1, 1970 (23-23-32)
	2	3613 832	Gold, After Sept. 1, 1970 (23-23-32)
	2	3613 834	Green, After Sept. 1, 1970 (23-23-32)
	AR	3613 507	TAPE, Door, Green (Above and Below Mldg.) (23-23-12)
	AR	3613 508	Black (Above and Below Mldg.) (23-23-12)
	AR	3613 506	Gold (Above and Below Mldg.) (23-23-12)

CONTINUED ON NEXT PAGE

All Packages Include Attaching Parts

Part Type Code is Indicated in Parentheses

1971
EXTERIOR VIEW - DART (DEMON) L-L FASTBACK

REF. NO.	QTY	PART NUMBER	DESCRIPTION
20	1	3612 810-1	TAPE, Qtr. Pnl. Color Stripe, Black, Before Dec. 1, 1970 (23-23-12)
	1	3612 812-3	White, Before Dec. 1, 1970 (23-23-12)
	1	3613 536-7	Black, After Dec. 1, 1970 (23-23-12)
	1	3613 538-9	White, After Dec. 1, 1970 (23-23-12)
	1	3612 814-5	TAPE, Door Color Stripe, Black, Before Dec. 1, 1970 (23-23-12)
	1	3612 816-7	White, Before Dec. 1, 1970 (23-23-12)
	1	3613 540-1	Black, After Dec. 1, 1970 (23-23-12)
	1	3613 542-3	White, After Dec. 1, 1970 (23-23-12)
	1	3612 818-9	TAPE, Fender Color Stripe, Black, Before Dec. 1, 1970 (12-15-33)
	1	3612 820-1	White, Before Dec. 1, 1970 (12-15-33)
	1	3613 544-5	Black, After Dec. 1, 1970 (12-15-33)
	1	3613 546-7	White, After Dec. 1, 1970 (12-15-33)
	1	3685 508-9	TAPE PACKAGE, Body Side, Fender, Door, Qtr. Panel, Black, Before Dec. 1, 1970 (23-23-12)
	1	3685 510-1	White, Before Dec. 1, 1970 (23-23-12)
	1	3685 446-7	Black, After Dec. 1, 1970 (23-23-12)
	1	3685 442-3	White, After Dec. 1, 1970 (23-23-12)
21	1	3612 904	TAPE, Deck Opng. Lwr. Pnl. Color Stripe, Lwr., Black (23-23-12)
	1	3612 906	White (23-23-12)
	1	3612 905	TAPE, Deck Opng. Lwr. Pnl. Color Stripe, Upr., Black (23-23-12)
	1	3612 907	White (23-23-12)
	1	3685 234	TAPE PACKAGE, Deck Opng. Upr. & Lwr. Pnl., Black (23-23-12)
	1	3685 235	White (23-23-12)
22	1	3613 359	DECAL, Deck Opng. Lwr. Pnl., "Demon" (23-34-184)
23	1	3612 830-1	TAPE, Fender, Color Stripe, Black (12-15-33)
	1	3612 832-3	White (12-15-33)
	1	3612 826-7	TAPE, Door, Color Stripe, Black (23-23-12)
	1	3612 828-9	White (23-23-12)
	1	3612 822-3	TAPE, Qtr. Pnl., Color Stripe, Black (23-23-12)
	1	3612 824-5	White (23-23-12)
	1	3685 248-9	TAPE PACKAGE, Body Side, Fender, Door, Qtr. Panel, Flat Black (23-23-12)
	1	3685 370-1	Glosye Black (23-23-12)
	1	3685 252-3	White (23-23-12)
24	1	3685 263	TAPE, Cowl (15-03-18)
25	1	3685 262	TAPE, Hood, Side (15-03-18)
26	1	3573 981	DECAL, Hood Front, "Sizzler" (15-03-18)

All Packages Include Attaching Parts

Part Type Code is Indicated in Parentheses

1971
EXTERIOR VIEW - DART (DEMON) L-L FASTBACK

NOTES

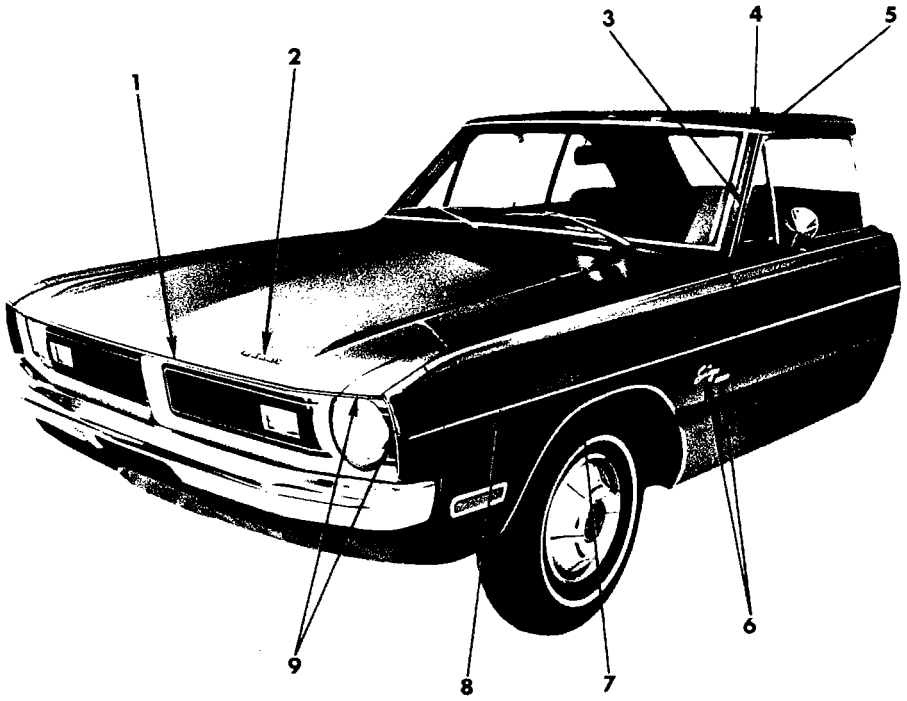

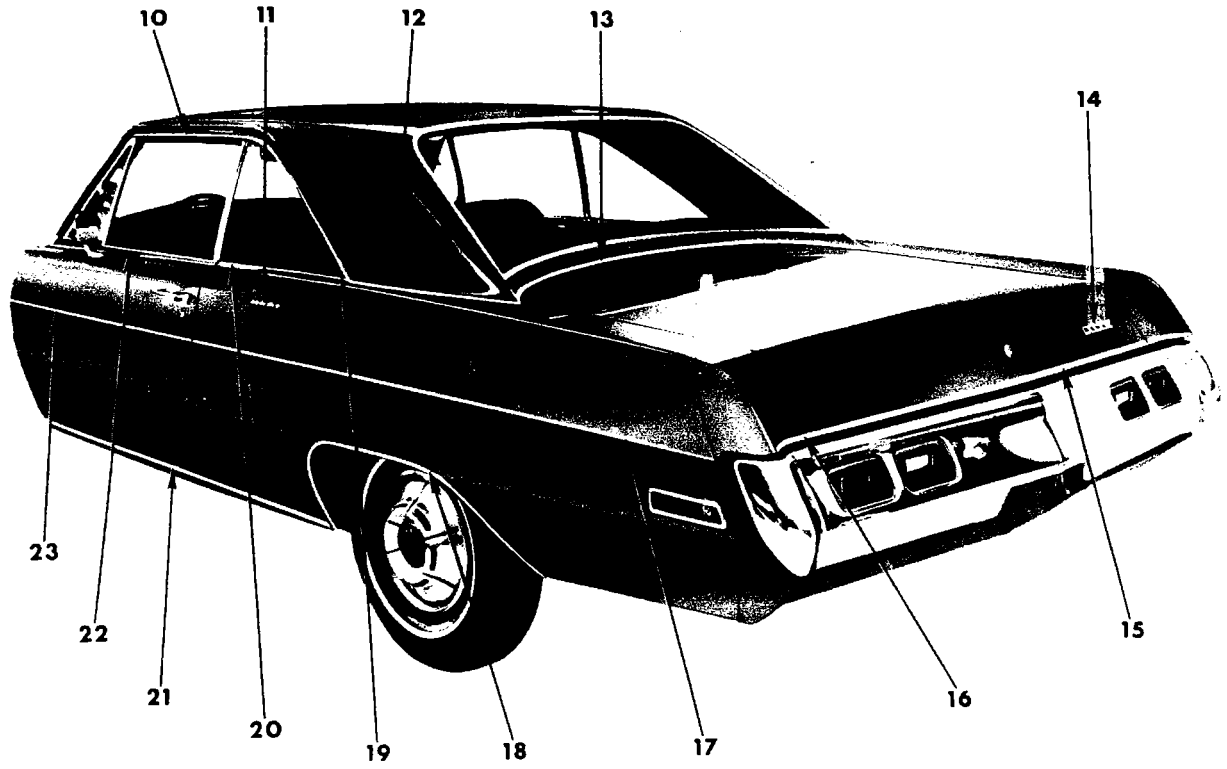

19a3762

1971
EXTERIOR VIEW - DART (SWINGER SPECIAL) L-L 2 DOOR HARDTOP

REF. NO.	QTY	PART NUMBER	DESCRIPTION
1	1	3481 911	MOULDING PACKAGE, Hood, Front (15-25-2)
	9	9428 267	Screw
2	1	2965 502	NAME PLATE, Hood, Front (15-06-3)
3	1	2783 018-9	MOULDING, Body Front Pillar Outside (23-59-61)
	AR	---- ---	Spacer
4	1	2807 882-3	MOULDING PACKAGE, Body Frt. Pillar Trim, use w/Vinyl Roof or Two Tone Paint (23-23-14)
	2	9431 737	Screw
5	2	2783 028	COVER, Roof Side Drain Trough Mldg. Joint (23-59-57)
6	2	3549 645	NAME PLATE, Fender, "Swinger" (12-15-21)
	AR	6002 852	Retainer
	2	3570 983	NAME PLATE, Fender, "Special" (12-15-21)
	AR	6002 852	Retainer
7	1	3579 384-5	MOULDING PACKAGE, Fender Wheel Opng., w/Wheel Lip Mldg. (12-15-2)
	1	2807 766-7	MOULDING PACKAGE, Fender Wheel Opng., w/o Wheel Lip Mldg. (12-15-2)
	8	6024 271	Screw
8	1	3481 716-7	MOULDING PACKAGE, Fender Side, Black (12-15-2)
	6	6002 922	Retainer
	2	6000 709	Retainer 2 9420 867 Nut
	2	3613 830	MOULDING, Fender Side, Black, After Sept. 1, 1970 (12-15-2)
	2	3613 832	Gold, After Sept. 1, 1970 (12-15-2)
	2	3613 834	Green, After Sept. 1, 1970 (12-15-2)
	AR	3613 506	TAPE, Fender, Gold (Above and Below Mldg.) (12-15-33)
	AR	3613 507	Green (Above and Below Mldg.) (12-15-33)
	AR	3613 508	Black (Above and Below Mldg.) (12-15-33)
9	1	3549 630-1	MOULDING PACKAGE, Fender Front (12-15-2)
	6	9429 022	Screw
10	1	2783 020-1	MOULDING, Roof Side Drain Trough, w/o Vinyl Roof (23-59-61)
	AR	---- ---	Spacer
	1	2840 982-3	MOULDING, Roof Side Drain Trough, w/Vinyl Roof (23-59-61)
	AR	---- ---	Spacer
11	2	3505 419	NAME PLATE, Qtr. Outside, "Dart" (23-34-238)
	AR	6002 852	Retainer
12	1	2807 700-1	MOULDING PACKAGE, Roof Outside Belt, use w/Vinyl Roof or Two Tone Paint (23-23-42)
	6	6002 192	Fastener
	2	6023 898	Screw 2 9420 276 Nut
	2	6002 297	Retainer w/Seal
13	1	2807 702-3	MOULDING PACKAGE, Deck Opng. Upr. Pnl., use w/Vinyl Roof or Two Tone Paint (23-23-31)
	7	6002 297	Retainer w/Seal
	9	9415 250	Nut
14	1	3505 433	NAME PLATE, Deck Lid, "Dodge" (23-19-114)
	AR	6002 852	Retainer
15	1	3481 718	MOULDING PACKAGE, Deck Lid (23-23-30)
	8	6002 967	Retainer 8 6026 523 Nut
16	1	3481 780-1	MOULDING PACKAGE, Qtr. Pnl. End Ext. (23-23-39)
	3	6028 537	Screw
17	1	3481 776-7	MOULDING PACKAGE, Qtr. Outside, Black (23-23-39)
	2	6000 709	Retainer, w/Seal
	20	6003 133	Retainer 2 6023 678 Nut
	2	3613 830	MOULDING, Qtr. Pnl., Black, After Sept. 1, 1970 (23-23-39)
	2	3613 832	Gold, After Sept. 1, 1970 (23-23-39)
	2	3613 834	Green, After Sept. 1, 1970 (23-23-39)
	AR	3613 506	TAPE, Qtr. Pnl., Gold (Above and Below Mldg.)(23-23-12)
	AR	3613 507	Green (Above and Below Mldg.) (23-23-12)
	AR	3613 508	Black (Above and Below Mldg.) (23-23-12)
18	1	2932 594-5	MOULDING PACKAGE, Qtr. Outside Wheel Opening (23-23-39)
	16	6028 545	Screw
19	1	3004 246-7	MOULDING PACKAGE, Qtr. Outside Belt, Rr. (23-23-39)
	2	9427 804	Screw
20	1	3004 242-3	MOULDING PACKAGE, Qtr. Outside Belt, Frt. (23-23-39)
	8	6002 398	Retainer
21	2	2807 906	MOULDING PACKAGE, Body Side Sill (23-23-2)
	8	6001 428	Retainer 2 6026 760 Screw
22	1	3004 244-5	MOULDING PACKAGE, Door Outside Belt (23-23-32)
	14	6002 398	Retainer
23	1	3481 774-5	MOULDING PACKAGE, Door, Black (23-23-32)
	12	6003 133	Retainer
	2	6002 162	Retainer 2 6029 259 Nut
	2	3613 830	MOULDING, Door, Black, After Sept. 1, 1970 (23-23-32)
	2	3613 832	Gold, After Sept. 1, 1970 (23-23-32)
	2	3613 834	Green, After Sept. 1, 1970 (23-23-32)
	AR	3613 506	TAPE, Door, Gold (Above and Below Mldg.) (23-23-12)
	AR	3613 507	Green (Above and Below Mldg.) (23-23-12)
	AR	3613 508	Black (Above and Below Mldg.) (23-23-12)

All Packages Include Attaching Parts

Part Type Code is Indicated in Parentheses

1971
EXTERIOR VIEW - DART (SWINGER SPECIAL) L-L 2 DOOR HARDTOP

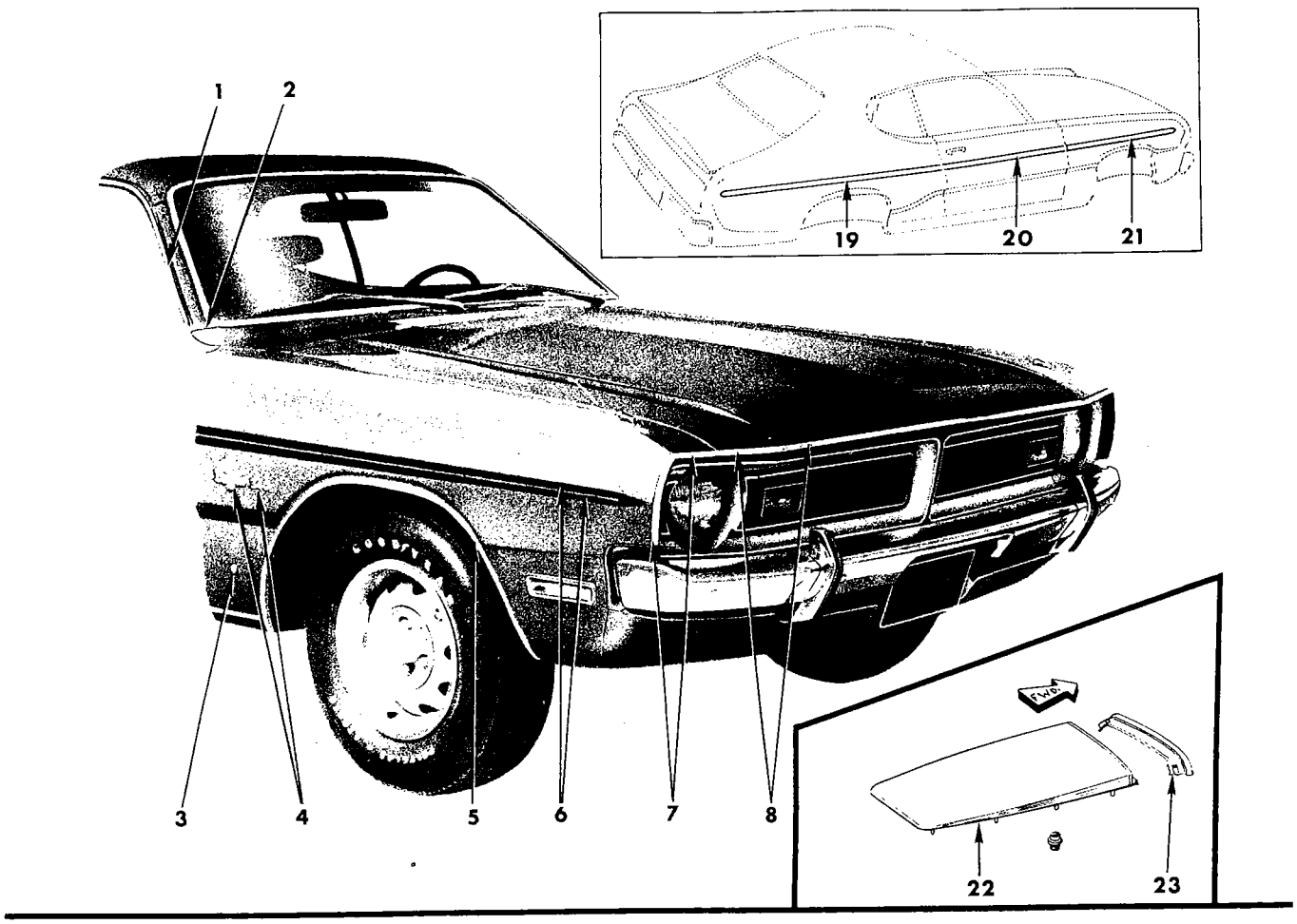

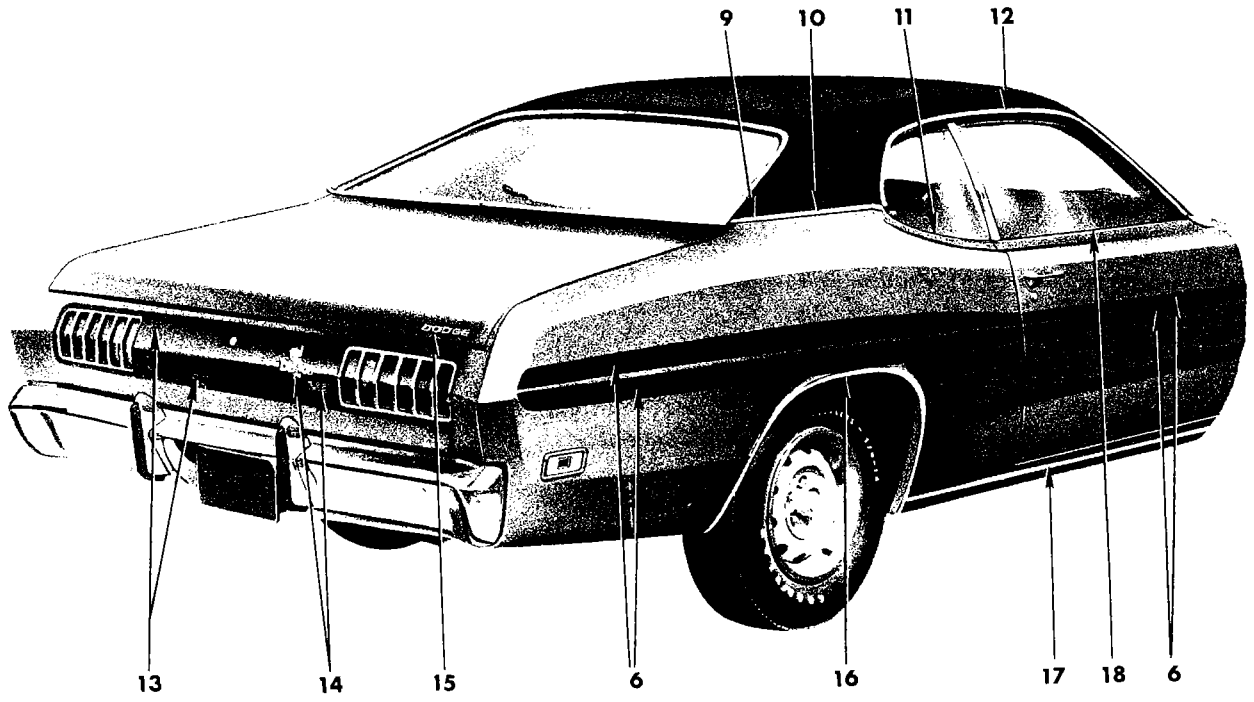

19a3512 **A**

1971
EXTERIOR VIEW - DART (DEMON 340) L-M FASTBACK

REF. NO.	QTY	PART NUMBER	DESCRIPTION
1	1	3444 930-1	MOULDING, Body Front Pillar Drain Trough, w/o Vinyl Roof (23-59-61)
	AR	---- ---	Spacer
	1	3445 932-3	MOULDING, Body Front Pillar Drain Trough, w/Vinyl Roof
	AR	---- ---	Spacer
2	1	3549 196-7	MOULDING PACKAGE, Body Frt. Pillar Lwr. (23-23-14)
	2	9431 737	Screw
3	1	2785 540	MEDALLION, Fender Side, Rt., Pentastar (12-15-21)
4	2	3613 358	DECAL, Fender Side, "Demon 340" (12-15-21)
5	1	2807 766-7	MOULDING PACKAGE, Fender Wheel Opng. (12-15-2)
	16	6028 545	Screw
6	1	3612 830-1	TAPE, Fender Color Stripe, Black (12-15-33)
	1	3612 832-3	White (12-15-33)
	1	3612 822-3	TAPE, Qtr. Pnl. Color Stripe, Black (23-23-12)
	1	3612 824-5	White (23-23-12)
	1	3612 826-7	TAPE, Door, Color Stripe, Black (23-23-12)
	1	3612 828-9	White (23-23-12)
	1	3685 248-9	TAPE PACKAGE, Body Side, Fender, Door, Qtr. Panel, Flat Black (23-23-12)
	1	3685 370-1	Glosye Black (23-23-12)
	1	3685 252-3	White (23-23-12)
7	1	3549 630-1	MOULDING PACKAGE, Fender Front (12-15-2)
	6	9429 022	Screw
8	1	3481 911	MOULDING PACKAGE, Hood Front (15-25-2)
	9	9428 267	Screw
9	1	3514 060-1	MOULDING PACKAGE, Qtr. Outside Belt, Rr. (23-23-39)
	2	9427 804	Screw
10	1	3444 412-3	MOULDING, Qtr. Outside Belt, Front (23-23-39)
	4	6002 354	Retainer
	4	6001 596	Retainer 4 9420 218 Nut
11	1	3444 410-1	MOULDING, Qtr. Wdo. Outside Belt (23-23-39)
	8	6003 013	Retainer
12	1	3444 932-3	MOULDING, Roof Side Drain Trough, w/o Vinyl Roof (23-59-61)
	AR	---- ---	Spacer
	1	3445 934-5	MOULDING, Roof Side Drain Trough, w/Vinyl Roof
	AR	---- ---	Spacer
13	1	3612 905	TAPE, Deck Opng. Lwr. Pnl. Color Stripe, Upper, Black (23-23-12)
	1	3612 907	White (23-23-12)
	1	3612 904	TAPE, Deck Opng. Lwr. Pnl. Color Stripe, Lower, Black (23-23-12)
	1	3612 906	White (23-23-12)
13 Cont'd	1	3685 234	TAPE PACKAGE, Deck Opng. Upr. & Lwr. Pnl., Black (23-23-12)
	1	3685 235	White (23-23-12)
14	1	3613 360	DECAL, Deck Opening Lower Panel, "Demon 340" (23-34-184)
15	1	2965 502	NAME PLATE, Deck Lid, "Dodge" (23-19-114)
16	1	3419 768-9	MOULDING PACKAGE, Qtr. Outside Whl. Opng. (23-23-39)
	18	6028 545	Screw
17	2	3506 036	MOULDING, Body Side Sill (23-23-2)
	16	6003 141	Retainer
	4	6029 403	Screw 4 6028 680 Screw
18	1	3444 408-9	MOULDING, Door Outside Belt (23-23-32)
	14	6002 398	Retainer
19	1	3570 190-1	MOULDING, Qtr. Outside, Black, Up to Sept. 1, 1970 (23-23-39)
	1	3570 192-3	Gold, Up to Sept. 1, 1970
	1	3570 194-5	Green, Up to Sept. 1, 1970
	2	3613 830	MOULDING, Qtr. Pnl., Black, After Sept. 1, 1970 (23-23-39)
	2	3613 832	Gold, After Sept. 1, 1970
	2	3613 834	Green, After Sept. 1, 1970
	AR	3613 507	TAPE, Qtr., Green (Above and Below Mldg.) (23-23-12)
	AR	3613 508	Black (Above and Below Mldg.)
	AR	3613 506	Gold (Above and Below Mldg.)
20	2	3570 157	MOULDING, Door, Black, Up to Sept. 1, 1970 (23-23-32)
	2	3570 158	Gold, Up to Sept. 1, 1970
	2	3570 159	Green, Up to Sept. 1, 1970
	2	3613 830	MOULDING, Door, Black, After Sept. 1, 1970 (23-23-32)
	2	3613 832	Gold, After Sept. 1, 1970
	2	3613 834	Green, After Sept. 1, 1970
	AR	3613 507	TAPE, Door, Green (Above and Below Mldg.) (23-23-12)
	AR	3613 508	Black (Above and Below Mldg.)
	AR	3613 506	Gold (Above and Below Mldg.)
21	1	3620 100-1	MOULDING PACKAGE, Fender Side, Black, Up to Sept. 1, 1970 (12-15-2)
	1	3620 102-3	Gold, Up to Sept. 1, 1970
	1	3620 104-5	Green, Up to Sept. 1, 1970
	5	6003 133	Retainer 5 6024 271 Screw
	2	6000 709	Retainer 2 116 000 Nut
	2	3613 830	MOULDING, Fender Side, Black, After Sept. 1, 1970 (12-15-2)
	2	3613 832	Gold, After Sept. 1, 1970
	2	3613 834	Green, After Sept. 1, 1970
	AR	3613 507	TAPE, Fender, Green (Above and Below Mldg.)(12-15-33)
	AR	3613 508	Black (Above and Below Mldg.)
	AR	3613 506	Gold (Above and Below Mldg.)
22	1	3443 130-1	ORNAMENT, Hood Scoop (15-03-64)
23	1	2949 146-7	BEZEL, Ornament Hood Scoop (15-03-18)

All Packages Include Attaching Parts

Part Type Code is Indicated in Parentheses

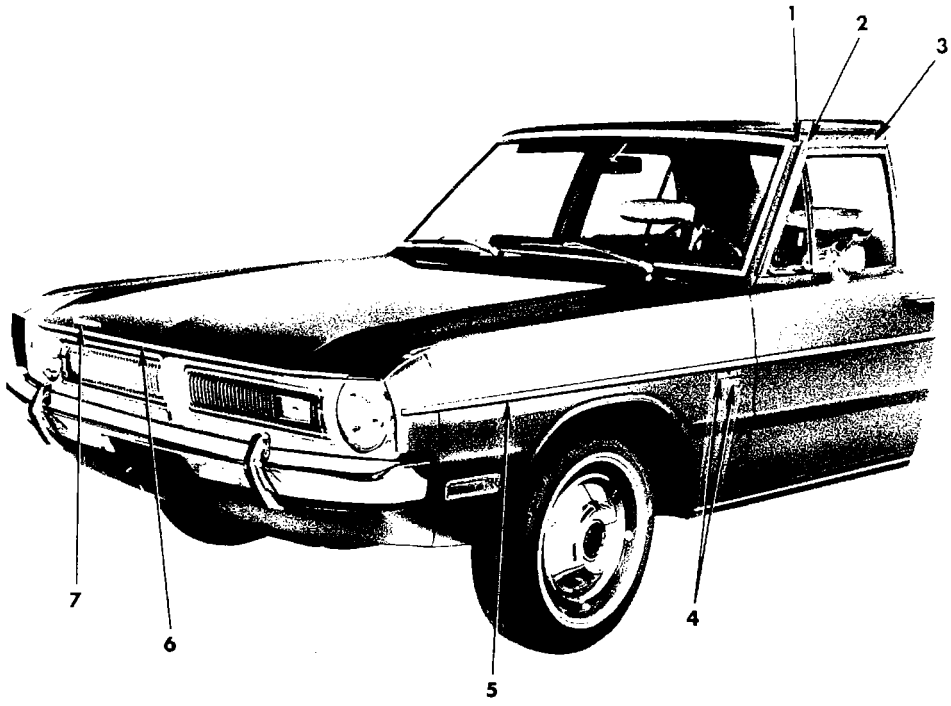

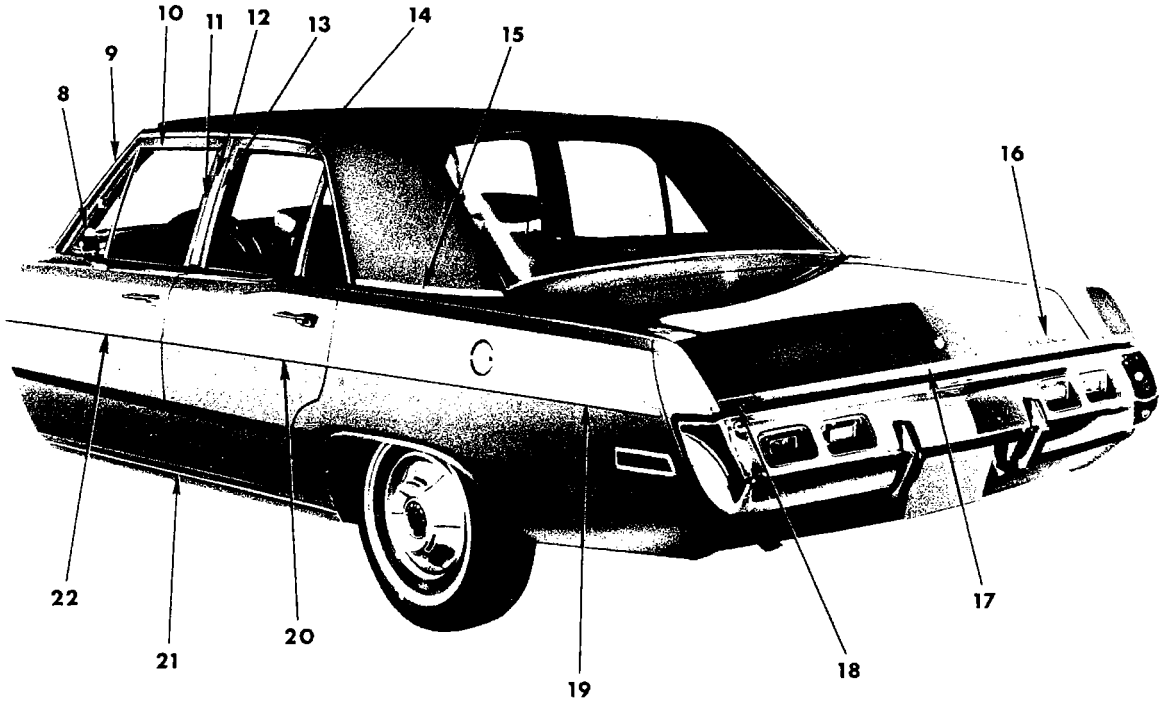

19a3472

1971
EXTERIOR VIEW - DART CUSTOM L-H 4 DOOR SEDAN

REF. NO.	QTY	PART NUMBER	DESCRIPTION
1	1	2807 882-3	MOULDING PACKAGE, Body Frt. Pillar Trim, use w/Vinyl Roof or Two Tone Paint (23-23-14)
	2	9431 737	Screw
2	2	2783 028	COVER, Roof Side Drain Trough Mldg. Joint (23-59-57)
3	1	2783 026-7	MOULDING, Roof Side Drain Trough, w/o Vinyl Roof (23-59-61)
	AR	---- ---	Spacer
	1	2840 980-1	MOULDING, Roof Side Drain Trough, w/Vinyl Roof (23-59-61)
	AR	---- ---	Spacer
4	2	3505 419	NAME PLATE, Fender Side, "Dart" (12-15-21)
	AR	6002 852	Retainer
	2	3505 056	NAME PLATE, Fender Side, "Custom" (12-15-21)
	1	2785 540	MEDALLION, Fender Side, Rt., Pentastar (12-15-21)
5	1	3481 716-7	MOULDING PACKAGE, Fender Side, w/Black Insert (12-15-2)
	6	6002 922	Retainer
	2	6000 709	Retainer
	2	9420 867	Nut
	1	3579 584-5	MOULDING PACKAGE, Fender Side, w/Black Paint (12-15-2)
	5	6002 922	Retainer
	2	6000 709	Retainer
	2	116 000	Nut
	2	3613 830	MOULDING, Fender Side, Black, After Sept. 1, 1970 (12-15-2)
	2	3613 832	Gold, After Sept. 1, 1970
	2	3613 834	Green, After Sept. 1, 1970
	AR	3613 507	TAPE, Fender, Green (Above and Below Mldg.)(12-15-33)
	AR	3613 508	Black (Above and Below Mldg.) (12-15-33)
	AR	3613 506	Gold (Above and Below Mldg.) (12-15-33)
6	1	3481 911	MOULDING PACKAGE, Hood Front (15-25-2)
	9	9428 267	Screw
7	1	2965 502	NAME PLATE, Hood, "Dodge" (15-06-3)
8	1	2663 434-5	MOULDING, Frt. Door Wdo. Opng. Frame, Frt. (23-23-32)
9	1	2783 024-5	MOULDING, Body Frt. Pillar Drain Trough (23-59-61)
	AR	---- ---	Spacer
10	1	2663 440-1	MOULDING, Frt. Door Wdo. Opng. Frame, Upr. (23-23-32)
11	1	2663 442-3	MOULDING, Frt. Door Wdo. Opng. Frame, Rr. (23-23-32)
12	1	2807 920-1	MOULDING PACKAGE, Body Center Pillar Outside Finish (23-23-16)
	4	6024 271	Screw
13	1	2664 812-3	MOULDING, Rear Door Wdo. Opng. Frame, Frt. (23-23-33)
14	1	2664 814-5	MOULDING, Rear Door Wdo. Opng. Frame, Upr. and Rr. (23-23-33)
15	1	2809 684-5	MOULDING PACKAGE, Qtr. Outside Belt, Paint Break, use w/Vinyl Roof or Two Tone Paint (23-23-39)
	3	6002 192	Fastener
	2	6002 507	Retainer
16	1	3505 433	NAME PLATE, Deck Lid, "Dodge" (23-19-114)
	AR	6002 852	Retainer
17	1	3481 718	MOULDING PACKAGE, Deck Lid (23-23-30)
	4	6002 967	Retainer
	4	6026 523	Nut
18	1	3481 780-1	MOULDING PACKAGE, Qtr. Panel End Extension (23-23-39)
	3	6028 537	Screw
19	1	3579 388-9	MOULDING PACKAGE, Qtr. Outside, w/Black Insert (23-23-39)
	7	6002 922	Retainer
	1	6000 709	Retainer
	1	6024 679	Nut
	1	3579 144-5	MOULDING PACKAGE, Qtr. Outside, w/Black Paint (23-23-39)
	7	6002 922	Retainer
	1	6000 709	Retainer
	1	6024 679	Nut
	2	3613 830	MOULDING, Qtr. Pnl., Black, After Sept. 1, 1970 (23-23-39)
	2	3613 832	Gold, After Sept. 1, 1970
	2	3613 834	Green, After Sept. 1, 1970
	AR	3613 507	TAPE, Qtr., Green (Above and Below Mldg.)(23-23-12)
	AR	3613 508	Black (Above and Below Mldg.) (23-23-12)
	AR	3613 506	Gold (Above and Below Mldg.) (23-23-12)

CONTINUED ON NEXT PAGE

All Packages Include Attaching Parts

Part Type Code is Indicated in Parentheses

1971
EXTERIOR VIEW - DART CUSTOM L-H 4 DOOR SEDAN

REF. NO.	QTY	PART NUMBER	DESCRIPTION
20	1	3579 140-1	MOULDING PACKAGE, Rear Door, w/Black Insert (23-23-33)
	3	6002 922	Retainer
	2	6002 162	Retainer
	1	3579 142-3	MOULDING PACKAGE, Rear Door, w/Black Paint (23-23-33)
	3	6002 922	Retainer
	2	6002 162	Retainer
	2	3613 830	MOULDING, Rear Door, Black, After Sept. 1, 1970 (23-23-33)
	2	3613 832	Gold, After Sept. 1, 1970
	2	3613 834	Green, After Sept. 1, 1970
	AR	3613 507	TAPE, Rear Door, Green (Above and Below Mldg.)(23-23-12)
	AR	3613 508	Black (Above and Below Mldg.) (23-23-12)
	AR	3613 506	Gold (Above and Below Mldg.) (23-23-12)
21	2	2807 906	MOULDING PACKAGE, Body Side Sill (23-23-2)
	8	6001 428	Retainer
	2	6026 760	Screw
22	1	3579 582-3	MOULDING PACKAGE, Frt. Door, w/Black Insert (23-23-32)
	5	6002 922	Retainer
	1	6002 162	Retainer
	1	6026 523	Nut
	1	3579 138-9	MOULDING PACKAGE, Frt. Door, w/Black Paint (23-23-32)
	6	6002 922	Retainer
	1	6002 162	Retainer
	2	3613 830	MOULDING, Frt. Door, Black, After Sept. 1, 1970 (23-23-32)
	2	3613 832	Gold, After Sept. 1, 1970
	2	3613 834	Green, After Sept. 1, 1970
	AR	3613 507	TAPE, Frt. Door, Green (Above and Below Mldg.)(23-23-12)
	AR	3613 508	Black (Above and Below Mldg.) (23-23-12)
	AR	3613 506	Gold (Above and Below Mldg.) (23-23-12)

All Packages Include Attaching Parts

Part Type Code is Indicated in Parentheses

1971
EXTERIOR VIEW - DART CUSTOM L-H 4 DOOR SEDAN

NOTES

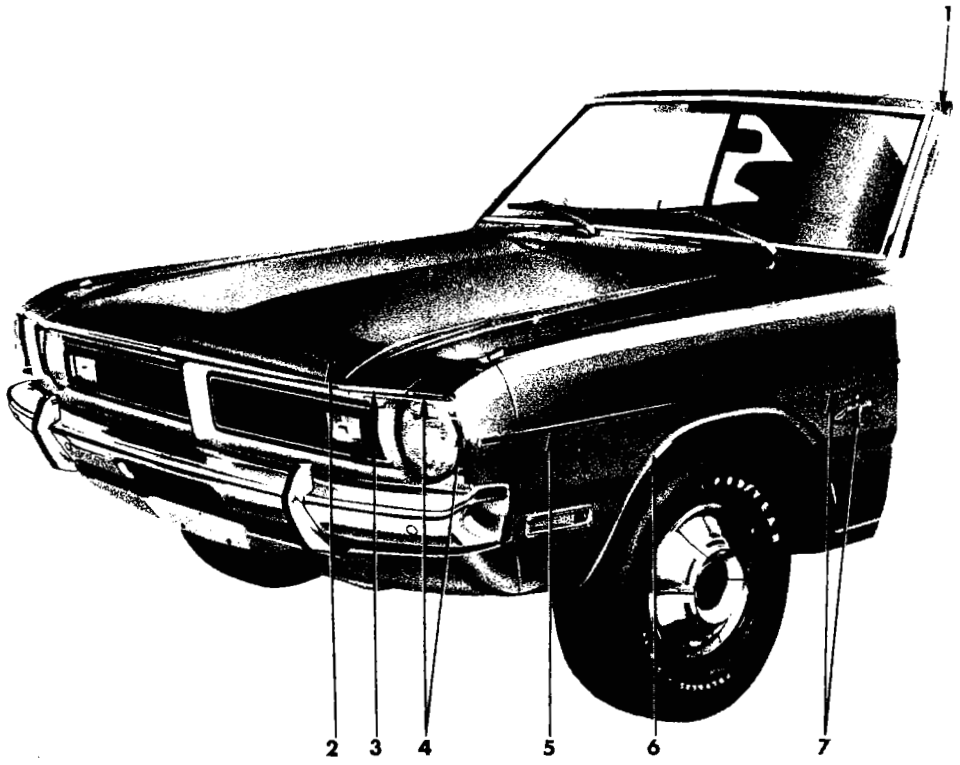

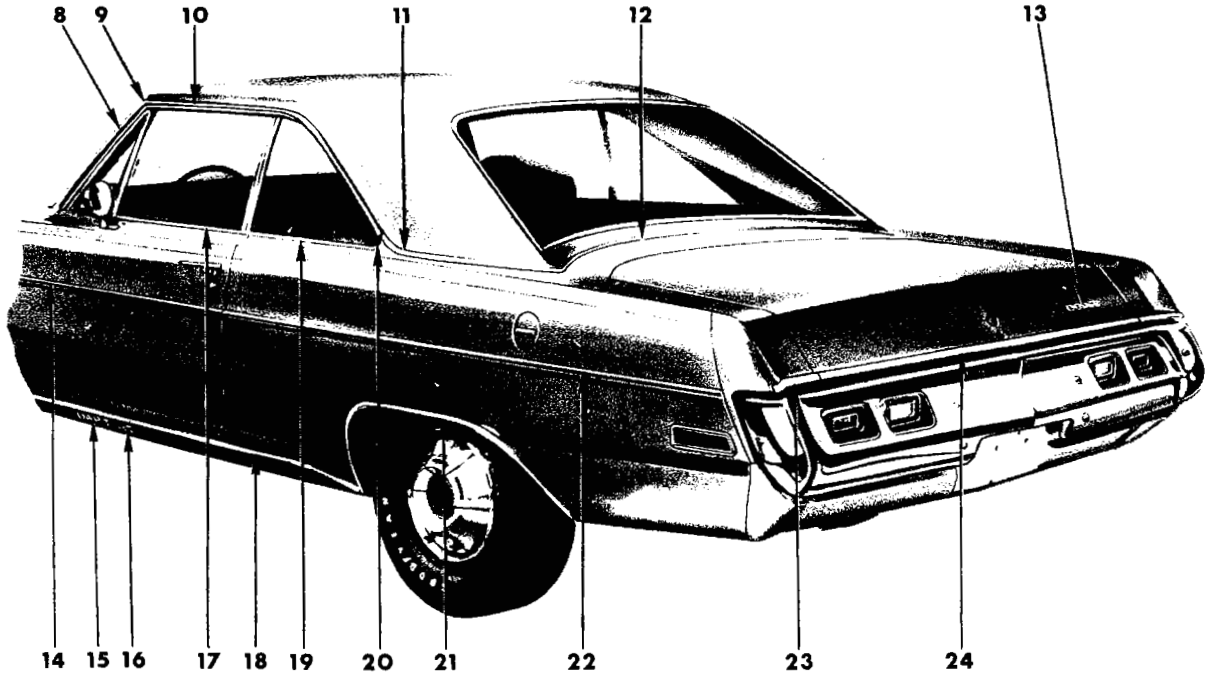

19a3596

1971
EXTERIOR VIEW - DART (SWINGER) L-H 2 DOOR HARDTOP

REF. NO.	QTY	PART NUMBER	DESCRIPTION
1	1	2807 882-3	MOULDING PACKAGE, Body Frt. Pillar Trim, use w/Vinyl Roof or Two Tone Paint (23-23-14)
	2	9431 737	Screw
2	1	2965 502	NAME PLATE, Hood Front (15-06-3)
3	1	3481 911	MOULDING PACKAGE, Hood Front (15-25-2)
	9	9428 267	Screw
4	1	3549 630-1	MOULDING PACKAGE, Fender Frt. (12-15-2)
	6	9429 022	Screw
5	1	3481 716-7	MOULDING PACKAGE, Fender Side, Black (12-15-2)
	6	6002 922	Retainer
	2	6000 709	Retainer
	2	9420 867	Nut
	2	3613 830	MOULDING, Fender Side, Black, After Sept. 1, 1970 (12-15-2)
	2	3613 832	Gold, After Sept. 1, 1970
	2	3613 834	Green, After Sept. 1, 1970
	AR	3613 507	TAPE, Fender, Green (Above and Below Mldg.)(12-15-33)
	AR	3613 508	Black (Above and Below Mldg.) (12-15-33)
	AR	3613 506	Gold (Above and Below Mldg.) (12-15-33)
6	1	3579 384-5	MOULDING PACKAGE, Fender Wheel Opng., w/Wheel Lip Mldg. (12-15-2)
	1	2807 766-7	MOULDING PACKAGE, Fender Wheel Opng., w/o Wheel Lip Mldg. (12-15-2)
	8	6024 271	Screw
7	2	3505 419	NAME PLATE, Fender Side, "Dart" (12-15-21)
	AR	6002 852	Retainer
	2	3549 645	NAME PLATE, Fender Side, "Swinger" (12-15-21)
	AR	6002 852	Retainer
8	1	2783 018-9	MOULDING, Body Frt. Plr. Drain Trough (23-59-61)
	AR	---- ---	Spacer
9	2	2783 028	COVER, Roof Side Drain Trough Mldg. Joint (23-59-57)
10	1	2783 020-1	MOULDING, Roof Side Drain Trough, w/o Vinyl Roof (23-59-61)
	AR	---- ---	Spacer
	1	2840 982-3	MOULDING, Roof Side Drain Trough, w/Vinyl Roof (23-59-61)
	AR	---- ---	Spacer
11	1	2807 700-1	MOULDING PACKAGE, Roof Outside Belt, use w/Vinyl Roof or Two Tone Paint (23-23-42)
	6	6002 192	Fastener
	2	6002 297	Retainer w/Seal
	2	6023 898	Screw 2 9420 276 Nut
12	1	2807 702-3	MOULDING PACKAGE, Deck Opng. Upr. Pnl., use w/Vinyl Roof or Two Tone Paint (23-23-31)
	7	6002 297	Retainer w/Seal
	9	9415 250	Nut
13	1	3505 433	NAME PLATE, Deck Lid, "Dodge" (23-19-114)
	AR	6002 852	Retainer
14	1	3481 774-5	MOULDING PACKAGE, Door, Black (23-23-32)
	12	6003 133	Retainer
	2	6002 162	Retainer
	2	6029 259	Nut
	2	3613 830	MOULDING, Door, Black, After Sept. 1, 1970 (23-23-32)
	2	3613 832	Gold, After Sept. 1, 1970
	2	3613 834	Green, After Sept. 1, 1970
	AR	3613 507	TAPE, Door, Green (Above and Below Mldg.) (23-23-12)
	AR	3613 508	Black (Above and Below Mldg.) (23-23-12)
	AR	3613 506	Gold (Above and Below Mldg.) (23-23-12)
15	2	3505 434	NAME PLATE, Body Side Sill, "Dart" (23-51-8)
	4	9427 804	Screw
16	2	3505 435	NAME PLATE, Body Side Sill, "GT" (23-51-8)
	4	9427 804	Screw
17	1	3004 244-5	MOULDING PACKAGE, Door Outside Belt (23-23-32)
	14	6002 398	Retainer
18	1	3579 386-7	MOULDING PACKAGE, Body Side Sill (23-23-2)
	8	6003 269	Retainer
	8	6024 271	Screw
	16	6002 460	Clip
19	1	3004 242-3	MOULDING PACKAGE, Qtr. Outside Belt, Frt. (23-23-39)
	8	6002 398	Retainer
20	1	3004 246-7	MOULDING PACKAGE, Qtr. Outside Belt, Rr. (23-23-39)
	2	9427 804	Screw
21	1	2932 594-5	MOULDING PACKAGE, Qtr. Outside Wheel Opening (23-23-39)
	16	6028 545	Screw
22	1	3481 776-7	MOULDING PACKAGE, Qtr. Outside (23-23-39)
	20	6003 133	Retainer
	2	6000 709	Retainer w/Seal
	2	6023 678	Nut
	2	3613 830	MOULDING, Qtr. Pnl., Black, After Sept. 1, 1970 (23-23-39)
	2	3613 832	Gold, After Sept. 1, 1970
	2	3613 834	Green, After Sept. 1, 1970
	AR	3613 507	TAPE, Qtr., Green (Above and Below Mldg.) (23-23-12)
	AR	3613 508	Black (Above and Below Mldg.) (23-23-12)
	AR	3613 506	Gold (Above and Below Mldg.) (23-23-12)
23	1	3481 780-1	MOULDING PACKAGE, Qtr. Pnl. End Ext. (23-23-39)
	3	6028 537	Screw
24	1	3481 718	MOULDING PACKAGE, Deck Lid (23-23-30)
	8	6002 967	Retainer
	8	6026 523	Nut

Part Type Code is Indicated in Parentheses
All Packages Include Attaching Parts

1971
EXTERIOR VIEW - DART (SWINGER) L-H 2 DOOR HARDTOP

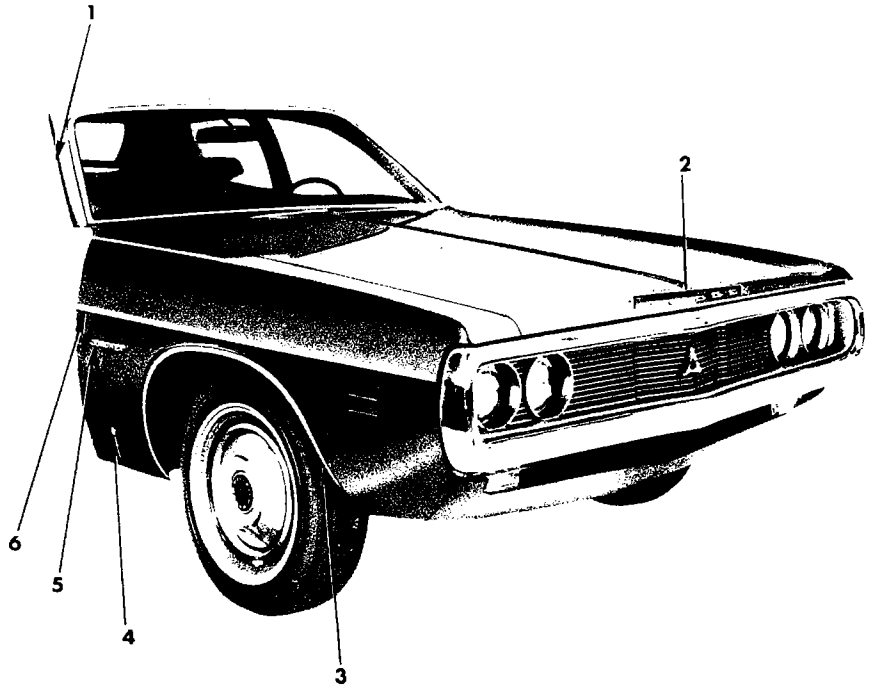

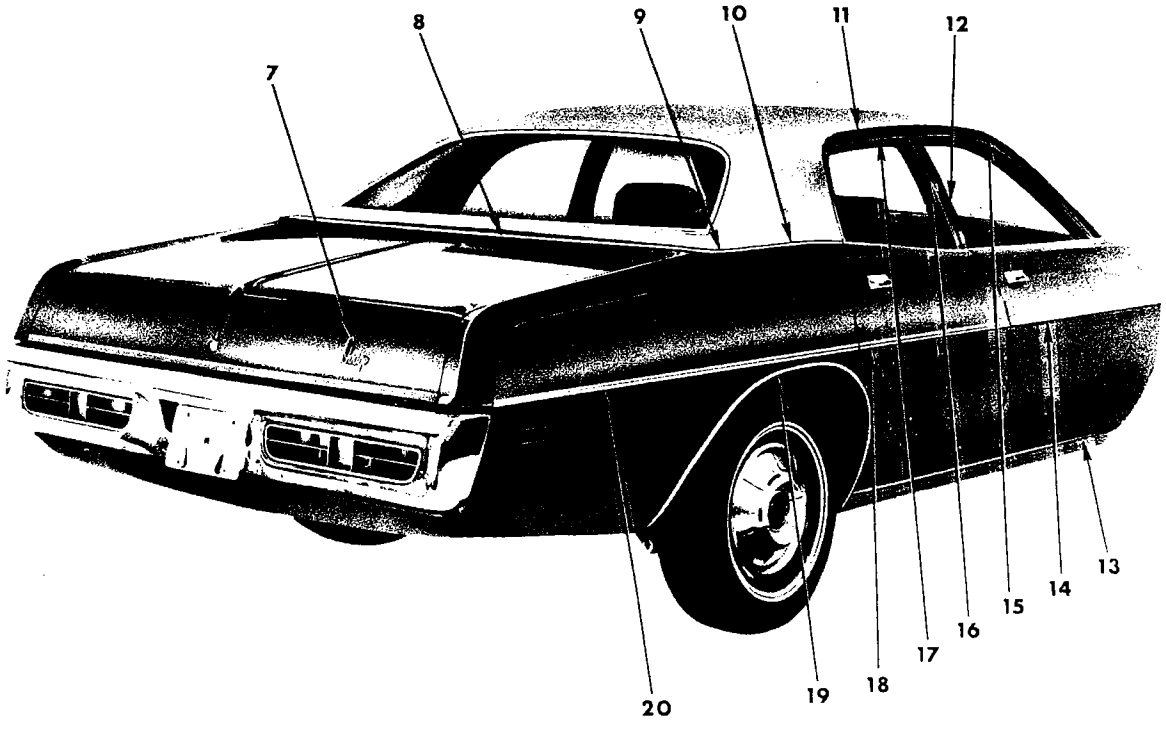

19a347

1971
EXTERIOR VIEW - CORONET W-L 4 DOOR SEDAN

REF. NO.	QTY	PART NUMBER	DESCRIPTION
1	1	3504 840-1	MOULDING, Body Front Pillar Drain Trough, w/o Vinyl Roof (23-59-61)
	1	3504 842-3	MOULDING, Body Front Pillar Drain Trough, w/Vinyl Roof (23-59-61)
2	1	3443 365	LETTER "D", Hood Front (15-06-16)
	1	3443 367	"O"
	1	3443 369	"D"
	1	3443 371	"G"
	1	3443 373	"E"
3	1	3579 372-3	MOULDING PACKAGE, Fender Wheel Opng. (12-15-2)
	9	6024 271	Screw
4	1	2785 540	MEDALLION, Fender Side, Rt. Pentastar (12-15-21)
5	2	3504 801	NAME PLATE, Fender Side, "Coronet" (12-15-21)
6	1	3579 366-7	MOULDING PACKAGE, Fender Side, w/Black Insert (12-15-2)
	1	3620 484-5	w/Gold Insert (12-15-2)
	1	3620 486-7	w/Green Insert (12-15-2)
	1	3620 488-9	w/Blue Insert (12-15-2)
	1	3621 532-3	MOULDING PACKAGE, Fender Side, w/Green Insert, After Jan. 1, 1971 (12-15-2)
	1	3632 534-5	w/Gold Insert, After Jan. 1, 1971 (12-15-2)
	1	3621 536-7	w/Black Insert, After Jan. 1, 1971 (12-15-2)
	1	3620 548-9	w/Blue Insert, After Jan. 1, 1971 (12-15-2)
	1	6002 842	Retainer
	1	6006 496	Retainer 1 116 000 Nut
	7	6003 133	Retainer 7 6024 271 Screw
7	1	3504 806	NAME PLATE, Deck Lid, "Dodge" (23-19-114)
	1	3680 384	NAME PLATE, Deck Lid, "Dodge", use After July 1, 1971 (23-19-114)
8	1	3579 428-9	MOULDING PACKAGE, Deck Opng. Upr. Pnl., use w/Vinyl Roof or Two Tone Paint (23-23-31)
	2	6006 496	Retainer 2 6023 898 Screw
	3	6003 147	Retainer 3 6024 271 Screw
9	1	3579 572-3	MOULDING PACKAGE, Qtr. Outside Belt, Rear, use w/Vinyl Roof or Two Tone Paint (23-23-39)
	2	6023 898	Screw 1 9420 294 Nut
10	1	3620 264-5	MOULDING PACKAGE, Qtr. Outside Belt, Frt., use w/Vinyl Roof or Two Tone Paint (23-23-39)
	1	6003 147	Retainer 1 6024 271 Screw
	1	6006 496	Retainer 1 9420 867 Nut
11	1	3445 118-9	MOULDING, Roof Side Drain Trough, w/o Vinyl Roof (23-59-61)
	1	3504 844-5	MOULDING, Roof Side Drain Trough, w/Vinyl Roof (23-59-61)
12	1	3439 716-7	MOULDING, Frt. Door Wdo. Opng. Frame, Rr. (23-23-32)
13	2	3579 401	MOULDING PACKAGE, Body Side Sill (23-23-2)
	8	6003 141	Retainer
	2	---- ---	Screw
14	1	3579 402-3	MOULDING PACKAGE, Frt. Door, w/Black Insert (23-23-32)
	1	3579 986-7	w/Gold Insert (23-23-32)
	1	3579 988-9	w/Green Insert (23-23-32)
	1	3579 990-1	w/Blue Insert (23-23-32)
	2	6003 134	Retainer
	2	6029 259	Nut
	4	6003 133	Retainer
15	1	3439 712-3	MOULDING, Frt. Door Wdo. Opng. Frame, Frt. (23-23-32)
16	1	3440 030-1	MOULDING, Rear Door Wdo. Opng. Frame, Frt. (23-23-33)
17	1	3440 032-3	MOULDING, Rear Door Wdo. Opng. Frame, Upr. (23-23-33)
18	1	3579 406-7	MOULDING PACKAGE, Rear Door, w/Black Insert (23-23-33)
	1	3579 992-3	w/Gold Insert (23-23-33)
	1	3579 994-5	w/Green Insert (23-23-33)
	1	3579 996-7	w/Blue Insert (23-23-33)
	3	6003 133	Retainer
	2	6003 134	Retainer
	2	6029 259	Nut
19	1	3579 422-3	MOULDING PACKAGE, Qtr. Outside Wheel Opng. (23-23-39)
	8	6024 271	Screw
20	1	3579 410-1	MOULDING PACKAGE, Qtr. Pnl., w/Black Insert (23-23-39)
	1	3579 998-9	w/Gold Insert (23-23-39)
	1	3620 002-3	w/Green Insert (23-23-39)
	1	3620 004-5	w/Blue Insert (23-23-39)
	7	6003 133	Retainer
	1	6006 496	Retainer
	1	6027 625	Nut

All Packages Include Attaching Parts

Part Type Code is Indicated in Parentheses

1971
EXTERIOR VIEW - CORONET W-L 4 DOOR SEDAN

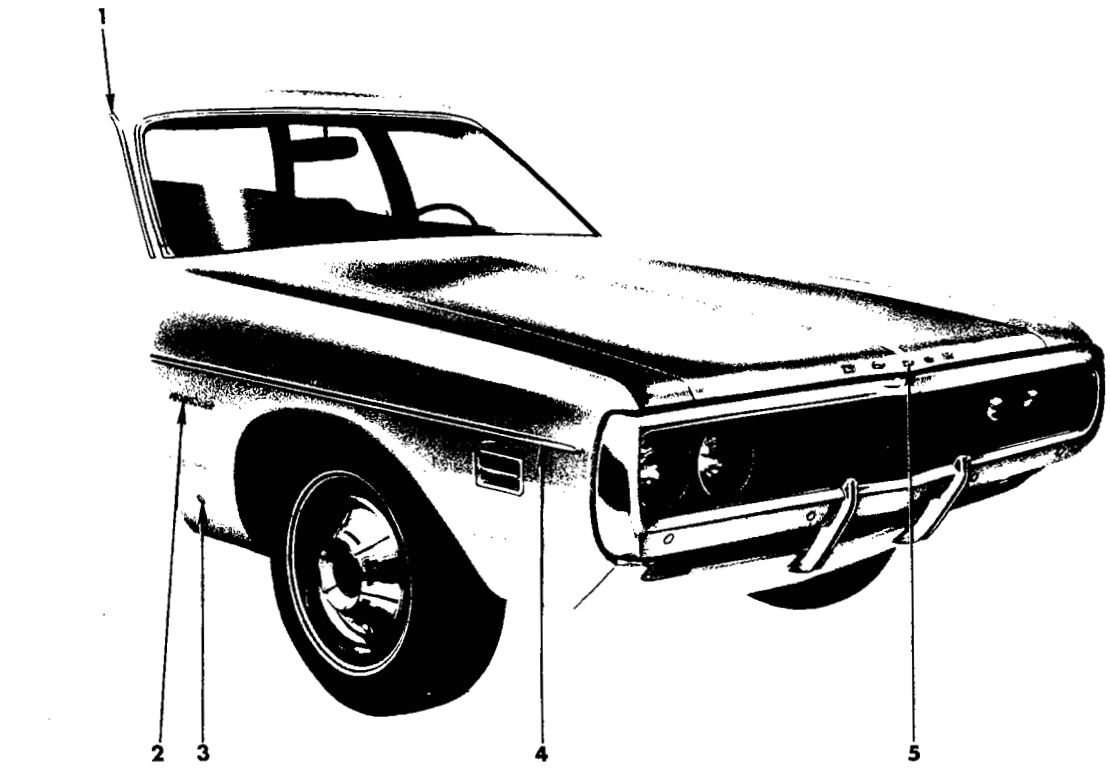

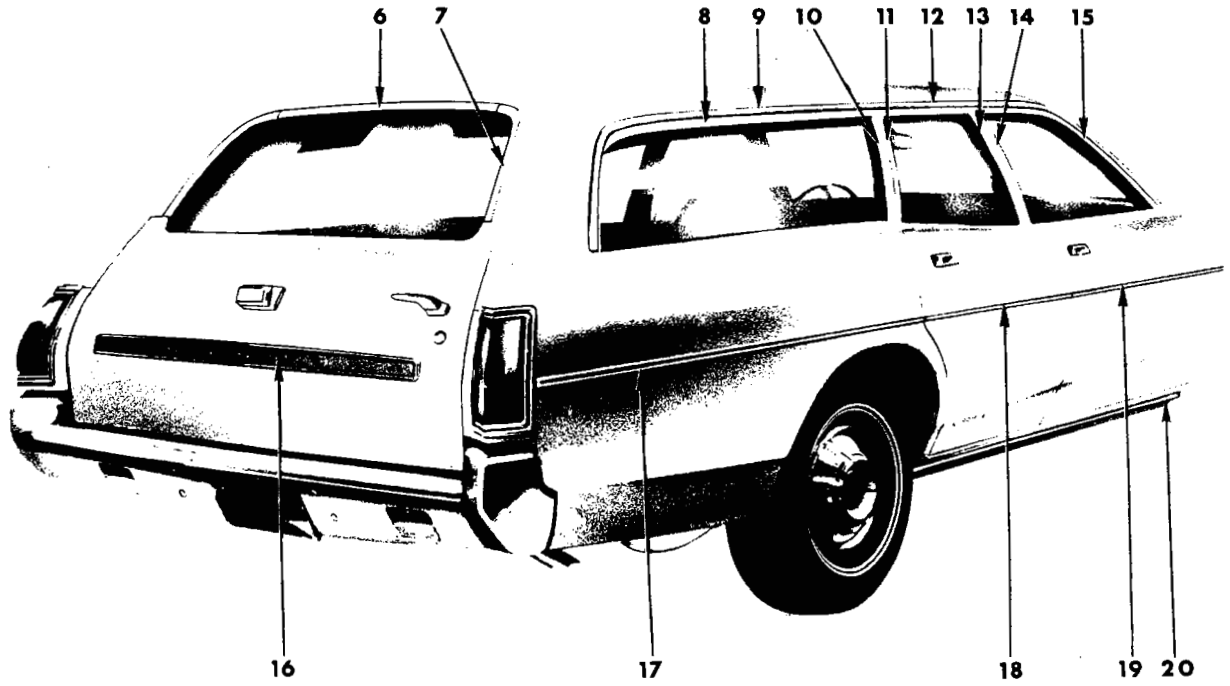

19a3644

1971
EXTERIOR VIEW - CORONET W-L STATION WAGON

REF. NO.	QTY	PART NUMBER	DESCRIPTION
1	1	3504 840-1	MOULDING, Body Front Pillar Drain Trough (23-59-61)
2	2	3504 801	NAME PLATE, Fender Side, "Coronet" (12-15-21)
3	1	2785 540	MEDALLION, Fender Side, Rt., Pentastar (12-15-21)
4	1	3579 364-5	MOULDING PACKAGE, Fender Side, Plain (12-15-2)
	1	3621 540-1	MOULDING PACKAGE, Fender Side, Plain, After Jan. 1, 1971 (12-15-2)
	1	6002 842	Retainer
	1	6006 496	Retainer
	7	6003 133	Retainer 1 116 000 Nut
	1	3579 366-7	MOULDING PACKAGE, Fender Side, w/Insert, Black (12-15-2)
	1	3620 484-5	Gold (12-15-2)
	1	3620 486-7	Green (12-15-2)
	1	3620 488-9	Blue (12-15-2)
	1	3621 532-3	MOULDING PACKAGE, Fender Side, w/Green Insert, After Jan. 1, 1971 (12-15-2)
	1	3621 534-5	w/Gold Insert, After Jan. 1, 1971 (12-15-2)
	1	3621 536-7	w/Black Insert, After Jan. 1, 1971 (12-15-2)
	1	3620 548-9	w/Blue Insert, After Jan. 1, 1971 (12-15-2)
	1	6002 842	Retainer
	1	6006 496	Retainer 1 116 000 Nut
	7	6003 133	Retainer 7 6024 271 Screw
5	1	3443 365	LETTER "D", Hood Front (15-06-16)
	1	3443 367	"O"
	1	3443 369	"D"
	1	3443 371	"G"
	1	3443 373	"E"
6	1	3440 120	MOULDING, Roof Pnl. Outside Tailgate Opng., Upr. (23-23-60)
	3	9414 732	Screw
7	1	3440 194-5	MOULDING, Qtr. Pnl. Outside Pillar, Upr. (23-23-60)
	2	9414 732	Screw
8	1	3620 082-3	MOULDING PACKAGE, Qtr. Wdo. Outside, Upr. and Rear, Stainless Steel (23-23-73)
	10	6003 238	Retainer
	10	6024 271	Screw
	1	3620 088-9	MOULDING PACKAGE, Qtr. Wdo. Outside, Upr. and Rear, Galv. Steel (23-23-73)
	10	6003 238	Retainer
	10	6024 271	Screw
9	1	3504 848-9	MOULDING, Roof Side Drain Trough (23-59-61)
10	1	3620 084-5	MOULDING PACKAGE, Qtr. Wdo. Outside, Frt., Stainless Steel (23-23-73)
	3	6024 271	Screw
	1	3620 086-7	MOULDING PACKAGE, Qtr. Wdo. Outside, Frt., Galv. Steel (23-23-73)
	3	6024 271	Screw
11	1	3440 036-7	MOULDING, Rear Door Wdo. Opng. Frame, Rr. (23-23-33)
12	1	3440 034-5	MOULDING, Rear Door Wdo. Opng. Frame, Upr. (23-23-33)
13	1	3440 030-1	MOULDING, Rear Door Wdo. Opng. Frame, Frt. (23-23-33)
14	1	3439 716-7	MOULDING, Frt. Door Wdo. Opng. Frame, Rr. (23-23-32)
15	1	3439 712-3	MOULDING, Frt. Door Wdo. Opng. Frame, Frt. (23-23-32)
16	1	3579 477	MOULDING PACKAGE, Tailgate Outside (23-23-61)
	5	---- ---	Nut
17	1	3579 456-7	MOULDING PACKAGE, Qtr. Outside, Plain (23-23-39)
	10	6003 133	Retainer
	10	6024 271	Screw
	1	3579 458-9	MOULDING PACKAGE, Qtr. Outside, w/Insert, Black (23-23-39)
	1	3620 006-7	Gold (23-23-39)
	1	3620 008-9	Green (23-23-39)
	1	3620 010-1	Blue (23-23-39)
	10	6003 133	Retainer
18	1	3579 462-3	MOULDING PACKAGE, Rear Door, Plain (23-23-33)
	3	6003 133	Retainer
	3	6024 271	Screw
	2	6003 134	Retainer
	2	6026 523	Nut
	1	3579 406-7	MOULDING PACKAGE, Rear Door, w/Insert, Black (23-23-33)
	1	3579 992-3	Gold (23-23-33)
	1	3579 994-5	Green (23-23-33)
	1	3579 996-7	Blue (23-23-33)
	3	6003 133	Retainer
	2	6003 134	Retainer
	2	6029 259	Nut
19	1	3620 504-5	MOULDING PACKAGE, Frt. Door, Plain (23-23-32)
	2	6003 134	Retainer
	2	6029 259	Nut
	4	6003 133	Retainer
	1	3579 402-3	MOULDING PACKAGE, Frt. Door, w/Insert, Black (23-23-32)
	1	3579 986-7	Gold (23-23-32)
	1	3579 988-9	Green (23-23-32)
	1	3579 990-1	Blue (23-23-32)
	2	6003 134	Retainer
	2	6029 259	Nut
	4	6003 133	Retainer
20	2	3579 401	MOULDING PACKAGE, Body Side Sill (23-23-2)
	2	---- ---	Screw
	8	6003 141	Retainer

All Packages Include Attaching Parts

Part Type Code is Indicated in Parentheses

1971
EXTERIOR VIEW - CORONET W-L STATION WAGON

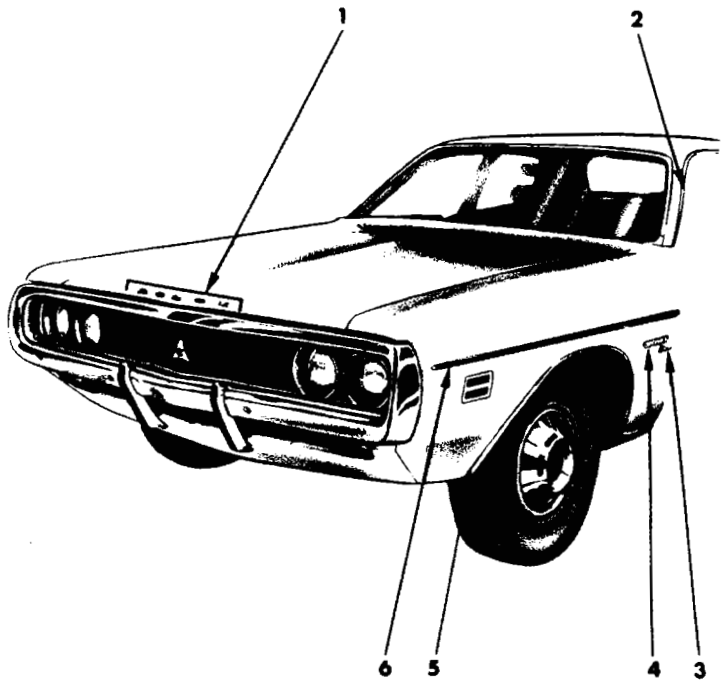

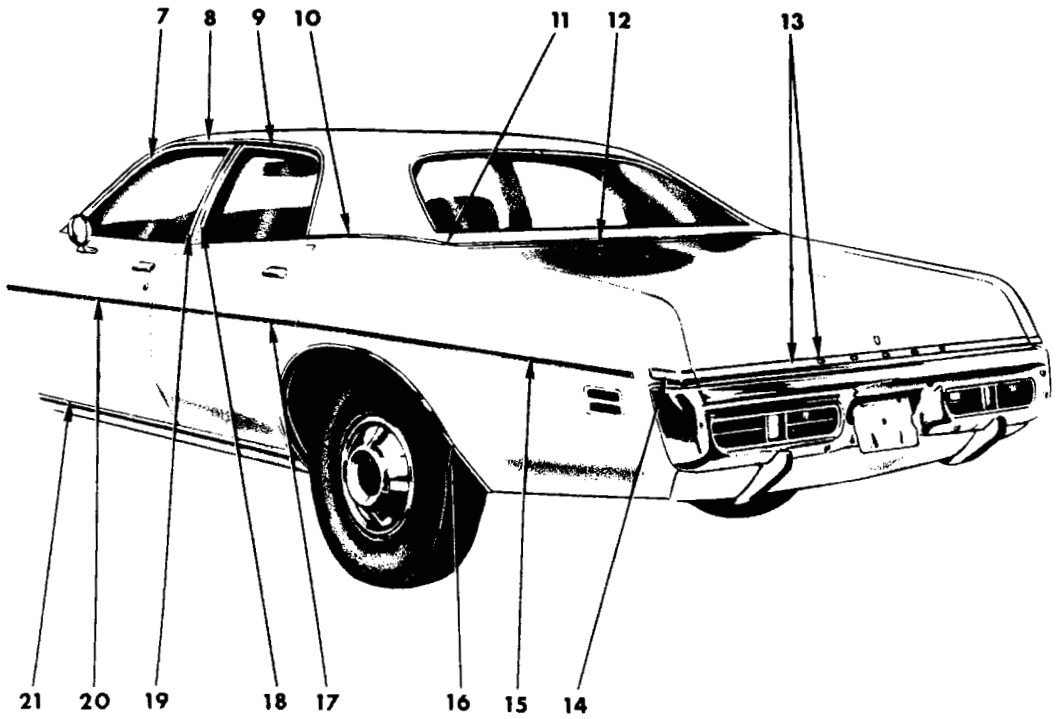

19a3474

1971
EXTERIOR VIEW - CORONET CUSTOM W-H 4 DOOR SEDAN

REF. NO.	QTY	PART NUMBER	DESCRIPTION
1	1	3443 365	LETTER "D", Hood Front (15-06-16)
	1	3443 367	"O"
	1	3443 369	"D"
	1	3443 371	"G"
	1	3443 373	"E"
2	1	3504 840-1	MOULDING, Body Frt. Pillar Drain Trough, w/o Vinyl Roof (23-59-61)
	1	3504 842-3	MOULDING, Body Frt. Pillar Drain Trough, w/Vinyl Roof (23-59-61)
3	2	3505 432	NAME PLATE, Fender Side, "Custom" (12-15-21)
4	2	3504 801	NAME PLATE, Fender Side, "Coronet" (12-15-21)
5	1	3579 372-3	MOULDING PACKAGE, Fender Wheel Opng. (12-15-2)
	9	6024 271	Screw
6	1	3579 366-7	MOULDING PACKAGE, Fender Side, w/Black Insert (12-15-2)
	1	3620 484-5	w/Gold Insert (12-15-2)
	1	3620 486-7	w/Green Insert (12-15-2)
	1	3620 488-9	w/Blue Insert (12-15-2)
	1	3621 532-3	MOULDING PACKAGE, Fender Side, w/Green Insert, After Jan. 1, 1971 (12-15-2)
	1	3621 534-5	w/Gold Insert, After Jan. 1, 1971 (12-15-2)
	1	3621 536-7	w/Black Insert, After Jan. 1, 1971 (12-15-2)
	1	3620 548-9	w/Blue Insert, After Jan. 1, 1971 (12-15-2)
	1	3579 368-9	MOULDING PACKAGE, Fender Side, Paint (12-15-2)
	1	3621 538-9	MOULDING PACKAGE, Fender Side, Paint, After Jan. 1, 1971 (12-15-2)
	1	6002 842	Retainer
	1	6006 496	Retainer 1 116 000 Nut
	7	6003 133	Retainer 7 6024 271 Screw
7	1	3439 712-3	MOULDING, Frt. Door Wdo. Opng. Frame, Frt. (23-23-32)
8	1	3445 118-9	MOULDING, Roof Side Drain Trough, w/o Vinyl Roof (23-59-61)
	1	3504 844-5	MOULDING, Roof Side Drain Trough, w/Vinyl Roof (23-59-61)
9	1	3440 032-3	MOULDING, Rr. Door Wdo. Opng. Frame, Upr. (23-23-33)
10	1	3620 264-5	MOULDING PACKAGE, Qtr. Outside Belt, Frt., use w/Vinyl Roof or Two Tone Paint (23-23-39)
	1	6003 147	Retainer 1 6024 271 Screw
	1	6006 496	Retainer 1 9420 867 Nut
11	1	3579 572-3	MOULDING PACKAGE, Qtr. Outside Belt, Rr., use w/Vinyl Roof or Two Tone Paint (23-23-39)
	2	6023 898	Screw 1 9420 294 Nut
12	1	3579 428-9	MOULDING PACKAGE, Deck Opng. Upr. Pnl., use w/Vinyl Roof or Two Tone Paint (23-23-31)
	2	6006 496	Retainer 2 6023 898 Screw
	3	6003 147	Retainer 3 6024 271 Screw
13	1	3579 476	MOULDING PACKAGE, Deck Lid Lwr. (23-23-30)
	2	6003 148	Retainer
	2	6026 523	Nut
	3	6003 150	Retainer
	3	6024 271	Screw
14	1	3620 262-3	MOULDING PACKAGE, Qtr. Outside Rr. End (23-23-39)
	1	6003 125	Retainer
	1	6024 271	Screw
15	1	3579 410-1	MOULDING PACKAGE, Qtr. Pnl., w/Black Insert (23-23-39)
	1	3579 998-9	w/Gold Insert (23-23-39)
	1	3620 002-3	w/Green Insert (23-23-39)
	1	3620 004-5	w/Blue Insert (23-23-39)
	1	3579 412-3	MOULDING PACKAGE, Qtr. Pnl., Paint (23-23-39)
	1	6006 496	Retainer
	7	6003 133	Retainer
	1	6027 625	Nut
16	1	3579 422-3	MOULDING PACKAGE, Qtr. Outside Whl. Opng. (23-23-39)
	8	6024 271	Screw
17	1	3579 406-7	MOULDING PACKAGE, Rr. Dr., w/Black Insert (23-23-33)
	1	3579 992-3	w/Gold Insert (23-23-33)
	1	3579 994-5	w/Green Insert (23-23-33)
	1	3579 996-7	w/Blue Insert (23-23-33)
	1	3579 408-9	MOULDING PACKAGE, Rear Door, Paint (23-23-33)
	3	6003 133	Retainer
	2	6003 134	Retainer
	2	6029 259	Nut
18	1	3440 030-1	MOULDING, Rear Door Wdo. Opng. Frame, Frt. (23-23-33)
19	1	3439 716-7	MOULDING, Frt. Door Wdo. Opng. Frame, Rr. (23-23-32)
20	1	3579 402-3	MOULDING PACKAGE, Frt. Door, w/Black Insert (23-23-32)
	1	3579 986-7	w/Gold Insert (23-23-32)
	1	3579 988-9	w/Green Insert (23-23-32)
	1	3579 990-1	w/Blue Insert (23-23-32)
	1	3579 404-5	MOULDING PACKAGE, Frt. Door, Paint (23-23-32)
	2	6003 134	Retainer
	2	6029 259	Nut
	4	6003 133	Retainer
21	2	3579 401	MOULDING PACKAGE, Body Side Sill (23-23-2)
	8	6003 141	Retainer
	2	---- ---	Screw

All Packages Include Attaching Parts

Part Type Code is Indicated in Parentheses

1971

EXTERIOR VIEW - CORONET CUSTOM W-H 4 DOOR SEDAN

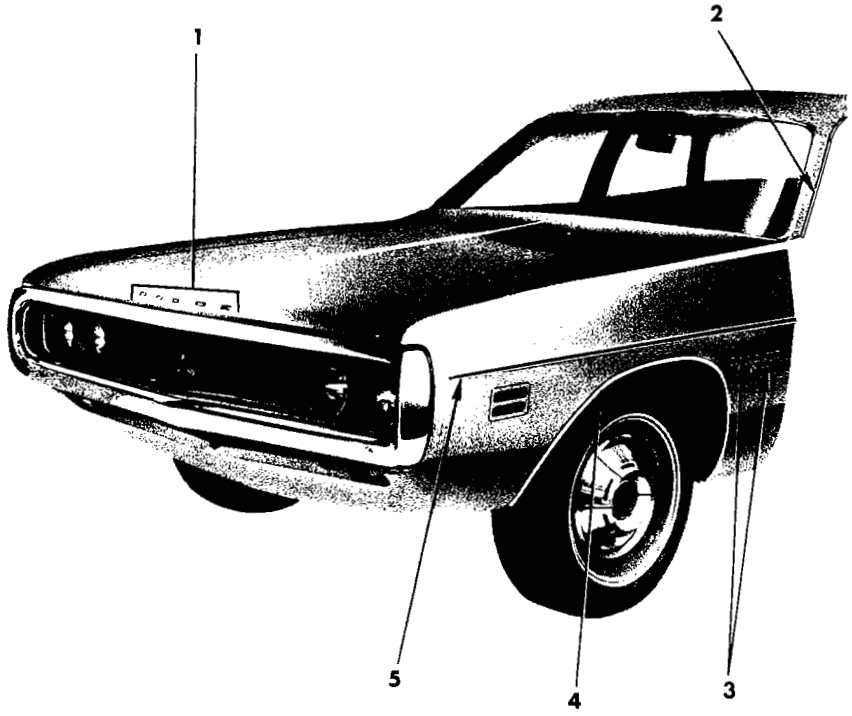

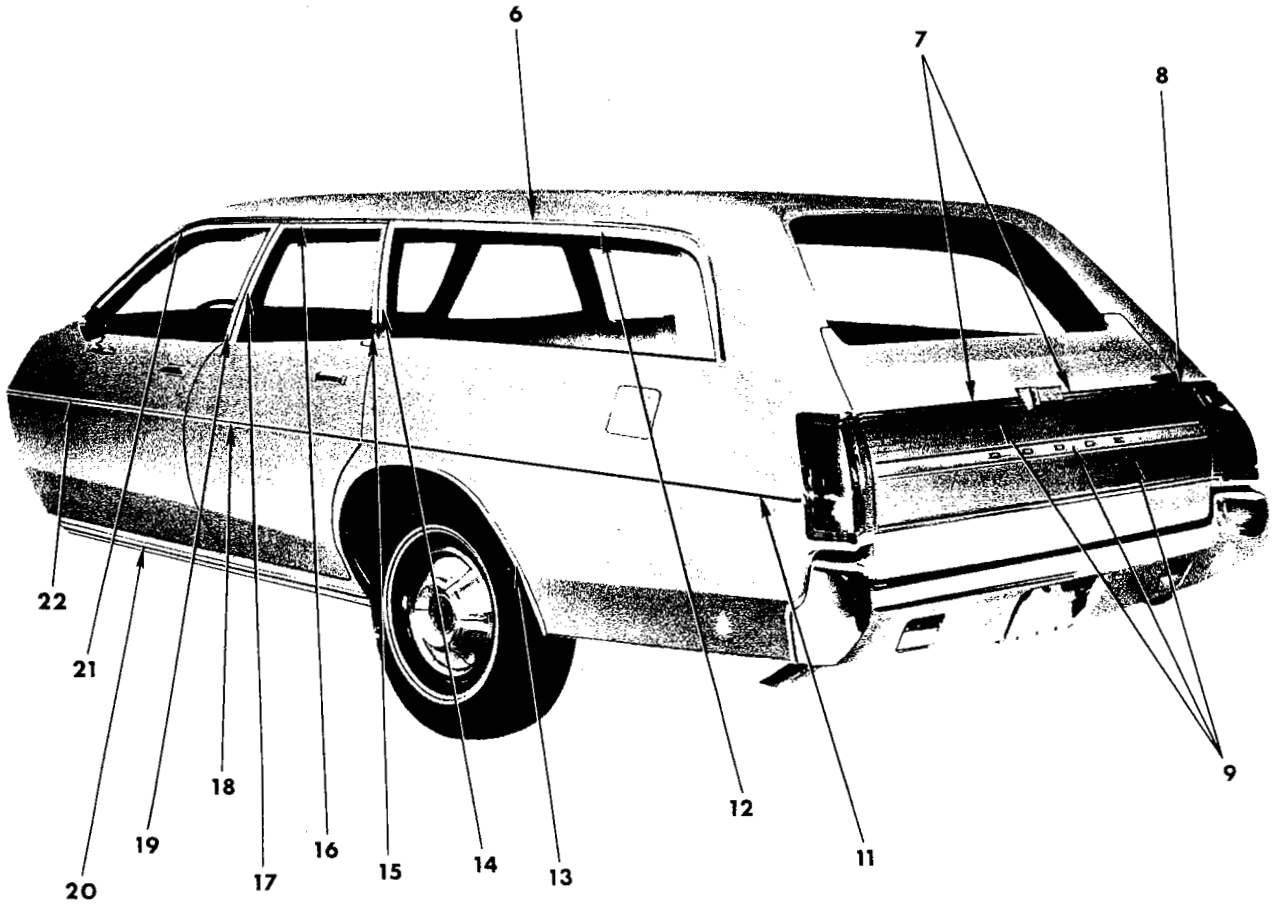

19a3636 **A**

1971
EXTERIOR VIEW - CORONET CUSTOM W-H STATION WAGON

REF. NO.	QTY	PART NUMBER	DESCRIPTION
1	1	3443 365	LETTER "D", Hood Front (15-06-16)
	1	3443 367	"O"
	1	3443 369	"D", Center
	1	3443 371	"G"
	1	3443 373	"E"
2	1	3504 840-1	MOULDING, Body Front Pillar Drain Trough (23-59-61)
3	2	3504 801	NAME PLATE, Fender Side, "Coronet" (12-15-21)
	2	3505 432	"Custom" (12-15-21)
4	1	3579 372-3	MOULDING PACKAGE, Fender Wheel Opng. (12-15-2)
	9	6024 271	Screw
5	1	3579 368-9	MOULDING PACKAGE, Fender Side, Painted (12-15-2)
	1	3621 538-9	MOULDING PACKAGE, Fender Side, Paint, After Jan. 1, 1971 (12-15-2)
	1	3579 366-7	MOULDING and INSERT, Fender Side, Black (12-15-2)
	1	3620 484-5	Gold (12-15-2)
	1	3620 486-7	Green (12-15-2)
	1	3620 488-9	Blue (12-15-2)
	1	3621 532-3	MOULDING PACKAGE, Fender Side, w/Green Insert, After Jan. 1, 1971 (12-15-2)
	1	3621 534-5	w/Gold Insert, After Jan. 1, 1971 (12-15-2)
	1	3621 536-7	w/Black Insert, After Jan. 1, 1971 (12-15-2)
	1	3620 548-9	w/Blue Insert, After Jan. 1, 1971 (12-15-2)
	1	6002 842	Retainer
	1	6006 496	Retainer 1 116 000 Nut
	7	6003 133	Retainer 7 6024 271 Screw
6	1	3504 848-9	MOULDING, Roof Side Drain Trough (23-59-61)
7	1	3579 480-1	MOULDING PACKAGE, Tailgate Outside Upr. Center, use w/o Pwr. Tailgate Wdo. (23-23-61)
	1	3579 478	MOULDING PACKAGE, Tailgate Outside Upr. Center, use w/Pwr. Tailgate Wdo. (23-23-61)
	3	6003 012	Retainer 2 6024 271 Screw
8	1	3620 266	MOULDING PACKAGE, Tailgate Outside Upr. Outer (23-23-61)
	1	6003 264	Retainer 1 6026 523 Nut
9	1	3505 998	PANEL, Tailgate Outside Finish, use w/o Pwr. Tailgate Wdo. (23-23-77)
	1	3683 208	PANEL PACKAGE, Tailgate Outside, use w/o Pwr. Tailgate Wdo. (23-23-77)
	2	6003 268	Retainer 2 6029 256 Nut
	1	3505 999	PANEL, Tailgate Outside Finish, use w/Pwr. Tailgate Wdo. (23-23-77)
	1	3683 209	PANEL PACKAGE, Tailgate Outside, use w/Pwr. Tailgate Wdo. (23-23-77)
	2	6003 268	Retainer 2 6029 256 Nut
11	1	3579 460-1	MOULDING PACKAGE, Qtr. Outside, Painted (23-23-39)
	1	3579 458-9	MOULDING and INSERT PACKAGE, Qtr. Outside, Black (23-23-39)
	1	3620 006-7	Gold (23-23-39)
	1	3620 008-9	Green (23-23-39)
	1	3620 010-1	Blue (23-23-39)
	10	6003 133	Retainer
12	1	3620 082-3	MOULDING PACKAGE, Qtr. Wdo. Outside, Upr. and Rear, Stainless Steel (23-23-73)
	1	3620 088-9	MOULDING PACKAGE, Qtr. Wdo. Outside, Upr. and Rear, Galv. Steel (23-23-73)
	10	6003 238	Retainer
	10	6024 271	Screw
13	1	3579 468-9	MOULDING PACKAGE, Qtr. Outside Wheel Opening (23-23-39)
	8	6024 271	Screw
14	1	3620 084-5	MOULDING PACKAGE, Qtr. Wdo. Outside, Frt., Stainless Steel (23-23-73)
	1	3620 086-7	MOULDING PACKAGE, Qtr. Wdo. Outside, Frt., Galv. Steel (23-23-73)
	3	6024 271	Screw
15	1	3440 036-7	MOULDING, Rear Door Wdo. Opng. Frame, Rr. (23-23-33)
16	1	3440 034-5	MOULDING, Rear Door Wdo. Opng. Frame, Upr. (23-23-33)
17	1	3440 030-1	MOULDING, Rear Door Wdo. Opng. Frame, Frt. (23-23-33)
18	1	3579 408-9	MOULDING PACKAGE, Rear Door, Painted (23-23-33)
	1	3579 406-7	MOULDING and INSERT PACKAGE, Rear Door, Black (23-23-33)
	1	3579 992-3	Gold (23-23-33)
	1	3579 994-5	Green (23-23-33)
	1	3579 996-7	Blue (23-23-33)
	3	6003 133	Retainer
	2	6003 134	Retainer
	2	6029 259	Nut
19	1	3439 716-7	MOULDING, Frt. Door Wdo. Opng. Frame, Rr. (23-23-32)
20	2	3579 401	MOULDING PACKAGE, Body Side Sill (23-23-2)
	8	6003 141	Retainer
	2	---- ---	Screw
21	1	3439 712-3	MOULDING, Frt. Door Wdo. Opng. Frame, Frt. (23-23-32)
22	1	3579 404-5	MOULDING PACKAGE, Frt. Door, Painted (23-23-32)
	1	3579 402-3	MOULDING and INSERT PACKAGE, Frt. Door, Black (23-23-32)
	1	3579 986-7	Gold (23-23-32)
	1	3579 988-9	Green (23-23-32)
	1	3579 990-1	Blue (23-23-32)
	2	6003 134	Retainer
	2	6029 259	Nut
	4	6003 133	Retainer

All Packages Include Attaching Parts

Part Type Code is Indicated in Parentheses

1971

EXTERIOR VIEW - CORONET CUSTOM W-H STATION WAGON

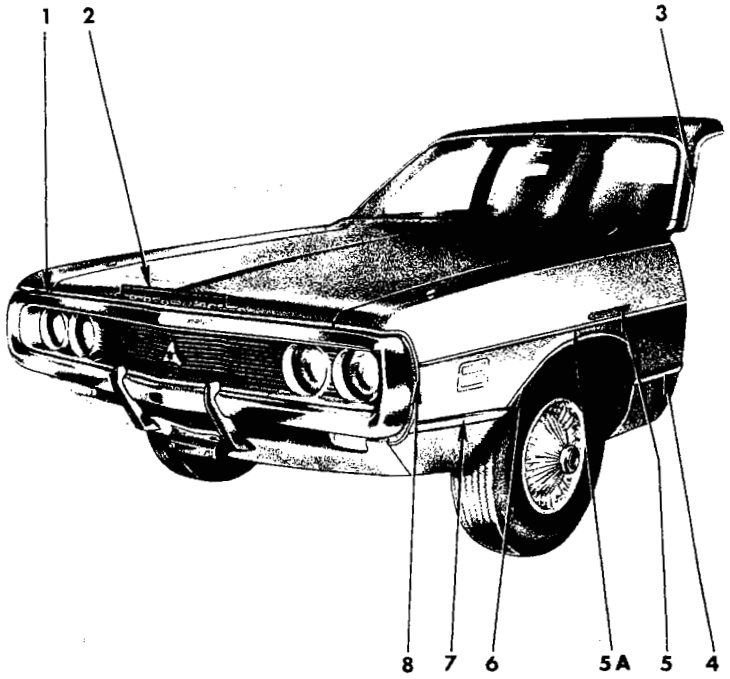

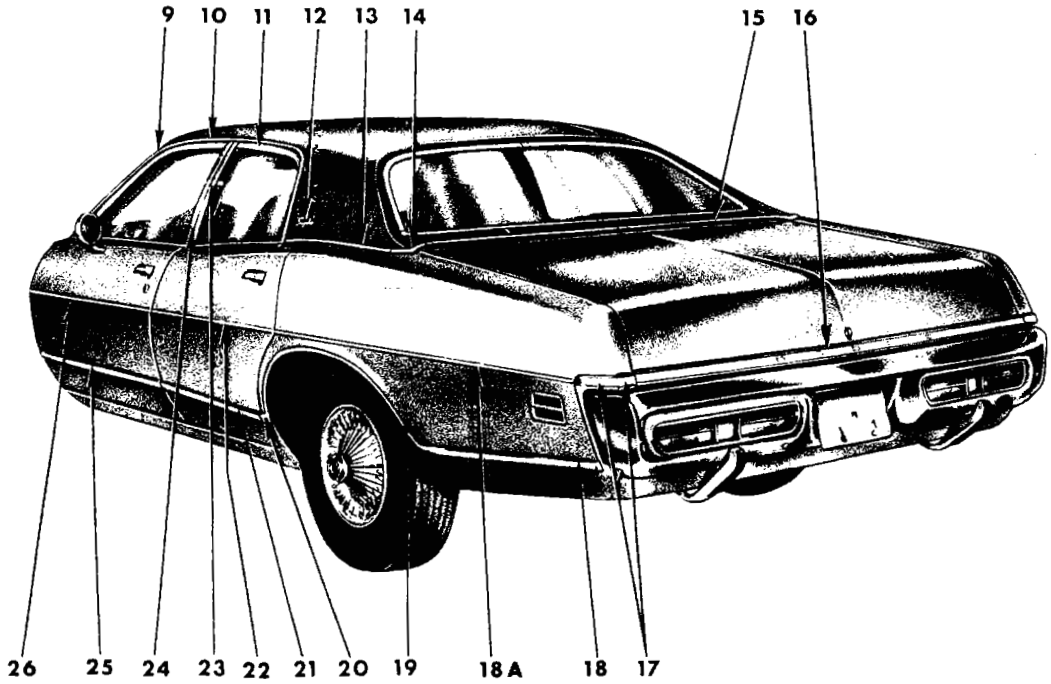

19a3471B

1971
EXTERIOR VIEW - CORONET BROUGHAM W-P 4 DOOR SEDAN

REF. NO.	QTY	PART NUMBER	DESCRIPTION
1	1	3579 557	MOULDING PACKAGE, Hood Front (15-25-2)
	7	9428 267	Screw
2	1	3443 365	LETTER "D", Hood Front (15-25-2)
	1	3443 367	"O"
	1	3443 369	"D"
	1	3443 371	"G"
	1	3443 373	"E"
3	1	3504 840-1	MOULDING, Body Front Pillar Drain Trough, w/o Vinyl Roof (23-59-61)
	1	3504 842-3	MOULDING, Body Front Pillar Drain Trough, w/Vinyl Roof (23-59-61)
4	1	3579 374-5	MOULDING PACKAGE, Fender Side, Rear (12-15-2)
	3	6003 138	Retainer
	2	6003 135	Retainer
	3	6024 271	Screw
	2	116 000	Nut
5	2	3504 801	NAME PLATE, Fender Side, "Coronet" (12-15-21)
5A	1	3579 366-7	MOULDING PACKAGE, Fender Side, w/Black Insert (12-15-2)
	1	3620 484-5	w/Gold Insert (12-15-2)
	1	3620 486-7	w/Green Insert (12-15-2)
	1	3620 488-9	w/Blue Insert (12-15-2)
	1	3621 532-3	MOULDING PACKAGE, Fender Side, w/Green Insert, After Jan. 1, 1971 (12-15-2)
	1	3621 534-5	w/Gold Insert, After Jan. 1, 1971 (12-15-2)
	1	3621 536-7	w/Black Insert, After Jan. 1, 1971 (12-15-2)
	1	3620 548-9	w/Blue Insert, After Jan. 1, 1971 (12-15-2)
	1	6002 842	Retainer
	1	6006 496	Retainer
	7	6003 133	Retainer
	1	116 000	Nut
	7	6024 271	Screw
6	1	3579 568-9	MOULDING PACKAGE, Fender Wheel Opng. (12-15-2)
	6	6024 271	Screw
7	1	3579 370-1	MOULDING PACKAGE, Fender Side, Front (12-15-2)
	3	6003 138	Retainer
	3	6024 271	Screw
8	1	3579 558-9	MOULDING PACKAGE, Fender Front (12-15-2)
	5	6023 898	Screw
9	1	3439 712-3	MOULDING, Frt. Door Wdo. Opng. Frame, Frt. (23-23-32)
10	1	3445 118-9	MOULDING, Roof Side Drain Trough, w/o Vinyl Roof (23-59-61)
	1	3504 844-5	MOULDING, Roof Side Drain Trough, w/Vinyl Roof (23-59-61)
11	1	3440 032-3	MOULDING, Rear Door Wdo. Opng. Frame, Rr. (23-23-33)
12	2	3504 323	NAME PLATE, Roof Side (23-34-238)
	2	9420 294	Nut
13	1	3620 264-5	MOULDING PACKAGE, Qtr. Outside Belt, Frt., use w/Vinyl Roof or Two Tone Paint (23-23-39)
	1	6003 147	Retainer
	1	6006 496	Retainer
	1	6024 271	Screw
	1	9420 867	Nut
14	1	3579 572-3	MOULDING PACKAGE, Qtr. Outside Belt, Rr., use w/Vinyl Roof or Two Tone Paint (23-23-39)
	2	6023 898	Screw
	1	9420 294	Nut
15	1	3579 428-9	MOULDING PACKAGE, Deck Opng. Upr. Pnl., use w/Vinyl Roof or Two Tone Paint (23-23-31)
	2	6006 496	Retainer
	3	6003 147	Retainer
	2	6023 898	Screw
	3	6024 271	Screw
16	1	3579 476	MOULDING PACKAGE, Deck Lid Lower (23-23-30)
	2	6003 148	Retainer
	3	6003 150	Retainer
	2	6026 523	Nut
	3	6024 271	Screw
17	1	3579 426-7	MOULDING PACKAGE, Qtr. Outside Bumper Periphery (23-23-39)
	4	6027 564	Screw
18	1	3579 424-5	MOULDING PACKAGE, Qtr. Outside, Rear (23-23-39)
	5	6003 138	Retainer
	1	9431 735	Screw
18A	1	3579 410-1	MOULDING PACKAGE, Qtr. Outside, w/Black Insert (23-23-39)
	1	3579 998-9	w/Gold Insert (23-23-39)
	1	3620 002-3	w/Green Insert (23-23-39)
	1	3620 004-5	w/Blue Insert (23-23-39)
	1	6006 496	Retainer
	7	6003 133	Retainer
	1	6027 625	Nut
19	1	3579 420-1	MOULDING PACKAGE, Qtr. Outside Wheel Opening (23-23-39)
	6	6024 271	Screw
20	1	3579 418-9	MOULDING PACKAGE, Qtr. Outside, Frt. (23-23-39)
	1	6024 271	Screw

CONTINUED ON NEXT PAGE

All Packages Include Attaching Parts

Part Type Code is Indicated in Parentheses

1971
EXTERIOR VIEW - CORONET BROUGHAM W-P 4 DOOR SEDAN

REF. NO.	QTY	PART NUMBER	DESCRIPTION
21	1	3579 416-7	MOULDING PACKAGE, Rear Door Outside (23-23-33)
	4	6003 138	Retainer
	1	6003 135	Retainer
	1	6026 523	Nut
22	1	3579 406-7	MOULDING PACKAGE, Rear Door, w/Black Insert (23-23-33)
	1	3579 992-3	w/Gold Insert (23-23-33)
	1	3579 994-5	w/Green Insert (23-23-33)
	1	3579 996-7	w/Blue Insert (23-23-33)
	3	6003 133	Retainer
	2	6003 134	Retainer
	2	6029 259	Nut
23	1	3440 030-1	MOULDING, Rear Door Wdo. Opng. Frame, Frt. (23-23-33)
24	1	3439 716-7	MOULDING, Frt. Door Wdo. Opng. Frame, Rr. (23-23-32)
25	1	3579 414-5	MOULDING PACKAGE, Frt. Door Outside (23-23-32)
	6	6003 138	Retainer
	1	6003 135	Retainer
	1	6026 523	Nut
26	1	3579 402-3	MOULDING PACKAGE, Frt. Door, w/Black Insert (23-23-32)
	1	3579 986-7	w/Gold Insert (23-23-32)
	1	3579 988-9	w/Green Insert (23-23-32)
	1	3579 990-1	w/Blue Insert (23-23-32)
	2	6003 134	Retainer
	4	6003 133	Retainer
	2	6029 259	Nut

All Packages Include Attaching Parts

Part Type Code is Indicated in Parentheses

1971
EXTERIOR VIEW - CORONET BROUGHAM W-P 4 DOOR SEDAN

NOTES

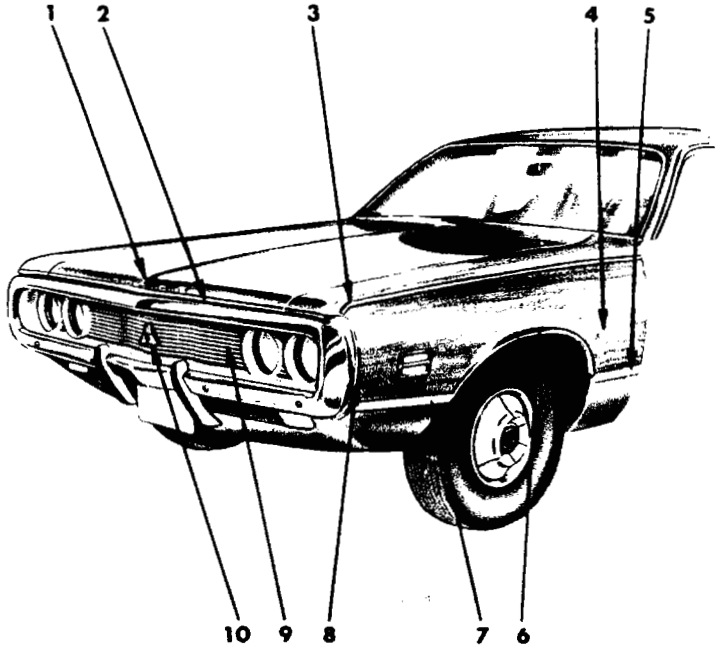

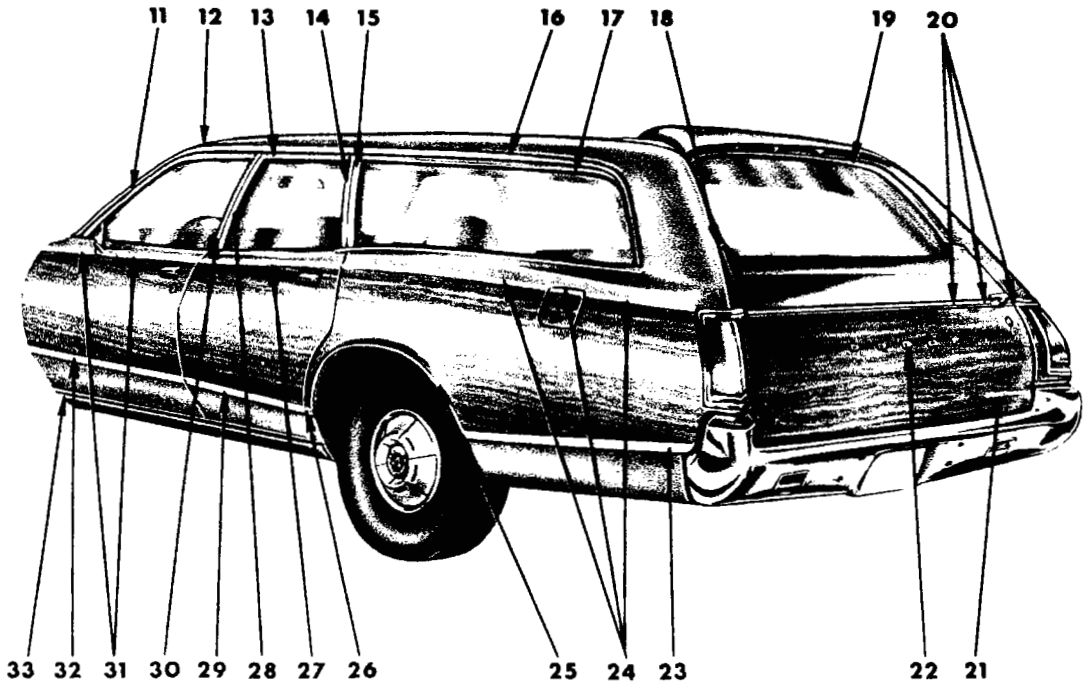

19a3508

1971
EXTERIOR VIEW - CORONET CRESTWOOD W-P STATION WAGON

REF. NO.	QTY	PART NUMBER	DESCRIPTION
1	1	3443 365	LETTER "D", Hood Front (15-06-16)
	1	3443 367	"O"
	1	3443 369	"D"
	1	3443 371	"G"
	1	3443 373	"E"
2	1	3579 557	MOULDING PACKAGE, Hood Front (15-25-2)
	7	9428 267	Screw
3	1	3579 376-7	MOULDING PACKAGE, Fender Side, Upr. (12-15-2)
	1	6006 496	Retainer
	1	116 000	Retainer 2 6003 139 Clip
	7	6002 871	Retainer 7 6024 271 Screw
4	2	3570 365	NAME PLATE, Fender Side, "Crestwood" (12-15-21)
5	1	3579 374-5	MOULDING PACKAGE, Fender Side, Rear (12-15-2)
	3	6003 138	Retainer 3 6024 271 Screw
	2	6003 135	Retainer 2 116 000 Nut
6	1	3579 568-9	MOULDING PACKAGE, Fender Wheel Opng. (12-15-2)
	6	6024 271	Screw
7	1	3579 370-1	MOULDING PACKAGE, Fender Side, Frt. (12-15-2)
	3	6003 138	Retainer 6 6024 271 Screw
8	1	3579 558-9	MOULDING PACKAGE, Fender, Frt. (12-15-2)
	5	6023 898	Screw
9	1	3442 079	GRILLE
10	1	3443 110	ORNAMENT
11	1	3504 840-1	MOULDING, Body Front Pillar Drain Trough (23-59-61)
12	1	3439 712-3	MOULDING, Frt. Door Wdo. Opng. Frame, Frt. (23-23-32)
13	1	3440 034-5	MOULDING, Rear Door Wdo. Opng. Frame, Upr. (23-23-33)
14	1	3440 036-7	MOULDING, Rear Door Wdo. Opng. Frame, Rr. (23-23-33)
15	1	3620 084-5	MOULDING PACKAGE, Qtr. Wdo. Outside, Frt. (23-23-73)
	3	6024 271	Screw
16	1	3504 848-9	MOULDING, Roof Side Drain Trough (23-59-61)
17	1	3620 082-3	MOULDING PACKAGE, Qtr. Wdo. Outside, Upr. & Rear (23-23-73)
	10	6003 238	Retainer 10 6024 271 Screw
18	2	3440 194	MOULDING, Qtr. Pnl. Tailgate Pillar, Upr. (23-23-60)
	2	9414 732	Screw
19	1	3440 120	MOULDING, Roof Pnl. Outside Tailgate Opng. Upr., Prime (23-23-60)
	3	9414 732	Screw
20	1	3579 478	MOULDING PACKAGE, Tailgate Outside Upr. Center, w/Pwr. T/Gate Wdo. (23-23-61)
	1	3579 480-1	MOULDING PACKAGE, Tailgate Outside Upr. Center, w/o Pwr. T/Gate Wdo. (23-23-61)
	3	6003 012	Retainer 2 6024 271 Screw
	1	3620 266	MOULDING PACKAGE, Tailgate Outside Upr., Outer (23-23-61)
	1	6003 264	Retainer 1 6026 523 Nut
21	1	3570 365	NAME PLATE, Tailgate Outside Panel, "Crestwood" (23-54-11)
22	2	3612 452	LETTER "D", Tailgate (23-54-11
	1	3612 453	"O"
	1	3612 454	"G"
	1	3612 455	"E"
	10	6002 852	Retainer
23	1	3579 470-1	MOULDING PACKAGE, Qtr. Outside Lwr., Rr. (23-23-39)
	5	6001 482	Retainer 1 6024 271 Screw
24	1	3579 474	MOULDING PACKAGE, Qtr. Outside Upr., Rt. (23-23-39)
	5	6002 871	Retainer 5 6024 271 Screw
	1	3579 475	MOULDING PACKAGE, Qtr. Outside Upr., Frt., Lt. (23-23-39)
	7	6002 871	Retainer 7 6024 271 Screw
	1	3579 472	MOULDING PACKAGE, Qtr. Outside Upr., Rear, Lt. (23-23-39)
	5	6002 871	Retainer 5 6024 271 Screw
	1	3579 473	MOULDING PACKAGE, Qtr. Outside Fuel Filler Door (23-23-39)
	1	6027 466	Nut
25	1	3579 466-7	MOULDING PACKAGE, Qtr. Outside Whl. Opng. (23-23-39)
	5	6024 271	Screw
26	1	3579 464-5	MOULDING PACKAGE, Qtr. Outside Lwr., Frt. (23-23-39)
	1	6024 271	Screw
27	1	3579 454-5	MOULDING PACKAGE, Rear Door Outside, Upr. (23-23-33)
	3	6002 871	Retainer
	2	6002 603	Retainer 2 6026 523 Nut
28	1	3440 030-1	MOULDING, Rear Door Wdo. Opng. Frame, Frt. (23-23-33)
29	1	3579 416-7	MOULDING PACKAGE, Rear Door Outside (23-23-33)
	4	6001 482	Retainer 1 6024 271 Screw
	1	6003 311	Retainer 1 6026 523 Nut
30	1	3439 716-7	MOULDING, Frt. Door Wdo. Opng. Frame, Rr. (23-23-32)
31	1	3579 452	MOULDING PACKAGE, Frt. Door Outside Upr., Rt. (23-23-32)
	1	3620 056	MOULDING PACKAGE, Frt. Door Outside Upr., Frt. Lt. (23-23-32)
	1	3620 057	MOULDING PACKAGE, Frt. Door Outside Upr., Rr. Lt. (23-23-32)
	AR	6002 871	Retainer AR 6024 271 Screw
32	1	3579 414-5	MOULDING PACKAGE, Frt. Door Outside (23-23-32)
	6	6001 482	Retainer 1 6024 271 Screw
	1	6003 311	Retainer 1 6026 523 Nut
33	2	3579 401	MOULDING PACKAGE, Body Side Sill (23-23-2)
	8	6003 141	Retainer
	2	---- ---	Screw

All Packages Include Attaching Parts

Part Type Code is Indicated in Parentheses

1971
EXTERIOR VIEW - CORONET CRESTWOOD W-P STATION WAGON

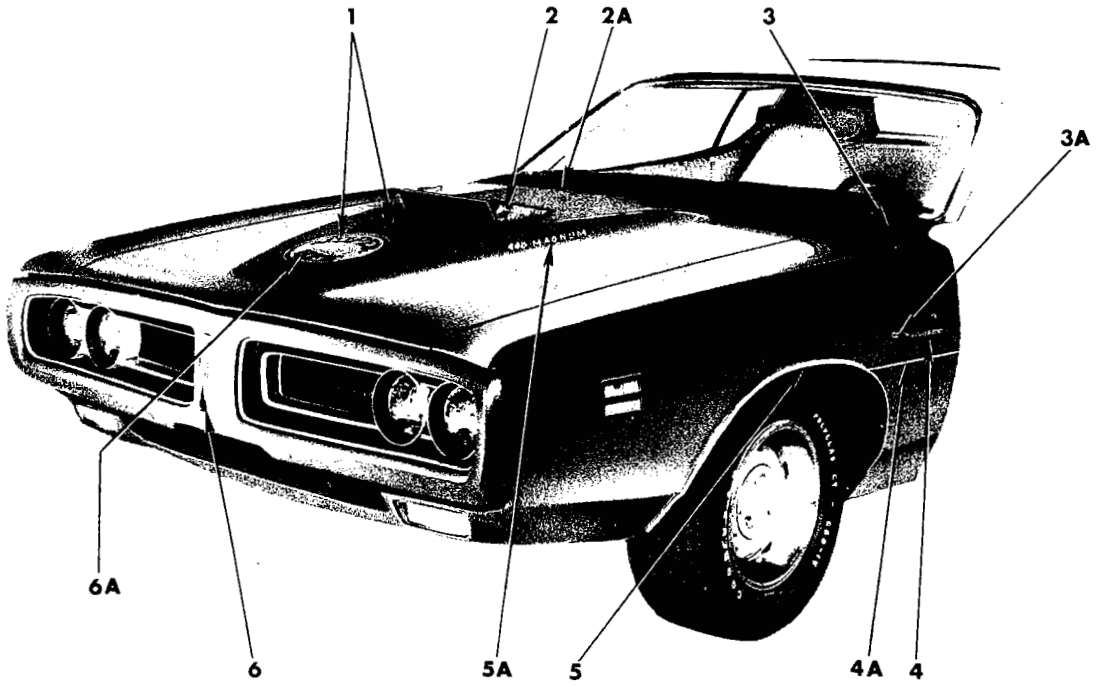

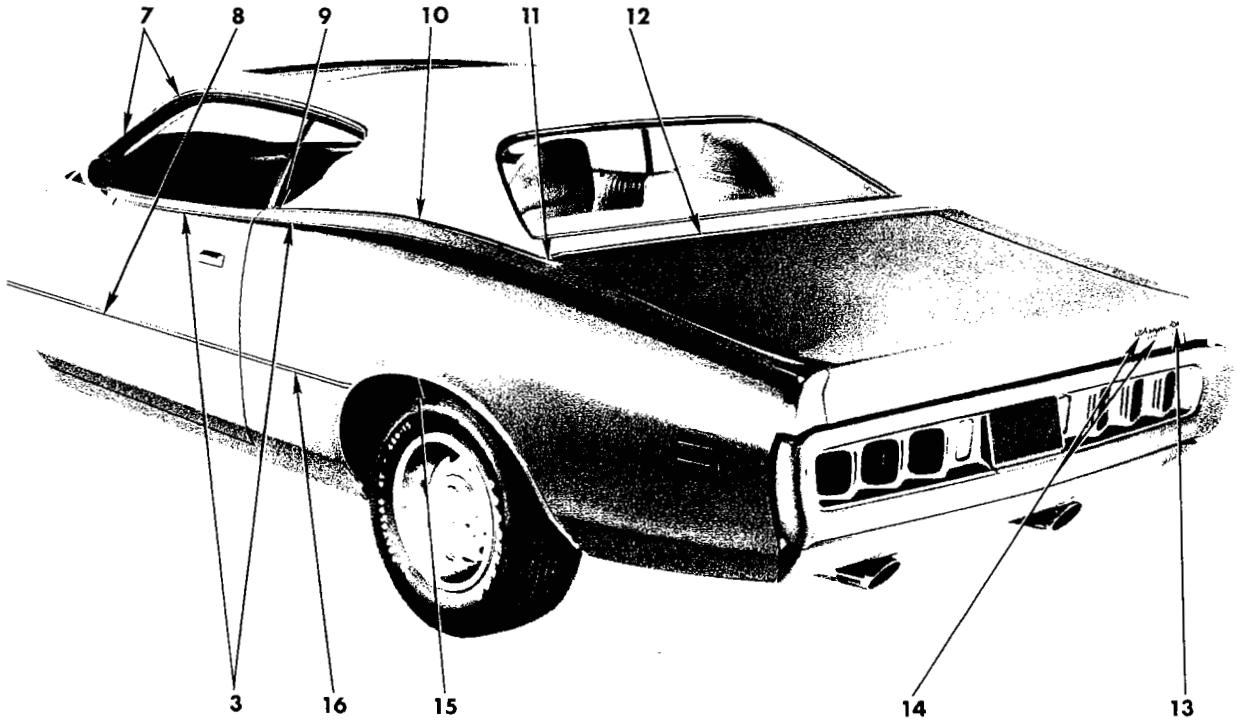

19a3481C

1971
EXTERIOR VIEW - CHARGER SUPER BEE W-M 2 DOOR HARDTOP

REF. NO.	QTY	PART NUMBER	DESCRIPTION
1	1	3573 736	TAPE and DECAL, Hood Top, Forward, Hi Performance (15-03-69)
	1	3573 752	TAPE and DECAL, Hood Top, Forward, Cold Air (15-03-69)
2	1	3443 636-7	DECAL, Hood Door, "Ram Charger" (15-03-18)
2A	1	3573 770	TAPE, Hood Top, Rear (15-03-69)
3	1	3613 432-3	TAPE, Fender, Color Stripe, Black (12-15-33)
	1	3613 434-5	TAPE, Qtr. Pnl. Color Stripe, Black (23-23-12)
	1	3613 428-9	TAPE, Door, Color Stripe, Black, use w/o Door Mirrors (23-23-12)
	1	3613 430-1	TAPE, Door, Color Stripe, Black, use w/Door Mirrors (23-23-12)
	1	3685 200-1	TAPE PACKAGE, Body Side, Door, Fender, Qtr. Panel, Black, w/o Door Mirror (23-23-12)
	1	3685 202-3	Black, w/Door Mirror (23-23-12)
3A	1	3569 496-7	DECAL, Fender Side, "Bee" (12-15-21)
4	2	3504 804	NAME PLATE, Fender Side, "Super Bee" (12-15-21)
4A	1	3613 472-3	MOULDING, Fender Outside Panel, Black (12-15-2)
5	1	3579 362-3	MOULDING PACKAGE, Fender Wheel Opng. (12-15-2)
	7	6024 271	Screw
5A	2	2998 804	NAME PLATE, Hood, "440 Six Pack" (15-06-3)
	2	3443 516	"440 Magnum" (15-06-3)
	2	3443 627	"383 Magnum" (15-06-3)
	2	3573 632	"340 Magnum" (15-06-3)
	6	9420 263	Nut w/Seal
6	1	3464 348	MEDALLION, Bumper Front (13-64-104)
	2	6027 352	Nut
6A	1	3443 638	DECAL, Hood, "Super Bee" (15-03-69)
7	1	3612 914-5	MOULDING, Roof Side Drain Trough, w/o Vinyl Roof (23-59-61)
	1	3612 912-3	MOULDING, Roof Side Drain Trough, w/Vinyl Roof (23-59-61)
8	2	3613 467	MOULDING, Door Outside Panel, Black (23-23-32)
9	1	3579 448-9	MOULDING PACKAGE, Qtr. Wdo. Outside Belt, use w/Vinyl Roof or Two Tone Paint, w/o Belt Mldg. (23-23-39)
	2	6003 145	Retainer
	1	9420 867	Nut
10	1	3579 434-5	MOULDING PACKAGE, Qtr. Outside Belt, Frt. (23-23-39)
	1	6006 496	Retainer
	5	6003 147	Retainer
	1	3579 446-7	MOULDING PACKAGE, Qtr. Outside Belt, Frt., use w/Vinyl Roof or Two Tone Paint, w/o Belt Mldgs. (23-23-39)
	1	6006 496	Retainer
	2	6023 898	Screw
	3	6003 147	Retainer
11	1	3579 444-5	MOULDING PACKAGE, Qtr. Outside Belt, Rr. (23-23-39)
	1	9420 294	Nut
	2	6023 898	Screw
12	1	3579 450-1	MOULDING PACKAGE, Deck Opng. Upr. Pnl. (23-23-31)
	2	6023 898	Screw
	4	6003 147	Retainer
13	1	3570 036	DECAL, Deck Lid, "Super Bee" (23-19-114)
14	1	3570 035	NAME PLATE, Deck Lid, "Charger Dodge Division" (23-19-114)
15	1	3579 440-1	MOULDING PACKAGE, Qtr. Outside Wheel Opening (23-23-39)
	8	6024 271	Screw
16	1	3613 474-5	MOULDING, Qtr. Outside Panel, Black (23-23-39)
**	2	3573 632	NAME PLATE, Hood Ornament, "340 Magnum" (15-03-18)
	2	3443 627	"383 Magnum"
	2	3443 516	"440 Magnum"
**	1	3573 770	TAPE, Hood Top Rear (15-03-69)

All Packages Include Attaching Parts

Part Type Code is Indicated in Parentheses

1971
EXTERIOR VIEW - CHARGER SUPER BEE W-M 2 DOOR HARDTOP

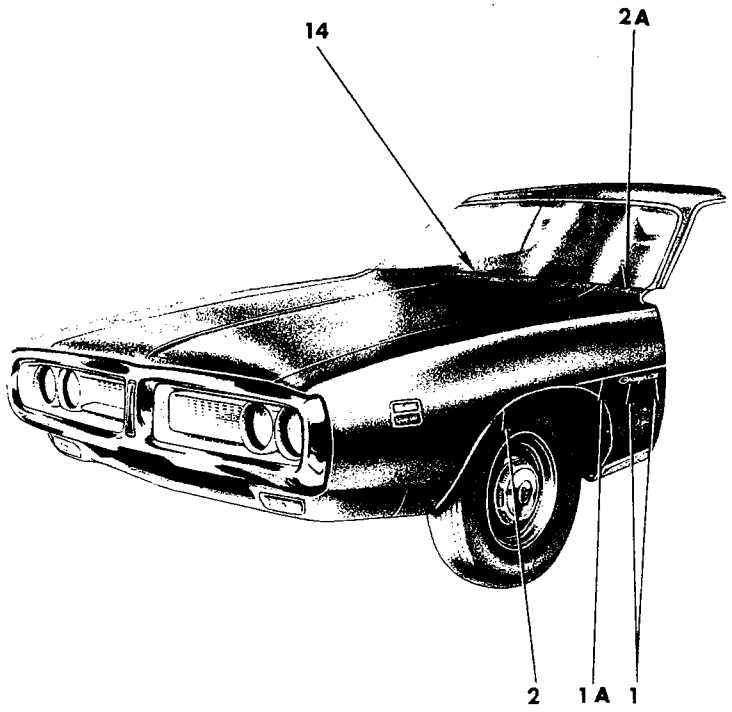

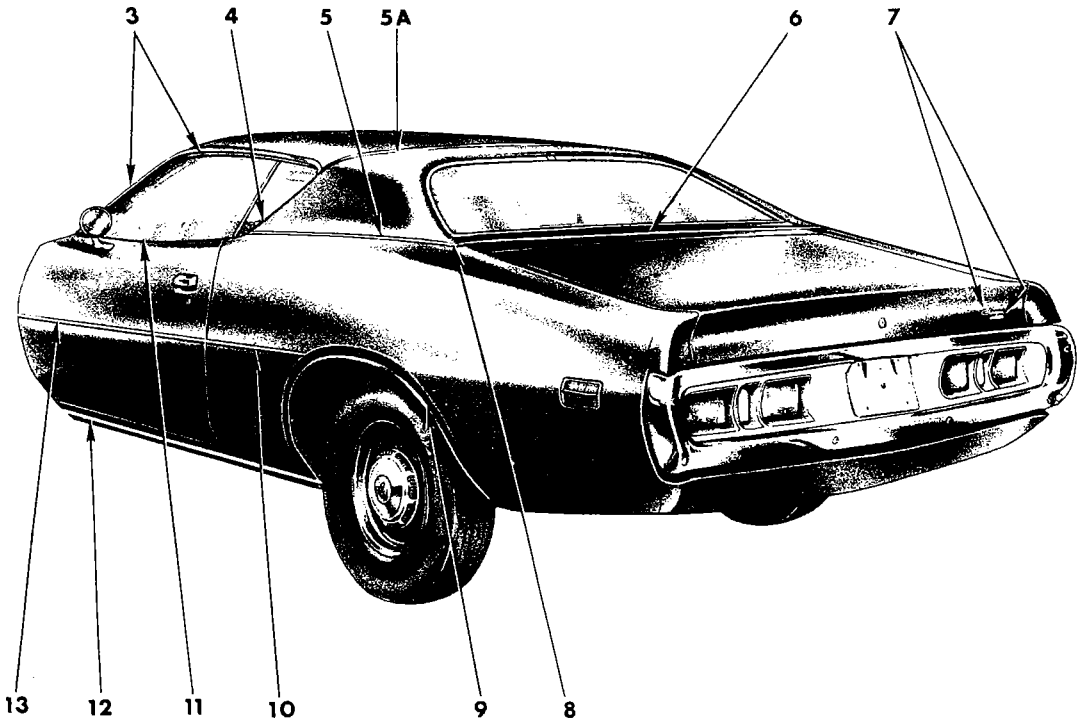

19a3528 C

NOTE: W-L 2 Dr. Sedan same ornamentation as W-H 2 Dr. Hardtop

1971
EXTERIOR VIEW - CHARGER W-H 2 DOOR HARDTOP

REF. NO.	QTY	PART NUMBER	DESCRIPTION
1	2	3504 807	NAME PLATE, Fender Side, "Charger" (12-15-21)
	2	3506 410	MEDALLION, Fender Side (12-15-21)
1A	1	3613 472-3	MOULDING, Fender Outside Panel, Black (12-15-2)
2	1	3579 362-3	MOULDING PACKAGE, Fender Wheel Opng. (12-15-2)
	7	6024 271	Screw
2A	1	3443 134-5	MOULDING, Fender Side, Rear (12-15-2)
3	1	3612 914-5	MOULDING, Roof Side Drain Trough, w/o Vinyl Roof (23-59-61)
	1	3612 912-3	MOULDING, Roof Side Drain Trough, w/Vinyl Roof (23-59-61)
4	1	3579 432-3	MOULDING PACKAGE, Qtr. Wdo. Outside Belt, use w/Belt Mldgs. (23-23-39)
	3	9414 752	Screw
	3	6026 552	Nut
	1	3579 448-9	MOULDING PACKAGE, Qtr. Wdo. Outside Belt, use w/Vinyl Roof or Two Tone Paint, w/o Belt Mldg. (23-23-39)
	2	6003 145	Retainer
	1	9420 867	Nut
5	1	3579 434-5	MOULDING PACKAGE, Qtr. Outside Belt, Frt., use w/Belt Mldgs. (23-23-39)
	1	6006 496	Retainer
	5	6003 147	Retainer
	1	3579 446-7	MOULDING PACKAGE, Qtr. Outside Belt, Frt., use w/Vinyl Roof or Two Tone Paint, w/o Belt Mldgs. (23-23-39)
	1	6006 496	Retainer
	2	6023 898	Screw
	3	6003 147	Retainer
5A	1	3621 583	MOULDING PACKAGE, w/o Cap, Roof Outside Transverse, Rt. and Lt. (23-23-42)
	8	6003 241	Retainer
6	1	3579 450-1	MOULDING PACKAGE, Deck Opng. Upr. Pnl. (23-23-31)
	2	6023 898	Screw
	4	6003 147	Retainer
7	1	3570 035	NAME PLATE, Deck Lid, "Charger Dodge Division" (23-19-114)
8	1	3579 444-5	MOULDING PACKAGE, Qtr. Outside Belt, Rear (23-23-39)
	1	9420 294	Nut
	2	6023 898	Screw
9	1	3579 440-1	MOULDING PACKAGE, Qtr. Outside Wheel Opening (23-23-39)
	8	6024 271	Screw
10	1	3613 474-5	MOULDING, Qtr. Outside Panel, Black (23-23-39)
11	1	3620 516-7	MOULDING PACKAGE, Door Outside Belt (23-23-32)
	1	6003 258	Retainer
	1	6028 755	Screw
	3	9414 752	Screw
	1	6003 246	Retainer
	1	6029 259	Nut
12	1	3579 554	MOULDING PACKAGE, Body Side Sill (23-23-2)
	8	6003 141	Retainer
	2	---- ---	Screw
13	2	3613 467	MOULDING, Door Outside Panel, Black (23-23-32)
14	1	3443 132	MOULDING, Hood Rear (15-25-2)

All Packages Include Attaching Parts

Part Type Code is Indicated in Parentheses

1971
EXTERIOR VIEW - CHARGER W-H 2 DOOR HARDTOP

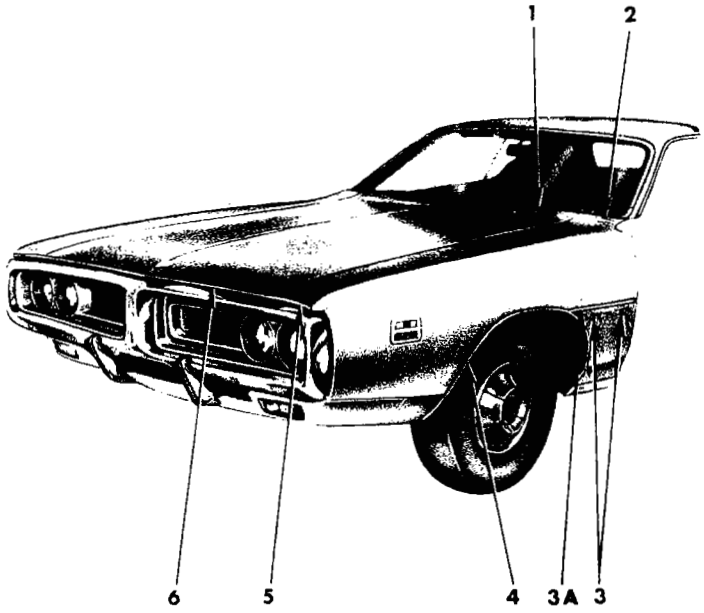

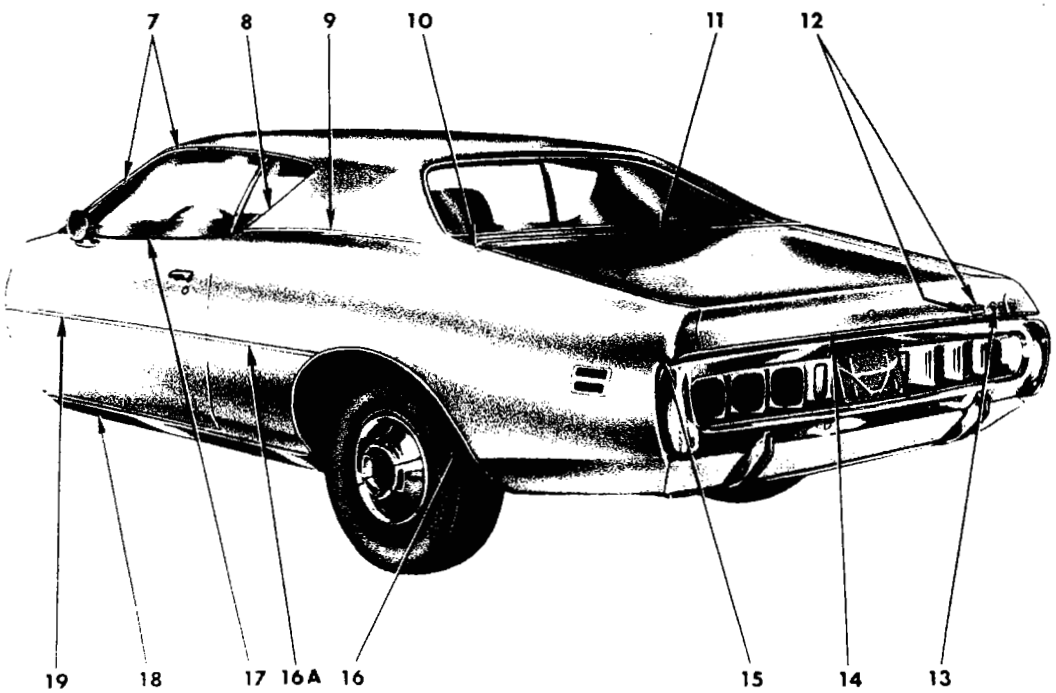

19a357o

1971
EXTERIOR VIEW - CHARGER 500 W-P 2 DOOR HARDTOP

REF. NO.	QTY	PART NUMBER	DESCRIPTION
1	1	3443 132	MOULDING, Hood Rear (15-25-2)
2	1	3443 134-5	MOULDING, Fender Side, Rear (12-15-2)
3	2	3504 807	NAME PLATE, Fender Side, "Charger" (12-15-21)
	2	3504 810	NUMERAL, Fender Side, "500" (12-15-21)
3A	1	3613 472-3	MOULDING, Fender Outside Panel, Black (12-15-2)
4	1	3579 362-3	MOULDING PACKAGE, Fender Wheel Opng. (12-15-2)
	7	6024 271	Screw
5	1	3620 482-3	MOULDING PACKAGE, Fender Frt. (12-15-2)
	3	---- ---	Screw
6	1	3620 248	MOULDING PACKAGE, Hood Front (15-25-2)
	7	9428 267	Screw
7	1	3612 914-5	MOULDING, Roof Side Drain Trough, w/o Vinyl Roof (23-59-61)
	1	3612 912-3	MOULDING, Roof Side Drain Trough, w/Vinyl Roof (23-59-61)
8	1	3579 432-3	MOULDING PACKAGE, Qtr. Wdo. Outside Belt, use w/Belt Mldgs. (23-23-39)
	3	9414 752	Screw
	3	6026 552	Nut
	1	3579 448-9	MOULDING PACKAGE, Qtr. Wdo. Outside Belt, use w/Vinyl Roof or Two Tone Paint, w/o Belt Mldgs. (23-23-39)
	2	6003 145	Retainer
	1	9420 867	Nut
9	1	3579 434-5	MOULDING PACKAGE, Qtr. Outside Belt, Frt., use w/Belt Mldgs. (23-23-39)
	1	6006 496	Retainer
	5	6003 147	Retainer
	1	3579 446-7	MOULDING PACKAGE, Qtr. Outside Belt, Frt., use w/Vinyl Roof or Two Tone Paint, w/o Belt Mldgs. (23-23-39)
	1	6006 496	Retainer
	2	6023 898	Screw
	3	6003 147	Retainer
10	1	3579 444-5	MOULDING PACKAGE, Qtr. Outside Belt, Rr. (23-23-39)
	1	9420 294	Nut
	2	6023 898	Screw
11	1	3579 450-1	MOULDING PACKAGE, Deck Opng. Upr. Pnl. (23-23-31)
	2	6023 898	Screw
	4	6003 147	Retainer
12	1	3570 035	NAME PLATE, Deck Lid, "Charger Dodge Division" (23-19-114)
13	1	3506 413	NUMERALS, Deck Lid, "500" (23-19-114)
14	1	3620 261	MOULDING and BRACKET PACKAGE, Deck Lid, Lwr. (23-23-30)
	2	6024 271	Screw
	1	3505 545	BRACKET, Deck Lid Lwr. Mldg. (23-23-30)
15	1	3504 758-9	MOULDING, Qtr. Outside Rear, End (23-23-39)
	4	9432 525	Screw
16	1	3579 440-1	MOULDING PACKAGE, Qtr. Outside Wheel Opening (23-23-39)
	8	6024 271	Screw
16A	1	3613 474-5	MOULDING, Qtr. Outside Panel, Black (23-23-39)
17	1	3620 516-7	MOULDING PACKAGE, Door Outside Belt (23-23-32)
	1	6003 258	Retainer
	1	6028 755	Screw
	3	9414 752	Screw
	1	6029 259	Nut
	1	6003 246	Retainer
	1	6026 523	Nut
18	1	3620 058-9	MOULDING PACKAGE, Body Side Sill (23-23-2)
	18	6003 133	Retainer
	4	9431 735	Screw
19	2	3613 467	MOULDING, Door Outside Panel, Black (23-23-32)

All Packages Include Attaching Parts

Part Type Code is Indicated in Parentheses

1971
EXTERIOR VIEW - CHARGER 500 W-P 2 DOOR HARDTOP

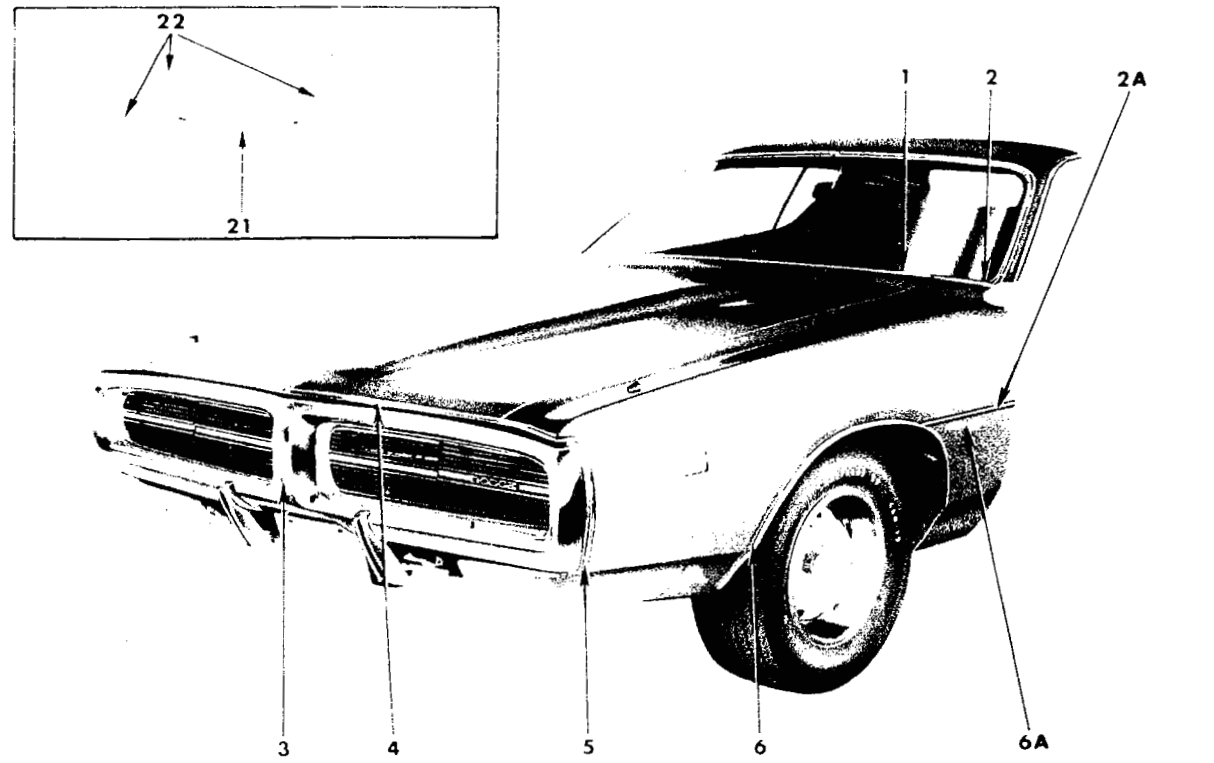

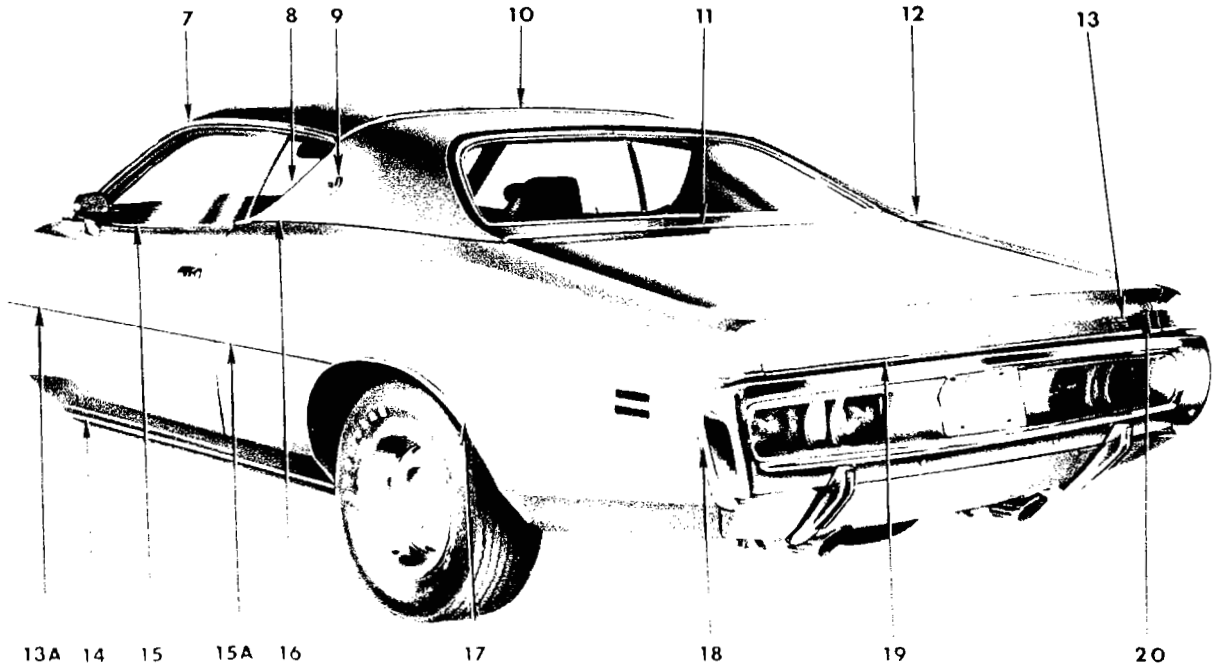

1971
EXTERIOR VIEW - CHARGER SE W-P FASTBACK

REF. NO.	QTY	PART NUMBER	DESCRIPTION
1	1	3443 132	MOULDING, Hood Top Rear (15-25-2)
2	1	3443 134-5	MOULDING PACKAGE, Fender, Rear (12-15-2)
2A	1	3613 472-3	MOULDING, Fender Outside Panel, Black (12-15-2)
3	1	3464 348	MEDALLION, Bumper Front (13-64-104)
4	1	3620 248	MOULDING PACKAGE, Hood Front (15-25-2)
	7	9428 267	Screw
5	1	3620 480-1	MOULDING PACKAGE, Fender, Front (12-15-2)
	3	6023 898	Screw
6	1	3579 362-3	MOULDING PACKAGE, Fender Wheel Opng. (12-15-2)
	7	6024 271	Screw
6A	2	3504 807	NAME PLATE, Fender Side, "Charger" (12-15-21)
	2	3506 410	MEDALLION, Fender Side (12-15-21)
7	1	3612 912-3	MOULDING, Roof Side Drain Trough (23-59-61)
8	1	3579 432-3	MOULDING PACKAGE, Qtr. Wdo. Outside Belt (23-23-39)
	3	9414 752	Screw 3 6026 552 Nut
9	2	3446 801	MEDALLION, Qtr. Outside (23-34-334)
10	1	3621 582	MOULDING PACKAGE, w/Cap, Roof Outside Transverse, Rt. and Lt. (23-23-42)
	1	3621 583	MOULDING PACKAGE, w/o Cap, Roof Outside Transverse, Rt. and Lt. (23-23-42)
	8	6003 241	Retainer
11	1	3579 450-1	MOULDING PACKAGE, Deck Opng. Upr. Pnl., use w/Vinyl Roof or Two Tone Paint (23-23-31)
	4	6003 147	Retainer
	2	6023 898	Screw
12	1	3579 444-5	MOULDING and SEAL PACKAGE, Qtr. Outside Belt, Rr. Mldg., use w/Vinyl Roof or Two Tone Paint (23-23-39)
	2	6023 898	Screw
	1	9420 294	Nut
13	1	3570 035	NAME PLATE, Deck Lid, "Charger Dodge Division" (23-19-114)
13A	2	3613 467	MOULDING, Door Outside Panel, Black (23-23-32)
14	2	3579 554	MOULDING PACKAGE, Body Side Sill (23-23-2)
	8	6003 141	Retainer
	2	---- ---	Screw
15	1	3620 516-7	MOULDING PACKAGE, Door Outside Belt (23-23-32)
	1	6003 258	Retainer
	1	6028 755	Screw
	1	6003 246	Retainer
	3	9414 752	Screw
	1	6029 259	Nut
15A	1	3613 474-5	MOULDING, Qtr. Outside Panel, Black (23-23-39)
16	1	3579 434-5	MOULDING PACKAGE, Qtr. Outside Belt, Frt., use w/Vinyl Roof or Two Tone Paint (23-23-39)
	5	6003 147	Retainer
	1	6006 496	Retainer
17	1	3579 440-1	MOULDING PACKAGE, Qtr. Outside Wheel Opening (23-23-39)
	8	6024 271	Screw
18	1	3579 442-3	MOULDING PACKAGE, Qtr. Outside Bumper Periphery (23-23-39)
	4	6027 564	Screw
19	1	3620 261	MOULDING and BRACKET PACKAGE, Deck Lid, Lwr. (23-23-30)
	2	6024 271	Screw
20	1	3504 811	MEDALLION, Deck Lid, "SE" (23-19-114)
21	1	3612 760	TAPE, Door, Rt., White (23-23-12)
	1	3612 761	Black (23-23-12)
	1	3612 762	Gold (23-23-12)
	1	3612 763	Dark Green (23-23-12)
	1	3612 764	Dark Blue (23-23-12)
	1	3612 765	TAPE, Door, Lt., Frt., White (23-23-12)
	1	3612 766	Black (23-23-12)
	1	3612 767	Gold (23-23-12)
	1	3612 768	Dark Green (23-23-12)
	1	3612 769	Dark Blue (23-23-12)
	1	3612 780	TAPE, Door, Lt., Rear, White (23-23-12)
	1	3612 781	Black (23-23-12)
	1	3612 782	Gold (23-23-12)
	1	3612 783	Dark Green (23-23-12)
	1	3612 784	Dark Blue (23-23-12)
22	AR	3612 953	TAPE, Qtr. Pnl., Cowl, Roof, Dark Blue, Up to Dec. 1, 1970 (23-23-12)
	AR	3612 526	Light Blue, After Dec. 1, 1970 (23-23-12)
	AR	3612 954	Dark Green, Up to Dec. 1, 1970 (23-23-12)
	AR	3612 525	Light Green, After Dec. 1, 1970 (23-23-12)
	AR	3612 955	Gold (23-23-12)
	AR	3612 956	Black (23-23-12)
	AR	3612 957	White (23-23-12)

All Packages Include Attaching Parts

Part Type Code is Indicated in Parentheses

1971
EXTERIOR VIEW - CHARGER SE W-P FASTBACK

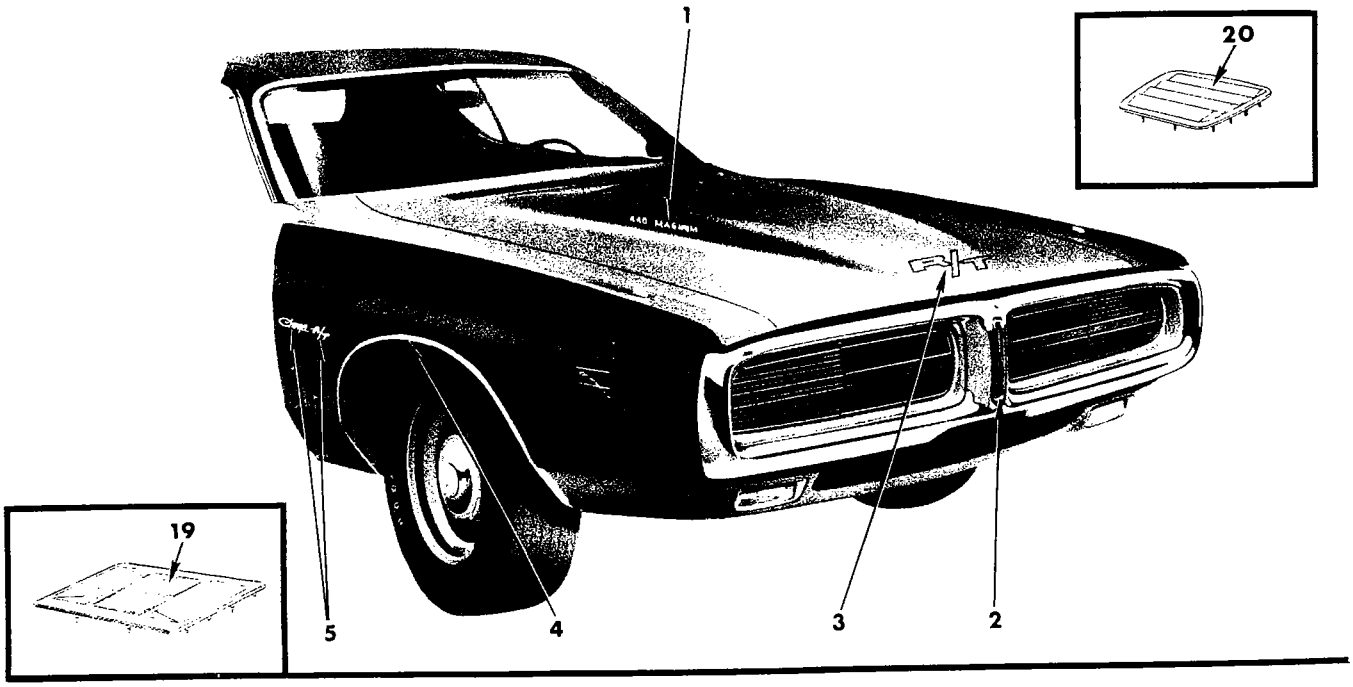

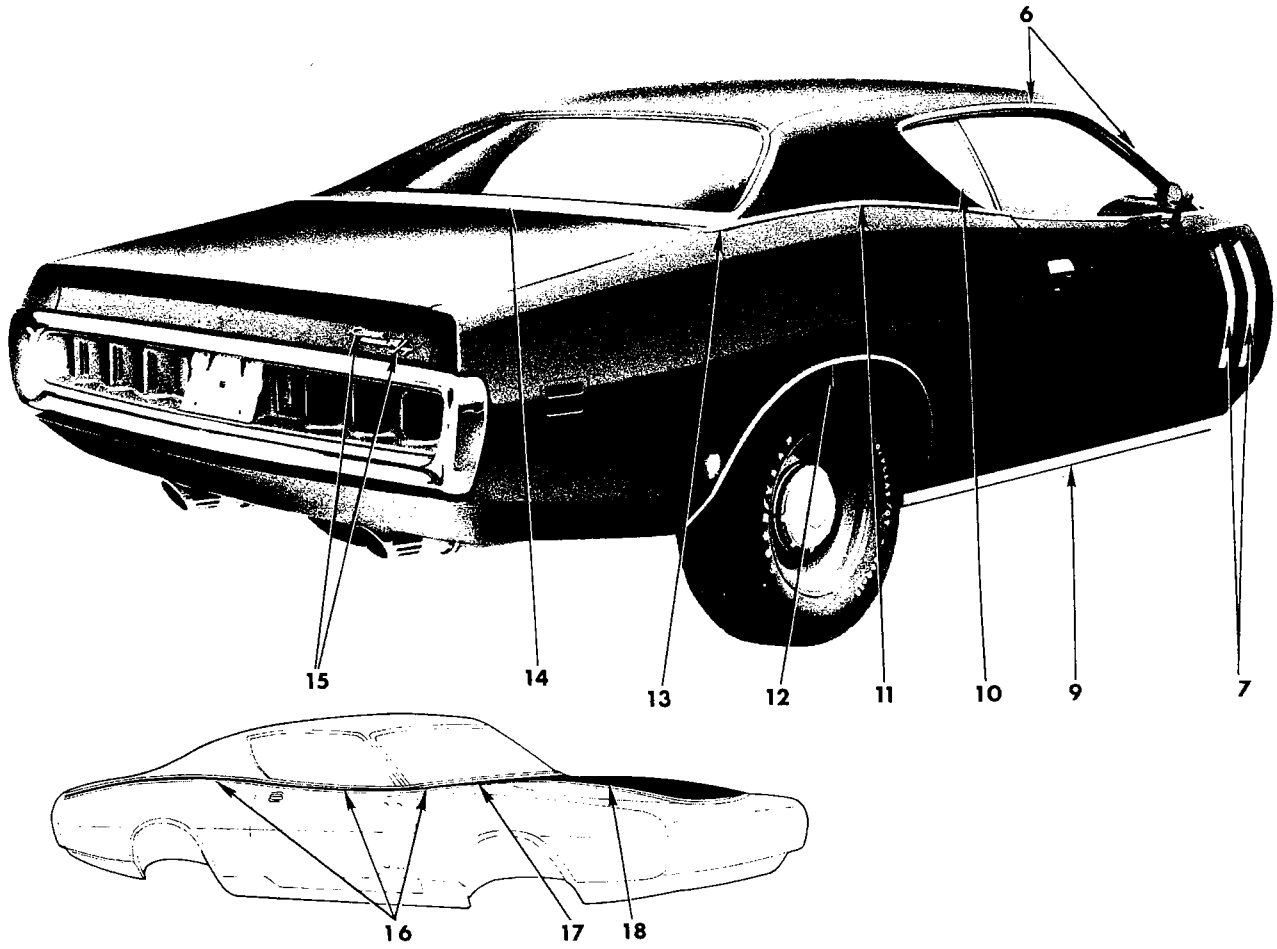

19a3647C

1971
EXTERIOR VIEW - CHARGER R/T W-S 2 DOOR HARDTOP

REF. NO.	QTY	PART NUMBER	DESCRIPTION
1	2	2998 804	NAME PLATE, Hood, "440 Six Pack" (15-06-3)
	2	3443 516	"440 Magnum" (15-06-3)
	2	3443 627	"383 Magnum" (15-06-3)
	2	3573 632	"340 Magnum" (15-06-3)
	2	2898 876	"Hemi" (15-06-3)
	6	9420 273	Nut w/Seal
2	1	3464 348	MEDALLION, Bumper Front (13-64-104)
	2	6027 352	Nut
3	1	3443 057	DECAL, Hood Front, "R/T" (15-03-69)
4	1	3579 362-3	MOULDING PACKAGE, Fender Wheel Opng. (12-15-2)
	7	6024 271	Screw
5	2	3504 807	NAME PLATE, Fender Side, "Charger" (12-15-21)
	2	3504 809	"R/T" (12-15-21)
6	1	3612 914-5	MOULDING, Roof Side Drain Trough, w/o Vinyl Roof (23-59-61)
	1	3612 912-3	MOULDING, Roof Side Drain Trough, w/Vinyl Roof (23-59-61)
7	1	3612 628-9	TAPE, Door Depression, Frt. (23-23-12)
	1	3612 630-1	TAPE, Door Depresion, Rear (23-23-12)
	1	3685 232-3	TAPE PACKAGE, Door Depression, Frt. & Rear (23-23-12)
9	2	3579 554	MOULDING PACKAGE, Body Side Sill (23-23-2)
	8	6003 141	Retainer
	2	---- ---	Screw
10	1	3579 448-9	MOULDING PACKAGE, Qtr. Wdo. Outside Belt, use w/Vinyl Roof or Two Tone Paint, w/o Belt Mldgs. (23-23-39)
	2	6003 145	Retainer
	1	9420 867	Nut
11	1	3579 434-5	MOULDING PACKAGE, Qtr. Outside Belt, Frt. (23-23-39)
	1	6006 496	Retainer
	5	6003 147	Retainer
	1	3579 446-7	MOULDING PACKAGE, Qtr. Outside Belt, Frt., use w/Vinyl Roof or Two Tone Paint, w/o Belt Mldgs. (23-23-39)
	1	6006 496	Retainer
	2	6023 898	Screw
	3	6003 147	Retainer
12	1	3579 440-1	MOULDING PACKAGE, Qtr. Outside Wheel Opening (23-23-39)
	8	6024 271	Screw
13	1	3579 444-5	MOULDING PACKAGE, Qtr. Outside Belt, Rr. (23-23-39)
	1	9420 294	Nut
	2	6023 898	Screw
14	1	3579 450-1	MOULDING PACKAGE, Deck Opng. Upr. Pnl. (23-23-31)
	2	6023 898	Screw
	4	6003 147	Retainer
15	1	3570 035	NAME PLATE, Deck Lid, "Charger Dodge Division" (23-19-114)
	1	3504 809	"R/T" (23-19-114)
16	1	3613 432-3	TAPE, Fender, Color Stripe, Black (12-15-33)
	1	3613 428-9	TAPE, Door, Color Stripe, Black, use w/o Door Mirrors (23-23-12)
	1	3613 430-1	TAPE, Door, Color Stripe, Black, use w/Door Mirrors (23-23-12)
	1	3613 434-5	TAPE, Qtr. Pnl., Color Stripe, Black (23-23-12)
	1	3685 200-1	TAPE PACKAGE, Body Side, Fender, Door, Qtr. Panel, Black, w/o Door Mirror (23-23-12)
	1	3685 202-3	Black, w/Door Mirror (23-23-12)
17	1	3573 770	TAPE, Hood Top, Rear (15-03-69)
18	1	3573 751	TAPE, Hood Top, Forward, Hi Performance (15-03-69)
	1	3573 755	Cold Air (15-03-69)
19	1	3443 617	ORNAMENT, Hood Top (15-03-18)
20	1	3443 547	ORNAMENT, Hood Top, Louver (15-03-18)

All Packages Include Attaching Parts

Part Type Code is Indicated in Parentheses

1971
EXTERIOR VIEW - CHARGER R/T W-S 2 DOOR HARDTOP

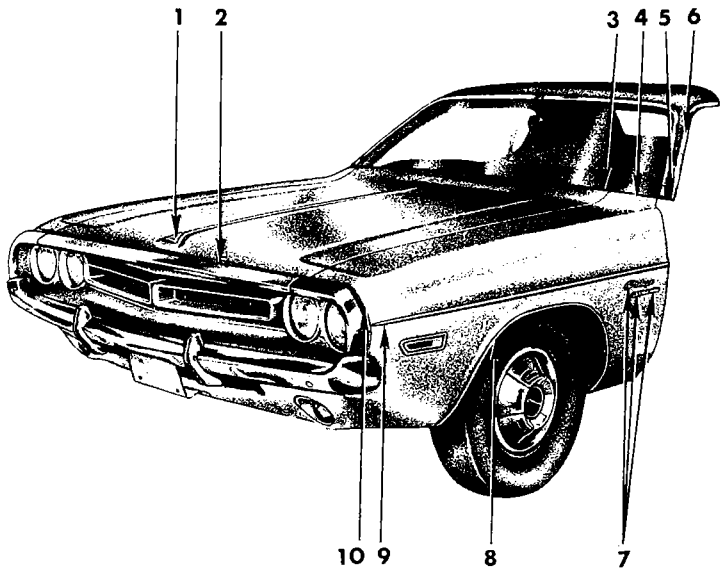

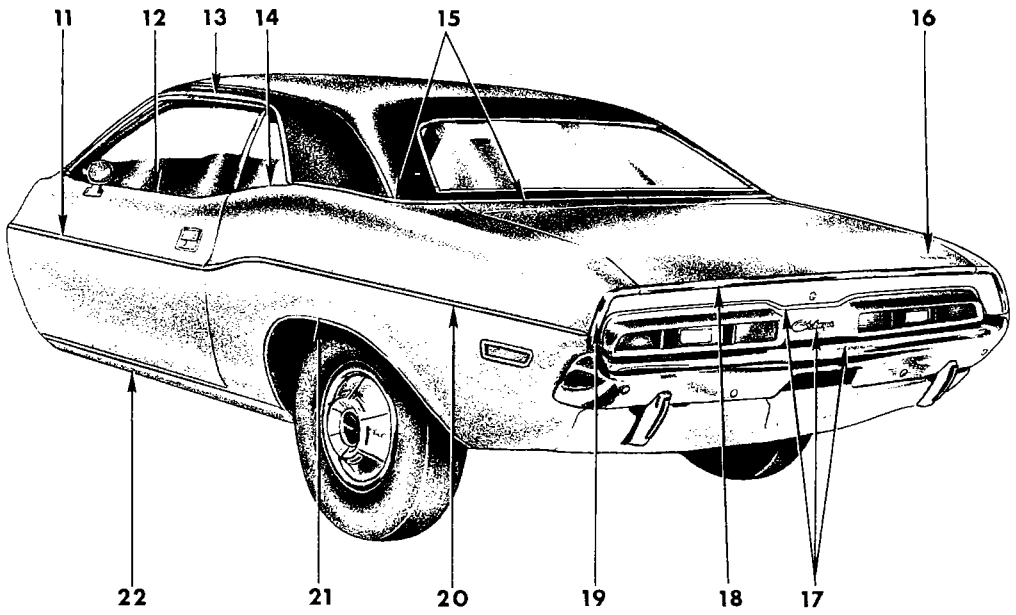

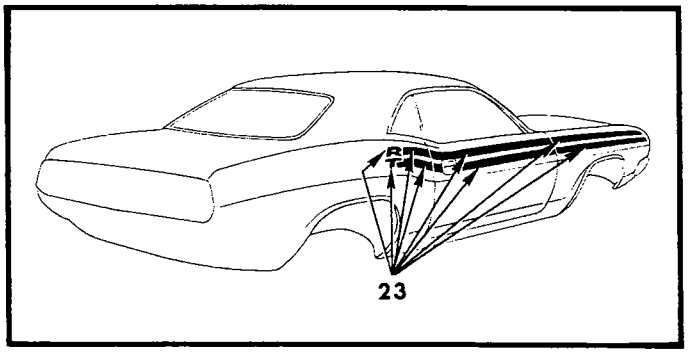

19a3579 **A**

NOTE: J-H 2 Dr. Sedan Ornamentation same as J-H 2 Dr. Hardtop

1971
EXTERIOR VIEW - CHALLENGER J-H 2 DOOR HARDTOP

REF. NO.	QTY	PART NUMBER	DESCRIPTION
1	1	2449 932	ORNAMENT, Hood Front (15-03-18)
	2	9420 263	Nut
2	1	3549 699	MOULDING PACKAGE, Hood Front (15-25-2)
	1	3620 475	MOULDING PACKAGE, Hood Front, w/o Carb. Fresh Air, w/Fibre Glass Hood, w/o Frt. Bumper Periphery Mldgs. (15-25-2)
	1	3685 359	MOULDING PACKAGE, Hood Front, w/o Carb. Fresh Air, w/Fibre Glass Hood, w/o Frt. Bumper Periphery Mldgs. (15-25-2)
	AR	---- ---	Screw
3	1	2949 474	MOULDING, Hood Rear (15-25-2)
4	1	2998 644-5	MOULDING, Fender, Rear (12-15-2)
5	1	3446 456-7	MOULDING, Body Frt. Pillar, Lwr. (23-23-14)
	2	6028 674	Screw
6	1	3419 906-7	MOULDING PACKAGE, Body Front Pillar Drain Trough (23-59-61)
	6	6028 721	Screw
7	2	3444 938	NAME PLATE, Fender, "Challenger" (12-15-21)
	2	3505 444	"383 Four Barrel" (12-15-21)
8	1	3419 710-1	MOULDING PACKAGE, Fender Wheel Opng. (12-15-2)
	8	6028 545	Screw
9	1	3579 596-7	MOULDING PACKAGE, Fender Side, Black (12-15-2)
	1	3620 150-1	Blue (12-15-2)
	1	3620 152-3	Green (12-15-2)
	7	6003 133	Retainer
	7	6024 271	Screw
	2	6000 709	Retainer
	2	9420 867	Nut
10	1	3442 984-5	MOULDING, Fender, Front (12-15-2)
11	1	3419 794-5	MOULDING PACKAGE, Door, Black (23-23-32)
	1	3620 164-5	Blue (23-23-32)
	1	3620 166-7	Green (23-23-32)
	7	6003 133	Retainer
	7	6024 271	Screw
	2	6000 709	Retainer
	2	6024 152	Nut
12	1	3549 648-9	MOULDING PACKAGE, Door Outside Belt (23-23-32)
	2	6028 755	Retainer
	2	6003 011	Retainer
	2	6003 010	Retainer
	6	6003 012	Retainer
	2	6003 009	Retainer
	2	6003 014	Screw
	2	116 000	Nut
13	1	3549 194-5	MOULDING PACKAGE, Roof Side Drain Trough (23-59-61)
	10	6028 721	Screw
14	1	2965 404-5	MOULDING, Qtr. Wdo. Outside Belt (23-23-39)
	2	6028 721	Screw
	4	6003 012	Retainer
15	1	2965 408-9	MOULDING, Qtr. Outside Belt, use w/Vinyl Roof, w/o Formal Roof Pkg. (23-23-39)
	1	3620 506-7	MOULDING PACKAGE, Qtr. Outside Belt, w/Vinyl Roof w/Formal Roof Pkg. (23-23-39)
	2	6002 297	Retainer
	4	6003 241	Retainer 3 9420 291 Nut
	1	6002 957	Retainer 4 6024 271 Screw
16	1	2965 502	NAME PLATE, Deck Lid, "Dodge" (23-19-114)
17	1	3570 512	PANEL, Deck Opng. Lwr. Finish, w/o Black Paint (23-23-28)
	1	3570 513	PANEL, Deck Opng. Lwr. Finish, w/Black Paint (23-23-28)
	12	6029 188	Nut
18	1	3579 590	MOULDING PACKAGE, Deck Lid, w/o Black Paint Stripe (23-23-30)
	1	3579 591	MOULDING PACKAGE, Deck Lid, w/Black Paint Stripe (23-23-30)
	2	6002 885	Retainer
	2	6026 523	Nut
	5	6002 873	Retainer
19	1	3579 592-3	MOULDING PACKAGE, Qtr. Outside, Rear, w/o Black Paint Stripe (23-23-39)
	1	3579 594-5	MOULDING PACKAGE, Qtr. Outside, Rear, w/Black Paint Stripe (23-23-39)
	3	9420 867	Nut
	3	6002 402	Retainer
20	1	3419 796-7	MOULDING PACKAGE, Qtr. Outside, Black (23-23-39)
	1	3620 160-1	Blue (23-23-39)
	1	3620 158-9	Green (23-23-39)
	7	6003 133	Retainer
	7	6024 271	Screw
	2	6000 709	Retainer
	2	6024 152	Nut

CONTINUED ON NEXT PAGE

All Packages Include Attaching Parts

Part Type Code is Indicated in Parentheses

REF. NO.	QTY	PART NUMBER	DESCRIPTION
21	1	3419 790-1	MOULDING PACKAGE, Qtr. Outside Wheel Opening (23-23-39)
	16	6028 545	Screw
22	1	3419 792-3	MOULDING PACKAGE, Body Side Sill (23-23-2)
	2	9420 218	Nut
	2	6002 977	Retainer
	14	6003 194	Retainer
	2	6028 680	Screw
23	1	3612 392-3	TAPE, Qtr. Pnl., Color Stripe, White (23-23-12)
	1	3612 394-5	Black (23-23-12)
	1	3612 898-9	Chartreuse (23-23-12)
	1	3612 900-1	Orange (23-23-12)
	1	3569 756-7	TAPE, Door, Color Stripe, White (23-23-12)
	1	3569 758-9	Black (23-23-12)
	1	3612 890-1	Chartreuse (23-23-12)
	1	3612 892-3	Orange (23-23-12)
23 Cont'd	1	3569 736-7	TAPE, Fender Side, Color Stripe, White (12-15-33)
	1	3569 738-9	Black (12-15-33)
	1	3612 884-5	Orange, use w/o Frt. Bumper Periphery Mldgs. (12-15-33)
	1	3612 888-9	Orange, use w/Frt. Bumper Periphery Mldgs. (12-15-33)
	1	3612 882-3	Chartreuse, use w/o Frt. Bumper Periphery Mldgs. (12-15-33)
	1	3612 886-7	Chartreuse, use w/Frt. Bumper Periphery Mldgs. (12-15-33)
	1	3685 224-5	TAPE PACKAGE, Body Side, Fender, Door, Qtr. Panel, White (23-23-12)
	1	3685 220-1	Black (23-23-12)
	1	3685 332-3	Chartreuse, Long (23-23-12)
	1	3685 336-7	Chartreuse, Short (23-23-12)
	1	3685 340-1	Orange, Long (23-23-12)
	1	3685 344-5	Orange, Short (23-23-12)
**	1	3443 247	NAME PLATE, Hood, "340 4 Barrel" (15-06-3)

All Packages Include Attaching Parts

Part Type Code is Indicated in Parentheses

1971
EXTERIOR VIEW - CHALLENGER J-H 2 DOOR HARDTOP

NOTES

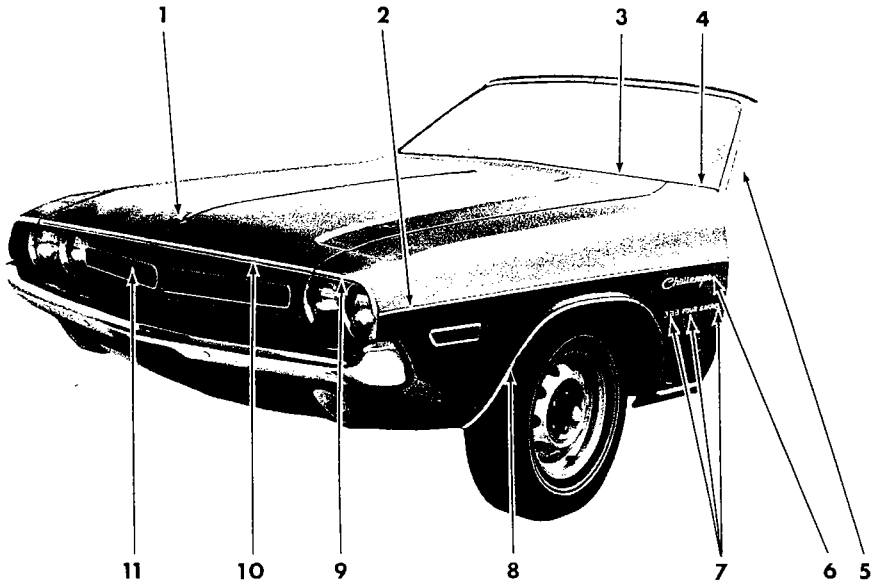

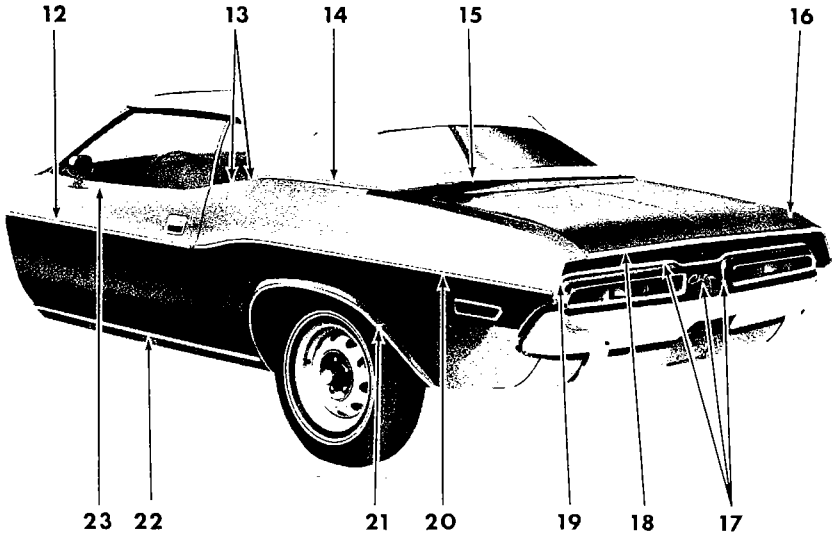

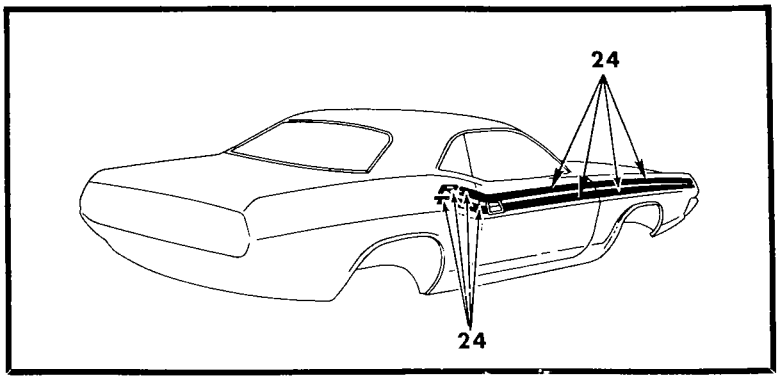

19a3662 **A**

1971
EXTERIOR VIEW - CHALLENGER J-H CONVERTIBLE COUPE

REF. NO.	QTY	PART NUMBER	DESCRIPTION
1	1	2449 932	ORNAMENT, Hood Front (15-03-18)
	2	9420 263	Nut
2	1	3579 596-7	MOULDING PACKAGE, Fender Side, Black (12-15-2)
	1	3620 150-1	Blue (12-15-2)
	1	3620 152-3	Green (12-15-2)
	7	6003 133	Retainer
	7	6024 271	Screw
	2	6000 709	Retainer
	2	9420 867	Nut
3	1	2949 474	MOULDING, Hood Rear (15-25-2)
4	1	2998 644-5	MOULDING, Fender, Rear (12-15-2)
5	1	3419 814-5	MOULDING PACKAGE, Body Frt. Upr. Pillar (23-23-14)
	2	6002 688	Retainer, Screw and Seal
	2	3445 622	Spacer
6	2	3444 938	NAME PLATE, Fender, "Challenger" (12-15-21)
7	2	3505 444	NAME PLATE, Fender, "383 Four Barrel" (12-15-21)
8	1	3419 710-1	MOULDING PACKAGE, Fender Wheel Opng. (12-15-2)
	8	6028 545	Screw
9	1	3442 012-3	MOULDING, Fender, Front (12-15-2)
10	1	3620 475	MOULDING PACKAGE, Hood Front (15-25-2)
	1	3685 359	MOULDING PACKAGE, Hood Front (15-25-2)
	8	6023 247	Screw
11	1	3443 278	GRILLE, Radiator (7-16-11)
12	1	3419 794-5	MOULDING PACKAGE, Door, Black (23-23-32)
	1	3620 164-5	Blue (23-23-32)
	1	3620 166-7	Green (23-23-32)
	7	6003 133	Retainer 7 6024 271 Screw
	2	6000 709	Retainer 2 6024 152 Nut
13	1	3549 628-9	MOULDING PACKAGE, Qtr. Outside Belt, Frt., use w/Belt Mldg. (23-23-39)
	2	9414 752	Screw
	1	3419 798-9	MOULDING PACKAGE, Qtr. Belt, Frt., use w/o Belt Mldg. (23-23-39)
	2	9414 732	Screw
14	1	3419 800-1	MOULDING PACKAGE, Qtr. Outside Belt, Rr. (23-23-39)
	12	6002 976	Retainer
	12	9429 605	Screw
15	1	3419 777	MOULDING PACKAGE, Deck Opng. Upr. Pnl. (23-23-31)
	9	6003 130	Retainer
16	1	2965 502	NAME PLATE, Deck Lid, "Dodge" (23-19-114)
17	1	3570 512	PANEL, Deck Opng. Lwr. Finish, w/o Black Paint (23-23-28)
	1	3570 513	PANEL, Deck Opng. Lwr. Finish, w/Black Paint (23-23-28)
	12	6029 188	Nut
18	1	3579 590	MOULDING PACKAGE, Deck Lid, w/o Black Paint Stripe (23-23-30)
	1	3579 591	MOULDING PACKAGE, Deck Lid, w/Black Paint Stripe (23-23-30)
	2	6002 885	Retainer
	5	6002 873	Retainer 2 6026 523 Nut
19	1	3579 592-3	MOULDING PACKAGE, Qtr. Outside, Rear, w/o Black Paint Stripe (23-23-39)
	1	3579 594-5	MOULDING PACKAGE, Qtr. Outside, Rear, w/Black Paint Stripe (23-23-39)
	3	6002 402	Retainer 3 9420 867 Nut
20	1	3419 796-7	MOULDING PACKAGE, Qtr. Outside, Black (23-23-39)
	1	3620 160-1	Blue (23-23-39)
	1	3620 158-9	Green (23-23-39)
	7	6003 133	Retainer 7 6024 271 Screw
	2	6000 709	Retainer 2 6024 152 Nut
21	1	3419 790-1	MOULDING PACKAGE, Qtr. Outside Whl. Opng. (23-23-39)
	16	6028 545	Screw
22	1	3419 792-3	MOULDING PACKAGE, Body Side Sill (23-23-2)
	2	6002 977	Retainer 2 9420 218 Nut
	14	6003 194	Retainer 2 6028 680 Screw
23	1	3549 648-9	MOULDING PACKAGE, Door Outside Belt (23-23-32)
	2	6028 755	Retainer
	2	6003 011	Retainer 2 6003 009 Ret.
	2	6003 010	Retainer 2 6003 014 Screw
	6	6003 012	Retainer 2 116 000 Nut
24	1	3569 736-7	TAPE, Fender Side, White (12-15-33)
	1	3569 738-9	Black (12-15-33)
	1	3612 884-5	Orange, use w/o Frt. Bumper Periphery Mldgs. (12-15-33)
	1	3612 888-9	Orange, use w/Frt. Bumper Periphery Mldgs. (12-15-33)
	1	3612 882-3	Chartreuse, use w/o Frt. Bumper Periphery Mldgs. (12-15-33)
	1	3612 886-7	Chartreuse, use w/Frt. Bumper Periphery Mldgs. (12-15-33)
	1	3569 756-7	TAPE, Door, White (23-23-12)
	1	3569 758-9	Black (23-23-12)
	1	3612 890-1	Chartreuse (23-23-12)
	1	3612 892-3	Orange (23-23-12)
	1	3612 392-3	TAPE, Qtr. Pnl., White (23-23-12)
	1	3612 394-5	Black (23-23-12)
	1	3612 898-9	Chartreuse (23-23-12)
	1	3612 900-1	Orange (23-23-12)
	1	3685 224-5	TAPE PACKAGE, Body Side, Fender, Door, Qtr. Panel, White (23-23-12)
	1	3685 220-1	Black (23-23-12)
	1	3685 340-1	Orange, Long (23-23-12)
	1	3685 344-5	Orange, Short (23-23-12)
	1	3685 332-3	Chartreuse, Long (23-23-12)
	1	3685 336-7	Chartreuse, Short (23-23-12)
**	1	3443 168	MOULDING, Hood A/Clnr. Opng. (15-25-2)
**	1	3443 247	NAME PLATE, Hood, "340 4 Barrel" (15-06-3)
**	1	3462 491-2	NAME PLATE, "440" (15-06-3)

All Packages Include Attaching Parts
Part Type Code is Indicated in Parentheses

1971

EXTERIOR VIEW - CHALLENGER J-H CONVERTIBLE COUPE

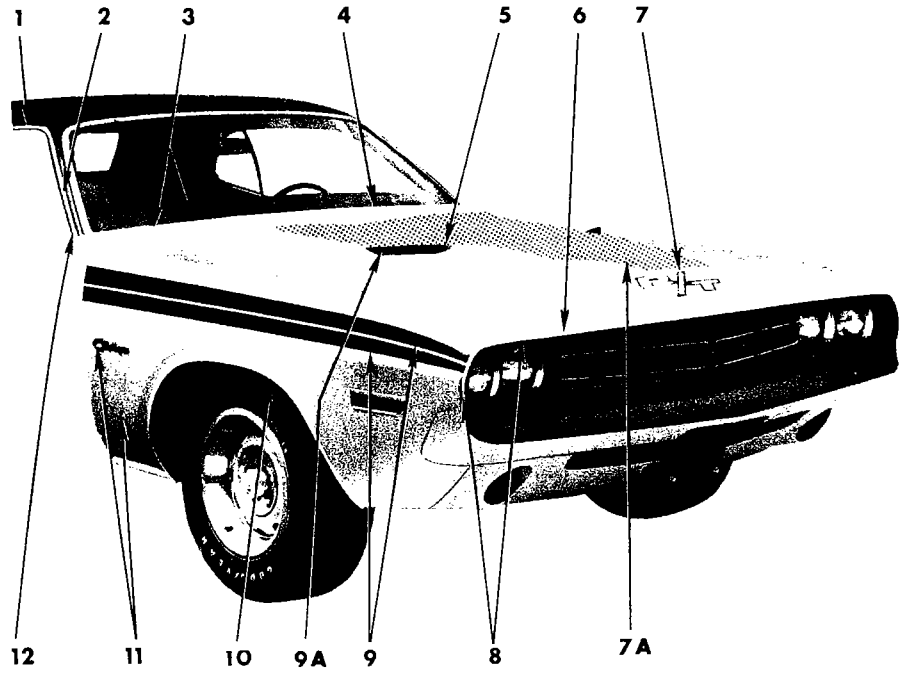

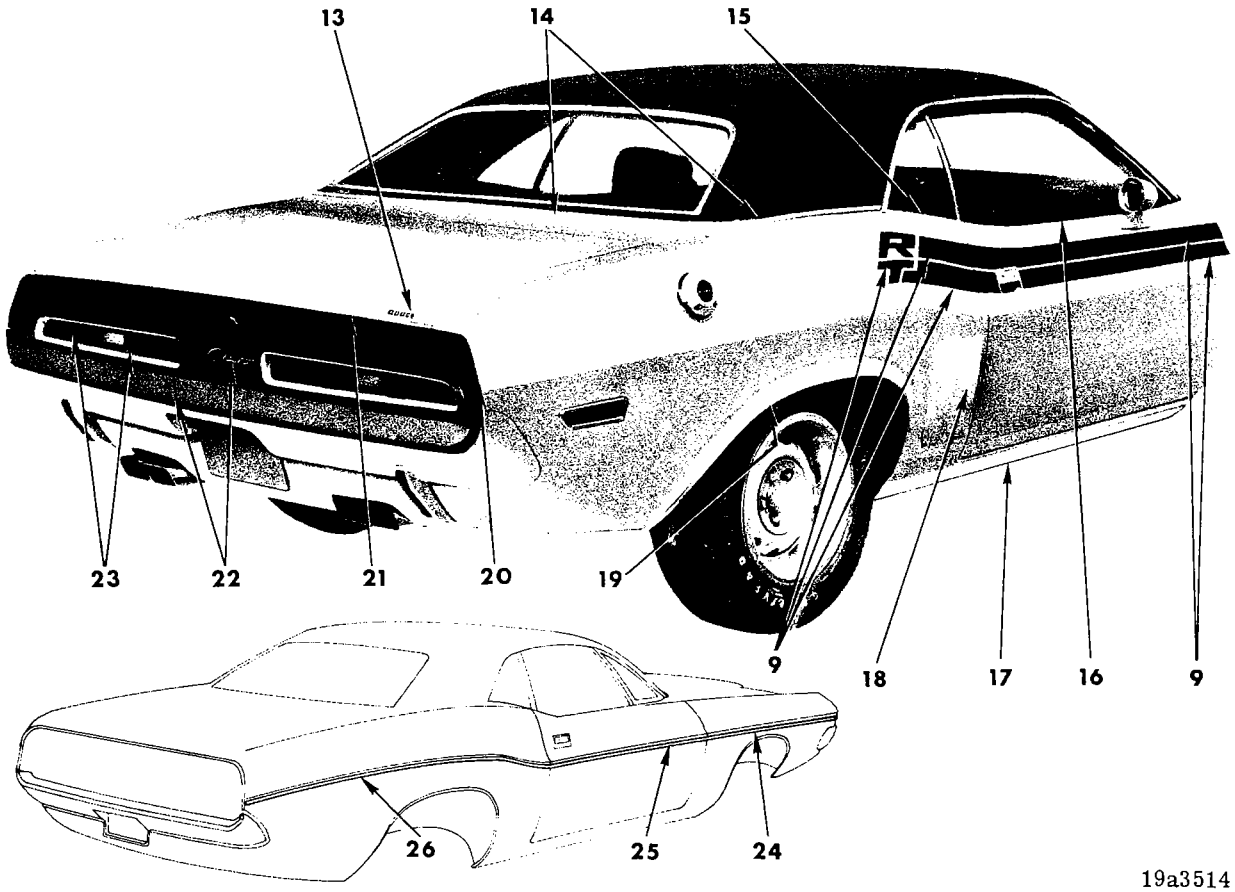

1971
EXTERIOR VIEW - CHALLENGER R/T J-S 2 DOOR HARDTOP

REF. NO.	QTY	PART NUMBER	DESCRIPTION
1	1	3549 194-5	MOULDING PACKAGE, Roof Side Drain Trough (23-59-61)
	10	6028 721	Screw
2	1	3419 906-7	MOULDING PACKAGE, Body Front Pillar Drain Trough (23-59-61)
	6	6028 721	Screw
3	1	2998 644-5	MOULDING, Fender, Rear (12-15-2)
4	1	2949 474	MOULDING, Hood Rear (15-25-2)
5	1	2998 182-3	ORNAMENT, Hood Top Side (15-03-18)
	8	6024 848	Screw
6	1	3620 475	MOULDING PACKAGE, Hood Front (15-25-2)
	8	6023 247	Screw
7	1	3443 057	DECAL, Hood Front (15-03-69)
7A	1	3443 512	TAPE, Hood (15-03-69)
8	1	3442 984-5	MOULDING, Fender, Front (12-15-2)
9	1	3569 736-7	TAPE, Fender Side, Color Stripe, White, use w/o Frt. Bumper Periphery Mldgs. (12-15-33)
	1	3569 738-9	Black (12-15-33)
	1	3612 884-5	Orange, use w/o Frt. Bumper Periphery Mldgs. (12-15-33)
	1	3612 888-9	Orange, use w/Frt. Bumper Periphery Mldgs. (12-15-33)
	1	3612 882-3	Chartreuse, use w/o Frt. Bumper Periphery Mldgs. (12-15-33)
	1	3612 886-7	Chartreuse, use w/Frt. Bumper Periphery Mldgs. (12-15-33)
	1	3569 756-7	TAPE, Door, Color Stripe, White (23-23-12)
	1	3569 758-9	Black (23-23-12)
	1	3612 890-1	Chartreuse (23-23-12)
	1	3612 892-3	Orange (23-23-12)
	1	3569 766-7	TAPE, Qtr. Pnl., Color Stripe, White (23-23-12)
	1	3569 768-9	Black (23-23-12)
	1	3612 894-5	Chartreuse (23-23-12)
	1	3612 896-7	Orange (23-23-12)
	1	3685 222-3	TAPE PACKAGE, Body Side, Fender, Door, Qtr. Panel, White (23-23-12)
	1	3685 218-9	Black (23-23-12)
	1	3685 334-5	Chartreuse, Long (23-23-12)
	1	3685 338-9	Chartreuse, Short (23-23-12)
	1	3685 342-3	Orange, Long (23-23-12)
	1	3685 346-7	Orange, Short (23-23-12)
9A	1	2998 180-1	PANEL, Hood Top Ornament Closure (15-03-83)
10	1	3419 710-1	MOULDING PACKAGE, Fender Wheel Opng. (12-15-2)
	8	6028 545	Screw
11	2	3444 938	NAME PLATE, Fender, "Challenger" (12-15-21)
	1	2785 540	MEDALLION, Fender Side, Rt., Pentastar (12-15-21)
12	1	3446 456-7	MOULDING, Body Frt. Pillar, Lwr. (23-23-14)
	2	6028 674	Screw
13	1	2965 502	NAME PLATE, Deck Lid, "Dodge" (23-19-114)
14	1	2965 408-9	MOULDING, Qtr. Outside Belt, use w/Vinyl Roof, w/o Formal Roof Pkg. (23-23-39)
	1	3620 506-7	MOULDING PACKAGE, Qtr. Outside Belt, w/Vinyl Roof, w/Formal Roof Pkg. (23-23-39)
	3	9420 291	Nut
	2	6002 297	Retainer
	4	6003 241	Retainer
	4	6024 271	Screw
	1	6002 957	Retainer
15	1	2965 404-5	MOULDING, Qtr. Wdo. Outside Belt (23-23-39)
	2	6028 721	Screw
	4	6003 012	Retainer
16	1	3549 648-9	MOULDING PACKAGE, Door Outside Belt (23-23-32)
	2	6028 755	Retainer
	2	6003 011	Retainer
	2	6003 010	Retainer
	6	6003 012	Retainer
	2	6003 009	Retainer
	2	6003 014	Screw
	2	116 000	Nut
17	1	3419 792-3	MOULDING PACKAGE, Body Side Sill (23-23-2)
	2	9420 218	Nut
	2	6002 977	Retainer
	14	6003 194	Retainer
	2	6028 680	Screw
18	1	3506 494-5	ORNAMENT, Qtr. Outside Louver (23-34-334)
	2	3569 498	Gasket
	8	9420 278	Nut
	8	6024 739	Washer
19	1	3419 790-1	MOULDING PACKAGE, Qtr. Outside Wheel Opening (23-23-39)
	16	6028 545	Screw
20	1	3579 594-5	MOULDING PACKAGE, Qtr. Outside, Rear, w/Black Paint Stripe (23-23-39)
	3	9420 867	Nut
	3	6002 402	Retainer
21	1	3579 591	MOULDING PACKAGE, Deck Lid, w/Black Paint Stripe (23-23-30)
	2	6002 885	Retainer
	2	6026 523	Nut
	5	6002 873	Retainer
22	1	3570 513	PANEL, Deck Opng. Lwr. Finish, w/Black Paint (23-23-28)
	12	6029 188	Nut

CONTINUED ON NEXT PAGE

All Packages Include Attaching Parts

Part Type Code is Indicated in Parentheses

1971
EXTERIOR VIEW - CHALLENGER R/T J-S 2 DOOR HARDTOP

REF. NO.	QTY	PART NUMBER	DESCRIPTION
23	2	3506 498	REFLEX, Deck Opng. Lwr. Finish Panel, Inner (23-23-25)
	2	3506 499	REFLEX, Deck Opng. Lwr. Finish Panel, Outer (23-23-25)
24	1	3579 596-7	MOULDING PACKAGE, Fender Side, Black (12-15-2)
	1	3620 150-1	Blue (12-15-2)
	1	3620 152-3	Green (12-15-2)
	7	6003 133	Retainer
	7	6024 271	Screw
	2	6000 709	Retainer
	2	9420 867	Nut
25	1	3419 794-5	MOULDING PACKAGE, Door, Black (23-23-32)
	1	3620 164-5	Blue (23-23-32)
	1	3620 166-7	Green (23-23-32)
	7	6003 133	Retainer
	7	6024 271	Screw
	2	6000 709	Retainer
	2	6024 152	Nut
26	1	3419 796-7	MOULDING PACKAGE, Qtr. Outside, Black (23-23-39)
	1	3620 160-1	Blue (23-23-39)
	1	3620 158-9	Green (23-23-39)
	7	6003 133	Retainer
	7	6024 271	Screw
	2	6000 709	Retainer
	2	6024 152	Nut
**	1	3443 168	MOULDING, Hood A/Clnr. Opng. (15-25-2)
**	1	3443 247	NAME PLATE, Hood, "340 4 Barrel" (15-06-3)
**	2	2998 801	NAME PLATE, Hood, "383 Magnum" (15-06-3)
	2	2998 800	"426 Hemi"
	2	2998 804	"440-6 Pack"
**	1	3462 491-2	NAME PLATE, "440" (15-06-3)
	1	3462 489 Lt.	"426 Hemi"
	1	3462 490 Rt.	"426 Hemi"

All Packages Include Attaching Parts

Part Type Code is Indicated in Parentheses

1971
EXTERIOR VIEW - CHALLENGER R/T J-S 2 DOOR HARDTOP

NOTES

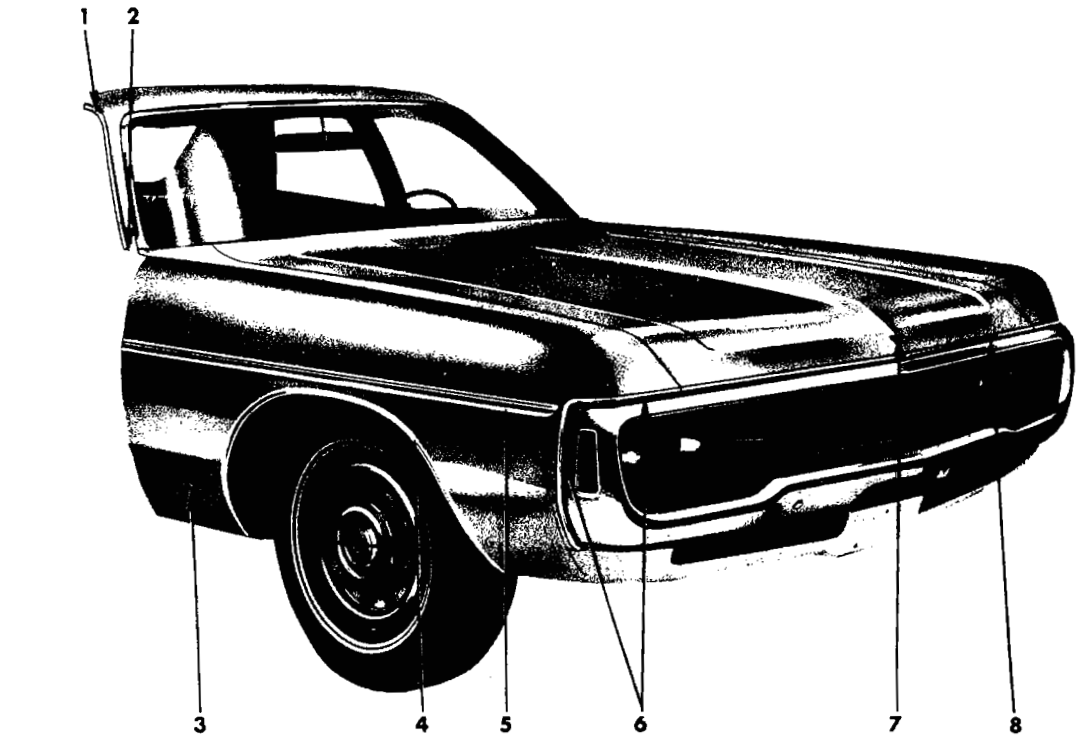

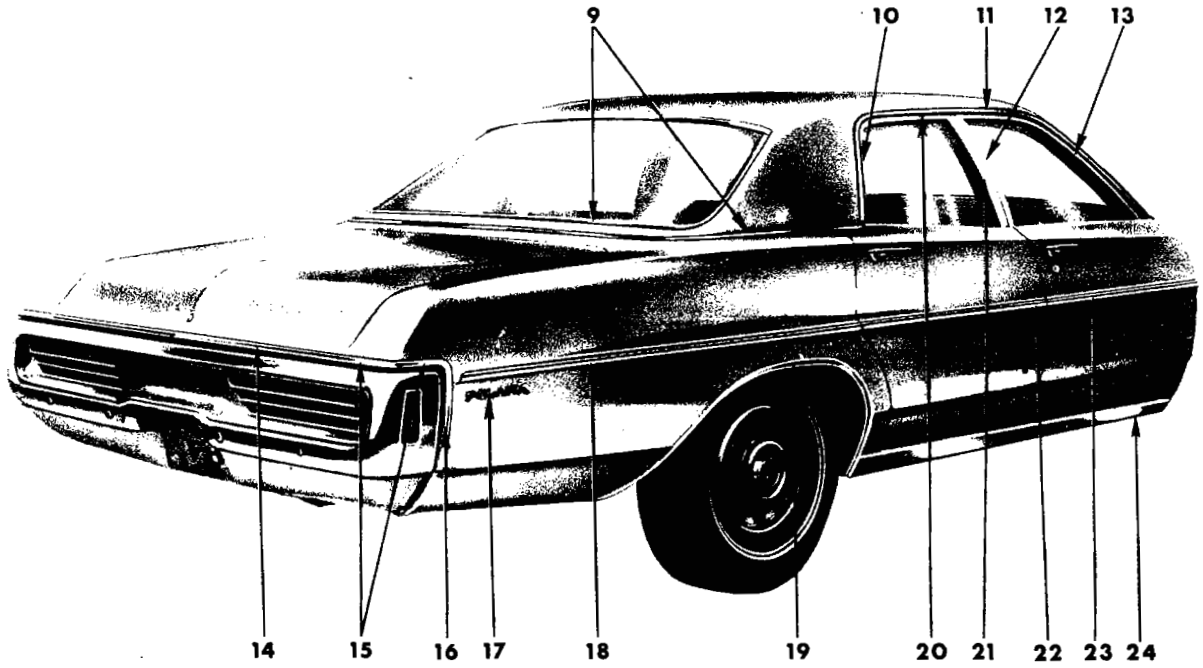

19a3646

1971
EXTERIOR VIEW - DODGE POLARA D-E 4 DOOR SEDAN

REF. NO.	QTY	PART NUMBER	DESCRIPTION
1	1	2933 568-9	MOULDING PACKAGE, Body Front Pillar Drain Trough (23-59-61)
	10	6024 271	Screw
2	1	3419 482-3	MOULDING PACKAGE, Body Frt. Lwr. Pillar (23-23-14)
	1	6028 674	Screw
3	1	2785 540	MEDALLION, Fender Side, Rt., Pentastar (12-15-21)
4	1	2933 266-7	MOULDING PACKAGE, Fender Wheel Opng. (12-15-2)
	7	6028 545	Screw
5	1	3620 364-5	MOULDING PACKAGE, Fender Side (12-15-2)
	2	6009 609	Retainer 2 6029 259 Nut
	6	6002 633	Retainer 6 6024 271 Screw
	2	3620 366	MOULDING PACKAGE, Fender Side, Black (12-15-2)
	2	3620 367	Blue (12-15-2)
	2	3620 368	Green (12-15-2)
	2	3620 369	Gold (12-15-2)
	1	6006 496	Retainer
	1	6003 134	Retainer 2 6029 259 Nut
	6	6003 133	Retainer 6 6024 271 Screw
6	1	3579 086-7	MOULDING PACKAGE, Fender Frt. Extension (12-15-2)
	6	9431 768	Screw
	4	152 335	Screw
7	1	2998 274	LETTER "D", Hood Front (15-06-16)
	1	2998 275	"O"
	1	2998 467	"D"
	1	2998 276	"G"
	1	2998 277	"E"
	10	9420 254	Nut
8	1	3419 950	MOULDING PACKAGE, Hood Front (15-25-2)
	8	152 334	Screw
9	1	2933 594-5	MOULDING PACKAGE, Deck Opng. Upr. Pnl. (23-23-31)
	6	6002 920	Retainer 6 9426 926 Nut
	9	6002 192	Fastener
10	1	2933 586-7	MOULDING PACKAGE, Roof Side Drain Trough, Rear (23-59-61)
	8	6024 271	Screw
11	1	3419 424-5	MOULDING PACKAGE, Roof Side Drain Trough, Front (23-59-61)
	10	6024 271	Screw
12	1	2893 700-1	MOULDING, Frt. Door Wdo. Opng. Frame, Rr. (23-23-32)
13	1	2893 698-9	MOULDING, Frt. Door Wdo. Opng. Frame, Upr. (23-23-32)
14	1	3620 223	MOULDING PACKAGE, Deck Lid (23-23-30)
	5	6024 271	Screw
15	1	3620 228-9	MOULDING PACKAGE, Qtr. Outside Bumper Periphery, Upr. (23-23-39)
	1	9432 446	Screw
16	1	3620 226-7	MOULDING PACKAGE, Qtr. Outside Bumper Periphery, Lwr. (23-23-39)
	2	9432 446	Screw
17	2	2902 300	NAME PLATE, Qtr. Outside, "Polara" (23-34-238)
	6	6027 352	Nut
18	1	3620 240-1	MOULDING PACKAGE, Qtr. Outside (23-23-39)
	9	6002 633	Retainer 9 6024 271 Screw
	1	6002 609	Retainer 1 6029 259 Nut
	1	3620 246-7	MOULDING PACKAGE, Qtr. Outside, Black (23-23-39)
	1	3620 286-7	Blue (23-23-39)
	1	3620 294-5	Green (23-23-39)
	1	3620 296-7	Gold (23-23-39)
	9	6003 133	Retainer 9 6024 271 Screw
	1	6006 496	Retainer 1 6027 625 Nut
19	1	3514 078-9	MOULDING PACKAGE, Qtr. Outside Whl. Opng. (23-23-39)
	7	6028 545	Screw
20	1	2893 722-3	MOULDING, Rear Door Wdo. Opng. Frame, Upr. (23-23-33)
21	1	2893 700	MOULDING, Rear Door Wdo. Opng. Frame, Frt., Lt. (23-23-33)
	1	2893 701	MOULDING, Rear Door Wdo. Opng. Frame, Frt., Rt. (23-23-33)
22	1	3620 236-7	MOULDING PACKAGE, Rear Door (23-23-33)
	4	6002 633	Retainer 4 6024 271 Screw
	2	6002 609	Retainer 2 6029 259 Nut
	1	3620 244-5	MOULDING PACKAGE, Rear Door, Black (23-23-33)
	1	3620 278-9	Blue (23-23-33)
	1	3620 280-1	Green (23-23-33)
	1	3620 282-3	Gold (23-23-33)
	4	6003 133	Retainer 4 6024 271 Screw
	2	6003 134	Retainer 2 6029 259 Nut
23	1	3620 232-3	MOULDING PACKAGE, Frt. Door (23-23-32)
	5	6002 633	Retainer 5 6024 271 Screw
	1	6002 609	Retainer 1 6029 259 Nut
	2	3620 242	MOULDING PACKAGE, Frt. Door, Black (23-23-32)
	2	3620 274	Blue (23-23-32)
	2	3620 275	Green (23-23-32)
	2	3620 276	Gold (23-23-32)
	5	6003 133	Retainer 5 6024 271 Screw
	1	6003 134	Retainer 1 6029 259 Nut
24	1	2933 802-3	MOULDING PACKAGE, Body Side Sill (23-23-2)
	8	6002 601	Retainer
	5	6028 548	Screw
	2	6028 057	Screw

All Packages Include Attaching Parts

Part Type Code is Indicated in Parentheses

1971
EXTERIOR VIEW - DODGE POLARA D-E 4 DOOR SEDAN

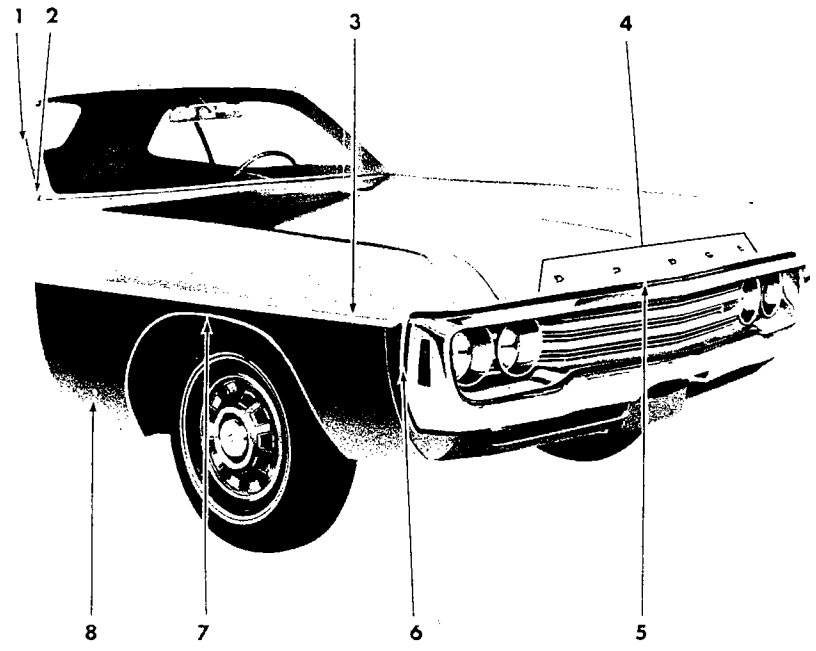

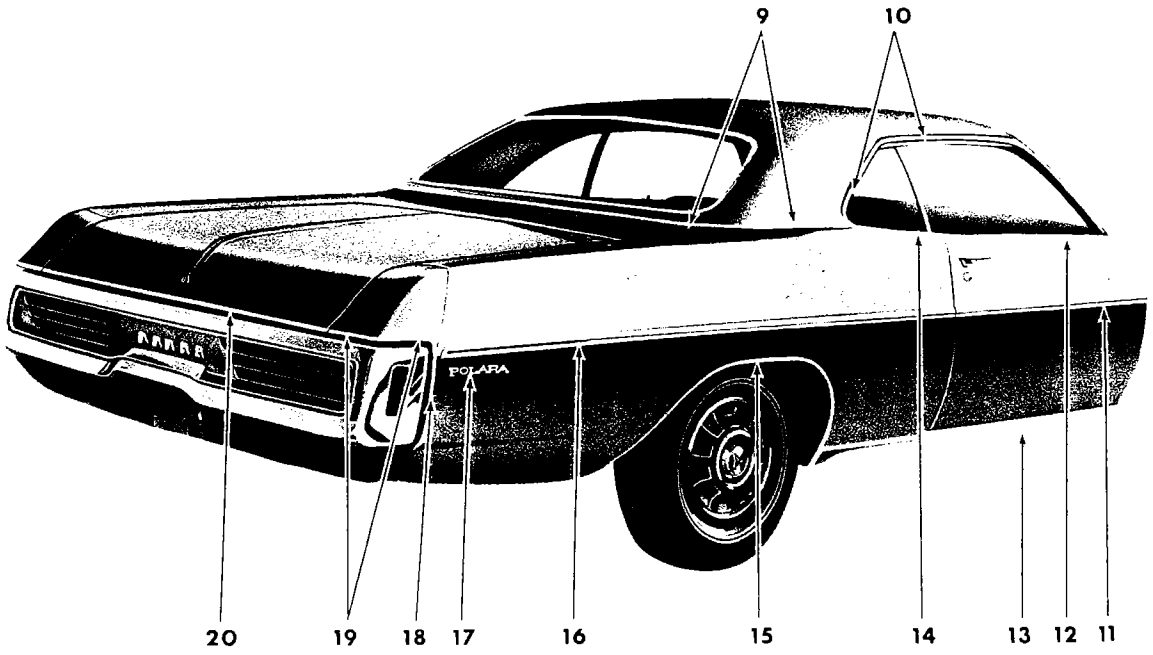

19a3666

1971
EXTERIOR VIEW - DODGE POLARA D-E 2 DOOR HARDTOP

REF. NO.	QTY	PART NUMBER	DESCRIPTION
1	1	2933 602-3	MOULDING PACKAGE, Body Front Pillar Drain Trough, Up to approx. June 1, 1971 (23-59-61)
	6	6024 271	Screw
	1	3683 304-5	MOULDING PACKAGE, Body Front Pillar Drain Trough, After approx. June 1, 1971 (23-59-61)
	6	6024 271	Screw
2	1	3419 482-3	MOULDING PACKAGE, Body Frt. Lwr. Pillar (23-23-14)
	1	6028 674	Screw
3	1	3620 364-5	MOULDING PACKAGE, Fender Side (12-15-2)
	2	6009 609	Retainer 2 6029 259 Nut
	6	6002 633	Retainer 6 6024 271 Screw
	2	3620 366	MOULDING PACKAGE, Fender Side, Black (12-15-2)
	2	3620 367	Blue (12-15-2)
	2	3620 368	Green (12-15-2)
	2	3620 369	Gold (12-15-2)
	1	6006 496	Retainer
	1	6003 134	Retainer 2 6029 259 Nut
	6	6003 133	Retainer 6 6024 271 Screw
4	1	2998 274	LETTER "D", Hood Front (15-06-16)
	1	2998 275	"O"
	1	2998 467	"D" 1 2998 277 "E"
	1	2998 276	"G" 10 9420 254 Nut
5	1	3419 950	MOULDING PACKAGE, Hood Front (15-25-2)
	8	152 334	Screw
6	1	3579 086-7	MOULDING PACKAGE, Fender Frt. Extension (12-15-2)
	6	9431 768	Screw
	4	152 335	Screw
7	1	2933 266-7	MOULDING PACKAGE, Fender Wheel Opng. (12-15-2)
	7	6028 545	Screw
8	1	2785 540	MEDALLION, Fender Side, Rt., Pentastar (12-15-21)
9	1	3579 124-5	MOULDING PACKAGE, Deck Opng. Upr. Pnl. (23-23-31)
	4	6002 192	Retainer
10	1	3579 598-9	MOULDING PACKAGE, Roof Side Drain Trough, Front and Rear (23-59-61)
	4	6024 271	Screw
11	1	3620 234-5	MOULDING PACKAGE, Door (23-23-32)
	5	6002 633	Retainer
	5	6024 271	Screw
	1	6002 609	Retainer
	1	6029 259	Nut
	2	3620 243	MOULDING PACKAGE, Door, Black (23-23-32)
	2	3620 267	Blue (23-23-32)
	2	3620 272	Green (23-23-32)
	2	3620 273	Gold (23-23-32)
	7	6003 133	Retainer
	7	6024 271	Screw
	1	6003 134	Retainer
	1	6029 259	Nut
12	1	2933 722-3	MOULDING PACKAGE, Door Outside Belt (23-23-32)
	6	6002 782	Retainer
13	1	2933 802-3	MOULDING PACKAGE, Body Side Sill (23-23-2)
	8	6002 601	Retainer
	5	6028 548	Screw
	2	6028 057	Screw
14	1	2933 626-7	MOULDING and T/PLATE PACKAGE, Qtr. Outside Belt (23-23-39)
	3	6002 782	Retainer
	1	6027 459	Screw
15	1	3514 078-9	MOULDING PACKAGE, Qtr. Outside Whl. Opng. (23-23-39)
	7	6028 545	Screw
16	1	3620 238-9	MOULDING PACKAGE, Qtr. Outside (23-23-39)
	12	6002 633	Retainer
	12	6024 271	Screw
	1	6002 609	Retainer
	1	6029 259	Nut
	2	3620 249	MOULDING PACKAGE, Qtr. Outside, Black (23-23-39)
	2	3620 277	Blue (23-23-39)
	2	3620 284	Green (23-23-39)
	2	3620 285	Gold (23-23-39)
	12	6003 133	Retainer
	12	6024 271	Screw
	1	6006 496	Retainer
	1	6027 625	Nut
17	2	2902 300	NAME PLATE, Qtr. Outside, "Polara" (23-34-238)
	6	6027 352	Nut
18	1	3620 226-7	MOULDING PACKAGE, Qtr. Outside Bumper Periphery, Lwr. (23-23-39)
	2	9432 446	Screw
19	1	3620 228-9	MOULDING PACKAGE, Qtr. Outside Bumper Periphery, Upr. (23-23-39)
	1	9432 446	Screw
20	1	3620 223	MOULDING PACKAGE, Deck Lid (23-23-30)
	5	6024 271	Screw

All Packages Include Attaching Parts

Part Type Code is Indicated in Parentheses

1971
EXTERIOR VIEW - DODGE POLARA D-E 2 DOOR HARDTOP

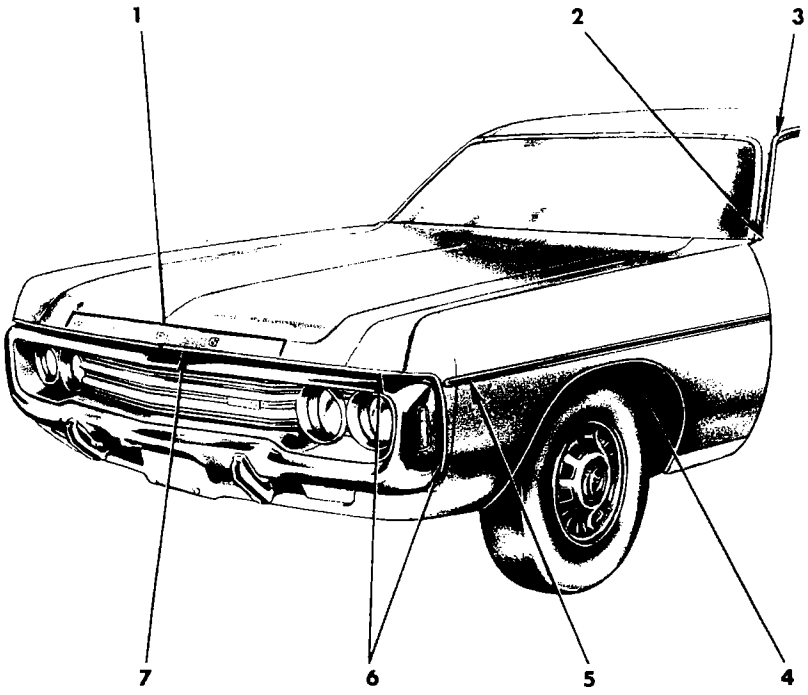

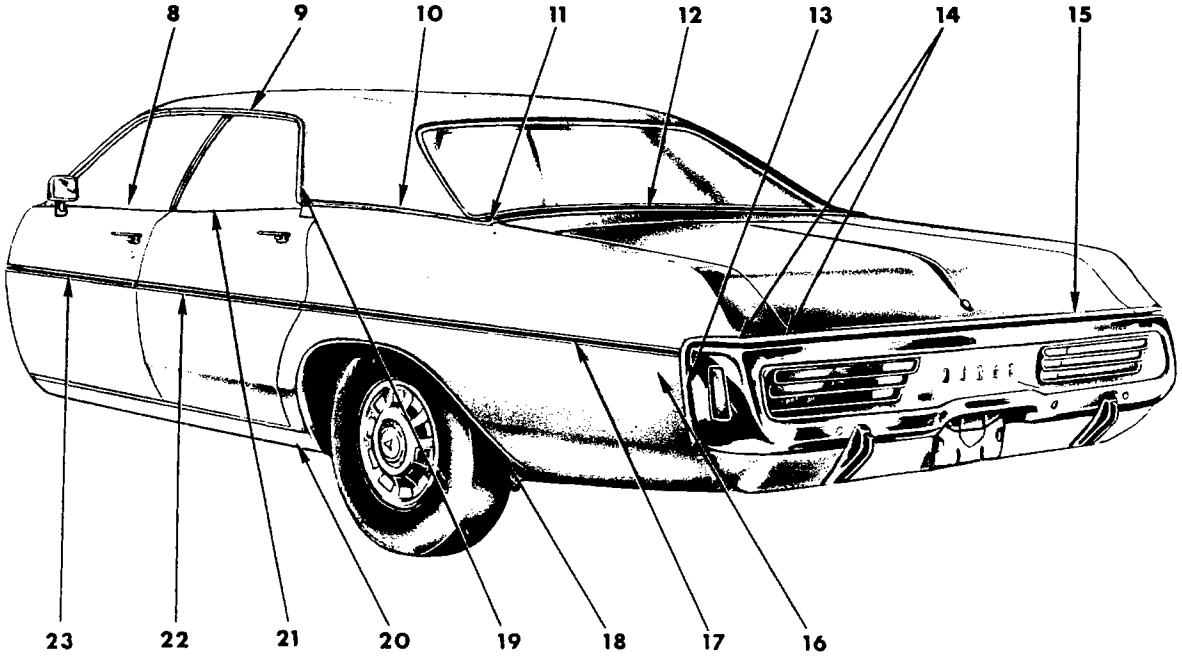

19a3781

1971
EXTERIOR VIEW - DODGE POLARA D-E 4 DOOR HARDTOP

REF. NO.	QTY	PART NUMBER	DESCRIPTION
1	1	2998 274	LETTER "D", Hood Front Name (15-06-16)
	1	2998 468	"O"
	1	2998 467	"D"
	1	2998 276	"G"
	1	2998 277	"E"
	10	9420 254	Nut
2	1	3419 482-3	MOULDING PACKAGE, Body Frt. Lwr. Pillar (23-23-14)
	1	6028 674	Screw
3	1	2933 600-1	MOULDING PACKAGE, Body Front Pillar Drain Trough, Up to approx. June 1, 1971 (23-59-61)
	6	6024 271	Screw
	1	3685 124-5	MOULDING PACKAGE, Body Front Pillar Drain Trough, After approx. June 1, 1971 (23-59-61)
	10	6024 271	Screw
4	1	2933 266-7	MOULDING PACKAGE, Fender Whl. Opng. (12-15-2)
	7	6028 545	Screw
5	1	3620 364-5	MOULDING PACKAGE, Fender Side (12-15-2)
	2	6009 609	Retainer 2 6029 259 Nut
	6	6002 633	Retainer 6 6024 271 Screw
	2	3620 366	MOULDING PACKAGE, Fender Side, Black (12-15-2)
	2	3620 367	Blue (12-15-2)
	2	3620 368	Green (12-15-2)
	2	3620 369	Gold (12-15-2)
	1	6006 496	Retainer
	1	6003 134	Retainer 2 6029 259 Nut
	6	6003 133	Retainer 6 6024 271 Screw
6	1	3579 086-7	MOULDING PACKAGE, Fender Frt. Extension (12-15-2)
	6	9431 768	Screw 4 152 335 Screw
7	1	3419 950	MOULDING PACKAGE, Hood Front (15-25-2)
8	1	2933 764-5	MOULDING PACKAGE, Frt. Door Outside Belt (23-23-32)
	10	6002 782	Retainer
9	1	3579 102-3	MOULDING PACKAGE, Roof Side Drain Trough, Front, Up to approx. June 1, 1971 (23-59-61)
	4	6024 271	Screw
	1	3683 306-7	MOULDING PACKAGE, Roof Side Drain Trough, Front, After approx. June 1, 1971
	4	6024 271	Screw
10	1	2933 596-7	MOULDING PACKAGE, Qtr. Outside Belt (23-23-39)
	9	6002 192	Fastener
	8	6002 920	Retainer 8 9426 926 Nut
11	1	2933 606-7	MOULDING PACKAGE, Deck Opng. Upr. Pnl. Outer Corner (23-23-31)
	2	9420 294	Nut w/Seal
12	1	2933 608-9	MOULDING PACKAGE, Deck Opng. Upr. Pnl. (23-23-31)
	9	6002 192	Fastener
	8	6002 920	Retainer 8 9426 926 Nut
13	1	3620 226-7	MOULDING PACKAGE, Qtr. Outside Bumper Periphery, Lwr. (23-23-39)
	2	9432 446	Screw
14	1	3620 228-9	MOULDING PACKAGE, Qtr. Outside Bumper Periphery, Upr. (23-23-39)
	1	9432 446	Screw
15	1	3620 223	MOULDING PACKAGE, Deck Lid (23-23-30)
	5	6024 271	Screw
16	2	2902 300	NAME PLATE, Qtr. Outside, "Polara" (23-34-238)
	6	6027 352	Nut
17	1	3620 240-1	MOULDING PACKAGE, Qtr. Outside (23-23-39)
	9	6002 633	Retainer 9 6024 271 Screw
	1	6002 609	Retainer 1 6029 259 Nut
	1	3620 246-7	MOULDING PACKAGE, Qtr. Outside, Black (23-23-39)
	1	3620 286-7	Blue (23-23-39)
	1	3620 294-5	Green (23-23-39)
	1	3620 296-7	Gold (23-23-39)
	9	6003 133	Retainer 9 6024 271 Screw
	1	6006 496	Retainer 1 6027 625 Nut
18	1	3514 078-9	MOULDING PACKAGE, Qtr. Outside Wheel Opening (23-23-39)
	7	6028 545	Screw
19	1	2933 588-9	MOULDING PACKAGE, Roof Side Drain Trough, Rear, Up to approx. June 1, 1971 (23-59-61)
	4	6024 271	Screw
	1	3683 308-9	MOULDING PACKAGE, Roof Side Drain Trough, Rear, After approx. June 1, 1971 (23-59-61)
	6	6024 271	Screw
20	1	2933 802-3	MOULDING PACKAGE, Body Side Sill (23-23-2)
	8	6002 601	Retainer
	5	6028 548	Screw 2 6028 057 Screw
21	1	2933 912-3	MOULDING PACKAGE, Rear Door Outside Belt (23-23-33)
	5	6002 782	Retainer
22	1	3620 236-7	MOULDING PACKAGE, Rear Door (23-23-33)
	4	6002 633	Retainer 4 6024 271 Screw
	2	6002 609	Retainer 2 6029 259 Nut
	1	3620 244-5	MOULDING PACKAGE, Rear Door, Black (23-23-33)
	1	3620 278-9	Blue (23-23-33)
	1	3620 280-1	Green (23-23-33)
	1	3620 282-3	Gold (23-23-33)
	4	6003 133	Retainer 4 6024 271 Screw
	2	6003 134	Retainer 2 6029 259 Nut
23	1	3620 232-3	MOULDING PACKAGE, Front Door (23-23-32)
	5	6002 633	Retainer 5 6024 271 Screw
	1	6002 609	Retainer 1 6029 259 Nut
	2	3620 242	MOULDING PACKAGE, Front Door, Black (23-23-32)
	2	3620 274	Blue (23-23-32)
	2	3620 275	Green (23-23-32)
	2	3620 276	Gold (23-23-32)
	5	6003 133	Retainer 5 6024 271 Screw
	1	6003 134	Retainer 1 6029 259 Nut

All Packages Include Attaching Parts

Part Type Code is Indicated in Parentheses

1971

EXTERIOR VIEW - DODGE POLARA D-E 4 DOOR HARDTOP

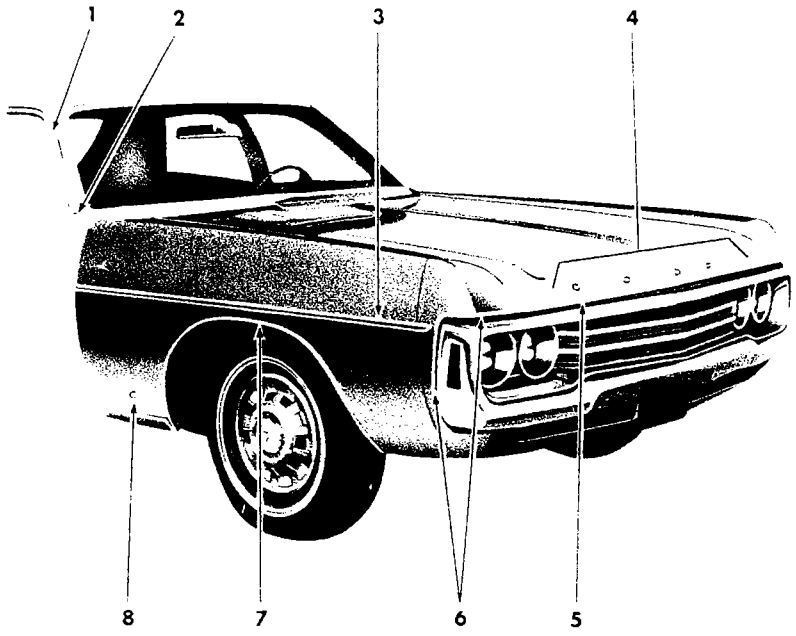

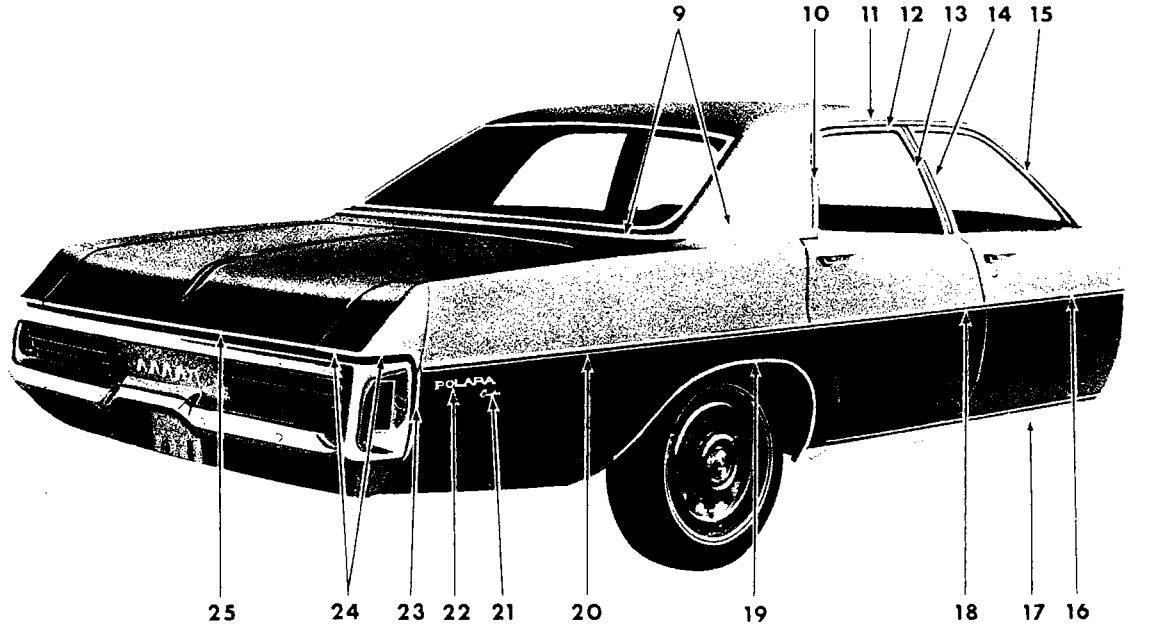

1971
EXTERIOR VIEW - DODGE POLARA CUSTOM D-L 4 DOOR SEDAN

REF. NO.	QTY	PART NUMBER	DESCRIPTION
1	1	2933 568-9	MOULDING PACKAGE, Body Front Pillar Drain Trough (23-59-61)
	10	6024 271	Screw
2	1	3419 482-3	MOULDING PACKAGE, Body Frt. Lwr. Pillar (23-23-14)
	1	6028 674	Screw
3	2	3620 366	MOULDING PACKAGE, Fender Side, Black (12-15-2)
	2	3620 367	Blue (12-15-2)
	2	3620 368	Green (12-15-2)
	2	3620 369	Gold (12-15-2)
	1	6006 496	Retainer
	2	6029 259	Nut
	1	6003 134	Retainer
	6	6003 133	Retainer
	6	6024 271	Screw
4	1	2998 274	LETTER "D", Hood Front (15-06-16)
	1	2998 275	"O"
	1	2998 467	"D"
	1	2998 276	"G"
	1	2998 277	"E"
	10	9420 254	Nut
5	1	3419 950	MOULDING PACKAGE, Hood Front (15-25-2)
	8	152 334	Screw
6	1	3579 086-7	MOULDING PACKAGE, Fender Frt. Extension (12-15-2)
	6	9431 768	Screw
	4	152 335	Screw
7	1	2933 266-7	MOULDING PACKAGE, Fender Wheel Opng. (12-15-2)
	7	6028 545	Screw
8	1	2785 540	MEDALLION, Fender Side, Rt., Pentastar (12-15-21)
9	1	2933 594-5	MOULDING PACKAGE, Deck Opng. Upr. Pnl. (23-23-31)
	6	9426 926	Nut
	6	6002 920	Retainer
	9	6002 192	Fastener
10	1	2933 586-7	MOULDING PACKAGE, Roof Side Drain Trough, Rear (23-59-61)
	8	6024 271	Screw
11	1	3419 424-5	MOULDING PACKAGE, Roof Side Drain Trough, Front (23-59-61)
	10	6024 271	Screw
12	1	2893 722-3	MOULDING, Rear Door Wdo. Opng. Frame, Upr. (23-23-33)
13	1	2893 700	MOULDING, Rear Door Wdo. Opng. Frame, Frt., Lt. (23-23-33)
	1	2893 701	MOULDING, Rear Door Wdo. Opng. Frame, Frt., Rt. (23-23-33)
14	1	2893 700-1	MOULDING, Frt. Door Wdo. Opng. Frame, Rr. (23-23-32)
15	1	2893 698-9	MOULDING, Frt. Door Wdo. Opng. Frame, Upr. (23-23-32)
16	2	3620 242	MOULDING PACKAGE, Frt. Door, Black (23-23-32)
	2	3620 274	Blue (23-23-32)
	2	3620 275	Green (23-23-32)
	2	3620 276	Gold (23-23-32)
	5	6003 133	Retainer
	5	6024 271	Screw
	1	6003 134	Retainer
	1	6029 259	Nut
17	1	2933 802-3	MOULDING PACKAGE, Body Side Sill (23-23-2)
	8	6002 601	Retainer
	5	6028 548	Screw
	2	6028 057	Screw
18	1	3620 244-5	MOULDING PACKAGE, Rear Door, Black (23-23-33)
	1	3620 278-9	Blue (23-23-33)
	1	3620 280-1	Green (23-23-33)
	1	3620 282-3	Gold (23-23-33)
	4	6003 133	Retainer
	4	6024 271	Screw
	2	6003 134	Retainer
	2	6029 259	Nut
19	1	3514 078-9	MOULDING PACKAGE, Qtr. Outside Whl. Opng. (23-23-39)
	7	6028 545	Screw
20	1	3620 246-7	MOULDING PACKAGE, Qtr. Outside, Black (23-23-39)
	1	3620 286-7	Blue (23-23-39)
	1	3620 294-5	Green (23-23-39)
	1	3620 296-7	Gold (23-23-39)
	9	6003 133	Retainer
	9	6024 271	Screw
	1	6006 496	Retainer
	1	6027 625	Nut
21	2	2842 795	NAME PLATE, Qtr. Outside, "Custom" (23-34-238)
	4	6027 352	Nut
22	2	2902 300	NAME PLATE, Qtr. Outside, "Polara" (23-34-238)
	6	6027 352	Nut
23	1	3620 226-7	MOULDING PACKAGE, Qtr. Outside Bumper Periphery, Lwr. (23-23-39)
	2	9432 446	Screw
24	1	3620 228-9	MOULDING PACKAGE, Qtr. Outside Bumper Periphery, Upr. (23-23-39)
	1	9432 446	Screw
25	1	3620 223	MOULDING PACKAGE, Deck Lid (23-23-30)
	5	6024 271	Screw

All Packages Include Attaching Parts

Part Type Code is Indicated in Parentheses

1971
EXTERIOR VIEW - DODGE POLARA CUSTOM D-L 4 DOOR SEDAN

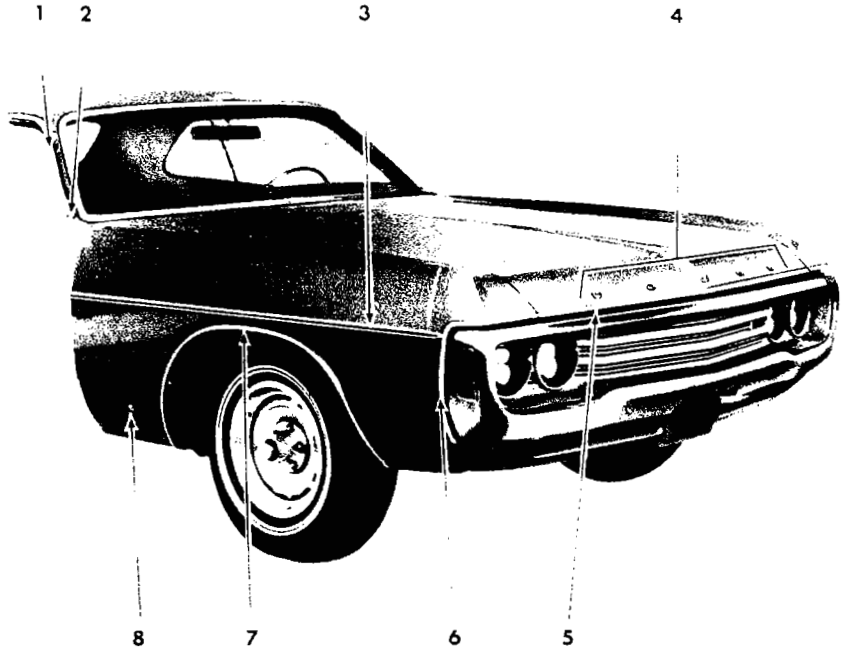

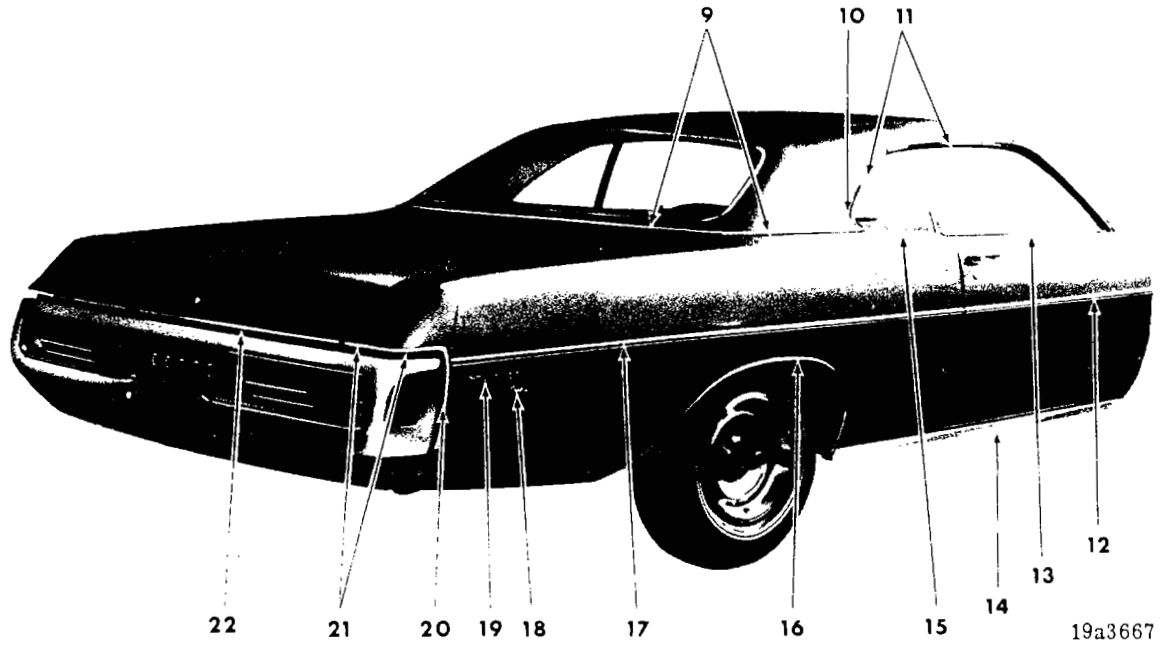

1971
EXTERIOR VIEW - DODGE POLARA CUSTOM D-L 2 DOOR HARDTOP

REF. NO.	QTY	PART NUMBER	DESCRIPTION
1	1	2933 602-3	MOULDING PACKAGE, Body Front Pillar Drain Trough, Up to approx. June 1, 1971 (23-59-61)
	6	6024 271	Screw
	1	3683 304-5	MOULDING PACKAGE, Body Front Pillar Drain Trough, After approx. June 1, 1971
	6	6024 271	Screw
2	1	3419 482-3	MOULDING PACKAGE, Body Frt. Lwr. Pillar (23-23-14)
	1	6028 674	Screw
3	2	3620 366	MOULDING PACKAGE, Fender Side, Black (12-15-2)
	2	3620 367	Blue (12-15-2)
	2	3620 368	Green (12-15-2)
	2	3620 369	Gold (12-15-2)
	1	6006 496	Retainer
	1	6003 134	Retainer 2 6029 259 Nut
	6	6003 133	Retainer 6 6024 271 Screw
4	1	2998 274	LETTER "D", Hood Front (15-06-16)
	1	2998 275	"O"
	1	2998 467	"D" 1 2998 277 "E"
	1	2998 276	"G" 10 9420 254 Nut
5	1	3419 950	MOULDING PACKAGE, Hood Front (15-25-2)
	8	152 334	Screw
6	1	3579 086-7	MOULDING PACKAGE, Fender Frt. Extension (12-15-2)
	6	9431 768	Screw 4 152 335 Screw
7	1	2933 266-7	MOULDING PACKAGE, Fender Wheel Opng. (12-15-2)
	7	6028 545	Screw
8	1	2785 540	MEDALLION, Fender Side, Rt., Pentastar (12-15-21)
9	1	3579 124-5	MOULDING PACKAGE, Deck Opng. Upr. Pnl. (23-23-31)
	4	6002 192	Retainer
10	1	3549 680-1	MOULDING PACKAGE, Roof Side Drain Trough, Rear Extension (Not used w/Belt Mldgs.) (23-59-61)
	2	6024 271	Screw
11	1	3579 598-9	MOULDING PACKAGE, Roof Side Drain Trough, Front and Rear (23-59-61)
	4	6024 271	Screw
12	2	3620 243	MOULDING PACKAGE, Door, Black (23-23-32)
	2	3620 267	Blue (23-23-32)
	2	3620 272	Green (23-23-32)
	2	3620 273	Gold (23-23-32)
	7	6003 133	Retainer
	7	6024 271	Screw
	1	6003 134	Retainer
	1	6029 259	Nut
13	1	2933 722-3	MOULDING PACKAGE, Door Outside Belt (23-23-32)
	6	6002 782	Retainer
14	1	2933 802-3	MOULDING PACKAGE, Body Side Sill (23-23-2)
	8	6002 601	Retainer
	5	6028 548	Screw
	2	6028 057	Screw
15	1	2933 626-7	MOULDING and T/PLATE PACKAGE, Qtr. Outside Belt (23-23-39)
	3	6002 782	Retainer
	1	6027 459	Screw
16	1	3514 078-9	MOULDING PACKAGE, Qtr. Outside Wheel Opng. (23-23-39)
	7	6028 545	Screw
17	2	3620 249	MOULDING PACKAGE, Qtr. Outside, Black (23-23-39)
	2	3620 277	Blue (23-23-39)
	2	3620 284	Green (23-23-39)
	2	3620 285	Gold (23-23-39)
	12	6003 133	Retainer
	12	6024 271	Screw
	1	6006 496	Retainer
	1	6027 625	Nut
18	2	2842 795	NAME PLATE, Qtr. Outside, "Custom" (23-34-238)
	4	6027 352	Nut
19	2	2902 300	NAME PLATE, Qtr. Outside, "Polara" (23-34-238)
	6	6027 352	Nut
20	1	3620 226-7	MOULDING PACKAGE, Qtr. Outside Bumper Periphery, Lwr. (23-23-39)
	2	9432 446	Screw
21	1	3620 228-9	MOULDING PACKAGE, Qtr. Outside Bumper Periphery, Upr. (23-23-39)
	1	9432 446	Screw
22	1	3620 223	MOULDING PACKAGE, Deck Lid (23-23-30)
	5	6024 271	Screw

All Packages Include Attaching Parts

Part Type Code is Indicated in Parentheses

1971
EXTERIOR VIEW - DODGE POLARA CUSTOM D-L 2 DOOR HARDTOP

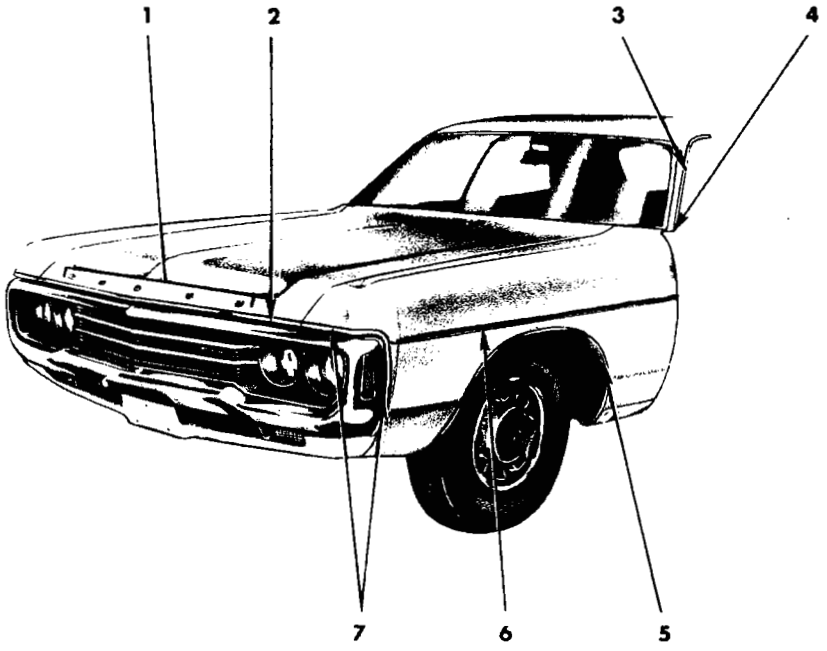

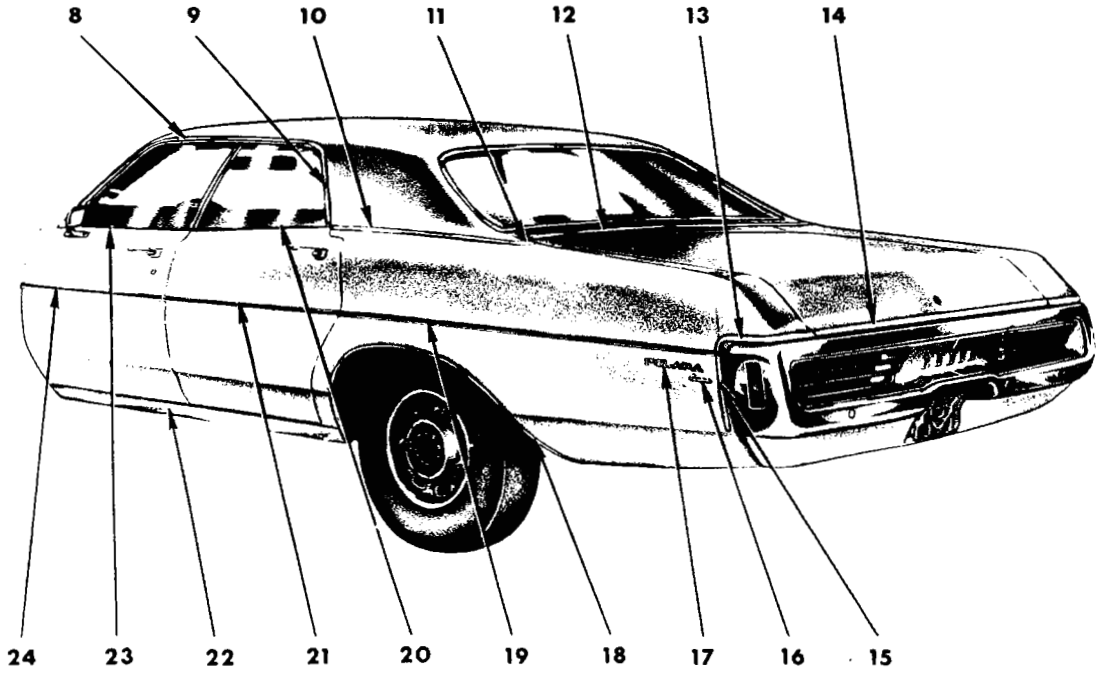

19a3591

1971
EXTERIOR VIEW - DODGE POLARA CUSTOM D-L 4 DOOR HARDTOP

REF. NO.	QTY	PART NUMBER	DESCRIPTION
1	1	2998 274	LETTER "D", Hood Front (15-06-16)
	1	2998 275	"O"
	1	2998 467	"D", Center
	1	2998 276	"G"
	1	2998 277	"E"
	10	9420 254	Nut
2	1	3419 950	MOULDING PACKAGE, Hood Front (15-25-2)
	8	152 334	Screw
3	1	2933 600-1	MOULDING PACKAGE, Body Front Pillar Drain Trough, Up to approx. June 1, 1971 (23-59-61)
	6	6024 271	Screw
	1	3685 124-5	MOULDING PACKAGE, Body Front Pillar Drain Trough, After approx. June 1, 1971
	10	6024 271	Screw
4	1	3419 482-3	MOULDING PACKAGE, Body Frt. Lwr. Pillar (23-23-14)
	1	6028 674	Screw
5	1	2933 266-7	MOULDING PACKAGE, Fender Wheel Opng. (12-15-2)
	7	6028 545	Screw
6	2	3620 366	MOULDING PACKAGE, Fender Side, Black (12-15-2)
	2	3620 367	Blue (12-15-2)
	2	3620 368	Green (12-15-2)
	2	3620 369	Gold (12-15-2)
	1	6006 496	Retainer
	1	6003 134	Retainer 2 6029 259 Nut
	6	6003 133	Retainer 6 6024 271 Screw
7	1	3579 086-7	MOULDING PACKAGE, Fender Frt. Extension (12-15-2)
	6	9431 768	Screw 4 152 335 Screw
8	1	3579 102-3	MOULDING PACKAGE, Roof Side Drain Trough, Front, Up to approx. June 1, 1971 (23-59-61)
	4	6024 271	Screw
	1	3683 306-7	MOULDING PACKAGE, Roof Side Drain Trough, Front, After approx. June 1, 1971
	4	6024 271	Screw
9	1	2933 588-9	MOULDING PACKAGE, Roof Side Drain Trough, Rear, Up to approx. June 1, 1971 (23-59-61)
	4	6024 271	Screw
	1	3683 308-9	MOULDING PACKAGE, Roof Side Drain Trough, Rear, After approx. June 1, 1971
	6	6024 271	Screw
10	1	2933 596-7	MOULDING PACKAGE, Qtr. Outside Belt (23-23-39)
	9	6002 192	Fastener
	8	6002 920	Retainer 8 9426 926 Nut
11	1	2933 606-7	MOULDING PACKAGE, Deck Opng. Upr. Pnl. Outer Corner (23-23-31)
	2	9420 294	Nut w/Seal
12	1	2933 608-9	MOULDING PACKAGE, Deck Opng. Upr. Pnl. (23-23-31)
	9	6002 192	Fastener
	8	6002 920	Retainer 8 9426 926 Nut
13	1	3620 228-9	MOULDING PACKAGE, Qtr. Outside Bumper Periphery, Upr. (23-23-39)
	1	9432 446	Screw
14	1	3620 223	MOULDING PACKAGE, Deck Lid (23-23-30)
	5	6024 271	Screw
15	1	3620 226-7	MOULDING PACKAGE, Qtr. Outside Bumper Periphery, Lwr. (23-23-39)
	2	9432 446	Screw
16	2	2842 795	NAME PLATE, Qtr. Outside, "Custom" (23-34-238)
	4	6027 352	Nut
17	2	2902 300	NAME PLATE, Qtr. Outside, "Polara" (23-34-238)
	6	6027 352	Nut
18	1	3514 078-9	MOULDING PACKAGE, Qtr. Outside Whl. Opng. (23-23-39)
	7	6028 545	Screw
19	1	3620 246-7	MOULDING PACKAGE, Qtr. Outside, Black (23-23-39)
	1	3620 286-7	Blue (23-23-39)
	1	3620 294-5	Green (23-23-39)
	1	3620 296-7	Gold (23-23-39)
	9	6003 133	Retainer 9 6024 271 Screw
	1	6006 496	Retainer 1 6027 625 Nut
20	1	2933 912-3	MOULDING PACKAGE, Rear Door Outside Belt (23-23-33)
	5	6002 782	Retainer
21	1	3620 244-5	MOULDING PACKAGE, Rear Door, Black (23-23-33)
	1	3620 278-9	Blue (23-23-33)
	1	3620 280-1	Green (23-23-33)
	1	3620 282-3	Gold (23-23-33)
	4	6003 133	Retainer 4 6024 271 Screw
	2	6003 134	Retainer 2 6029 259 Nut
22	1	2933 802-3	MOULDING PACKAGE, Body Side Sill (23-23-2)
	8	6002 601	Retainer
	5	6028 548	Screw 2 6028 057 Screw
23	1	2933 764-5	MOULDING PACKAGE, Frt. Door Outside Belt (23-23-32)
	10	6002 782	Retainer
24	2	3620 242	MOULDING PACKAGE, Frt. Door, Black (23-23-32)
	2	3620 274	Blue (23-23-32)
	2	3620 275	Green (23-23-32)
	2	3620 276	Gold (23-23-32)
	5	6003 133	Retainer 5 6024 271 Screw
	1	6003 134	Retainer 1 6029 259 Nut

All Packages Include Attaching Parts

Part Type Code is Indicated in Parentheses

1971

EXTERIOR VIEW - DODGE POLARA CUSTOM D-L 4 DOOR HARDTOP

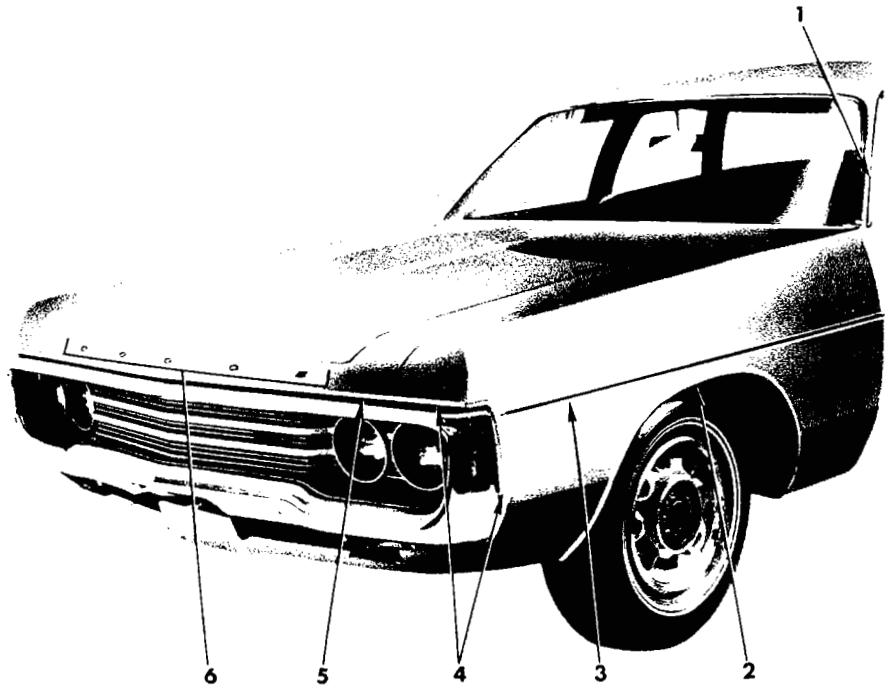

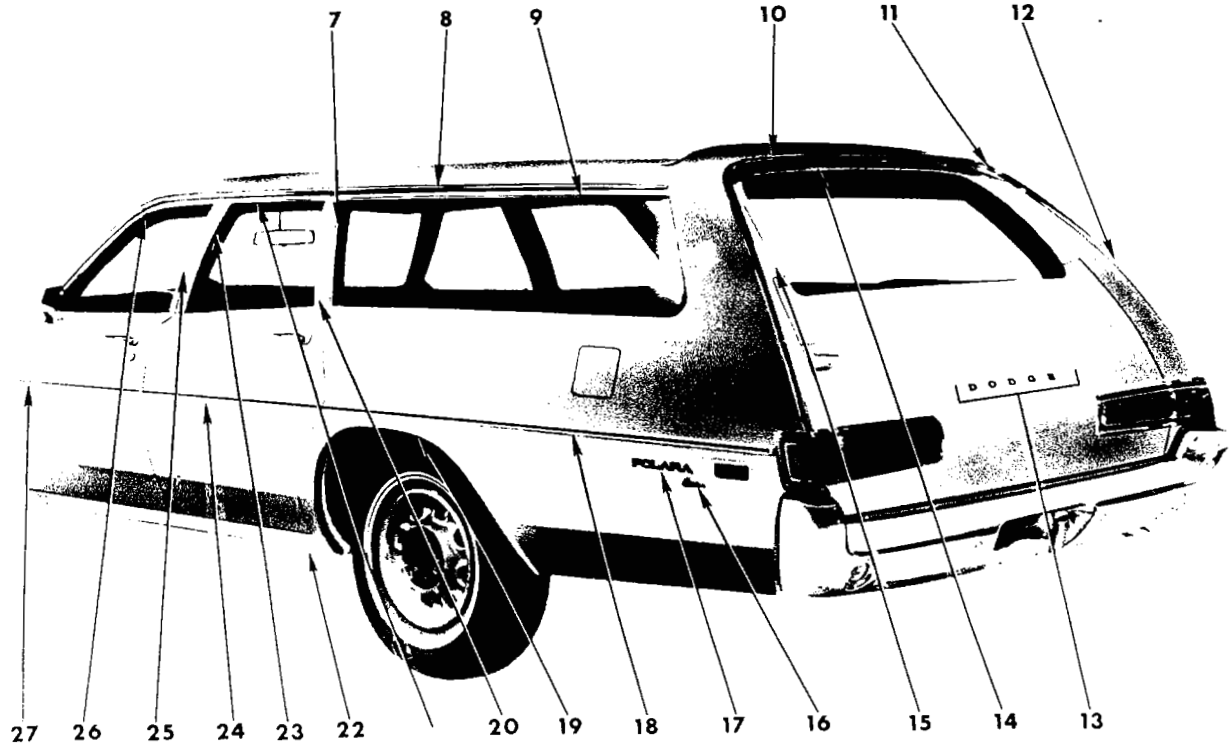

19a3640

1971
EXTERIOR VIEW - POLARA CUSTOM D-L STATION WAGON

REF. NO.	QTY	PART NUMBER	DESCRIPTION
1	1	2933 568-9	MOULDING PACKAGE, Body Front Pillar Drain Trough (23-59-61)
	10	6024 271	Screw
2	1	2933 266-7	MOULDING PACKAGE, Fender Wheel Opng. (12-15-2)
	7	6028 545	Screw
3	2	3620 366	MOULDING PACKAGE, Fender Side, Black (12-15-2)
	2	3620 367	Blue (12-15-2)
	2	3620 368	Green (12-15-2)
	2	3620 369	Gold (12-15-2)
	1	6006 496	Retainer
	2	6029 259	Nut
	1	6003 134	Retainer
	6	6003 133	Retainer
	6	6024 271	Screw
4	1	3579 086-7	MOULDING PACKAGE, Fender Frt. Extension (12-15-2)
	6	9431 768	Screw
	4	152 335	Screw
5	1	3419 950	MOULDING PACKAGE, Hood Front (15-25-2)
	8	152 334	Screw
6	1	2998 274	LETTER "D", Hood Front (15-06-16)
	1	2998 275	"O"
	1	2998 467	"D"
	1	2998 276	"G"
	1	2998 277	"E"
	10	9420 254	Nut
7	1	2893 256-7	MOULDING, Qtr. Wdo. Outside, Frt., Prime (23-23-73)
	1	2894 870-1	MOULDING, Qtr. Wdo. Outside, Frt., Finish (23-23-73)
8	1	3419 450-1	MOULDING PACKAGE, Roof Side Drain Trough (23-59-61)
	12	6024 271	Screw
9	1	2893 258-9	MOULDING, Qtr. Wdo. Outside, Upr., Prime (23-23-73)
	1	2894 872-3	MOULDING, Qtr. Wdo. Outside, Upr., Finish (23-23-73)
10	1	2894 418	MOULDING, Roof Rear Air Deflector, Center (23-23-60)
11	1	2894 416-7	MOULDING, Roof Rear Air Deflector, End (23-23-60)
12	1	3440 736-7	MOULDING, Qtr. Pnl. Outside Tailgate Pillar, Upr., use w/Assist Handles (23-23-60)
	1	3440 778-9	MOULDING, Qtr. Pnl. Outside Tailgate Pillar, Upr., use w/o Assist Handles (23-23-60)
13	2	2998 274	LETTER "D", Tailgate Outside Panel (23-54-11)
	1	2998 275	"O"
	1	2998 276	"G"
	1	2998 277	"E"
	10	9420 263	Nut
14	1	2894 445	MOULDING, Roof Pnl. Outside Tailgate Opng., Upr., Prime (23-23-60)
15	1	2894 442-3	MOULDING, Qtr. Pnl. Outside Tailgate Pillar, Upr. Tailgate Opng., Prime (23-23-60)
16	2	3505 056	NAME PLATE, Qtr. Outside, "Custom" (23-34-238)
	AR	6002 852	Retainer
17	2	3504 096	NAME PLATE, Qtr. Outside Pnl., "Polara" (23-34-238)
	AR	6002 852	Retainer
18	1	3620 250-1	MOULDING PACKAGE, Qtr. Outside, Black (23-23-39)
	1	3620 298-9	Blue (23-23-39)
	1	3620 300-1	Green (23-23-39)
	1	3620 302-3	Gold (23-23-39)
	11	6003 133	Retainer
	11	6024 271	Screw
19	1	3419 436-7	MOULDING PACKAGE, Qtr. Outside Wheel Opening (23-23-39)
	16	6028 545	Screw
20	1	2893 728-9	MOULDING, Rear Door Wdo. Opng. Frame, Rr. (23-23-33)
21	1	2893 724-5	MOULDING, Rear Door Wdo. Opng. Frame, Upr. (23-23-33)
22	1	3514 046-7	MOULDING PACKAGE, Body Side Sill (23-23-2)
	16	6002 601	Retainer
	10	6028 545	Screw
	4	6028 057	Screw
23	1	2893 700	MOULDING, Rear Door Wdo. Opng. Frame, Frt., Lt. (23-23-33)
	1	2893 701	MOULDING, Rear Door Wdo. Opng. Frame, Frt., Rt. (23-23-33)
24	1	3620 244-5	MOULDING PACKAGE, Rear Door, Black (23-23-33)
	1	3620 278-9	Blue (23-23-33)
	1	3620 280-1	Green (23-23-33)
	1	3620 282-3	Gold (23-23-33)
	4	6003 133	Retainer
	4	6024 271	Screw
	2	6003 134	Retainer
	2	6029 259	Nut
25	1	2893 700-1	MOULDING, Frt. Door Wdo. Opng. Frame, Rr. (23-23-32)
26	1	2893 698-9	MOULDING, Frt. Door Wdo. Opng. Frame, Upr. (23-23-32)
27	2	3620 242	MOULDING PACKAGE, Frt. Door, Black (23-23-32)
	2	3620 274	Blue (23-23-32)
	2	3620 275	Green (23-23-32)
	2	3620 276	Gold (23-23-32)
	5	6003 133	Retainer
	5	6024 271	Screw
	1	6003 134	Retainer
	1	6029 259	Nut

All Packages Include Attaching Parts

Part Type Code is Indicated in Parentheses

1971
EXTERIOR VIEW - POLARA CUSTOM D-L STATION WAGON

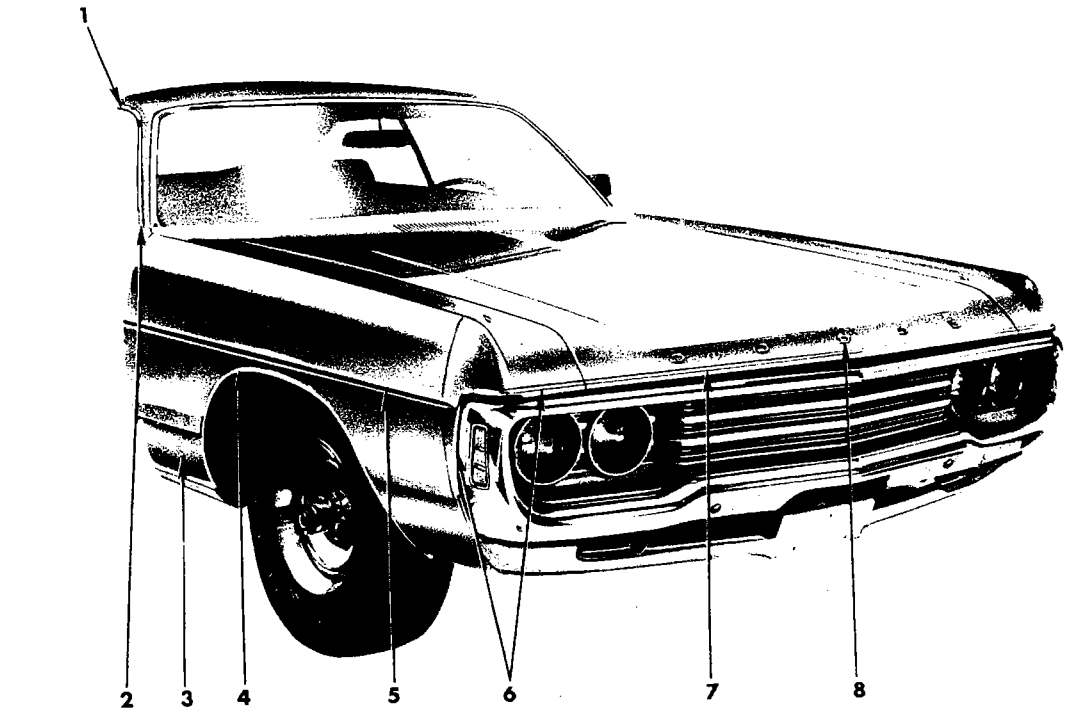

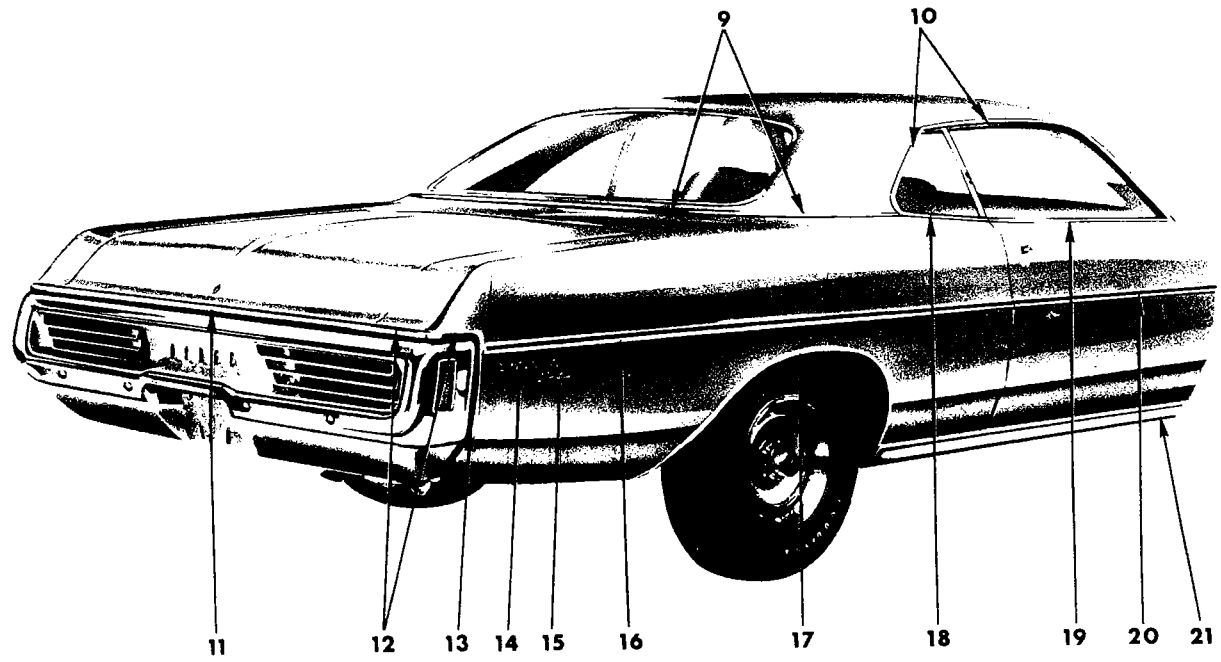

19a3643

1971
EXTERIOR VIEW - POLARA BROUGHAM D-M 2 DOOR HARDTOP

REF. NO.	QTY	PART NUMBER	DESCRIPTION
1	1	2933 602-3	MOULDING PACKAGE, Body Front Pillar Drain Trough, Up to approx. June 1, 1971 (23-59-61)
	6	6024 271	Screw
	1	3683 304-5	MOULDING PACKAGE, Body Front Pillar Drain Trough, After approx. June 1, 1971 (23-59-61)
	6	6024 271	Screw
2	1	3419 482-3	MOULDING PACKAGE, Body Frt. Lwr. Pillar (23-23-14)
	1	6028 674	Screw
3	1	2785 540	MEDALLION, Fender Side, Rt., Pentastar (12-15-21)
4	1	2933 266-7	MOULDING PACKAGE, Fender Wheel Opng. (12-15-2)
	7	6028 545	Screw
5	2	3620 366	MOULDING PACKAGE, Fender Side, Black (12-15-2)
	2	3620 367	Blue (12-15-2)
	2	3620 368	Green (12-15-2)
	2	3620 369	Gold (12-15-2)
	1	6006 496	Retainer
	2	6029 259	Nut
	1	6003 134	Retainer
	6	6003 133	Retainer
	6	6024 271	Screw
6	1	3579 086-7	MOULDING PACKAGE, Fender Frt. Extension (12-15-2)
	6	9431 768	Screw
	4	152 335	Screw
7	1	3419 950	MOULDING PACKAGE, Hood Front (15-25-2)
	8	152 334	Screw
8	1	2998 274	LETTER "D", Hood Front (15-06-16)
	1	2998 275	"O"
	1	2998 467	"D"
	1	2998 276	"G"
	1	2998 277	"E"
	10	9420 254	Nut
9	1	3579 124-5	MOULDING PACKAGE, Deck Opng. Upr. Pnl. (23-23-31)
	4	6002 192	Retainer
10	1	3579 598-9	MOULDING PACKAGE, Roof Side Drain Trough, Front and Rear (23-59-61)
	4	6024 271	Screw
11	1	3620 223	MOULDING PACKAGE, Deck Lid (23-23-30)
	5	6024 271	Screw
12	1	3620 228-9	MOULDING PACKAGE, Qtr. Outside Bumper Periphery, Upr. (23-23-39)
	1	9432 446	Screw
13	1	3620 226-7	MOULDING PACKAGE, Qtr. Outside Bumper Periphery, Lwr. (23-23-39)
	2	9432 446	Screw
14	2	2902 300	NAME PLATE, Qtr. Outside, "Polara" (23-34-238)
	6	6027 352	Nut
15	2	2964 634	NAME PLATE, Qtr. Outside, "Brougham" (23-34-238)
	6	6027 352	Nut
16	2	3620 249	MOULDING PACKAGE, Qtr. Outside, Black (23-23-39)
	2	3620 277	Blue (23-23-39)
	2	3620 284	Green (23-23-39)
	2	3620 285	Gold (23-23-39)
	12	6003 133	Retainer
	12	6024 271	Screw
	1	6006 496	Retainer
	1	6027 625	Nut
17	1	3514 078-9	MOULDING PACKAGE, Qtr. Outside Wheel Opening (23-23-39)
	7	6028 545	Screw
18	1	2933 610-1	MOULDING and T/PLATE PACKAGE, Qtr. Outside Belt (23-23-39)
	6	6002 782	Retainer and Seal
19	1	2933 722-3	MOULDING PACKAGE, Door Outside Belt (23-23-32)
	6	6002 782	Retainer
20	2	3620 243	MOULDING PACKAGE, Door, Black (23-23-32)
	2	3620 267	Blue (23-23-32)
	2	3620 272	Green (23-23-32)
	2	3620 273	Gold (23-23-32)
	7	6003 133	Retainer
	7	6024 271	Screw
	1	6003 134	Retainer
	1	6029 259	Nut
21	1	2933 802-3	MOULDING PACKAGE, Body Side Sill (23-23-2)
	8	6002 601	Retainer
	5	6028 548	Screw
	2	6028 057	Screw

All Packages Include Attaching Parts

Part Type Code is Indicated in Parentheses

1971
EXTERIOR VIEW - POLARA BROUGHAM D-M 2 DOOR HARDTOP

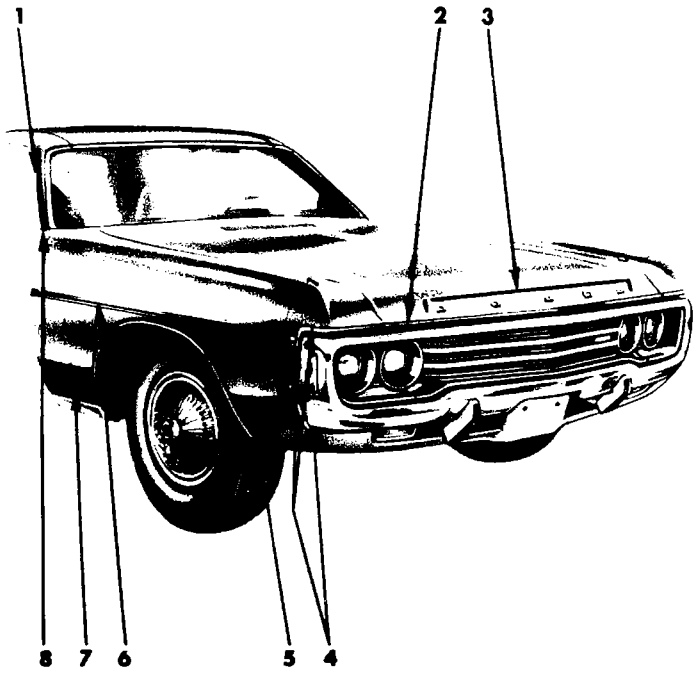

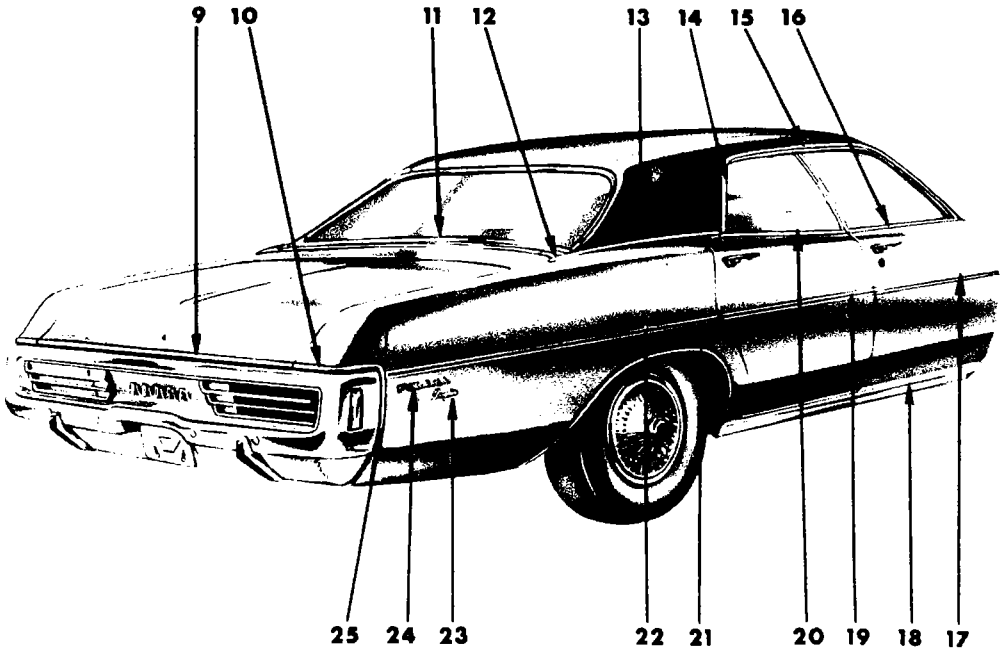

19a3477

1971
EXTERIOR VIEW - DODGE POLARA BROUGHAM D-M 4 DOOR HARDTOP

REF. NO.	QTY	PART NUMBER	DESCRIPTION
1	1	2933 600-1	MOULDING PACKAGE, Body Front Pillar Drain Trough, Up to approx. June 1, 1971 (23-59-61)
	6	6024 271	Screw
	1	3685 124-5	MOULDING PACKAGE, Body Front Pillar Drain Trough, After approx. June 1, 1971
	10	6024 271	Screw
2	1	3419 950	MOULDING PACKAGE, Hood Front (15-25-2)
	8	152 234	Screw
3	1	2998 274	LETTER "D", Hood Front Name (15-06-16)
	1	2998 468	"O"
	1	2998 467	"D" 1 2998 277 "E"
	1	2998 276	"G" 10 9420 254 Nut
4	1	3579 086-7	MOULDING PACKAGE, Fender Frt. Extension (12-15-2)
	6	9431 768	Screw 4 152 335 Screw
5	1	2933 266-7	MOULDING PACKAGE, Fender Wheel Opng. (12-15-2)
	7	6028 545	Screw
6	2	3620 366	MOULDING PACKAGE, Fender Side, Black (12-15-2)
	2	3620 367	Blue (12-15-2)
	2	3620 368	Green (12-15-2)
	2	3620 369	Gold (12-15-2)
	1	6006 496	Retainer
	1	6003 134	Retainer 2 6029 259 Nut
	6	6003 133	Retainer 6 6024 271 Screw
7	1	2785 540	MEDALLION, Fender Side, Rt., Pentastar (12-15-21)
8	1	3419 482-3	MOULDING PACKAGE, Body Frt. Lwr. Pillar (23-23-14)
	1	6028 674	Screw
9	1	3620 223	MOULDING PACKAGE, Deck Lid (23-23-30)
	5	6024 271	Screw
10	1	3620 228-9	MOULDING PACKAGE, Qtr. Outside Bumper Periphery, Upr. (23-23-39)
	1	9432 446	Screw
11	1	2933 608-9	MOULDING PACKAGE, Deck Opng. Upr. Pnl. (23-23-31)
	4	6002 920	Retainer
	4	6002 192	Fastener 4 9420 867 Nut
12	1	2933 606-7	MOULDING PACKAGE, Deck Opng. Upr. Pnl. Outer Corner (23-23-31)
	2	6025 985	Screw
13	1	2933 596-7	MOULDING PACKAGE, Qtr. Outside Belt (23-23-39)
	4	6002 920	Retainer
	4	6002 192	Fastener 4 9420 867 Nut
14	1	2933 588-9	MOULDING PACKAGE, Roof Side Drain Trough, Rear, Up to approx. June 1, 1971 (23-59-61)
	4	6024 271	Screw
	1	3683 308-9	MOULDING PACKAGE, Roof Side Drain Trough, Rear, After approx. June 1, 1971
	6	6024 271	Screw
15	1	3579 102-3	MOULDING PACKAGE, Roof Side Drain Trough, Front, Up to approx. June 1, 1971 (23-59-61)
	4	6024 271	Screw
	1	3683 306-7	MOULDING PACKAGE, Roof Side Drain Trough, Front, After approx. June 1, 1971
	4	6024 271	Screw
16	1	2933 764-5	MOULDING PACKAGE, Frt. Door Outside Belt (23-23-32)
	5	6002 782	Retainer
17	2	3620 242	MOULDING PACKAGE, Frt. Door, Black (23-23-32)
	2	3620 274	Blue (23-23-32)
	2	3620 275	Green (23-23-32)
	2	3620 276	Gold (23-23-32)
	5	6002 133	Retainer 5 6024 271 Screw
	1	6003 134	Retainer 1 6029 259 Nut
18	1	2933 802-3	MOULDING PACKAGE, Body Side Sill (23-23-2)
	8	6002 601	Retainer
	5	6028 545	Screw
	2	6028 057	Screw
19	1	3620 244-5	MOULDING PACKAGE, Rear Door, Black (23-23-33)
	1	3620 278-9	Blue (23-23-33)
	1	3620 280-1	Green (23-23-33)
	1	3620 282-3	Gold (23-23-33)
	4	6003 133	Retainer
	4	6024 271	Screw
	2	6003 134	Retainer
	2	6029 259	Nut
20	1	2933 912-3	MOULDING PACKAGE, Rear Door Outside Belt (23-23-33)
	5	6002 782	Retainer
21	1	3514 078-9	MOULDING PACKAGE, Qtr. Outside Whl. Opng. (23-23-39)
	7	6028 545	Screw
22	1	3620 246-7	MOULDING PACKAGE, Qtr. Outside, Black (23-23-39)
	1	3620 286-7	Blue (23-23-39)
	1	3620 294-5	Green (23-23-39)
	1	3620 296-7	Gold (23-23-39)
	9	6003 133	Retainer
	9	6024 271	Screw
	1	6006 496	Retainer
	1	6027 625	Nut
23	2	2964 634	NAME PLATE, Qtr. Outside, Brougham (23-34-238)
	4	6027 352	Nut
24	2	2902 300	NAME PLATE, Qtr. Outside, Polara (23-34-238)
	6	6027 352	Nut
25	1	3620 226-7	MOULDING PACKAGE, Qtr. Outside Bumper Periphery, Lwr. (23-23-39)
	2	9432 446	Screw

All Packages Include Attaching Parts

Part Type Code is Indicated in Parentheses

1971

EXTERIOR VIEW - DODGE POLARA BROUGHAM D-M 4 DOOR HARDTOP

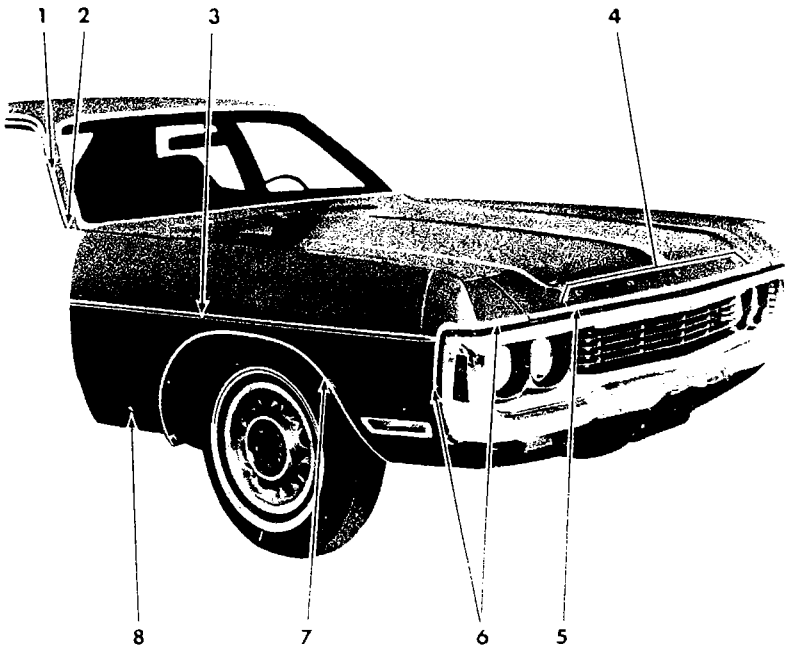

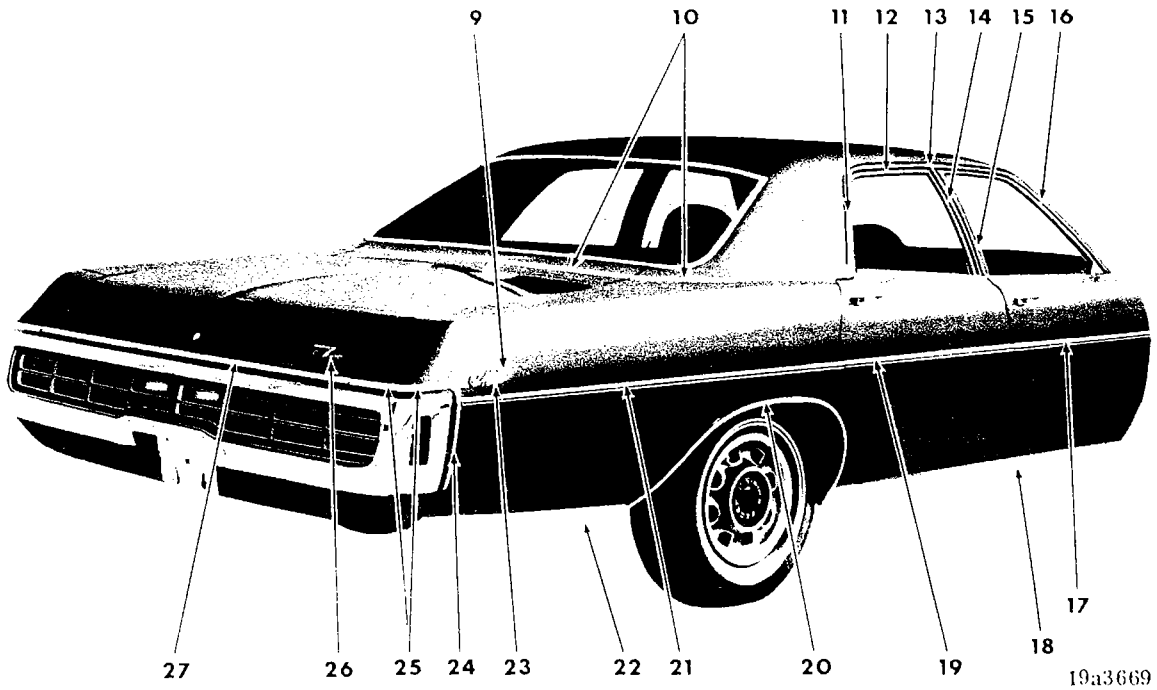

1971
EXTERIOR VIEW - DODGE MONACO D-H 4 DOOR SEDAN

REF. NO.	QTY	PART NUMBER	DESCRIPTION
1	1	2933 568-9	MOULDING PACKAGE, Body Front Pillar Drain Trough (23-59-61)
	10	6024 271	Screw
2	1	3419 482-3	MOULDING PACKAGE, Body Frt. Lwr. Pillar (23-23-14)
	1	6028 674	Screw
3	2	3620 366	MOULDING PACKAGE, Fender Side, Black (12-15-2)
	2	3620 367	Blue (12-15-2)
	2	3620 368	Green (12-15-2)
	2	3620 369	Gold (12-15-2)
	1	6006 496	Retainer
	2	6029 259	Nut
	1	6003 134	Retainer
	6	6003 133	Retainer
	6	6024 271	Screw
4	1	2998 274	LETTER "D", Hood Front (15-06-16)
	1	2998 275	"O"
	1	2998 467	"D"
	1	2998 276	"G"
	1	2998 277	"E"
	10	9420 254	Nut
5	1	3419 950	MOULDING PACKAGE, Hood Front (15-25-2)
	8	152 334	Screw
6	1	3579 086-7	MOULDING PACKAGE, Fender Frt. Extension (12-15-2)
	6	9431 768	Screw
	4	152 335	Screw
7	1	2933 266-7	MOULDING PACKAGE, Fender Wheel Opng. (12-15-2)
	7	6028 545	Screw
8	1	2785 540	MEDALLION, Fender Side, Rt., Pentastar (12-15-21)
9	2	3568 596	MEDALLION, Qtr. Outside, "Brougham" (23-34-334)
10	1	2933 594-5	MOULDING PACKAGE, Deck Opng. Upr. Pnl. (23-23-31)
	6	9426 926	Nut
	6	6002 920	Retainer
	9	6002 192	Fastener
11	1	2933 586-7	MOULDING PACKAGE, Roof Side Drain Trough, Rear (23-59-61)
	8	6024 271	Screw
12	1	2893 722-3	MOULDING, Rear Door Wdo. Opng. Frame, Upr. (23-23-33)
13	1	3419 424-5	MOULDING PACKAGE, Roof Side Drain Trough, Front (23-59-61)
	10	6024 271	Screw
14	1	2893 700	MOULDING, Rear Door Wdo. Opng. Frame, Frt., Lt. (23-23-33)
	1	2893 701	MOULDING, Rear Door Wdo. Opng. Frame, Frt., Rt. (23-23-33)
15	1	2893 700-1	MOULDING, Frt. Door Wdo. Opng. Frame, Rr. (23-23-32)
16	1	2893 698-9	MOULDING, Frt. Door Wdo. Opng. Frame, Upr. (23-23-32)
17	2	3620 242	MOULDING PACKAGE, Frt. Door, Black (23-23-32)
	2	3620 274	Blue (23-23-32)
	2	3620 275	Green (23-23-32)
	2	3620 276	Gold (23-23-32)
	5	6003 133	Retainer
	5	6024 271	Screw
	1	6003 134	Retainer
	1	6029 259	Nut
18	1	2933 802-3	MOULDING PACKAGE, Body Side Sill (23-23-2)
	8	6002 601	Retainer
	5	6028 548	Screw
	2	6028 057	Screw
19	1	3620 244-5	MOULDING PACKAGE, Rear Door, Black (23-23-33)
	1	3620 278-9	Blue (23-23-33)
	1	3620 280-1	Green (23-23-33)
	1	3620 282-3	Gold (23-23-33)
	4	6003 133	Retainer
	4	6024 271	Screw
	2	6003 134	Retainer
	2	6029 259	Nut
20	1	3514 078-9	MOULDING PACKAGE, Qtr. Outside Whl. Opng. (23-23-39)
	7	6028 545	Screw
21	1	3620 246-7	MOULDING PACKAGE, Qtr. Outside, Black (23-23-39)
	1	3620 286-7	Blue (23-23-39)
	1	3620 294-5	Green (23-23-39)
	1	3620 296-7	Gold (23-23-39)
	9	6003 133	Retainer
	9	6024 271	Screw
	1	6006 496	Retainer
	1	6027 625	Nut
22	1	3620 268-9	MOULDING PACKAGE, Qtr. Outside Finish, Rear (23-23-39)
	2	6002 601	Retainer
	3	6024 271	Screw
	2	6028 057	Screw
23	2	2839 929	NAME PLATE, Qtr. Outside, "Monaco" (23-34-238)
	6	6027 352	Nut
24	1	3620 226-7	MOULDING PACKAGE, Qtr. Outside Bumper Periphery, Lwr. (23-23-39)
	2	9432 446	Screw
25	1	3620 228-9	MOULDING PACKAGE, Qtr. Outside Bumper Periphery, Upr. (23-23-39)
	1	9432 446	Screw
26	1	3570 339	NAME PLATE, Deck Lid (23-19-114)
27	1	3620 223	MOULDING PACKAGE, Deck Lid (23-23-30)
	5	6024 271	Screw

All Packages Include Attaching Parts

Part Type Code is Indicated in Parentheses

1971
EXTERIOR VIEW - DODGE MONACO D-H 4 DOOR SEDAN

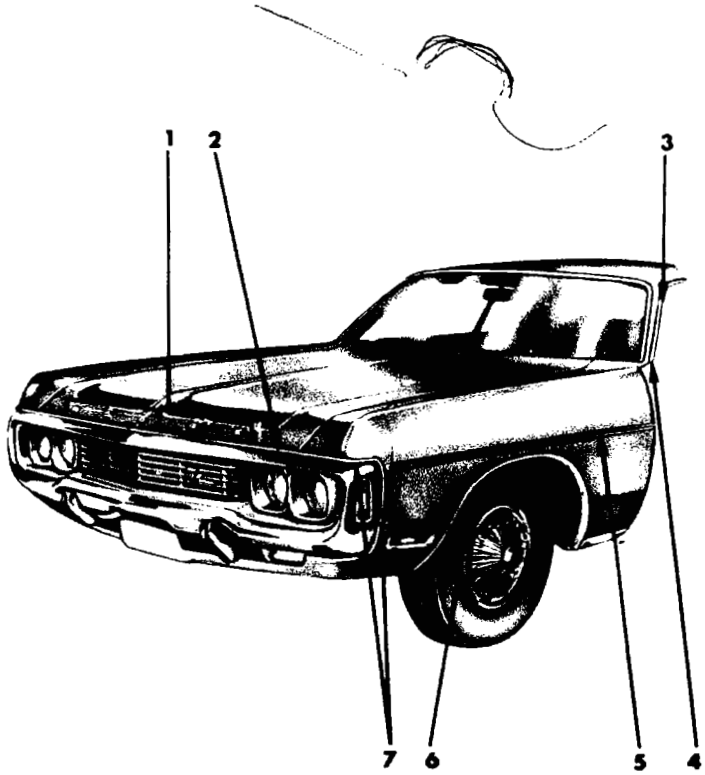

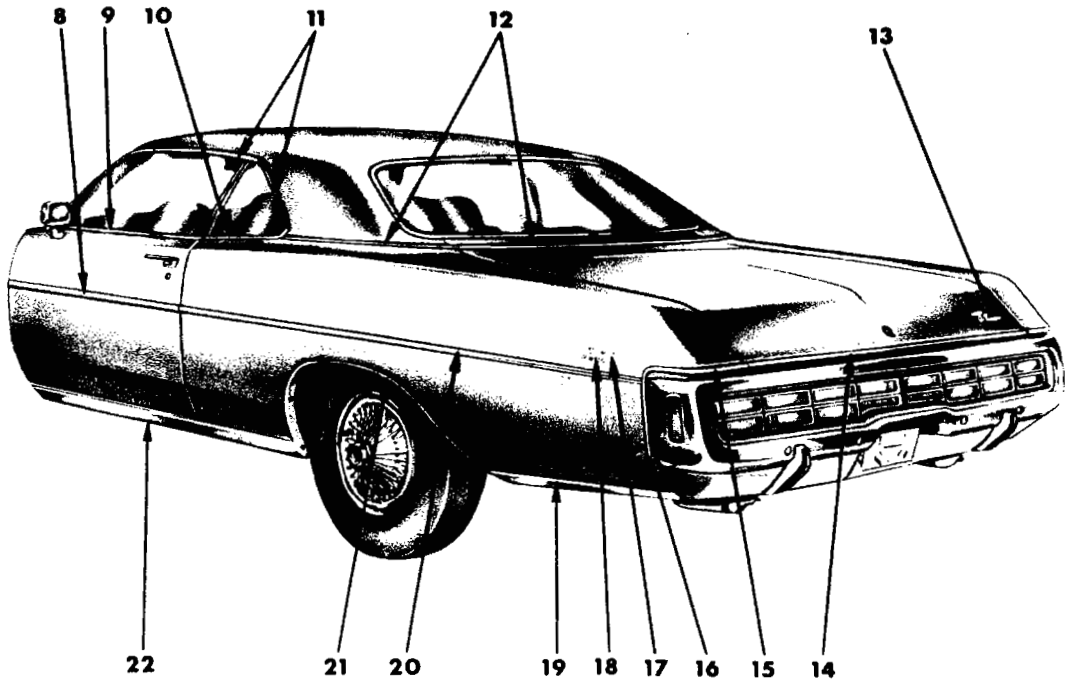

19a3482

1971
EXTERIOR VIEW - DODGE MONACO D-H 2 DOOR HARDTOP

REF. NO.	QTY	PART NUMBER	DESCRIPTION
1	1	2998 274	LETTER "D", Hood Front (15-06-16)
	1	2998 275	"O"
	1	2998 467	"D", Center
	1	2998 276	"G"
	1	2998 277	"E"
	10	9420 254	Nut
2	1	3419 950	MOULDING PACKAGE, Hood Front (15-25-2)
	8	152 334	Screw
3	1	2933 602-3	MOULDING PACKAGE, Body Front Pillar Drain Trough, Up to approx. June 1, 1971 (23-59-61)
	6	6024 271	Screw
	1	3683 304-5	MOULDING PACKAGE, Body Front Pillar Drain Trough, After approx. June 1, 1971 (23-59-61)
	6	6024 271	Screw
4	1	3419 482-3	MOULDING PACKAGE, Body Frt. Lwr. Pillar (23-23-14)
	1	6028 674	Screw
5	2	3620 366	MOULDING PACKAGE, Fender Side, Black (12-15-2)
	2	3620 367	Blue (12-15-2)
	2	3620 368	Green (12-15-2)
	2	3620 369	Gold (12-15-2)
	1	6006 496	Retainer
	2	6029 259	Nut
	1	6003 134	Retainer
	6	6003 133	Retainer
	6	6024 271	Screw
6	1	2933 266-7	MOULDING PACKAGE, Fender Wheel Opng. (12-15-2)
	7	6028 545	Screw
7	1	3579 086-7	MOULDING PACKAGE, Fender Frt. Extension (12-15-2)
	6	9431 768	Screw
	4	152 335	Screw
8	2	3620 243	MOULDING PACKAGE, Door, Black (23-23-32)
	2	3620 267	Blue (23-23-32)
	2	3620 272	Green (23-23-32)
	2	3620 273	Gold (23-23-32)
	7	6003 133	Retainer
	7	6024 271	Screw
	1	6003 134	Retainer
	1	6029 259	Nut
9	1	2933 722-3	MOULDING PACKAGE, Door Outside Belt (23-23-32)
	6	6002 782	Retainer
10	1	2933 610-1	MOULDING and T/PLATE, Qtr. Outside Belt (23-23-39)
	6	6002 782	Retainer and Seal
11	1	3579 598-9	MOULDING PACKAGE, Roof Side Drain Trough, Front and Rear (23-59-61)
	4	6024 271	Screw
12	1	3579 124-5	MOULDING PACKAGE, Deck Opng. Upr. Pnl. (23-23-31)
	4	6002 192	Retainer
13	1	3570 339	NAME PLATE, Deck Lid (23-19-114)
14	1	3620 223	MOULDING PACKAGE, Deck Lid (23-23-30)
	5	6024 271	Screw
15	1	3620 228-9	MOULDING PACKAGE, Qtr. Outside Bumper Periphery, Upr. (23-23-39)
	1	9432 446	Screw
16	1	3620 226-7	MOULDING PACKAGE, Qtr. Outside Bumper Periphery, Lwr. (23-23-39)
	2	9432 446	Screw
17	2	3568 596	MEDALLION, Qtr. Outside, Brougham (23-34-334)
18	2	2839 929	NAME PLATE, Qtr. Outside, "Monaco" (23-34-238)
	6	6027 352	Nut
19	1	3620 268-9	MOULDING PACKAGE, Qtr. Outside Finish, Rear (23-23-39)
	2	6002 601	Retainer
	3	6024 271	Screw
	2	6028 057	Screw
20	2	3620 249	MOULDING PACKAGE, Qtr. Outside, Black (23-23-39)
	2	3620 277	Blue (23-23-39)
	2	3620 284	Green (23-23-39)
	2	3620 285	Gold (23-23-39)
	12	6003 133	Retainer
	12	6024 271	Screw
	1	6006 496	Retainer
	1	6027 625	Nut
21	1	3514 078-9	MOULDING PACKAGE, Qtr. Outside Wheel Opng. (23-23-39)
	7	6028 545	Screw
22	1	2933 802-3	MOULDING PACKAGE, Body Side Sill (23-23-2)
	8	6002 601	Retainer
	5	6028 548	Screw
	2	6028 057	Screw

All Packages Include Attaching Parts

Part Type Code is Indicated in Parentheses

1971
EXTERIOR VIEW - DODGE MONACO D-H 2 DOOR HARDTOP

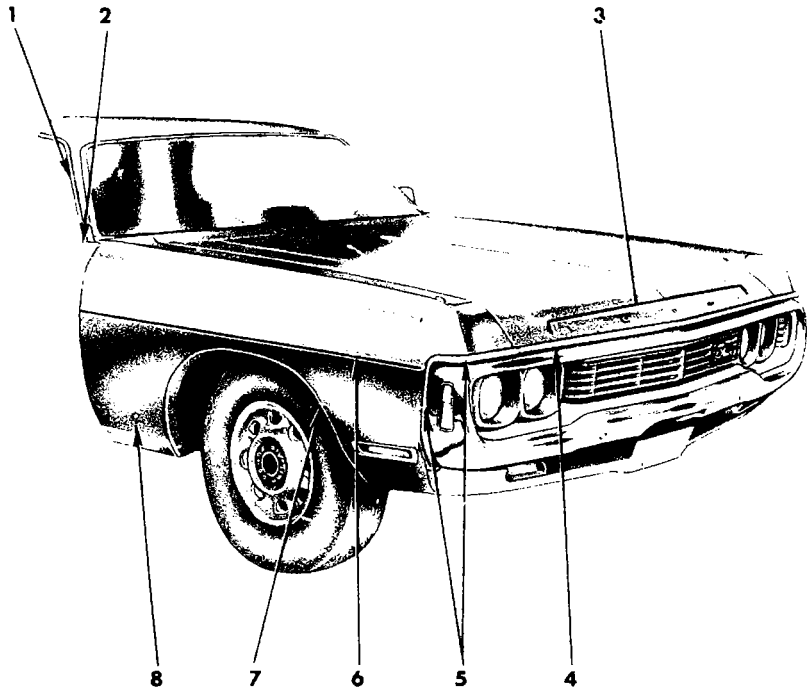

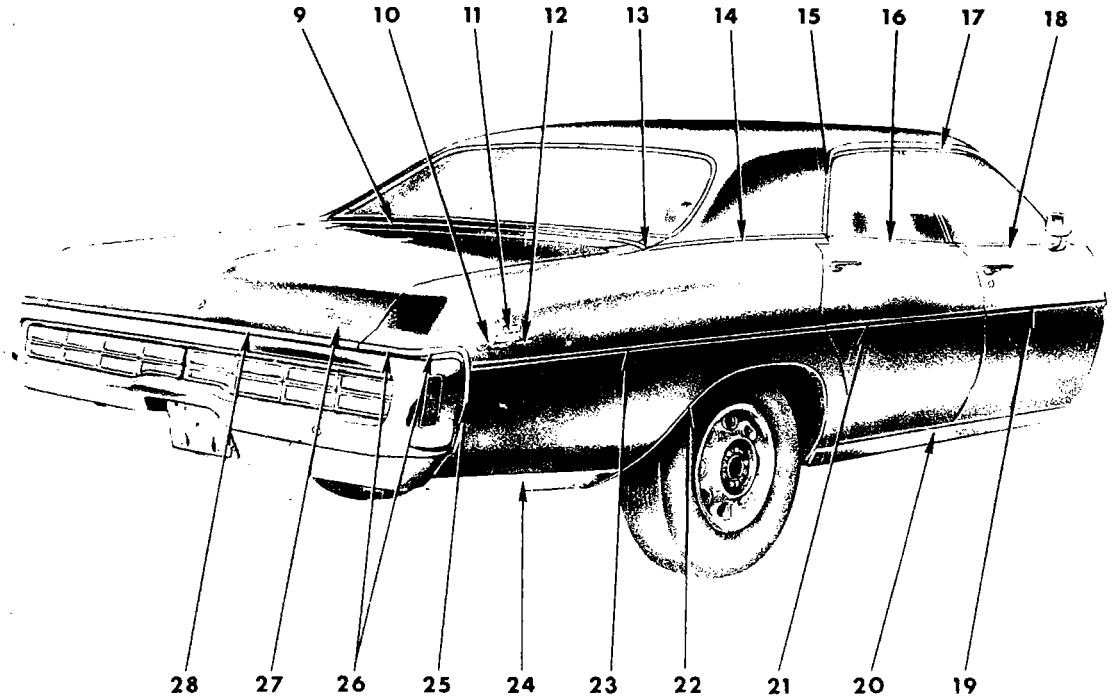

19a3637

1971
EXTERIOR VIEW - DODGE MONACO D-H 4 DOOR HARDTOP

REF. NO.	QTY	PART NUMBER	DESCRIPTION
1	1	2933 600-1	MOULDING PACKAGE, Body Front Pillar Drain Trough, Up to approx. June 1, 1971 (23-59-61)
	6	6024 271	Screw
	1	3685 124-5	MOULDING PACKAGE, Body Front Pillar Drain Trough, After approx. June 1, 1971
	10	6024 271	Screw
2	1	3419 482-3	MOULDING PACKAGE, Body Frt. Lwr. Pillar (23-23-14)
	1	6028 674	Screw
3	1	2998 274	LETTER "D", Hood Front Name (15-06-16)
	1	2998 275	"O"
	1	2998 467	"D" 1 2998 277 "E"
	1	2998 276	"G" 10 9420 254 Nut
4	1	3419 950	MOULDING PACKAGE, Hood Front (15-25-2)
	8	152 334	Screw
5	1	3579 086-7	MOULDING PACKAGE, Fender Frt. Extension (12-15-2)
	6	9431 768	Screw 4 152 335 Screw
6	2	3620 366	MOULDING PACKAGE, Fender Side, Black (12-15-2)
	2	3620 367	Blue (12-15-2)
	2	3620 368	Green (12-15-2)
	2	3620 369	Gold (12-15-2)
	1	6006 496	Retainer
	1	6003 134	Retainer 2 6029 259 Nut
	6	6003 133	Retainer 6 6024 271 Screw
7	1	2933 266-7	MOULDING PACKAGE, Fender Wheel Opng. (12-15-2)
	7	6028 545	Screw
8	1	2785 540	MEDALLION, Fender Side, Rt., Pentastar (12-15-21)
9	1	2933 608-9	MOULDING PACKAGE, Deck Opng. Upr. Pnl. (23-23-31)
	9	6002 192	Fastener
	8	6002 920	Retainer
	8	9426 926	Nut
10	2	2839 929	NAME PLATE, Qtr. Outside, "Monaco" (23-34-238)
	6	6027 352	Nut
11	2	3568 596	MEDALLION, Qtr. Outside, "Brougham" (23-34-334)
12	2	2964 634	NAME PLATE, Qtr. Outside, "Brougham" (23-34-238)
	4	6027 352	Nut
13	1	2933 606-7	MOULDING PACKAGE, Deck Opng. Upr. Pnl., Outer Corner (23-23-31)
	2	9420 294	Nut w/Seal
14	1	2933 596-7	MOULDING PACKAGE, Qtr. Outside Belt (23-23-39)
	9	6002 192	Retainer
	8	6002 920	Retainer 8 9426 926 Nut
15	1	2933 588-9	MOULDING PACKAGE, Roof Side Drain Trough, Rear, Up to approx. June 1, 1971 (23-59-61)
	4	6024 271	Screw
	1	3683 308-9	MOULDING PACKAGE, Roof Side Drain Trough, Rear, After approx. June 1, 1971
	6	6024 271	Screw
16	1	2933 912-3	MOULDING PACKAGE, Rear Door Outside Belt (23-23-33)
	5	6002 782	Retainer
17	1	3579 102-3	MOULDING PACKAGE, Roof Side Drain Trough, Front, Up to approx. June 1, 1971 (23-59-61)
	4	6024 271	Screw
	1	3683 306-7	MOULDING PACKAGE, Roof Side Drain Trough, Front, After approx. June 1, 1971
	4	6024 271	Screw
18	1	2933 764-5	MOULDING PACKAGE, Frt. Door Outside Belt (23-23-32)
	10	6002 782	Retainer
19	2	3620 242	MOULDING PACKAGE, Frt. Door, Black (23-23-32)
	2	3620 274	Blue (23-23-32)
	2	3620 275	Green (23-23-32)
	2	3620 276	Gold (23-23-32)
	5	6003 133	Retainer 5 6024 271 Screw
	1	6003 134	Retainer 1 6029 259 Nut
20	1	2933 802-3	MOULDING PACKAGE, Body Side Sill (23-23-2)
	8	6002 601	Retainer
	5	6028 548	Screw 2 6028 057 Screw
21	1	3620 244-5	MOULDING PACKAGE, Rear Door, Black (23-23-33)
	1	3620 278-9	Blue (23-23-33)
	1	3620 280-1	Green (23-23-33)
	1	3620 282-3	Gold (23-23-33)
	4	6003 133	Retainer 4 6024 271 Screw
	2	6003 134	Retainer 2 6029 259 Nut
22	1	3514 078-9	MOULDING PACKAGE, Qtr. Outside Wheel Opening (23-23-39)
	7	6028 545	Screw
23	1	3620 246-7	MOULDING PACKAGE, Qtr. Outside, Black (23-23-39)
	1	3620 286-7	Blue (23-23-39)
	1	3620 294-5	Green (23-23-39)
	1	3620 296-7	Gold (23-23-39)
	9	6003 133	Retainer
	9	6024 271	Screw
	1	6006 496	Retainer
	1	6027 625	Nut
24	1	3620 268-9	MOULDING PACKAGE, Qtr. Outside Finish, Rear (23-23-39)
	2	6002 601	Retainer
	3	6024 271	Screw
	2	6028 057	Screw
25	1	3620 226-7	MOULDING PACKAGE, Qtr. Outside Bumper Periphery, Lwr. (23-23-39)
	2	9432 446	Screw
26	1	3620 228-9	MOULDING PACKAGE, Qtr. Outside Bumper Periphery, Upr. (23-23-39)
	1	9432 446	Screw
27	1	3570 339	NAME PLATE, Deck Lid, "Monaco" (23-19-114)
28	1	3620 223	MOULDING PACKAGE, Deck Lid (23-23-30)
	5	6024 271	Screw

All Packages Include Attaching Parts

Part Type Code is Indicated in Parentheses

1971
EXTERIOR VIEW - DODGE MONACO D-H 4 DOOR HARDTOP

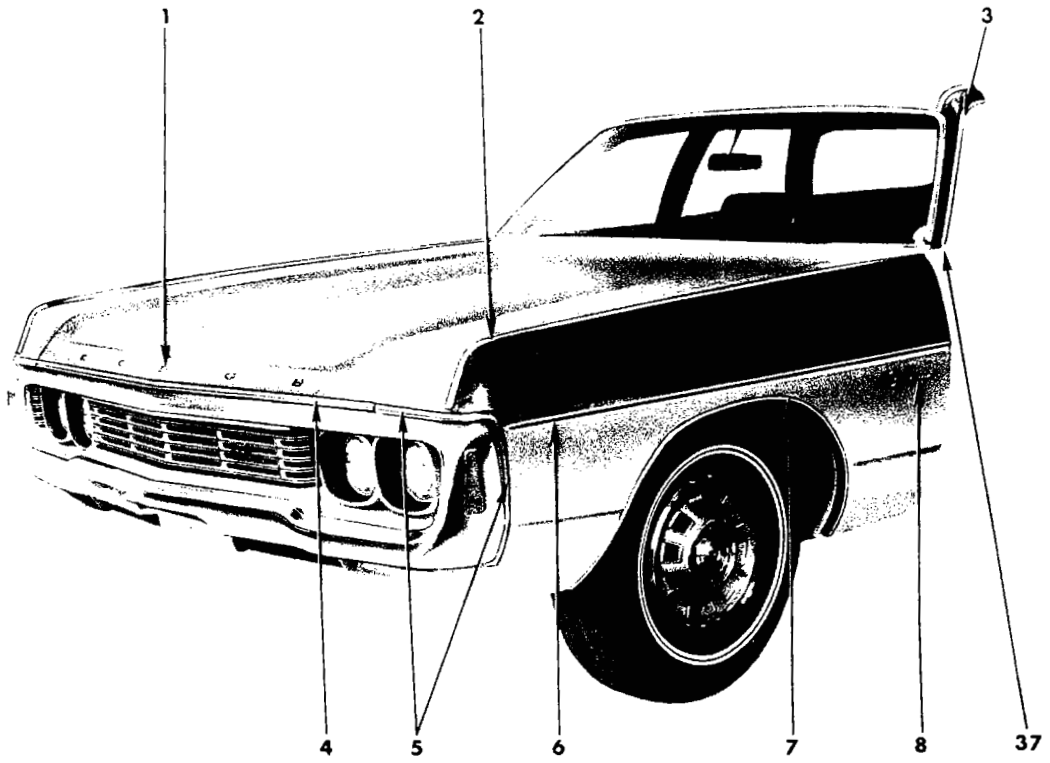

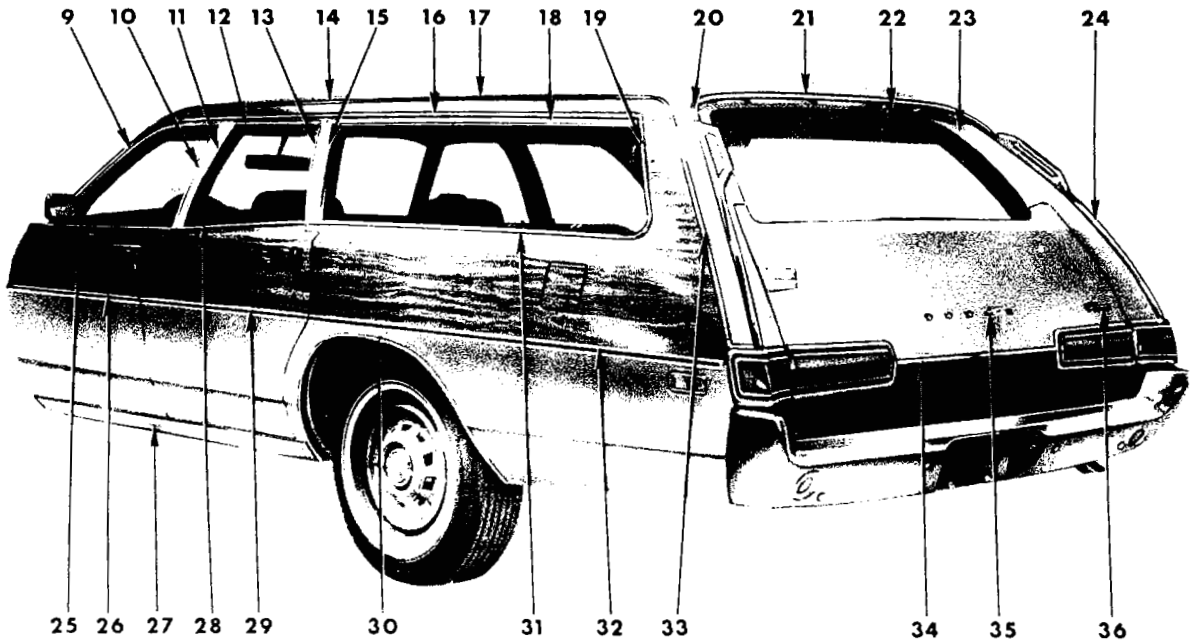

19a3689 A

1971
EXTERIOR VIEW - DODGE MONACO D-H STATION WAGON

REF. NO.	QTY	PART NUMBER	DESCRIPTION
1	1	2998 274	LETTER "D", Hood Front (15-06-16)
	1	2998 275	"O"
	1	2998 467	"D"
	1	2998 276	"G"
	1	2998 277	"E"
	10	9420 254	Nut
2	1	3620 362-3	MOULDING PACKAGE, Fender Peak (12-15-2)
	1	6002 985	Retainer
	1	---- ---	Nut
3	1	2933 568-9	MOULDING PACKAGE, Body Front Pillar Drain Trough (23-59-61)
	10	6024 271	Screw
4	1	3419 950	MOULDING PACKAGE, Hood Front (15-25-2)
	8	152 334	Screw
5	1	3579 086-7	MOULDING PACKAGE, Fender Frt. Extension (12-15-2)
	6	9431 768	Screw
	4	152 335	Screw
6	2	3620 366	MOULDING PACKAGE, Fender Side, Black (12-15-2)
	1	6006 496	Retainer
	2	6029 259	Nut
	1	6003 134	Retainer
	6	6003 133	Retainer
	6	6024 271	Screw
7	1	2933 266-7	MOULDING PACKAGE, Fender Wheel Opng. (12-15-2)
	7	6028 545	Screw
8	2	3612 456	NAME PLATE, Fender, "Monaco" (12-15-21)
9	1	2893 698-9	MOULDING, Frt. Door Wdo. Opng. Frame, Upr. (23-23-32)
10	1	2893 700-1	MOULDING, Frt. Door Wdo. Opng. Frame, Rr. (23-23-32)
11	1	2893 700	MOULDING, Rear Door Wdo. Opng. Frame, Frt., Lt. (23-23-33)
	1	2893 701	MOULDING, Rear Door Wdo. Opng. Frame, Frt., Rt. (23-23-33)
12	1	2893 724-5	MOULDING, Rear Door Wdo. Opng. Frame, Upr. (23-23-33)
13	1	2893 728-9	MOULDING, Rear Door Wdo. Opng. Frame, Rr. (23-23-33)
14	1	3620 090-1	MOULDING PACKAGE, Roof Side Wood Grain Periphery (23-23-42)
	24	6002 871	Retainer
	24	6026 581	Weld Stud
15	1	2893 256-7	MOULDING, Qtr. Wdo. Outside, Frt., Prime (23-23-73)
	1	2894 870-1	MOULDING, Qtr. Wdo. Outside, Frt., Finish (23-23-73)
16	1	3419 450-1	MOULDING PACKAGE, Roof Side Drain Trough (23-59-61)
	12	6024 271	Screw
17	1	3506 906-7	MOULDING, Qtr. Pnl. Outside Pillar Rear, Upr. (23-23-60)
	AR	6002 871	Retainer
	2	6026 581	Weld Stud
	4	6029 062	Screw
18	1	2893 258-9	MOULDING, Qtr. Wdo. Outside, Upr., Prime (23-23-73)
	1	2894 872-3	MOULDING, Qtr. Wdo. Outside, Upr., Finish (23-23-73)
19	1	3620 256-7	MOULDING PACKAGE, Qtr. Wdo. Outside, Rr. (23-23-73)
	7	6003 233	Retainer
	1	---- ---	Screw
20	1	2894 416-7	MOULDING, Roof Rear Air Deflector, End (23-23-61)
21	1	2894 418	MOULDING, Roof Rear Air Deflector, Center (23-23-61)
22	1	2894 445	MOULDING, Roof Pnl. Outside Tailgate Opng. Upr., Prime (23-23-60)
23	1	2894 442-3	MOULDING, Qtr. Pnl. Outside Tailgate Pillar, Upr. Tailgate Opng., Prime (23-23-60)
24	1	3440 736-7	MOULDING, Qtr. Pnl. Outside Tailgate Pillar, Upr., use w/Assist Handles (23-23-60)
	1	3440 778-9	MOULDING, Qtr. Pnl. Outside Tailgate Pillar, Upr., use w/o Assist Handles (23-23-60)
25	1	3620 252-3	MOULDING PACKAGE, Frt. Door Belt (23-23-32)
	1	6002 985	Retainer
	1	---- ---	Nut
	4	6003 233	Retainer
26	2	3620 242	MOULDING PACKAGE, Frt. Door, Black (23-23-32)
	5	6003 133	Retainer
	5	6024 271	Screw
	1	6003 134	Retainer
	1	6029 259	Nut
27	1	3514 046-7	MOULDING PACKAGE, Body Side Sill (23-23-2)
	16	6002 601	Retainer
	10	6028 545	Screw
	4	6028 057	Screw
28	1	3620 254-5	MOULDING PACKAGE, Rear Door Belt, Up to Type (23-23-33)
	5	6003 233	Retainer
	1	3613 638-9	MOULDING, Rear Door Belt (w/Staked on Retainers) After Type (23-23-33)
29	1	3620 244-5	MOULDING PACKAGE, Rear Door, Black (23-23-33)
	4	6003 133	Retainer 4 6024 271 Screw
	2	6003 134	Retainer 2 6029 259 Nut
30	1	3419 436-7	MOULDING PACKAGE, Qtr. Outside Wheel Opening (23-23-39)
	16	6028 545	Screw

CONTINUED ON NEXT PAGE

All Packages Include Attaching Parts

Part Type Code is Indicated in Parentheses

REF. NO.	QTY	PART NUMBER	DESCRIPTION
31	1	3620 304-5	MOULDING PACKAGE, Qtr. Wdo. Outside Belt (23-23-39)
	9	6003 133	Retainer
	9	6024 271	Screw
32	1	3620 250-1	MOULDING PACKAGE, Qtr. Outside, Black (23-23-39)
	11	6003 133	Retainer
	11	6024 271	Screw
33	1	3620 270-1	MOULDING PACKAGE, Qtr. Pnl. Outside Pillar, Lwr. (23-23-60)
	5	6002 871	Retainer
	5	6024 271	Screw
34	1	3620 222	MOULDING PACKAGE, Tailgate Outside (23-23-61)
	5	6002 772	Retainer
35	2	2998 274	LETTER "D", Tailgate Outside Panel (23-54-11)
	1	2998 275	"O"
	1	2998 276	"G"
	1	2998 277	"E"
	10	9420 263	Nut
36	1	2839 929	NAME PLATE, Tailgate Outside Panel, "Monaco" (23-54-11)
	3	9420 263	Nut
37	1	3419 482-3	MOULDING PACKAGE, Body Frt. Lwr. Pillar (23-23-14)
	1	6028 674	Screw

All Packages Include Attaching Parts

Part Type Code is Indicated in Parentheses

1971
EXTERIOR VIEW - DODGE MONACO D-H STATION WAGON

NOTES

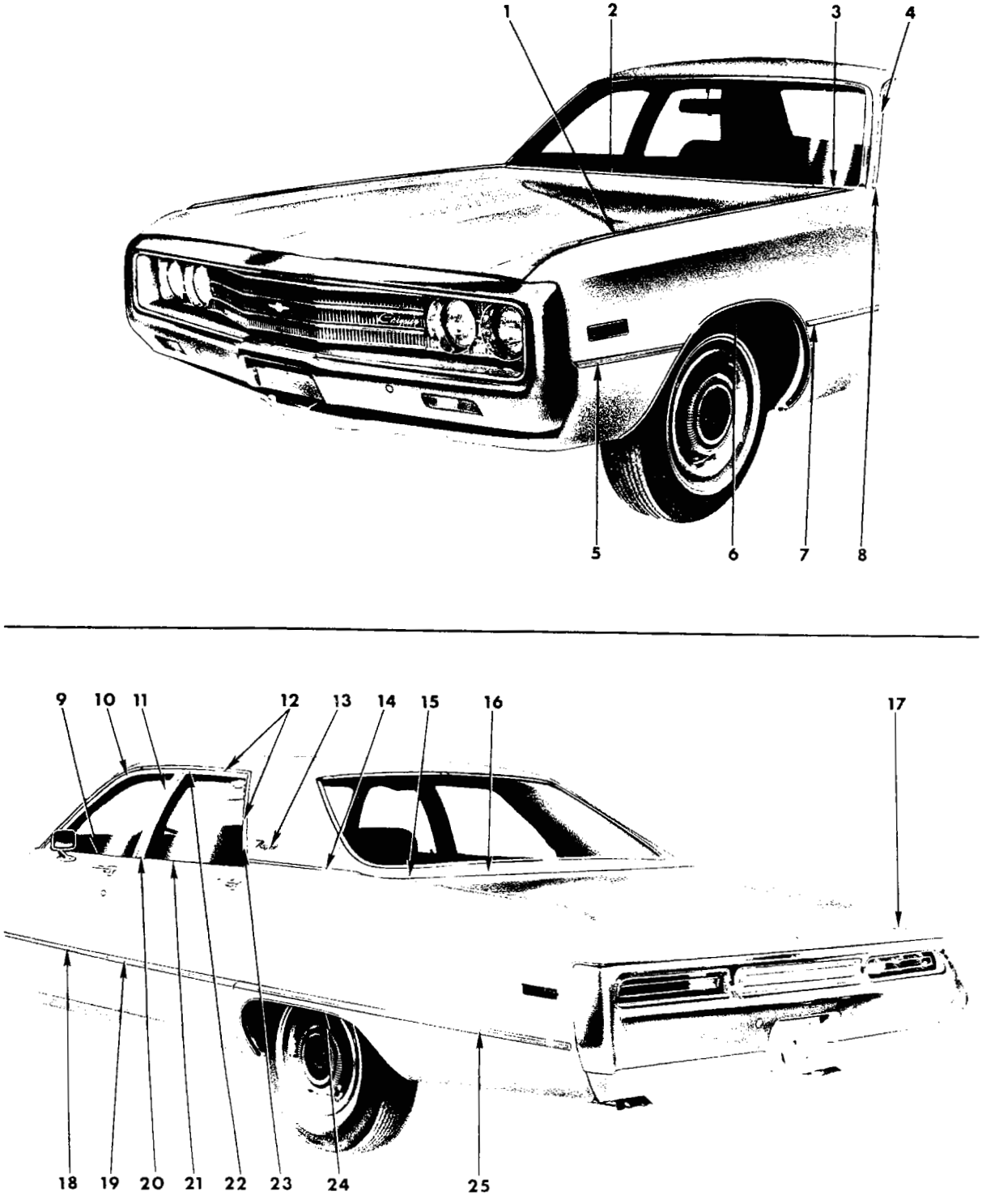

14835-4

1971
EXTERIOR VIEW - CHRYSLER NEWPORT C-E 4 DOOR SEDAN

REF. NO.	QTY	PART NUMBER	DESCRIPTION
1	1	2933 334-5	MOULDING PACKAGE, Fender Outside Peak (12-15-2)
	18	6002 713	Clip
2	1	2898 828	MOULDING, Hood Top Rear (15-25-2)
3	1	2949 488-9	MOULDING, Fender Hood Extension, Rear (12-15-2)
4	1	2933 568-9	MOULDING PACKAGE, Body Front Pillar Drain Trough (23-59-61)
	10	6024 271	Screw
5	1	3620 014-5	MOULDING PACKAGE, Fender Side, Frt. (12-15-2)
	5	6002 754	Retainer
	5	6024 271	Screw
6	1	3514 056-7	MOULDING PACKAGE, Fender Wheel Opng. (12-15-2)
	8	6028 545	Screw
7	1	3620 016-7	MOULDING PACKAGE, Fender Side, Rear (12-15-2)
	1	6002 754	Retainer
	1	6024 271	Screw
	2	6002 335	Retainer
8	1	3419 482-3	MOULDING PACKAGE, Body Frt. Lwr. Pillar (23-23-14)
	1	6028 674	Screw
9	1	3419 432-3	MOULDING PACKAGE, Frt. Door Belt, use w/ Fndr. Hood Mtg. (23-23-32)
	1	3419 434-5	MOULDING PACKAGE, Frt. Door Belt, use w/o Fndr. Hood Mtg. (23-23-32)
	14	6002 713	Clip
10	1	2893 698-9	MOULDING, Frt. Door Wdo. Opng. Frame, Upr. (23-23-32)
11	1	2893 700-1	MOULDING, Frt. Door Wdo. Opng. Frame, Rr. (23-23-32)
12	1	3419 390-1	MOULDING PACKAGE, Roof Side Drain Trough, Front and Rear (23-59-61)
	16	6024 271	Screw
13	2	3505 788	NAME PLATE, Qtr. Outside, "Newport" (23-34-238)
	4	9420 263	Nut
14	1	3419 314-5	MOULDING PACKAGE, Qtr. Outside Belt, Frt., Argent, use w/Vinyl Roof or Two Tone Paint (23-23-39)
	1	2933 376-7	MOULDING PACKAGE, Qtr. Outside Belt, Frt., Chrome (23-23-39)
	8	6002 192	Fastener
	2	6001 596	Retainer
	2	9420 254	Nut
15	1	3419 316-7	MOULDING PACKAGE, Qtr. Outside Belt, Rr., Argent, use w/Vinyl Roof or Two Tone Paint (23-23-39)
	1	2933 390-1	MOULDING PACKAGE, Qtr. Outside Belt, Rear, Chrome (23-23-39)
	4	9427 804	Screw
	2	6024 740	Seal
	2	9420 293	Nut
16	1	3419 318-9	MOULDING PACKAGE, Deck Opng. Upr. Pnl., Argent, use w/Vinyl Roof or Two Tone Paint (23-23-31)
	1	2933 416-7	MOULDING PACKAGE, Deck Opng. Upr. Pnl., Chrome (23-23-31)
	7	6002 936	Retainer 7 9426 925 Nut
17	1	3445 251	NAME PLATE, Deck Lid, "Chrysler" (23-19-114)
	AR	6002 852	Retainer
18	1	3620 020-1	MOULDING PACKAGE, Frt. Door (23-23-32)
	1	6002 335	Retainer 1 6029 259 Nut
	5	6002 754	Retainer 5 6024 271 Screw
19	1	3620 022-3	MOULDING PACKAGE, Rear Door (23-23-33)
	4	6002 754	Retainer
	4	6024 271	Screw
	2	6002 335	Retainer
	2	6029 259	Nut
20	1	2893 700	MOULDING, Rear Door Wdo. Opng. Frame, Frt., Lt. (23-23-33)
	1	2893 701	MOULDING, Rear Door Wdo. Opng. Frame, Frt., Rt. (23-23-33)
21	1	2933 464-5	MOULDING and T/PLATE PACKAGE, Rear Door Belt, Frt. to Rr. (23-23-33)
	16	6002 713	Retainer
22	1	2893 708-9	MOULDING, Rear Door Wdo. Opng. Frame, Upr. (23-23-33)
23	1	2893 712-3	MOULDING, Rear Door Wdo. Opng. Frame, Rr. (23-23-33)
24	1	3514 080-1	MOULDING PACKAGE, Qtr. Outside Wheel Opng. (23-23-39)
	6	9420 867	Nut w/Seal
	1	3620 220-1	MOULDING PACKAGE, Qtr. Outside Wheel Opng. Panel (23-23-39)
	5	6024 271	Screw
25	1	3620 026-7	MOULDING PACKAGE, Qtr. Outside (23-23-39)
	8	6002 754	Retainer
	8	6024 271	Screw
	2	6002 335	Retainer
	2	6029 259	Nut

All Packages Include Attaching Parts

Part Type Code is Indicated in Parentheses

1971

EXTERIOR VIEW - CHRYSLER NEWPORT C-E 4 DOOR SEDAN

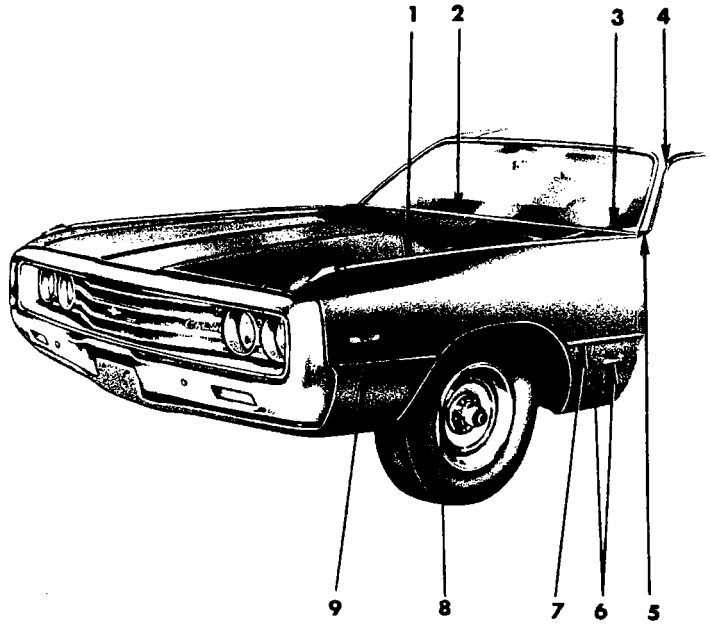

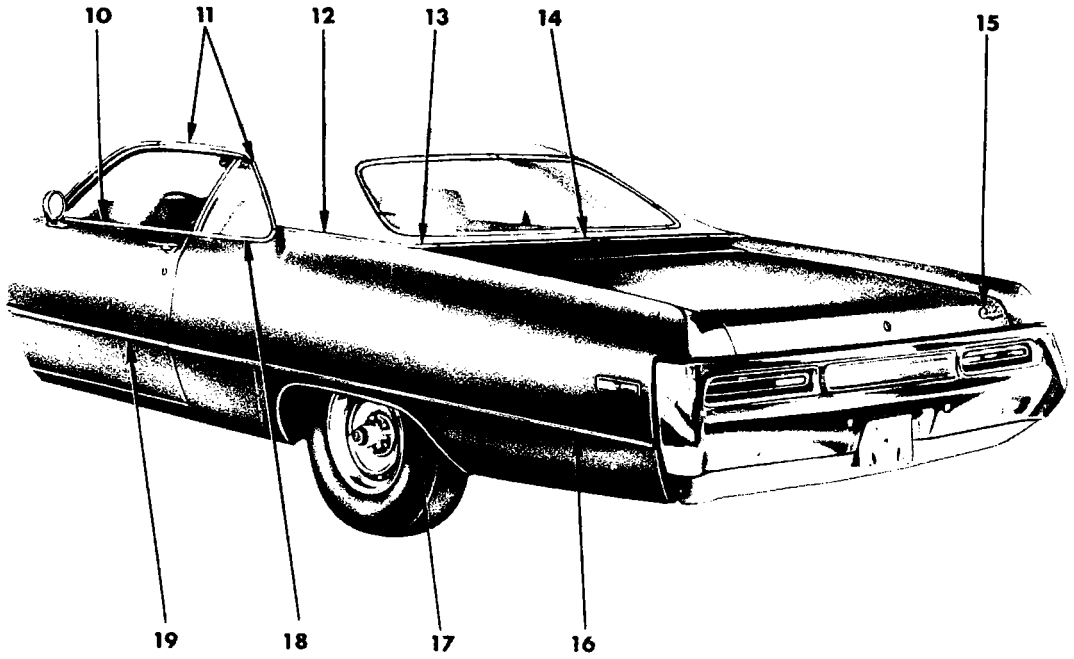

19a3483

1971
EXTERIOR VIEW - CHRYSLER NEWPORT C-E 2 DOOR HARDTOP

REF. NO.	QTY	PART NUMBER	DESCRIPTION
1	1	2933 334-5	MOULDING PACKAGE, Fender Outside Peak (12-15-2)
	18	6002 713	Clip
2	1	2898 828	MOULDING, Hood Top Rear (15-25-2)
3	1	2949 488-9	MOULDING, Fender Hood Extension, Rear (12-15-2)
4	1	2933 602-3	MOULDING PACKAGE, Body Front Pillar Drain Trough, Up to approx. June 1, 1971 (23-59-61)
	6	6024 271	Screw
	1	3683 304-5	MOULDING PACKAGE, Body Front Pillar Drain Trough, After approx. June 1, 1971 (23-59-61)
	6	6024 271	Screw
5	1	3419 482-3	MOULDING PACKAGE, Body Frt. Lwr. Pillar (23-23-14)
	1	6028 674	Screw
6	2	3505 033	NAME PLATE, Fender Side, "Newport" (12-15-21)
	AR	6002 852	Retainer
	1	2785 540	MEDALLION, Fender Side, Rt., Pentastar (12-15-21)
7	1	3620 016-7	MOULDING PACKAGE, Fender Side, Rear (12-15-2)
	1	6002 754	Retainer
	1	6024 271	Screw
	2	6002 335	Retainer
8	1	3514 056-7	MOULDING PACKAGE, Fender Wheel Opng. (12-15-21)
	8	6028 545	Screw
9	1	3620 014-5	MOULDING PACKAGE, Fender Side, Frt. (12-15-2)
	5	6002 754	Retainer
	5	6024 271	Screw
10	1	3419 428-9	MOULDING PACKAGE, Door Outside Belt, use w/Turn Indicator Fndr. Hood Mtg. (23-23-32)
	1	3419 430-1	MOULDING PACKAGE, Door Outside Belt, use w/o Turn Indicator Fndr. Hood Mtg. (23-23-32)
	16	6002 713	Clip
11	1	3419 388-9	MOULDING PACKAGE, Roof Side Drain Trough, Front and Rear (23-59-61)
	6	6024 271	Screw
12	1	3419 310-1	MOULDING PACKAGE, Qtr. Outside Belt, Frt., Argent, use w/Vinyl Roof or Two Tone Paint (23-23-39)
	1	2933 430-1	MOULDING PACKAGE, Qtr. Outside Belt, Frt., Chrome (23-23-39)
	4	6002 297	Retainer
	4	9420 254	Nut w/Seal
	6	6002 192	Fastener
13	1	3419 312-3	MOULDING PACKAGE, Qtr. Outside Belt, Rear, Argent, use w/Vinyl Roof or Two Tone Paint (23-23-39)
	1	2933 440-1	MOULDING PACKAGE, Qtr. Outside Belt, Rear, Chrome (23-23-39)
	4	6023 898	Screw
	2	9420 293	Nut w/Seal
14	1	3419 320-1	MOULDING PACKAGE, Deck Opng. Upr. Pnl., Argent, use w/Vinyl Roof or Two Tone Paint (23-23-31)
	1	2933 324-5	MOULDING PACKAGE, Deck Opng. Upr. Pnl., Chrome (23-23-31)
	14	6002 709	Retainer
	14	9426 925	Nut
15	1	3445 251	NAME PLATE, Deck Lid, "Chrysler" (23-19-114)
	AR	6002 852	Retainer
16	1	3620 024-5	MOULDING PACKAGE, Qtr. Outside (23-23-39)
	10	6002 754	Retainer
	10	6024 271	Screw
	1	6002 335	Retainer
	1	6029 259	Nut
17	1	3514 080-1	MOULDING PACKAGE, Qtr. Outside Wheel Opening (23-23-39)
	6	9420 867	Nut w/Seal
	1	3620 220-1	MOULDING PACKAGE, Qtr. Outside Wheel Opng. Panel (23-23-39)
	5	6024 271	Screw
18	1	2933 374-5	MOULDING PACKAGE, Qtr. Wdo. Outside Belt (23-23-39)
	4	6027 459	Screw
19	1	3620 018-9	MOULDING PACKAGE, Door Outside (23-23-32)
	6	6002 754	Retainer
	6	6024 271	Screw
	1	6002 335	Retainer
	1	6029 259	Nut

All Packages Include Attaching Parts

Part Type Code is Indicated in Parentheses

1971
EXTERIOR VIEW - CHRYSLER NEWPORT C-E 2 DOOR HARDTOP

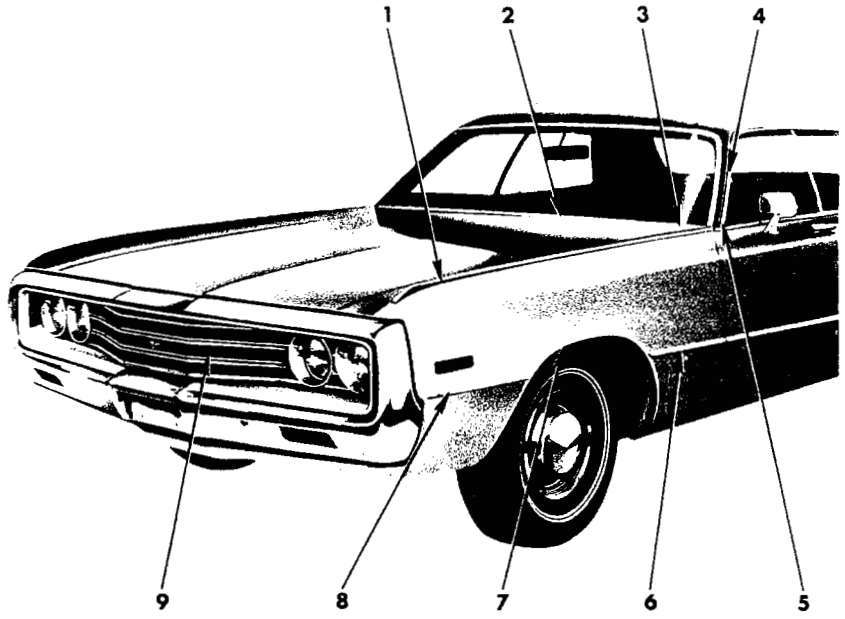

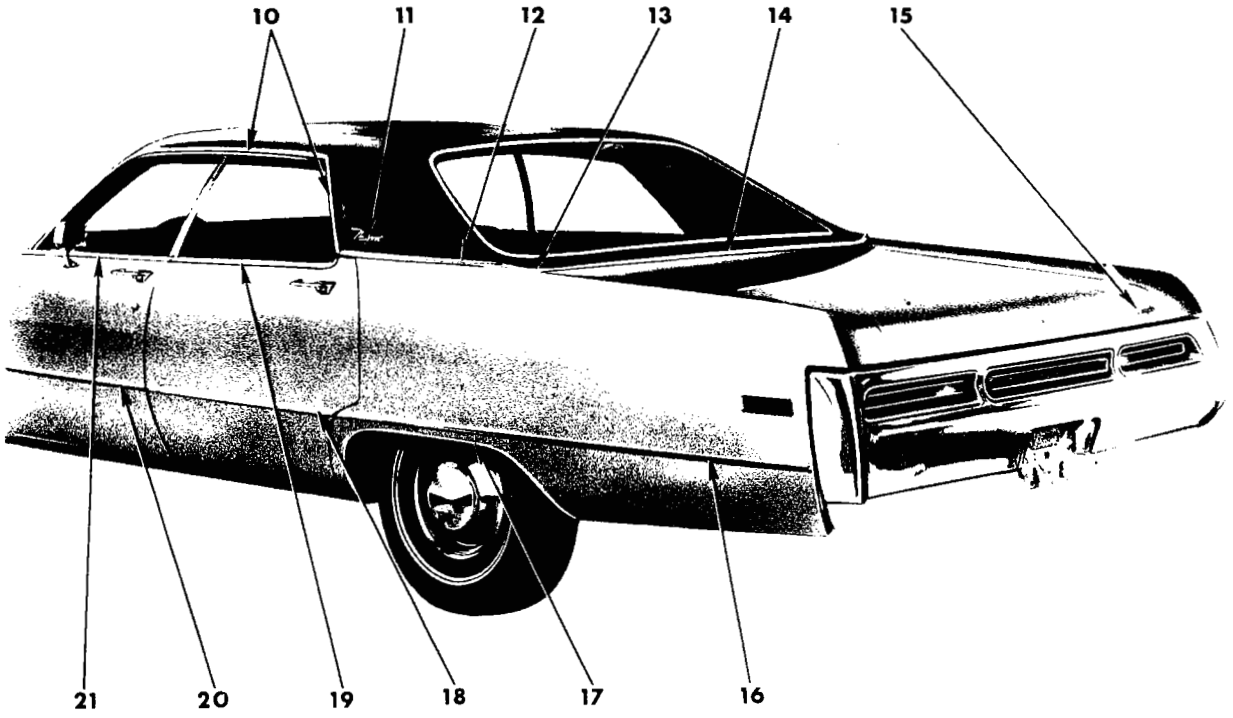

19a3661

1971
EXTERIOR VIEW - CHRYSLER NEWPORT C-E 4 DOOR HARDTOP

REF. NO.	QTY	PART NUMBER	DESCRIPTION
1	1	2933 334-5	MOULDING PACKAGE, Fender Outside Peak (12-15-2)
	18	6002 713	Clip
2	1	2898 828	MOULDING, Hood Top Rear (15-25-2)
3	1	2949 488-9	MOULDING, Fender Hood Extension, Rear (12-15-2)
4	1	2933 600-1	MOULDING PACKAGE, Body Front Pillar Drain Trough, Up to approx. June 1, 1971 (23-59-61)
	6	6024 271	Screw
	1	3685 124-5	MOULDING PACKAGE, Body Front Pillar Drain Trough, After approx. June 1, 1971
	10	6024 271	Screw
5	1	3419 482-3	MOULDING PACKAGE, Body Frt. Lwr. Pillar (23-23-14)
	1	6028 674	Screw
6	1	3620 016-7	MOULDING PACKAGE, Fender Side, Rear (12-15-2)
	1	6002 754	Retainer
	2	6002 335	Retainer 1 6024 271 Screw
7	1	3514 056-7	MOULDING PACKAGE, Fender Wheel Opng. (12-15-2)
	8	6028 545	Screw
8	1	3620 014-5	MOULDING PACKAGE, Fender Side, Frt. (12-15-2)
	5	6002 754	Retainer 5 6024 271 Screw
9	1	3443 709	GRILLE, Radiator (7-16-11)
10	1	2964 846-7	MOULDING, Roof Side Drain Trough, Front and Rear, Up to approx. June 1, 1971 (23-59-61)
	8	6024 271	Screw
	1	3683 546-7	MOULDING PACKAGE, Roof Side Drain Trough, Front and Rear, After approx. June 1, 1971 (23-59-61)
	8	6024 271	Screw
11	2	3505 788	NAME PLATE, Qtr. Outside, "Newport" (23-34-238)
	4	9420 263	Nut
12	1	3419 314-5	MOULDING PACKAGE, Qtr. Outside Belt, Frt., Argent (23-23-39)
	1	2933 376-7	MOULDING PACKAGE, Qtr. Outside Belt, Frt., Chrome (23-23-39)
	8	6002 192	Fastener
	2	6001 596	Retainer 2 9420 254 Nut
13	1	3419 316-7	MOULDING PACKAGE, Qtr. Outside Belt, Rr., Argent (23-23-39)
	1	2933 390-1	MOULDING PACKAGE, Qtr. Outside Belt, Rr., Chrome (23-23-39)
	4	9427 804	Screw
	2	6024 740	Seal 2 9420 293 Nut
14	1	3419 318-9	MOULDING PACKAGE, Deck Opng. Upr. Pnl., Argent (23-23-31)
	1	2933 416-7	Chrome (23-23-31)
	7	6002 936	Retainer 7 9426 925 Nut
15	1	3445 251	NAME PLATE, Deck Lid, "Chrysler" (23-19-114)
	AR	6002 852	Retainer
16	1	3620 026-7	MOULDING PACKAGE, Qtr. Outside (23-23-39)
	8	6002 754	Retainer
	8	6024 271	Screw
	2	6002 335	Retainer
	2	6029 259	Nut
17	1	3514 080-1	MOULDING PACKAGE, Qtr. Outside Wheel Opening (23-23-39)
	8	6028 545	Screw
	1	3620 220-1	MOULDING PACKAGE, Qtr. Outside Wheel Opng. Pnl. (23-23-39)
	5	6024 271	Screw
18	1	3620 022-3	MOULDING PACKAGE, Rear Door (23-23-33)
	4	6002 754	Retainer
	4	6024 271	Screw
	2	6002 335	Retainer
	2	6029 259	Nut
19	1	2933 464-5	MOULDING and T/PLATE PACKAGE, Rear Door Outside Belt, Frt. to Rear (23-23-33)
	16	6002 713	Retainer
20	1	3620 020-1	MOULDING PACKAGE, Frt. Door (23-23-32)
	1	6002 335	Retainer
	1	6029 259	Nut
	5	6002 754	Retainer
	5	6024 271	Screw
21	1	3419 432-3	MOULDING PACKAGE, Frt. Door Outside Belt, use w/Turn Indicator Fender Hood Mtg. (23-23-32)
	1	3419 434-5	MOULDING PACKAGE, Frt. Door Outside Belt, use w/o Turn Indicator Fender Hood Mtg. (23-23-32)
	14	6002 713	Clip and Seal

All Packages Include Attaching Parts

Part Type Code is Indicated in Parentheses

1971
EXTERIOR VIEW - CHRYSLER NEWPORT C-E 4 DOOR HARDTOP

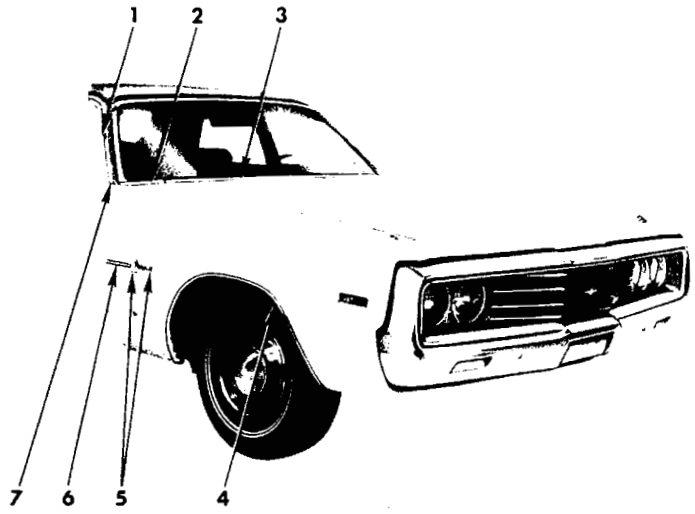

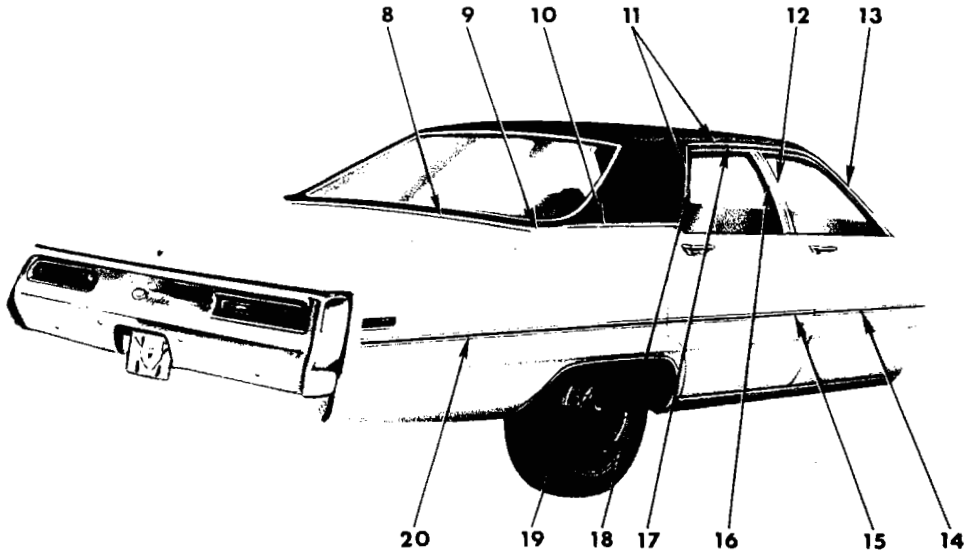

19a3721

1971
EXTERIOR VIEW - CHRYSLER NEWPORT ROYAL C-E 4 DOOR SEDAN (SPRING SPECIAL)

REF. NO.	QTY	PART NUMBER	DESCRIPTION
1	1	2933 568-9	MOULDING PACKAGE, Body Front Pillar Drain Trough (23-59-61)
	10	6024 271	Screw
2	1	2949 488-9	MOULDING, Fender Hood Extension, Rear (12-15-2)
3	1	2898 828	MOULDING, Hood Top Rear (15-25-2)
4	1	3514 056-7	MOULDING PACKAGE, Fender Wheel Opng. (12-15-2)
	8	6028 545	Screw
5	2	3613 640	NAME PLATE, Fender Side, "Royal" (12-15-21)
	2	3613 641	"Newport" (12-15-21)
6	2	3620 523	MOULDING PACKAGE, Fender Rear, Black (12-15-2)
	1	6003 133	Retainer
	1	6024 271	Screw
	1	6000 709	Retainer
	1	6029 259	Nut
7	1	3419 482-3	MOULDING PACKAGE, Body Frt. Lwr. Pillar (23-23-14)
	1	6028 674	Screw
8	1	3419 318-9	MOULDING PACKAGE, Deck Opng. Upr. Pnl., Argent, use w/Vinyl Roof or Two Tone Paint (23-23-31)
	1	2933 416-7	MOULDING PACKAGE, Deck Opng. Upr. Pnl., Chrome (23-23-31)
	7	6002 936	Retainer
	7	9426 925	Nut
9	1	3419 316-7	MOULDING PACKAGE, Qtr. Outside Belt, Rear, Argent, use w/Vinyl Roof or Two Tone Paint (23-23-39)
	1	2933 390-1	MOULDING PACKAGE, Qtr. Outside Belt, Rear, Chrome (23-23-39)
	4	9427 804	Screw
	2	6024 740	Seal
	2	9420 293	Nut
10	1	3419 314-5	MOULDING PACKAGE, Qtr. Outside Belt, Frt., Argent, use w/Vinyl Roof or Two Tone Paint (23-23-39)
	1	2933 376-7	MOULDING PACKAGE, Qtr. Outside Belt, Frt., Chrome (23-23-39)
	8	6002 192	Fastener
	2	6001 596	Retainer
	2	9420 254	Nut
11	1	3419 390-1	MOULDING PACKAGE, Roof Side Drain Trough, Front and Rear (23-59-61)
	16	6024 271	Screw
12	1	2893 700-1	MOULDING, Frt. Door Wdo. Opng. Frame, Rr. (23-23-32)
13	1	2893 698-9	MOULDING, Frt. Door Wdo. Opng. Frame, Upr. (23-23-32)
14	2	3620 519	MOULDING PACKAGE, Frt. Door, Black (23-23-32)
	5	6002 754	Retainer
	5	6024 271	Screw
	1	6002 335	Retainer
	1	6029 259	Nut
15	2	3620 522	MOULDING PACKAGE, Rear Door, Black (23-23-33)
	4	6002 754	Retainer
	4	6024 271	Screw
	2	6002 335	Retainer
	2	6029 259	Nut
16	1	2893 700	MOULDING, Rear Door Wdo. Opng. Frame, Frt., Lt. (23-23-33)
	1	2893 701	MOULDING, Rear Door Wdo. Opng. Frame, Frt., Rt. (23-23-33)
17	1	2893 708-9	MOULDING, Rear Door Wdo. Opng. Frame, Upr. (23-23-33)
18	1	2893 712-3	MOULDING, Rear Door Wdo. Opng. Frame, Rr. (23-23-33)
19	1	3514 080-1	MOULDING PACKAGE, Qtr. Outside Wheel Opening (23-23-39)
	6	9420 867	Nut w/Seal
	1	3620 220-1	MOULDING PACKAGE, Qtr. Outside Wheel Opng. Panel (23-23-39)
	5	6024 271	Screw
20	1	3620 520-1	MOULDING PACKAGE, Qtr. Outside, Black (23-23-39)
	8	6002 754	Retainer
	8	6024 271	Screw
	1	6002 335	Retainer
	1	6029 259	Nut

All Packages Include Attaching Parts

Part Type Code is Indicated in Parentheses

1971
EXTERIOR VIEW - CHRYSLER NEWPORT ROYAL C-E 4 DOOR SEDAN (SPRING SPECIAL)

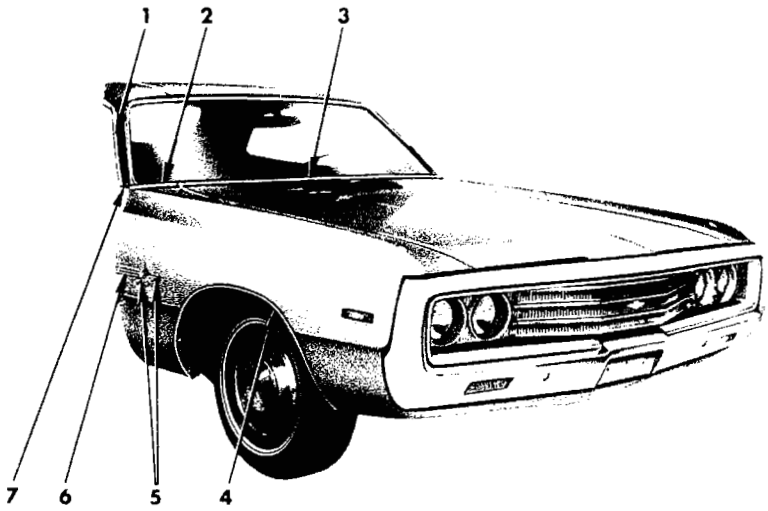

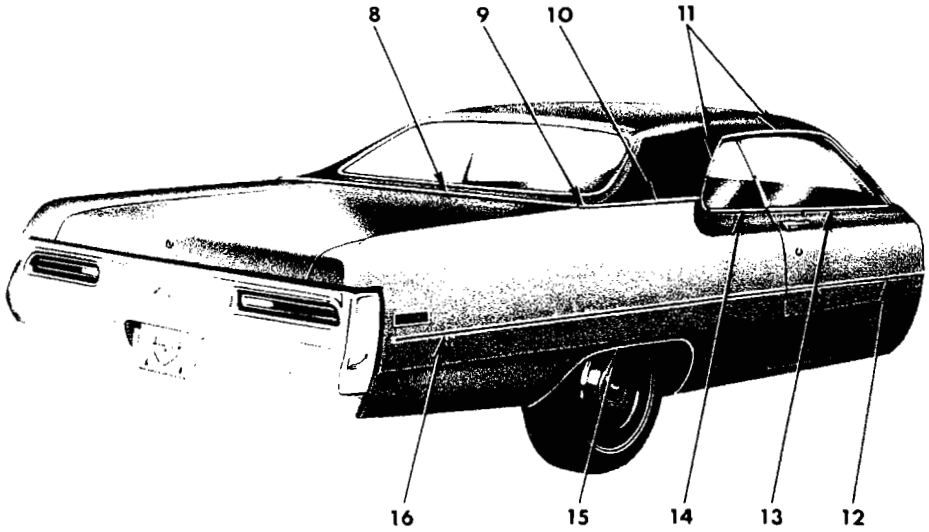

19a3720

1971
EXTERIOR VIEW - CHRYSLER NEWPORT ROYAL C-E 2 DOOR HARDTOP (SPRING SPECIAL)

REF. NO.	QTY	PART NUMBER	DESCRIPTION
1	1	2933 602-3	MOULDING PACKAGE, Body Front Pillar Drain Trough, Up to approx. June 1, 1971 (23-59-61)
	6	6024 271	Screw
	1	3683 304-5	MOULDING PACKAGE, Body Front Pillar Drain Trough, After approx. June 1, 1971
	6	6024 271	Screw
2	1	2949 488-9	MOULDING, Fender Hood Extension, Rear (12-15-2)
3	1	2898 828	MOULDING, Hood Top Rear (15-25-2)
4	1	3514 056-7	MOULDING PACKAGE, Fender Wheel Opng. (12-15-2)
	8	6028 545	Screw
5	2	3613 640	NAME PLATE, Fender Side, "Royal" (12-15-21)
	2	3613 641	"Newport" (12-15-21)
6	2	3620 523	MOULDING PACKAGE, Fender Rear, Black (12-15-2)
	1	6003 133	Retainer
	1	6024 271	Screw
	1	6000 709	Retainer
	1	6029 259	Nut
7	1	3419 482-3	MOULDING PACKAGE, Body Frt. Lwr. Pillar (23-23-14)
	1	6028 674	Screw
8	1	3419 320-1	MOULDING PACKAGE, Deck Opng. Upr. Pnl., Argent, use w/Vinyl Roof or Two Tone Paint (23-23-31)
	1	2933 324-5	MOULDING PACKAGE, Deck Opng. Upr. Pnl., Chrome (23-23-31)
	14	6002 709	Retainer
	14	9426 925	Nut
9	1	3419 312-3	MOULDING PACKAGE, Qtr. Outside Belt, Rear, Argent, use w/Vinyl Roof or Two Tone Paint (23-23-39)
	1	2933 440-1	MOULDING PACKAGE, Qtr. Outside Belt, Rear, Chrome (23-23-39)
	4	6023 898	Screw
	2	9420 293	Nut w/Seal
10	1	3419 310-1	MOULDING PACKAGE, Qtr. Outside Belt, Frt., Argent, use w/Vinyl Roof or Two Tone Paint (23-23-39)
	1	2933 430-1	MOULDING PACKAGE, Qtr. Outside Belt, Frt., Chrome (23-23-39)
	4	6002 297	Retainer
	4	9420 254	Nut w/Seal
	6	6002 192	Fastener
11	1	3419 388-9	MOULDING PACKAGE, Roof Side Drain Trough, Front and Rear (23-59-61)
	6	6024 271	Screw
12	2	3620 524	MOULDING PACKAGE, Door, Black (23-23-32)
	6	6002 754	Retainer
	6	6024 271	Screw
	1	6002 335	Retainer
	1	6029 259	Nut
13	1	3419 430-1	MOULDING PACKAGE, Door Outside Belt (23-23-32)
	16	6002 713	Retainer
14	1	2933 374-5	MOULDING PACKAGE, Qtr. Wdo. Outside Belt (23-23-39)
	4	6027 459	Screw
15	1	3514 080-1	MOULDING PACKAGE, Qtr. Outside Wheel Opening (23-23-39)
	6	9420 867	Nut w/Seal
	1	3620 220-1	MOULDING PACKAGE, Qtr. Outside Wheel Opng. Panel (23-23-39)
	5	6024 271	Screw
16	1	3620 526-7	MOULDING PACKAGE, Qtr. Outside, Black (23-23-39)
	11	6002 754	Retainer
	11	6024 271	Screw
	1	6002 335	Retainer
	1	6029 259	Nut

All Packages Include Attaching Parts

Part Type Code is Indicated in Parentheses

1971
EXTERIOR VIEW - CHRYSLER NEWPORT ROYAL C-E 2 DOOR HARDTOP (SPRING SPECIAL)

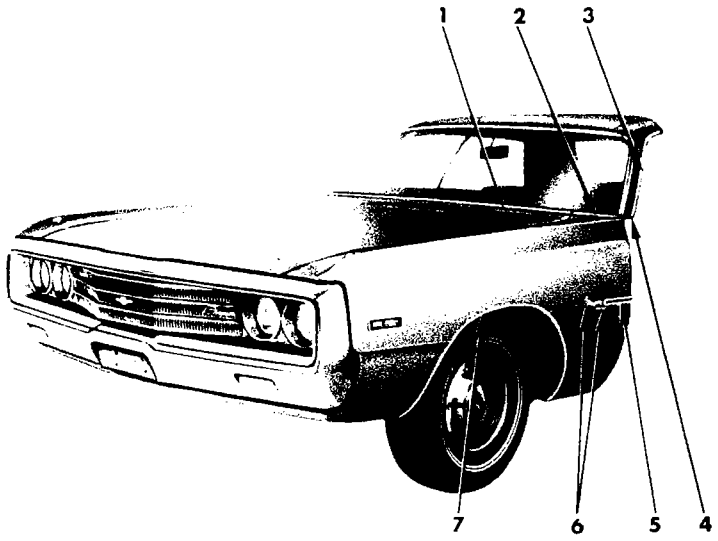

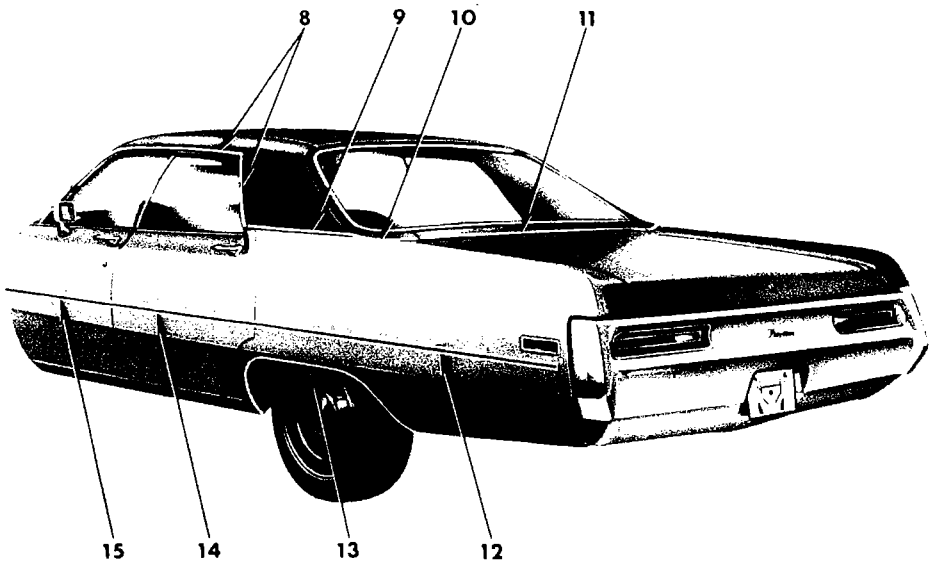

19a3722

1971
EXTERIOR VIEW - CHRYSLER NEWPORT ROYAL C-E 4 DOOR HARDTOP (SPRING SPECIAL)

REF. NO.	QTY	PART NUMBER	DESCRIPTION
1	1	2898 828	MOULDING, Hood Top Rear (15-25-2)
2	1	2949 488-9	MOULDING, Fender Hood Extension, Rear (12-15-2)
3	1	2933 600-1	MOULDING PACKAGE, Body Front Pillar Drain Trough, Up to approx. June 1, 1971 (23-59-61)
	6	6024 271	Screw
	1	3685 124-5	MOULDING PACKAGE, Body Front Pillar Drain Trough, After approx. June 1, 1971 (23-59-61)
	10	6024 271	Screw
4	1	3419 482-3	MOULDING PACKAGE, Body Frt. Lwr. Pillar (23-23-14)
	1	6028 674	Screw
5	2	3620 523	MOULDING PACKAGE, Fender Rear, Black (12-15-2)
	1	6003 133	Retainer
	1	6024 271	Screw
	1	6000 709	Retainer
	1	6029 259	Nut
6	2	3613 640	NAME PLATE, Fender Side, "Royal" (12-15-21)
	2	3613 641	"Newport" (12-15-21)
7	1	3514 056-7	MOULDING PACKAGE, Fender Wheel Opng. (12-15-2)
	8	6028 545	Screw
8	1	2964 846-7	MOULDING, Roof Side Drain Trough, Front and Rear, Up to approx. June 1, 1971 (23-59-61)
	8	6024 271	Screw
	1	3683 546-7	MOULDING PACKAGE, Roof Side Drain Trough, Front and Rear, After approx. June 1, 1971 (23-59-61)
	8	6024 271	Screw
9	1	3419 314-5	MOULDING PACKAGE, Qtr. Outside Belt, Frt., Argent, use w/Vinyl Roof or Two Tone Paint (23-23-39)
	1	2933 376-7	MOULDING PACKAGE, Qtr. Outside Belt, Frt., Chrome (23-23-39)
	8	6002 192	Fastener
	2	6001 596	Retainer
	2	9420 254	Nut
10	1	3419 316-7	MOULDING PACKAGE, Qtr. Outside Belt, Rear, Argent, use w/Vinyl Roof or Two Tone Paint (23-23-39)
	1	2933 390-1	MOULDING PACKAGE, Qtr. Outside Belt, Rear, Chrome (23-23-39)
	4	9427 804	Screw
	2	6024 740	Seal
	2	9420 293	Nut
11	1	3419 318-9	MOULDING PACKAGE, Deck Opng. Upr. Pnl., Argent, use w/Vinyl Roof or Two Tone Paint (23-23-31)
	1	2933 416-7	MOULDING PACKAGE, Deck Opng. Upr. Pnl., Chrome (23-23-31)
	7	6002 936	Retainer
	7	9426 925	Nut
12	1	3620 520-1	MOULDING PACKAGE, Qtr. Outside, Black (23-23-39)
	8	6002 754	Retainer
	8	6024 271	Screw
	1	6002 335	Retainer
	1	6029 259	Nut
13	1	3514 080-1	MOULDING PACKAGE, Qtr. Outside Wheel Opening (23-23-39)
	6	9420 867	Nut w/Seal
	1	3620 220-1	MOULDING PACKAGE, Qtr. Outside Wheel Opng. Panel (23-23-39)
	5	6024 271	Screw
14	2	3620 522	MOULDING PACKAGE, Rear Door, Black (23-23-33)
	4	6002 754	Retainer
	4	6024 271	Screw
	2	6002 335	Retainer
	2	6029 259	Nut
15	2	3620 519	MOULDING PACKAGE, Frt. Door, Black (23-23-32)
	5	6002 754	Retainer
	5	6024 271	Screw
	1	6002 335	Retainer
	1	6029 259	Nut

All Packages Include Attaching Parts

Part Type Code is Indicated in Parentheses

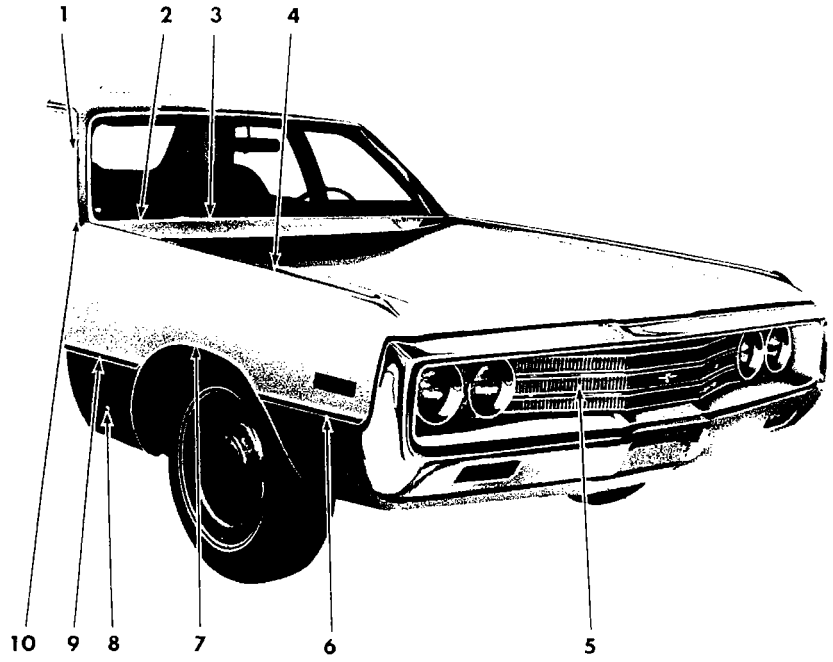

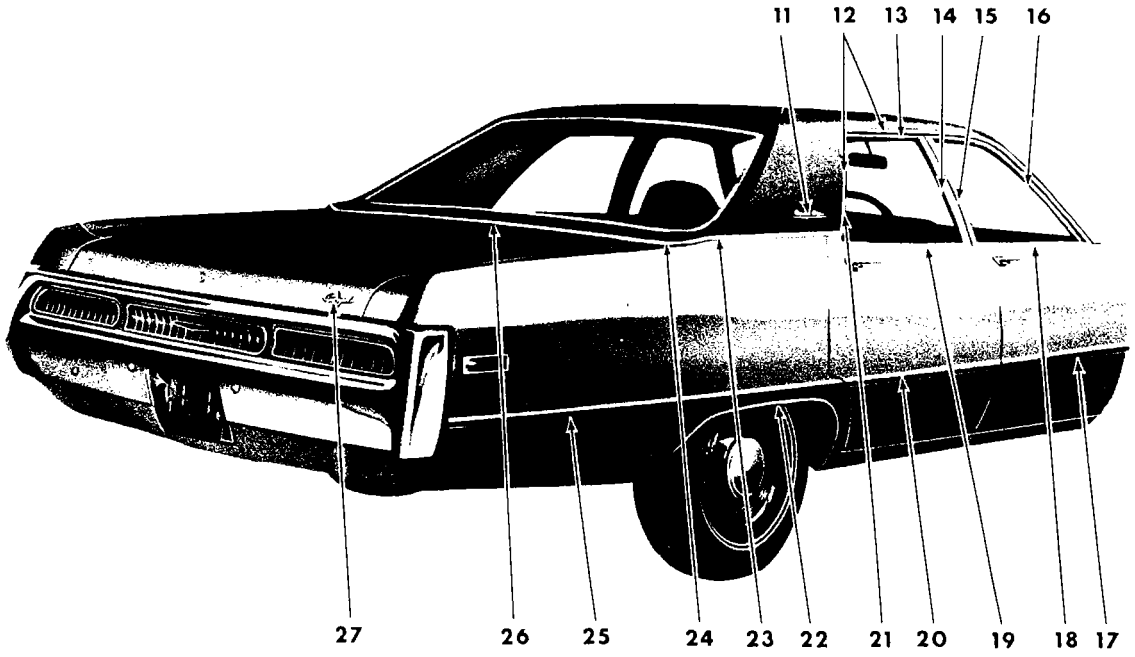

19a3660

1971
EXTERIOR VIEW - CHRYSLER NEWPORT CUSTOM C-L 4 DOOR SEDAN

REF. NO.	QTY	PART NUMBER	DESCRIPTION
1	1	2933 568-9	MOULDING PACKAGE, Body Front Pillar Drain Trough (23-59-61)
	10	6024 271	Screw
2	1	2949 488-9	MOULDING, Fender Hood Extension, Rear (12-15-2)
3	1	2898 828	MOULDING, Hood Top Rear (15-25-2)
4	1	2933 334-5	MOULDING PACKAGE, Fender Outside Peak (12-15-2)
	18	6002 713	Clip
5	1	3443 709	GRILLE, Radiator (7-16-11)
6	1	3620 028-9	MOULDING PACKAGE, Fender Side, Frt., Black (12-15-2)
	5	6003 164	Retainer
7	1	3514 056-7	MOULDING PACKAGE, Fender Wheel Opng. (12-15-2)
	8	6028 545	Screw
8	1	2785 540	MEDALLION, Fender Side, Rt., Pentastar (12-15-21)
9	1	3620 030-1	MOULDING PACKAGE, Fender Side, Rear, Black (12-15-2)
	5	6003 164	Retainer
	2	6003 221	Retainer
	2	6029 259	Nut
10	1	3419 482-3	MOULDING PACKAGE, Body Frt. Lwr. Pillar (23-23-14)
	1	6028 674	Screw
11	1	3444 194-5	NAME PLATE, Qtr. Outside, "Newport Custom" (23-34-238)
	4	9420 263	Nut
12	1	3419 390-1	MOULDING PACKAGE, Roof Side Drain Trough, Front and Rear (23-59-61)
	16	6024 271	Screw
13	1	2893 708-9	MOULDING, Rear Door Wdo. Opng. Frame, Upr. (23-23-33)
14	1	2893 700	MOULDING, Rear Door Wdo. Opng. Frame, Frt., Lt. (23-23-33)
	1	2893 701	MOULDING, Rear Door Wdo. Opng. Frame, Frt., Rt. (23-23-33)
15	1	2893 700-1	MOULDING, Frt. Door Wdo. Opng. Frame, Rr. (23-23-32)
16	1	2893 698-9	MOULDING, Frt. Door Wdo. Opng. Frame, Upr. (23-23-32)
17	1	3620 066-7	MOULDING PACKAGE, Frt. Door, Black (23-23-32)
	10	6003 164	Retainer
	2	6003 166	Retainer
	2	6029 259	Nut
18	1	3419 432-3	MOULDING PACKAGE, Frt. Door Outside Belt, use w/Turn Indicator Fender Hood Mtg. (23-23-32)
	1	3419 434-5	MOULDING PACKAGE, Frt. Door Outside Belt, use w/o Turn Indicator Fender Hood Mtg. (23-23-32)
	14	6002 713	Clip and Seal
19	1	2933 464-5	MOULDING and T/PLATE PACKAGE, Rear Door Outside Belt, Frt. to Rear (23-23-33)
	16	6002 713	Retainer
20	1	3620 032-3	MOULDING PACKAGE, Rear Door, Black (23-23-33)
	4	6003 164	Retainer
	4	6024 271	Screw
	2	6003 166	Retainer
	2	6029 259	Nut
21	1	2893 712-3	MOULDING, Rear Door Wdo. Opng. Frame, Rr. (23-23-33)
22	1	3514 080-1	MOULDING PACKAGE, Qtr. Outside Wheel Opng. (23-23-39)
	8	6028 545	Screw
	1	3620 220-1	MOULDING PACKAGE, Qtr. Outside Wheel Opng. Pnl. (23-23-39)
	5	6024 271	Screw
23	1	3419 314-5	MOULDING PACKAGE, Qtr. Outside Belt, Frt., Argent (23-23-39)
	1	2933 376-7	MOULDING PACKAGE, Qtr. Outside Belt, Frt., Chrome (23-23-39)
	8	6002 192	Fastener
	2	6001 596	Retainer
	2	9420 254	Nut
24	1	3419 316-7	MOULDING PACKAGE, Qtr. Outside Belt, Rr., Argent (23-23-39)
	1	2933 390-1	MOULDING PACKAGE, Qtr. Outside Belt, Rear, Chrome (23-23-39)
	4	9427 804	Screw
	2	6024 740	Seal
	2	9420 293	Nut
25	1	3620 034-5	MOULDING PACKAGE, Qtr. Outside, Black (23-23-39)
	8	6003 164	Retainer
	8	6024 271	Screw
	1	6003 166	Retainer
	1	6029 259	Nut
26	1	3419 318-9	MOULDING PACKAGE, Deck Opng. Upr. Pnl., Argent (23-23-31)
	1	2933 416-7	MOULDING PACKAGE, Deck Opng. Upr. Pnl., Chrome (23-23-31)
	7	6002 936	Retainer
	7	9426 925	Nut
27	1	3445 251	NAME PLATE, Deck Lid, "Chrysler" (23-19-114)
	AR	6002 852	Retainer

All Packages Include Attaching Parts

Part Type Code is Indicated in Parentheses

1971

EXTERIOR VIEW - CHRYSLER NEWPORT CUSTOM C-L 4 DOOR SEDAN

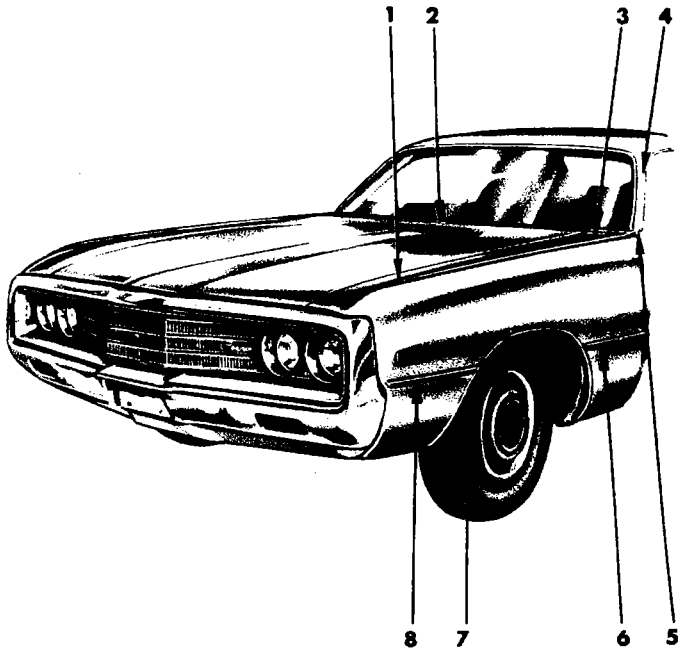

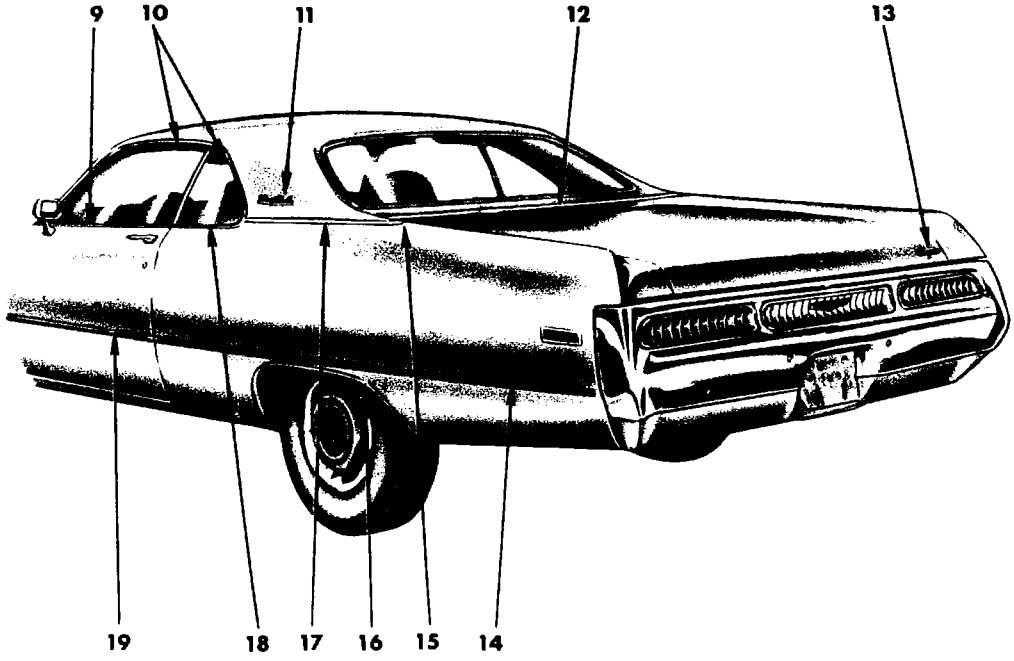

19a3529

1971
EXTERIOR VIEW - CHRYSLER NEWPORT CUSTOM C-L 2 DOOR HARDTOP

REF. NO.	QTY	PART NUMBER	DESCRIPTION
1	1	2933 334-5	MOULDING PACKAGE, Fender Outside Peak (12-15-2)
	18	6002 713	Clip
2	1	2898 828	MOULDING, Hood Top Rear (15-25-2)
3	1	2949 488-9	MOULDING, Fender Hood Extension, Rear (12-15-2)
4	1	2933 602-3	MOULDING PACKAGE, Body Front Pillar Drain Trough, Up to approx. June 1, 1971 (23-59-61)
	6	6024 271	Screw
	1	3683 304-5	MOULDING PACKAGE, Body Front Pillar Drain Trough, After approx. June 1, 1971 (23-59-61)
	6	6024 271	Screw
5	1	3419 482-3	MOULDING PACKAGE, Body Frt. Lwr. Pillar (23-23-14)
	1	6028 674	Screw
6	1	3620 030-1	MOULDING PACKAGE, Fender Side Rear, Black (12-15-2)
	5	6003 164	Retainer
	2	6003 221	Retainer
	2	6029 259	Nut
7	1	3514 056-7	MOULDING PACKAGE, Fender Wheel Opng. (12-15-2)
	8	6028 545	Screw
8	1	3620 028-9	MOULDING PACKAGE, Fender Side, Frt., Black (12-15-2)
	5	6003 164	Retainer
9	1	3419 428-9	MOULDING PACKAGE, Door Outside Belt, use w/Turn Indicator Fndr. Hood Mtg. (23-23-32)
	1	3419 430-1	MOULDING PACKAGE, Door Outside Belt, use w/o Turn Indicator Fndr. Hood Mtg. (23-23-32)
	16	6002 713	Clip
10	1	3419 388-9	MOULDING PACKAGE, Roof Side Drain Trough, Front and Rear (23-59-61)
	6	6024 271	Screw
11	1	3444 194-5	NAME PLATE, Qtr. Outside, "Newport Custom" (23-34-238)
	4	9420 263	Nut
12	1	3419 320-1	MOULDING PACKAGE, Deck Opng. Upr. Pnl., Argent, use w/Vinyl Roof or Two Tone Paint (23-23-31)
	1	2933 324-5	MOULDING PACKAGE, Deck Opng. Upr. Pnl., Chrome (23-23-31)
	14	6002 709	Retainer
	14	9426 925	Nut
13	1	3445 251	NAME PLATE, Deck Lid, "Chrysler" (23-19-114)
	AR	6002 852	Retainer
14	1	3620 012-3	MOULDING PACKAGE, Qtr. Outside, Black (23-23-39)
	11	6003 164	Retainer
	1	6003 166	Retainer
	1	6029 259	Nut
	11	6024 271	Screw
15	1	3419 312-3	MOULDING PACKAGE, Qtr. Outside Belt, Rear, Argent, use w/Vinyl Roof or Two Tone Paint (23-23-39)
	1	2933 440-1	MOULDING PACKAGE, Qtr. Outside Belt, Rear, Chrome (23-23-39)
	4	6023 898	Screw
	2	9420 293	Nut w/Seal
16	1	3514 080-1	MOULDING PACKAGE, Qtr. Outside Wheel Opening (23-23-39)
	6	9420 867	Nut w/Seal
	1	3620 220-1	MOULDING PACKAGE, Qtr. Outside Wheel Opng. Panel (23-23-39)
	5	6024 271	Screw
17	1	3419 310-1	MOULDING PACKAGE, Qtr. Outside Belt, Frt., Argent, use w/Vinyl Roof or Two Tone Paint (23-23-39)
	1	2933 430-1	MOULDING PACKAGE, Qtr. Outside Belt, Frt., Chrome (23-23-39)
	4	6002 297	Retainer
	4	9420 254	Nut w/Seal
	6	6002 192	Fastener
18	1	2933 374-5	MOULDING PACKAGE, Qtr. Wdo. Outside Belt (23-23-39)
	4	6027 459	Screw
19	1	3620 064-5	MOULDING PACKAGE, Door Outside, Black (23-23-32)
	12	6003 164	Retainer
	2	6003 166	Retainer

All Packages Include Attaching Parts

Part Type Code is Indicated in Parentheses

1971
EXTERIOR VIEW - CHRYSLER NEWPORT CUSTOM C-L 2 DOOR HARDTOP

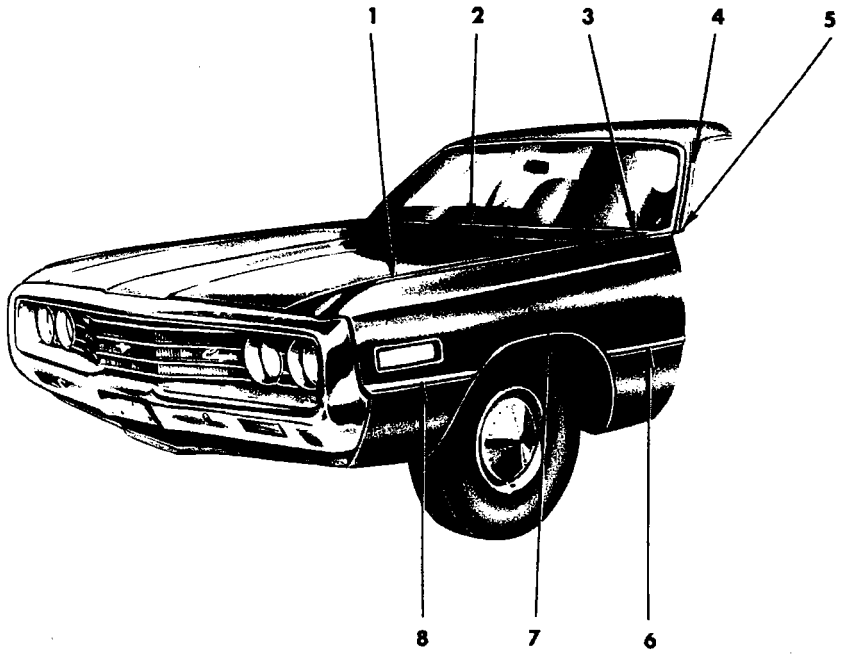

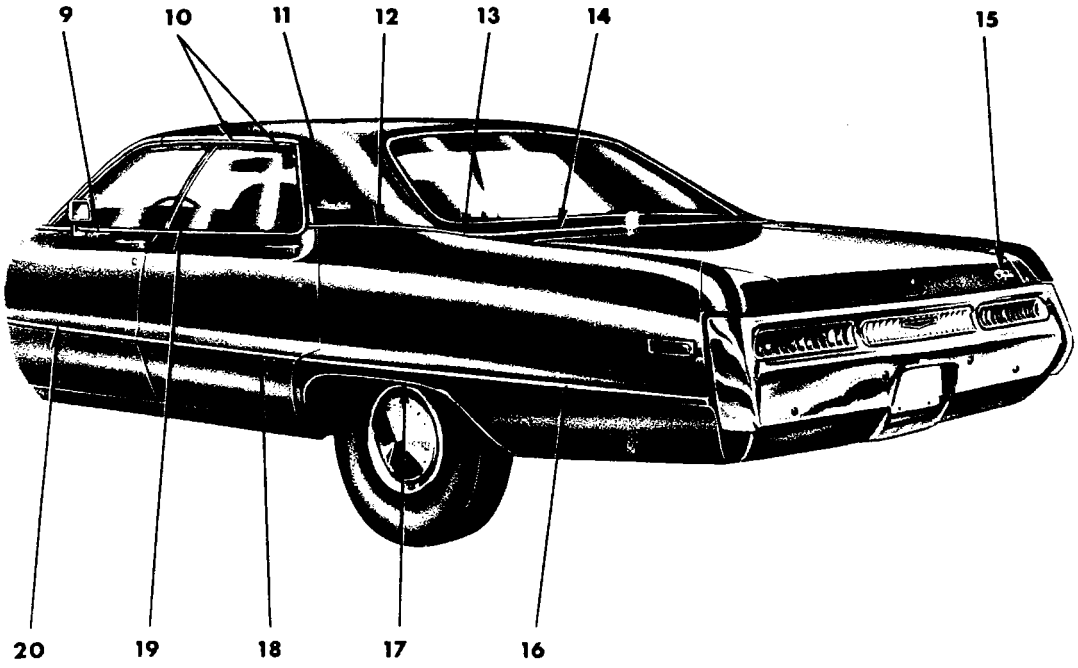

19a3588

1971
EXTERIOR VIEW - CHRYSLER NEWPORT CUSTOM C-L 4 DOOR HARDTOP

REF. NO.	QTY	PART NUMBER	DESCRIPTION
1	1	2933 334-5	MOULDING PACKAGE, Fender Outside Peak (12-15-2)
	18	6002 713	Clip
2	1	2898 828	MOULDING, Hood Top Rear (15-25-2)
3	1	2949 488-9	MOULDING, Fender Hood Extension, Rr. (12-15-2)
4	1	2933 600-1	MOULDING PACKAGE, Body Front Pillar Drain Trough, Up to approx. June 1, 1971 (23-59-61)
	6	6024 271	Screw
	1	3685 124-5	MOULDING PACKAGE, Body Front Pillar Drain Trough, After approx. June 1, 1971 (23-59-61)
	10	6024 271	Screw
5	1	3419 482-3	MOULDING PACKAGE, Body Frt. Lwr. Pillar (23-23-14)
	1	6028 674	Screw
6	1	3620 030-1	MOULDING PACKAGE, Fender Side, Rear, Black (12-15-2)
	5	6003 164	Retainer
	2	6003 221	Retainer
	2	6029 259	Nut
7	1	3514 056-7	MOULDING PACKAGE, Fender Wheel Opng. (12-15-2)
	16	6028 545	Screw
8	1	3620 028-9	MOULDING PACKAGE, Fender Side, Frt., Black (12-15-2)
	5	6003 164	Retainer
9	1	3419 432-3	MOULDING PACKAGE, Frt. Door Outside Belt, use w/Turn Indicator Fndr. Hood Mtg. (23-23-32)
	1	3419 434-5	MOULDING PACKAGE, Frt. Door Outside Belt, use w/o Turn Indicator Fndr. Hood Mtg. (23-23-32)
	14	6002 713	Clip
10	1	2964 846-7	MOULDING, Roof Side Drain Trough, Front and Rear, Up to approx. June 1, 1971 (23-59-61)
	8	6024 271	Screw
	1	3683 546-7	MOULDING PACKAGE, Roof Side Drain Trough, Front and Rear, After approx. June 1, 1971 (23-59-61)
	8	6024 271	Screw
11	1	3444 194-5	NAME PLATE, Qtr. Outside, "Newport Custom" (23-34-238)
	4	9420 263	Nut
12	1	3419 314-5	MOULDING PACKAGE, Qtr. Outside Belt, Frt., Argent, use w/Vinyl Roof or Two Tone Paint (23-23-39)
	1	2933 376-7	MOULDING PACKAGE, Qtr. Outside Belt, Frt., Chrome (23-23-39)
	8	6002 192	Fastener
	2	6001 596	Retainer
	2	9420 254	Nut
13	1	3419 316-7	MOULDING PACKAGE, Qtr. Outside Belt, Rear, Argent, use w/Vinyl Roof or Two Tone Paint (23-23-39)
	1	2933 390-1	MOULDING PACKAGE, Qtr. Outside Belt, Rear, Chrome (23-23-39)
	4	9427 804	Screw
	2	6024 740	Seal
	2	9420 293	Nut
14	1	3419 318-9	MOULDING PACKAGE, Deck Opng. Upr. Pnl., Argent, use w/Vinyl Roof or Two Tone Paint (23-23-31)
	1	2933 416-7	MOULDING PACKAGE, Deck Opng. Upr. Pnl., Chrome (23-23-31)
	7	6002 936	Retainer
	7	9426 925	Nut
15	1	3445 251	NAME PLATE, Deck Lid, "Chrysler" (23-19-114)
	AR	6002 852	Retainer
16	1	3620 034-5	MOULDING PACKAGE, Qtr. Outside, Black (23-23-39)
	8	6003 164	Retainer
	8	6024 271	Screw
	1	6003 166	Retainer
	1	6029 259	Nut
17	1	3514 080-1	MOULDING PACKAGE, Qtr. Outside Wheel Opening (23-23-39)
	6	9420 867	Nut w/Seal
	1	3620 220-1	MOULDING PACKAGE, Qtr. Outside Wheel Opng. Pnl. (23-23-39)
	5	6024 271	Screw
18	1	3620 032-3	MOULDING PACKAGE, Rear Door, Black (23-23-33)
	4	6003 164	Retainer
	4	6024 271	Screw
	2	6003 166	Retainer
	2	6029 259	Nut
19	1	2933 464-5	MOULDING and T/PLATE PACKAGE, Rear Door Outside Belt Frt. to Rear (23-23-33)
	16	6002 713	Retainer
20	1	3620 066-7	MOULDING PACKAGE, Frt. Door, Black (23-23-32)
	10	6003 164	Retainer
	2	6003 166	Retainer
	2	6029 259	Nut

All Packages Include Attaching Parts

Part Type Code is Indicated in Parentheses

1971
EXTERIOR VIEW - CHRYSLER NEWPORT CUSTOM C-L 4 DOOR HARDTOP

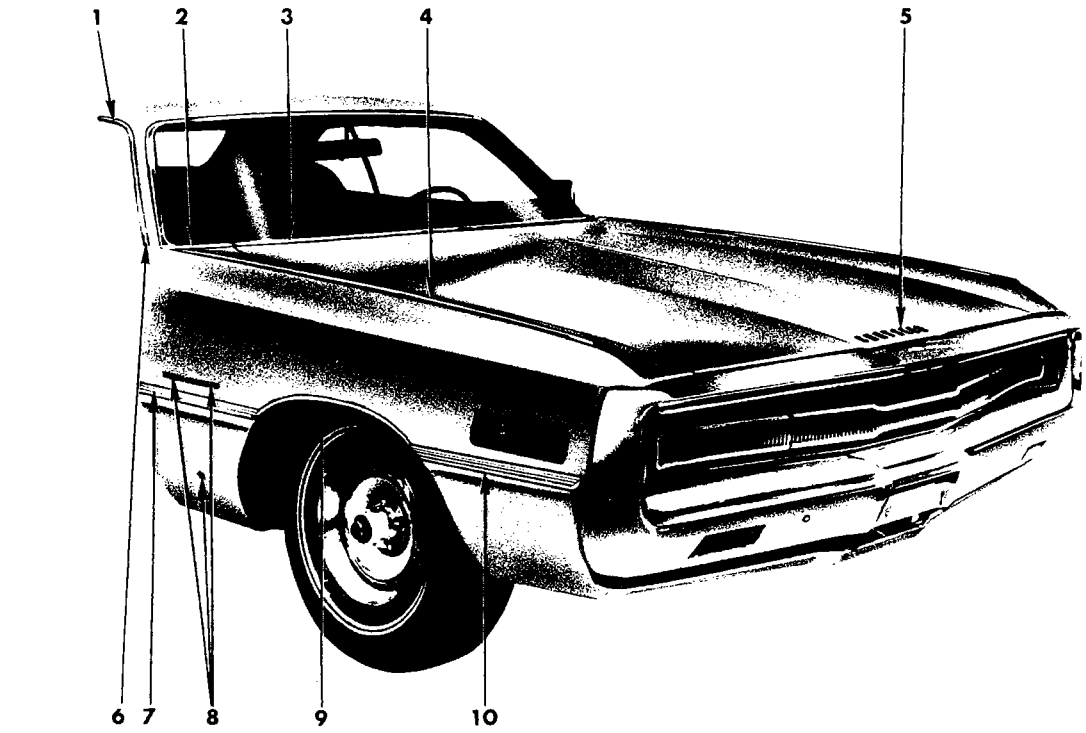

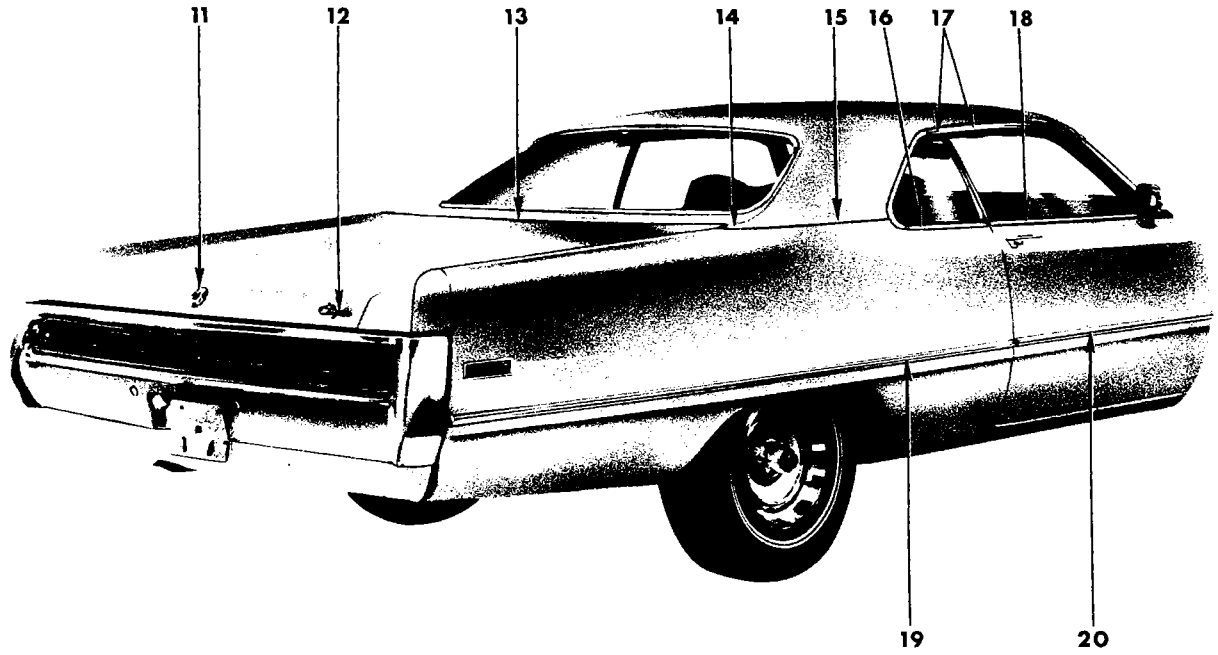

19a3582

1971
EXTERIOR VIEW - CHRYSLER 300 C-S 2 DOOR HARDTOP

REF. NO.	QTY	PART NUMBER	DESCRIPTION
1	1	2933 602-3	MOULDING PACKAGE, Body Front Pillar Drain Trough, Up to approx. June 1, 1971 (23-59-61)
	6	6024 271	Screw
	1	3683 304-5	MOULDING PACKAGE, Body Front Pillar Drain Trough, After approx. June 1, 1971
	6	6024 271	Screw
2	1	2949 488-9	MOULDING, Fender Hood Ext., Rear (12-15-2)
3	1	2898 828	MOULDING, Hood Top Rear (15-25-2)
4	1	2933 334-5	MOULDING PACKAGE, Fender Outside Peak (12-15-2)
	18	6002 713	Clip
5	1	2898 838	LETTER "C", Hood Front Name (15-06-16)
	1	2898 839	"H"
	2	2898 840	"R" 1 2898 843 "L"
	1	2898 841	"Y" 1 2898 844 "E"
	1	2898 842	"S" 8 9420 254 Nut
6	1	3419 482-3	MOULDING PACKAGE, Body Frt. Lwr. Pillar (23-23-14)
	1	6028 674	Screw
7	1	3620 174-5	MOULDING and INSERT PACKAGE, Fender Side, Rear, Black (12-15-2)
	1	3620 184-5	Gunmetal (12-15-2)
	1	3620 186-7	Tan (12-15-2)
	1	3620 188-9	Gold (12-15-2)
	1	3620 190-1	Green (12-15-2)
	2	6002 765	Retainer 2 6029 259 Nut
	1	6002 767	Retainer 1 6024 271 Screw
8	1	3444 169	NAME PLATE, Fender Side, "Three" (12-15-21)
	1	3444 170	"Hundred" (12-15-21)
	AR	6002 852	Retainer
	1	2785 540	MEDALLION, Fender Side, Rt., Pentastar (12-15-21)
9	1	2933 342-3	MOULDING PACKAGE, Fender Wheel Opng. (12-15-2)
	8	6028 545	Screw
10	1	3620 172-3	MOULDING and INSERT PACKAGE, Fender Side, Frt., Black (12-15-2)
	1	3620 176-7	Gunmetal (12-15-2)
	1	3620 178-9	Tan (12-15-2)
	1	3620 180-1	Gold (12-15-2)
	1	3620 182-3	Green (12-15-2)
	3	6029 259	Nut
	2	6002 765	Retainer
	1	6002 814	Retainer
11	1	2964 861	MEDALLION, Deck Lid Lock Cyl. (23-17-19)
	2	9420 292	Nut
12	1	3445 251	NAME PLATE, Deck Lid, "Chrysler" (23-19-114)
	AR	6002 852	Retainer
13	1	3419 320-1	MOULDING PACKAGE, Deck Opng. Upr. Pnl., Argent, use w/Vinyl Roof or Two Tone Paint (23-23-31)
	1	2933 324-5	MOULDING PACKAGE, Deck Opng. Upr. Pnl., Chrome (23-23-31)
	14	6002 709	Retainer
	14	9426 925	Nut
14	1	3419 312-3	MOULDING PACKAGE, Qtr. Outside Belt, Rear, Argent, use w/Vinyl Roof or Two Tone Paint (23-23-39)
	1	2933 440-1	MOULDING PACKAGE, Qtr. Outside Belt, Rear, Chrome (23-23-39)
	4	6023 898	Screw
	2	9420 293	Nut w/Seal
15	1	3419 310-1	MOULDING PACKAGE, Qtr. Outside Belt, Frt., Argent, use w/Vinyl Roof or Two Tone Paint (23-23-39)
	1	2933 430-1	MOULDING PACKAGE, Qtr. Outside Belt, Frt., Chrome (23-23-39)
	4	6002 297	Retainer
	4	9420 254	Nut w/Seal
	6	6002 192	Fastener
16	1	2933 374-5	MOULDING PACKAGE, Qtr. Wdo. Outside Belt (23-23-39)
	4	6027 459	Screw
17	1	3419 388-9	MOULDING PACKAGE, Roof Side Drain Trough, Front and Rear (23-59-61)
	6	6024 271	Screw
18	1	3419 428-9	MOULDING PACKAGE, Door Outside Belt, use w/Turn Indicator Fndr. Hood Mtg. (23-23-32)
	1	3419 430-1	MOULDING PACKAGE, Door Outside Belt, use w/o Turn Indicator Fndr. Hood Mtg. (23-23-32)
	16	6002 713	Clip
19	1	3620 112-3	MOULDING and INSERT PACKAGE, Qtr. Outside, Black (23-23-39)
	1	3620 132-3	Gunmetal (23-23-39)
	1	3620 134-5	Tan (23-23-39)
	1	3620 136-7	Gold (23-23-39)
	1	3620 138-9	Green (23-23-39)
	11	6002 767	Retainer
	1	6002 787	Retainer
	1	6027 625	Nut
20	2	3620 108	MOULDING and INSERT PACKAGE, Door, Black (23-23-32)
	2	3620 116	Gunmetal (23-23-32)
	2	3620 117	Tan (23-23-32)
	2	3620 118	Gold (23-23-32)
	2	3620 119	Green (23-23-32)
	5	6002 767	Retainer

All Packages Include Attaching Parts

Part Type Code is Indicated in Parentheses

1971
EXTERIOR VIEW - CHRYSLER 300 C-S 2 DOOR HARDTOP

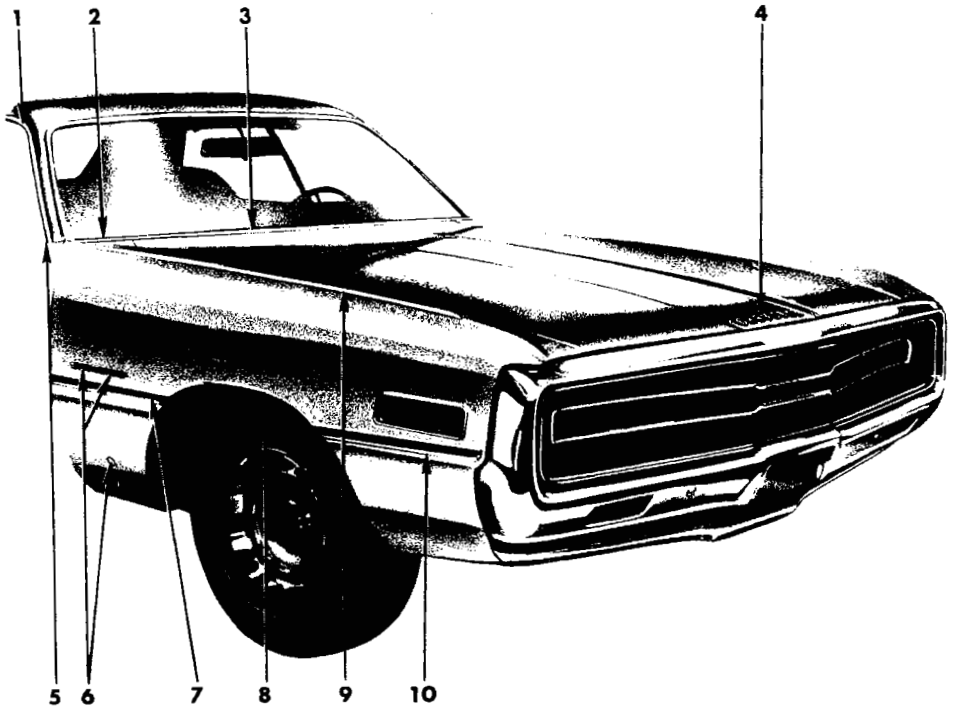

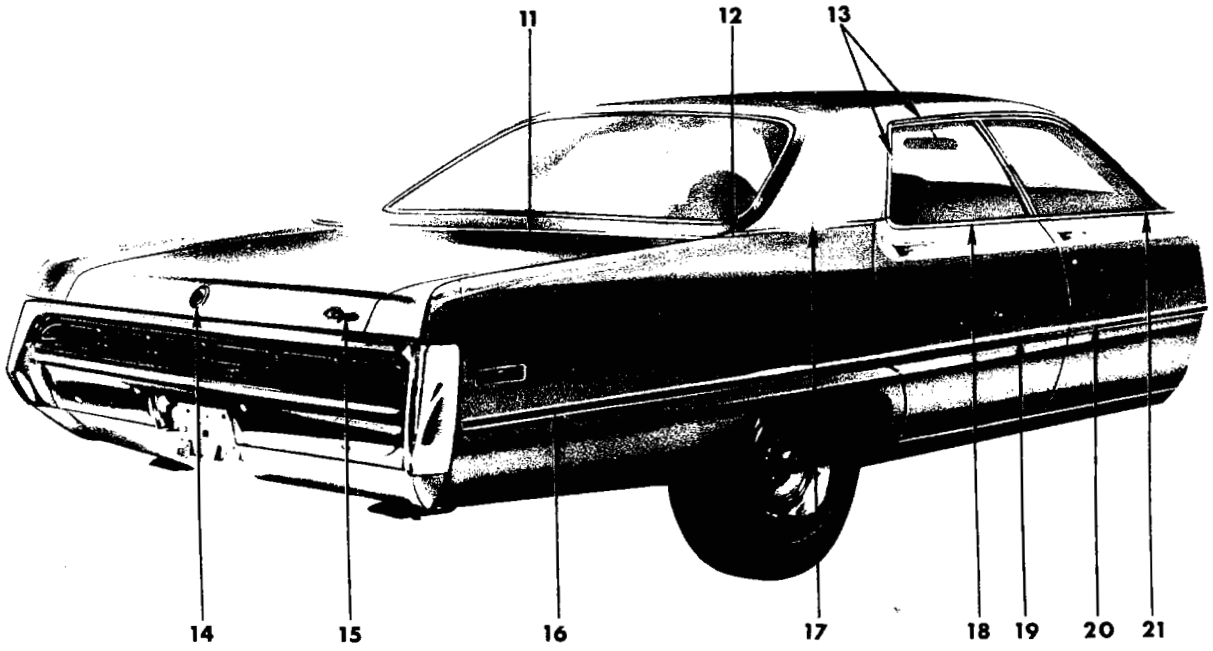

19a3584

1971
EXTERIOR VIEW - CHRYSLER 300 C-S 4 DOOR HARDTOP

REF. NO.	QTY	PART NUMBER	DESCRIPTION
1	1	2933 600-1	MOULDING PACKAGE, Body Front Pillar Drain Trough, Up to approx. June 1, 1971 (23-59-61)
	6	6024 271	Screw
	1	3685 124-5	MOULDING PACKAGE, Body Front Pillar Drain Trough, After approx. June 1, 1971
	10	6024 271	Screw
2	1	2949 488-9	MOULDING, Fender Hood Extension, Rear (12-15-2)
3	1	2898 828	MOULDING, Hood Top Rear (15-25-2)
4	1	2898 838	LETTER "C", Hood Front (15-06-16)
	1	2898 839	"H"
	2	2898 840	"R" 1 2898 843 "L"
	1	2898 841	"Y" 1 2898 844 "E"
	1	2898 842	"S" 8 9420 254 Nut
5	1	3419 482-3	MOULDING PACKAGE, Body Frt. Lwr. Pillar (23-23-14)
	1	6028 674	Screw
6	2	3444 169	NAME PLATE, Fender Side, "Three" (12-15-21)
	2	3444 170	"Hundred" (12-15-21)
	AR	6002 852	Retainer
	1	2785 540	MEDALLION, Fender Side, Rt., Pentastar (12-15-21)
7	1	3620 174-5	MOULDING and INSERT PACKAGE, Fender Side, Rr., Black (12-15-2)
	1	3620 184-5	Gunmetal (12-15-2)
	1	3620 186-7	Tan (12-15-2)
	1	3620 188-9	Gold (12-15-2)
	1	3620 190-1	Green (12-15-2)
	2	6002 765	Retainer 2 6029 259 Nut
	1	6002 767	Retainer 1 6024 271 Screw
8	1	2933 342-3	MOULDING PACKAGE, Fender Wheel Opng. (12-15-2)
	8	6028 545	Screw
9	1	2933 334-5	MOULDING PACKAGE, Fender Peak (12-15-2)
	18	6002 713	Clip
10	1	3620 172-3	MOULDING and INSERT PACKAGE, Fender Side, Frt., Black (12-15-2)
	1	3620 176-7	Gunmetal (12-15-2)
	1	3620 178-9	Tan (12-15-2)
	1	3620 180-1	Gold (12-15-2)
	1	3620 182-3	Green (12-15-2)
	3	6029 259	Nut
	2	6002 765	Retainer
	1	6002 814	Retainer
11	1	3419 318-9	MOULDING PACKAGE, Deck Opng. Upr. Pnl., Argent (23-23-31)
	1	2933 416-7	MOULDING PACKAGE, Deck Opng. Upr. Pnl., Chrome (23-23-31)
	7	6002 936	Retainer
	7	9426 925	Nut
12	1	3419 316-7	MOULDING PACKAGE, Qtr. Outside Belt, Rear, Argent (23-23-39)
12 Cont'd	1	2933 390-1	MOULDING PACKAGE, Qtr. Outside Belt, Rear, Chrome (23-23-39)
	4	9427 804	Screw
	2	6024 740	Seal 2 9420 293 Nut
13	1	2964 846-7	MOULDING, Roof Side Drain Trough, Front and Rear, Up to approx. June 1, 1971 (23-59-61)
	8	6024 271	Screw
	1	3683 546-7	MOULDING PACKAGE, Roof Side Drain Trough, Front and Rear, After approx. June 1, 1971 (23-59-61)
	8	6024 271	Screw
14	1	2964 861	MEDALLION, Deck Lid Lock Cyl. (23-17-19)
	2	9420 292	Nut
15	1	3445 251	NAME PLATE, Deck Lid, "Chrysler" (23-19-114)
	AR	6002 852	Retainer
16	1	3620 114-5	MOULDING and INSERT PACKAGE, Qtr. Outside, Black (23-23-39)
	1	3620 140-1	Gunmetal (23-23-39)
	1	3620 142-3	Tan (23-23-39)
	1	3620 144-5	Gold (23-23-39)
	1	3620 146-7	Green (23-23-39)
	8	6002 767	Retainer
	1	6002 787	Retainer 1 6027 625 Nut
17	1	3419 314-5	MOULDING PACKAGE, Qtr. Outside Belt, Frt., Argent (23-23-39)
	1	2933 376-7	MOULDING PACKAGE, Qtr. Outside Belt, Frt., Chrome (23-23-39)
	8	6002 192	Fastener
	2	6001 596	Retainer 2 9420 254 Nut
18	1	2933 464-5	MOULDING and T/PLATE PACKAGE, Rear Door Belt, Frt. to Rr. (23-23-33)
	16	6002 713	Retainer
19	1	3620 110-1	MOULDING and INSERT PACKAGE, Rear Door, Black (23-23-33)
	1	3620 124-5	Gunmetal (23-23-33)
	1	3620 126-7	Tan (23-23-33)
	1	3620 128-9	Gold (23-23-33)
	1	3620 130-1	Green (23-23-33)
	3	6002 767	Retainer
20	2	3620 109	MOULDING and INSERT PACKAGE, Frt. Door, Black (23-23-32)
	2	3620 120	Gunmetal (23-23-32)
	2	3620 121	Tan (23-23-32)
	2	3620 122	Gold (23-23-32)
	2	3620 123	Green (23-23-32)
	4	6002 767	Retainer
21	1	3419 434-5	MOULDING PACKAGE, Frt. Door Outside Belt, use w/o Turn Indicator Fndr. Hood Mtg. (23-23-32)
	16	6002 713	Retainer
	1	3419 432-3	MOULDING PACKAGE, Frt. Door Outside Belt, use w/ Turn Indicator Fndr. Hood Mtg. (23-23-32)

All Packages Include Attaching Parts

Part Type Code is Indicated in Parentheses

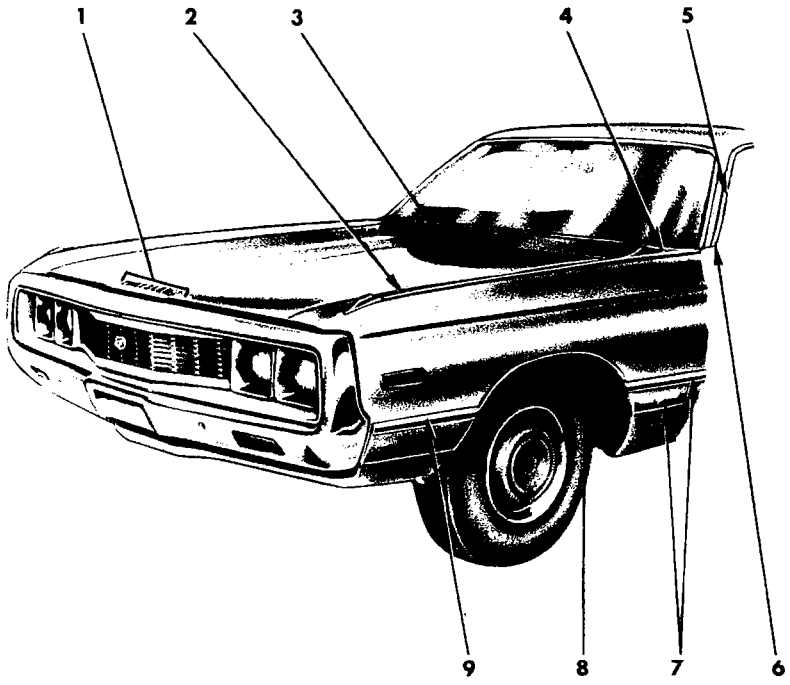

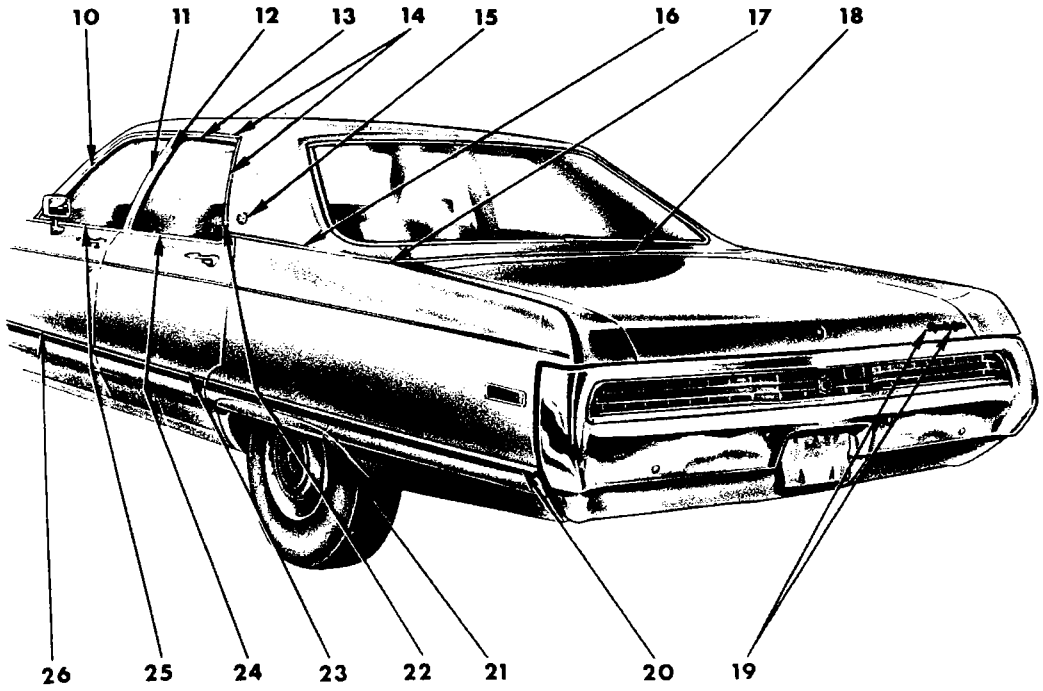

19a3590

1971
EXTERIOR VIEW - CHRYSLER NEW YORKER C-H 4 DOOR SEDAN

REF. NO.	QTY	PART NUMBER	DESCRIPTION
1	1	2898 838	LETTER "C", Hood Front Name (15-06-16)
	1	2898 839	"H"
	2	2898 840	"R"
	1	2898 841	"Y"
	1	2898 842	"S"
	1	2898 843	"L"
	1	2898 844	"E"
	8	9420 254	Nut
2	1	2933 334-5	MOULDING PACKAGE, Fender Outside Peak (12-15-2)
	18	6002 713	Clip
3	1	2898 828	MOULDING, Hood Top Rear (15-25-2)
4	1	2949 488-9	MOULDING, Fender Hood Extension, Rear (12-15-2)
5	1	2933 568-9	MOULDING PACKAGE, Body Front Pillar Drain Trough (23-59-61)
	10	6024 271	Screw
6	1	3419 482-3	MOULDING PACKAGE, Body Frt. Lwr. Pillar (23-23-14)
	1	6028 674	Screw
7	1	3620 036-7	MOULDING and NAME PLATE PACKAGE, Fender Side, Rr., w/Tape (12-15-2)
	1	3481 794-5	w/Black Paint (12-15-2)
	2	6024 271	Screw 5 6027 466 Nut
8	1	3481 792-3	MOULDING PACKAGE, Frt. Fender Wheel Opng. (12-15-2)
	8	6028 545	Screw
9	1	3620 192-3	MOULDING and TAPE PACKAGE, Fender Side, Frt. (12-15-2)
	1	3481 790-1	MOULDING PACKAGE, Fender Side, Frt., w/Black Paint (12-15-2)
	2	6024 271	Screw 5 6027 466 Nut
10	1	2893 698-9	MOULDING, Frt. Door Wdo. Opng. Frame, Upr. (23-23-32)
11	1	2893 700-1	MOULDING, Frt. Door Wdo. Opng. Frame, Rr. (23-23-32)
12	1	2893 700	MOULDING, Rear Door Wdo. Opng. Frame, Frt., Lt. (23-23-33)
	1	2893 701	MOULDING, Rear Door Wdo. Opng. Frame, Frt., Rt. (23-23-33)
13	1	2893 708-9	MOULDING, Rear Door Wdo. Opng. Frame, Upr. (23-23-33)
14	1	3419 390-1	MOULDING PACKAGE, Roof Side Drain Trough, Front and Rear (23-59-61)
	16	6024 271	Screw
15	2	2964 806	MEDALLION, Qtr. Outside (23-34-334)
	2	9420 263	Nut
16	1	3419 314-5	MOULDING PACKAGE, Qtr. Outside Belt, Frt., Argent (23-23-39)
	1	2933 376-7	MOULDING PACKAGE, Qtr. Outside Belt, Frt., Chrome (23-23-39)
	8	6002 192	Fastener
	2	6001 596	Retainer 2 9420 254 Nut
17	1	3419 316-7	MOULDING PACKAGE, Qtr. Outside Belt, Rear, Argent (23-23-39)
	1	2933 390-1	MOULDING PACKAGE, Qtr. Outside Belt, Rear, Chrome (23-23-39)
	4	9427 804	Screw
	2	6024 740	Seal 2 9420 293 Nut
18	1	3419 318-9	MOULDING PACKAGE, Deck Opng. Upr. Pnl., Argent (23-23-39)
	1	2933 416-7	MOULDING PACKAGE, Deck Opng. Upr. Pnl., Chrome (23-23-39)
	7	6002 936	Retainer
	7	9426 925	Nut
19	1	3569 957	NAME PLATE, Deck Lid, "Chrysler" (23-19-114)
	1	3569 955	"New Yorker" (23-19-114)
	AR	6002 852	Retainer
20	1	3620 046-7	MOULDING and SUPPORT PACKAGE, Qtr. Outside, w/Tape (23-23-39)
	1	3514 084-5	w/Black Paint (23-23-39)
	8	6002 927	Retainer
	8	6024 271	Screw 2 6028 614 Screw
21	1	3620 094-5	MOULDING PACKAGE, Qtr. Outside Wheel Opng. Pnl. (23-23-39)
	6	6026 907	Washer
	6	6010 088	Cup Washer
	6	449 621	Screw
22	1	2893 712-3	MOULDING, Rear Door Wdo. Opng. Frame, Rr. (23-23-33)
23	1	3620 042-3	MOULDING and TAPE PACKAGE, Rear Door (23-23-33)
	1	3481 994-5	MOULDING PACKAGE, Rear Door, w/Black Paint (23-23-33)
	5	6003 239	Retainer 2 6029 259 Nut
	2	6002 926	Retainer 5 6024 271 Screw
24	1	2933 464-5	MOULDING and T/PLATE PACKAGE, Rear Door Outside Belt, Frt. to Rear (23-23-33)
	16	6002 713	Retainer
25	1	3419 432-3	MOULDING PACKAGE, Frt. Door Outside Belt, use w/Turn Indicator Fndr. Mtg. (23-23-32)
	1	3419 434-5	MOULDING PACKAGE, Frt. Door Outside Belt, use w/o Turn Indicator Fndr. Mtg. (23-23-32)
	14	6002 713	Clip and Seal
26	1	3620 040-1	MOULDING and TAPE PACKAGE, Frt. Door (23-23-32)
	1	3481 992-3	MOULDING PACKAGE, Frt. Door, w/Black Paint (23-23-32)
	6	6003 239	Retainer 2 6029 259 Nut
	2	6002 926	Retainer 6 6024 271 Screw

All Packages Include Attaching Parts

Part Type Code is Indicated in Parentheses

1971

EXTERIOR VIEW - CHRYSLER NEW YORKER C-H 4 DOOR SEDAN

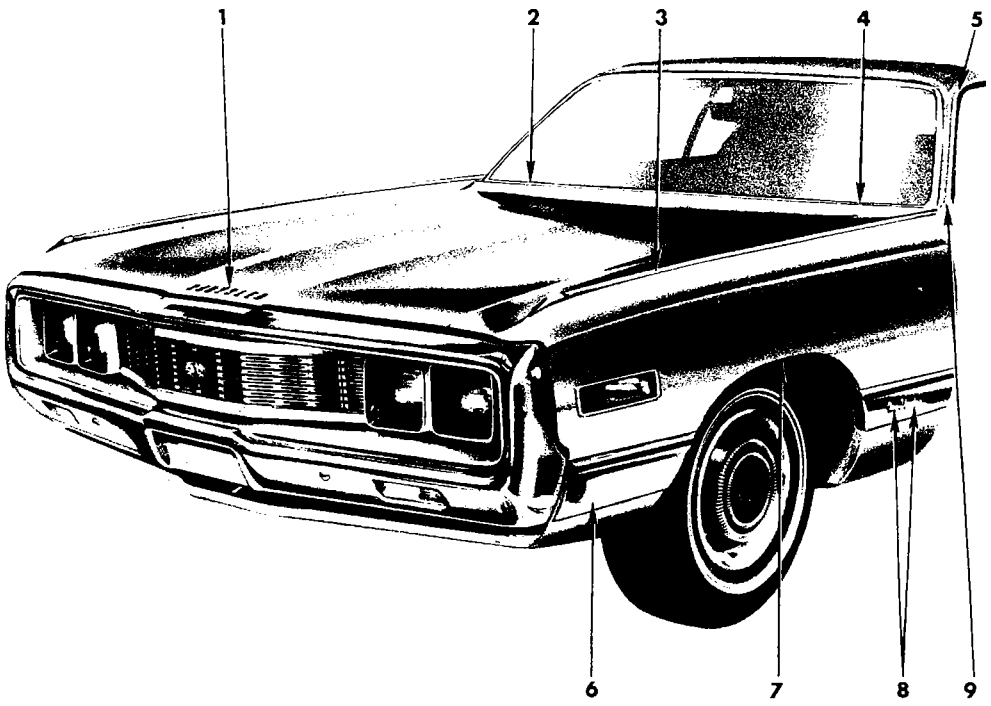

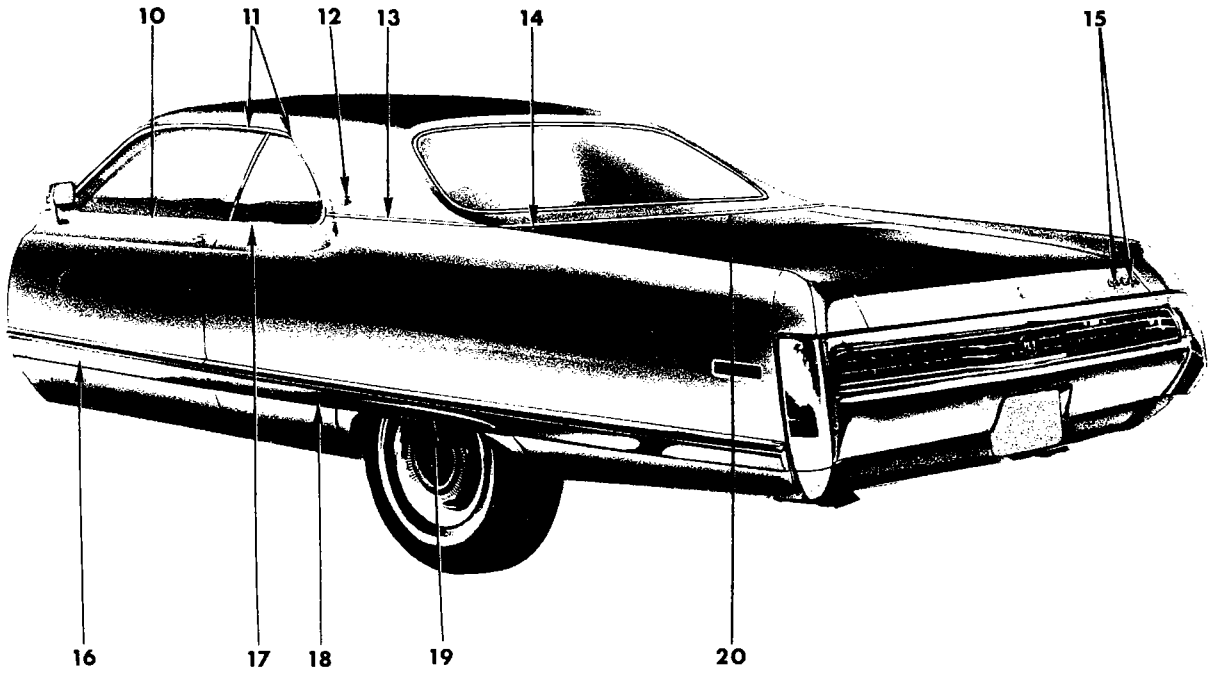

19a3583

1971
EXTERIOR VIEW - CHRYSLER NEW YORKER C-H 2 DOOR HARDTOP

REF. NO.	QTY	PART NUMBER	DESCRIPTION
1	1	2898 838	LETTER "C", Hood Front (15-06-16)
	1	2898 839	"H"
	2	2898 840	"R"
	1	2898 841	"Y"
	1	2898 842	"S"
	1	2898 843	"L"
	1	2898 844	"E"
	8	9420 254	Nut
2	1	2898 828	MOULDING, Hood Top Rear (15-25-2)
3	1	2933 334-5	MOULDING PACKAGE, Fender Outside Peak (12-15-2)
	18	6002 713	Clip
4	1	2949 488-9	MOULDING, Fender Hood Extension, Rear (12-15-2)
5	1	2933 602-3	MOULDING PACKAGE, Body Front Pillar Drain Trough, Up to approx. June 1, 1971 (23-59-61)
	6	6024 271	Screw
	1	3683 304-5	MOULDING PACKAGE, Body Front Pillar Drain Trough, After approx. June 1, 1971 (23-59-61)
	6	6024 271	Screw
6	1	3620 192-3	MOULDING and TAPE PACKAGE, Fender Side, Frt. (12-15-2)
	1	3481 790-1	MOULDING PACKAGE, Fender Side, Frt., w/Black Paint (12-15-2)
	2	6024 271	Screw
	5	6027 466	Nut
7	1	3481 792-3	MOULDING PACKAGE, Frt. Fender Whl. Opng. (12-15-2)
	8	6028 545	Screw
8	1	3620 036-7	MOULDING and NAME PLATE PACKAGE, Fender Side, Rr., w/Tape (12-15-2)
	1	3481 794-5	w/Black Paint (12-15-2)
	2	6024 271	Screw
	5	6027 466	Nut
9	1	3419 482-3	MOULDING PACKAGE, Body Frt. Lwr. Pillar (23-23-14)
	1	6028 674	Screw
10	1	3419 428-9	MOULDING PACKAGE, Door Outside Belt (23-23-32)
	16	6002 713	Clip
11	1	3419 388-9	MOULDING PACKAGE, Roof Side Drain Trough, Front and Rear (23-59-61)
	6	6024 271	Screw
12	2	2964 806	MEDALLION, Qtr. Outside (23-34-334)
	2	9420 263	Nut
13	1	3419 310-1	MOULDING PACKAGE, Qtr. Outside Belt, Frt., Argent, use w/Vinyl Roof or Two Tone Paint (23-23-39)
	1	2933 430-1	MOULDING PACKAGE, Qtr. Outside Belt, Frt., Chrome (23-23-39)
	4	6002 297	Retainer
	4	9420 254	Nut w/Seal
	6	6002 192	Fastener
14	1	3419 312-3	MOULDING PACKAGE, Qtr. Outside Belt, Rr., Argent, use w/Vinyl Roof or Two Tone Paint (23-23-39)
	1	2933 440-1	MOULDING PACKAGE, Qtr. Outside Belt, Rear, Chrome (23-23-39)
	4	6023 898	Screw
	2	9420 293	Nut w/Seal
15	1	3569 957	NAME PLATE, Deck Lid, "Chrysler" (23-19-114)
	1	3569 955	"New Yorker" (23-19-114)
	AR	6002 852	Retainer
16	1	3620 038-9	MOULDING and TAPE PACKAGE, Door (23-23-32)
	1	3481 914-5	MOULDING PACKAGE, Door, w/Black Paint (23-23-32)
	8	6003 239	Retainer
	8	6024 271	Screw
	2	6002 926	Retainer
	2	6029 259	Nut
17	1	2933 374-5	MOULDING PACKAGE, Qtr. Wdo. Outside Belt (23-23-39)
	4	6027 459	Screw
18	1	3620 044-5	MOULDING and SUPPORT PACKAGE, Qtr. Outside, w/Tape (23-23-39)
	1	3514 082-3	w/Black Paint (23-23-39)
	5	6003 239	Retainer
	5	6024 271	Screw
	8	6002 927	Retainer
	1	6028 614	Screw
19	1	3620 094-5	MOULDING PACKAGE, Qtr. Outside Wheel Opng. Panel (23-23-39)
	6	6026 907	Washer
	6	6010 088	Cup Washer
	6	449 621	Screw
20	1	3419 320-1	MOULDING PACKAGE, Deck Opng. Upr. Pnl., Argent, use w/Vinyl Roof or Two Tone Paint (23-23-31)
	1	2933 324-5	MOULDING PACKAGE, Deck Opng. Upr. Pnl., Chrome (23-23-31)
	14	6002 709	Retainer
	14	9426 925	Nut

All Packages Include Attaching Parts

Part Type Code is Indicated in Parentheses

1971
EXTERIOR VIEW - CHRYSLER NEW YORKER C-H 2 DOOR HARDTOP

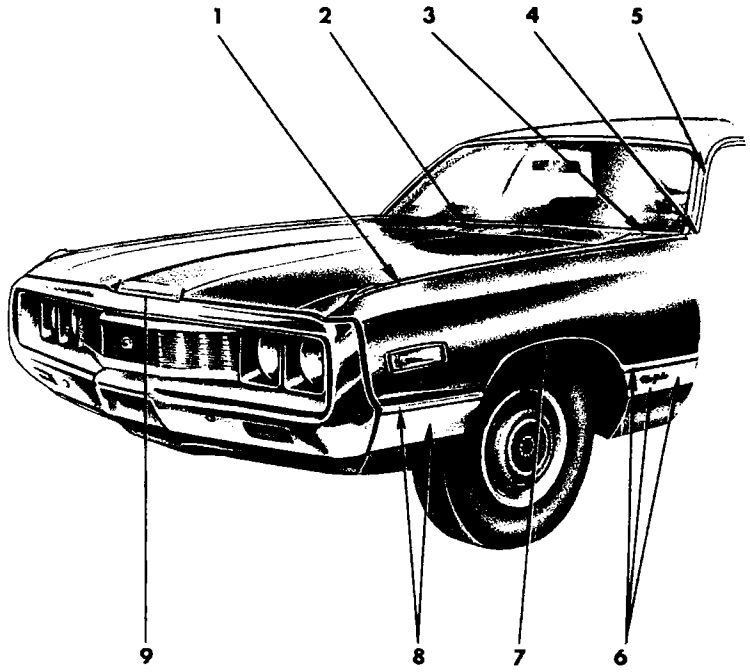

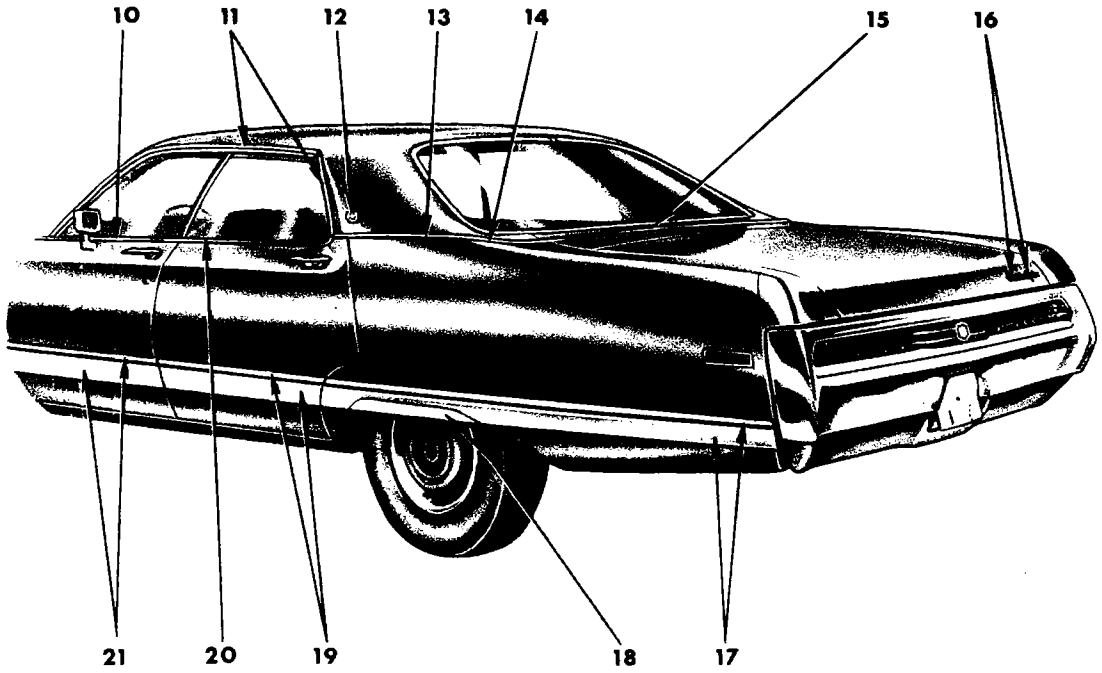

19a3648

1971
EXTERIOR VIEW - CHRYSLER NEW YORKER C-H 4 DOOR HARDTOP

REF. NO.	QTY	PART NUMBER	DESCRIPTION
1	1	2933 334-5	MOULDING PACKAGE, Fender Outside Peak (12-15-2)
	18	6002 713	Clip
2	1	2898 828	MOULDING, Hood Top Rear (15-25-2)
3	1	2949 488-9	MOULDING, Fender Hood Extension, Rear (12-15-2)
4	1	3419 482-3	MOULDING PACKAGE, Body Frt. Lwr. Pillar (23-23-14)
	1	6028 674	Screw
5	1	2933 600-1	MOULDING PACKAGE, Body Front Pillar Drain Trough, Up to approx. June 1, 1971 (23-59-61)
	6	6024 271	Screw
	1	3685 124-5	MOULDING PACKAGE, Body Front Pillar Drain Trough, After approx. June 1, 1971 (23-59-61)
	10	6024 271	Screw
6	1	3620 036-7	MOULDING and NAME PLATE PACKAGE, w/Tape, Fender Side Rear (12-15-2)
	1	3481 794-5	MOULDING and NAME PLATE PACKAGE, Fender Side, Rr., w/Black Paint (12-15-2)
	2	6024 271	Screw 5 6027 466 Nut
7	1	3481 792-3	MOULDING PACKAGE, Fender Wheel Opng. (12-15-2)
	8	6028 545	Screw
8	1	3620 192-3	MOULDING and TAPE PACKAGE, Fender Side, Frt. (12-15-2)
	1	3481 790-1	MOULDING PACKAGE, Fender Side, Frt., w/Black Paint (12-15-2)
	2	6024 271	Screw 5 6027 466 Nut
9	1	2898 838	NAME LETTER "C", Hood Front (15-06-16)
	1	2898 839	"H"
	2	2898 840	"R" 1 2898 843 "L"
	1	2898 841	"Y" 1 2898 844 "E"
	1	2898 842	"S" 8 9420 254 Nut
10	1	3419 432-3	MOULDING PACKAGE, Frt. Door Outside Belt, use w/Turn Indicator Fndr. Hood Mtg. (23-23-32)
	1	3419 434-5	MOULDING PACKAGE, Frt. Door Outside Belt, use w/o Turn Indicator Fndr. Hood Mtg. (23-23-32)
	14	6002 713	Clip and Seal
11	1	2964 846-7	MOULDING, Roof Side Drain Trough, Front and Rear, Up to approx. June 1, 1971 (23-59-61)
	8	6024 271	Screw
	1	3683 546-7	MOULDING PACKAGE, Roof Side Drain Trough, Front and Rear, After approx. June 1, 1971 (23-59-61)
	8	6024 271	Screw
12	2	2964 806	MEDALLION, Qtr. Outside (23-34-334)
	2	9420 263	Nut
13	1	3419 314-5	MOULDING PACKAGE, Qtr. Outside Belt, Frt., Argent (23-23-39)
	1	2933 376-7	MOULDING PACKAGE, Qtr. Outside Belt, Frt., Chrome (23-23-39)
	8	6002 192	Fastener
	2	6001 596	Retainer 2 9420 254 Nut
14	1	3419 316-7	MOULDING PACKAGE, Qtr. Outside Belt, Rr., Argent (23-23-39)
	1	2933 390-1	MOULDING PACKAGE, Qtr. Outside Belt, Rear, Chrome (23-23-39)
	4	9427 804	Screw
	2	6024 740	Seal 2 9420 293 Nut
15	1	3419 318-9	MOULDING PACKAGE, Deck Opng. Upr. Pnl., Argent (23-23-31)
	1	2933 416-7	MOULDING PACKAGE, Deck Opng. Upr. Pnl., Chrome (23-23-31)
	7	6002 936	Retainer 7 9426 925 Nut
16	1	3569 957	NAME PLATE, Deck Lid, "Chrysler" (23-19-114)
	1	3569 955	"New Yorker" (23-19-114)
	AR	6002 852	Retainer
17	1	3620 046-7	MOULDING and SUPPORT PACKAGE, Qtr. Outside, w/Tape (23-23-39)
	1	3514 084-5	w/Black Paint (23-23-39)
	8	6002 927	Retainer
	8	6024 271	Screw
	2	6028 614	Screw
18	1	3620 094-5	MOULDING PACKAGE, Qtr. Outside Wheel Opng. Pnl. (23-23-39)
	6	6026 907	Washer
	6	6010 088	Cup Washer
	6	449 621	Screw
19	1	3620 042-3	MOULDING and TAPE PACKAGE, Rr. Door (23-23-33)
	1	3481 994-5	MOULDING PACKAGE, Rear Door, w/Black Paint (23-23-33)
	5	6003 239	Retainer 5 6024 271 Screw
	2	6002 926	Retainer 2 6029 259 Nut
20	1	2933 464-5	MOULDING and T/PLATE PACKAGE, Rear Door Belt, Frt. to Rear (23-23-33)
	16	6002 713	Retainer
21	1	3620 040-1	MOULDING and TAPE PACKAGE, Frt. Door (23-23-32)
	1	3481 992-3	MOULDING PACKAGE, Frt. Door, w/Black Paint (23-23-32)
	6	6003 239	Retainer 6 6024 271 Screw
	2	6002 926	Retainer 2 6029 259 Nut

All Packages Include Attaching Parts

Part Type Code is Indicated in Parentheses

1971
EXTERIOR VIEW - CHRYSLER NEW YORKER C-H 4 DOOR HARDTOP

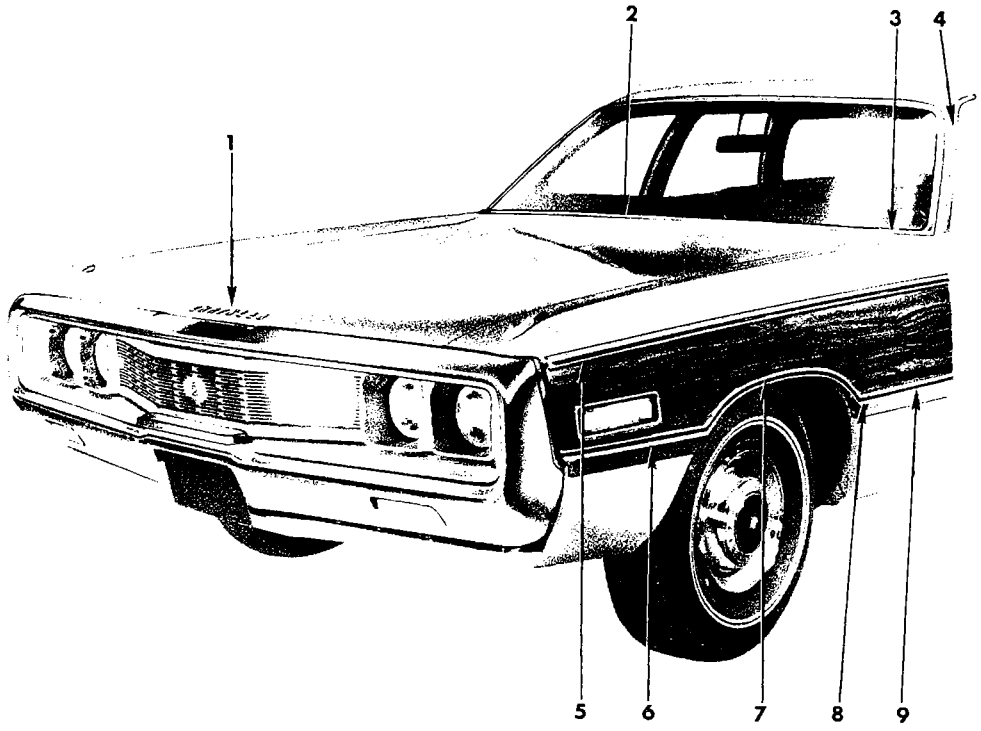

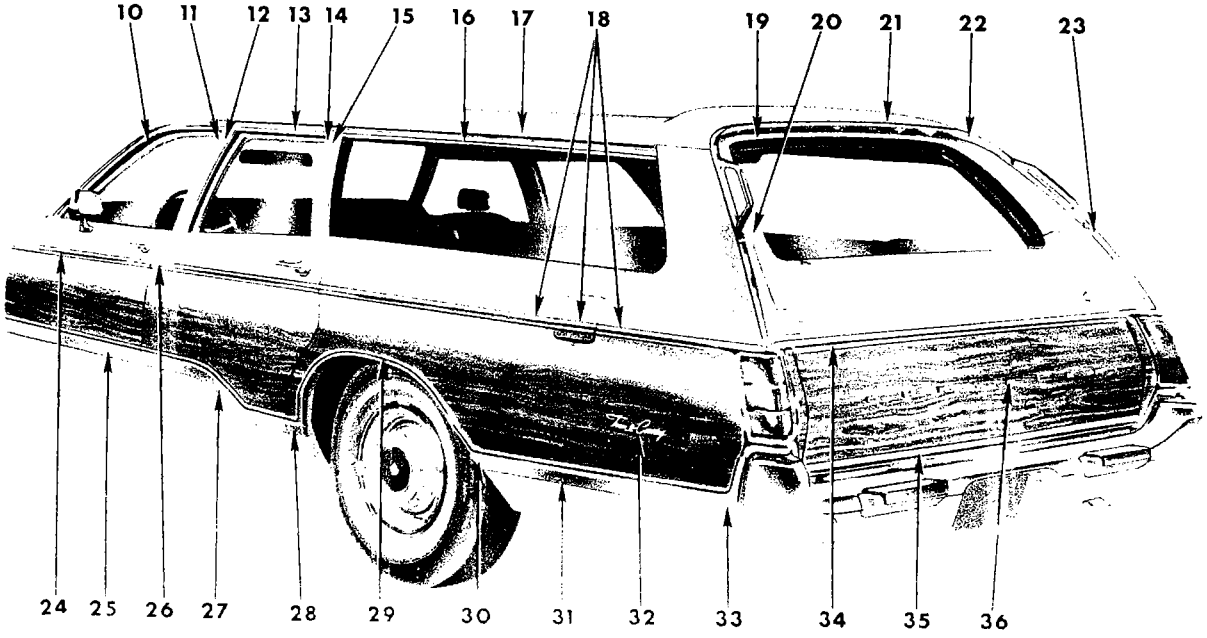

1-03475

1971
EXTERIOR VIEW - CHRYSLER TOWN AND COUNTRY C-P STATION WAGON

REF. NO.	QTY	PART NUMBER	DESCRIPTION
1	1	2898 838	LETTER "C", Hood Front (15-06-16)
	1	2898 839	"H"
	2	2898 840	"R"
	1	2898 841	"Y"
	1	2898 842	"S"
	1	2898 843	"L"
	1	2898 844	"E"
	8	9420 254	Nut
2	1	2898 828	MOULDING, Hood Rear (15-25-2)
3	1	2949 488-9	MOULDING, Fender Hood Extension, Rear (12-15-2)
4	1	2933 568-9	MOULDING PACKAGE, Body Front Pillar Drain Trough (23-59-61)
	10	6024 271	Screw
5	1	3481 798-9	MOULDING PACKAGE, Fender Side, Upr. (12-15-2)
	4	6002 487	Retainer
	4	9420 219	Nut
	14	6002 726	Retainer
6	1	3481 796-7	MOULDING PACKAGE, Fender Side, Lwr. Frt. (12-15-2)
	6	6024 735	Seal
	6	6027 466	Nut
	2	152 305	Screw
7	1	3481 902-3	MOULDING PACKAGE, Fender Wheel Opng. (12-15-2)
	6	6028 545	Screw
8	1	3481 904-5	MOULDING PACKAGE, Fender Wheel Opng., Rear (12-15-2)
	2	6028 545	Screw
	2	9420 293	Nut
	2	6025 464	Seal
9	1	3481 906-7	MOULDING PACKAGE, Fender Side, Lwr. Rear (12-15-2)
	6	6002 720	Retainer
10	1	2893 698-9	MOULDING, Frt. Door Wdo. Opng. Frame, Upr. (23-23-32)
11	1	2893 700-1	MOULDING, Frt. Door Wdo. Opng. Frame, Rear (23-23-32)
12	1	2893 700	MOULDING, Rear Door Wdo. Opng. Frame, Frt., Lt. (23-23-33)
	1	2893 701	MOULDING, Rear Door Wdo. Opng. Frame, Frt., Rt. (23-23-33)
13	1	2893 724-5	MOULDING, Rear Door Wdo. Opng. Frame, Upr. (23-23-33)
14	1	2893 728-9	MOULDING, Rear Door Wdo. Opng. Frame, Rear (23-23-33)
15	1	2893 256-7	MOULDING, Qtr. Wdo. Outside, Frt., Prime (23-23-73)
	1	2894 870-1	MOULDING, Qtr. Wdo. Outside, Frt., Finish (23-23-73)
16	1	2893 258-9	MOULDING, Qtr. Wdo. Outside, Upr., Prime (23-23-73)
	1	2894 872-3	MOULDING, Qtr. Wdo. Outside, Upr., Finish (23-23-73)
17	1	3419 450-1	MOULDING PACKAGE, Roof Side Drain Trough (23-59-61)
	12	6024 271	Screw
18	1	3481 952	MOULDING PACKAGE, Qtr. Outside, Upr., Rt. (23-23-39)
	9	6002 726	Retainer
	1	3481 953	MOULDING PACKAGE, Qtr. Outside, Upr. Frt., Lt. (23-23-39)
	10	6002 726	Retainer
	1	6002 724	Retainer
	1	3481 957	MOULDING PACKAGE, Qtr. Outside Fuel Filler Door (23-23-39)
	2	6002 487	Retainer
	2	6023 265	Nut
	1	3481 955	MOULDING PACKAGE, Qtr. Outside, Upr. Rear, Lt. (23-23-39)
	1	6002 724	Retainer
	10	6002 726	Retainer
19	1	2894 445	MOULDING, Roof Pnl. Outside Tailgate Opng. Upr. Prime (23-23-60)
20	1	2894 442-3	MOULDING, Qtr. Pnl. Outside Tailgate Pillar, Upr. Tailgate Opng., Prime (23-23-60)
21	1	2894 418	MOULDING, Roof Rear Air Deflector, Ctr. (23-23-60)
22	1	2894 416-7	MOULDING, Roof Rear Air Deflector, End (23-23-60)
23	1	3419 066-7	MOULDING PACKAGE, Qtr. Pnl. Outside Tailgate Pillar Upr., Short, use w/Assist Handles (23-23-60)
	8	6002 665	Spacer
	1	2894 592-3	MOULDING, Qtr. Pnl. Outside Tailgate Pillar, Upr., use w/o Assist Handles (23-23-60)
24	1	3481 948-9	MOULDING PACKAGE, Frt. Door, Upr. (23-23-32)
	10	6002 726	Retainer
	2	6002 487	Retainer
	2	6029 259	Nut
25	1	3481 958-9	MOULDING PACKAGE, Frt. Door, Lwr. (23-23-32)
	10	6002 720	Retainer
	2	6002 763	Retainer
	2	6029 259	Nut
26	1	3481 950-1	MOULDING PACKAGE, Rear Door, Upr. (23-23-33)
	6	6002 726	Retainer
	4	6002 487	Retainer
	4	6029 259	Nut

CONTINUED ON NEXT PAGE

All Packages Include Attaching Parts

Part Type Code is Indicated in Parentheses

1971
EXTERIOR VIEW - CHRYSLER TOWN AND COUNTRY C-P STATION WAGON

REF. NO.	QTY	PART NUMBER	DESCRIPTION
27	1	3481 960-1	MOULDING PACKAGE, Rear Door, Lwr. (23-23-33)
	4	9420 218	Nut
	4	6003 129	Retainer
	2	6002 763	Retainer
	2	6029 259	Nut
	2	6002 909	Retainer
	2	6026 523	Nut
28	1	3481 976-7	MOULDING PACKAGE, Qtr. Outside Wheel Opng., Frt. (23-23-39)
	4	6028 545	Screw
29	1	3481 964-5	MOULDING PACKAGE, Qtr. Outside Wheel Opng. (23-23-39)
	8	6028 545	Screw
	4	6023 895	Screw
30	1	3481 966-7	MOULDING PACKAGE, Qtr. Outside Wheel Opng., Rear (23-23-39)
	2	6028 545	Screw
	4	6023 895	Screw
31	1	3481 962-3	MOULDING PACKAGE, Qtr. Outside, Lwr. Frt. (23-23-39)
	10	6002 914	Retainer
32	2	3446 749	NAME PLATE, Qtr. Panel, "Town & Country" (23-34-238)
	8	6002 582	Retainer
33	1	3579 052-3	MOULDING PACKAGE, Qtr. Outside, Lwr. Rear (23-23-39)
	2	6026 650	Screw
34	1	3481 767	MOULDING PACKAGE, Tailgate, Upr. (23-23-61)
	1	6002 487	Retainer
	1	6026 523	Nut
	5	6002 726	Retainer
35	1	3481 770	MOULDING PACKAGE, Tailgate, Lwr. (23-23-61)
	2	6002 487	Retainer
	2	6026 523	Nut
	5	6002 436	Retainer
	5	6024 271	Screw
36	1	3506 271	LETTER "C", Tailgate Outside Panel (23-54-11)
	1	3506 272	"H"
	2	3506 273	"R"
	1	3506 274	"Y"
	1	3506 275	"S"
	1	3506 276	"L"
	1	3506 277	"E"
	16	6002 852	Retainer

All Packages Include Attaching Parts

Part Type Code is Indicated in Parentheses

1971
EXTERIOR VIEW - CHRYSLER TOWN AND COUNTRY C-P STATION WAGON

NOTES

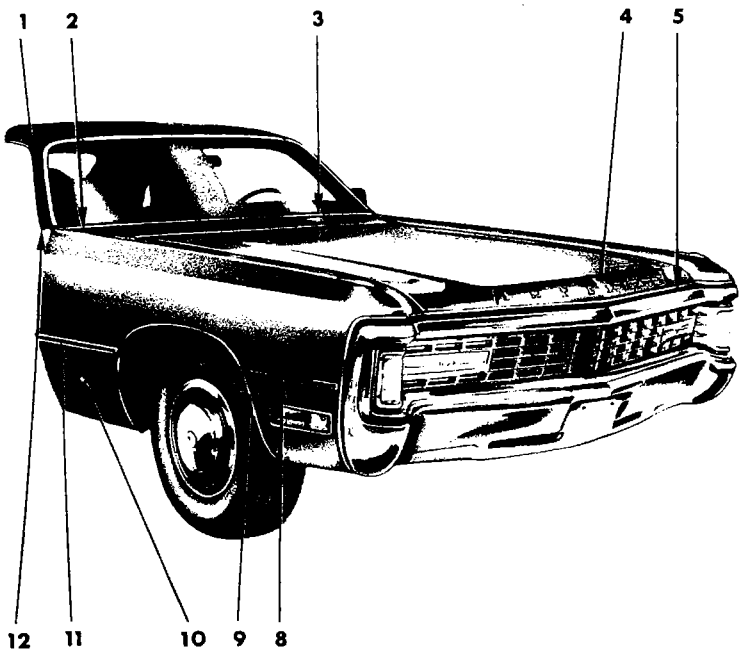

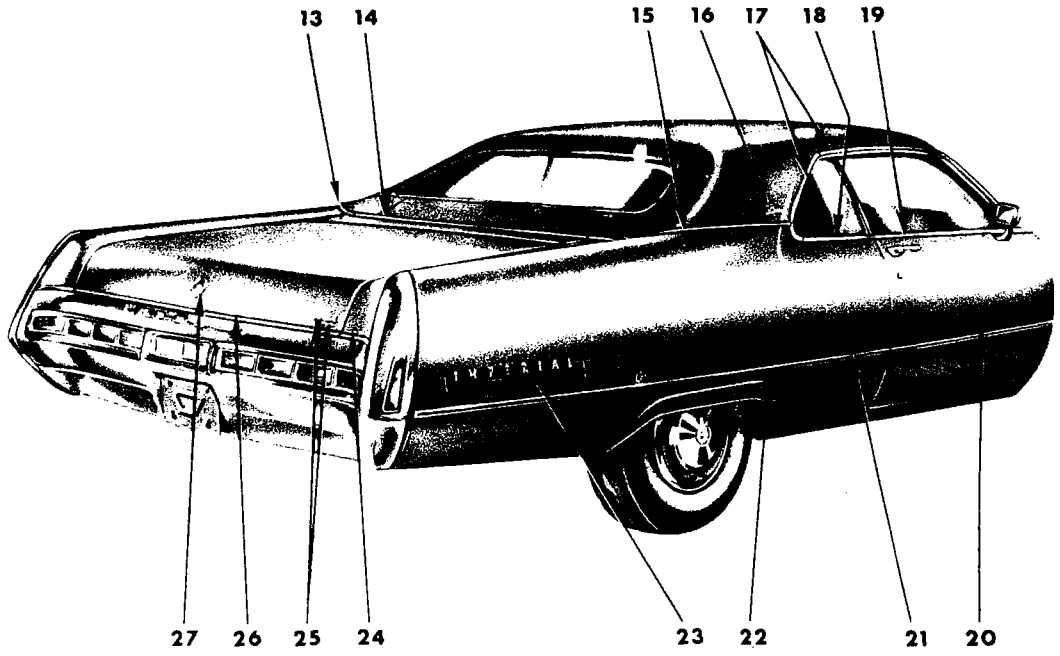

19a3487 A

1971
EXTERIOR VIEW - IMPERIAL LE BARON Y-M 2 DOOR HARDTOP

REF. NO.	QTY	PART NUMBER	DESCRIPTION
1	1	2933 602-3	MOULDING PACKAGE, Body Front Pillar Drain Trough, Up to approx. June 1, 1971 (23-59-61)
	6	6024 271	Screw
	1	3683 304-5	MOULDING PACKAGE, Body Front Pillar Drain Trough, After approx. June 1, 1971 (23-59-61)
	6	6024 271	Screw
2	1	2949 488-9	MOULDING, Fender Hood Extension, Rear (12-15-2)
3	1	2898 828	MOULDING, Hood Top Rear (15-25-2)
4	2	3443 748	LETTER "I", Hood Front (15-06-16)
	1	3443 749	"M"
	1	3443 750	"P"
	1	3443 751	"E"
	1	3443 752	"R"
	1	3443 753	"A"
	1	3443 754	"L"
	8	6027 352	Nut
5	1	3620 230	MOULDING PACKAGE, Hood Front (15-25-2)
	8	152 334	Screw
8	1	3579 952-3	MOULDING PACKAGE, Fender Side, Frt., Black (12-15-2)
	1	3579 954-5	Burgundy (12-15-2)
	1	3579 956-7	Tan (12-15-2)
	1	3579 958-9	Gold (12-15-2)
	1	3579 960-1	Green (12-15-2)
	6	6003 170	Retainer
	6	6024 271	Screw
	1	6029 259	Nut
	1	6003 004	Retainer
9	1	2933 276-7	MOULDING PACKAGE, Fender Wheel Opng. (12-15-2)
	14	6028 545	Screw
10	1	2785 540	MEDALLION, Fender Side, Rt., Pentastar (12-15-12)
11	1	3579 972-3	MOULDING PACKAGE, Fender Side, Rear, Black (12-15-2)
	1	3579 974-5	Burgundy (12-15-2)
	1	3579 976-7	Tan (12-15-2)
	1	3579 978-9	Gold (12-15-2)
	1	3579 980-1	Green (12-15-2)
	1	6003 170	Retainer
	1	6024 271	Screw
	2	6003 204	Retainer
	2	6029 259	Nut
12	1	3419 482-3	MOULDING PACKAGE, Body Front Lwr. Pillar (23-23-14)
	1	6028 674	Screw
13	1	3579 758-9	MOULDING PACKAGE, Qtr. Outside Belt, Rear, Burgundy (23-23-39)
	1	3579 760-1	White (23-23-39)
	1	3579 762-3	Black (23-23-39)
	1	3579 764-5	Tan (23-23-39)
	1	3579 766-7	Gold (23-23-39)
	1	3579 768-9	Green (23-23-39)
	2	9427 804	Screw
14	1	3579 800-1	MOULDING PACKAGE, Deck Opng. Upr., Burgundy (23-23-31)
	1	3579 802-3	White (23-23-31)
	1	3579 804-5	Black (23-23-31)
	1	3579 806-7	Tan (23-23-31)
	1	3579 808-9	Gold (23-23-31)
	1	3579 810-1	Green (23-23-31)
	4	6002 936	Retainer
	4	9426 925	Nut
15	1	3579 772-3	MOULDING PACKAGE, Qtr. Outside Belt, Frt., Burgundy (23-23-39)
	1	3579 774-5	White (23-23-39)
	1	3579 776-7	Black (23-23-39)
	1	3579 778-9	Tan (23-23-39)
	1	3579 780-1	Gold (23-23-39)
	1	3579 782-3	Green (23-23-39)
	3	6002 192	Retainer
	1	6002 297	Retainer
	1	9420 254	Nut
16	2	3504 322	NAME PLATE, Qtr. Outside Panel, "Le Baron" (23-34-238)
	4	9420 263	Nut
17	1	3419 388-9	MOULDING PACKAGE, Roof Side Drain Trough, Front and Rear (23-59-61)
	6	6024 271	Screw
18	1	2933 374-5	MOULDING PACKAGE, Qtr. Wdo. Outside Belt (23-23-39)
	4	6027 459	Screw
19	1	3419 430-1	MOULDING PACKAGE, Door Outside Belt (23-23-32)
	16	6002 713	Retainer
20	1	3620 068-9	MOULDING PACKAGE, Door, Upr., Black (23-23-32)
	1	3579 940-1	Burgundy (23-23-32)
	1	3579 942-3	Tan (23-23-32)
	1	3579 944-5	Gold (23-23-32)
	1	3579 946-7	Green (23-23-32)
	6	6003 170	Retainer
	6	6024 271	Screw
	1	6003 204	Retainer
	1	6029 259	Nut

CONTINUED ON NEXT PAGE

All Packages Include Attaching Parts

Part Type Code is Indicated in Parentheses

1971
EXTERIOR VIEW - IMPERIAL LE BARON Y-M 2 DOOR HARDTOP

REF. NO.	QTY	PART NUMBER	DESCRIPTION
21	1	3579 912-3	MOULDING PACKAGE, Qtr., Upr., Black (23-23-39)
	1	3579 914-5	Burgundy (23-23-39)
	1	3579 916-7	Tan (23-23-39)
	1	3579 918-9	Gold (23-23-39)
	1	3579 920-1	Green (23-23-39)
	11	6003 170	Retainer
	11	6024 271	Screw
	1	6003 204	Retainer
	1	6029 259	Nut
22	1	3620 220-1	MOULDING PACKAGE, Qtr. Outside Wheel Opng. Panel (23-23-39)
	5	6024 271	Screw
23	4	3568 522	LETTER "I", Qtr. Panel (23-34-238)
	2	3568 523	"M"
	2	3568 524	"P"
	2	3568 525	"E"
	2	3568 526	"R"
	2	3568 527	"A"
	2	3568 528	"L"
	32	9420 263	Nut
24	1	3620 218-9	MOULDING PACKAGE, Qtr. Pnl. Outside End Extension (23-23-39)
	1	9425 246	Screw
25	1	3570 598	NAME PLATE, Deck Lid, "Imperial" (23-19-114)
	1	3612 864	NAME PLATE, Deck Lid, "By Chrysler" (23-19-114)
26	1	3579 970	MOULDING PACKAGE, Deck Lid Lwr. Edge (23-23-30)
	6	6024 271	Screw
27	1	2945 391	MEDALLION, Deck Lid Lock Cyl. (23-17-19)

All Packages Include Attaching Parts

Part Type Code is Indicated in Parentheses

1971
EXTERIOR VIEW - IMPERIAL LE BARON Y-M 2 DOOR HARDTOP

NOTES

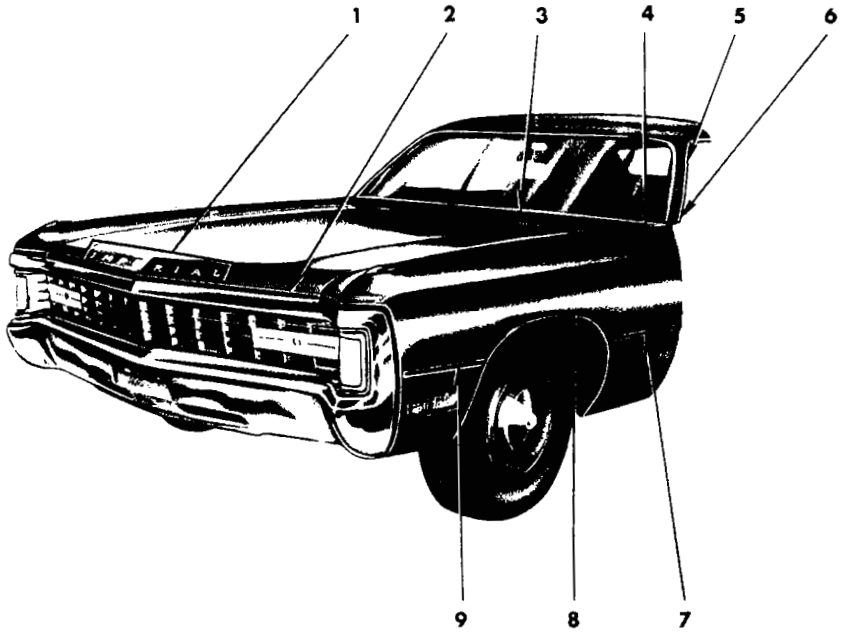

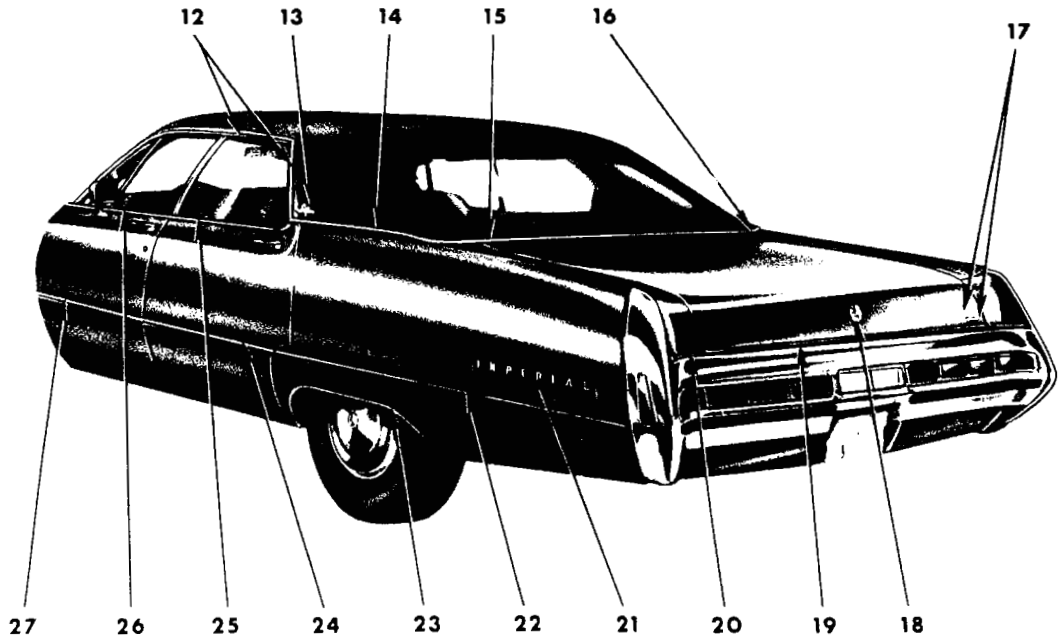

19a3587 A

1971
EXTERIOR VIEW - IMPERIAL LE BARON Y-M 4 DOOR HARDTOP

REF. NO.	QTY	PART NUMBER	DESCRIPTION
1	2	3443 748	LETTER "I", Hood Front (15-06-16)
	1	3443 749	"M"
	1	3443 750	"P"
	1	3443 751	"E"
	1	3443 752	"R"
	1	3443 753	"A"
	1	3443 754	"L"
	8	6027 352	Nut
2	1	3620 230	MOULDING PACKAGE, Hood Front (15-25-2)
	8	152 334	Screw
3	1	2898 828	MOULDING, Hood Top Rear (15-25-2)
4	1	2949 488-9	MOULDING, Fender Hood Extension, Rear (12-15-2)
5	1	2933 600-1	MOULDING PACKAGE, Body Front Pillar Drain Trough, Up to approx. June 1, 1971 (23-59-61)
	6	6024 271	Screw
	1	3685 124-5	MOULDING PACKAGE, Body Front Pillar Drain Trough, After approx. June 1, 1971 (23-59-61)
	10	6024 271	Screw
6	1	3419 482-3	MOULDING PACKAGE, Body Frt. Lwr. Pillar (23-23-14)
	1	6028 674	Screw
7	1	3579 972-3	MOULDING PACKAGE, Fender Side, Rear, Black (12-15-2)
	1	3579 974-5	Burgundy (12-15-2)
	1	3579 976-7	Tan (12-15-2)
	1	3579 978-9	Gold (12-15-2)
	1	3579 980-1	Green (12-15-2)
	1	6003 170	Retainer
	1	6024 271	Screw
	2	6003 204	Retainer
	2	6029 259	Nut
8	1	2933 276-7	MOULDING PACKAGE, Fender Wheel Opng. (12-15-2)
	14	6028 545	Screw
9	1	3579 952-3	MOULDING PACKAGE, Fender Side, Frt., Black (12-15-2)
	1	3579 954-5	Burgundy (12-15-2)
	1	3579 956-7	Tan (12-15-2)
	1	3579 958-9	Gold (12-15-2)
	1	3579 960-1	Green (12-15-2)
	6	6003 170	Retainer
	6	6024 271	Screw
	1	6029 259	Nut
	1	6003 004	Retainer
12	1	2964 846-7	MOULDING, Roof Side Drain Trough, Front and Rear, Up to approx. June 1, 1971 (23-59-61)
	8	6024 271	Screw
	1	3683 546-7	MOULDING PACKAGE, Roof Side Drain Trough, Front and Rear, After approx. June 1, 1971 (23-59-61)
	8	6024 271	Screw
13	2	3504 322	NAME PLATE, Qtr. Outside Panel, "Le Baron" (23-34-238)
	4	9420 263	Nut
14	1	3579 786-7	MOULDING PACKAGE, Qtr. Outside Belt, Frt., Burgundy (23-23-39)
	1	3579 788-9	White (23-23-39)
	1	3579 790-1	Black (23-23-39)
	1	3579 792-3	Tan (23-23-39)
	1	3579 794-5	Gold (23-23-39)
	1	3579 796-7	Green (23-23-39)
	4	6002 192	Retainer
	1	6002 297	Retainer
	1	9420 254	Nut
15	1	3579 814-5	MOULDING PACKAGE, Deck Opng. Upr., Burgundy (23-23-31)
	1	3579 816-7	White (23-23-31)
	1	3579 818-9	Black (23-23-31)
	1	3579 820-1	Tan (23-23-31)
	1	3579 822-3	Gold (23-23-31)
	1	3579 824-5	Green (23-23-31)
	4	6002 936	Retainer
	4	9426 925	Nut
16	1	3579 744-5	MOULDING PACKAGE, Qtr. Outside Belt, Rear, Burgundy (23-23-39)
	1	3579 746-7	White (23-23-39)
	1	3579 748-9	Black (23-23-39)
	1	3579 750-1	Tan (23-23-39)
	1	3579 752-3	Gold (23-23-39)
	1	3579 754-5	Green (23-23-39)
	2	9427 804	Screw
17	1	3570 598	NAME PLATE, Deck Lid, "Imperial" (23-19-114)
	1	3612 864	NAME PLATE, Deck Lid, "By Chrysler" (23-19-114)
18	1	2945 391	MEDALLION, Deck Lid Lock Cyl. (23-17-19)
19	1	3579 970	MOULDING PACKAGE, Deck Lid Lwr. Edge (23-23-30)
	6	6024 271	Screw
20	1	3620 218-9	MOULDING PACKAGE, Qtr. Pnl. Outside End Extension (23-23-39)
	1	9425 246	Screw
21	4	3568 522	LETTER "I", Qtr. Panel (23-34-238)
	2	3568 523	"M"
	2	3568 524	"P"
	2	3568 525	"E"
	2	3568 526	"R"
	2	3568 527	"A"
	2	3568 528	"L"
	32	9420 263	Nut

CONTINUED ON NEXT PAGE

All Packages Include Attaching Parts

Part Type Code is Indicated in Parentheses

1971
EXTERIOR VIEW - IMPERIAL LE BARON Y-M 4 DOOR HARDTOP

REF. NO.	QTY	PART NUMBER	DESCRIPTION
22	1	3579 926-7	MOULDING PACKAGE, Qtr. Outside, Upr., Black (23-23-39)
	1	3579 928-9	Burgundy (23-23-39)
	1	3579 930-1	Tan (23-23-39)
	1	3579 932-3	Gold (23-23-39)
	1	3579 934-5	Green (23-23-39)
	8	6003 170	Retainer
	8	6024 271	Screw
	1	6003 204	Retainer
	1	6029 259	Nut
23	1	3620 220-1	MOULDING PACKAGE, Qtr. Outside Wheel Opng. Pnl. (23-23-39)
	5	6024 271	Screw
24	1	3579 898-9	MOULDING PACKAGE, Rear Door, Upr., Black (23-23-33)
	1	3579 900-1	Burgundy (23-23-33)
	1	3579 902-3	Tan (23-23-33)
	1	3579 904-5	Gold (23-23-33)
	1	3579 906-7	Green (23-23-33)
	4	6003 170	Retainer
	4	6024 271	Screw
	2	6003 204	Retainer
	2	6029 259	Nut
25	1	2933 464-5	MOULDING and T/PLATE PACKAGE, Rear Door Outside Belt Frt. to Rear (23-23-33)
	16	6002 713	Retainer
26	1	3419 434-5	MOULDING PACKAGE, Frt. Door Outside Belt (23-23-32)
	16	6002 713	Retainer
27	1	3579 884-5	MOULDING PACKAGE, Frt. Door, Upr., Black (23-23-32)
	1	3579 886-7	Burgundy (23-23-32)
	1	3579 888-9	Tan (23-23-32)
	1	3579 890-1	Gold (23-23-32)
	1	3579 892-3	Green (23-23-32)
	5	6003 170	Retainer
	5	6024 271	Screw
	1	6003 204	Retainer
	1	6029 259	Nut

All Packages Include Attaching Parts

Part Type Code is Indicated in Parentheses

1971
EXTERIOR VIEW - IMPERIAL LE BARON Y-M 4 DOOR HARDTOP

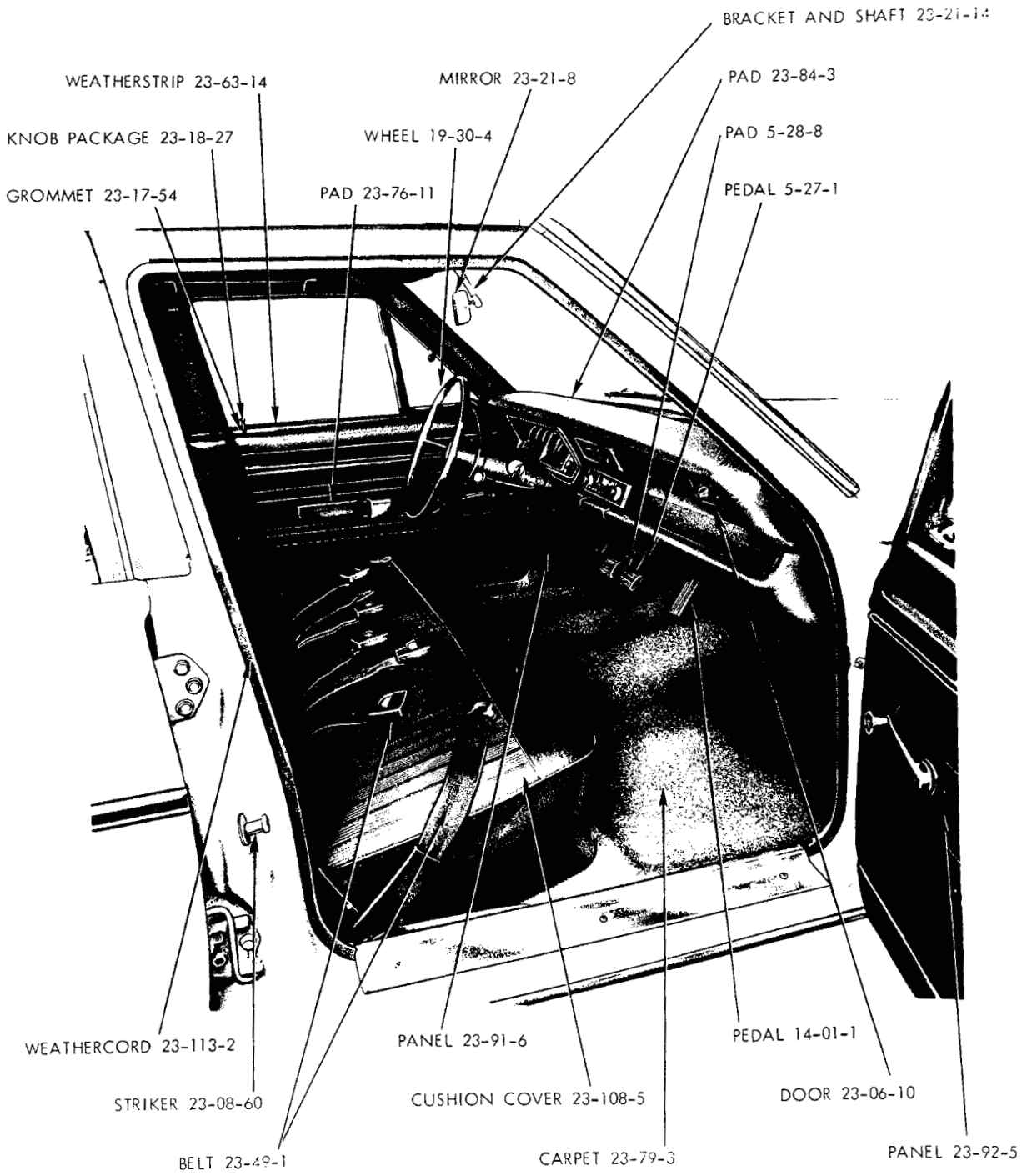

19a3563

1971
FRONT INTERIOR - VALIANT V-L 4 DOOR SEDAN

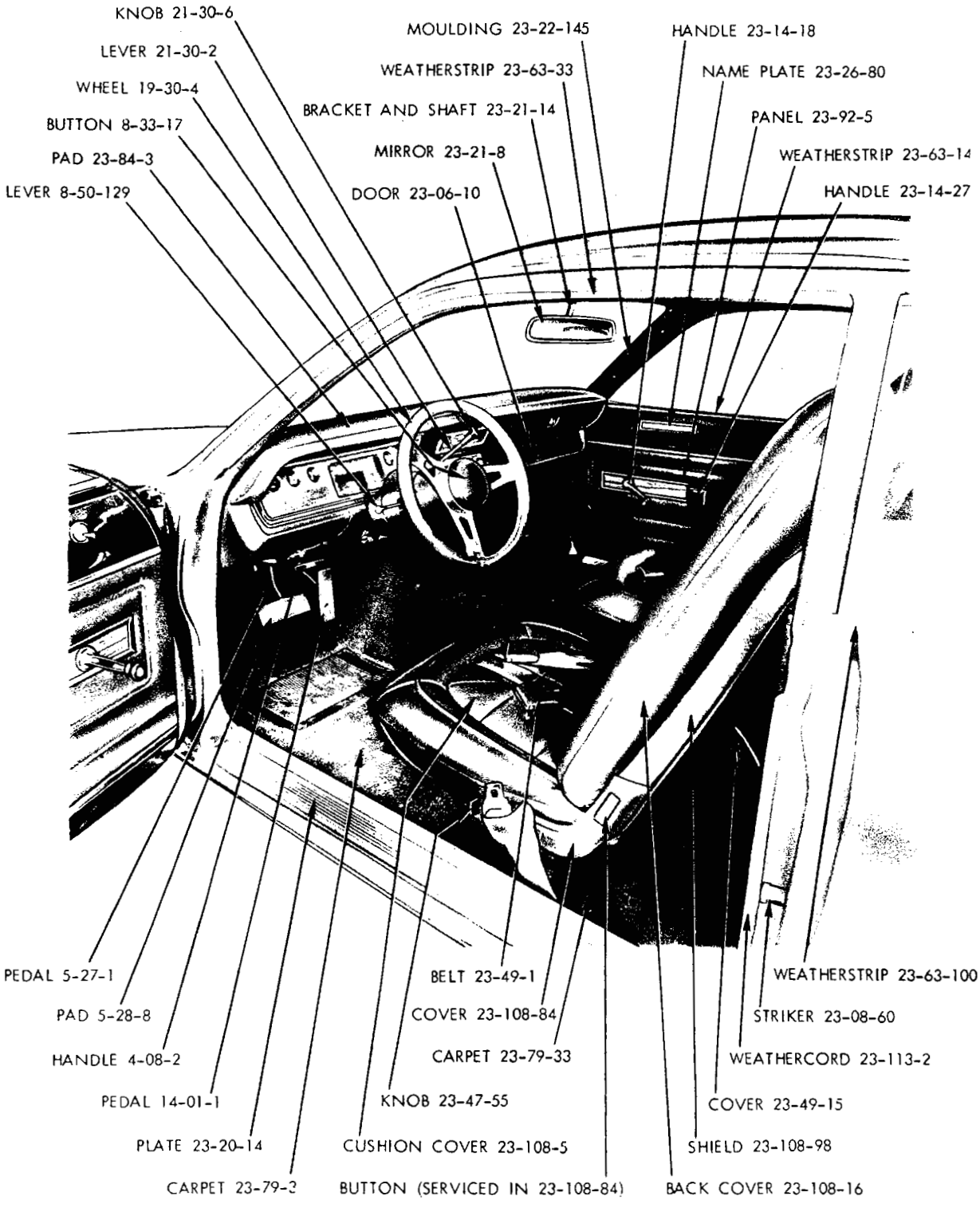

19a3606

1971
FRONT INTERIOR - VALIANT DUSTER V-L FASTBACK

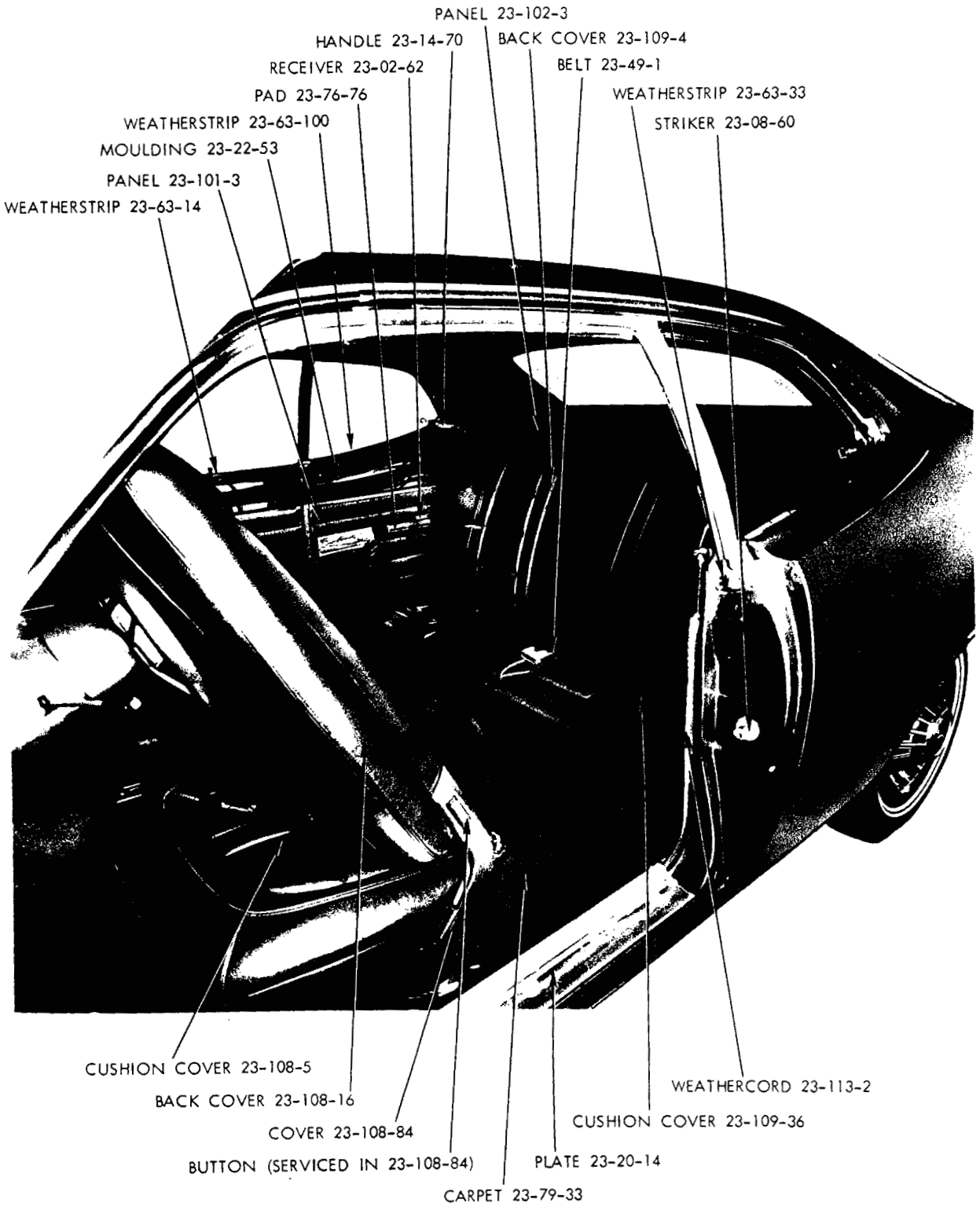

19a3621

1971
REAR INTERIOR - VALIANT DUSTER V-L FASTBACK

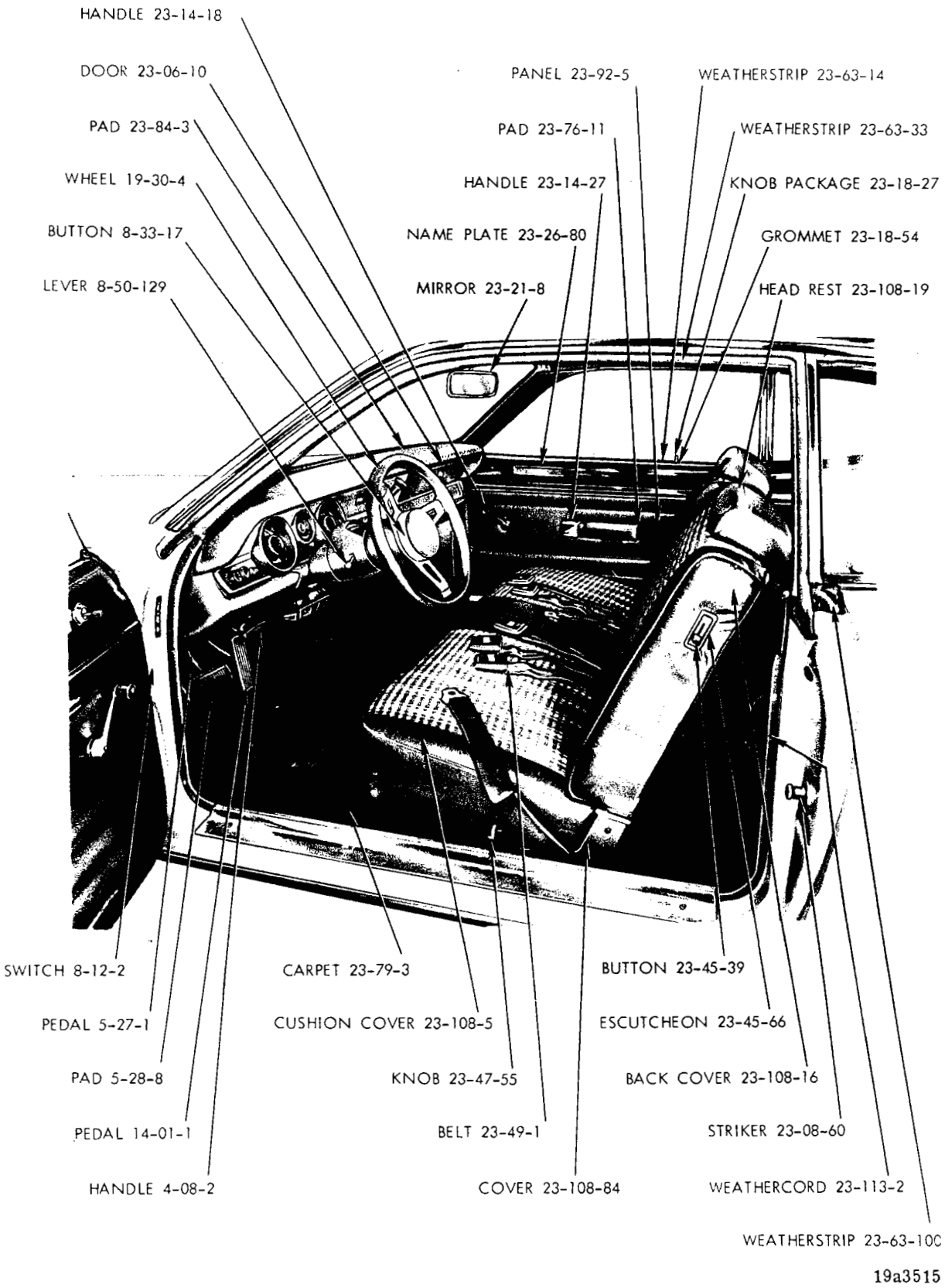

1971
FRONT INTERIOR - DUSTER 340 V-S FASTBACK

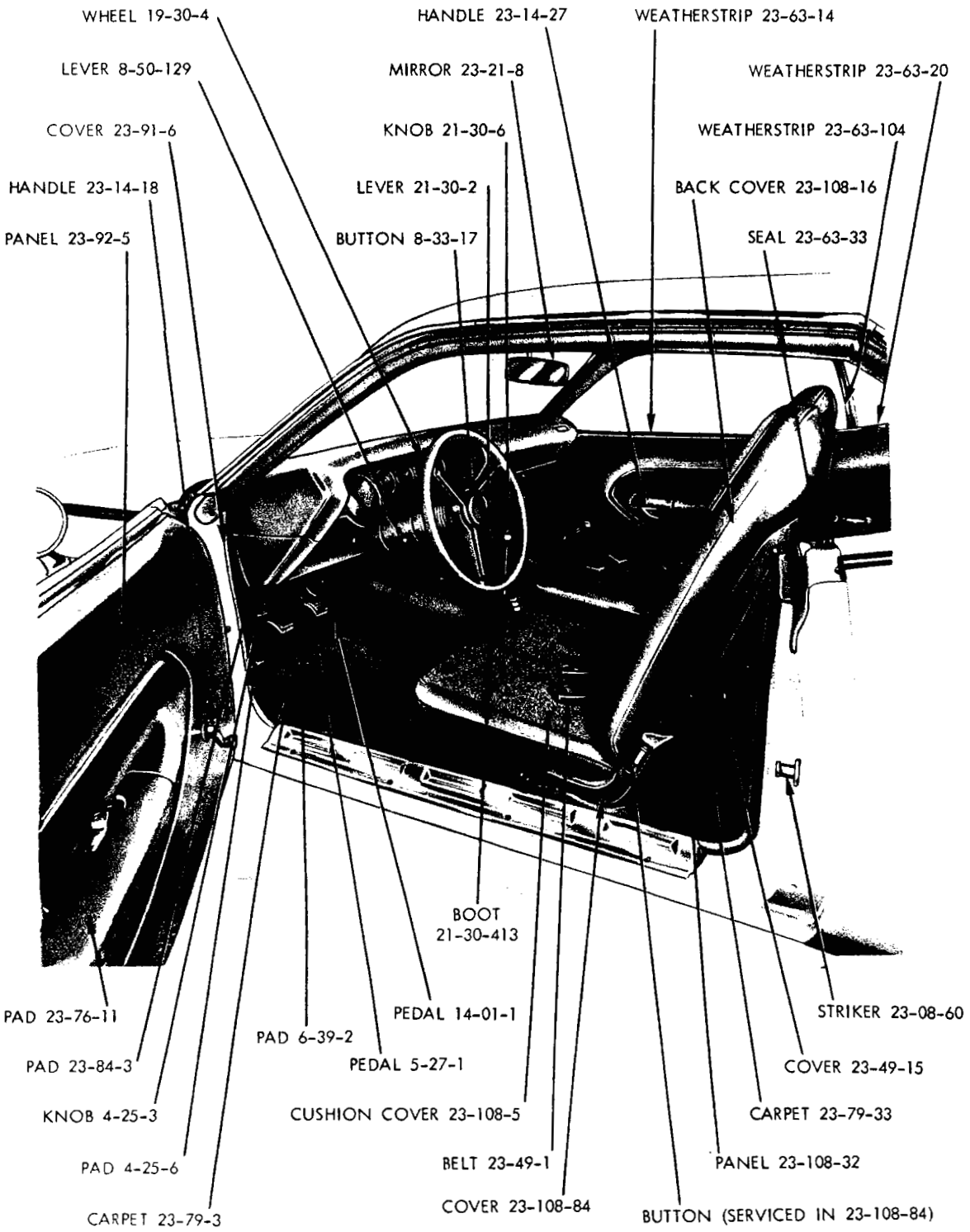

19a3617

1971
FRONT INTERIOR - BARRACUDA B-H 2 DOOR HARDTOP

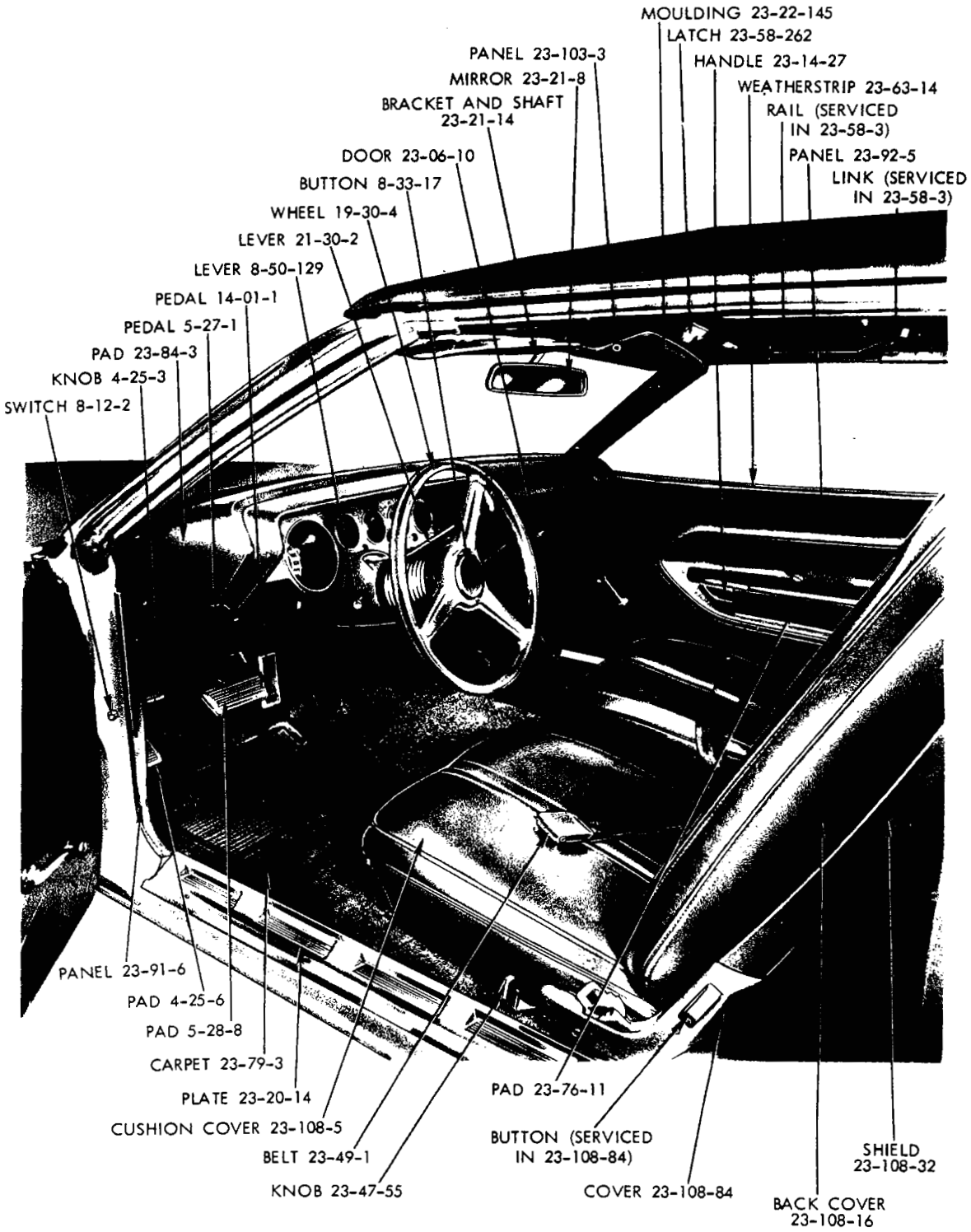

19a3607

1971
FRONT INTERIOR - BARRACUDA B-H CONVERTIBLE COUPE

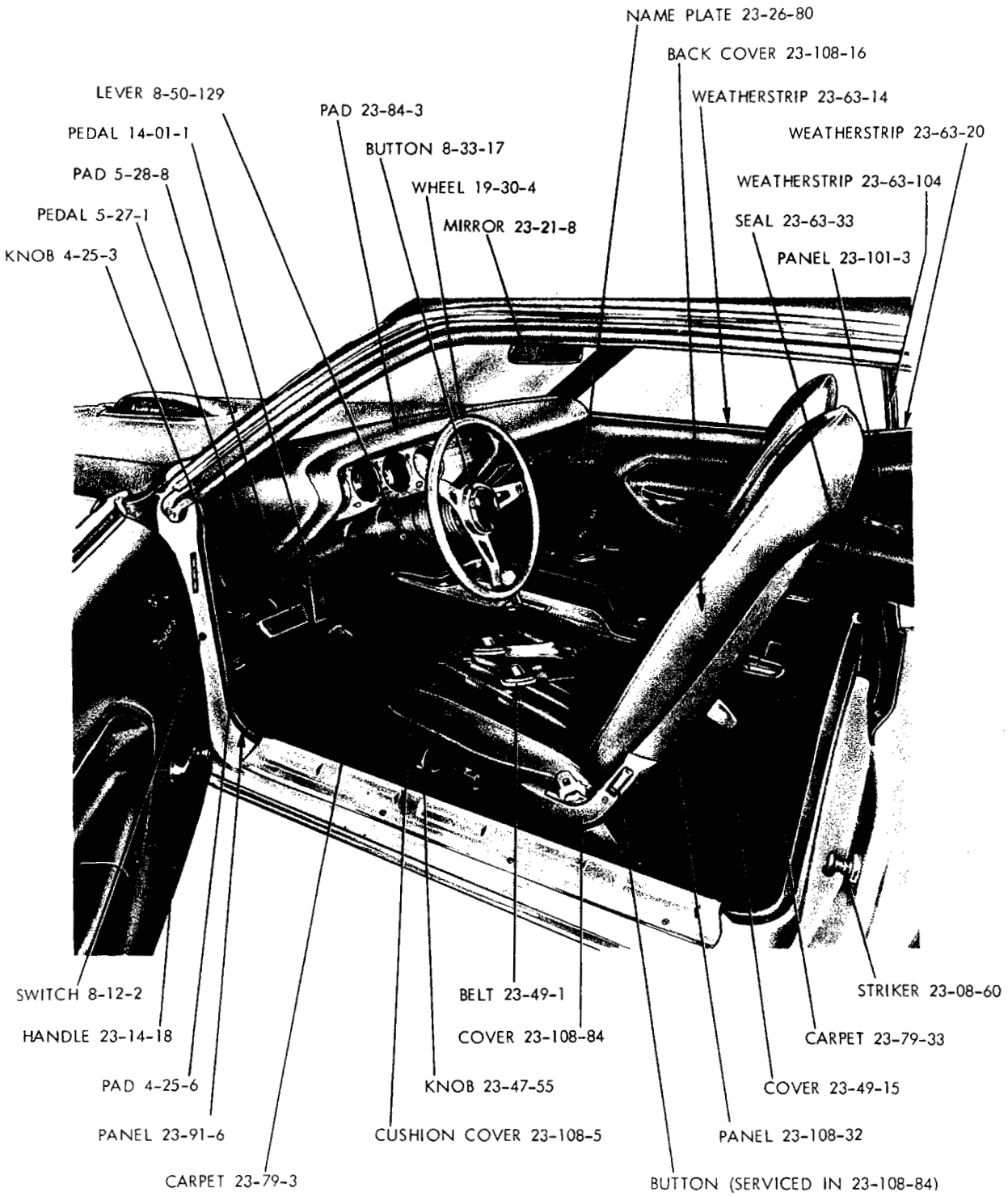

19a3516

1971
FRONT INTERIOR - BARRACUDA 'CUDA B-S 2 DOOR HARDTOP

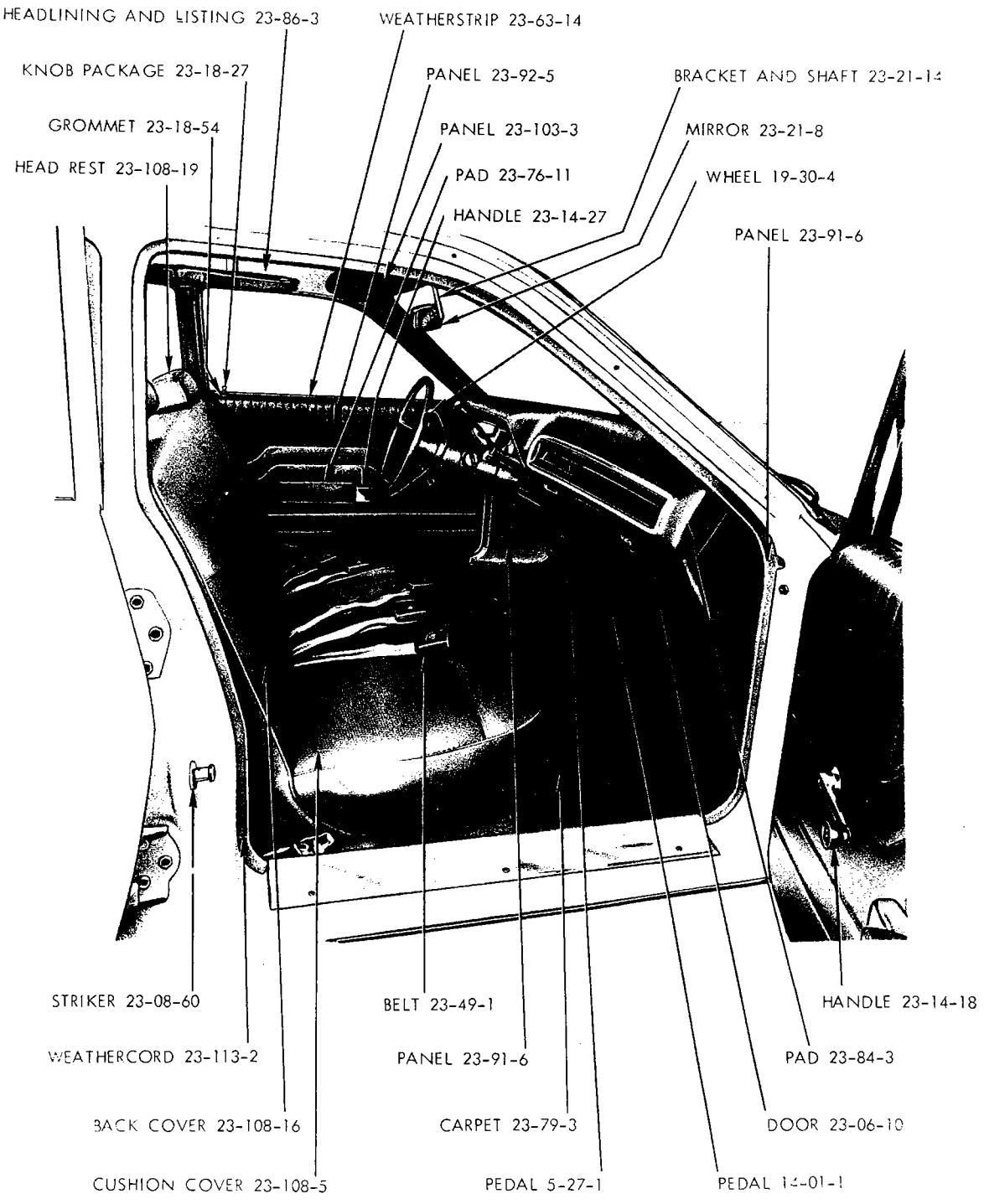

19a3538

1971
FRONT INTERIOR - SATELLITE R-L WAGON

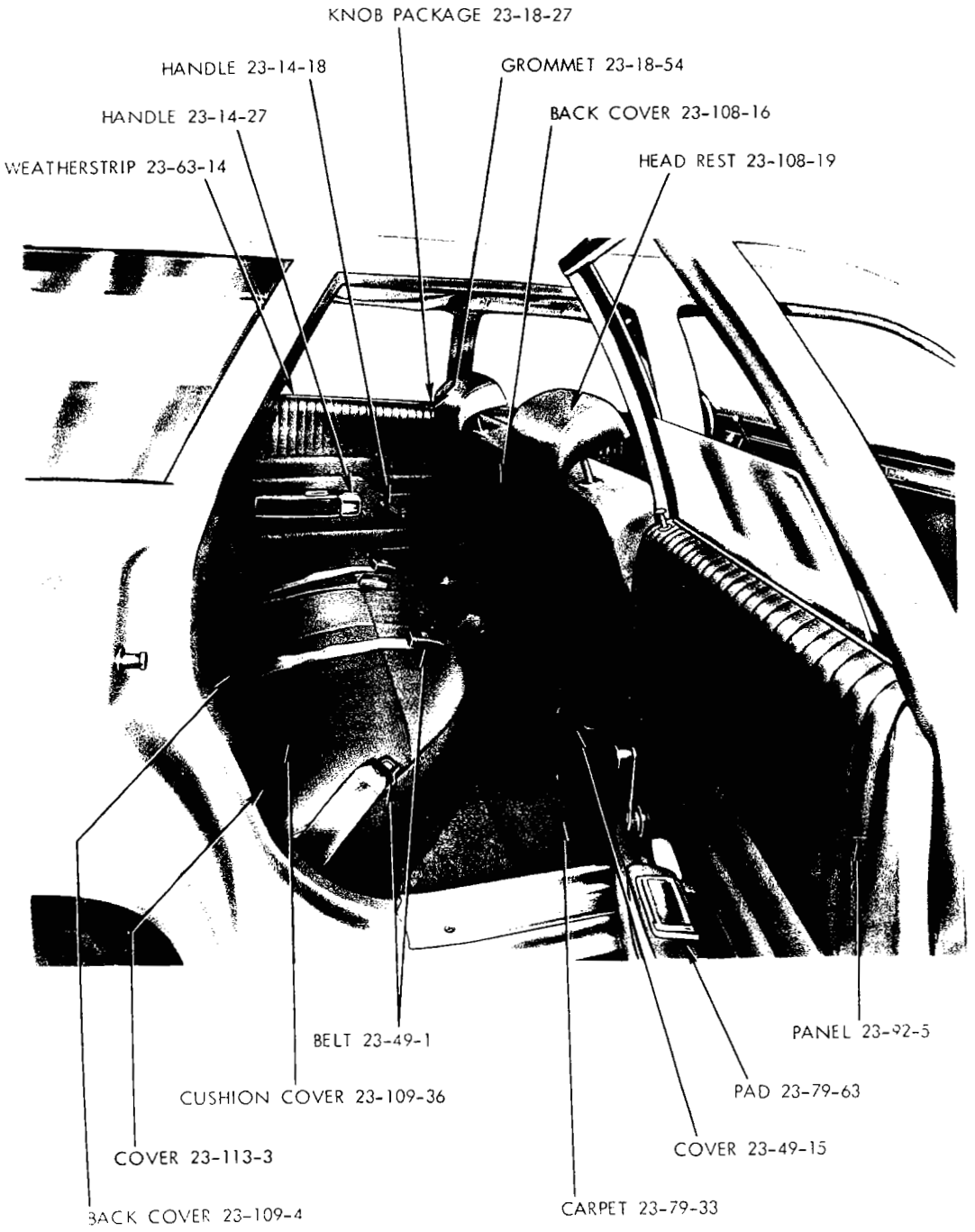
KNOB PACKAGE 23-18-27
HANDLE 23-14-18
GROMMET 23-18-54
HANDLE 23-14-27
BACK COVER 23-108-16
WEATHERSTRIP 23-63-14
HEAD REST 23-108-19
BELT 23-49-1
PANEL 23-92-5
CUSHION COVER 23-109-36
PAD 23-79-63
COVER 23-113-3
COVER 23-49-15
BACK COVER 23-109-4
CARPET 23-79-33

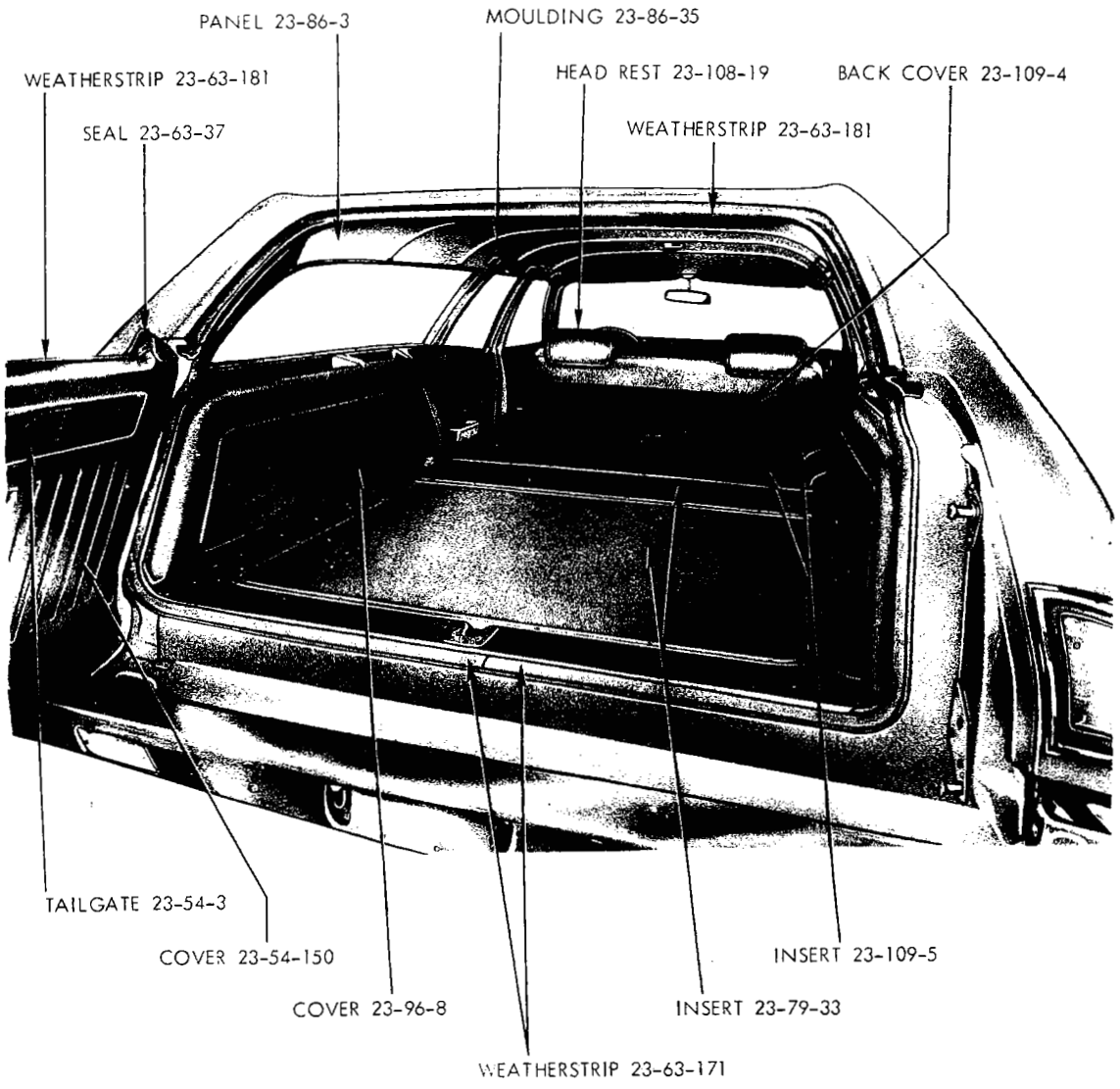

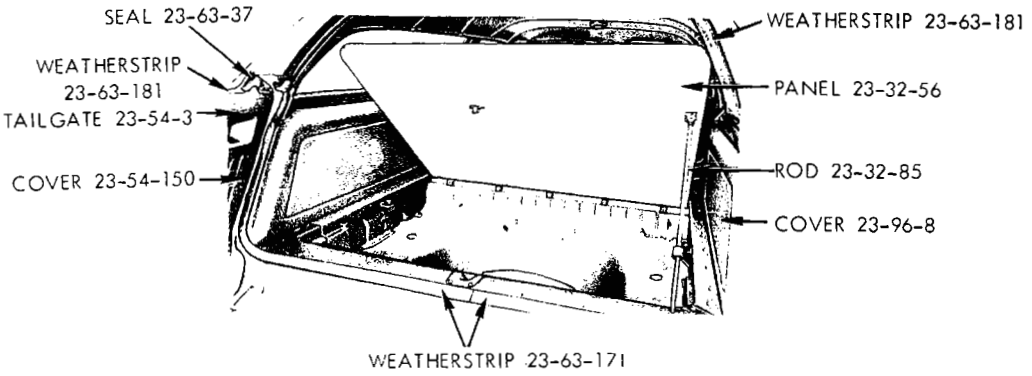

19a3544A

1971
REAR INTERIOR - SATELLITE R-L STATION WAGON

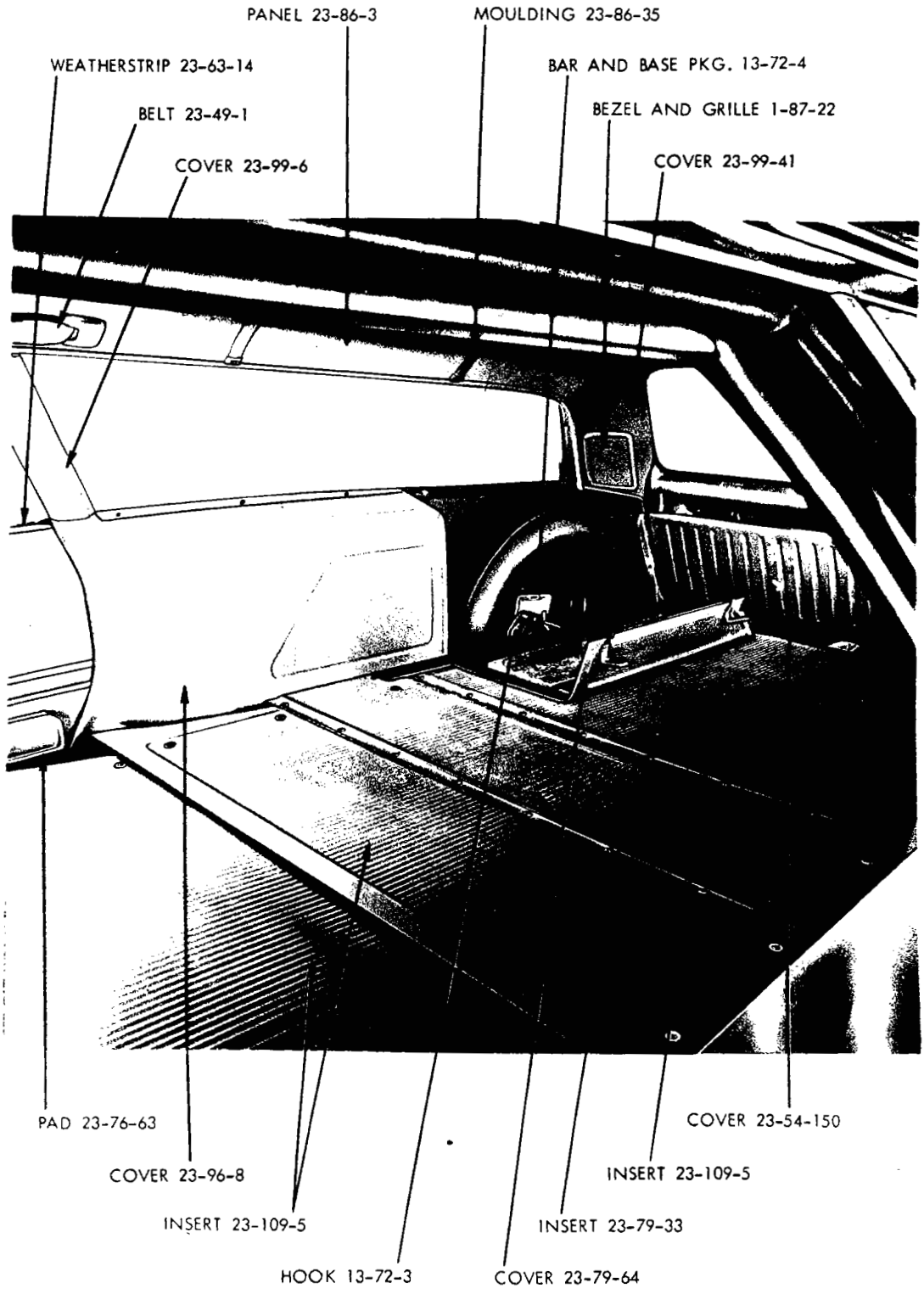

19a3575

1971
SIDE INTERIOR - SATELLITE AND CORONET STATION WAGON

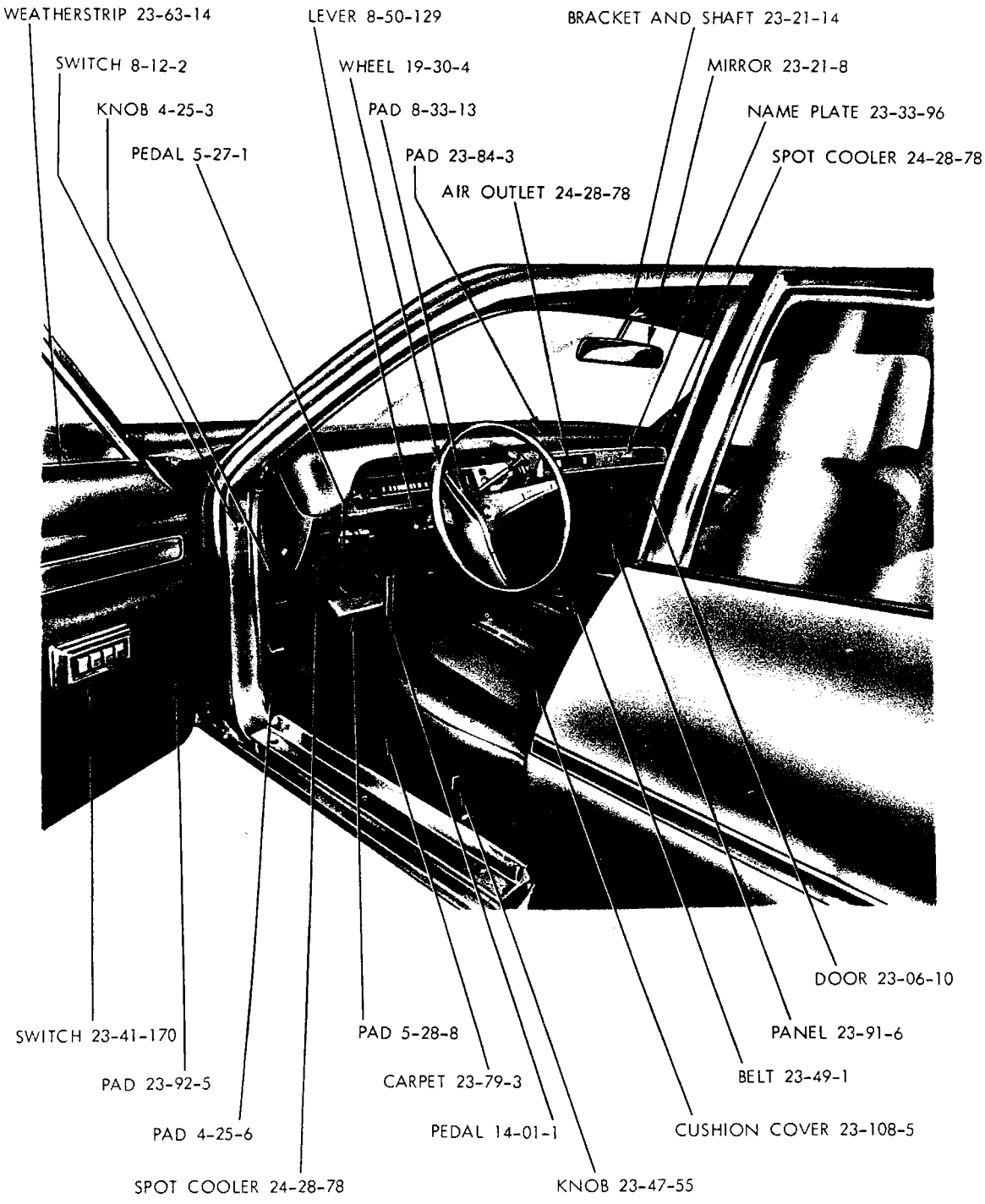

19a3517

1971
FRONT INTERIOR - SATELLITE CUSTOM R-H 4 DOOR SEDAN

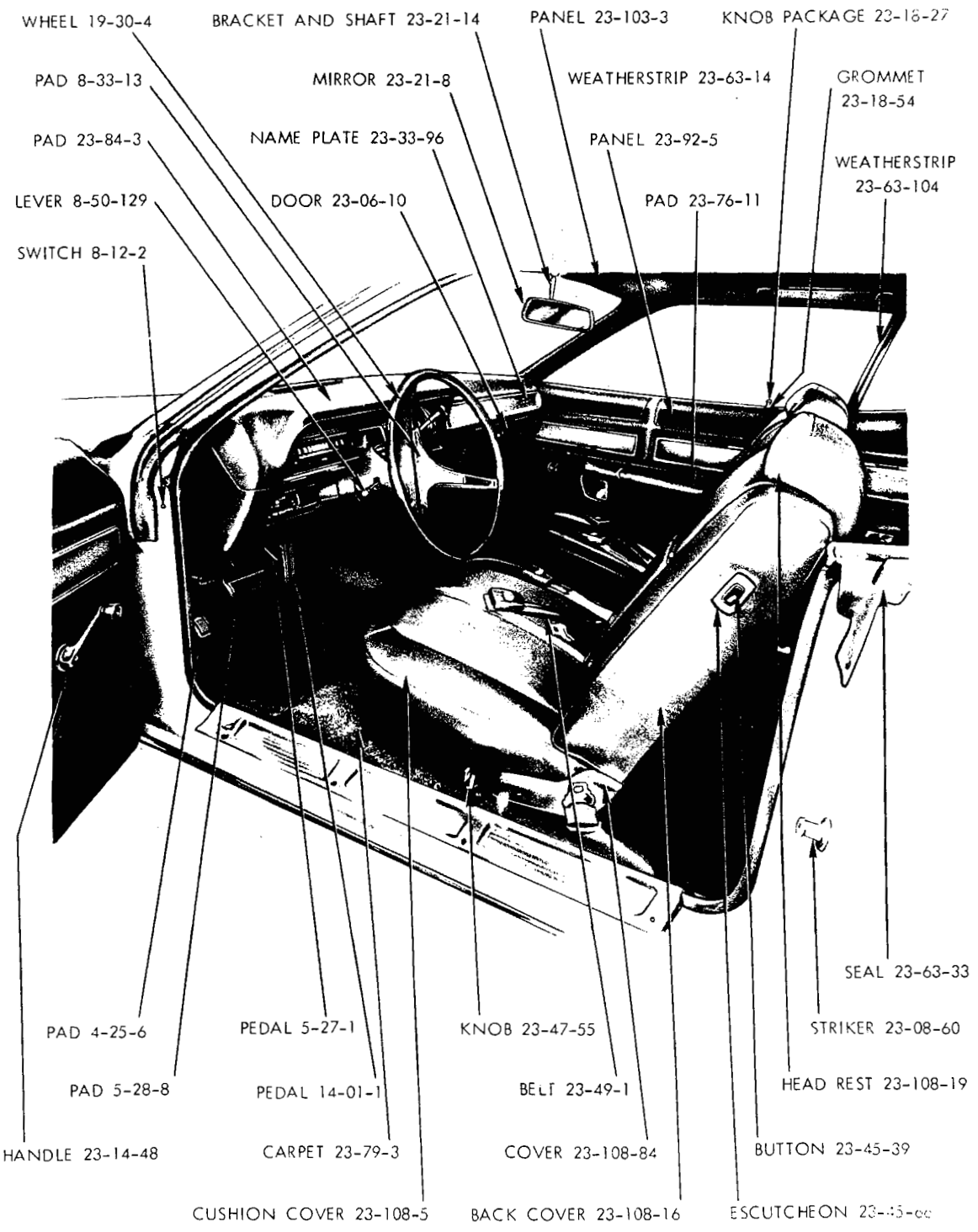

19a3541

1971
FRONT INTERIOR - SATELLITE SEBRING R-H 2 DOOR HARDTOP

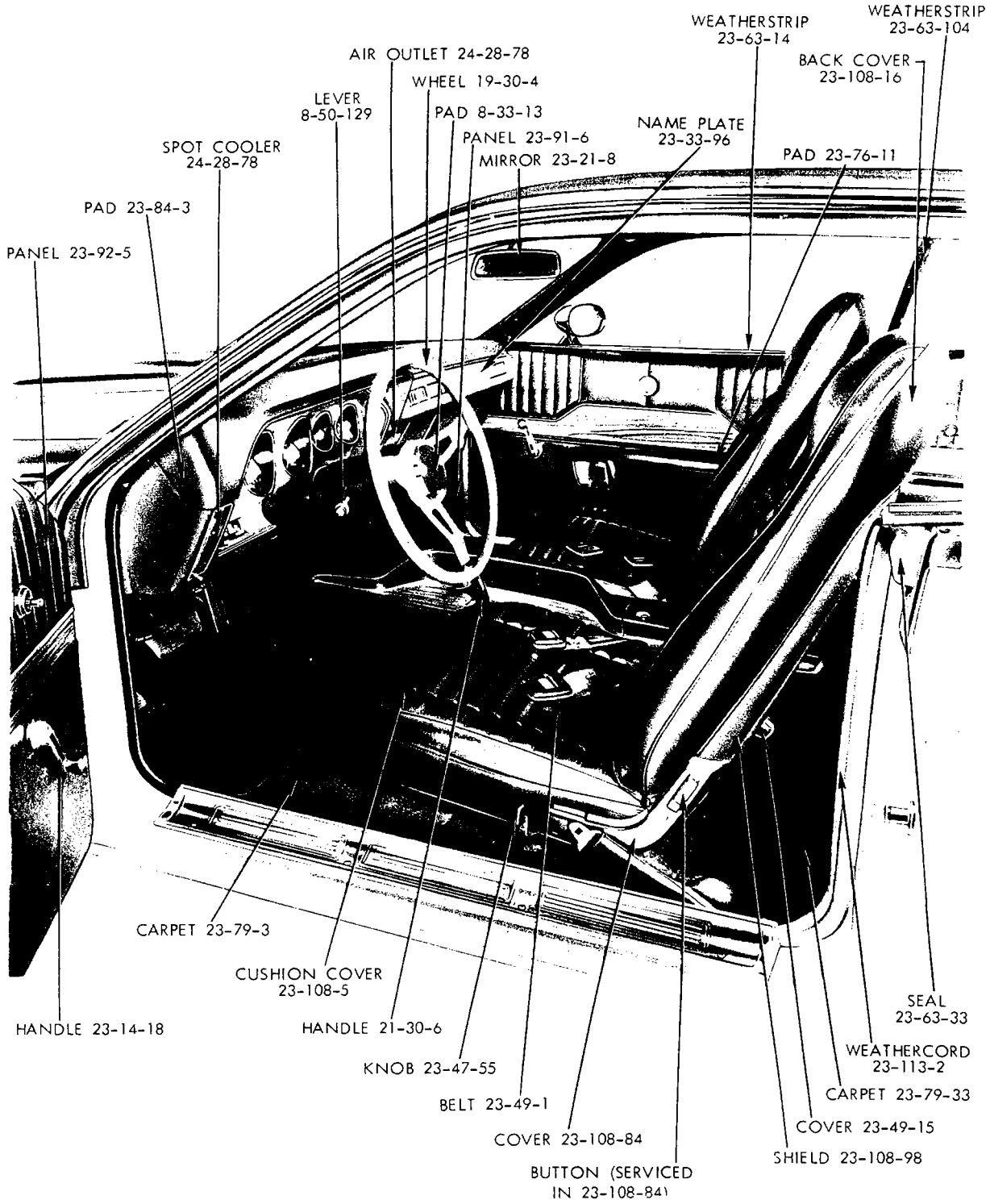

19a3491

1971
FRONT INTERIOR - SATELLITE SEBRING PLUS R-P 2 DOOR HARDTOP

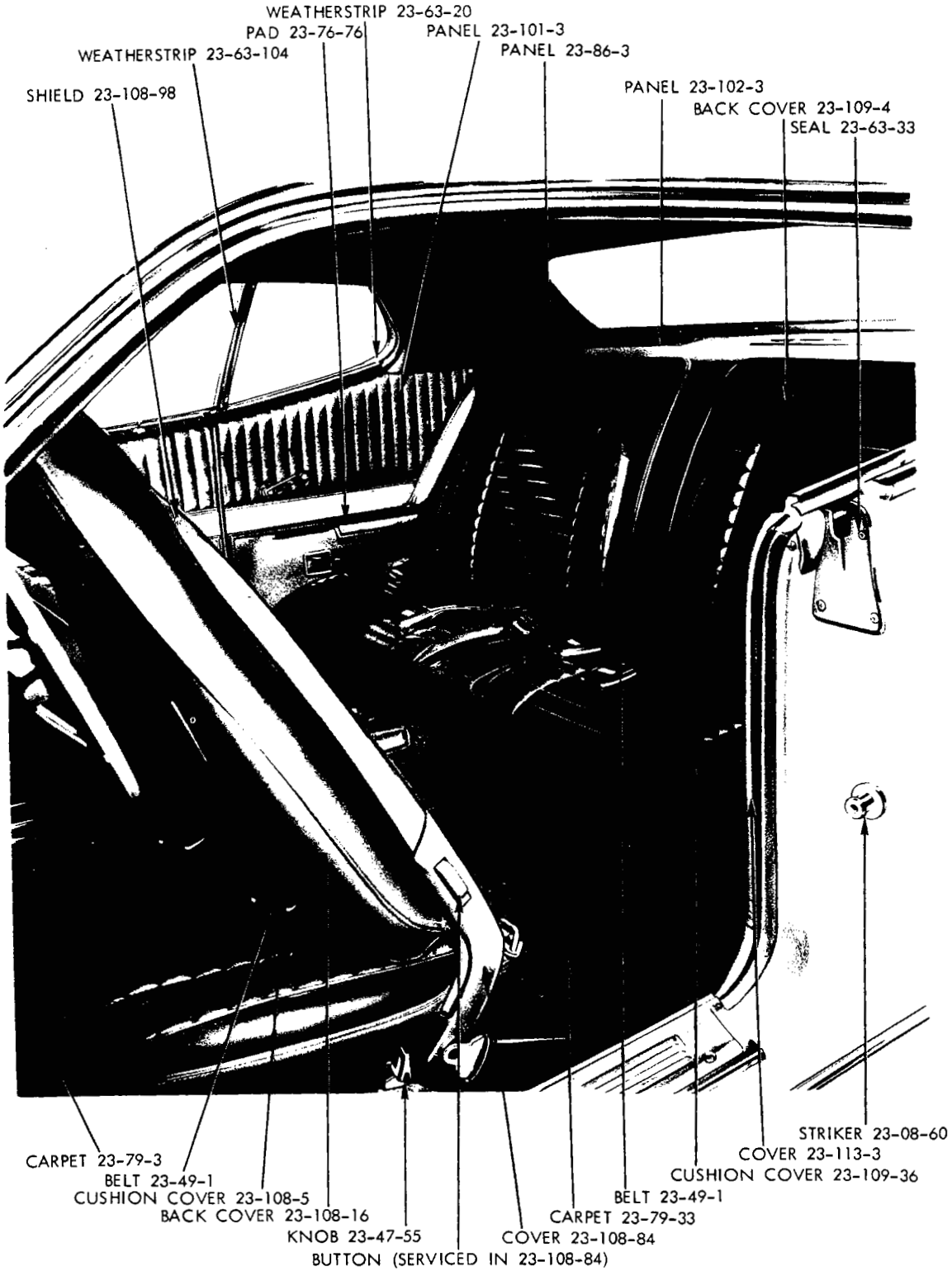

19a3498

1971
REAR INTERIOR - SATELLITE SEBRING PLUS R-P 2 DOOR HARDTOP

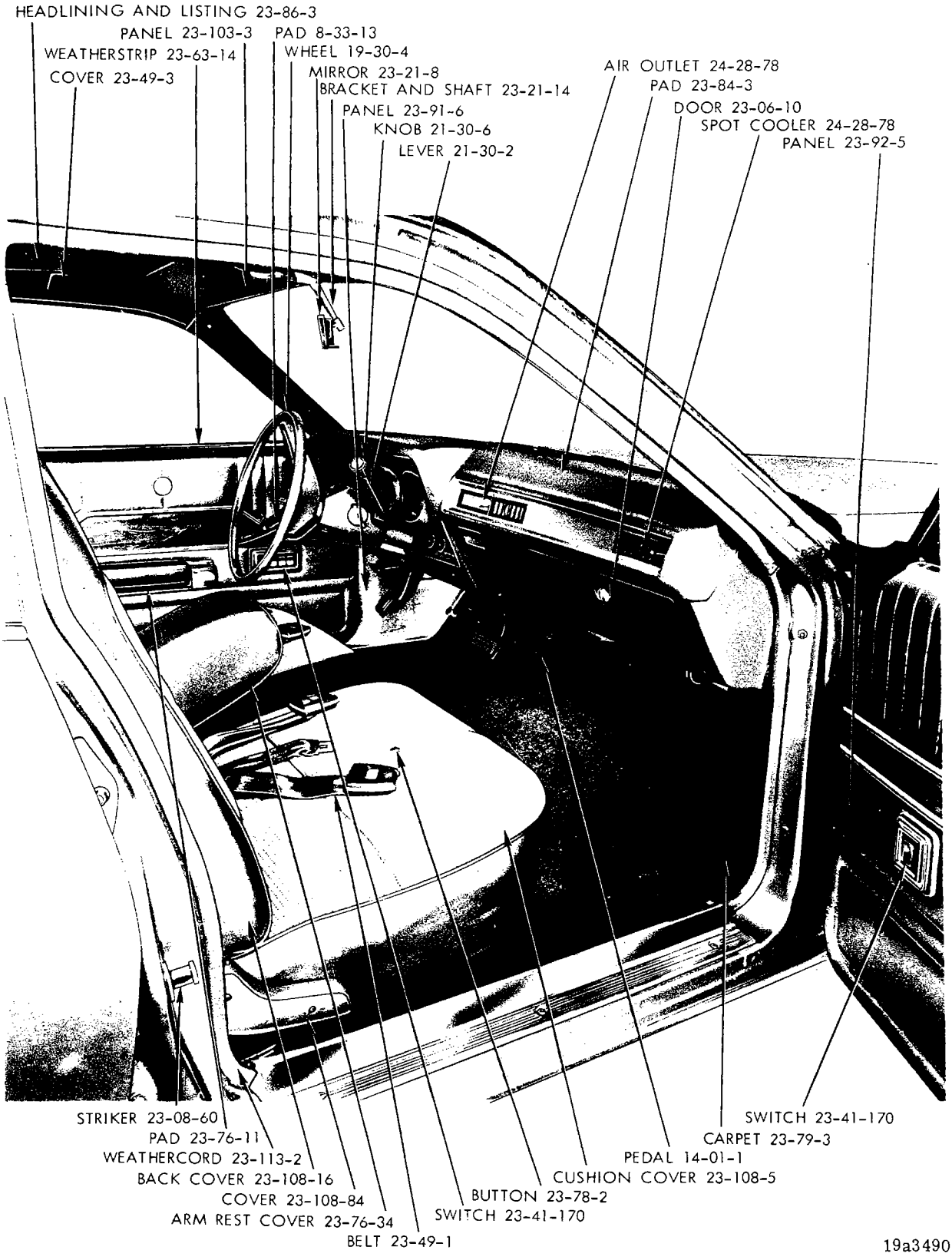

1971
FRONT INTERIOR - SATELLITE BROUGHAM R-P 4 DOOR SEDAN



19a3497

1971
REAR INTERIOR - SATELLITE BROUGHAM R-P 4 DOOR SEDAN

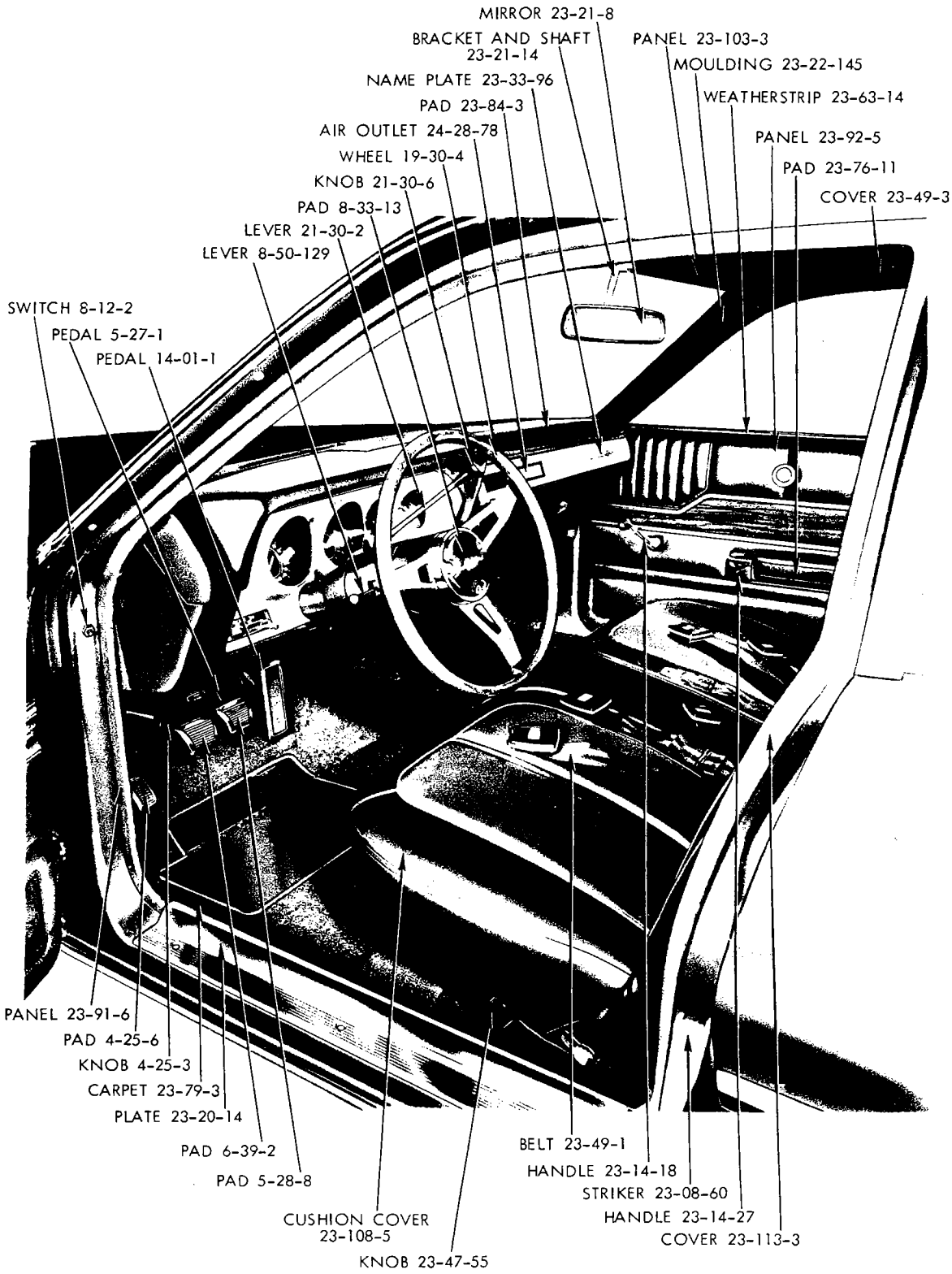

19a3602

1971
FRONT INTERIOR - SATELLITE REGENT R-P STATION WAGON

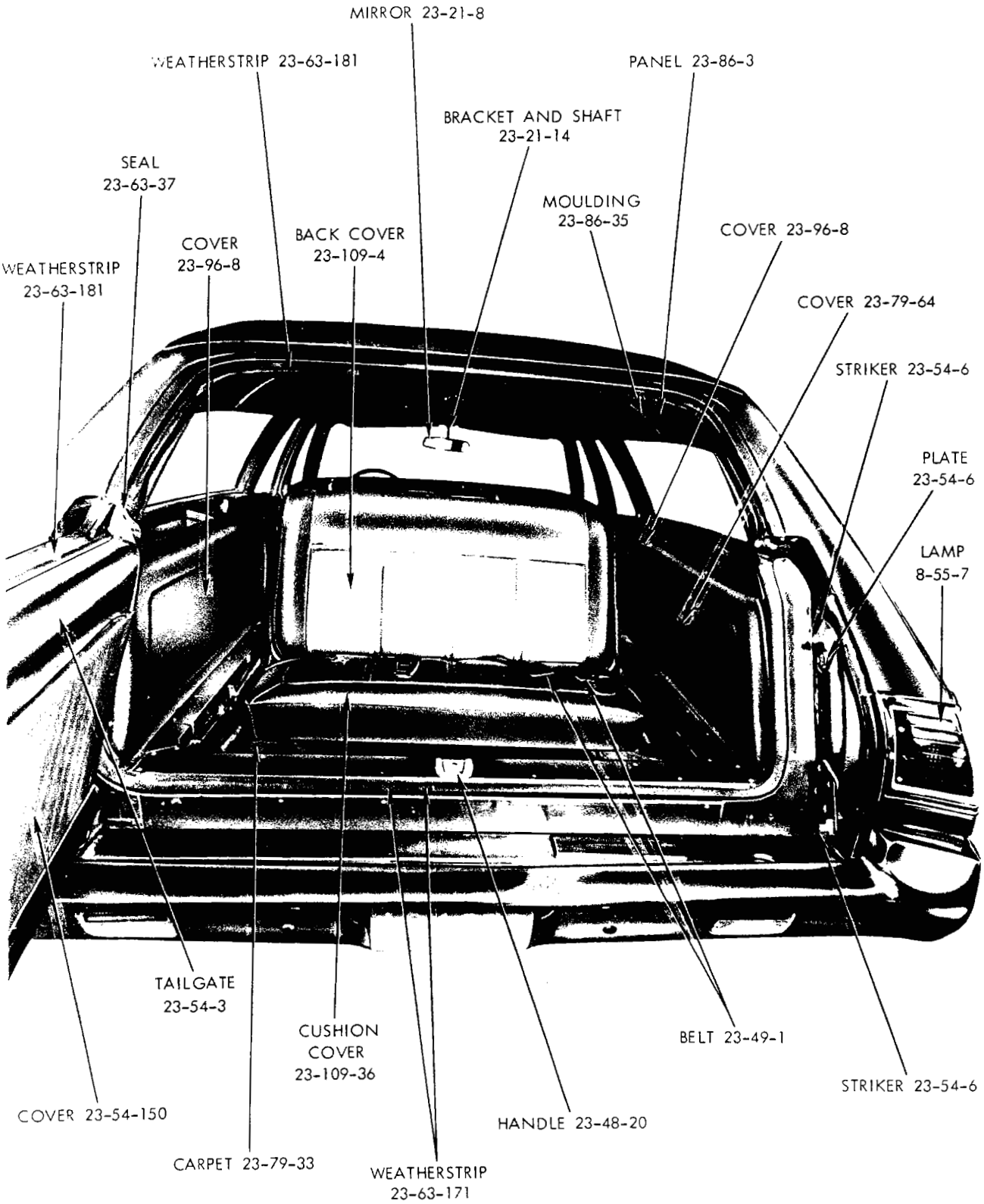

19a3576

1971
REAR INTERIOR - SATELLITE REGENT STATION WAGON
(TYPICAL OF CORONET CRESTWOOD)



19a3626

1971
REAR INTERIOR - SATELLITE REGENT 4 DOOR STATION WAGON
(TYPICAL OF CORONET CRESTWOOD)

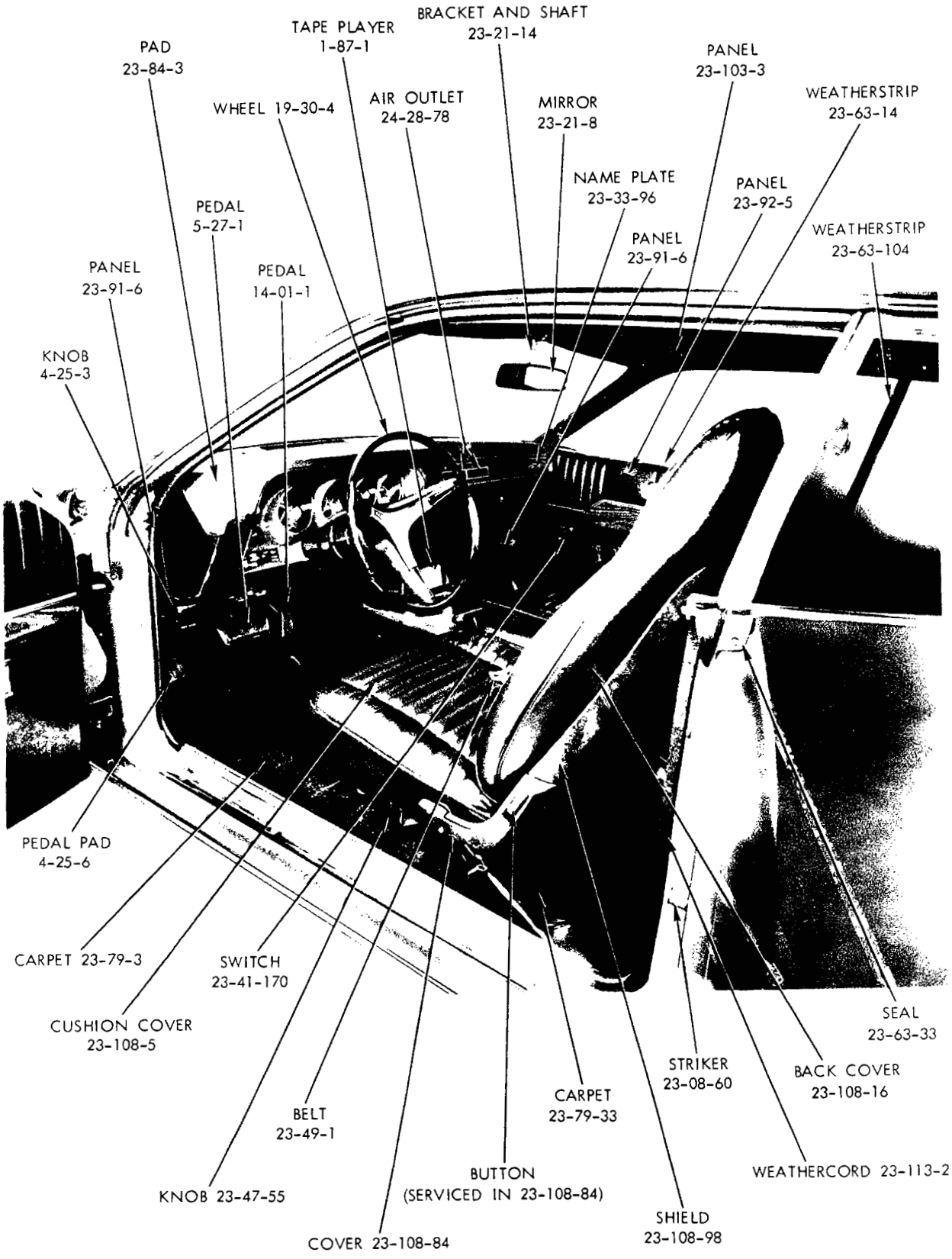

19a3542

1971
FRONT INTERIOR - SATELLITE GTX R-S 2 DOOR HARDTOP

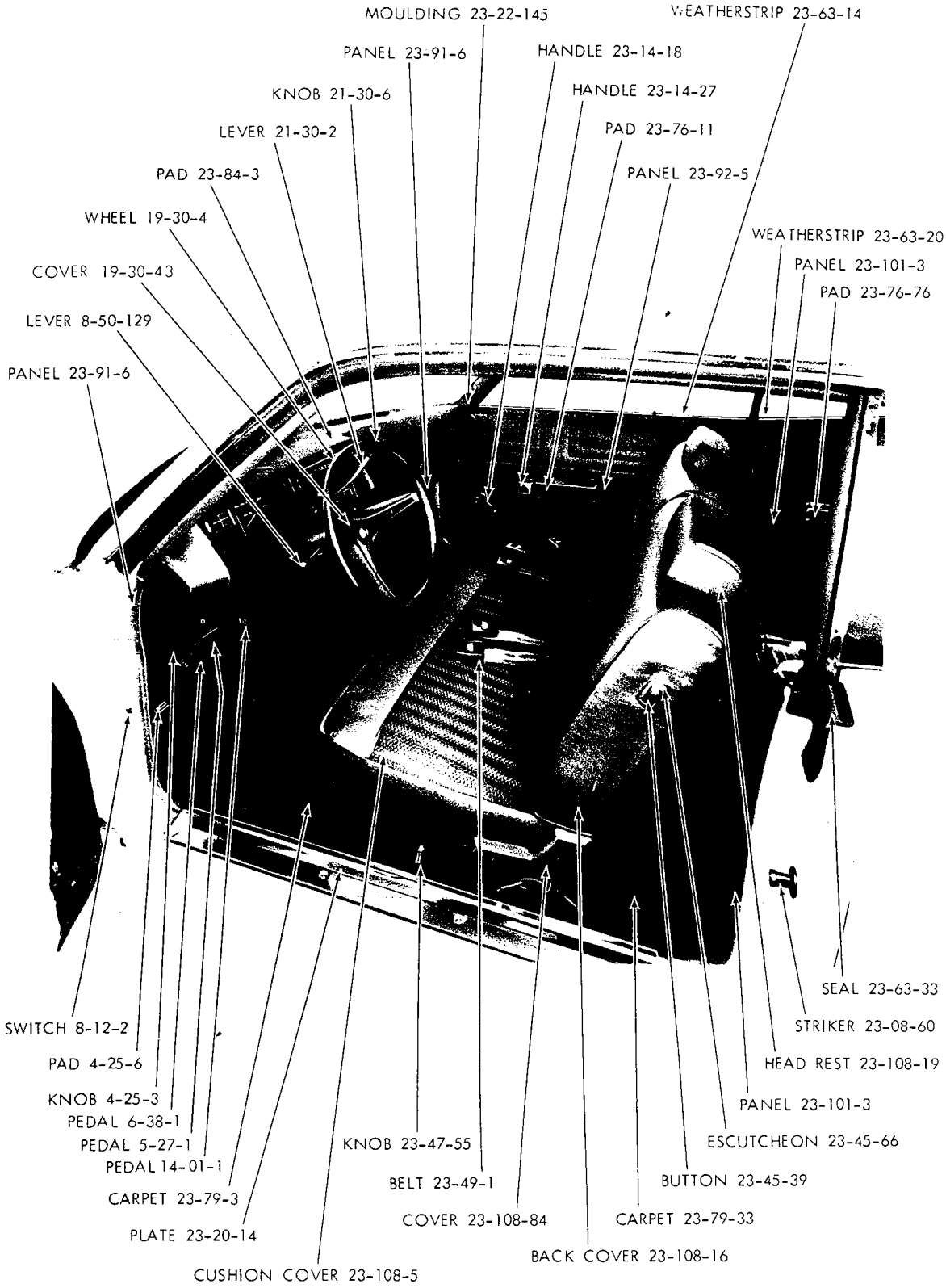

1971
FRONT INTERIOR - PLYMOUTH FURY I P-E 2 DOOR SEDAN

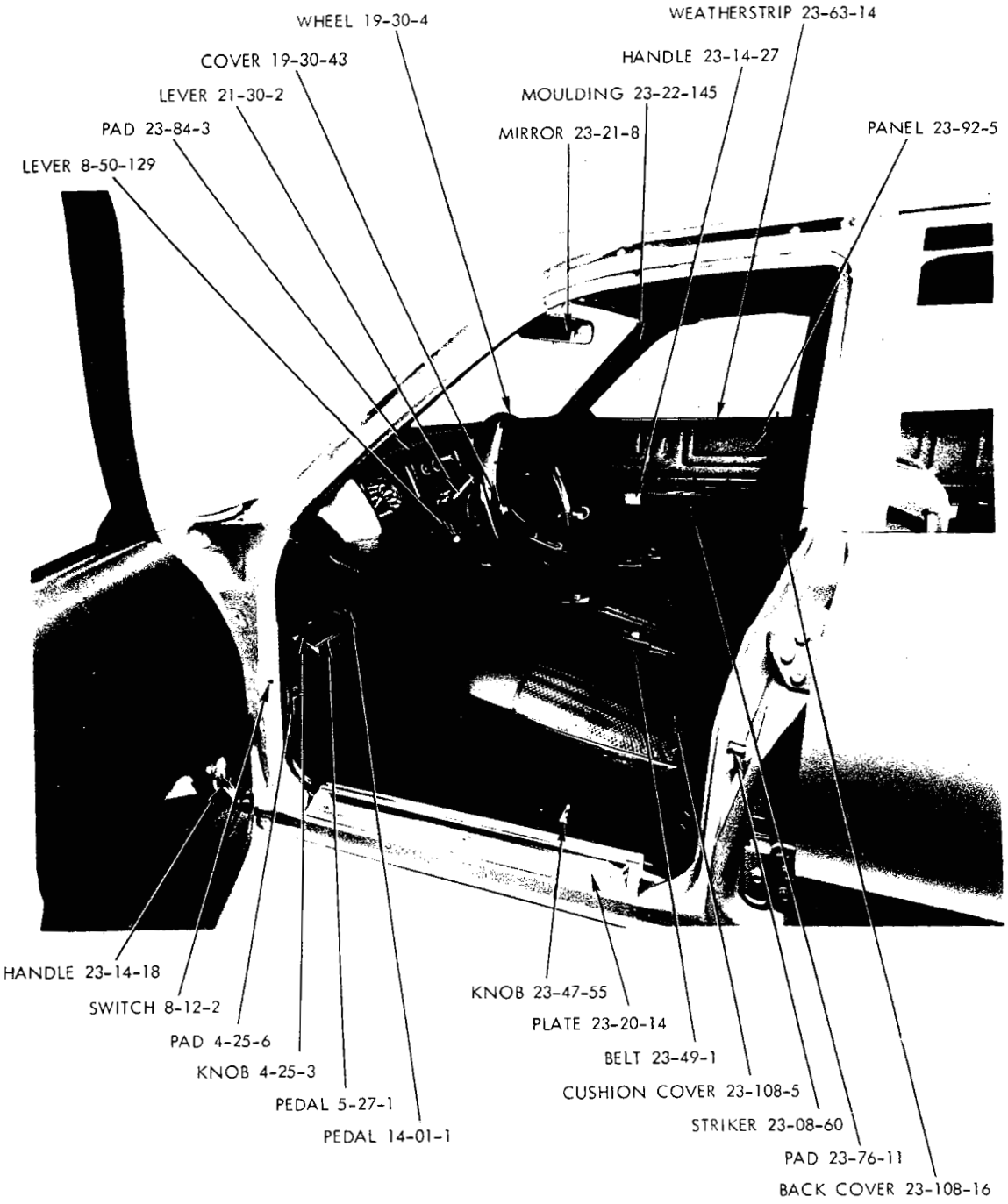

19a3688

1971
FRONT INTERIOR - PLYMOUTH FURY I P-E 4 DOOR SEDAN

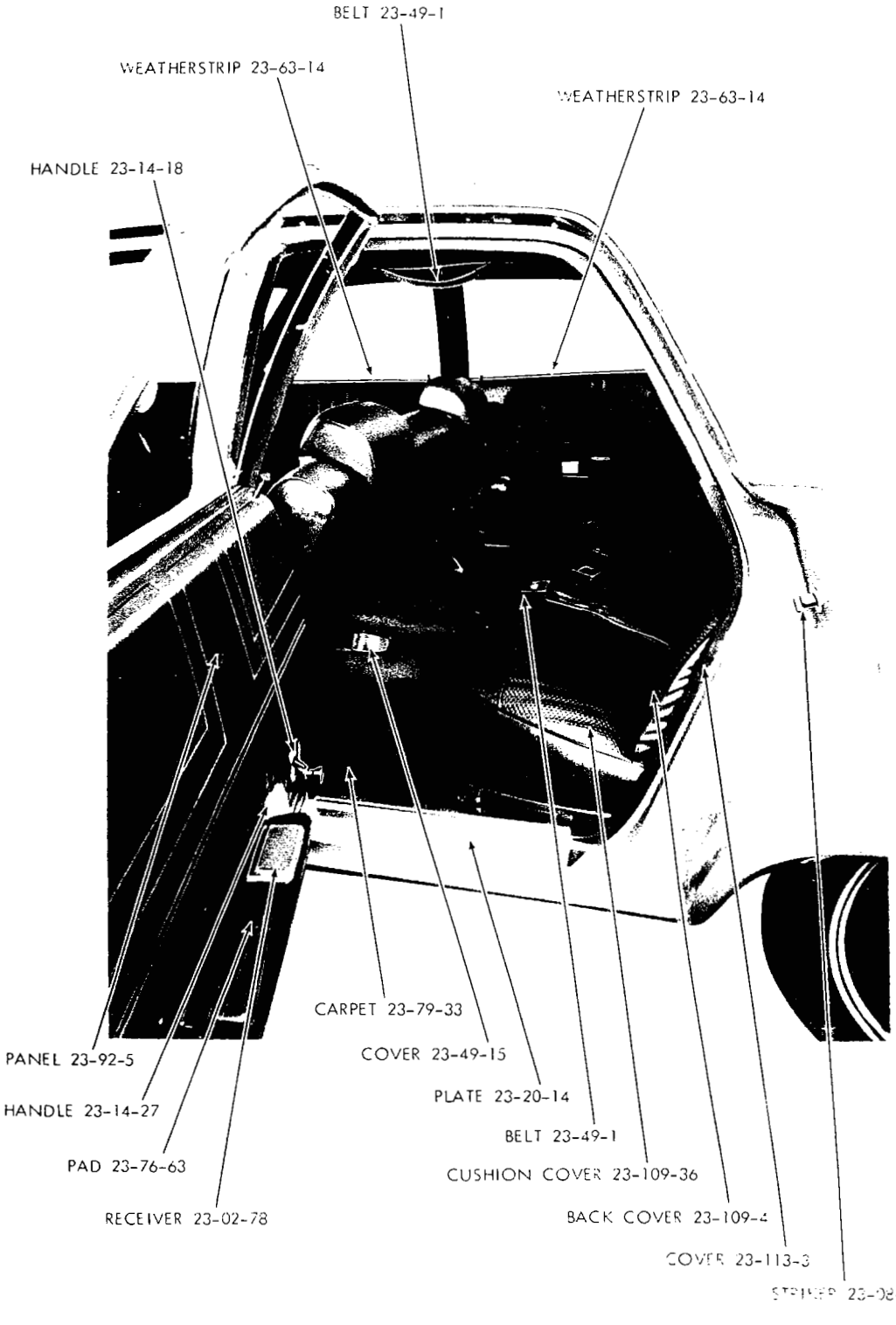

1971
REAR INTERIOR - PLYMOUTH FURY I P-E 4 DOOR SEDAN

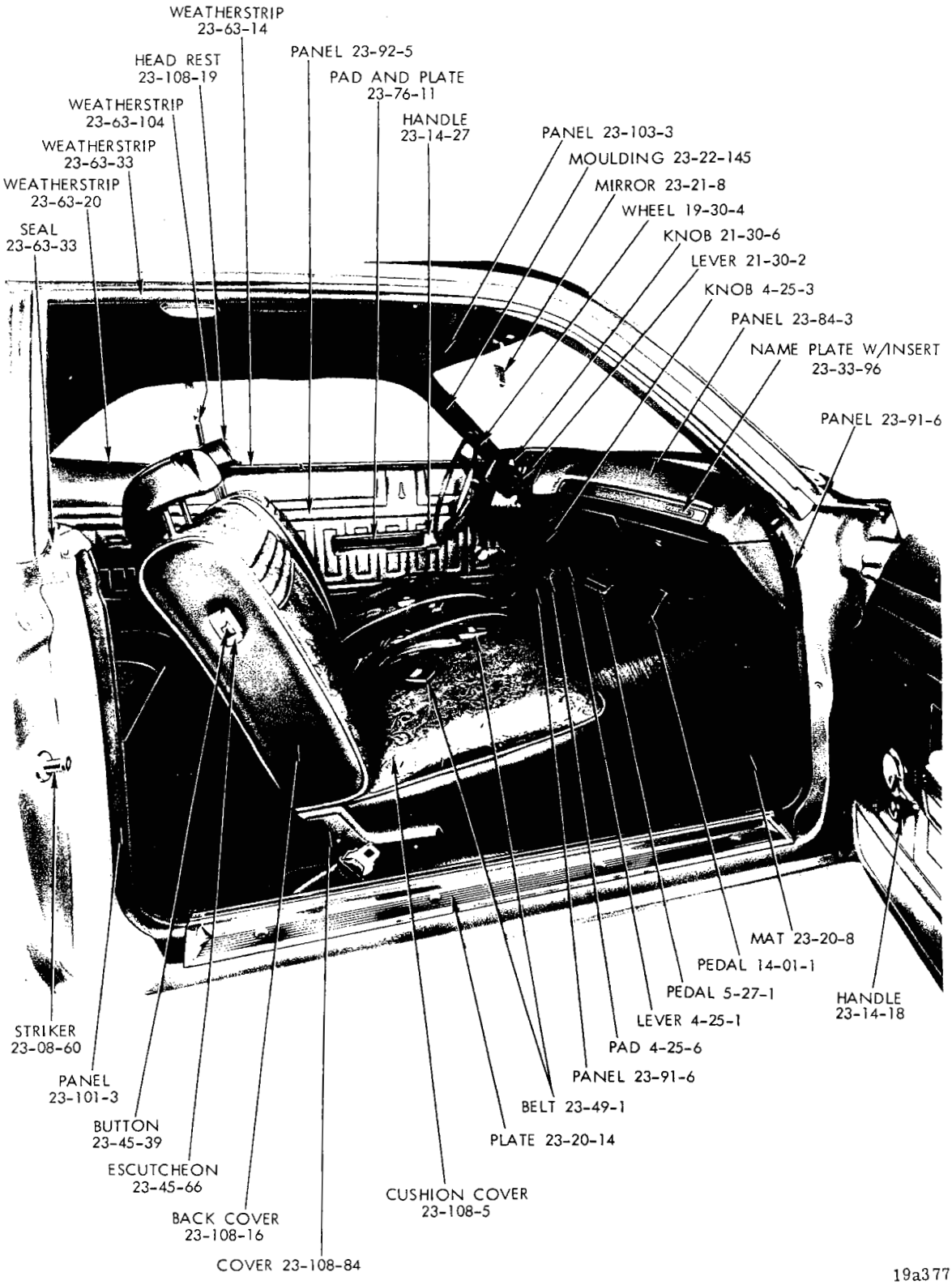

19a3771

1971
FRONT INTERIOR - PLYMOUTH P-E (CUSTOM SPRING SPECIAL) 2 DOOR SEDAN

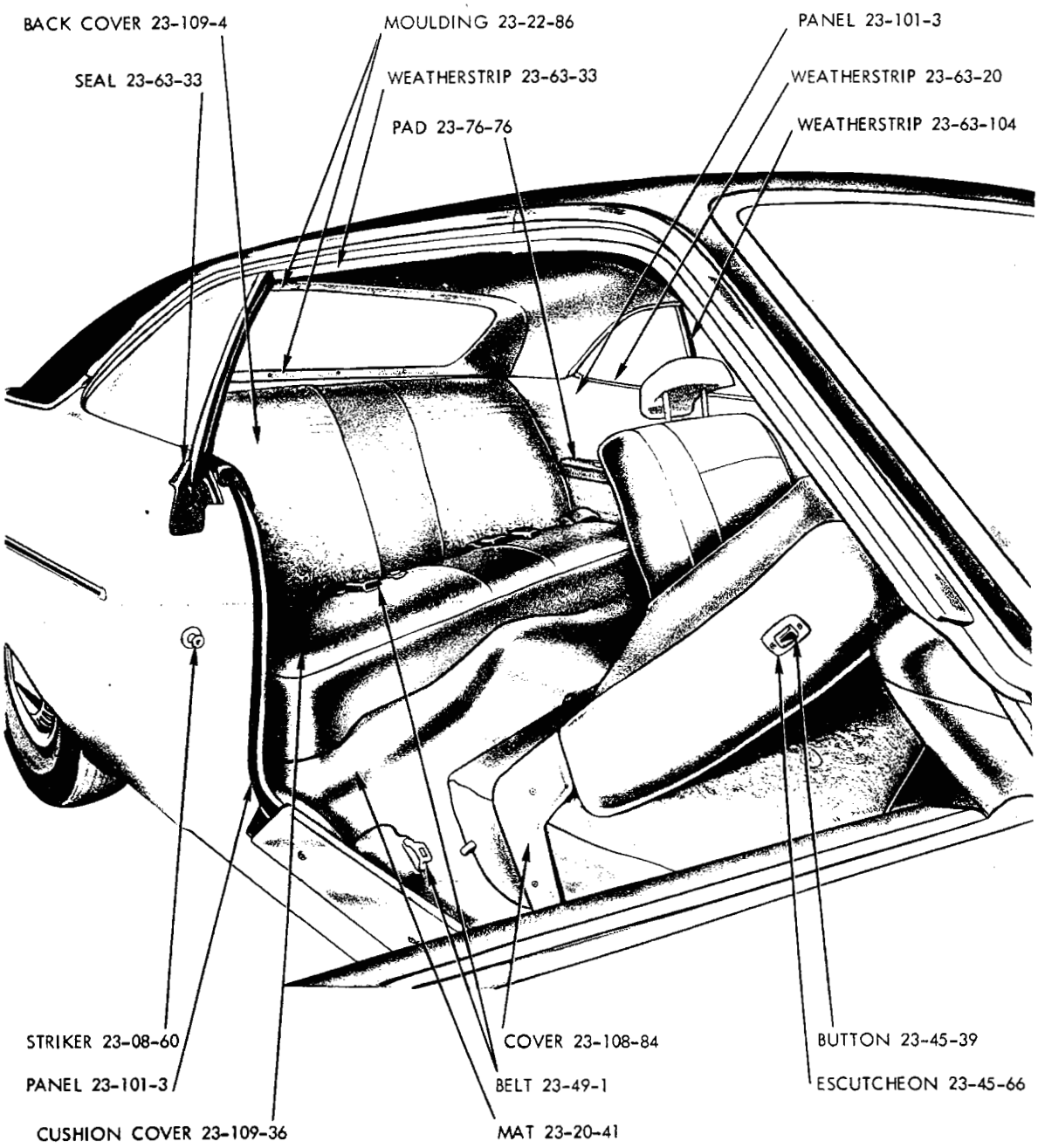

19a3767

1971
REAR INTERIOR - PLYMOUTH FURY P-E (CUSTOM SPRING SPECIAL) 2 DOOR SEDAN

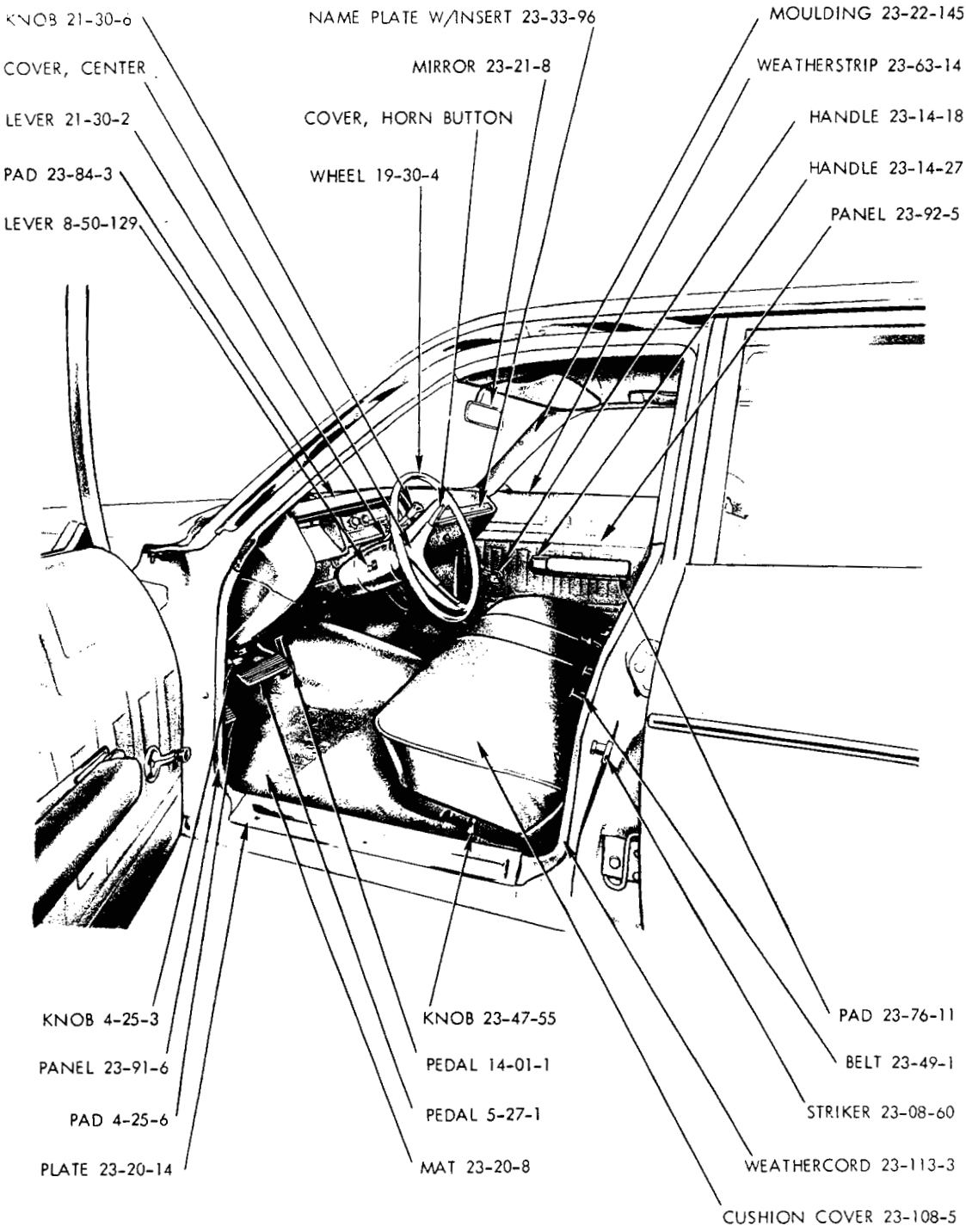

19a3772

1971
FRONT INTERIOR - PLYMOUTH FURY P-E (CUSTOM SPRING SPECIAL) 4 DOOR SEDAN

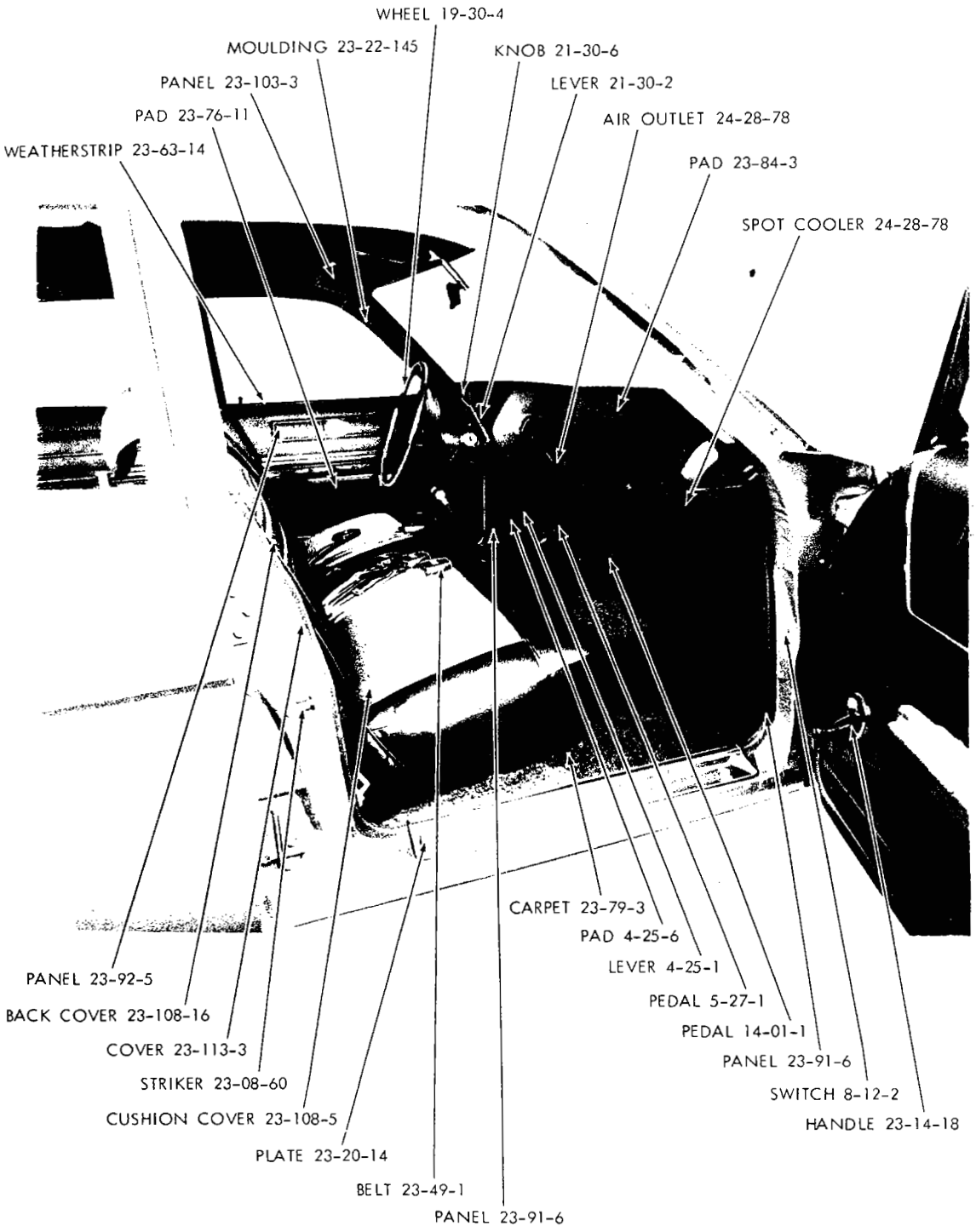

1971
FRONT INTERIOR - PLYMOUTH FURY II P-L 4 DOOR SEDAN

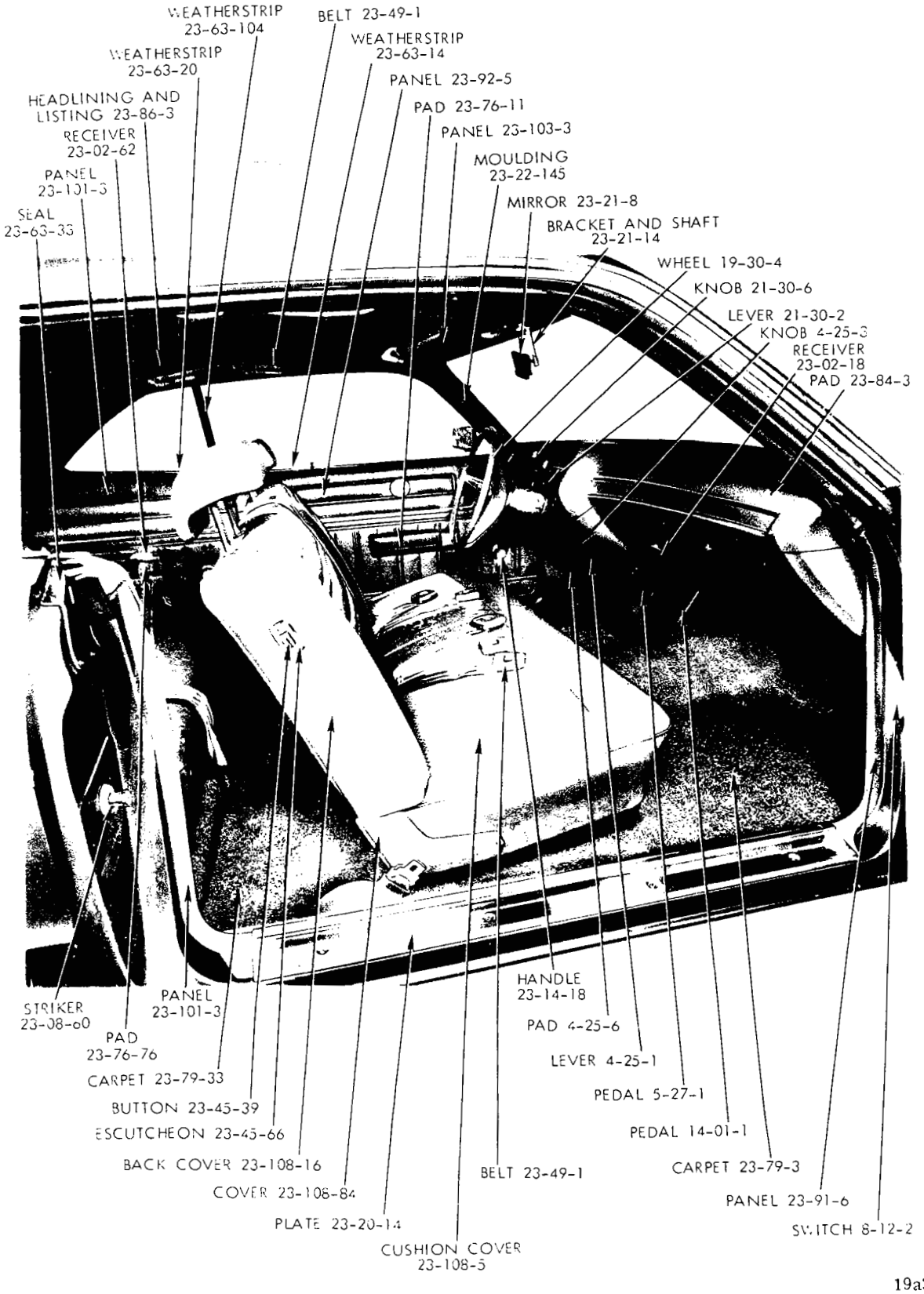

19a3687

1971
FRONT INTERIOR - PLYMOUTH FURY II P-L 2 DOOR HARDTOP

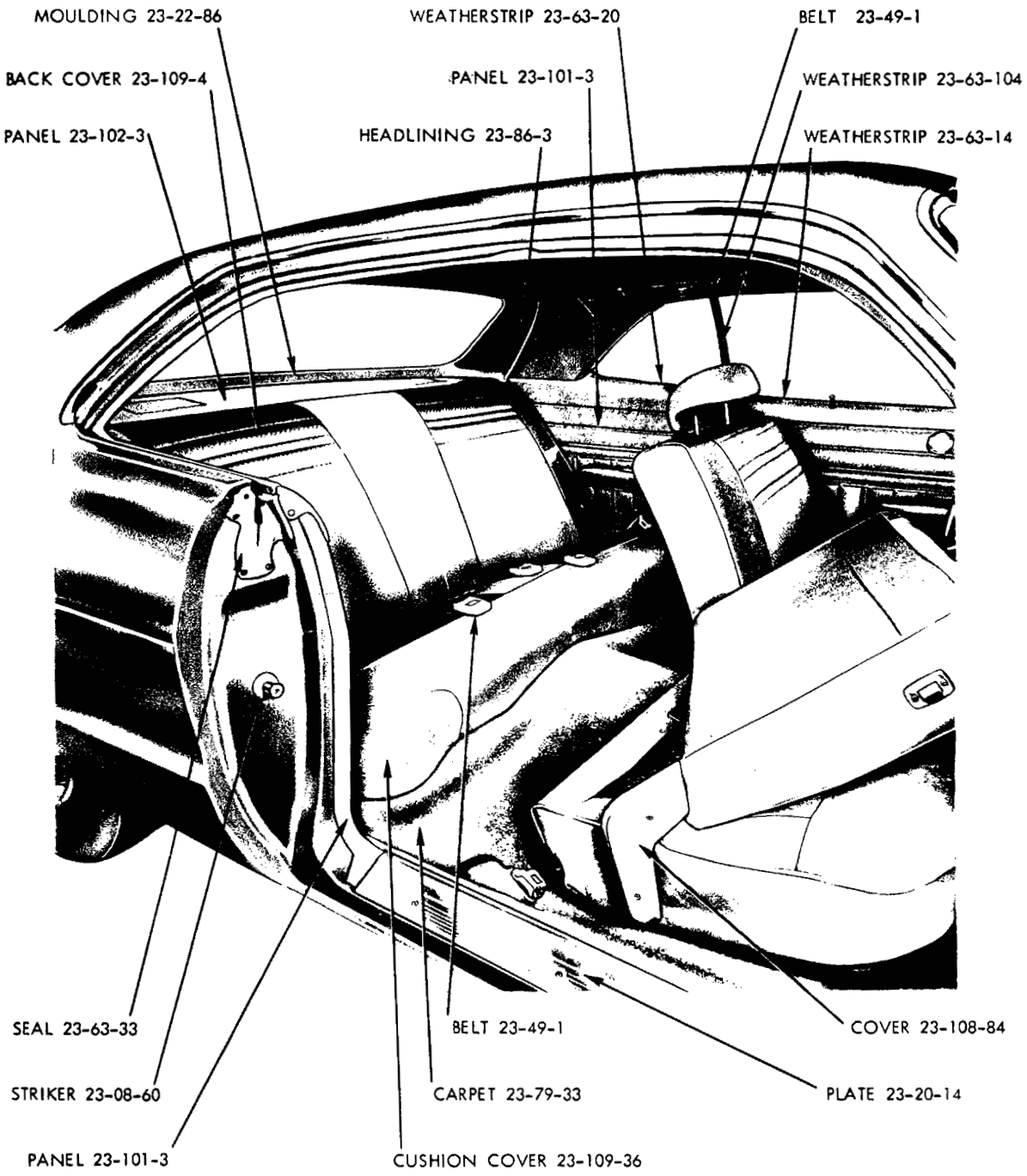

19a3695

1971
REAR INTERIOR - PLYMOUTH FURY II P-L 2 DOOR HARDTOP

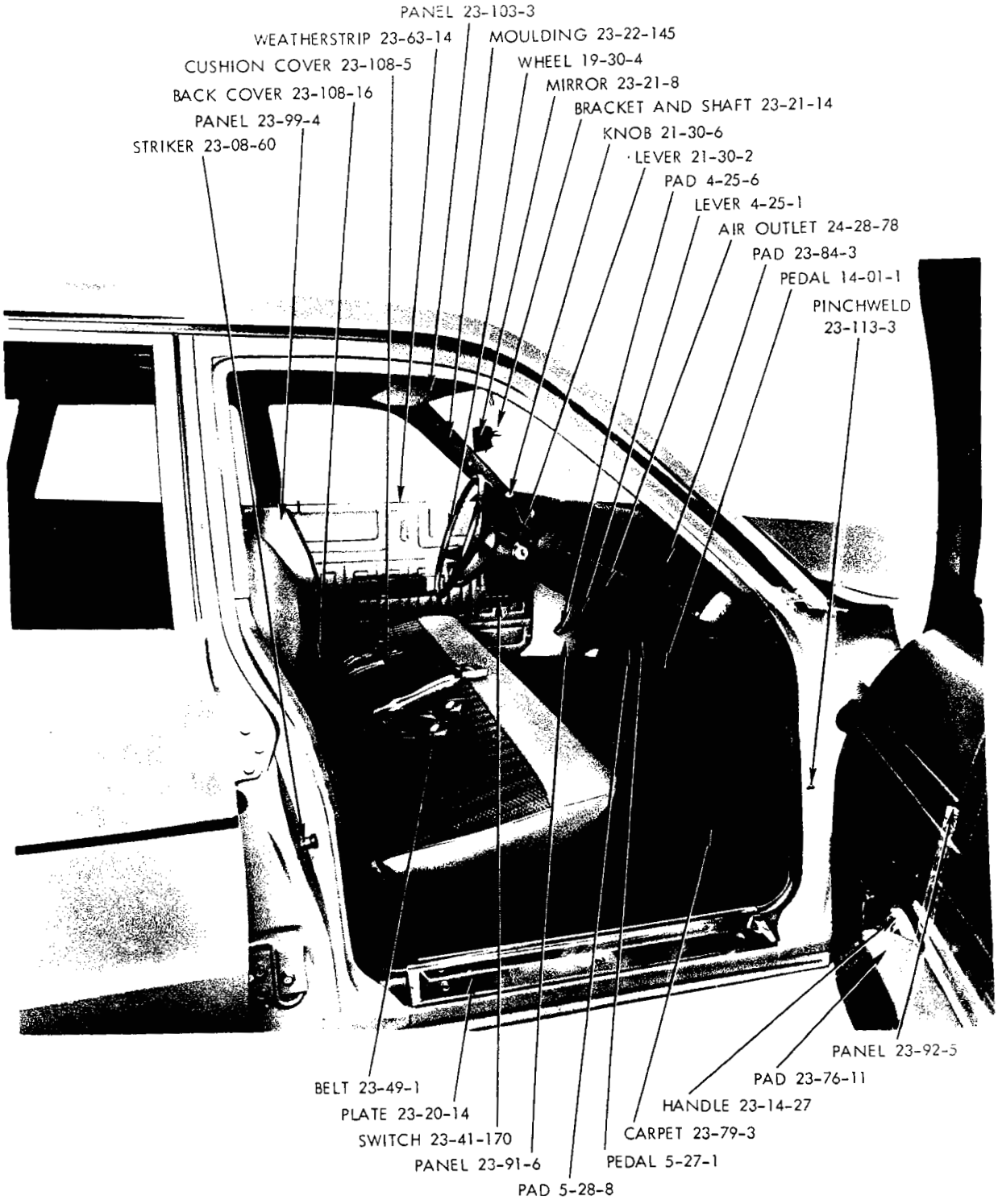

19a3612

1971
FRONT INTERIOR - PLYMOUTH P-L STATION WAGON

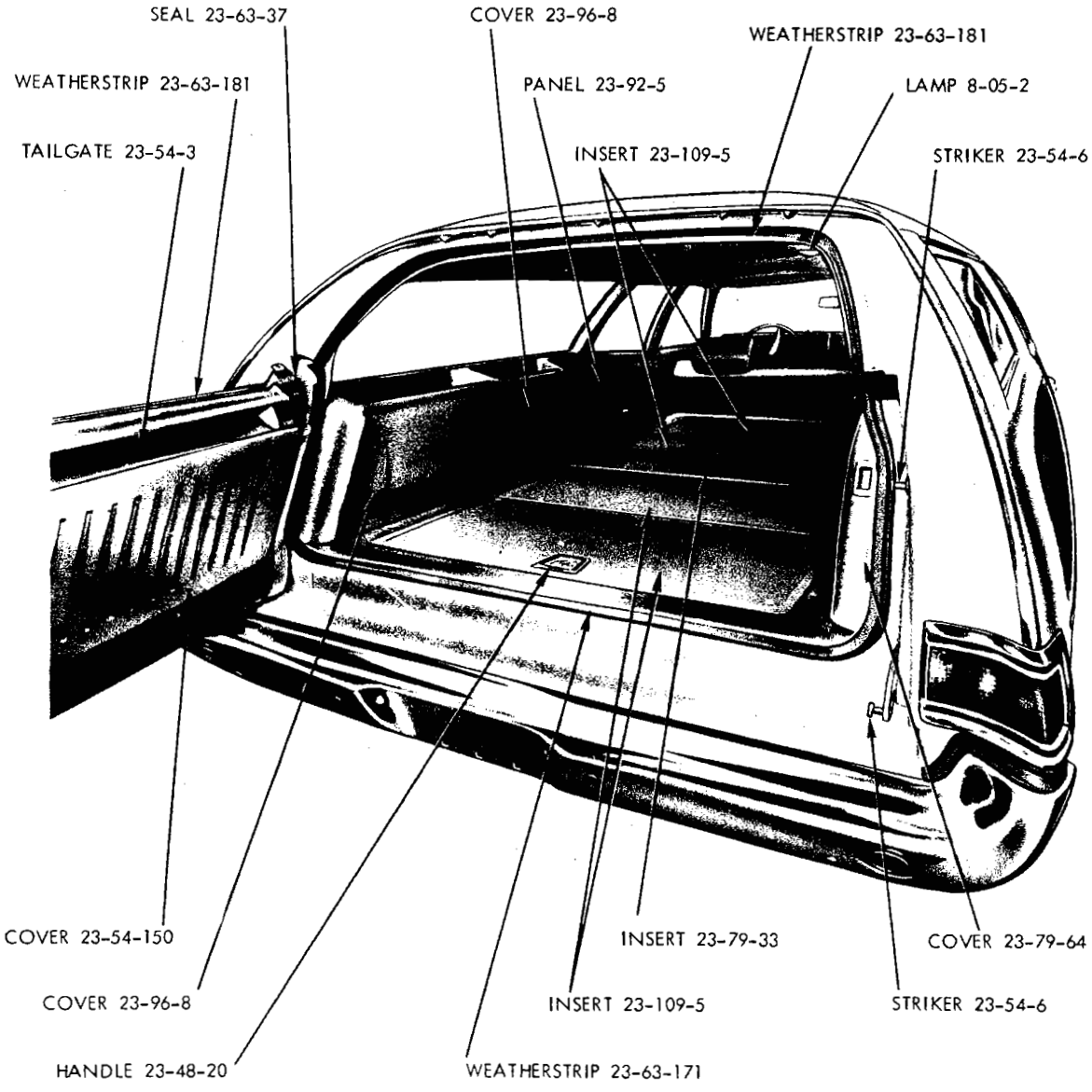

19a3632

1971
REAR INTERIOR - PLYMOUTH P-L STATION WAGON

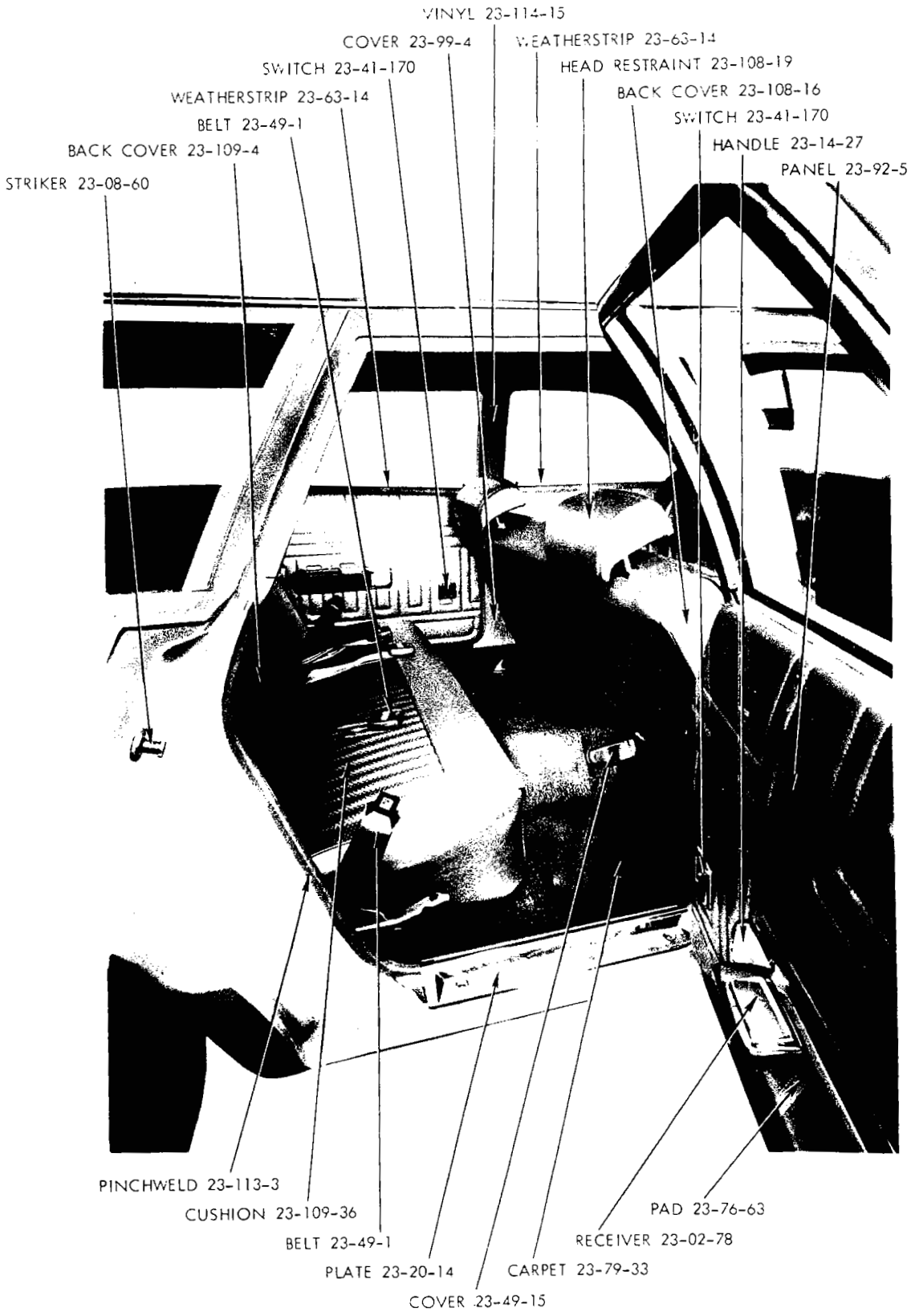

19a3631

1971
SIDE INTERIOR - PLYMOUTH P-L STATION WAGON

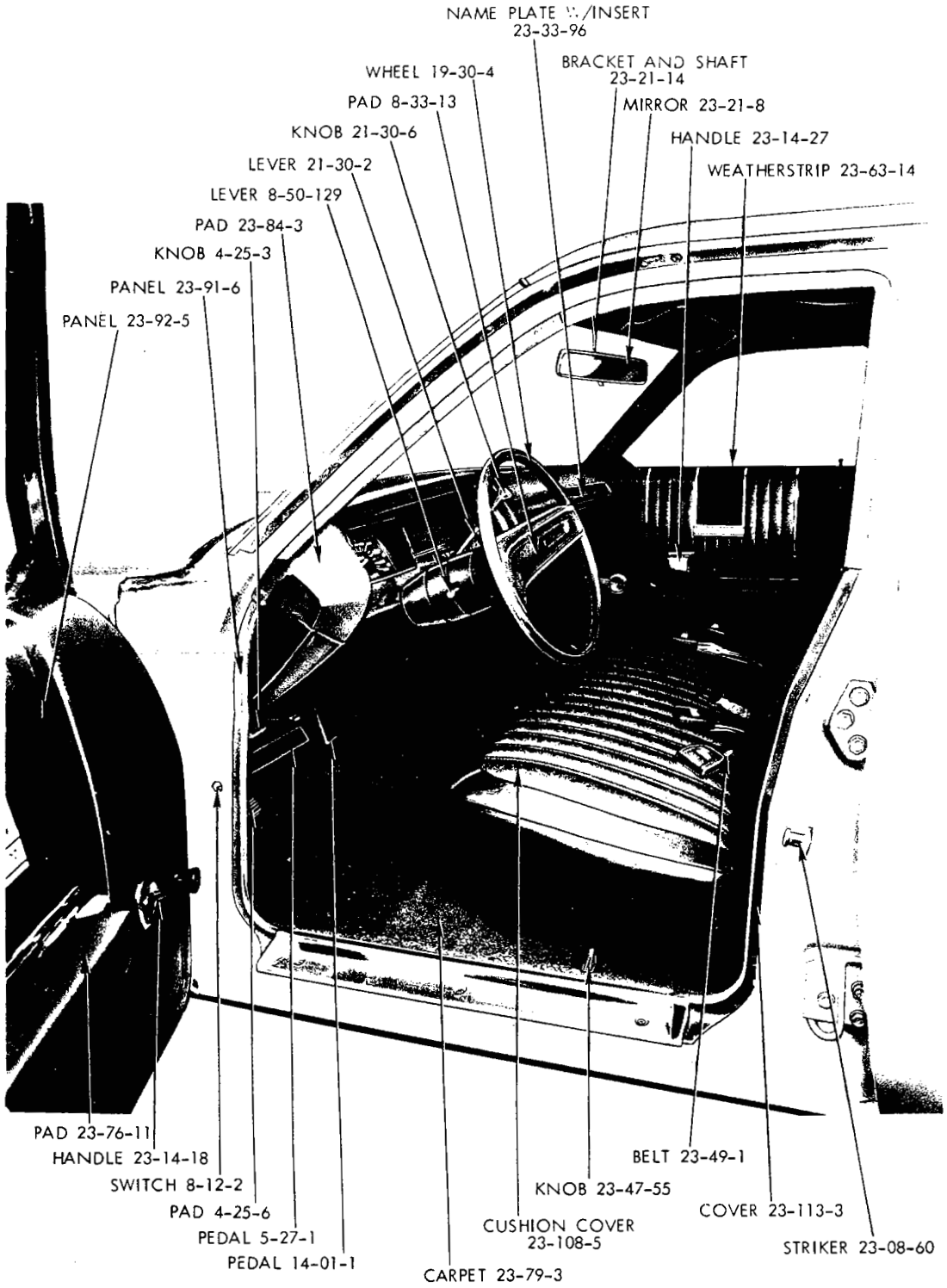

19a3616

1971
FRONT INTERIOR - PLYMOUTH FURY III P-M 4 DOOR SEDAN

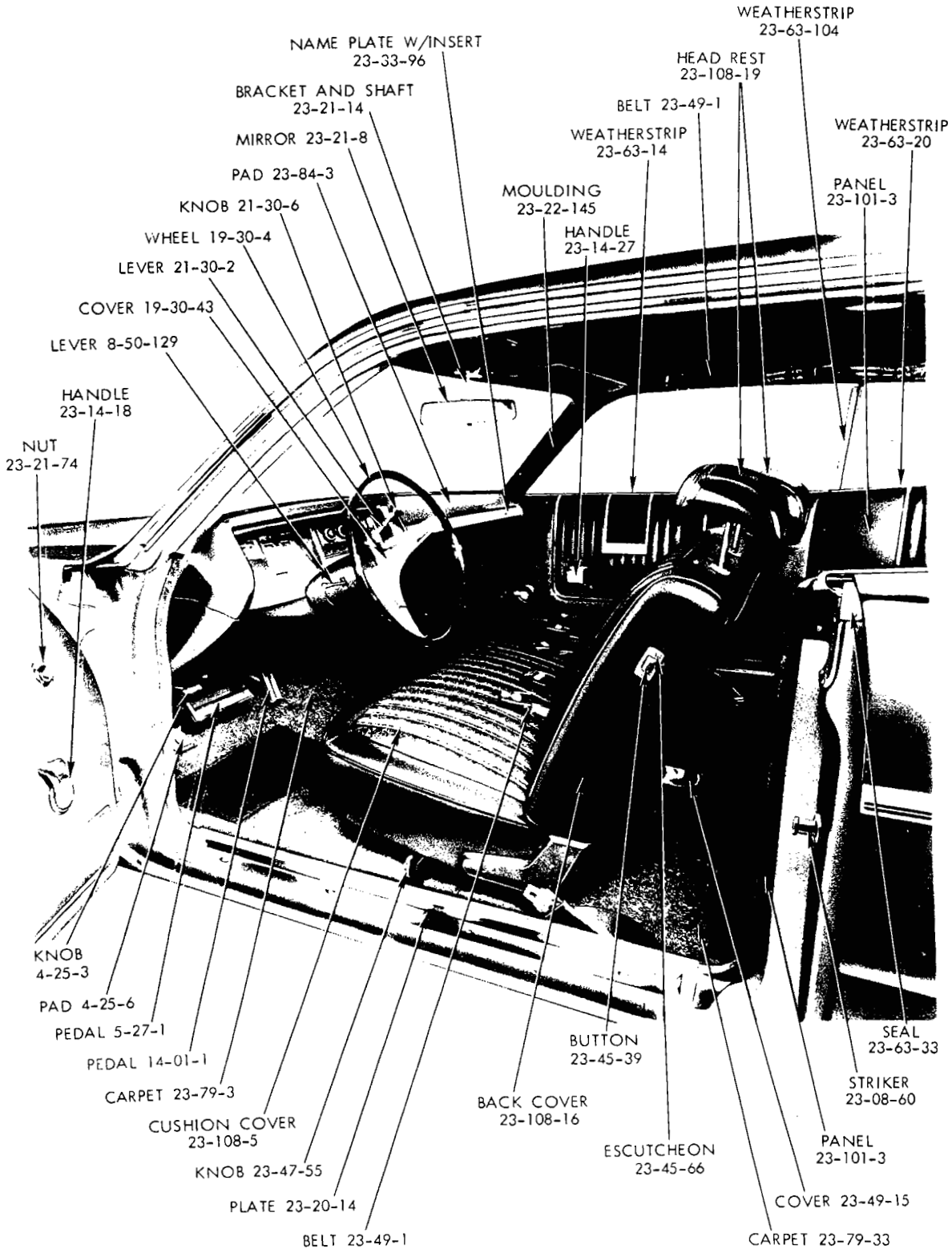

19a3682

1971
FRONT INTERIOR - PLYMOUTH FURY III P-M 2 DOOR HARDTOP

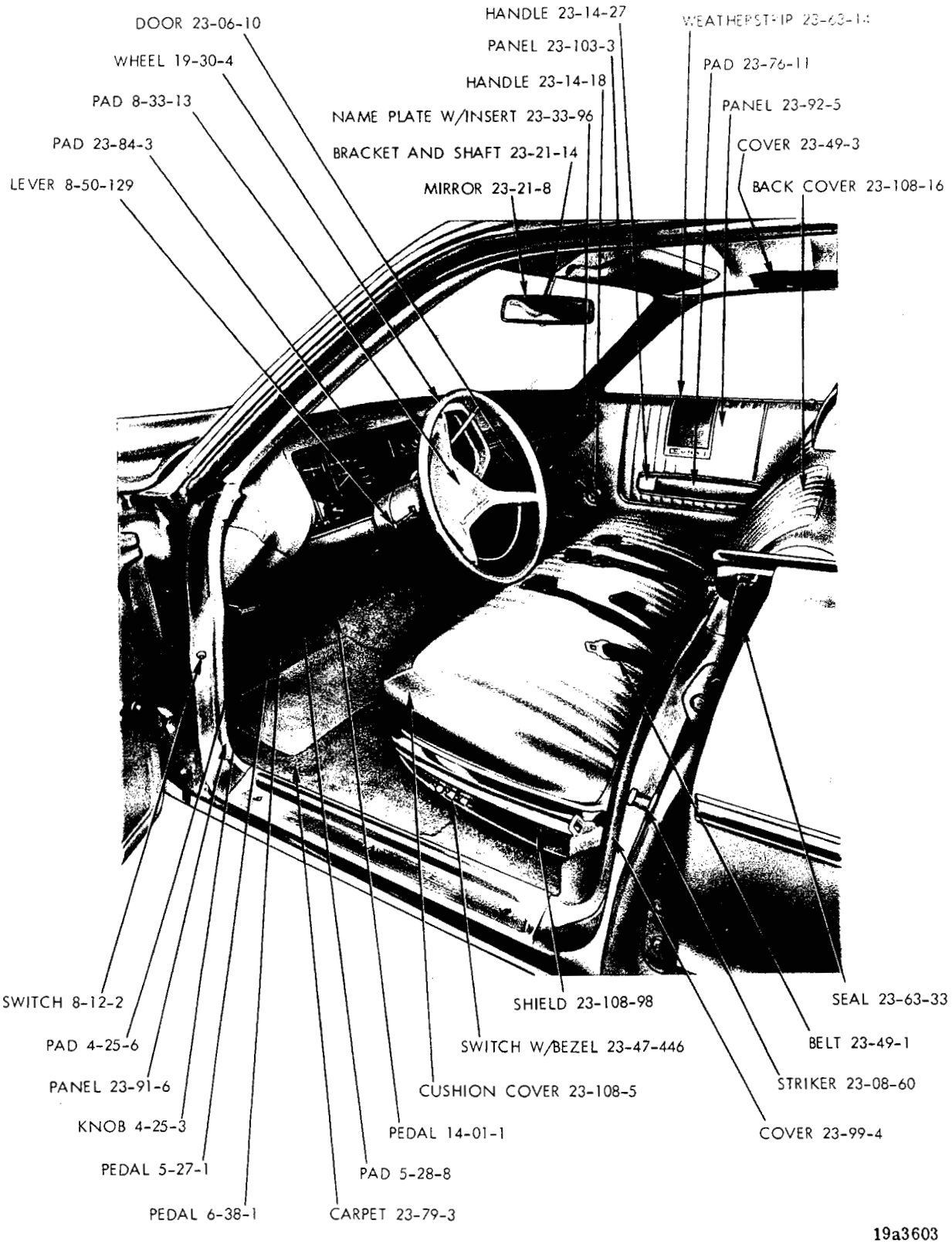

1971
FRONT INTERIOR - PLYMOUTH FURY III P-M 4 DOOR HARDTOP

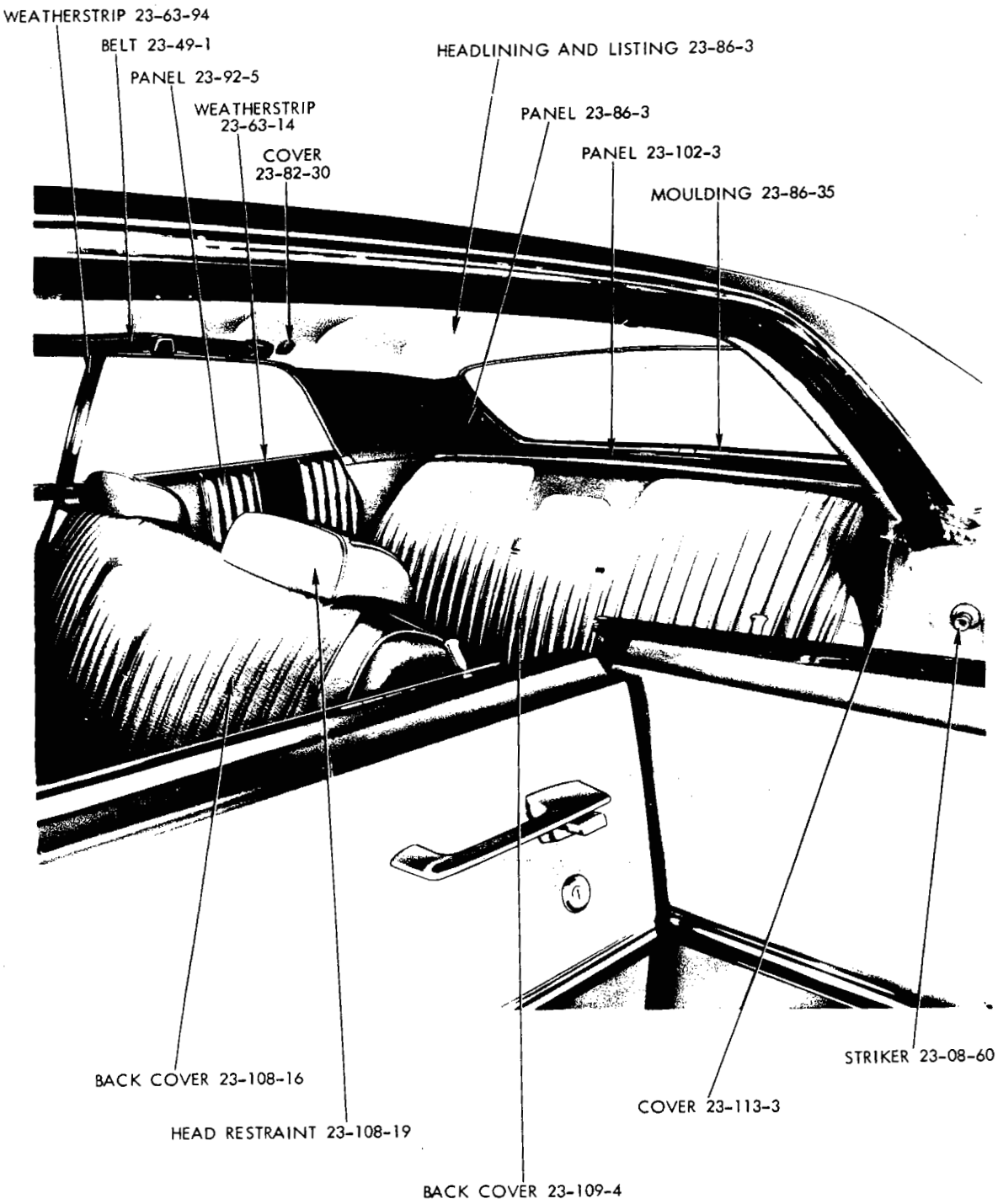

19a3623

1971
REAR INTERIOR - PLYMOUTH FURY III P-M 4 DOOR HARDTOP

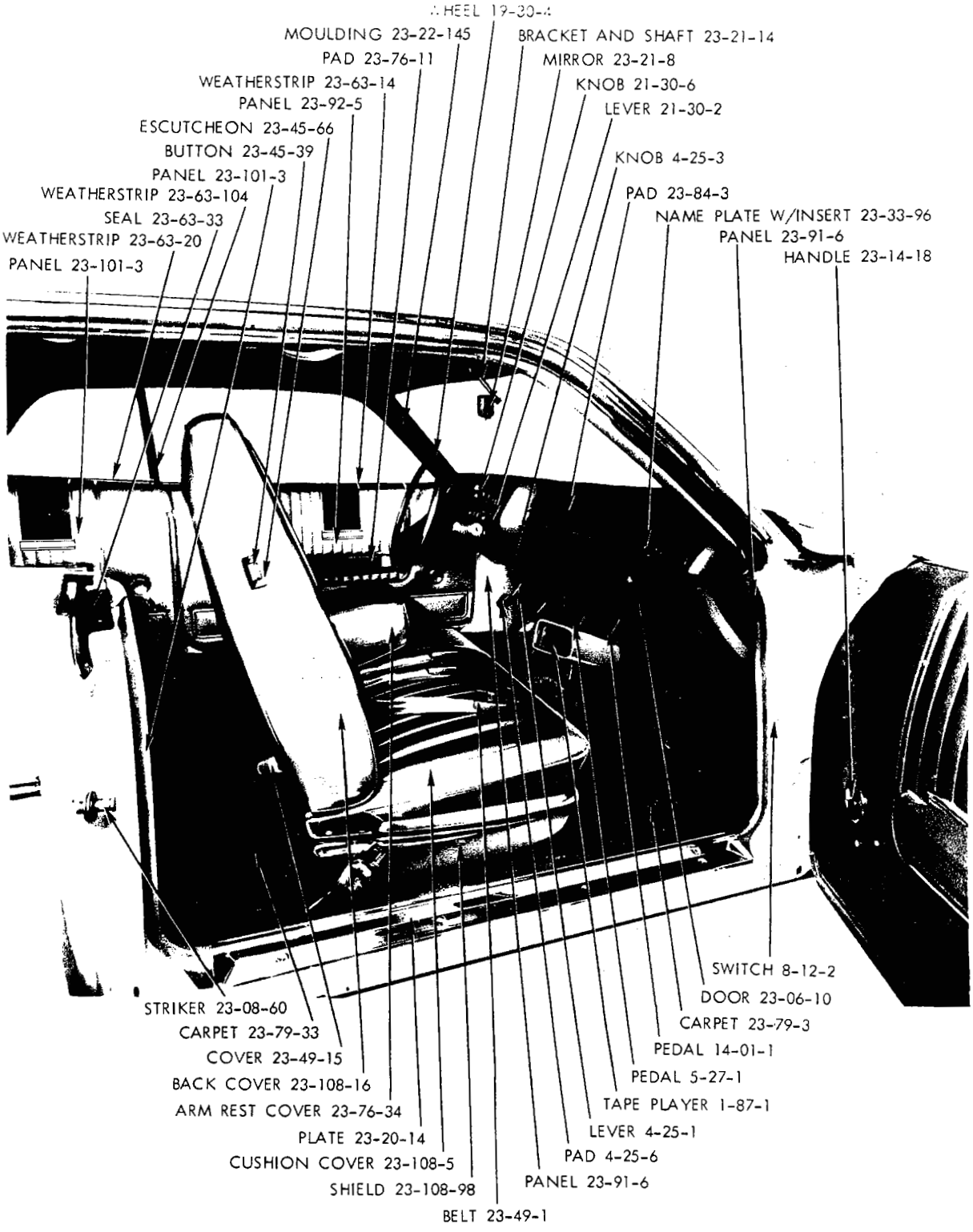

19a3619

1971
FRONT INTERIOR - PLYMOUTH FURY III P-M FASTBACK

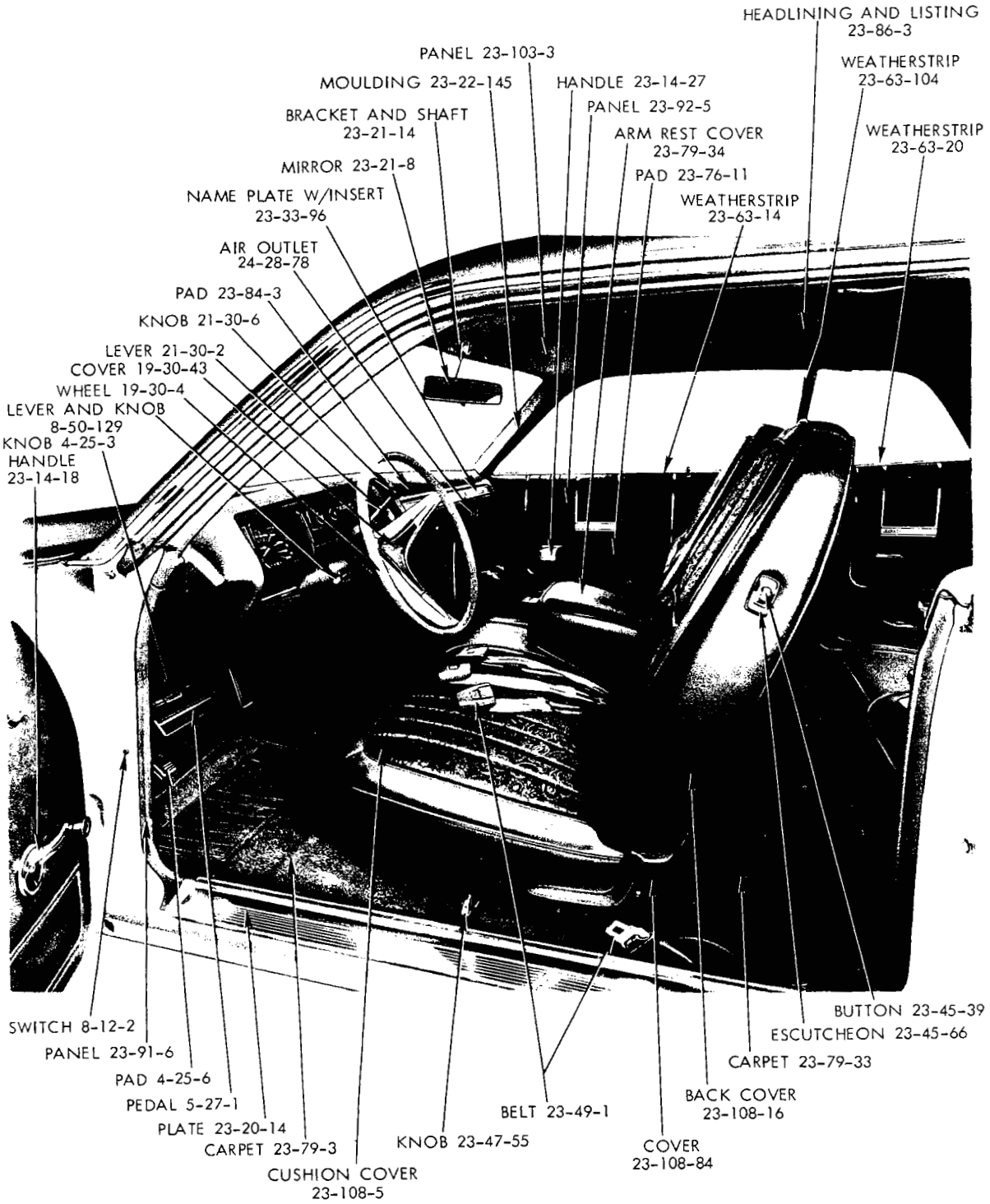

19a3759

1971
FRONT INTERIOR - PLYMOUTH FURY P-M (GRAN COUPE) FASTBACK

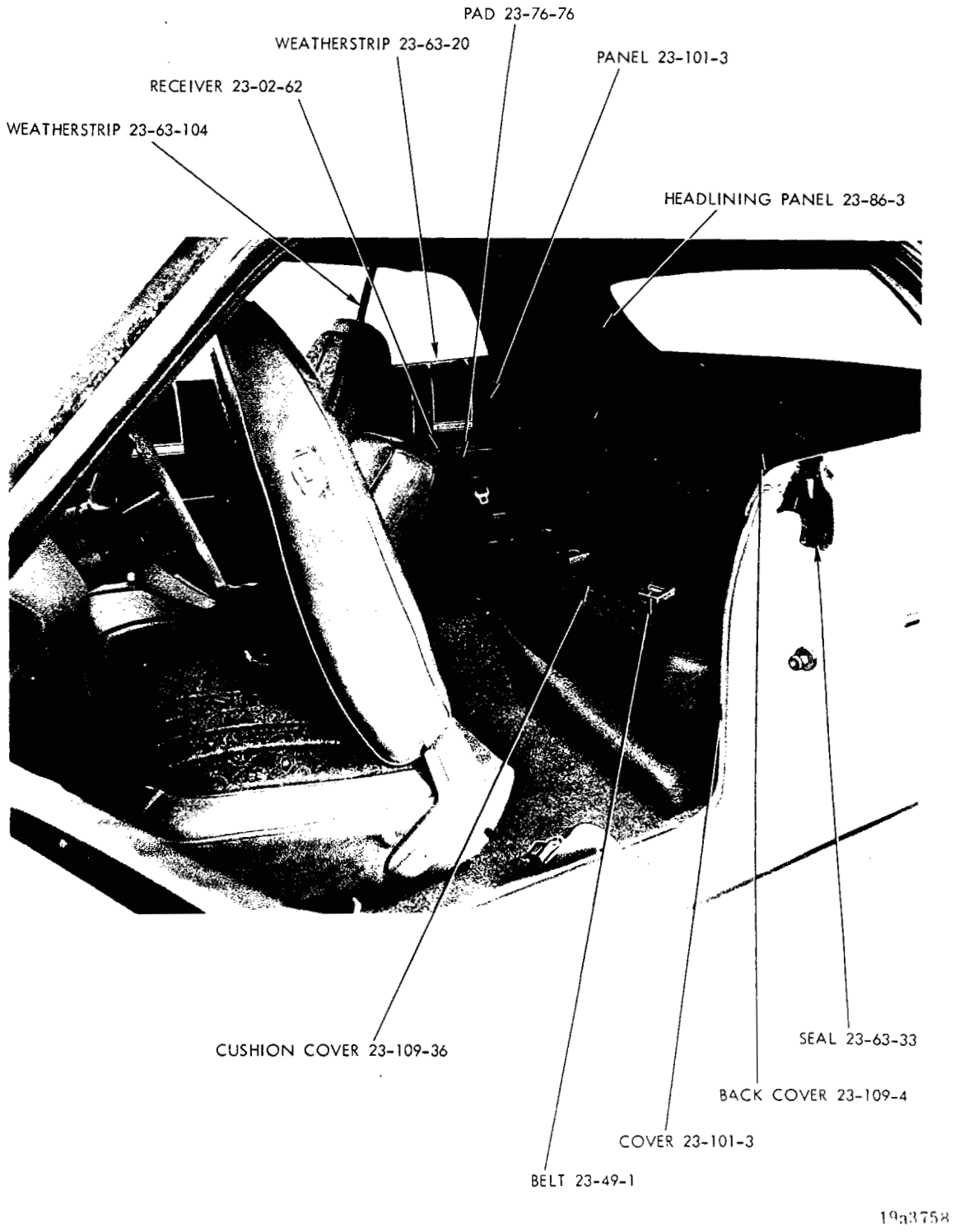

REAR INTERIOR - PLYMOUTH FURY P-M (GRAN COUPE) FASTBACK

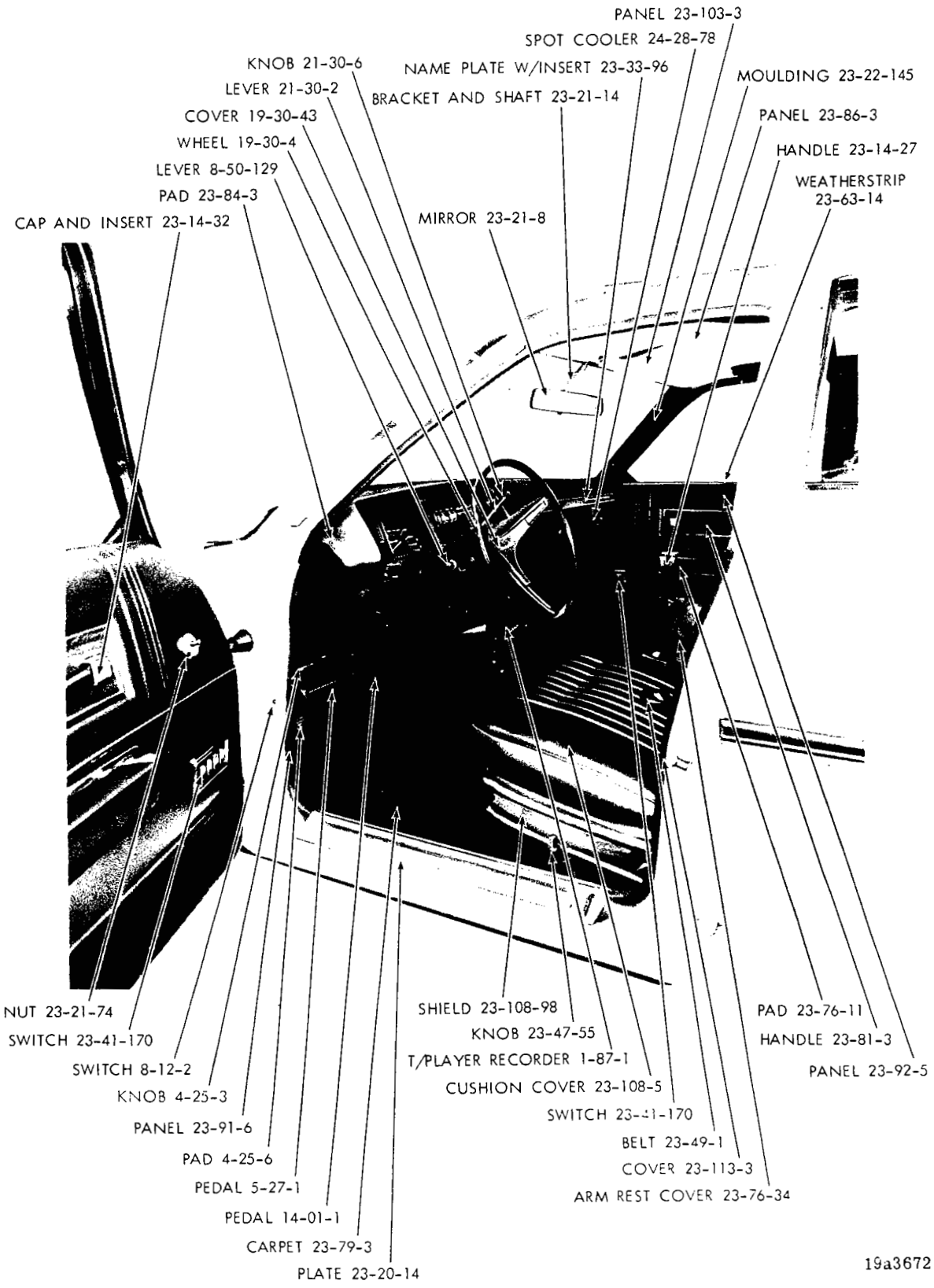

1971
FRONT INTERIOR - PLYMOUTH CUSTOM P-M SUBURBAN

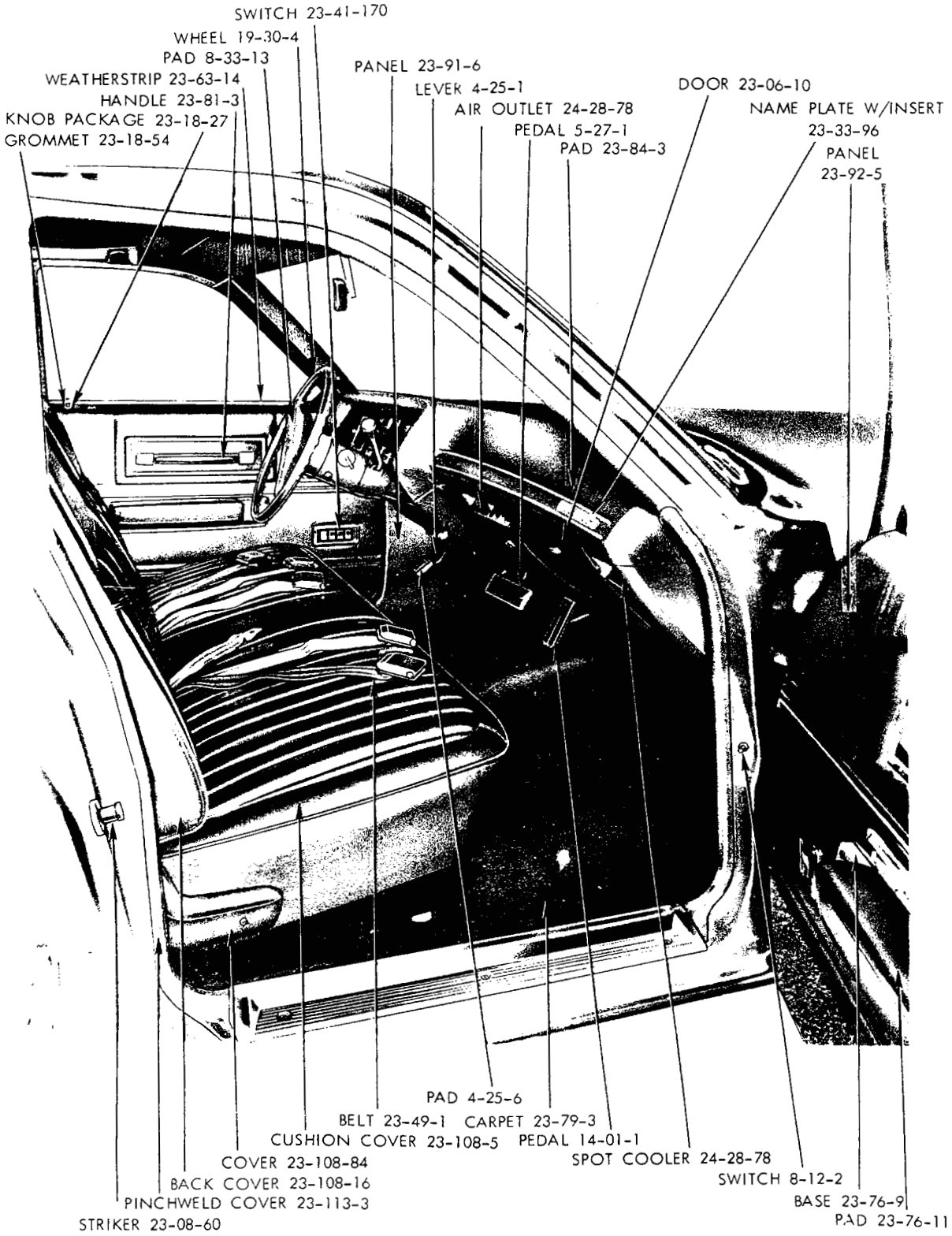

19a3496

1971
FRONT INTERIOR - PLYMOUTH SPORT FURY P-H 4 DOOR SEDAN



19a3500

1971
REAR INTERIOR - PLYMOUTH SPORT FURY P-H 4 DOOR SEDAN

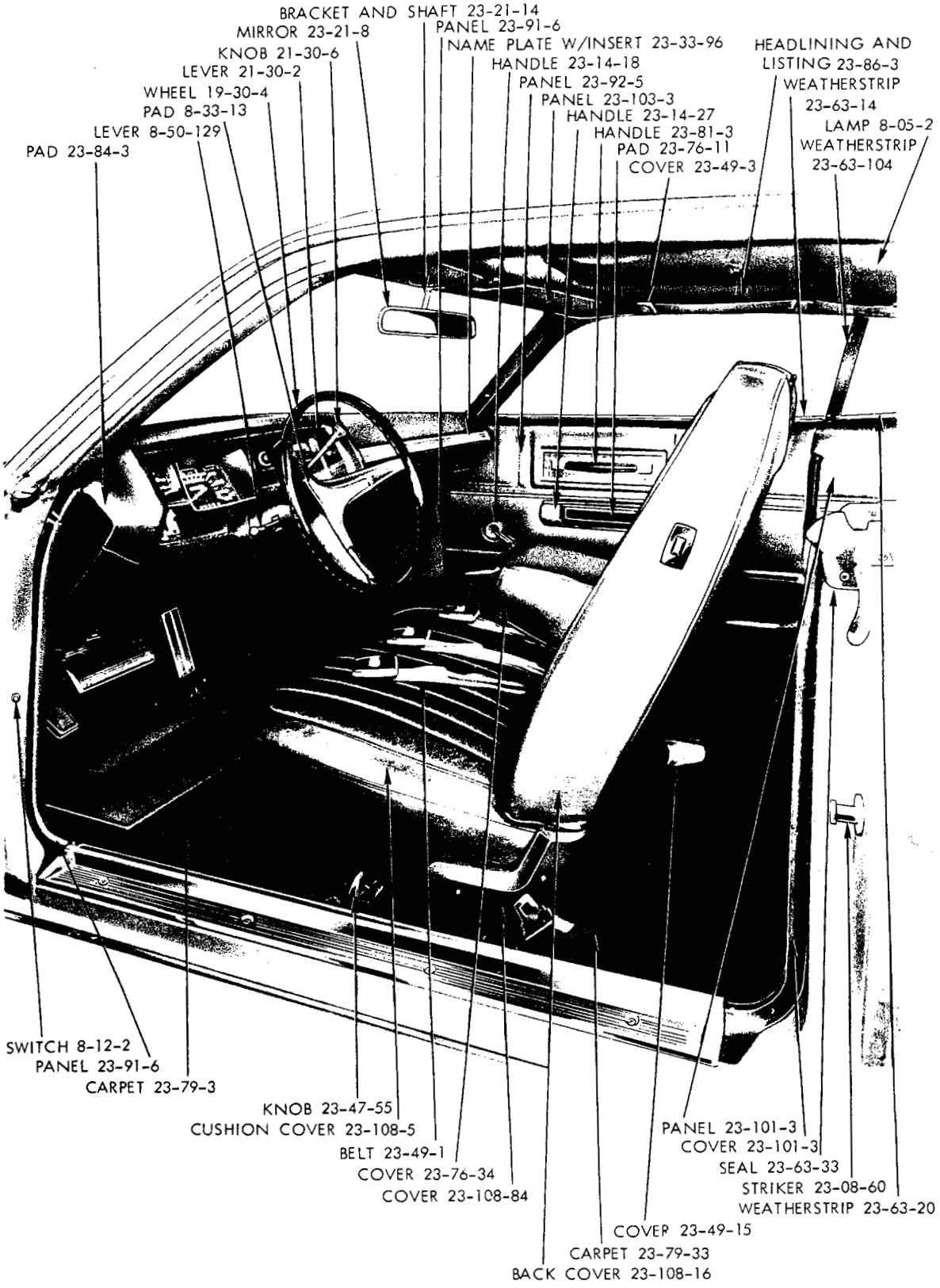

1971
FRONT INTERIOR - SPORT FURY P-H 2 DOOR HARDTOP



19a3499

1971
REAR INTERIOR - PLYMOUTH SPORT FURY P-H 2 DOOR HARDTOP

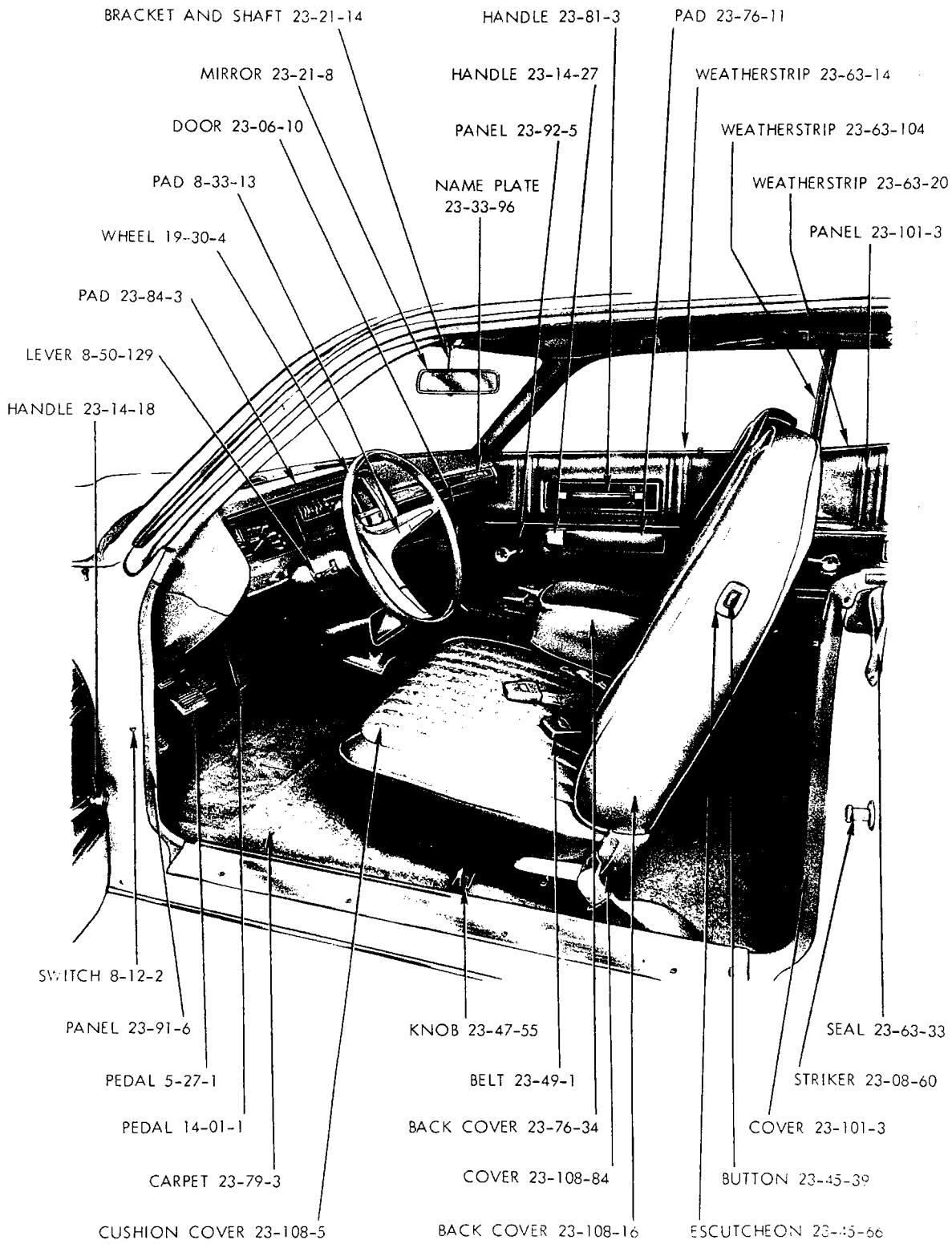

19a3562

1971
FRONT INTERIOR - PLYMOUTH SPORT FURY P-H FASTBACK

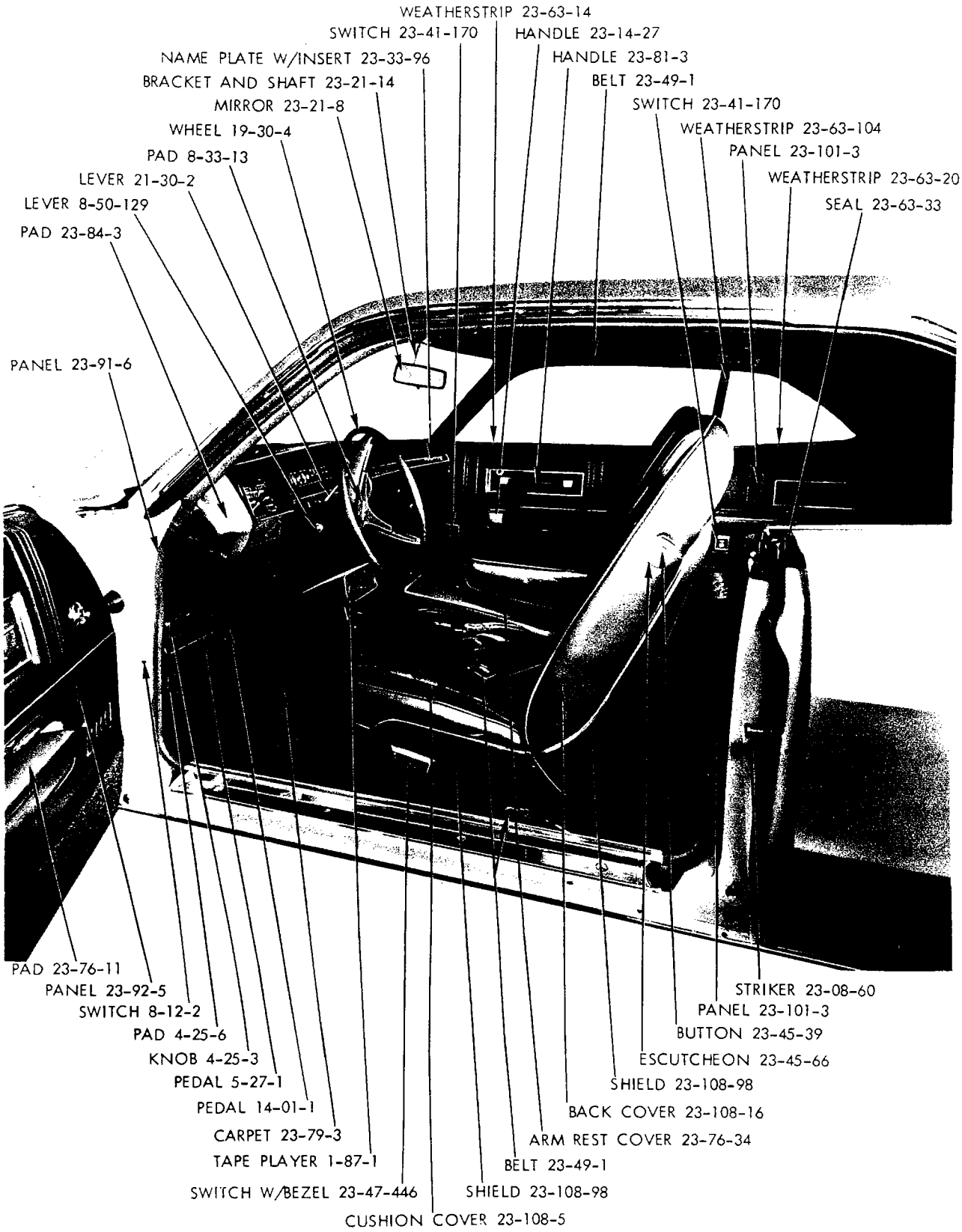

19a3618

1971
FRONT INTERIOR - PLYMOUTH SPORT FURY P-P 2 DOOR HARDTOP

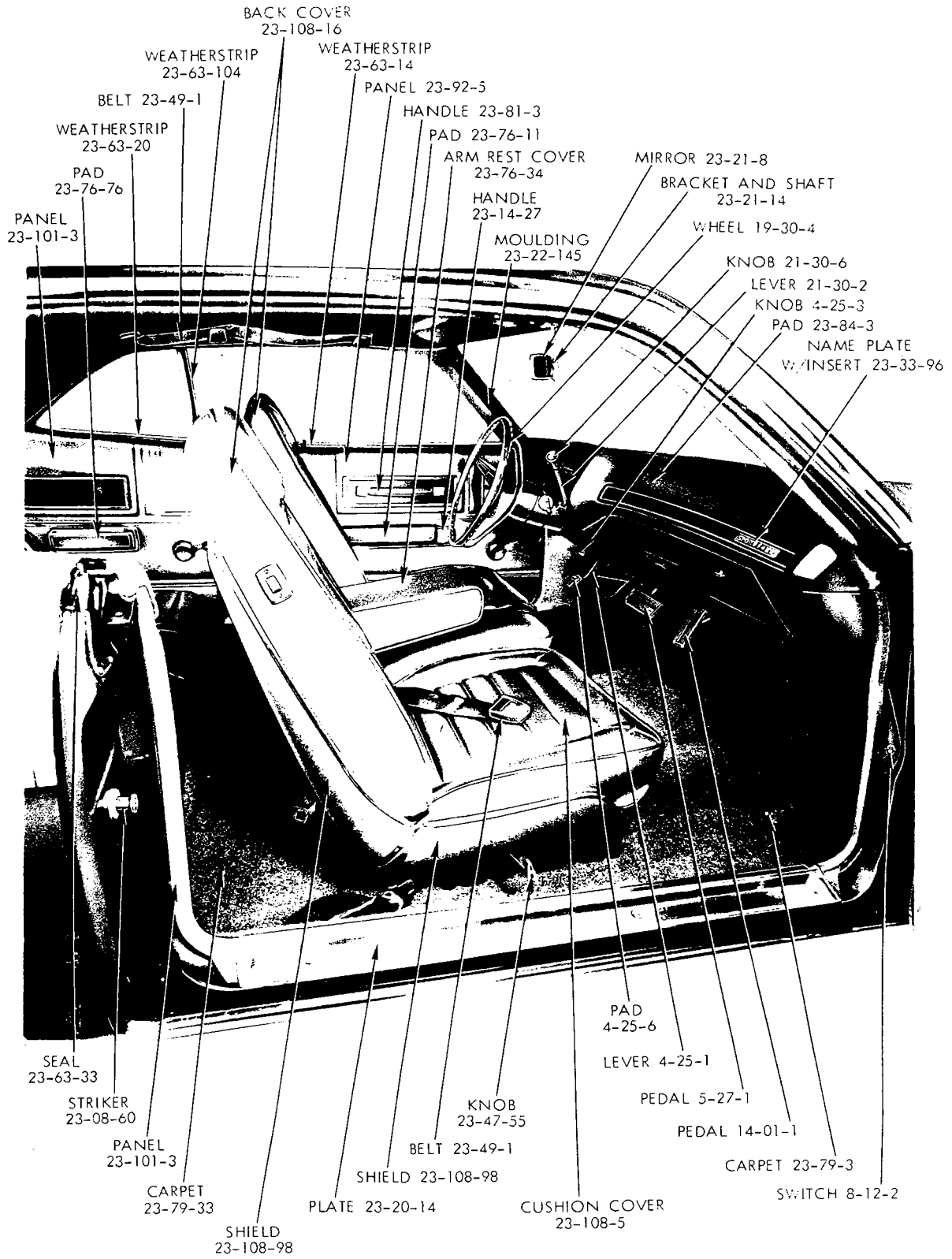

19a3689

1971
FRONT INTERIOR - PLYMOUTH SPORT FURY GT P-P 2 DOOR HARDTOP

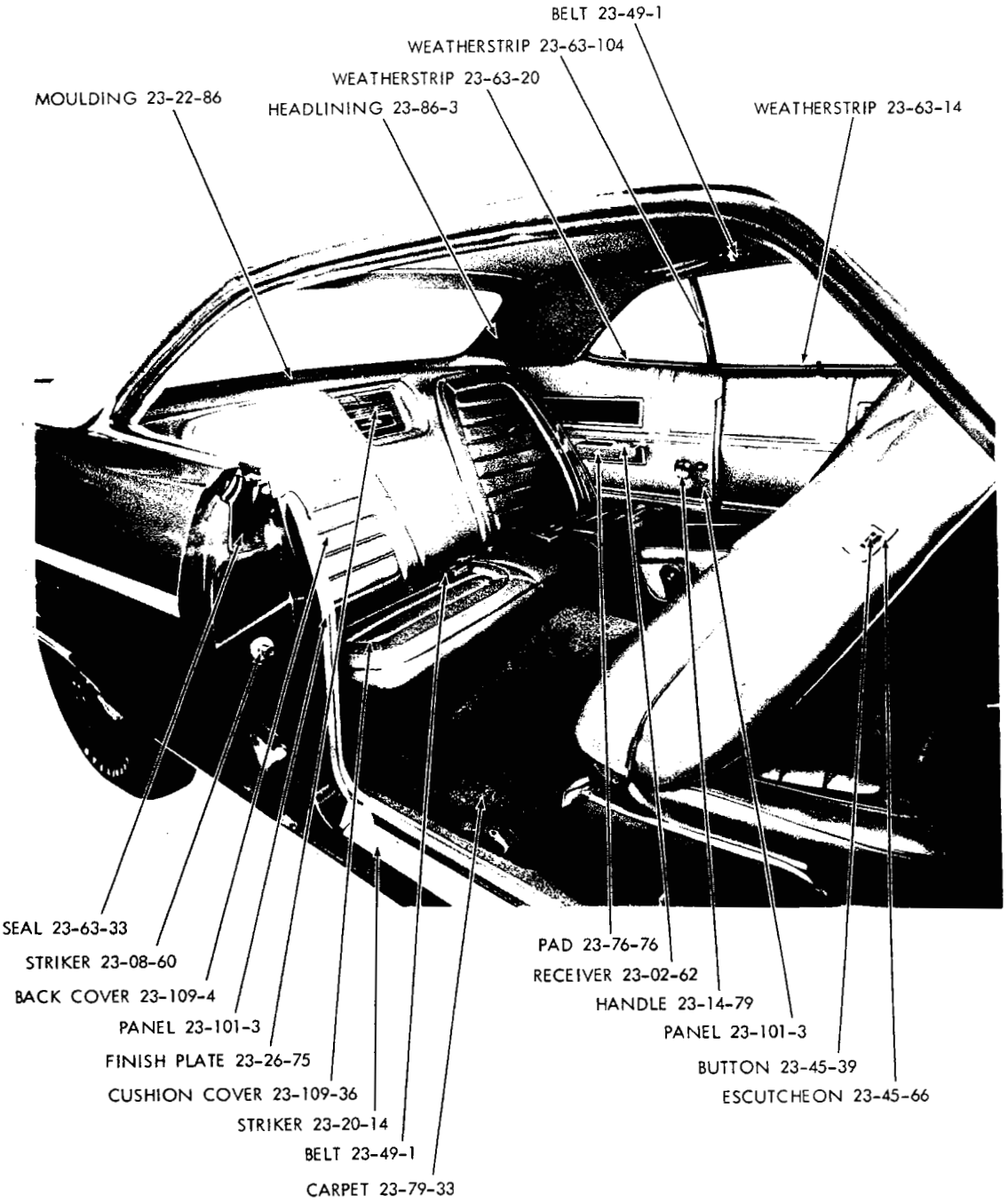
BELT 23-49-1
WEATHERSTRIP 23-63-104
WEATHERSTRIP 23-63-20
MOULDING 23-22-86
HEADLINING 23-86-3
WEATHERSTRIP 23-63-14
SEAL 23-63-33
STRIKER 23-08-60
BACK COVER 23-109-4
PANEL 23-101-3
FINISH PLATE 23-26-75
CUSHION COVER 23-109-36
STRIKER 23-20-14
BELT 23-49-1
CARPET 23-79-33
PAD 23-76-76
RECEIVER 23-02-62
HANDLE 23-14-79
PANEL 23-101-3
BUTTON 23-45-39
ESCUTCHEON 23-45-66

19a3693

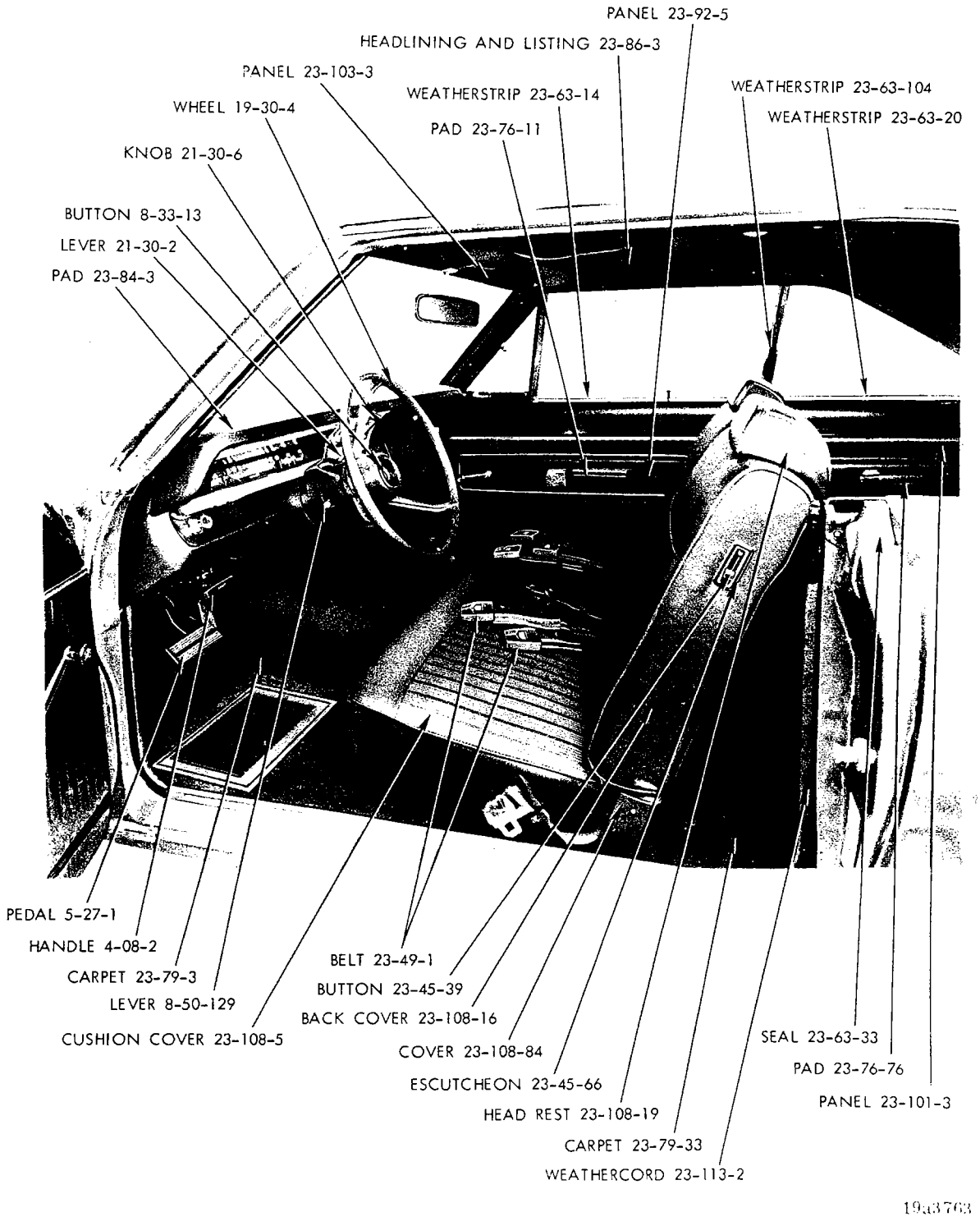

1971
INTERIOR VIEW - DART (SWINGER SPECIAL) L-L 2 DOOR HARDTOP

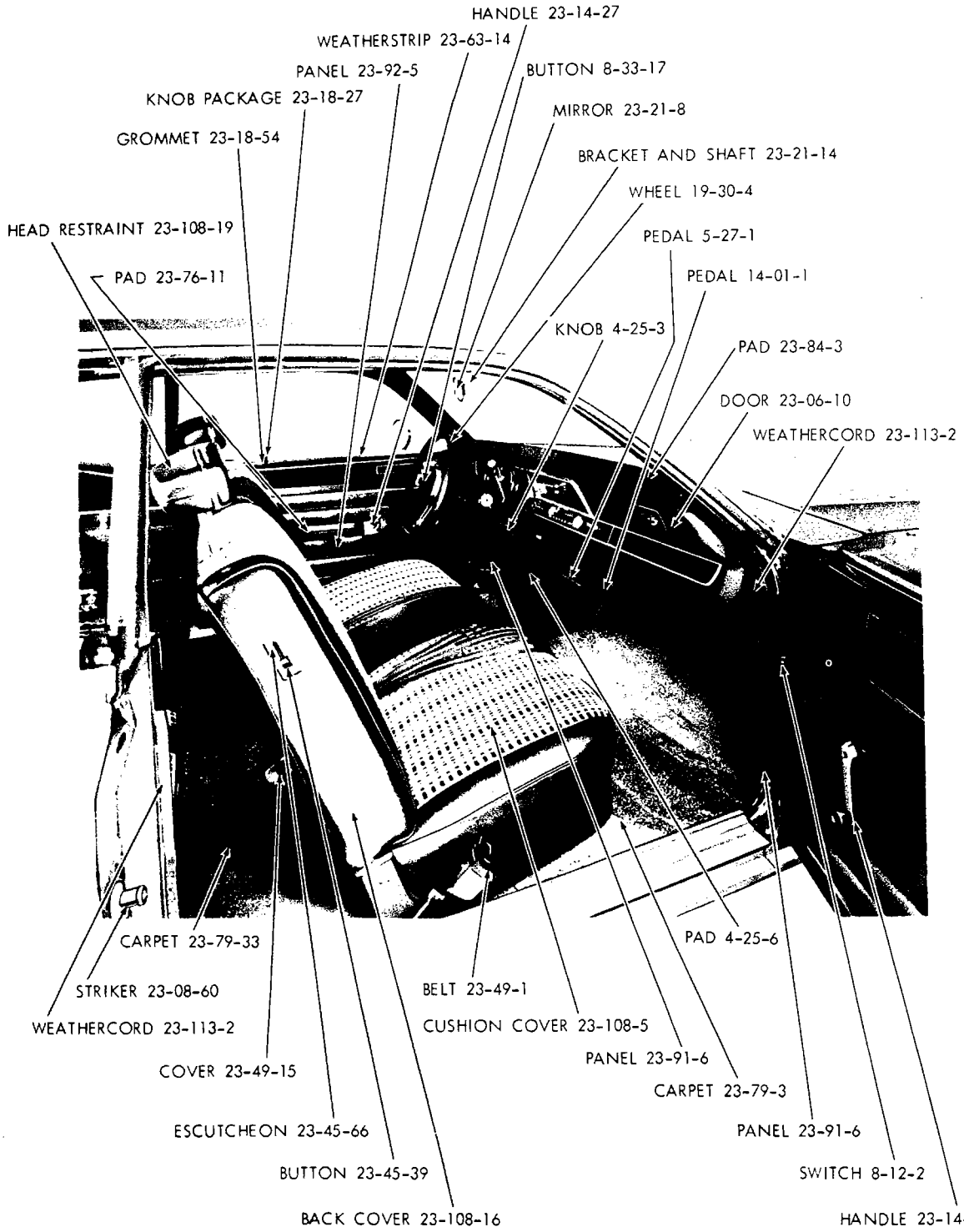

19a3599

1971
FRONT INTERIOR - DART DEMON 340 L-M FASTBACK

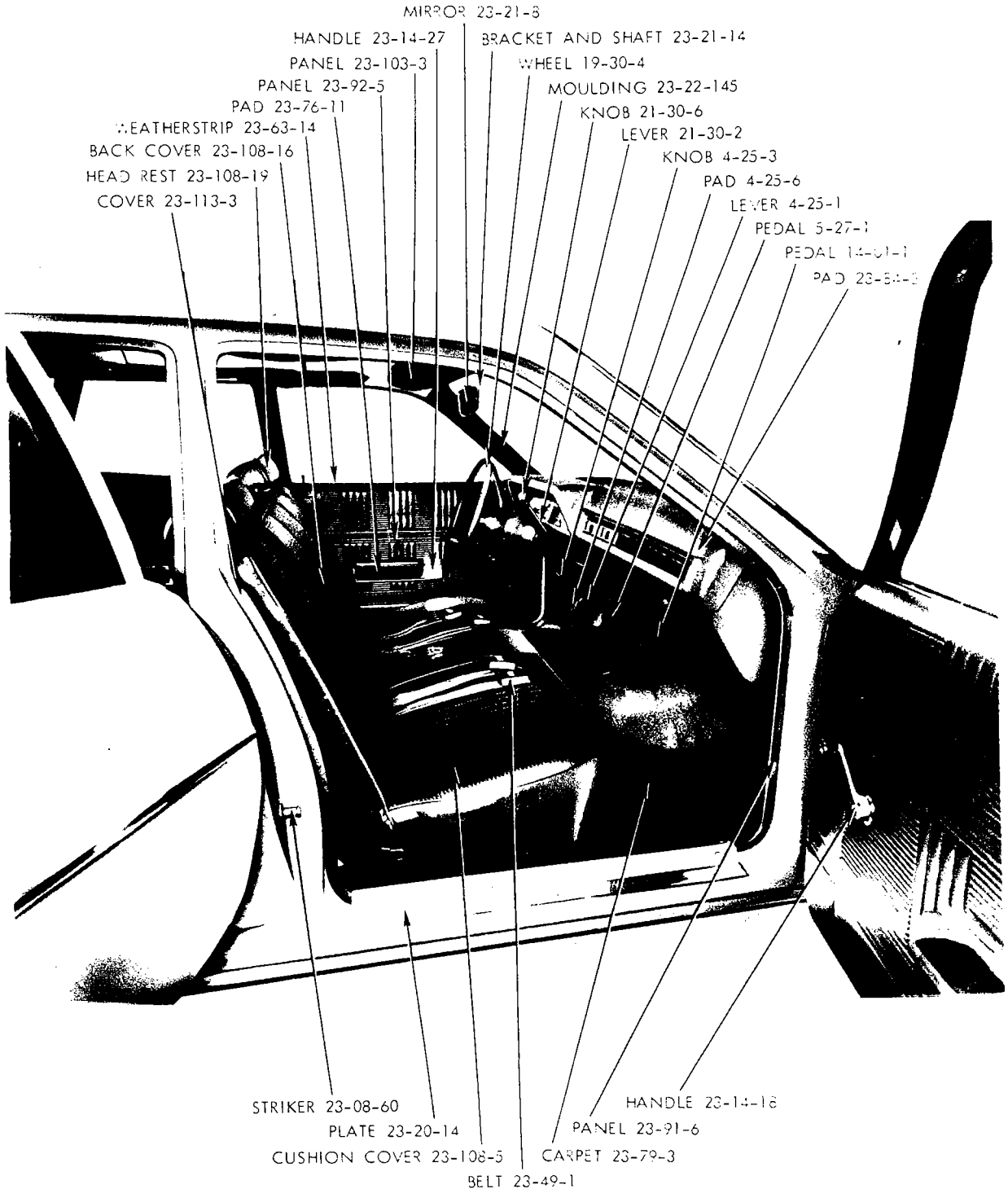

1971
FRONT INTERIOR - CORONET W-L STATION WAGON

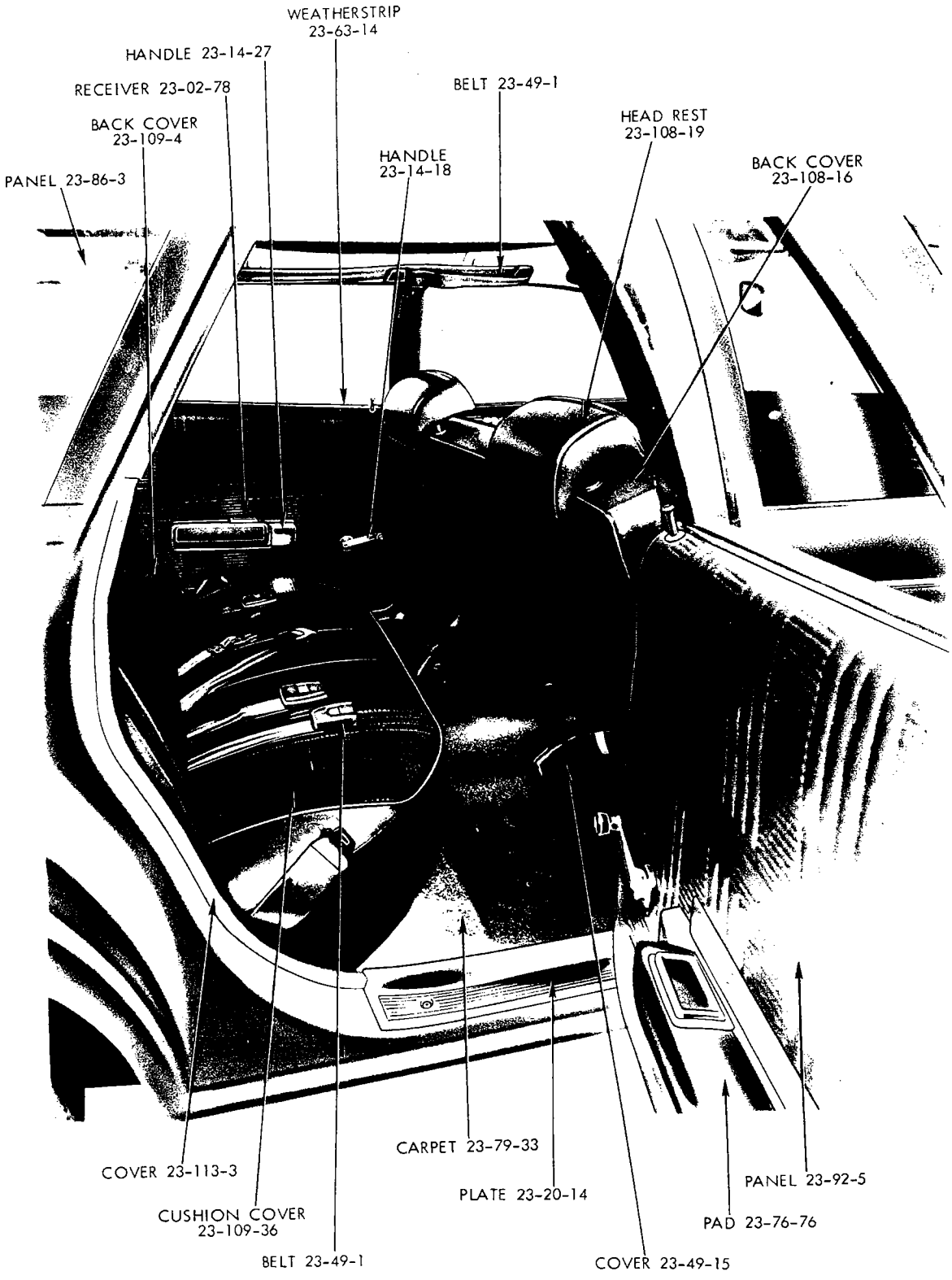

19a3655

1971
REAR INTERIOR - CORONET W-L STATION WAGON

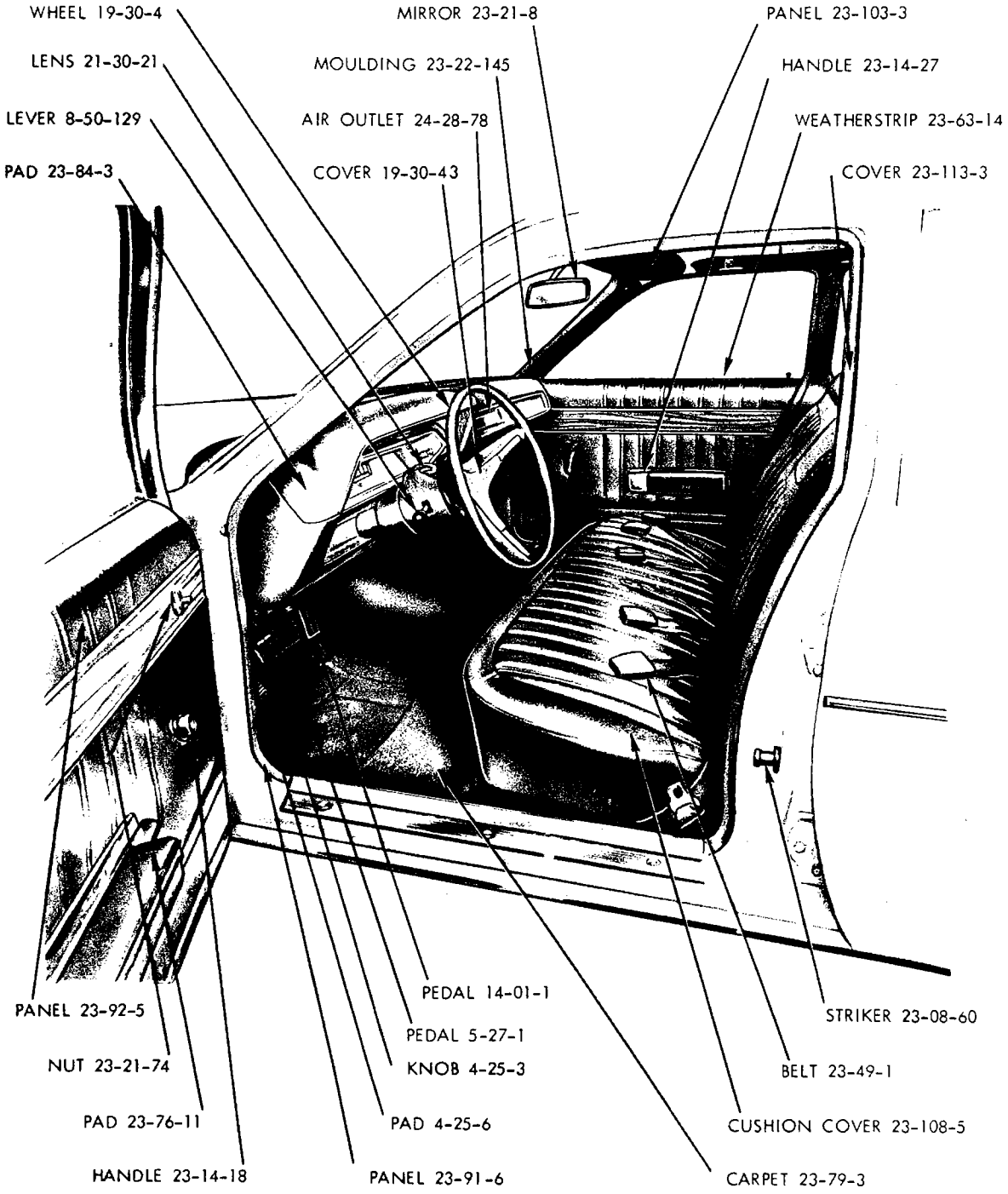

19a3671

1971
FRONT INTERIOR - CORONET CUSTOM W-H STATION WAGON

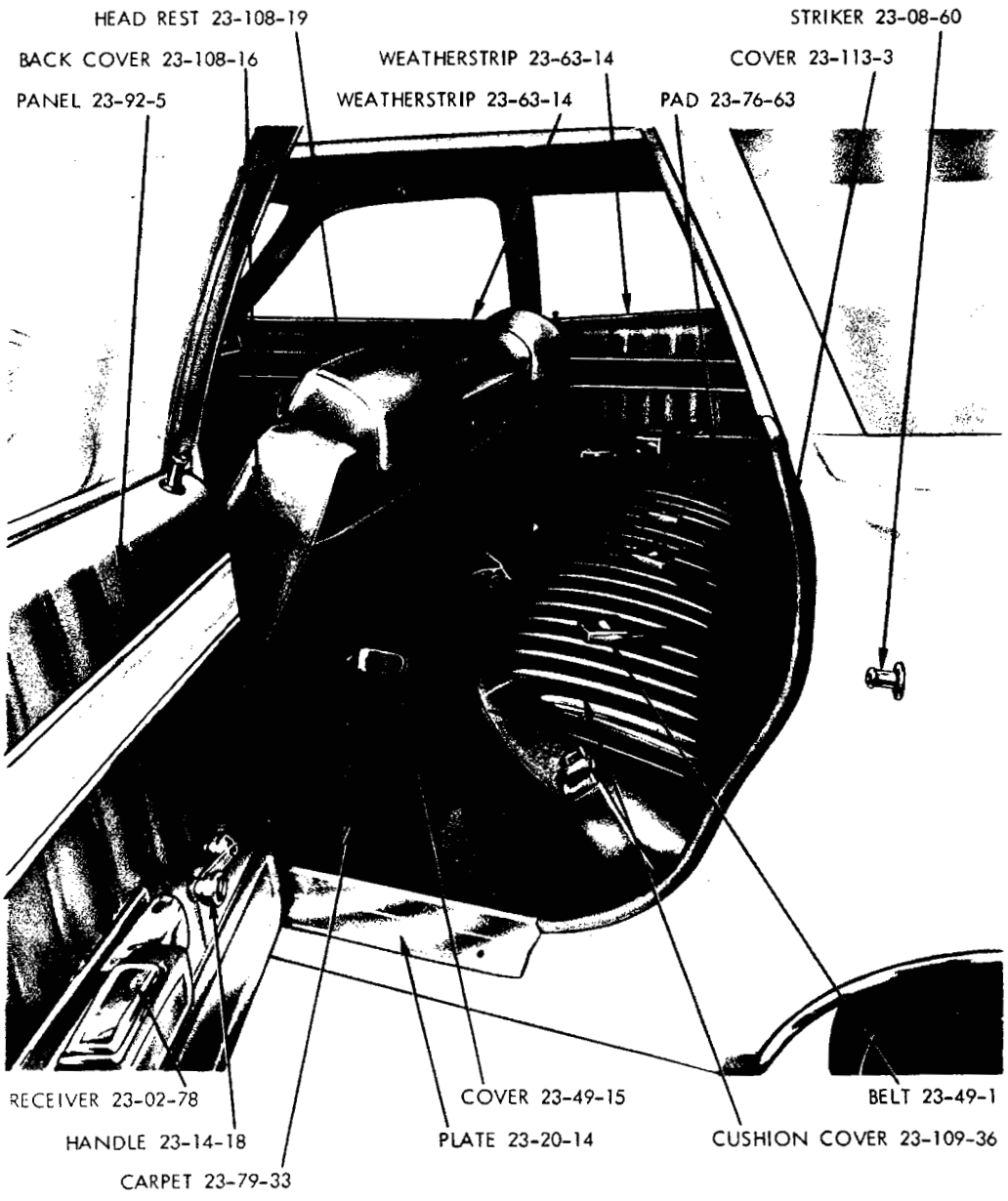
HEAD REST 23-108-19
BACK COVER 23-108-16
PANEL 23-92-5
WEATHERSTRIP 23-63-14
WEATHERSTRIP 23-63-14
PAD 23-76-63
STRIKER 23-08-60
COVER 23-113-3
RECEIVER 23-02-78
HANDLE 23-14-18
CARPET 23-79-33
COVER 23-49-15
PLATE 23-20-14
BELT 23-49-1
CUSHION COVER 23-109-36

19a3654

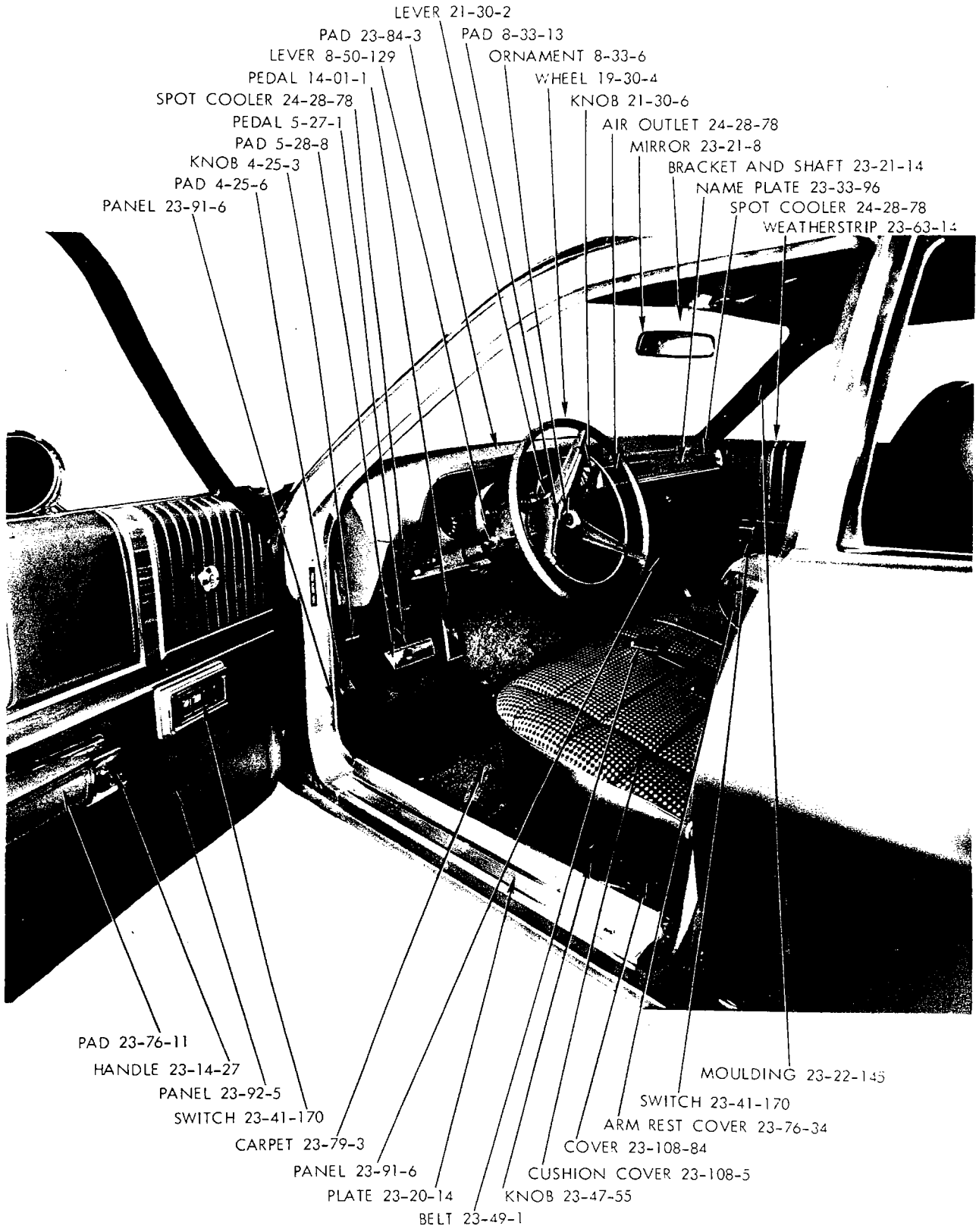

19a3600

1971
FRONT INTERIOR - CORONET BROUGHAM W-P 4 DOOR SEDAN

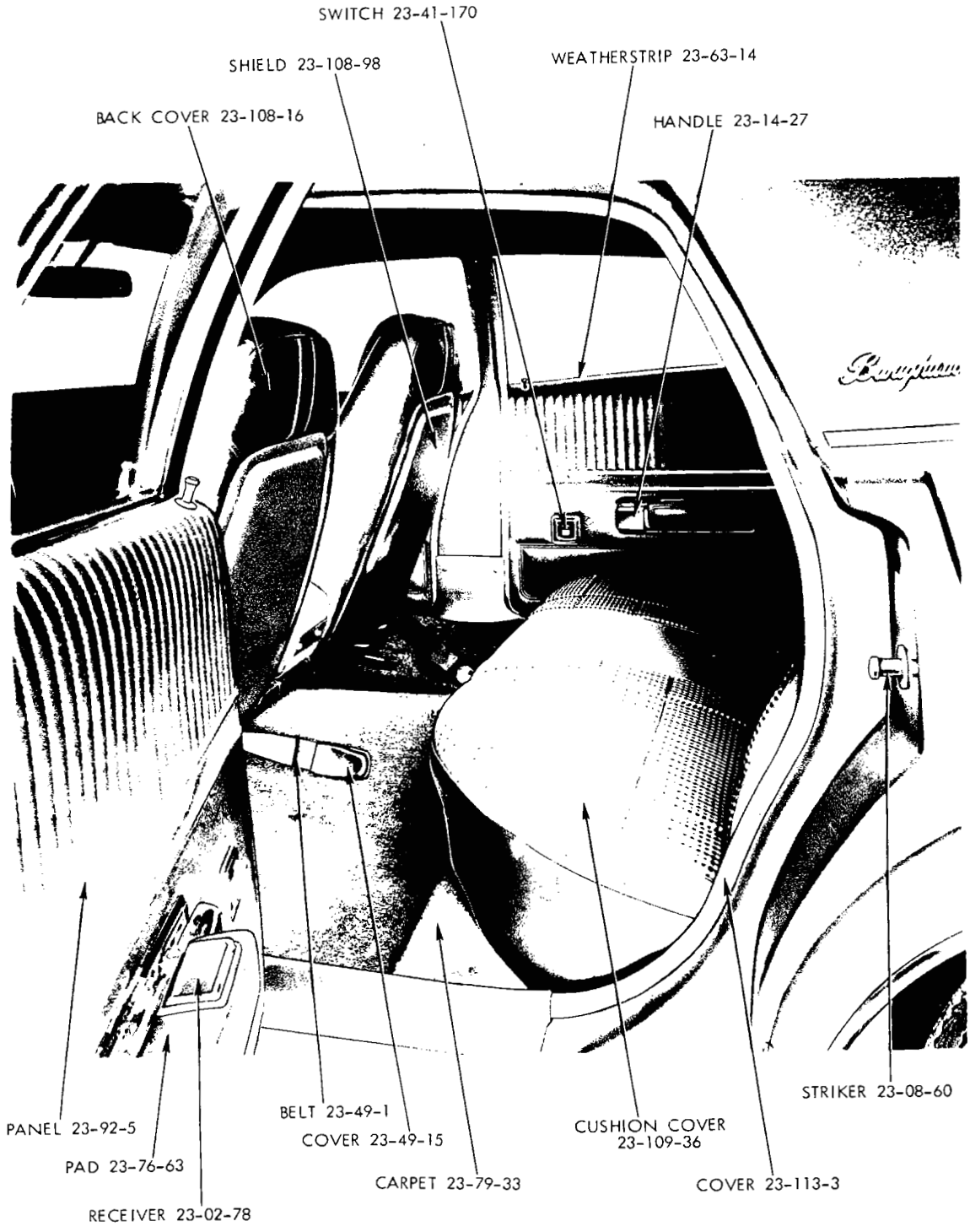

19a3620

1971
REAR INTERIOR - CORONET BROUGHAM W-P 4 DOOR SEDAN

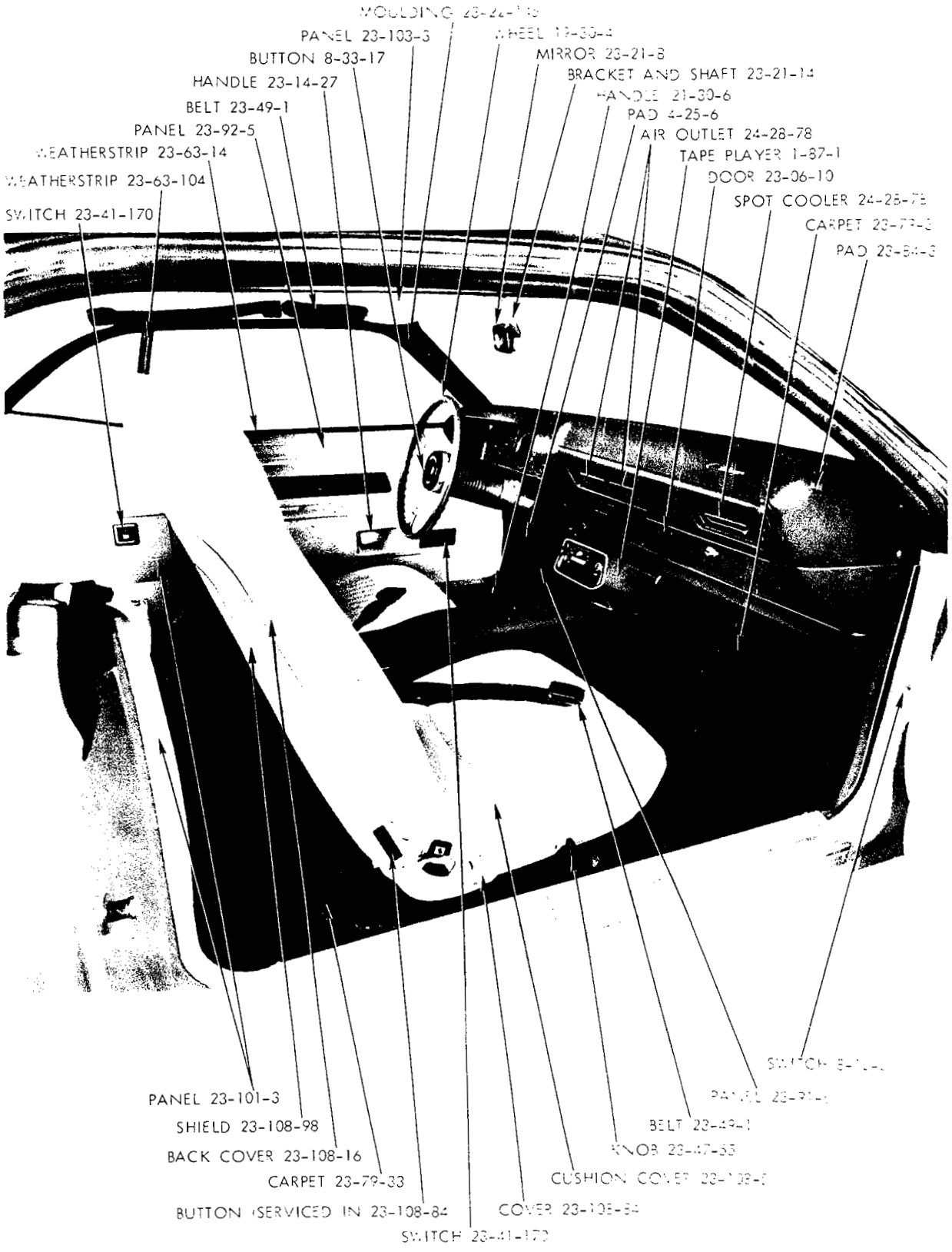

13a3605

1971
FRONT INTERIOR - CHALLENGER J-H 2 DOOR HARDTOP

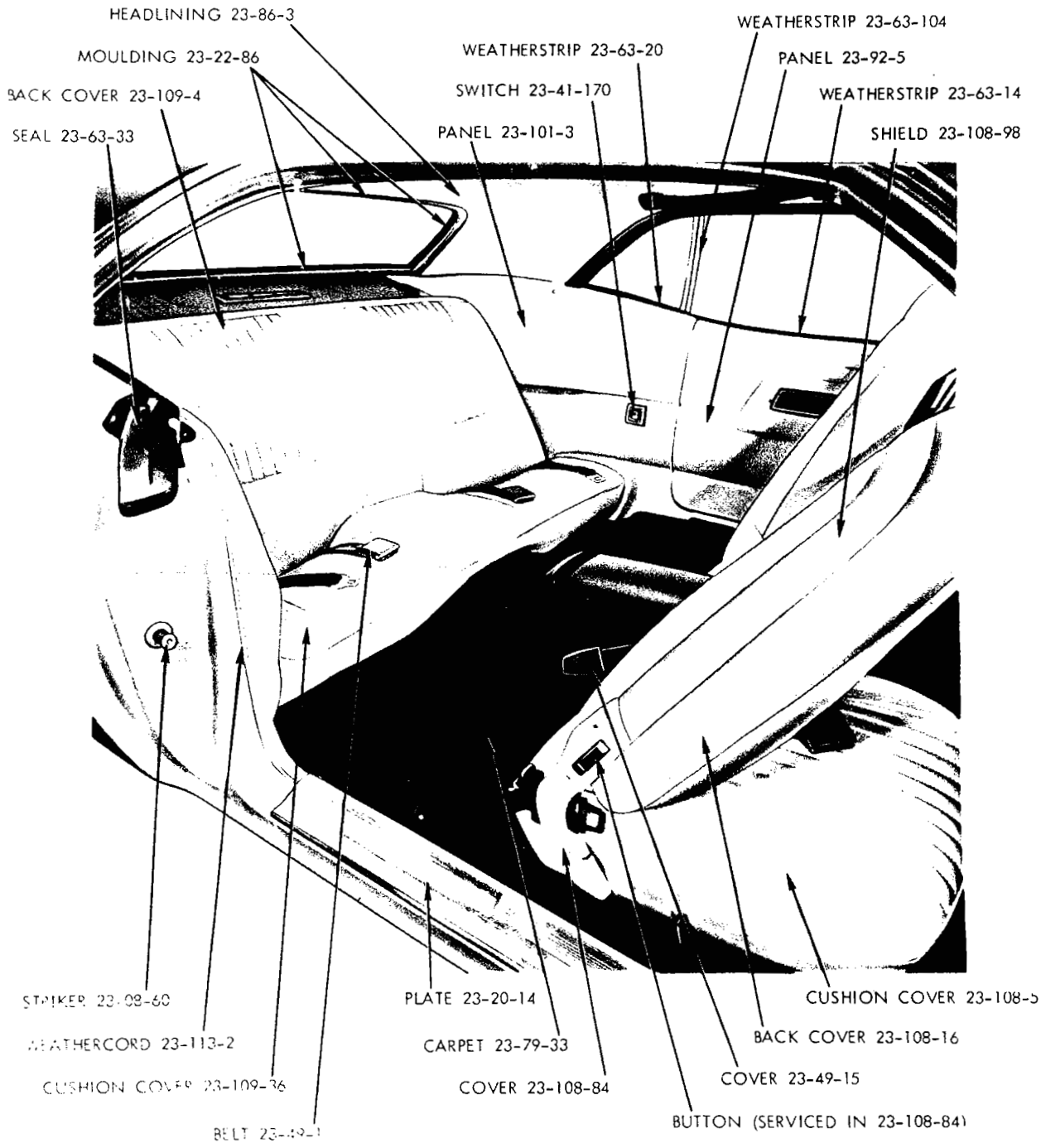

19a3622

1971
REAR INTERIOR - CHALLENGER J-H 2 DOOR HARDTOP

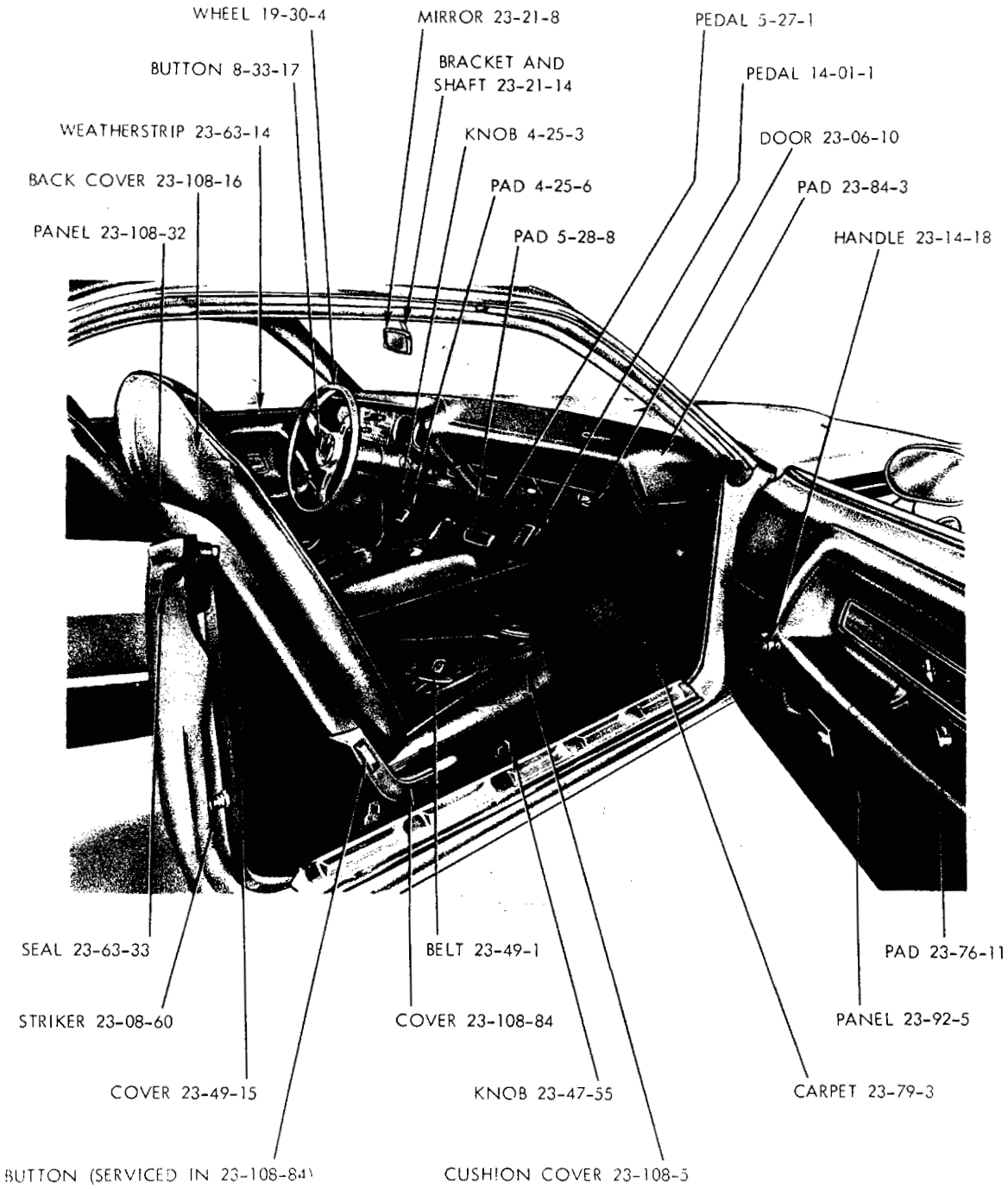

19a351a

1971
FRONT INTERIOR - CHALLENGER J-S 2 DOOR HARDTOP

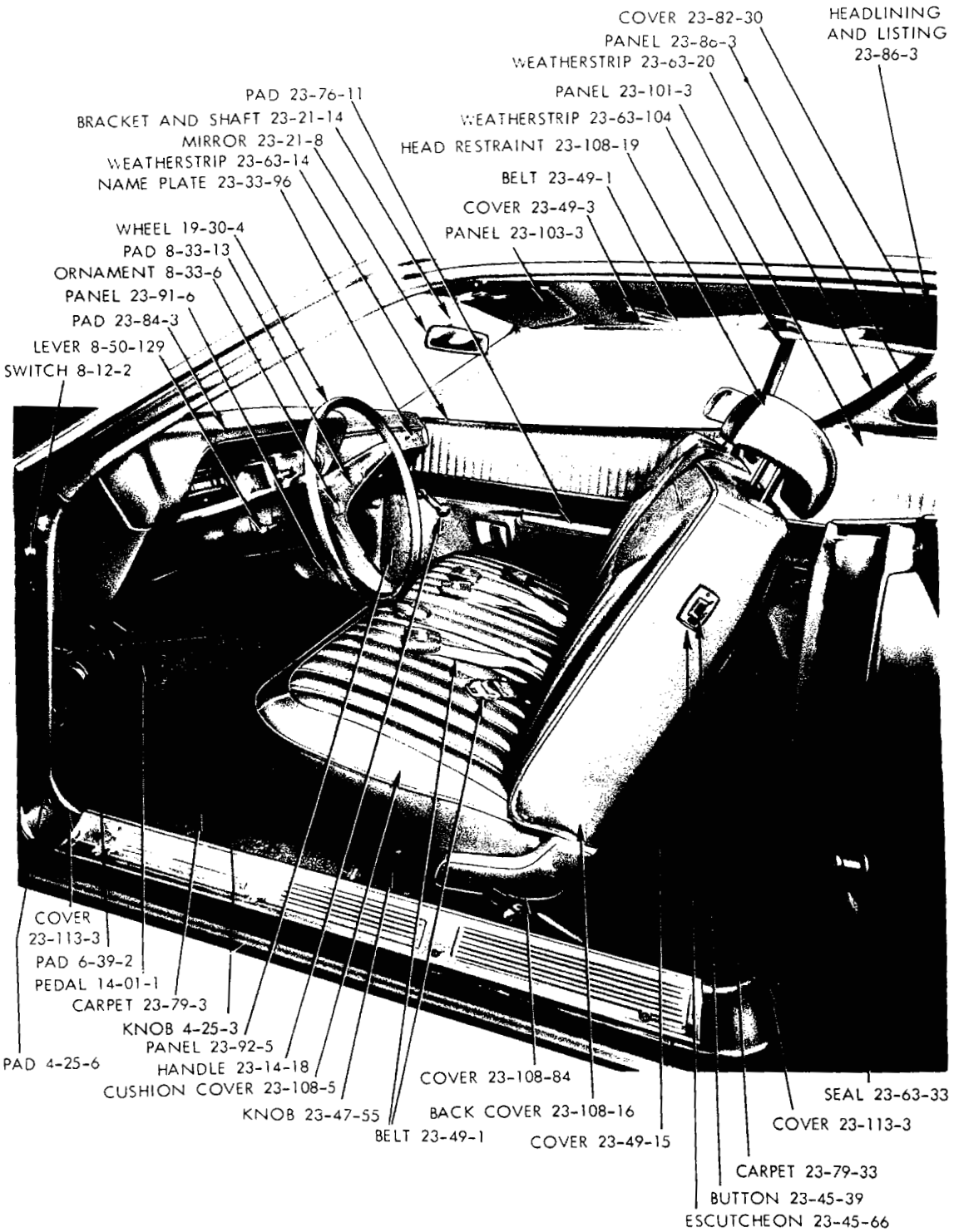

19a3530 A

1971
FRONT INTERIOR - CHARGER W-H 2 DOOR HARDTOP

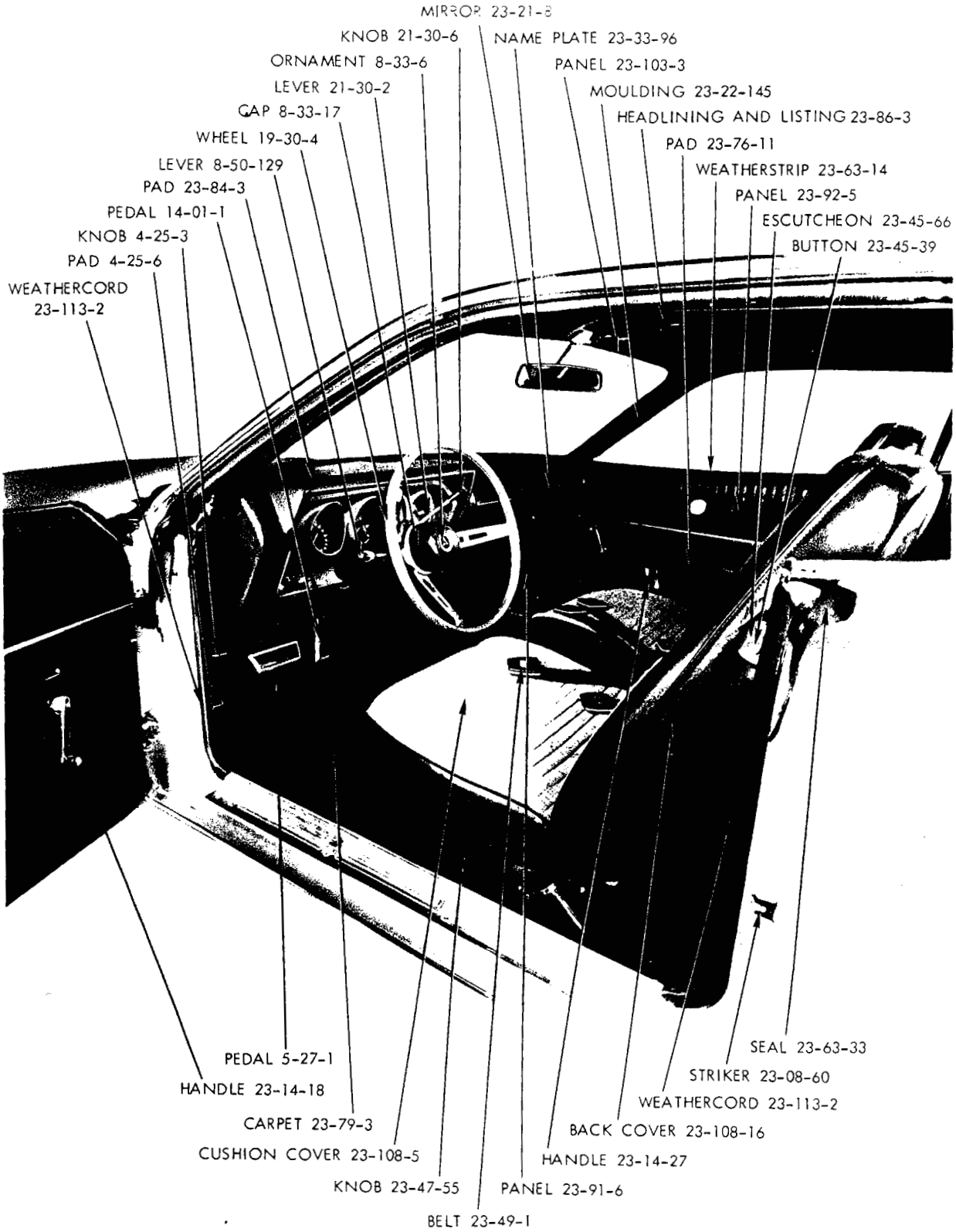

19a3604

1971
FRONT INTERIOR - CHARGER 500 W-P 2 DOOR HARDTOP

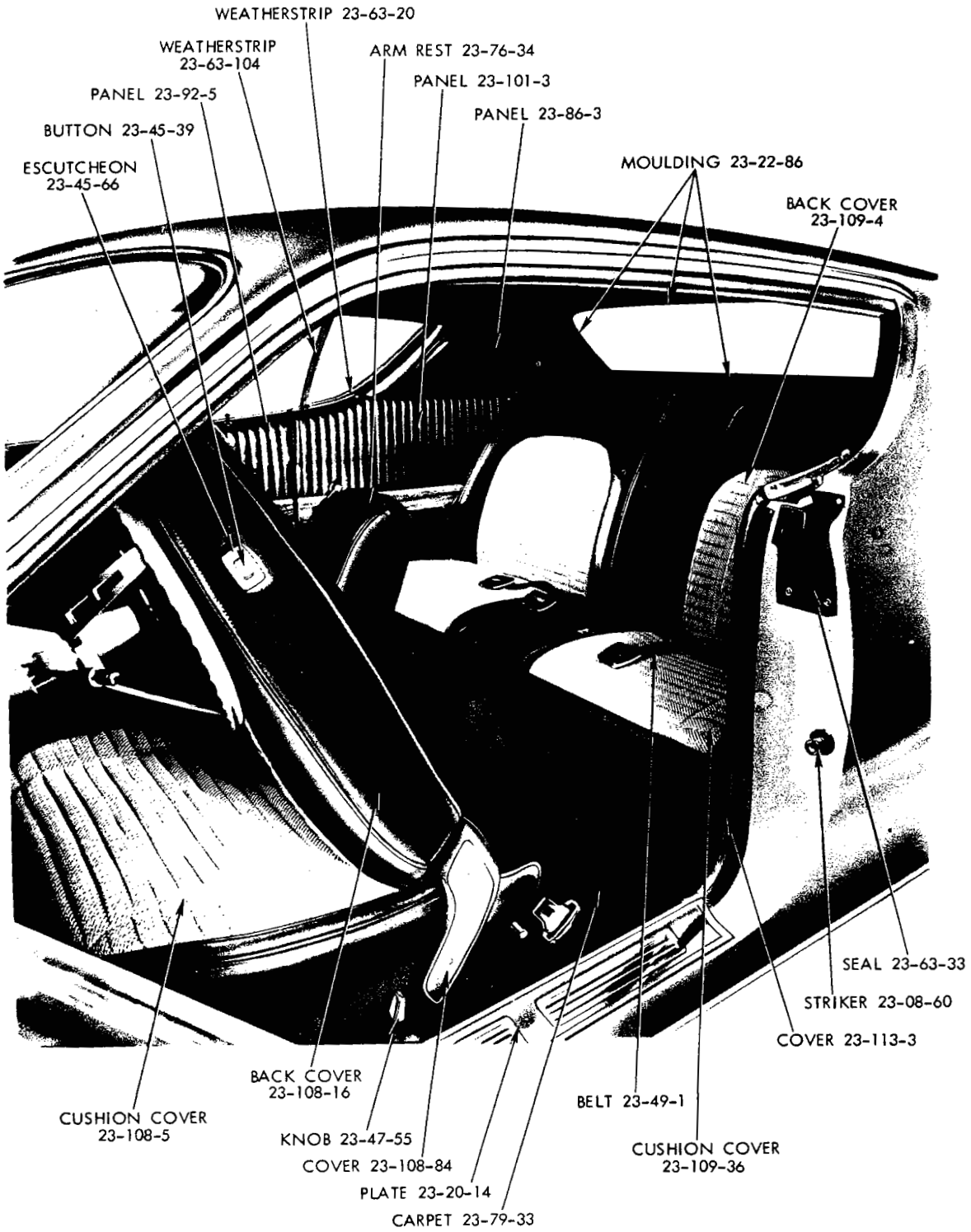

19a3624

1971
REAR INTERIOR - CHARGER 500 W-P 2 DOOR HARDTOP

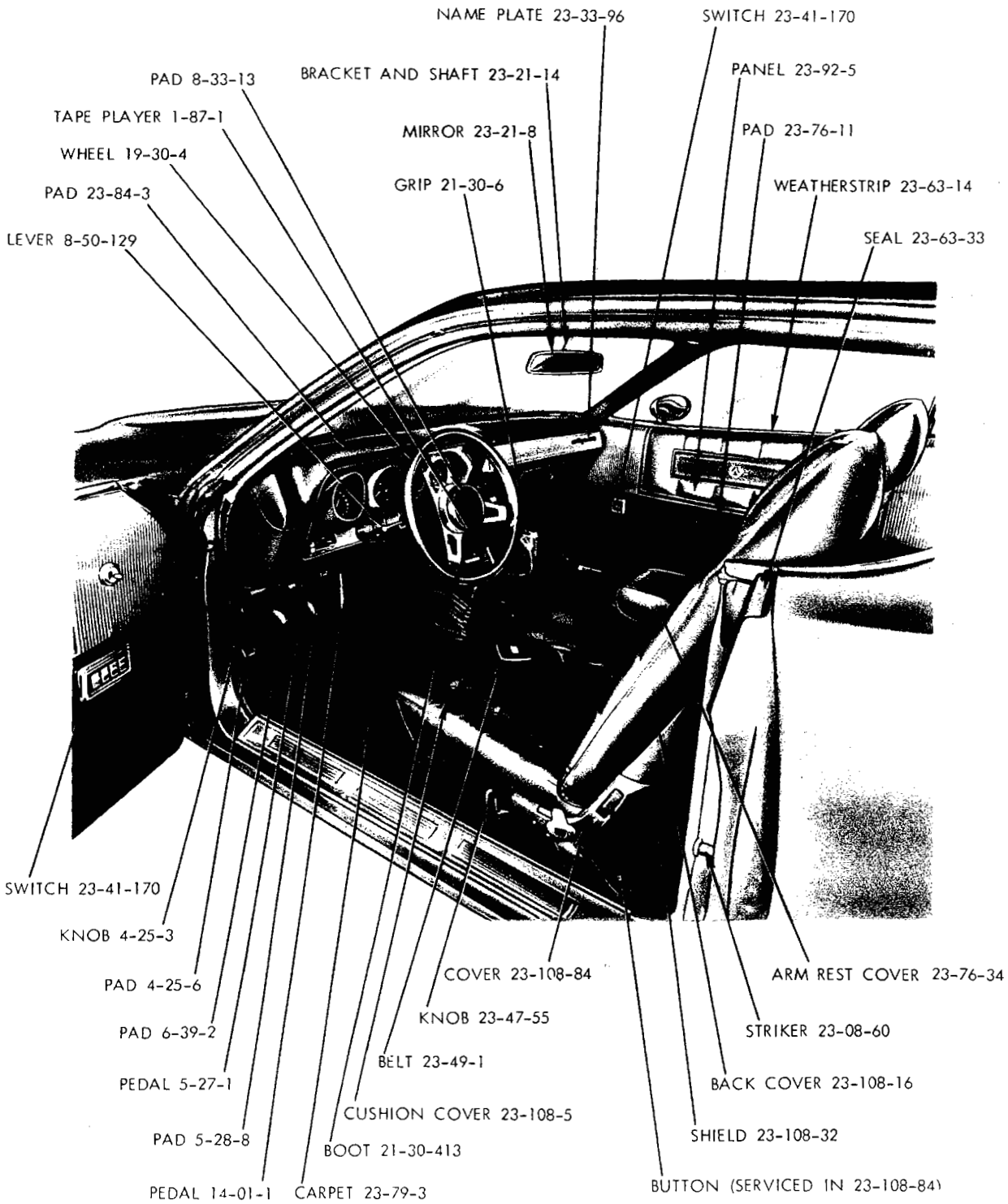

19a3601

1971
FRONT INTERIOR - CHARGER SE W-P FASTBACK

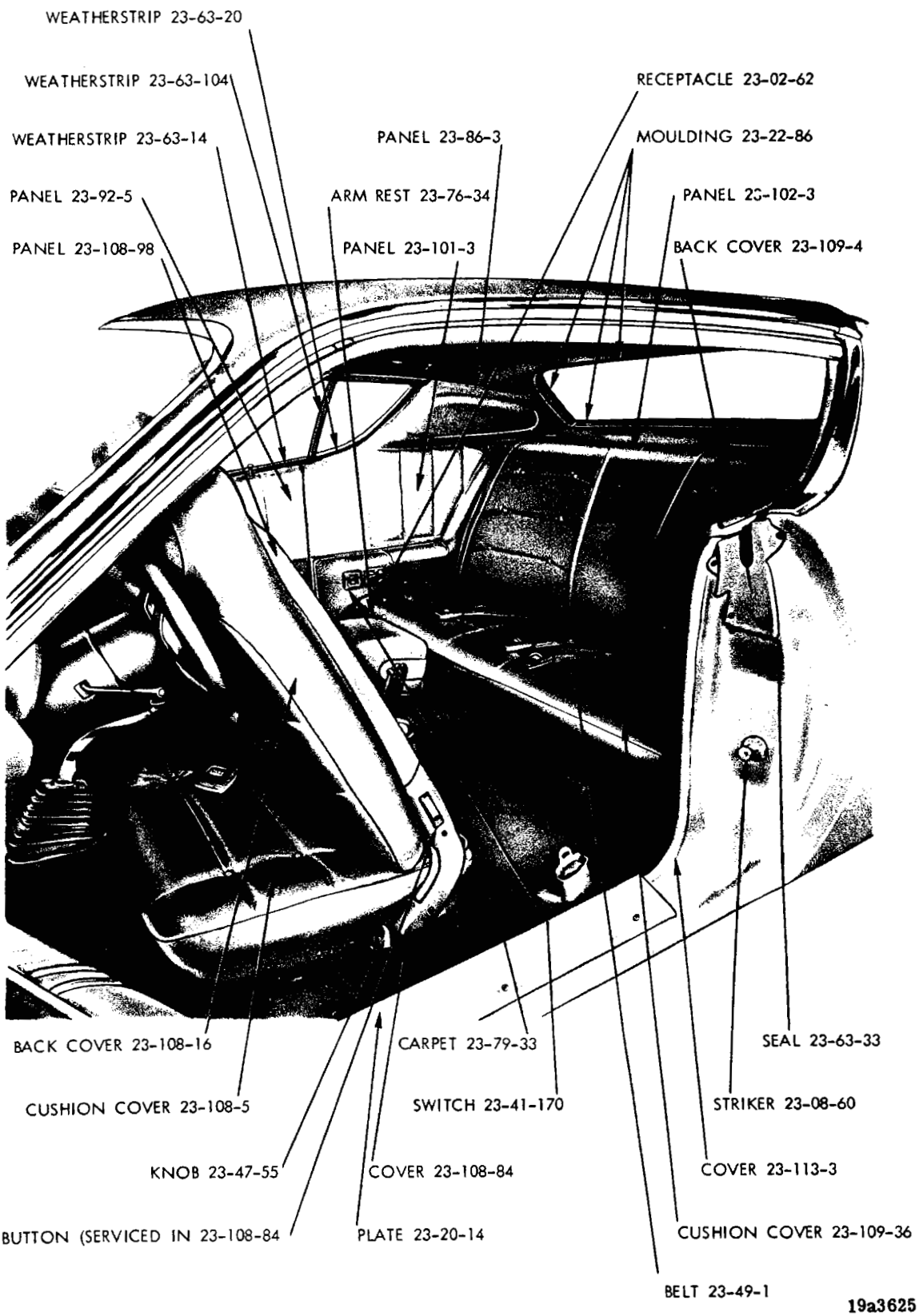

1971
REAR INTERIOR - CHARGER SE W-P FASTBACK

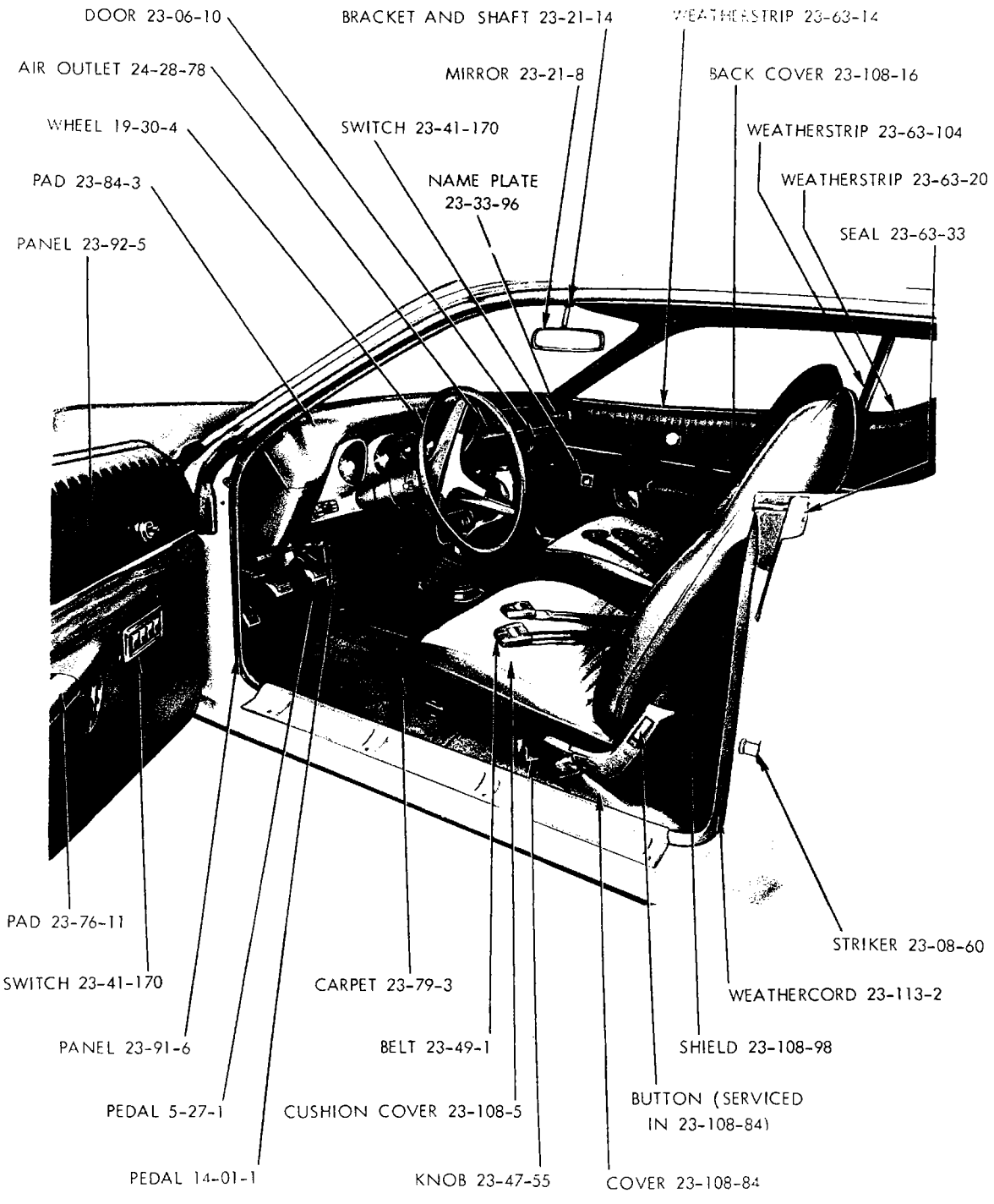

19a3539

1971
FRONT INTERIOR - CHARGER R/T W-S 2 DOOR HARDTOP

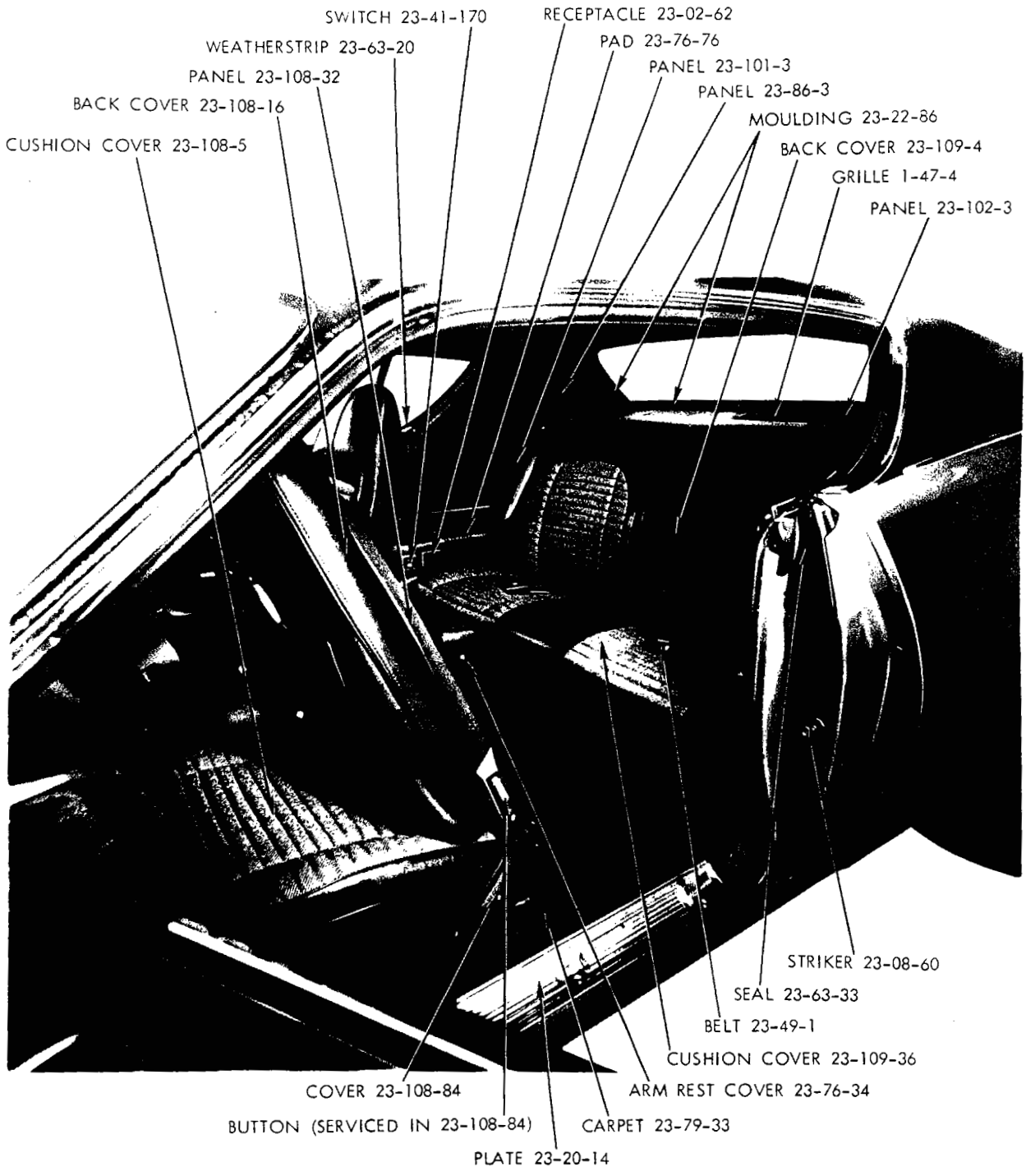

19a3656

1971
REAR INTERIOR - CHARGER R/T W-S 2 DOOR HARDTOP

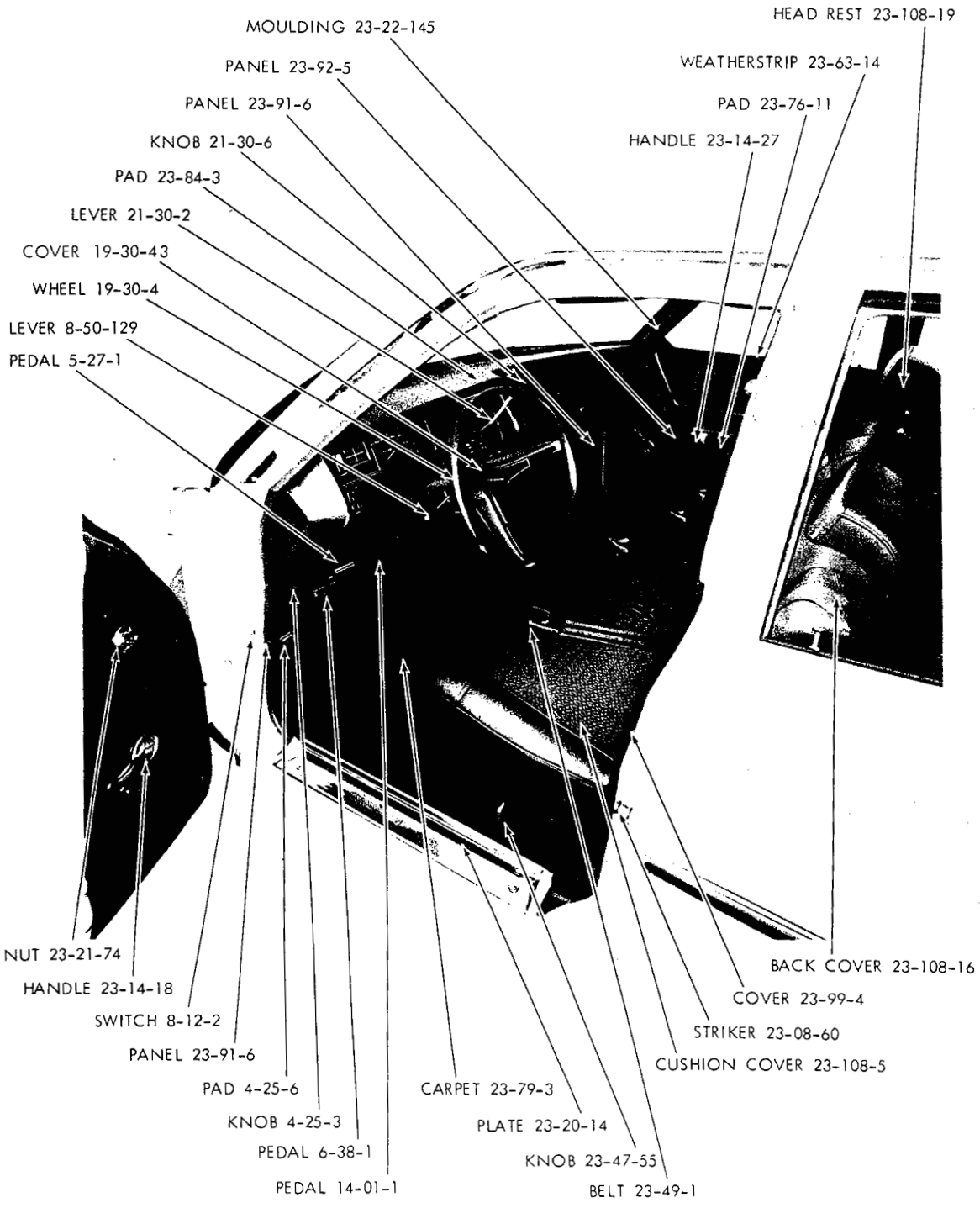

19a3675

1971
FRONT INTERIOR - DODGE POLARA D-E 4 DOOR SEDAN

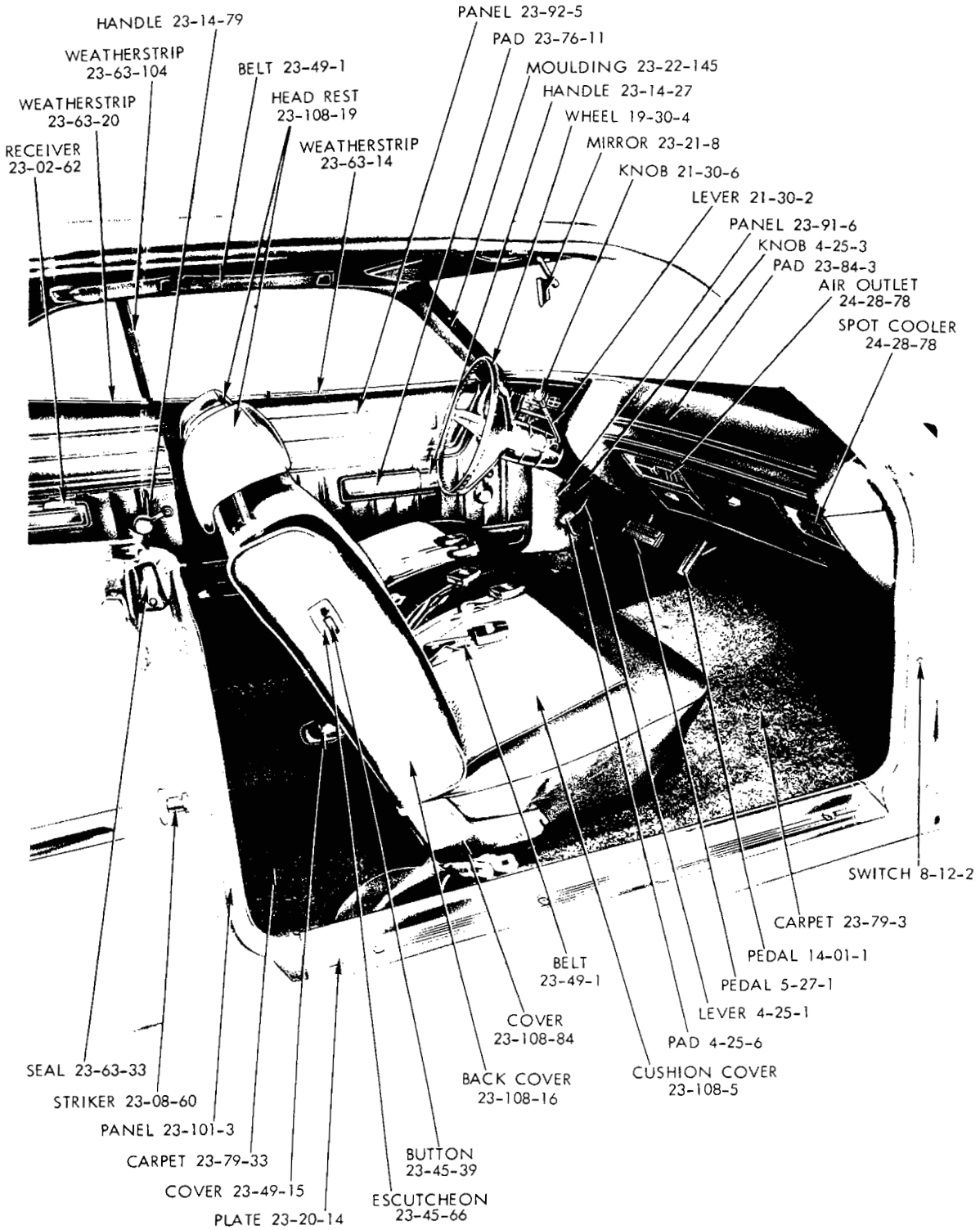

13d3686

1971
FRONT INTERIOR - DODGE POLARA D-E 2 DOOR HARDTOP

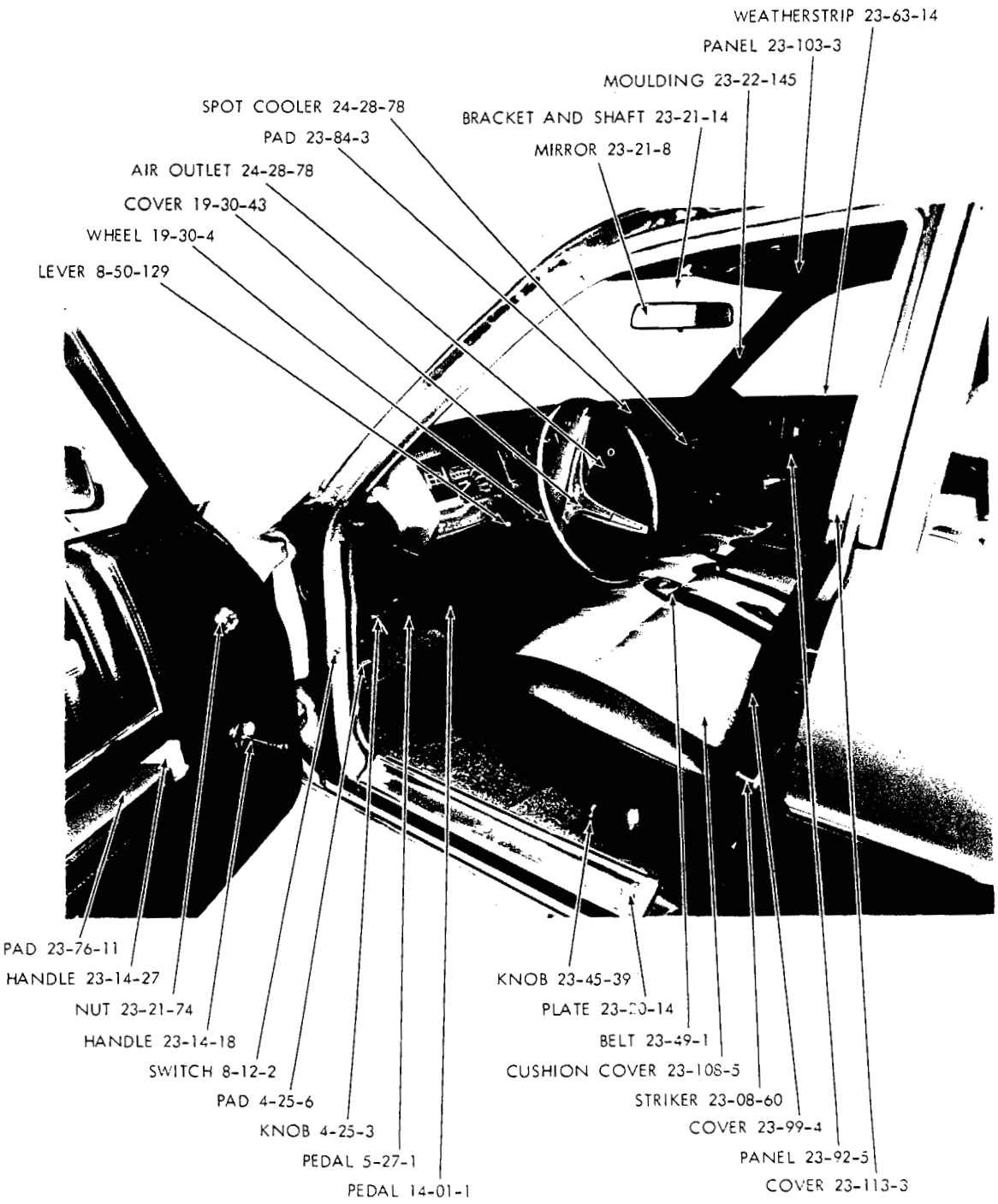

19a3684

1971
FRONT INTERIOR - DODGE POLARA CUSTOM D-L 4 DOOR SEDAN

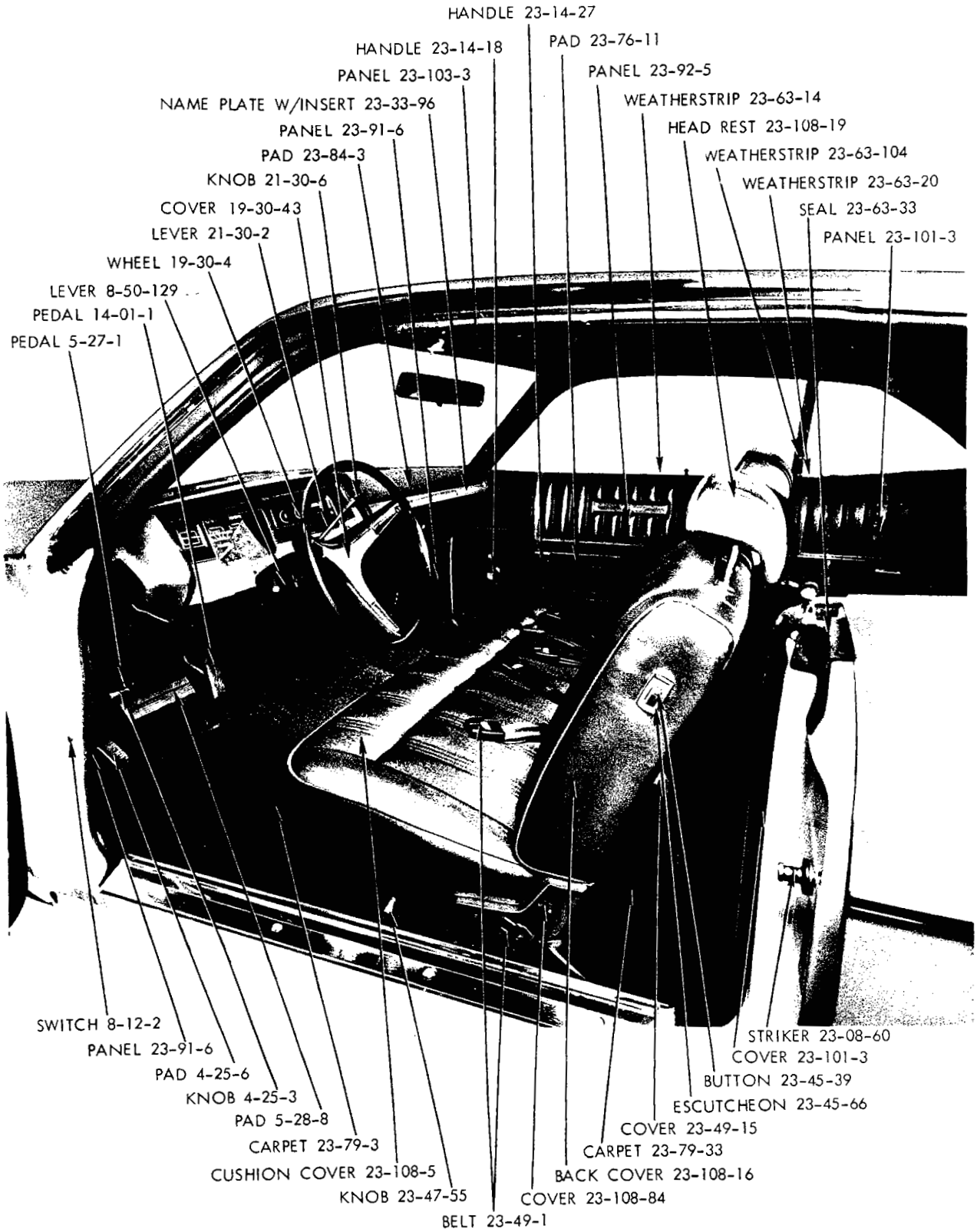

19a3611

1971
FRONT INTERIOR - DODGE POLARA CUSTOM D-L 2 DOOR HARDTOP

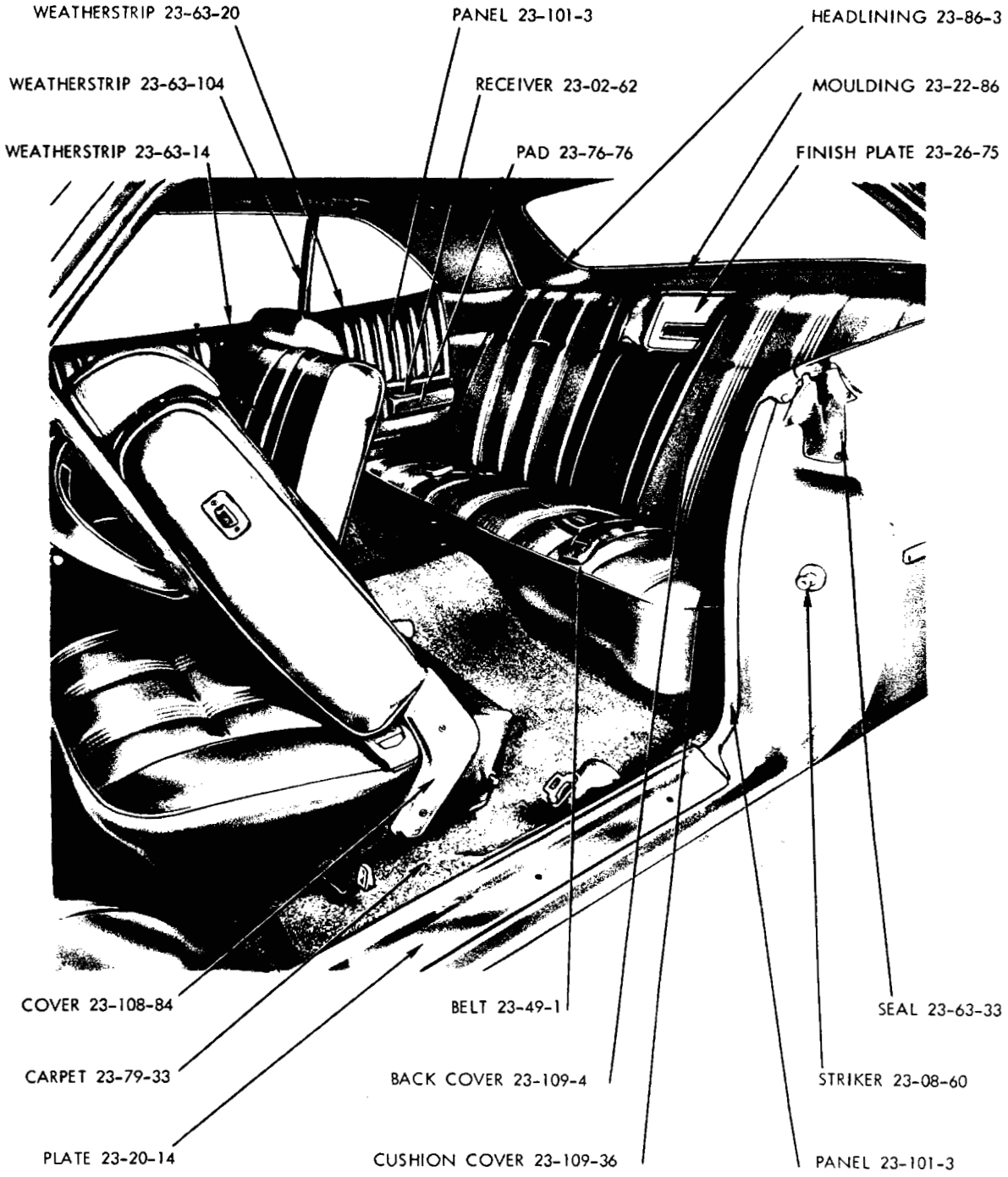

19a3697

1971
REAR INTERIOR - DODGE POLARA CUSTOM D-L 2 DOOR HARDTOP

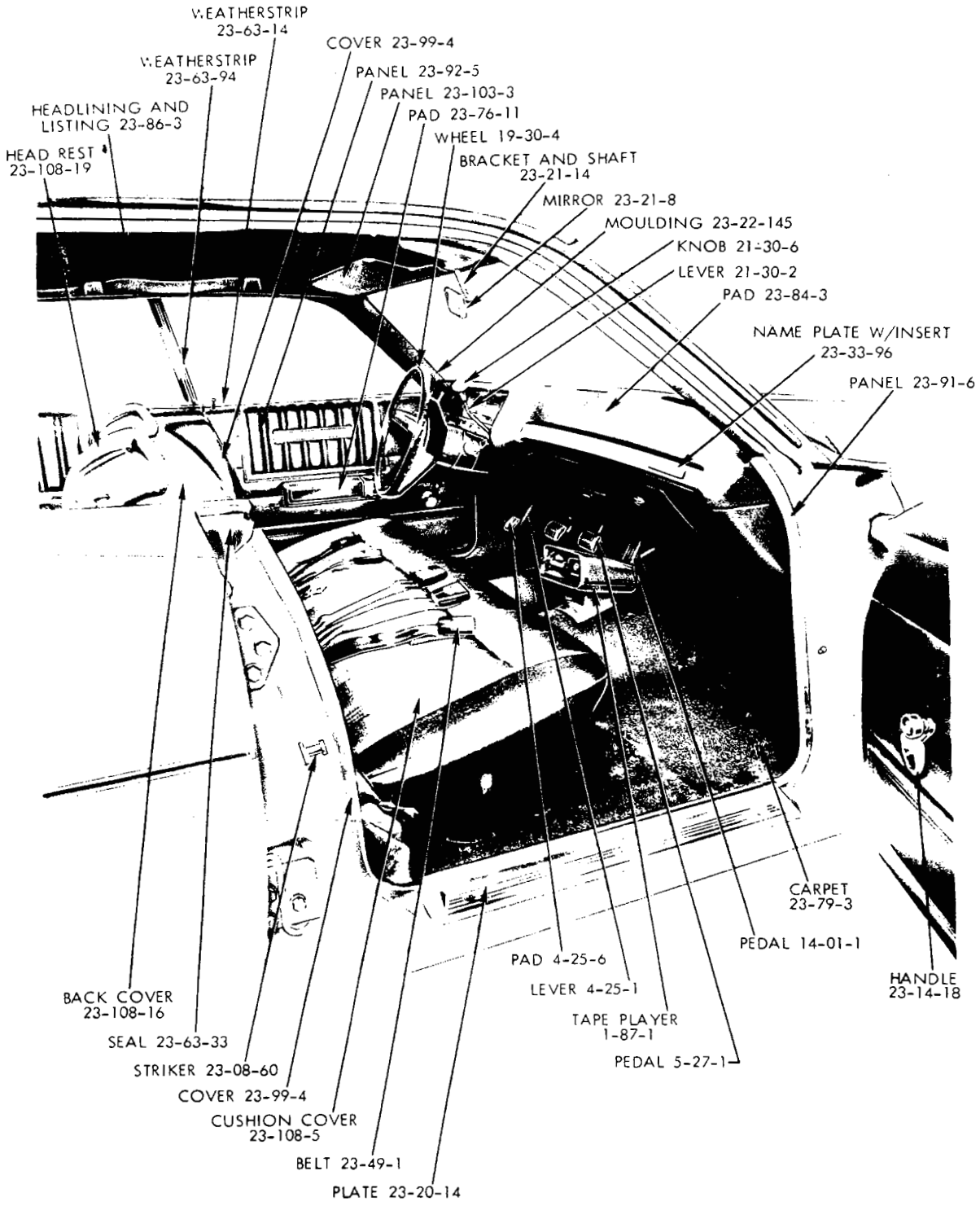

19a3615

1971
FRONT INTERIOR - DODGE POLARA CUSTOM D-L 4 DOOR HARDTOP



19a3696

1971
REAR INTERIOR - DODGE POLARA CUSTOM D-L 4 DOOR HARDTOP

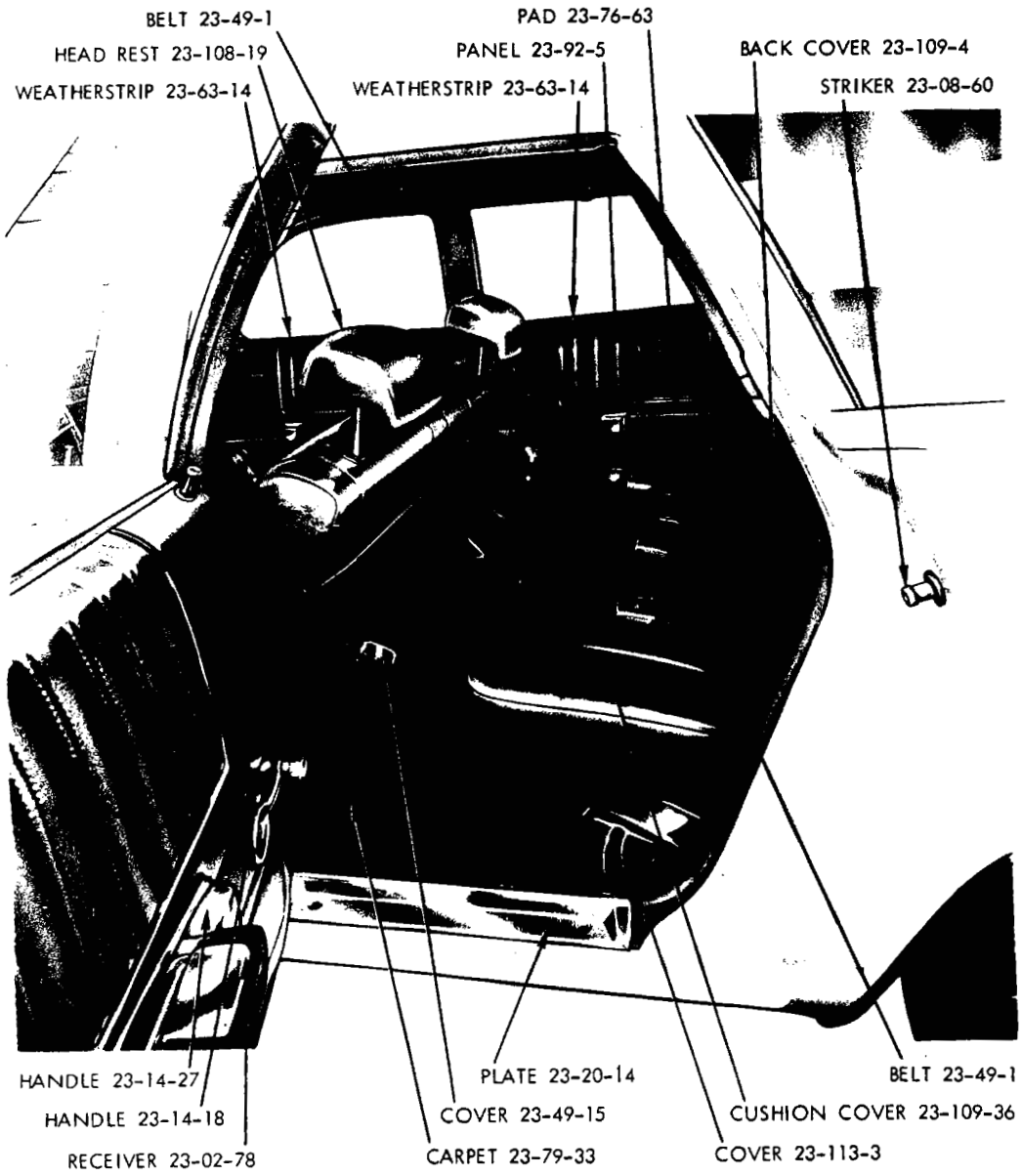

19a3633

1971
REAR INTERIOR - DODGE POLARA CUSTOM D-L STATION WAGON

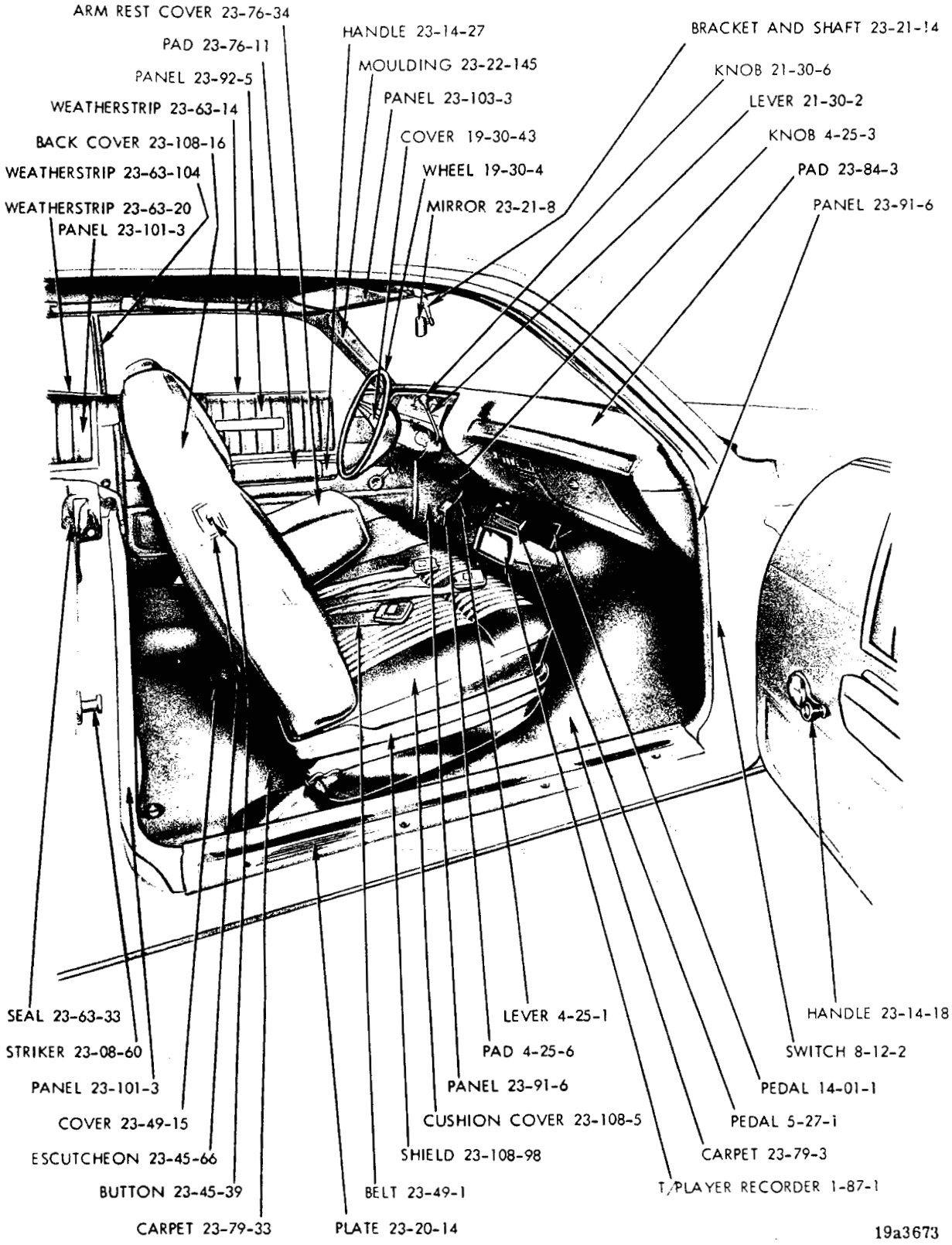

1971
FRONT INTERIOR - DODGE POLARA BROUGHAM D-M 2 DOOR HARDTOP

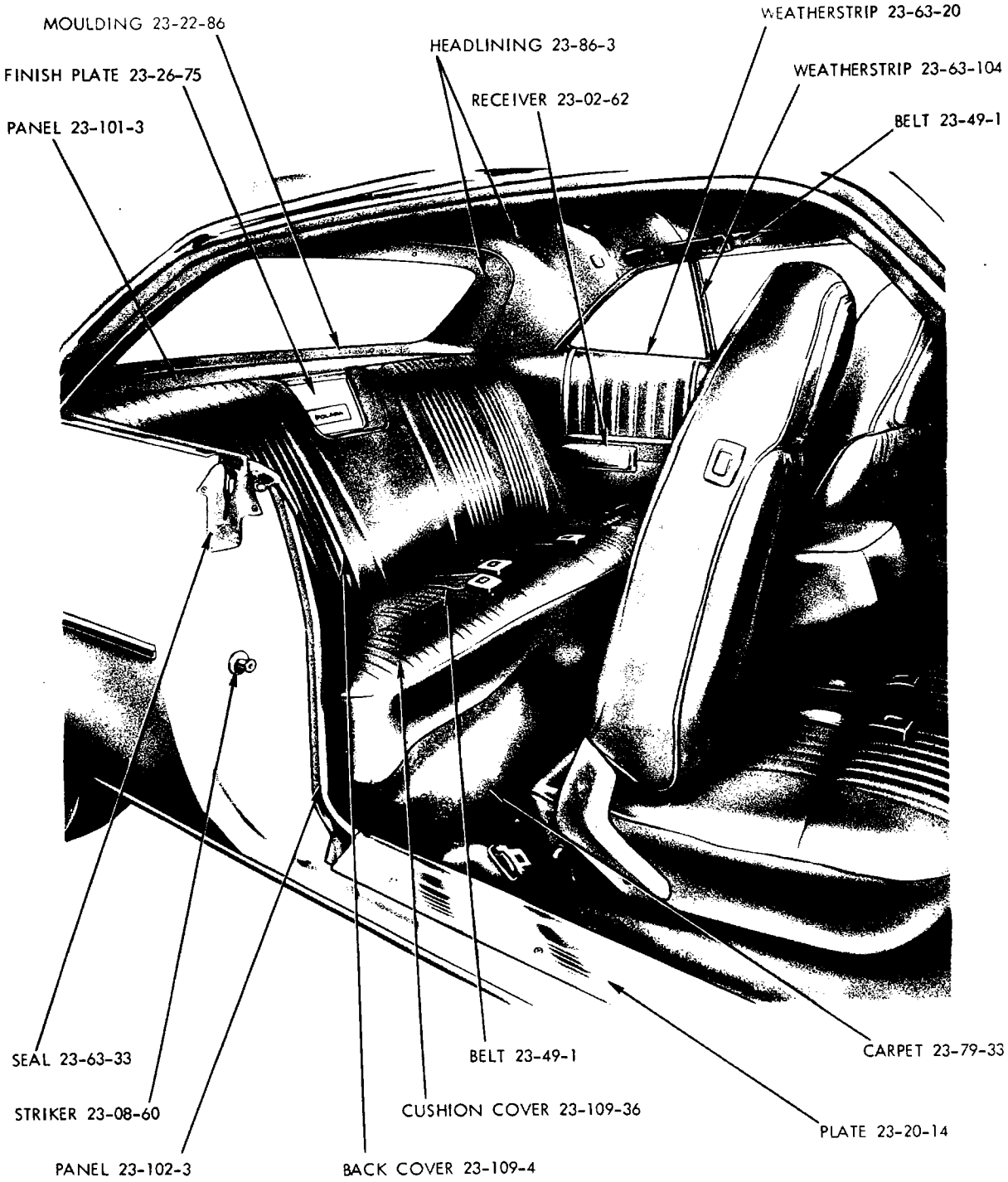

19a3698

1971
REAR INTERIOR - DODGE POLARA BROUGHAM D-M 2 DOOR HARDTOP

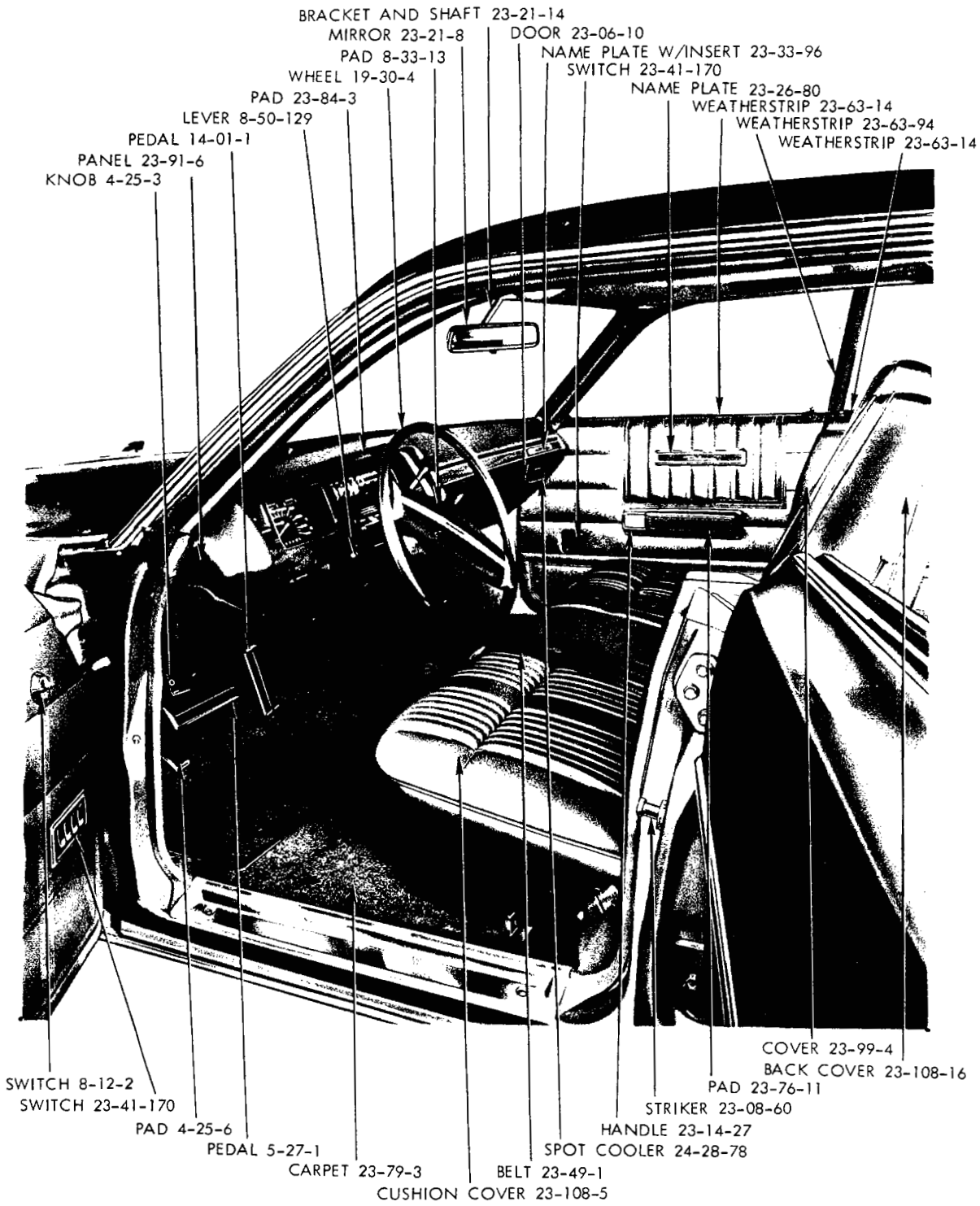

19a3493

1971
FRONT INTERIOR - POLARA BROUGHAM D-M 4 DOOR HARDTOP



19a3501

1971
REAR INTERIOR - POLARA BROUGHAM D-M 4 DOOR HARDTOP

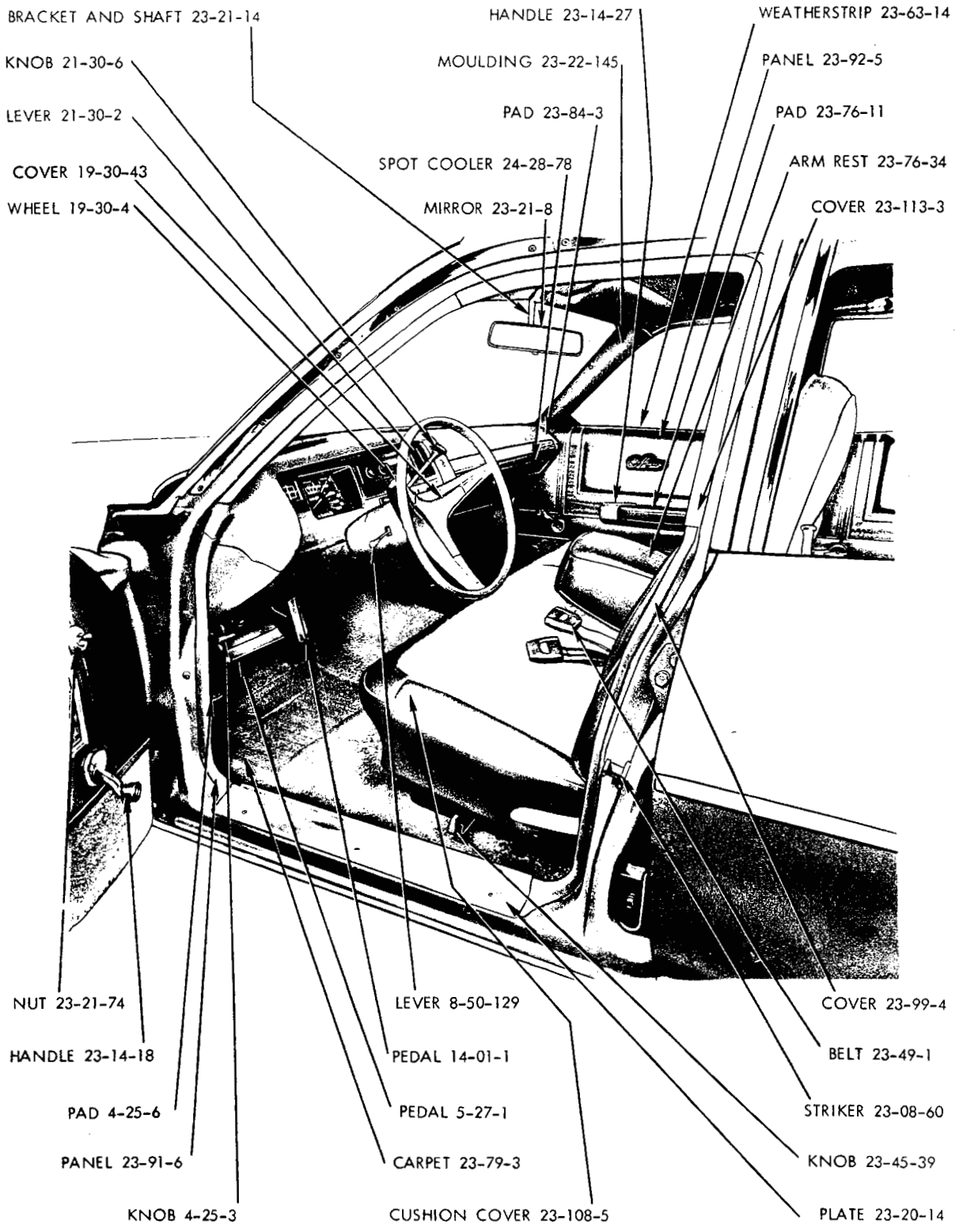

19a3685

1971
FRONT INTERIOR - DODGE MONACO D-H 4 DOOR SEDAN

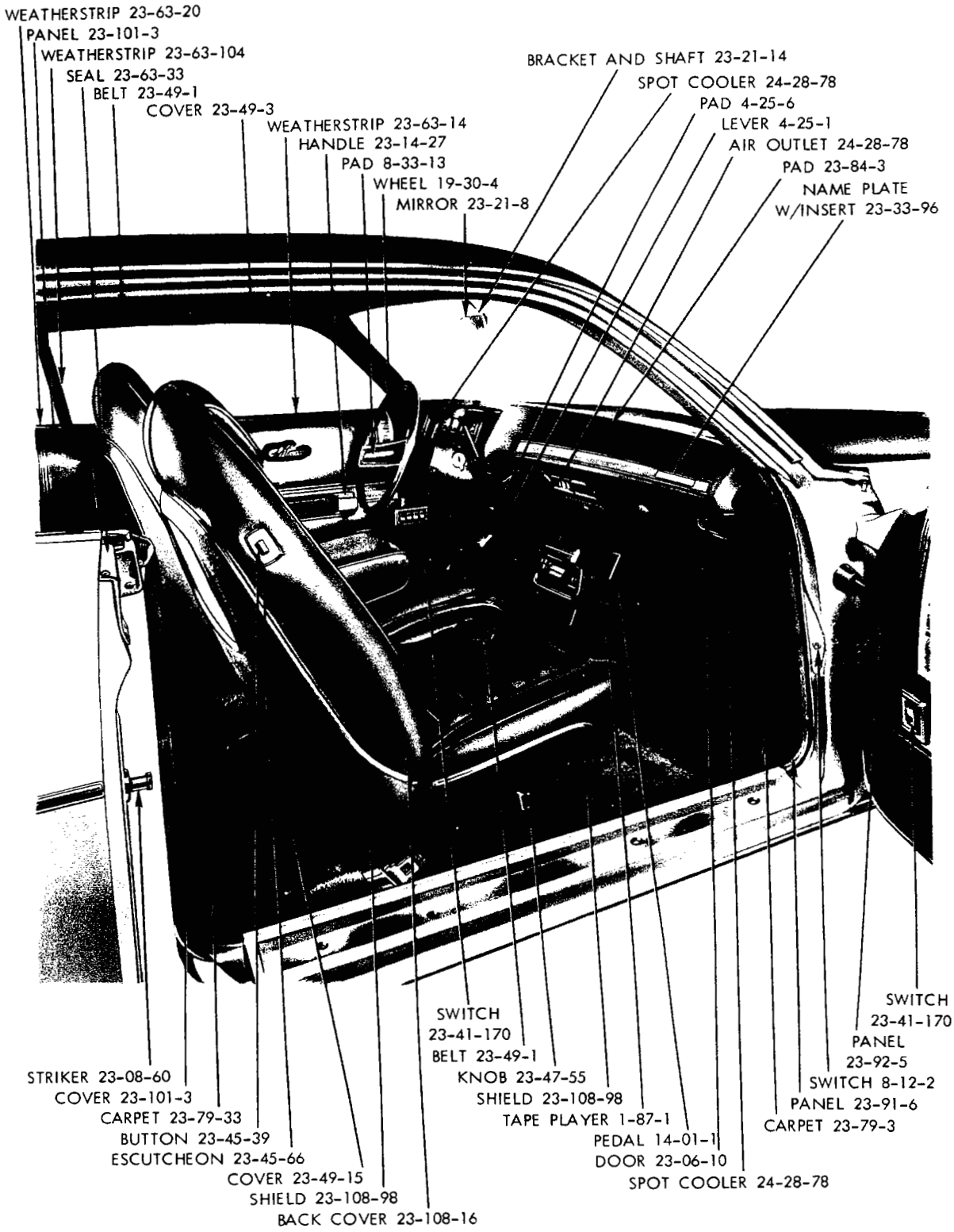

19a3494

1971
FRONT INTERIOR - DODGE MONACO D-H 2 DOOR HARDTOP

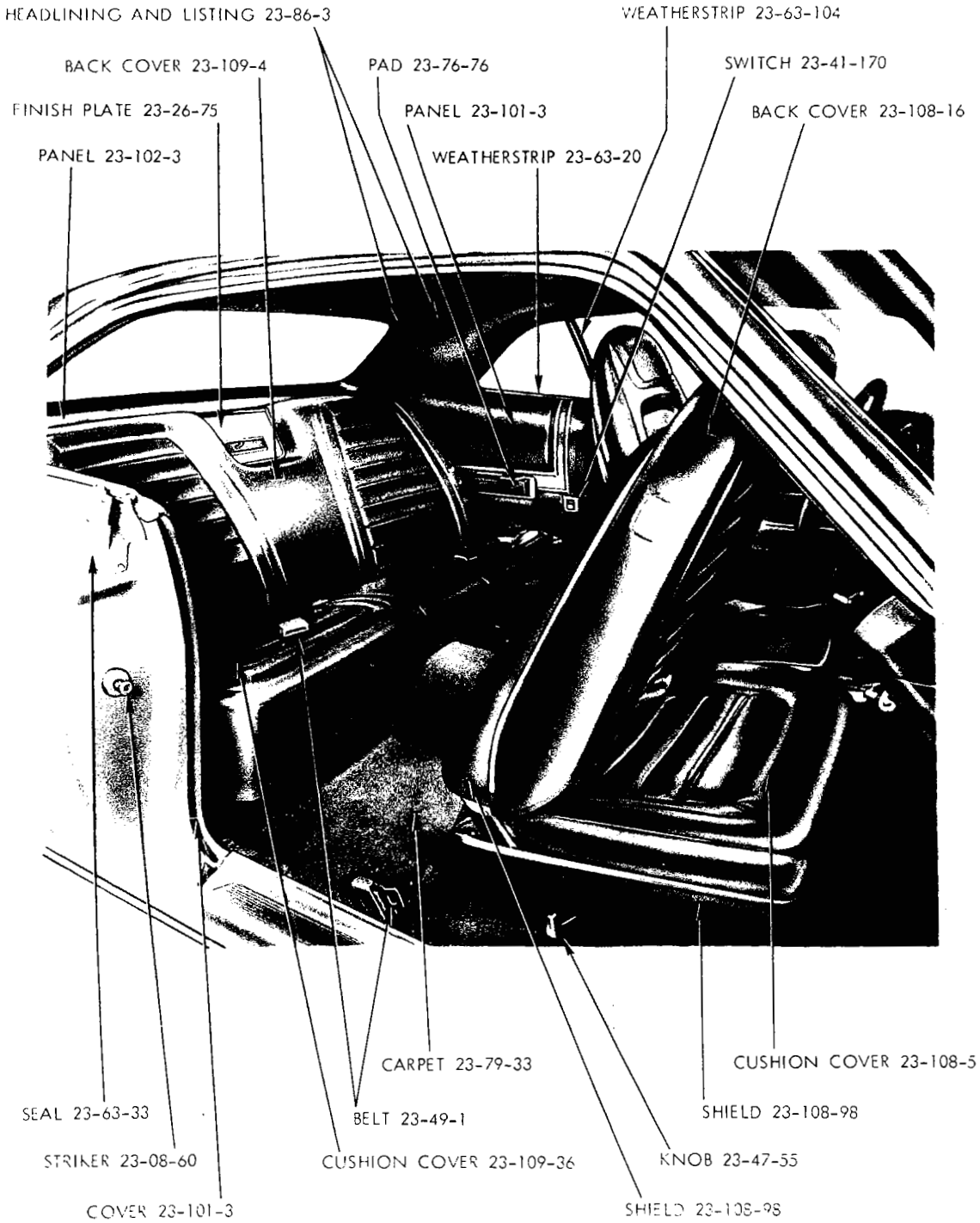

1971
REAR INTERIOR - DODGE MONACO D-H 2 DOOR HARDTOP

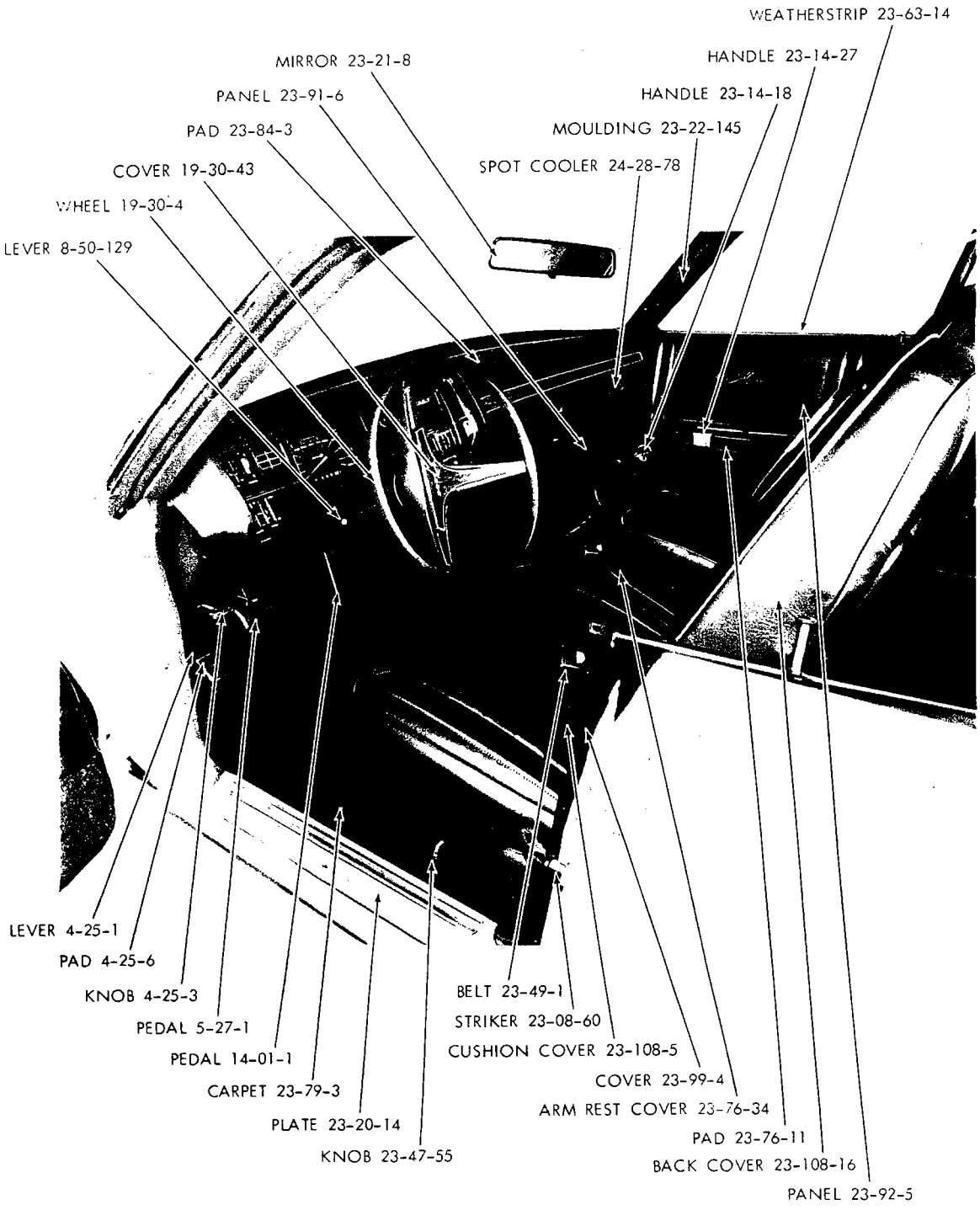

19a3690

1971
FRONT INTERIOR - DODGE MONACO D-H 4 DOOR HARDTOP



19a3692

1971
REAR INTERIOR - DODGE MONACO D-H 4 DOOR HARDTOP

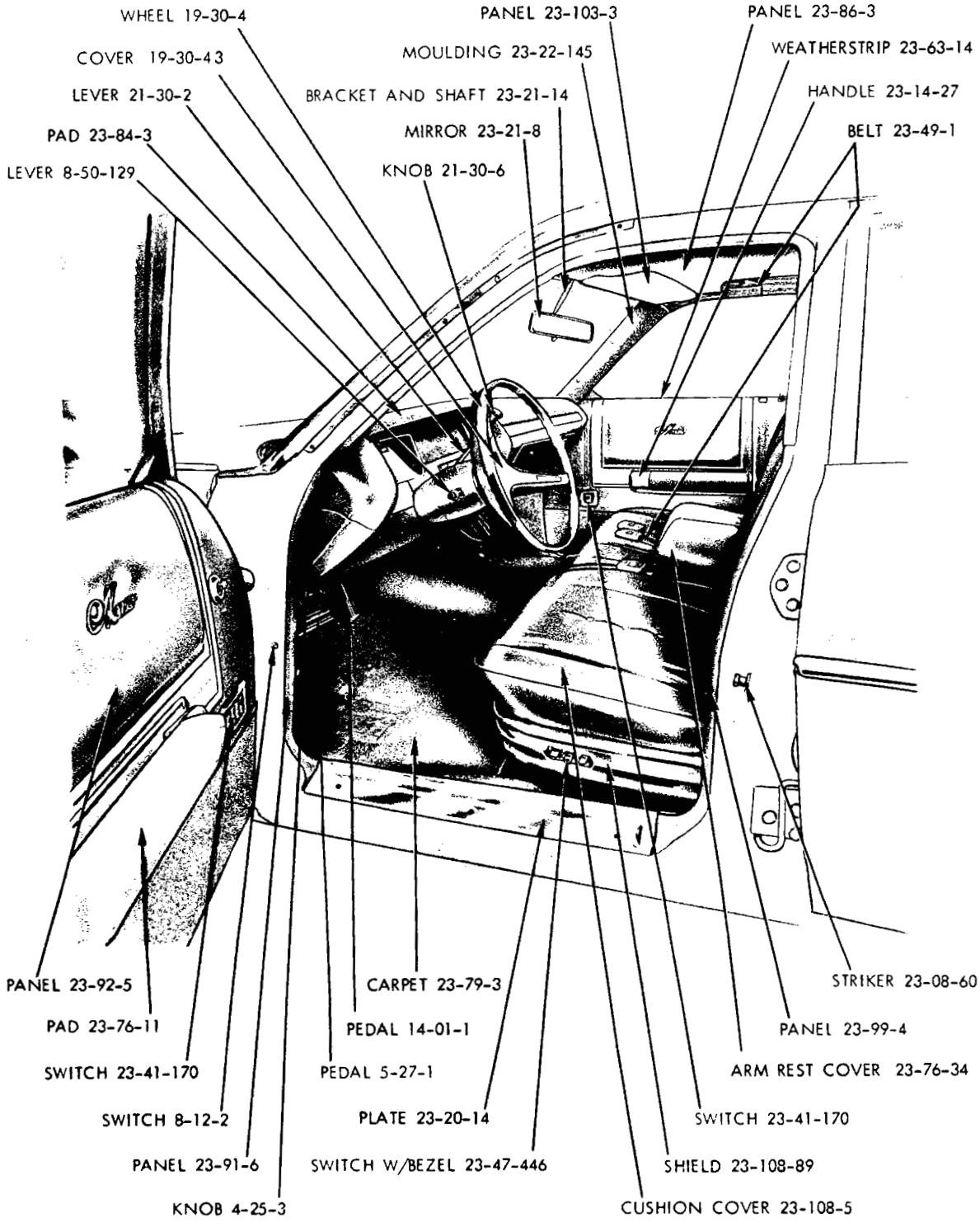

19a3679

1971
FRONT INTERIOR - DODGE MONACO D-H STATION WAGON



19a3657

1971
REAR INTERIOR - DODGE MONACO D-H STATION WAGON

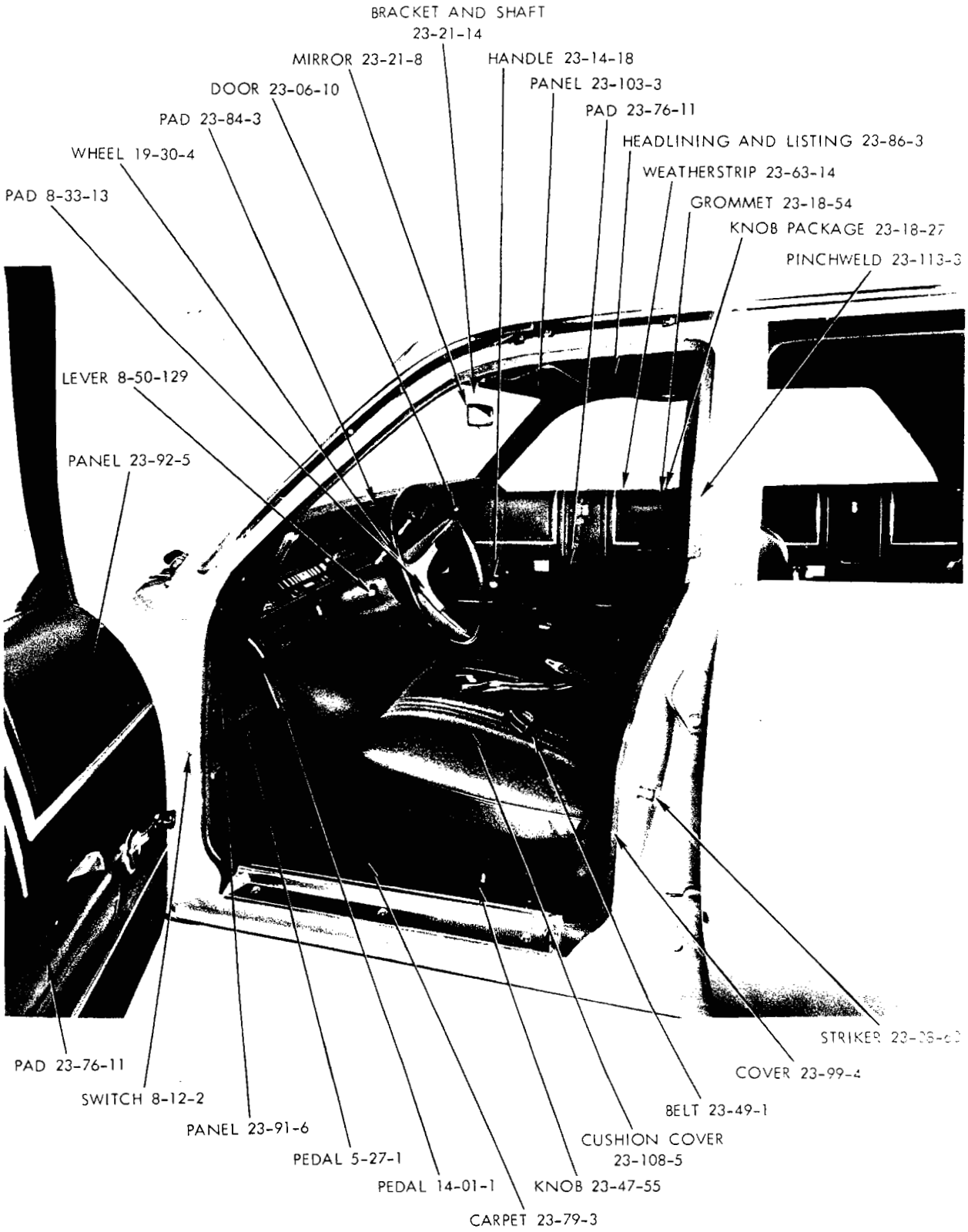

19a3540

1971
FRONT INTERIOR - CHRYSLER NEWPORT C-E 4 DOOR SEDAN

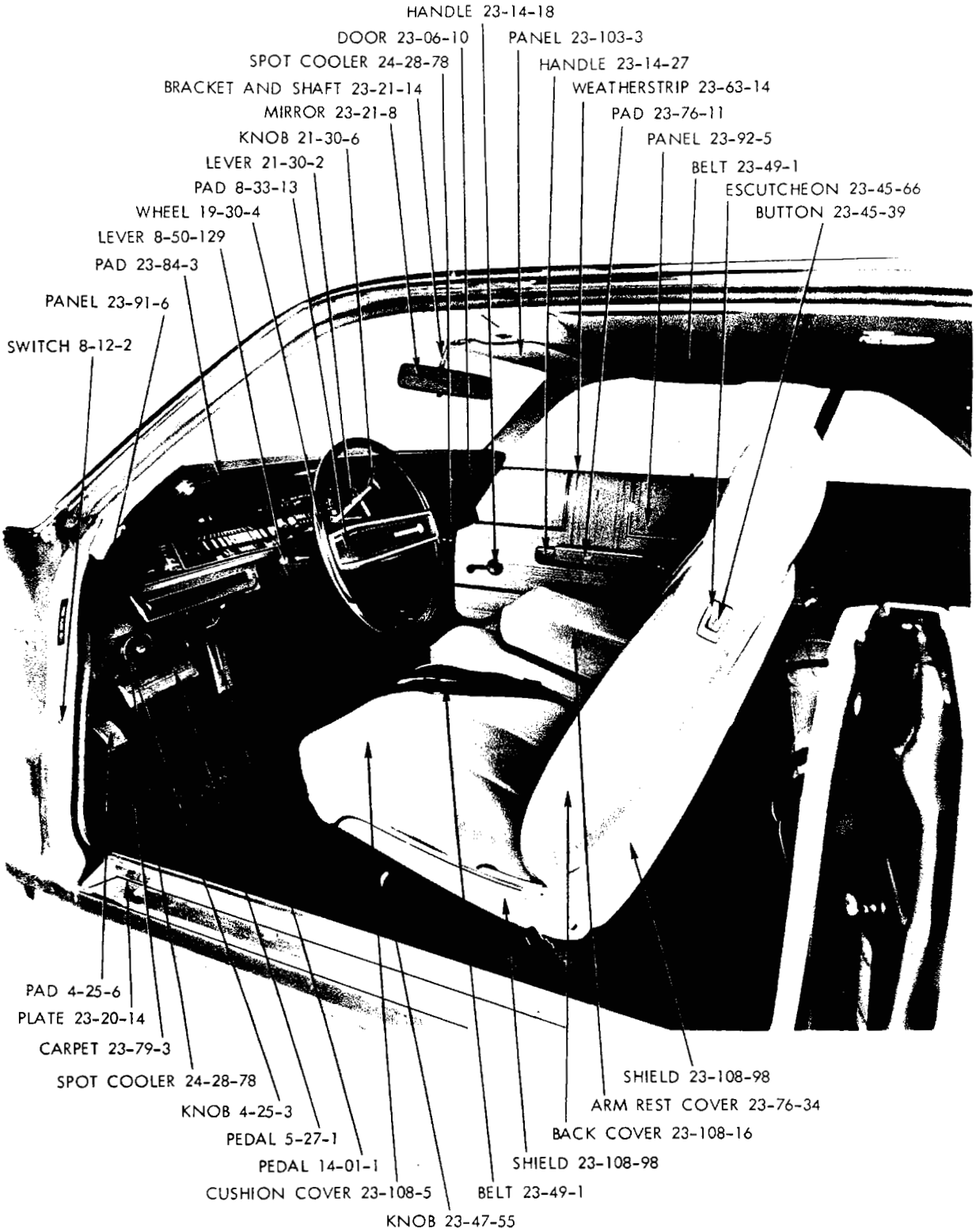

19a3628

1971
FRONT INTERIOR - CHRYSLER NEWPORT C-E 2 DOOR HARDTOP

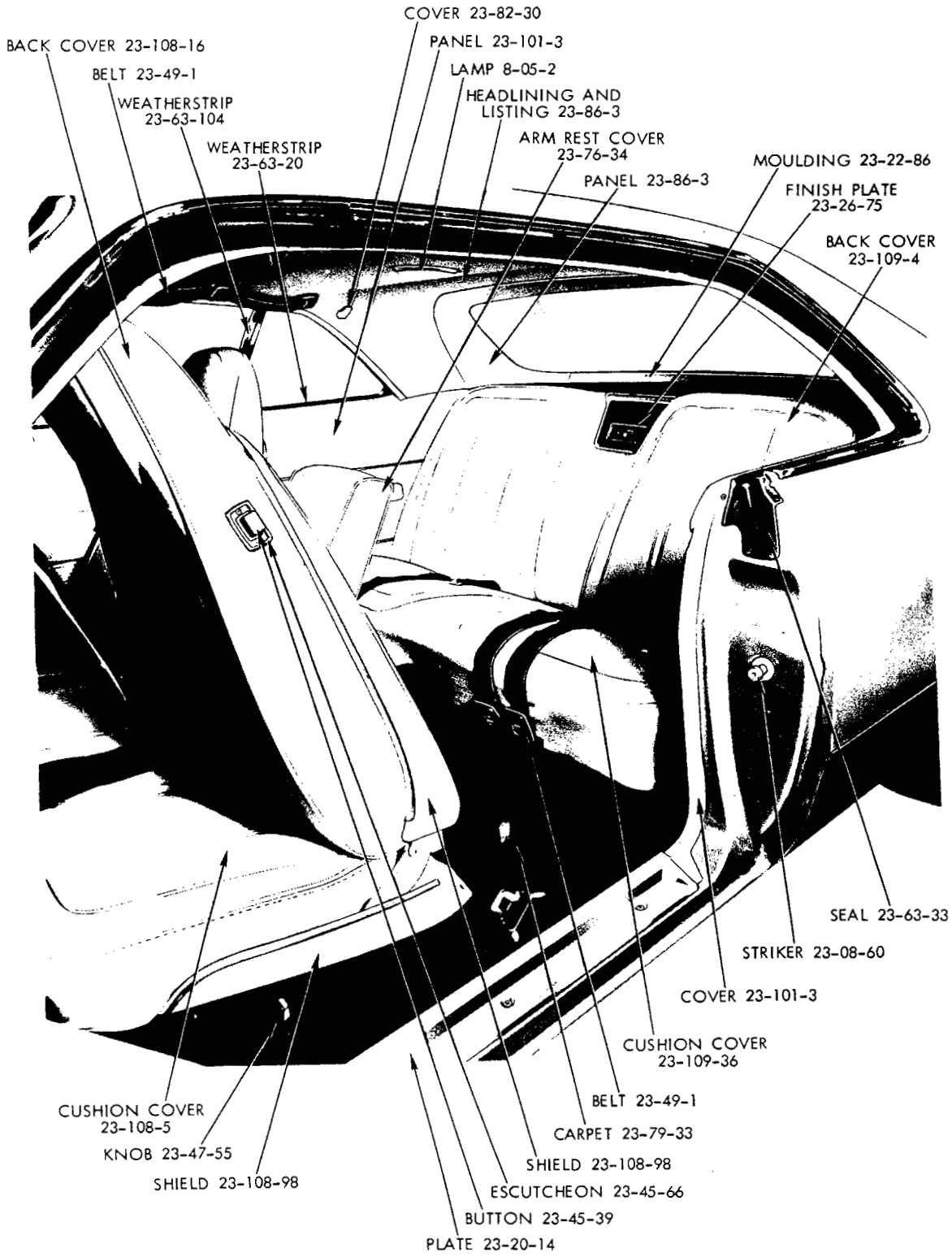

19a3609

1971
REAR INTERIOR - CHRYSLER NEWPORT C-E 2 DOOR HARDTOP

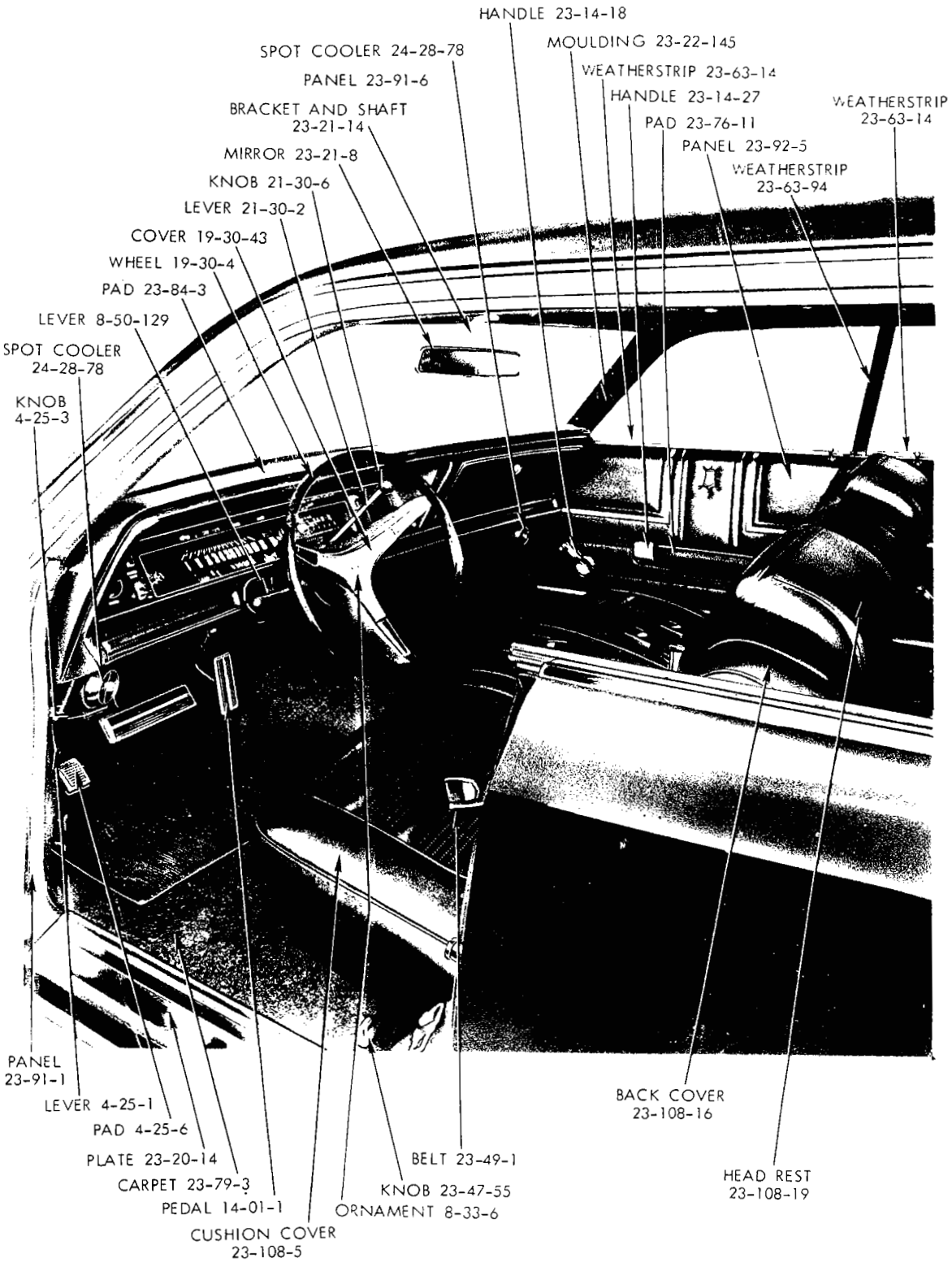

19a3681

1971
FRONT INTERIOR - CHRYSLER NEWPORT C-E 4 DOOR HARDTOP

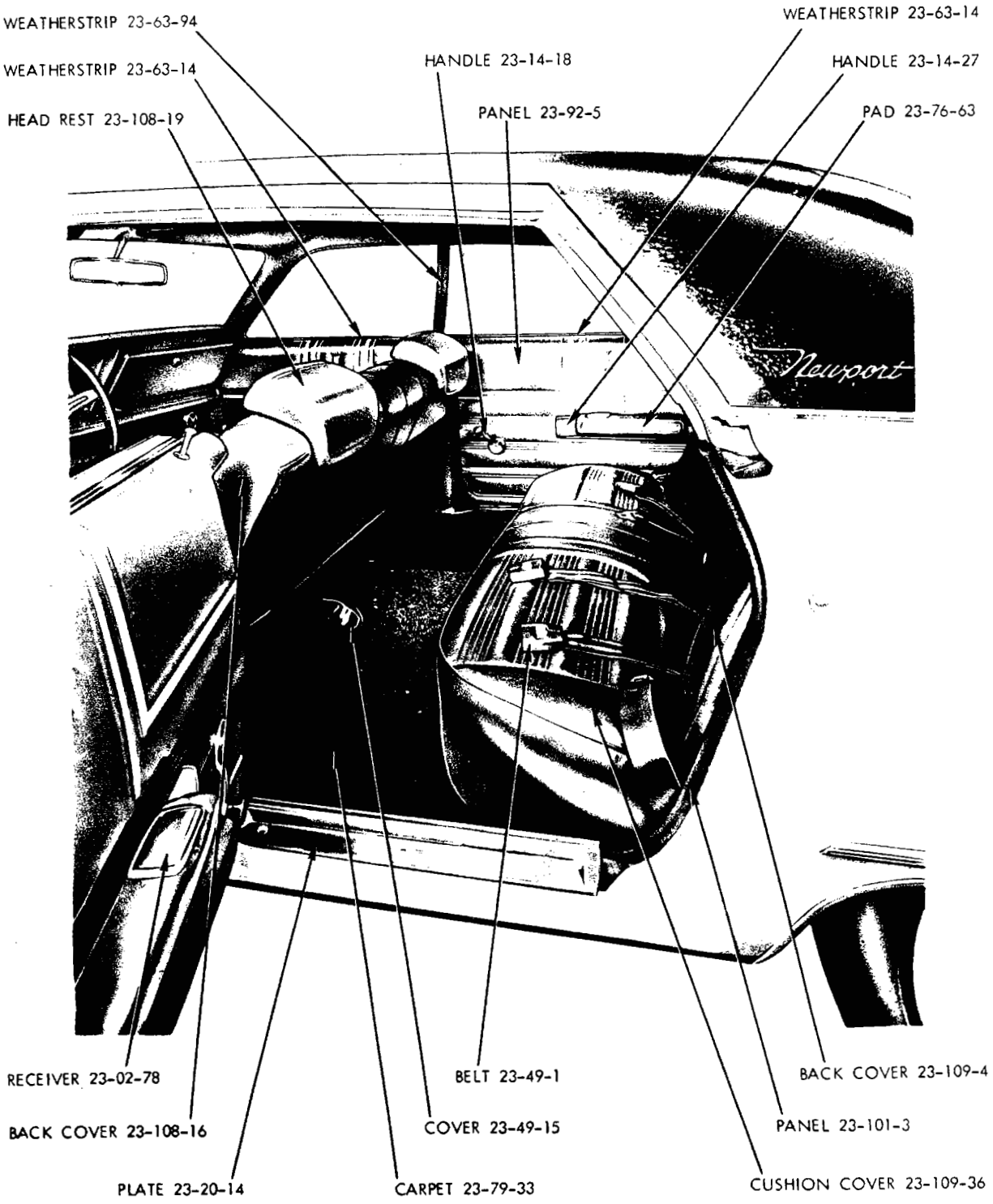

19a3691

1971
REAR INTERIOR - CHRYSLER NEWPORT C-E 4 DOOR HARDTOP

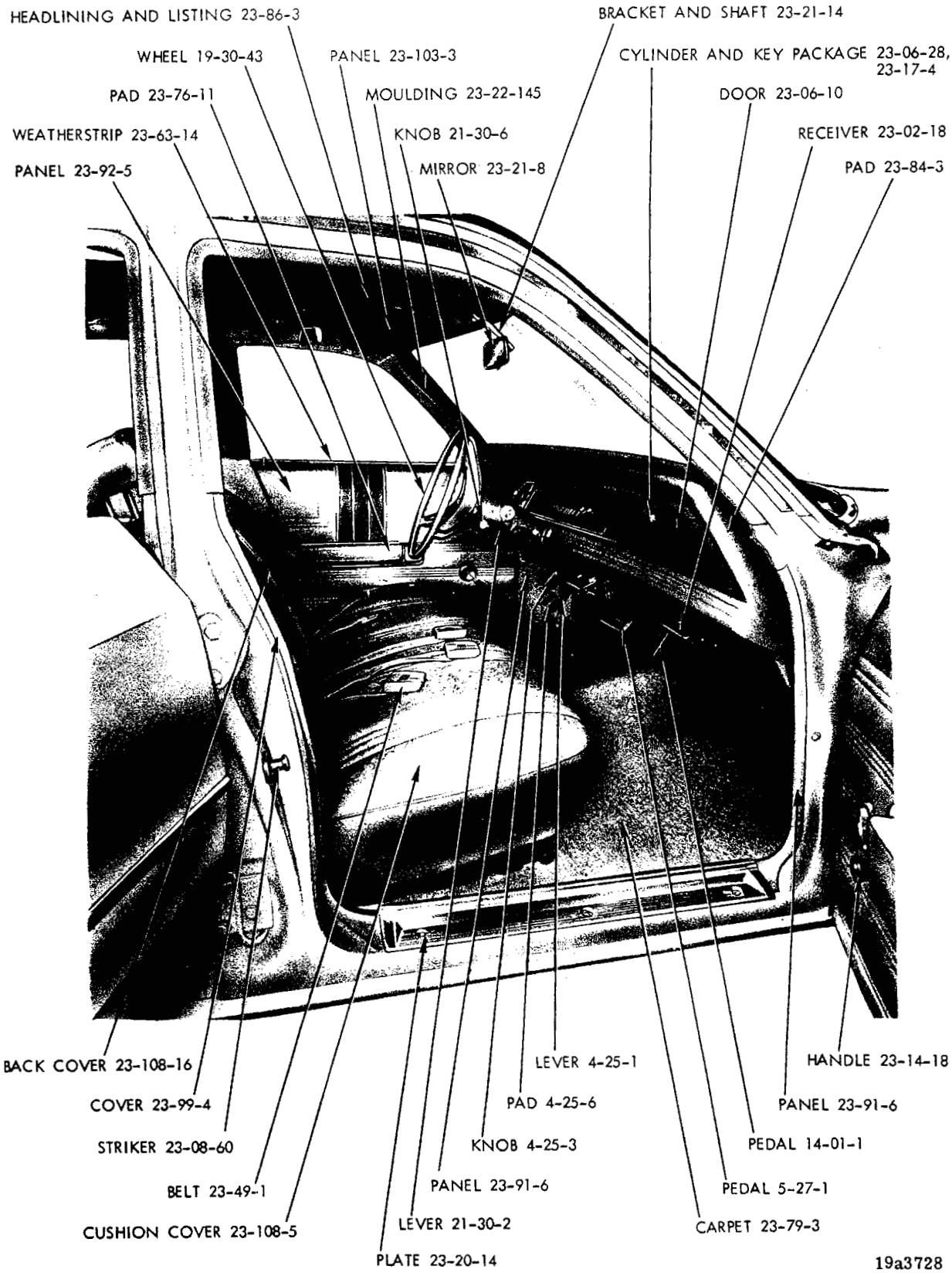

1971
FRONT INTERIOR - CHRYSLER NEWPORT ROYAL C-E 4 DOOR SEDAN (SPRING SPECIAL)


BELT 23-49-1
HANDLE 23-14-27
VINYL (SERVICE ROLL STOCK)
WEATHERSTRIP 23-63-14
WEATHERSTRIP 23-63-14
PANEL 23-92-5
STRIKER 23-08-60
COVER 23-113-3
BACK COVER 23-109-5
PAD 23-76-63
CUSHION COVER 23-109-36
PLATE 23-20-14
BELT 23-49-1
CARPET 23-79-33
COVER 23-49-15
HANDLE 23-14-18
RECEIVER 23-02-78

19a3725

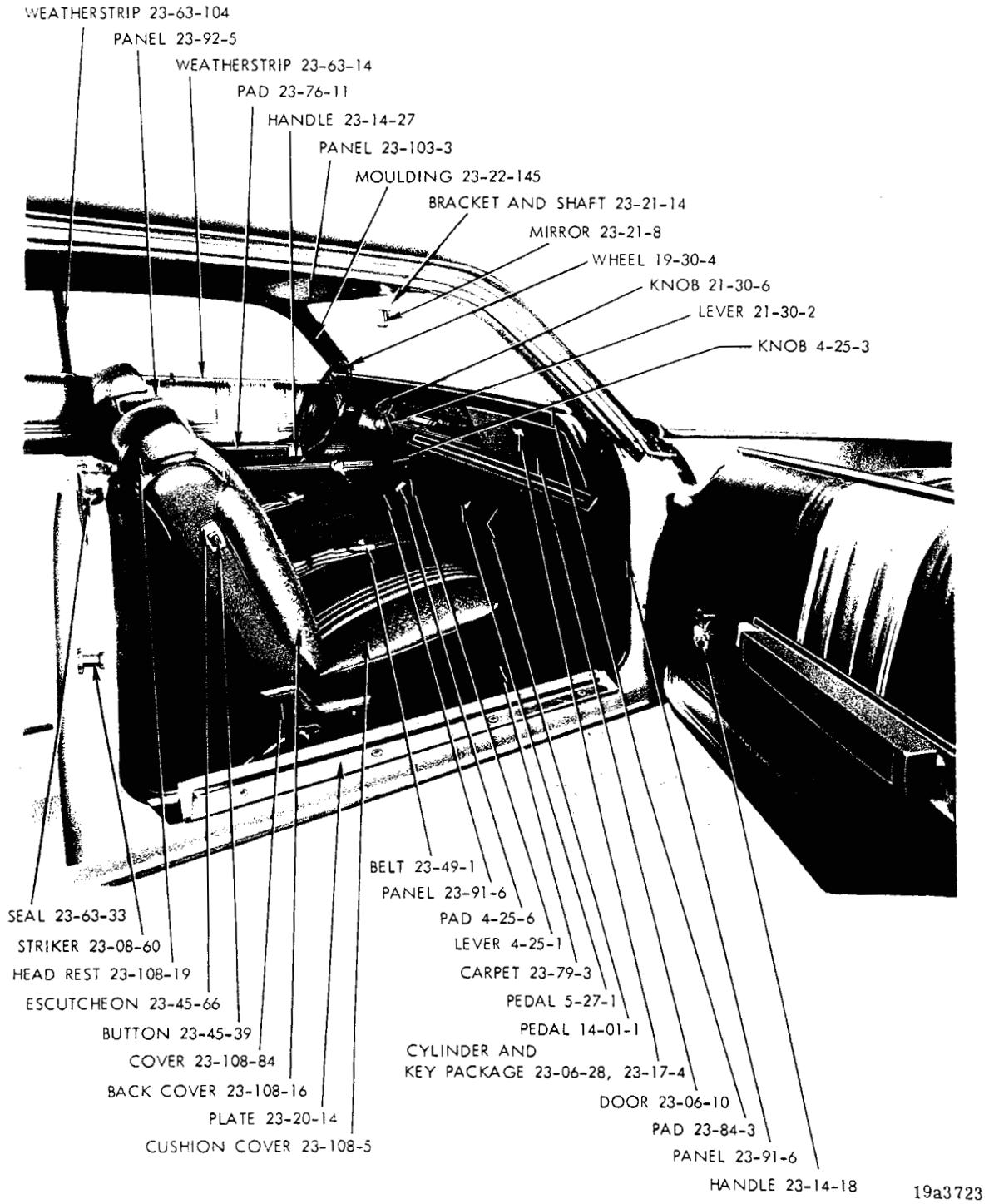

1971
FRONT INTERIOR - CHRYSLER NEWPORT ROYAL C-E 2 DOOR HARDTOP (SPRING SPECIAL)

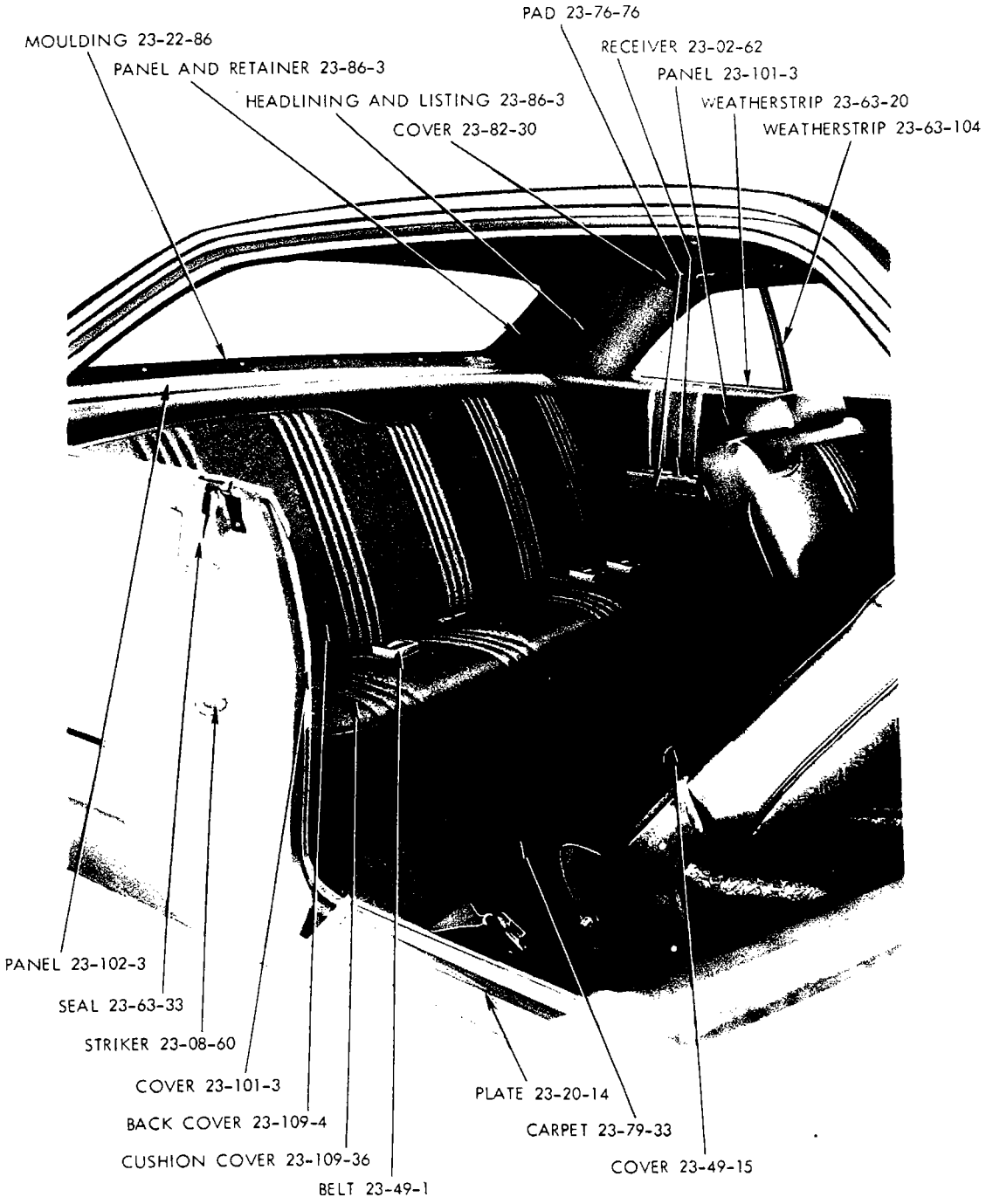
PAD 23-76-76
MOULDING 23-22-86
RECEIVER 23-02-62
PANEL AND RETAINER 23-86-3
PANEL 23-101-3
HEADLINING AND LISTING 23-86-3
WEATHERSTRIP 23-63-20
COVER 23-82-30
WEATHERSTRIP 23-63-104
PANEL 23-102-3
SEAL 23-63-33
STRIKER 23-08-60
COVER 23-101-3
BACK COVER 23-109-4
CUSHION COVER 23-109-36
BELT 23-49-1
PLATE 23-20-14
CARPET 23-79-33
COVER 23-49-15

19a3724

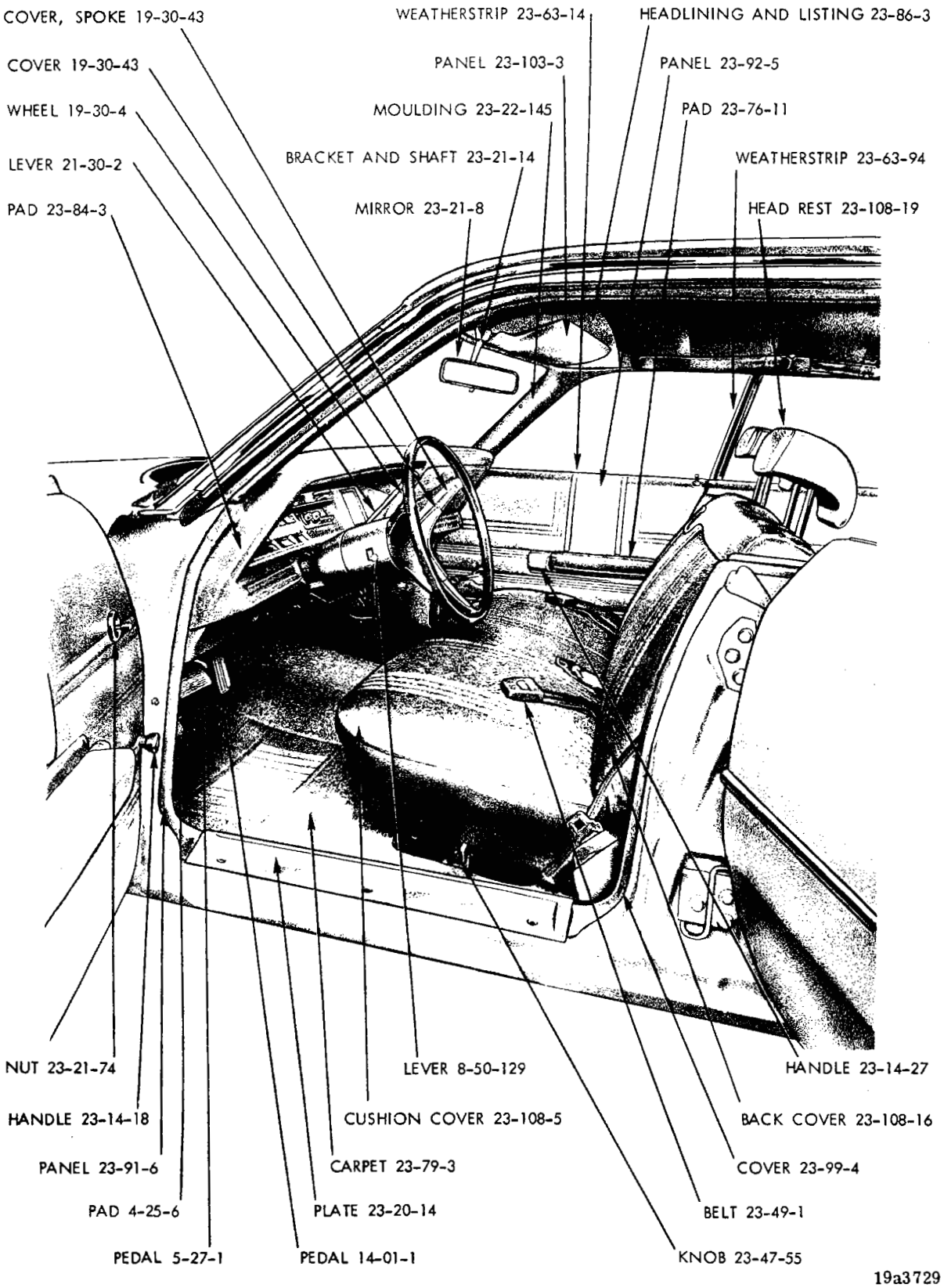

1971
FRONT INTERIOR - CHRYSLER NEWPORT ROYAL C-E 4 DOOR HARDTOP (SPRING SPECIAL)

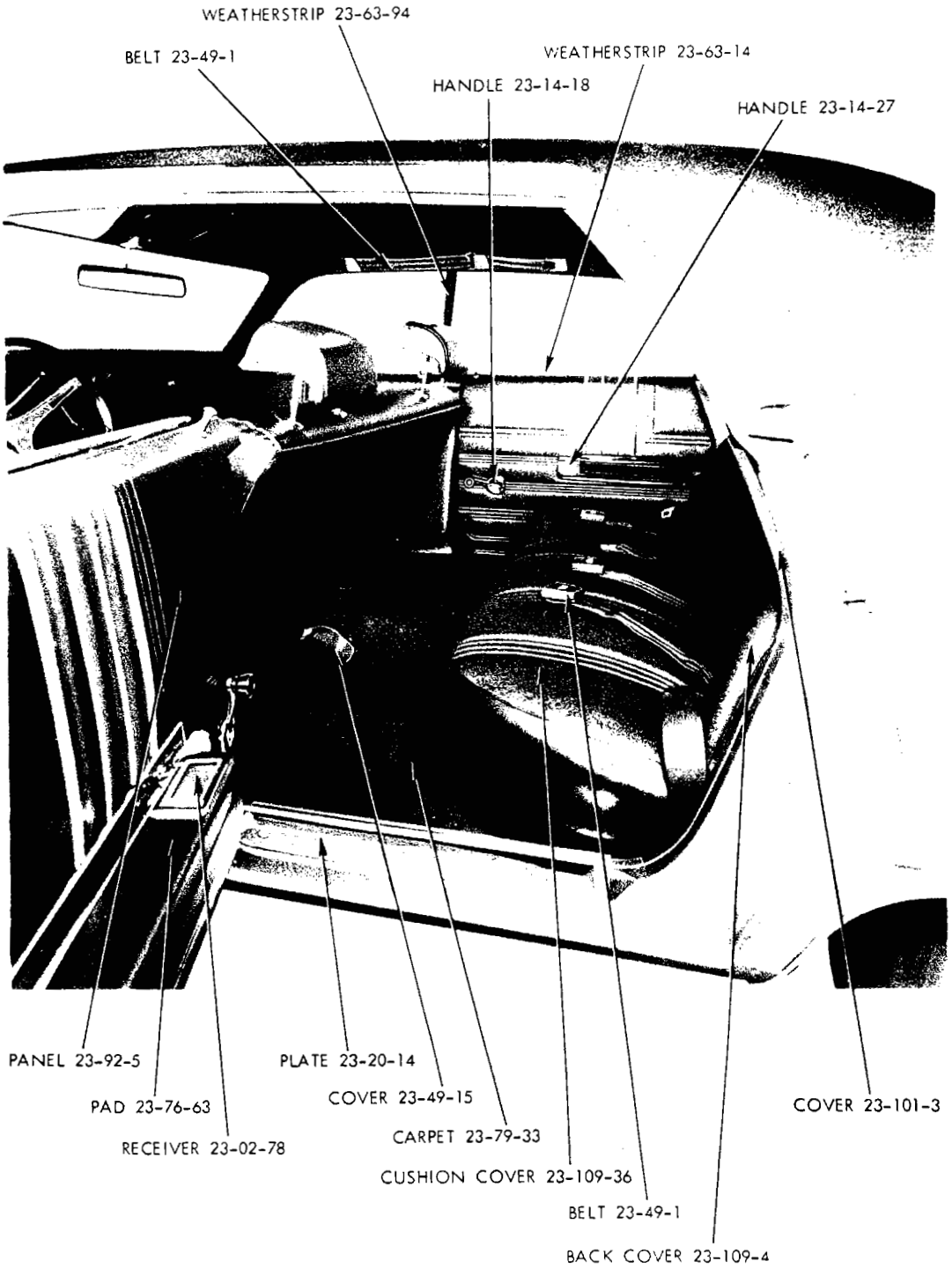

19a3726

1971
REAR INTERIOR - CHRYSLER NEWPORT ROYAL C-E 4 DOOR HARDTOP (SPRING SPECIAL)

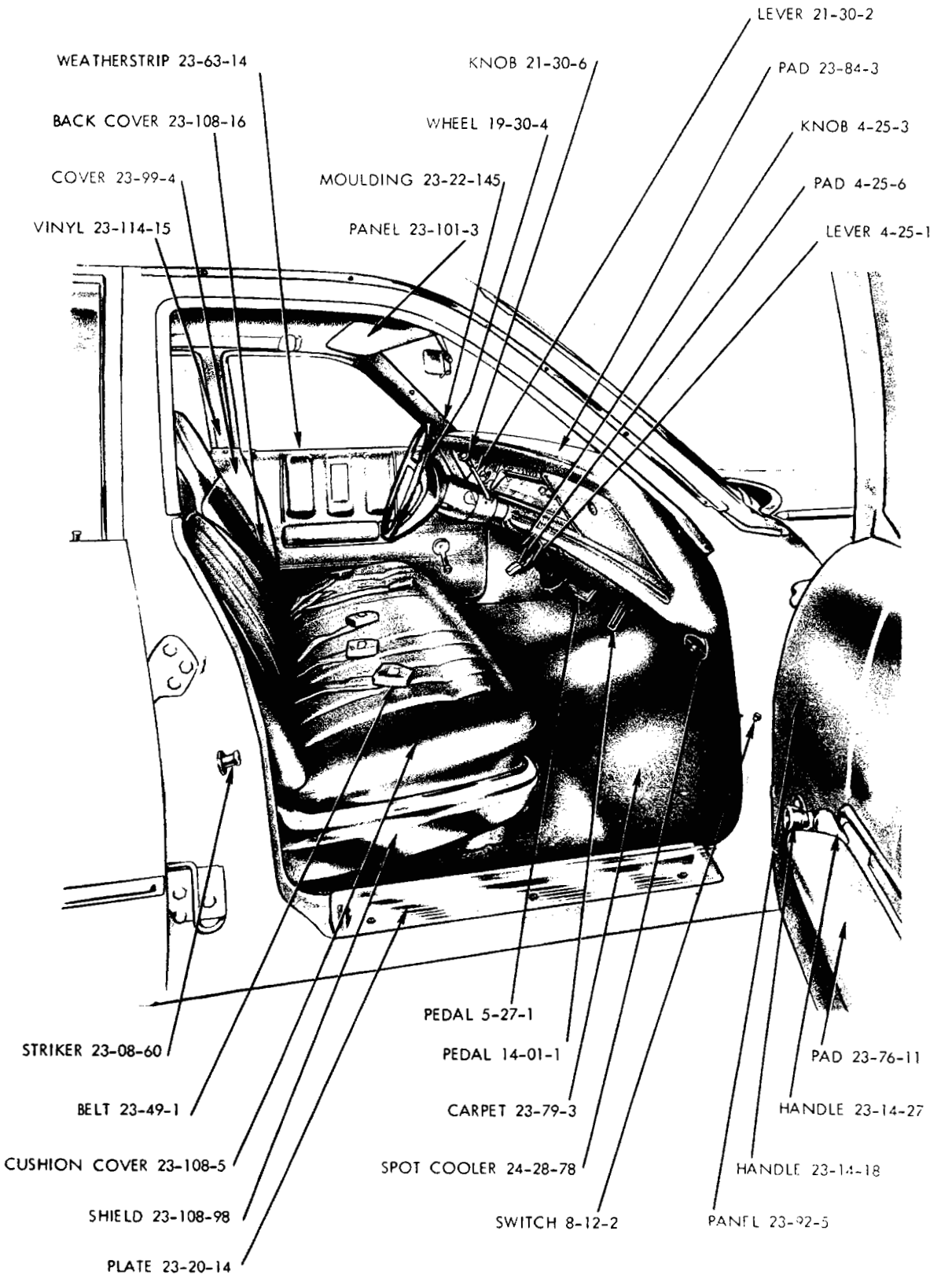

19a3680

1971
FRONT INTERIOR - CHRYSLER NEWPORT CUSTOM C-L 4 DOOR SEDAN

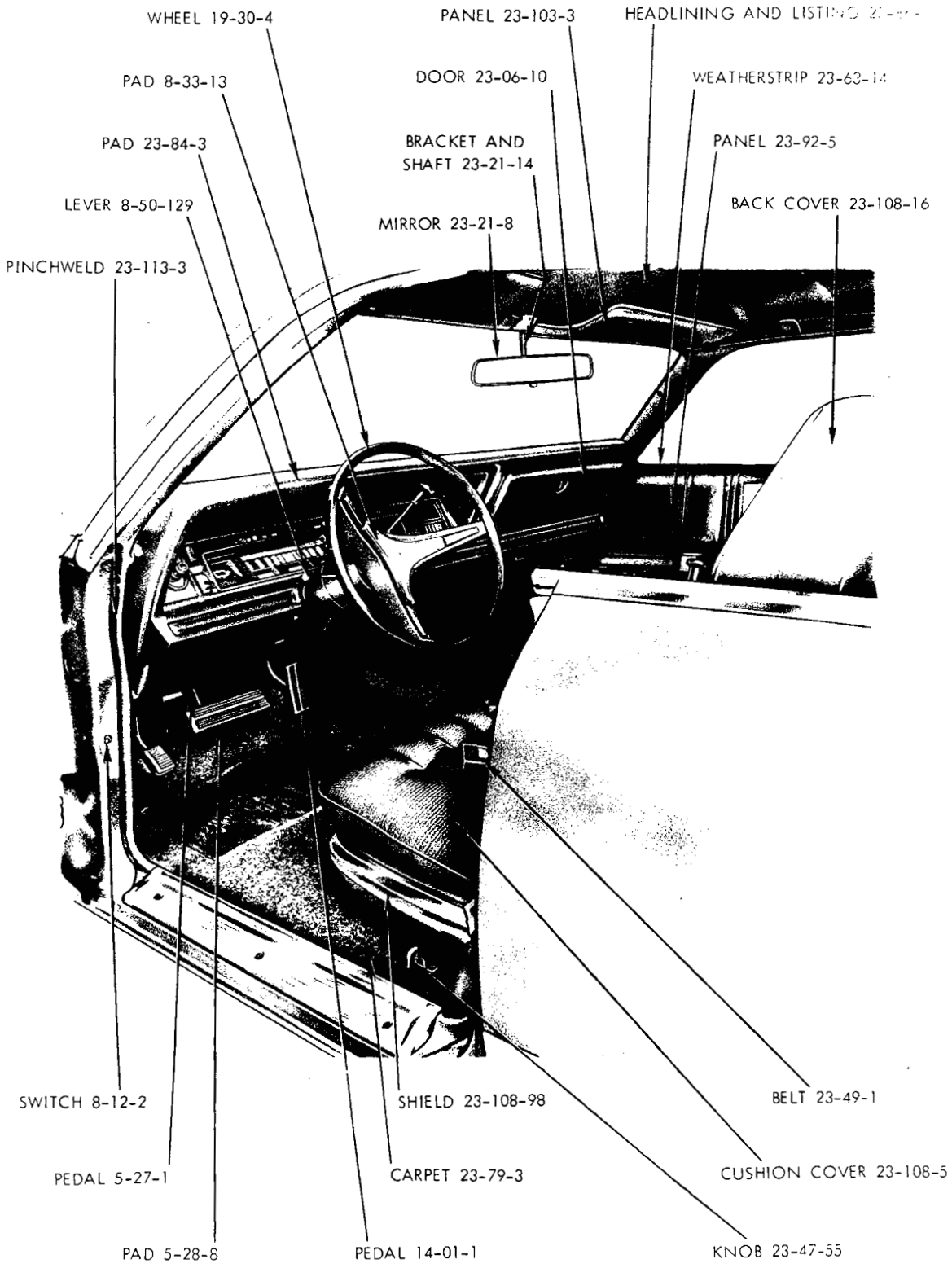

19a3561

1971
FRONT INTERIOR - CHRYSLER NEWPORT CUSTOM C-L 4 DOOR HARDTOP

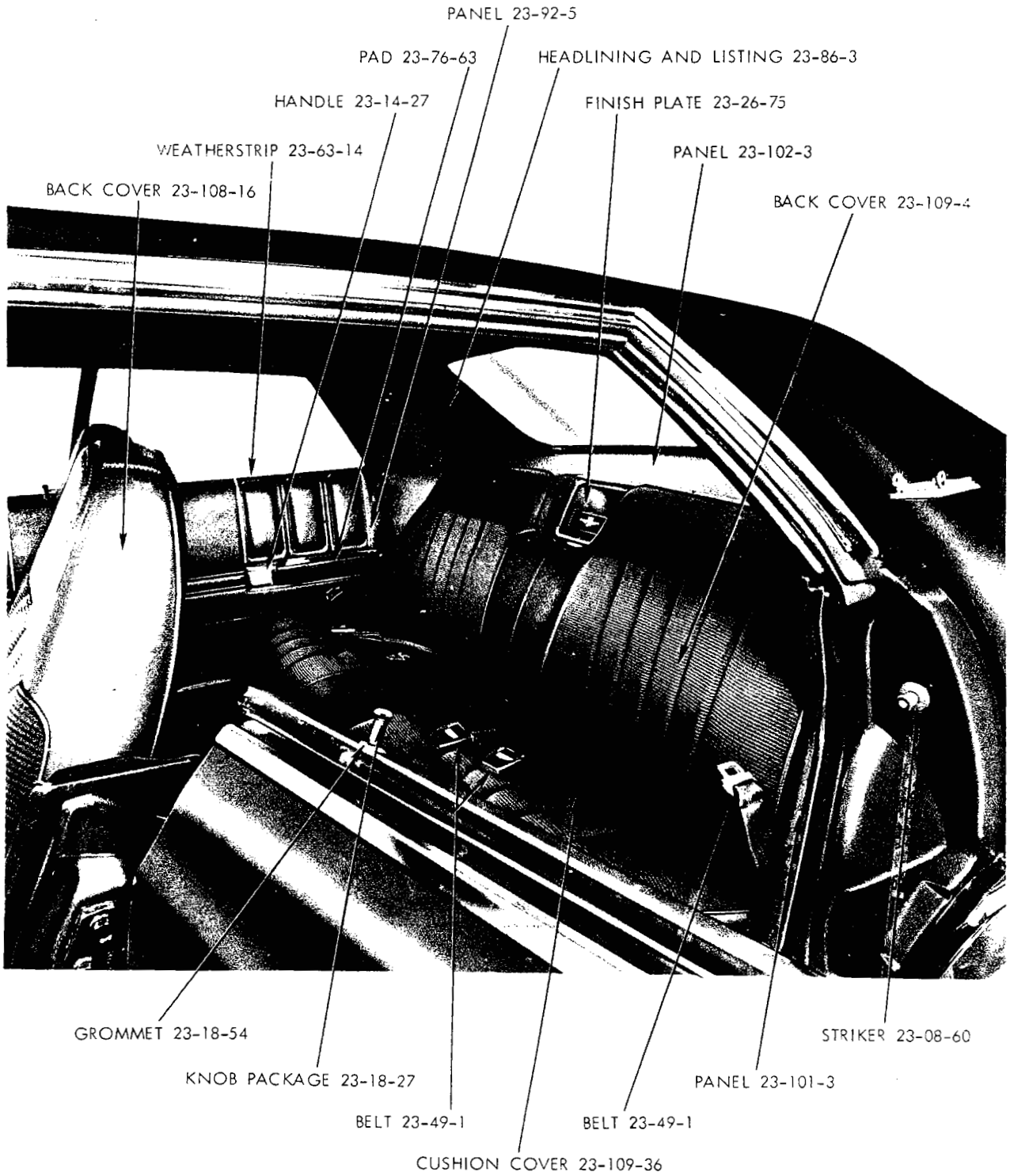

19a3564

1971
REAR INTERIOR - CHRYSLER NEWPORT CUSTOM C-L 4 DOOR HARDTOP

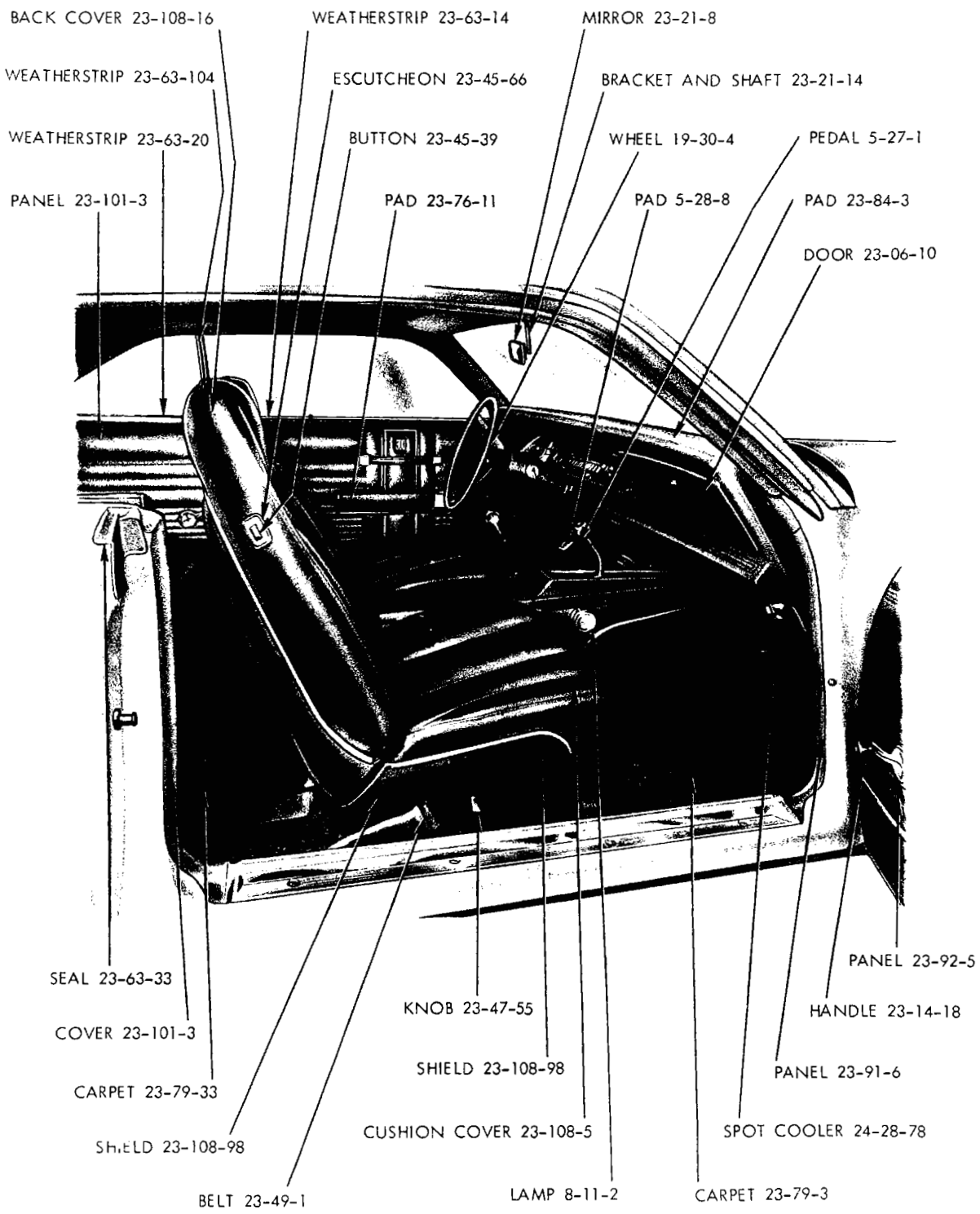

19a3560

1971
FRONT INTERIOR - CHRYSLER 300 C-S 2 DOOR HARDTOP

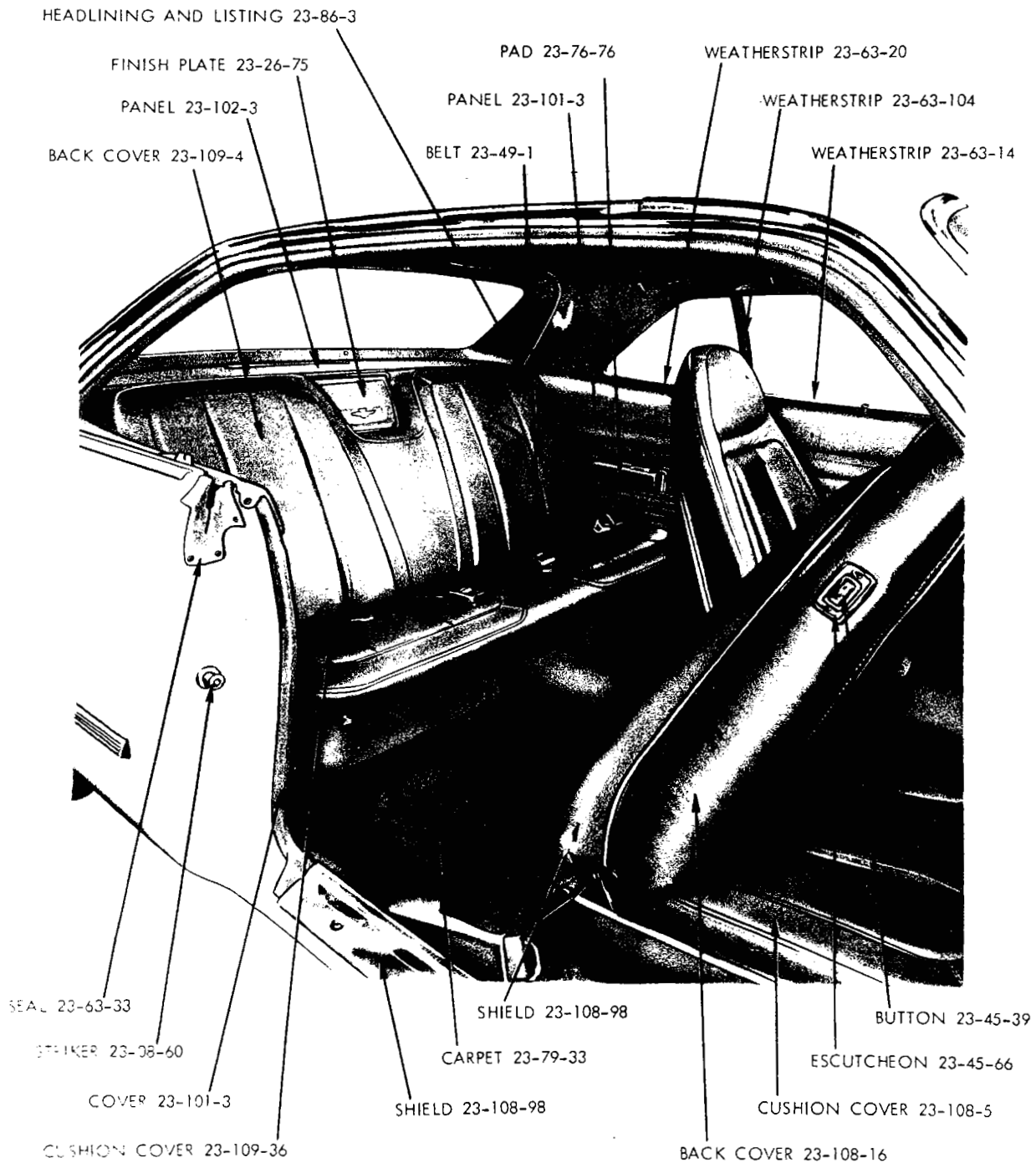

19a3630

1971
REAR INTERIOR - CHRYSLER 300 C-S 2 DOOR HARDTOP

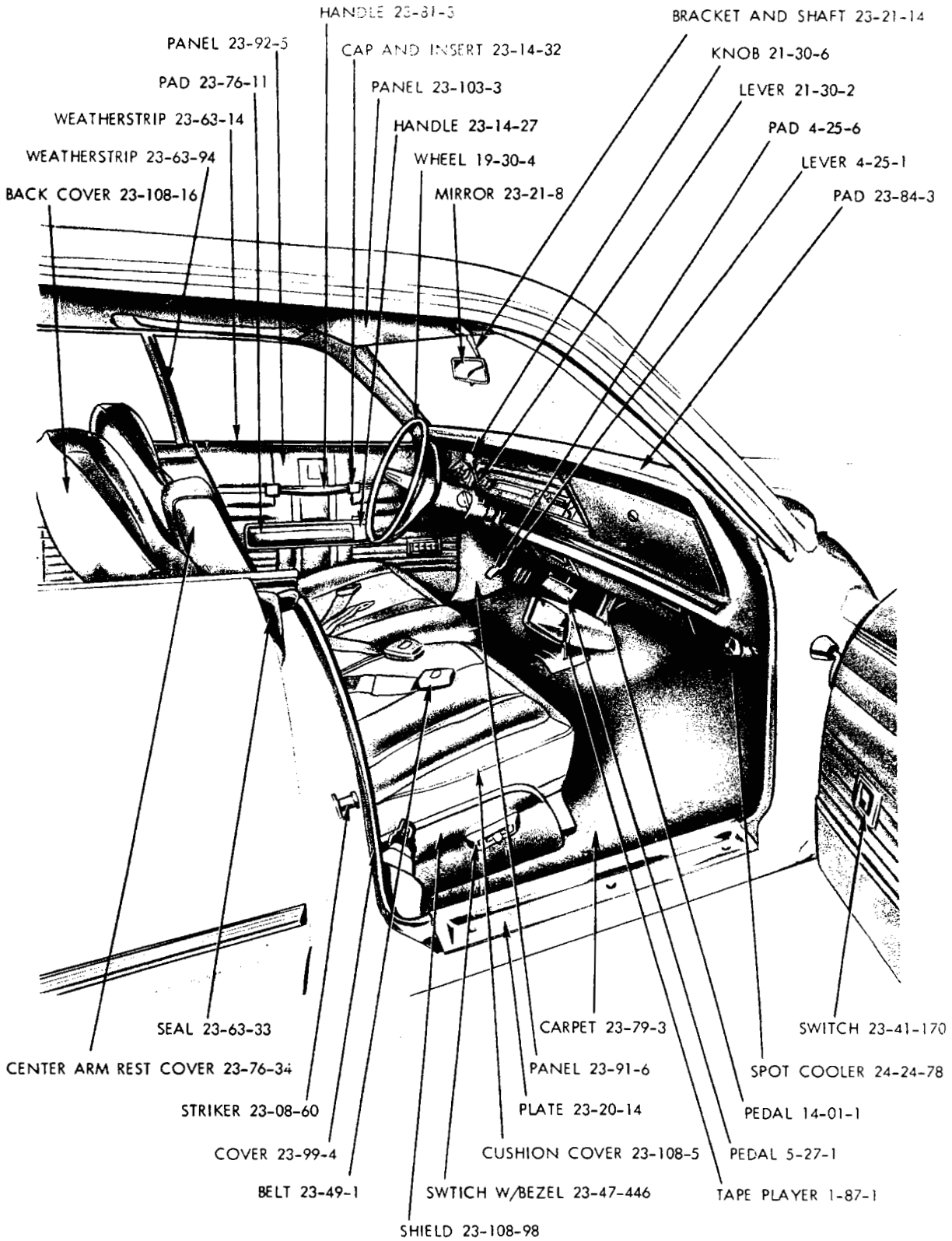

19a3613

1971
FRONT INTERIOR - CHRYSLER 300 C-S 4 DOOR HARDTOP

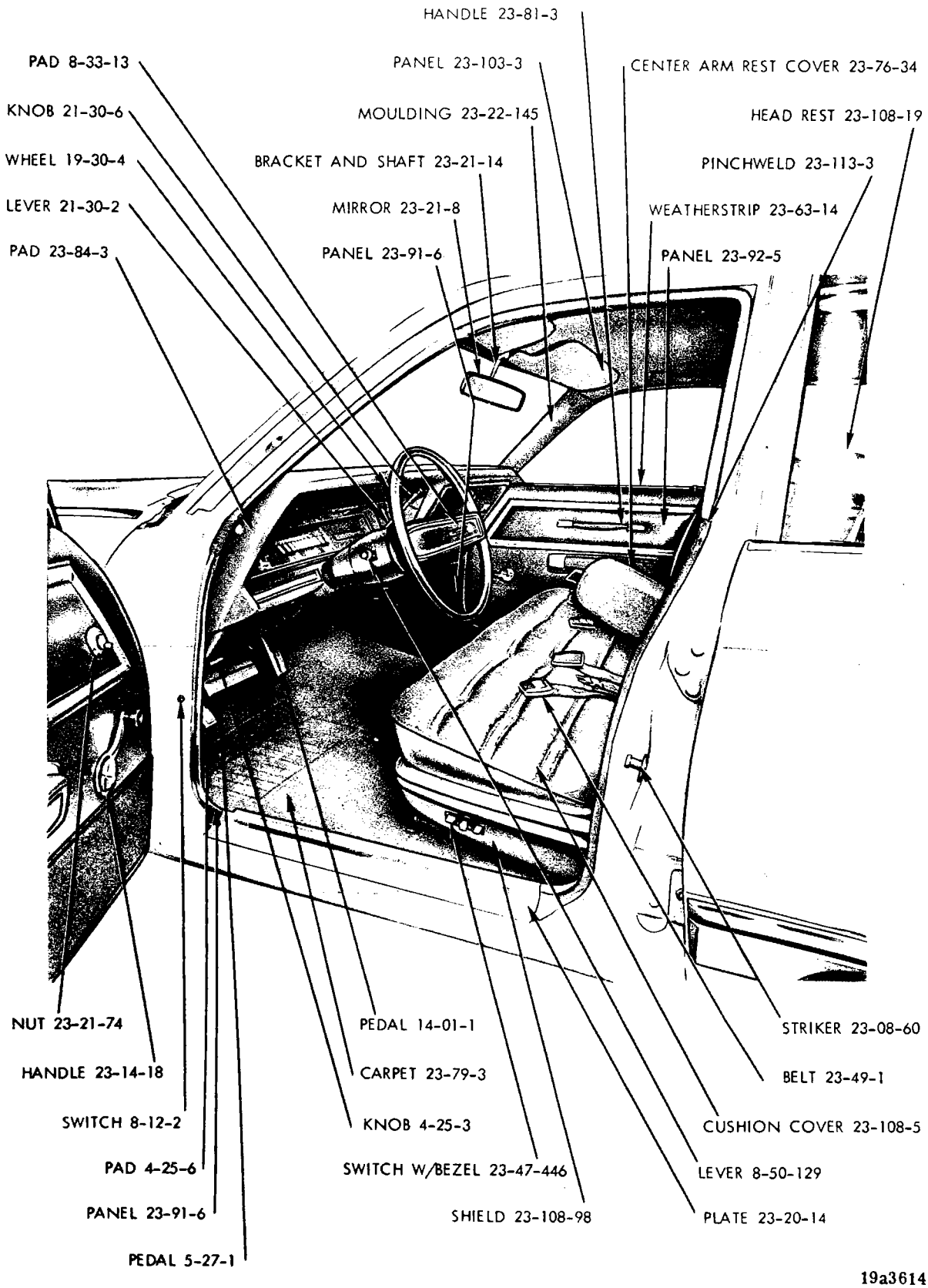

1971
FRONT INTERIOR - CHRYSLER NEW YORKER C-H 4 DOOR SEDAN

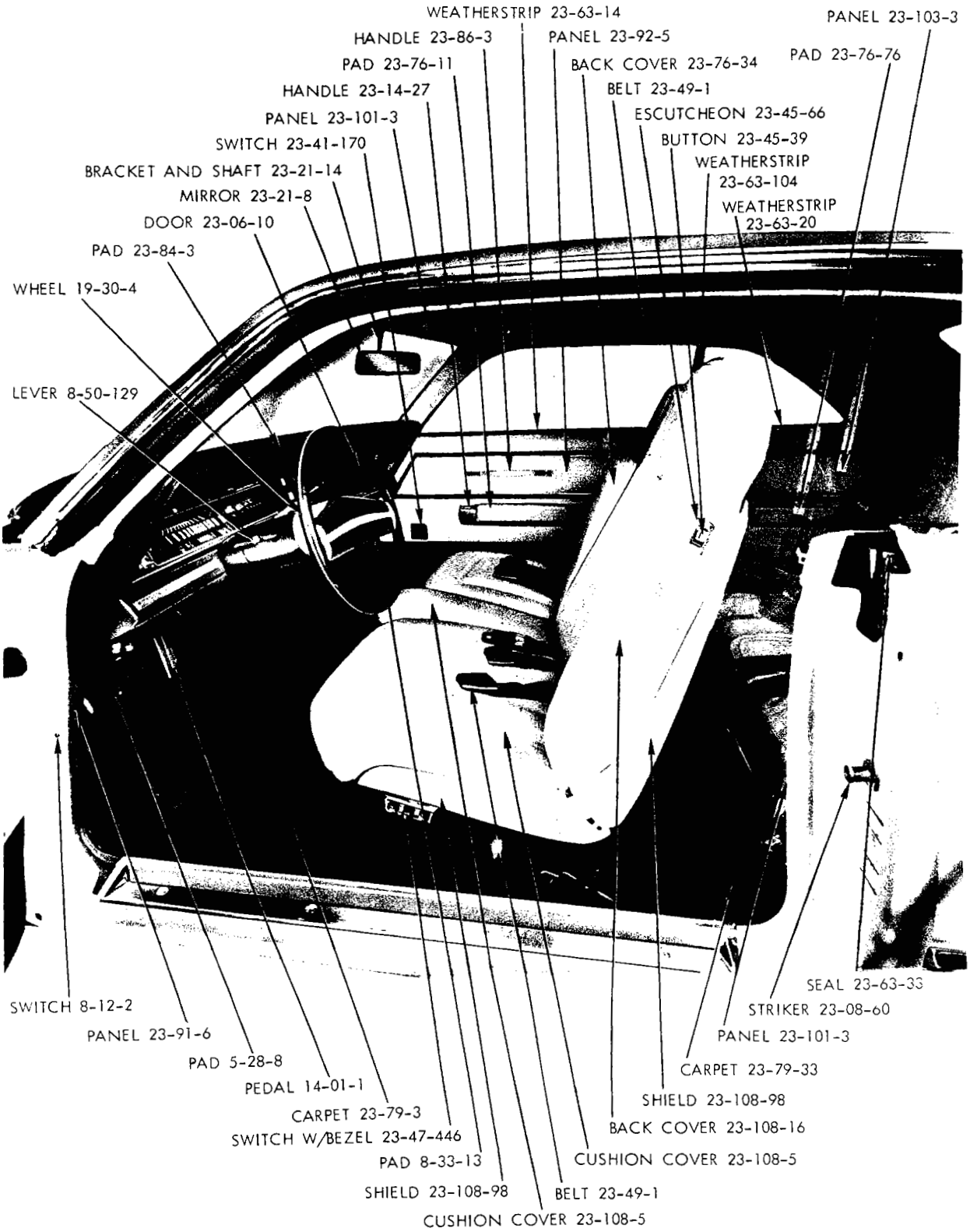

19a3559

1971
FRONT INTERIOR - CHRYSLER NEW YORKER C-H 2 DOOR HARDTOP

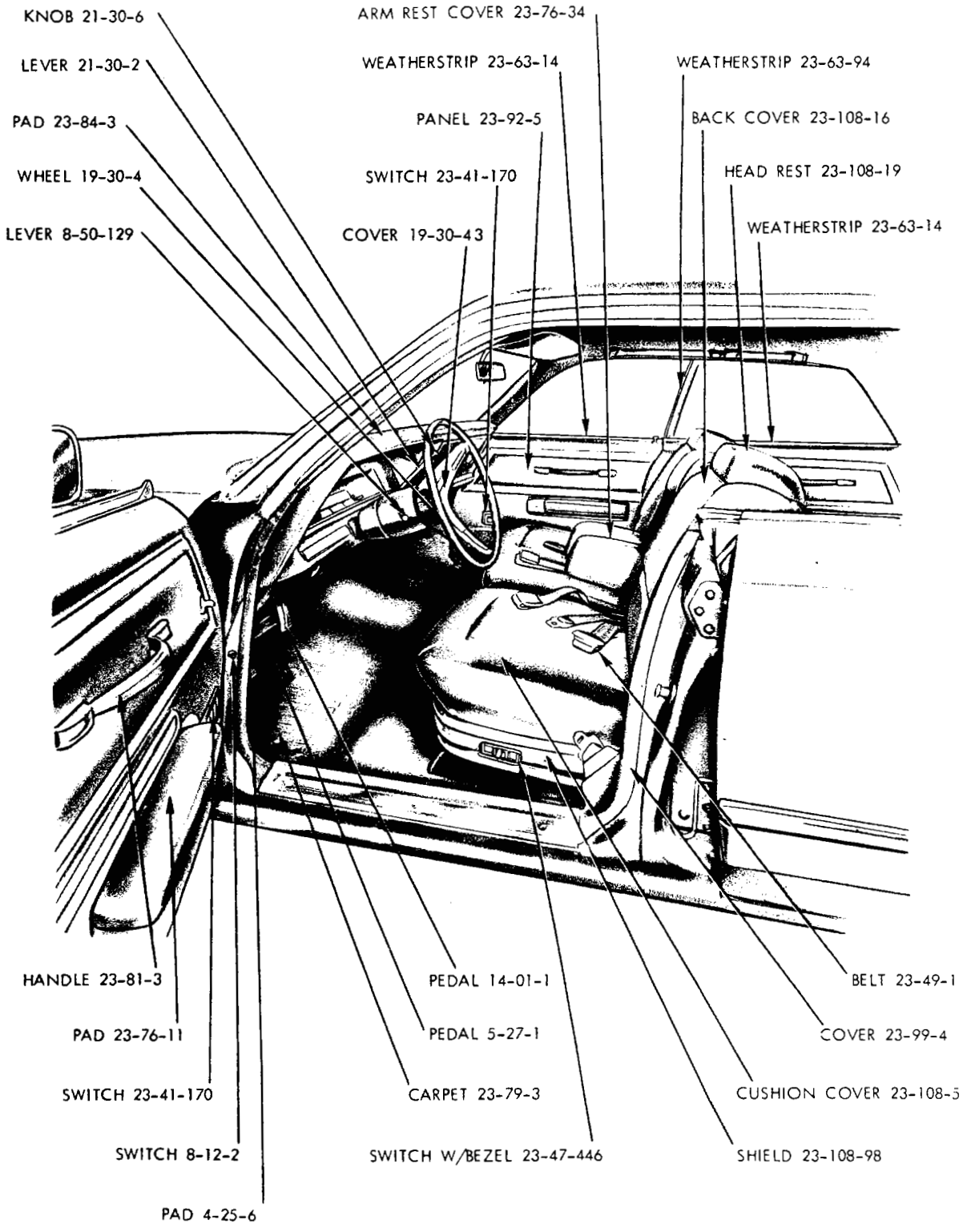

19a3678

1971
FRONT INTERIOR - CHRYSLER NEW YORKER C-H 4 DOOR HARDTOP

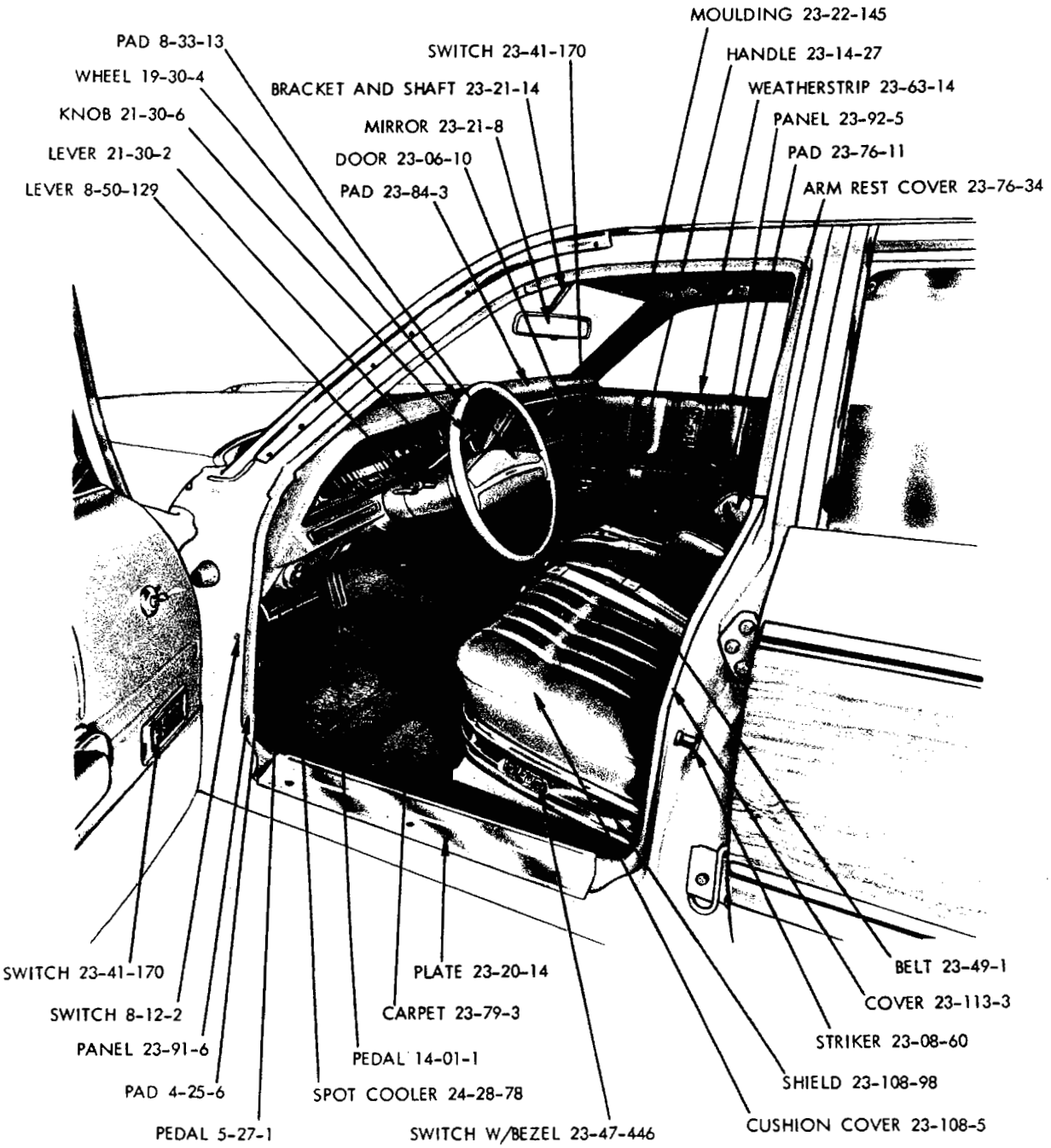
MOULDING 23-22-145
PAD 8-33-13
SWITCH 23-41-170
HANDLE 23-14-27
WHEEL 19-30-4
BRACKET AND SHAFT 23-21-14
WEATHERSTRIP 23-63-14
KNOB 21-30-6
MIRROR 23-21-8
PANEL 23-92-5
LEVER 21-30-2
DOOR 23-06-10
PAD 23-76-11
LEVER 8-50-129
PAD 23-84-3
ARM REST COVER 23-76-34
SWITCH 23-41-170
PLATE 23-20-14
BELT 23-49-1
SWITCH 8-12-2
CARPET 23-79-3
COVER 23-113-3
PANEL 23-91-6
PEDAL 14-01-1
STRIKER 23-08-60
PAD 4-25-6
SPOT COOLER 24-28-78
SHIELD 23-108-98
PEDAL 5-27-1
SWITCH W/BEZEL 23-47-446
CUSHION COVER 23-108-5

19a3608

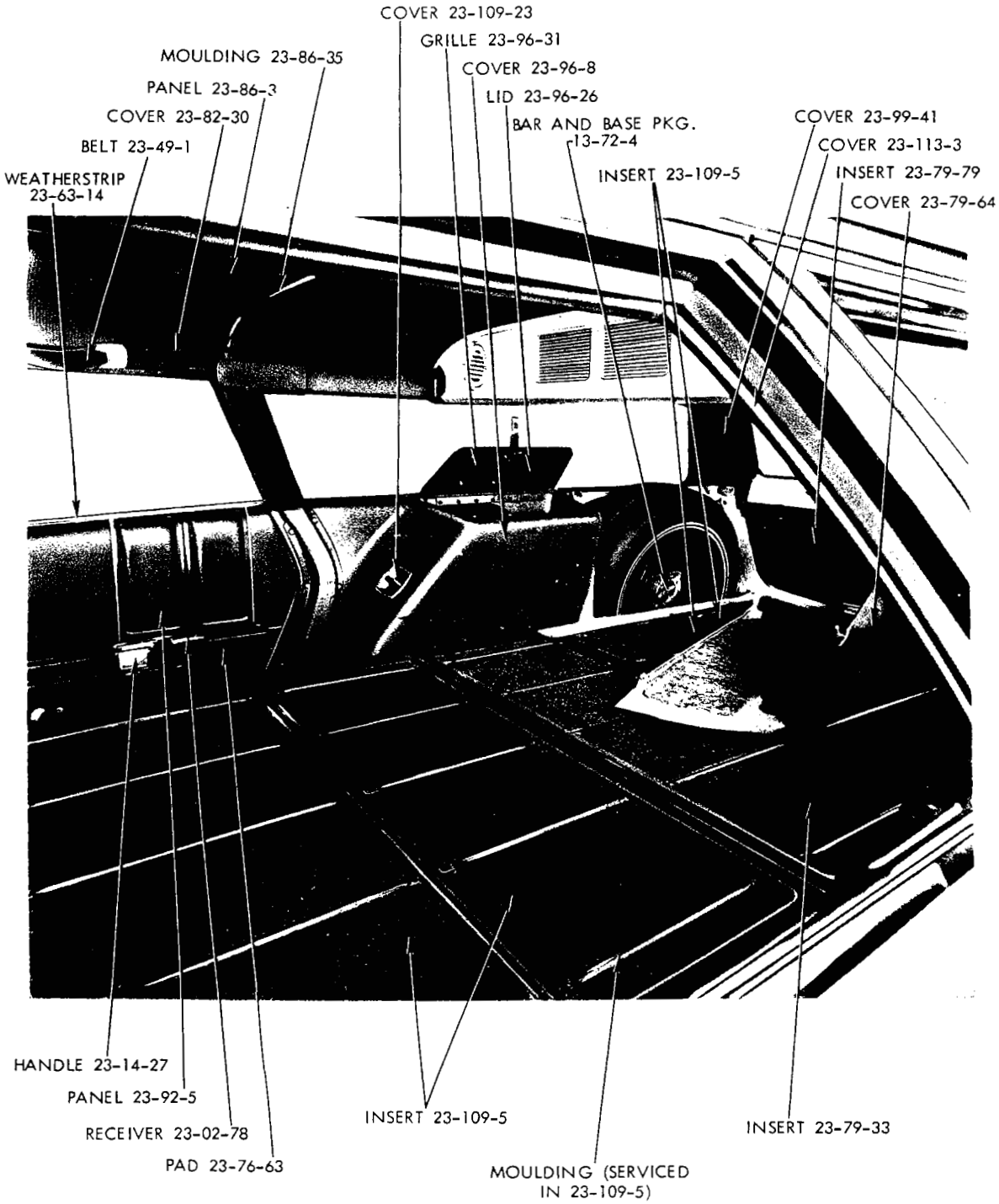

19a3627

1971
REAR INTERIOR - CHRYSLER C-P STATION WAGON

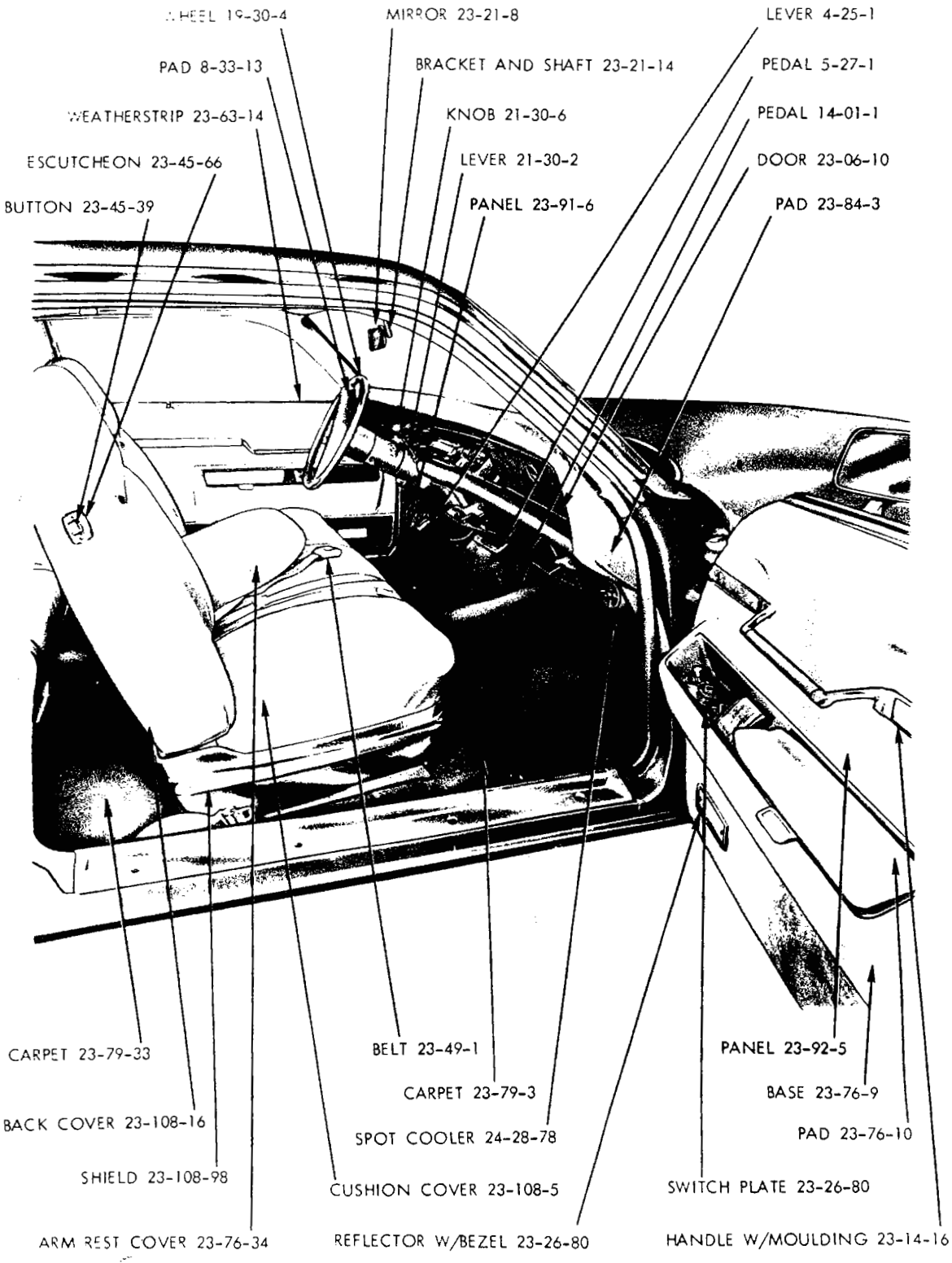

19a3610

1971
FRONT INTERIOR - IMPERIAL LE BARON Y-M 2 DOOR HARDTOP

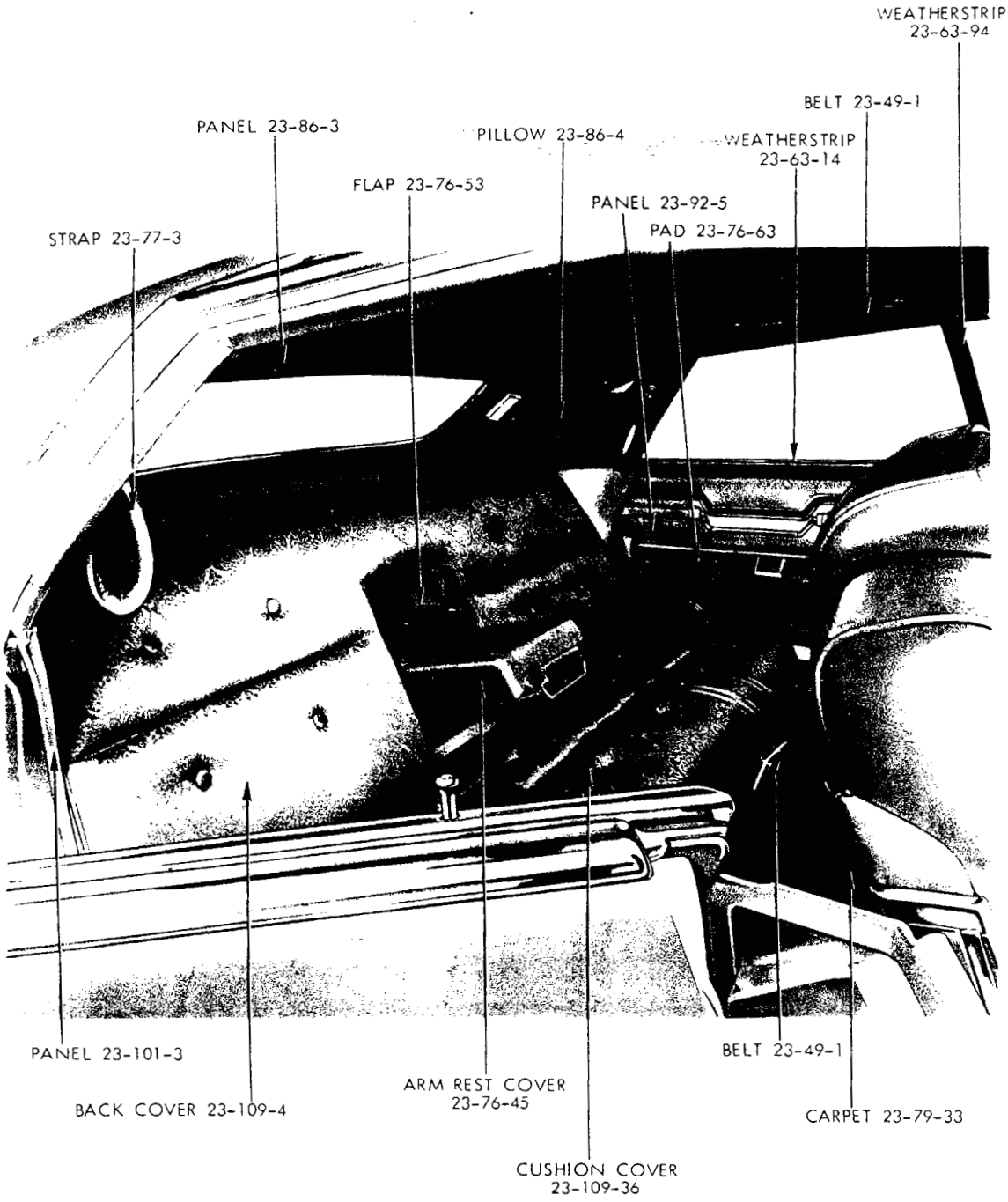

19a3503

1971
REAR INTERIOR - IMPERIAL LE BARON Y-M 4 DOOR HARDTOP

CODE	PART NAME		MODEL CODES	SEE BOTTOM NOTE 21	23	27	29	41	43	45	46	PART NUMBER
23-02-0	**ASH RECEIVER**											
23-02-2	RETAINER, w/BEZEL , 3rd Seat Ash Receiver		D, C	—	—	—	—	—	—	—	1	2080 784
	Use After May 1, 1971	71	D,C	—	—	—	—	—	—	—	1	= 3510 868
	SCREW		D,C	—	—	—	—	—	—	—	2	9417 316
23-02-18	RECEPTACLE, Inst. Pnl. Ash Receiver w/FACE PLATE		V,L	—	1	—	1	1	—	—	—	2771 725
	w/FACE PLATE		B,J	—	1	1	1	—	—	—	—	2984 345
	w/FACE PLATE, Except R-M, R-S, W-M, W-S	70	R,W	1	1	1	—	1	—	1	1	2984 800
	w/FACE PLATE, w/o Rallye Inst. Pnl.	70	W-S	—	1	1	—	—	—	—	—	2984 800
	w/FACE PLATE, w/Rallye Inst. Pnl.	70	R-M,R-3S	1	1	1	—	—	—	—	—	2984 801
	w/FACE PLATE, w/Rallye Inst. Pnl.	70	W-M, W-S	1	1	1	—	—	—	—	—	2984 801
	w/FACE PLATE, w/Rallye Inst. Pnl.	70	W	—	—	—	1	—	—	—	—	2984 801
		Rt.	C,Y	—	1	1	—	1	1	1	1	2984 517
		Lt.	C,Y	—	1	1	—	1	1	1	1	2984 525
	RECEIVER, Inst. Panel Ash Comp.	Blue 71	R,W	—	1	—	1	1	—	1	1	4218 GB7
	Comp.	Green 71	R, W	—	1	—	1	1	—	1	1	4218 GF7
	Comp.	Tan 71	R,W	—	1	—	1	1	—	1	1	4218 GT6
	Comp.	Black 71	R,W	—	1	—	1	1	—	1	1	4218 GX9★
	Comp.	Gold 71	R,W	—	1	—	1	1	—	1	1	4218 GY6
	Comp., Prime		P,D	1	1	1	1	1	1	1	1	2927 446
	RECEIVER, Inst. Panel Ash	CANADA	P,D	1	1	1	1	1	1	1	1	4300 EX9
23-02-19	HOUSING, Inst. Pnl. Ash Receiver		V,L	—	1	—	1	1	—	—	—	2771 277
			B,J	—	1	1	1	—	—	—	—	2984 262
	Except R-M, R-S, W-M, w/o Rallye Inst. Pnl.	70	R,W	1	1	1	—	1	—	1	1	2984 706
	w/Rallye Inst. Pnl.	70	R-M,R'3S	1	1	1	—	—	—	—	—	2984 797
	w/Rallye Inst. Pnl.	70	W-M, W-S	1	1	1	—	—	—	—	—	2984 797
	w/Rallye Inst. Pnl.	70	W	—	—	—	1	—	—	—	—	2984 797
		71	R,W	—	1	—	1	1	—	1	1	2985 047
		Rt.	C,Y	—	1	1	—	1	1	1	1	2984 522
		Lt.	C,Y	—	1	1	—	1	1	1	1	2984 529
	HOUSING, Inst. Panel Ash Rec.	CANADA	P,D	1	1	1	1	1	1	1	1	3456 364
23-02-20	NUT, Ash Receiver Hsg. to Frt. Plate Use w/Console	70	V	—	—	—	2	—	—	—	—	1839 995
	Use w/Console	70	L-M,L-H	—	2	—	—	—	—	—	—	1839 995
23-02-29	SPRING STOP, Inst. Pnl. Ash Receiver	70	R-M,R-S	1	1	1	—	—	—	—	—	2984 647
		70	W	1	1	1	1	—	—	—	—	2984 647
	With 1A29837 Stmpg. No.	70	P,D	1	1	1	1	1	1	1	1	2984 552
	STOP PACKAGE, Ash Rec. Receptacle Above Consists of: 1 - 2984552 Stop 2 - 2985902 Bumper	70	P,D	1	1	1	1	1	1	1	1	3579 666
	With A28499 Stmpg. No.	70	P,D	1	1	1	1	1	1	1	1	= 3621 750
			C,Y	—	1	1	—	1	1	1	1	= 3621 754
23-02-38	BUMPER, Inst. Pnl. Ash Receiver 23/32" x 3/8", With 5/E64" Wide Stem	70	R,W	2	2	2	2	2	—	2	2	2984 955
	13/16" x 3/8", With 1/4" Wide Stem	70	R,W	2	2	2	—	2	—	2	2	729 152
			P,D	2	2	2	2	2	2	2	2	2984 548
		70	C,Y	—	2	2	—	2	2	2	2	2771 668
	BUMPER, Inst. Pnl. Ash Rec. Hsg. Attach.		C,Y	—	4	4	—	4	4	4	4	1651 493
	BUMPER, Inst. Pnl. Ash Rec. to Ash Rec. Hsg.		C,Y	—	4	4	—	4	4	4	4	1651 493
	BUMPER, Inst. Pnl. Ash Rec. Spring		C,Y	—	2	2	—	2	2	2	2	2985 624
	BUMPER, Inst. Pnl. Ash Receiver Stop	71	R,W	—	1	—	1	1	—	1	1	2985 816
			P,D	1	1	1	1	1	1	1	1	2985 902

CARLINES: J - Challenger; V - Valiant; R - Belvedere - Satallite; P - Plymouth; C - Chrysler; B - Barracuda; L - Dart; W - Coronet - Charger; D - Dodge; Y - Imperial

NUMERALS INDICATE: 21 - 2 DR. SED.; 23 - 2 DR. H.T.; 27 - CONV. CPE.; 29 - FAST BACK; 41 - 4 DR. SED.; 43 - 4 DR. H.T.; 45 - 6 PASS. STA. WGN.; 46 - 9 PASS. STA. WGN.

AR Indicates use as required.
\# Indicates parts not listed in any previous parts book
Numerals in parentheses ( ) refer to notes.
★ Indicates change or addition.

Printed in U.S.A.
January 1972

Right and left part numbers are on same line, first number is right, second number is left.

23-02-0 ASH RECEIVER Cont'd.

CODE	PART NAME		MODEL CODES	SEE BOTTOM NOTE 21	23	27	29	41	43	45	46	PART NUMBER
23-02-42	HANDLE, Inst. Pnl. Ash Receiver w/FACE PLATE, Prime		B,J	—	1	1	1	—	—	—	—	2984 859
	HANDLE, Inst. Pnl. Ash Receiver	Prime 70	R,W	1	1	1	1	1	—	1	1	2984 062
23-02-62	RECEIVER, Qtr. Arm Rest Ash		V,L	—	2	—	2	—	—	—	—	2788 032
	Except B-H	Comp.	B,J	—	2	—	2	—	—	—	—	2589 587
		Comp. 70	R,W	2	2	—	2	—	—	—	—	2589 587
		Comp.	P,D,C	2	2	2	2	—	—	—	—	2589 587
	RECEPTACLE, W/FINISH PLATE, Qtr. Ash Receiver	71	R,W	—	2	—	2	—	—	—	—	3416 839
	RECEPTACLE, Qtr. Arm Rest Ash Receiver		Y	—	2	—	—	—	—	—	—	2589 874
23-02-68	BEZEL, Qtr. Arm Rest Ash Receiver		V,L	—	2	—	2	—	—	—	—	2788 701
	BEZEL, Qtr. Arm Rest Ash Receiver Retaining	70	R,W	2	2	—	2	—	—	—	—	2657 877
			P,D,C	2	2	2	2	—	—	—	—	2657 877
	BEZEL, Qtr. Trim Pnl. Ash Receiver		B,J	—	2	—	—	—	—	—	—	= 2879 652
	BEZEL, W/RETAINER, Qtr. Ash Receiver	71	R,W	—	2	—	2	—	—	—	—	3416 846
	BEZEL, Rear Door Arm Rest Ash Receiver		V,L	—	—	—	—	2	—	—	—	2788 701
	BEZEL, Rear Door Arm Rest Ash Receiver Retaining		R,W	—	—	—	—	2	—	2	2	2657 877
			P,D,C	—	—	—	—	2	2	2	2	2657 877
23-02-78	RECEIVER, Rear Door Arm Rest Ash	Comp.	V,L	—	—	—	—	2	—	—	—	2788 032
		Comp.	R,W	—	—	—	—	2	—	2	2	2589 587
		Comp.	P,D,C	—	—	—	—	2	2	2	2	2589 587
	RECEPTACLE, Rear Door Arm Rest Ash Receiver		Y	—	—	—	—	—	2	—	—	2589 874
23-02-79	RECEIVER, w/LID, Folding Top Pocket Pnl. Ash	70	B,J	—	—	2	—	—	—	—	—	2589 587
		71	B-S,J	—	—	2	—	—	—	—	—	2589 587
		70	R,W	—	—	2	—	—	—	—	—	2490 481
23-02-82	SPRING, Folding Top Pocket Pnl. Ash Receiver	70	B-P, J	—	—	2	—	—	—	—	—	2292 503
		71	B-S,J	—	—	2	—	—	—	—	—	2292 503
		70	R,W	—	—	2	—	—	—	—	—	2292 503
	SPRING, Floor Console Ash Rec.	71	B,J	—	1	1	—	—	—	—	—	2292 503
	Except R-H, W-H	71	R,W	—	1	—	1	—	—	—	—	2292 503
		71	W-P	—	—	—	—	1	—	1	1	2292 503
	SPRING, Qtr. Arm Rest Ash Receiver		V,L	—	2	—	2	—	—	—	—	2292 503
			B,J	—	2	—	—	—	—	—	—	2292 503
		70	R,W	2	2	—	2	—	—	—	—	2292 503
			P,D,C	2	2	2	2	—	—	—	—	2292 503
	SPRING, Qtr. Arm Rest Ash Receiver Lid		Y	—	2	—	—	—	—	—	—	2572 163
	SPRING, Rear Door Ash Receiver Lid		V,L,R,W	—	—	—	—	2	—	2	2	2292 503
			P,D,C	—	—	—	—	2	2	2	2	2292 503
	SPRING, Rear Door Arm Rest Ash Receiver Lid		Y	—	—	—	—	—	2	—	—	2572 163
23-02-84	BUMPER, Qtr. Arm Rest Ash Receiver		C-S,Y	—	AR	—	—	—	—	—	—	1639 961
	BUMPER, Rear Door Arm Rest Ash Receiver Lid		C-S,Y	—	—	—	AR	AR	AR	—	—	1639 961
23-02-105	RECEIVER, Floor Console Ash		V,L	—	1	—	1	—	—	—	—	2657 284
		71	B,J	—	1	1	—	—	—	—	—	2589 587
	Except R-H	71	R	—	1	—	—	—	—	—	—	2589 587
	Except W-H	71	W	—	1	—	1	—	—	—	—	2589 587
		71	W-P	—	—	—	—	1	—	1	1	2589 587
23-02-107	BEZEL, Folding Top Pocket Pnl. Ash Receiver	70	R,W	—	—	2	—	—	—	—	—	1623 104

CARLINES	J - Challenger	V - Valiant	R - Belvedere - Satallite	P - Plymouth	C - Chrysler
	B - Barracuda	L - Dart	W - Coronet - Charger	D - Dodge	Y - Imperial

NUMERALS INDICATE:	21 - 2 DR. SED.	27 - CONV. CPE.	41 - 4 DR. SED.	45 - 6 PASS. STA. WGN.
	23 - 2 DR. H.T.	29 - FAST BACK	43 - 4 DR. H.T.	46 - 9 PASS. STA. WGN.

AR Indicates use as required.
\# Indicates parts not listed in any previous parts book
Numerals in parentheses ( ) refer to notes.
★ Indicates change or addition.

Printed in U.S.A.
January 1972

Right and left part numbers are on same line, first number is right, second number is left.

CODE	PART NAME		MODEL CODES	SEE BOTTOM NOTE 21	23	27	29	41	43	45	46	PART NUMBER
23-02-0	**ASH RECEIVER Cont'd.**											
23-02-107	BEZEL Cont'd.											
			B,J	—	—	2	—	—	—	—	—	= 2879 652
	BEZEL, Console Ash Reciver		B,J,R,W	—	1	1	1	—	—	—	—	= 2879 652
23-02-110	HOUSING, Console Ash Receiver		V,L	—	1	—	1	—	—	—	—	2656 391
23-02-111	LID, Floor Console Ash Receiver		V,L	—	1	—	1	—	—	—	—	2589 615
23-02-115	GUIDE, Floor Console Ash Receiver Lid		V,L	—	2	—	2	—	—	—	—	2656 087
23-02-145	RECEPTACLE, w/FACE PLATE, 3rd Seat Ash Receiver		D,C	—	—	—	—	—	—	—	1	2161 115
	RECEIVER and RETAINER, 3rd Seat Ash	Comp.	D,C	—	—	—	—	—	—	—	1	2161 119
23-02-149	BRACKET, 3 rd. Seat Ash Rec. Mtg. Use After May 1, 1971	71	D,C	—	—	—	—	—	—	—	1	= 3510 867
23-04-0	**FLOOR BOARDS**											
23-04-18	INSERT PANEL, Center Floor, New York Taxi	70	W-T	—	—	—	—	1	—	—	—	2836 719
23-04-205	MOULDING, Rear Floor Pan Cover Pnl.		R,W	—	—	—	—	—	—	1	—	2254 668
	MOULDING, Rear Floor Well Carpet Side Ret.	70	R,W	—	—	—	—	—	—	—	1	2656 886-7
	SKID STRIP, Ctr. Floor Pan 3rd Seat Back Supt.		R,W	—	—	—	—	—	—	—	2	2251 868
	MOULDING, Spare Tire Cover, Frt.	71	R,W	—	—	—	—	—	—	1	1	3509 221
	MOULDING, Spare Tire Cover, Rear Up to Dec. 1, 1970	71	R,W	—	—	—	—	—	—	1	1	3416 994
	After Dec. 1, 1970	71	R,W	—	—	—	—	—	—	1	1	= 3509 966
	MOULDING, Ctr. and Rear Floor Pan Cover Pnl.		P,D,C	—	—	—	—	—	—	—	1	2526 642
23-04-229	COVER, Spare Tire		V,L	—	1	—	1	1	—	—	—	2419 361
	NOTE: See Code 23-79-64											
23-04-241	HOUSING, Qtr. Pnl. Fuel Filler		P	—	—	—	—	—	—	1	1	2894 502
			D	—	—	—	—	—	—	1	1	2894 504
			C	—	—	—	—	—	—	1	1	2894 506
	HOUSING, Qtr. Pnl. Fuel Filler Tube	71	R	—	—	—	—	—	—	1	1	3440 902
		71	W	—	—	—	—	—	—	1	1	3440 903
23-04-245	BRACKET, Spare Tire Cover Mtg.	70	R,W	—	—	—	—	—	—	1	1	2877 185
	W/KEEPER		R,W	—	—	—	—	—	—	1	1	= 3509 973
	BRACKET, Qtr. Pnl. Inside Ctr. Spare Tire Cover Pnl. Mtg., Rt. Frt., w/o KEEPER		R,W	—	—	—	—	—	—	1	1	3440 886
	RETAINER, Spare Tire Cover	Rt. 71	R,W	—	—	—	—	—	—	1	1	= 3509 964
23-04-246	KEEPER, Spare Tire Cover Hge. or Brkt., use w/3440886	71	R,W	—	—	—	—	—	—	1	1	3416 997
23-04-249	GASKET, Qtr. Pnl. Fuel Filler Hsg. to W/House	71	R	—	—	—	—	—	—	1	1	3440 909
	to Outer W/House	71	W	—	—	—	—	—	—	1	1	3500 402
23-05-0	**BODY HOLD DOWN**											
23-05-1	BOLT, Frame to Body Attaching Sta. 2	70	P,Y	2	2	2	2	2	2	2	2	2461 684
	Sta. 2	70	D,C	—	—	2	—	—	—	2	2	2461 684
	Sta. 2, 2A	71	P,D,C	—	4	—	4	4	4	—	—	6028 647
23-05-10	ISOLATOR, Body Hold Down Sta. 1, Rt.	70	D,C	—	2	—	—	2	2	—	—	3466 012
	Sta. 1, Lt.		P,D,C	—	2	—	—	2	2	—	—	3466 014
	Sta. 2-2A, Rt.		P,D,C	—	4	—	—	4	4	—	—	3466 018

CARLINES J - Challenger, B - Barracuda, V - Valiant, L - Dart, R - Belvedere - Satallite, W - Coronet - Charger, P - Plymouth, D - Dodge, C - Chrysler, Y - Imperial

NUMERALS INDICATE: 21 - 2 DR. SED., 23 - 2 DR. H.T., 27 - CONV. CPE., 29 - FAST BACK, 41 - 4 DR. SED., 43 - 4 DR. H.T., 45 - 6 PASS. STA. WGN., 46 - 9 PASS. STA. WGN.

AR Indicates use as required.
\# Indicates parts not listed in any previous parts book
Numerals in parentheses ( ) refer to notes.
★ Indicates change or addition.

Printed in U.S.A. January 1972

Right and left part numbers are on same line, first number is right, second number is left.

CODE	PART NAME		MODEL CODES	SEE BOTTOM NOTE 21	23	27	29	41	43	45	46	PART NUMBER
23-05-0	**BODY HOLD DOWN Cont'd.**											
23-05-10	ISOLATOR Cont'd.											
	Sta. 2-2A, Lt.	70	D,C	—	4	—	—	4	4	—	—	3466 019
	Sta. 3, Rt.		P,D,C	—	2	—	—	2	2	—	—	3466 020
	Sta. 3, Lt.	70	D,C	—	2	—	—	2	2	—	—	3466 021
23-05-25	INSERT, Isolator Body Hold Down											
	Sta. 1		P,D,C	—	2	—	—	2	2	—	—	3466 002
	Sta. 2-2A		P,D,C	—	2	—	—	2	2	—	—	3466 004
	Sta. 3		P,D,C	—	2	—	—	2	2	—	—	3466 005
23-05-27	PLUG, Body Hold Down Isolator to Shim											
	Sta. 2-2A		P,D,C	—	AR	—	—	AR	AR	—	—	3466 023
23-05-31	BRACKET, Rear Side Rail Hold Down		B,J	—	1	1	1	—	—	—	—	2964 706-7
23-05-36	SPACER, Body Hold Down											
	Sta. 1		P,D,C	—	2	—	—	2	2	—	—	3466 029
	Sta. 2-2A, Rt.	70	D,C	—	AR	—	—	AR	AR	—	—	3466 024
	Sta. 2-2A, Lt.	70	D,C	—	AR	—	—	AR	AR	—	—	3466 025
23-06-0	**GLOVE BOX AND DOOR**											
23-06-4	BOX, Inst. Pnl. Glove		V,L	—	1	—	1	1	—	—	—	2889 773
	Upr.	70	B,J	—	1	1	1	—	—	—	—	2984 457
	Lwr.	70	B,J	—	1	1	1	—	—	—	—	2984 456
	Upr. and Lwr.		B,J	—	1	1	1	—	—	—	—	2984 819
		70	R,W	1	1	1	1	1	—	1	1	2984 716
		71	R,W	—	1	—	1	1	—	1	1	2985 747
	w/Air Cond.		P,D	1	1	1	1	1	1	1	1	2984 655
	w/o Air Cond.		P,D	1	1	1	1	1	1	1	1	2984 656
	Lwr.	70	C,Y	—	1	1	—	1	1	1	1	2927 905
	Upr.	70	C,Y	—	1	1	—	1	1	1	1	2927 906
	Upr.	71	C	—	1	—	—	1	1	1	1	2985 089
	Lwr.	71	C	—	1	—	—	1	1	1	1	2985 090
	Lwr.	71	Y	—	1	—	—	—	1	—	—	2927 905
	Upr.	71	Y	—	1	—	—	—	1	—	—	2927 906
23-06-10	DOOR, Inst. Pnl. Glove Box		V,L	—	1	—	1	1	—	—	—	2984 468
			B,J	—	1	1	1	—	—	—	—	2984 029
	Inner Pnl., Except R-M, R-S	70	R	1	1	1	—	1	—	1	1	2984 720
	Inner Pnl., Except W-M	70	W	1	1	1	—	1	—	1	1	2984 720
	Inner Pnl., w/Rallye Inst. Pnl.	70	R-M,R-S	1	1	1	—	—	—	—	—	2984 721
	Inner Pnl., w/Rallye Inst. Pnl.	70	W-M	1	1	—	—	—	—	—	—	2984 721
	Inner Pnl., w/Rallye Inst. Pnl.	70	W-S	—	1	1	—	—	—	—	—	2984 721
	Inner Pnl., w/Rallye Inst. Pnl.	70	W	—	—	—	1	—	—	—	—	2984 721
	Inner and Outer Pnl.	71	R,W	—	1	—	1	1	—	1	1	2985 037
	Inner and Outer Pnl., After Jan. 1, 1971	71	R,W	—	1	—	1	1	—	1	1	= 2985 973
	Inner and Outer Pnl.		P,D	1	1	1	1	1	1	1	1	2984 460
	Inner Pnl.	70	C	—	1	1	—	1	1	1	1	2984 350
	Inner Panel	71	C	—	1	—	—	1	1	1	1	2985 095
	Inner and Outer Pnls., Chrysler	70	C-E,C-L	—	1	1	—	1	1	—	—	2984 361
	Outer Pnl., Spring Spec.	70	C-E	—	1	—	—	—	1	—	—	2985 752
	Inner and Outer Pnls., Blue	70	C-M	—	1	1	—	—	1	—	—	4120 FB7
	Green	70	C-M	—	1	1	—	—	1	—	—	4120 FF8
	Light Gold	70	C-M	—	1	1	—	—	1	—	—	4120 FY4
	Dark Gold	70	C-M	—	1	1	—	—	1	—	—	4120 FY8
	Red	70	C-M	—	1	1	—	—	1	—	—	4120 FR9
	Tan	70	C-M	—	1	1	—	—	1	—	—	4120 FT4
	Black	70	C-M	—	1	1	—	—	1	—	—	4120 FX9
	Outer	70	C-H	—	1	—	—	1	1	—	—	2984 371
	Outer	70	C	—	—	—	—	—	—	1	1	2984 371
	Inner	70	Y	—	1	—	—	—	1	—	—	2984 352

CARLINES J - Challenger, B - Barracuda, V - Valiant, L - Dart, R - Belvedere - Satallite, W - Coronet - Charger, P - Plymouth, D - Dodge, C - Chrysler, Y - Imperial

NUMERALS INDICATE: 21 - 2 DR. SED., 23 - 2 DR. H.T., 27 - CONV. CPE, 29 - FAST BACK, 41 - 4 DR. SED., 43 - 4 DR. H.T., 45 - 6 PASS. STA. WGN., 46 - 9 PASS. STA. WGN.

AR Indicates use as required.
\# Indicates parts not listed in any previous parts book
Numerals in parentheses ( ) refer to notes.
★ Indicates change or addition.

Printed in U.S.A.
January 1972

Right and left part numbers are on same line, first number is right, second number is left.

23-06-0 GLOVE BOX AND DOOR Cont'd.

CODE	PART NAME		MODEL CODES	SEE BOTTOM NOTE 21	23	27	29	41	43	45	46	PART NUMBER
23-06-10	DOOR Cont'd.											
	Outer	70	Y	—	1	—	—	—	1	—	—	2984 358
	Outer Pnl., Hard Finish, w/o MEDALLION	Gray 71	C	—	1	—	—	1	1	1	1	4209 GA6
		Blue 71	C	—	1	—	—	1	1	1	1	4209 GB7
		Red 71	C	—	1	—	—	1	1	1	1	4209 GE9
		Green 71	C	—	1	—	—	1	1	1	1	4209 GF7
		Tan 71	C	—	1	—	—	1	1	1	1	4209 GT6
		Black 71	C	—	1	—	—	1	1	1	1	4209 GX9
		Gold 71	C	—	1	—	—	1	1	1	1	4209 GY6
	Use 3416662 Medallion Outer Pnl., Soft Finish MEDALLION	Blue 71	C-H,C-P	—	1	—	—	1	1	1	1	4250 GB7
		Red 71	C-H,C-P	—	1	—	—	1	1	1	1	4250 GE9
		Green 71	C-H,C-P	—	1	—	—	1	1	1	1	4250 GF7
		Tan 71	C-H,C-P	—	1	—	—	1	1	1	1	4250 GT6
		Black 71	C-H,C-P	—	1	—	—	1	1	1	1	4250 GX9
		Gold 71	C-H,C-P	—	1	—	—	1	1	1	1	4250 GY6
		Gray 71	C-H,C-P	—	1	—	—	1	1	1	1	4250 GA6
	Inner	71	Y	—	1	—	—	—	1	—	—	2985 653
	Outer	71	Y	—	1	—	—	—	1	—	—	2985 118
23-06-13	ARM, Glove Box Door Check		B,J	—	1	1	1	—	—	—	—	2984 038
	Hge.	70	R,W	1	1	1	1	1	—	1	1	2984 726
			P,D	1	1	1	1	1	1	1	1	2927 296
		71	C	—	1	—	—	1	1	1	1	2985 642
		71	Y	—	1	—	—	—	1	—	—	2985 638
	ARM, Glove Box Check	71	R,W	—	1	—	1	1	—	1	1	2985 742
23-06-14	BUMPER, Inst. Pnl. to Glove Box Door		V,L	—	2	—	2	2	—	—	—	2080 201
			B,J	—	2	2	2	—	—	—	—	2218 683
			R,W	2	2	2	2	2	—	2	2	729 152
			P,D	2	2	2	2	2	2	2	2	729 152
		70	C,Y	—	2	2	—	2	2	2	2	1707 384
	to Upr. Glove Box Attach.	71	C	—	2	—	—	2	2	2	2	729 152
	to Inst. Pnl. Bezel Attach.	71	Y	—	2	—	—	—	2	—	—	1707 384
	BUMPER, Glove Box Door Hge. Stop		V,L	—	2	—	2	2	—	—	—	2822 617
		70	C,Y	—	2	2	—	2	2	2	2	2927 803
		71	Y	—	2	—	—	—	2	—	—	2927 803
	BUMPER, Glove Box Door Check Arm		B,J	—	1	1	1	—	—	—	—	1943 547
			R,W,P,D	1	1	1	1	1	1	1	1	1943 547
23-06-15	LATCH, Glove Box Lock Cylinder	70	All	1	1	1	1	1	1	1	1	2999 806
		71	V,L,B,J	—	1	1	1	1	—	—	—	2999 806
		71	P,D	1	1	—	1	1	1	1	1	2999 806
		71	R,W,C,Y	—	1	—	1	1	1	1	1	3508 886
	CATCH, Glove Box Door Lock		V,L	—	1	—	1	1	—	—	—	2984 853
			B,J	—	1	1	1	—	—	—	—	2984 283
	Except R-M, R-S, W-M	70	R,W	1	1	1	—	1	—	1	1	2984 645
	w/Rallye Inst. Pnl.	70	R-M,R-S	1	1	1	—	—	—	—	—	2984 660
	w/Rallye Inst. Pnl.	70	W-M	1	1	—	—	—	—	—	—	2984 660
	w/Rallye Inst. Pnl.	70	W-S	—	1	1	—	—	—	—	—	2984 660
	w/Rallye Inst. Pnl.	70	W	—	—	—	1	—	—	—	—	2984 660
		71	R,W	—	1	—	1	1	—	1	1	2985 267
			P,D	1	1	1	1	1	1	1	1	2984 464
		70	C,Y	—	1	1	—	1	1	1	1	2984 854
		71	C	—	1	—	—	1	1	1	1	2985 099
	Use After Feb. 1, 1971	71	C	—	1	—	—	1	1	1	1	= 2985 980
	w/Slots on Ends	71	Y	—	1	—	—	—	1	—	—	2985 852

CARLINES	J - Challenger	V - Valiant	R - Belvedere - Satellite	P - Plymouth	C - Chrysler
	B - Barracuda	L - Dart	W - Coronet - Charger	D - Dodge	Y - Imperial

NUMERALS INDICATE:	21 - 2 DR. SED.	27 - CONV. CPE.	41 - 4 DR. SED.	45 - 6 PASS. STA. WGN.
	23 - 2 DR. H.T.	29 - FAST BACK	43 - 4 DR. H.T.	46 - 9 PASS. STA. WGN.

AR Indicates use as required.
\# Indicates parts not listed in any previous parts book

Numerals in parentheses ( ) refer to notes.
★ Indicates change or addition.

Printed in U.S.A.
January 1972

Right and left part numbers are on same line, first number is right, second number is left.

CODE	PART NAME		MODEL CODES	SEE BOTTOM NOTE 21	23	27	29	41	43	45	46	PART NUMBER
23-06-0	**GLOVE BOX AND DOOR Cont'd.**											
23-06-15	LATCH Cont'd.											
	W/Longer Slot on Ends, After Dec. 1, 1970	71	Y	—	1	—	—	—	1	—	—	= 2985 992
	W/Looped Ends, After March 1, 1971	71	Y	—	1	—	—	—	1	—	—	= 3590 142
	S/NUT	70	V,L,R,W	1	1	1	1	1	—	1	1	6027 449
	S/NUT	70	P,D,C,Y	1	1	1	1	1	1	1	1	6027 449
	SCREW	70	V,L,R,W	2	2	2	2	2	—	2	2	9420 813
	SCREW	70	P,D,C,Y	2	2	2	2	2	2	2	2	9420 813
	SCREW	70	B,J	—	2	2	2	—	—	—	—	9416 049
23-06-17	FINISH PLATE, Inst. Pnl. Glove Box Door		V-L	—	—	—	1	1	—	—	—	2984 467
		71	V-H	—	1	—	—	—	—	—	—	2984 467
		71	L-L	—	—	—	1	—	—	—	—	2984 467
	Wood Grain Specs.	71	V-L	—	—	—	1	1	—	—	—	= 2985 982
		71	V-H	—	1	—	—	—	—	—	—	= 2985 982
		71	L-L	—	—	—	1	—	—	—	—	= 2985 982
			L-H	—	1	—	—	1	—	—	—	2984 465
	Wood Grain Specs.	71	L-H	—	1	—	—	1	—	—	—	= 2985 983
			V-S,L-M	—	1	—	1	—	—	—	—	2984 228
23-06-21	HINGE, Glove Box Door		V,L	—	1	—	1	1	—	—	—	2889 452
			B,J	—	1	1	1	—	—	—	—	2984 034
		70	R,W	1	1	1	1	1	—	1	1	2984 327
		71	R,W	—	1	—	1	1	—	1	1	2985 763
			P,D	1	1	1	1	1	1	1	1	2927 437
		70	C,Y	—	2	2	—	2	2	2	2	2984 849
		71	C	—	2	—	—	2	2	2	2	2985 100
		71	Y	—	2	—	—	—	2	—	—	2984 849
23-06-22	SPRING, Glove Box Door Hge. Pivot		V,L	—	2	—	2	2	—	—	—	2889 457
	SPRING, Glove Box Door Hinge	70	L,C,Y,	—	1	1	—	1	1	1	1	2984 545
		71	V,L,Y	—	1	—	1	1	1	—	—	2984 545
23-06-28	CYLINDER, Glove Box Door w/o Lock		V,L,B	—	1	—	1	1	—	—	—	3548 263
	CYLINDER and KEY PACKAGE, Glove Box Lock	70	All	1	1	1	1	1	1	1	1	2999 464
		71	V,L,B,J	—	1	1	1	1	—	—	—	2999 464
		71	P,D	1	1	—	1	1	1	1	1	2999 464
		71	R,W,C,Y	1	1	—	1	1	1	1	1	3508 887
	Lock CANADA	70	All	1	1	1	1	1	1	1	1	2999 464
	CANADA	71	D-H	—	—	—	—	—	—	1	1	2999 464
	w/Deck Lid Release Knob	70	R-T,W-T	—	—	—	—	1	—	—	—	2999 464
	w/Deck Lid Release Knob	71	R-T, W-T	—	—	—	—	1	—	—	—	3508 887
	w/Deck Lid Release Knob		P-T,D-T	—	—	—	—	1	—	—	—	2999 464
23-06-35	SPACER, Inst. Pnl. Glove Box Door Hge. Attaching		C,Y	—	2	2	—	2	2	2	2	2984 835
	SPACER, Inst. Pnl. Glove Box Door Hinge Stop	71	C	—	1	—	—	1	1	1	1	2985 961
23-06-46	CABLE, Glove Box Door		V,L	—	1	—	1	1	—	—	—	2927 281
	SCREW		V,L	—	1	—	1	1	—	—	—	9414 711
23-06-53	NAME PLATE, Glove Box Door "Dart Custom"		L-H	—	1	—	—	1	—	—	—	2984 863
	"New Yorker"	70	C-H	—	1	—	—	1	1	—	—	2927 781
	"Town and Country"	70	C	—	—	—	—	—	—	1	1	2927 744
	"Crown"	70	Y-L	—	1	—	—	—	1	—	—	2927 739
	"Le Baron"		Y-M	—	1	—	—	—	1	—	—	2927 738
	MEDALLION, Glove Box Door	71	C-H, C-P	—	1	—	—	1	1	1	1	3416 662
23-06-54	NUT, Glove Box Door Name Plate Attach.	70	L-H	—	2	—	—	2	—	—	—	1839 995

CARLINES J - Challenger, B - Barracuda, V - Valiant, L - Dart, R - Belvedere - Satallite, W - Coronet - Charger, P - Plymouth, D - Dodge, C - Chrysler, Y - Imperial

NUMERALS INDICATE: 21 - 2 DR. SED., 23 - 2 DR. H.T., 27 - CONV. CPE., 29 - FAST BACK, 41 - 4 DR. SED., 43 - 4 DR. H.T., 45 - 6 PASS. STA. WGN., 46 - 9 PASS. STA. WGN.

AR Indicates use as required.
\# Indicates parts not listed in any previous parts book
Numerals in parentheses ( ) refer to notes.
★ Indicates change or addition.

Printed in U.S.A.
January 1972

Right and left part numbers are on same line, first number is right, second number is left.

CODE	PART NAME		MODEL CODES	SEE BOTTOM NOTE 21	23	27	29	41	43	45	46	PART NUMBER
23-06-0	**GLOVE BOX AND DOOR Cont'd.**											
23-06-55	BEZEL, Inst. Pnl. Glove Box Door Lock,	Blue 70	V,L	—	1	—	1	1	—	—	—	4202 FB7
		Red 70	V,L	—	1	—	1	1	—	—	—	4202 FE5
		Green 70	V,L	—	1	—	1	1	—	—	—	4202 FF8
		Tan 70	V,L	—	1	—	1	1	—	—	—	4202 FT4
		Black 70	V,L	—	1	—	1	1	—	—	—	4202 FX9
		Blue 71	V,L	—	1	—	1	1	—	—	—	4202 GB7
		Green 71	V,L	—	1	—	1	1	—	—	—	4202 GF7
		Tan 71	V,L	—	1	—	1	1	—	—	—	4202 GT6
		Black 71	V,L	—	1	—	1	1	—	—	—	4202 FX9
		Gold 71	V,L	—	1	—	1	1	—	—	—	4202 GY6
	SCREW		V,L	—	2	—	2	2	—	—	—	9421 776
23-08-0	**BUMPERS AND STRIKERS**											
23-08-12	BUMPER, Door		V,L	—	—	—	4	—	—	—	—	3440 744
	Except V Fastback		All	AR	AR	AR	AR	AR	AR	AR	AR	2255 231
		71	V,L,R,W	—	AR	—	AR	AR	AR	AR	AR	3581 892
		71	B,J	—	AR	AR	AR	—	—	—	—	3581 892
	WEDGE, Door	Body Half	All	—	—	2	—	—	—	—	—	2520 004
	STRIKER, Frt. Door Sliding Wedge		All	—	—	2	—	—	—	—	—	989 513
23-08-54	SPACER, Door Latch Striker	Thick 70	R,W	AR	AR	AR	AR	AR	—	AR	AR	2862 554
		Thin 70	R,W	AR	AR	AR	AR	AR	—	AR	AR	2862 555
	WASHER, Door Latch Striker		All	AR	AR	AR	AR	AR	AR	AR	AR	6026 361
23-08-60	STRIKER, Door Latch	Frt.	V,L,B,J	—	2	2	2	2	—	—	—	3454 485
		Frt. 70	R,W	1	1	1	1	1	—	1	1	2862 426-7
		Frt. 71	R,W	—	2	—	2	—	—	—	—	3454 485
		Frt. 71	R,W	—	—	—	—	2	—	2	2	3454 484
		Frt.	P,D,C,Y	2	2	2	2	—	—	—	—	3454 485
		Frt.	P,D,C,Y	—	—	—	—	2	2	2	2	3454 484
		Rear	V,L	—	—	—	—	—	—	—	—	3454 485
		Rear 70	R,W	—	—	—	—	1	—	1	1	2862 426-7
		Rear 71	R,W	—	—	—	—	2	—	2	2	3454 485
		Rear	P,D,C,Y	—	—	—	—	2	2	2	2	3454 485
23-08-75	TAPPED PLATE, Door Lock Striker on Qtr. Pnl.	70	R,W	2	2	2	2	2	—	2	2	2218 956
	TAPPED PLATE, Center Pillar Frt. Door Lock Striker	70	R,W	—	—	—	—	2	—	2	2	2218 956
		71	R,W	—	—	—	—	1	—	1	1	3439 514
			P,D,C,Y	—	—	—	—	2	2	2	2	2893 939
	TAPPED PLATE, Body Lock Pillar Lock Striker		P,D,C,Y	2	2	2	2	2	2	2	2	2893 939
23-09-0	**GLASS CHANNELS**											
23-09-9	FRAME, Qtr. Wdo. Glass Lwr.	w/CAPS	V-H,L	—	1	—	—	—	—	—	—	2841 170-1
		w/CAPS 70	R,W	—	1	—	1	—	—	—	—	2840 944-5
			P	—	—	—	1	—	—	—	—	2965 980-1
		70	P,D,C,Y	—	1	1	—	—	—	—	—	2901 570-1
		71	P,D,C,Y	—	1	—	—	—	—	—	—	3445 800-1
	GUIDE, Qtr. Wdo. Glass Frame Slide	70	P	2	—	—	—	—	—	—	—	2902 578
23-09-27	CAP, Qtr. Wdo. Glass Lwr. Frame Reg. Roller Slot	Frt.	V-H,L	—	4	—	—	—	—	—	—	2218 301
		Rear	V-H,L	—	4	—	—	—	—	—	—	2218 301

CARLINES: J - Challenger, B - Barracuda, V - Valiant, L - Dart, R - Belvedere - Satellite, W - Coronet - Charger, P - Plymouth, D - Dodge, C - Chrysler, Y - Imperial

NUMERALS INDICATE: 21 - 2 DR. SED., 23 - 2 DR. H.T., 27 - CONV. CPE., 29 - FAST BACK, 41 - 4 DR. SED., 43 - 4 DR. H.T., 45 - 6 PASS. STA. WGN., 46 - 9 PASS. STA. WGN.

AR *Indicates use as required.*
\# Indicates parts not listed in any previous parts book
Numerals in parentheses ( ) refer to notes.
★ Indicates change or addition.

Printed in U.S.A.
January 1972

Right and left part numbers are on same line, first number is right, second number is left.

CODE	PART NAME		MODEL CODES	SEE BOTTOM NOTE 21	23	27	29	41	43	45	46	PART NUMBER
23-09-0	**GLASS CHANNELS Cont'd.**											
23-09-27	CAP Cont'd.											
		70	R,W	—	4	4	4	—	—	—	—	2218 301
23-09-46	TAPPING PLATE, Frt. Door Glass Run Rear Channel Upr. Brkt.		P,D,C,Y	2	2	2	2	—	2	—	—	2860 488
23-09-47	SUPPORT, w/NUT, Frt. Door Glass Lwr. Rear Channel		V-H,L	—	1	—	—	—	—	—	—	2811 962-3
		70	R,W	1	1	1	1	—	—	—	—	2811 962-3
	SUPPORT, w/NUT, Frt. Door Inside Pnl. to Rear Channel Lwr. to Inside Pnl.		P,D,C,Y	2	2	2	2	—	—	—	—	3440 590
23-09-51	CHANNEL, w/NUT, Frt. Door Glass Run Rear		V,L	—	—	—	—	1	—	—	—	2811 158-9
	CHANNEL, w/STABILIZER, Door Wdo. Glass		V,L	—	—	—	1	—	—	—	—	2895 968-9
	After Nov. 1, 1970	71	V,L	—	—	—	1	—	—	—	—	= 3582 028-9
		71	R,W	—	1	—	1	—	—	—	—	3499 248-9
	After Nov. 1, 1970	71	R,W	—	1	—	1	—	—	—	—	= 3582 038-9
		71	R,W	—	—	—	—	1	—	1	1	= 3582 034-5
	CHANNEL, Frt. Door Glass Run Rear Prime	70	R,W	—	—	—	—	1	—	1	1	2570 718-9
	CHANNEL, w/BRKT., Frt. Door Glass Run Rear		V-H,L	—	1	—	—	—	—	—	—	3440 472-3
	Comp.	70	R,W	1	—	—	—	—	—	—	—	3419 134-5
	Comp.	70	R,W	—	—	1	—	—	—	—	—	3419 136-7
	Comp.	70	R,W	—	1	—	1	—	—	—	—	3419 138-9
	Comp.	70	P,D,C	1	—	1	—	—	—	—	—	3440 710-1
	Rear, Comp.		P,D,C,Y	1	1	—	1	—	—	—	—	2895 392-3
	Rear, Comp.		P,D,C,Y	—	—	—	—	—	1	—	—	3440 714-5
	Use After June 1, 1971, Rear Comp.	71	P,D,C,Y	—	—	—	—	—	1	—	—	= 3582 496-7
	CHANNEL and RUN, Frt. Door Upr. Frame Extension	71	R,W	—	—	—	—	1	—	1	1	3581 680-1
23-09-52	BRACKET, w/GUIDE, Frt. Door Glass Lift		V,L	—	2	—	—	2	—	—	—	2664 256
	w/o Pwr. Wdo.	70	R,W	2	2	2	2	2	—	2	2	2664 256
	w/Pwr. Wdo.	70	R,W	—	1	1	1	—	—	—	—	2588 718-9
	RIVET	70	All	AR	AR	AR	AR	AR	AR	AR	AR	6023 546
	CHANNEL, Frt. Door Glass Lift		B,J	—	2	2	2	—	—	—	—	2895 722
		70	P,D,C,Y	2	—	2	—	2	2	2	2	2893 528
		71	C-H, Y	—	—	—	—	—	2	—	—	2893 528
			P,D,C,Y	2	2	—	2	—	—	—	—	2895 036
		71	P,D,C,Y	—	—	—	—	2	2	2	2	= 3581 424
23-09-53	SPACER, Qtr. Wdo. Glass to Qtr. Wdo. Glass Lwr. Frame		V-H,L	—	4	—	—	—	—	—	—	2216 544
			R,W	—	4	—	4	—	—	—	—	2216 544
			P,D,C,Y	—	4	4	4	—	—	—	—	2216 544
	SPACER, Frt. Door Stab Plate to Glass	70	V	—	—	—	8	—	—	—	—	3499 225
	BUSHING, Frt. Door Glass Lift Fastener to Stabilizer	71	V,L	—	—	—	8	—	—	—	—	3581 597
		71	B,J	—	2	2	—	—	—	—	—	3581 597
		71	R,W	—	—	—	—	6	—	6	6	3581 597
		71	P,D,C,Y	4	4	—	4	4	4	4	4	3581 597
	BUSHING, Rear Door Glass to Lift Channel	71	R,W	—	—	—	—	4	—	4	4	★ 3581 597
		71	P,D,C,Y	—	—	—	—	4	4	4	4	3581 597
23-09-54	GASKET, Frt. Door Glass Lift Brkt.		V	—	2	—	—	2	—	—	—	2217 351
			L	—	2	—	2	2	—	—	—	2217 351
	Manual, w/o Pwr. Wdo.	70	R,W	2	2	2	2	2	—	2	2	2217 351
	Elect., w/Pwr. Wdo.	70	R,W	—	2	2	2	—	—	—	—	2520 463
	GASKET, Frt. Door Glass Stab.	71	R,W	—	16	—	16	—	—	—	—	3581 798

CARLINES	J - Challenger B - Barracuda	V - Valiant L - Dart	R - Belvedere - Satallite W - Coronet - Charger	P - Plymouth D - Dodge	C - Chrysler Y - Imperial
NUMERALS INDICATE:	21 - 2 DR. SED. 23 - 2 DR. H.T.	27 - CONV. CPE. 29 - FAST BACK	41 - 4 DR. SED. 43 - 4 DR. H.T.	45 - 6 PASS. STA. WGN. 46 - 9 PASS. STA. WGN.	

AR Indicates use as required.
\# Indicates parts not listed in any previous parts book
Numerals in parentheses ( ) refer to notes.
★ Indicates change or addition.

Printed in U.S.A.
January 1972

Right and left part numbers are on same line, first number is right, second number is left.

CODE	PART NAME		MODEL CODES	SEE BOTTOM NOTE 21	23	27	29	41	43	45	46	PART NUMBER
23-09-0	**GLASS CHANNELS Cont'd.**											
23-09-54	GASKET Cont'd.											
	GASKET, Rear Door Wdo. Frt. Glass Lift Brkt.		V,L	—	—	—	—	2	—	—	—	2217 351
		70	R,W	—	—	—	—	2	—	2	2	2217 351
23-09-56	CHANNEL, w/LWR. BRACKET, Rear Door Glass Division Attaching		V,L	—	—	—	—	1	—	—	—	2663 572-3
	w/Deck Lid Release Knob Division, Manual	70										
		70	R,W	—	—	—	—	1	—	—	—	2811 420-1
		70	R,W	—	—	—	—	—	—	1	1	2588 598-9
23-09-58	BRACKET, w/GUIDE, Rear Door Wdo. Frt. Glass Lift		V,L	—	—	—	—	2	—	—	—	2664 256
		70	R,W	—	—	—	—	2	—	2	2	2664 256
	CHANNEL, Rear Door Wdo. Glass Lift	71	R,W	—	—	—	—	2	—	2	2	3440 540
	RIVET	70	All	—	—	—	—	AR	AR	AR	AR	6023 546
	CHANNEL, Rear Door Glass Lift		P,D,C,Y	—	—	—	—	2	2	2	2	2894 366
23-09-61	GROMMET, Qtr. Wdo. Glass to Qtr. Wdo. Glass Lwr. Frame		V-H,L	—	8	—	—	—	—	—	—	2216 546
		70	R,W	—	8	—	8	—	—	—	—	2216 546
			P,D,C,Y	—	8	8	8	—	—	—	—	2216 546
23-09-63	SEAL, Rear Door Rear Glass Division Channel	70	V,L,R,W	—	—	—	—	2	—	2	2	2860 324
		71	V,L	—	—	—	—	2	—	—	—	2860 324
23-09-64	FRAME, Tailgate Glass Lwr.	70	R,W	—	—	—	—	—	—	1	1	2860 103
			P,D,C	—	—	—	—	—	—	2	2	3440 800
	FRAME, W/CHANNEL, Tailgate Glass Lwr.	71	R,W	—	—	—	—	—	—	2	2	3581 172
23-09-65	BRACKET, W/NUT Tailgate Glass Run Channel, Lwr.		P,D,C	—	—	—	—	—	—	2	2	2895 136
23-09-67	CHANNEL, Qtr. Tailgate Glass Run Ret. Inner and Outer	70	R,W	—	—	—	—	—	—	1	1	2860 336-7
	CHANNEL, w/BRKT., Tailgate Glass Run Lwr., Comp.	70	R,W	—	—	—	—	—	—	1	1	2860 814-5
		71	R,W	—	—	—	—	—	—	1	1	3440 246-7
	CHANNEL, w/BRKT., Tailgate Glass Run Lwr.		P,D,C	—	—	—	—	—	—	1	1	2933 930-1
23-10-0	**DOOR CHECK**											
23-10-1	ARM, Frt. Door Lwr. Hge. Check		P,D,C,Y	2	2	2	2	2	2	2	2	2862 602
23-10-9	SPACER, Frt. Door Lwr. Hge. Check Arm		P,D,C,Y	4	4	4	4	4	4	4	4	2520 013
23-10-18	SPRING, Frt. Door Lwr. Hge. Check Arm Tension		P,D,C,Y	2	2	2	2	2	2	2	2	2520 009
	SPRING, Door Lwr. Hge. Frt. Door, Door Half	71	R,W	—	2	—	2	2	—	2	2	3548 380
	Frt. Door, Door Half After Type	71	R,W	—	2	—	2	2	—	2	2	= 3586 386
	Rear Door, Door Half (Also See Code 23-15-14)	71	R,W	—	—	—	—	2	—	2	2	3454 813
23-11-0	**DOORS**											
23-11-1	SHELL, Frt. Door	70	V	—	—	—	1	—	—	—	—	3417 596-7
		71	V,L	—	—	—	1	—	—	—	—	3482 894-5
			V,L	—	—	—	—	1	—	—	—	2859 500-1
		70	L	—	1	—	—	—	—	—	—	2934 474-5
		71	V-H,L	—	1	—	—	—	—	—	—	3482 890-1
		70	B	—	1	1	—	—	—	—	—	2934 748-9
		71	B	—	1	1	—	—	—	—	—	3482 958-9
		70	J	—	1	1	1	—	—	—	—	2934 780-1

CARLINES J - Challenger, B - Barracuda, V - Valiant, L - Dart, R - Belvedere - Satallite, W - Coronet - Charger, P - Plymouth, D - Dodge, C - Chrysler, Y - Imperial

NUMERALS INDICATE: 21 - 2 DR. SED., 23 - 2 DR. H.T., 27 - CONV. CPE., 29 - FAST BACK, 41 - 4 DR. SED., 43 - 4 DR. H.T., 45 - 6 PASS. STA. WGN., 46 - 9 PASS. STA. WGN.

AR Indicates use as required.
\# Indicates parts not listed in any previous parts book
Numerals in parentheses ( ) refer to notes.
★ Indicates change or addition.

Printed in U.S.A.
January 1972

Right and left part numbers are on same line, first number is right, second number is left.

CODE	PART NAME		MODEL CODES	SEE BOTTOM NOTE 21	23	27	29	41	43	45	46	PART NUMBER
23-11-0	**DOORS Cont'd.**											
23-11-1	SHELL Cont'd.											
		Rt. 71	J	—	1	1	—	—	—	—	—	3482 674
		Lt. 71	J	—	1	1	—	—	—	—	—	3482 673
		70	R,W	1	1	1	—	—	—	—	—	2934 462-3
		71	R	—	1	—	—	—	—	—	—	3482 068-9
		70	R,W	—	—	—	—	1	—	1	1	2859 056-7
		71	R	—	—	—	—	1	—	1	1	3482 062-3
	Use After March 1, 1971	71	R	—	—	—	—	1	—	1	1	= 3611 902-3
		70	W	—	—	—	1	—	—	—	—	3417 740-1
	Except W-S	71	W	—	1	—	1	—	—	—	—	3482 050-1
		71	W-S	—	1	—	—	—	—	—	—	3482 048-9
		71	W	—	—	—	—	1	—	1	1	3482 056-7
	Use After March 1, 1971	71	W	—	—	—	—	1	—	1	1	= 3611 900-1
		70	P	1	1	1	1	—	—	—	—	2859 644-5
		71	P	1	1	—	1	—	—	—	—	3482 690-1
		70	P	—	—	—	—	1	—	1	1	2859 628-9
		71	P	—	—	—	—	1	—	1	1	3482 978-9
	W/O Mirror Holes	Lt. 71	P	—	—	—	—	1	—	1	1	= 3611 927
		70	P	—	—	—	—	—	1	—	—	2859 636-7
		71	P	—	—	—	—	—	1	—	—	3482 714-5
		70	D	—	1	1	—	—	—	—	—	3417 384-5
		71	D	—	1	—	—	—	—	—	—	3482 694-5
		70	D	—	—	—	—	1	—	1	1	2859 656-7
		71	D	—	—	—	—	1	—	1	1	3482 706-7
		70	D	—	—	—	—	—	1	—	—	3417 320-1
		71	D	—	—	—	—	—	1	—	—	3482 718-9
		70	C,Y	—	1	1	—	—	—	—	—	3417 396-7
		71	C,Y	—	1	—	—	—	—	—	—	3482 698-9
		70	C	—	—	—	—	1	—	1	1	3417 388-9
		71	C	—	—	—	—	1	—	1	1	3482 710-1
		70	C,Y	—	—	—	—	—	1	—	—	3417 392-3
		71	C,Y	—	—	—	—	—	1	—	—	3482 722-3
23-11-3	SHELL, Rear Door		V	—	—	—	—	1	—	—	—	2859 470-1
			L	—	—	—	—	1	—	—	—	2859 474-5
		70	R	—	—	—	—	1	—	—	—	3417 070-1
		71	R	—	—	—	—	1	—	—	—	3482 350-1
	Use After March 1, 1971	71	R	—	—	—	—	1	—	—	—	= 3611 904-5
		70	W	—	—	—	—	1	—	—	—	2859 080-1
		71	W	—	—	—	—	1	—	—	—	3482 360-1
	Use After March 1, 1971	71	W	—	—	—	—	1	—	—	—	= 3611 908-9
		70	R,W	—	—	—	—	—	—	1	1	2859 094-5
		71	R	—	—	—	—	—	—	1	1	3482 356-7
	Use After March 1, 1971	71	R	—	—	—	—	—	—	1	1	= 3611 906-7
		71	W	—	—	—	—	—	—	1	1	3482 366-7
	Use After March 1, 1971	71	W	—	—	—	—	—	—	1	1	= 3611 910-1
		70	P	—	—	—	—	1	—	—	—	2859 700-1
		71	P	—	—	—	—	1	—	—	—	3482 752-3
		70	P	—	—	—	—	—	1	—	—	2859 708-9
		71	P	—	—	—	—	—	1	—	—	3482 772-3
		70	P	—	—	—	—	—	—	1	1	2859 716-7
		71	P	—	—	—	—	—	—	1	1	3482 790-1
		70	D	—	—	—	—	1	—	—	—	2859 722-3
		71	D	—	—	—	—	1	—	—	—	3482 756-7
		70	D	—	—	—	—	—	1	—	—	3417 440-1
		71	D	—	—	—	—	—	1	—	—	3482 782-3
		70	D	—	—	—	—	—	—	1	1	2859 738-9
		71	D	—	—	—	—	—	—	1	1	3482 786-7
		70	C	—	—	—	—	1	—	—	—	3417 360-1

CARLINES J - Challenger, B - Barracuda, V - Valiant, L - Dart, R - Belvedere - Satallite, W - Coronet - Charger, P - Plymouth, D - Dodge, C - Chrysler, Y - Imperial

NUMERALS INDICATE: 21 - 2 DR. SED., 23 - 2 DR. H.T., 27 - CONV. CPE., 29 - FAST BACK, 41 - 4 DR. SED., 43 - 4 DR. H.T., 45 - 6 PASS. STA. WGN., 46 - 9 PASS. STA. WGN.

AR Indicates use as required.
\# Indicates parts not listed in any previous parts book
Numerals in parentheses ( ) refer to notes.
★ Indicates change or addition.

Printed in U.S.A.
January 1972

Right and left part numbers are on same line, first number is right, second number is left.

CODE	PART NAME		MODEL CODES	SEE BOTTOM NOTE 21	23	27	29	41	43	45	46	PART NUMBER
23-11-0	**DOORS Cont'd.**											
23-11-3	SHELL Cont'd.											
		71	C	—	—	—	—	1	—	—	—	3482 764-5
		70	C	—	—	—	—	—	—	1	1	2859 760-1
		71	C	—	—	—	—	—	—	1	1	3482 760-1
		70	C,Y	—	—	—	—	—	1	—	—	3417 262-3
		71	C,Y	—	—	—	—	—	1	—	—	3482 768-9
23-11-9	BRACE and NUT, Frt. Door Inside Pnl. Access Hole		V,L	—	—	—	2	—	—	—	—	3440 400
23-11-10	OVERLAY, Door Outside	70	R-P	—	—	—	—	—	—	4	4	3444 813
		71	R-P	—	—	—	—	—	—	AR	AR	3569 975
		70	W-P	—	—	—	—	—	—	4	4	3444 834
		71	W-P	—	—	—	—	—	—	AR	AR	3569 975
		70	P-H	—	—	—	—	—	—	4	4	3444 846
		71	P-H	—	—	—	—	—	—	4	4	3569 975
		70	D-H	—	—	—	—	—	—	4	4	3444 860
		71	D-H	—	—	—	—	—	—	4	4	3569 975
		70	C-P	—	—	—	—	—	—	4	4	3444 874
		71	C-P	—	—	—	—	—	—	4	4	3569 975
23-11-11	PLUG, Rear Door Inside Pnl. Outside Handle Attach. Access. Hole	71	C	—	—	—	—	—	—	2	2	3581 135
			P,D	—	—	—	—	2	2	2	2	2811 953
			C	—	—	—	—	—	—	2	2	2811 953
23-11-12	SPACER and P/NUT, Frt. Door Inside Pnl. Supt. to Outside Pnl. Belt Reinf.											
		70	P,D,C	—	—	1	—	—	—	—	—	2894 798-9
	W/Pwr. Vent Wdo.	71	C-H, Y	—	—	—	—	—	1	—	—	2894 798-9
23-11-14	RETAINER, Rear Door Outside Pnl. Belt Reinf. Nut		P,D,C,Y	—	—	—	—	—	4	—	—	2894 782
23-11-15	DECAL, Door Outside (1)											
23-11-16	BUMPER, Door Inside Pnl. Brace Down Stop	70	V	—	—	—	2	—	—	—	—	2861 828
23-11-17	VALVE, Door Drain Slot Rubber	70	P,D,C,Y	AR	AR	AR	AR	AR	AR	AR	AR	2894 542
23-11-21	NAME PLATE, Door Outside Ornament (1)											
	ORNAMENT, Door Outside (1)											
	MEDALLION, Door Outside (1)											
	NAME PLATE, Door Outside (1)											
23-11-29	BRACKET, Frt. Door Inside Pnl. to Trim Pnl.	71	R,W	—	AR	—	AR	—	—	—	—	3499 270
		Rear 71	W	—	2	—	2	—	—	—	—	3499 268

NOTE (1) See Exterior Moulding Illustrations in Illustration Catalog

23-12-0 FRONT SECTION

23-12-23	PLATE, Vehicle Identification		V,L,B,J	—	1	1	1	1	—	—	—	2927 369
			R,W	1	1	1	1	1	—	1	1	2927 369
			P,D,C,Y	1	1	1	1	1	1	1	1	2927 369

23-14-0 DOOR REGULATORS AND REMOTE CONTROL HANDLES

23-14-10	HANDLE, Door Outside											
		Frt. 70	V,L	—	1	—	1	1	—	—	—	3454 338-9
		Frt. 71	V,L	—	1	—	1	1	—	—	—	3548 036-7
			B	—	1	1	—	—	—	—	—	2999 816-7
			J	—	1	1	1	—	—	—	—	2999 882-3
		Frt. 70	R,W	1	1	1	1	1	—	1	1	3454 390-1
		Frt. 71	R,W	—	2	—	2	—	—	—	—	= 3621 757
		Frt. 71	R,W	—	—	—	—	2	—	2	2	= 3621 755
		Frt. 70	P,D	1	1	1	1	1	1	1	1	2945 670-1
		Frt. 71	P,D	1	1	—	1	1	1	1	1	3454 396-7

CARLINES J - Challenger, B - Barracuda, V - Valiant, L - Dart, R - Belvedere - Satallite, W - Coronet - Charger, P - Plymouth, D - Dodge, C - Chrysler, Y - Imperial

NUMERALS INDICATE: 21 - 2 DR. SED., 23 - 2 DR. H.T., 27 - CONV. CPE., 29 - FAST BACK, 41 - 4 DR. SED., 43 - 4 DR. H.T., 45 - 6 PASS. STA. WGN., 46 - 9 PASS. STA. WGN.

AR Indicates use as required.
\# Indicates parts not listed in any previous parts book
Numerals in parentheses ( ) refer to notes.
★ Indicates change or addition.

Printed in U.S.A.
January 1972

Right and left part numbers are on same line, first number is right, second number is left.

23-14-0 DOOR REGULATORS AND REMOTE CONTROL HANDLES Cont'd.

23-14-10 HANDLE Cont'd.

CODE	PART NAME		MODEL CODES	SEE BOTTOM NOTE 21	23	27	29	41	43	45	46	PART NUMBER
		Frt. 70	C,Y	—	1	1	—	1	1	1	1	2935 236-7
		Frt. 71	C,Y	—	1	—	—	1	1	1	1	3454 398-9
		Rear	V,L	—	—	—	—	1	—	—	—	3454 394-5
		Rear, Rt. 70	R,W	—	—	—	—	1	—	1	1	3454 390
		Rear, Lt. 70	R,W	—	—	—	—	1	—	1	1	3454 393
		Rear 71	R,W	—	—	—	—	2	—	2	2	= 3621 756
		Rear 70	P	—	—	—	—	1	1	1	1	2945 670-1
		Rear 70	D	—	—	—	—	1	1	1	1	2486 704-5
		Rear 70	C,Y	—	—	—	—	1	1	—	—	2945 600-1
		Rear 70	C	—	—	—	—	—	—	1	1	2935 236-7
		Rear 71	P,D	—	—	—	—	1	1	1	1	3454 396-7
		Rear 71	C,Y	—	—	—	—	1	1	—	—	3454 400-1
		Rear 71	C	—	—	—	—	—	—	1	1	3454 398-9
23-14-15	RETAINER, Frt. Door Pnl. Pull Handle	70	C-M,C-H	—	4	4	—	4	4	—	—	3415 263
	Approx. 1" x 31/32", Up to Type	71	P-H	—	4	—	4	4	4	4	4	3415 263
		71	P-M	—	—	—	—	—	—	4	4	3415 263
		71	P-P	—	4	—	—	—	—	—	—	3415 263
		71	C-S	—	4	—	—	—	4	—	—	3415 263
	Approx. 1 9/16" x 1/2", w/7/32" hole after Type	71	P-H	—	4	—	4	4	4	4	4	3509 860
		71	P-M	—	—	—	—	—	—	4	4	3509 860
		71	P-P	—	4	—	—	—	—	—	—	3509 860
		71	C-S	—	4	—	—	—	—	—	—	3509 860
	RETAINER, Rear Door Pull Handle											
	Approx. 1" x 31/32", Up to Type	71	P-H	—	—	—	—	4	4	4	4	3415 263
		71	P-M	—	—	—	—	—	—	4	4	3415 263
		71	C-S	—	—	—	—	—	4	—	—	3415 263
	Approx. 1 9/16" x 1/2", w/7/32" hole After Type	71	P-H	—	—	—	—	4	4	4	4	3509 860
		71	P-M	—	—	—	—	—	—	4	4	3509 860
		71	C-S	—	—	—	—	—	4	—	—	3509 860
	RETAINER, Door Pull Handle											
	Up to Type	71	C-H	—	AR	—	—	AR	AR	—	—	3415 267
	After Type	71	C-H	—	AR	—	—	AR	AR	—	—	3509 860
		70	Y	—	AR	—	—	—	AR	—	—	3415 267
	BRACKET, Door Pull Handle Attach.	70	C-M,C-H	—	2	2	—	2	2	—	—	2879 732
		70	Y	—	2	—	—	—	2	—	—	2879 732
	BRACKET, Rear Door Pull Handle,	Frt.	C-M,C-H	—	—	—	—	2	2	—	—	2879 732
		70	Y	—	—	—	—	—	2	—	—	2879 732
	BRACKET, Door Pull Handle	Frt. 71	P-H	—	2	—	2	2	2	2	2	2879 732
		71	P-M	—	—	—	—	—	—	2	2	2879 732
		71	P-P	—	2	—	—	—	—	—	—	2879 732
		71	C-S, C-H	—	2	—	—	2	2	—	—	2879 732
	BRACKET, Frt. Door Pull Handle											
		Mtg. Frt. 71	Y	—	2	—	—	—	2	—	—	3509 448
		Mtg. Rear 71	Y	—	2	—	—	—	2	—	—	3416 794
	BRACKET, Rear Door Pull Handle	71	R-T, W-T	—	—	—	—	2	—	—	—	3509 564
		Frt. 71	C-S, C-H	—	—	—	—	2	2	—	—	2879 732
23-14-16	HANDLE, W/MLDG., Frt. Door Trim Pnl.	71	Y	—	1	—	—	—	1	—	—	3509 490-1
	HANDLE, W/Frt. MLDG., Rear Door Trim Pnl.	71	Y	—	—	—	—	—	1	—	—	3509 492-3
23-14-18	HANDLE, Door Manual Wdo. Reg.		V,L	—	AR	—	AR	AR	—	—	—	2862 167
			B,J	—	AR	AR	AR	—	—	—	—	2862 167
			R,W	AR	AR	AR	AR	AR	—	AR	AR	2862 167

CARLINES	J - Challenger B - Barracuda	V - Valiant L - Dart	R - Belvedere - Satallite W - Coronet - Charger	P - Plymouth D - Dodge	C - Chrysler Y - Imperial
NUMERALS INDICATE:	21 - 2 DR. SED. 23 - 2 DR. H.T.	27 - CONV. CPE. 29 - FAST BACK	41 - 4 DR. SED. 43 - 4 DR. H.T.	45 - 6 PASS. STA. WGN. 46 - 9 PASS. STA. WGN.	

AR Indicates use as required.
\# Indicates parts not listed in any previous parts book

Numerals in parentheses ( ) refer to notes.
★ Indicates change or addition.

Printed in U.S.A.
January 1972

Right and left part numbers are on same line, first number is right, second number is left.

23-14-0 DOOR REGULATORS AND REMOTE CONTROL HANDLES Cont'd.

CODE	PART NAME		MODEL CODES	SEE BOTTOM NOTE 21	23	27	29	41	43	45	46	PART NUMBER
23-14-18	HANDLE Cont'd.											
			P,D,C	AR	AR	AR	AR	AR	AR	AR	AR	2999 644
	SCREW		All	AR	AR	AR	AR	AR	AR	AR	AR	6027 221
23-14-24	SPACER, Door Manual Wdo. Reg. Handle		V,L	—	AR	—	AR	AR	—	—	—	2935 231
		70	B,J	—	2	2	2	—	—	—	—	2935 231
		71	J	—	2	2	—	—	—	—	—	2935 232
		70	R,W	AR	AR	AR	AR	AR	—	AR	AR	2935 231
		Frt. 71	R,W	—	2	—	2	2	—	2	2	2935 231
		Rear 71	R,W	—	—	—	—	2	—	2	2	2935 232
		70	P,D-L,D-M	AR	AR	AR	AR	AR	AR	AR	AR	2945 511
		Frt. 71	P,D	2	2	—	2	2	2	2	2	2945 511
		70	C-M,C-H	—	AR	AR	—	AR	AR	—	—	2945 511
		Frt. 71	C-S, C-H	—	2	—	—	2	2	—	—	2945 511
	Except D-M	Rear 71	P,D	—	—	—	—	2	2	2	2	2945 511
		Rear 71	C-S, C-H	—	—	—	—	2	2	—	—	2945 511
		70	D-H,C-E,C-L	—	AR	AR	—	AR	AR	AR	AR	2945 512
		71	D-H	—	AR	—	—	AR	AR	AR	AR	2945 512
	Except C-S, C-H	71	C	—	AR	—	—	AR	AR	AR	AR	2945 512
		70	D-P	—	AR	—	—	AR	AR	—	—	2945 512
		70	C-P	—	—	—	—	—	—	AR	AR	2945 512
	SPACER, Qtr. Wdo. Manual Reg. Handle		J	—	2	2	2	—	—	—	—	2935 231
			B	—	2	2	—	—	—	—	—	2999 870
		70	R,W	—	2	2	2	—	—	—	—	2935 231
		70	P,D-L,D-M	2	2	2	2	—	—	—	—	2945 511
		71	P,D	—	2	—	2	—	—	—	—	2945 511
		70	C-M,C-H	—	2	2	—	—	—	—	—	2945 511
		71	C-S, C-H	—	2	—	—	—	—	—	—	2945 511
			D-H,C-E,C-L	—	2	2	—	—	—	—	—	2945 512
		70	D-P	—	2	—	—	—	—	—	—	2945 512
	SPACER, Frt. Door Manual Vent Wing Reg.	70	P,D,C,Y	2	—	2	—	2	2	2	2	2945 511
	BEZEL, Qtr. Manual Wdo. Reg. Handle		V-H,L	—	2	—	—	—	—	—	—	2935 232
		71	R,W	—	2	—	2	—	—	—	—	2935 232
23-14-27	HANDLE, Door Latch Remote Control		B	—	1	1	—	—	—	—	—	3454 842-3
			J	—	1	1	1	—	—	—	—	3454 170-1
		70	V,L,R,W	AR	AR	AR	AR	AR	—	AR	AR	2935 214-5
		71	V,L	—	AR	—	AR	AR	—	—	—	2935 214-5
		71	R,W	—	1	—	1	—	—	—	—	3508 916-7
		71	R,W	—	—	—	—	AR	—	AR	AR	2935 214-5
			P,D,C	AR	AR	AR	AR	AR	AR	AR	AR	2935 294-5
		70	Y	—	AR	—	—	—	AR	—	—	2999 524-5
	COVER And HANDLE, Door Latch Remote Control	71	Y	—	AR	—	—	—	AR	—	—	3586 128-9
	SCREW		All	AR	AR	AR	AR	AR	AR	AR	AR	6027 201
23-14-32	CAP and INSERT, Door Pull Handle											
	Chrome	70	C-M,C-H	—	AR	AR	—	AR	AR	—	—	3415 264
	Cross Fire Walnut	70	Y	—	AR	—	—	—	AR	—	—	3415 465
	Chrome	71	P,C-S	—	AR	—	AR	AR	AR	AR	AR	3415 264
	American Walnut	71	P	—	AR	—	AR	AR	AR	AR	AR	≠3509 898
	Rosewood	71	C-S	—	AR	—	—	—	AR	—	—	3416 598
	Cross Fire Walnut	71	C-S	—	AR	—	—	—	AR	—	—	3415 465
	Rosewood	71	C-S	—	AR	—	—	—	AR	—	—	3509 861
		71	Y	—	AR	—	—	—	AR	—	—	3416 796
23-14-35	PAD, Rear Door Inside Pull Handle to Door		R-T,W-T	—	—	—	—	2	—	—	—	2664 346
23-14-53	HANDLE PACKAGE, Frt. Door Vent Wing		V,L	—	1	—	—	1	—	—	—	2809 940-1
		70	R,W	—	—	1	—	1	—	1	1	2809 940-1

CARLINES: J - Challenger, B - Barracuda, V - Valiant, L - Dart, R - Belvedere - Satallite, W - Coronet - Charger, P - Plymouth, D - Dodge, C - Chrysler, Y - Imperial

NUMERALS INDICATE: 21 - 2 DR. SED., 23 - 2 DR. H.T., 27 - CONV. CPE., 29 - FAST BACK, 41 - 4 DR. SED., 43 - 4 DR. H.T., 45 - 6 PASS. STA. WGN., 46 - 9 PASS. STA. WGN.

AR Indicates use as required.
# Indicates parts not listed in any previous parts book
Numerals in parentheses ( ) refer to notes.
★ Indicates change or addition.

Printed in U.S.A.
January 1972

Right and left part numbers are on same line, first number is right, second number is left.

CODE	PART NAME	MODEL CODES		SEE BOTTOM NOTE 21	23	27	29	41	43	45	46	PART NUMBER
23-14-0	**DOOR REGULATORS AND REMOTE CONTROL HANDLES Cont'd.**											
23-14-53	HANDLE PACKAGE Cont'd.											
		70	R,W	1	1	—	1	—	—	—	—	2933 204-5
	HANDLE, Frt. Door Manual Vent Wing Regulator	70	P,D,C,Y	2	—	2	—	2	2	2	2	2999 646
	SCREW	70	P,D,C,Y	2	—	2	—	2	2	2	2	6027 221
23-14-70	HANDLE, Qtr. Window Glass	70	R,W	2	—	—	—	—	—	—	—	2842 538
			V,L	—	—	—	2	—	—	—	—	2842 538
	HANDLE PACKAGE, Qtr. Wdo. Glass Latch	70	V,R,W	1	—	—	1	—	—	—	—	3620 495
	(Also see Code 23-64-181)											
23-14-79	HANDLE, Qtr. Manual Wdo. Regulator		V,L	—	2	—	—	—	—	—	—	2862 167
			B,J	—	2	2	—	—	—	—	—	2862 167
			R,W	2	2	2	2	—	—	—	—	2862 167
		70	P,D,C	2	2	2	2	—	—	—	—	2999 644
		71	P,D,C	—	2	—	2	—	—	—	—	2999 644
	SCREW		All	2	2	2	2	—	—	—	—	6027 221
23-14-80	RETAINER, Qtr. Wdo. Glass Handle to Link		V,L	—	—	—	2	—	—	—	—	2841 446
		70	R,W	2	—	—	—	—	—	—	—	2841 446
23-14-81	BUMPER, Qtr. Wdo. Glass Handle	70	R,W	2	—	—	—	—	—	—	—	2842 537
		71	V,L	—	—	—	2	—	—	—	—	2842 537
23-14-82	SPRING, Qtr. Wdo. Reg. Handle		J	—	2	2	2	—	—	—	—	#3509 056
23-14-147	GASKET or SEAL, Door Outside Handle		B,J	—	2	2	2	—	—	—	—	2999 813
	Frt., Frt.	70	V,L,R,W	2	2	2	2	2	—	2	2	2945 808
	Frt., Frt.	71	V,L	—	2	—	2	2	—	—	—	3454 334
	Frt., Frt.	70	P,D,C,Y	2	2	2	2	2	2	2	2	2945 808
	Frt., Frt.	71	P,D,C,Y	2	2	—	2	2	2	2	2	3454 334
	Frt., Rear	70	V,L,R,W	2	2	2	2	2	—	2	2	2935 182
	Frt., Rear	71	V,L	—	2	—	2	2	—	—	—	3454 335
	Frt., Rear	70	P,D	2	2	2	2	2	2	2	2	2935 182
	Frt., Rear	71	P,D	2	2	—	2	2	2	2	2	3454 335
	Frt., Rear		C,Y	—	2	2	—	2	2	2	2	3454 336
	Rear, Frt.	70	V,L,R,W	—	—	—	—	2	—	2	2	2945 808
	Rear, Frt.	71	V,L	—	—	—	—	2	—	—	—	3454 334
	Rear, Frt.	70	P,D,C,Y	—	—	—	—	2	2	2	2	2945 808
	Rear, Frt.	71	P,D,C,Y	—	—	—	—	2	2	2	2	3454 334
	Rear, Rear	70	V,L,R,W	—	—	—	—	2	—	2	2	2935 182
	Rear, Rear	71	V,L	—	—	—	—	2	—	—	—	3454 335
	Rear, Rear	70	P,D	—	—	—	—	2	2	2	2	2935 182
	Rear, Rear	71	P,D	—	—	—	—	2	2	2	2	3454 335
	Rear, Rear		C,Y	—	—	—	—	2	2	2	2	3454 336
	GASKET, Door Outside Handle Base	71	R,W	—	AR	—	AR	AR	—	AR	AR	3454 572
	SEAL, Door Outside Handle Push Button	70	V,L,R,W	AR	AR	AR	AR	AR	—	AR	AR	2216 279
		70	P,D,C,Y	AR	AR	AR	AR	AR	AR	AR	AR	2216 279
	SPACER, Frt. Door Outside Handle		B,J	—	1	1	1	—	—	—	—	3454 304-5
23-14-153	BUMPER, Frt. Door Outside Handle		B,J	—	2	2	2	—	—	—	—	1707 384
	BUMPER, Door Outside Handle Push Button	71	V,L	—	AR	—	AR	AR	—	—	—	2216 279
		71	P,D,C,Y	AR	AR	—	AR	AR	AR	AR	AR	2216 279
23-15-0	**DOOR HINGE**											
23-15-1	HINGE, Door Upr.											
	Frt.		V,L	—	1	—	1	1	—	—	—	2583 796-7
	Frt.		B,J	—	1	1	1	—	—	—	—	2999 368-9
	Frt.	70	R,W	2	2	2	2	2	—	2	2	2298 649
	Frt.	71	R,W	—	2	—	2	2	—	2	2	3454 510
	Frt.		P,D,C,Y	1	1	1	1	1	1	1	1	2862 606-7

CARLINES J - Challenger, B - Barracuda, V - Valiant, L - Dart, R - Belvedere - Satallite, W - Coronet - Charger, P - Plymouth, D - Dodge, C - Chrysler, Y - Imperial

NUMERALS INDICATE: 21 - 2 DR. SED., 23 - 2 DR. H.T., 27 - CONV. CPE., 29 - FAST BACK, 41 - 4 DR. SED., 43 - 4 DR. H.T., 45 - 6 PASS. STA. WGN., 46 - 9 PASS. STA. WGN.

AR Indicates use as required.
# Indicates parts not listed in any previous parts book
Numerals in parentheses ( ) refer to notes.
★ Indicates change or addition.

Printed in U.S.A.
January 1972

Right and left part numbers are on same line, first number is right, second number is left.

23-15-0 DOOR HINGE Cont'd.

CODE	PART NAME		MODEL CODES	SEE BOTTOM NOTE 21	23	27	29	41	43	45	46	PART NUMBER
23-15-1	HINGE Cont'd.											
	Rear		V,L	—	—	—	—	1	—	—	—	2765 790-1
	Rear	70	R,W	—	—	—	—	1	—	1	1	2862 236-7
	Rear	71	R,W	—	—	—	—	1	—	1	1	3454 504-5
	Rear		P,D,C,Y	—	—	—	—	1	1	1	1	2935 382-3
23-15-3	HINGE, Door Lwr.											
	Frt., w/Integral Check	70	V,L,R,W	1	1	1	1	1	—	1	1	2583 578-9
	Frt., W/Integral Check	71	V,L	—	1	—	1	1	—	—	—	2583 578-9
	Frt.		B,J	—	1	1	1	—	—	—	—	2999 370-1
	Lwr.	71	R,W	—	1	—	1	1	—	1	1	3454 512-3
	Frt.		P,D,C,Y	1	1	1	1	1	1	1	1	2862 598-9
	Rear, w/Integral Check		V,L	—	—	—	—	1	—	—	—	2583 002-3
	Rear, w/Integral Check	70	R,W	—	—	—	—	1	—	1	1	3508 970-1
	Rear	71	R,W	—	—	—	—	1	—	1	1	3454 506-7
	Rear		P,D,C,Y	—	—	—	—	1	1	1	1	2945 038-9
23-15-6	ROLLER, Frt. Door Lwr. Hge. Check Arm	Frt. Lwr.	P,D,C,Y	2	2	2	2	2	2	2	2	2520 014
23-15-9	PIN, Frt. Door Upr. Hinge		V,L,B,J	—	2	2	2	2	—	—	—	6023 576
		70	R,W	2	2	2	2	2	—	2	2	6023 576
		2.75" 71	R,W	AR	AR	—	AR	AR	—	AR	AR	6029 042
			P,D,C,Y	2	2	2	2	2	2	2	2	6024 871
	PIN, Frt. Door Lwr. Hinge		V,L,B,J	—	2	2	2	2	—	—	—	6022 891
		70	R,W	2	2	2	2	2	—	2	2	6022 891
		1.90" 71	R,W	AR	AR	—	AR	AR	AR	AR	—	6029 041
			P,D,C,Y	2	2	2	2	2	2	2	2	6024 871
	PIN, Frt. Door Lwr. Hinge Check Arm		P,D,C,Y	2	2	2	2	2	2	2	2	6024 871
	PIN, Rear Door Upr. Hinge		All	—	—	—	—	2	2	2	2	6006 043
	PIN, Frt. Door Lwr. Hge. Check Arm Roller		P,D,C,Y	2	2	2	2	2	2	2	2	457 009
23-15-13	TAPPING PLATE, Body Frt. Pillar Door Upr. and Lwr. Hge.		P,D,C,Y	4	4	4	4	4	4	4	4	2893 940
	TAPPING PLATE, Frt. Door Hge. Pillar											
	Lwr.	71	R,W	—	2	—	2	2	—	2	2	3439 709
	Upr.	71	R,W	—	2	—	2	2	—	2	2	2893 958
	Upr. and Lwr.		P,D,C,Y	4	4	4	4	4	4	4	4	2491 290
	TAPPING PLATE, Rear Door Hge. Pillar											
	Upr.	70	V,L,R,W	—	—	—	—	2	—	2	2	2491 448
	Upr.	71	V,L	—	—	—	—	2	—	—	—	2491 448
	Upr.	71	R,W	—	—	—	—	2	—	2	2	2893 958
	Lwr.	71	R,W	—	—	—	—	2	—	2	2	3439 709
	Upr.		P,D,C,Y	—	—	—	—	2	2	2	2	2893 958
	Lwr.		P;D,C,Y	—	—	—	—	1	1	1	1	2894 368-9
	TAPPING PLATE, Body Ctr. Pillar											
	Lwr., Hge.	70	V,L,R,W	—	—	—	—	2	—	2	2	2254 270
	Lwr. Hge.	71	V,L	—	—	—	—	2	—	—	—	2254 270
	Lwr., Hge.		P,D,C,Y	—	—	—	—	2	2	2	2	2893 178
	Upr., Hge.		P,D,C,Y	—	—	—	—	2	2	2	2	2893 176
	TAPPING PLATE, Center Pillar Rear Door Upr. Hge. Reinf.	71	R,W	—	—	—	—	2	—	2	2	3439 508
	REINFORCEMENT, Frt. Door Upr. Hge. Door Half	71	R,W	—	2	—	2	2	—	2	2	3454 790
23-15-14	SPRING, Frt. Door Lwr. Hge. Check Arm Tension		P,D,C,Y	2	2	2	2	2	2	2	2	2520 009
	SPRING, Door Lwr. Hge. Rear Door, Door Half (Also see Code 23-10-18)		R,W	—	—	—	—	2	—	2	2	3454 813
23-15-30	BAR, Door Lwr. Hge. Torsion Frt.		V,L,B,J	—	2	2	2	2	—	—	—	2583 568

CARLINES: J - Challenger, B - Barracuda, V - Valiant, L - Dart, R - Belvedere - Satallite, W - Coronet - Charger, P - Plymouth, D - Dodge, C - Chrysler, Y - Imperial

NUMERALS INDICATE: 21 - 2 DR. SED., 23 - 2 DR. H.T., 27 - CONV. CPE., 29 - FAST BACK, 41 - 4 DR. SED., 43 - 4 DR. H.T., 45 - 6 PASS. STA. WGN., 46 - 9 PASS. STA. WGN.

AR Indicates use as required.
\# Indicates parts not listed in any previous parts book
Numerals in parentheses ( ) refer to notes.
★ Indicates change or addition.

Printed in U.S.A.
January 1972

Right and left part numbers are on same line, first number is right, second number is left.

CODE	PART NAME			MODEL CODES	SEE BOTTOM NOTE 21	23	27	29	41	43	45	46	PART NUMBER
23-15-0	**DOOR HINGE Cont'd.**												
23-15-30	BAR Cont'd.												
	Frt.		70	R,W	2	2	2	2	2	—	2	2	2583 568
	Rear		70	V,L,R,W	—	—	—	—	2	—	2	2	2583 468
	Rear		71	V,L	—	—	—	—	2	—	—	—	2583 468
23-15-38	BUSHING, Door Hinge												
	Frt., Upr.			V,L,B,J	—	4	4	4	4	—	—	—	2486 468
	Frt., Upr.			P,D,C,Y	4	4	4	4	4	4	4	4	2486 468
	Rear, Lwr.			P,D,C,Y	—	—	—	—	4	4	4	4	2486 468
	Frt., Lwr., Body Half			P,D,C,Y	4	4	4	4	4	4	4	4	2486 468
	Rear, Upr., Body Half		70	V,L,R,W	—	—	—	—	4	—	4	4	2486 468
	Rear, Upr., Body Half		71	V,L	—	—	—	—	4	—	—	—	2486 468
	Rear, Upr., Body Half			P,D,C,Y	—	—	—	—	4	4	4	4	2486 468
23-17-0	**LOCK CYLINDER AND KEYS**												
	NOTE: For Glove Box see Code 23-06-28												
23-17-1	KEY BLANK, Ign. and Doors	CANADA		All	2	2	2	2	2	2	2	2	3454 327
	Deck Lid, Glove Box, Console	CANADA		All	2	2	2	2	2	2	—	—	2999 041
	Tailgate	CANADA		All	—	—	—	—	—	—	2	2	3454 327
23-17-2	CYLINDER and KEY PACKAGE, Door and Ignition			V,L,R,W	1	1	1	1	1	—	—	—	2999 444
				P,D,C,Y	1	1	1	1	1	1	—	—	2999 444
				B,J	—	1	1	1	—	—	—	—	3454 265
	CYLINDER and KEY PACKAGE, Door, Ign., Glove Box and Deck Lid		70	R,W	1	1	1	—	1	—	—	—	3419 951
			71	R	—	1	—	—	—	—	—	—	3508 903
			71	W	—	1	—	1	—	—	—	—	3508 906
			71	R,W	—	—	—	—	1	—	—	—	3508 905
				P	1	1	1	1	1	1	—	—	3454 284
				D	—	1	1	—	1	1	—	—	3419 951
	Use After April 1, 1971		71	D-L	—	—	—	—	1	—	—	—	=3670 055
	Use After April 1, 1971		71	D-E,D-S	—	—	—	—	1	—	—	—	=3670 055
	CYLINDER and KEY PACKAGE, Door and Ignition Use w/Tilt Strg.			R,W,P,D	1	1	1	1	1	1	—	—	3548 955
	Use w/Tilt-Telescopic Strg.			C,Y	—	1	1	—	1	1	—	—	3548 955
	CYLINDER and KEY PACKAGE, Door, Ign., and Tailgate, Manual		70	R,W	—	—	—	—	—	—	1	—	2999 445
	W/O Tilt Strg. Wheel		71	R,W	—	—	—	—	—	—	1	1	3508 876
	W/Tilt Strg. Wheel		71	R,W	—	—	—	—	—	—	1	1	3548 957
		Electric	70	R,W	—	—	—	—	—	—	1	1	2999 446
	W/Tilt Strg. Wheel	Electric	71	R,W	—	—	—	—	—	—	1	1	3548 958
	w/o Tilt and Telescopic Strg.			P,D,C	—	—	—	—	—	—	1	1	2999 446
	w/Tilt and Telescopic Strg.			P,D,C	—	—	—	—	—	—	1	1	3548 956
	CYLINDER and KEY PACKAGE, Door Ign., Glove Box and Tailgate		70	R,W	—	—	—	—	—	—	1	—	2999 463
			71	R,W	—	—	—	—	—	—	1	1	3508 910
				P,D	—	—	—	—	—	—	1	1	3454 853
	CYLINDER and KEY PACKAGE, Door and Ign., Manual Tailgate Lock	Export	71	V	—	—	—	—	—	—	1	—	=3548 218
	CYLINDER and KEY PACKAGE, Door and Ing., Elect. Tailgate Lock	Export	71	V	—	—	—	—	—	—	1	1	=3548 220
23-17-4	CYLINDER and KEY PACKAGE, Deck Lid and Glove Box			V	—	—	—	1	1	—	—	—	3419 954
			71	L	—	—	—	1	—	—	—	—	3419 954
				V-H,L	—	1	—	—	1	—	—	—	3419 955
				B	—	1	1	—	—	—	—	—	3419 952

CARLINES: J - Challenger, B - Barracuda, V - Valiant, L - Dart, R - Belvedere - Satallite, W - Coronet - Charger, P - Plymouth, D - Dodge, C - Chrysler, Y - Imperial

NUMERALS INDICATE: 21 - 2 DR. SED., 23 - 2 DR. H.T., 27 - CONV. CPE., 29 - FAST BACK, 41 - 4 DR. SED., 43 - 4 DR. H.T., 45 - 6 PASS. STA. WGN., 46 - 9 PASS. STA. WGN.

AR Indicates use as required.
# Indicates parts not listed in any previous parts book
Numerals in parentheses ( ) refer to notes.
★ Indicates change or addition.

Printed in U.S.A.
January 1972

Right and left part numbers are on same line, first number is right, second number is left.

23-17-0 LOCK CYLINDER AND KEYS Cont'd.

CODE	PART NAME		MODEL CODES	SEE BOTTOM NOTE 21	23	27	29	41	43	45	46	PART NUMBER
23-17-4	CYLINDER and KEY PACKAGE Cont'd.											
			J	—	1	1	1	—	—	—	—	3419 955
		70	R,W	1	1	1	—	1	—	—	—	3419 955
		70	W	—	—	—	1	—	—	—	—	3419 955
		71	R,W	—	1	—	1	1	—	—	—	3620 494
			P	1	1	1	1	1	1	—	—	3419 953
			D	—	1	1	—	1	1	—	—	3419 955
	Use After April 1, 1971	71	D	—	1	—	—	1	1	—	—	= 3670 050
		70	C,Y	—	1	1	—	1	1	—	—	3419 954
		71	C	—	1	—	—	1	1	—	—	= 3586 096
		71	Y	—	1	—	—	—	1	—	—	3508 862
	CYLINDER and KEY PACKAGE, Deck Lid Lock w/Manual Handle	70	R-T	—	—	—	—	1	—	—	—	3419 075
	w/Manual Handle	70	W-T	—	—	—	—	1	—	—	—	3419 958
		71	R-T, W-T	—	—	—	—	1	—	—	—	3419 075
	w/Manual Handle		P-T	—	—	—	—	1	—	—	—	3454 494
	w/Manual Handle		D-T	—	—	—	—	1	—	—	—	3419 958
	Use After April 1, 1971 Comp., w/Manual Handle	71	D-T	—	—	—	—	1	—	—	—	= 3670 051
23-17-9	GASKET, Deck Lid Lock Cylinder		L	—	1	—	1	1	—	—	—	2583 860
			V	—	1	—	1	1	—	—	—	3508 471
			B,J	—	1	1	1	—	—	—	—	3508 471
		Medal	B-P	—	1	1	—	—	—	—	—	3454 772
		70	R,W	1	1	1	1	1	—	—	—	3508 471
		71	R,W	—	1	—	1	1	—	—	—	2583 860
			P,D,C,Y	1	1	1	1	1	1	—	—	2583 860
23-17-10	RETAINER, Deck Lid Lock Cylinder		V	—	—	—	1	1	—	—	—	2583 377
		71	L	—	—	—	1	—	—	—	—	2583 377
			V-H,L	—	1	—	—	1	—	—	—	2999 212
			B,J	—	1	1	1	—	—	—	—	2583 377
			R,W	1	1	1	1	1	—	—	—	2583 377
			P,D,C,Y	1	1	1	1	1	1	—	—	2583 377
23-17-11	SPRING, Deck Lid Lock Cylinder Medal Ret.		Y	—	1	—	—	1	—	—	—	2945 400
23-17-19	MEDALLION, Deck Lid Lock Cyl. (1)											
23-17-27	GASKET, Frt. Door Latch Lock Key Cylinder	70	P,D,C,Y	2	2	2	—	—	—	—	—	2583 860
	GASKET, Frt. Door Lock Cylinder to Latch	70	C,Y	—	2	2	—	2	2	2	2	2583 860
	GASKET, Frt. Door Lock Cylinder		V,L,R,W	2	2	2	2	2	—	2	2	2583 860
			P,D,C,Y	2	2	2	2	2	2	2	2	2583 860
	NOTE (1) See Exterior Moulding Illustrations in Illustration Catalog											
23-17-28	RETAINER, Frt. Door Lock Cylinder Attaching		V,L	—	2	—	2	2	—	—	—	2583 377
		70	R,W	2	2	2	2	2	—	2	2	2583 377
		71	R,W	—	2	—	2	2	—	2	2	3548 350-1
			P,D,C,Y	2	2	2	2	2	2	2	2	2583 377
	RETAINER, Frt. Door Lock Cyl. Spacer		B,J	—	2	2	2	—	—	—	—	3548 208
23-17-38	CYLINDER and KEY PACKAGE, Floor Console Lock		B,J	—	1	1	1	—	—	—	—	3454 987
		70	R,W	1	1	1	1	1	—	1	1	3454 986
		70	P,D	—	1	1	1	—	—	—	—	3454 987
		70	C-M	—	—	—	—	—	1	—	—	3454 987
		71	R,W	—	1	—	1	—	—	—	—	3454 987
		71	D-M	—	1	—	—	—	—	—	—	3454 987
		71	C-E, C-H	—	1	—	—	—	—	—	—	3454 987
	Except P-L 2D.H.T.	71	P	—	1	—	1	—	—	—	—	3454 986
		71	P-H	—	—	—	—	—	1	—	—	3454 986

CARLINES	J - Challenger B - Barracuda	V - Valiant L - Dart	R - Belvedere - Satallite W - Coronet - Charger	P - Plymouth D - Dodge	C - Chrysler Y - Imperial
NUMERALS INDICATE:	21 - 2 DR. SED. 23 - 2 DR. H.T.		27 - CONV. CPE. 29 - FAST BACK	41 - 4 DR. SED. 43 - 4 DR. H.T.	45 - 6 PASS. STA. WGN. 46 - 9 PASS. STA. WGN.

AR Indicates use as required.
\# Indicates parts not listed in any previous parts book
Numerals in parentheses ( ) refer to notes.
★ Indicates change or addition.

Printed in U.S.A.
January 1972

Right and left part numbers are on same line, first number is right, second number is left.

CODE	PART NAME		MODEL CODES	SEE BOTTOM NOTE 21	23	27	29	41	43	45	46	PART NUMBER
23-17-0	**LOCK CYLINDER AND KEYS Cont'd.**											
23-17-51	GASKET, Tailgate Door Lock Cylinder											
		Elect.	R,W	—	—	—	—	—	—	1	1	2583 860
			P,D,C	—	—	—	—	—	—	1	1	2583 860
23-17-52	RETAINER, Tailgate Elect. Lock											
	Cylinder Attach.	70	R,W	—	—	—	—	—	—	1	1	2802 644
	Approx. 1 1/8" x 1 5/32"	70	P,D,C	—	—	—	—	—	—	1	1	2999 017
		71	R,W	—	—	—	—	—	—	1	1	2583 377
		71	P,D,C	—	—	—	—	—	—	1	1	2583 377
23-17-72	CYLINDER and KEY PACKAGE, Rear											
	Floor Pan Cover Pnl. Lock		R,W	—	—	—	—	—	—	1	—	2935 916
			P,D,C	—	—	—	—	—	—	1	—	2935 916
	CYLINDER and KEY PACKAGE, 3rd Seat											
	Back Lock		R,W	—	—	—	—	—	—	—	1	2935 916
			P,D,C	—	—	—	—	—	—	—	1	2935 916
	NOTE: Parts Listed Below Not Contained in Pkgs.											
	SCREW and L/WASHER		R,W									
			P,D,C	—	—	—	—	—	—	1	1	6026 336
	NUT		R,W									
			P,D,C	—	—	—	—	—	—	1	1	6025 196
	WASHER		R,W									
			P,D,C	—	—	—	—	—	—	1	1	121 753
	SPRING WASHER		R,W									
			P,D,C	—	—	—	—	—	—	1	1	6025 198
23-17-74	LEVER, Rear Floor Pan Cover Pnl.											
	Lock Cylinder		R,W	—	—	—	—	—	—	1	—	2583 620
			P,D,C	—	—	—	—	—	—	1	—	2520 621
	LEVER, 3rd Seat Back Release											
	Handle Lock Cylinder		R,W	—	—	—	—	—	—	—	1	2583 620
			P,D,C	—	—	—	—	—	—	—	1	2520 621
23-18-0	**DOOR LOCKS AND REMOTE CONTROLS**											
23-18-5	LATCH, Door											
		Frt., Rt. 70	V,L	—	1	—	1	—	—	—	—	3454 138
		Rt. 71	V,L	—	1	—	1	1	—	—	—	3548 710
		Lt. 70	V,L	—	1	—	1	—	—	—	—	2999 735
		Lt. 71	V,L	—	1	—	1	1	—	—	—	3548 709
		Rt. 70	V,L	—	—	—	—	1	—	—	—	3454 138
		Lt. 70	V,L	—	—	—	—	1	—	—	—	2999 737
		70	B,J	—	1	1	1	—	—	—	—	3454 250-1
		Rt. 71	B,J	—	1	1	—	—	—	—	—	3548 716
		Lt. 71	B,J	—	1	1	—	—	—	—	—	3548 715
		Rt. 70	R,W	1	1	1	1	—	—	—	—	2945 780
		Rt. 71	R,W	—	1	—	1	—	—	—	—	3548 558
		Lt. 70	R,W	1	1	1	1	—	—	—	—	2999 759
		Lt. 71	R,W	—	1	—	1	—	—	—	—	3548 565
		Rt. 70	R,W	—	—	—	—	1	—	1	1	2935 004
		Rt. 71	R,W	—	—	—	—	1	—	1	1	3548 558
		Lt. 70	R,W	—	—	—	—	1	—	1	1	2999 761
		Lt. 71	R,W	—	—	—	—	1	—	1	1	3548 565
		Rt. 70	P,D,C,Y	1	1	1	1	—	—	—	—	3454 138
		Rt. 71	P,D,C,Y	1	1	—	1	—	—	—	—	3586 404
		Lt. 70	P,D,C,Y	1	1	1	1	—	—	—	—	2999 735
		Lt. 71	P,D,C,Y	1	1	—	1	—	—	—	—	3586 407
		Rt. 70	P,D,C,Y	—	—	—	—	1	1	1	1	3454 138
		Rt. 71	P,D,C,Y	—	—	—	—	1	1	1	1	3586 404
		Lt. 70	P,D,C,Y	—	—	—	—	1	1	1	1	2999 737
		Lt. 71	P,D,C,Y	—	—	—	—	1	1	1	1	3586 407

CARLINES J - Challenger, B - Barracuda, V - Valiant, L - Dart, R - Belvedere - Satallite, W - Coronet - Charger, P - Plymouth, D - Dodge, C - Chrysler, Y - Imperial

NUMERALS INDICATE: 21 - 2 DR. SED., 23 - 2 DR. H.T., 27 - CONV. CPE., 29 - FAST BACK, 41 - 4 DR. SED., 43 - 4 DR. H.T., 45 - 6 PASS. STA. WGN., 46 - 9 PASS. STA. WGN.

AR Indicates use as required.
\# Indicates parts not listed in any previous parts book
Numerals in parentheses ( ) refer to notes.
★ Indicates change or addition.

Printed in U.S.A.
January 1972

Right and left part numbers are on same line, first number is right, second number is left.

CODE	PART NAME		MODEL CODES	SEE BOTTOM NOTE 21	23	27	29	41	43	45	46	PART NUMBER
23-18-0	**DOOR LOCKS AND REMOTE CONTROLS Cont'd.**											
23-18-5	LATCH Cont'd.											
		Rear 70	V,L	—	—	—	—	1	—	—	—	2765 610-1
		Rear 71	V,L	—	—	—	—	1	—	—	—	3586 168-9
		Rear 70	R,W	—	—	—	—	1	—	1	1	2935 040-1
		Rear 71	R,W	—	—	—	—	1	—	1	1	3548 520-1
		Rear 70	P,D,C,Y	—	—	—	—	1	1	1	1	3454 142-3
		Rear 71	P,D,C,Y	—	—	—	—	1	1	1	1	3586 110-1
23-18-11	LINK, w/SLEEVE, Frt. Door Latch Remote Control	70	V	—	—	—	1	—	—	—	—	3454 060-1
		70	L	—	1	—	—	—	—	—	—	2862 892-3
		71	V,L	—	1	—	1	—	—	—	—	3586 164-5
		70	V,L	—	—	—	—	1	—	—	—	2945 082-3
		71	V,L	—	—	—	—	1	—	—	—	3586 162-3
		70	B,J	—	1	1	1	—	—	—	—	2999 388-9
		71	B,J	—	1	1	—	—	—	—	—	3586 160-1
		70	R,W	2	2	2	2	—	—	—	—	2583 720
		71	R,W	—	1	—	1	—	—	—	—	3548 772-3
		70	R,W	—	—	—	—	2	—	2	2	2583 721
		71	R,W	—	—	—	—	1	—	1	1	3586 668-9
		70	P,D,C	1	1	1	1	—	—	—	—	2935 652-3
		71	P,D,C	1	1	—	1	—	—	—	—	3548 644-5
		70	P,D,C	—	—	—	—	1	1	1	1	2935 656-7
		71	P,D,C	—	—	—	—	1	1	1	1	3586 420-1
		70	Y	—	1	—	—	—	—	—	—	2999 528-9
		71	Y	—	1	—	—	—	—	—	—	3548 650-1
		70	Y	—	—	—	—	—	1	—	—	2999 532-3
		71	Y	—	—	—	—	—	1	—	—	3586 424-5
	LINK, Frt. Door Latch Locking Control W/SLEEVE	70	L	—	1	—	—	—	—	—	—	2945 676
			B,J	—	1	1	1	—	—	—	—	3454 450-1
	LINK, Rear Door Latch Locking Control W/SLEEVE	71	R,W	—	—	—	—	2	—	2	2	3548 390
	LINK, Rear Door Latch Remote Control	70	V,L	—	—	—	—	1	—	—	—	2802 096-7
		71	V,L	—	—	—	—	1	—	—	—	3586 166-7
		70	R,W	—	—	—	—	1	—	1	1	2935 066-7
		71	R,W	—	—	—	—	1	—	1	1	3508 782-3
		70	P,D	—	—	—	—	1	1	1	1	2935 114-5
		71	P,D	—	—	—	—	1	1	1	1	3508 790-1
		70	C	—	—	—	—	—	—	1	1	2935 114-5
		71	C	—	—	—	—	—	—	1	1	3508 790-1
		70	C	—	—	—	—	1	1	—	—	2945 270-1
		71	C	—	—	—	—	1	1	—	—	3508 792-3
		70	Y	—	—	—	—	—	1	—	—	2999 534-5
		71	Y	—	—	—	—	—	1	—	—	3508 794-5
23-18-13	REMOTE CONTROL, Door Latch	70	V,L,R,W	AR	AR	AR	AR	AR	—	AR	AR	2945 578-9
		71	V,L	—	AR	—	AR	AR	—	—	—	2945 578-9
			B	—	1	1	—	—	—	—	—	3454 172-3
			J	—	1	1	1	—	—	—	—	2999 384-5
		71	R,W	—	1	—	1	—	—	—	—	3508 772-3
		71	R,W	—	—	—	—	AR	—	AR	AR	3454 940-1
		70	P,D,C	AR	AR	AR	AR	AR	AR	AR	AR	2945 578-9
		71	P,D	AR	AR	—	AR	AR	AR	AR	AR	3454 940-1
		71	C	—	AR	—	—	AR	AR	AR	AR	3548 974-5
		70	Y	—	AR	—	—	—	AR	—	—	2999 506-7
		71	Y	—	AR	—	—	—	AR	—	—	3548 652-3
23-18-20	LINK, Frt. Door Latch to Outside Handle	70	V,L	—	2	—	2	—	—	—	—	2765 771
		71	V,L	—	2	—	2	—	—	—	—	3508 718
		70	V,L	—	—	—	—	2	—	—	—	2802 114

CARLINES: J - Challenger, B - Barracuda, V - Valiant, L - Dart, R - Belvedere - Satallite, W - Coronet - Charger, P - Plymouth, D - Dodge, C - Chrysler, Y - Imperial

NUMERALS INDICATE: 21 - 2 DR. SED., 23 - 2 DR. H.T., 27 - CONV. CPE., 29 - FAST BACK, 41 - 4 DR. SED., 43 - 4 DR. H.T., 45 - 6 PASS. STA. WGN., 46 - 9 PASS. STA. WGN.

AR Indicates use as required.
\# Indicates parts not listed in any previous parts book
Numerals in parentheses ( ) refer to notes.
★ Indicates change or addition.

Printed in U.S.A.
January 1972

Right and left part numbers are on same line, first number is right, second number is left.

CODE	PART NAME		MODEL CODES	SEE BOTTOM NOTE 21	23	27	29	41	43	45	46	PART NUMBER
23-18-0	**DOOR LOCKS AND REMOTE CONTROLS Cont'd.**											
23-18-20	LINK Cont'd.											
		71	V,L	—	—	—	—	2	—	—	—	3508 720
			B,J	—	1	1	1	—	—	—	—	2999 374-5
		70	R,W	2	2	2	2	2	—	2	2	2583 978
		71	R,W	—	2	—	2	—	—	—	—	3508 714
		71	R,W	—	—	—	—	2	—	2	2	3508 716
		70	P,D	2	2	2	2	—	—	—	—	2935 272
		71	P,D	2	2	—	2	—	—	—	—	3454 532
		70	P,D	—	—	—	—	1	1	1	1	2935 270-1
		71	P,D	—	—	—	—	1	1	1	1	3454 530-1
		70	C,Y	—	2	2	—	—	—	—	—	2935 264
		71	C,Y	—	2	—	—	—	—	—	—	3454 533
		70	C,Y	—	—	—	—	1	1	1	1	2935 262-3
		71	C,Y	—	—	—	—	1	1	1	1	3454 534-5
	LINK, Rear Door Latch to Outside Handle	70	R,W	—	—	—	—	2	—	2	2	2862 301
		71	R,W	—	—	—	—	2	—	2	2	3508 774
			P	—	—	—	—	2	2	2	2	2935 105
			D	—	—	—	—	2	2	2	2	2999 964
			C	—	—	—	—	—	—	2	2	3454 002
			C,Y	—	—	—	—	2	2	—	—	2945 428
23-18-21	SPRING, Rear Door Latch Remote Control Link		P,D,C,Y	—	—	—	—	2	2	2	2	2935 118
	SPRING, Frt. Door Latch Locking Control Link Anti-Rattle	71	P,D,C,Y	2	2	—	2	—	—	—	—	2935 118
	SPRING, Frt. Door Latch Remote Control Link Anti-Rattle	71	P,D,C,Y	2	2	—	2	—	—	—	—	2935 118
23-18-24	SPRING, Rear Door Latch Remote Actuator	70	V,L	—	—	—	—	2	—	—	—	2802 116
		71	R,W	—	—	—	—	2	—	2	2	2802 116
		71	P,D,C,Y	—	—	—	—	2	2	2	2	2802 116
23-18-25	CONTROL, w/LINK, Door Key Cyl. Locking	70	W	—	—	—	1	—	—	—	—	2862 240-1
	CONTROL, w/LINK, Frt. Door Latch Locking		V,L	—	—	—	1	—	—	—	—	3454 086-7
		70	L	—	1	—	—	—	—	—	—	3454 234-5
		71	V-H,L	—	1	—	—	—	—	—	—	3454 086-7
			B	—	1	1	—	—	—	—	—	2999 400-1
			J	—	1	1	1	—	—	—	—	2999 426-7
		70	R,W	1	1	1	—	—	—	—	—	2945 246-7
		70	W	—	—	—	1	—	—	—	—	2945 736-7
		71	R,W	—	1	—	1	—	—	—	—	3548 758-9
			P,D,C,Y	1	1	1	—	—	—	—	—	2945 254-5
	Elect., w/Pwr. Locks, Rt.		P,D,C	1	1	1	1	—	—	—	—	2999 660
	CONTROL, w/LINK, Rear Door Latch Locking		V,L	—	—	—	—	1	—	—	—	2802 104-5
		70	R,W	—	—	—	—	1	—	1	1	2935 062-3
		71	R,W	—	—	—	—	1	—	1	1	3508 776-7
			P,D,C,Y	—	—	—	—	1	1	1	1	2935 674-5
23-18-26	LINK, Door Lock Key Cylinder		V,L	—	1	—	1	—	—	—	—	2765 778-9
			V,L	—	—	—	—	1	—	—	—	2802 106-7
		70	B,J	—	1	1	1	—	—	—	—	2999 404-5
		71	B,J	—	1	1	—	—	—	—	—	3548 690-1
		70	R,W	1	1	1	—	—	—	—	—	2862 210-1
		71	R,W	—	1	—	1	—	—	—	—	3508 818-9
	After Jan. 1, 1971	71	R,W	—	1	—	1	—	—	—	—	= 3670 070-1
		70	R,W	—	—	—	—	1	—	1	1	2583 980-1
		71	R,W	—	—	—	—	1	—	1	1	3508 820-1
			P,D	1	1	1	1	—	—	—	—	2935 456-7
			P,D	—	—	—	—	1	1	1	1	2935 458-9
			C,Y	—	1	1	—	—	—	—	—	2935 460-1
			C,Y	—	—	—	—	1	1	1	1	2935 462-3

CARLINES	J - Challenger	V - Valiant	R - Belvedere - Satallite	P - Plymouth	C - Chrysler
	B - Barracuda	L - Dart	W - Coronet - Charger	D - Dodge	Y - Imperial

NUMERALS INDICATE:	21 - 2 DR. SED.	27 - CONV. CPE.	41 - 4 DR. SED.	45 - 6 PASS. STA. WGN.
	23 - 2 DR. H.T.	29 - FAST BACK	43 - 4 DR. H.T.	46 - 9 PASS. STA. WGN.

AR Indicates use as required.
\# Indicates parts not listed in any previous parts book
Numerals in parentheses ( ) refer to notes.
★ Indicates change or addition.

Printed in U.S.A.
January 1972

Right and left part numbers are on same line, first number is right, second number is left.

CODE	PART NAME		MODEL CODES	SEE BOTTOM NOTE 21	23	27	29	41	43	45	46	PART NUMBER
23-18-0	**DOOR LOCKS AND REMOTE CONTROLS Cont'd.**											
23-18-26	LINK Cont'd.											
	LINK, Frt. Door Latch Locking Control		P,D,C,Y	2	2	2	—	—	—	—	—	2945 258
	LINK, w/SLEEVE, Rear Door Latch Locking Control		P,D	—	—	—	—	2	2	2	2	2935 678
			C	—	—	—	—	—	—	2	2	2935 678
			C,Y	—	—	—	—	2	2	—	—	2945 266
	LINK, w/SLEEVE, Rr. Door Elect. Lock		P,D	—	—	—	—	2	2	2	2	3454 596-7
			C	—	—	—	—	—	—	2	2	3454 596-7
	NOTE: See 23-18-107 For LINK Only-3454 488-9											
	ROD, Frt. Door Latch Locking Control Push	71	V,L	—	—	—	—	1	—	—	—	2862 774-5
		71	V,L	—	2	—	2	—	—	—	—	2945 236-7
		70	R,W	2	2	2	—	—	—	—	—	2945 250
		71	R	—	1	—	—	—	—	—	—	3548 776-7
		71	W	—	1	—	1	—	—	—	—	3548 778-9
		70	W	—	—	—	2	—	—	—	—	2945 734
			R,W	—	—	—	—	1	—	1	1	2862 744-5
	Use Before May 1, 1971	71	R,W	—	—	—	—	1	—	1	1	3454 948-9
	Use After May 1, 1971	71	R,W	—	—	—	—	1	—	1	1	≠4670 628-9
	w/o Pwr. Door Locks		P,D,C,Y	2	2	2	—	—	—	—	—	2935 660
	w/o Pwr. Door Locks		P,D,C,Y	—	—	—	—	1	1	1	1	2935 662-3
	ROD, Rear Door Latch Locking Control Push	71	R,W	—	—	—	—	1	—	1	1	3508 778-9
			P,D,C,Y	—	—	—	—	2	2	2	2	2935 676
	ROD, Frt. Door Elect. Latch Control Push w/Pwr. Door Locks, Lt.		P,D,C	1	1	1	1	—	—	—	—	2999 779
	ROD, Frt. Door Elect. Latch Locking Push w/Pwr. Door Locks, Lt.		P,D,C,Y	—	—	—	—	1	1	1	1	2999 777
	NOTE: See 23-18-125 Push Rod Rt.											
23-18-27	PACKAGE, Door Lock Locking Control Knob Except B,J		All	AR	AR	AR	AR	AR	AR	AR	AR	3419 209
	KNOB, Door Lock Locking Control		B,J	—	2	2	2	—	—	—	—	2999 950
23-18-29	CLIP, Frt. Door Latch Remote Control Link to Latch	70	V,L,R,W	2	2	2	2	2	—	2	2	2520 565
		70	B,J	—	2	2	2	—	—	—	—	2520 565
		71	V,L,B,J	—	1	1	1	1	—	—	—	3454 220-1
		71	R,W	—	1	—	1	1	—	1	1	3454 220-1
		70	P,D,C,Y	—	—	—	—	2	2	2	2	2520 565
	CLIP, Frt. Door Latch Remote Control Link to Inside Pnl.		V,L	—	2	—	2	—	—	—	—	3454 256
			V,L	—	—	—	—	2	—	—	—	2520 697
		70	L	—	2	—	—	—	—	—	—	2935 085
		70	R,W	2	2	2	2	2	—	2	2	2935 085
			P,D,C,Y	2	2	2	2	2	2	2	2	2935 086
	CLIP, Frt. Door Latch Key Cyl. Link		All	2	2	2	2	2	2	2	2	2765 654
	CLIP, Door Latch Remote Control Handle Lever	70	All	AR	AR	AR	AR	AR	AR	AR	AR	2765 985
		71	V,L,B,J	—	AR	AR	AR	AR	—	—	—	2765 985
		Rt. 71	R,W	—	AR	—	AR	AR	—	AR	AR	2945 108
		Lt. 71	R,W	—	AR	—	AR	AR	—	AR	AR	2945 109
		Rt. 71	P,D,C,Y	AR	AR	—	AR	AR	AR	AR	AR	2945 108
		Lt. 71	P,D,C,Y	AR	AR	—	AR	AR	AR	AR	AR	2945 109
	CLIP, Frt. Door Latch Outside Handle Link		V,L	—	4	—	4	4	—	—	—	2802 570
			R,W	4	4	4	4	4	—	4	4	2802 570
			P,D,C,Y	4	4	4	4	4	4	4	4	2802 570
	CLIP, Frt. Door Latch Locking Lever		R,W	2	2	2	2	2	—	2	2	2802 949

CARLINES J - Challenger, B - Barracuda, V - Valiant, L - Dart, R - Belvedere - Satallite, W - Coronet - Charger, P - Plymouth, D - Dodge, C - Chrysler, Y - Imperial

NUMERALS INDICATE: 21 - 2 DR. SED., 23 - 2 DR. H.T., 27 - CONV. CPE., 29 - FAST BACK, 41 - 4 DR. SED., 43 - 4 DR. H.T., 45 - 6 PASS. STA. WGN., 46 - 9 PASS. STA. WGN.

AR Indicates use as required.
\# Indicates parts not listed in any previous parts book
Numerals in parentheses ( ) refer to notes.
★ Indicates change or addition.

Printed in U.S.A.
January 1972

Right and left part numbers are on same line, first number is right, second number is left.

CODE	PART NAME	MODEL CODES	SEE BOTTOM NOTE 21	23	27	29	41	43	45	46	PART NUMBER
23-18-0	**DOOR LOCKS AND REMOTE CONTROLS Cont'd.**										
23-18-29	CLIP Cont'd.										
	CLIP, Frt. Door Latch Locking Push Rod Retaining										
	Black and Natural	V,L	—	1	—	1	1	—	—	—	2945 108-9
	Red, Rt.	V,L	—	—	—	—	1	—	—	—	3454 220
	Green, Lt.	V,L	—	—	—	—	1	—	—	—	3454 221
	Black and Natural	B,J	—	1	1	1	—	—	—	—	2945 108-9
	Black and Natural	R,W	1	1	1	1	1	—	1	1	2945 108-9
	Black and Natural	P,D,C,Y	1	1	1	1	1	1	1	1	2945 108-9
	Red, Rt.	P,D,C,Y	—	—	—	—	1	1	1	1	3454 220
	Green, Lt.	P,D,C,Y	—	—	—	—	1	1	1	1	3454 221
	CLIP, Frt. Door Outside Handle										
	Rt.	B,J	—	1	1	1	—	—	—	—	2945 109
	Rt. 71	R,W	—	1	—	1	1	—	1	1	2945 109
	Lt.	B,J	—	1	1	1	—	—	—	—	2945 108
	Lt. 71	R,W	—	1	—	1	1	—	1	1	2945 108
	CLIP, Frt. Door Lock Locking Control										
	Rt.	B,J	—	1	1	1	—	—	—	—	2945 108
	Rt. 71	R,W	—	1	—	1	—	—	—	—	2945 108
	Lt.	V,L	—	1	—	1	—	—	—	—	2945 109
	Lt. 70	B,J	—	1	1	1	—	—	—	—	2945 109
	Lt. 71	J	—	1	1	—	—	—	—	—	2945 109
	Lt. 71	R,W	—	1	—	1	—	—	—	—	2945 109
	Lt.	R,W	—	—	—	—	1	—	1	1	2945 109
	Lt.	P,D,C,Y	1	1	1	1	—	—	—	—	2945 109
	CLIP, Frt. Door Latch Remote Control 70	P,D,C,Y	2	2	2	—	—	—	—	—	2520 565
	CLIP, Frt. Door Elect. Latch Solenoid Link to Lock Locking Lever	P,D,C	1	1	1	1	1	1	1	1	2945 108-9
	CLIP, Frt. Door Elect. Lock Solenoid Link to Latch Up To Type	P,D,C,Y	1	1	1	1	1	1	1	1	2945 108-9
	After Type	P,D,C,Y	1	1	1	1	1	1	1	1	3454 220-1
	CLIP, Rear Door Latch Remote Control Link to Latch	V,L,R,W	—	—	—	—	2	—	2	2	2520 565
	CLIP, Rear Door Latch Locking Lever										
	Rt.	V,L	—	—	—	—	1	—	—	—	2945 109
	Lt.	V,L	—	—	—	—	1	—	—	—	2945 108
		P,D,C,Y	—	—	—	—	2	2	2	2	2765 654
	CLIP, Rear Door Latch Locking Control Link to Inside Pnl.	V,L,R,W	—	—	—	—	2	—	2	2	2935 085
		P,D,C,Y	—	—	—	—	2	2	2	2	2999 185
	CLIP, Rear Door Latch Outside Handle Link	R,W	—	—	—	—	4	—	4	4	2802 570
	CLIP, Rear Door Outside Handle										
	Rt.	R,W	—	—	—	—	1	—	1	1	2945 109
	Lt.	R,W	—	—	—	—	1	—	1	1	2945 108
	CLIP, Rear Door Latch Shift Lever Actuator to Link Retaining	R,W	—	—	—	—	1	—	1	1	2945 108-9
		P,D,C,Y	—	—	—	—	1	1	1	1	2945 108-9
	CLIP, Rear Door Latch Locking Control Push Rod Retaining	P,D,C,Y	—	—	—	—	1	1	1	1	2945 108-9
	CLIP, Rear Door Latch Remote Control Lock	P,D,C,Y	—	—	—	—	4	4	4	4	2802 570
	CLIP, Rear Door Elect. Latch Solenoid Link to Actuator Up to Type	P,D,C,Y	—	—	—	—	1	1	1	1	2945 108-9
	After Type	P,D,C,Y	—	—	—	—	1	1	1	1	3454 220-1
23-18-37	SEAL, Door Latch Remote Control Inside Pnl.	V,L,R,W	AR	AR	AR	AR	AR	—	AR	AR	2802 973
	71	V,L	—	AR	—	AR	AR	—	—	—	2802 973

CARLINES	J - Challenger B - Barracuda	V - Valiant L - Dart	R - Belvedere - Satallite W - Coronet - Charger	P - Plymouth D - Dodge	C - Chrysler Y - Imperial
NUMERALS INDICATE:	21 - 2 DR. SED. 23 - 2 DR. H.T.	27 - CONV. CPE. 29 - FAST BACK	41 - 4 DR. SED. 43 - 4 DR. H.T.	45 - 6 PASS. STA. WGN. 46 - 9 PASS. STA. WGN.	

AR Indicates use as required.
\# Indicates parts not listed in any previous parts book
Numerals in parentheses ( ) refer to notes.
★ Indicates change or addition.

Printed in U.S.A.
January 1972

Right and left part numbers are on same line, first number is right, second number is left.

23-18-0 DOOR LOCKS AND REMOTE CONTROLS Cont'd.

CODE	PART NAME		MODEL CODES	SEE BOTTOM NOTE 21	23	27	29	41	43	45	46	PART NUMBER
23-18-37	SEAL Cont'd.											
	SEAL, Frt. Door Latch Remote Control		Y	—	2	—	—	—	2	—	—	2945 615
	SEAL, Frt. Door Latch Remote Control Air		J	—	2	2	2	—	—	—	—	3508 536-7
		71	R,W	—	AR	—	AR	AR	—	AR	AR	3508 536-7
		71	P,D,C	—	1	—	1	1	1	1	1	3508 002-3
	SEAL, Door Latch Remote Control Air		Y	—	AR	—	—	—	AR	—	—	3508 042-3
23-18-48	BUMPER, Door Latch Remote Control Handle Lever		V,B,L	—	AR	AR	AR	AR	—	—	—	2862 052-3
		70	R,W	AR	AR	AR	AR	AR	—	AR	AR	2862 052-3
		71	R,W	—	—	—	—	AR	—	AR	AR	2862 052-3
	Except C-S	71	P,D,C	AR	AR	—	AR	AR	AR	AR	AR	2862 052-3
		70	P,D,C	AR	AR	AR	AR	AR	AR	AR	AR	2862 052-3
		71	R,W	—	2	—	2	—	—	—	—	2583 391
		71	C-S, Y	—	AR	—	—	—	AR	—	—	2583 391
23-18-49	ESCUTCHEON, Door Latch Locking Control Knob		V,L	—	AR	—	AR	AR	—	—	—	2862 309
	4 Tab Type	70	R,W	AR	AR	AR	—	AR	—	AR	AR	2428 178
	4 Tab Type	70	W-P	—	—	—	2	—	—	—	—	2428 178
	2 Tab Type	70	W	—	—	—	2	—	—	—	—	2583 817
23-18-54	GROMMET, Door Trim Pnl. Lock Knob Clear Plastic	71	R,W	—	AR	—	AR	AR	—	AR	AR	2788 831
			P,D,C	AR	AR	—	AR	AR	AR	AR	AR	2788 831
23-18-70	STRAP, w/NUT, Rear Door Remote Control Rod Anti-Rattle	70	R,W	—	—	—	—	2	—	2	2	2588 635
23-18-101	LEVER, Frt. Door Elect. Lock Sw. Actuating	Rt. 70	P,D,C	—	—	—	—	2	2	2	2	2935 706
23-18-102	SWITCH, Elect. Frt. Door Lock *Remote Button Actuated*		P,D,C	2	2	2	2	2	2	2	2	2661 746
23-18-103	BRACKET and SWITCH, Frt. Door Elect. Lock	Rt. 71	P,D,C,Y	—	—	—	—	1	1	1	1	3586 410
23-18-104	SPRING, Elect. Door Lock Sw. Return		P,D,C	2	2	2	2	2	2	2	2	2661 118
23-18-105	WIRING, Elect. Door Lock	70	P,D,C	1	1	1	1	1	1	1	1	2926 175
	WIRING, Frt. Door Lock Solenoid and Switch	CANADA 70	P,D,C	—	2	2	2	2	2	2	2	2926 700
23-18-106	RELAY, Elect. Door Lock		P,D,C,Y	1	1	1	1	1	1	1	1	2926 386
23-18-107	LINK, Door Elect. Latch Solenoid	Frt.	P,D,C,Y	2	2	2	2	—	—	—	—	2945 646
		Frt.	P,D,C,Y	—	—	—	—	2	2	2	2	2935 326
	Approx. 9 3/4" Long, Up to Type	Rear 70	P,D	—	—	—	—	1	1	1	1	2999 790-1
	Approx. 9 3/4" Long, Up to Type	Rear 70	C	—	—	—	—	—	—	1	1	2999 790-1
	Approx. 10 1/4" Long, After Type, W/O SLEEVE	Rear	P,D	—	—	—	—	1	1	1	1	3454 488-9
	Approx. 10 1/4" Long, After Type, W/O SLEEVE	Rear	C	—	—	—	—	—	—	1	1	3454 488-9
	NOTE: See 23-18-26-LINK, W/SLEEVE-3454 596-7	Rear	C,Y	—	—	—	—	1	1	—	—	2945 572-3
23-18-109	CLIP, Elect. Latch Solenoid Link Attaching	Frt., Rt.	P,D,C,Y	1	1	1	1	1	1	1	1	612 492
		Lt.	P,D,C,Y	1	1	1	1	1	1	1	1	629 792
		Rear, Rt.	P,D,C,Y	—	—	—	—	1	1	1	1	612 492
		Lt.	P,D,C,Y	—	—	—	—	1	1	1	1	629 792
23-18-115	SOLENOID, Door Elect. Latch	Frt.	P,D,C,Y	1	1	1	1	1	1	1	1	2520 832-3
		Rear	P,D,C,Y	—	—	—	—	1	1	1	1	2520 832-3
	NUT		P,D,C,Y	AR	AR	AR	AR	AR	AR	AR	AR	6025 670
23-18-121	CONDUIT, Elect. Wdo. Lift and Door Lock Wiring	Frt. 70	P,D,C,Y	2	2	2	—	2	2	2	2	2926 371
	SCREW	70	P,D,C,Y	4	4	4	—	4	4	4	4	180 018

CARLINES: J - Challenger, B - Barracuda, V - Valiant, L - Dart, R - Belvedere - Satallite, W - Coronet - Charger, P - Plymouth, D - Dodge, C - Chrysler, Y - Imperial

NUMERALS INDICATE: 21 - 2 DR. SED., 23 - 2 DR. H.T., 27 - CONV. CPE., 29 - FAST BACK, 41 - 4 DR. SED., 43 - 4 DR. H.T., 45 - 6 PASS. STA. WGN., 46 - 9 PASS. STA. WGN.

AR Indicates use as required.
\# Indicates parts not listed in any previous parts book
Numerals in parentheses ( ) refer to notes.
★ Indicates change or addition.

Printed in U.S.A.
January 1972

Right and left part numbers are on same line, first number is right, second number is left.

CODE	PART NAME		MODEL CODES	SEE BOTTOM NOTE 21	23	27	29	41	43	45	46	PART NUMBER
23-18-0	**DOOR LOCKS AND REMOTE CONTROLS Cont'd.**											
23-18-121	CONDUIT Cont'd.											
	(Also see Code 23-41-167)											
23-18-124	BRACKET, Elect. Door Lock Sw. Mtg.											
		Frt., Lt.	P,D,C	1	1	1	1	—	—	—	—	2945 277
	NOTE: See 23-18-5, Control, w/LINK,	Rt.										
	BRACKET, Elect. Door Lock Switch											
		Frt., Rt.	P,D,C	—	—	—	—	1	1	1	1	2945 894
		Lt.	P,D,C	—	—	—	—	1	1	1	1	2945 895
23-18-125	ROD, Frt. Door Elect. Sw. Actuating											
	Push	Rt.	P,D,C	—	—	—	—	1	1	1	1	2935 696
	ROD, Frt. Door Elect. Lock Push	Rt. 71	P,D,C	1	1	—	1	—	—	—	—	3586 154
	NOTE: See 34-18-26, ROD,	Lt.										
23-18-126	BOOT, Elect. Frt. Door Lock Switch		P,D,C	2	2	2	2	2	2	2	2	2661 572
23-19-0	**DECK LID**											
23-19-6	DECAL, Deck Lid Bird (1)											
23-19-8	LID, Deck											
	Use W/O Deck Lid Spoiler, Up to Type	70	V	—	—	—	1	—	—	—	—	3417 167
	Use W/or W/O Deck Lid Spoiler, After Type		V,L	—	—	—	1	—	—	—	—	3482 625
	Use After June 15, 1971	71	VL	—	—	—	1	—	—	—	—	= 3611 553
			V	—	—	—	—	1	—	—	—	2934 074
	Use W/O Deck Lid Spoiler, Up to Type	70	L	—	1	—	—	1	—	—	—	3417 160
	Use w/or w/o Deck Lid Spoiler,		V-H,L	—	1	—	—	1	—	—	—	3482 861
	Use W/O Deck Lid Spoiler, Up to Type	70	B	—	1	1	—	—	—	—	—	2934 744
	Use W/or W/O Deck Lid Spoiler, After Type	70	B	—	1	1	—	—	—	—	—	3482 628
		71	B	—	1	1	—	—	—	—	—	3482 802
	Use W/O Deck Lid Spoiler, Up to Type	70	J	—	1	1	1	—	—	—	—	2934 950
	Use W/or W/O Deck Lid Spoiler, After Type	70	J	—	1	1	1	—	—	—	—	3482 623
		71	J	—	1	1	—	—	—	—	—	3482 687
	Use W/O Deck Lid Spoiler, Up to Type	70	R	1	1	1	—	1	—	—	—	2934 970
	Use W/or W/O Deck Lid Spoiler, After Type	70	R	1	1	1	—	1	—	—	—	3482 629
		71	R	—	1	—	—	—	—	—	—	3482 010
		71	R	—	—	—	—	1	—	—	—	3482 007
	Use W/O Deck Lid Spoiler, Up to Type	70	W	1	1	1	—	1	—	—	—	2934 958
	SCREW	70	W	1	1	1	—	1	—	—	—	3482 624
	Use W/O Deck Lid Spoiler, Up to Type	70	W	—	—	—	1	—	—	—	—	2859 146
	Use W/or W/O Deck Lid Spoiler, After Type	70	W	—	—	—	1	—	—	—	—	3482 627
		71	W	—	1	—	1	—	—	—	—	3482 013
		71	W	—	—	—	—	1	—	—	—	3482 001
		70	P	1	1	1	1	1	1	—	—	2934 967
		71	P	1	1	—	1	1	1	—	—	3482 681
			D	—	1	1	—	1	1	—	—	2934 990
			C	—	1	1	—	1	1	—	—	2934 955
	W/SPOILER, C-300H	70	C-M	—	1	—	—	—	—	—	—	3571 217
			Y	—	1	—	—	—	1	—	—	2934 028
	NOTE (1) See Exterior Moulding Illustrations in Illustration Catalog											
23-19-21	PLUG, Deck Lid Inner Pnl. Drain Hole											
	1/2" Dia.		V,L	—	2	—	2	2	—	—	—	2094 984
			B,J	—	2	2	2	—	—	—	—	2094 984
			R,W	2	2	2	2	2	—	—	—	2094 984
			P,D,C,Y	2	2	2	2	2	2	—	—	2094 984

CARLINES	J - Challenger B - Barracuda	V - Valiant L - Dart	R - Belvedere - Satallite W - Coronet - Charger	P - Plymouth D - Dodge	C - Chrysler Y - Imperial
NUMERALS INDICATE:	21 - 2 DR. SED. 23 - 2 DR. H.T.	27 - CONV. CPE. 29 - FAST BACK	41 - 4 DR. SED. 43 - 4 DR. H.T.	45 - 6 PASS. STA. WGN. 46 - 9 PASS. STA. WGN.	

AR Indicates use as required.
\# Indicates parts not listed in any previous parts book
Numerals in parentheses ( ) refer to notes.
★ Indicates change or addition.

Printed in U.S.A.
January 1972

Right and left part numbers are on same line, first number is right, second number is left.

23-19-0 DECK LID Cont'd.

CODE	PART NAME		MODEL CODES	SEE BOTTOM NOTE 21	23	27	29	41	43	45	46	PART NUMBER
23-19-21	PLUG Cont'd.											
	PLUG, Deck Lid Inside Panel											
	Use W./Aerodynamic Spoiler	71	W-M, W-S	—	2	—	—	—	—	—	—	1950 477
23-19-24	SPOILER, Deck Lid	70	V,L	—	1	—	1	—	—	—	—	3570 208
		70	B,J	1	1	1	—	—	—	—	—	3570 208
		70	R,W	1	1	1	1	—	—	—	—	3570 208
		71	V-S, L-M	—	—	—	1	—	—	—	—	3570 208
		71	B,J	—	1	1	—	—	—	—	—	3570 208
		71	R,W	—	1	—	1	—	—	—	—	3570 208
	Trans-AM, 340	70	B-S	—	1	—	—	—	—	—	—	3570 369
	Trans-AM, 340	70	J-H	—	1	—	—	—	—	—	—	3570 371
	BOLT, W/Washer, Deck Lid Spoiler Support		V,L	—	2	—	2	—	—	—	—	180 077
			B,J	—	2	2	2	—	—	—	—	180 077
			R,W	2	2	2	2	—	—	—	—	180 077
	SPOILER MTG. PACKAGE, Deck Lid		V	—	—	—	1	—	—	—	—	3579 056
		71	V	—	1	—	—	—	—	—	—	3579 057
			L	—	1	—	—	—	—	—	—	3579 057
		71	L	—	—	—	1	—	—	—	—	3579 056
		70	B	—	1	1	—	—	—	—	—	3579 058
		71	B	—	1	1	—	—	—	—	—	3579 668
			J	—	1	1	1	—	—	—	—	3579 059
		70	R	1	1	1	—	—	—	—	—	3579 060
		70	W	1	1	1	—	—	—	—	—	3579 061
		70	W	—	—	—	1	—	—	—	—	3579 062
		71	R,W	—	1	—	1	—	—	—	—	3579 669
23-19-25	BRACKET, Deck Lid Inside Pnl. Spoiler Mtg.											
		Painted	V,L	—	—	—	1	—	—	—	—	3506 470-1
		Painted	V,L	—	1	—	—	—	—	—	—	3506 472-3
		Painted 70	B	—	1	1	—	—	—	—	—	3506 482-3
		Painted	J	—	1	1	1	—	—	—	—	3506 480-1
		Painted 70	R	1	1	1	—	—	—	—	—	3506 474-5
		Painted 70	W	1	1	1	—	—	—	—	—	3506 478-9
		Painted 70	W	—	—	—	1	—	—	—	—	3506 476-7
		Painted 71	B	—	2	2	—	—	—	—	—	3570 399
		Painted 71	R,W	—	2	—	2	—	—	—	—	3570 445
	BRACKET, W/STUD, Deck Lid Spoiler Attach., Trans. AM	70	B-S, J-H	—	4	—	—	—	—	—	—	3570 359
	SUPPORT and BRKT. Deck Lid Spoiler		All	1	1	1	1	—	—	—	—	3570 212-3
	BRACKET, Deck Lid Support		All	1	1	1	1	—	—	—	—	# 3570 214-5
	NUT and SEAL		All	4	4	4	4	—	—	—	—	6026 687
	SCREW		All	4	4	4	4	—	—	—	—	6026 034
23-19-27	GASKET, Deck Lid Spoiler Support	70	V	—	—	—	1	—	—	—	—	3506 488-9
		70	L	—	1	—	—	—	—	—	—	3506 490-1
		70	B,J	—	1	1	1	—	—	—	—	3506 488-9
		70	R,W	1	1	1	—	—	—	—	—	3506 488-9
		70	W	—	—	—	1	—	—	—	—	3406 490-1
		Thick 71	V-S, L-M	—	—	—	1	—	—	—	—	3506 488-9
		71	B,J	—	1	1	—	—	—	—	—	3506 488-9
		71	R,W	—	1	—	1	—	—	—	—	3506 488-9
		Thin 71	V-S, L-M	—	—	—	1	—	—	—	—	3506 490-1
		71	B,J	—	1	1	—	—	—	—	—	3506 490-1
		71	R,W	—	1	—	1	—	—	—	—	3506 490-1
23-19-63	BUMPER, Deck Lid Inside Pnl.		V,L	—	—	—	2	—	—	—	—	2784 714
			V,L	—	2	—	—	2	—	—	—	2484 307
	Sw. to Latch 3		B,J	—	2	2	2	—	—	—	—	2784 714
		70	R	2	2	2	—	2	—	—	—	2602 675
		70	W	2	2	2	2	2	—	—	—	2784 714

CARLINES	J - Challenger B - Barracuda	V - Valiant L - Dart	R - Belvedere - Satallite W - Coronet - Charger	P - Plymouth D - Dodge	C - Chrysler Y - Imperial
NUMERALS INDICATE:	21 - 2 DR. SED. 23 - 2 DR. H.T.	27 - CONV. CPE. 29 - FAST BACK	41 - 4 DR. SED. 43 - 4 DR. H.T.	45 - 6 PASS. STA. WGN. 46 - 9 PASS. STA. WGN.	

AR Indicates use as required.
\# Indicates parts not listed in any previous parts book
Numerals in parentheses ( ) refer to notes.
★ Indicates change or addition.

Printed in U.S.A.
January 1972

Right and left part numbers are on same line, first number is right, second number is left.

CODE	PART NAME		MODEL CODES	SEE BOTTOM NOTE 21	23	27	29	41	43	45	46	PART NUMBER
23-19-0	**DECK LID Cont'd.**											
23-19-63	BUMPER Cont'd.											
		71	R,W	—	2	—	2	2	—	—	—	2484 307
			P	2	2	2	2	2	2	—	—	2602 675
			D	—	2	2	—	2	2	—	—	2842 869
			C	—	2	2	—	2	2	—	—	2784 714
			Y	—	2	—	—	—	2	—	—	2842 869
23-19-68	GROMMET, Vacuum Deck Lid Latch Release, w/Pwr. Deck Lid Release		P,D,C,Y	1	1	1	1	1	1	—	—	1370 460
	GROMMET, Vacuum Deck Lid Latch Release Sw. Tube, w/Pwr. Deck Lid Release	70	R,W	1	1	1	1	1	—	—	—	1886 101
			P,D,C,Y	1	1	1	1	1	1	—	—	1886 101
23-19-70	STRIKER, Deck Lid Latch		V,L	—	1	—	1	1	—	—	—	2244 149
			B	—	1	1	—	—	—	—	—	1867 661
			J	—	1	1	1	—	—	—	—	2244 149
			R,W	1	1	1	—	1	—	—	—	2244 149
		70	W	—	—	—	1	—	—	—	—	1867 661
		71	W	—	—	—	1	—	—	—	—	2244 149
			P,D,C,Y	1	1	1	1	1	1	—	—	2244 149
23-19-74	SUPPORT, w/NUT, Deck Opng. Lwr. Pnl. Lock Catch		V	—	—	—	—	1	—	—	—	2604 126
			V-H,L	—	1	—	—	1	—	—	—	3445 427
			B	—	1	1	—	—	—	—	—	2965 691
			J	—	1	1	1	—	—	—	—	2965 973
		70	R	1	1	1	—	1	—	—	—	2965 548
		70	W	1	1	1	—	1	—	—	—	2965 549
		70	W	—	—	—	1	—	—	—	—	2902 969
	SUPPORT, Deck Opng. Lwr. Pnl. Lock Striker		Y	—	1	—	—	—	1	—	—	3446 058
23-19-76	BRACE, Wheel House to Deck Lid Hge. Support		B	—	—	1	—	—	—	—	—	2964 216-7
			J	—	—	1	—	—	—	—	—	2964 218-9
23-19-79	TANK, Vacuum Deck Lid Latch Reservoir Except Police and Taxi, w/Pwr. Deck Lid Release		P,D,C	1	1	1	—	1	1	—	—	2999 434
	w/Pwr. Deck Lid Release		Y	—	1	—	—	—	1	—	—	2999 130
23-19-82	SUPPORT, Deck Lid Hinge w/PIN, to Wheel House		V,L	—	—	—	1	—	—	—	—	3446 882-3
	to Wheel House		V	—	—	—	—	1	—	—	—	2604 240-1
	w/PIN, Upr. Pnl.		V	—	—	—	—	1	—	—	—	2604 318-9
	w/PIN, to Upr. Pnl.		V-H,L	—	1	—	—	1	—	—	—	2604 322-3
	to Wheel House		V-H,L	—	1	—	—	1	—	—	—	2603 642-3
	Lwr.		B	—	1	—	—	—	—	—	—	2963 422-3
	w/PIN to Upr. Pnl. 70		B	—	1	—	—	—	—	—	—	3444 690-1
	W/PIN, to Upr. Pnl. 71		B	—	1	—	—	—	—	—	—	3570 862-3
	w/PIN, Deck Opng. Upr. Pnl. 70		B	—	—	1	—	—	—	—	—	3444 782-3
	W/PIN, Deck Opng. Upr. Pnl. 71		B	—	—	1	—	—	—	—	—	3570 870-1
	Lwr.		J	—	1	—	1	—	—	—	—	2965 504-5
	W/PIN, to Upr. Pnl. 70		J	—	1	—	1	—	—	—	—	3444 688-9
	W/PIN, to Upr. Pnl. 71		J	—	1	—	—	—	—	—	—	3570 866-7
	W/PIN, Deck Opng. Upr. Pnl. 70		J	—	—	1	—	—	—	—	—	3444 656-7
	W/PIN, Deck Opng. Upr. Pnl. 71		J	—	—	1	—	—	—	—	—	3570 874-5
	Lwr., 70		R,W	1	1	—	—	1	—	—	—	2838 482-3
	Lwr., Rt. 71		R,W	—	1	—	1	1	—	—	—	3445 074
	Lwr., Lt. 71		R,W	—	1	—	1	1	—	—	—	3445 075
	Lwr. 70		R,W	—	—	2	—	—	—	—	—	2841 848
	w/PIN, Upr. 70		R,W	1	1	—	—	—	—	—	—	3446 640-1
	w/PIN, Upr. 71		R,W	—	1	—	1	—	—	—	—	3506 278-9

CARLINES: J - Challenger, B - Barracuda, V - Valiant, L - Dart, R - Belvedere - Satallite, W - Coronet - Charger, P - Plymouth, D - Dodge, C - Chrysler, Y - Imperial

NUMERALS INDICATE: 21 - 2 DR. SED., 23 - 2 DR. H.T., 27 - CONV. CPE., 29 - FAST BACK, 41 - 4 DR. SED., 43 - 4 DR. H.T., 45 - 6 PASS. STA. WGN., 46 - 9 PASS. STA. WGN.

AR Indicates use as required.
\# Indicates parts not listed in any previous parts book
Numerals in parentheses ( ) refer to notes.
★ Indicates change or addition.

Printed in U.S.A.
January 1972

Right and left part numbers are on same line, first number is right, second number is left.

23-19-0 DECK LID Cont'd.

CODE	PART NAME	MODEL CODES	SEE BOTTOM NOTE 21	23	27	29	41	43	45	46	PART NUMBER
23-19-82	SUPPORT Cont'd.										
	w/PIN, Qtr. Pnl. Upr. 70	R,W	—	—	1	—	—	—	—	—	2841 380-1
	w/PIN, Upr. 70	R,W	—	—	—	—	1	—	—	—	3446 642-3
	w/PIN, Upr. 71	R,W	—	—	—	—	1	—	—	—	3506 210-1
	Lwr.	P	1	1	—	1	1	1	—	—	2900 752-3
	Lwr. 70	P	—	—	1	—	—	—	—	—	2901 118-9
	Upr.	P,D	1	1	—	1	1	1	—	—	2902 618-9
	Lwr.	D	—	1	—	—	1	1	—	—	2900 754-5
	Lwr. 70	D	—	—	1	—	—	—	—	—	2901 120-1
	Lwr. 70	C	—	—	1	—	—	—	—	—	2901 122-3
	w/PIN, Qtr. Pnl. Upr. 70	C	—	—	1	—	—	—	—	—	2963 502-3
	Lwr.	C,Y	—	1	—	—	1	1	—	—	2900 078-9
	w/PIN, Upr.	C,Y	—	1	—	—	1	1	—	—	2902 554-5
	w/PIN, Upr. 70	P,D	—	—	1	—	—	—	—	—	2963 504-5
23-19-84	HINGE, Deck Lid										
	w/CAM	V,L	—	—	—	1	—	—	—	—	3417 768-9
	w/CAM	V	—	—	—	—	2	—	—	—	2769 289
	w/CAM	V-H,L	—	1	—	—	1	—	—	—	3417 078-9
	70	B,J	—	1	1	1	—	—	—	—	2963 364-5
	71	B,J	—	1	1	—	—	—	—	—	3615 014-5
	w/CAM 70	R	2	2	2	—	2	—	—	—	2769 289
	w/CAM 70	W	1	1	1	—	1	—	—	—	3446 520-1
	w/CAM 70	W	—	—	—	2	—	—	—	—	2842 708
	w/CAM 71	R,W	—	1	—	1	1	—	—	—	3482 536-7
	w/CAM 70	P,D	—	—	1	—	—	—	—	—	2934 742-3
	w/CAM	P,D,C,Y	1	1	—	1	1	1	—	—	2934 320-1
	w/CAM 70	C	—	—	1	—	—	—	—	—	2934 320-1
23-19-86	GUIDE, Deck Opng. Upr. Pnl. Reinf.										
	Torsion Bar Center	B,J	—	—	1	—	—	—	—	—	3504 208
	End	B,J	—	—	1	—	—	—	—	—	3504 206-7
23-19-87	REINFORCEMENT PLATE, Deck Lid										
	Hinge Mtg., 300H 70	C-M	—	2	—	—	—	—	—	—	3571 368
23-19-94	SWITCH, Vacuum Deck Lid Latch Release										
	w/Pwr. Deck Lid Release 70	R,W	1	1	1	1	1	—	—	—	2935 997
	w/Pwr. Deck Lid Release	P,D,C,Y	1	1	1	1	1	1	—	—	2935 997
	w/Pwr. Deck Lid Release, Comp. 70	R,W	1	1	1	1	1	—	—	—	2935 944
	w/Pwr. Deck Lid Release, Comp.	P,D,C,Y	1	1	1	1	1	1	—	—	2935 944
	NUT 70	R,W									
		P,D,C	1	1	1	—	1	1	—	—	6026 839
	SWITCH, Remote Deck Lid Release										
	Use w/Pwr. Deck Lid Release	R,W,P,D	1	1	—	1	1	1	—	—	2426 836
23-19-97	TUBE, Vacuum Deck Lid Release										
	w/Pwr. Release 70	R,W	1	1	1	1	1	—	—	—	2254 552
	w/Pwr. Release	P,D,C,Y	1	1	1	1	1	1	—	—	2254 552
	Sw. to Latch 3										
	W/Pwr. Rel., W/Pwr. Rsvr. 70	C	—	1	1	—	1	1	—	—	2254 552
	TUBE, Vacuum Deck Lid Latch										
	Release Tank 71	P,D,C,Y	1	1	—	1	1	1	—	—	2254 552
	(Tube Sold by the Inch.)										
23-19-99	TAPPING PLATE, Deck Lid Hinge	V,L	—	2	—	2	2	—	—	—	2243 327
		B,J	—	2	2	2	—	—	—	—	2963 374
		R,W	2	2	2	2	2	—	—	—	2243 327
		P,D,C,Y	2	2	2	2	2	2	—	—	2243 327
23-19-100	BEZEL, Vacuum Deck Lid Latch Release										
	Switch w/Pwr. Release 70	R,W	1	1	1	1	1	—	—	—	2765 100
	70	P,D,C	1	1	1	1	1	1	—	—	2765 100
	71	C,Y	—	1	—	—	1	1	—	—	2765 100
	70	D-K,D-T	—	—	—	—	1	—	—	—	2765 100

CARLINES	J - Challenger B - Barracuda	V - Valiant L - Dart	R - Belvedere - Satellite W - Coronet - Charger	P - Plymouth D - Dodge	C - Chrysler Y - Imperial
NUMERALS INDICATE:	21 - 2 DR. SED. 23 - 2 DR. H.T.	27 - CONV. CPE. 29 - FAST BACK	41 - 4 DR. SED. 43 - 4 DR. H.T.	45 - 6 PASS. STA. WGN. 46 - 9 PASS. STA. WGN.	

AR Indicates use as required.
\# Indicates parts not listed in any previous parts book
Numerals in parentheses ( ) refer to notes.
★ Indicates change or addition.

Printed in U.S.A.
January 1972

Right and left part numbers are on same line, first number is right, second number is left.

CODE	PART NAME	MODEL CODES	SEE BOTTOM NOTE 21	23	27	29	41	43	45	46	PART NUMBER
23-19-0	**DECK LID Cont'd.**										
23-19-102	SOLENOID and BRACKET, Elect. Deck Lid Latch Pwer. Release, 71	D	—	1	—	—	1	1	—	—	3586 390
	CANADA 71	R,W,P	1	1	—	1	1	1	—	—	2428 267
23-19-105	LATCH, Deck Lid	V,L,J	—	1	1	1	1	—	—	—	2167 260
		B	—	1	1	—	—	—	—	—	2999 345
	w/o Pwr. Release	R,W	1	1	1	1	1	—	—	—	2167 260
	w/o Pwr. Release	D,C,Y	—	1	1	—	1	1	—	—	2167 260
	w/o Pwr. Release	P	1	1	1	1	1	—	—	—	2999 800
	w/Pwr. Release 70	R,W	1	1	1	1	1	—	—	—	2428 275
	w/Pwr. Release	D,C,Y	—	1	1	—	1	1	—	—	2428 275
	w/Pwr. Release, Comp. 70	R,W	1	1	1	1	1	—	—	—	2520 735
	w/Pwr. Release, Comp.	P	1	1	1	1	1	1	—	—	2999 805
	w/Pwr. Release, Comp.	D,C,Y	—	1	1	—	1	1	—	—	2520 735
	LATCH, Elect. Deck Lid Use W/Pwr. Deck Lid Release 71	P	1	1	—	1	1	1	—	—	2999 800
	71	R,W,D	—	1	—	1	1	1	—	—	2428 275
	Comp. 71	R,W	—	1	—	1	1	—	—	—	3586 435
	Comp. 71	P	1	1	—	1	1	1	—	—	3586 438
	Comp. 71	D	—	1	—	—	1	1	—	—	3586 392
	SCREW and WASHER	All	2	2	2	2	2	2	—	—	180 077
	CABLE and HANDLE, Manual Deck Lid Release C-300H 70	C-M	—	1	—	—	—	—	—	—	3571 235
	LATCH MECHANISM, Rear Deck Lid Comp. C-300H 70	C-M	—	1	—	—	—	—	—	—	3571 236
23-19-109	CONNECTOR, Vacuum Deck Lid Latch Tube w/Pwr. Release, Tee Type 70	R,W	1	1	1	1	1	—	—	—	2520 748
	70	P,D,C,Y	1	1	1	1	1	1	—	—	2520 748
	71	C,Y	—	1	—	—	1	1	—	—	2520 748
	CONNECTOR, Vacuum Deck Lid Latch Tube w/Pwr. Release 70	R,W	3	3	3	3	3	—	—	—	2520 749
		P,D,C,Y	3	3	3	3	3	3	—	—	2520 749
23-19-110	CLIP, Vacuum Deck Lid Latch Tube w/Pwr. Release	P,D,C,Y	2	2	2	2	2	2	—	—	2520 750
23-19-111	LINK, Deck Lid Latch Release	B	—	1	1	—	—	—	—	—	2999 349
	LINK, Deck Lid Latch	P	1	1	1	1	1	1	—	—	2999 804
23-19-112	CLIP, Deck Lid Latch Rel. Link to Lock Cyl. Lever Attach.	B	—	1	1	—	—	—	—	—	2999 986
		P	1	1	1	1	1	1	—	—	2999 985
	CLIP, Deck Lid Latch Rel. Lever to Rel. Link Attach.	B	—	1	1	—	—	—	—	—	2999 986
		P	1	1	1	1	1	1	—	—	2999 985
23-19-113	SHIELD, Deck Opng. Lwr. Pnl. Lock Linkage Prime	B	—	1	1	—	—	—	—	—	3444 780
23-19-114	NAME PLATE, MEDALLION or ORNAMENT, Deck Lid (1)										
	NOTE (1) See Exterior Moulding Illustrations in Illustration Catalog										
23-19-123	GASKET, Deck Lid Lock Cyl. Medal Base	Y	—	1	—	—	—	1	—	—	2945 399
23-19-177	BAR, Deck Lid Hinge Torsion	V	—	—	—	—	1	—	—	—	2604 146-7
		V,L	—	—	—	1	—	—	—	—	2965 678-9
		V-H,L	—	1	—	—	1	—	—	—	3446 880-1
	70	B	—	1	—	—	—	—	—	—	2963 358-9
	71	B	—	1	—	—	—	—	—	—	3570 332
	70	B	—	—	1	—	—	—	—	—	2964 300-1
	71	B	—	—	1	—	—	—	—	—	3570 333

CARLINES J - Challenger, B - Barracuda, V - Valiant, L - Dart, R - Belvedere - Satallite, W - Coronet - Charger, P - Plymouth, D - Dodge, C - Chrysler, Y - Imperial

NUMERALS INDICATE: 21 - 2 DR. SED., 23 - 2 DR. H.T., 27 - CONV. CPE., 29 - FAST BACK, 41 - 4 DR. SED., 43 - 4 DR. H.T., 45 - 6 PASS. STA. WGN., 46 - 9 PASS. STA. WGN.

AR Indicates use as required.
\# Indicates parts not listed in any previous parts book
Numerals in parentheses ( ) refer to notes.
★ Indicates change or addition.

Printed in U.S.A.
January 1972

Right and left part numbers are on same line, first number is right, second number is left.

CODE	PART NAME		MODEL CODES	SEE BOTTOM NOTE 21	23	27	29	41	43	45	46	PART NUMBER
23-19-0	**DECK LID Cont'd.**											
23-19-177	BAR Cont'd.											
		70	J	—	1	—	1	—	—	—	—	2963 360-1
		71	J	—	1	—	—	—	—	—	—	3570 334
		70	J	—	—	1	—	—	—	—	—	2964 302-3
		71	J	—	—	1	—	—	—	—	—	3570 335
		70	R,W	1	1	—	—	1	—	—	—	3445 980-1
		71	R	—	1	—	—	1	—	—	—	3445 134-5
		71	W	—	—	—	—	1	—	—	—	3445 134-5
		70	R,W	—	—	1	—	—	—	—	—	3445 982-3
	Use W/O Aerodynamic Spoiler	70	W	—	—	—	1	—	—	—	—	2842 712-3
	Use W/O Aerodynamic Spoiler	71	W	—	1	—	1	—	—	—	—	3445 882-3
	Use W/Aerodynamic Spoiler	70	W	—	—	—	1	—	—	—	—	3569 016-7
			P,D	1	1	—	1	1	1	—	—	3445 708-9
		70	P,D	—	—	1	—	—	—	—	—	3445 714-5
			C,Y	—	1	—	—	1	1	—	—	2900 836-7
		70	C	—	—	1	—	—	—	—	—	2902 834-5
23-19-178	SLIDE, Deck Lid Hge. Torsion Bar		V,L	—	2	—	2	2	—	—	—	2480 230
		70	B,J	—	2	2	2	—	—	—	—	3444 594
		71	B,J	—	2	2	—	—	—	—	—	2480 231
			R,W	2	2	2	—	2	—	—	—	2480 230
			P,D,C,Y	2	2	—	2	2	2	—	—	2480 230
	RETAINER, Deck Lid Hge. Torsion Bar		V,L,R,W	1	1	1	1	1	—	—	—	6000 594
		70	W	—	—	—	1	—	—	—	—	2259 413
			P,D,C,Y	1	1	—	1	1	1	—	—	6000 594
23-19-181	BRACKET, w/STUD, Deck Lid Hge. Torsion Bar	70	W	—	—	—	1	—	—	—	—	2842 704-5
23-19-188	STOP, Deck Opng. Upr. Pnl. Hinge	70	W	—	—	—	1	—	—	—	—	2842 754-5
23-20-0	**FLOOR MATS AND SCUFF PLATES**											
23-20-8	MAT, Front Floor											
	Blue and Black	70	V	—	—	—	1	1	—	—	—	1611 EBX
	Green and Black		V	—	—	—	1	1	—	—	—	1611 FFX
	Blue and Black	71	V	—	—	—	1	1	—	—	—	1611 GBX
	Tan and Black	71	V	—	—	—	1	1	—	—	—	1611 GTX
	Blue and Black	71	L	—	—	—	1	—	—	—	—	1611 GBX
	Tan and Black	71	L	—	—	—	1	—	—	—	—	1611 GTX
	Green and Black	71	L	—	—	—	1	—	—	—	—	1611 FFX
	Gray and Black		V	—	—	—	1	1	—	—	—	1638 FAX
	Gray and Black	71	L	—	—	—	1	—	—	—	—	1638 FAX
	Man. Trans. Floor, Gray and Black		V	—	—	—	1	1	—	—	—	1635 FAX
	Man. Trans. Floor, Gray and Black	71	L	—	—	—	1	—	—	—	—	1635 FAX
	Man. Trans. Floor, Gray and Black	71	L-L	—	1	—	—	1	—	—	—	1635 FAX
	Man. Trans. Black	70	L-L,L-M	—	1	—	—	1	—	—	—	1635 FX9
	Heavy Duty, Black	70	V,L-L,L-M	—	1	—	1	1	—	—	—	1647 CX9
	Heavy Duty, Black	71	V-L, L-L	—	—	—	1	1	—	—	—	1647 CX9
	Blue and Black	70	R-L,W-L	1	—	—	—	1	—	1	—	1602 DBX
	Tan and Black	70	R-L,W-L	1	—	—	—	1	—	1	—	1602 ETX
	Blue and Black	71	R-L, W-L	—	—	—	—	1	—	1	—	1602 GBX
	Tan and Black	71	R-L, W-L	—	—	—	—	1	—	1	—	1602 GTX
	Blue and Black	71	R-H, W-H	—	1	—	—	—	—	—	—	1602 GBX
	Tan and Black	71	R-H, W-H	—	1	—	—	—	—	—	—	1602 GTX
	Black	71	R-L, W-L	—	—	—	—	1	—	1	—	1600 GX9
	Black	71	R-H, W-H	—	1	—	—	—	—	—	—	1600 GX9
	Gold and Black	70	R-L	—	—	—	—	1	—	—	—	1602 FYX
	Police and Taxi, Black	70	R,W	1	—	—	—	1	—	1	—	1601 CX8

CARLINES J - Challenger, B - Barracuda, V - Valiant, L - Dart, R - Belvedere - Satallite, W - Coronet - Charger, P - Plymouth, D - Dodge, C - Chrysler, Y - Imperial

NUMERALS INDICATE: 21 - 2 DR. SED., 23 - 2 DR. H.T., 27 - CONV. CPE., 29 - FAST BACK, 41 - 4 DR. SED., 43 - 4 DR. H.T., 45 - 6 PASS. STA. WGN., 46 - 9 PASS. STA. WGN.

AR Indicates use as required.
\# Indicates parts not listed in any previous parts book
Numerals in parentheses ( ) refer to notes.
★ Indicates change or addition.

Printed in U.S.A.
January 1972

Right and left part numbers are on same line, first number is right, second number is left.

23-20-0 FLOOR MATS AND SCUFF PLATES Cont'd.

CODE	PART NAME		MODEL CODES	SEE BOTTOM NOTE 21	23	27	29	41	43	45	46	PART NUMBER
23-20-8	MAT Cont'd.											
	Police and Taxi, Black	71	R,W	—	—	—	—	1	—	1	—	1601 GX8
	Heavy Duty, Black	71	R-L, W-L	—	—	—	—	1	—	1	—	1601 GX8
	Heavy Duty, Black		R-L, W-L	—	—	—	—	1	—	1	—	1601 CX8
	Heavy Duty, Black	70	R-M,W-M	1	1	1	—	—	—	—	—	1601 CX8
	Blue and Black	70	P-E	1	—	—	—	1	—	—	—	1639 FBX
	Tan and Black	70	P-E	1	—	—	—	1	—	—	—	1639 FTX
	Blue and Black	70	P-L	—	—	—	—	—	—	1	—	1639 FBX
	Tan and Black	70	P-L	—	—	—	—	—	—	1	—	1639 FTX
	Blue and Black	71	P-E	1	—	—	—	1	—	—	—	1639 GBX
	Tan and Black	71	P-E	1	—	—	—	1	—	—	—	1639 GTX
	Black	71	P-E	1	—	—	—	1	—	—	—	1639 GX9
	Blue and Black	71	P-L	—	—	—	—	—	—	1	—	1639 GBX
	Tan and Black	71	P-L	—	—	—	—	—	—	1	—	1639 GTX
	Black	71	P-L	—	—	—	—	—	—	1	—	1639 GX9
	Police and Taxi, Black		P,D	1	—	—	—	1	—	1	—	1627 EX8
	Heavy Duty, Black		P-E, P-L	1	1	—	—	1	—	1	1	1627 EX8
	Heavy Duty, Black	70	D-L	—	—	—	—	1	—	1	1	1627 EX8
	Heavy Duty, Black	71	D-S, D-E	—	—	—	—	1	—	1	1	1627 EX8
	Heavy Duty, Black	71	D-L	—	—	—	—	1	—	1	1	1627 EX8
23-20-14	PLATE, Body Side Sill Door Scuff		V,L	—	2	—	2	—	—	—	—	2788 080
		Frt.	V,L	—	—	—	—	1	—	—	—	2788 252-3
		Rear	V,L	—	—	—	—	1	—	—	—	2788 084-5
			B,J	—	2	2	2	—	—	—	—	2879 600
		70	R,W	2	2	2	2	—	—	—	—	2789 608
		71	R,W	—	2	—	2	—	—	—	—	3416 002
		Frt. 70	R,W	—	—	—	—	2	—	2	2	2789 604
		Frt. 71	R,W	—	—	—	—	1	—	1	1	3416 004-5
		Rear 70	R,W	—	—	—	—	1	—	1	1	2789 606-7
		Rear 71	R,W	—	—	—	—	1	—	1	1	3416 006-7
			P,D,C,Y	2	2	2	2	—	—	—	—	2879 508
		Frt.	P,D,C,Y	—	—	—	—	2	2	2	2	2879 509
		Rear	P,D	—	—	—	—	1	1	1	1	2879 510-1
		Rear	C	—	—	—	—	—	—	1	1	2879 510-1
		Rear	C,Y	—	—	—	—	1	1	—	—	2879 512-3
		New York Taxi, Rear 70	W-T	—	—	—	—	1	—	—	—	2836 716-7
		New York Taxi, Rear, Rt. 71	P-T,D-T	—	—	—	—	1	—	—	—	3412 179
		Lt. 71	P-T,D-T	—	—	—	—	1	—	—	—	3412 180
23-20-24	EXTENSION, Body Side Sill Door Scuff Plate		V,L	—	1	—	1	—	—	—	—	3415 810-1
		70	R,W	1	1	1	1	—	—	—	—	2656 972-3
		Rear 70	R,W	—	—	—	—	1	—	1	1	2788 400-1
23-20-29	MAT, Luggage Compartment Floor	70	V	—	—	—	—	1	—	—	—	2787 851
		71	V	—	—	—	—	1	—	—	—	3416 170
	Use After Jan. 1, 1971 Coated Rubber	71	V	—	—	—	—	1	—	—	—	= 3509 987
	Use After Jan. 1, 1971 Foamed Rubber, Polyester	71	V	—	—	—	—	1	—	—	—	= 3509 988
		70	V	—	—	—	1	—	—	—	—	2879 829
		71	V,L	—	—	—	1	—	—	—	—	3416 169
	Use After Jan. 1, 1971 Foamed Backed, Polyester	71	V,L	—	—	—	1	—	—	—	—	= 3509 986
	Use After Jan. 1, 1971 Coated Rubber	71	V,L	—	—	—	1	—	—	—	—	= 3509 985
		Up to Type 70	L	—	1	—	—	1	—	—	—	3415 881
		Effective March, After Type 70	L	—	1	—	—	1	—	—	—	3509 106
		71	V-H,L	—	1	—	—	1	—	—	—	3416 171
	Use After Jan. 1, 1971 Foamed Backed, Polyester	71	V-H,L	—	1	—	—	1	—	—	—	= 3509 989

CARLINES: J - Challenger, B - Barracuda, V - Valiant, L - Dart, R - Belvedere - Satellite, W - Coronet - Charger, P - Plymouth, D - Dodge, C - Chrysler, Y - Imperial

NUMERALS INDICATE: 21 - 2 DR. SED., 23 - 2 DR. H.T., 27 - CONV. CPE., 29 - FAST BACK, 41 - 4 DR. SED., 43 - 4 DR. H.T., 45 - 6 PASS. STA. WGN., 46 - 9 PASS. STA. WGN.

AR Indicates use as required.
\# Indicates parts not listed in any previous parts book
Numerals in parentheses ( ) refer to notes.
★ Indicates change or addition.

Printed in U.S.A.
January 1972

Right and left part numbers are on same line, first number is right, second number is left.

23-20-0 FLOOR MATS AND SCUFF PLATES Cont'd.

CODE	PART NAME		MODEL CODES	SEE BOTTOM NOTE 21	23	27	29	41	43	45	46	PART NUMBER
23-20-29	MAT Cont'd.											
	Use After Jan. 1, 1971											
	Coated Rubber	71	V-H, L	—	1	—	—	1	—	—	—	= 3509 990
			B	—	1	1	—	—	—	—	—	3415 648
	Up to Dec. 1, 1970		J	—	1	1	1	—	—	—	—	3415 640
	After Dec. 1, 1970	71	J	—	1	1	1	—	—	—	—	= 3509 951
		70	R	1	1	1	—	1	—	—	—	3415 956
		70	W	1	1	1	—	1	—	—	—	3415 958
		71	R,W	—	1	—	—	—	—	—	—	3509 756
		71	R,W	—	—	—	—	1	—	—	—	3509 757
		70	W	—	—	—	1	—	—	—	—	3415 960
		70	P,D	1	1	—	1	1	1	—	—	3415 961
		71	P	1	1	—	1	1	—	—	—	3509 801
	Rubber	71	P	1	1	—	1	1	1	—	—	3416 166
		70	P,D	—	—	1	—	—	—	—	—	3415 962
	w/o Trunk Dress Up	70	D,C-L,C-M	—	1	—	—	1	1	—	—	3415 961
	w/o Trunk Dress Up	70	C	—	—	1	—	—	—	—	—	3415 962
	W/O Truck Dress Up	71	D	—	1	—	—	1	1	—	—	3509 680
	W/O Truck Dress Up	71	C-E, C-L, C-S	—	1	—	—	1	1	—	—	3509 680
23-20-41	MAT, Rear Floor											
	Blue and Black	70	V	—	—	—	1	—	—	—	—	1610 DBX
	Green and Black		V,L	—	—	—	1	—	—	—	—	1610 FFX
	Blue and Black	71	V,L	—	—	—	1	—	—	—	—	1609 GBX
	Tan and Black	71	V,L	—	—	—	1	—	—	—	—	1609 GTX
	Gray and Black		V,L	—	—	—	1	—	—	—	—	1637 FAX
	Heavy Duty, Black		V,L	—	—	—	1	—	—	—	—	1650 CX9
	Blue and Black	70	V-L	—	—	—	—	1	—	—	—	1610 DBX
	Blue and Black	71	V-L	—	—	—	—	1	—	—	—	1610 GBX
	Tan and Black	71	V-L	—	—	—	—	1	—	—	—	1610 GTX
	Green and Black	70	V-L	—	—	—	—	1	—	—	—	1610 FFX
	Man. Trans. Floor, Gray and Black		V-L	—	—	—	—	1	—	—	—	1636 FAX
	Heavy Duty, Black		V-L	—	—	—	—	1	—	—	—	1619 CX9
	Black	70	L-L,L-M	—	1	—	—	1	—	—	—	1684 CX9
	Black	71	L-L	—	1	—	—	1	—	—	—	1684 CX9
	Blue and Black	70	R-L,W-L	—	—	—	—	1	—	1	—	1699 DBX
	Gold and Black	70	R-L,W-L	1	—	—	—	1	—	1	—	1699 FYX
	Tan and Black	70	R-L,W-L	—	—	—	—	1	—	1	—	1607 ETX
	Blue and Black	70	R-L,W-L	1	—	—	—	—	—	—	—	1657 DBX
	Tan and Black	70	R-L,W-L	1	—	—	—	—	—	—	—	1657 ETX
	Heavy Duty, Police, Black	70	R,W	1	—	—	—	—	—	—	—	1656 DX8
	Heavy Duty, Black	70	R-L,R-M	1	1	1	—	—	—	—	—	1656 DX8
	Heavy Duty, Black	70	W-L,W-M	1	1	—	—	—	—	—	—	1656 DX8
	Blue and Black	71	R-L, W-L	—	—	—	—	1	—	—	—	1607 GBX
	Tan and Black	71	R-L, W-L	—	—	—	—	1	—	—	—	1607 GTX
	Black	71	R-L, W-L	—	—	—	—	1	—	—	—	1603 GX9
	Police, Black	71	R-K, W-K	—	—	—	—	—	—	1	—	1656 GX8
	Heavy Duty, Black	71	R-L, W-L	—	—	—	—	—	—	1	—	1656 GX8
	Blue and Black	71	R-L, W-L	—	—	—	—	—	—	1	—	1657 GBX
	Tan and Black	71	R-L, W-L	—	—	—	—	—	—	1	—	1657 GTX
	Blue and Black	71	R-H, W-H	—	1	—	—	—	—	—	—	1614 GBX
	Tan and Black	71	R-H, W-H	—	1	—	—	—	—	—	—	1614 GTX
	Black	71	R-H, W-H	—	1	—	—	—	—	—	—	1615 GX9
	Heavy Duty, Police, Taxi, Black	70	R,W	1	—	—	—	1	—	1	—	1604 CX8
	Heavy Duty, Black	70	R-L,W-L	1	—	—	—	1	—	1	—	1604 CX8
	Police and Taxi, Black	71	R,W	—	—	—	—	1	—	—	—	1604 GX8
	Heavy Duty, Black	71	R-L, W-L	—	—	—	—	1	—	—	—	1604 GX8
	Blue and Black	70	P-E	1	—	—	—	—	—	—	—	1641 FBX
	Tan and Black	70	P-E	1	—	—	—	—	—	—	—	1641 FTX
	Blue and Black	71	P-E	1	—	—	—	—	—	—	—	1641 GBX

CARLINES: J - Challenger, B - Barracuda, V - Valiant, L - Dart, R - Belvedere - Satallite, W - Coronet - Charger, P - Plymouth, D - Dodge, C - Chrysler, Y - Imperial

NUMERALS INDICATE: 21 - 2 DR. SED., 23 - 2 DR. H.T., 27 - CONV. CPE., 29 - FAST BACK, 41 - 4 DR. SED., 43 - 4 DR. H.T., 45 - 6 PASS. STA. WGN., 46 - 9 PASS. STA. WGN.

AR Indicates use as required.
\# Indicates parts not listed in any previous parts book
Numerals in parentheses ( ) refer to notes.
★ Indicates change or addition.

Printed in U.S.A.
January 1972

Right and left part numbers are on same line, first number is right, second number is left.

CODE	PART NAME		MODEL CODES	SEE BOTTOM NOTE 21	23	27	29	41	43	45	46	PART NUMBER
23-20-0	**FLOOR MATS AND SCUFF PLATES Cont'd.**											
23-20-41	MAT Cont'd.											
	Tan and Black	71	P-E	1	—	—	—	—	—	—	—	1641 GTX
	Black	71	P-E	1	—	—	—	—	—	—	—	1641 GX9
	Heavy Duty, Black	70	P-K,P-E,P-L	1	1	—	—	—	—	—	—	1634 FX8
	Heavy Duty, Black	71	P-E	1	—	—	—	—	—	—	—	1634 GX8
	Heavy Duty, Black	71	P-L	—	1	—	—	—	—	—	—	1634 GX8
	Blue and Black	70	P-E	—	—	—	—	1	—	—	—	1640 FBX
	Tan and Black	70	P-E	—	—	—	—	1	—	—	—	1640 FTX
	Blue and Black	71	P-E	—	—	—	—	1	—	—	—	1640 GBX
	Tan and Black	71	P-E	—	—	—	—	1	—	—	—	1640 GTX
	Black	71	P-E	—	—	—	—	1	—	—	—	1640 GX9
	Heavy Duty, Black	70	P-K,P-T	—	—	—	—	1	—	—	—	1653 FX8
	Heavy Duty, Black	70	P-E,P-L	—	—	—	—	1	—	—	—	1653 FX8
	Heavy Duty, Black	71	P-K, P-T	—	—	—	—	1	—	—	—	1653 GX8
	Heavy Duty, Black	71	P-E, P-L	—	—	—	—	1	—	—	—	1653 GX8
	Tan and Black	70	P-L	—	—	—	—	—	—	1	—	1642 FTX
	Blue and Black	70	P-L	—	—	—	—	—	—	1	—	1642 FBX
	Blue and Black	71	P-L	—	—	—	—	—	—	1	—	1642 GBX
	Tan and Black	71	P-L	—	—	—	—	—	—	1	—	1642 GTX
	Black	71	P-L	—	—	—	—	—	—	1	—	1642 GX9
	Heavy Duty, Black	70	P-K	—	—	—	—	—	—	1	—	1613 EX8
	Heavy Duty, Black	70	P-L,D-L	—	—	—	—	—	—	1	1	1613 EX8
	Heavy Duty, Black	71	P-K	—	—	—	—	—	—	1	—	1613 GX8
	Heavy Duty, Black	71	P-L, D-L	—	—	—	—	—	—	1	1	1613 GX8
	Heavy Duty, Black,	71 CANADA	D-S	—	—	—	—	—	—	1	1	1613 GX8
	Heavy Duty, Black	70	D-K,D-T	—	—	—	—	1	—	—	—	1652 FX8
	Heavy Duty, Black	70	D-L	—	—	—	—	1	—	—	—	1652 FX8
	Heavy Duty, Black	71	D-K, D-T	—	—	—	—	1	—	—	—	1652 GX8
	Heavy Duty, Black	71	D-S, D-E, D-L	—	—	—	—	1	—	—	—	1652 GX8
	Rear Floor Well	71	R,W	—	—	—	—	—	—	1	—	3416 343
	Rear Floor Well, Black	70	P,D	—	—	—	—	—	—	1	—	1632 EX8
	COVER, Rear Floor Well	70	R,W	—	—	—	—	—	—	1	—	3415 698
23-20-65	PLATE, Body Side Sill Ctr. Pillar Scuff		V,L	—	—	—	—	2	—	—	—	2788 088
	PLATE, Center Pillar Scuff Except R-T, W-T, W-P	70	R,W	—	—	—	—	2	—	2	2	2789 423
23-21-0	**MIRRORS**											
23-21-3	MIRROR PACKAGE, Door Outside Remote Control Rear View	70	V,L	—	1	—	—	1	—	—	—	2935 217
	Non-Racing Type	70	R,W	1	1	1	1	1	—	1	1	2935 217
	Racing Type, Chrome	70	V,L,R,W	1	1	1	1	—	—	—	—	3586 175
	Racing Type, Prime	70	V,L,R,W	1	1	1	1	—	—	—	—	3586 655
	MIRROR, Door Outside Remote Control Rear View Non-Racing Type	70	V,L,R,W	1	1	1	—	1	—	1	1	2945 955
	Round Type, Chrome	70	V	—	—	—	1	—	—	—	—	2999 875
	Racing Type, Prime	70	B,J	—	1	1	1	—	—	—	—	3548 053
	Racing Type, Chrome	70	B,J	—	1	1	1	—	—	—	—	2999 549
		70	P-K	1	—	—	—	—	—	—	—	2935 334
		70	P	—	—	1	—	1	1	1	1	2935 334
		70	P-E,P-L	1	—	—	—	—	—	—	—	2999 356
		70	P	—	1	—	1	—	—	—	—	2999 356
		70	D,C,Y	—	1	—	—	—	—	—	—	2999 357
		70	D,C,Y	—	—	1	—	1	1	1	1	2935 335
	MIRROR PACKAGE, Door Outside Rear View	Rt. 70	V,L,R,W	1	1	1	1	1	—	1	1	2802 869
	Racing Type, Chrome	Rt. 70	V,L,R,W	1	1	1	1	—	—	—	—	3586 174

CARLINES	J - Challenger B - Barracuda	V - Valiant L - Dart	R - Belvedere - Satellite W - Coronet - Charger	P - Plymouth D - Dodge	C - Chrysler Y - Imperial
NUMERALS INDICATE:	21 - 2 DR. SED. 23 - 2 DR. H.T.	27 - CONV. CPE. 29 - FAST BACK	41 - 4 DR. SED. 43 - 4 DR. H.T.	45 - 6 PASS. STA. WGN. 46 - 9 PASS. STA. WGN.	

AR Indicates use as required.
\# Indicates parts not listed in any previous parts book
Numerals in parentheses ( ) refer to notes.
★ Indicates change or addition.

Printed in U.S.A.
January 1972

Right and left part numbers are on same line, first number is right, second number is left.

CODE	PART NAME		MODEL CODES	SEE BOTTOM NOTE 21	23	27	29	41	43	45	46	PART NUMBER
23-21-0	**MIRRORS Cont'd.**											
23-21-3	MIRROR PACKAGE Cont'd.											
	Racing Type, Prime	RT. 70	V,L,R,W	1	1	1	1	—	—	—	—	3586 176
	Racing Type, Painted	Rt. 70	B,J	—	1	1	1	—	—	—	—	3508 990
	Racing Type, Chrome	Rt. 70	B,J	—	1	1	1	—	—	—	—	3508 989
	MIRROR, Door Outside Rear View											
	Companion to Remote Control	Rt. 70	P	1	1	1	1	1	1	1	1	2945 608
	Companion to Remote Control	Rt.	P	1	1	1	1	1	1	1	1	2945 608
	Companion to Remote Control	Rt. 70	D,C,Y	—	1	1	—	1	1	1	1	2945 610
	MIRROR, Door Outside Rear View											
	Manual	Rt. or Lt. 70	V,L,R,W	1	1	1	1	1	—	1	1	2802 710
	Manual, Non-Racing Type	Lt. 70	B,J	—	1	1	1	—	—	—	—	2999 553
	Mnaual	Lt. 70	P	1	1	1	1	1	1	1	1	2935 337
	Manual	Rt. 70	P	1	1	1	1	1	1	1	1	2935 338
	Manual, Except C-H	Lt. 70	D,C	—	1	1	—	1	1	1	1	2935 339
		Rt. 70	D,C	—	1	1	—	1	1	1	1	2935 340
	MIRROR, Door Outside Remote Control											
	Round, Chrome	71	V,L	—	—	—	1	—	—	—	—	3586 087
	Round, Chrome	71	V,L	—	1	—	—	1	—	—	—	2945 955
	MIRROR PACKAGE, Door Outside Remote Control											
	RACING, Chrome	71	V,L	—	1	—	1	—	—	—	—	3586 654
	RACING, Prime	71	V,L	—	1	—	1	—	—	—	—	3586 655
	ROUND, Chrome	71	V,L	—	1	—	1	1	—	—	—	3586 641
	RACING, Chrome	71	B,J	—	1	1	1	—	—	—	—	3586 642
	RACING, Prime	71	B,J	—	1	1	1	—	—	—	—	3586 649
	RACING, Prime	71	R,W	—	1	—	1	—	—	—	—	3586 976
	RACING, Chrome	71	R,W	—	1	—	1	—	—	—	—	= 3586 977
	ROUND, Chrome	71	R,W	—	—	—	—	1	—	1	1	3586 643
	RECTANGULAR, Chrome	71	P	1	1	—	1	1	1	1	1	3586 646
	RECTANGULAR, Chrome	71	D,C,Y	—	1	—	—	1	1	1	1	3586 651
	MIRROR, Door Outside Manual											
	Chrome	Rt. or Lt. 71	V,L	—	1	—	1	1	—	—	—	2802 710
	MIRROR PACKAGE, Door Outside Manual											
	Round, Chrome	Rt. 71	V,L	—	1	—	1	1	—	—	—	2802 869
	RACING, Chrome	Rt. 71	V,L	—	1	—	1	—	—	—	—	3586 174
	RACING, Prime	Rt. 71	V,L	—	1	—	1	—	—	—	—	3586 176
	ROUND, Chrome	Lt. 71	B,J,R,W	—	1	1	1	—	—	—	—	3586 645
	RACING, Chrome	Rt. 71	B,J,R,W	—	1	1	1	—	—	—	—	3586 644
	RACING, Prime	Rt. 71	B,J,R,W	—	1	1	1	—	—	—	—	3586 650
	ROUND, Chrome Companion to R/CONTROL	Rt. 71	R,W	—	—	—	—	1	—	1	1	3586 738
	ROUND, Chrome	Lt. 71	R,W	—	—	—	—	1	—	1	1	3586 739
	RECTANGULAR, Chrome, Companion to R/CONTROL	Rt. 71	P	1	1	—	1	1	1	1	1	3586 647
	RECTANGULAR, Chrome, Companion to R/CONTROL	Rt. 71	D,C,Y	—	1	—	—	1	1	1	1	3586 652
	RECTANGULAR, Chrome	Rt. 71	P,D,C	1	1	—	1	1	1	1	1	3586 653
	RECTANGULAR, Chrome	Lt. 71	P,D,C	1	1	—	1	1	1	1	1	3586 648
	SCREW, Door Outside Rear View Mirror Attach	Rt. or Lt. 70	V,L	—	1	—	1	1	—	—	—	9417 992
		70	R,W	1	1	1	1	1	—	1	1	9417 992
		Rt. or Lt. 70	B,J	—	2	2	2	—	—	—	—	187 709
	NUT, W/WASHER, Door Outside Remote Control Rear View Mirror Attach.	70	V,L,R,W	1	1	1	1	1	—	1	1	6023 204
	NUT, W/WASHER, Door Outside Rear View Mirror Attach.	Rt. or Lt. 70	V,L,R,W	1	1	1	1	1	—	1	1	6023 204
	NUT, Door Outside Rear View Mirror Riveting Attach.	Rt. or Lt.	B,J	—	2	2	2	—	—	—	—	6026 292

CARLINES: J - Challenger, B - Barracuda, V - Valiant, L - Dart, R - Belvedere - Satallite, W - Coronet - Charger, P - Plymouth, D - Dodge, C - Chrysler, Y - Imperial

NUMERALS INDICATE: 21 - 2 DR. SED., 23 - 2 DR. H.T., 27 - CONV. CPE., 29 - FAST BACK, 41 - 4 DR. SED., 43 - 4 DR. H.T., 45 - 6 PASS. STA. WGN., 46 - 9 PASS. STA. WGN.

AR Indicates use as required.
\# Indicates parts not listed in any previous parts book
Numerals in parentheses ( ) refer to notes.
★ Indicates change or addition.

Printed in U.S.A.
January 1972

Right and left part numbers are on same line, first number is right, second number is left.

CODE	PART NAME		MODEL CODES	SEE BOTTOM NOTE								PART NUMBER
				21	23	27	29	41	43	45	46	
23-21-0	**MIRRORS Cont'd.**											
23-21-3	MIRROR PACKAGE Cont'd.											
	NUT, Door Outside Rear View Remote Control											
	Mirror Riveting Attach.	70	B,J	—	2	2	2	—	—	—	—	6026 292
23-21-8	MIRROR, Inside Rear View Prismatic											
		Comp. 70	All	1	1	1	1	1	1	1	1	3454 875
		71	V,L,B,J	—	1	1	1	1	—	—	—	3454 875
		71	R,W	—	1	—	1	1	—	1	1	3454 875
		12 Inch 71	P,D,C,Y	1	1	—	1	1	1	1	1	3508 226
	SCREW		All	1	1	1	1	1	1	1	1	6026 911
	MIRROR, Inside Rear View, W/O Prismatic		V,L	—	1	—	1	1	—	—	—	3548 447
			B-H,J-H	—	1	—	—	—	—	—	—	3548 447
		71	R-H,W-H	—	1	—	—	—	—	—	—	3548 447
	MIRROR, Inst. Pnl. Glove Box Vanity	70	Y	—	1	—	—	—	1	—	—	3419 413
		71	Y	—	1	—	—	—	1	—	—	2857 539
23-21-14	BRACKET and SHAFT, Inside Rear View											
	Mirror Mtg.	Painted 70	V,B,J	—	1	—	1	—	—	—	—	3508 523
		Painted 71	V,L	—	—	—	1	—	—	—	—	3508 523
		Painted 71	B,J	—	1	—	—	—	—	—	—	3508 523
		Painted	V,L	—	1	—	—	1	—	—	—	3508 984
		Painted 70	R,W	1	1	—	1	1	—	1	1	3508 984
		Painted 71	R,W	—	1	—	1	1	—	1	1	3508 523
		Chrome	B,J	—	—	1	—	—	—	—	—	3508 522
		Chrome 70	R,W	—	—	1	—	—	—	—	—	2945 206
		Chrome 70	P,D,C	—	—	1	—	—	—	—	—	2935 343
		Painted 70	P,D,C	1	1	—	1	1	1	—	—	2999 022
		Painted 71	P,D,C	1	1	—	1	1	1	—	—	3586 103
		Painted 70	P,D,C	—	—	—	—	—	—	1	1	2945 209
		Painted 71	P,D,C	—	—	—	—	—	—	1	1	3586 105
		Chrome 70	Y	—	1	—	—	—	1	—	—	2999 023
		Chrome 71	Y	—	1	—	—	—	1	—	—	3508 219
	SCREW, 3/4" Long	70	V,L,B,J	—	2	2	2	2	—	—	—	9414 764
	SCREW, 3/4" Long	70	R,W	2	2	2	2	2	—	2	2	9414 764
	SCREW, 1 1/4" Long	70	V,L,B,J	—	1	1	1	1	—	—	—	9414 767
	SCREW, 1 1/4" Long	70	R,W	1	1	1	1	1	—	1	1	9414 767
	SCREW	70	P,D,C,Y	3	3	—	3	3	3	3	3	121 839
23-21-16	SPACER, Door Outside Remote Control											
	Rear View Mirror		R,W	1	1	1	—	—	—	—	—	2945 103
23-21-18	GASKET, Door Outside Remote Control											
	Rear View Mirror		V,L	—	1	—	1	1	—	—	—	2802 303
		70	B,J	—	1	1	1	—	—	—	—	3454 052
		Up To Type 70	R,W	1	1	1	1	—	—	—	—	2802 303
	Effective April	After Type 70	W	—	—	—	1	—	—	—	—	3548 693
	GASKET, Door Outside Rear View Mirror											
	Rt. or Lt. Side	70	V,L,R,W	1	1	1	1	1	—	1	1	2802 303
	Rt. or Lt. Side	70	B,J	—	1	1	1	—	—	—	—	3454 052
	Rt. or Lt. Side	70	P	1	1	1	1	1	1	1	1	2935 854
	Rt. or Lt. Side	70	D,C,Y	—	1	1	—	1	1	1	1	2935 855
	Rt. or Lt.	71	V,L	—	1	—	1	1	—	—	—	2802 303
	Rt.,	71	B,J	—	1	1	—	—	—	—	—	3548 741
	Lt., W/REMOTE CONTROL	71	B,J	—	1	1	—	—	—	—	—	3548 741
	Lt., W/O REMOTE CONTROL	71	B,J	—	1	1	—	—	—	—	—	3548 745
	Rt. or Lt.	71	R,W	—	1	—	1	—	—	—	—	3548 741
	Lt., W/O Remote Control	71	R,W	—	1	—	1	1	—	1	1	3548 745
	Lt., W/REMOTE CONTROL	71	R,W	—	—	—	—	1	—	1	1	3548 745
	Rt.	71	P	1	1	—	1	1	1	1	1	3586 178
	Lt., W/REMOTE CONTROL	71	P	1	1	—	1	1	1	1	1	3586 179
	Rt. or Lt.	71	P,D	1	1	—	1	1	1	1	1	3548 745
	Lt., Except C-H	71	C	—	1	—	—	1	1	1	1	3548 745
	Rt., Except C-S	71	C	—	1	—	—	1	1	1	1	3548 745

CARLINES J - Challenger, B - Barracuda, V - Valiant, L - Dart, R - Belvedere - Satallite, W - Coronet - Charger, P - Plymouth, D - Dodge, C - Chrysler, Y - Imperial

NUMERALS INDICATE: 21 - 2 DR. SED., 23 - 2 DR. H.T., 27 - CONV. CPE., 29 - FAST BACK, 41 - 4 DR. SED., 43 - 4 DR. H.T., 45 - 6 PASS. STA. WGN., 46 - 9 PASS. STA. WGN.

AR Indicates use as required.
\# Indicates parts not listed in any previous parts book
Numerals in parentheses ( ) refer to notes.
★ Indicates change or addition.

Printed in U.S.A.
January 1972

Right and left part numbers are on same line, first number is right, second number is left.

CODE	PART NAME		MODEL CODES	SEE BOTTOM NOTE 21	23	27	29	41	43	45	46	PART NUMBER
23-21-0	**MIRRORS Cont'd.**											
23-21-18	GASKET Cont'd.											
	Rt.	71	D,C,Y	—	1	—	—	1	1	1	1	3586 180
	Lt., W/REMOTE CONTROL	71	D,C,Y	—	1	—	—	1	1	1	1	3586 181
	GASKET, Door Outside Rear View Mirror Hole Bezel Lt. Side	70	P	1	1	1	1	1	1	1	1	2895 277
	Except C-H, Lt. Side	70	D,C,Y	—	1	1	—	1	1	1	1	2895 281
23-21-19	WASHER, Door Outside Remote Control Rear View Mirror Cont. Attach.		V,L,B,J	—	1	1	1	1	—	—	—	2945 603
		70	R,W	1	1	1	1	1	—	1	1	2945 603
		71	R,W	—	1	—	1	1	—	1	1	2999 115
			P,D,C,Y	1	1	1	1	1	1	1	1	2999 115
23-21-26	RETAINER, Glove Box Vanity Mirror	70	Y	—	2	—	—	—	2	—	—	2984 991
23-21-28	BEZEL, Door Outside Pnl. Rear View Mirror Hole											
	Lt. Side	70	P	1	1	1	1	1	1	1	1	2895 275
	Except C-H, Lt. Side	70	D,C,Y	—	1	1	—	1	1	1	1	2895 279
23-21-58	GUIDE, Door Outside Remote Control Rear View Mirror Cable		V,L	—	—	—	1	—	—	—	—	3454 233
	w/NUT, Ventless Glass	70	B,J	—	1	—	1	—	—	—	—	2999 557
	Ventless Glass	70	P,D,C,Y	1	1	—	1	—	—	—	—	2999 358
	SCREW and WASHER		V,B,J	—	1	1	1	—	—	—	—	180 079
	SCREW		P,D,C,Y	—	1	1	1	—	—	—	—	6028 301
	WASHER		P,D,C,Y	—	1	1	1	—	—	—	—	120 392
23-21-74	NUT, Door Outside Remote Control Rear View Mirror Cont. Attach.		P,D,C,Y	1	1	1	1	1	1	1	1	2999 001
		70	V,L,B,J	—	1	1	1	1	—	—	—	6027 749
		70	R,W	1	1	1	1	1	—	1	1	6027 749
		71	R,W	—	1	—	1	—	—	—	—	2999 001
23-22-0	**GARNISH MOULDINGS**											
23-22-53	MOULDING, Qtr. Wdo. Belt Garnish	Prime	V-H,L	—	1	—	—	—	—	—	—	2782 082-3
	RETAINER		L	—	AR	—	—	—	—	—	—	6002 186
	SCREW		L	—	AR	—	—	—	—	—	—	9414 756
		Prime 70	R	1	—	—	—	—	—	—	—	2840 704-5
		Prime 70	R	—	1	—	—	—	—	—	—	2838 672-3
		Prime 70	W	1	—	—	—	—	—	—	—	2840 706-7
		Prime 70	W-M,W-H	—	1	—	—	—	—	—	—	2840 350-1
		Prime 70	W-P,W-S	—	1	—	—	—	—	—	—	3505 690-1
		Valve Pkg., Prime 70	W-P	—	—	—	1	—	—	—	—	2838 672-3
			P,D,C	—	—	—	—	—	—	1	1	2877 916-7
	SCREW, Lwr.	70	R,W	AR	AR	—	AR	—	—	—	—	6024 654
	SCREW, Frt.	70	R,W	AR	AR	—	AR	—	—	—	—	6028 679
	MOULDING, Qtr. Wdo. Garnish	Prime	V,L	—	—	—	1	—	—	—	—	2965 604-5
	RETAINER		V,L	—	—	—	AR	—	—	—	—	6002 330
	SCREW		V,L	—	—	—	AR	—	—	—	—	9418 780
	SCREW		V,L	—	—	—	AR	—	—	—	—	9414 711
		Prime 71	R	—	1	—	—	—	—	—	—	# 3500 878-9
		Frt., Prime 70	R,W	—	—	—	—	—	—	1	1	2861 572-3
		Frt., Prime 71	R,W	—	—	—	—	—	—	1	1	3509 300-1
		Upr., Prime 70	R,W	—	—	—	—	—	—	1	1	2811 780-1
		Upr., Prime 71	R,W	—	—	—	—	—	—	1	1	3440 220-1
		Upr., Prime	P,D,C	—	—	—	—	—	—	1	1	2894 736-7
		Lwr., Frt., Prime, Rt.	70 R,W	—	—	—	—	—	—	1	1	2811 782
		Lt.	70 R,W	—	—	—	—	—	—	1	1	2811 783
		Lwr., Rear, Prime, Rt.	70 R,W	—	—	—	—	—	—	1	1	2811 986
		Lt.	70 R,W	—	—	—	—	—	—	1	1	2811 987
	RETAINER, Upr.		70 R,W	—	—	—	—	—	—	AR	AR	6002 011

CARLINES: J - Challenger, B - Barracuda, V - Valiant, L - Dart, R - Belvedere - Satallite, W - Coronet - Charger, P - Plymouth, D - Dodge, C - Chrysler, Y - Imperial

NUMERALS INDICATE: 21 - 2 DR. SED., 23 - 2 DR. H.T., 27 - CONV. CPE., 29 - FAST BACK, 41 - 4 DR. SED., 43 - 4 DR. H.T., 45 - 6 PASS. STA. WGN., 46 - 9 PASS. STA. WGN.

AR Indicates use as required.
\# Indicates parts not listed in any previous parts book
Numerals in parentheses ( ) refer to notes.
★ Indicates change or addition.

Printed in U.S.A.
January 1972

Right and left part numbers are on same line, first number is right, second number is left.

CODE	PART NAME	MODEL CODES	SEE BOTTOM NOTE 21	23	27	29	41	43	45	46	PART NUMBER
23-22-0	**GARNISH MOULDINGS Cont'd.**										
23-22-53	MOULDING Cont'd.										
	SCREW, Upr. 70	R,W	—	—	—	—	—	—	AR	AR	9423 434
23-22-55	SUPPORT, Qtr. Wdo. Lwr. Garnish Mldg.	P,D,C	—	—	—	—	—	—	1	1	2878 062-3
23-22-57	BRACKET, Qtr. Wdo. Lwr. Garnish Mldg. 70	R,W	—	—	—	—	—	—	6	6	2860 755
23-22-78	MOULDING, Qtr. Pnl. Tailgate Opng. Side Garnish 70	R,W	—	—	—	—	—	—	1	1	2861 576-7
	MOULDING, Qrt. Pnl. Tailgate Opng. Upr. Corner Garnish 70	R,W	—	—	—	—	—	—	1	1	2663 942-3
	MOULDING, Roof Rear Garnish Tailgate Opng. Prime	P,D,C	—	—	—	—	—	—	1	1	2894 734
	Prime 71	R,W	—	—	—	—	—	—	1	1	3499 817
23-22-86	MOULDING, Rear Wdo. Garnish Side and Upr. Prime	V-H,L	—	1	—	—	—	—	—	—	2782 080-1
	Side, Prime	B	—	1	—	—	—	—	—	—	3444 072-3
	Upr., Prime	B	—	1	—	—	—	—	—	—	3444 060
	Lwr., Prime	B	—	1	—	—	—	—	—	—	2964 584-5
	Side and Upr., Prime	J	—	1	—	—	—	—	—	—	3444 056-7
	Lwr., Prime	J	—	1	—	—	—	—	—	—	3444 064-5
	Side and Upr., Prime 71	R,W	—	1	—	1	—	—	—	—	3446 588-9
	Side and Upr., Prime 71	R,W	—	—	—	—	1	—	—	—	3446 594-5
	Use After Jan. 1, 1971										
	Side and Upr. 71	R,W	—	—	—	—	1	—	—	—	= 3500 988-9
	Lwr., Prime 71	R,W	—	1	—	1	—	—	—	—	3499 866-7
	Lwr., Prime 71	R,W	—	—	—	—	1	—	—	—	3499 868-9
	Upr., Prime	P,D,C	—	1	—	—	—	—	—	—	2877 668
	Upr., Prime 71	P-E	1	—	—	—	—	—	—	—	2877 668
	Upr., Prime 70	Y-L	—	1	—	—	—	—	—	—	2877 668
	Lwr., Prime	P,D,C	—	1	—	—	—	—	—	—	2877 670
	Lwr., Prime 71	P-E	1	—	—	—	—	—	—	—	2877 670
	Lwr., Prime 70	Y-L	—	1	—	—	—	—	—	—	2877 670
	Lwr., Dark Green 70	Y-M	—	1	—	—	—	—	—	—	4452 FF8
	Black 70	Y-M	—	1	—	—	—	—	—	—	4452 FX9
	White 70	Y-M	—	1	—	—	—	—	—	—	4452 FW1
	Teal 70	Y-M	—	1	—	—	—	—	—	—	4452 FP6
	Light Tan 70	Y-M	—	1	—	—	—	—	—	—	4452 FT2
	Dark Tan 70	Y-M	—	1	—	—	—	—	—	—	4452 FT5
	Gold 70	Y-M	—	1	—	—	—	—	—	—	4452 FY4
	Light Blue 70	Y-M	—	1	—	—	—	—	—	—	4452 FB3
	Dark Blue 70	Y-M	—	1	—	—	—	—	—	—	4452 FB7
	Lwr., Burgundy 71	Y	—	1	—	—	—	—	—	—	4453 GM9
	Lwr., Dark Tan 71	Y	—	1	—	—	—	—	—	—	4453 GT7
	Lwr., White 71	Y	—	1	—	—	—	—	—	—	4453 GW1
	Lwr., Black 71	Y	—	1	—	—	—	—	—	—	4453 GX9
	Lwr., Gold 71	Y	—	1	—	—	—	—	—	—	4453 GY5
	Lwr., Gray 71	Y	—	1	—	—	—	—	—	—	4453 GA6
	Lwr., Light Blue 71	Y	—	1	—	—	—	—	—	—	4453 GB2
	Lwr., Dark Blue 71	Y	—	1	—	—	—	—	—	—	4453 GB9
	Lwr., Red 71	Y	—	1	—	—	—	—	—	—	4453 GE8
	Lwr., Dark Green 71	Y	—	1	—	—	—	—	—	—	4453 GF7
	Lwr., Light Tan 71	Y	—	1	—	—	—	—	—	—	4453 GT3
	SCREW	L	—	AR	—	—	—	—	—	—	9414 760
	SCREW	L	—	AR	—	—	—	—	—	—	9418 780
	SCREW	B,J	—	AR	—	—	—	—	—	—	9414 753
	RETAINER, Lwr.	P,D,C	—	AR	—	—	—	—	—	—	6002 597
	SCREW, Upr.	P,D,C	—	AR	—	—	—	—	—	—	9414 753
	SCREW, Lwr.	P,D,C	—	AR	—	—	—	—	—	—	9423 434

CARLINES J - Challenger, B - Barracuda, V - Valiant, L - Dart, R - Belvedere - Satallite, W - Coronet - Charger, P - Plymouth, D - Dodge, C - Chrysler, Y - Imperial

NUMERALS INDICATE: 21 - 2 DR. SED., 23 - 2 DR. H.T., 27 - CONV. CPE., 29 - FAST BACK, 41 - 4 DR. SED., 43 - 4 DR. H.T., 45 - 6 PASS. STA. WGN., 46 - 9 PASS. STA. WGN.

AR Indicates use as required.
\# Indicates parts not listed in any previous parts book
Numerals in parentheses ( ) refer to notes.
★ Indicates change or addition.

Printed in U.S.A.
January 1972

Right and left part numbers are on same line, first number is right, second number is left.

CODE	PART NAME		MODEL CODES	SEE BOTTOM NOTE 21	23	27	29	41	43	45	46	PART NUMBER
23-22-0	**GARNISH MOULDINGS Cont'd.**											
23-22-86	MOULDING Cont'd.											
	RETAINER, Lwr.	70	Y-L	—	AR	—	—	—	—	—	—	6002 597
	SCREW, Lwr.	70	Y-L	—	AR	—	—	—	—	—	—	9423 434
	SCREW, Upr.	70	Y-L	—	AR	—	—	—	—	—	—	9414 753
23-22-88	RETAINER, Rear Wdo. Mldg. Lwr.	70	P	1	—	—	1	—	1	—	—	3509 074
		71	P	—	—	—	1	—	1	—	—	3509 074
			D	—	—	—	—	—	1	—	—	3509 074
23-22-90	BRACKET, Rear Wdo. Lwr. Garnish Mldg., Ctr. and Interm. Attach.		Y	—	3	—	—	—	—	—	—	2878 920
23-22-145	MOULDING, Windshield Garnish											
		Side 70	V,L	—	—	—	1	—	—	—	—	3752-3 FX9
		Side, Blue 71	V,L	—	—	—	1	—	—	—	—	3726-7 GB7
		Side, Green 71	V,L	—	—	—	1	—	—	—	—	3726-7 GF7
		Side, Black 71	V,L	—	—	—	1	—	—	—	—	3726-7 GX9
		Side, Gold 71	V,L	—	—	—	1	—	—	—	—	3726-7 GY4
		Side, Tan 71	V,L	—	—	—	1	—	—	—	—	3726-7 GT8
		Side	V-H,L	—	1	—	—	—	—	—	—	3706-7 EX9
		Side 70	B,J	—	1	—	1	—	—	—	—	3790-1 FX9
		Side, Blue 71	B,J	—	1	—	—	—	—	—	—	3768-9 GB5
		Side, Green 71	B,J	—	1	—	—	—	—	—	—	3768-9 GF7
		Side, Tan 71	B,J	—	1	—	—	—	—	—	—	3768-9 GT6
		Side, White 71	B,J	—	1	—	—	—	—	—	—	3768-9 GW1
		Side, Black 71	B,J	—	1	—	—	—	—	—	—	3768-9 GX9
		Side, Gold 71	B,J	—	1	—	—	—	—	—	—	3768-9 GY4
		Side	B,J	—	—	1	—	—	—	—	—	3766-7 FX9
	After Jan. 1, 1971	Side 71	B,J	—	—	1	—	—	—	—	—	= 3770-1 GX9
		Side 70	R,W	1	1	—	1	—	—	—	—	3760-1 DX9
		Side, Gray 71	R,W	—	1	—	1	—	—	—	—	3760-1 GA6
		Side, Med. Blue 71	R,W	—	1	—	1	—	—	—	—	3760-1 GB5
		Side, Green 71	R,W	—	1	—	1	—	—	—	—	3760-1 GF7
		Side, Dark Tan 71	R,W	—	1	—	1	—	—	—	—	3760-1 GT6
		Side, Black 71	R,W	—	1	—	1	—	—	—	—	3760-1 GX9
		Side, Gold 71	R,W	—	1	—	1	—	—	—	—	3760-1 GY4
		Side, White 71	R,W	—	1	—	1	—	—	—	—	3760-1 GW1
		Side 70	R,W	—	—	1	—	—	—	—	—	3794-5 DX9
		Side 70	R,W	—	—	—	—	1	—	—	—	3762-3 DX9
		Side, Med. Blue 71	R,W	—	—	—	—	1	—	—	—	3794-5 GB7
		Side, Green 71	R,W	—	—	—	—	1	—	—	—	3794-5 GF7
		Side, Dark Tan 71	R,W	—	—	—	—	1	—	—	—	3794-5 GT6
		Side, Black 71	R,W	—	—	—	—	1	—	—	—	3794-5 GX9
		Side, Gold 71	R,W	—	—	—	—	1	—	—	—	3794-5 GY4
		Side 70	R,W	—	—	—	—	—	—	1	1	3792-3 DX9
		Side, Med. Blue 71	R,W	—	—	—	—	—	—	1	1	3792-3 GB7
		Side, Green 71	R,W	—	—	—	—	—	—	1	1	3792-3 GF7
		Side, Dark Tan 71	R,W	—	—	—	—	—	—	1	1	3792-3 GT6
		Side, Black 71	R,W	—	—	—	—	—	—	1	1	3792-3 GX9
		Side 70	P,D,C,Y	—	1	—	—	—	—	—	—	3738-9 EX9
		Side 70	P-K	1	—	—	—	—	—	—	—	3742-3 EX9
		Side 70	P-E, P-L	1	—	—	—	—	—	—	—	3786-7 EX9
		Side, Light Blue 71	P,D,C,Y	1	1	—	—	—	—	—	—	3738-9 GB2
		Side, Red 71	P,D,C,Y	1	1	—	—	—	—	—	—	3738-9 GE9
		Side, Green 71	P,D,C,Y	1	1	—	—	—	—	—	—	3738-9 GF7
		Side, Dark Tan 71	P,D,C,Y	1	1	—	—	—	—	—	—	3738-9 GT6
		Side, Black 71	P,D,C,Y	1	1	—	—	—	—	—	—	3738-9 GX9
		Side, Gold 71	P,D,C,Y	1	1	—	—	—	—	—	—	3738-9 GY5
		Side, Gray 71	P,D,C,Y	1	1	—	—	—	—	—	—	3738-9 GA6
		Side, White 71	P,D,C,Y	1	1	—	—	—	—	—	—	3738-9 GW1
		Side, Beige 71	P,D,C,Y	1	1	—	—	—	—	—	—	3738-9 GL1

CARLINES	J - Challenger B - Barracuda	V - Valiant L - Dart	R - Belvedere - Satallite W - Coronet - Charger	P - Plymouth D - Dodge	C - Chrysler Y - Imperial
NUMERALS INDICATE:	21 - 2 DR. SED. 23 - 2 DR. H.T.	27 - CONV. CPE. 29 - FAST BACK	41 - 4 DR. SED. 43 - 4 DR. H.T.	45 - 6 PASS. STA. WGN. 46 - 9 PASS. STA. WGN.	

AR Indicates use as required.
\# Indicates parts not listed in any previous parts book
Numerals in parentheses ( ) refer to notes.
★ Indicates change or addition.

Printed in U.S.A.
January 1972

Right and left part numbers are on same line, first number is right, second number is left.

CODE	PART NAME	MODEL CODES	SEE BOTTOM NOTE								PART NUMBER
			21	23	27	29	41	43	45	46	
23-22-0	**GARNISH MOULDINGS Cont'd.**										
23-22-145	MOULDING Cont'd.										
	Side, Med. Blue 71	P,D,C,Y	1	1	—	—	—	—	—	—	3738-9 GB7
	Side, Burgundy 71	P,D,C,Y	1	1	—	—	—	—	—	—	3738-9 GM9
	Side, Light Tan 71	Y	—	1	—	—	—	—	—	—	3738-9 GT1
	Side, Gray 71	P,D,C,Y	—	—	—	1	—	1	—	—	3786-7 GA6
	Side, White 71	P,D,C,Y	—	—	—	1	—	1	—	—	3786-7 GW1
	Side, Beige 71	P,D,C,Y	—	—	—	1	—	1	—	—	3786-7 GL1
	Side, Med. Blue 71	P,D,C,Y	—	—	—	1	—	1	—	—	3786-7 GB7
	Side, Dark Blue 71	P,D,C,Y	—	—	—	1	—	1	—	—	3786-7 GB9
	Side, Light Tan 71	P,D,C,Y	—	—	—	1	—	1	—	—	3786-7 GT1
	Side, Light Blue 71	P,D,C,Y	—	—	—	1	—	1	—	—	3786-7 GB2
	Side, Dark Red 71	P,D,C,Y	—	—	—	1	—	1	—	—	3786-7 GE9
	Side, Green 71	P,D,C,Y	—	—	—	1	—	1	—	—	3786-7 GF7
	Side, Med. Tan 71	P,D,C,Y	—	—	—	1	—	1	—	—	3786-7 GT6
	Side, Black 71	P,D,C,Y	—	—	—	1	—	1	—	—	3786-7 GX9
	Side, Gold 71	P,D,C,Y	—	—	—	1	—	1	—	—	3786-7 GY5
	Side, Burgundy 71	Y	—	—	—	—	—	1	—	—	3786-7 GM9
	Side 70	D,C,Y	—	—	—	—	—	1	—	—	3742-3 EX9
W/VENT	Side, Black 71	C-H, Y	—	—	—	—	—	1	—	—	3742-3 GX9
	Side 70	P,D,C	—	—	1	—	—	—	—	—	3748-9 EX9
	Side 70	P	—	—	—	1	—	—	—	—	3786-7 EX9
Up to Type	Side 70	P,D,C	—	—	—	—	1	—	1	1	3744-5 FX9
	Side, Black 71	P,D,C	—	—	—	—	1	—	1	1	3744-5 GX9
Flange Which Covers Pinch Weld Removed After Type	Side 70	P,D,C	—	—	—	—	1	—	1	1	3730-1 FX9
	Upr., Prime	B,J	—	1	—	1	—	—	—	—	2895 803
	Upr., Prime	B,J	—	—	1	—	—	—	—	—	2964 142
	Upr. Corner, Prime	B,J	—	—	1	—	—	—	—	—	3446 244-5
	Upr. Prime 70	R,W	1	1	—	1	—	—	—	—	2811 273
	Upr., Prime 71	R,W	—	1	—	1	—	—	—	—	3439 488
	Upr. Prime 70	R,W	—	—	1	—	—	—	—	—	2842 205
	Upr. Corner, Prime 70	R,W	—	—	1	—	—	—	—	—	2842 742-3
	Upr., Prime 70	R,W	—	—	—	—	1	—	1	1	2570 320
	Upr., Prime 71	R,W	—	—	—	—	1	—	1	1	3439 489
	Upr., Prime	P,D,C,Y	1	1	—	1	1	1	1	1	2893 146
	Upr., Prime 70	P,D,C	—	—	1	—	—	—	—	—	2901 020
	Upr. Corner, Prime 70	P,D,C	—	—	1	—	—	—	—	—	2901 022-3

23-23-0 OUTSIDE FINISH MOULDINGS AND ORNAMENTATIONS

23-23-2	MOULDING, Body Side Sill Finish (1)											
23-23-11	SPACER, Rear Wdo. Mldg.											
	NOTE: See Code 23-23-52											
	SPACER, W/Shield Mldg.											
	NOTE: See Code 23-23-65											
23-23-12	TAPE, Deck Lid or Deck Lid Finish Pnl. (1)											
	TAPE, Door and Qtr. (1)											
23-23-14	MOULDING, Frt. Pillar (1)											
23-23-16	PANEL, Center Pillar Upr. Finish (1)											
23-23-23	MOULDING, Deck Opng. Lwr. Pnl. (1)											
23-23-25	REFLEX, Deck Opng. Lwr. Finish Panel (1)											
23-23-27	SPACER, Deck Opng. Lwr. Finish Pnl.	70	W	—	2	2	—	2	—	—	—	3444 963
	SEAL, Tailgate Upr. and Lwr. End Mldg.	70	W	—	—	—	—	—	—	4	4	2603 240
23-23-28	PANEL, Deck Opng. Lwr. Finish (1)											
23-23-30	MOULDING, Deck Lid Finish (1)											
23-23-31	MOULDING, Deck Opng. Upr. Pnl. Finish (1)											

CARLINES	J - Challenger B - Barracuda	V - Valiant L - Dart	R - Belvedere - Satallite W - Coronet - Charger	P - Plymouth D - Dodge	C - Chrysler Y - Imperial
NUMERALS INDICATE:	21 - 2 DR. SED. 23 - 2 DR. H.T.	27 - CONV. CPE. 29 - FAST BACK	41 - 4 DR. SED. 43 - 4 DR. H.T.	45 - 6 PASS. STA. WGN. 46 - 9 PASS. STA. WGN.	

AR Indicates use as required.
\# Indicates parts not listed in any previous parts book
Numerals in parentheses ( ) refer to notes.
★ Indicates change or addition.

Printed in U.S.A.
January 1972

Right and left part numbers are on same line, first number is right, second number is left.

23-23-0 OUTSIDE FINISH MOULDINGS AND ORNAMENTATIONS Cont'd.

CODE	PART NAME	MODEL CODES	SEE BOTTOM NOTE 21	23	27	29	41	43	45	46	PART NUMBER
23-23-32	MOULDING, Frt. Door Outside Finish (1)										
23-23-33	MOULDING, Rear Door Outside Finish (1)										
23-23-39	MOULDING, Qtr. Pnl. Outside Finish (1)										
23-23-41	CAP or COVER, Body Outside Finish (1)										
23-23-42	MOULDING, Roof Panel Finish (1)										
	NOTE (1) See Exterior Moulding Illustration in Illustration Catalog										
23-23-52	MOULDING PACKAGE, Rear Wdo. Outside										
	Lwr.	V,L	—	—	—	1	—	—	—	—	3419 990-1
	Upr. and Side	V,L	—	—	—	1	—	—	—	—	3419 988-9
	SCREW, Lwr.	V	—	—	—	AR	—	—	—	—	6024 271
	RETAINER, Upr. and Side	V	—	—	—	AR	—	—	—	—	6002 615
	MOULDING PACKAGE, Rear Wdo.										
	Outside Upr.	V	—	—	—	—	1	—	—	—	2932 464-5
	Lwr.	V	—	—	—	—	1	—	—	—	2932 466-7
	RETAINER, Upr.	V	—	—	—	—	12	—	—	—	6002 263
	RETAINER, Lwr.	V	—	—	—	—	8	—	—	—	6002 263
	MOULDING PACKAGE, Rear Wdo. Outside										
	Lwr.	V-H,L	—	1	—	—	—	—	—	—	2807 614-5
	Upr. and Side	V-H,L	—	1	—	—	—	—	—	—	2807 616-7
	Lwr.	L	—	—	—	—	1	—	—	—	2807 612-3
	Upr.	L	—	—	—	—	1	—	—	—	2807 610-1
	RETAINER, Lwr.	L	—	AR	—	—	—	—	—	—	6002 206
	RETAINER, Upr. and Side	L	—	AR	—	—	—	—	—	—	6002 206
	RETAINER, Lwr.	L	—	—	—	—	AR	—	—	—	6002 206
	RETAINER, Upr.	L	—	—	—	—	AR	—	—	—	6002 206
	MOULDING PACKAGE, Rear Wdo. Outside										
	Upr. 70	B	—	1	—	—	—	—	—	—	3419 806
	Black, Upr. 70	B	—	1	—	—	—	—	—	—	3481 710
	Upr. Corner 70	B	—	1	—	—	—	—	—	—	3419 802-3
	Black, Upr. Corner 70	B	—	1	—	—	—	—	—	—	3481 708-9
	Lwr. 70	B	—	1	—	—	—	—	—	—	3419 804-5
	Black, Lwr. and Side 70	B	—	1	—	—	—	—	—	—	3481 712-3
	RETAINER, Upr. 70	B	—	AR	—	—	—	—	—	—	6002 861
	SPACER, Upr. 70	B	—	AR	—	—	—	—	—	—	2840 418
	SPACER, Upr., Black 70	B-P	—	AR	—	—	—	—	—	—	2900 275
	RETAINER, Upr. Corner 70	B	—	AR	—	—	—	—	—	—	6002 861
	SPACER, Lwr. 70	B	—	AR	—	—	—	—	—	—	2964 590
	SUPPORT, Lwr. 70	B	—	AR	—	—	—	—	—	—	2964 592
	RETAINER, Lwr. and Side 70	B-P	—	AR	—	—	—	—	—	—	6002 861
	SPACER, Lwr. and Side, 70	B-P	—	AR	—	—	—	—	—	—	2964 590
	SUPPORT, Lwr. and Side 70	B-P	—	AR	—	—	—	—	—	—	2964 592
	MOULDING PACKAGE, Rear Door Outside										
	Upr. 71	B	—	1	—	—	—	—	—	—	3419 806
	Upr., Black 71	B-P, B-S	—	1	—	—	—	—	—	—	3579 740
	Upr., Green 71	B-P	—	1	—	—	—	—	—	—	3579 718
	Upr., Gold 71	B-P	—	1	—	—	—	—	—	—	3579 719
	Upr., White 71	B-P	—	1	—	—	—	—	—	—	3579 720
	SPACER, Upr. 71	B	—	AR	—	—	—	—	—	—	2900 275
	RETAINER, Upr. 71	B	—	AR	—	—	—	—	—	—	6002 688
	MOULDING PACKAGE, Rear Wdo. Outside										
	Lwr. 71	B	—	1	—	—	—	—	—	—	3419 804-5
	Lwr., Green 71	B-P	—	1	—	—	—	—	—	—	3579 734-5
	Lwr., Gold 71	B-P	—	1	—	—	—	—	—	—	3579 736-7
	Lwr., White 71	B-P	—	1	—	—	—	—	—	—	3579 738-9
	RETAINER, Lwr. 71	B	—	AR	—	—	—	—	—	—	6002 688
	MOULDING PACKAGE, Rear Wdo. Outside										
	Upr. Corner 71	B	—	1	—	—	—	—	—	—	3419 802-3

CARLINES: J - Challenger, B - Barracuda, V - Valiant, L - Dart, R - Belvedere - Satallite, W - Coronet - Charger, P - Plymouth, D - Dodge, C - Chrysler, Y - Imperial

NUMERALS INDICATE: 21 - 2 DR. SED., 23 - 2 DR. H.T., 27 - CONV. CPE., 29 - FAST BACK, 41 - 4 DR. SED., 43 - 4 DR. H.T., 45 - 6 PASS. STA. WGN., 46 - 9 PASS. STA. WGN.

AR Indicates use as required.
\# Indicates parts not listed in any previous parts book
Numerals in parentheses ( ) refer to notes.
★ Indicates change or addition.

Printed in U.S.A.
January 1972

Right and left part numbers are on same line, first number is right, second number is left.

CODE	PART NAME	MODEL CODES	SEE BOTTOM NOTE 21	23	27	29	41	43	45	46	PART NUMBER
23-23-0	**OUTSIDE FINISH MOULDINGS AND ORNAMENTATIONS Cont'd.**										
23-23-52	MOULDING PACKAGE Cont'd.										
	Upr. Corner, Black 71	B-P, B-S	—	1	—	—	—	—	—	—	3579 730-1
	Upr. Corner, Green 71	B-P	—	1	—	—	—	—	—	—	3579 724-5
	Upr. Corner, Gold 71	B-P	—	1	—	—	—	—	—	—	3579 726-7
	Upr. Corner, White 71	B-P	—	1	—	—	—	—	—	—	3579 728-9
	RETAINER, Upr. Corner 71	B	—	AR	—	—	—	—	—	—	6002 688
	RETAINER, Upr. Corner 71	B	—	AR	—	—	—	—	—	—	6002 263
	MOULDING PACKAGE, Rear Wdo. Outside										
	Lwr. and Side, Black 71	B-P, B-S	—	1	—	—	—	—	—	—	3579 742-3
	RETAINER, Lwr. and Side 71	B-P, B-S	—	AR	—	—	—	—	—	—	6002 688
	MOULDING PACKAGE, Rear Wdo. Outside										
	W/O Formal Roof, Lwr.	J	—	1	—	—	—	—	—	—	3419 808-9
	W/O Formal Roof, Upr. and Side	J	—	1	—	—	—	—	—	—	3419 810-1
	Upr. and Side 70	J	—	—	—	1	—	—	—	—	3549 626-7
	W/Formal Roof Pkg. Upr. and Side	J	—	1	—	—	—	—	—	—	3549 626-7
	Lwr. 70	J	—	—	—	1	—	—	—	—	3549 601
	W/Formal Roof Pkg. Lwr.	J	—	1	—	—	—	—	—	—	3549 601
	RETAINER, Upr. and Side	J	—	AR	—	—	—	—	—	—	6002 861
	SPACER, Upr. and Side	J	—	AR	—	—	—	—	—	—	2964 590
	SUPPORT, Upr. and Side	J	—	AR	—	—	—	—	—	—	2965 592
	RETAINER, Lwr.	J	—	AR	—	—	—	—	—	—	6002 861
	SPACER, Lwr.	J	—	AR	—	—	—	—	—	—	2964 590
	SUPPORT, Lwr.	J	—	AR	—	—	—	—	—	—	2964 592
	RETAINER, Upr. and Side	J	—	—	—	AR	—	—	—	—	6002 861
	RETAINER, Lwr.	J	—	—	—	AR	—	—	—	—	6002 861
	MOULDING, Rear Wdo. Outside										
	Lwr. Corner 70	J	—	—	—	1	—	—	—	—	3446 710-1
	W/Formal Roof Pkg. Lwr. Corner	J	—	1	—	—	—	—	—	—	3446 710-1
	MOULDING PACKAGE, Rear Wdo. Outside										
	Side and Upr. 70	R,W	1	1	—	—	—	—	—	—	3004 390-1
	Lwr. 70	R,W	1	1	—	—	—	—	—	—	3004 392-3
	Upr. 70	R,W	—	—	—	—	1	—	—	—	3419 479
	Lwr. and Side 70	R,W	—	—	—	—	1	—	—	—	3419 480-1
	Upr. Corner 70	R,W	—	—	—	—	1	—	—	—	3004 384-5
	RETAINER, Side and Upr. 70	R,W	AR	AR	—	—	—	—	—	—	6001 084
	RETAINER, Lwr. 70	R,W	AR	AR	—	—	—	—	—	—	6001 084
	RETAINER, Upr. 70	R,W	—	—	—	—	AR	—	—	—	6002 893
	SCREW, Upr. 70	R,W	—	—	—	—	AR	—	—	—	6024 271
	SPACER, Upr. 70	R,W	—	—	—	—	AR	—	—	—	2840 418
	RETAINER, Lwr. and Side 70	R,W	—	—	—	—	AR	—	—	—	6002 893
	SCREW, Lwr. and Side 70	R,W	—	—	—	—	AR	—	—	—	6024 271
	SPACER, Lwr. and Side 70	R,W	—	—	—	—	AR	—	—	—	2840 418
	RETAINER, Upr. Corner 70	R,W	—	—	—	—	AR	—	—	—	6001 084
	Side and Upr. 71	R,W	—	1	—	1	—	—	—	—	3579 576-7
	Lwr. 71	R,W	—	1	—	1	—	—	—	—	3579 588-9
	Side and Upr. 71	R,W	—	—	—	—	1	—	—	—	3579 562-3
	Lwr. 71	R,W	—	—	—	—	1	—	—	—	3579 560-1
	SPACER, Upr. and Side 71	R,W	—	AR	—	AR	—	—	—	—	3505 747
	RETAINER, Upr. and Side 71	R,W	—	AR	—	AR	—	—	—	—	6002 893
	SCREW 71	R,W	—	AR	—	AR	—	—	—	—	6029 062
	RETAINER, Lwr. 71	R,W	—	AR	—	AR	—	—	—	—	6002 893
	SPACER, Lwr. 71	R,W	—	AR	—	AR	—	—	—	—	3505 747
	SCREW, Lwr. 71	R,W	—	AR	—	AR	—	—	—	—	6029 062
	RETAINER, Side and Upr. 71	R,W	—	—	—	—	AR	—	—	—	6002 893
	SPACER, Side and Upr. 71	R,W	—	—	—	—	AR	—	—	—	3505 747
	SCREW, Side and Upr. 71	R,W	—	—	—	—	AR	—	—	—	6029 062
	RETAINER, Lwr. 71	R,W	—	—	—	—	AR	—	—	—	6002 893
	SPACER, Lwr. 71	R,W	—	—	—	—	AR	—	—	—	3505 747

CARLINES J - Challenger, B - Barracuda, V - Valiant, L - Dart, R - Belvedere - Satallite, W - Coronet - Charger, P - Plymouth, D - Dodge, C - Chrysler, Y - Imperial

NUMERALS INDICATE: 21 - 2 DR. SED., 23 - 2 DR. H.T., 27 - CONV. CPE., 29 - FAST BACK, 41 - 4 DR. SED., 43 - 4 DR. H.T., 45 - 6 PASS. STA. WGN., 46 - 9 PASS. STA. WGN.

AR Indicates use as required.
\# Indicates parts not listed in any previous parts book
Numerals in parentheses ( ) refer to notes.
★ Indicates change or addition.

Printed in U.S.A.
January 1972

Right and left part numbers are on same line, first number is right, second number is left.

23-23-0 OUTSIDE FINISH MOULDINGS AND ORNAMENTATIONS Cont'd.

CODE	PART NAME	MODEL CODES	SEE BOTTOM NOTE 21	23	27	29	41	43	45	46	PART NUMBER
23-23-52	MOULDING PACKAGE Cont'd.										
	SCREW, Lwr. 71	R,W	—	—	—	—	AR	—	—	—	6029 062
	MOULDING PACKAGE, Rear Wdo. Outside Upr. 70	W	—	—	—	1	—	—	—	—	2932 220-1
	Corner 70	W	—	—	—	1	—	—	—	—	2932 218-9
	Lwr. 70	W	—	—	—	1	—	—	—	—	2932 217
	RETAINER, Upr. 70	W	—	—	—	AR	—	—	—	—	6002 263
	RETAINER, Corner 70	W	—	—	—	AR	—	—	—	—	6002 263
	RETAINER, Lwr. 70	W	—	—	—	AR	—	—	—	—	6002 263
	Lwr., Black 71	W	—	1	—	1	—	—	—	—	3579 618-9
	Lwr., Green 71	W	—	1	—	1	—	—	—	—	3579 606-7
	Lwr., Gold 71	W	—	1	—	1	—	—	—	—	3579 608-9
	Lwr., White 71	W	—	1	—	1	—	—	—	—	3579 610-1
	Side and Upr., Black 71	W	—	1	—	1	—	—	—	—	3579 620-1
	Side and Upr., Green 71	W	—	1	—	1	—	—	—	—	3579 614-5
	Side and Upr., Gold 71	W	—	1	—	1	—	—	—	—	3579 616-7
	Side and Upr., White 71	W	—	1	—	1	—	—	—	—	3579 602-3
	RETAINER, Lwr. 71	W	—	AR	—	AR	—	—	—	—	6002 893
	SPACER, Lwr. 71	W	—	AR	—	AR	—	—	—	—	3505 747
	SCREW, Lwr. 71	W	—	AR	—	AR	—	—	—	—	6029 062
	RETAINER, Side and Upr. 71	W	—	AR	—	AR	—	—	—	—	6002 893
	SPACER, Side and Upr. 71	W	—	AR	—	AR	—	—	—	—	3505 747
	SCREW, Side and Upr. 71	W	—	AR	—	AR	—	—	—	—	6029 062
	MOULDING PACKAGE, Rear Wdo. Outside Side and Upr.	P,D	1	—	—	1	—	1	—	—	2933 492-3
	Lwr. 70	P,D	1	—	—	1	—	1	—	—	3419 306-7
	Lwr. 71	P,D	—	—	—	1	—	1	—	—	3419 306-7
	Upr. 70	P,D,C	—	1	—	—	—	—	—	—	2933 544-5
	Upr. 71	P-E	1	—	—	—	—	—	—	—	2933 544-5
	Upr. 71	P,D,C	—	1	—	—	—	—	—	—	2933 544-5
	Upr. 70	Y-L	—	1	—	—	—	—	—	—	2933 544-5
	Lwr. 70	P,D,C	—	1	—	—	—	—	—	—	2933 546-7
	Lwr. 71	P-E	1	—	—	—	—	—	—	—	2933 546-7
	Lwr. 71	P,D,C	—	1	—	—	—	—	—	—	2933 546-7
	Lwr. 70	Y-L	—	1	—	—	—	—	—	—	2933 546-7
	Side and Lwr.	P,D	—	—	—	—	1	—	—	—	2933 494-5
	Upr.	P,D	—	—	—	—	1	—	—	—	2933 496-7
	RETAINER, Side and Upr.	P,D	AR	—	—	AR	—	AR	—	—	6002 686
	RETAINER, Lwr.	P,D	AR	—	—	AR	—	AR	—	—	6002 686
	SPACER, Lwr.	P,D	AR	—	—	AR	—	AR	—	—	2840 418
	RETAINER, Upr.	P,D,C	—	AR	—	—	—	—	—	—	6002 686
	RETAINER, Upr. 70	Y-L	—	AR	—	—	—	—	—	—	6002 686
	RETAINER, Lwr.	P,D,C	—	AR	—	—	—	—	—	—	6002 686
	RETAINER, Lwr. 70	Y-L	—	AR	—	—	—	—	—	—	6002 686
	RETAINER, Side and Lwr.	P,D	—	—	—	—	AR	—	—	—	6002 686
	RETAINER, Upr.	P,D	—	—	—	—	AR	—	—	—	6002 686
	MOULDING PACKAGE, Rear Wdo. Outside Side and Lwr.	C	—	—	—	—	1	—	—	—	2933 502-3
	Upr.	C	—	—	—	—	1	—	—	—	2933 498-9
	Side and Upr. 70	C,Y-L	—	—	—	—	—	1	—	—	2933 506-7
	Side and Upr. 71	C	—	—	—	—	—	1	—	—	2933 506-7
	Lwr. 70	C,Y-L	—	—	—	—	—	1	—	—	2933 504-5
	Lwr. 71	C	—	—	—	—	—	1	—	—	2933 504-5
	RETAINER, Side and Lwr.	C	—	—	—	—	AR	—	—	—	6002 686
	RETAINER, Upr.	C	—	—	—	—	AR	—	—	—	6002 686
	RETAINER, Side and Upr. 70	C,Y-L	—	—	—	—	—	AR	—	—	6002 686
	RETAINER, Side and Upr. 71	C	—	—	—	—	—	1	—	—	6002 686
	RETAINER, Lwr. 70	C,Y-L	—	—	—	—	—	AR	—	—	6002 686

CARLINES: J - Challenger, B - Barracuda, V - Valiant, L - Dart, R - Belvedere - Satellite, W - Coronet - Charger, P - Plymouth, D - Dodge, C - Chrysler, Y - Imperial

NUMERALS INDICATE: 21 - 2 DR. SED., 23 - 2 DR. H.T., 27 - CONV. CPE., 29 - FAST BACK, 41 - 4 DR. SED., 43 - 4 DR. H.T., 45 - 6 PASS. STA. WGN., 46 - 9 PASS. STA. WGN.

AR Indicates use as required.
\# Indicates parts not listed in any previous parts book
Numerals in parentheses ( ) refer to notes.
★ Indicates change or addition.

Printed in U.S.A.
January 1972

Right and left part numbers are on same line, first number is right, second number is left.

CODE	PART NAME		MODEL CODES	SEE BOTTOM NOTE 21	23	27	29	41	43	45	46	PART NUMBER
23-23-0	**OUTSIDE FINISH MOULDINGS AND ORNAMENTATIONS Cont'd.**											
23-23-52	MOULDING PACKAGE Cont'd.											
	RETAINER, Lwr.	71	C	—	—	—	—	—	1	—	—	6002 686
	MOULDING PACKAGE, Rear Wdo. Outside											
		Upr., Black 70	Y	—	1	—	—	—	—	—	—	2933 630-1
		White 70	Y	—	1	—	—	—	—	—	—	2933 632-3
		Green 70	Y	—	1	—	—	—	—	—	—	2933 634-5
		Champagne 70	Y	—	1	—	—	—	—	—	—	2933 636-7
		Blue 70	Y-M	—	1	—	—	—	—	—	—	2933 638-9
		Walnut 70	Y-M	—	1	—	—	—	—	—	—	2933 640-1
		Upr., Burgundy 71	Y	—	1	—	—	—	—	—	—	3579 828-9
		White 71	Y	—	1	—	—	—	—	—	—	3579 830-1
		Black 71	Y	—	1	—	—	—	—	—	—	3579 832-3
		Tan 71	Y	—	1	—	—	—	—	—	—	3579 834-5
		Gold 71	Y	—	1	—	—	—	—	—	—	3579 836-7
		Green 71	Y	—	1	—	—	—	—	—	—	3579 838-9
		Lwr., Black 70	Y	—	1	—	—	—	—	—	—	2933 644-5
		White 70	Y	—	1	—	—	—	—	—	—	2933 646-7
		Green 70	Y	—	1	—	—	—	—	—	—	2933 648-9
		Champagne 70	Y	—	1	—	—	—	—	—	—	2933 688-9
		Blue 70	Y-M	—	1	—	—	—	—	—	—	2933 690-1
		Walnut 70	Y-M	—	1	—	—	—	—	—	—	2933 692-3
		Lwr., Burgundy 71	Y	—	1	—	—	—	—	—	—	3579 842-3
		White 71	Y	—	1	—	—	—	—	—	—	3579 844-5
		Black 71	Y	—	1	—	—	—	—	—	—	3579 846-7
		Tan 71	Y	—	1	—	—	—	—	—	—	3579 848-9
		Gold 71	Y	—	1	—	—	—	—	—	—	3579 850-1
		Green 71	Y	—	1	—	—	—	—	—	—	3579 852-3
		Upr., Black 70	Y-M	—	—	—	—	—	1	—	—	3419 338-9
		White 70	Y	—	—	—	—	—	1	—	—	2933 698-9
		Green 70	Y	—	—	—	—	—	1	—	—	2933 700-1
		Champagne 70	Y	—	—	—	—	—	1	—	—	2933 702-3
		Blue 70	Y-M	—	—	—	—	—	1	—	—	2933 704-5
		Walnut 70	Y-M	—	—	—	—	—	1	—	—	2933 706-7
		Upr., Burgundy 71	Y	—	—	—	—	—	1	—	—	3579 856-7
		White 71	Y	—	—	—	—	—	1	—	—	3579 858-9
		Black 71	Y	—	—	—	—	—	1	—	—	3579 860-1
		Tan 71	Y	—	—	—	—	—	1	—	—	3579 862-3
		Gold 71	Y	—	—	—	—	—	1	—	—	3579 864-5
		Green 71	Y	—	—	—	—	—	1	—	—	3579 866-7
		Lwr., Black 70	Y-M	—	—	—	—	—	1	—	—	3419 336-7
		White 70	Y	—	—	—	—	—	1	—	—	2933 708-9
		Green 70	Y	—	—	—	—	—	1	—	—	2933 710-1
		Champagne 70	Y	—	—	—	—	—	1	—	—	2933 712-3
		Blue 70	Y-M	—	—	—	—	—	1	—	—	2933 714-5
		Walnut 70	Y-M	—	—	—	—	—	1	—	—	2933 716-7
		Lwr., Burgundy 71	Y	—	—	—	—	—	1	—	—	3579 870-1
		White 71	Y	—	—	—	—	—	1	—	—	3579 872-3
		Black 71	Y	—	—	—	—	—	1	—	—	3579 874-5
		Tan 71	Y	—	—	—	—	—	1	—	—	3579 876-7
		Gold 71	Y	—	—	—	—	—	1	—	—	3579 878-9
		Green 71	Y	—	—	—	—	—	1	—	—	3579 880-1
	RETAINER	70	Y	—	AR	—	—	—	AR	—	—	6002 206
	RETAINER	71	Y	—	AR	—	—	—	AR	—	—	6002 206
	SPACER	71	Y	—	AR	—	—	—	AR	—	—	2840 418

CARLINES	J - Challenger B - Barracuda	V - Valiant L - Dart	R - Belvedere - Satallite W - Coronet - Charger	P - Plymouth D - Dodge	C - Chrysler Y - Imperial
NUMERALS INDICATE:		21 - 2 DR. SED. 23 - 2 DR. H.T.	27 - CONV. CPE. 29 - FAST BACK	41 - 4 DR. SED. 43 - 4 DR. H.T.	45 - 6 PASS. STA. WGN. 46 - 9 PASS. STA. WGN.

AR Indicates use as required.
\# Indicates parts not listed in any previous parts book
Numerals in parentheses ( ) refer to notes.
★ Indicates change or addition.

Printed in U.S.A.
January 1972

Right and left part numbers are on same line, first number is right, second number is left.

23-23-0 OUTSIDE FINISH MOULDINGS AND ORNAMENTATIONS Cont'd.

CODE	PART NAME	MODEL CODES	SEE BOTTOM NOTE 21	23	27	29	41	43	45	46	PART NUMBER
23-23-60	MOULDING, Tailgate Opng. Outside Finish (1)										
	MOULDING, Roof Rear Air Deflector (1)										
	MOULDING, Roof Rear Tailgate Opng. (1)										
23-23-61	MOULDING, Tailgate Outside Finish (1)										
	NOTE (1) See Extension Moulding Illustration in Illustration Catalog										
23-23-65	MOULDING PACKAGE, w/Shield Outside										
	Upr. and Side	V,L	—	—	—	1	—	—	—	—	3481 772-3
	Lwr.	V,L	—	—	—	1	—	—	—	—	3481 771
	SCREW, Upr. and Side	V,L	—	—	—	AR	—	—	—	—	6002 615
	RETAINER, Lwr.	V,L	—	—	—	AR	—	—	—	—	6002 263
	MOULDING, w/Shield Outside										
	Lwr. Corner	V,L	—	—	—	1	—	—	—	—	3444 796-7
	MOULDING PACKAGE, w/Shield Outside										
	Upr.	V,L	—	—	—	—	1	—	—	—	2932 452-3
	Lwr.	V,L	—	1	—	—	1	—	—	—	2932 445
	RETAINER, Upr.	V,L	—	—	—	—	AR	—	—	—	6002 263
	RETAINER, Lwr.	V,L	—	AR	—	—	AR	—	—	—	6002 263
	RETAINER, Lwr.	V,L	—	AR	—	—	AR	—	—	—	6002 615
	MOULDING PACKAGE, w/Shield Outside										
	Side	V,L	—	—	—	—	1	—	—	—	2932 448-9
	Side	V-H,L	—	1	—	—	—	—	—	—	2932 446-7
	Upr.	V-H,L	—	1	—	—	—	—	—	—	2932 450-1
	RETAINER, Side	V,L	—	—	—	—	AR	—	—	—	6002 263
	RETAINER, Side	L	—	AR	—	—	—	—	—	—	6002 263
	RETAINER, Upr.	L	—	AR	—	—	—	—	—	—	6002 263
	MOULDING PACKAGE, w/Shield Outside										
	Lwr.	B,J	—	1	1	1	—	—	—	—	3419 807
	Before Oct. 1970, Up To Type, Upr.	B,J	—	—	1	—	—	—	—	—	3419 816-7
	Upr. Pillar	B,J	—	—	1	—	—	—	—	—	3419 814-5
	Upr. and Side	B,J	—	1	1	1	—	—	—	—	3419 818-9
	Lwr. Corner	B,J	—	1	1	1	—	—	—	—	3419 820-1
	SPACER, Lwr.	B,J	—	AR	AR	AR	—	—	—	—	2895 334
	SCREW, Lwr.	B,J	—	AR	AR	AR	—	—	—	—	6024 271
	RETAINER, Upr.	B,J	—	—	AR	—	—	—	—	—	6002 861
	SPACER, Upr.	B,J	—	—	AR	—	—	—	—	—	3445 623
	RETAINER, Upr. and Side	B,J	—	AR	AR	AR	—	—	—	—	6002 861
	SPACER, Upr. and Side	B,J	—	AR	AR	AR	—	—	—	—	3445 623
	SCREW, Lwr. Corner	B,J	—	AR	AR	AR	—	—	—	—	6024 421
	MOULDING, W/Shield Outside, Upr.										
	After Oct. 1970, After Type 71	B,J	—	—	1	—	—	—	—	—	3570 966-7
	MOULDING, w/Shield Outside										
	Upr. 70	R,W	1	1	—	1	—	—	—	—	2811 259
	Lwr. 70	R,W	1	1	—	1	—	—	—	—	2811 888-9
	Side 70	R,W	1	1	—	1	—	—	—	—	2811 260-1
	MOULDING PACKAGE, w/Shield Outside										
	Upr. 70	R,W	—	—	1	—	—	—	—	—	2586 272-3
	Lwr. 70	R,W	—	—	1	—	1	—	1	1	2585 852-3
	Side 70	R,W	—	—	1	—	—	—	—	—	2586 274-5
	Upr. 70	R,W	—	—	—	—	1	—	1	1	2584 699
	Side 70	R,W	—	—	—	—	1	—	1	1	2585 850-1
	SCREW, Upr. 70	R,W	—	—	AR	—	—	—	—	—	6026 220
	RETAINER and SEAL, Lwr. 70	R,W	—	—	AR	—	AR	—	AR	AR	6001 855
	SCREW, Lwr. 70	R,W	—	—	AR	—	AR	—	AR	AR	6024 271
	RETAINER, Lwr., Rt. 70	R,W	—	—	AR	—	AR	—	AR	AR	6002 242
	RETAINER, Lwr., Lt. 70	R,W	—	—	AR	—	AR	—	AR	AR	6002 243
	SCREW, Side 70	R,W	—	—	AR	—	—	—	—	—	9415 910
	RETAINER, SCREW and SEAL, Upr. 70	R,W	—	—	—	—	AR	—	AR	AR	6002 263

CARLINES J - Challenger, B - Barracuda, V - Valiant, L - Dart, R - Belvedere - Satallite, W - Coronet - Charger, P - Plymouth, D - Dodge, C - Chrysler, Y - Imperial

NUMERALS INDICATE: 21 - 2 DR. SED., 23 - 2 DR. H.T., 27 - CONV. CPE., 29 - FAST BACK, 41 - 4 DR. SED., 43 - 4 DR. H.T., 45 - 6 PASS. STA. WGN., 46 - 9 PASS. STA. WGN.

AR Indicates use as required.
\# Indicates parts not listed in any previous parts book
Numerals in parentheses ( ) refer to notes.
★ Indicates change or addition.

Printed in U.S.A.
January 1972

Right and left part numbers are on same line, first number is right, second number is left.

CODE	PART NAME	MODEL CODES	SEE BOTTOM NOTE 21	23	27	29	41	43	45	46	PART NUMBER
23-23-0	**OUTSIDE FINISH MOULDINGS AND ORNAMENTATIONS Cont'd.**										
23-23-65	MOULDING PACKAGE Cont'd.										
	RETAINER, SCREW and SEAL, Side 70	R,W	—	—	—	—	AR	—	AR	AR	6002 263
	Side and Upr. 71	R,W	—	1	—	1	—	—	—	—	3579 580-1
	RETAINER, Side and Upr. 71	R,W	—	AR	—	AR	—	—	—	—	6002 893
	SPACER, Side and Upr. 71	R,W	—	AR	—	AR	—	—	—	—	3505 747
	SCREW, Side and Upr. 71	R,W	—	AR	—	AR	—	—	—	—	6029 062
	Lwr. 71	R,W	—	1	—	1	1	—	1	1	3579 553
	SCREW, Lwr. 71	R,W	—	AR	—	AR	AR	—	AR	AR	9428 267
	Upr. and Side 71	R,W	—	—	—	—	1	—	1	1	3579 564-5
	RETAINER, Upr. and Side 71	R,W	—	—	—	—	AR	—	AR	AR	6002 893
	SPACER, Upr. and Side 71	R,W	—	—	—	—	AR	—	AR	AR	3505 747
	SCREW, Upr. and Side 71	R,W	—	—	—	—	AR	—	AR	AR	6029 062
	Lwr. Corner 71	R,W	—	1	—	1	—	—	—	—	3579 578-9
	Lwr. Corner 71	R,W	—	—	—	—	1	—	1	1	3579 566-7
	SCREW, Lwr. Corner 71	R,W	—	AR	—	AR	AR	—	AR	AR	9428 267
	MOULDING PACKAGE, W/Shield Outside										
	Side	P,D,C,Y	1	1	1	1	—	1	—	—	2933 966-7
	Side	P,D,C	—	—	—	—	1	—	1	1	2933 064-5
	SCREW, Side	P,D,C,Y	AR	AR	AR	AR	AR	AR	AR	AR	6002 688
	SPACER, Side	P,C,C,Y	AR	AR	AR	AR	AR	AR	AR	AR	2900 275
	MOULDING, W/Shield Outside										
	Upr.	P,D,C,Y	1	1	1	1	1	1	1	1	2893 077
	RETAINER, Upr. 70	P,D,C,Y	AR	AR	AR	AR	AR	AR	AR	AR	6002 688
	RETAINER, Upr. 71	P,D,C,Y	AR	AR	AR	AR	AR	AR	AR	AR	6002 893
	MOULDING, W/Shield Outside										
	Upr. Header 70	P,D,C	—	—	1	—	—	—	—	—	2902 536-7
	SCREW, Upr. Header 70	P,D,C	—	—	AR	—	—	—	—	—	6025 792
	MOULDING PACKAGE, W/Shield Outside										
	Lwr. Center	P,D,C,Y	1	1	1	1	1	1	1	1	3419 854
	SCREW, Lwr. Ctr.	P,D,C,Y	AR	AR	AR	AR	AR	AR	AR	AR	6024 271
	SEAL, Lwr. Ctr.	P,D,C,Y	AR	AR	AR	AR	AR	AR	AR	AR	3440 526
	SEAL, Lwr. Ctr.	P,D,C,Y	AR	AR	AR	AR	AR	AR	AR	AR	3440 527
	MOULDING, W/Shield Outside										
	Lwr. End	P,D,C,Y	1	1	1	1	1	1	1	1	3439 034-5
	SCREW, W/Seal	P,D,C,Y	AR	AR	AR	AR	AR	AR	AR	AR	6024 271
23-23-73	MOULDING, Qtr. Wdo. Outside Finish (1)										
23-23-77	PANEL and NAME LETTERS, Tailgate Outside Finish (1)										
23-23-85	PANEL, Qtr. Outside Panel Finish (1)										
	NOTE: (1) See Exterior Moulding Illustrations in Illustration Catalog										
23-26-0	**TRIM FINISH MOULDINGS**										
23-26-19	MOULDING, Tailgate Inside Trim										
	Upr. and Lwr.	C	—	—	—	—	—	—	2	2	2878 238
	Side	C	—	—	—	—	—	—	2	2	2878 242
23-26-23	MOULDING, Door Trim Panel										
	Upr., Ret. Chrome	V,L	—	1	—	1	—	—	—	—	2787 776-7
	Frt., Upr. Ret. Chrome	L	—	—	—	—	1	—	—	—	2787 778-9
	Rear, Upr. Ret. Chrome	V,L	—	—	—	—	1	—	—	—	2787 780-1
	Frt., Wood grain	B-P	—	1	1	—	—	—	—	—	3415 296-7
	Orange 70	B-P	—	1	—	—	—	—	—	—	3415 304-5
	71	B-P	—	1	—	—	—	—	—	—	3509 616-7
	Except R-P, R-S, Frt. Upr. Ret. Chrome 70	R,W	1	1	1	—	—	—	—	—	2788 934-5
	Frt. Upr. Ret. Chrome 70	R,W	—	—	—	—	1	—	1	1	2788 930-1
	Frt., Use w/o Remote Control Mirror 70	W-P,W-S	—	2	2	—	—	—	—	—	3439 300
	Frt., Use w/Remote Control Mirror Lt. 70	W-P, W-S	—	1	1	—	—	—	—	—	3439 301
	Frt., Use w/Remote Control Mirror, Rt. 70	W-P,W-S	—	1	1	—	—	—	—	—	3439 300
	Frt., Use w/Remote Control Mirror Lt. 70	W-P	—	—	—	—	1	—	1	1	3439 303

CARLINES J - Challenger, B - Barracuda, V - Valiant, L - Dart, R - Belvedere - Satallite, W - Coronet - Charger, P - Plymouth, D - Dodge, C - Chrysler, Y - Imperial

NUMERALS INDICATE: 21 - 2 DR. SED., 23 - 2 DR. H.T., 27 - CONV. CPE., 29 - FAST BACK, 41 - 4 DR. SED., 43 - 4 DR. H.T., 45 - 6 PASS. STA. WGN., 46 - 9 PASS. STA. WGN.

AR Indicates use as required.
\# Indicates parts not listed in any previous parts book
Numerals in parentheses ( ) refer to notes.
★ Indicates change or addition.

Printed in U.S.A.
January 1972

Right and left part numbers are on same line, first number is right, second number is left.

23-26-0 TRIM FINISH MOULDINGS Cont'd.

CODE	PART NAME	MODEL CODES	SEE BOTTOM NOTE 21	23	27	29	41	43	45	46	PART NUMBER
23-26-23	MOULDING Cont'd.										
	Frt., Use w/Remote Control Mirror, Rt. 70	W-P	—	—	—	—	1	—	1	1	3439 302
	Frt., Use w/o Remote Control Mirror 70	W-P	—	—	—	—	2	—	2	2	3439 302
	Frt, Upr, Ret. Chrome 70	W-S	—	—	—	1	—	—	—	—	2788 934-5
	Frt. Door Frt. Finish 70	W-S	—	—	—	1	—	—	—	—	3415 106-7
	Frt. Door Rear Finish 70	W-S	—	—	—	1	—	—	—	—	3415 108-9
	Rear Upr. Ret. Chrome 70	R,W	—	—	—	—	1	—	1	1	2788 932-3
	Rear, Rt. and Lt. 70	R-P	—	—	—	—	2	—	2	2	3439 298
	Rear, Rt. and Lt. 70	W-P	—	—	—	—	1	—	1	1	3439 302
	Gran Coupe, Spring Spec. Frt. 70	P-L	2	—	—	—	—	—	—	—	3415 112
	Frt. 70	P-M	—	2	2	2	—	—	—	—	3415 112
	Rear 70	P-M	—	2	2	2	—	—	—	—	3415 112
	Frt., Rear 70	P-M	—	—	—	—	2	2	—	—	3415 112
	Frt., Rear 70	P-H	—	—	—	—	—	—	2	2	3415 112
	Frt., CANADA 70	D-H	—	2	—	—	—	—	—	—	3415 112
	Rear, CANADA 70	D-H	—	2	—	—	—	—	—	—	3415 112
	70	D-H	—	1	—	—	—	—	—	—	3415 054-5
	Frt. 70	D-H	—	—	—	—	1	1	1	1	3415 056-7
	Rear 70	D-H	—	—	—	—	1	1	1	1	3415 052-3
	Upr. 70	Y	—	1	—	—	—	—	—	—	3415 338-9
	Lwr. 70	Y	—	2	—	—	—	—	—	—	3415 340
	Upr. Rear 71	Y	—	1	—	—	—	—	—	—	3509 488-9
	Rr. Upr. Rear 71	Y	—	—	—	—	—	1	—	—	3509 482-3
	Frt. Upr. Rear 71	Y	—	—	—	—	—	1	—	—	3509 484-5
	MOULDING and MEDALLION, Door Inside Pnl. Trim										
	w/o Remote Control Mirror 70	R-P,R-S	—	2	—	—	—	—	—	—	3440 636
	w/Remote Control Mirror Rt. 70	R-P,R-S	—	1	—	—	—	—	—	—	3440 636
	Lt. 70	R-P,R-S	—	1	—	—	—	—	—	—	3440 637
	Frt., w/Remote Control Mirror Lt. 70	R-P	—	—	—	—	1	—	1	1	3440 639
	Frt., W/Remote Control Mirror Rt. 70	R-P	—	—	—	—	1	—	1	1	3440 638
	Frt., W/O Remote Control Mirror 70	R-P	—	—	—	—	2	—	2	2	3440 638
	FINISH PLATE, Door Arm Rest Storage Compt. Lid Pad, Approx. 10 1/2" Long Frt.	Y	—	2	—	—	—	2	—	—	2879 393
	Rear	Y	—	—	—	—	—	2	—	—	2879 393
	Approx. 10 15/32" Long, After Type Frt.	Y	—	2	—	—	—	2	—	—	3509 019
	Rear	Y	—	—	—	—	—	2	—	—	3509 019
	FINISH PLATE, Door Trim Panel CANADA 70	D-P	—	2	—	—	2	2	—	—	3415 944
	70	Y	—	1	—	—	—	—	—	—	3415 346-7
	RETAINER, Door Trim Moulding 70	R-P,R-S W-P, W-S	—	AR	AR	—	AR	—	AR	AR	6002 937
	MOULDING & MEDALLION, Frt. Door I/Side Panel Trim 70	R-P	—	—	—	—	2	—	2	2	3440 638
	FINISH PLATE, Wood Grain w/Sport Fury N/Plate, Door Trim Panel Canada 70	P-H	—	2	—	2	2	2	—	—	3415 558
	FINISH PLATE, Rr. Door Trim Panel Wood Grain CANADA 70	P-H,D-P	—	—	—	—	2	2	—	—	2879 686
23-26-26	NUT, Door Trim Pnl. Name Plate Attach.	B-P,B-S	—	AR	AR	—	—	—	—	—	1839 995
	SPRING NUT, Door Trim Pnl. Finish Plate Attach. Frt. and Rear 70	P-H	—	AR	—	AR	AR	AR	—	—	2197 678
	Frt. and Rear, CANADA 70	D-P	—	AR	—	—	AR	AR	—	—	2197 678
	SPRING NUT, Qtr. Trim Pnl. Finish Plate Attach. 70	P-H	—	AR	—	AR	—	—	—	—	2197 678
	CANADA 70	D-P	—	AR	—	—	—	—	—	--	2197 678
	RETAINER, Door Trim Pnl. Attach. 70	D-H	—	AR	—	—	AR	AR	AR	AR	2197 678

CARLINES: J - Challenger, B - Barracuda, V - Valiant, L - Dart, R - Belvedere - Satallite, W - Coronet - Charger, P - Plymouth, D - Dodge, C - Chrysler, Y - Imperial

NUMERALS INDICATE: 21 - 2 DR. SED., 23 - 2 DR. H.T., 27 - CONV. CPE., 29 - FAST BACK, 41 - 4 DR. SED., 43 - 4 DR. H.T., 45 - 6 PASS. STA. WGN., 46 - 9 PASS. STA. WGN.

AR *Indicates use as required.*
\# Indicates parts not listed in any previous parts book
Numerals in parentheses ( ) refer to notes.
★ Indicates change or addition.

Printed in U.S.A.
January 1972

Right and left part numbers are on same line, first number is right, second number is left.

CODE	PART NAME		MODEL CODES	SEE BOTTOM NOTE 21	23	27	29	41	43	45	46	PART NUMBER
23-26-0	**TRIM FINISH MOULDINGS Cont'd.**											
23-26-41	MOULDING, Roof Side Rail Garnish											
		Prime, Frt.	V,L	—	—	—	1	—	—	—	—	2965 856-7
		Prime	V,L	—	1	—	—	—	—	—	—	2604 092-3
		Prime	B	—	1	—	—	—	—	—	—	2963 282-3
		Prime 71	J	—	1	—	—	—	—	—	—	2963 282-3
		Prime	J	—	1	—	1	—	—	—	—	2963 284-5
		Prime 70	R,W	1	—	—	—	—	—	—	—	2841 314-5
		Prime 70	R,W	—	1	—	1	—	—	—	—	2838 682-3
		Prime 71	R	—	1	—	—	—	—	—	—	3445 834-5
		Prime 71	W	—	1	—	1	—	—	—	—	3445 838-9
		Up to June 71 Prime	P,D	—	—	—	1	—	1	—	—	2900 200-1
	After June 1971	Prime 71	P,D	—	—	—	1	—	1	—	—	= 3670 468-9
		Prime	P,D,C,Y	1	1	—	—	—	—	—	—	2902 826-7
		Prime	C,Y	—	—	—	—	—	1	—	—	2902 768-9
		Prime, Rear Lwr.	P	1	—	—	—	—	—	—	—	2902 796-7
		Prime, Rear Lwr.	P	—	—	—	1	—	—	—	—	2965 100-1
		Prime, Rear Lwr.	P,D	—	—	—	—	—	1	—	—	2902 794-5
		Prime, Rear Lwr.	C,Y	—	—	—	—	—	1	—	—	2900 308-9
	MOULDING, Roof Side Headlining											
	Up to Type	Prime, Frt. 70	P,D,C	—	—	—	—	—	—	1	1	2894 508-9
	After Type, Frt. End of Mldg. Extended	Prime, Frt.	P,D,C	—	—	—	—	—	—	1	1	3499 614-5
	RETAINER, Roof Side Rail Garnish Mldg.	70	B,J	—	8	—	8	—	—	—	—	6002 940
		70	P,D	8	10	—	8	—	8	—	—	6002 620
		70	V	—	—	—	6	—	—	—	—	6003 007
		70	C,Y	—	10	—	—	—	10	—	—	6002 620
	RETAINER, Roof Side Rail Garn. Mldg.	Rear Upper 70	P,D	2	—	—	2	—	2	—	—	6002 697
		Rear Upper 70	C,Y	—	—	—	—	—	2	—	—	6002 699
		Rear Lower 70	P,D	2	—	—	2	—	2	—	—	6002 698
		Rear Lower 70	C,Y	—	—	—	—	—	2	—	—	6002 700
	CLIP, Roof Side Rail Garn. Mldg.	70	L	—	12	—	—	—	—	—	—	6002 178
		70	R,W	12	12	—	12	—	—	—	—	6002 518
23-26-43	MOULDING, Shelf Trim Pnl.	70	R,W	1	1	—	—	—	—	—	—	2877 139
		Rear 70	P,D	1	—	—	1	—	1	—	—	2878 729
		Side 70	P,D	2	—	—	2	—	2	—	—	1356 EB7
		Side 70	P,D	2	—	—	2	—	2	—	—	1356 EF8
		Side 70	P,D	2	—	—	2	—	2	—	—	1356 FK5
		Side 70	P,D	2	—	—	2	—	2	—	—	1356 FT4
		Side 70	P,D	2	—	—	2	—	2	—	—	1356 EX9
		Side 70	P,D	2	—	—	2	—	2	—	—	1356 FY4
		Side 70	P,D	—	—	—	—	2	—	—	—	1356 EB7
		Side 70	P,D	—	—	—	—	2	—	—	—	1356 EF8
		Side 70	P,D	—	—	—	—	2	—	—	—	1356 FT4
		Side 70	P,D	—	—	—	—	2	—	—	—	1356 EX9
		Side 70	P,D	—	—	—	—	2	—	—	—	1356 FY4
		Side 70	C	—	—	—	—	2	2	—	—	1356 EB7
		Side 70	C	—	—	—	—	2	2	—	—	1356 EF8
		Side 70	C	—	—	—	—	2	2	—	—	1356 FT4
		Side 70	C	—	—	—	—	2	2	—	—	1356 EX9
		Side 70	C	—	—	—	—	2	2	—	—	1356 FY4
		Side 70	C	—	—	—	—	2	2	—	—	1356 FP6
		Side 70	C	—	—	—	—	2	2	—	—	1356 EY8
		Side 70	C	—	—	—	—	2	2	—	—	1356 FR8
		Side 71	P,D	—	—	—	—	2	—	—	—	1356 GB7
		Side 71	P,D	—	—	—	—	2	—	—	—	1356 GE9
		Side 71	P,D	—	—	—	—	2	—	—	—	1356 GF7

CARLINES J - Challenger, B - Barracuda, V - Valiant, L - Dart, R - Belvedere - Satallite, W - Coronet - Charger, P - Plymouth, D - Dodge, C - Chrysler, Y - Imperial

NUMERALS INDICATE: 21 - 2 DR. SED., 23 - 2 DR. H.T., 27 - CONV. CPE., 29 - FAST BACK, 41 - 4 DR. SED., 43 - 4 DR. H.T., 45 - 6 PASS. STA. WGN., 46 - 9 PASS. STA. WGN.

AR Indicates use as required.
\# Indicates parts not listed in any previous parts book
Numerals in parentheses ( ) refer to notes.
★ Indicates change or addition.

Printed in U.S.A.
January 1972

Right and left part numbers are on same line, first number is right, second number is left.

23-26-0 TRIM FINISH MOULDINGS Cont'd.

CODE	PART NAME		MODEL CODES	SEE BOTTOM NOTE 21	23	27	29	41	43	45	46	PART NUMBER
23-26-43	MOULDING Cont'd.											
		Side 71	P,D	—	—	—	—	2	—	—	—	1356 GT6
		Side 71	P,D	—	—	—	—	2	—	—	—	1356 EX9
		Side 71	P,D	—	—	—	—	2	—	—	—	1356 GY5
		Side 71	C	—	—	—	—	2	2	—	—	1356 GB7
		Side 71	C	—	—	—	—	2	2	—	—	1356 GE9
		Side 71	C	—	—	—	—	2	2	—	—	1356 GF7
		Side 71	C	—	—	—	—	2	2	—	—	1356 GT6
		Side 71	C	—	—	—	—	2	2	—	—	1356 EX9
		Side 71	C	—	—	—	—	2	2	—	—	1356 GY5
		Side 71	D,C	—	—	—	—	2	2	—	—	1356 GA6
23-26-45	MOULDING, Frt. Seat Cushion Side Shield	Rt.	Y	—	1	—	—	—	1	—	—	2577 696
		Rt.	Y	—	1	—	—	—	1	—	—	2609 204
		Lt.	Y	—	1	—	—	—	1	—	—	2577 697
		Upr. Corner	Y	—	1	—	—	—	1	—	—	2888 498-9
	MOULDING, Bucket Seat Cushion Shield	70	P-M	—	1	1	1	—	—	—	—	2858 902-3
		70	P-H	—	1	—	1	—	1	—	—	2858 902-3
		70	D-L,D-M	—	1	1	—	—	—	—	—	2858 902-3
		70	D-P	—	1	—	—	—	1	—	—	2858 902-3
		70	C-E	—	1	1	—	—	—	—	—	2858 902-3
		70	C-M	—	1	1	—	—	1	—	—	2858 902-3
		70	C-H	—	1	—	—	—	—	—	—	2858 902-3
		71	P,D,C	—	1	—	1	—	1	—	—	3520 010-1
	MOULDING, Bucket Seat Back Shield	70	P-M	—	2	2	2	—	—	—	—	2888 364-5
		70	P-H	—	2	—	2	—	2	—	—	2888 364-5
		70	D-L,D-H	—	2	2	—	—	—	—	—	2888 364-5
		70	D-P	—	2	—	—	—	2	—	—	2888 364-5
		70	C-E	—	2	2	—	—	—	—	—	2888 364-5
		70	C-M	—	2	2	—	—	2	—	—	2888 364-5
		70	C-H	—	2	—	—	—	—	—	—	2888 364-5
		71	P,D,C	—	AR	AR	AR	AR	AR	AR	AR	3520 030
	Panel, Wood Grained	71	Y	—	—	2	—	—	—	—	—	3520 040
23-26-46	INSERT, Base and Ornament Trim Pnl. Frt. Door Spring Spec.	70	C-E	—	2	—	—	—	2	—	—	3509 103
	Rear Door, Spring Spec.	70	C-E	—	—	—	—	—	2	—	—	3509 103
	Qtr. Pnl., Spring Spec.	70	C-E	—	2	—	—	—	—	—	—	3509 103
	FINISH PLATE, Qtr. Trim Pnl.	70	Y	—	2	—	—	—	—	—	—	3415 348
	Wood Grain	CANADA 70	P-H,D-P	—	2	—	2	—	—	—	—	2879 686
23-26-47	MOULDING, Qtr. Trim Panel	Upr., Ret., Chrome	V	—	—	—	1	—	—	—	—	2876 966-7
		Upr., Ret., Finish	V,L	—	1	—	—	—	—	—	—	2787 782-3
		Upr. 71	B-S	—	—	2	—	—	—	—	—	3509 619
		Lwr. 71	B-S	—	—	2	—	—	—	—	—	3509 620
		Upr., Woodgrain 70	B-P	—	2	—	—	—	—	—	—	3415 300
		Upr., Orange 70	B-P	—	2	—	—	—	—	—	—	3415 306
		Lwr., Woodgrain 70	B-P	—	2	—	—	—	—	—	—	3415 302
		Lwr., Orange 70	B-P	—	2	—	—	—	—	—	—	3415 308
		Upr., Woodgrain 70	B-P	—	—	2	—	—	—	—	—	3415 376
		Lwr., Woodgrain 70	B-P	—	—	2	—	—	—	—	—	3415 378
		Upr. Woodgrain 71	B-Y	—	2	—	—	—	—	—	—	3509 619
		Lwr. Woodgrain 71	B-P	—	2	—	—	—	—	—	—	3509 618
		Lwr. 71	R,W	—	—	—	—	—	—	1	1	3416 312-3
		Upr., Ret., Finish, Chrome 70	R,W	1	1	—	—	—	—	—	—	2788 936-7
		Finish 70	W-S	—	—	—	2	—	—	—	—	3415 110
		Upr., Ret., Finish, Chrome 70	W-S	—	—	—	1	—	—	—	—	2789 856-7
		Upr., Ret., Finish, Prime 70	W-P	—	—	—	1	—	—	—	—	3415 394-5
		70	D-H	—	2	—	—	—	—	—	—	3415 058

CARLINES: J - Challenger, B - Barracuda, V - Valiant, L - Dart, R - Belvedere - Satallite, W - Coronet - Charger, P - Plymouth, D - Dodge, C - Chrysler, Y - Imperial

NUMERALS INDICATE: 21 - 2 DR. SED., 23 - 2 DR. H.T., 27 - CONV. CPE., 29 - FAST BACK, 41 - 4 DR. SED., 43 - 4 DR. H.T., 45 - 6 PASS. STA. WGN., 46 - 9 PASS. STA. WGN.

AR Indicates use as required.
\# *Indicates parts not listed in any previous parts book*
Numerals in parentheses ( ) refer to notes.
★ Indicates change or addition.

Printed in U.S.A.
January 1972

Right and left part numbers are on same line, first number is right, second number is left.

23-26-0 TRIM FINISH MOULDINGS Cont'd.

CODE	PART NAME		MODEL CODES	SEE BOTTOM NOTE 21	23	27	29	41	43	45	46	PART NUMBER
23-26-47	MOULDING Cont'd.											
		Upr. 70	Y	—	2	—	—	—	—	—	—	3415 341
		Lwr. 70	Y	—	2	—	—	—	—	—	—	3415 342
		Upr. 71	Y	—	2	—	—	—	—	—	—	3509 486
	MOULDING, Qtr. Wdo. Belt Garnish Trim Mldg.	70	W-P,W-S	—	2	—	—	—	—	—	—	3439 302
	MOULDING, Wheelhouse Cover Finish	Prime 71	R,W	—	—	—	—	—	—	1	1	3416 312-3
	MOULDING, Rear Floor Well Mat Retainer	71	R,W	—	—	—	—	—	—	1	1	3416 344-5
23-26-58	CAP, Center Pillar Upr. Trim											
		Prime	V,L	—	—	—	—	2	—	—	—	2789 135
		Prime 70	R,W	—	—	—	—	2	—	—	—	2876 470
	CAP, Body Center Pillar	Prime	P,D,C,Y	—	—	—	—	—	1	—	—	2894 920-1
23-26-67	KEEPER, Spare Tire Cover Latch											
23-26-75	FINISH PLATE, Rear Seat Back	70	P-M	—	1	—	—	—	—	—	—	2942 445
		70	P-H	—	1	—	—	—	—	—	—	2942 504
		70	D-L	—	1	—	—	—	—	—	—	2942 446
	Polara Custom Pkg.	70	D-L	—	1	—	—	—	—	—	—	3447 818
		70	D-M	—	1	—	—	—	—	—	—	2942 446
		70	D-H,D-P	—	1	—	—	—	—	—	—	3447 581
		71	P-H, P-P	—	1	—	1	—	1	—	—	3520 677
		71	P-M	—	1	—	1	—	—	—	—	3520 676
		71	D-E, D-L, D-M	—	1	—	—	—	—	—	—	3520 679
		71	D-H	—	1	—	—	—	—	—	—	3520 680
		71	C-H	—	1	—	—	—	—	—	—	3520 685
23-26-76	MEDALLION, Seat Back											
	2 19/32" x 17/32"	Frt. and Rear 70	V	—	—	—	AR	AR	—	—	—	2981 978
	2 3/16" x 27/32"	Frt. and Rear 70	V	—	—	—	AR	AR	—	—	—	2981 972
	2 3/16" x 27/32"	Frt. and Rear 70	B-P	—	AR	—	—	—	—	—	—	2981 972
	1 11/16" x 17/32"	Frt.	R-P,R-S	—	4	—	—	4	—	4	4	2981 974
	1 11/16" x 17/32"	Rear 70	R-P,R-S	—	4	—	—	4	—	—	—	2981 974
	3 1/4" x 1/2"	Frt. 70	R-M,R-H	2	2	2	—	2	—	2	2	2981 980
	3 1/4" x 1/2"	Frt. 70	R-P	—	—	—	—	—	—	2	2	2981 980
	3 1/4" x 1/2"	Frt. 70	P-M	—	2	2	2	2	2	—	—	2981 980
	3 1/4" x 1/2"	Frt. 70	P-H	—	2	—	2	2	2	—	—	2981 980
	3 1/4" x 1/2"	Frt. 70	D-H	—	2	—	—	—	—	—	—	2981 980
	3 1/4" x 1/2"	Frt. 70	D-P	—	2	—	—	—	2	—	—	2981 980
		Frt. 71	R-H	—	2	—	—	2	—	—	—	2981 978
		Frt. 71	R-P	—	—	—	—	—	—	2	2	2981 974
		Frt. 71	R-M	—	2	—	—	—	—	—	—	2981 974
		Frt. 71	R-H	—	2	—	—	2	—	2	2	2981 974
		Frt. 71	P-P	—	2	—	—	—	—	—	—	2981 980
		Frt. 71	P-M, P-H	—	—	—	—	—	—	4	4	3521 956
		Frt. 71	P-H, P-P	—	4	—	—	—	—	—	—	3521 956
		Frt. 71	P-H	—	—	—	4	4	4	—	—	3521 956
		Frt. 71	P-M	—	2	—	2	2	2	2	2	3521 950
		Frt. 71	D-M	—	—	—	—	—	—	2	2	3521 950
		Frt. 71	D-H	—	2	—	—	—	—	—	—	3521 950
	3 1/4" x 1/2"	Rear 70	R-M,R-H	2	2	2	—	2	—	—	—	2981 980
	3 1/4" x 1/2"	Rear	P-M	—	2	2	2	—	—	—	—	2981 980
	3 1/4" x 1/2"	Rear	P-H	—	2	—	2	—	2	—	—	2981 980
	3 1/4" x 1/2"	Rear 70	D-H	—	2	—	—	—	—	—	—	2981 980
	3 1/4" x 1/2"	Rear 70	D-P	—	2	—	—	—	2	—	—	2981 980
		Rear 71	R-M, R-H	—	4	—	—	4	—	—	—	2981 974
		Rear 71	P-H, P-P	—	4	—	—	—	—	—	—	2981 956
		Rear 71	P-M	—	2	—	2	2	2	—	—	3521 950

CARLINES J - Challenger, B - Barracuda, V - Valiant, L - Dart, R - Belvedere - Satallite, W - Coronet - Charger, P - Plymouth, D - Dodge, C - Chrysler, Y - Imperial

NUMERALS INDICATE: 21 - 2 DR. SED., 23 - 2 DR. H.T., 27 - CONV. CPE., 29 - FAST BACK, 41 - 4 DR. SED., 43 - 4 DR. H.T., 45 - 6 PASS. STA. WGN., 46 - 9 PASS. STA. WGN.

AR Indicates use as required.
\# Indicates parts not listed in any previous parts book
Numerals in parentheses ( ) refer to notes.
★ Indicates change or addition.

Printed in U.S.A.
January 1972

Right and left part numbers are on same line, first number is right, second number is left.

23-26-0 TRIM FINISH MOULDINGS Cont'd.

CODE	PART NAME		MODEL CODES	SEE BOTTOM NOTE 21	23	27	29	41	43	45	46	PART NUMBER
23-26-76	MEDALLION Cont'd.											
	2 27/32" x 1/2"	Frt. 70	P-M,P-H	—	2	2	2	2	2	—	—	2981 970
	2 27/32" x 1/2"	Frt. 70	D-H,D-P	—	2	—	—	2	2	—	—	2981 970
	2 27/32" x 1/2"	Frt.	P-M,P-H	—	—	—	—	—	—	2	2	2981 970
	2 27/32" x 1/2"	Frt. 70	D-M,D-H	—	—	—	—	—	—	2	2	2981 970
	2 27/32" x 1/2"	Rear 70	P-M,P-H	—	2	2	2	2	2	—	—	2981 970
	2 27/32" x 1/2"	Rear 70	D-H,D-P	—	2	—	—	2	2	—	—	2981 970
	3 1/4" x 1/2"	2nd Seat Back 70	R-H,R-P	—	—	—	—	—	—	2	2	2981 980
	1 11/16" x 17/32"	2nd Seat Back	R-P	—	—	—	—	—	—	4	4	2981 974
	3 1/4" x 1/2"	3rd Seat Back 70	R-H,R-P	—	—	—	—	—	—	—	2	2981 980
	1 11/16" x 17/32"	3rd Seat Back	R-P	—	—	—	—	—	—	—	4	2981 974
	2 27/32" x 1/2"	2nd Seat Back	P-M,P-H	—	—	—	—	—	—	2	2	2981 970
	2 27/32" x 1/2"	2nd Seat Back 70	D-M,D-H	—	—	—	—	—	—	2	2	2981 970
		2nd. Seat Back 71	P-M, P-H	—	—	—	—	—	—	4	4	3521 956
		2nd. Seat Back 71	P-M	—	—	—	—	—	—	2	2	3521 950
	2 27/32" x 1/2"	3rd Seat Back	P-M,P-H	—	—	—	—	—	—	—	2	2981 970
	2 27/32" x 1/2"	3rd Seat Back 70	D-M,D-H	—	—	—	—	—	—	—	2	2981 970
23-26-80	NAME PLATE, Door Inside Trim Pnl.											
	Garnish "DUSTER"		V	—	—	—	2	—	—	—	—	3499 375
	Garnish, "SPORT COUPE"		V,L	—	—	—	2	—	—	—	—	3440 452
	Garnish, "DART CUSTOM"	70	L-H	—	2	—	—	2	—	—	—	2894 998
	Garnish, "DEMON"	71	L	—	—	—	2	—	—	—	—	3613 436
	"GRAN COUPE"	70	B-P	—	2	2	—	—	—	—	—	3415 646
	"CUDA"		B-S	—	2	2	—	—	—	—	—	3415 645
	"CHARGER"	70	W	—	—	—	2	—	—	—	—	3415 362
		71	W-P	—	—	—	2	—	—	—	—	3509 427
	"Gran Coupe", Spring Spec.	70	P-L	2	—	—	—	—	—	—	—	3509 124
	Frt., "POLARA"	70	D-K	—	—	—	—	2	—	—	—	3415 822
	Frt., "POLARA"	70	D-T,D-L	—	2	2	—	2	2	2	2	3415 822
	Frt., "POLARA CUSTOM"	70	D-L	—	2	2	—	2	2	2	2	3415 937
	POLARA	71	D	—	2	—	—	2	2	—	—	3509 826
	Frt. and Rear, "MONACO"	70	D-H	—	2	—	—	2	2	2	2	3415 152
	Frt. and Rear, "MONACO BROUGHAM"	70	D-H	—	—	—	—	2	2	—	—	3415 155
	Frt., "POLARA 500"	CANADA 70	D-M	—	2	—	—	2	—	2	2	2879 174
	Frt., "MONACO"	CANADA 70	D-H	—	2	—	—	2	2	2	2	2789 775
	"Monaco"	CANADA 71	D-H	—	2	—	—	4	4	4	4	3416 698
	NAME PLATE, Frt. Door Elect. Door Lock		P,D,C	2	2	2	2	2	2	2	2	2589 046
	BASE and MEDALLION, Door Trim Pnl.											
	Finish Plate	70	J	—	2	2	—	—	—	—	—	3415 312
		71	J	—	2	2	—	—	—	—	—	3509 253
	BASE and NAME PLATE, Door Trim Pnl.											
	Finish Plate		J	—	—	—	2	—	—	—	—	3415 843
		71	J	—	—	—	2	—	—	—	—	3509 252
	REFLECTOR, and Bezel, Frt. Door Trim Pnl.		J	—	2	2	2	—	—	—	—	2879 656
		70	C-H	—	2	—	—	2	2	—	—	2879 656
			Y	—	2	—	—	—	—	—	—	2879 656
	MEDALLION, Door Inside Trim Pnl.											
	Mldg. Frt.	70	R-P,R-S	—	2	—	—	2	—	2	2	3440 600
		70	W	—	—	—	2	—	—	—	—	2876 267
		Upr. 71	W	—	2	—	—	—	—	—	—	3416 185
	Frt., "300"		C-M,C-S	—	2	2	—	—	2	—	—	2787 751
	Frt., TOWN & COUNTRY	71	C-P	—	—	—	—	—	—	2	2	3416 958
	ORNAMENT, Door Trim Panel											
	Frt. and Rear	70	C-E	—	2	2	—	2	2	—	—	3415 785
	Frt. and Rr.	71	C-E	—	2	—	—	2	2	—	—	= 3416 663
	Frt. and Rr.	71	C-L	—	2	—	—	2	2	—	—	= 3416 959

CARLINES	J - Challenger B - Barracuda	V - Valiant L - Dart	R - Belvedere - Satallite W - Coronet - Charger	P - Plymouth D - Dodge	C - Chrysler Y - Imperial
NUMERALS INDICATE:	21 - 2 DR. SED. 23 - 2 DR. H.T.	27 - CONV. CPE. 29 - FAST BACK	41 - 4 DR. SED. 43 - 4 DR. H.T.	45 - 6 PASS. STA. WGN. 46 - 9 PASS. STA. WGN.	

AR Indicates use as required.
\# Indicates parts not listed in any previous parts book

Numerals in parentheses ( ) refer to notes.
★ Indicates change or addition.

Printed in U.S.A.
January 1972

Right and left part numbers are on same line, first number is right, second number is left.

23-26-0 TRIM FINISH MOULDINGS Cont'd.

CODE	PART NAME		MODEL CODES	SEE BOTTOM NOTE 21	23	27	29	41	43	45	46	PART NUMBER
23-26-80	NAME PLATE Cont'd.											
	Frt.	70	C-L	—	2	—	—	2	2	—	—	2879 938
	Rear	70	C-L	—	—	—	—	2	2	—	—	2879 939
	ORNAMENT, Qtr. Trim Panel	70	C-L	—	2	—	—	—	—	—	—	2879 939
	DECAL, Door Inside Pnl., "Bird"	Rt. 70	R-M	—	1	—	—	—	—	—	—	3499 407
	SWITCH PLATE, Frt. Door Arm Rest w/Elect. Wdo. Lock and Wdo. Lift	Lt. 70	Y	—	1	—	—	—	1	—	—	2878 561
	w/Elect. Wdo.	Rt. 70	Y	—	1	—	—	—	1	—	—	2878 542
	w/Elect. Wdo. Lock, Wdo. Lift and Door Lock	Lt. 70	Y	—	1	—	—	—	1	—	—	2878 565
	w/Elect. Wdo. Lift and Door Lock	Rt. 70	Y	—	1	—	—	—	1	—	—	2878 546
	w/Elect. Wdo. Lock, Wdo. Lift and Vent Wdo.	Lt. 70	Y	—	—	—	—	—	1	—	—	2878 563
	w/Elect. Wdo. Lift and Vent Wdo.	Rt. 70	Y	—	—	—	—	—	1	—	—	2878 544
	w/Elect. Wdo. Lock, Wdo. Lift, Vent Wdo. and Door Lock	Lt. 70	Y	—	—	—	—	—	1	—	—	2878 567
	w/Elect. Wdo., Vent Wdo. and Door Lock	Rt. 70	Y	—	—	—	—	—	1	—	—	2878 548
	w/Elect. Wdo. Lock and Wdo. Lift	Lt. 71	Y	—	1	—	—	—	1	—	—	3509 261
	W/Elect. Wdo.	Rt. 71	Y	—	1	—	—	—	1	—	—	3509 254
	w/Elect. Wndo. Lock, Wdo. Lift and Door Lock	Lt. 71	Y	—	1	—	—	—	1	—	—	3509 265
	w/Elect. Wnd. Left and Door Lock	Rt. 71	Y	—	—	—	—	—	—	—	—	3509 256
	w/Elect. Wndo. Lock, Wndo. Left and Vent Wdo.	Rt. 71	Y	—	—	—	—	—	1	—	—	3509 735
	w/Elect. Wndo. Lock, Wndo. Lift Vent Wndo. and Door Lock	Lt. 71	Y	—	—	—	—	—	1	—	—	3509 721
	w/Elect. Wndo., Vent Wndo. and Door Lock	Rt. 71	Y	—	—	—	—	—	1	—	—	3509 700
	w/Elect. Wndo. Lift and Vent Wndo.	Rt. 71	Y	—	—	—	—	—	1	—	—	3509 702
	SWITCH PLATE, Rear Door Arm Rest	70	Y	—	—	—	—	—	1	—	—	2878 568-9
		71	Y	—	—	—	—	—	1	—	—	3509 268-9
	SWITCH PLATE, Qtr. Trim Pnl. Arm Rest	70	Y	—	2	—	—	—	—	—	—	2878 570-1
		71	Y	—	—	—	—	—	1	—	—	3509 258-9
	PLATE and SEAL, Door Air		J	—	2	2	2	—	—	—	—	3499 182
	BEZEL, Door Arm Rest Storage Compt.		Y	—	1	—	—	—	2	—	—	3509 020-1
23-26-84	RETAINER, Seat Back Medallion											
	2 15/16" x 1 9/16"	Frt. and Rear 70	V	—	—	—	4	4	—	—	—	2981 986
	3 7/32" x 1 1/8"	Frt. and Rear 70	V	—	—	—	4	4	—	—	—	2981 979
	2 15/16" x 1 9/16"	Frt. and Rear 70	B-P	—	8	8	—	—	—	—	—	2981 973
	3 31/32" x 1 1/4"	Frt. and Rear 70	R-M,R-H	4	4	4	—	4	—	—	—	2981 981
	3 31/32" x 1 1/4"	Frt. 70	R-H,R-P	—	—	—	—	—	—	2	2	2981 981
	1 13/16" x 1 3/32"	Frt. and Rear	R-P,R-S	—	8	—	—	8	—	—	—	2981 975
	1 13/16" x 1 3/32"	Frt.	R-P	—	—	—	—	—	—	4	4	2981 975
	3 31/32" x 1 1/4"	2nd Seat 70	R-H,R-P	—	—	—	—	—	—	2	2	2981 981
	3 31/32" x 1 1/4"	3rd Seat 70	R-H,R-P	—	—	—	—	—	—	—	2	2981 981
	1 3/16" x 1 3/32"	2nd Seat	R-P	—	—	—	—	—	—	4	4	2981 975
	1 3/16" x 1 3/32"	3rd Seat	R-P	—	—	—	—	—	—	—	4	2981 975
		Frt. and Rr. 71	P-M, P-H, P-P	—	4	—	4	4	4	4	4	3594 086
		2nd Seat 71	P-M, P-H	—	—	—	—	—	—	4	4	3594 086
		3rd Seat 71	P-M, P-H	—	—	—	—	—	—	2	2	3594 086
	3 7/16" x 1 3/32"	Frt.	P-M,P-H	—	2	2	2	2	2	—	—	2981 971
	3 7/16" x 1 3/32"	Frt.	P-M,P-H	—	—	—	—	—	—	2	2	2981 971
	2" x 1"	Frt. 70	P-M	—	2	2	2	—	—	—	—	2981 999

CARLINES J - Challenger, B - Barracuda, V - Valiant, L - Dart, R - Belvedere - Satallite, W - Coronet - Charger, P - Plymouth, D - Dodge, C - Chrysler, Y - Imperial

NUMERALS INDICATE: 21 - 2 DR. SED., 23 - 2 DR. H.T., 27 - CONV. CPE., 29 - FAST BACK, 41 - 4 DR. SED., 43 - 4 DR. H.T., 45 - 6 PASS. STA. WGN., 46 - 9 PASS. STA. WGN.

AR Indicates use as required.
\# Indicates parts not listed in any previous parts book
Numerals in parentheses ( ) refer to notes.
★ Indicates change or addition.

Printed in U.S.A.
January 1972

Right and left part numbers are on same line, first number is right, second number is left.

23-26-0 TRIM FINISH MOULDINGS Cont'd.

CODE	PART NAME		MODEL CODES	SEE BOTTOM NOTE 21	23	27	29	41	43	45	46	PART NUMBER
23-26-84	RETAINER Cont'd.											
	2" x 1"	Frt. 70	P-H	—	2	—	2	—	2	—	—	2981 999
	3 31/32" x 1 1/4"	Rear 70	P-M	—	2	2	2	—	—	—	—	2981 981
	3 31/32" x 1 1/4"	Rear 70	P-H	—	2	—	2	—	2	—	—	2981 981
	3 7/16" x 1 3/32"	Rear 70	P-M,P-H	—	2	2	2	2	2	—	—	2981 971
	3 7/16" x 1 3/32"	2nd Seat 70	P-M,P-H	—	—	—	—	—	—	2	2	2981 971
	3 7/16" x 1 3/32"	2nd Seat 70	D-M,D-H	—	—	—	—	—	—	2	2	2981 971
	3 7/16" x 1 3/32"	3rd Seat 70	P-M,P-H	—	—	—	—	—	—	—	2	2981 971
	3 7/16" x 1 3/32"	3rd Seat 70	D-M,D-H	—	—	—	—	—	—	—	2	2981 971
	3 7/16" x 1 3/32"	Frt. 70	D-H,D-P	—	2	—	—	2	2	—	—	2981 971
	3 7/16" x 1 3/32"	Frt. 70	D-M,D-H	—	—	—	—	—	—	2	2	2981 971
	2" x 1"	Frt. 70	D-H	—	2	—	—	—	—	—	—	2981 999
	2" x 1"	Frt. 70	D-P	—	2	—	—	—	2	—	—	2981 999
	3 31/32" x 1 1/4"	Rear 70	D-H	—	2	—	—	—	—	—	—	2981 981
	3 31/32" x 1 1/4"	Rear 70	D-P	—	2	—	—	—	2	—	—	2981 981
	3 7/16" x 1 3/32"	Rear 70	D-H,D-P	—	2	—	—	2	2	—	—	2981 971
		Frt. 71	R-H	—	2	—	—	2	—	—	—	2981 979
		Frt. 71	P-M	—	—	—	—	2	2	—	—	2981 971
		Frt. and Rr. 71	P-M	—	2	—	2	2	2	2	2	3521 968
		Frt. and Rr. 71	P-H	—	2	—	2	2	2	2	2	3521 968
		Frt. and Rr. 71	P-P	—	2	—	—	—	—	—	—	3521 968
		Frt. 71	P-M	—	2	—	2	2	2	2	2	3521 951
		Frt. 71	Y	—	—	—	—	—	8	—	—	2943 010
		Rear 71	P-M	—	2	—	2	2	2	2	2	3521 951
		3rd Seat 71	P-M, P-H	—	—	—	—	—	—	—	6	3521 968
23-26-85	MOULDING, Folding Top Pocket Panel											
		Upr. 71	B-S	—	—	2	—	—	—	—	—	= 3509 621
23-26-87	MOULDING, Floor Console Side Carpet											
		Rt. 70	R-M	1	1	1	—	—	—	—	—	2656 842
		Rt. 70	R-P,R-S	—	1	—	—	1	—	1	1	2656 842
		Rt. 70	W-M	1	1	—	—	—	—	—	—	2656 842
		Rt. 70	W-P,W-S	—	1	1	1	—	—	—	—	2656 842
		Rt.	P-M	—	1	1	1	—	—	—	—	2656 842
		Rt.	P-H	—	1	—	1	—	1	—	—	2656 842
		Rt.	D-L,D-H	—	1	1	—	—	—	—	—	2656 842
		Rt.	D-P	—	1	—	—	—	1	—	—	2656 842
		Rt.	C-E,C-H	—	1	1	—	—	—	—	—	2656 842
		Rt.	C-M, C-S	—	1	1	—	—	1	—	—	2656 842
		Lt. 70	R-M	1	1	1	—	—	—	—	—	2589 819
		Lt. 70	R-P,R-S	—	1	—	—	1	—	1	1	2589 819
		Lt. 70	W-M	1	1	—	—	—	—	—	—	2589 819
		Lt. 70	W-P,W-S	—	1	1	1	—	—	—	—	2589 819
		Lt.	P-M	—	1	1	1	—	—	—	—	2589 819
		Lt.	P-H, P-P	—	1	—	1	—	1	—	—	2589 819
		Lt.	D-L,D-H	—	1	1	—	—	—	—	—	2589 819
		Lt.	D-P	—	1	—	—	—	1	—	—	2589 819
		Lt.	C-E,C-H	—	1	1	—	—	—	—	—	2589 819
		Lt.	C-M, C-S	—	1	1	—	—	1	—	—	2589 819
		w/Manual Trans., Lt. 70	R-M	1	1	1	—	—	—	—	—	2657 101
		Lt. 70	R-P,R-S	—	1	—	—	1	—	1	1	2657 101
		w/Manual Trans., Lt. 70	W-M	1	1	—	—	—	—	—	—	2657 101
		Lt. 70	W-P,W-S	—	1	1	1	—	—	—	—	2657 101
	MOULDING, Roof Console Finish		B	—	1	—	—	—	—	—	—	3415 611
			J	—	—	—	1	—	—	—	—	3415 611

CARLINES	J - Challenger B - Barracuda	V - Valiant L - Dart	R - Belvedere - Satallite W - Coronet - Charger	P - Plymouth D - Dodge	C - Chrysler Y - Imperial
NUMERALS INDICATE:	21 - 2 DR. SED. 23 - 2 DR. H.T.	27 - CONV. CPE. 29 - FAST BACK	41 - 4 DR. SED. 43 - 4 DR. H.T.	45 - 6 PASS. STA. WGN. 46 - 9 PASS. STA. WGN.	

AR Indicates use as required.
\# Indicates parts not listed in any previous parts book
Numerals in parentheses ( ) refer to notes.
★ Indicates change or addition.

Printed in U.S.A.
January 1972

Right and left part numbers are on same line, first number is right, second number is left.

CODE	PART NAME		MODEL CODES	SEE BOTTOM NOTE 21	23	27	29	41	43	45	46	PART NUMBER
23-31-0	**PADS, LINERS, INSULATORS, SEALS, ANTI-SQUEAK**											
23-31-33	LINER, Dash											
	w/or w/o Heater and A/Cond.	Rt.	V,L	—	1	—	1	1	—	—	—	2664 972
	w/Heater and A/Cond.	Rt.	V,L	—	1	—	1	1	—	—	—	2664 976
	w/or w/o Heater and A/Cond.	Lt.	V,L	—	1	—	1	1	—	—	—	2861 689
	w/Heater and A/Cond.	Ctr.	V,L	—	1	—	1	1	—	—	—	2664 975
	w/Heater and A/Cond.	Upr.	V,L	—	1	—	1	1	—	—	—	2664 977
	w/or w/o Heater, w/o A/Cond.	Rt.	B,J	—	1	1	1	—	—	—	—	2895 561
		Lt.	B,J	—	1	1	1	—	—	—	—	2895 560
	w/Heater and A/Cond.	Rt.	B,J	—	1	1	1	—	—	—	—	2895 564
	w/Heater and A/Cond.	Ctr.	B,J	—	1	1	1	—	—	—	—	2895 563
	w/Heater and A/Cond.	Rt. 70	R,W	1	1	1	1	1	—	1	1	2588 756
	w/o Heater and A/Cond.	Rt. 70	R,W	1	1	1	1	1	—	1	1	2861 596
	w/or w/o Heater and A/Cond.	Lt. 70	R,W	1	1	1	1	1	—	1	1	2588 755
	w/or w/o Heater, W/O A/Cond.	Rt. 71	R,W	—	1	—	1	1	—	1	1	2895 561
		Lt. 71	R,W	—	1	—	1	1	—	1	1	2895 560
	w/Heater and A/Cond.	Rt. 71	R,W	—	1	—	1	1	—	1	1	2895 564
	w/Heater and A/Cond.	Lt. 71	R,W	—	1	—	1	1	1	1	1	3499 957
	w/Heater and A/Cond.	Center 71	R,W	—	1	—	1	1	—	1	1	2895 563
	w/Heater W/O A/Cond.	Rt. 71	R,W	—	1	—	1	1	—	1	1	3439 433
	w/Heater W/O A/Cond.	Center 71	R,W	—	1	—	1	1	—	1	1	3499 700
	w/Heater and A/Cond.	Rt.	P,D,C,Y	1	1	1	1	1	1	1	1	2893 086
	w/or w/o Heater and A/Cond.	Ctr.	P,D,C,Y	1	1	1	1	1	1	1	1	2893 090
	w/or w/o Heater and A/Cond.	Lt.	P,D,C,Y	1	1	1	1	1	1	1	1	3440 730
	w/or w/o Heater and A/Cond.	Lt. Ctr.	P,D,C	1	1	1	1	1	1	1	1	3440 731
	FASTENER		All	AR	AR	AR	AR	AR	AR	AR	AR	6008 109
23-31-137	SILENCER, Dash Pnl. Plenum Area		B,J	—	1	1	1	—	—	—	—	3440 560-1
		Rt. 71	R,W	—	1	—	1	1	—	1	1	3439 435
	w/A/Cond.	Lt. 71	R,W	—	1	—	1	1	—	1	1	3499 957
	SILENCER, Cowl Plenum Pnl.		P,D,C,Y	1	1	1	1	1	1	1	1	2895 241
23-31-145	SEAL and CLIPS, Cowl Top to Hood Pnl.		B,J	—	1	1	1	—	—	—	—	3440 865
23-31-146	SEAL, w/FASTENER, Dash Pnl. to Fender Splash Shield	Lwr.	V,L	—	—	—	2	2	—	—	—	2663 132
		Lwr.	L	—	2	—	—	2	—	—	—	2663 133
		Lwr. 70	R,W	2	2	2	2	2	—	2	2	2811 631
		Upr. 70	R,W	1	1	1	—	1	—	1	1	2861 824-5
		Upr. 70	W	—	—	—	1	—	—	—	—	2861 826-7
	FASTENER, Dash Pnl. to Fender Side Shield	Upr. Seal 70	R,W	16	16	16	16	16	—	16	16	2898 909
	FASTENER, Cowl Top Panel to Instrument Panel Filler	70	C,Y	—	5	5	—	5	5	5	5	2898 909
	RETAINER, Door Air Seal and Plate to Inside Pnl. Attach.		J	—	4	4	4	—	—	—	—	2898 909
	RETAINER, Dash Panel Fender Shield		B,J,R,W	—	2	2	2	2	—	2	2	2898 909
23-31-205	SILENCER, Roof Panel, 1/2" x 25 1/2" x 67"		All	AR	AR	AR	AR	AR	AR	AR	AR	1774 621
23-32-0	**PANS, PLUGS AND BODY BUMPERS**											
23-32-6	BRACE, Frt. Floor Pan 1 Hold Down	70	P,D,C,Y	1	1	1	1	1	1	1	1	3444 284-5
	BRACE, Frt. Floor Pan Body Hold Down	Comp.	Y	—	1	—	—	—	1	—	—	3417 218-9
	BRACE, w/GUSSET, Frt. Floor Pan 1 Hold Down		P,D,C,Y	1	1	1	1	1	1	1	1	3417 216-7
23-32-7	SILENCER, Floor Pan Under Front Seat	71	P,D,C	1	1	—	1	1	1	1	1	3509 806
23-32-10	PLATE, Rear Crossmember Bumper Mtg.	70	R,W	1	1	1	—	1	—	—	—	2840 410-1

CARLINES: J - Challenger, B - Barracuda, V - Valiant, L - Dart, R - Belvedere - Satallite, W - Coronet - Charger, P - Plymouth, D - Dodge, C - Chrysler, Y - Imperial

NUMERALS INDICATE: 21 - 2 DR. SED., 23 - 2 DR. H.T., 27 - CONV. CPE., 29 - FAST BACK, 41 - 4 DR. SED., 43 - 4 DR. H.T., 45 - 6 PASS. STA. WGN., 46 - 9 PASS. STA. WGN.

AR Indicates use as required.
\# Indicates parts not listed in any previous parts book
Numerals in parentheses ( ) refer to notes.
★ Indicates change or addition.

Printed in U.S.A.
January 1972

Right and left part numbers are on same line, first number is right, second number is left.

23-22-0 PANS, PLUGS AND BODY BUMPERS Cont'd.

CODE	PART NAME		MODEL CODES	SEE BOTTOM NOTE 21	23	27	29	41	43	45	46	PART NUMBER
23-32-15	PLUG, Floor Pan											
	1/2" Hole		All	AR	AR	AR	AR	AR	AR	AR	AR	2094 984
	1/2" Hole	71	B,J	—	4	4	—	—	—	—	—	2093 945
	1" Hole	71	B,J	—	AR	—	—	—	—	—	—	3570 625
	1 7/8" Hole	71	B,J	—	2	2	—	—	—	—	—	= 3615 192
	1/2" Hole		R,W	—	—	AR	—	—	—	—	—	2093 945
	1/2" Hole		P,D,C	—	—	—	—	—	—	AR	AR	2093 945
	1/2" Hole		P,D,C,Y	AR	AR	AR	AR	AR	AR	AR	AR	1878 752
	1" Hole		All	AR	AR	AR	AR	AR	AR	AR	AR	2094 985
	1" Hole		All	AR	AR	AR	AR	AR	AR	AR	AR	2480 957
	1 1/4" Hole		B,J,R,W	2	2	2	2	2	—	2	2	3506 419
	1 1/4" x 3 1/4" Hole		P,D,C,Y	AR	AR	AR	AR	AR	AR	AR	AR	2664 330
	1 3/4" Hole		All	AR	AR	AR	AR	AR	AR	AR	AR	2189 098
	1 3/4" Hole		B,J,R,W	AR	AR	AR	AR	AR	—	AR	AR	2189 375
	1 3/4" Hole	70	P,D,C,Y	AR	AR	AR	AR	AR	AR	AR	AR	2189 375
	1 3/4" Hole		All	AR	AR	AR	AR	AR	AR	AR	AR	2424 864
	2" Hole	71	All	AR	AR	AR	AR	AR	AR	AR	AR	1878 303
	2 1/2" Hole		P,D,C,Y	AR	AR	AR	AR	AR	AR	AR	AR	2083 111
	2 1/2" Hole		All	AR	AR	AR	AR	AR	AR	AR	AR	2189 093
	2 1/2" Hole		V,L	—	AR	—	AR	AR	—	—	—	2483 571
	2 1/2" Hole	70	R,W	—	—	—	—	—	—	AR	AR	2861 730
		70	P,D,C	—	—	—	—	—	—	AR	AR	2861 730
	3 7/16" Hole		P,D,C	AR	AR	AR	AR	AR	AR	AR	AR	3444 809
	D Shaped Hole		All	AR	AR	AR	AR	AR	AR	AR	AR	2484 575
	PLUG, Rear Floor Pan											
	Screw in Center	70	B,J	—	2	2	2	—	—	—	—	3506 006
	Use w/E.C.S	70	R,W	AR	AR	AR	AR	AR	—	—	—	3445 939
			P,D,C,Y	AR	AR	AR	AR	AR	AR	—	—	3445 939
	PLUG, Center Floor Pan	70	B,J	—	4	4	4	—	—	—	—	3505 713
23-32-17	CROSSMEMBER, Frt. Suspension											
	Use w/198 and 225 Eng.	Comp. 70	V,L	—	1	—	1	1	—	—	—	2962 082
	Use w/318 Eng.	Comp. 70	V,L	—	1	—	1	1	—	—	—	2925 976
	Use w/340 Eng.	Comp. 70	V,L	—	1	—	1	1	—	—	—	2925 976
	Use w/198, 225 Eng.	Complete 71	V,L	—	1	—	1	1	—	—	—	3583 062
	Use w/318, 340 Eng.	Complete 71	V,L	—	1	—	1	1	—	—	—	3583 064
	Use w/225 Eng.	Comp. 70	B,J	—	1	1	1	—	—	—	—	2962 010
	Use w/318, 383 Eng.	Comp. 70	B,J	—	1	1	1	—	—	—	—	3466 477
	Use w/340 Eng. Trans-Am.	Comp.	B,J	—	1	1	1	—	—	—	—	3583 052
	Use w/440 Eng., w/SKID	Comp. 70	B,J	—	1	1	1	—	—	—	—	3466 477
	Use w/426 Eng., w/SKID	Comp. 70	B,J	—	1	1	1	—	—	—	—	2962 014
	Use w/198, 225 Eng.	Complete	B,J,R,W	—	1	1	1	1	—	1	1	3583 070
	Use w/426 Eng.	Complete 70	B,J	—	1	1	—	—	—	—	—	3583 076
	Use w/426 Eng.	Complete 71	B,J,R,W	—	1	1	—	—	—	—	—	3583 076
	Use w/318, 340, 383, 440 Eng.	Complete 70	B,J	—	1	1	—	—	—	—	—	3583 074
	Use w/318, 340, 383, 440 Eng.	71	B,J,R,W	—	1	1	1	1	—	1	1	3583 074
	Use w/318, 383, 440 Eng. w/Skid	71	R,W	—	1	—	1	1	—	1	1	= 3583 100
	Use w/225 Eng.	Comp. 70	R,W	1	1	1	1	1	—	1	1	2962 092
	Use w/318, 383 Eng.	Comp. 70	R,W	1	1	1	1	1	—	1	1	2962 090
	Use w/426 Eng., w/SKID	Comp. 70	R,W	1	1	1	1	1	—	1	1	2962 094
	Use w/440 Eng., w/SKID	Comp. 70	R,W	1	1	1	1	1	—	1	1	3466 479
	CROSSMEMBER and REINFORCEMENT, Floor Pan											
	Rear Center Shock Absorber		V,L	—	1	—	1	1	—	—	—	2859 409
	CROSSMEMBER, Torsion Bar Anchor		V,L	—	1	—	1	1	—	—	—	3417 303
		w/ANCHORS 70	B,J	—	1	1	1	—	—	—	—	2934 912
		w/Anchors 71	B,J,R,W	—	1	1	1	1	—	1	1	3482 523

CARLINES	J - Challenger B - Barracuda	V - Valiant L - Dart	R - Belvedere - Satallite W - Coronet - Charger	P - Plymouth D - Dodge	C - Chrysler Y - Imperial
NUMERALS INDICATE:	21 - 2 DR. SED. 23 - 2 DR. H.T.	27 - CONV. CPE. 29 - FAST BACK	41 - 4 DR. SED. 43 - 4 DR. H.T.	45 - 6 PASS. STA. WGN. 46 - 9 PASS. STA. WGN.	

AR Indicates use as required.
\# Indicates parts not listed in any previous parts book
Numerals in parentheses ( ) refer to notes.
★ Indicates change or addition.

Printed in U.S.A.
January 1972

Right and left part numbers are on same line, first number is right, second number is left.

23-32-0 PANS, PLUGS AND BODY BUMPERS Cont'd.

CODE	PART NAME		MODEL CODES	SEE BOTTOM NOTE 21	23	27	29	41	43	45	46	PART NUMBER
23-32-17	CROSSMEMBER Cont'd.											
	1/2" Trans. C/Mbr. Mtg. Attach. Holes W/ANCHORS, Up to Type	70	R,W	1	1	1	1	1	—	1	1	2576 512
	3/8" Trans. C/Mbr. Attach Holes W/ANCHORS, After Type	70	R,W	1	1	1	1	1	—	1	1	3417 812
	CROSSMEMBER, Frt. Side Rail Frt.		V,L	—	1	—	1	1	—	—	—	2925 941
			B,J	—	1	1	1	—	—	—	—	2962 076
		71	R,W	—	1	—	1	1	—	1	1	2962 076
	CROSSMEMBER, Frt. Side Rail Frt and Yoke Attach. Brkts.	Comp. 70	R,W	1	1	1	1	1	—	1	1	2576 505
	CROSSMEMBER, Rear Floor Pan Rear											
		Center	V,L	—	1	—	1	1	—	—	—	2838 999
		w/NUT	B,J	—	1	1	1	—	—	—	—	3444 119
		w/REINF. 70	R,W	1	1	1	1	1	—	—	—	2859 282
		70	R,W	—	—	—	—	—	—	1	1	2860 356
		71	R,W	—	1	—	1	1	—	—	—	3445 022
		71	R,W	—	—	—	—	—	—	1	1	3440 842
		w/REINF.	P,D,C,Y	1	1	1	1	1	1	—	—	3417 314
			P,D,C	—	—	—	—	—	—	1	1	2894 456
	CROSSMEMBER, Rear Floor Pan Shock Absorber		B,J	—	1	1	1	—	—	—	—	3504 640
	CROSSMEMBER, w/REINF., Rear Floor Pan Rear Shock Absorber	70	R,W	1	1	1	1	1	—	1	1	2934 451
		71	R,W	—	1	—	1	1	—	1	1	3445 023
			P,D,C,Y	1	1	1	1	1	1	1	1	2769 759
	CROSSMEMBER, Center Floor Pan Ext. to Center Floor Pan	Rt.	P,D,C,Y	1	1	1	1	1	1	1	1	2900 844
		Lt.	P,D,C,Y	1	1	1	1	1	1	1	1	2526 953
	EXTENSION, Rear Floor Pan Rear Crossmember		V,L	—	—	—	1	1	—	—	—	2603 620-1
			B,J	—	1	1	1	—	—	—	—	2963 672-3
		70	R,W	1	1	1	—	1	—	—	—	2840 536-7
		70	R,W	—	—	—	—	—	—	1	1	2860 296-7
		71	R	—	—	—	—	1	—	—	—	3504 122-3
		71	R	—	1	—	—	—	—	—	—	3504 582-3
		71	W	—	1	—	1	—	—	—	—	3504 584-5
		71	W	—	—	—	—	1	—	—	—	3445 024-5
			P,C,Y	1	1	1	1	1	1	—	—	2900 016-7
			D	—	1	1	—	1	1	—	—	2963 746-7
			P,D,C	—	—	—	—	—	—	1	1	2894 184-5
	EXTENSION, Floor Pan Rear Side Rail to Rear Crossmember w/Nut		B,J	—	1	1	1	—	—	—	—	3445 312-3
23-32-18	BOLT, Frt. Suspension Crossmember		V,L,B,J	—	AR	AR	AR	AR	—	—	—	2467 693
			R,W	AR	AR	AR	AR	AR	—	AR	AR	2467 693
	SCREW and WASHER, Frt. Suspension Crossmember		V,L,B,J	—	4	4	4	4	—	—	—	2467 693
			R,W	4	4	4	4	4	—	4	4	2467 693
23-32-19	REINFORCEMENT, Rear Shock Absorber Crossmember Tail Pipe Mtg.	Rt.	P,D,C,Y	1	1	1	1	1	1	1	1	2784 606
23-32-20	LOCK WASHER, Frt. Suspension REINFORCEMENT and SPACER, Rear Floor Pan Shock Absorber	70	R-K, R-T									
			W-K, W-T	1	—	—	—	1	—	1	—	3417 836
	Crossmember Bolt		V,L,B,J	—	AR	AR	AR	AR	—	—	—	2074 386
			R,W	AR	AR	AR	AR	AR	—	AR	AR	2074 386
23-32-22	PAN, Front Floor		V	—	—	—	1	1	—	—	—	2604 160
		71	L	—	—	—	1	—	—	—	—	2604 160

CARLINES	J - Challenger	V - Valiant	R - Belvedere - Satallite	P - Plymouth	C - Chrysler
	B - Barracuda	L - Dart	W - Coronet - Charger	D - Dodge	Y - Imperial

NUMERALS INDICATE:	21 - 2 DR. SED.	27 - CONV. CPE.	41 - 4 DR. SED.	45 - 6 PASS. STA. WGN.
	23 - 2 DR. H.T.	29 - FAST BACK	43 - 4 DR. H.T.	46 - 9 PASS. STA. WGN.

AR Indicates use as required.
\# Indicates parts not listed in any previous parts book
Numerals in parentheses ( ) refer to notes.
★ Indicates change or addition.

Printed in U.S.A.
January 1972

Right and left part numbers are on same line, first number is right, second number is left.

23-32-0 PANS, PLUGS AND BODY BUMPERS Cont'd.

CODE	PART NAME		MODEL CODES	SEE BOTTOM NOTE 21	23	27	29	41	43	45	46	PART NUMBER
23-32-22	PAN Cont'd.											
			V,L	—	1	—	—	1	—	—	—	2603 600
		70	B,J	—	1	1	1	—	—	—	—	2963 035
	w/Console, w/Auto. Trans.	71	B,J	—	1	1	1	—	—	—	—	3570 436
		70	R,W	1	1	1	1	1	—	1	1	2900 800
		71	R,W	—	1	—	—	1	—	1	1	3570 436
	PAN, w/NUT, Frt. Floor	70	P,D	1	1	1	1	1	1	1	1	3444 977
		70	C	—	1	1	—	1	1	1	1	3444 977
		70	Y	—	1	—	—	—	1	—	—	3444 977
		w/Nut 71	P,D,C,Y	1	1	—	1	1	1	1	1	3570 201
23-32-24	PAN, Center Floor		V,L	—	1	—	1	1	—	—	—	3445 438
			B,J	—	1	1	1	—	—	—	—	2963 036
		70	R,W	1	1	1	1	1	—	—	—	3445 440
		70	R,W	—	—	—	—	—	—	1	1	3440 823
		71	R,W	—	1	—	1	1	—	—	—	3445 001
		71	R,W	—	—	—	—	—	—	1	1	3440 824
			P,D,C,Y	1	1	1	1	1	1	—	—	3445 441
			P,D,C	—	—	—	—	—	—	1	1	3440 860
23-32-25	EXTENSION, Center Floor Pan											
			V,L	—	1	—	—	1	—	—	—	2604 166-7
		70	B	—	1	1	—	—	—	—	—	2963 022-3
		70	J	—	1	1	1	—	—	—	—	2964 560-1
		71	J	—	1	1	—	—	—	—	—	3570 402-3
		71	B	—	1	1	—	—	—	—	—	3570 400-1
		Frt. 70	R,W	1	1	1	1	1	—	1	1	2900 856-7
		71	R,W	—	1	—	1	—	—	—	—	3445 492-3
		71	R,W	—	—	—	—	1	—	1	1	3445 014-5
		Frt., Rt.	P	1	1	1	1	1	1	—	—	2902 890
		Lt.	P	1	1	1	1	1	1	—	—	2481 401
		Rt. 70	D	—	1	1	—	1	1	—	—	2902 892
		Lt. 70	D	—	1	1	—	1	1	—	—	2481 813
		Rt.	C,Y	—	1	1	—	1	1	—	—	2900 846
		Lt. 70	C,Y	—	1	1	—	1	1	—	—	2481 403
		Rt.	P,D,C	—	1	—	—	1	1	1	1	2902 892
		Lt.	P,D,C	—	1	—	—	1	1	1	1	2481 813
23-32-27	REINFORCEMENT, Frt. Floor Pan Seat Guide	Frt.	V,L	—	1	—	1	1	—	—	—	2603 606-7
		70	V,L	—	1	—	1	1	—	—	—	2603 608-9
		Frt.	B,J	—	2	2	2	—	—	—	—	2963 052
		Rear	B,J	—	2	2	2	—	—	—	—	2963 054
		Frt. 70	R,W	1	1	1	1	1	—	1	1	2527 114-5
		Rear 70	R,W	1	1	1	1	1	—	1	1	2527 116-7
		Frt. 71	R,W	—	2	—	2	2	—	2	2	2963 052
		Rr. 71	R,W	—	2	—	2	2	—	2	2	2963 054
		Inner, w/Screw 71	R,W	—	4	—	4	—	—	—	—	3570 439
	REINFORCEMENT, Frt. Floor Pan Seat Attaching	Frt. 70	R-M,R-P,R-S	1	1	1	—	1	—	1	1	2574 800-1
		Frt. 70	W-P,W-S	—	1	1	1	—	—	1	1	2574 800-1
		Rear 70	R-M,R-P,R-S	1	1	1	—	1	—	1	1	2574 802-3
		Rear 70	W-P,W-S	—	1	1	1	—	—	1	1	2574 802-3
	REINFORCEMENT, Frt. Floor Pan to Seat Track Frt. Crossmember		P,D,C	—	4	—	4	4	4	4	4	3444 762
		Ctr.	Y	—	1	—	—	—	1	—	—	2842 966
		End	Y	—	1	—	—	—	1	—	—	2842 964-5
		Frt.	Y	—	1	—	—	1	—	—	—	2842 539
	REINFORCEMENT, Frt. Floor Pan Seat Track Rear Crossmember		C-E	—	1	—	—	—	—	—	—	2842 540
			C-L	—	—	—	—	1	1	—	—	2842 540
			C-M,C-H	—	1	—	—	1	1	—	—	2842 540

CARLINES: J - Challenger, B - Barracuda, V - Valiant, L - Dart, R - Belvedere - Satellite, W - Coronet - Charger, P - Plymouth, D - Dodge, C - Chrysler, Y - Imperial

NUMERALS INDICATE: 21 - 2 DR. SED., 23 - 2 DR. H.T., 27 - CONV. CPE., 29 - FAST BACK, 41 - 4 DR. SED., 43 - 4 DR. H.T., 45 - 6 PASS. STA. WGN., 46 - 9 PASS. STA. WGN.

AR Indicates use as required.
\# Indicates parts not listed in any previous parts book
Numerals in parentheses ( ) refer to notes.
★ Indicates change or addition.

Printed in U.S.A.
January 1972

Right and left part numbers are on same line, first number is right, second number is left.

23-32-0 PANS, PLUGS AND BODY BUMPERS Cont'd.

CODE	PART NAME	MODEL CODES	SEE BOTTOM NOTE 21	23	27	29	41	43	45	46	PART NUMBER
23-32-27	REINFORCEMENT Cont'd.										
		Y	—	1	—	—	—	1	—	—	2842 540
	w/NUT	C-E	—	1	—	—	—	—	—	—	3445 160
	w/NUT	C-L	—	—	—	—	1	1	—	—	3445 160
	w/NUT	C-M, C-H	—	1	—	—	1	1	—	—	3445 160
	w/NUT, 70	Y	—	1	—	—	—	1	—	—	3445 160
	REINFORCEMENT and NUT, Center Floor Pan Frt. Extension Frt. Seat Belt Outer										
	71	B,J	—	1	1	—	—	—	—	—	3570 564-5
	SUPPORT, Frt. Floor Pan Seat Track Rear Crossmember Reinf. 70	C-E	—	1	—	—	—	—	—	—	3445 163
	70	C-L	—	—	—	—	1	1	—	—	3445 163
	70	C-M,C-H	—	1	—	—	1	1	—	—	3445 163
	70	Y	—	1	—	—	—	1	—	—	3445 163
23-32-29	COVER, Frt. Floor Pan Gear Shift Opng.	V,L	—	1	—	1	1	—	—	—	2784 440
		B,J	—	1	1	1	—	—	—	—	2963 017
	w/4 Speed Manual Trans. 70	R,W	1	1	1	1	1	—	1	1	2574 805
	w/Console 71	R,W	—	1	1	1	—	—	1	1	2963 017
	w/o Console 71	R,W	—	1	1	1	1	—	1	1	3445 010
23-32-31	BRACE, Frt. Crossmember to Frt. Suspension Crossmember	V,L	—	1	—	1	1	—	—	—	2768 492
		B,J	—	1	1	1	—	—	—	—	2962 003
	70	R,W	1	1	1	1	1	—	1	1	2530 683
	71	R,W	—	1	—	1	1	—	1	1	2962 003
23-32-43	SPACER, Rear Floor Pan to Shock Absorber Crossmember										
	71	R,W	1	—	—	—	1	—	1	—	3506 115
	71	P,D	1	1	—	—	1	1	—	—	3506 061
23-32-45	PLATE and SCREW, Rear Floor Pan to Shock Absorber Crossmember										
	Long 71	R-K, R-T									
		W-K, W-T	1	—	—	—	1	—	1	—	3506 119
	Short 71	R-K, R-T, W-K, W-T	1	—	—	—	1	—	1	—	3506 117
	71	P,D	1	1	—	—	1	1	—	—	3506 063
23-32-46	PANEL, Ctr. Floor Pan Cover 70	R,W	—	—	—	—	—	—	1	1	2859 880
	71	R,W	—	—	—	—	—	—	1	1	3499 954
	PANEL and SUPPORT, Ctr. and Rear Floor Pan Cover	P,D,C	—	—	—	—	—	—	1	1	2934 198
23-32-48	PAN, Rear Floor	V,L	—	1	—	1	1	—	—	—	3444 121
		J	—	1	1	1	—	—	—	—	2965 425
	70	R,W	1	1	1	—	1	—	—	—	2838 707
	71	R,W	—	1	—	1	—	—	—	—	3446 763
	71	R,W	—	—	—	—	1	—	—	—	3445 020
	71	R,W	—	—	—	—	—	—	1	1	3440 566
	70	W	—	—	—	1	—	—	—	—	3444 967
		P,D,C,Y	1	1	1	1	1	1	—	—	2900 783
		P,D,C	—	—	—	—	—	—	1	1	2481 824
	Frt. 70	R,W	—	—	—	—	—	—	1	1	2860 810
	Rear 70	R,W	—	—	—	—	—	—	1	1	2895 348
	PANEL, Rear Floor	B	—	1	1	—	—	—	—	—	2963 038
	Pan Side Upr., Rt. 70	R,W	—	—	—	—	—	—	1	1	2860 094
	Lt. 70	R,W	—	—	—	—	—	—	1	1	2861 605
	71	R,W	—	—	—	—	—	—	1	1	3440 894-5
	Pan Side Upr.	P,D,C	—	—	—	—	—	—	1	1	2894 584-5
	PANEL, Rear Floor Pan Rear	P,D,C	—	—	—	—	—	—	1	1	2484 064

CARLINES: J - Challenger, B - Barracuda, V - Valiant, L - Dart, R - Belvedere - Satellite, W - Coronet - Charger, P - Plymouth, D - Dodge, C - Chrysler, Y - Imperial

NUMERALS INDICATE: 21 - 2 DR. SED., 23 - 2 DR. H.T., 27 - CONV. CPE., 29 - FAST BACK, 41 - 4 DR. SED., 43 - 4 DR. H.T., 45 - 6 PASS. STA. WGN., 46 - 9 PASS. STA. WGN.

AR Indicates use as required.
\# Indicates parts not listed in any previous parts book
Numerals in parentheses ( ) refer to notes.
★ Indicates change or addition.

Printed in U.S.A.
January 1972

Right and left part numbers are on same line, first number is right, second number is left.

23-32-0 PANS, PLUGS AND BODY BUMPERS Cont'd.

CODE	PART NAME		MODEL CODES	SEE BOTTOM NOTE 21	23	27	29	41	43	45	46	PART NUMBER
23-32-48	PAN Cont'd.											
	PANEL, Rear Floor Pan Filler	71	R,W	—	—	—	—	—	—	1	1	3440 794
23-32-49	EXTENSION, Rear Floor Pan Side	70	R,W	—	—	—	—	—	—	1	1	2860 142-3
		71	R	—	1	—	—	—	—	—	—	3445 524-5
		71	R	—	—	—	—	1	—	—	—	3445 526-7
		71	W	—	1	—	1	—	—	—	—	3445 528-9
		71	W	—	—	—	—	1	—	—	—	3445 070-1
		Upr. Pnl.	P,D,C	—	—	—	—	—	—	1	1	2894 582-3
	EXTENSION, Qtr. Pnl. Rear Floor Pan Side		V,L	—	—	—	1	—	—	—	—	2965 582-3
	Use w/E.C.S. on Rt. Side		B	—	1	1	—	—	—	—	—	2963 102
		Lt.	B	—	1	1	—	—	—	—	—	2963 103
			J	—	1	1	1	—	—	—	—	2963 104-5
		70	R	1	1	1	—	1	—	—	—	2965 946-7
		70	W	—	—	—	1	—	—	—	—	2838 002-3
		Rt.	P	1	1	1	1	1	1	—	—	3444 118
		Lt.	P	1	1	1	1	1	1	—	—	2963 927
		Rt. 70	D	—	1	1	—	1	1	—	—	3444 120
		Lt. 70	D	—	1	1	—	1	1	—	—	2963 745
		Rt. 71	D	—	1	—	—	1	1	—	—	3570 434
		Lt. 71	D	—	1	—	—	1	1	—	—	3570 433
		Rt.	C,Y	—	1	1	—	1	1	—	—	3444 122
		Lt.	C,Y	—	1	1	—	1	1	—	—	2900 553
23-32-51	BUMPER, Center Floor Pan Cover Pnl.	70	R,W	—	—	—	—	—	—	AR	—	2811 861
	BUMPER, Rear Floor Pan Cover Pnl. Release Handle		R-W	—	—	—	—	—	—	1	—	2765 393
	BUMPER, Rear Floor Pan Cover Pnl.		R,W	—	—	—	—	—	—	—	AR	2094 618
	BUMPER, Rear Floor Pan Side Upr. Pnl.	70	R,W	—	—	—	—	—	—	4	4	2252 184
		71	R,W	—	—	—	—	—	—	4	4	3500 392
	BUMPER, Ctr. Floor Pan to 2nd Seat Cvr. Inner		R,W	—	—	—	—	—	—	2	2	2664 268
	BUMPER, Tailgate Opng. Sill Reinf. Floor Pan Cover	70	R,W	—	—	—	—	—	—	—	2	2255 231
	BUMPER, Rr. Floor Tailgate Opening Sill	71	R,W	—	—	—	—	—	—	—	4	3500 818
	BUMPER, Rear Floor Pan Side Upr. Pnl. 3rd Seat		R,W	—	—	—	—	—	—	—	2	2861 934
	BUMPER, Ctr. and Rear Floor Pan Cvr. Pnl. 2nd Seat Back Support Pnl.		P,D,C	—	—	—	—	—	—	8	8	2664 681
	BUMPER, Ctr. and Rear Floor Pan Cvr. Pnl. 2nd Seat Back		P,D,C	—	—	—	—	—	—	2	2	2276 804
	BUMPER, Rear Floor Pan Cover		P,D,C	—	—	—	—	—	—	2	—	2895 196
	SCREW, Ctr. & RR Floor Pan Cover Pnl. 2nd. Seat Back Bumper		P,D,C	—	—	—	—	—	—	2	2	6023 531
23-32-52	BRACKET, Rear Floor Pan Bumper Impact	70	W	—	—	—	1	—	—	—	—	2840 382-3
23-32-53	STRAINER & REINFORCEMENT, Rear Floor Pan & Fuel Tank Strap	70	B,J	—	2	2	2	—	—	—	—	2934 840
23-32-56	PANEL, w/TEE NUTS, Rear Floor Pan Cover		R,W	—	—	—	—	—	—	1	—	2254 788
	FILLER, Qtr. Outside Pnl. to Rear Floor Pan Side Extension		B	—	1	1	—	—	—	—	—	2963 988-9
	COVER, Rear Floor Pan Complete w/o Wgn. Cargo Compt. Dressup		P,D	—	—	—	—	—	—	1	—	3417 003
	w/Wgn. Cargo Compt. Dressup		P,D	—	—	—	—	—	—	1	—	3417 004
			C	—	—	—	—	—	—	1	—	3417 004
23-32-57	HOUSING, Rear Floor Pan Cover Pnl. Rel. Handle Usr w/Rear Compt. Lock	70	R,W	—	—	—	—	—	—	1	—	2583 616

CARLINES: J - Challenger, B - Barracuda, V - Valiant, L - Dart, R - Belvedere - Satallite, W - Coronet - Charger, P - Plymouth, D - Dodge, C - Chrysler, Y - Imperial

NUMERALS INDICATE: 21 - 2 DR. SED., 23 - 2 DR. H.T., 27 - CONV. CPE., 29 - FAST BACK, 41 - 4 DR. SED., 43 - 4 DR. H.T., 45 - 6 PASS. STA. WGN., 46 - 9 PASS. STA. WGN.

AR Indicates use as required.
\# Indicates parts not listed in any previous parts book
Numerals in parentheses ( ) refer to notes.
★ Indicates change or addition.

Printed in U.S.A.
January 1972

Right and left part numbers are on same line, first number is right, second number is left.

23-32-0 PANS, PLUGS AND BODY BUMPERS Cont'd.

CODE	PART NAME		MODEL CODES	SEE BOTTOM NOTE 21	23	27	29	41	43	45	46	PART NUMBER
23-32-58	STRIKER, Rear Floor Cvr. Pnl. Use w/Rear Compt. Lock		R,W	—	—	—	—	—	—	1	—	2254 667
	STRIKER, Rear Floor Pan Cvr. Pnl. Release Handle		P,D,C	—	—	—	—	—	—	1	—	2486 846
23-32-61	SCREW, Center Floor Pan Cvr. Pnl. Bumper	70	R,W	—	—	—	—	—	—	13	—	2496 153
23-32-65	HINGE, Rear Floor Pan Cvr. Pnl.		R,W	—	—	—	—	—	—	1	—	2254 675
			P,D,C	—	—	—	—	—	—	1	—	2481 811
23-32-69	T/PLATE, Rear Floor Pan to Center Floor Pan Cover Pnl.		P,D,C	—	—	—	—	—	—	1	1	2484 974
23-32-70	STRAINER, w/Reinf. Rear Floor Pan	70	B,J	—	1	1	1	—	—	—	—	2934 840
23-32-79	BRACKET, w/RETAINER, Rear Floor Pan Cvr. Pnl. Prop. Rod		R,W	—	—	—	—	—	—	1	—	2254 810
23-32-80	HANDLE, Rear Floor Pan Cvr. Pnl. Release Use w/Rear Compt. Lock	70	R,W	—	—	—	—	—	—	1	—	2583 010
		71	R,W	—	—	—	—	—	—	1	—	3548 674
			P,D,C	—	—	—	—	—	—	1	—	2486 844
	HANDLE, Rear Floor Pan Cvr. Inner Rear Pnl.	Prime	P,D,C	—	—	—	—	—	—	1	—	2895 262
23-32-82	BEZEL, Rear Floor Pan Cover Pnl. Grip Use w/Rear Compt. Lock		R,W	—	—	—	—	—	—	1	—	2252 183
23-32-84	SHIM, Rear Floor Pan Cover Pnl. Release Handle		P,D,C	—	—	—	—	—	—	AR	—	2802 998
23-32-87	SPRING, Rear Floor Pan Cvr. Pnl. Release		R,W	—	—	—	—	—	—	1	—	2251 676
	SPRING, Rear Floor Pan Cvr. Pnl. Release Handle		R,W	—	—	—	—	—	—	1	—	2945 442
	SPRING, 3rd Seat Back Release Handle Inner	70	R,W	—	—	—	—	—	—	—	1	2945 442
23-32-88	ROD, Rear Floor Pan Cover Prop		R,W	—	—	—	—	—	—	1	—	1960 061
23-32-92	GUSSET, Center Floor Pan Rear Support Frt. Hanger Brkt.		B,J	—	1	1	1	—	—	—	—	2963 030-1
	GUSSET, Floor Pan Extension to Wheelhouse Bracket	71	R	—	—	—	—	1	—	—	—	3615 024
23-32-93	SUPPORT and T/PLATE, Rear Floor Pan Rear Suspension Rear Hgr. Brkt.		V,L	—	1	—	1	1	—	—	—	2081 004-5
	SUPPORT, Center Floor Pan Rear Suspension Frt. Hgr. Brkt.		B,J	—	1	1	1	—	—	—	—	2963 078-9
		71	R,W	—	1	—	1	1	—	1	1	3445 018-9
	w Reinforcement	71	R,W	—	1	—	1	1	—	1	1	3482 250-1
		71	P,D,C,Y	1	1	—	1	1	1	1	1	3504 368-9
	SUPPORT, Ctr. Floor Pan Rear Suspension Frt. Brkt.	70	R,W	1	1	1	1	1	—	1	1	2527 120-1
		71	R,W	—	—	—	—	—	—	1	1	3499 028-9
	SUPPORT, Rear Floor Pan Rear Suspension Rear Hge. Brkt.	70	R,W	1	1	1	1	1	—	—	—	2602 294-5
		70	R,W	—	—	—	—	—	—	1	1	2588 294-5
		71	R,W	—	1	—	1	1	—	—	—	3445 040-1
			P,D,C,Y	1	1	1	1	1	1	1	1	2782 668-9
	SUPPORT, Rr. Floor Pan Spare Wheel	71	D,C,Y	—	1	—	—	1	1	—	—	3615 152
		Canada 71	D,C,Y	—	—	—	—	—	—	—	—	2965 118
	SUPPORT, W/NUT, Ctr. Floor Pan Rear Suspension Frt. Brkt., Up to Type	70	P,D,C	1	1	1	1	1	1	1	1	2528 396-7
	After Type		P,D,C	1	1	1	1	1	1	1	1	3504 368-9
	BRACKET and SLEEVE, Rear Floor Pan Rear Suspension Hanger	70	W	1	1	1	1	1	—	—	—	2576 754-5

CARLINES: J - Challenger, B - Barracuda, V - Valiant, L - Dart, R - Belvedere - Satallite, W - Coronet - Charger, P - Plymouth, D - Dodge, C - Chrysler, Y - Imperial

NUMERALS INDICATE: 21 - 2 DR. SED., 23 - 2 DR. H.T., 27 - CONV. CPE., 29 - FAST BACK, 41 - 4 DR. SED., 43 - 4 DR. H.T., 45 - 6 PASS. STA. WGN., 46 - 9 PASS. STA. WGN.

AR Indicates use as required.
\# Indicates parts not listed in any previous parts book
Numerals in parentheses ( ) refer to notes.
★ Indicates change or addition.

Printed in U.S.A.
January 1972

Right and left part numbers are on same line, first number is right, second number is left.

23-32-0 PANS, PLUGS AND BODY BUMPERS Cont'd.

CODE	PART NAME		MODEL CODES	SEE BOTTOM NOTE 21	23	27	29	41	43	45	46	PART NUMBER
23-32-93	SUPPORT and T/PLATE Cont'd.											
		71	R,W	—	—	—	—	1	—	—	—	3482 244-5
	BRACKET, SUPPORT and SLEEVE, Rear Floor Pan											
	Rr. Suspension Hanger	71	R,W	—	1	—	1	—	—	—	—	= 3482 246-7
	BRACKET, Rear Floor Pan Rear Suspension Hanger	70	R,W	—	—	—	—	—	—	1	1	2588 296-7
		71	R,W	—	—	—	—	—	—	1	1	3482 264-5
	BRACKET, Rear Floor Pan Rear Shock Absorber Crossmember	71	B,J	—	2	2	—	—	—	—	—	3504 640
	PLATE, Rear Suspension Frt. Brkt. Support Frt., 426, 440 Eng.		B,J	—	2	2	2	—	—	—	—	2963 046
	T/PLATE, Rear Floor Pan Rear Suspension Hanger Brkt.		R,W	—	—	—	—	—	—	2	2	2588 899
	PLATE, w/NUT, Rear Floor Pan Rear Suspension Rear Brkt. Mtg.		P,D,C,Y	1	1	1	1	1	1	1	1	2783 704-5
	PLATE, Rear Floor Pan Rear Suspension *Hanger Bracket* Use w/426, 440 Eng.	71	R,W	—	2	—	2	2	—	—	—	3504 198
	SUPPORT & ANTI RATTLER, Rear Floor Pan Spare Wheel	Canada 70	P-D,C,Y	1	1	—	1	1	1	—	—	2965 118
	ANTI RATTLER, Rr. Floor Pan Spare Wheel Support	71	D,C,Y	—	2	—	—	2	2	—	—	2842 994
23-32-98	PLUG, Dash Pnl. Heater Hose Hole	70	V,L,R,W	2	2	2	2	2	—	2	2	2094 985
23-32-105	RAIL, Frt. Side	Comp., Rt.	V,L	—	1	—	1	1	—	—	—	2769 306
		Lt.	V,L	—	1	—	1	1	—	—	—	2769 307
		Rt.	B,J	—	1	1	1	—	—	—	—	2934 928
		Lt.	B,J	—	1	1	1	—	—	—	—	2934 929
		Rt. 70	R,W	1	1	1	1	1	—	1	1	3417 810
		Lt. 70	R,W	1	1	1	1	1	—	1	1	3417 811
		Rt.	R,W	—	1	—	1	1	—	1	1	3482 512
		Lt.	R,W	—	1	—	1	1	—	1	1	3482 513
	RAIL and Rear HANGER, Rear Floor Pan Side	71	R,W	—	1	—	1	—	—	—	—	3482 240-1
		71	R,W	—	—	—	—	1	—	—	—	3482 238-9
		71	R,W	—	—	—	—	—	—	1	1	3482 242-3
	RAIL and Frt. Hanger GUSSET, Rear Floor Pan Side		V,L	—	1	—	1	1	—	—	—	3417 148-9
	RAIL and REINFORCEMENT, Rear Floor Pan Side		B	—	1	1	—	—	—	—	—	2934 808-9
			J	—	1	1	1	—	—	—	—	2934 810-1
	RAIL and SUPPORT, to Sill Reinf. Rear Floor Pan Side		R	1	1	1	—	1	—	—	—	3417 562-3
			W	1	1	1	1	1	—	—	—	3417 564-5
			W	—	—	—	—	—	—	1	1	3417 548-9
	RAIL and SILL REINFORCEMENT, Rear Floor Pan Side	70	P	1	1	1	1	1	1	—	—	3417 882-3
		70	D,C,Y	—	1	1	—	1	1	—	—	3417 884-5
		71	P,D,C,Y	1	1	—	1	1	1	—	—	3611 066-7
			P,D,C	—	—	—	—	—	—	1	1	3417 886-7
		71	D	—	—	—	—	—	—	1	1	3611 068-9
	RAIL and FRONT HANGER, Rr. Floor Pan Side	71	B,J	—	1	1	—	—	—	—	—	= 3482 908-9
23-32-106	RETAINER, Rear Floor Pan Spare Tire Cover Pnl.		V,L	—	1	—	1	1	—	—	—	2259 173
	RETAINER, *Rear Floor Pan Tailgate Opening* Lower Sill Seal	71	R,W	—	—	—	—	—	—	1	1	3500 366
23-32-107	SUPPORT, Rear Floor Pan Cover		P,D,C	—	—	—	—	—	—	2	—	2895 195

CARLINES: J - Challenger, B - Barracuda, V - Valiant, L - Dart, R - Belvedere - Satellite, W - Coronet - Charger, P - Plymouth, D - Dodge, C - Chrysler, Y - Imperial

NUMERALS INDICATE: 21 - 2 DR. SED., 23 - 2 DR. H.T., 27 - CONV. CPE., 29 - FAST BACK, 41 - 4 DR. SED., 43 - 4 DR. H.T., 45 - 6 PASS. STA. WGN., 46 - 9 PASS. STA. WGN.

AR Indicates use as required.
\# Indicates parts not listed in any previous parts book
Numerals in parentheses ( ) refer to notes.
★ Indicates change or addition.

Printed in U.S.A.
January 1972

Right and left part numbers are on same line, first number is right, second number is left.

23-32-0 PANS, PLUGS AND BODY BUMPERS Cont'd.

CODE	PART NAME		MODEL CODES	SEE BOTTOM NOTE 21	23	27	29	41	43	45	46	PART NUMBER
23-32-107	SUPPORT Cont'd.											
	SUPPORT, w/NUT, Rear Floor Pan Cover Pnl.	Rt.	P,D,C	—	—	—	—	—	—	1	1	2664 126
		Lt. 70	P,D,C	—	—	—	—	—	—	1	1	2769 021
23-32-110	SHIELD, Frt. Suspension Crossmember to Frt. Side Rail Splash	Rt.	V,L	—	1	—	1	1	—	—	—	2800 658
		Lt.	V,L	—	1	—	1	1	—	—	—	2800 659
		Rt.	B,J,R,W	1	1	1	1	1	—	1	1	2925 348
		Lt.	B,J,R,W	1	1	1	1	1	—	1	1	2925 349
23-32-111	SUPPORT, Floor Pan Rear Side Rail to Inner Sill		B,J	—	1	1	1	—	—	—	—	2963 754-5
23-32-112	REINFORCEMENT, Frt. Floor Pan Still to Rail w/383, 426, 440 Eng.		B,J	—	1	1	1	—	—	—	—	3445 720-1
	w/340 Eng.		B-S, J-H	—	1	—	—	—	—	—	—	3445 720-1
		70	R,W	—	—	1	—	—	—	—	—	2602 930-1
	REINFORCEMENT, Rear Suspension Frt. Brkt. Support to Rail	70	R,W	1	1	1	1	1	—	1	1	2527 118-9
			P,D,C,Y	1	1	1	1	1	1	1	1	3504 332-3
	REINFORCEMENT, Rear Suspension Frt. Brkt. Support to Sill	70	R,W	1	1	1	1	1	—	1	1	2527 138-9
		71	R,W	—	1	—	1	1	—	1	1	3445 034-5
			P,D,C,Y	1	1	1	1	1	1	1	1	3504 334-5
	REINFORCEMENT, Center Floor Pan Spring Hanger Brkt.	70	B,J	—	—	1	—	—	—	—	—	3444 992-3
	Use w/426, 440 Eng.		B-S,J-S	—	1	—	1	—	—	—	—	3444 992-3
	Use W/340 Eng.		B-S, J-H	—	1	—	—	—	—	—	—	3444 992-3
		70	R,W	—	—	1	—	—	—	—	—	2573 368-9
	Use w/426, Eng.	70	R,W	1	1	—	1	1	—	—	—	2573 368-9
		70	P	—	—	1	—	—	—	—	—	3504 424-5
		70	D,C	—	—	1	—	—	—	—	—	3504 526-7
	REINFORCEMENT, Center Floor Pan to Inner Sill and Rear Rail Sprg. Hanger Support Use w/340 Eng.		V-S,L-M	—	1	—	1	—	—	—	—	2604 902-3
	REINFORCEMENT, Center Floor Pan Extension Sill to Rail use w/426, 440 Eng.	71	R,W	—	1	—	1	—	—	—	—	3569 560-1
	REINFORCEMENT, W/NUT, Center Floor Pan Frt. Extension Frt. Seat Belt Outer		R,W	—	1	—	1	1	—	1	1	3506 054-5
23-32-115	REINFORCEMENT, Frt. Side Rail to Side Sill Inner	Rt.	V,L	—	1	—	1	1	—	—	—	2603 610
		Lt.	V,L	—	1	—	1	1	—	—	—	2603 611
		Rt. 70	R,W	1	1	1	1	1	—	1	1	2527 104
		Lt. 70	R,W	1	1	1	1	1	—	1	1	2527 105
	REINFORCEMENT, Frt. Side Rail Frt.	Rt.	V,L	—	1	—	1	1	—	—	—	2768 486
		Lt.	V,L	—	1	—	1	1	—	—	—	2768 487
		Rt. 70	R,W	1	1	1	1	1	—	1	1	2530 666
		Lt. 70	R,W	1	1	1	1	1	—	1	1	2530 667
			B,J,R,W	—	1	1	—	1	—	1	1	2962 066-7
	REINFORCEMENT, Rear Side Rail to Rear Crossmember	Rt. 70	R,W	—	—	—	—	—	—	1	1	2573 272
		Lt. 70	R,W	—	—	—	—	—	—	1	1	2860 355
	REINFORCEMENT, Floor Pan Frt. Side Rail to Side Sill	Inner, Rt.	B,J	—	1	1	1	—	—	—	—	2963 058
		Lt.	B,J	—	1	1	1	—	—	—	—	2963 059
		71	R,W	—	1	—	1	1	—	1	1	3446 242-3

CARLINES: J - Challenger, B - Barracuda, V - Valiant, L - Dart, R - Belvedere - Satallite, W - Coronet - Charger, P - Plymouth, D - Dodge, C - Chrysler, Y - Imperial

NUMERALS INDICATE: 21 - 2 DR. SED., 23 - 2 DR. H.T., 27 - CONV. CPE., 29 - FAST BACK, 41 - 4 DR. SED., 43 - 4 DR. H.T., 45 - 6 PASS. STA. WGN., 46 - 9 PASS. STA. WGN.

AR Indicates use as required.
# Indicates parts not listed in any previous parts book
Numerals in parentheses ( ) refer to notes.
★ Indicates change or addition.

Printed in U.S.A.
January 1972

Right and left part numbers are on same line, first number is right, second number is left.

CODE	PART NAME	MODEL CODES	SEE BOTTOM NOTE 21	23	27	29	41	43	45	46	PART NUMBER
23-32-0	**PANS, PLUGS AND BODY BUMPERS Cont'd.**										
23-32-115	REINFORCEMENT Cont'd.										
	PLATE, w/SCREW, Rear Floor Pan Rear Reinf. and Crossmember Bumper Support Att. 71	R,W	—	—	—	—	—	—	2	2	3499 968
	PLATE, W/SCREW, Rear Floor Pan Rear Side Rail Rr. Crossmember 71		—	—	—	—	—	—	2	2	3499 882
	BRACKET, Side Rail Frt. Reinf. and Frt. Side Rail Yoke Attach. Rt. 70	B,J	—	1	1	1	—	—	—	—	2934 926
23-32-116	EXTENSION, Frt. Side Rail to Side Sill Inner Reinf. Rt.	B,J	—	1	1	1	—	—	—	—	2963 436
	Lt.	B,J	—	1	1	1	—	—	—	—	2963 437
	Rt. 70	R,W	1	1	1	1	1	—	1	1	2574 144
	Lt. 70	R,W	1	1	1	1	1	—	1	1	2574 145
	71	R,W	—	1	—	1	1	—	1	1	2963 436-7
	EXTENSION and Rr. HANGER BRKT. SLEEVE, Floor Pan Rr. Side Rail 71	B,J	—	1	1	—	—	—	—	—	= 2934 816-7
23-32-120	WEIGHT, Body Center Floor Pan Damper Use w/318, 383 Eng.	R-P, W-P	—	—	—	—	1	—	1	1	3466 713
23-32-121	BUSHING, Body Center Floor Pan Damper Use w/318, 383 Eng.	R-P, W-P	—	—	—	—	1	—	1	1	3466 711
23-32-122	RETAINER, Body Center Floor Pan Damper Use w/318, 383 Eng.	R-P, W-P	—	—	—	—	1	—	1	1	3466 701
	Lwr.	R-P, W-P	—	—	—	—	1	—	1	1	3466 702
23-33-0	**INSTRUMENT PANEL**										
23-33-10	BRACE, Instrument Panel Lower Reinforcement to Cowl Top Support	V,L	—	1	—	1	1	—	—	—	2889 625
	BRACE, Instrument Panel Center w/Screw	R,W	—	1	—	1	1	—	1	1	2985 732
	SUPPORT, Instrument Panel Lower Reinforcement to Cowl Panel	P,D,C,Y	1	1	1	1	1	1	1	1	2984 667
23-33-12	PLATE, Radio Cover 70	V,L	—	1	—	1	1	—	—	—	2770 557
	PLATE, Radio Control Opening Cover 70	V,L	—	1	—	1	1	—	—	—	2857 675
	71	V,L	—	1	—	1	1	—	—	—	2985 719
23-33-16	COVER, A/Conditioning Spot Cooler Hole 70	P	1	1	1	1	1	1	1	1	2927 776
	COVER, A/Conditioning Opening 71	C	—	1	—	—	1	1	1	1	2985 592
	COVER, Inst. Panel Lt. End CANADA 70	P	1	1	1	1	1	1	1	1	2984 898
	w/out Wood Grain CANADA 71	P,D	—	1	—	1	1	1	1	1	2985 007
	with Wood Grain CANADA 71	P,D	—	1	—	1	1	1	1	1	2985 013
23-33-20	COVER, Instrument Panel Clock Hole 70	B	—	1	1	—	—	—	—	—	2984 140
	70	J	—	1	1	1	—	—	—	—	2984 174
	71	B,J	—	1	1	—	—	—	—	—	2984 140
		P	1	1	1	1	1	1	1	1	2927 081
		D	—	1	1	—	1	1	1	1	2984 958
	70	C	—	1	1	—	1	1	1	1	2927 240
	71	C	—	1	—	—	1	1	1	1	2985 584
	70	R,W	1	1	1	1	—	—	—	—	2984 764
	71	R,W	—	1	—	1	1	—	1	1	2985 423
	COVER, Instrument Panel Clock or Tachometer or Oil Gage Hole 70	R,W	1	1	1	1	1	—	1	1	2857 019
	COVER, Clock, Tachometer or Vacuum Gage Hole	V,L	—	1	—	1	1	—	—	—	2857 726

CARLINES	J - Challenger B - Barracuda	V - Valiant L - Dart	R - Belvedere - Satallite W - Coronet - Charger	P - Plymouth D - Dodge	C - Chrysler Y - Imperial
NUMERALS INDICATE:	21 - 2 DR. SED. 23 - 2 DR. H.T.	27 - CONV. CPE. 29 - FAST BACK	41 - 4 DR. SED. 43 - 4 DR. H.T.	45 - 6 PASS. STA. WGN. 46 - 9 PASS. STA. WGN.	

AR Indicates use as required.
\# Indicates parts not listed in any previous parts book
Numerals in parentheses ( ) refer to notes.
★ Indicates change or addition.

Printed in U.S.A.
January 1972

Right and left part numbers are on same line, first number is right, second number is left.

CODE	PART NAME		MODEL CODES	SEE BOTTOM NOTE 21	23	27	29	41	43	45	46	PART NUMBER
23-33-0	**INSTRUMENT PANEL Cont'd.**											
23-33-42	GRILLE, Instrument Panel Radio Speaker											
		Blue 70	B	—	1	1	—	—	—	—	—	4327 FB5
		Briar 70		—	1	1	—	—	—	—	—	4327 FE5
		Green 70		—	1	1	—	—	—	—	—	4327 FF8
		Copper 70		—	1	1	—	—	—	—	—	4327 FK5
		Tan 70		—	1	1	—	—	—	—	—	4327 FT4
		Black 70		—	1	1	—	—	—	—	—	4327 FX9
		Blue 70	J	—	1	1	1	—	—	—	—	4326 FB5
		Briar 70		—	1	1	1	—	—	—	—	4326 FE5
		Green 70		—	1	1	1	—	—	—	—	4326 FF8
		Copper 70		—	1	1	1	—	—	—	—	4326 FK5
		Tan 70		—	1	1	1	—	—	—	—	4326 FT4
		Black 70		—	1	1	1	—	—	—	—	4326 FX9
		Blue 71	B,J	—	1	1	—	—	—	—	—	4327 GB7
		Green 71		—	1	1	—	—	—	—	—	4327 GF7
		Tan 71		—	1	1	—	—	—	—	—	4327 GT6
		Black 71		—	1	1	—	—	—	—	—	4327 GX9
		Gold 71		—	1	1	—	—	—	—	—	4327 GY6
	GRILLE, Instrument Panel Stereo Speaker Used w/A/M Radio w/Stereo Player and A/M, F/M Multiplex Radio	Rt.	B	—	1	1	—	—	—	—	—	2884 691
		Lt	B	—	1	1	—	—	—	—	—	2884 687
		Rt. 70	J	—	1	1	1	—	—	—	—	2884 682
		Lt. 70	J	—	1	1	1	—	—	—	—	2884 678
		Rt. 71	J	—	1	1	—	—	—	—	—	2884 691
		Lt. 71	J	—	1	1	—	—	—	—	—	2884 687
	Used w/A/M Radio w/Stereo Player	70	R,W	2	2	2	2	2	—	2	2	2864 714
	Used w/A/M Radio w/Stereo Player and A/M, F/M Multiplex Radio		P	1	1	1	1	1	1	1	1	2884 444-5
		70	D	—	1	1	—	1	1	1	1	2884 426-7
		71	D	—	1	—	—	1	1	1	1	2884 444-5
		Rt.	C,Y	—	1	1	—	1	1	1	1	2884 408
		Lt.	C,Y	—	1	1	—	1	1	1	1	2884 404
	GRILLE, Instrument Panel Radio Speaker and Defroster		C	—	1	1	—	1	1	1	1	2927 147
			Y	—	1	—	—	—	1	—	—	2985 298
	PLATE, Instrument Panel, Defroster and Radio Speaker Opening Finish	71	R,W	—	1	—	—	1	—	1	1	2985 029
23-33-43	PLATE, Instrument Panel Stereo Radio Speaker and Grille Mounting		P,D	2	2	2	2	2	2	2	2	2884 267
23-33-45	GASKET, Anti-Rattle Grille to Bezel		C,Y	—	2	2	—	2	2	2	2	2884 667
23-33-65	COVER, Instrument Panel Trim Bezel w/o Heater A/Cond. or Auto. Temp. Control	70	P	1	1	1	1	1	1	1	1	2884 440
	COVER, Heater Control Opening	70	D	—	1	1	—	1	1	1	1	2884 441
		70	C	—	1	1	—	1	1	1	1	2927 355
		71	R,W	—	1	—	—	1	—	1	1	3431 175
		71	C	—	1	—	—	1	1	1	1	2985 571
	COVER, Switch Opening w/o Rear Seat Heater and Defroster, Rr. Window Defogger, A/Cond. and Auto. Temp. Control	70	C	—	1	1	—	1	1	1	1	2984 912

CARLINES: J - Challenger, B - Barracuda, V - Valiant, L - Dart, R - Belvedere - Satallite, W - Coronet - Charger, P - Plymouth, D - Dodge, C - Chrysler, Y - Imperial

NUMERALS INDICATE: 21 - 2 DR. SED., 23 - 2 DR. H.T., 27 - CONV. CPE., 29 - FAST BACK, 41 - 4 DR. SED., 43 - 4 DR. H.T., 45 - 6 PASS. STA. WGN., 46 - 9 PASS. STA. WGN.

AR *Indicates use as required.*
\# Indicates parts not listed in any previous parts book
Numerals in parentheses ( ) refer to notes.
★ Indicates change or addition.

Printed in U.S.A.
January 1972

Right and left part numbers are on same line, first number is right, second number is left.

23-33-0 INSTRUMENT PANEL Cont'd.

CODE	PART NAME	MODEL CODES	SEE BOTTOM NOTE 21	23	27	29	41	43	45	46	PART NUMBER
23-33-65	COVER Cont'd. w/O Rr. Seat Heater and Rr. Window Defogger 71	C	—	1	—	—	1	1	—	—	2985 589
	COVER, Heater and A/Cond. Control Opening Burnt Orange 70	R,W	1	1	1	1	1	—	1	1	4221 FK5
	Tan 70		1	1	1	1	1	—	1	1	4221 FT4
	Gold 70		1	1	1	1	1	—	1	1	4221 FY4
	Dark Blue 70		1	1	1	1	1	—	1	1	4221 EB7
	Dark Green 70		1	1	1	1	1	—	1	1	4221 EF8
	Black 70		1	1	1	1	1	—	1	1	4221 DX9
	COVER, A/Conditioning Outlet 71	Y									2985 558
	PLATE, Heater Fan Switch Opening Cover	V,L	—	1	—	1	—	1	—	—	2927 280
	PLATE, Heater Control Opening Cover	V,L	—	1	—	1	—	1	—	—	2857 673
23-33-86	MOULDING, Instrument Panel 70	R-H,R-P, R-S,W-H, W-P,W-S	1	1	1	—	1	—	1	1	2889 028-9
	Center 70	R-H,R-P, R-S,W-H, W-P,W-S	1	1	1	—	1	—	1	1	2889 030
	Rt. 71	C-H	—	1	—	—	1	1	—	—	= 2985 082
	Rt. 71	C-P	—	—	—	—	—	—	1	1	= 2985 734
	Lt. 71	C-H,C-P	—	1	—	—	1	1	1	1	= 2985 075
	MOULDING, Inst. Panel, Wood Grain CANADA 71	D-H	—	1	—	—	1	1	1	1	2985 911
23-33-92	SPACER, Instrument Panel Center Moulding Attaching 70	R,W	6	6	6	—	6	—	6	6	2889 501
23-33-96	NAMEPLATE, Instrument Panel Finish Plate Up to Dec. 1970 Barracuda 71	B	—	1	1	—	—	—	—	—	= 2985 884
	Up to Dec. 1970 Challenger 71	J	—	1	1	—	—	—	—	—	= 2985 885
	After Dec. 1970 Barracuda 71	B	—	1	1	—	—	—	—	—	= 3590 126
	After Dec. 1970 Challenger 71	J	—	1	1	—	—	—	—	—	= 3590 127
	"R/T" 70	W-S	—	1	1	—	—	—	—	—	2984 449
	"G.T.X." 70	R-S	—	1	—	—	—	—	—	—	2984 447
	"Road Runner" 71	R-M	—	1	—	—	—	—	—	—	2985 767
	"Satellite" 71	R-H, R-P	—	1	—	—	1	—	1	1	2985 768
	"G.T.X." 71	R-S	—	1	—	—	—	—	—	—	2985 772
	"Charger" 71	W-H	—	1	—	—	—	—	—	—	2985 775
	"Coronet Custom" 71	W-H	—	—	—	—	1	—	1	1	2985 776
	"Super Bee" 71	W-M	—	1	—	—	—	—	—	—	2985 774
	"Charger 500" 71	W-P	—	1	—	—	—	—	—	—	2985 777
	"Brougham" 71	W-P	—	—	—	—	1	—	—	—	2985 905
	"Crestwood" 71	W-P	—	—	—	—	—	—	1	1	2985 909
	"Charger S/E" 71	W-P	—	—	—	1	—	—	—	—	2985 809
	"Charger R/T" 71	W-S	—	1	—	—	—	—	—	—	2985 779
	w/Insert Fury Custom 71	P-E	1	—	—	—	1	—	—	—	= 2985 969
	w/Insert Gran Coupe 71	P-M	—	—	—	1	—	1	—	—	= 2985 978
	w/Insert "Sport Sub" 71	P-H	—	—	—	—	—	—	1	1	2985 832
	w/Insert "Custom Sub." 71	P-M	—	—	—	—	—	—	1	1	2985 831
	w/Insert "Sport Fury" 71	P-H, P-P	—	1	—	1	1	1	—	—	2985 830
	w/Insert "Fury III" 71	P-M	—	1	—	1	1	1	—	—	2985 829
	w/Insert "Brougham" 71	P-H, P-P-P, D-M, D-H	—	1	—	1	1	1	—	—	2985 828
	w/Insert "Brougham" 71	P-M	—	—	—	—	—	—	1	1	2985 828
	w/Insert "Custom" 71	D-L,D-E	—	1	—	—	1	1	1	1	2985 910
23-33-107	DECAL, Instrument Panel Bird 70	R-M	1	1	1	—	—	—	—	—	2984 392

CARLINES J - Challenger, B - Barracuda, V - Valiant, L - Dart, R - Belvedere - Satallite, W - Coronet - Charger, P - Plymouth, D - Dodge, C - Chrysler, Y - Imperial

NUMERALS INDICATE: 21 - 2 DR. SED., 23 - 2 DR. H.T., 27 - CONV. CPE., 29 - FAST BACK, 41 - 4 DR. SED., 43 - 4 DR. H.T., 45 - 6 PASS. STA. WGN., 46 - 9 PASS. STA. WGN.

AR *Indicates use as required.*
\# Indicates parts not listed in any previous parts book
Numerals in parentheses ( ) refer to notes.
★ Indicates change or addition.

Printed in U.S.A. January 1972

Right and left part numbers are on same line, *first number is right, second number is left.*

23-33-0 INSTRUMENT PANEL Cont'd.

CODE	PART NAME	MODEL CODES	SEE BOTTOM NOTE 21	23	27	29	41	43	45	46	PART NUMBER
23-33-109	PANEL, Instrument	V	—	1	—	1	1	—	—	—	2984 574
	70	L	—	1	—	1	1	—	—	—	2984 576
	71	L	—	1	—	1	1	—	—	—	2984 574
		B,J	—	1	1	1	—	—	—	—	2984 019
	Duster 340 & Swinger 340 70	V,L	—	1	—	1	—	—	—	—	2985 452
	Duster 340 & Swinger 340 71	V,L	—	1	—	1	—	—	—	—	2985 869
	W/o Air Cond. 70	R-M,R-S									
		W-M	1	1	1	—	—	—	—	—	2984 290
	W/Air Cond. 70	R-M,R-S									
		W-M	1	1	1	—	—	—	—	—	2984 292
	w/A/Cond. 70	R	1	1	1	—	1	—	1	1	2984 288
	w/o A/Cond. 70	R	1	1	1	—	1	—	1	1	2984 286
	w/A/Cond. 70	W-K,W-T, W-L,W-H, W-P	1	1	1	—	1	—	1	1	2984 288
	w/o A/Cond. 70	W-K,W-T, W-L,W-H, W-P	1	1	1	—	1	—	1	1	2984 286
	w/o Rallye Inst. Pnl., w/A/Cond. 70	W-S	—	1	1	—	—	—	—	—	2984 288
	w/o Rallye Inst. Pnl., w/o A/Cond. 70	W-S	—	1	1	—	—	—	—	—	2984 286
	w/A/Cond. 70	W-P,W-S	—	—	—	1	—	—	—	—	2984 292
	70	W-M	1	1	—	—	—	—	—	—	2984 292
	w/o A/Cond. 70	W-P,W-S	—	—	—	1	—	—	—	—	2984 290
	70	W-M	1	1	—	—	—	—	—	—	2984 290
	w/Rallye Inst. Pnl., w/A/Cond. 70	W-S	—	1	1	—	—	—	—	—	2984 292
	w/o Rallye Inst. Pnl., w/o A/Cond. 70	W-S	—	1	1	—	—	—	—	—	2984 290
	w/Air/Cond. 71	R,W	—	1	—	1	1	—	1	1	2985 018
	w/O Air Cond. 71	R,W	—	1	—	1	1	—	1	1	2985 016
	w/A/Cond.	P	1	1	1	1	1	1	1	1	2984 618
	w/o A/Cond. 70	P	1	1	1	1	1	1	1	1	2984 584
	w/Heater 71	P,D	1	1	—	1	1	1	1	1	2895 704
	w/O Heater or A/Cond. 71	P,D	1	1	—	1	1	1	1	1	2894 584
	w/or w/o A/Cond. 70	D	—	1	1	—	1	1	1	1	2984 613
	w/A/Cond., A/M Radio w/Stereo Player and A/M F/M Multiplex Radio 70	C,Y	—	1	1	—	1	1	1	1	2984 603
	w/A/Cond., w/o A/M Radio w/Stereo Player, w/o A/M F/M Muptiplex Radio 70	C,Y	—	1	1	—	1	1	1	1	2984 605
	w/o A/Cond., w/o A/M Radio w/Stereo Player and A/M F/M Multiplex Radio 70	C,Y	—	1	1	—	1	1	1	1	2984 599
	w/o A/Cond., w/A/M Radio w/Stereo Player and A/M F/M Multiplex Radio 70	C,Y	—	1	1	—	1	1	1	1	2984 601
	w/O A/Cond. w/O Radio or Tape 71	C,Y	—	1	—	—	1	1	1	1	2985 122
	w/A/Cond. w/O Radio or Tape 71	C,Y	—	1	—	—	1	1	1	1	2985 128
	w/O A/Cond. w/Radio and Tape 71	C,Y	—	1	—	—	1	1	1	1	2985 124
	w/A Cond. w/Radio and Tape 71	C,Y	—	1	—	—	1	1	1	1	2985 126
23-33-119	SHIELD, Instrument Panel Lower w/Heater	B,J	—	1	1	1	—	—	—	—	4237 FX9
23-33-132	COVER, Instrument Panel Steering Column Opening										
	Dark Blue 70	V,L	—	1	—	1	1	—	—	—	4229 FB7
	Red 70		—	1	—	1	1	—	—	—	4229 FE5
	Dark Green 70		—	1	—	1	1	—	—	—	4229 FF8
	Tan 70		—	1	—	1	1	—	—	—	4229 FT4
	Black 70		—	1	—	1	1	—	—	—	4229 FX9
	Blue 71	V,L	—	1	—	1	1	—	—	—	4229 GB7
	Green 71	V,L	—	1	—	1	1	—	—	—	4229 GF7

CARLINES J - Challenger, B - Barracuda, V - Valiant, L - Dart, R - Belvedere - Satallite, W - Coronet - Charger, P - Plymouth, D - Dodge, C - Chrysler, Y - Imperial

NUMERALS INDICATE: 21 - 2 DR. SED., 23 - 2 DR. H.T., 27 - CONV. CPE., 29 - FAST BACK, 41 - 4 DR. SED., 43 - 4 DR. H.T., 45 - 6 PASS. STA. WGN., 46 - 9 PASS. STA. WGN.

AR Indicates use as required.
\# Indicates parts not listed in any previous parts book
Numerals in parentheses ( ) refer to notes.
★ Indicates change or addition.

Printed in U.S.A.
January 1972

Right and left part numbers are on same line, first number is right, second number is left.

23-33-0 INSTRUMENT PANEL Cont'd.

23-33-132 COVER Cont'd.

CODE	PART NAME		MODEL CODES	SEE BOTTOM NOTE 21	23	27	29	41	43	45	46	PART NUMBER
		Tan 71	V,L	—	1	—	1	1	—	—	—	4229 GT6
		Black 71	V,L	—	1	—	1	1	—	—	—	4229 FX9
		Gold 71	V,L	—	1	—	1	1	—	—	—	4229 GY6
	w/o Rallye Inst. Pnl.,	Dark Blue 70	R,W-T, W-K,W-L W-H,W-P W-S	1	1	1	—	1	—	1	1	4050 FB7
		Dark Green 70		1	1	1	—	1	—	1	1	4050 FF8
		Burnt Orange 70		1	1	1	—	1	—	1	1	4050 FK5
		Tan 70		1	1	1	—	1	—	1	1	4050 FT4
		Black70		1	1	1	—	1	—	1	1	4050 FX9
	w/Rallye Inst. Pnl.	Dark Blue 70	W-M,W-P,									
		Black 70		1	1	1	1	—	—	—	—	4051 FX9
		Blue 70	P	1	1	1	1	1	1	1	1	4278 FB7
		Dark Green 70		1	1	1	1	1	1	1	1	4278 FF8
		Tan 70		1	1	1	1	1	1	1	1	4278 FT4
		Black 70		1	1	1	1	1	1	1	1	4278 FX9
		Gold 70		1	1	1	1	1	1	1	1	4278 FY4
		Burnt Orange 70		1	1	1	1	1	1	1	1	4278 FK5
		Black 71	P,D	1	1	—	1	1	1	1	1	4278 GX9
		Blue 71		1	1	—	1	1	1	1	1	4278 GB7
		Dark Blue 71		1	1	—	1	1	1	1	1	4278 GB9
		Dark Saddle 71		1	1	—	1	1	1	1	1	4278 GT6
		Gold 71		1	1	—	1	1	1	1	1	4278 GY6
		Russet 71		1	1	—	1	1	1	1	1	4278 GE9
		Gray 71	P,D	1	1	—	1	1	1	1	1	4278 GA6
	w/Fresh Air Door Control	Blue 70	D	—	1	1	—	1	1	1	1	4238 FBB
		Green 70		—	1	1	—	1	1	1	1	4238 FF8
		Burnt Orange 70		—	1	1	—	1	1	1	1	4238 FK5
		Tan 70		—	1	1	—	1	1	1	1	4238 FT4
		Gold 70		—	1	1	—	1	1	1	1	4238 FY4
		Black 70		—	1	1	—	1	1	1	1	4234 EX9
	Upr.	Dark Blue 70	C,Y	—	1	1	—	1	1	1	1	4276 FB7
		Dark Green 70		—	1	1	—	1	1	1	1	4276 EF8
		Teal 70		—	1	1	—	1	1	1	1	4276 FP6
		Oxblood 70		—	1	1	—	1	1	1	1	4276 FR9
		Saddle 70		—	1	1	—	1	1	1	1	4276 FT4
		Black 70		—	1	1	—	1	1	1	1	4276 EX9
		Gold 70		—	1	1	—	1	1	1	1	4276 FY4
		Dark Gold 70		—	1	1	—	1	1	1	1	4276 FY8
		Burgundy 70		—	1	1	—	1	1	1	1	4276 EM9
		Dark Saddle 70		—	1	1	—	1	1	1	1	4276 FT8
	Lwr.	Dark Blue 70	C,Y	—	1	1	—	1	1	1	1	4275 FB7
		Dark Green 70		—	1	1	—	1	1	1	1	4275 FF8
		Burgundy 70		—	1	1	—	1	1	1	1	4275 FM9
		Teal 70		—	1	1	—	1	1	1	1	4275 FP6
		Oxblood 70		—	1	1	—	1	1	1	1	4275 FR9
		Saddle 70		—	1	1	—	1	1	1	1	4275 FT4
		Dark Saddle 70		—	1	1	—	1	1	1	1	4275 FT8
		Black 70		—	1	1	—	1	1	1	1	4275 FX9
		Gold 70		—	1	1	—	1	1	1	1	4275 FY4
		Dark Gold 70		—	1	1	—	1	1	1	1	4275 EY8
		Gray 71	C,Y	—	1	—	—	1	1	1	1	4275 GA6
		Blue 71		—	1	—	—	1	1	1	1	4275 GB7
		Russet 71		—	1	—	—	1	1	1	1	4275 GE9
		Green 71		—	1	—	—	1	1	1	1	4275 GF7
		Tan 71		—	1	—	—	1	1	1	1	4275 GT6

CARLINES J - Challenger, B - Barracuda, V - Valiant, L - Dart, R - Belvedere - Satallite, W - Coronet - Charger, P - Plymouth, D - Dodge, C - Chrysler, Y - Imperial

NUMERALS INDICATE: 21 - 2 DR. SED., 23 - 2 DR. H.T., 27 - CONV. CPE., 29 - FAST BACK, 41 - 4 DR. SED., 43 - 4 DR. H.T., 45 - 6 PASS. STA. WGN., 46 - 9 PASS. STA. WGN.

AR Indicates use as required.
\# Indicates parts not listed in any previous parts book
Numerals in parentheses ( ) refer to notes.
★ Indicates change or addition.

Printed in U.S.A.
January 1972

Right and left part numbers are on same line, first number is right, second number is left.

CODE	PART NAME	MODEL CODES	SEE BOTTOM NOTE 21	23	27	29	41	43	45	46	PART NUMBER
23-33-0	**INSTRUMENT PANEL Cont'd.**										
23-33-132	COVER Cont'd.										
	Black 71		—	1	—	—	1	1	1	1	4275 GX9
	Burgundy 71		—	1	—	—	1	1	1	1	4275 GM9
	Gold 71		—	1	—	—	1	1	1	1	4275 GY6
23-33-135	FINISH PLATE, Instrument Panel										
	Up to Dec. 71	L-H	—	1	—	—	1	—	—	—	2984 466
	After Dec. 71	L-H	—	1	—	—	1	—	—	—	☆ 2985 984
	Upr. Rt., w/Name Plate "GTX" 70	R-S	—	1	—	—	—	—	—	—	2984 671
	Upr. Rt., w/Name Plate "Satellite" 70	R-H	—	1	1	—	1	—	1	1	2984 815
	Upr. Rt., w/Name Plate "Sport Satellite" 70	R-P	—	1	—	—	1	—	1	1	2984 672
	w/o A/Cond., Upr. Lt. 70	R-H,W-H	1	1	1	—	1	—	1	1	2984 681
	w/o A/Cond., Lower Rt. 70	R-H,W-H	1	1	1	—	1	—	1	1	2984 685
	w/o A/Cond., Lower Lt. 70	R-H,W-H	1	1	1	—	1	—	1	1	2984 689
	w/o A/Cond., Center 70	R-H,W-H	1	1	1	—	1	—	1	1	2984 678
	w/A/M Radio and Stereo Player, Center 70	R-H,W-H	1	1	1	—	1	—	1	1	2984 679
	w/Economy Radio and A/M F/M Radio Center 70	R-H,W-H	1	1	1	—	1	—	1	1	2984 677
	Upr. Lt. 70	R-P,R-S	—	1	—	—	1	—	1	1	2984 680
	Upr. Lt. 70	W-P	—	1	1	—	1	—	1	1	2984 680
	w/o Rallye Inst. Panel, Upr. Lt. 70	W-S	—	1	1	—	—	—	—	—	2984 680
	w/o A/Cond., Lwr. Lt. 70	R-P,R-S	—	1	—	—	1	—	1	1	2984 687
	w/o A/Cond., Lwr. Lt. 70	W-P	—	1	1	—	1	—	1	1	2984 687
	w/o Rallye Inst. Panel										
	w/o A/Cond. Lwr. Lt. 70	W-S	—	1	1	—	—	—	—	—	2984 687
	w/o A/Cond. Lwr. Rt. 70	R-P, R-S	—	1	—	—	1	—	—	—	2984 683
	w/o A/Cond. Lwr. Rt. 70	W-P	—	1	1	—	1	—	1	1	2984 683
	w/o A/Cond., w/o Rallye Inst. Panel Lwr. Rt. 70	W-S	—	1	1	—	—	—	—	—	2984 683
	w/A/M Radio with Stereo Player Center 70	R-P,R-S	—	1	—	—	1	—	—	—	2984 676
	w/A/M Radio with Stereo Player Center 70	W-P	—	1	1	—	1	—	1	1	2984 676
	w/A/M Radio with Stereo Player, w/o Rallye Inst. Panel Center 70	W-S	—	1	1	—	—	—	—	—	2984 676
	w/o Radio Center 70	R-P,R-S	—	1	—	—	1	—	—	—	2984 675
	w/o Radio Center 70	W-P	—	1	1	—	1	—	1	1	2984 675
	w/o Radio, w/o Rallye Inst. Panel Center 70	W-S	—	1	1	—	—	—	—	—	2984 675
	w/Economy and A/M F/M Radio Center 70	R-P,R-S	—	1	—	—	1	—	—	—	2984 674
	w/Economy and A/M F/M Radio Center 70	W-P	—	1	1	—	1	—	1	1	2984 674
	w/Economy and A/M F/M Radio										
	w/o Rallye Inst. Panel Center 70	W-S	—	1	1	—	—	—	—	—	2984 674
	w/o A/Cond. Lwr. Rt. 70	W-P,W-S	—	—	—	1	—	—	—	—	2927 870
	w/o A/Cond. Lwr. Rt. 70	W-M	1	1	—	—	—	—	—	—	2927 870
	w/o A/Cond. w/Rallye Inst. Panel Lower Rt.70	W-S	—	1	1	—	—	—	—	—	2927 870
	w/o A/Cond. Lwr. Lt. 70	W-P,W-S	—	—	—	1	—	—	—	—	2927 871
	w/o A/Cond. Lwr. Lt. 70	W-M	1	1	—	—	—	—	—	—	2927 871
	w/o A/Cond., w/Rallye Inst. Panel Lwr. Lt. 70	W-S	—	1	1	—	—	—	—	—	2927 871
	w/o Radio Center 70	W-P,W-S	—	—	—	1	—	—	—	—	2927 928
	w/o Radio Center 70	W-M	1	1	—	—	—	—	—	—	2927 928
	w/o Radio, w/Rallye Inst. Pnl., Center 70	W-S	—	1	1	—	—	—	—	—	2927 928
	w/or w/o Radio Center 70	W-P,W-S	—	—	—	1	—	—	—	—	2984 697

CARLINES: J - Challenger, B - Barracuda, V - Valiant, L - Dart, R - Belvedere - Satallite, W - Coronet - Charger, P - Plymouth, D - Dodge, C - Chrysler, Y - Imperial

NUMERALS INDICATE: 21 - 2 DR. SED., 23 - 2 DR. H.T., 27 - CONV. CPE., 29 - FAST BACK, 41 - 4 DR. SED., 43 - 4 DR. H.T., 45 - 6 PASS. STA. WGN., 46 - 9 PASS. STA. WGN.

AR Indicates use as required.
\# Indicates parts not listed in any previous parts book
Numerals in parentheses ( ) refer to notes.
★ Indicates change or addition.

Printed in U.S.A.
January 1972

Right and left part numbers are on same line, first number is right, second number is left.

23-33-0 INSTRUMENT PANEL Cont'd.

CODE	PART NAME		MODEL CODES	SEE BOTTOM NOTE 21	23	27	29	41	43	45	46	PART NUMBER
23-33-135	FINISH PLATE Cont'd.											
	w/Economy and A/M F/M Radio Center	70	W-M	1	1	—	—	—	—	—	—	2984 697
	w/Economy and A/M F/M Radio w/Rallye Inst. Pnl. Center	70	W-S	—	1	1	—	—	—	—	—	2984 697
	Upr. Rt.	70	W-P,W-S	—	—	—	1	—	—	—	—	2984 772
	Upr. Rt.	70	W-M	1	1	—	—	—	—	—	—	2984 772
	w/Rallye Inst. Pnl. Upr. Rt.	70	W-S	—	1	1	—	—	—	—	—	2984 772
	w/Nameplate "Coronet 440" Upr. Rt.	70	W-H	1	1	—	—	1	—	1	1	2984 673
	w/Nameplate "Coronet 500" Upr. Rt.	70	W-P	—	1	1	—	1	—	1	1	2984 670
	w/Nameplate "R/T", w/o Rallye Inst. Pnl. Upr. Rt.	70	W-S	—	1	1	—	—	—	—	—	2984 669
	Center, w/o Radio Dark Blue	70	R-K,R-L, R-M,R-T, W-K,W-L, W-T	1	1	1	—	1	—	1	—	4521 FB7
	Dark Green	70		1	1	1	—	1	—	1	—	4521 FF8
	Burnt Orange	70		1	1	1	—	1	—	1	—	4521 FK5
	Tan	70		1	1	1	—	1	—	1	—	4521 FT4
	Black	70		1	1	1	—	1	—	1	—	4521 FX9
	Gold	70		1	1	1	—	1	—	1	—	4521 FY4
	w/o Heater or A/Cond.	71	R-K, R-T, R-L, W-K, W-T, W-L	—	—	—	—	1	—	1	—	2985 986
	w/o Heater or A/Cond., w/Coupe Pkg.	71	R-H, W-H	—	1	—	—	—	—	—	—	2985 986
	w/o Heater or A/Cond. w/o Coupe Pkg.	71	R-H, W-H	—	1	—	—	—	—	—	—	2985 985
	w/o Heater or A/Cond.	71	R-M, R-P R-H, R-S W-M, W-P, W-H, W-S	—	1	—	1	1	—	1	1	2985 985
	End Burnt Orange	70	D	—	1	1	—	1	1	1	1	4110-1 FKX
	Black	70		—	1	1	—	1	1	1	1	4110-1 FX9
	Switch Mtg. Bezel	70	D-M,D-H,D-P	—	1	—	—	1	1	—	—	2947 756
	Switch Mtg. Bezel, w/Top Lift Switch	70	D-M,D-H,D-P	—	—	1	—	—	—	—	—	2947 757
	Switch Mtg. Bezel, w/Tailgate Window Lift Switch	70	D-M,D-H	—	—	—	—	—	—	1	1	2947 758
	Switch Mtg. Bezel w/Rr. Window Defogger Switch	70	D-M,D-H,D-P	—	1	—	—	1	1	—	—	2947 770
	w/o A/Cond., Blue	70	C-M	—	1	1	—	—	1	—	—	4119 FB7
	Green	70		1	1	—	—	1	—	—	—	4119 FF8
	Dark Gold	70		—	1	1	—	—	1	—	—	4119 FY8
	Red	70		—	1	1	—	—	1	—	—	4119 FR9
	Tan	70		—	1	1	—	—	1	—	—	4119 FT4
	Black	70		—	1	1	—	—	1	—	—	4119 FX9
	Medium Gold	70		—	1	1	—	—	1	—	—	4119 FY4
	w/A/Cond.	70	C-E,C-L	—	1	1	—	1	1	—	—	2984 373
	w/o A/Cond.	70	C-E,C-L	—	1	1	—	1	1	—	—	2984 372
	w/A/Cond. Dark Blue	70	C-M	—	1	1	—	—	1	—	—	4118 FB7
	Dark Green	70		—	1	1	—	—	1	—	—	4118 FF8
	Dark Gold	70		—	1	1	—	—	1	—	—	4118 FY8
	Oxblood	70		—	1	1	—	—	1	—	—	4118 FR9
	Saddle	70		—	1	1	—	—	1	—	—	4118 FT4
	Black	70		—	1	1	—	—	1	—	—	4118 FX9
	Gold	70		—	1	1	—	—	1	—	—	4118 FY4
	w/Insert, Spring Special w/o A/Cond.	70	C-E	—	1	—	—	—	1	—	—	2985 754
	w/INSERT, w/A/Cond.	70	C-H,C-P	—	1	—	—	1	1	1	1	2984 378

CARLINES J - Challenger, B - Barracuda, V - Valiant, L - Dart, R - Belvedere - Satallite, W - Coronet - Charger, P - Plymouth, D - Dodge, C - Chrysler, Y - Imperial

NUMERALS INDICATE: 21 - 2 DR. SED., 23 - 2 DR. H.T., 27 - CONV. CPE., 29 - FAST BACK, 41 - 4 DR. SED., 43 - 4 DR. H.T., 45 - 6 PASS. STA. WGN., 46 - 9 PASS. STA. WGN.

AR Indicates use as required.
\# Indicates parts not listed in any previous parts book
Numerals in parentheses ( ) refer to notes.
★ Indicates change or addition.

Printed in U.S.A. January 1972

Right and left part numbers are on same line, first number is right, second number is left.

CODE	PART NAME		MODEL CODES	SEE BOTTOM NOTE 21	23	27	29	41	43	45	46	PART NUMBER
23-33-0	**INSTRUMENT PANEL Cont'd.**											
23-33-135	FINISH PLATE Cont'd.											
	w/INSERT, w/o A/Cond.	70	C-H,C-P	—	1	—	—	1	1	1	1	2984 379
	TRIM PLATE, Instrument Panel											
	Switch Mtg. Bezel, w/o Rallye Inst. Pnl.	70	B-P	—	1	1	—	—	—	—	—	2947 785
	Switch Mtg. Bezel, w/o Rallye Inst. Pnl.	71	B,J	—	1	1	—	—	—	—	—	3488 408
	Speedometer and Inst. Cluster Wood Grained	70	W-P,W-S	—	—	—	1	—	—	—	—	2984 776
	w/Stereo	70	P	1	1	1	1	1	1	1	1	2884 488
	w/A/M Radio and Stereo Tape Player	70	D	—	1	1	—	1	1	1	1	2884 694
	BEZEL, Instrument Panel Trim											
	w/o Heater or A/Cond.		V,L	—	1	—	1	1	—	—	—	2884 891
	w/o Heater or A/Cond., w/o Wood Trim	71	V	—	—	—	—	1	—	—	—	2884 891
			L-L	—	—	—	1	—	—	—	—	2884 891
	w/Radio and Heater Openings	70	V	—	—	—	1	1	—	—	—	2884 886
	w/Radio Openings		V,L	—	1	—	1	1	—	—	—	2884 888
	w/Radio Openings, w/Heater, w/Wood Trim	71	V	—	—	—	—	1	—	—	—	2884 888
			L-L	—	—	—	1	—	—	—	—	2884 888
	After Feb. 1971	71	V,L	—	1	—	1	1	—	—	—	= 3501 193
	Radio Control Opening Cover		V,L	—	1	—	1	1	—	—	—	2884 784
	Control Opening Cover, w/Radio, w/Wood Trim	71	V	—	1	—	—	1	—	—	—	2884 784
			L-L	—	—	—	1	—	—	—	—	2884 784
	w/Heater Openings		V,L	—	1	—	1	1	—	—	—	2884 885
	w/Heater Opening, w/Wood Trim, w/o Radio	71	V	—	—	—	—	1	—	—	—	2884 885
			L-L	—	—	—	1	—	—	—	—	2884 885
	w/A/Cond. and Radio Openings		V,L	—	—	—	1	1	—	—	—	2884 887
	After Feb. 1971	71	V,L	—	1	—	1	1	—	—	—	= 3501 187
	w/A/Cond. and Radio Openings, w/Wood Trim	71	V	—	—	—	—	1	—	—	—	2884 887
			L-L	—	—	—	1	—	—	—	—	2884 887
	After Feb. 1971	71	V,L	—	1	—	1	1	—	—	—	= 3501 191
	w/Heater Openings and Radio		L-L	—	1	—	—	1	—	—	—	2884 896
	w/o Heater, W/o Radio		L-H	—	1	—	—	1	—	—	—	2884 892
	After Dec. 1971	71	L-H	—	1	—	—	1	—	—	—	= 3501 195
	W/Heater, & Radio	70	L-H	—	1	—	—	1	—	—	—	2884 893
	w/Heater & Radio		L-L	—	1	—	—	1	—	—	—	2884 897
	w/A/Cond. and Radio Openings		L-H	—	1	—	—	1	—	—	—	2884 895
	After Dec. 1971	71	L-H	—	1	—	—	1	—	—	—	= 3501 199
	w/Radio Openings		L-H	—	1	—	—	1	—	—	—	2884 894
	After Dec. 1971	71	L-H	—	1	—	—	1	—	—	—	= 3501 201
	w/A/Cond. and Radio Openings		L-L	—	1	—	—	1	—	—	—	2884 899
	w/Radio Openings		L-L	—	1	—	—	1	—	—	—	2884 898
	Radio Control Opening Cover		L-H	—	1	—	—	1	—	—	—	2884 794
	w/o Radio Openings		B,J-S	—	1	1	1	—	—	—	—	2884 877
	w/o Radio Openings, w/Rallye Inst. Panel, w/Wood Trim	71	J-H	—	1	1	—	—	—	—	—	2884 877
	w/o Radio Openings, w/o Rallye Inst. Panel	70	J	—	1	1	1	—	—	—	—	2884 879
	w/A/M F/M Multiplex Radio and Heater and A/Cond. Openings	70	P	1	1	1	1	1	1	1	1	2884 841
	w/Tape Radio and Heater and A/Cond. Openings	70	P	1	1	1	1	1	1	1	1	2884 842
	w/Heater, A/Cond. or Auto. Temp. Control Openings	70	P	1	1	1	1	1	1	1	1	2884 840

CARLINES: J - Challenger, B - Barracuda, V - Valiant, L - Dart, R - Belvedere - Satallite, W - Coronet - Charger, P - Plymouth, D - Dodge, C - Chrysler, Y - Imperial

NUMERALS INDICATE: 21 - 2 DR. SED., 23 - 2 DR. H.T., 27 - CONV. CPE., 29 - FAST BACK, 41 - 4 DR. SED., 43 - 4 DR. H.T., 45 - 6 PASS. STA. WGN., 46 - 9 PASS. STA. WGN.

AR Indicates use as required.
\# Indicates parts not listed in any previous parts book
Numerals in parentheses ( ) refer to notes.
★ Indicates change or addition.

Printed in U.S.A.
January 1972

Right and left part numbers are on same line, first number is right, second number is left.

23-33-0 INSTRUMENT PANEL Cont'd.

CODE	PART NAME	MODEL CODES	SEE BOTTOM NOTE 21	23	27	29	41	43	45	46	PART NUMBER
23-33-135	FINISH PLATE Cont'd.										
	w/Heater and A/Cond. Openings w/o Radio Wood Grain	P,D	—	1	—	1	1	1	1	1	3501 003
	Black 71	P,D	—	1	—	1	1	1	1	1	# 3501 002
	w/Heater and A/Cond. Openings W/Radio Wood Grain 71	P,D	—	1	—	1	1	1	1	1	3501 005
	Black 71	P,D	—	1	—	1	1	1	1	1	# 3501 004
	w/A/M F/M Multiplex Radio and Rr. Speaker 70	D-K,D-T, D-L,D-M	—	1	1	—	1	1	1	1	2884 803
	w/A/M Radio w/Stereo Player 70	D-K,D-T,D-L, D-M,D-H, D-P	—	1	—	—	1	1	1	1	2884 694
	w/o Radio 70	D	—	1	1	—	1	1	1	1	2884 112
	w/Radio and Tape Player, W/Rr. Seat Speaker 70	D	—	1	1	—	1	1	—	—	2884 425
	w/Radio & Tape Player W/O RR. Seat Speaker 70	D	—	1	1	—	1	1	1	1	2884 827
	w/AM Radio, W/AM FM Multiplex & Rr. Seat Speaker 70	D	—	1	1	—	1	1	—	—	2884 803
	w/Radio, W/Out RR Seat Speaker 70	D	—	1	1	—	1	1	1	1	2884 835
	w/A/M/F/M Multiplex Radio 70	D-K,D-T, D-L,D-M	—	1	1	—	1	1	1	1	2884 832
	w/A/M Radio and Rr. Speaker 70	D-K,D-T, D-L,D-M	—	1	1	—	1	1	1	1	2884 803
	w/Radio 70	D-K,D-T D-L,D-M, D-H,D-P	—	1	1	—	1	1	1	1	2884 801
	Inst. Panel Bezel 70	C	—	1	1	—	1	1	1	1	2984 914
	70	Y	—	1	—	—	—	1	—	—	2927 155
	Upr. and Lwr. 71	Y	—	1	—	—	—	1	—	—	2985 793
	COVER, Inst. Panel Trim Bezel w/o Heater or A/Cond. or Auto. Temp. Control	P	—	1	—	1	1	1	1	1	3501 010
	APPLIQUE, Instrument Panel Finish Plate										
	Wood Grain, Upr. Rt. 70	R-S,W-P,W-S	—	1	1	1	—	—	—	—	2984 437
	Wood Grain w/o A/Cond., Lwr. Rt. 70	R-S,W-P,W-S	—	1	1	1	—	—	—	—	2984 438
	Wood Grain w/o A/Cond., Lwr. Lt. 70	R-S,W-P,W-S	—	1	1	1	—	—	—	—	2984 433
	Wood Grain, w/A/M Radio w/Stereo Player Center 70	R-S,W-P,W-S	—	1	1	1	—	—	—	—	2984 436
	Wood Grain, w/Radio Center 70	R-S,W-P,W-S	—	1	1	1	—	—	—	—	2984 435
	Wood Grain, w/Economy, Deluxe and A/M F/M Radio Center 70	R-S,W-P,W-S	—	1	1	1	—	—	—	—	2984 434
	OVERLAY, Inst. Panel Trim Bezel w/o Radio 70	D-K,D-T, D-L,D-M, D-H,D-P	—	1	1	—	1	1	1	1	2884 826
	w/A/M F/M Multiplex Radio 70	D-K,D-T, D-L,D-M, D-H,D-P	—	1	1	—	1	1	1	1	2884 832
	w/A/M Radio, w/stereo Player 70	D-T,D-L, D-M,D-K, D-H,D-P	—	1	1	—	1	1	1	1	2884 828
	w/A/M F/M Multiplex Radio w/Rr. Seat Speaker 70	D-K,D-T, D-L,D-M, D-H, D-P	—	1	1	—	1	1	1	1	2884 834

CARLINES J - Challenger, B - Barracuda, V - Valiant, L - Dart, R - Belvedere - Satallite, W - Coronet - Charger, P - Plymouth, D - Dodge, C - Chrysler, Y - Imperial

NUMERALS INDICATE: 21 - 2 DR. SED., 23 - 2 DR. H.T., 27 - CONV. CPE., 29 - FAST BACK, 41 - 4 DR. SED., 43 - 4 DR. H.T., 45 - 6 PASS. STA. WGN., 46 - 9 PASS. STA. WGN.

AR Indicates use as required.
# Indicates parts not listed in any previous parts book
Numerals in parentheses ( ) refer to notes.
★ Indicates change or addition.

Printed in U.S.A. January 1972

Right and left part numbers are on same line, first number is right, second number is left.

CODE	PART NAME		MODEL CODES	SEE BOTTOM NOTE 21	23	27	29	41	43	45	46	PART NUMBER
23-33-0	**INSTRUMENT PANEL Cont'd.**											
23-33-135	FINISH PLATE Cont'd.											
	w/A/M Radio w/Stereo Player w/Rr. Seat Speaker	70	D-K,D-L, D-M,D-T, D-H,D-P	—	1	1	—	1	1	1	1	2884 830
	w/A/M Radio	70	D-L,D-M,D-K, D-H,D-P,D-T	—	1	1	—	1	1	1	1	2884 836
	w/A M Radio and Rr. Speaker	70	D-L,D-M,D-T, D-H,D-P,D-K	—	1	1	—	1	1	1	1	2884 838
23-33-139	CLIP, Dummy Cover to Trim Bezel Mounting w/o Heater		P,D	4	4	—	4	4	4	4	4	2884 484
23-33-141	BRACKET, Inst. Panel Bezel to Trim Pad Retainer Att.	71	Y	—	1	—	—	—	1	—	—	2985 109
23-33-149	PLUG, Glove Box Switch Opening		C-E,C-L,C-M	—	1	1	—	1	1	—	—	2947 226
	PLUG, Inst. Panel Deck Lid Switch	70	Y	—	1	—	—	—	1	—	—	2984 546
	PLUG, Inst. Panel Deck Lid Switch	71	Y	—	1	—	—	—	1	—	—	2984 546
23-33-216	COVER, Inst. Panel Map Light Opening	70	R,W	1	1	1	1	1	—	1	1	2771 821
		70	C	—	1	—	—	1	1	—	—	2947 114
		71	C,Y	—	1	—	1	1	1	1	1	3488 128
	Map w/Rr. Speaker Opening	71	C-E,C-L,C-S	—	1	—	—	1	1	—	—	3488 135
23-34-0	**BODY PANELS**											
23-34-5	PANEL, Quarter Panel Space Tire Housing	Lower 70	R,W	—	—	—	—	—	—	1	1	2811 984
		Lwr. 71	R	—	—	—	—	—	—	1	1	3439 570
		Lwr. 71	W	—	—	—	—	—	—	1	1	3499 380
	PANEL, Quarter Inside Wheel Well	Rt. 70	R,W	—	—	—	—	—	—	1	1	2811 750
	PANEL, Rr. Floor Pan Spare Tire Housing	Inner 70	R,W	—	—	—	—	—	—	1	1	2811 985
	PANEL, Quarter Wheelhouse Spare Tire Housing	Frt.	P,D,C	—	—	—	—	—	—	1	1	2893 992
		Inner	P,D,C	—	—	—	—	—	—	1	1	2893 991
		Lower	P,D,C	—	—	—	—	—	—	1	1	2893 990
		Inner 71	R,W	—	—	—	—	—	—	1	1	3440 129
	PANEL, Quarter Panel Lock Pillar to Wheelhouse	Rt. 71	R,W	—	—	—	—	—	—	1	1	3440 866
23-34-10	COVER, Rr. Floor Pan Cover Panel Latch Opening	Prime	R,W	—	—	—	—	—	—	1	—	2664 625
23-34-13	BRACKET and NUT, Wheelhouse to Fuel Tank Stone Deflector	Upr.	P,D,C	—	—	—	—	—	—	1	1	2526 829
23-34-15	BRACKET, Wheelhouse Inner Panel Fuel Tank Rr. Strap Att. Outside	Frt. Rr.	P,D,C	—	—	—	—	—	—	2	2	2860 784
		Frt. 71	R,W	—	—	—	—	—	—	1	1	3499 455
		Rr. 71	R,W	—	—	—	—	—	—	1	1	3499 457
23-34-16	PANEL, Rr. Floor Pan Tailgate Opening Sill	70	R,W	—	—	—	—	—	—	1	—	2860 150
	Up To Dec. 1970	Upr. 71	R,W	—	—	—	—	—	—	1	1	3499 701
	After Dec. 1970	Upr. 71	R,W	—	—	—	—	—	—	1	1	3500 938
		71	R,W	—	—	—	—	—	—	1	1	3440 567
			P,D,C	—	—	—	—	—	—	1	1	2894 242

CARLINES	J - Challenger B - Barracuda	V - Valiant L - Dart	R - Belvedere - Satallite W - Coronet - Charger	P - Plymouth D - Dodge	C - Chrysler Y - Imperial
NUMERALS INDICATE:	21 - 2 DR. SED. 23 - 2 DR. H.T.	27 - CONV. CPE. 29 - FAST BACK	41 - 4 DR. SED. 43 - 4 DR. H.T.	45 - 6 PASS. STA. WGN. 46 - 9 PASS. STA. WGN.	

AR Indicates use as required.
\# Indicates parts not listed in any previous parts book
Numerals in parentheses ( ) refer to notes.
★ Indicates change or addition.

Printed in U.S.A.
January 1972

Right and left part numbers are on same line, first number is right, second number is left.

23-34-0 BODY PANELS Cont'd.

CODE	PART NAME		MODEL CODES	SEE BOTTOM NOTE 21	23	27	29	41	43	45	46	PART NUMBER
23-34-16	PANEL Cont'd.											
	EXTENSION, Tailgate Opening Sill											
		70	R,W	—	—	—	—	—	—	1	1	2860 818-9
			P,D,C	—	—	—	—	—	—	1	1	2894 316-7
	To Pillar Lt.	71	R,W	—	—	—	—	—	—	1	1	3440 139
	To Wheelhouse Lt.	71	R,W	—	—	—	—	—	—	1	1	3440 931
23-34-17	BRACE, Tailgate Opening Sill at Lock Opening	70	R,W	—	—	—	—	—	—	1	1	2573 976
		71	R,W	—	—	—	—	—	—	1	1	3499 690
		71	P,D,C	—	—	—	—	—	—	1	1	3500 565
	BRACE, Tailgate Opening Sill Outer		P,D,C	—	—	—	—	—	—	2	2	2894 398
	BRACE, Tailgate Opening Sill to Rr. Floor Pan at Lock Opening	70	P,D,C	—	—	—	—	—	—	1	1	2893 880
	SUPPORT, Quarter Panel Tailgate Pillar to Sill Hinge Pivot to Rr. Crossmember Extension	Lt.	P,D,C	—	—	—	—	—	—	1	1	2894 495
	SUPPORT, Rr. Sill Tailgate Opening to Rr. Crossmember			—	—	—	—	—	—	2	2	2860 194
	SUPPORT, Rr. Floor Pan Tailgate Opening Sill Panel		P,D,C	—	—	—	—	—	—	1	1	2894 458-9
		71	R,W	—	—	—	—	—	—	1	1	3499 040-1
	SUPPORT and REINF., Quarter Pillar to Sill Hinge Pivot	71	P,D,C	—	—	—	—	—	—	1	1	2934 953
	SUPPORT, Tailgate Opening Sill Panel to Wheelhouse Extension	Lt. 71	R,W	—	—	—	—	—	—	1	1	3499 905
	REINFORCEMENT, Rr. Floor Pan Tailgate Opening Sill to Quarter Panel	70	R,W	—	—	—	—	—	—	1	1	2861 570
	REINFORCEMENT, Quarter Panel Spare Tire Inside Panel Anchor	71	R,W	—	—	—	—	—	—	1	1	3500 324
	GUSSET, Tailgate Opening Sill Lower to Rr. Crossmember	71	R,W	—	—	—	—	—	—	2	2	3499 042
23-34-19	FILLER, Rr. Floor Pan Tailgate Opening Sill Panel		P,D,C	—	—	—	—	—	—	—	1	3499 170-1
23-34-20	DEFLECTOR, Quarter Inside Panel Water		B,J	—	—	1	—	—	—	—	—	3505 350-1
		71	V,L	—	—	—	1	—	—	—	—	≠3615 986-7
			P,D,C	—	—	1	—	—	—	—	—	2965 544-5
23-34-21	PANEL, Wheelhouse Cap		B,J	—	—	1	—	—	—	—	—	2964 230-1
		70	R,W	—	—	1	—	—	—	—	—	2782 374-5
		70	P,D,C	—	—	1	—	—	—	—	—	2901 106-7
23-34-22	SUPPORT, Wheelhouse to Quarter Panel		V,L	—	—	—	1	—	—	—	—	2965 630-1
			V	—	—	—	—	1	—	—	—	2604 328-9
			V,L	—	1	—	—	—	—	—	—	2782 160-1
			L	—	—	—	—	1	—	—	—	2603 652-3
			J	—	1	—	1	—	—	—	—	2963 702-3
			B	—	1	—	—	—	—	—	—	2963 712-3
	SUPPORT, Quarter Outside Panel to Wheelhouse	70	R,W	—	—	—	—	1	—	—	—	2838 476-7
	SUPPORT, Wheelhouse to Quarter Deck Drain Trough Brace	70	W	—	—	—	1	—	—	—	—	2840 366-7
	SUPPORT, Wheelhouse to Quarter Inside Lower Panel		C,Y	—	1	—	—	—	—	—	—	2902 486-7
			P,D	—	1	—	—	—	—	—	—	2901 412-3
	SUPPORT, Quarter Panel Wheelhouse Outer to Roof Rail	70	P,D,C	—	—	—	—	—	—	1	1	2894 492-3
	SUPPORT, Wheelhouse to Rr. Window Opening Upper Frame	71	R,W	—	1	—	1	—	—	—	—	3504 914-5

CARLINES	J - Challenger B - Barracuda	V - Valiant L - Dart	R - Belvedere - Satallite W - Coronet - Charger	P - Plymouth D - Dodge	C - Chrysler Y - Imperial
NUMERALS INDICATE:	21 - 2 DR. SED. 23 - 2 DR. H.T.	27 - CONV. CPE. 29 - FAST BACK	41 - 4 DR. SED. 43 - 4 DR. H.T.	45 - 6 PASS. STA. WGN. 46 - 9 PASS. STA. WGN.	

AR Indicates use as required.
\# Indicates parts not listed in any previous parts book

Numerals in parentheses ( ) refer to notes.
★ Indicates change or addition.

Printed in U.S.A.
January 1972

Right and left part numbers are on same line, first number is right, second number is left.

23-34-0 BODY PANELS Cont'd.

CODE	PART NAME		MODEL CODES	SEE BOTTOM NOTE 21	23	27	29	41	43	45	46	PART NUMBER
23-34-22	SUPPORT Cont'd.											
	SUPPORT, Quarter Panel Wheelhouse Outer to Roof Rail	71	P,D,C	—	—	—	—	—	—	1	1	3499 464-5
23-34-26	REINFORCEMENT, Wheelhouse Cap to Belt Bar		J	—	—	1	—	—	—	—	—	2964 222-3
23-34-27	PANEL, Wheelhouse	Inner	V	—	—	—	1	—	—	—	—	2603 646-7
		Outer	V,L	—	—	—	1	—	—	—	—	3444 208-9
		Inner	V	—	1	—	—	1	—	—	—	2603 646-7
		Outer	V	—	1	—	—	1	—	—	—	2604 226-7
		Inner	L	—	1	—	1	1	—	—	—	2603 646-7
		Outer	L	—	1	—	—	1	—	—	—	2603 644-5
		Inner	B	—	—	1	—	—	—	—	—	2964 214-5
		Outer	B	—	—	1	—	—	—	—	—	2964 210-1
		Inner	B	—	1	—	—	—	—	—	—	2963 162-3
		Outer	B	—	1	—	—	—	—	—	—	2963 158-9
		Inner	J	—	—	1	—	—	—	—	—	2963 162-3
		Outer	J	—	—	1	—	—	—	—	—	2964 212-3
		Inner	J	—	1	—	1	—	—	—	—	2963 162-3
		Outer	J	—	1	—	1	—	—	—	—	2963 160-1
		Inner 70	R,W	—	—	—	—	—	—	1	1	2860 430-1
		Outer 70	R,W	—	—	—	—	—	—	1	1	2811 498-9
		Inner 70	R,W	—	—	1	—	—	—	—	—	2841 908-9
		Outer 70	R	—	—	1	—	—	—	—	—	2838 216-7
		Outer 70	W	—	—	1	—	—	—	—	—	2838 218-9
		Inner 70	R,W	1	1	—	1	1	—	—	—	2841 906-7
		Outer 70	R	1	1	—	—	1	—	—	—	2811 498-9
		Outer 70	W	1	1	—	1	—	—	—	—	2838 870-1
		Outer 70	W	—	—	—	—	1	—	—	—	2838 330-1
		Inner 71	R,W	—	—	—	—	—	—	1	1	3439 534-5
		Outer 71	R	—	—	—	—	—	—	1	1	3439 528-9
		Outer 71	W	—	—	—	—	—	—	1	1	3439 530-1
		Inner 71	R,W	—	1	—	1	1	—	—	—	3445 058-9
		Outer 71	R	—	1	—	1	1	—	—	—	3445 602-3
		Outer 71	W	—	1	—	1	1	—	—	—	3445 604-5
		Inner 70	P,D,C	—	—	1	—	—	—	—	—	2901 100-1
		Outer 70	P	—	—	1	—	—	—	—	—	3504 372-3
		Outer 70	D	—	—	1	—	—	—	—	—	3504 374-5
		Outer 70	C	—	—	1	—	—	—	—	—	3504 376-7
		Inner	P,D,C	—	—	—	—	—	—	1	1	2893 250-1
		Outer	P	—	—	—	—	—	—	1	1	2893 252-3
		Outer	D	—	—	—	—	—	—	1	1	2893 378-9
		Outer	C	—	—	—	—	—	—	1	1	2895 946-7
		Inner	P,D,C,Y	1	1	—	1	1	1	—	—	3445 462-3
		Outer	P	1	1	—	1	1	1	—	—	3504 578-9
		Outer	D	—	1	—	—	1	1	—	—	3445 466-7
		Outer 70	C,Y	—	1	—	—	1	1	—	—	3504 580-1
		Outer 71	C,Y	—	1	—	—	1	1	—	—	3570 968-9
23-34-29	PANEL, Quarter Wheelhouse Inner Rear Extension	Lt.	P,D,C	—	—	—	—	—	—	1	1	2894 777
23-34-36	REINFORCEMENT, Wheelhouse to Belt Bar	70	R,W	—	—	1	—	—	—	—	—	2838 224-5
23-34-38	PAD, Tailgate Opening Sill Step	70	R,W	—	—	—	—	—	—	—	1	2789 728
		71	R,W	—	—	—	—	—	—	—	1	3416 654
	PLATE, Tailgate Opening Sill Step		P,D,C	—	—	—	—	—	—	1	1	2877 937
23-34-40	PLUG, Quarter Inside Wheel Well Panel	70	R,W	—	—	—	—	—	—	1	1	2094 985
	PLUG, Quarter Outside Panel End Reinf.	71	P,D	2	2	—	2	2	2	—	—	# 3569 435

CARLINES J - Challenger, B - Barracuda, V - Valiant, L - Dart, R - Belvedere - Satallite, W - Coronet - Charger, P - Plymouth, D - Dodge, C - Chrysler, Y - Imperial

NUMERALS INDICATE: 21 - 2 DR. SED., 23 - 2 DR. H.T., 27 - CONV. CPE., 29 - FAST BACK, 41 - 4 DR. SED., 43 - 4 DR. H.T., 45 - 6 PASS. STA. WGN., 46 - 9 PASS. STA. WGN.

AR Indicates use as required.
# Indicates parts not listed in any previous parts book
Numerals in parentheses ( ) refer to notes.
★ Indicates change or addition.

Printed in U.S.A.
January 1972

Right and left part numbers are on same line, first number is right, second number is left.

CODE	PART NAME	MODEL CODES	SEE BOTTOM NOTE 21	23	27	29	41	43	45	46	PART NUMBER
23-34-0	**BODY PANELS Cont'd.**										
23-34-40	PLUG Cont'd.										
	PLUG, Wheelhouse Quarter Panel Rt. Side Only 70	P,D,C	—	—	—	—	—	—	1	1	2094 985
	PLUG, Rr. Floor Pan Tailgate Opening Sill Panel Access Slot Rt. Side 70	P,D,C	—	—	—	—	—	—	1	1	2895 498
23-34-52	BUMPER, Tailgate Opening Sill Panel 70	P,D,C	—	—	—	—	—	—	4	—	1943 547
23-34-80	PANEL, Cowl Top and Dash w/or w/o A/Cond.	B,J	—	1	1	—	—	—	—	—	2934 786
	w/A/Cond. 71	R,W	—	1	—	1	1	—	1	1	3482 087
	w/o A/Cond. 71	R,W	—	1	—	1	1	—	1	1	3482 086
	PANEL, Cowl Top	B,J	—	1	1	1	—	—	—	—	2895 502
	CHAMBER, Cowl Top and Plenum w/A/Cond. 70	P,D,C,Y	1	1	1	1	1	1	1	1	3417 931
	w/A/Cond. 71	P,D,C,Y	1	1	—	1	1	1	1	1	3482 671
	w/o A/Cond.	P,D,C,Y	1	1	1	1	1	1	1	1	3417 932
		V,L	—	1	—	1	1	—	—	—	2859 990
	70	R,W	1	1	1	1	1	—	1	1	2934 364
	PANEL, Cowl Side	V,L	—	—	—	1	—	—	—	—	3417 600-1
		V,L	—	—	—	—	1	—	—	—	3417 946-7
		V,L	—	1	—	—	—	—	—	—	3417 948-9
		B,J	—	—	1	—	—	—	—	—	2934 756-7
	70	B,J	—	1	—	1	—	—	—	—	2934 754-5
	Approx. After June 1, 70	B,J	—	1	—	1	—	—	—	—	3482 990-1
	70	R,W	—	—	1	—	—	—	—	—	3417 954-5
	70	R,W	1	1	—	1	—	—	—	—	3417 952-3
	70	R,W	—	—	—	—	1	—	1	1	3417 950-1
	71	R,W	—	1	—	1	—	—	—	—	3482 102-3
	71	R,W	—	—	—	—	1	—	1	1	3482 100-1
	70	P,D,C	—	—	1	—	—	—	—	—	2859 924-5
	70	P,D,C	—	1	—	—	—	—	—	—	2859 922-3
	70	P,D,C	1	—	—	1	—	1	—	—	2859 920-1
	71	P,D,C,Y	1	1	—	—	—	—	—	—	2859 922-3
	71	P,D,C,Y	—	—	—	1	—	1	—	—	2859 920-1
		P,D,C	—	—	—	—	1	—	1	1	2859 626-7
	Outer	P,D,C,Y	1	1	1	1	1	1	1	1	2893 064-5
23-34-82	BRACKET and NUT, Cowl Side Inner	P,D,C,Y	1	1	1	1	1	1	1	1	2894 388
23-34-83	PLATE, Cowl Plenum Panel Bracket to Brake Pedal Bracket 70										
23-34-84	PLATE, Cowl Side Outer to Inner Panel Front	P,D,C,Y	1	1	1	1	1	1	1	1	2893 068-9
23-34-87	REINFORCEMENT, Cowl Plenum Chamber to Strg. Col. Supt. 70	R,W	1	1	1	1	1	—	1	1	2860 976
23-34-88	STRUT, Cowl Side to Strg. Column Support Reinforcement	R,W	1	1	1	—	1	—	1	1	3440 928
	STRUT, Dash Panel Strg. Col. Support to Brake Pedal Bracket Rt. 71	R,W	—	1	—	1	1	—	1	1	3499 951
	Lt. 71	R,W	—	1	—	1	1	—	1	1	3500 675
	STRUT, Dash Panel Strg. Col. Support to Cowl Side Panel Lt. 71	R,W	—	1	—	1	1	—	1	1	3500 676
	STRUT, Cowl Side Panel to Dash Panel Support Lt. 71	R,W	—	1	—	1	—	—	—	—	3500 799
23-34-89	PANEL, Cowl Side Inner w/NUT	P,D,C	1	1	—	1	1	1	1	1	2894 740-1
	w/NUT	P,D,C	—	—	1	—	—	—	—	—	2894 772-3
	w/NUT	Y	—	1	—	—	—	1	—	—	2894 772-3
	EXTENSION, Cowl Side Inner Panel to Outer Sill 70	P,D,C	—	—	1	—	—	—	—	—	2894 970-1
		Y	—	1	—	—	—	1	—	—	2894 970-1

CARLINES J - Challenger, B - Barracuda, V - Valiant, L - Dart, R - Belvedere - Satallite, W - Coronet - Charger, P - Plymouth, D - Dodge, C - Chrysler, Y - Imperial

NUMERALS INDICATE: 21 - 2 DR. SED., 23 - 2 DR. H.T., 27 - CONV. CPE., 29 - FAST BACK, 41 - 4 DR. SED., 43 - 4 DR. H.T., 45 - 6 PASS. STA. WGN., 46 - 9 PASS. STA. WGN.

AR Indicates use as required.
\# Indicates parts not listed in any previous parts book
Numerals in parentheses ( ) refer to notes.
★ Indicates change or addition.

Printed in U.S.A.
January 1972

Right and left part numbers are on same line, first number is right, second number is left.

CODE	PART NAME		MODEL CODES	SEE BOTTOM NOTE 21	23	27	29	41	43	45	46	PART NUMBER
23-34-0	**BODY PANELS Cont'd.**											
23-34-102	SEAL and CLIP, Cowl Top to FENDER	70	P,D,C,Y	1	1	1	1	1	1	1	1	2895 096-7
	SUPPORT, Center Floor Pan Cover Panel to Center Floor Pan	71	R,W	—	—	—	—	—	—	1	1	3499 936-7
	W/Nut	71	R,W	—	—	—	—	—	—	1	1	3500 288-9
23-34-110	PANEL, Dash w/or w/o A/Cond.	70	V,L	—	1	—	1	1	—	—	—	3417 747
	w/or w/o A/Cond.	71	V,L	—	1	—	1	1	—	—	—	3482 866
	w/or w/o A/Cond.	70	R,W	1	1	1	1	1	—	1	1	2934 772
23-34-116	COVER, Dash Panel Heater Motor Opening		V,L	—	1	—	1	1	—	—	—	2242 439
	COVER, Dash Panel Extension Air Duct Drain Hole		B,J,P,D,C,Y	1	1	1	1	1	1	1	1	2894 318
	COVER, Dash Panel Heater and A/Cond. Opening	71	R,W	—	1	—	1	1	—	1	1	3439 431
23-34-117	SUPPORT, Dash Panel to Fender Side Shield		V,L	—	1	—	1	1	—	—	—	2663 054-5
	SUPPORT, Dash Panel to Fender Side Shield		B,J	—	1	1	1	—	—	—	—	2895 518-9
		71	R,W	—	1	—	1	1	—	1	1	2895 518
	BRACKET, Clutch Shaft Mtg. to Dash Panel Support w/Manual Trans.	Lt. 71	V,L	—	1	—	1	1	—	—	—	3500 525
		70	R,W	1	1	1	1	1	—	1	1	2570 204-5
	BRACKET, Dash Panel to Fender Splash	71	R,W	—	1	—	1	1	—	1	1	3439 428-9
23-34-119	GASKET, Heater Motor Mtg. Plate		V,L	—	1	—	1	1	—	—	—	2242 425
	GASKET, Dash Panel Heater Motor Opening Cover		V,L	—	1	—	1	1	—	—	—	2242 425
23-34-120	PANEL, Front Door Outside Repair	Rt.	V,L	—	—	—	1	—	—	—	—	2895 954
		Lt.	V,L	—	—	—	1	—	—	—	—	3499 845
		Rt.	V,L	—	—	—	—	1	—	—	—	2663 354
		Lt.	V,L	—	—	—	—	1	—	—	—	2860 403
			V,L	—	1	—	—	—	—	—	—	2859 592-3
		70	B	—	1	1	—	—	—	—	—	2934 752-3
		70	J	—	1	1	1	—	—	—	—	2934 784-5
		71	B	—	1	1	—	—	—	—	—	3482 960-1
		71	J	—	1	1	—	—	—	—	—	3482 962-3
		70	W	—	—	—	1	—	—	—	—	2859 078-9
		70	R,W	1	1	1	1	—	—	—	—	2859 072-3
		70	R,W	—	—	—	—	1	—	1	1	2811 294-5
		71	R	—	1	—	—	—	—	—	—	3482 070-1
		71	R	—	—	—	—	1	—	1	1	3482 064-5
		71	W	—	—	—	—	1	—	1	1	3482 058-9
		71	W-M,W-H,W-P	—	1	—	1	—	—	—	—	3482 052-3
		71	W-S	—	1	—	—	—	—	—	—	3482 074-5
		70	P	1	1	1	1	—	—	—	—	2859 648-9
		70	P	—	—	—	—	—	1	—	—	2859 640-1
		70	P	—	—	—	—	1	—	1	1	2859 632-3
		71	P	1	1	—	1	—	—	—	—	3482 728-9
		71	P	—	—	—	—	—	1	—	—	3482 726-7
		71	P	—	—	—	—	1	—	1	1	= 3482 980-1
		71	D	—	1	—	—	—	—	—	—	3482 734-5
		71	D	—	—	—	—	—	1	—	—	3482 732-3
		71	D	—	—	—	—	1	—	1	1	3482 730-1
		71	C	—	—	—	—	1	—	1	1	3482 736-7

CARLINES J - Challenger, B - Barracuda, V - Valiant, L - Dart, R - Belvedere - Satallite, W - Coronet - Charger, P - Plymouth, D - Dodge, C - Chrysler, Y - Imperial

NUMERALS INDICATE: 21 - 2 DR. SED., 23 - 2 DR. H.T., 27 - CONV. CPE., 29 - FAST BACK, 41 - 4 DR. SED., 43 - 4 DR. H.T., 45 - 6 PASS. STA. WGN., 46 - 9 PASS. STA. WGN.

AR Indicates use as required.
# Indicates parts not listed in any previous parts book
Numerals in parentheses ( ) refer to notes.
★ Indicates change or addition.

Printed in U.S.A.
January 1972

Right and left part numbers are on same line, first number is right, second number is left.

CODE	PART NAME		MODEL CODES	SEE BOTTOM NOTE 21	23	27	29	41	43	45	46	PART NUMBER
23-34-0	**BODY PANELS Cont'd.**											
23-34-120	PANEL Cont'd.											
		71	C,Y	—	—	—	—	—	1	—	—	3482 738-9
		70	D	—	1	1	—	—	—	—	—	3417 312-3
		70	D	—	—	—	—	—	1	—	—	3417 322-3
		70	D	—	—	—	—	1	—	1	1	2859 660-1
		70	C	—	—	—	—	1	—	1	1	2859 682-3
		70	C,Y	—	—	—	—	—	1	—	—	2859 690-1
		70	C,Y	—	1	1	—	—	—	—	—	2859 698-9
		71	C,Y	—	1	—	—	—	—	—	—	3482 740-1
	PANEL, Rear Door Outside Repair		V	—	—	—	—	1	—	—	—	2663 566-7
			L	—	—	—	—	1	—	—	—	2663 762-3
		70	R	—	—	—	—	1	—	—	—	2895 808-9
		70	W	—	—	—	—	1	—	—	—	2811 372-3
		70	R,W	—	—	—	—	—	—	1	1	2811 794-5
		71	R	—	—	—	—	1	—	1	1	3440 000-1
		71	W	—	—	—	—	1	—	1	1	3440 004-5
			P	—	—	—	—	1	—	1	1	2893 612-3
			P	—	—	—	—	—	1	—	—	2859 710-1
			D	—	—	—	—	—	1	—	—	3417 782-3
			D	—	—	—	—	1	—	1	1	2893 624-5
			C	—	—	—	—	1	—	—	—	3440 888-9
			C	—	—	—	—	—	—	1	1	2894 156-7
			C,Y	—	—	—	—	—	1	—	—	2859 754-5
23-34-121	SHIELD, Dash Panel to Fender											
		Side w/NUT	L	—	1	—	1	1	—	—	—	2860 166-7
			V	—	1	—	1	1	—	—	—	2859 188-9
		Side	B,J	—	1	1	1	—	—	—	—	2895 554-5
		Side w/Brkt. 70	RW	1	1	—	1	1	—	1	1	2861 822-3
		Side 71	R	—	—	—	—	1	—	1	1	3439 420-1
		Side 71	R	—	1	—	—	—	—	—	—	3439 422-3
			W	—	—	—	—	1	—	1	1	3439 422-3
		Side 71	R	—	—	—	—	1	—	1	1	3439 424-5
		71	W	—	1	—	1	1	—	—	—	3439 424-5
23-34-123	PLUG, Cowl Side Panel Antenna Hole		V,L,B,J,R,W	1	1	1	1	1	—	1	1	2860 332
	PLUG, Dash Panel Clutch Rod Opening		V,L,B,J,R,W	1	1	1	1	1	—	1	1	2811 825
	PLUG, Heater Mtg. Hole	70	R,W	3	3	3	3	3	—	3	3	2094 984
	PLUG, Cowl Top Panel to Inst. Pnl. Filler Att. Holes		P,D	5	5	5	5	5	5	5	5	2465 483
	PLUG, Front Floor Pan Radio Antenna Cable Access		P,D,C,Y	1	1	1	1	1	1	1	1	2860 332
	PLUG, Cowl Side Panel Forward Welding Access Hole Inner Panel		P,D,C,Y	2	2	2	2	2	2	2	2	2664 330
23-34-124	COVER, Front Door Outside Panel Belt Flange Rr.	70	R,W	—	1	—	1	—	—	—	—	2860 334-5
23-34-130	GUSSET, Dash Panel to Strut		P,C,D	—	1	—	1	1	1	1	1	3439 176-7
23-34-135	COVER, Front Door Outside Panel Rr. View Mirror Hole	70	V,L,R,W	1	1	1	1	1	—	1	1	2860 748
23-34-137	GASKET, Front Door Outside Panel Rr. View Mirror Hole Cover	70	V,L,R,W	1	1	1	1	1	—	1	1	2860 749
23-34-166	PANEL, Deck Opening Upper		V	—	—	—	—	1	—	—	—	2842 327
			V,L	—	1	—	—	—	—	—	—	2604 073
			L	—	—	—	—	1	—	—	—	2603 665
			B	—	1	—	—	—	—	—	—	2963 262
			B	—	—	1	—	—	—	—	—	2963 385
			J	—	—	1	—	—	—	—	—	2963 390
			J	—	1	—	1	—	—	—	—	2963 263

CARLINES: J - Challenger, B - Barracuda, V - Valiant, L - Dart, R - Belvedere - Satellite, W - Coronet - Charger, P - Plymouth, D - Dodge, C - Chrysler, Y - Imperial

NUMERALS INDICATE: 21 - 2 DR. SED., 23 - 2 DR. H.T., 27 - CONV. CPE., 29 - FAST BACK, 41 - 4 DR. SED., 43 - 4 DR. H.T., 45 - 6 PASS. STA. WGN., 46 - 9 PASS. STA. WGN.

AR Indicates use as required.
\# Indicates parts not listed in any previous parts book
Numerals in parentheses ( ) refer to notes.
★ Indicates change or addition.

Printed in U.S.A.
January 1972

Right and left part numbers are on same line, first number is right, second number is left.

CODE	PART NAME		MODEL CODES	SEE BOTTOM NOTE 21	23	27	29	41	43	45	46	PART NUMBER
23-34-0	**BODY PANELS Cont'd.**											
23-34-166	PANEL Cont'd.	70	R,W	1	1	—	—	—	—	—	—	2838 712
		70	R,W	—	—	1	—	—	—	—	—	2838 248
		70	R,W	—	—	—	—	1	—	—	—	3444 574
		70	W	—	—	—	1	—	—	—	—	2838 090
		71	R	—	1	—	—	—	—	—	—	3445 776
		71	R	—	—	—	—	1	—	—	—	3445 778
		71	W	—	1	—	1	—	—	—	—	3445 777
		71	W	—	—	—	—	1	—	—	—	3445 086
		70	P	1	—	—	1	—	1	—	—	2900 414
		71	P	1	—	—	—	—	—	—	—	2900 415
		71	P,D	—	—	—	1	—	1	—	—	2900 414
		70	D	—	—	—	—	—	1	—	—	2900 414
			P,D	—	1	—	—	—	—	—	—	2900 415
		70	P,D	—	—	1	—	—	—	—	—	2901 183
			P,D	—	—	—	—	1	—	—	—	2900 416
		70	C	—	—	1	—	—	—	—	—	2901 184
			C,Y	—	1	—	—	—	—	—	—	2900 855
			C,Y	—	—	—	—	1	1	—	—	2900 109
	PANEL, Deck Opening Upper Plenum	70	W	—	—	—	1	—	—	—	—	2840 228
23-34-167	PANEL, Deck Opening Lower		V	—	—	—	1	—	—	—	—	2965 644
			V	—	—	—	—	1	—	—	—	2604 120
			V,L	—	1	—	—	1	—	—	—	2964 483
		71	L	—	—	—	1	—	—	—	—	3504 125
			B	—	1	1	—	—	—	—	—	3417 412
		70	J	—	1	1	1	—	—	—	—	2963 261
		71	J	—	1	1	—	—	—	—	—	3446 310
		71	R	—	1	—	—	—	—	—	—	3505 073
		71	R	—	—	—	—	1	—	—	—	3504 309
		71	W	—	—	—	—	1	—	—	—	= 3504 310
		71	W	—	1	—	1	—	—	—	—	3445 780
		71	P	1	1	—	1	1	1	—	—	3570 061
		71	D	—	1	—	—	1	1	—	—	3446 174
		70	R	1	1	1	—	1	—	—	—	2963 606
		70	W	—	—	—	1	—	—	—	—	2901 678
		70	W	1	1	1	—	1	—	—	—	2963 607
		70	P	1	1	1	1	1	1	—	—	2963 608
		70	D	—	1	1	—	1	1	—	—	2963 609
			C	—	1	1	—	1	1	—	—	2963 610
			Y	—	1	—	—	—	1	—	—	2900 422
	PANEL, Deck Opening Lower to Rear Crossmember	70	W	—	—	—	1	—	—	—	—	2902 524
23-34-176	EXTENSION, Deck Opening Lower Panel		V,L	—	—	—	1	—	—	—	—	3445 388-9
	EXTENSION, Deck Opening Lower Panel Reinforcement		V	—	—	—	—	1	—	—	—	2782 102-3
			W	—	—	—	1	—	—	—	—	2901 688-9
		71	R	—	1	—	—	—	—	—	—	3504 314-5
		71	R	—	—	—	—	1	—	—	—	3504 094-5
		71	W	—	—	—	—	1	—	—	—	3446 524-5
		71	W	—	1	—	1	—	—	—	—	3504 312-3
23-34-178	PLUG, Deck Opening Lower Panel		B	—	2	2	2	—	—	—	—	1882 735
23-34-179	REINFORCEMENT, Deck Opening Upper or Lower Panel	Lwr. 70	V	—	—	—	—	1	—	—	—	2604 124
		Lwr. 71	V	—	—	—	—	1	—	—	—	3570 024
		Upr.	B	—	—	1	—	—	—	—	—	2964 288

CARLINES	J - Challenger B - Barracuda	V - Valiant L - Dart	R - Belvedere - Satallite W - Coronet - Charger	P - Plymouth D - Dodge	C - Chrysler Y - Imperial
NUMERALS INDICATE:	21 - 2 DR. SED. 23 - 2 DR. H.T.	27 - CONV. CPE. 29 - FAST BACK	41 - 4 DR. SED. 43 - 4 DR. H.T.	45 - 6 PASS. STA. WGN. 46 - 9 PASS. STA. WGN.	

AR Indicates use as required.
\# Indicates parts not listed in any previous parts book

Numerals in parentheses ( ) refer to notes.
★ Indicates change or addition.

Printed in U.S.A.
January 1972

Right and left part numbers are on same line, first number is right, second number is left.

23-34-0 BODY PANELS Cont'd.

CODE	PART NAME		MODEL CODES	SEE BOTTOM NOTE 21	23	27	29	41	43	45	46	PART NUMBER
23-34-179	REINFORCEMENT Cont'd.											
		Upr.	J	—	—	1	—	—	—	—	—	2964 289
		Upr. 70	R,W	—	—	1	—	—	—	—	—	2838 250
	w/Nut	Lwr. 71	W	—	1	—	1	—	—	—	—	3505 470
	w/Nut	Lwr. 70	P	1	1	1	1	1	1	—	—	3444 679
		Upr. 70	P,D	—	—	1	—	—	—	—	—	2901 185
	w/Nut	Lwr. 70	D	—	1	1	—	1	1	—	—	3444 686
		Upr. 70	C	—	—	1	—	—	—	—	—	2902 395
	w/Nut	Lwr.	C	—	1	1	—	1	1	—	—	3444 687
	w/Nut	Lwr.	Y	—	1	—	—	—	1	—	—	2902 623
	w/Nut and Stud	Lwr. 71	P	1	1	—	1	1	1	—	—	3446 948
	w/Nut and Stud	Lwr. 71	D	—	1	—	—	1	1	—	—	3446 953
	REINFORCEMENT, Deck Opening Lower Panel Impact Bracket		C	—	1	1	—	1	1	—	—	2963 906-7
	SUPPORT, Deck Opening Upper Plenum Panel Center	70	W	—	—	—	1	—	—	—	—	2840 397
	SUPPORT, Deck Opening Lower Panel w/NUT	Lid Lock	V	—	—	—	1	—	—	—	—	3446 955
		71	R	—	2	—	—	—	—	—	—	3445 793
	w/Nut	71	R	—	—	—	—	2	—	—	—	3615 060
		To Bumper 71	R,W	—	2	—	2	—	—	—	—	3504 166
		To Bumper 71	R,W	—	—	—	—	2	—	—	—	3446 048
		71	W	—	—	—	—	2	—	—	—	3445 098
	w/Nut	71	W	—	—	—	—	—	2	—	—	3615 062
	w/Nut	71	W	—	2	—	2	—	—	—	—	3615 061
		Lwr. 71	W	—	—	—	—	2	—	—	—	3445 098
		71	P	1	1	—	1	1	1	—	—	3446 950
		Lock 70	P	1	1	1	1	1	1	—	—	2963 614
			D	—	1	1	—	1	1	—	—	2963 752
		Lock	C	—	1	1	—	1	1	—	—	2963 616
			C	—	2	2	—	2	2	—	—	2963 903
			Y	—	1	—	—	—	1	—	—	2902 754
23-34-184	LETTER, NAMEPLATE or MEDALLION, Deck Opening Lower Panel (1)											
23-34-190	FILLER, Deck Opening Lower Panel	70	J	—	1	1	1	—	—	—	—	2964 730
23-34-191	BRACKET, Deck Opening Lower Panel Reinf. Impact		V	—	—	—	1	1	—	—	—	2782 108-9
		71	L	—	—	—	1	—	—	—	—	2782 108-9
		Upr.	D	—	1	1	—	1	1	—	—	3445 992-3
			P,D,C,Y	2	2	2	2	2	2	—	—	2900 884
	BRACKET, Quarter Panel Rear Bumper Impact		P,D,C	—	—	—	—	—	—	1	1	2894 490-1
		71	R,W	—	—	—	—	—	—	1	1	3440 834-5
	PLATE, Quarter Panel Rr. Bumper IMPACT Bracket	71	R,W	—	—	—	—	—	—	2	2	3440 836
	BRACKET, Deck Opening Lower Panel Jack Assist.	71	R,W	—	—	—	—	1	—	—	—	3615 156-7
	BRACKET, Deck Opening Lower Panel Bumper Mtg.		V,L	—	1	—	—	1	—	—	—	3445 316-7
23-34-193	SPACER, Deck Opening Upper Panel to Rr. Window Glass	Nominal 70	W	—	—	—	AR	—	—	—	—	2842 348
		Thin 70	W	—	—	—	AR	—	—	—	—	2842 363
		70	R,W	AR	AR	—	—	AR	—	—	—	2807 425
			B,J	—	AR	—	AR	—	—	—	—	2964 590
			P,D,C,Y	AR	AR	—	AR	AR	AR	—	—	2964 590
		Nominal 71	P,D,C,Y	—	2	—	—	—	—	—	—	2807 425

CARLINES	J - Challenger B - Barracuda	V - Valiant L - Dart	R - Belvedere - Satallite W - Coronet - Charger	P - Plymouth D - Dodge	C - Chrysler Y - Imperial
NUMERALS INDICATE:	21 - 2 DR. SED. 23 - 2 DR. H.T.	27 - CONV. CPE. 29 - FAST BACK	41 - 4 DR. SED. 43 - 4 DR. H.T.	45 - 6 PASS. STA. WGN. 46 - 9 PASS. STA. WGN.	

AR Indicates use as required.
\# Indicates parts not listed in any previous parts book
Numerals in parentheses ( ) refer to notes.
★ Indicates change or addition.

Printed in U.S.A.
January 1972

Right and left part numbers are on same line, first number is right, second number is left.

23-34-0 BODY PANELS Cont'd.

CODE	PART NAME		MODEL CODES	SEE BOTTOM NOTE 21	23	27	29	41	43	45	46	PART NUMBER
23-34-212	PANEL, Quarter Wheel Opening											
		71	P	1	1	—	1	1	1	—	—	3505 506-7
		71	C,Y	—	1	—	—	1	1	—	—	3570 928-9
	Wing Screw		P,C,Y	2	2	—	2	2	2	—	—	6028 934
23-34-213	SEAL, Quarter Qutside Panel to Rr. Bumper	Rt. 70	R,W	—	—	—	—	—	—	1	1	2860 640
		Lt. 70	R,W	—	—	—	—	—	—	1	1	2895 403
			Y	—	—	—	—	—	1	—	—	2902 900-1
		70	Y	—	1	—	—	—	—	—	—	3446 432-3
	SEAL, Quarter Panel End Extension to Rr. Bumper	Frt.	P,D,C	—	—	—	—	—	—	2	2	2895 228
	SEAL, Deck Opening Lower Panel to Bumper											
		71	R	—	1	—	—	—	—	—	—	3570 029
		71	R	—	—	—	—	1	—	—	—	3505 552
		71	W	—	1	—	1	—	—	—	—	3570 070
	GASKET, Quarter Wheel Opening Panel											
		71	C,Y	—	2	—	—	2	2	—	—	3570 797
23-34-216	PIN, Quarter Wheel Opening Panel Locating											
		71	P,C,Y	—	2	—	—	2	2	—	—	3506 428
23-34-229	PLATE, Body Side Sill to Quarter Inside Panel Tie	70	R,W	—	—	—	—	—	—	—	—	2839 960-1
		70	R,W	1	1	—	1	—	—	—	—	2838 286-7
		70	P,D,C	—	—	1	—	—	—	—	—	2901 550-1
			P,D,C	1	1	—	1	—	—	—	—	2900 506-7
		71	R,W	—	1	—	1	—	—	—	—	3445 504-5
		71	Y	—	1	—	—	—	—	—	—	2902 370-1
	PLATE, Body Side Sill to Wheelhouse											
		70	R,W	—	—	—	—	1	—	1	1	3446 364-5
		71	R,W	—	—	—	—	—	1	1	1	3505 494-5
			D	—	—	—	—	1	1	—	—	3446 368-9
			P,C	—	—	—	—	1	1	—	—	3446 378-9
			P,D,C	—	—	—	—	—	—	1	1	2901 632-3
			Y	—	—	—	—	1	1	—	—	3446 382-3
	PLATE, Quarter Panel to Wheelhouse to Side Sill Quarter Panel Tie		V	—	—	—	—	1	—	—	—	3446 362-3
			L	—	—	—	—	1	—	—	—	3446 360-1
	PLATE, Body Side Sill Quarter Window Track Bracket Tie		B,J	—	2	—	2	—	—	—	—	3446 384
	PLATE, Quarter Outside Panel Impact Outer											
		71	P	1	1	—	1	—	—	—	—	3505 238-9
		71	D	—	1	—	—	—	—	—	—	3505 238-9
		71	C,Y	—	1	—	—	—	—	—	—	3505 240-1
	GUSSET, Inner Wheelhouse to Tailgate Hinge Pillar	Lt. 71	R,W	—	—	—	—	—	—	1	1	3440 901
23-34-231	BRACKET, Quarter Outside Panel to Rear Bumper Seal	w/NUT	Y	—	1	—	—	—	—	—	—	2963 696-7
		w/NUT	Y	—	—	—	—	—	1	—	—	2963 670-1
	SUPPORT, Quarter Outside Panel to Rear Bumper Seal		Y	—	—	—	—	—	1	—	—	2902 908-9
	BRACKET, Quarter Outside Panel Wheel Opening Panel Mounting	71	P,C,Y	—	2	—	—	2	2	—	—	3505 509
23-34-234	PANEL, Quarter Inside		V,L	—	—	—	1	—	—	—	—	2965 614-5
		Upr. 70	V	—	—	—	—	1	—	—	—	2604 192-3
		Upr. 70	V	—	—	—	1	—	—	—	—	2965 616-7
		Lwr.	V	—	—	—	—	1	—	—	—	2604 194-5
		Lwr. 70	V	—	—	—	1	—	—	—	—	2965 618-9

CARLINES	J - Challenger B - Barracuda	V - Valiant L - Dart	R - Belvedere - Satallite W - Coronet - Charger	P - Plymouth D - Dodge	C - Chrysler Y - Imperial
NUMERALS INDICATE:	21 - 2 DR. SED. 23 - 2 DR. H.T.	27 - CONV. CPE. 29 - FAST BACK	41 - 4 DR. SED. 43 - 4 DR. H.T.	45 - 6 PASS. STA. WGN. 46 - 9 PASS. STA. WGN.	

AR Indicates use as required.
\# Indicates parts not listed in any previous parts book
Numerals in parentheses ( ) refer to notes.
★ Indicates change or addition.

Printed in U.S.A.
January 1972

Right and left part numbers are on same line, first number is right, second number is left.

23-34-0 BODY PANELS Cont'd.

23-34-234 PANEL Cont'd.

CODE	PART NAME	MODEL CODES	SEE BOTTOM NOTE 21	23	27	29	41	43	45	46	PART NUMBER
	Upr. 71	V	—	—	—	—	1	—	—	—	3500 422-3
	Upr. 71	V,L	—	—	—	1	—	—	—	—	3500 426-7
	Lwr. 71	V,L	—	—	—	1	—	—	—	—	3500 492-3
	Upr. 71	L	—	—	—	—	1	—	—	—	3500 424-5
	Upr. Rr. 71	V,L	—	1	—	—	—	—	—	—	3500 420-1
		V,L	—	1	—	—	—	—	—	—	3445 454-5
	Upr. 70	L	—	—	—	—	1	—	—	—	2603 638-9
	w/NUT, Rr. Upr. 70	L	—	1	—	—	—	—	—	—	2842 770-1
	Lwr.	L	—	—	—	—	1	—	—	—	2603 640-1
	Rr. Lwr.	V,L	—	1	—	—	—	—	—	—	2604 224-5
	Rr. Upr. 70	B	—	1	—	—	—	—	—	—	3444 764-5
	Rr. Lwr.	B	—	1	—	—	—	—	—	—	2963 154-5
	Up To Apr. 1970	B,J	—	—	1	—	—	—	—	—	2964 232-3
	Lt. After Apr. 1970	B,J	—	—	1	—	—	—	—	—	3506 372
	w/Nut Upr. Rr. 71	B	—	1	—	—	—	—	—	—	3500 428-9
	w/Nut Upr. Rr. 71	J	—	1	—	—	—	—	—	—	3500 448-9
		J	—	1	—	1	—	—	—	—	2963 666-7
		B	—	1	—	—	—	—	—	—	2963 148-9
	w/NUT, Rr. Upr. 70	J	—	1	—	1	—	—	—	—	3444 664-5
	Rr. Lwr.	J	—	1	—	1	—	—	—	—	2963 156-7
	w/Nut Upr. 71	R	—	1	—	—	—	—	—	—	3500 376-7
	71	R,W	—	—	—	—	—	—	1	1	3439 526-7
	Upr. Frt. 71	R,W	—	—	—	—	1	—	—	—	3445 052-3
	71	R,W	—	1	—	1	—	—	—	—	3445 586-7
	Rr. Rt. 71	R,W	—	—	—	—	—	—	1	1	3499 454
	Rr. Lt. 71	R,W	—	—	—	—	—	—	1	1	3440 897
	Center Rt. 71	R,W	—	—	—	—	—	—	1	1	3440 864
	Center Lt. 71	R,W	—	—	—	—	—	—	1	1	3499 621
	Upr. Rr. 71	R,W	—	—	—	—	1	—	—	—	3445 054-5
	w/Screw Upr. Frt. 71	W	—	1	—	1	—	—	—	—	3499 914-5
	w/Nut Upr. 71	W	—	1	—	1	—	—	—	—	3500 378-9
	Upr. Rr. 71	W	—	1	—	1	—	—	—	—	3499 792
	Upr. Frt. 71	R,W	—	—	—	—	1	—	—	—	3445 052-3
	w/Screw Rr. Upr. Rt. 71	R	—	—	—	—	1	—	—	—	3615 042
	Upr. Frt. 71	W	—	1	—	1	—	—	—	—	3500 668-9
	70	R,W	1	1	—	1	—	—	—	—	3445 456-7
	Frt. 6	R,W	—	—	—	—	—	—	1	1	2861 678-9
	Rr. Rt. 70	R,W	—	—	—	—	—	—	1	1	2811 756
	Center, Rt. 70	R,W	—	—	—	—	—	—	1	1	2895 230
	70	R,W	—	—	1	—	—	—	—	—	2838 236-7
	Upr. 70	R,W	—	—	—	—	1	—	—	—	2842 798-9
	w/NUT, Upr. 70	R,W	1	1	—	—	—	—	—	—	3505 322-3
	Upr. 70	W	—	—	—	1	—	—	—	—	2842 478-9
	w/NUT, Upr. 70	W	—	—	—	1	—	—	—	—	2842 776-7
	Lwr. 70	W	—	—	—	1	—	—	—	—	2840 372-3
	Lwr. 70	R,W	1	1	—	—	—	—	—	—	2838 326-7
	Lwr. 70	R,W	—	—	—	—	1	—	—	—	2838 322-3
	70	P	—	—	1	—	—	—	—	—	2900 648-9
	70	P	1	1	—	1	—	—	—	—	3445 458-9
	Lwr.	P	—	1	—	—	—	—	—	—	2900 670-1
	Lwr. 70	P	—	—	—	—	1	—	—	—	2900 666-7
	Lwr.	P	1	—	—	1	—	1	—	—	2902 392-3
	71	P	1	1	—	1	—	—	—	—	3506 102-3
	Lwr. 71	P	1	1	—	—	—	—	—	—	3500 548-9
	Lwr. 71	P	—	—	—	1	—	1	—	—	3500 556-7
	Upr. 71	P	—	—	—	1	—	1	—	—	3500 558-9
	Upr. 71	P,D	—	—	—	—	1	—	—	—	3500 444-5

CARLINES J - Challenger, B - Barracuda, V - Valiant, L - Dart, R - Belvedere - Satallite, W - Coronet - Charger, P - Plymouth, D - Dodge, C - Chrysler, Y - Imperial

NUMERALS INDICATE: 21 - 2 DR. SED., 23 - 2 DR. H.T., 27 - CONV. CPE., 29 - FAST BACK, 41 - 4 DR. SED., 43 - 4 DR. H.T., 45 - 6 PASS. STA. WGN., 46 - 9 PASS. STA. WGN.

AR Indicates use as required.
\# Indicates parts not listed in any previous parts book
Numerals in parentheses ( ) refer to notes.
★ Indicates change or addition.

Printed in U.S.A.
January 1972

Right and left part numbers are on same line, first number is right, second number is left.

23-34-0 BODY PANELS Cont'd.

CODE	PART NAME		MODEL CODES	SEE BOTTOM NOTE 21	23	27	29	41	43	45	46	PART NUMBER
23-34-234	PANEL Cont'd.											
		Lwr. 71	P	—	—	—	—	1	—	—	—	3500 516-7
		Lwr. 71	D	—	—	—	—	1	—	—	—	3500 530-1
		Upr.	P,D	—	—	—	—	1	—	—	—	2900 658-9
		Upr. 70	P,D	1	—	—	1	—	1	—	—	2900 660-1
		Lwr.	D	—	—	—	—	—	1	—	—	2900 668-9
		70	D	—	—	1	—	—	—	—	—	2900 652-3
		70	D	—	1	—	—	—	—	—	—	3446 478-9
		71	D	—	1	—	—	—	—	—	—	= 3506 106-7
		Lwr. 70	D	—	1	—	—	—	—	—	—	2901 404-5
		Lwr. 70	D	—	—	—	—	1	—	—	—	2900 978-9
		Lwr. 71	D	—	1	—	—	—	—	—	—	3500 560-1
		Lwr. 71	D	—	—	—	—	—	1	—	—	3500 554-5
		w/NUT, Upr.	P,D,C,Y	—	1	—	—	—	—	—	—	2902 688-9
		Frt. Upr.	P,D,C	—	—	—	—	—	—	1	1	2893 986-7
		w/NUT, Rr.	P,D,C	—	—	—	—	—	—	1	1	2894 850-1
		w/Nut Upr. 71	P,D,C,Y	1	1	—	—	—	—	—	—	3500 552-3
		Upr. 71	C	—	—	—	—	1	—	—	—	3500 452-3
		Upr. 71	C,Y	—	—	—	—	—	1	—	—	3500 454-5
		Lwr. 71	C,Y	—	1	—	—	—	—	—	—	3500 562-3
		70	C	—	1	—	—	—	—	—	—	3445 460-1
		70	C	—	—	1	—	—	—	—	—	2900 656-7
		Lwr. 71	C,Y	—	—	—	—	1	1	—	—	3500 500-1
			C,Y	—	1	—	—	—	—	—	—	3506 110-1
		Upr. 70	C	—	—	—	—	1	—	—	—	2900 664-5
		Upr. 70	C,Y	—	—	—	—	—	1	—	—	2900 042-3
		Rr. Upr. 71	P,D,C,Y	—	1	—	—	—	—	—	—	2902 688-9
		Lwr. 70	C,Y	—	—	—	—	1	1	—	—	2900 672-3
23-34-235	PANEL, Quarter Outside Repair		V,L	—	—	—	1	—	—	—	—	2965 612-3
			V	—	—	—	—	1	—	—	—	3445 712-3
			V,L	—	1	—	—	—	—	—	—	3444 666-7
			L	—	—	—	—	1	—	—	—	2964 506-7
			B	—	1	—	—	—	—	—	—	2963 144-5
			B	—	—	1	—	—	—	—	—	2963 386-7
			J	—	1	—	1	—	—	—	—	2902 646-7
			J	—	—	1	—	—	—	—	—	2902 648-9
		70	R	—	—	—	—	1	—	—	—	2963 810-11
		70	R	1	1	—	—	—	—	—	—	2963 806-7
		70	R	—	—	1	—	—	—	—	—	2963 808-9
		71	R	—	1	—	—	—	—	—	—	3444 182-3
		71	R	—	—	—	—	1	—	—	—	3444 184-5
		71	R	—	—	—	—	—	—	1	1	3439 516-7
		71	W	—	—	—	—	—	—	1	1	3439 518-9
		71	W	—	—	—	—	1	—	—	—	3615 260-1
		71	W	—	1	—	1	—	—	—	—	3445 584-5
		70	W	1	1	—	—	—	—	—	—	2963 728-9
		70	W	—	—	1	—	—	—	—	—	2963 730-1
		70	W	—	—	—	—	1	—	—	—	2963 732-3
		70	W	—	—	—	1	—	—	—	—	3445 304-5
		70	R,W	—	—	—	—	—	—	1	1	3439 186-7
		70	P	1	—	—	—	—	—	—	—	3505 198-9
		70	P	—	1	—	—	—	—	—	—	3505 202-3
		70	P	—	—	1	—	—	—	—	—	3505 204-5
		70	P	—	—	—	1	—	—	—	—	3505 200-1
			P	—	—	—	—	1	—	—	—	2963 920-1
			P	—	—	—	—	—	1	—	—	2963 922-3
			P	—	—	—	—	—	—	1	1	3440 288-9
		71	P	1	1	—	—	—	—	—	—	3570 454-5

CARLINES J - Challenger, B - Barracuda; V - Valiant, L - Dart; R - Belvedere - Satallite, W - Coronet - Charger; P - Plymouth, D - Dodge; C - Chrysler, Y - Imperial

NUMERALS INDICATE: 21 - 2 DR. SED., 23 - 2 DR. H.T., 27 - CONV. CPE., 29 - FAST BACK, 41 - 4 DR. SED., 43 - 4 DR. H.T., 45 - 6 PASS. STA. WGN., 46 - 9 PASS. STA. WGN.

AR Indicates use as required.
\# Indicates parts not listed in any previous parts book
Numerals in parentheses ( ) refer to notes.
★ Indicates change or addition.

Printed in U.S.A.
January 1972

Right and left part numbers are on same line, first number is right, second number is left.

CODE	PART NAME		MODEL CODES	SEE BOTTOM NOTE 21	23	27	29	41	43	45	46	PART NUMBER
23-34-0	**BODY PANELS Cont'd.**											
23-34-235	PANEL Cont'd.	71	P	—	—	—	1	—	—	—	—	3570 452-3
			D	—	1	—	—	—	—	—	—	3505 206-7
		70	D	—	—	1	—	—	—	—	—	3505 208-9
			D	—	—	—	—	1	—	—	—	2963 736-7
			D	—	—	—	—	—	1	—	—	2963 738-9
			D	—	—	—	—	—	—	1	1	2893 200-1
		70	C	—	1	—	—	—	—	—	—	3505 192-3
		70	C	—	—	1	—	—	—	—	—	3505 196-7
		70	C	—	—	—	—	1	1	—	—	2963 898-9
			C	—	—	—	—	—	—	1	1	2895 944-5
		71	C	—	1	—	—	—	—	—	—	3570 984-5
		71	C	—	—	—	—	1	1	—	—	3570 986-7
		70	Y	—	1	—	—	—	—	—	—	3505 194-5
		70	Y	—	—	—	—	—	1	—	—	3570 938-9
		71	Y	—	1	—	—	—	—	—	—	3570 936-7
		71	Y	—	—	—	—	—	1	—	—	3570 938-9
23-34-236	EXTENSION, Quarter Inside Panel to Wheelhouse		B	—	—	1	—	—	—	—	—	2965 890-1
			J	—	—	1	—	—	—	—	—	2965 892-3
	EXTENSION, Quarter Inside Panel Support to Wheelhouse		B,J	—	—	1	—	—	—	—	—	2964 240-1
23-34-237	PLUG, Quarter Inside Panel Access Hole		V,L	—	2	—	—	—	—	—	—	2783 355
23-34-238	NAMEPLATE, Quarter Outside (1)											
23-34-240	SHIELD, Quarter Panel Rear Stone	70	R,W	—	—	—	—	—	—	2	2	2842 791
23-34-242	EXTENSION, Quarter Outside Panel		V	—	—	—	—	1	—	—	—	3444 214-5
	To Rear Floor Pan Side		V	—	—	—	—	1	—	—	—	2604 168-9
	To Rear Floor Pan Side		V,L	—	1	—	—	1	—	—	—	3445 150-1
	End		V,L	—	1	—	—	1	—	—	—	2964 486-7
	At Belt Reinf.		B,J	—	—	1	—	—	—	—	—	3445 950-1
	Rr. Rt. 70		R	—	—	—	—	—	—	1	1	2895 340
	Rr. Lt. 70		R	—	—	—	—	—	—	1	1	3440 923
	End 70		R	1	1	1	—	1	—	—	—	2963 510-1
	Rr. Flange w/Nut 71		R	—	1	—	—	—	—	—	—	3570 228-9
	Rr. Flange w/Nut 71		R	—	—	—	—	1	—	—	—	3570 222-3
	Rr. Flange 71		R	—	—	—	—	1	—	—	—	3504 042-3
	Rr. Flange 71		R	—	1	—	—	—	—	—	—	3504 316-7
	Rr. 71		R	—	—	—	—	—	—	1	1	3440 154-5
	Rr. Supt. to Frt. Supt. 71		R	—	—	—	—	—	—	1	1	3499 384
	Quarter Wndo. Opening Reinf. 71		R	—	1	—	—	—	—	—	—	= 3615 188-9
	End 71		W	—	1	—	1	—	—	—	—	3445 520-1
	Rr. 71		W	—	—	—	—	—	—	1	1	3440 158-9
	Rr. Supt. to Frt. Supt. 71		W	—	—	—	—	—	—	1	1	3499 410
	Rr. Flange 71		W	—	1	—	1	—	—	—	—	3504 318-9
	Rr. Flange w/Nut 71		W	—	1	—	1	—	—	—	—	3570 224-5
	Rr. Flange 71		W	—	—	—	—	1	—	—	—	3446 038-9
	Rr. Flange w/Nut 71		W	—	—	—	—	1	—	—	—	3570 226-7
	Rr. Upr. 71		R,W	—	—	—	—	—	—	1	1	3440 514-5
	Rr. Upr. 70		W	—	—	—	1	—	—	—	—	2841 516-7
	Rr. Lwr. 70		W	—	—	—	1	—	—	—	—	2838 008-9
	Rr. Rt. 70		W	—	—	—	—	—	—	1	1	2895 342
	Rr. Lt. 70		W	—	—	—	—	—	—	1	1	3440 925
	To Rr. Floor Pan Side	70	W	1	1	1	—	1	—	—	—	2839 544-5
	End 70		W	—	—	—	—	1	—	—	—	2963 516-7
	End 70		W	1	1	1	—	—	—	—	—	2963 522-3
	Rr. Upr. 70		R,W	—	—	—	—	—	—	1	1	2860 190-1

CARLINES J - Challenger, B - Barracuda, V - Valiant, L - Dart, R - Belvedere - Satallite, W - Coronet - Charger, P - Plymouth, D - Dodge, C - Chrysler, Y - Imperial

NUMERALS INDICATE: 21 - 2 DR. SED., 23 - 2 DR. H.T., 27 - CONV. CPE., 29 - FAST BACK, 41 - 4 DR. SED., 43 - 4 DR. H.T., 45 - 6 PASS STA. WGN., 46 - 9 PASS. STA. WGN.

AR Indicates use as required.
\# Indicates parts not listed in any previous parts book
Numerals in parentheses ( ) refer to notes.
★ Indicates change or addition.

Printed in U.S.A.
January 1972

Right and left part numbers are on same line, first number is right, second number is left.

CODE	PART NAME		MODEL CODES	SEE BOTTOM NOTE 21	23	27	29	41	43	45	46	PART NUMBER
23-34-0	**BODY PANELS Cont'd.**											
23-34-242	EXTENSION Cont'd.											
		Rr.	P	—	—	—	—	—	—	1	1	2894 434-5
		End	P	1	1	1	1	1	1	—	—	2963 528-9
		End Reinf.	P	1	1	1	1	1	1	—	—	2963 932-3
		Rr.	D	—	—	—	—	—	—	1	1	2893 216-7
		End Reinf.	D	—	1	1	—	1	1	—	—	2963 748-9
		End 70	D-K,D-T, D-L,D-M	—	1	1	—	1	1	—	—	2963 540-1
		End 70	D-H,D-P	—	1	1	—	1	1	—	—	2963 546-7
		End w/Gasket 70	D-H, D-P	—	1	1	—	1	1	—	—	2963 548-9
		End 71	D	—	1	—	—	1	1	—	—	2963 540-1
	C-300H	End 70	C-M	—	1	—	—	—	—	—	—	3571 218-9
		Rr.	C	—	—	—	—	—	—	1	1	2893 218-9
		End	C	—	1	1	—	—	—	—	—	3446 106-7
		End	C	—	—	—	—	1	1	—	—	2963 554-5
		End	Y	—	1	—	—	—	—	—	—	3615 202-3
		End	Y	—	—	—	—	—	1	—	—	3615 198-9
23-34-244	SEAL, Quarter Panel End Extension to Bumper		P,D,C	—	—	—	—	—	—	1	1	2894 730-1
			Y	—	1	—	—	—	—	—	—	2963 640-1
23-34-245	RETAINER, Quarter Outside Panel to Rr. Bumper Seal		Y	—	1	—	—	—	—	—	—	2963 638-9
			Y	—	—	—	—	—	1	—	—	2902 902-3
	RETAINER, Quarter Panel End Extension to Bumper Seal		P,D,C	—	—	—	—	—	—	2	2	2898 909
		Frt.	P,D,C	—	—	—	—	—	—	2	2	2895 244
	RETAINER, Quarter Panel Taillamp Opening Upper Gusset Seal											
		71	R	—	—	—	—	—	—	1	1	3499 970-1
		71	W	—	—	—	—	—	—	1	1	3499 928-9
23-34-246	REINFORCEMENT, Quarter Outside Panel at Belt		V,L	—	1	—	—	—	—	—	—	2604 286-7
			B	—	—	1	—	—	—	—	—	2964 180-1
			B	—	1	—	—	—	—	—	—	2963 174-5
			J	—	1	—	1	—	—	—	—	2963 706-7
			J	—	—	1	—	—	—	—	—	2964 182-3
		70	R	—	—	1	—	—	—	—	—	2838 208-9
		70	W	—	—	1	—	—	—	—	—	2838 210-11
		70	P	—	—	1	—	—	—	—	—	2901 062-3
		70	D	—	—	1	—	—	—	—	—	2901 064-5
		70	C	—	—	1	—	—	—	—	—	2901 066-7
	REINFORCEMENT, Quarter Outside Panel											
		71	W	—	1	—	1	—	—	—	—	3445 636-7
		End 70	P	1	1	1	1	1	1	—	—	2963 586-7
		End 71	P	1	1	—	1	1	1	—	—	= 3570 428-9
		71	P	1	1	—	1	1	1	—	—	3570 428-9
		71	D	—	1	—	—	1	1	—	—	3570 430-1
		70	D	—	1	1	—	1	1	—	—	2965 518-9
		End 71	D	—	1	—	—	1	1	—	—	3570 430-1
			C	—	1	1	—	—	—	—	—	2963 904-5
			C	—	—	—	—	1	1	—	—	2963 590-1
			Y	—	1	—	—	—	—	—	—	3445 238-9
			Y	—	—	—	—	—	1	—	—	3445 218-9
	REINFORCEMENT, Quarter Outside Panel Extension Opening	w/Nut 70	R,W	—	—	—	—	—	—	1	1	3439 262-3
	REINFORCEMENT, Quarter Outside Panel Upr. Bumper Mounting											
		71	P	2	2	—	2	2	2	—	—	3506 064

CARLINES	J - Challenger B - Barracuda	V - Valiant L - Dart	R - Belvedere - Satallite W - Coronet - Charger	P - Plymouth D - Dodge	C - Chrysler Y - Imperial
NUMERALS INDICATE:	21 - 2 DR. SED. 23 - 2 DR. H.T.	27 - CONV. CPE. 29 - FAST BACK	41 - 4 DR. SED. 43 - 4 DR. H.T.	45 - 6 PASS. STA. WGN. 46 - 9 PASS. STA. WGN.	

AR Indicates use as required.
\# Indicates parts not listed in any previous parts book
Numerals in parentheses ( ) refer to notes.
★ Indicates change or addition.

Printed in U.S.A.
January 1972

Right and left part numbers are on same line, first number is right, second number is left.

34-34-0 BODY BUMPERS Cont'd.

CODE	PART NAME		MODEL CODES	SEE BOTTOM NOTE 21	23	27	29	41	43	45	46	PART NUMBER
23-34-246	REINFORCEMENT Cont'd.											
	SUPPORT, Quarter Outside Panel to Rear Bumper Seal	70	Y	—	1	—	—	—	—	—	—	2963 662-3
23-34-248	SUPPORT, Quarter Inside Panel Rr. Floor Pan Upper Panel Att.	70	R,W	—	—	—	—	—	—	1	1	2573 989
	BRACKET, Quarter Inside Panel Support to Wheelhouse Cap	70	P	—	—	1	—	—	—	—	—	2901 148-9
		70	D	—	—	1	—	—	—	—	—	2901 150-1
		70	C	—	—	1	—	—	—	—	—	2901 152-3
	BRACE, Quarter Inside Panel Support to Wheelhouse Outer	70	P	—	—	1	—	—	—	—	—	2902 960-1
		70	D	—	—	1	—	—	—	—	—	2902 962-3
		70	C	—	—	1	—	—	—	—	—	2902 964-5
	BRACE, Quarter Inside Panel to Floor		B	—	1	1	—	—	—	—	—	3444 612-3
			J	—	1	1	1	—	—	—	—	3444 614-5
	SUPPORT, Quarter Panel Inside Trim Panel to Tailgate Pillar Frt. Support	71	R,W	—	—	—	—	—	—	1	1	3499 214-5
23-34-249	REINFORCEMENT, Quarter Inside w/Stud	71	R	—	1	—	—	—	—	—	—	3506 404-5
		71	W	—	1	—	1	—	—	—	—	# 3506 002-3
	Panel Belt	70	P,D,C	—	—	1	—	—	—	—	—	2901 986-7
			P,D,C,Y	1	1	—	1	—	—	—	—	2965 106-7
	REINFORCEMENT, Quarter Inside Panel w/Power Windows		B,J	—	1	—	1	—	—	—	—	3446 388-9
	REINFORCEMENT, Quarter Inside Panel Support Upper	70	R,W	—	—	1	—	—	—	—	—	2574 850-9
	At Belt	71	R	—	1	—	—	—	—	—	—	3615 120-1
		70	P,D,C	—	—	1	—	—	—	—	—	2901 988-9
	REINFORCEMENT, Quarter Panel Spare Tire Inside Panel Anchor	71	R,W	—	—	—	—	—	—	1	1	3500 324
	BRACKET, Floor Pan Extension Gusset to Wheelhouse	71	R	—	—	—	—	1	—	—	—	3615 026
	BRACKET, Wheelhouse Inner Rr. Floor Pan Cover Support Att.	70	R,W	—	—	—	—	—	—	1	1	2573 986-7
23-34-252	SUPPORT, Quarter Outside Panel End Reinforcement		Y	—	1	—	—	—	—	—	—	2902 696-7
			Y	—	—	—	—	—	1	—	—	2902 398-9
23-34-253	DOOR, Quarter Panel Fuel Filler	71	R	—	—	—	—	—	—	1	1	3440 987
		71	W	—	—	—	—	—	—	1	1	3440 988
	Tube Housing		P	—	—	—	—	—	—	1	1	2894 065
			D	—	—	—	—	—	—	1	1	2894 067
			C	—	—	—	—	—	—	1	1	2894 069
23-34-255	SPRING, Quarter Panel Fuel	71	R,W	—	—	—	—	—	—	1	1	3500 661
	Filler Housing		P,D,C	—	—	—	—	—	—	2	2	2811 141
23-34-257	GUSSET, Deck Opening Lower Panel	70	D	—	2	2	—	2	2	—	—	2963 750
		71	D	—	2	—	—	2	2	—	—	3446 956
	GUSSET, Quarter Panel to Deck Opening Lower Panel		V,L	—	—	—	1	—	—	—	—	3445 158-9
	GUSSET, Quarter Belt Bar and Support to Wheelhouse		B	—	—	1	—	—	—	—	—	2964 194-5
			J	—	—	1	—	—	—	—	—	2964 196-7

CARLINES J - Challenger, B - Barracuda, V - Valiant, L - Dart, R - Belvedere - Satallite, W - Coronet - Charger, P - Plymouth, D - Dodge, C - Chrysler, Y - Imperial

NUMERALS INDICATE: 21 - 2 DR. SED., 23 - 2 DR. H.T., 27 - CONV. CPE., 29 - FAST BACK, 41 - 4 DR. SED., 43 - 4 DR. H.T., 45 - 6 PASS. STA. WGN., 46 - 9 PASS. STA. WGN.

AR Indicates use as required.
# Indicates parts not listed in any previous parts book
Numerals in parentheses ( ) refer to notes.
★ Indicates change or addition.

Printed in U.S.A. January 1972

Right and left part numbers are on same line, first number is right, second number is left.

23-34-0 BODY BUMPERS Cont'd.

CODE	PART NAME			MODEL CODES	SEE BOTTOM NOTE 21	23	27	29	41	43	45	46	PART NUMBER
23-34-257	GUSSET Cont'd.												
	GUSSET, Quarter Belt Bar to Wheelhouse to Rr. Quarter Pillar		70	P	—	—	1	—	—	—	—	—	2901 078-9
	GUSSET, Quarter Panel Taillamp Opening Upper												
			71	R	—	—	—	—	—	—	1	1	3499 124-5
			71	W	—	—	—	—	—	—	1	1	3499 122-3
			70	D	—	—	1	—	—	—	—	—	3504 378-9
23-34-270	BUMPER, Quarter Panel Gas Filler Door		70	P,D,C	—	—	—	—	—	—	2	2	2811 139
			71	R,W,P,D,C	—	—	—	—	—	—	2	2	2811 139
23-34-275	BUMPER, Quarter Outside Panel Jack			V,L	—	—	—	2	2	—	—	—	2782 827
23-34-280	FILLER, Quarter Panel Tailamp Opening		Rt.	P	—	—	—	—	—	—	1	1	3894 486
			Rt.	D	—	—	—	—	—	—	1	1	2894 488
	FILLER, Quarter Outside Panel to Rr. Lower Pillar		Rt. 70	R,W	—	—	—	—	—	—	1	1	2860 139
	FILLER, Quarter Outside Panel Rear		71	J	—	1	1	—	—	—	—	—	3504 328-9
	FILLER, Quarter Panel Tailamp Opening to Tailgate Opening												
			71	R	—	—	—	—	—	—	1	1	3499 332-3
			71	W	—	—	—	—	—	—	1	1	3499 574-5
23-34-281	GASKET, Quarter Outside Panel		70	R	1	1	1	—	1	—	—	—	2963 574
	End Extension			Y	—	2	—	—	—	—	—	—	2901 430
				Y	—	—	—	—	—	2	—	—	2900 600
23-34-293	HEADER, Roof Rear	Complete	70	R,W	—	—	—	—	—	—	1	1	3417 401
		Complete	70	P,D,C	—	—	—	—	—	—	1	1	2934 429
		Complete	71	R,W	—	—	—	—	—	—	1	1	3482 547
		Complete	71	P,D,C	—	—	—	—	—	—	1	1	3482 869
23-34-301	PANEL, Roof			V,L	—	—	—	1	—	—	—	—	2965 661
				V	—	—	—	—	1	—	—	—	2842 322
				V,L	—	1	—	—	—	—	—	—	2842 323
				L	—	—	—	—	1	—	—	—	2842 326
				B	—	1	—	—	—	—	—	—	2963 296
				J	—	1	—	1	—	—	—	—	2963 297
			70	R,W	1	1	—	—	—	—	—	—	2838 573
			70	R,W	—	—	—	—	1	—	—	—	3444 575
			70	R,W	—	—	—	—	—	—	1	1	2529 831
			71	R,W	—	1	—	1	—	—	—	—	3445 833
			71	R,W	—	—	—	—	1	—	—	—	3445 101
			71	R,W	—	—	—	—	—	—	1	1	3440 088
			70	W	—	—	—	1	—	—	—	—	2838 103
			70	P	1	—	—	1	—	1	—	—	2900 207
			71	P	1	—	—	—	—	—	—	—	2900 208
				D	—	—	—	—	—	1	—	—	2900 207
				P,D	—	—	—	—	1	—	—	—	2900 206
			71	P,D	—	—	—	1	—	1	—	—	2900 207
				P,D,C	—	—	—	—	—	—	1	1	2893 229
				P,D,C,Y	—	1	—	—	—	—	—	—	2900 208
				C	—	—	—	—	1	—	—	—	2900 209
				C,Y	—	—	—	—	—	1	—	—	2900 116
23-34-308	MOTOR, Sun Roof		70	All	—	1	—	1	1	1	—	—	3412 549
	w/Gear Box and Drive Coupling		71	All	—	1	—	1	1	1	—	—	3571 510
	SWITCH, Sun Roof			All	—	1	—	1	1	1	—	—	3412 550
	GEAR BOX, Sun Roof		70	All	—	1	—	1	1	1	—	—	3412 551

CARLINES: J - Challenger, B - Barracuda, V - Valiant, L - Dart, R - Belvedere - Satellite, W - Coronet - Charger, P - Plymouth, D - Dodge, C - Chrysler, Y - Imperial

NUMERALS INDICATE: 21 - 2 DR. SED. 23 - 2 DR. H.T. 27 - CONV. CPE. 29 - FAST BACK 41 - 4 DR. SED 43 - 4 DR. H.T. 45 - 6 PASS. STA. WGN. 46 - 9 PASS. STA. WGN.

AR Indicates use as required.
\# Indicates parts not listed in any previous parts book
Numerals in parentheses ( ) refer to notes.
★ Indicates change or addition.

Printed in U.S.A. January 1972

Right and left part numbers are on same line, first number is right, second number is left.

CODE	PART NAME		MODEL CODES	SEE BOTTOM NOTE 21	23	27	29	41	43	45	46	PART NUMBER
23-34-0	**BODY BUMPERS Cont'd.**											
23-34-308	MOTOR Cont'd.											
	DRIVE PULLEY, Sun Roof		All	—	1	—	1	1	1	—	—	3412 552
	SCREW, Sun Roof Clutch Adj.		All	—	1	—	1	1	1	—	—	3412 553
	SLIDE w/CABLE, Sun Roof Rear	Rt. and Lt.	All	—	1	—	1	1	1	—	—	3412 554
	WEATHERSTRIP, Sun Roof		All	—	1	—	1	1	1	—	—	3412 555
	WEATHERSTRIP, Sun Roof Rear		All	—	1	—	1	1	1	—	—	3412 556
	DRIVE COUPLING, Sun Roof	70	All	—	1	—	1	1	1	—	—	3412 557
	CRANK, Sun Roof Emergency Operating		All	—	1	—	1	1	1	—	—	3412 558
23-34-309	SUN ROOF, Folding Type-Manual											
	FRAME, Folding Top	71	V,L	—	—	—	1	—	—	—	—	= 3674 200
	BRACKET, Frame to Roof Side Rail Inner Rr. Rt.	71	V,L	—	—	—	AR	—	—	—	—	= 3674 202
	HEADLINING, Roof	71	V,L	—	—	—	AR	—	—	—	—	3674 204
	MOULDING, Folding Top to Roof Seal Ret. Corner	71	V,L	—	—	—	1	—	—	—	—	= 3674 206-7
	MOULDING, Folding Top to Roof Seal Ret. Frt.	71	V,L	—	—	—	1	—	—	—	—	= 3674 208
	BOW, Folding Top	71	V,L	—	—	—	1	—	—	—	—	= 3674 209
	RAIL, Guide	71	V,L	—	—	—	1	—	—	—	—	= 3674 210-11
	EXTENSION, Guide Rail	71	V,L	—	—	—	1	—	—	—	—	= 3674 212-3
	RETAINER, Folding Top Headlining	71	V,L	—	—	—	AR	—	—	—	—	= 3674 216
	Hook, Latch	71	V,L	—	—	—	1	—	—	—	—	= 3674 217
	COVER, Outer	71	V,L	—	—	—	1	—	—	—	—	= 3674 218
	BEAD, Roof Header Headlining	71	V,L	—	—	—	AR	—	—	—	—	= 3674 220
	BUMPER, Outer Cover Pull Down	71	V,L	—	—	—	AR	—	—	—	—	= 3674 227
	ESCUTCHEON, Latch Hook	71	V,L	—	—	—	1	—	—	—	—	= 3674 228
	SPRING, Latch Hook to Latch Mech.	71	V,L	—	—	—	1	—	—	—	—	= 3674 229
	PLATE, Actuator Handle Bearing	71	V,L	—	—	—	1	—	—	—	—	= 3674 230
	HANDLE, Actuator	71	V,L	—	—	—	1	—	—	—	—	= 3674 231
	GUIDE, Side Rail Roof Bow	71	V,L	—	—	—	1	—	—	—	—	= 3674 240-1
	PLATE, Roof Header Striker	71	V,L	—	—	—	1	—	—	—	—	= 3674 250
	SCREW, Roof Header Striker Plate	71	V,L	—	—	—	AR	—	—	—	—	= 3674 251
	SCREW, Frame Brkt. to Roof Rail	71	V,L	—	—	—	AR	—	—	—	—	= 3674 252
	SCREW, Corner Moulding	71	V,L	—	—	—	AR	—	—	—	—	= 3674 253
	SCREW, Frt. Moulding	71	V,L	—	—	—	AR	—	—	—	—	= 3674 254
	SCREW, Guide Rail	71	V,L	—	—	—	AR	—	—	—	—	= 3674 255
	SCREW, Guide Rail Extension	71	V,L	—	—	—	AR	—	—	—	—	= 3674 256
	SCREW, Headlining Ret. to Frame	71	V,L	—	—	—	AR	—	—	—	—	= 3674 257
	SCREW, Rr. Plate Outer Cover to Roof	71	V,L	—	—	—	AR	—	—	—	—	= 3674 258
	SCREW, Latch Hook Escutcheon	71	V,L	—	—	—	AR	—	—	—	—	= 3674 268
	WASHER, Latch Hook Pressure	71	V,L	—	—	—	AR	—	—	—	—	= 3674 269
	WASHER, Latch Hook	71	V,L	—	—	—	AR	—	—	—	—	= 3674 270
	LOCKWASHER, Latch Hook	71	V,L	—	—	—	AR	—	—	—	—	= 3674 271
	BOLT, Latch Hook to Mech.	71	V,L	—	—	—	AR	—	—	—	—	= 3674 272
	SCREW, Actuator Handle Bearing Plate	71	V,L	—	—	—	AR	—	—	—	—	= 3674 273
	SCREW, Actuator Handle Set	71	V,L	—	—	—	AR	—	—	—	—	= 3674 274
	WASHER, Side Rail Frt. Guide	71	V,L	—	—	—	AR	—	—	—	—	= 3674 275
	LOCKWASHER, Side Rail Frt. Guide	71	V,L	—	—	—	AR	—	—	—	—	= 3674 276
	SCREW, Side Rail Frt. Guide	71	V,L	—	—	—	AR	—	—	—	—	= 3674 277
	SEAL, Folding Top to Roof	71	V,L	—	—	—	AR	—	—	—	—	= 3670 205
	LAMP, Dome	71	V,L	—	—	—	AR	—	—	—	—	2947 493
	BEZEL, Dome Lamp Lens and Retainer	71	V,L	—	—	—	AR	—	—	—	—	2947 845
	BOW NO. 2, Folding Top Complete	71	V,L	—	—	—	AR	—	—	—	—	= 3674 504

CARLINES J - Challenger, B - Barracuda, V - Valiant, L - Dart, R - Belvedere - Satallite, W - Coronet - Charger, P - Plymouth, D - Dodge, C - Chrysler, Y - Imperial

NUMERALS INDICATE: 21 - 2 DR. SED., 23 - 2 DR. H.T., 27 - CONV. CPE., 29 - FAST BACK, 41 - 4 DR. SED., 43 - 4 DR. H.T., 45 - 6 PASS. STA. WGN., 46 - 9 PASS. STA. WGN.

AR Indicates use as required.
\# Indicates parts not listed in any previous parts book
Numerals in parentheses ( ) refer to notes.
★ Indicates change or addition.

Printed in U.S.A.
January 1972

Right and left part numbers are on same line, first number is right, second number is left.

23-34-0 BODY BUMPERS Cont'd.

CODE	PART NAME		MODEL CODES	SEE BOTTOM NOTE 21	23	27	29	41	43	45	46	PART NUMBER
23-34-309	SUN ROOF Cont'd.											
	BRACKET, Frame to Roof Side Rail Inner											
		Lt. Rr. 71	V,L	—	—	—	AR	—	—	—	—	= 3674 505
		Frt. 71	V,L	—	—	—	AR	—	—	—	—	= 3674 506-7
	RETAINER, Roof Header Trim	71	V,L	—	—	—	AR	—	—	—	—	= 3674 509
	COVER, Roof Header Trim Retainer	71	V,L	—	—	—	AR	—	—	—	—	= 3674 512
	BRACKET, Dome Lamp Mtg.	71	V,L	—	—	—	AR	—	—	—	—	= 3720 060-1
23-34-326	FILLER, Shelf Panel Extension	70	R,W	1	1	—	—	—	—	—	—	2841 158-9
		70	W	—	—	—	1	—	—	—	—	2841 366-7
23-34-328	BRACE, Shelf Panel to Deck Opening Upper Panel		V,L	—	—	—	—	2	—	—	—	2782 746
			V,L	—	2	—	—	—	—	—	—	2782 746
	REINFORCEMENT, Shelf Panel to Deck Opening Upper Panel											
		71	R	—	2	—	—	—	—	—	—	3445 782
		71	W	—	2	—	2	—	—	—	—	3505 492
23-34-329	OVERLAY, Quarter Outside Panel	70	R-P	—	—	—	—	—	—	2	2	3444 813
		70	W-P	—	—	—	—	—	—	2	2	3444 834
		70	P-H	—	—	—	—	—	—	2	2	3444 846
		70	D-H	—	—	—	—	—	—	2	2	3444 860
		70	C	—	—	—	—	—	—	2	2	3444 874
		Block 71	B-S	—	1	1	—	—	—	—	—	3569 734-5
		White 71	B-S	—	1	1	—	—	—	—	—	3569 730-1
		71	R,W,P, D,C	—	—	—	—	—	—	2	2	3569 975
	OVERLAY, Quarter Outside End Extension	70	P-H	—	—	—	—	—	—	1	1	3446 574-5
		70	D-H	—	—	—	—	—	—	1	1	3444 856-7
		Lwr. 70	D-H	—	—	—	—	—	—	1	1	3446 572-3
		70	C	—	—	—	—	—	—	1	1	3444 870-1
		71	R-P	—	—	—	—	—	—	1	1	3612 504-5
		71	W-P	—	—	—	—	—	—	1	1	3569 996-7
		End 71	W-P	—	—	—	—	—	—	1	1	3612 640-1
		71	P-H	—	—	—	—	—	—	1	1	3506 858-9
		71	C	—	—	—	—	—	—	1	1	3570 002
	OVERLAY, Quarter Outside Fuel Filler Door	70	P-H	—	—	—	—	—	—	1	1	3444 844
		70	D-H	—	—	—	—	—	—	1	1	3444 858
		70	C	—	—	—	—	—	—	1	1	3444 872
		71	W-P	—	—	—	—	—	—	1	1	3569 995
		71	P	—	—	—	—	—	—	1	1	3506 856
		71	D	—	—	—	—	—	—	1	1	3506 922
		71	C	—	—	—	—	—	—	1	1	3506 606
	OVERLAY, Roof Air Deflector	71	D-H, C-P	—	—	—	—	—	—	AR	AR	3570 002
	OVERLAY, Roof Panel	71	D-H	—	—	—	—	—	—	AR	AR	3612 716
	OVERLAY, Roof Side	71	D-H	—	—	—	—	—	—	AR	AR	3612 716
	OVERLAY, Body Frt. Pillar	71	D-H	—	—	—	—	—	—	AR	AR	3570 002
	OVERLAY, Quarter Panel Tailgate Pillar Outer	71	D-H, C-P	—	—	—	—	—	—	AR	AR	3570 002
23-34-330	EXTENSION, Shelf Panel Rear		V,L	—	1	—	—	—	—	—	—	2839 402-3
23-34-334	MEDALLION, ORNAMENT or LOUVER, Quarter Panel (1)		L	—	—	—	—	1	—	—	—	2604 996-7

CARLINES J - Challenger, B - Barracuda, V - Valiant, L - Dart, R - Belvedere - Satallite, W - Coronet - Charger, P - Plymouth, D - Dodge, C - Chrysler, Y - Imperial

NUMERALS INDICATE: 21 - 2 DR. SED., 23 - 2 DR. H.T., 27 - CONV. CPE, 29 - FAST BACK, 41 - 4 DR. SED., 43 - 4 DR. H.T., 45 - 6 PASS. STA. WGN., 46 - 9 PASS. STA. WGN.

AR Indicates use as required.
\# Indicates parts not listed in any previous parts book
Numerals in parentheses ( ) refer to notes.
★ Indicates change or addition.

Printed in U.S.A. January 1972

Right and left part numbers are on same line, first number is right, second number is left.

CODE	PART NAME		MODEL CODES	SEE BOTTOM NOTE 21	23	27	29	41	43	45	46	PART NUMBER
23-34-0	**BODY BUMPERS Cont'd.**											
23-34-338	INSERT, Quarter Outside Louver Ornament	70	W-S	—	1	1	—	—	—	—	—	3446 162-3
	GASKET, Quarter Outside Louver	71	J-S	—	2	—	—	—	—	—	—	3569 498
23-34-346	BRACKET, Quarter Panel Wheelhouse to Fuel Tank Stone Deflector Lower		P,D,C	—	—	—	—	—	—	1	1	2894 002
		Upr. 71	R,W	—	—	—	—	—	—	1	1	3499 986
		Lwr. 71	R,W	—	—	—	—	—	—	1	1	3500 360
23-36-0	**PILLARS**											
23-36-3	FILLER, Body Front Pillar Lower to Inst. Panel		V,L	—	1	—	—	1	—	—	—	2664 532-3
23-36-5	PILLAR, Body Center		V,L	—	—	—	—	1	—	—	—	2769 174-5
		70	R,W	—	—	—	—	1	—	1	1	2859 572-3
		71	R,W	—	—	—	—	1	—	—	—	3482 138-9
		71	R,W	—	—	—	—	—	—	1	1	3482 128-9
			P,D,C	—	—	—	—	1	—	1	1	2859 886-7
			P,D,C,Y	—	—	—	—	—	1	—	—	2859 888-9
23-36-12	SUPPORT, Front Floor to Center Pillar		P	—	—	—	—	—	1	—	—	3444 756-7
			D	—	—	—	—	—	1	—	—	3444 758-9
			C,Y	—	—	—	—	—	1	—	—	3444 498-9
23-36-18	PLUG, Quarter Panel Tailgate Lock Lower Inner	70	R,W	—	—	—	—	—	—	1	1	2861 654
	PLUG, Body Lock Pillar Gage Hole	1/2" Dia.	V	—	—	—	2	—	—	—	—	1878 752
			P	1	—	—	—	—	—	—	—	1878 752
	PLUG, Quarter Panel Tailgate Lock Inner Pillar		P,D,C	—	—	—	—	—	—	2	2	2894 902
		71	R,W	—	—	—	—	—	—	1	1	2894 902
	PLUG, Tailgate Pillar Hinge Access Hole	Lt. 70	P,D,C	—	—	—	—	—	—	1	1	2480 957
23-36-20	EXTENSION, Floor Pan to Center Pillar	w/NUT	P,D,C,Y	—	—	—	—	—	1	—	—	2902 642-3
23-36-29	FILLER, Body Lock Pillar		V,L	—	—	—	1	—	—	—	—	3445 232-3
23-36-33	BRACKET, Body Lock Pillar to Quarter Impact Plate	w/NUT 70	P,D,C,Y	1	1	1	1	—	—	—	—	3446 154-5
23-36-53	PILLAR, Body Lock	Lwr.	V,L	—	—	—	1	—	—	—	—	2965 620-1
			V	—	—	—	—	1	—	—	—	2782 738-9
			V,L	—	1	—	—	—	—	—	—	2604 258-9
			L	—	—	—	—	1	—	—	—	2604 260-1
			B	—	1	—	—	—	—	—	—	2963 166-7
			B	—	—	1	—	—	—	—	—	2964 168-9
			J	—	1	—	1	—	—	—	—	2963 668-9
			J	—	—	1	—	—	—	—	—	2964 170-1
		70	R	—	—	—	—	1	—	—	—	3504 570-1
		70	W	—	—	—	—	1	—	—	—	2838 406-7
		Upr. 70	R,W	1	—	—	—	—	—	—	—	2838 398-9
		Lwr. 70	R,W	1	—	—	—	—	—	—	—	2838 722-3
		70	R,W	—	1	—	—	—	—	—	—	2838 786-7
		70	R,W	—	—	1	—	—	—	—	—	2840 284-5
		71	R	—	—	—	—	1	—	—	—	3445 618-9
		71	R	—	1	—	—	—	—	—	—	3445 614-5
		71	W	—	1	—	1	—	—	—	—	3445 616-7
		71	W	—	—	—	—	1	—	—	—	3445 060-1
		70	W	—	—	—	1	—	—	—	—	2838 024-5
		Upr. 70	P	1	—	—	—	—	—	—	—	2900 688-9
		Lwr. 70	P	1	—	—	—	—	—	—	—	2900 690-1

CARLINES: J - Challenger, B - Barracuda, V - Valiant, L - Dart, R - Belvedere - Satallite, W - Coronet - Charger, P - Plymouth, D - Dodge, C - Chrysler, Y - Imperial

NUMERALS INDICATE: 21 - 2 DR. SED., 23 - 2 DR. H.T., 27 - CONV. CPE., 29 - FAST BACK, 41 - 4 DR. SED., 43 - 4 DR. H.T., 45 - 6 PASS. STA. WGN., 46 - 9 PASS. STA. WGN.

AR Indicates use as required.
\# Indicates parts not listed in any previous parts book
Numerals in parentheses ( ) refer to notes.
★ Indicates change or addition.

Printed in U.S.A.
January 1972

Right and left part numbers are on same line, first number is right, second number is left.

CODE	PART NAME		MODEL CODES	SEE BOTTOM NOTE 21	23	27	29	41	43	45	46	PART NUMBER
23-36-0	**PILLARS Cont'd.**											
23-36-53	PILLAR Cont'd.											
		71	P	1	—	—	—	—	—	—	—	2900 692-3
			P	—	1	—	1	—	—	—	—	2900 692-3
			P	—	—	1	—	—	—	—	—	2901 048-9
			P	—	—	—	—	1	—	—	—	2900 694-5
			P	—	—	—	—	—	1	—	—	2900 696-7
			D	—	1	—	—	—	—	—	—	2900 698-9
			D	—	—	1	—	—	—	—	—	2901 050
			D	—	—	—	—	1	—	—	—	2900 700-1
			D	—	—	—	—	—	1	—	—	2900 702-3
			C	—	—	1	—	—	—	—	—	2901 052-3
		70	C,Y	—	1	—	—	—	—	—	—	2900 704-5
		71	C,Y	—	1	—	—	—	—	—	—	3615 028-9
			C,Y	—	—	—	—	1	1	—	—	2900 074-5
	PILLAR, Quarter Panel Rear Door											
		70	R,W	—	—	—	—	—	—	1	1	2811 744-5
		Lower	P	—	—	—	—	—	—	1	1	2893 976-7
		Lower	D	—	—	—	—	—	—	1	1	2893 978-9
		Lower	C	—	—	—	—	—	—	1	1	2893 232-3
		Upr. Outer 70	R,W	—	—	—	—	—	—	1	1	2811 748-9
		Upr. Inner 70	R,W	—	—	—	—	—	—	1	1	2811 746-7
		Lwr. 71	R	—	—	—	—	—	—	1	1	3439 536-7
		Lwr. 71	W	—	—	—	—	—	—	1	1	3439 538-9
		Upr. Inner 71	R,W	—	—	—	—	—	—	1	1	3439 546-7
		Upr. Outer 71	R,W	—	—	—	—	—	—	1	1	3439 550-1
		Upr. Inner 71	C	—	—	—	—	—	—	1	1	2893 234-5
		Upr. Outer 71	C	—	—	—	—	—	—	1	1	2893 236-7
		Upr. Inner 70	P,D,C	—	—	—	—	—	—	1	1	2893 234-5
		Upr. Outer 70	P,D,C	—	—	—	—	—	—	1	1	2893 236-7
	PILLAR, Quarter Panel Tailgate Lock											
		Lwr. Inner 70	R,W	—	—	—	—	—	—	1	1	2811 494-5
		Rt. 71	R,W	—	—	—	—	—	—	1	1	3482 528
		Lt. 71	R,W	—	—	—	—	—	—	1	1	2895 193
		Lower Inner	P,D,C	—	—	—	—	—	—	1	1	2934 496
		Inner Lt. 70	P,D,C	—	—	—	—	—	—	1	1	2894 947
		Inner Lt. 71	P,D,C	—	—	—	—	—	—	1	1	2895 193
	EXTENSION, Quarter Panel Rr. Door Lock Upr. Pillar to Wheelhouse	70	R,W	—	—	—	—	—	—	1	1	2860 132-3
	EXTENSION, Body Lock Pillar to Wheelhouse		P,C	—	—	—	—	—	—	1	1	2900 550-1
			D	—	—	—	—	1	1	1	1	2900 550-1
23-36-54	TAPPING PLATE, Quarter Panel Tailgate Inner to Outer Pillar Hinge Inner Reinf.	Upr. Lt. 70	R,W	—	—	—	—	—	—	1	1	2860 487
		Lwr. Lt. 70	R,W	—	—	—	—	—	—	1	1	2860 488
		Upr. Lt. 71	R,W	—	—	—	—	—	—	1	1	3440 181
		Lwr. Lt. 71	R,W	—	—	—	—	—	—	2	2	3440 182
23-36-58	BRACKET, Quarter Panel Wheelhouse to Rr. Door Lock Pillar Brace											
		71	R,W	—	—	—	—	—	—	1	1	3499 822-3
23-36-66	REINFORCEMENT, Body Lock Pillar		V,L	—	1	—	1	—	—	—	—	2604 850-1
		To Side Sill	B,J	—	1	1	1	—	—	—	—	3444 616-7
		To Side Sill Complete	B,J	—	1	1	1	—	—	—	—	3417 608-9
		70	R,W	1	1	1	1	—	—	—	—	2529 564-5
		At Belt 70	R,W	—	1	1	1	—	—	—	—	2603 722-3
		Upr. 71	R	—	1	—	—	—	—	—	—	3615 046-7
		Upr. 71	W	—	1	—	1	—	—	—	—	3615 044-5
		To Side Sill 71	R,W	—	1	—	1	—	—	—	—	3445 624-5

CARLINES J - Challenger, B - Barracuda, V - Valiant, L - Dart, R - Belvedere - Satallite, W - Coronet - Charger, P - Plymouth, D - Dodge, C - Chrysler, Y - Imperial

NUMERALS INDICATE: 21 - 2 DR. SED., 23 - 2 DR. H.T., 27 - CONV. CPE., 29 - FAST BACK, 41 - 4 DR. SED., 43 - 4 DR. H.T., 45 - 6 PASS. STA. WGN., 46 - 9 PASS. STA. WGN.

AR Indicates use as required.
\# Indicates parts not listed in any previous parts book
Numerals in parentheses ( ) refer to notes.
★ Indicates change or addition.

Printed in U.S.A.
January 1972

Right and left part numbers are on same line, first number is right, second number is left.

23-36-0 PILLARS Cont'd.

CODE	PART NAME	MODEL CODES	SEE BOTTOM NOTE 21	23	27	29	41	43	45	46	PART NUMBER
23-36-66	REINFORCEMENT Cont'd.										
	Up to June 1971	P,D,C,Y	—	1	1	1	—	—	—	—	2900 712-3
	After June 1971 71	P,D,C,Y	1	1	—	1	—	—	—	—	≠3615 744-5
	Upr. 70	R,W	—	1	1	—	—	—	—	—	2842 822-3
	Upr. 70	R,W	1	—	—	—	—	—	—	—	2838 726-7
	Upr. 70	W	—	—	—	1	—	—	—	—	2842 824-5
	71	R,W	—	—	—	—	2	2	2	2	3440 180
	To Wheelhouse Lwr.	P,D,C	—	—	—	—	—	—	1	1	2894 028-9
	Upr. 70	P	2	—	—	—	—	—	—	—	2900 710
	REINFORCEMENT, Body Lock Pillar Lock Striker	P,D,C,Y	2	2	2	2	2	2	2	2	2964 648
23-36-118	PILLAR, Quarter Panel Tailgate										
	Lwr. Lt. 70	R,W	—	—	—	—	—	—	1	1	2860 486
	Upr. 71	R,W	—	—	—	—	—	—	1	1	3440 148-9
	Upr. Outer	P	—	—	—	—	—	—	1	1	2894 228-9
	Upr. Outer	D	—	—	—	—	—	—	1	1	2894 230-1
	Upr. Outer 70	C	—	—	—	—	—	—	1	1	2894 232-3
	Outer 70	R,W	—	—	—	—	—	—	1	1	2859 548-9
	PILLAR, Quarter Panel Tailgate Opening Upper Inner 70	R,W	—	—	—	—	—	—	1	1	2860 092-3
	Inner	P,D,C	—	—	—	—	—	—	1	1	2895 128-9
	Outer	P,D,C	—	—	—	—	—	—	1	1	2895 130-1
	PILLAR, Quarter Panel Tailgate Hinge Inner Lt. 71	P,D,C	—	—	—	—	—	—	1	1	3499 135
23-36-123	HANDLE, Quarter Panel Outside Tailgate Pillar Upper Assist	P,D,C	—	—	—	—	—	—	1	1	2894 576-7
23-36-125	REINFORCEMENT, Quarter Panel Tailgate Pillar Lwr. 70	R,W	—	—	—	—	—	—	1	1	2860 192-3
	To Roof Rail Support	P,D,C	—	—	—	—	—	—	1	1	2894 030
	To Quarter Pillar Hinge, Lt.	P,D,C	—	—	—	—	—	—	1	1	2894 193
	To Sill Hinge Pivot Support	P,D,C	—	—	—	—	—	—	1	1	2894 859
	To Roof Rail Frt. Support Lt.	P,D,C	—	—	—	—	—	—	1	1	2894 775
	REINFORCEMENT, Quarter Panel Tailgate Inner to Outer Pillar Hinge Outer 70	R,W	—	—	—	—	—	—	1	1	2860 099
	Inner Rt. 71	R,W	—	—	—	—	—	—	1	1	3440 884
	Outer Lt. 71	R,W	—	—	—	—	—	—	1	1	3440 885
	Inner Upr. 70	R,W	—	—	—	—	—	—	1	1	2860 098
	Inner Lwr. 70	R,W	—	—	—	—	—	—	1	1	2860 475
	SUPPORT, Quarter Panel Tailgate Pillar To Roof Rail Rr. 71	R	—	—	—	—	—	—	1	1	3499 604-5
	To Roof Rail Rr. 71	W	—	—	—	—	—	—	1	1	3499 606-7
	To Roof Rail Frt. 71	R,W	—	—	—	—	—	—	1	1	3439 562-3
	BRACE, Quarter Panel Wheelhouse to Rr. Door Lock Pillar 71	R,W	—	—	—	—	—	—	1	1	3499 820-1
	To Roof Rail Rr.	P,D	—	—	—	—	—	—	1	1	2894 934-5
	To Roof Rail Rr.	C	—	—	—	—	—	—	1	1	2894 938-9
	To Roof Rail Frt.	P,D,C	—	—	—	—	—	—	1	1	2894 056-7
	To Sill Hinge Pivot Lt.	P,D,C	—	—	—	—	—	—	1	1	2894 494
23-36-133	SPACER, Quarter Panel Tailgate Rr. Pillar Bumper Bolt 70	R,W	—	—	—	—	—	—	2	2	2860 482
	SPACER, Roof Air Deflector to Roof Center	P,D,C	—	—	—	—	—	—	1	1	3440 446
	Outer	P,D,C	—	—	—	—	—	—	1	1	3440 450
	Inter.	P,D,C	—	—	—	—	—	—	1	1	3440 448
23-36-134	DEFLECTOR, Roof Rr. Air	P,D,C	—	—	—	—	—	—	1	1	2894 586
	Nut and Seal	P,D,C	—	—	—	—	—	—	9	9	6028 886

CARLINES	J - Challenger B - Barracuda	V - Valiant L - Dart	R - Belvedere - Satallite W - Coronet - Charger	P - Plymouth D - Dodge	C - Chrysler Y - Imperial
NUMERALS INDICATE:	21 - 2 DR. SED. 23 - 2 DR. H.T.	27 - CONV. CPE. 29 - FAST BACK	41 - 4 DR. SED. 43 - 4 DR. H.T.	45 - 6 PASS. STA. WGN. 46 - 9 PASS. STA. WGN.	

AR Indicates use as required.
\# Indicates parts not listed in any previous parts book

Numerals in parentheses ( ) refer to notes.
★ Indicates change or addition.

Printed in U.S.A.
January 1972

Right and left part numbers are on same line, first number is right, second number is left.

CODE	PART NAME		MODEL CODES	SEE BOTTOM NOTE 21	23	27	29	41	43	45	46	PART NUMBER
23-36-0	**PILLARS Cont'd.**											
23-36-134	DEFLECTOR Cont'd.											
	PACKAGE, Roof Rear Air Deflector											
		71	R,W	—	—	—	—	—	—	1	1	3579 672
	Nut w/Seal			—	—	—	—	—	—	7	7	6028 886
23-38-0	**FLOOR TUNNEL CONSOLE**											
23-38-1	CONSOLE, Floor Tunnel	70	V	—	—	—	1	1	—	—	—	3415 844
			V,L	—	1	—	1	—	—	—	—	3415 844
		Manual Trans. 70	R,W	1	1	1	1	1	—	1	1	2788 367
		Auto. Trans. 70	R,W	1	1	1	1	1	—	1	1	2788 366
			P,D,C	—	1	1	1	—	1	—	—	2788 366
	BASE, Floor Console	Upper 70	B,J	—	1	1	1	—	—	—	—	3504 FX9
		Upper 71	B,J	—	1	1	—	—	—	—	—	= 3540 GX9
		Standard Trans. Lower	B,J,R,W	—	1	1	1	—	—	—	—	3526 FX9
		Auto. Trans. Lower	B,J,R,W	—	1	1	1	—	—	—	—	3505 FX9
		Upr. 71	R,W	—	1	—	1	—	—	—	—	3504 FX9
	BASE, Console	Blue	B	—	1	—	—	—	—	—	—	1003 FB5
		Green		—	1	—	—	—	—	—	—	1003 FF8
		Copper		—	1	—	—	—	—	—	—	1003 FK4
		Black		—	1	—	—	—	—	—	—	1003 FX9
		Briar		—	1	—	—	—	—	—	—	1003 FE4
		White		—	1	—	—	—	—	—	—	1003 FW1
		Gold		—	1	—	—	—	—	—	—	1003 FY4
		Blue	J	—	—	—	1	—	—	—	—	1003 FB5
		Green		—	—	—	1	—	—	—	—	1003 FF8
		Copper		—	—	—	1	—	—	—	—	1003 FK4
		Tan		—	—	—	1	—	—	—	—	1003 FT5
		Black		—	—	—	1	—	—	—	—	1003 FX9
		Blue 71	B	—	1	—	—	—	—	—	—	1003 GB4
		Black 71	B	—	1	—	—	—	—	—	—	1003 FX9
		Gold 71	B	—	1	—	—	—	—	—	—	1003 GY4
23-38-2	EXTENSION, Console to Floor											
	Rear	70	R-M,R-P,R-S W-M,W-H, W-P,W-S	1	1	1	—	1	—	1	1	2788 372
				1	1	1	1	—	—	—	—	2788 372
		w/Auto. Trans.	P,D,C	—	1	1	1	—	1	—	—	2788 372
23-38-3	LID, Floor Console Compartment	70	V,L	—	1	—	1	1	—	—	—	3415 685
		71	V,L	—	1	—	1	—	—	—	—	3415 685
		70	R,W	1	1	1	1	1	—	1	1	2656 184
		70	P,D	—	1	—	1	—	1	—	—	2656 184
		71	P	—	1	—	1	—	1	—	—	2656 184
23-38-5	FINISH PLATE, Floor Console											
	Manual Trans.	w o Insert 70	V,L	—	1	—	1	1	—	—	—	2589 600
	Manual Trans.	w/Vinyl Insert 70	V,L	—	1	—	1	1	—	—	—	2877 234
	Manual Trans.	w/Vinyl Insert 71	V,L	—	—	—	1	—	—	—	—	2877 234
	Auto Trans.	w o Insert 70	V,L	—	1	—	1	1	—	—	—	2589 599
	Auto Trans.	w Vinyl Insert	V,L	—	1	—	1	1	—	—	—	2877 233
		Man. 70	B,J	—	1	1	1	—	—	—	—	3415 507
		Auto. 70	B,J	—	1	1	1	—	—	—	—	3415 508
	Plate	Base, Manual 71	B,J	—	1	1	1	—	—	—	—	3509 152
	Plate	Base, Auto. 71	B,J	—	1	1	1	—	—	—	—	3509 153
	Plate	Base, Manual 71	R	—	1	—	—	—	—	—	—	3509 152
	Plate	Base, Manual 71	W	—	1	—	1	1	—	1	1	3509 152
	Plate	Base, Auto. 71	R	—	1	—	—	—	—	—	—	3509 153
	Plate	Base, Auto. 71	W	—	1	—	1	1	—	1	1	3509 153
	PLATE, Rr. Four Speed	Manual 70	R,W	1	1	1	1	1	—	1	1	2879 973
	PLATE, Four Speed	Manual Frt. 70	R,W	1	1	1	1	1	—	1	1	2657 175

CARLINES	J - Challenger B - Barracuda	V - Valiant L - Dart	R - Belvedere - Satallite W - Coronet - Charger	P - Plymouth D - Dodge	C - Chrysler Y - Imperial
NUMERALS INDICATE:	21 - 2 DR. SED. 23 - 2 DR. H.T.	27 - CONV. CPE. 29 - FAST BACK	41 - 4 DR. SED. 43 - 4 DR. H.T.	45 - 6 PASS. STA. WGN. 46 - 9 PASS. STA. WGN.	

AR Indicates use as required.
\# Indicates parts not listed in any previous parts book
Numerals in parentheses ( ) refer to notes.
★ Indicates change or addition.

Printed in U.S.A.
January 1972

Right and left part numbers are on same line, first number is right, second number is left.

23-38-0 FLOOR TUNNEL CONSOLE Cont'd.

CODE	PART NAME		MODEL CODES	SEE BOTTOM NOTE 21	23	27	29	41	43	45	46	PART NUMBER
23-38-5	FINISH PLATE Cont'd.											
	Four Speed	Manual Frt. 70	R,W	1	1	1	1	1	—	1	1	2879 813
	PLATE, Auto.	Frt. 70	R,W,P,D	1	1	1	1	1	1	—	—	2657 580
		Base. Auto. 70	R,W,P,D	1	1	1	1	1	1	—	—	2879 815
		Lid 70	R,W,P,D	1	1	1	1	1	1	1	1	2879 817
		Base Auto. 70	P,D,C	—	1	1	1	—	1	—	—	2879 811
		Lid Auto. 71	P	—	1	—	1	—	1	—	—	3509 159
		Base, Auto. 71	P	—	1	—	1	—	1	—	—	3509 157
	End Cap	Frt. Upr. 71	P	—	1	—	1	—	1	—	—	3509 161
	Plate	Base Auto. Frt. 71	P	—	1	—	1	—	1	—	—	2657 580
		Base Auto. 71	D	—	1	—	—	—	—	—	—	3509 150
		Base Auto. 71	C	—	1	—	—	—	1	—	—	3509 151
	End Cap	Frt. Upr. 70	R,W,P,D	1	1	1	1	—	1	1	1	2879 819
23-38-14	HINGE, Floor Console Compartment Lid	70	V,L	—	1	—	1	1	—	—	—	3415 686
		71	V	—	—	—	1	—	—	—	—	3415 686
		71	L	—	1	—	1	—	—	—	—	3415 686
			B,J	—	1	1	1	—	—	—	—	3415 131
		71	R	—	1	—	—	—	—	—	—	3415 131
		71	W	—	1	—	1	1	—	1	1	3415 131
		71	P	—	1	—	1	—	1	—	—	2656 859
		71	D	—	1	—	—	—	—	—	—	2878 268
		70	R,W,P,D	1	1	1	1	1	1	1	1	2656 859
			C	—	1	1	—	—	1	—	—	2878 268
23-38-15	LATCH, Console		V,L	—	1	—	1	—	—	—	—	3508 038
23-38-22	TAPPING PLATE, Floor Console Lid Hinge or Adapter	70	R,W, P,D,C	1	1	1	1	1	1	1	1	2876 358
		71	P,D,C	—	1	—	1	—	1	—	—	2876 358
23-38-23	CABLE, Floor Console Compartment Lid Check		B,J	—	1	1	1	—	—	—	—	3415 393
		71	R	—	1	—	—	—	—	—	—	3415 393
		71	W	—	1	—	1	1	—	1	1	3415 393
23-38-27	BRACKET, Floor Console Compartment Lid Opening Stop		V,L	—	1	—	1	1	—	—	—	2589 598
	BRACKET, Console to Floor Pan Mounting Frt.		V,L	—	1	—	1	—	—	—	—	2839 184
	BRACKET, Console Gear Selector to Floor Pan Mtg.	w/Nut	V,L	—	1	—	1	—	—	—	—	2839 186
	BRACKET, Roof Console		B,J	—	1	—	1	—	—	—	—	2879 736
	BRACKET, Console to Floor	Frt.	B,J	—	1	1	1	—	—	—	—	3444 275
		Rr.	B,J	—	1	1	1	—	—	—	—	3444 277
		Frt. 71	R,W	—	1	—	1	—	—	—	—	3444 275
		Frt. 71	R,W	—	1	—	1	—	—	—	—	3444 277
	BRACKET, Console Front T/Pad to Console Rr.		D,C	—	1	1	1	—	1	—	—	2878 519
23-38-29	BUMPER, Floor Tunnel Console Lid		V,L	—	2	—	2	2	—	—	—	1651 493
	BUMPER, Console Opening to Lid	70	R,W,P,D	2	2	2	2	2	2	2	2	2789 126
		71	P	—	2	—	2	—	2	—	—	2789 126
23-38-43	BEZEL, Floor Console End Cap	70	R,W,P	1	1	1	1	1	1	1	1	2657 134
		70	D,C	—	1	1	—	—	1	—	—	2589 728
		71	P	—	1	—	1	—	1	—	—	2657 134
		71	D,C	—	1	—	1	—	1	—	—	2589 728
23-38-44	CLIP, Floor Console Frt. Plate Frt.	70	R,W,P,D	1	1	1	1	1	1	1	1	2589 789
		71	P,D,C	—	1	—	1	—	1	—	—	2589 789

CARLINES	J - Challenger	V - Valiant	R - Belvedere - Satallite	P - Plymouth	C - Chrysler
	B - Barracuda	L - Dart	W - Coronet - Charger	D - Dodge	Y - Imperial

NUMERALS INDICATE:	21 - 2 DR. SED.	27 - CONV. CPE.	41 - 4 DR. SED.	45 - 6 PASS. STA. WGN.
	23 - 2 DR. H.T.	29 - FAST BACK	43 - 4 DR. H.T.	46 - 9 PASS. STA. WGN.

AR Indicates use as required.
\# Indicates parts not listed in any previous parts book
Numerals in parentheses ( ) refer to notes.
★ Indicates change or addition.

Printed in U.S.A.
January 1972

Right and left part numbers are on same line, first number is right, second number is left.

CODE	PART NAME		MODEL CODES	SEE BOTTOM NOTE 21	23	27	29	41	43	45	46	PART NUMBER
23-38-0	**FLOOR TUNNEL CONSOLE Cont'd.**											
23-38-44	CLIP Cont'd.											
	CLIP, Console End Cap Bezel Att.	70	R,W,P,D,C	2	2	2	2	2	2	2	2	2789 250
		71	P,D,C	—	1	—	1	—	1	—	—	2789 250
23-38-45	REINFORCEMENT, Console Compartment Lid Opening Stop Brkt.		V,L	—	1	—	1	1	—	—	—	2656 088
23-38-46	STRIKER, Floor Console Lid Latch		V,L	—	1	—	1	1	—	—	—	3415 687
			B,J	—	1	1	1	—	—	—	—	2879 805
		71	R	—	1	—	—	—	—	—	—	2879 805
		71	W	—	1	—	1	1	—	1	1	2879 805
	STRIKER, Console Compartment Lid	70	R,W,P	1	1	1	1	1	1	1	1	2789 380
		70	P,D,C	—	1	1	1	—	1	—	—	2878 269
		71	P	—	1	—	1	—	1	—	—	2789 380
		71	D	—	1	—	—	—	—	—	—	2878 269
		71	C	—	1	—	—	—	1	—	—	2878 269
23-38-48	PLATE, Console Rear Opening		V,L	—	1	—	1	1	—	—	—	2656 090
23-39-0	**WINDOW LIFT (MANUAL)**											
23-39-2	SPRING, Door Window Regulator Assist	Frt.	V,L	—	—	—	2	—	—	—	—	3454 966
		Frt.	V,L	—	2	—	—	—	—	—	—	2299 819
		Frt. 71	V,L	—	—	—	—	2	—	—	—	3583 559
		Rr. 71	V,L	—	—	—	—	2	—	—	—	2520 534
		Rr. 71	R,W	—	—	—	—	2	—	2	2	3508 121
		Frt. 70	V,L,R,W	—	—	—	—	2	—	2	2	2583 559
		Frt.	B,J	—	2	2	2	—	—	—	—	3454 237
		Frt. 71	R,W	—	2	—	2	—	—	—	—	3548 596
		Frt. 71	R,W	—	—	—	—	2	—	2	2	2520 490
		Frt. 71	P,D,C	—	—	—	—	2	2	2	2	3548 643
		Rr. 71	P,D,C	—	—	—	—	2	2	2	2	2520 557
		Frt.	P,D,C	2	2	—	2	—	—	—	—	2486 851
		Rr. 70	V,L,R,W	—	—	—	—	2	—	2	2	2520 534
23-39-5	REGULATOR, Door Window	Frt.	V,L	—	1	—	—	1	—	—	—	2765 792-3
		Frt. 70	B	—	1	1	1	—	—	—	—	2945 828-9
		Frt. 70	J	—	1	1	1	—	—	—	—	2999 398-9
		Frt. 70	R,W	1	1	1	1	—	—	—	—	2802 800-1
		Frt. Rt. 70	R,W	—	—	—	—	1	—	1	1	2802 802
		Frt. Lt. 70	R,W	—	—	—	—	1	—	1	1	2802 801
		wVent Frt. 70	P,D,C	1	—	1	—	—	—	—	—	2935 394-5
		Frt. 70	P,D,C	—	—	—	—	1	1	1	1	2935 392-3
		Rr. 70	V,L,R,W	—	—	—	—	1	—	1	1	2583 064-5
		Rr. 70	P,D,C	—	—	—	—	1	1	1	1	2935 396-7
		Frt. 71	V,L	—	—	—	—	1	—	—	—	2765 792-3
		Rr. 71	V,L	—	—	—	—	1	—	—	—	2583 064-5
		Frt. 71	L	—	1	—	—	—	—	—	—	2765 792-3
		Frt. 71	B	—	1	1	—	—	—	—	—	3586 190-1
		Frt. 71	J	—	1	1	—	—	—	—	—	3586 192-3
		Frt. 71	R,W	—	1	—	1	—	—	—	—	3508 392-3
		Frt. 71	R,W	—	—	—	—	1	—	1	1	3508 400-1
		Rr. 71	R,W	—	—	—	—	1	—	1	1	3508 404-5
		Frt. 71	P,D,C	—	—	—	—	1	1	1	1	3548 554-5
		Rr. 71	P,D,C	—	—	—	—	1	1	1	1	3548 684-5
	ARM, Front Door Manual Window Regulator		V,L	—	—	—	1	—	—	—	—	3454 536-7
		w/o Vent 70	P,D,C	1	1	—	1	—	—	—	—	2945 968-9
		w/o Vent 71	P,D,C	1	1	—	1	—	—	—	—	3548 626-7
	PLATE and LINK, Front Door Manual Window Regulator Sector		V,L	—	—	—	1	—	—	—	—	3454 544-5

CARLINES J - Challenger, B - Barracuda; V - Valiant, L - Dart; R - Belvedere - Satallite, W - Coronet - Charger; P - Plymouth, D - Dodge; C - Chrysler, Y - Imperial

NUMERALS INDICATE: 21 - 2 DR. SED., 23 - 2 DR. H.T., 27 - CONV. CPE., 29 - FAST BACK, 41 - 4 DR. SED., 43 - 4 DR. H.T., 45 - 6 PASS. STA. WGN., 46 - 9 PASS. STA. WGN.

AR Indicates use as required.
\# Indicates parts not listed in any previous parts book
Numerals in parentheses ( ) refer to notes.
★ Indicates change or addition.

Printed in U.S.A.
January 1972

Right and left part numbers are on same line, first number is right, second number is left.

23-39-0 WINDOW LIFT (MANUAL) Cont'd.

CODE	PART NAME	MODEL CODES	SEE BOTTOM NOTE 21	23	27	29	41	43	45	46	PART NUMBER
23-39-5	REGULATOR Cont'd.										
	70	P	—	—	—	1	—	—	—	—	2999 928-9
	w o Vent 70	P,D,C	1	1	—	—	—	—	—	—	2945 966-7
	71	P	—	—	—	1	—	—	—	—	3548 628-9
	w/o Vent 71	P,D,C	—	1	—	—	—	—	—	—	3548 628-9
23-39-12	SPRING, Front Door Manual Window Regulator	P,D,C	2	2	—	2	—	—	—	—	1954 125
	71	V,L	—	—	—	2	—	—	—	—	1954 125
23-39-15	STOP, Window Regulator Down on Plate Frt.	V	—	—	—	2	—	—	—	—	3454 967
	Frt. 70	V,B,L	—	2	2	—	2	—	—	—	1909 918
	Frt. 70	R,W	2	2	2	2	2	—	2	2	1909 918
	Frt. 70	P,D,C	2	2	2	2	2	2	2	2	1909 918
	Frt. 71	V	—	—	—	—	2	—	—	—	1909 918
	Frt. 71	L,P,D,C	2	2	—	2	2	—	—	—	1909 918
	Rr. 71	V,L	—	—	—	—	2	—	—	—	1909 918
	Rr. 71	R,W,P,D,C	—	—	—	—	2	2	2	2	1909 918
	Rr. 70	V,L	—	—	—	—	2	—	—	—	1909 918
	Rr. 70	R,W	—	—	—	—	2	—	2	2	1909 918
	Rr. 70	P,D,C	—	—	—	—	2	2	2	2	1909 918
	Qtr. 70	L,B,J	—	2	2	2	—	—	—	—	1909 918
	Qtr. 71	V,L	—	2	—	—	—	—	—	—	1909 918
	Qtr. 71	R,W	—	2	2	—	—	—	—	—	1909 918
	Qtr. 70	R,W	—	—	2	—	—	—	—	—	1909 918
	Qtr. 70	P	2	—	—	—	—	—	—	—	1909 918
	NOTE: Also see Code 23-64-12										
23-39-17	BUSHING, Quarter Window Regulator Rear Arm 70	R,W	—	4	4	4	—	—	—	—	2583 551
23-39-19	BRACKET and SUPPORT, Frt. Door Window Regulator Arm Pivot 70	P,D,C,Y	—	2	—	2	—	—	—	—	2894 786
	Up To Nov. 1971 71	P,D,C,Y	2	2	—	2	—	—	—	—	3581 121
	After Nov. 1971 71	P,D,C,Y	1	1	—	1	—	—	—	—	≠3582 014
	SUPPORT and BRACKET, Rr. Door Window Regulator Arm Pivot Bracket w/NUT	P,D,C,Y	—	—	—	—	2	2	2	2	3581 860
	SUPPORT, Frt. Door Window Regulator Pivot Bracket w/Nut 71	P,D,C,Y	—	—	—	—	1	1	1	1	3581 276-7
	PLATE, Frt. Door Window Regulator Guide w/Nut 71	P,D,C,Y	—	—	—	—	1	1	1	1	3581 276
	BRACKET, Frt. Door Regulator Arm Pivot 71	P,D,C,Y	2	2	—	2	2	2	2	2	3581 568
	BRACKET, Rear Door Window Regulator Arm Pivot w/Screw 71	R,W	—	—	—	—	2	—	2	2	3581 463
	w/Stud 71	R,W	—	—	—	—	2	—	2	2	3499 344
23-39-24	PLATE and GUIDE, Frt. Door Regulator Arm Pivot	V,L	—	—	—	1	—	—	—	—	3417 732-3
	SUPPORT and GUIDE, Door Window Regulator Arm Pivot	B	—	2	2	—	—	—	—	—	3417 250
		J	—	2	2	2	—	—	—	—	3417 445
	GUIDE, Frt. Door Regulator Arm Pivot 71	R,W	—	2	—	2	2	—	2	2	3482 573
	GUIDE and CLIP, Frt. Door Window Regulator Arm Pivot 71	R,W	—	1	—	1	—	—	—	—	3482 025

CARLINES	J - Challenger	V - Valiant	R - Belvedere - Satallite	P - Plymouth	C - Chrysler
	B - Barracuda	L - Dart	W - Coronet - Charger	D - Dodge	Y - Imperial
NUMERALS INDICATE:	21 - 2 DR. SED.		27 - CONV. CPE.	41 - 4 DR. SED.	45 - 6 PASS. STA. WGN.
	23 - 2 DR. H.T.		29 - FAST BACK	43 - 4 DR. H.T.	46 - 9 PASS. STA. WGN.

AR Indicates use as required.
\# Indicates parts not listed in any previous parts book
Numerals in parentheses ( ) refer to notes.
★ Indicates change or addition.

Printed in U.S.A.
January 1972

Right and left part numbers are on same line, first number is right, second number is left.

23-39-0 WINDOW LIFT (MANUAL) Cont'd.

CODE	PART NAME	MODEL CODES	SEE BOTTOM NOTE 21	23	27	29	41	43	45	46	PART NUMBER
23-39-24	PLATE and GUIDE Cont'd.										
	SUPPORT, Frt. Door Window Regulator Arm Pivot Guide 71	R,W	—	2	—	2	2	—	2	2	3499 282
	PLATE and GUIDE, Frt. Door Window Regulator 71	P,D,C	—	—	—	—	1	1	1	1	3482 794-5
23-39-29	REGULATOR, Front Door Vent Wing Window 70	P,D,C,Y	1	1	1	1	1	1	1	1	2935 446-7
	Screw 70	P,D,C,Y	2	2	2	2	2	2	2	2	6025 850
23-39-32	SUPPORT and GUIDE, Door Window Regulator Arm Pivot 70	B	—	2	2	—	—	—	—	—	3417 250
23-39-34	REGULATOR, Quarter Window	V,L	—	1	—	—	—	—	—	—	2862 224-5
		B	—	1	1	—	—	—	—	—	2999 380-1
		J	—	1	1	1	—	—	—	—	2999 382-3
	70	R,W	—	—	1	—	—	—	—	—	2583 032-3
	70	R,W	—	1	—	1	—	—	—	—	2583 030-1
	71	R,W	—	1	—	1	—	—	—	—	3508 396-7
	70	P	1	—	—	—	—	—	—	—	2935 386-7
		P,D,C	—	1	1	1	—	—	—	—	2935 388-9
23-39-44	SPRING, Quarter Window Regulator Assist	B,J	—	2	2	2	—	—	—	—	2945 510
		L	—	2	—	—	—	—	—	—	2583 824
	70	R,W	—	—	2	—	—	—	—	—	2583 541
	70	R,W	—	2	—	2	—	—	—	—	2583 549
	71	R,W	—	1	—	1	—	—	—	—	2520 534
		P	2	—	—	—	—	—	—	—	2945 510
		P,D,C	—	2	2	2	—	—	—	—	2945 126
23-39-45	ROLLER, Door Window Regulator Arm Frt. Door 70	V,L	—	2	—	—	2	—	—	—	2486 982
	Frt. Door 70	R,W	2	2	2	2	2	—	2	2	2486 982
	Frt. Door	V,L	—	—	—	2	—	—	—	—	1697 607
	Frt. Door	B,J	—	2	2	2	—	—	—	—	1697 607
	Frt. Door 70	P,D,C	—	2	—	2	—	—	—	—	1697 607
	Rr. Door 70	V,L,R,W	—	—	—	—	2	—	2	2	2486 982
	ROLLER, Frt. Door Glass Stabilizer Adjusting Up to Nov. 1971 71	R,W	—	2	—	2	2	—	2	2	3581 323
	After Nov. 1971 71	R,W	—	2	—	2	2	—	2	2	= 3582 015
	Screw	R,W	—	2	—	2	2	—	2	2	6029 281
	ROLLER, Rr. Door Window Regulator Pivot Arm	P,D,C	—	—	—	—	2	2	2	2	1697 607
	ROLLER, Frt. Door Window Regulator Pivot Arm 70	B,J	—	2	2	2	—	—	—	—	1697 607
	70	P,D,C,Y	—	2	—	2	—	—	—	—	1697 607
	ROLLER, Quarter Window Rr. Track Slide	V,L	—	2	—	—	—	—	—	—	2862 330
	ROLLER, Quarter Window Regulator Frt. Arm	L	—	2	—	—	—	—	—	—	2862 330
	70	R,W	—	2	2	2	—	—	—	—	2486 982
	Rr. Arm 70	V,L	—	2	—	—	—	—	—	—	2486 982
	Pivot Arm	V,L	—	2	—	—	—	—	—	—	1697 607
		R,W, P,D,C	—	2	2	2	—	—	—	—	1697 607
23-39-47	ARM and SLIDE, Quarter Manual Window Regulator 71	R,W	—	2	—	2	—	—	—	—	3482 562
23-39-48	BRACKET, Quarter Window Regulator Arm Pivot	V,L	—	2	—	—	—	—	—	—	2782 680

CARLINES: J - Challenger, B - Barracuda, V - Valiant, L - Dart, R - Belvedere - Satallite, W - Coronet - Charger, P - Plymouth, D - Dodge, C - Chrysler, Y - Imperial

NUMERALS INDICATE: 21 - 2 DR. SED., 23 - 2 DR. H.T., 27 - CONV. CPE., 29 - FAST BACK, 41 - 4 DR. SED., 43 - 4 DR. H.T., 45 - 6 PASS. STA. WGN., 46 - 9 PASS. STA. WGN.

AR Indicates use as required.
\# Indicates parts not listed in any previous parts book
Numerals in parentheses ( ) refer to notes.
★ Indicates change or addition.

Printed in U.S.A. January 1972

Right and left part numbers are on same line, first number is right, second number is left.

CODE	PART NAME	MODEL CODES	SEE BOTTOM NOTE 21	23	27	29	41	43	45	46	PART NUMBER
23-39-0	**WINDOW LIFT (MANUAL) Cont'd.**										
23-39-48	BRACKET Cont'd.										
	71	B,J,R,W	—	2	2	2	—	—	—	—	2963 098
	w/SCREW 71	P,D,C,Y	—	2	—	2	—	—	—	—	2900 976
	w/SCREW 70	R,W	—	—	2	—	—	—	—	—	2602 773
	w/SCREW 70	R,W	—	2	—	2	—	—	—	—	2603 332
	w/SCREW 70	P	2	2	—	2	—	—	—	—	2900 976
	w/SCREW 70	D,C,Y	—	2	—	—	—	—	—	—	2900 976
23-39-49	SUPPORT, Quarter Window Regulator Arm Pivot Bracket	P	1	1	—	1	—	—	—	—	2902 490-1
		D,C,Y	—	1	—	—	—	—	—	—	2902 490-1
	SUPPORT and BRACKET, Quarter Window Regulator Arm Pivot Guide	B,J	—	2	—	2	—	—	—	—	3417 174
	BRACKET, Quarter Window Regulator Arm Pivot 70	B,J	—	—	2	—	—	—	—	—	2963 098
	71	B,J	—	2	2	—	—	—	—	—	2963 098
	71	R,W	—	2	—	2	—	—	—	—	2963 098
23-40-0	**ROOF RAIL AND LUGGAGE RACK**										
23-40-82	SUPPORT, Rr. Window Frame to Rr. Headlining Bow	V,L	—	—	—	2	—	—	—	—	3415 840
		V	—	—	—	—	2	—	—	—	2657 042
	Outer	L	—	—	—	—	2	—	—	—	2589 422
		V,L	—	2	—	—	—	—	—	—	2788 320
		B	—	2	—	—	—	—	—	—	2879 971
		J	—	2	—	—	—	—	—	—	2879 742
	Outer 70	R,W	—	—	—	—	2	—	—	—	2581 324
	71	R,W	—	2	—	2	2	—	2	2	3416 028
		P,D	—	—	—	—	2	—	—	—	2589 377
		C,Y	—	—	—	—	2	2	—	—	2878 024
		P,D	2	2	—	2	—	2	—	—	2878 008
		C,Y	—	2	—	—	—	—	—	—	2878 008
	SUPPORT, Rr. Window Frame to Rr. Headlining Wire 70	W	—	—	—	2	—	—	—	—	2789 941
	70	R,W	2	2	—	—	—	—	—	—	2877 069
	SUPPORT, Rear Headlining and Listing Wire 71	R,W	—	2	—	—	—	—	—	—	3416 027
	Inner 71	V,L	—	1	—	—	—	—	—	—	3500 836-7
23-40-85	RAIL, Roof Side w/NUT 70	V,L	—	—	—	—	1	—	—	—	3446 236-7
	w/NUT 71	V,L	—	—	—	—	1	—	—	—	3500 848-9
	w/NUT Inner	V,L	—	—	—	1	—	—	—	—	3446 164-5
	Outer	V,L	—	—	—	1	—	—	—	—	2965 668-9
	Inner 70	L	—	1	—	—	—	—	—	—	3445 722-3
	Outer	V,L	—	1	—	—	—	—	—	—	3446 198-9
	Inner 70	B	—	1	—	—	—	—	—	—	2963 302-3
	Outer Rr. 70	B	—	1	—	—	—	—	—	—	2963 716-7
	Outer Frt. 70	B,J	—	1	—	1	—	—	—	—	2963 300-1
	Inner 70	J	—	1	—	1	—	—	—	—	2963 304-5
	Outer Rr. 70	J	—	1	—	1	—	—	—	—	2963 718-9
	Inner 71	B	—	1	—	—	—	—	—	—	3500 490-1
	Outer Rr.	B	—	1	—	—	—	—	—	—	3500 592-3
	Outer Frt. 71	B,J	—	1	—	—	—	—	—	—	3500 580-1
	Inner 71	J	—	1	—	—	—	—	—	—	3500 442-3
	Outer Rr. 71	J	—	1	—	—	—	—	—	—	3500 590-1
	w/NUT, Inner 70	R,W	—	—	—	—	1	—	—	—	3445 924-5
	w/NUT, Inner Frt. 70	R,W	—	—	—	—	—	—	1	1	2861 810-1
	w/NUT Inner Frt. 71	R,W	—	—	—	—	—	—	1	1	3500 714-5
	Inner Rr. 70	R,W	—	—	—	—	—	—	1	1	2861 526-7

CARLINES: J - Challenger, B - Barracuda, V - Valiant, L - Dart, R - Belvedere - Satallite, W - Coronet - Charger, P - Plymouth, D - Dodge, C - Chrysler, Y - Imperial

NUMERALS INDICATE: 21 - 2 DR. SED., 23 - 2 DR. H.T., 27 - CONV. CPE., 29 - FAST BACK, 41 - 4 DR. SED., 43 - 4 DR. H.T., 45 - 6 PASS. STA. WGN., 46 - 9 PASS. STA. WGN.

AR Indicates use as required.
\# Indicates parts not listed in any previous parts book
Numerals in parentheses ( ) refer to notes.
★ Indicates change or addition.

Printed in U.S.A.
January 1972

Right and left part numbers are on same line, first number is right, second number is left.

23-40-0 ROOF RAIL AND LUGGAGE RACK Cont'd.

CODE	PART NAME		MODEL CODES	SEE BOTTOM NOTE 21	23	27	29	41	43	45	46	PART NUMBER
23-40-85	RAIL Cont'd.											
		Rr. Corner Inner 70	R,W	—	—	—	—	—	—	1	1	2529 852-3
		Outer Frt. 70	R,W	—	—	—	—	—	—	1	1	2529 842-3
		Outer Rr. 70	R,W	—	—	—	—	—	—	1	1	2529 844-5
		Rr. Corner Outer 70	R,W	—	—	—	—	—	—	1	1	2529 850-1
		Inner 70	R,W	1	1	—	1	—	—	—	—	3445 946-7
		Outer 70	R,W	1	1	—	1	—	—	—	—	2838 574-5
		Outer Frt. 71	R,W	—	—	—	—	—	—	1	1	3440 090-1
		Outer Rr. 71	R,W	—	—	—	—	—	—	1	1	3440 092-3
		Rr. Corner Inner 71	R,W	—	—	—	—	—	—	1	1	3440 100-1
		Rr. Corner Outer 71	R,W	—	—	—	—	—	—	1	1	3440 094-5
		Inner Frt. 71	R,W	—	—	—	—	—	—	1	1	3440 096-7
		w/NUT Inner Frt. 71	R,W	—	—	—	—	—	—	1	1	3499 674-5
		Inner Rr. 71	R,W	—	—	—	—	—	—	1	1	3440 098-9
		Inner 71	R,W	—	1	—	1	—	—	—	—	3445 848-9
		w/NUT Inner 71	R,W	—	—	—	—	1	—	—	—	3500 720-1
		Outer 71	R,W	—	1	—	1	—	—	—	—	3445 842-3
		Outer 71	R,W	—	—	—	—	1	—	—	—	3445 104-5
		w NUT, Inner 70	P,D	1	—	—	1	—	1	—	—	3446 076-7
		Outer 70	P	1	—	—	—	—	—	—	—	2902 308-9
		Outer 71	P	1	—	—	—	—	—	—	—	2900 214-5
		w Nut Inner 71	P,D	—	1	—	1	—	—	—	—	3500 386-7
		w Nut Inner 71	P,D	—	—	—	—	1	—	—	—	3500 396-7
		Rr. Corner Inner 71	P,D,C	—	—	—	—	—	—	1	1	3500 640-1
		Inner 71	P,D,C,Y	1	1	—	—	—	—	—	—	3500 400-1
		w Nut Inner 71	C,Y	—	—	—	—	—	1	—	—	3500 408-9
		Frt. Inner	P,D,C	—	—	—	—	—	—	1	1	2893 280-1
		Rr. Corner Inner 70	P,D,C	—	—	—	—	—	—	1	1	2895 198-9
		Rr. Corner Outer	P,D,C	—	—	—	—	—	—	1	1	2894 120-1
		Outer Frt.	P,D,C	—	—	—	—	—	—	1	1	2893 286-7
		Outer Rr.	P,D,C	—	—	—	—	—	—	1	1	2893 288-9
		Inner Rr.	P,D,C	—	—	—	—	—	—	1	1	2893 282-3
		Inner 70	P,D,C,Y	—	1	—	—	—	—	—	—	3446 176-7
		Outer	P,D,C,Y	1	1	—	—	—	—	—	—	2900 214-5
		w NUT, Inner 70	C	—	—	—	—	1	—	—	—	3446 414-5
		Outer	C	—	—	—	—	1	—	—	—	2900 216-7
		w/NUT, Inner 70	P,D	—	—	—	—	1	—	—	—	3446 150-1
		Outer	P,D	—	—	—	—	1	—	—	—	2900 210-11
	Up to May 1971	Outer	P,D	—	—	—	1	—	1	—	—	2900 212-3
	After May 1971	Outer 71	P,D	—	—	—	1	—	1	—	—	= 3674 142-3
		w NUT, Inner	C,Y	—	—	—	—	—	1	—	—	3446 196-7
	Up To May 1971	Outer	C,Y	—	—	—	—	—	1	—	—	2900 120-1
	After May 1971	Outer 71	C,Y	—	—	—	—	—	1	—	—	= 3674 140-1
		Inner Rt. 71	P,D	—	—	—	—	1	—	—	—	= 3500 396
23-40-86	REINFORCEMENT, Roof Bow to Windshield Header for Roof Flasher Signal	70	R,W	1	—	—	—	—	—	—	—	2840 719
		70	R,W	—	—	—	—	1	—	—	—	2838 583
		70	R,W	—	—	—	—	—	—	1	1	2839 679
		71	R,W	—	—	—	—	1	—	—	—	3445 854
		71	R,W	—	—	—	—	—	—	1	1	3499 906
		71	P,D	1	1	—	—	—	—	—	—	3500 674
			P	—	—	—	—	—	1	—	—	2902 804
			P,D	—	—	—	—	1	—	—	—	2900 226
			C	—	—	—	—	1	—	—	—	= 3500 968
	SUPPORT, Roof Panel Outside Flasher Light or Siren		P,D	—	—	—	—	—	—	1	1	2894 075
23-40-92	EXTENSION, Roof Side Rail	Outer	V,L	—	—	—	1	—	—	—	—	3444 204-5

CARLINES J - Challenger, B - Barracuda, V - Valiant, L - Dart, R - Belvedere - Satallite, W - Coronet - Charger, P - Plymouth, D - Dodge, C - Chrysler, Y - Imperial

NUMERALS INDICATE: 21 - 2 DR. SED., 23 - 2 DR. H.T., 27 - CONV. CPE., 29 - FAST BACK, 41 - 4 DR. SED., 43 - 4 DR. H.T., 45 - 6 PASS. STA. WGN., 46 - 9 PASS. STA. WGN.

AR Indicates use as required.
# Indicates parts not listed in any previous parts book
Numerals in parentheses ( ) refer to notes.
★ Indicates change or addition.

Printed in U.S.A.
January 1972

Right and left part numbers are on same line, first number is right, second number is left.

23-40-0 ROOF RAIL AND LUGGAGE RACK Cont'd.

CODE	PART NAME		MODEL CODES	SEE BOTTOM NOTE 21	23	27	29	41	43	45	46	PART NUMBER
23-40-92	EXTENSION Cont'd.											
		Outer Rr. 70	B	—	1	—	—	—	—	—	—	2963 710-11
		Outer Rr. 70	J	—	1	—	1	—	—	—	—	2963 700-1
		Outer Rr.	B	—	1	—	—	—	—	—	—	3500 582-3
		Outer Rr.	J	—	1	—	—	—	—	—	—	3500 574-5
		Outer 71	R,W	—	1	—	1	—	—	—	—	3445 816-7
		Outer 70	R,W	1	1	—	1	—	—	—	—	2838 558-9
		Outer	P,D	1	—	—	1	—	1	—	—	3445 706-7
		Outer	P,D	—	—	—	—	1	—	—	—	3445 704-5
		Outer	P,D,C,Y	—	1	—	—	—	—	—	—	2900 158-9
		Outer	C	—	—	—	—	1	—	—	—	2900 160-1
		Outer	C,Y	—	—	—	—	—	1	—	—	2900 162-3
23-40-96	SUPPORT, Wheelhouse to Roof Side Outer Rail Extension		P	1	1	—	—	—	—	—	—	2900 768-9
			P	—	—	—	1	1	1	—	—	2900 770-1
			D	—	1	—	—	—	—	—	—	2901 408-9
			D	—	—	—	—	1	1	—	—	2900 772-3
			C,Y	—	1	—	—	—	—	—	—	2901 410-11
			C,Y	—	—	—	—	1	1	—	—	2900 774-5
		71	R,W	—	—	—	—	1	—	—	—	3445 078-9
	SUPPORT, Roof Side Rail Extension to Quarter Outside Panel Seal											
		71	R	—	1	—	—	—	—	—	—	3499 600-1
		71	W	—	1	—	1	—	—	—	—	3499 602-3
23-40-148	NUT, Roof Luggage Rack Side Rail 1/4"-20	70	R,W,P,D,C	—	—	—	—	—	—	AR	AR	2094 869
23-40-150	RAIL, Roof Luggage Rack											
		Frt. and Rr. 70	R,W	—	—	—	—	—	—	2	2	2602 651
		Side 70	R,W	—	—	—	—	—	—	2	2	2602 647
		Frt. and Rr. 70	P,D,C	—	—	—	—	—	—	2	2	2894 892
		Side 70	P,D,C	—	—	—	—	—	—	2	2	2894 882
		Side 71	R,W,P,D,C	—	—	—	—	—	—	2	2	= 3499 798
		Frt. & Rear CANADA 71	R,W	—	—	—	—	—	—	2	2	= 3499 753
		Frt. & Rear 71	R,W	—	—	—	—	—	—	2	2	= 3499 331
		Frt. & Rear CANADA 71	P,D,C	—	—	—	—	—	—	2	2	3499 800
		Frt. and Rr. 71	P,D,C	—	—	—	—	—	—	2	2	= 3499 801
	TUBE, Deck Lid Luggage Rack	Intermediate	B,J	—	2	2	2	—	—	—	—	3446 439
	TUBE and INSERT, Deck Lid Luggage Rack	Frt. 70	W	—	—	—	1	—	—	—	—	2842 893
		Rr. 70	W	—	—	—	1	—	—	—	—	2842 894
		Intermediate 70	W	—	—	—	6	—	—	—	—	2842 895
23-40-153	DECAL, Deck Lid Luggage Rack Load Limit		B,J	—	1	1	1	—	—	—	—	2842 908
		71	R,W	—	1	—	1	—	—	—	—	2842 908
		70	W	—	—	—	1	—	—	—	—	2842 908
23-40-155	CROSSMEMBER, Roof Luggage Rack	70	R,W	—	—	—	—	—	—	4	4	2602 652
	STRIP, Roof Luggage Rack Skid		P,D,C	—	—	—	—	—	—	5	5	3439 314
		71	R,W	—	—	—	—	—	—	5	5	3439 314
23-40-157	SPACER, Roof Luggage Rack Side Rail	Lower 70	R,W	—	—	—	—	—	—	6	6	2860 759
		70	P,D,C	—	—	—	—	—	—	15	15	3499 754
			R,W,P,D,C	—	—	—	—	—	—	15	15	3499 754
23-40-170	BRACKET, Roof Luggage Rack Rail	Frt. and Rr. 70	R,W	—	—	—	—	—	—	4	4	2528 454
	STANCHION, Roof Luggage Rack Side Rail	70	P,D,C	—	—	—	—	—	—	2	2	2894 884-5

CARLINES J - Challenger, B - Barracuda, V - Valiant, L - Dart, R - Belvedere - Satallite, W - Coronet - Charger, P - Plymouth, D - Dodge, C - Chrysler, Y - Imperial

NUMERALS INDICATE: 21 - 2 DR. SED., 23 - 2 DR. H.T., 27 - CONV. CPE., 29 - FAST BACK, 41 - 4 DR. SED., 43 - 4 DR. H.T., 45 - 6 PASS. STA. WGN., 46 - 9 PASS. STA. WGN.

AR Indicates use as required.
\# Indicates parts not listed in any previous parts book
Numerals in parentheses ( ) refer to notes.
★ Indicates change or addition.

Printed in U.S.A.
January 1972

Right and left part numbers are on same line, first number is right, second number is left.

23-40-0 ROOF RAIL AND LUGGAGE RACK Cont'd.

CODE	PART NAME		MODEL CODES	SEE BOTTOM NOTE 21	23	27	29	41	43	45	46	PART NUMBER
23-40-170	BRACKET Cont'd.											
		71	R,W,P,D,C	—	—	—	—	—	—	2	2	= 3499 828-9
	SUPPORT, Deck Lid Luggage Rack Intermediate Tube to Rr. Tube	70	W	—	—	—	6	—	—	—	—	2842 896
		71	R,W	—	8	—	8	—	—	—	—	2842 896
	SUPPORT, Deck Lid Luggage Rack Mtg.	Rr.	B,J,R,W	—	1	1	1	—	—	—	—	3446 546-7
		Rr. 71	R,W	—	1	—	1	—	—	—	—	3446 546-7
		Intermediate	B,J	—	2	2	2	—	—	—	—	3445 415
		Intermediate 71	R,W	—	1	—	1	—	—	—	—	3445 415
		Frt. 70	W	—	—	—	2	—	—	—	—	2842 899
		Rr. 70	W	—	—	—	2	—	—	—	—	2842 900
23-40-171	SCREW, Roof Luggage Rack Side Tie Down	70	P,D,C	—	—	—	—	—	—	4	4	2528 464
	THUMB SCREW, Roof Luggage Rack Rr. Rail Brkt.	70	R,W,P,									
		70	D,C	—	—	—	—	—	—	4	4	2528 464
	SCREW, Roof Luggage Rack Stanchion	70	P,D,C	—	—	—	—	—	—	8	8	6027 941
	THUMB SCREW, Roof Luggage Rack Rear Rail Bracket	70	P,D,C	—	—	—	—	—	—	4	4	6028 787
	SCREW, Roof Lugg. Rack Skid Strip	70	P,D,C	—	—	—	—	—	—	15	15	6026 650
	SCREW, Roof Rack Stanchion to Roof	71	R,W,P,D,C	—	—	—	—	—	—	8	8	6029 070
	SCREW, Locking Cross Bar Tee Plate	71	R,W,P,D,C	—	—	—	—	—	—	6	6	6029 067
23-40-177	CAP, Roof Luggage Rack Side Rail End	70	R,W	—	—	—	—	—	—	2	2	2602 648-9
	TIP, Deck Lid Luggage Rack Intermediate Tube		B,J	—	8	8	8	—	—	—	—	2842 901
		71	R,W	—	8	—	8	—	—	—	—	2842 901
		70	W	—	—	—	8	—	—	—	—	2842 901
23-40-180	T/PLATE, Roof Luggage Rack Side Rail		P,D,C	—	—	—	—	—	—	6	6	2894 895
		71	R,W	—	—	—	—	—	—	6	6	2894 895
	w/SPACER		P,D,C	—	—	—	—	—	—	6	6	2894 899
	T/PLATE, Roof Luggage Rack Crossmember End	70	R,W	—	—	—	—	—	—	8	8	2842 991
	ADAPTER PLATE, Deck Lid Luggage Rack	70	R,W	—	—	—	—	—	—	2	2	2842 898
	T/PLATE, Roof Luggage Rack Cross Bar		PDC	—	—	—	—	—	—	4	4	2894 893
	PLATE, Roof Luggage Rack Side Rail Tie Down		P,D,C	—	—	—	—	—	—	2	2	2894 894
		71	R,W	—	—	—	—	—	—	2	2	2894 894
23-40-187	PAD, Deck Lid Luggage Rack Support		W	—	—	—	2	—	—	—	—	2842 897
		Rr.	B,J	—	2	2	2	—	—	—	—	3445 418
		71	R,W	—	2	—	2	—	—	—	—	3445 418
	PAD, Roof Luggage Rack Crossmember	70	R,W	—	—	—	—	—	—	4	4	2602 656
	PAD, Roof Luggage Rack Side Rail	70	R,W	—	—	—	—	—	—	2	2	2602 655
	PAD, Roof Luggage Rack Skid Strip		P,D,C	—	—	—	—	—	—	5	5	3439 315
		71	R,W	—	—	—	—	—	—	5	5	3439 315
	PAD, Roof Luggage Rack Side Rail Stanchions		P,D,C	—	—	—	—	—	—	4	4	2894 888
23-40-192	PROTECTOR, Roof Panel Luggage Rack Skid Strip Screw	Frt. 70	P,D,C	—	—	—	—	—	—	5	5	2895 103
	STRIP, Deck Lid Luggage Rack Vinyl Protector	70	B,J	—	8	8	8	—	—	—	—	3446 799

CARLINES	J - Challenger B - Barracuda	V - Valiant L - Dart	R - Belvedere - Satallite W - Coronet - Charger	P - Plymouth D - Dodge	C - Chrysler Y - Imperial
NUMERALS INDICATE:	21 - 2 DR. SED. 23 - 2 DR. H.T.	27 - CONV. CPE. 29 - FAST BACK	41 - 4 DR. SED. 43 - 4 DR. H.T.	45 - 6 PASS. STA. WGN. 46 - 9 PASS. STA. WGN.	

AR Indicates use as required.
\# Indicates parts not listed in any previous parts book
Numerals in parentheses ( ) refer to notes.
★ Indicates change or addition.

Printed in U.S.A.
January 1972

Right and left part numbers are on same line, first number is right, second number is left.

23-41-0 WINDOW LIFT (ELECTRIC)

CODE	PART NAME		MODEL CODES	SEE BOTTOM NOTE 21	23	27	29	41	43	45	46	PART NUMBER
23-41-4	REGULATOR, Electric Window	Frt.	B,J	—	1	1	1	—	—	—	—	3548 530-1
		Qtr.	B,J	—	—	1	—	—	—	—	—	3508 210-11
		Qtr.	B,J	—	1	—	1	—	—	—	—	3454 108-9
		Frt. 70	R,W	—	1	1	1	—	—	—	—	2999 682-3
		Qtr. 70	R,W	—	—	1	—	—	—	—	—	2583 854-5
		Qtr. 70	R,W	—	1	—	1	—	—	—	—	2583 764-5
		Frt. 71	R,W	—	1	—	1	—	—	—	—	3548 750-1
		Qtr. 71	R,W	—	1	—	1	—	—	—	—	3548 610-1
		Frt. 71	R,W	—	—	—	—	1	—	1	1	= 3548 748-9
		Rr. 71	R,W	—	—	—	—	1	—	1	1	= 3548 802-3
		Qtr.	P,D,C,Y	—	1	1	1	—	—	—	—	2945 560-1
		Frt. 70	P,D,C,Y	—	1	—	1	—	—	—	—	2945 996-7
		Frt. 70	P,D,C,Y	—	—	1	—	1	1	1	1	2945 950-1
		Frt. 71	P,D,C,Y	1	1	—	1	—	—	—	—	3548 962-3
		w/o Vent Frt. 71	P,D,C,Y	—	—	—	—	1	1	1	1	3548 622-3
		w/Vent Frt. 71	C,Y	—	—	—	—	—	1	—	—	2945 950-1
		Rr. 71	P,D,C,Y	—	—	—	—	—	1	—	—	3548 966-7
		Rr. 71	P,D,C	—	—	—	—	1	—	1	1	3548 964-5
		Rr. 70	P,D,C,Y	—	—	—	—	1	—	1	1	2945 952-3
		Rr. 70	P,D,C,Y	—	—	—	—	—	1	—	—	2999 354-5
	PLATE and GUIDE, Front Door Window Regulator Electric	71	P,D,C,Y	—	—	—	—	1	1	1	1	3482 796-7
	ARM and SLIDE, Quarter Electric Window Regulator	71	R,W	—	2	—	2	—	—	—	—	3482 562
23-41-7	SPRING, Electric Window Regulator Assist	Qtr.	B,J	—	2	2	2	—	—	—	—	2945 510
		Qtr. 70	R,W	—	—	2	—	—	—	—	—	2583 541
		Qtr. 70	R,W	—	2	—	2	—	—	—	—	2583 723
		Qtr.	P,D,C,Y	—	2	2	2	—	—	—	—	2945 126
		Frt.	B,J	—	2	2	2	—	—	—	—	2486 851
		Frt. 70	R,W	—	2	2	2	—	—	—	—	2583 824
		Qtr. 71	R,W	—	2	—	2	—	—	—	—	2583 559
		Frt. 71	R,W	—	2	—	2	—	—	—	—	3548 637
		Frt. 71	R,W	—	—	—	—	2	—	2	2	2520 556
		Rr. 71	R,W	—	—	—	—	2	—	2	2	3548 665
		Frt. 71	P,D,C,Y	—	2	—	2	—	—	—	—	2486 851
		Frt. 71	P,D,C,Y	—	—	—	—	2	2	2	2	3508 594
		Frt. 70	P,D,C,Y	—	2	—	2	—	—	—	—	2486 851
23-41-27	RELAY, w/BRACKET, Electric Window Lift		B,J	—	1	1	1	—	—	—	—	2932 834
		70	R,W	—	1	1	1	—	—	1	1	3004 186
		71	R,W	—	1	—	1	1	—	1	1	2932 834
			P,D,C	—	1	1	1	1	1	1	1	2932 834
			Y	—	1	—	—	—	1	—	—	2932 834
23-41-34	GEAR and SEAL PACKAGE, Electric Window Regulator Mechanism		B,J,R,W, P,D,C,Y	—	AR	AR	AR	AR	AR	AR	AR	2932 973
	GEAR, Frt. Door Electric Window Regulator Mechanism Pinion	70	B,J,R,W P,D,C,Y	—	2	2	2	2	2	2	2	2999 365
23-41-53	SUPPORT, Front Door Inside Panel to Window Regulator Motor Electric Window Lift	70	R,W	2	2	2	2	—	—	—	—	2860 051
	SUPPORT, Frt. Door Window Electric Motor Vent Wing	71	C,Y	—	—	—	—	—	1	—	—	3581 720-1

CARLINES: J - Challenger, B - Barracuda, V - Valiant, L - Dart, R - Belvedere - Satallite, W - Coronet - Charger, P - Plymouth, D - Dodge, C - Chrysler, Y - Imperial

NUMERALS INDICATE: 21 - 2 DR. SED., 23 - 2 DR. H.T., 27 - CONV. CPE., 29 - FAST BACK, 41 - 4 DR. SED., 43 - 4 DR. H.T., 45 - 6 PASS. STA. WGN., 46 - 9 PASS. STA. WGN.

AR Indicates use as required.
\# Indicates parts not listed in any previous parts book
Numerals in parentheses ( ) refer to notes.
★ Indicates change or addition.

Printed in U.S.A.
January 1972

Right and left part numbers are on same line, first number is right, second number is left.

23-41-0 WINDOW LIFT (ELECTRIC) Cont'd.

CODE	PART NAME	MODEL CODES	SEE BOTTOM NOTE 21	23	27	29	41	43	45	46	PART NUMBER
23-41-55	WIRING, Electric Window Lift										
	Door, Rt.	B,J	—	1	1	1	—	—	—	—	2983 457
	Door, Lt.	B,J	—	1	1	1	—	—	—	—	2983 456
	Rr. Qtr.	B,J	—	1	1	1	—	—	—	—	2983 458
	Rr. Qtr. 71	R,W	—	2	—	2	—	—	—	—	3513 501
	Door Rt. 71	R,W	—	2	—	2	—	—	—	—	3513 377
	Door Lt. 71	R,W	—	2	—	2	—	—	—	—	3513 633
	Rr. Door 71	R,W	—	—	—	—	2	—	2	2	3513 500
	Door Rt. 70	R,W	—	1	1	1	—	—	—	—	2926 368
	Door Lt. 70	R,W	—	1	1	1	—	—	—	—	2926 361
	w/Power Windows, w/o Power Door Locks 70	P,D,C	—	1	1	1	1	1	1	1	2926 196
	w/Power Windows, w/o Power Door Locks Rr. Door	P,D,C	—	—	—	—	1	1	1	1	2926 301
	w/Power Windows, w/Power Door Locks Rr. Door	P,D,C	—	—	—	—	1	1	1	1	2926 300
	Rr. Qtr.	P,D,C	—	2	2	2	—	—	—	—	2926 299
	w/Power Windows, w/Power Door Locks	P,D,C	—	1	1	1	1	1	1	1	2926 234
	w/Power Windows, w/o Power Door Locks 71	P,D,C	—	1	—	1	1	1	1	1	3513 071
	w/o Power Windows, w/Power Door Locks 71	P,D,C	—	1	—	1	1	1	1	1	3513 191
	w/Power Windows, w/Power Door Locks 71	P,D,C	—	1	—	1	1	1	1	1	3513 194
	w/Power Windows, w/Power Vents 71	C-H	—	—	—	—	—	1	—	—	3513 588
	w/o Power Vents, w/o Power Door Locks 71	Y	—	1	—	—	—	1	—	—	3513 236
	w/Power Vents, w/Power Door Locks 71	Y	—	1	—	—	—	1	—	—	3513 597
	w/o Power Vents, w/Power Door Locks 71	Y	—	1	—	—	—	1	—	—	3513 237
	w/Power Windows, w/Power Vents and w/power Door Locks 70	C	—	—	1	—	1	1	1	1	2926 225
	w/Power Windows, w/Power Vents w/o Power Door Locks 70	C	—	—	1	—	1	1	1	1	2926 207
	w/o Power Door Locks Rr. Door	Y	—	—	—	—	—	2	—	—	2926 356
	w/Power Door Locks 70	Y	—	1	—	—	—	1	—	—	2983 531
	w/Power Door Locks Rr. Door	Y	—	—	—	—	—	1	—	—	2926 358
	w/Power Vents, w/Power Door Locks 70	Y	—	—	—	—	—	1	—	—	2983 529
	w/Power Vents, w/o Power Door Locks 70	Y	—	—	—	—	—	1	—	—	2983 530
	WIRING, Window Lift Safety Relay 70	P	—	1	1	1	1	1	1	1	2983 446
	70	D	—	1	1	—	1	1	1	1	2983 442
	Up To Jan. 1971	C	—	1	1	—	1	1	1	1	2983 504
	After Jan. 1971 71	C	—	1	—	—	1	1	1	1	= 3513 717
	71	B,J	—	1	1	—	—	—	—	—	= 3513 719
	Up To Jan. 1971 71	R,W	—	1	—	1	1	—	1	1	3513 097
	After Jan. 1971 71	R,W	—	1	—	1	1	—	1	1	= 3513 721
	Up To Jan. 1971 71	P,D	—	1	—	1	1	—	1	1	3513 172
	After Jan. 1971 71	P,D	1	1	—	1	1	1	1	1	= 3513 718
23-41-83	BUSHING, Quarter Electric Window Regulator Rr. Arm 70	R,W	—	4	4	4	—	—	—	—	2583 551
23-41-95	GROMMET, Electric Window Lift and Door Locks Wiring Frt. Pillar 71	P,D,C,Y	—	2	—	2	2	2	2	2	3513 130
23-41-106	MOTOR and MECHANISM, Electric Window Lift Frt. Door	B,J	—	1	1	1	—	—	—	—	3454 240-1
	Frt. Door 70	R,W	—	1	1	1	—	—	—	—	2999 326-7

CARLINES J - Challenger, B - Barracuda, V - Valiant, L - Dart, R - Belvedere - Satallite, W - Coronet - Charger, P - Plymouth, D - Dodge, C - Chrysler, Y - Imperial

NUMERALS INDICATE: 21 - 2 DR. SED., 23 - 2 DR. H.T., 27 - CONV. CPE., 29 - FAST BACK, 41 - 4 DR. SED., 43 - 4 DR. H.T., 45 - 6 PASS. STA. WGN., 46 - 9 PASS. STA. WGN.

AR Indicates use as required.
\# Indicates parts not listed in any previous parts book
Numerals in parentheses ( ) refer to notes.
★ Indicates change or addition.

Printed in U.S.A.
January 1972

Right and left part numbers are on same line, first number is right, second number is left.

23-41-0 WINDOW LIFT (ELECTRIC) Cont'd.

CODE	PART NAME	MODEL CODES	SEE BOTTOM NOTE 21	23	27	29	41	43	45	46	PART NUMBER
23-41-106	MOTOR and MECHANISM Cont'd.										
	Frt. Door 71	R,W	—	1	—	1	—	—	—	—	3548 746-7
	Frt. Door 71	R,W	—	—	—	—	1	—	1	1	3508 206-7
	Rr. Door 71	R,W	—	—	—	—	1	—	1	1	≠3586 312-3
	Frt. Door	P,D,C,Y	—	—	1	—	1	1	1	1	2999 332-3
	Frt. Door	P,D,C,Y	—	1	—	1	—	—	—	—	2999 334-5
	Rr. Door	P,D,C,Y	—	—	—	—	1	1	1	1	2999 336-7
	Qtr.	B,J	—	1	1	1	—	—	—	—	3454 018-9
	Qtr. 71	R,W	—	1	—	1	—	—	—	—	3454 240-1
	Qtr.	P,D,C,Y	—	1	1	1	—	—	—	—	2999 338-9
	MOTOR and MECHANISM PACKAGE, Electric Window Lift Qtr. Rt. 70	R,W	—	—	1	—	—	—	—	—	3004 124
	Qrt. Lt. 70	R,W	—	—	1	—	—	—	—	—	3004 123
	Qtr. Rt. 70	R,W	—	1	—	1	—	—	—	—	3004 126
	Qtr. Lt. 70	R,W	—	1	—	1	—	—	—	—	3004 125
23-41-167	CONDUIT, Frt. Door Window Lift and Door Lock Wiring 70	P,D,C,Y	2	2	—	—	2	2	2	2	2926 371
	71	P,D,C,Y	2	2	—	2	2	2	2	2	3513 128
23-41-169	SHIELD, Frt. Door Electric Window Lift Wiring 71	R,W	—	—	—	—	2	—	2	2	3513 238
23-41-170	SWITCH, Right Front Door Window Lift Single 70	B,J,R,W	—	1	1	1	—	—	—	—	2926 118
	Single 70	P,D,C	1	1	1	1	1	1	1	1	2926 118
	w/o Power Door Locks, w/o Power Vents	Y	—	1	—	—	—	1	—	—	2926 306
	w/Power Door Locks, w/Power Vents	Y	—	—	—	—	—	1	—	—	2926 309
	w/Power Vents, w/o Power Door Locks	Y	—	—	—	—	—	1	—	—	2926 308
	w/Power Door Locks, w/o Power Vents	Y	—	1	—	—	—	1	—	—	2926 307
	SWITCH, Left Front Door Window Lift										
	w/o Power Door Locks, w/o Power Vents	Y	—	1	—	—	—	1	—	—	2926 311
	w/Power Door Locks, w/o Power Vents	Y	—	1	—	—	—	1	—	—	2926 312
	w/Power Door Locks, w/Power Vents	Y	—	—	—	—	—	1	—	—	2926 314
	w/Power Vents, w/o Power Door Locks	Y	—	—	—	—	—	1	—	—	2926 313
	SWITCH, Door and Quarter Window Lift Single	B,J,R,W, P,D,C	—	2	2	2	2	2	2	2	2926 118
	Single	Y	—	2	—	—	—	2	—	—	2926 304
	SWITCH, Electric Window Lift Lt. Frt. Door 4 Gang	B,J,R,W	—	1	1	1	—	—	—	—	2926 117
		P,D,C	1	1	1	1	1	1	1	1	2926 117
	SWITCH, Front Door Vent Wing Rt. Single	C	—	—	1	—	1	1	1	1	2926 118
	Lt. Dual 71	C-H	—	—	—	—	—	1	—	—	2926 119
	Lt. Dual 70	C	—	—	1	—	1	1	1	1	2926 119
	SWITCH, Window Lift Lockout	Y	—	1	—	—	—	1	—	—	2770 157
23-41-173	RETAINER, Window Lift Lockout Switch Insulator	Y	—	1	—	—	—	1	—	—	2926 033
23-41-176	TERMINAL and INSULATOR PACKAGE, Window Lift Switch 5 Way	Y	—	AR	—	—	—	AR	—	—	2809 016
	7 Way	Y	—	AR	—	—	—	AR	—	—	2809 017
	10 Way	Y	—	AR	—	—	—	AR	—	—	2809 018-9
	TERMINAL, 5 Way Female, Rr. Door & Qtr.	P,D,C	—	2	2	2	2	2	2	2	2926 174
	INSULATOR, 5 Way, Rr. Door & Qtr.	P,D,C	—	2	2	2	2	2	2	2	2926 172
23-41-182	SPACER, Door Electric Window Lift Switch Frt. Door										
	Rt. Blue 71	R,W	—	—	—	—	1	—	1	1	4332 GB7
	Lt. Blue 71	R,W	—	—	—	—	1	—	1	1	4331 GB7
	Rt. Green 71	R,W	—	—	—	—	1	—	1	1	4332 GF7

CARLINES: J - Challenger, B - Barracuda, V - Valiant, L - Dart, R - Belvedere - Satallite, W - Coronet - Charger, P - Plymouth, D - Dodge, C - Chrysler, Y - Imperial

NUMERALS INDICATE: 21 - 2 DR. SED., 23 - 2 DR. H.T., 27 - CONV. CPE., 29 - FAST BACK, 41 - 4 DR. SED., 43 - 4 DR. H.T., 45 - 6 PASS. STA. WGN., 46 - 9 PASS. STA. WGN.

AR Indicates use as required.
# Indicates parts not listed in any previous parts book
Numerals in parentheses ( ) refer to notes.
★ Indicates change or addition.

Printed in U.S.A.
January 1972

Right and left part numbers are on same line, first number is right, second number is left.

CODE	PART NAME		MODEL CODES	SEE BOTTOM NOTE 21	23	27	29	41	43	45	46	PART NUMBER
23-41-0	**WINDOW LIFT (ELECTRIC) Cont'd.**											
23-41-182	SPACER Cont'd.											
		Lt. Green 71	R,W	—	—	—	—	1	—	1	1	4331 GF7
		Rt. Tan 71	R,W	—	—	—	—	1	—	1	1	4332 GT6
		Lt. Tan 71	R,W	—	—	—	—	1	—	1	1	4331 GT6
		Rt. Black 71	R,W	—	—	—	—	1	—	1	1	4332 GX9
		Lt. Black 71	R,W	—	—	—	—	1	—	1	1	4331 GX9
		Rt. Gold 71	R,W	—	—	—	—	1	—	1	1	4332 GY4
		Rt. Gold 71 Rr. Door	R,W	—	—	—	—	1	—	1	1	4331 GY4
		Blue 71	R,W	—	—	—	—	1	—	1	1	4332 GB7
		Green 71	R,W	—	—	—	—	1	—	1	1	4332 GF7
		Tan 71	R,W	—	—	—	—	1	—	1	1	4332 GT6
		Black 71	R,W	—	—	—	—	1	—	1	1	4332 GX9
		Gold 71	R,W	—	—	—	—	1	—	1	1	4332 GY4
23-41-184	RETAINER, Window Lift Switch Right Frt. Door Rear Door and Quarter	Single	B,J,R,W, P,D,C	AR	AR	AR	AR	AR	AR	AR	AR	2926 122
	Lt. Frt. Door	4 Gang	B,J,R,W	—	AR	AR	AR	—	—	—	—	2926 121
			P,D,C	AR	AR	AR	AR	AR	AR	AR	AR	2926 121
	RETAINER, Front Door Vent Wing Switch	Rt. Single	C	—	—	1	—	1	1	1	1	2926 122
		Lt. Dual 71	C-H	—	—	—	—	—	1	—	—	2926 123
	PLATE, Vent Wing Switch Trim Retaining	Single 71	C-H	—	—	—	—	—	1	—	—	3488 445
		Double 71	C-H	—	—	—	—	—	1	—	—	3488 444
23-41-250	ROLLER, Electric Window Regulator Arm	Frt. Door 70	R,W	—	2	2	2	—	—	—	—	2486 982
	ROLLER, Electric Window Regulator Front Arm	Qrt. 70	R,W	—	2	2	2	—	—	—	—	2486 982
	ROLLER, Electric Window Regulator Pivot Arm	Qtr.	R,W,P, D,C,Y	—	2	2	2	—	—	—	—	1697 607
		Frt. Door 70	P,D,C,Y	—	2	—	2	—	—	—	—	1697 607
		Rr. Door 70	P,D,C,Y	—	—	—	—	2	2	2	2	1697 607
23-41-260	BOOT, Front Door Electric Window Regulated Mechanism and Motor Anti-Rattle		B,J	—	2	2	2	—	—	—	—	3508 974
	BOOT, Quarter Electric Window Regulator Mechanism and Motor Anti-Rattle	71	R,W	—	2	—	2	—	—	—	—	3508 974
23-41-270	HOUSING w/SHAFT, Electric Window Regulator Mechanism Frt. Door, Rear Door and Quarter		B,J,R,W	—	4	4	4	—	—	—	—	2520 914-5
			P,D,C,Y	—	4	4	4	4	4	4	4	2520 914-5
23-41-286	O-RING, Door Electric Window Regulator	Frt. Door	R,W,P, D,C,Y	—	2	2	2	2	2	2	2	1316 813
		Rr. Door	P,D,C,Y	—	—	—	—	2	2	2	2	1316 813
	O-RING, Quarter Electric Window Regulator Mechanism		B,J,R,W, P,D,C,Y	—	2	2	2	—	—	—	—	1316 813
23-42-0	**WINDOW GLASS RUN**											
23-42-13	RUN, Frt. Door V/Wing Divisional Channel Door Glass		V,L	—	—	—	—	2	—	—	—	2570 243
		70	R,W	—	—	—	—	2	—	2	2	2570 243

CARLINES	J - Challenger B - Barracuda	V - Valiant L - Dart	R - Belvedere - Satallite W - Coronet - Charger	P - Plymouth D - Dodge	C - Chrysler Y - Imperial
NUMERALS INDICATE:	21 - 2 DR. SED. 23 - 2 DR. H.T.	27 - CONV. CPE. 29 - FAST BACK	41 - 4 DR. SED. 43 - 4 DR. H.T.	45 - 6 PASS. STA. WGN. 46 - 9 PASS. STA. WGN.	

AR Indicates use as required.
\# Indicates parts not listed in any previous parts book
Numerals in parentheses ( ) refer to notes.
★ Indicates change or addition.

Printed in U.S.A.
January 1972

Right and left part numbers are on same line, first number is right, second number is left.

23-42-0 WINDOW GLASS RUN Cont'd.

CODE	PART NAME		MODEL CODES	SEE BOTTOM NOTE 21	23	27	29	41	43	45	46	PART NUMBER
23-42-13	RUN Cont'd.											
	RUN, Rr. Door Divisional Channel											
	Door Glass	70	V,L	—	—	—	—	2	—	—	—	2570 243
		70	R,W	—	—	—	—	2	—	2	2	2570 243
23-42-16	RUN, Frt. Door Glass	70	R,W	—	—	—	—	2	—	2	2	2570 244
		71	R,W	—	—	—	—	2	—	2	2	3581 454
	Up to May 1971 w/Retainer	71	RW	—	—	—	—	1	—	1	1	3581 920-1
	After May 1971 w/Retainer	71	R,W	—	—	—	—	1	—	1	1	= 3582 316-7
		70	P,D,C	—	—	—	—	2	—	2	2	2895 250
	RUN, Frt. Door Glass Rear											
			V,L	—	2	—	—	—	—	—	—	2861 772
		70	R,W	—	—	2	—	—	—	—	—	2861 772
		70	R,W	—	1	—	1	—	—	—	—	3440 422-3
		70	R,W	—	—	—	—	2	—	—	—	2860 398
	RUN, Frt. Door Glass Track Stabilizer Guide											
		71	V,L	—	—	—	2	—	—	—	—	= 3582 025
		71	B,J	—	2	2	—	—	—	—	—	= 3582 025
		71	R,W	—	2	—	2	2	—	2	2	= 3582 040
	RUN, Frt. Door Glass Rr. Channel		V,L	—	—	—	—	2	—	—	—	2663 479
		Inner 70	P,D,C,Y	2	—	2	—	—	2	—	—	3440 493
		Inner 71	P,D,C,Y	—	—	—	—	—	2	—	—	3440 493
		Inner	P,D,C,Y	2	2	—	2	—	—	—	—	2895 409
		Outer	P,D,C,Y	2	2	2	2	—	2	—	—	2894 802
	RUN, Frt. Door Upper Frame Extension Channel											
		71	R,W	—	—	—	—	2	—	2	2	3581 478
	RUN, Frt. Door Glass											
		71	P,D,C	—	—	—	—	2	—	2	2	3499 752
23-42-23	RUN, Rear Door Glass Front		V,L	—	—	—	—	2	—	—	—	2663 790
	RUN, Rear Door Glass	70	R,W	—	—	—	—	2	—	—	—	2664 198
		70	R,W	—	—	—	—	—	—	2	2	2664 197
		71	R,W	—	—	—	—	2	—	—	—	3440 038
		71	R,W	—	—	—	—	—	—	2	2	3581 877
			P,D	—	—	—	—	2	—	—	—	2893 738
			C	—	—	—	—	2	—	—	—	2893 739
			P,D,C	—	—	—	—	—	—	2	2	2893 740
23-42-32	RETAINER, Quarter Tailgate Glass Run	70	R,W	—	—	—	—	—	—	1	1	2860 764-5
			P,D,C	—	—	—	—	—	—	1	1	2895 238-9
	RETAINER, Roof Rear Header Tailgate Glass Run	70	R,W	—	—	—	—	—	—	1	1	2573 304
			P,D,C	—	—	—	—	—	—	1	1	2895 134
	RETAINER, Quarter Panel Tailgate Glass Weatherstrip											
		71	R,W	—	—	—	—	—	—	1	1	3581 208-9
	RETAINER, Rr. Tailgate Glass Opening Upper Weatherstrip											
		71	R,W	—	—	—	—	—	—	1	1	3440 126
23-42-38	RUN, Quarter Window Glass	Frt. 70	P	2	—	—	—	—	—	—	—	2965 756
		Rr. 70	P	2	—	—	—	—	—	—	—	2902 762
		w/Retainer	J	—	1	—	1	—	—	—	—	3444 804-5
		w/Retainer	B	—	1	—	—	—	—	—	—	3444 806-7
23-42-46	RUN, Tailgate Glass	Lower 70	R,W	—	—	—	—	—	—	2	2	2860 621
		Lower	P,D,C	—	—	—	—	—	—	2	2	2894 102
	RUN, Roof Rear Tailgate Glass		R,W	—	—	—	—	—	—	1	1	2574 657
	RUN, Quarter Panel Tailgate Glass											
		Inner 70	R,W	—	—	—	—	—	—	1	1	2860 476-7
	w/CLIP	Outer 70	R,W	—	—	—	—	—	—	1	1	2861 334-5

CARLINES	J - Challenger B - Barracuda	V - Valiant L - Dart	R - Belvedere - Satellite W - Coronet - Charger	P - Plymouth D - Dodge	C - Chrysler Y - Imperial
NUMERALS INDICATE:	21 - 2 DR. SED. 23 - 2 DR. H.T.	27 - CONV. CPE. 29 - FAST BACK	41 - 4 DR. SED. 43 - 4 DR. H.T.	45 - 6 PASS. STA. WGN. 46 - 9 PASS. STA. WGN.	

AR Indicates use as required.
\# Indicates parts not listed in any previous parts book
Numerals in parentheses ( ) refer to notes.
★ Indicates change or addition.

Printed in U.S.A.
January 1972

Right and left part numbers are on same line, first number is right, second number is left.

CODE	PART NAME		MODEL CODES	SEE BOTTOM NOTE 21	23	27	29	41	43	45	46	PART NUMBER
23-42-0	**WINDOW GLASS RUN Cont'd.**											
23-42-46	RUN Cont'd.											
	RUN or WEATHERSTRIP, Quarter Panel											
	Tailgate Pillar Upper Side	Inner	P,D,C	—	—	—	—	—	—	1	1	3439 278-9
	w/CLIP	Outer	P,D,C	—	—	—	—	—	—	1	1	2895 256-7
23-42-55	SEAL, Roof Rear Header Tailgate Glass Run Retainer to Header Rail		P,D,C	—	—	—	—	—	—	1	1	2895 263
	WEATHERSTRIP, Roof Rear Tailgate Glass Upper		P,D,C	—	—	—	—	—	—	1	1	2894 527
23-42-56	RETAINER and BRACKET, Quarter Window Glass Rear Run		P	1	—	—	—	—	—	—	—	2933 240-1
23-45-0	**FRONT SEAT**											
23-45-29	PLATE, Front Seat Cushion Bumper Stop		V,L,B,J, R,W	2	2	2	2	2	—	2	2	3447 740
23-45-30	BUMPER, Frt. Seat Back to Cushion Up To Nov. 1970		V,L,B,J, R,W	2	2	2	2	2	—	2	2	3447 739
	Screw			2	2	2	2	2	—	2	2	6028 520
	After Nov. 1970	71	V,L,B,J R,W	—	AR	AR	AR	AR	—	AR	AR	3594 092
	Complete w/Washer		V,L,B,J, R,W	AR	AR	AR	AR	AR	—	AR	AR	3594 091
23-45-31	WASHER, Bucket Seat Back To Cushion Mtg. Bolt		P,D,C,Y	—	4	4	4	—	4	—	—	6026 654
	BOLT, Bucket Seat Back To Cushion Mtg.		P,D,C,Y	—	4	4	4	—	4	—	—	6027 141
	PIVOT, (Shoulder Bolt) Front Seat Back Outer Hinge, Bench Seat		B,J	—	2	—	—	—	—	—	—	6028 622
	Bucket Seat		V,L,B,J R,W	—	4	4	4	4	—	—	—	6028 365
23-45-39	KNOB, Front Seat Back Release Lever	70	V,L,R,W P,D,C,Y	2	2	2	2	—	—	—	—	2888 762
		71	V,L,P,D,C	2	2	—	2	—	—	—	—	2888 762
	CAP, Front Seat Back Latch Release Lever Bench	70	V,L,R,W, P,D,C	2	2	2	2	—	—	—	—	3447 320
		71	V,L,P,D,C	2	2	—	2	—	—	—	—	3447 320
	BUTTON, Front Seat Back Latch Actuator	71	V,L,B,J R,W,P,D, C,Y,	2	2	—	2	—	—	—	—	3520 284
23-45-47	WIRE, Seat Reclining Handle Return Spring Connecting w/Split Seats		P,D,C	—	—	—	—	1	1	1	1	2858 151
		71	Y	—	—	—	—	—	1	—	—	2767 869
23-45-51	SPACER, Frt. Seat Latch Striker		V,L,B,J, R,W	4	4	4	4	4	—	4	4	2942 849
23-45-52	HANDLE, Reclining Front Seat Back Release		P,D,C,Y	—	—	—	—	1	1	1	1	2609 250
	HANDLE, Reclining Bucket Seat Back Release	70	P,D,C,Y	—	1	—	1	—	—	—	—	2609 221
		70	C	—	—	1	—	—	1	—	—	2609 221
		71	P,D,C,Y	—	1	—	1	—	1	—	—	3520 229
	LEVER, Bucket Seat Back Release	70	P,D,C	—	1	1	1	—	—	—	—	2888 386-7
		70	Y	—	1	—	—	—	—	—	—	3447 850-1

CARLINES	J - Challenger B - Barracuda	V - Valiant L - Dart	R - Belvedere - Satallite W - Coronet - Charger	P - Plymouth D - Dodge	C - Chrysler Y - Imperial
NUMERALS INDICATE:	21 - 2 DR. SED 23 - 2 DR. H.T.	27 - CONV. CPE. 29 - FAST BACK	41 - 4 DR. SED. 43 - 4 DR. H.T.	45 - 6 PASS. STA. WGN. 46 - 9 PASS. STA. WGN.	

AR Indicates use as required.
\# Indicates parts not listed in any previous parts book
Numerals in parentheses ( ) refer to notes.
★ Indicates change or addition.

Printed in U.S.A.
January 1972

Right and left part numbers are on same line, first number is right, second number is left.

CODE	PART NAME		MODEL CODES	SEE BOTTOM NOTE 21	23	27	29	41	43	45	46	PART NUMBER
23-45-0	**FRONT SEAT Cont'd.**											
23-45-52	HANDLE Cont'd.											
	LEVER, Front Seat Back Release, w/Bench Seats		V,L,R,W P,D,C,Y	1	1	1	1	—	—	—	—	3447 316-7
		71	V,L,P,D,C	1	1	—	1	—	—	—	—	3447 316-7
	ACTUATOR, Frt. Seat Back Latch Bench Seats	71	R,W	—	1	—	—	—	—	—	—	3520 790-1
	Bench Seats	71	P,D,C	1	1	—	1	—	—	—	—	3520 972-3
	Bucket Seats	71	P,D,C	—	1	—	1	—	1	—	—	3520 794-5
23-45-55	SPRING, Front Seat Back Latch Return w/Bench Seats	70	V,L,R,W P,D,C,Y	1	1	1	1	—	—	—	—	2888 582-3
	w/Bench Seats	71	V,L,R,W, D,C,Y	1	1	—	1	—	—	—	—	2888 738-9
	SPRING, Reclining Bucket Seat Back Latch Return	70	D,C,Y	—	1	1	—	—	—	—	—	2888 739
	SPRING, Front Seat Back Latch Return w/Bucket Seats		P,D,C	—	1	1	1	—	—	—	—	2888 738-9
	SPRING, Front Seat Reclining Release Handle Return Split Seats		P,D,C,Y	—	—	—	—	1	1	1	1	2428 388
	SPRING, Front Seat Back Release Lever Return w/Bucket Seats		P,D,C,Y	—	1	1	1	—	—	—	—	2888 562-3
	w/Bench Seats		V,L,R,W, P,D,C,Y	1	1	1	1	—	—	—	—	3447 314-5
		71	V,L,P,D,C	1	1	—	1	—	—	—	—	3447 314-5
	SPRING, Front Seat Back Latch Release		V,L,B,J R,W	1	1	1	1	1	—	1	1	2942 688-9
	SPRING, Front Seat Back Latch Detent		V,L,B,J, R,W	2	2	2	2	2	—	2	2	2942 686
		71	V,L,B,J, R,W	—	1	1	1	—	—	—	—	3447 974-5
23-45-57	LOCK, Front Seat Back to Cushion w/Split or Bucket Seats		V,R,W P,D,C	—	—	—	—	2	2	2	2	2888 659
	LATCH, Front Seat Back w/Bucket or Reclining Seats		V,L,B,J, R,W	1	1	1	1	1	—	1	1	3447 878-9
		71	P,D,C,Y	AR	AR	—	AR	AR	AR	AR	AR	2888 565
	LATCH, Reclining Bucket Seat Back to Cushion	70	D,C,Y	—	1	—	—	—	—	—	—	2888 566
		70	C	—	—	1	—	—	—	—	—	2888 566
	LATCH, Non-Reclining Bucket Seat Back to Cushion	70	C	—	—	1	—	—	—	—	—	2888 565
		70	P,D,C,Y	—	1	—	1	—	—	—	—	2888 565
	LATCH, w/Cable, Bucket Seat Back Rel.	71	P,D,C,Y									3520 932-3
	RING, Frt. Seat Latch to Back Spring	70	All	2	2	2	2	2	2	2	2	6024 440
	WASHER, Frt. Seat Back Release Latch Nylon	70	All	2	2	2	2	2	2	2	2	6027 330
23-45-63	SHAFT, Reclining Bucket Seat Release Handle	70	P,C	—	—	—	—	—	1	—	—	2888 497
		70	C	—	—	1	—	—	—	—	—	2888 497
		70	P,D,C,Y	—	1	—	1	—	—	—	—	2888 497
23-45-66	ESCUTCHEON, Front Seat Back Release Handle	70	V,L,R,W,									
		70	P,D,C,Y	1	1	1	1	—	—	—	—	2858 967
		71	V,L,P,D,C	2	2	—	2	—	—	—	—	3447 872

CARLINES: J - Challenger, B - Barracuda, V - Valiant, L - Dart, R - Belvedere - Satallite, W - Coronet - Charger, P - Plymouth, D - Dodge, C - Chrysler, Y - Imperial

NUMERALS INDICATE: 21 - 2 DR. SED., 23 - 2 DR. H.T., 27 - CONV. CPE., 29 - FAST BACK, 41 - 4 DR. SED., 43 - 4 DR. H.T., 45 - 6 PASS. STA. WGN., 46 - 9 PASS. STA. WGN.

AR Indicates use as required.
\# Indicates parts not listed in any previous parts book
Numerals in parentheses ( ) refer to notes.
★ Indicates change or addition.

Printed in U.S.A.
January 1972

Right and left part numbers are on same line, first number is right, second number is left.

CODE	PART NAME		MODEL CODES	SEE BOTTOM NOTE 21	23	27	29	41	43	45	46	PART NUMBER
23-45-0	**FRONT SEAT Cont'd.**											
23-45-66	ESCUTCHEON Cont'd.											
	BEZEL, Frt. Seat Back Latch Actuator Button	71	R,W,P, D,C,Y	2	2	—	2	—	—	—	—	3520 283
	ESCUTCHEON, Front Seat Back Release Latch Handle	70	Y	—	2	—	—	—	—	—	—	9644 DX9
	RETAINER, Front Seat Back Latch Release Button w/Split Back or Bucket Seats	71	V,L,B,J R,W	—	2	2	2	—	—	—	—	3594 211
23-45-76	STRIKER, Bucket Front Seat Back Latch	70	V,L,B,J R,W	1	1	1	1	1	—	1	1	2942 690-1
		71	V,L,B,J R,W	—	1	1	1	—	—	—	—	2942 690-1
	STRIKER, Bench Front Seat Back Latch		B,J	—	1	—	—	—	—	—	—	3447 880-1
23-45-183	WIRE, Reclining Bucket Seat Back Mechanism Release		P,D,C,Y	—	1	—	1	—	—	—	—	2609 878
			C	—	—	1	—	—	1	—	—	2609 878
23-45-184	PIN, Reclining Seat Release Cable to Handle Split Seats		P,D,C,Y	—	—	—	—	1	1	1	1	2609 262
23-45-185	BASE, Bucket Front Seat Back Latch Striker	70	V,L,B,J, R,W	1	1	1	1	1	—	1	1	2942 690-1
	BASE, Reclining Bucket Seat Back	70	P,D,C,Y	—	1	—	—	—	—	—	—	2858 582
		70	C	—	—	1	—	—	1	—	—	2858 582
		71	P,D,C,Y	1	1	—	1	1	1	1	1	3520 892
	BOLT, Shoulder		D,C,Y	—	2	2	—	—	2	—	—	6027 424
	WASHER		D,C,Y	—	2	2	—	—	2	—	—	6026 654
	PIN		D,C,Y	—	4	4	—	—	4	—	—	9412 281
23-45-186	CROSSMEMBER, Bucket Seat Back Lower Non-Reclining	71	P,D,C,Y	—	AR	—	AR	—	AR	—	—	3520 054
23-45-192	CLIP, Reclining Front Seat Adjusting Cable Split Seats		P,D,C	—	—	—	—	1	1	1	1	2858 422
23-45-194	ADJUSTER, Reclining Seat Back w/Split Seats	70	P,D,C	—	—	—	—	1	1	1	1	2858 175
	w/Split Seats	70	Y	—	—	—	—	—	1	—	—	2858 124
	w/Bucket Seats	70	P,D,C	—	1	1	1	—	—	—	—	2888 667
	w/Bucket Seats	71	P,C,Y	—	1	—	1	—	1	—	—	3520 982
	w/Split Seats	71	P,D,C	—	—	—	—	1	1	1	1	3447 991
	w/Split Seats	71	Y	—	—	—	—	—	1	—	—	= 3447 992
	w/Bucket Seats	70	C	—	—	1	—	—	1	—	—	2888 667
	w/Bucket Seats	70	Y	—	1	—	—	—	—	—	—	2888 671
	w/Bucket Seats	71	Y	—	1	—	—	—	—	—	—	3594 288
	ACTUATOR, Frt. Seat Back Latch w/Bucket Seats	71	P,D,C,Y	1	1	—	1	1	1	—	—	3520 794-5
23-45-204	CABLE, Seat Back Latch Release w/Bucket Seats	70	P,D,C,Y	—	AR	AR	AR	—	—	—	—	2858 970
	w/Reclining Bucket Seats	70	P,D,C,Y	—	1	1	1	—	—	—	—	2888 691
	w/Reclining Bucket Seats	70	C	—	—	1	—	—	—	—	—	2888 691
	w/Bench Seats, w/Latch		V,L	—	1	—	1	—	—	—	—	3447 434-5
	w/Bench Seats	70	R,W	1	1	1	1	—	—	—	—	3447 436-7
	w/Bench Seats		P,D,C,Y	1	1	1	1	—	—	—	—	3447 438-9
	w/Latch, Bench Seats	71	R,W	—	1	—	—	—	—	—	—	3520 928-9
	Split Bench, w/Center Arm Rest, w/Latch	71	R,W	—	1	—	1	—	—	—	—	= 3520 288-9

CARLINES J - Challenger, B - Barracuda, V - Valiant, L - Dart, R - Belvedere - Satallite, W - Coronet - Charger, P - Plymouth, D - Dodge, C - Chrysler, Y - Imperial

NUMERALS INDICATE: 21 - 2 DR. SED., 23 - 2 DR. H.T., 27 - CONV. CPE., 29 - FAST BACK, 41 - 4 DR. SED., 43 - 4 DR. H.T., 45 - 6 PASS. STA. WGN., 46 - 9 PASS. STA. WGN.

AR Indicates use as required.
\# Indicates parts not listed in any previous parts book
Numerals in parentheses ( ) refer to notes.
★ Indicates change or addition.

Printed in U.S.A.
January 1972

Right and left part numbers are on same line, first number is right, second number is left.

CODE	PART NAME		MODEL CODES	SEE BOTTOM NOTE 21	23	27	29	41	43	45	46	PART NUMBER
23-45-0	**FRONT SEAT Cont'd.**											
23-45-204	CABLE Cont'd.											
	w/Latch, Split Bench, Frt. w/Center Arm Rest	71	P,D,C,Y	—	1	—	1	—	—	—	—	3520 280-1
	w/Latch, Bench Seats, Heavy Duty	71	P,D	1	1	—	1	—	—	—	—	3447 438-9
	Bucket Seats, Non Reclining Rt.	71	P,D,C	1	1	—	1	—	—	—	—	3520 242
	Bucket Seats, Non Reclining Lt.	71	P,D,C,Y	1	1	—	1	—	—	—	—	3520 243
	w/Latch, Bench Seats	71	P,D,C	1	1	—	1	—	—	—	—	3520 958-9
	Reclining Bucket Seats	71	P,C,Y	—	1	—	1	—	—	—	—	3520 936
	CABLE, Seat Back Reclining Adjusting w/Split Seats	70	P,D,C,Y	—	—	—	—	1	1	1	1	2858 193
		71	P,D,C,Y	—	—	—	—	1	1	1	1	= 3447 978
23-45-204	COVER, Front Seat Back Latch Release Cable W/Reclining Bucket Seats	71	P,C,Y	—	1	—	1	—	1	—	—	3594 043
	RETAINER, Recl. Adj. to Seat Pin		P,D,C,Y	—	2	—	2	2	2	2	2	6029 279
	CLEVIS PIN, Recl. Adj. to Seat		P,D,C,Y	—	2	—	2	2	2	2	2	6029 280
	NUT, Frt. Seat Back Rel. Cable to Back Lwr.		R,W,P,D,C	—	2	—	2	—	—	—	—	6029 501
	CLIP, Recl. Seat Back Wire Adj.		P,D,C,Y	—	1	1	1	—	1	—	—	6026 350
23-47-0	**FRONT SEAT ADJUSTER**											
23-47-6	ADJUSTER, Manual Seat w/Bench Seats	Rt. 70	B,J	—	1	—	—	—	—	—	—	2999 518
		Lt. 70	B,J	—	1	—	—	—	—	—	—	2999 521
		Rt. 71	B,J	—	1	—	—	—	—	—	—	3586 134
		Lt. 71	B,J	—	1	—	—	—	—	—	—	3586 139
	w/Bench Seats	70	V,L	—	1	—	1	1	—	—	—	2935 758-9
	W/Bench Seats	71	V,L	—	1	—	1	1	—	—	—	3586 388-9
	w/Bucket Seats	Inner 70	V	—	—	—	1	1	—	—	—	3454 068-9
	w/Bucket Seats	Inner 70	L	—	1	—	—	—	—	—	—	3454 068-9
	w/Bucket Seats	Outer 70	V	—	—	—	1	1	—	—	—	3454 072-3
	w/Bucket Seats	Outer 70	L	—	1	—	—	—	—	—	—	3454 072-3
	w/Bucket Seats	Inner 71	V,L	—	1	—	1	—	—	—	—	3586 148-9
	w/Bucket Seats	Outer 71	V,L	—	1	—	1	—	—	—	—	3454 072-3
	w/Bucket Seats	Inner	B,J	—	1	1	1	—	—	—	—	2999 522-3
	w/Bucket Seats	Outer	B,J	—	1	1	1	—	—	—	—	2999 520-1
	w/Bench Seats	70	R,W	1	1	1	1	—	—	—	—	2935 774-5
	w/Bench Seats	70	R,W	—	—	—	—	1	—	1	1	2935 778-9
	w/Bench Seats	71	R,W	—	1	—	1	1	—	1	1	= 3586 132-3
	w/Bench Seats	70	P,D,C,Y	1	1	1	1	—	—	—	—	3454 882-3
	w/Bench Seats, w/Heavy Duty Springs	71	P,D,C,Y	1	1	—	1	1	—	—	—	3508 606-7
	w/Bench Seats	70	P,D,C,Y	—	—	—	—	1	1	1	1	3454 886-7
	w/Bench Seats	71	P,D,C,Y	—	—	—	—	1	1	1	1	3508 608-9
	w/BUCKET or SPLIT SEATS PASSENGER SEAT	Inner 70	R,W	1	1	1	1	1	—	1	1	3454 070
		Inner 71	R,W	—	1	—	1	—	—	—	—	= 3586 144
		Outer 70	R,W	1	1	1	1	1	—	1	1	3454 074
		Outer 71	R,W	—	1	—	1	—	—	—	—	3586 136
		Inner	P,D,C	—	1	1	1	—	1	—	—	2935 418
		Outer 70	P,D,C	—	1	1	1	—	1	—	—	2935 420
		Outer 71	P,D,C	—	1	—	1	—	1	—	—	3548 388
		Inner	Y	—	1	—	—	—	—	—	—	2935 418
		Outer	Y	—	1	—	—	—	—	—	—	2935 420
		Outer	P,D,C,Y	—	—	—	—	1	1	1	1	2935 790
		Inner	P,D,C,Y	—	—	—	—	1	1	1	1	2935 418
	DRIVER SEAT	Inner 70	R,W	1	1	1	1	1	—	1	1	3454 071
		Inner 71	R,W	—	1	—	1	1	—	1	1	3586 145
		Outer 70	R,W	1	1	1	1	1	—	1	1	3454 075

CARLINES J - Challenger, B - Barracuda, V - Valiant, L - Dart, R - Belvedere - Satallite, W - Coronet - Charger, P - Plymouth, D - Dodge, C - Chrysler, Y - Imperial

NUMERALS INDICATE: 21 - 2 DR. SED., 23 - 2 DR. H.T., 27 - CONV. CPE., 29 - FAST BACK, 41 - 4 DR. SED., 43 - 4 DR. H.T., 45 - 6 PASS. STA. WGN., 46 - 9 PASS. STA. WGN.

AR Indicates use as required.
# Indicates parts not listed in any previous parts book
Numerals in parentheses ( ) refer to notes.
★ Indicates change or addition.

Printed in U.S.A. January 1972

Right and left part numbers are on same line, first number is right, second number is left.

CODE	PART NAME		MODEL CODES	SEE BOTTOM NOTE 21	23	27	29	41	43	45	46	PART NUMBER
23-47-0	**FRONT SEAT ADJUSTER Cont'd.**											
23-47-6	ADJUSTER Cont'd.											
		Outer 71	R,W	—	1	—	1	1	—	1	1	3586 137
		Inner	P,D,C,Y	—	—	—	—	1	1	1	1	2935 419
		Outer	P,D,C,Y	—	—	—	—	1	1	1	1	2935 791
		Inner	P,D,C,Y	—	1	1	1	—	1	—	—	2935 419
		Outer 70	P,D,C,Y	—	1	1	1	—	1	—	—	2935 421
		Outer 71	P,D,C	—	1	—	1	—	1	—	—	3548 389
	ADJUSTER, Front Seat Manual											
	6 Way	Lt.	B,J	—	1	1	1	—	—	—	—	3454 443
		Lt. 70	R,W	1	1	1	1	1	—	1	1	3454 445
		Lt. 71	R,W	—	1	—	1	1	—	1	1	3508 217
	ADJUSTER, Front Seat Electric											
	w/Bucket Seats		P,D,C,Y	—	1	1	1	—	1	—	—	2945 944-5
	w/Split Seats		P,D,C,Y	—	—	—	—	1	1	1	1	3454 386-7
	w/Bench Seats	71	P,D,C,Y	—	1	—	—	1	1	1	1	= 3548 353
23-47-7	REINFORCEMENT, Front Seat Adjuster w/Split Seats		Y	—	—	—	—	—	1	—	—	2888 745
23-47-8	COVER, Front Seat Adjuster (Paint as req'd.)	Upr. Rr.	P,D,C,Y	AR	AR	AR	AR	AR	AR	AR	AR	2715 EX9
		Lower	P,D,C,Y	—	AR	AR	AR	AR	AR	AR	AR	4372 EX9
		Upr.	P,D,C,Y	—	1	1	1	—	1	—	—	4374-5 EX9
23-47-15	SPACER, Front Seat Manual Adjuster Steel Type		V,L,B,J, R,W	AR	AR	AR	AR	AR	—	AR	AR	2999 991
	Plastic Type		R,W,P, D,C,Y	4	4	4	4	4	—	4	4	2945 544
	SPACER, Front Seat Electric Adjuster		P,D,C,Y	—	AR	—	—	AR	AR	AR	AR	3454 555
23-47-26	SPRING, Front Seat Manual Adjuster Tension		V,L, B,J,R,W	AR	AR	AR	AR	AR	—	AR	AR	2999 995
		6 Way	B,J,R,W	1	1	1	1	1	—	1	1	3454 435
			V,L,R,W P,D,C,Y	2	2	2	2	2	2	2	2	2299 980
	SPRING, Front Seat Manual Adjuster Vertical Tilt Assist,	6 Way 70	B,J,R,W	2	2	2	2	2	—	2	2	2999 714
23-47-28	HOOK, Manual Seat Guide Wire Tension		V,L,R,W, P,D,C,Y	AR	AR	AR	AR	AR	AR	AR	AR	2494 549
	HOOK, Bucket Front Seat Guide Wire		V,L,B,J, R,W	2	2	2	2	2	—	2	2	2942 556
23-47-33	CROSSMEMBER, Front Floor Pan Seat Track	Frt.	B,J	—	2	2	2	—	—	—	—	3444 949
		Rr.	B,J	—	1	1	1	—	—	—	—	2965 827
		Frt. 71	R,W	—	1	—	1	1	—	1	1	3444 949
		Rr. 71	R,W	—	1	—	1	1	—	1	1	2965 827
	w/Spacer	Frt. Frt. 71	R,W	—	1	—	1	1	—	1	1	3570 443
	w/Spacer	Frt. Rr. 71	R,W	—	1	—	1	1	—	1	1	3570 441
		Frt. 71	P,D,C	1	1	—	1	1	1	1	1	3444 281
		Frt. 71	Y	—	1	—	—	—	1	—	—	3444 281
		Frt.	P,D,C,Y	1	1	1	1	1	1	1	1	3444 281
		Rr.	P,D,C,Y	1	1	1	1	1	1	1	1	3444 282
23-47-34	T/PLATE, Front Floor Pan Seat Track C/Member Reinforcement		Y	—	2	—	—	—	—	—	—	2842 565
	PLATE and SCREW, Frt. Floor Pan Seat Crossmember	Frt.	B,J	—	1	1	1	—	—	—	—	3504 599

CARLINES: J - Challenger, B - Barracuda, V - Valiant, L - Dart, R - Belvedere - Satallite, W - Coronet - Charger, P - Plymouth, D - Dodge, C - Chrysler, Y - Imperial

NUMERALS INDICATE: 21 - 2 DR. SED., 23 - 2 DR. H.T., 27 - CONV. CPE., 29 - FAST BACK, 41 - 4 DR. SED., 43 - 4 DR. H.T., 45 - 6 PASS. STA. WGN., 46 - 9 PASS. STA. WGN.

AR Indicates use as required.
# Indicates parts not listed in any previous parts book
Numerals in parentheses ( ) refer to notes.
★ Indicates change or addition.

Printed in U.S.A.
January 1972

Right and left part numbers are on same line, first number is right, second number is left.

23-47-0 FRONT SEAT ADJUSTER Cont'd.

CODE	PART NAME	MODEL CODES	SEE BOTTOM NOTE 21	23	27	29	41	43	45	46	PART NUMBER
23-47-34	T/PLATE Cont'd.										
	Rr.	B,J	—	1	1	1	—	—	—	—	3504 601
	Frt. 71	R,W	—	1	—	1	1	—	1	1	3504 599
	Rr. 71	R,W	—	1	—	1	1	—	1	1	3504 601
23-47-55	KNOB, Manual Seat Adjuster Release Lever Chrome 70	V,L,B,J, R,W,P, D,C	1	1	1	1	1	1	1	1	2765 197
	Black	V,L,B,J, R,W,P,Y	AR	AR	AR	AR	AR	AR	AR	AR	2583 623
	KNOB, Frt. Seat Manual Adjuster Horizontal Lever 71	B,J,R,W	—	1	1	1	1	—	1	1	2999 725
	KNOB, Frt. Seat Manual Adjuster Vertical Tilt Lever 70	R,W	1	1	1	1	1	—	1	1	= 2999 728
	71	B,J,R,W	—	1	1	1	1	—	1	1	2999 726
	HANDLE, Bucket Front Seat Back Reclining Release 71	P,D,C,Y	—	1	—	1	—	1	—	—	3520 229
	HANDLE, Frt. Seat Manual Adjuster Verticle Tilt Actuator 6 Way Manual Lt. 70	B,J	—	1	1	1	—	—	—	—	= 3454 415
23-47-66	WIRE, Manual Seat Adjuster Latch Connector w/Bench Seats	V,L	—	1	—	1	1	—	—	—	2270 067
	w/Bucket Seats Rt.	V,L,B,J, R,W	1	1	1	1	1	—	1	1	2999 998
	w/Bucket Seats Lt.	V,L,B,J, R,W	2	2	2	2	2	—	2	2	3454 001
	w/Bench Seats 70	R,W	1	1	1	—	1	—	1	1	2486 968
	w/Bench Seats 71	R,W	—	1	—	1	1	—	1	1	2486 966
	w/Bucket Seats	P,D,C	—	1	1	1	—	1	—	—	2765 157
	w/Bucket Seats	Y	—	1	—	—	—	—	—	—	2765 157
	w/Bench Seats	P,D,C,Y	1	1	1	1	1	1	1	1	2520 883
	w/Split Seats	P,D,C,Y	—	—	—	—	1	1	1	1	2765 434
	WIRE, Front Seat Manual Adjusting Connecting 6 Way Lt.	B,J	—	1	1	1	—	—	—	—	3454 972
	6 Way Lt.	R,W	1	1	1	1	1	—	1	1	3454 972
	TURNBUCKLE and WIRE, Frt. Seat Adjuster Connecting w/Bench Seats	B,J	—	1	—	—	—	—	—	—	3454 132
23-47-67	GUIDE, Manual Seat Adjuster Latch Connecting Wire w/Bucket Seats Rt. 70	V,L,R,W	1	1	1	1	1	—	1	1	2765 159
	Rt. 71	V,L	—	1	—	1	—	—	—	—	2765 159
	w/Bucket or Split Seats Rt.	B,J,P, D,C,Y	—	1	1	1	1	1	1	1	2486 994
23-47-75	SPRING, Manual Seat Adjuster Release Lever	V,L,B,J, R,W,P, D,C,Y	AR	AR	AR	AR	AR	AR	AR	AR	2428 388
	SPRING, Manual Seat Adjuster Latch	V,L,B,J, R,W,P D,C,Y	2	2	2	2	2	2	2	2	2428 388
	SPRING, Front Seat Manual Adjuster Horizontal Latch 6 Way Lt.	B,J,R,W	1	1	1	1	1	—	1	1	2999 713
	SPRING, Front Seat Manual Adjuster Horizontal Lever 6 Way Lt	B,J,R,W	1	1	1	1	1	—	1	1	2999 713

CARLINES: J - Challenger, B - Barracuda, V - Valiant, L - Dart, R - Belvedere - Satallite, W - Coronet - Charger, P - Plymouth, D - Dodge, C - Chrysler, Y - Imperial

NUMERALS INDICATE: 21 - 2 DR. SED., 23 - 2 DR. H.T., 27 - CONV. CPE., 29 - FAST BACK, 41 - 4 DR. SED., 43 - 4 DR. H.T., 45 - 6 PASS. STA. WGN., 46 - 9 PASS. STA. WGN.

AR Indicates use as required.
\# Indicates parts not listed in any previous parts book
Numerals in parentheses ( ) refer to notes.
★ Indicates change or addition.

Printed in U.S.A. January 1972

Right and left part numbers are on same line, first number is right, second number is left.

CODE	PART NAME		MODEL CODES	SEE BOTTOM NOTE 21	23	27	29	41	43	45	46	PART NUMBER
23-47-0	**FRONT SEAT ADJUSTER Cont'd.**											
23-47-75	SPRING Cont'd.											
	SPRING, Front Seat Manual Adjuster Vertical Tilt Latch	6 Way Lt	B,J,R,W	2	2	2	2	2	—	2	2	3454 433
23-47-337	TERMINAL, Front Seat Electric Adjuster Motor	Lt. 70	P,D,C,Y	1	1	1	1	1	1	1	1	2926 174
23-47-344	DRIVE UNIT, Frt. Seat Electric Adjuster w/Bench Seats	70	P,D,C,Y	—	1	1	—	1	1	1	1	2999 239
	SLAVE UNIT, Frt. Seat Electric Adjuster w/Bench Seats	70	P,D,C,Y	—	1	1	—	1	1	1	1	2999 238
23-47-345	BRACKET, Seat Back Stop	70	W-T	—	—	—	—	2	—	—	—	3412 284
23-47-420	WIRING, Seat Adjuster Feed w/Bucket or Split Seats	Rt.	C	—	1	1	—	—	1	1	1	2926 736
		Rt.	Y	—	—	—	—	—	1	—	—	2926 736
		Rt.	Y	—	1	—	—	—	—	—	—	2926 737
	w/Bucket or Bench Seats	Rt. and Lt.	C,Y	—	1	—	—	1	1	1	1	= 3588 117
23-47-425	RELAY, Seat Automatic Forward Actuator w/Bucket or Split Seats		Y	—	1	—	—	—	—	—	—	2926 862
	ACTUATOR, Split Bench W/Center Arm Rest Frt. Seat Latch	71	R,W,P, D,C,Y	—	1	—	1	—	—	—	—	3520 276-7
	ACTUATOR, Frt. Seat Back Split Back Auto. Latch Release	71	P,D,C	1	1	—	1	—	—	—	—	3520 556-7
	ACTUATOR PIVOT, Bucket Seat Back Reclining Adjuster	71	P,C,Y	—	1	—	1	—	1	—	—	3520 549
23-47-430	MOTOR, Electric Seat Adjuster w/Bench Seats		P,D,C,Y	—	1	1	1	1	1	1	1	2945 792
	w/Bucket or Split Seats	Lt.	P,D,C,Y	—	1	1	1	1	1	1	1	2945 937
23-47-431	TUBE, Electric Seat Adjuster Horizontal Transmission w/Bench Seats	Rt.	P,D,C,Y	—	1	1	1	1	1	1	1	2945 926
	w/Bench Seats	Lt.	P,D,C,Y	—	1	1	1	1	1	1	1	2945 927
	w/Bucket or Split Seats	Rt.	P,D,C,Y	—	1	1	1	1	1	1	1	2945 924
		Lt.	P,D,C,Y	—	1	1	1	1	1	1	1	2945 923
	TUBE, Electric Seat Adjuster Vertical Transmission w Bench Seats	Frt. Rt.	P,D,C,Y	—	1	1	1	1	1	1	1	2945 926
	w/Bench Seats	Frt. Lt.	P,D,C,Y	—	1	1	1	1	1	1	1	2945 925
	w/Bucket or Split Seat	Frt. Rt.	P,D,C,Y	—	AR	AR	AR	AR	AR	AR	AR	2945 921
	w/Bench Seats	Rr. Rt.	P,D,C,Y	—	1	1	1	1	1	1	1	2945 926
	w/Bench Seats	Rr. Lt.	P,D,C,Y	—	1	1	1	1	1	1	1	2945 922
23-47-432	CABLE, Electric Seat Adjuster Transmission w/Bench Seats	Frt. Vertical Rt.	P,D,C,Y	—	1	1	—	1	1	1	1	2945 798
		Frt. Vertical Lt.	P,D,C,Y	—	1	1	—	1	1	1	1	2945 801
		Rr. Vertical	P,D,C,Y	—	1	1	—	1	1	1	1	2945 798-9
		Horizontal Rt.	P,D,C,Y	—	1	1	—	1	1	1	1	2945 798
		Horizontal Lt.	P,D,C,Y	—	1	1	—	1	1	1	1	2999 811
	Bucket or Split Seats	Frt. Vertical	P,D,C,Y	—	AR	AR	AR	AR	AR	AR	AR	2945 796
	Bucket or Split Seats	Rr. Vertical	P,D,C,Y	—	AR	AR	AR	AR	AR	AR	AR	2945 797
	Bucket or Split Seat	Horizontal Rt.	P,D,C,Y	—	AR	AR	AR	AR	AR	AR	AR	2945 796
	Bucket or Split Seats	Horizontal Lt.	P,D,C,Y	—	AR	AR	AR	AR	AR	AR	AR	2945 795
23-47-433	GROMMET, Front Seat Electric Adjuster Tube Bracket to Motor Mount Screw Sleeve		P,D,C,Y	AR	AR	AR	AR	AR	AR	AR	AR	2945 679

CARLINES J - Challenger, B - Barracuda, V - Valiant, L - Dart, R - Belvedere - Satallite, W - Coronet - Charger, P - Plymouth, D - Dodge, C - Chrysler, Y - Imperial

NUMERALS INDICATE: 21 - 2 DR. SED., 23 - 2 DR. H.T., 27 - CONV. CPE., 29 - FAST BACK, 41 - 4 DR. SED., 43 - 4 DR. H.T., 45 - 6 PASS. STA. WGN., 46 - 9 PASS. STA. WGN.

AR Indicates use as required.
\# Indicates parts not listed in any previous parts book
Numerals in parentheses ( ) refer to notes.
★ Indicates change or addition.

Printed in U.S.A.
January 1972

Right and left part numbers are on same line, first number is right, second number is left.

23-47-0 FRONT SEAT ADJUSTER Cont'd.

CODE	PART NAME		MODEL CODES	SEE BOTTOM NOTE 21	23	27	29	41	43	45	46	PART NUMBER
23-47-436	STRAP, Frt. Seat Electric Adjuster Tube Ty-Rap. w/Bench Seats	Rt.	P,D,C,Y	—	2	2	2	2	2	2	2	2945 704
	STRAP, Frt. Seat Electric Adjuster Rr. Vertical Tube to Rr. Torsion Bar w/Bench Seats		P,D,C,Y	—	AR	AR	AR	AR	AR	AR	AR	2945 704
23-47-439	BRACKET, Front Seat Electric Adjuster Motor and Tube		P,D,C,Y	AR	AR	AR	AR	AR	AR	AR	AR	2999 722
	CONNECTOR, Bucket Frt. Seat Back Reclining Adjuster to Actuator	71	P,C,Y	—	1	—	1	—	1	—	—	3520 667
23-47-446	SWITCH, Electric Seat Adjuster w/Bucket Seats	w/Bezel 70	P,D,C	—	AR	AR	AR	—	AR	—	—	2926 424
	w/Bucket Seats	w/Bezel 70	Y	—	—	—	—	—	AR	—	—	2926 424
		w/Bezel 71	P,D,C	—	AR	—	AR	—	AR	—	—	3488 098
		w/Bezel 71	Y	—	—	—	—	—	2	—	—	3488 098
	w/Bench Seats	Lt.	P,D,C	—	1	1	1	1	1	1	1	2926 202
	w/Bench Seats	Lt.	Y	—	1	—	—	—	—	—	—	2926 202
	w/Split Seats		P,D,C,Y	—	—	—	—	AR	AR	AR	AR	2926 202
	SWITCH, Seat Automatic Forword Limit		Y	—	1	—	—	—	—	—	—	2926 593
	SWITCH, Seat Automatic Forward Activating	w/Brkt. 70	Y	—	1	—	—	—	—	—	—	2926 487
23-47-455	CAM, Seat Automatic Forward Switch Operating		Y	—	1	—	—	—	—	—	—	2822 427
23-47-456	BRACKET, Seat Adjuster Switch and Bezel w/Bucket or Split Seats		P,D,C	AR	AR	AR	AR	AR	AR	AR	AR	2926 422
	w/Bucket or Split Seats		Y	—	2	—	—	—	—	—	—	2926 422
	BRACKET, Bucket Seat Cushion Electric Switch Mtg.	70	P,D,C	—	AR	AR	AR	—	AR	—	—	2942 590
		70	Y	—	2	—	—	—	—	—	—	2942 590
	BRACKET, Seat Adjuster Switch	71	P,D,C	—	AR	—	AR	—	AR	—	—	3488 100
		71	Y	—	—	—	—	—	2	—	—	3488 100
		Bucket Seats 71	P,D,C,Y	—	1	—	1	—	1	—	—	3520 974-5

23-48-0 SECOND AND THIRD SEAT

23-48-17	RING, 3rd Seat Back Release Latch Retaining		P,D,C	—	—	—	—	—	—	—	2	1922 183
23-48-19	STRIKER, 2nd Seat Back Latch		R,W	—	—	—	—	—	—	1	1	2583 144
			P,D,C	—	—	—	—	—	—	2	2	2935 332
	STRIKER, 3rd Seat Back Release Handle		R,W	—	—	—	—	—	—	—	1	2251 678
			P,D,C	—	—	—	—	—	—	—	1	2486 846
23-48-20	HANDLE, 3rd Seat Back Release		R,W	—	—	—	—	—	—	—	1	2583 010
			P,D,C	—	—	—	—	—	—	—	1	2486 844
	HANDLE, 3rd Seat Back Release Latch		R,W	—	—	—	—	—	—	—	1	2862 612
			P,D,C	—	—	—	—	—	—	—	1	2945 422
23-48-21	ESCUTCHEON, 2nd Seat Back Latch		R,W	—	—	—	—	—	—	1	1	2588 818
	ESCUTCHEON, 2nd Seat Back Latch Push Rod		R,W	—	—	—	—	—	—	1	1	2765 025
	GROMMET, 3rd Seat Back Latch Release Handle		P,D,C	—	—	—	—	—	—	—	2	2999 861
	After May 1		P,D,C	—	—	—	—	—	—	—	2	3548 609
	RETAINER, 2nd Seat Back Hinge to Wheelhouse Brkt.	71	R,W	—	—	—	—	—	—	2	2	6029 448

CARLINES J - Challenger, B - Barracuda, V - Valiant, L - Dart, R - Belvedere - Satallite, W - Coronet - Charger, P - Plymouth, D - Dodge, C - Chrysler, Y - Imperial

NUMERALS INDICATE: 21 - 2 DR. SED., 23 - 2 DR. H.T., 27 - CONV. CPE., 29 - FAST BACK, 41 - 4 DR. SED., 43 - 4 DR. H.T., 45 - 6 PASS. STA. WGN., 46 - 9 PASS. STA. WGN.

AR Indicates use as required.
\# Indicates parts not listed in any previous parts book
Numerals in parentheses ( ) refer to notes.
★ Indicates change or addition.

Printed in U.S.A. January 1972

Right and left part numbers are on same line, first number is right, second number is left.

23-48-0 SECOND AND THIRD SEAT Cont'd.

CODE	PART NAME		MODEL CODES	SEE BOTTOM NOTE 21	23	27	29	41	43	45	46	PART NUMBER
23-48-22	SPRING, 3rd Seat Back Release Handle	Outer	R,W	—	—	—	—	—	—	—	1	2251 676
	SPRING, 3rd. Seat Back Release Handle Latch Return		P,D,C	—	—	—	—	—	—	—	1	2486 910
23-48-24	BRACKET, 3rd Seat Back Release Rod Mtg.	70	R,W	—	—	—	—	—	—	—	1	2862 474-5
	BRACKET, 3rd Seat Back Release Latch Handle		R,W	—	—	—	—	—	—	—	1	2862 614
	BRACKET, 3rd Seat Back Release Latch Mtg.		P,D,C	—	—	—	—	—	—	—	1	2862 488-9
23-48-30	SHIM, 3rd Seat Back Release Handle		P,D,C	—	—	—	—	—	—	—	AR	2802 998
23-48-32	HOUSING, 3rd Seat Back Release Handle	70	R,W	—	—	—	—	—	—	—	1	2583 616
23-48-43	RETAINER, 2nd Seat Back Panel Frame	Rt.	R,W	—	—	—	—	—	—	1	1	2254 575
	RETAINER, Seat Back Hinge to Wheelhouse Brkt.	71	R,W	—	—	—	—	—	—	2	2	3500 670
23-48-44	BUSHING, 3rd Seat Back Release Handle		R,W	—	—	—	—	—	—	—	1	2583 429
23-48-51	KNOB, 2nd Seat Back Lock Push Rod	Black	R,W	—	—	—	—	—	—	—	—	3524 BX9
23-48-65	PANEL, 2nd Seat Back	70	R,W	—	—	—	—	—	—	1	1	2576 724
			P,D,C	—	—	—	—	—	—	1	1	2493 662
23-48-67	ROD, w/LATCH, 3rd Seat Back Release	70	R,W	—	—	—	—	—	—	—	1	2945 467
		70	P,D,C	—	—	—	—	—	—	—	1	2945 461
	ROD and LATCH, 3rd Seat Back Release Passenger Position											
	Up To July 1971	71	R,W	—	—	—	—	—	—	—	1	3548 675
	After July 1971	71	R,W	—	—	—	—	—	—	—	1	= 3670 473
23-48-68	COVER and HINGE, 2nd Seat Back	Complete 70	R,W	—	—	—	—	—	—	1	1	2576 942
		Inner and Outer 71	R,W	—	—	—	—	—	—	1	1	3482 434
23-48-70	LATCH and PIN, 3rd Seat Back		P,D,C	—	—	—	—	—	—	—	1	2945 416-7
	LATCH, 3rd Seat Back After July 1971	71	P,D,C	—	—	—	—	—	—	—	1	= 3670 504
23-48-88	SKID STRIP, Seat Back Support Panel	2nd Seat	P,D,C	—	—	—	—	—	—	2	2	2526 949
		3rd Seat	P,D,C	—	—	—	—	—	—	—	2	2526 734
23-48-90	PLATE, w/SCREW, Rr. Floor Pan 3rd Seat Back Latch		R,W	—	—	—	—	—	—	—	2	2945 460
	PLATE w/SCREW, 3rd Seat Back Latch Release		P,D,C	—	—	—	—	—	—	—	2	2945 395
	PLATE w/SCREW, Rr. Floor Pan 3rd Seat Back Hinge		P,D,C	—	—	—	—	—	—	—	2	2860 275
	PLATE, Rr. Floor Pan Bracket	w/Screw 71	R,W	—	—	—	—	—	—	—	2	3499 855
23-48-93	BUMPER, 3rd Seat Back Support Upper Frame		R,W	—	—	—	—	—	—	—	2	2252 184
	BUMPER, 3rd Seat Back Release Handle		R,W	—	—	—	—	—	—	—	1	2765 393
	BUMPER, 2nd Seat Back Cover Inner Panel		R,W	—	—	—	—	—	—	2	2	2255 147
	BUMPER, 2nd Seat Back Panel Frame		R,W	—	—	—	—	—	—	4	4	2255 147
	BUMPER, 3rd Seat Back Support Outer Panel		P,D	—	—	—	—	—	—	—	2	2574 912

CARLINES: J - Challenger, B - Barracuda, V - Valiant, L - Dart, R - Belvedere - Satallite, W - Coronet - Charger, P - Plymouth, D - Dodge, C - Chrysler, Y - Imperial

NUMERALS INDICATE: 21 - 2 DR. SED., 23 - 2 DR. H.T., 27 - CONV. CPE., 29 - FAST BACK, 41 - 4 DR. SED., 43 - 4 DR. H.T., 45 - 6 PASS. STA. WGN., 46 - 9 PASS. STA. WGN.

AR Indicates use as required.
\# Indicates parts not listed in any previous parts book
Numerals in parentheses ( ) refer to notes.
★ Indicates change or addition.

Printed in U.S.A.
January 1972

Right and left part numbers are on same line, first number is right, second number is left.

23-48-0 SECOND AND THIRD SEAT Cont'd.

CODE	PART NAME		MODEL CODES	SEE BOTTOM NOTE 21	23	27	29	41	43	45	46	PART NUMBER
23-48-93	BUMPER Cont'd.											
	BUMPER w/INSERT, 3rd Seat Back Panel		P,D	—	—	—	—	—	—	—	2	2529 943
	BUMPER w/INSERT, 3rd Seat Back Panel		P,D,C	—	—	—	—	—	—	—	2	2529 942
	BUMPER, 2nd Seat Back		P,D,C	—	—	—	—	—	—	2	2	2862 466
	BUMPER, 2nd Seat Back Hinge to Floor Pan Bracket		P,D,C	—	—	—	—	—	—	2	2	2574 322
	BUMPER STRIP, 3rd Seat Back		P,D,C	—	—	—	—	—	—	—	1	3439 166
23-48-98	HINGE, 2nd Seat Back Support Panel		P,D,C	—	—	—	—	—	—	1	1	2484 868
23-48-99	BRACKET, 2nd Seat Back Hinge to Wheelhouse Inner Panel	70	R,W	—	—	—	—	—	—	1	1	2573 320-1
		71	R,W	—	—	—	—	—	—	1	1	3499 396-7
	w/Retainer and Nut	71	R,W	—	—	—	—	—	—	1	1	3482 858-9
	BRACKET and STUD, 3rd Seat Back Hinge to Floor Pan	70	R,W	—	—	—	—	—	—	—	1	2664 730-1
		71	R,W	—	—	—	—	—	—	—	1	3499 400-1
			P,D,C	—	—	—	—	—	—	—	2	2861 656
	BRACKET and SCREW, 2nd Seat Back Hinge to Floor Pan		P,D,C	—	—	—	—	—	—	1	1	3440 754-5
	REINFORCEMENT and SCREW, Wheelhouse Inner Panel 2nd Seat Back Hinge		R,W	—	—	—	—	—	—	2	2	2588 662
	REINFORCEMENT and NUT, Center Floor Pan 2nd Seat Back Hinge Brkt.		P,D,C	—	—	—	—	—	—	1	1	2894 672-3
23-48-109	LINK, 2nd Seat Back Hinge	Front	P,D,C	—	—	—	—	—	—	2	2	2482 508
		Rear	P,D,C	—	—	—	—	—	—	1	1	2482 510-11
	LINK, 2nd Seat Back Cover Inner Panel to 2nd Seat Back Frame	Rt. 70	R,W	—	—	—	—	—	—	1	1	2574 254
		Lt. 70	R,W	—	—	—	—	—	—	1	1	2664 668
		71	R,W	—	—	—	—	—	—	1	1	3499 388-9
	SHOULDER BOLT, Link To 2nd Seat Cover Panel		R,W	—	—	—	—	—	—	2	2	6024 972
	Link To 2nd Seat Back Frame		R,W	—	—	—	—	—	—	2	2	6025 724
	2nd Seat Back Frame Side Ext.	71	R,W	—	—	—	—	—	—	2	2	6025 779
	2nd Seat Back Hinge Link Frt.		P,D,C	—	—	—	—	—	—	2	2	6024 973
	2nd Seat Back Hinge Link Rr.		P,D,C	—	—	—	—	—	—	2	2	6024 972
23-48-111	BRACKET, 2nd Seat Back Bumper Mtg.		P,D,C	—	—	—	—	—	—	2	2	2583 239
23-48-113	WASHER, Second Seat Back Hinge Link	Front	P,D,C	—	—	—	—	—	—	4	4	869 770
		Rear	P,D,C	—	—	—	—	—	—	4	4	869 770
	SPRING WASHER, 2nd Seat Back Link to 2nd Seat Cover Panel		R,W	—	—	—	—	—	—	4	4	869 770
23-48-121	HINGE, 3rd Seat Back Frame to Support Hinge	(Piano Type)	R,W	—	—	—	—	—	—	—	1	2664 696
	HINGE and STUD, 3rd Seat Back	Complete	P,D,C	—	—	—	—	—	—	—	1	2861 862-3
	HINGE, 3rd Seat Back to Support Panel	w/Cargo Dress Up Pkg.	P,D,C	—	—	—	—	—	—	—	1	2895 203
		w/o Cargo Dress Up Pkg.	P,D	—	—	—	—	—	—	—	1	2895 204
	HINGE, Rr. Floor Pan Frt. and Rr. Cover	w/o Cargo Dress Up Pkg.	P,D	—	—	—	—	—	—	1	—	2895 204
		w/Cargo Dress Up Pkg.	P,D,C	—	—	—	—	—	—	1	—	2895 203
23-48-122	PUSH NUT, 3rd Seat Back Release Rod		R,W	—	—	—	—	—	—	—	2	2410 102

CARLINES	J - Challenger B - Barracuda	V - Valiant L - Dart	R - Belvedere - Satallite W - Coronet - Charger	P - Plymouth D - Dodge	C - Chrysler Y - Imperial
NUMERALS INDICATE:	21 - 2 DR. SED. 23 - 2 DR. H.T.	27 - CONV. CPE. 29 - FAST BACK	41 - 4 DR. SED. 43 - 4 DR. H.T.	45 - 6 PASS STA. WGN. 46 - 9 PASS. STA. WGN.	

AR Indicates use as required.
\# Indicates parts not listed in any previous parts book
Numerals in parentheses ( ) refer to notes.
★ Indicates change or addition.

Printed in U.S.A.
January 1972

Right and left part numbers are on same line, first number is right, second number is left.

CODE	PART NAME		MODEL CODES	SEE BOTTOM NOTE 21	23	27	29	41	43	45	46	PART NUMBER
23-48-0	**SECOND AND THIRD SEAT Cont'd.**											
23-48-122	PUSH NUT Cont'd.											
	PUSH NUT, 3rd Seat Back Hinge to Bracket		R,W,P, D,C	—	—	—	—	—	—	—	2	2410 102
23-48-188	PANEL, Rr. Seat Top and Back	70	R,W	—	—	1	—	—	—	—	—	2876 564
	PANEL and SUPPORT, 3rd Seat Back	Complete	R,W	—	—	—	—	—	—	—	1	2861 864
	BACK, 2nd Seat	71	R,W	—	—	—	—	—	—	1	1	3482 435
	BACK, 3rd Seat	Partial	P,D,C	—	—	—	—	—	—	—	1	2493 666
23-48-189	SUPPORT, 2nd Seat Back		P,D	—	—	—	—	—	—	1	1	2493 663
			C	—	—	—	—	—	—	1	1	2493 664
	SUPPORT, 3rd Seat Back		P,D,C	—	—	—	—	—	—	—	1	2493 882
23-48-201	LATCH, 2nd Seat Back		R,W	—	—	—	—	—	—	1	1	2583 142
			P,D,C	—	—	—	—	—	—	1	1	2765 086-7
23-48-202	ROD, 2nd Seat Back Latch		P,D,C	—	—	—	—	—	—	1	1	2765 089
23-48-203	SPRING, 2nd Seat Back Latch Rod		P,D,C	—	—	—	—	—	—	1	1	2520 852
	SPRING, 3rd Seat Back Release Rod Tension		R,W	—	—	—	—	—	—	—	1	2862 478-9
	SPRING, 3rd Seat Back Release Latch Tension		R,W, P,D,C	—	—	—	—	—	—	—	1	2862 492-3
23-48-204	CLIP, 2nd Seat Back Latch Rod Spring		P,D,C	—	—	—	—	—	—	1	1	2765 088
23-48-206	RETAINER, 2nd Seat Back Latch Rod Bearing		P,D,C	—	—	—	—	—	—	1	1	2520 850
23-49-0	**SEAT BELTS**											
23-49-1	BELT, w/Retractor, Frt. Seat Lap											
	Label No. 2999587	Blue 70	B,J	—	2	2	2	—	—	—	—	4749 FB7
		70 Green	B,J	—	2	2	2	—	—	—	—	4749 FF8
		70 Red	B,J	—	2	2	2	—	—	—	—	4749 FE5
		70 Black	B,J	—	2	2	2	—	—	—	—	4749 FX9
		70 Burnt Orange	B,J	—	2	2	2	—	—	—	—	4749 FK5
		70 Tan	B,J	—	2	2	2	—	—	—	—	4749 FT4
	Label No. 2999598	70Blue	P,D,C,Y	2	2	2	2	2	2	2	2	4750 FB7
		70 Green	P,D,C,Y	2	2	2	2	2	2	2	2	4750 FF8
		70 Tan	P,D,C,Y	2	2	2	2	2	2	2	2	4750 FT4
		70 Black	P,D,C,Y	2	2	2	2	2	2	2	2	4750 FX9
		70 Burnt Orange	P,D,C,Y	2	2	2	2	2	2	2	2	4750 FK5
		70 Gold	P,D,C,Y	2	2	2	2	2	2	2	2	4750 FY4
		70 Beige	C,Y	—	2	—	—	2	—	2	2	4750 FL4
		70 Teal	C,Y	—	2	—	—	2	—	2	2	4750 FP6
	Label No. 2999597											
		Beige 70	P,D,C,Y	—	—	—	—	—	2	—	—	4751 FL4
		Teal 70	P,D,C,Y	—	—	—	—	—	2	—	—	4751 FP6
		Blue 70	P,D,C,Y	—	—	—	—	—	2	—	—	4751 FB7
		Green 70	P,D,C,Y	—	—	—	—	—	2	—	—	4751 FF8
		Tan 70	P,D,C,Y	—	—	—	—	—	2	—	—	4751 FT4
		Black 70	P,D,C,Y	—	—	—	—	—	2	—	—	4751 FX9
		Burnt Orange 70	P,D,C,Y	—	—	—	—	—	2	—	—	4751 FK5
		Gold 70	P,D,C,Y	—	—	—	—	—	2	—	—	4751 FY4
	Label No. 3508304											
		Blue 71	P,D,C	—	—	—	—	—	2	—	—	9035 GB7
		Gold 71	P,D,C	—	—	—	—	—	2	—	—	9035 GY5
		Green 71	P,D,C	—	—	—	—	—	2	—	—	9035 GF7
		Tan 71	P,D,C	—	—	—	—	—	2	—	—	9035 GT6

CARLINES J - Challenger, B - Barracuda, V - Valiant, L - Dart, R - Belvedere - Satallite, W - Coronet - Charger, P - Plymouth, D - Dodge, C - Chrysler, Y - Imperial

NUMERALS INDICATE: 21 - 2 DR. SED., 23 - 2 DR. H.T., 27 - CONV. CPE., 29 - FAST BACK, 41 4 DR. SED., 43 - 4 DR. H.T., 45 - 6 PASS. STA. WGN., 46 - 9 PASS. STA. WGN.

AR Indicates use as required.
\# Indicates parts not listed in any previous parts book
Numerals in parentheses ( ) refer to notes.
★ Indicates change or addition.

Printed in U.S.A.
January 1972

Right and left part numbers are on same line, first number is right, second number is left.

23-49-0 SEAT BELTS Cont'd.

23-49-1 BELT Cont'd.

CODE	PART NAME		MODEL CODES	SEE BOTTOM NOTE 21	23	27	29	41	43	45	46	PART NUMBER
		Black 71	P,D,C	—	—	—	—	—	2	—	—	9035 GX9
	BELT, Front Seat Lap											
	Label No. 3508587	70 Blue	V,L,B,J	—	2	—	2	2	—	—	—	4787 FB7
		70 Green	V,L,B,J	—	2	—	2	2	—	—	—	4787 FF8
		70 Black	V,L,B,J	—	2	—	2	2	—	—	—	4787 FX9
		70 Tan	V,L,B,J	—	2	—	2	2	—	—	—	4787 FT4
		70 Red	V,L,B,J	—	2	—	2	2	—	—	—	4787 FE5
		70 Burnt Orange	V,L,B,J	—	2	—	2	2	—	—	—	4787 FK5
		70 Blue	R,W	2	2	—	2	2	—	2	2	4787 FB7
		70 Green	R,W	2	2	—	2	2	—	2	2	4787 FF8
		70 Black	R,W	2	2	—	2	2	—	2	2	4787 FX9
		70 Burnt Orange	R,W	2	2	—	2	2	—	2	2	4787 FK5
		70 Tan	R,W	2	2	—	2	2	—	2	2	4787 FT4
		70 Gold	R,W	2	2	—	2	2	—	2	2	4787 FY4
	Label No. 3508270-1											
		Blue 71	B,J	—	—	1	—	—	—	—	—	9008-9 GB7
		Green 71	B,J	—	—	1	—	—	—	—	—	9008-9 GF7
		Black 71	B-J	—	—	1	—	—	—	—	—	9008-9 GX9
		Tan 71	B,J	—	—	1	—	—	—	—	—	9008-9 GT6
	BELT, Frt. Seat Lap											
	Tip Half Label No. 2999564-5	70 Blue	V,L	—	1	—	1	1	—	—	—	4754-5 FB7
		70 Green	V,L	—	1	—	1	1	—	—	—	4754-5 FF8
		70 Tan	V,L	—	1	—	1	1	—	—	—	4754-5 FT4
		70 Black	V,L	—	1	—	1	1	—	—	—	4754-5 FX9
	Label No. 3548342											
		Blue 70	V	—	—	—	2	2	—	—	—	4793 FB7
		Green 70	V	—	—	—	2	2	—	—	—	4793 FF8
		Black 70	V	—	—	—	2	2	—	—	—	4793 FX9
	Label No. 2999574-5	70 Blue	R,W	1	1	1	1	1	—	1	1	4758-9 FB7
		70 Green	R,W	1	1	1	1	1	—	1	1	4758-9 FF8
		70 Black	R,W	1	1	1	1	1	—	1	1	4758-9 FX9
		70 Orange	R,W	1	1	1	1	1	—	1	1	4758-9 FK5
		70 Tan	R,W	1	1	1	1	1	—	1	1	4758-9 FT4
		70 Gold	R,W	1	1	1	1	1	—	1	1	4758-9 FY4
	BELT, Front Seat Lap											
	Buckle Half, Label No. 3454754	70 Blue	P,D,C	—	—	2	—	—	—	—	—	4785 FB7
		70 Green	P,D,C	—	—	2	—	—	—	—	—	4785 FF8
		70 Tan	P,D,C	—	—	2	—	—	—	—	—	4785 FT4
		70 Black	P,D,C	—	—	2	—	—	—	—	—	4785 FX9
	BELT, Front Seat Lap Inner											
	Label No. 3454756	70 Blue	B,J,R,W	—	—	2	—	—	—	—	—	4748 FB7
		70 Green	B,J,R,W	—	—	2	—	—	—	—	—	4748 FF8
		70 Black	B,J,R,W	—	—	2	—	—	—	—	—	4748 FX9
	Label No. 3508584 - Deluxe (w/Push Button Buckle)	70 Blue	B,J,R,W	—	—	2	—	—	—	—	—	4788 FB7
		70 Green	B,J,R,W	—	—	2	—	—	—	—	—	4788 FF8
		70 Black	B,J,R,W	—	—	2	—	—	—	—	—	4788 FX9
		70 Tan	B,J,R,W	—	—	2	—	—	—	—	—	4788 FT4
		70 Red	B,J,R,W	—	—	2	—	—	—	—	—	4788 FE5
		70 Burnt Orange	B,J,R,W	—	—	2	—	—	—	—	—	4788 FK5
	Label No. 3454871 - Deluxe (w/Push Button Buckle)	70 Blue	P,D,C	—	—	2	—	—	—	—	—	4733 FB7
		70 Green	P,D,C	—	—	2	—	—	—	—	—	4733 FF8
		70 Black	P,D,C	—	—	2	—	—	—	—	—	4733 FX9
		70 Gold	P,D,C	—	—	2	—	—	—	—	—	4733 FY4
		70 Tan	P,D,C	—	—	2	—	—	—	—	—	4733 FT4

CARLINES	J - Challenger B - Barracuda	V - Valiant L - Dart	R - Belvedere - Satallite W - Coronet - Charger	P - Plymouth D - Dodge	C - Chrysler Y - Imperial
NUMERALS INDICATE:	21 - 2 DR. SED. 23 - 2 DR. H.T.	27 - CONV. CPE. 29 - FAST BACK	41 - 4 DR. SED. 43 - 4 DR. H.T.	45 - 6 PASS. STA. WGN. 46 - 9 PASS. STA. WGN.	

AR Indicates use as required.
\# Indicates parts not listed in any previous parts book
Numerals in parentheses ( ) refer to notes.
★ Indicates change or addition.

Printed in U.S.A.
January 1972

Right and left part numbers are on same line, first number is right, second number is left.

CODE	PART NAME		MODEL CODES	SEE BOTTOM NOTE 21	23	27	29	41	43	45	46	PART NUMBER
23-49-0	**SEAT BELTS Cont'd.**											
23-49-1	BELT Cont'd.											
	BELT, Front Seat Shoulder, Standard											
	Label No. 2999566	70 Blue	V,L	—	—	—	—	2	—	—	—	4747 FB7
		70 Green	V,L	—	—	—	—	2	—	—	—	4747 FF8
		70 Black	V,L	—	—	—	—	2	—	—	—	4747 FX9
		70 Tan	V,L	—	—	—	—	2	—	—	—	4747 FT4
		70 Blue	B,J	—	2	—	2	—	—	—	—	4747 FB7
		70 Burnt Orange	B,J	—	2	—	2	—	—	—	—	4747 FK5
		70 Green	B,J	—	2	—	2	—	—	—	—	4747 FF8
		70 Tan	B,J	—	2	—	2	—	—	—	—	4747 FT4
		70 Black	B,J	—	2	—	2	—	—	—	—	4747 FX9
		70 Red	B,J	—	2	—	2	—	—	—	—	4747 FE5
		70 Blue	L	—	2	—	—	—	—	—	—	4746 FB7
		70 Green	L	—	2	—	—	—	—	—	—	4746 FF8
		70 Black	L	—	2	—	—	—	—	—	—	4746 FX9
		70 Tan	L	—	2	—	—	—	—	—	—	4746 FT4
		70 Blue	V,R,W	2	2	—	2	—	—	—	—	4745 FB7
		70 Green	V,R,W	2	2	—	2	—	—	—	—	4745 FF8
		70 Black	V,R,W	2	2	—	2	—	—	—	—	4745 FX9
		70 Tan	V,R,W	2	2	—	2	—	—	—	—	4745 FT4
		70 Burnt Orange	V,R,W	2	2	—	2	—	—	—	—	4745 FK5
		70 Blue	R,W	—	—	—	—	2	—	2	2	4746 FB7
		70 Green	R,W	—	—	—	—	2	—	2	2	4746 FF8
		70 Black	R,W	—	—	—	—	2	—	2	2	4746 FX9
		70 Blue	P,D,C	2	2	—	2	2	2	2	2	4746 FB7
		70 Green	P,D,C	2	2	—	2	2	2	2	2	4746 FF8
		70 Tan	P,D,C	2	2	—	2	2	2	2	2	4746 FT4
		70 Black	P,D,C	2	2	—	2	2	2	2	2	4746 FX9
	Label No. 3999608	70 Black	R,W,P,D,C	—	—	2	—	—	—	—	—	4772 FX9
	BELT, Front Seat Shoulder, Deluxe w/Push Button Buckle											
	Label No. 3454604	70 Black	P,D,C	—	—	2	—	—	—	—	—	4735 FX9
	Label No. 2999589	70 Black	B,J	—	—	2	—	—	—	—	—	4771 FX9
	BELT, Front Seat Shoulder											
	Label No. 2999566											
		Blue 71	V,L	—	2	—	2	2	—	—	—	4745 GB7
		Green 71	V,L	—	2	—	2	2	—	—	—	4745 GF7
		Black 71	V,L	—	2	—	2	2	—	—	—	4745 FX9
		Tan 71	V,L	—	2	—	2	2	—	—	—	4745 GT6
		Blue 71	B,J	—	2	—	—	—	—	—	—	4747 GB7
		Green 71	B,J	—	2	—	—	—	—	—	—	4747 GF7
		Black 71	B,J	—	2	—	—	—	—	—	—	4747 FX9
		Tan 71	B,J	—	2	—	—	—	—	—	—	4747 GT6
	Label No. 2999589											
		Black 71	B,J	—	—	2	—	—	—	—	—	4771 FX9
	Label No. 3508289											
		Blue 71	R,W	—	2	—	2	2	—	2	2	9027 GB7
		Green 71	R,W	—	2	—	2	2	—	2	2	9027 GF7
		Black 71	R,W	—	2	—	2	2	—	2	2	9027 GX9
		Tan 71	R,W	—	2	—	2	2	—	2	2	9027 GT6
	Label No. 3454614											
		Blue 71	P,D,C,Y	2	2	—	2	2	2	2	2	4725 GB7
		Green 71	P,D,C,Y	2	2	—	2	2	2	2	2	4725 GF7
		Tan 71	P,D,C,Y	2	2	—	2	2	2	2	2	4725 GT6
		Black 71	P,D,C,Y	2	2	—	2	2	2	2	2	4725 FX9
		Red 71	P,D,C,Y	2	2	—	2	2	2	2	2	4725 GE9
		Gold 71	P,D,C,Y	2	2	—	2	2	2	2	2	4725 GY5
		Gray 71	P,D,C,Y	2	2	—	2	2	2	2	2	4725 GA6

CARLINES J - Challenger, B - Barracuda, V - Valiant, L - Dart, R - Belvedere - Satallite, W - Coronet - Charger, P - Plymouth, D - Dodge, C - Chrysler, Y - Imperial

NUMERALS INDICATE: 21 - 2 DR. SED., 23 - 2 DR. H.T., 27 - CONV. CPE., 29 - FAST BACK, 41 - 4 DR. SED., 43 - 4 DR. H.T., 45 - 6 PASS. STA. WGN., 46 - 9 PASS. STA. WGN.

AR Indicates use as required.
\# Indicates parts not listed in any previous parts book
Numerals in parentheses ( ) refer to notes.
★ Indicates change or addition.

Printed in U.S.A.
January 1972

Right and left part numbers are on same line, first number is right, second number is left.

23-49-0 SEAT BELTS Cont'd.

23-49-1 BELT Cont'd.

CODE	PART NAME		MODEL CODES	SEE BOTTOM NOTE 21	23	27	29	41	43	45	46	PART NUMBER
	BELT, *Front Seat Shoulder, Tip Half*											
	Label No. 3454614	70 Blue	P,D,C,Y	2	2	—	2	2	2	2	2	4725 FB7
		70 Green	P,D,C,Y	2	2	—	2	2	2	2	2	4725 FF8
		70 Burnt Orange	P,D	2	2	—	2	2	2	2	2	4725 FK8
		70 Tan	P,D,C,Y	2	2	—	2	2	2	2	2	4725 FT4
		70 Black	P,D,C,Y	2	2	—	2	2	2	2	2	4725 FX9
		70 Gold	P,D,C,Y	2	2	—	2	2	2	2	2	4725 FY4
		70 Beige	C,Y	—	2	—	—	2	2	2	2	4725 FL4
		70 Teal	C,Y	—	2	—	—	2	2	2	2	4725 FP6
	BELT, Frt. Seat Lap and Shoulder, Buckle Half											
	Label No. 3454755	70 Blue	B,J,V,L	—	2	—	2	2	—	—	—	4752 FB7
		70 Green	B,J,V,L	—	2	—	2	2	—	—	—	4752 FF8
		70 Black	B,J,V,L	—	2	—	2	2	—	—	—	4752 FX9
	Label No. 3454755	70 Blue	R,W	2	2	—	2	2	—	2	2	4752 FB7
		70 Green	R,W	2	2	—	2	2	—	2	2	4752 FF8
		70 Black	R,W	2	2	—	2	2	—	2	2	4752 FX9
	Label No. 3454753	70 Blue	P,D,C	2	2	—	2	2	2	2	2	4763 FB7
		70 Green	P,D,C	2	2	—	2	2	2	2	2	4763 FF8
		70 Tan	P,D,C	2	2	—	2	2	2	2	2	4763 FT4
		70 Black	P,D,C	2	2	—	2	2	2	2	2	4763 FX9
	BELT, Frt. Seat Lap and Shoulder Inner											
	Label No. 3454609	70 Blue	P,D,C,Y	2	2	—	2	2	2	2	2	4737 FB7
		70 Green	P,D,C,Y	2	2	—	2	2	2	2	2	4737 FF8
		70 Burnt Orange	P,D	2	2	—	2	2	2	2	2	4737 FK5
		70 Tan	P,D,C,Y	2	2	—	2	2	2	2	2	4737 FT4
		70 Black	P,D,C,Y	2	2	—	2	2	2	2	2	4737 FX9
		70 Gold	P,D,C,Y	2	2	—	2	2	2	2	2	4737 FY4
		70 Teal	C,Y	—	2	—	—	2	2	2	2	4737 FP6
		70 Beige	C,Y	—	2	—	—	2	2	2	2	4737 FL4
	BELT, Front Seat Lap and Shoulder											
	Label No. 3548752	Blue 71	V,L	—	—	—	2	2	—	—	—	9024 GB7
		Green 71	V,L	—	—	—	2	2	—	—	—	9024 GF7
		Black 71	V,L	—	—	—	2	2	—	—	—	9024 GX9
		Tan 71	V,L	—	—	—	2	2	—	—	—	9024 GT6
	Label No. 3548830-1	Black 71	V,L	—	1	—	1	—	—	—	—	9016-7 GX9
	Label No. 3548834-5	Blue 71	V,L	—	1	—	—	1	—	—	—	9020-1 GB7
		Green 71	V,L	—	1	—	—	1	—	—	—	9020-1 GF7
		Black 71	V,L	—	1	—	—	1	—	—	—	9020-1 GX9
		Tan 71	V,L	—	—	—	1	—	—	—	—	= 9020-1 GT6
	Label No. 3508272-3	Blue 71	B,J	—	1	—	—	—	—	—	—	9006-7 GB7
		Green 71	B,J	—	1	—	—	—	—	—	—	9006-7 GF7
		Black 71	B,J	—	1	—	—	—	—	—	—	9006-7 GX9
		Tan 71	B,J	—	1	—	—	—	—	—	—	9006-7 GT6
	Label No. 3508286-7	Blue 71	R,W	—	1	—	1	1	—	1	1	9036-7 GB7
		Green 71	R,W	—	1	—	1	1	—	1	1	9036-7 GF7
		Black 71	R,W	—	1	—	1	1	—	1	1	9036-7 GX9
		Tan 71	R,W	—	1	—	1	1	—	1	1	9036-7 GT6
	Label No. 3548840-1	Blue 71	P,D,C,Y	1	1	—	1	1	—	1	1	9040-1 GB7
		Green 71	P,D,C,Y	1	1	—	1	1	—	1	1	9040-1 GF7
		Tan 71	P,D,C,Y	1	1	—	1	1	—	1	1	9040-1 GT6
		Black 71	P,D,C,Y	1	1	—	1	1	—	1	1	9040-1 GX9

CARLINES J - Challenger, B - Barracuda, V - Valiant, L - Dart, R - Belvedere - Satallite, W - Coronet - Charger, P - Plymouth, D - Dodge, C - Chrysler, Y - Imperial

NUMERALS INDICATE: 21 - 2 DR. SED., 23 - 2 DR. H.T., 27 - CONV. CPE., 29 - FAST BACK, 41 - 4 DR. SED., 43 - 4 DR. H.T., 45 - 6 PASS. STA. WGN., 46 - 9 PASS. STA. WGN.

AR Indicates use as required.
\# Indicates parts not listed in any previous parts book
Numerals in parentheses ( ) refer to notes.
★ Indicates change or addition.

Printed in U.S.A.
January 1972

Right and left part numbers are on same line, first number is right, second number is left.

CODE	PART NAME		MODEL CODES	SEE BOTTOM NOTE 21	23	27	29	41	43	45	46	PART NUMBER
23-49-0	**SEAT BELTS Cont'd.**											
23-49-1	BELT Cont'd.											
		Red 71	P,D,C,Y	1	1	—	1	1	—	1	1	9040-1 GE9
		Gold 71	P,D,C,Y	1	1	—	1	1	—	1	1	9040-1 GY5
		Gray 71	P,D,C,Y	—	1	—	—	1	—	—	—	9040-1 GA6
	Label No. 3508306-7											
		Blue 71	P,D,C	1	1	—	1	1	—	1	1	9038-9 GB7
		Green 71	P,D,C	1	1	—	1	1	—	1	1	9038-9 GF7
		Tan 71	P,D,C	1	1	—	1	1	—	1	1	9038-9 GT6
		Black 71	P,D,C	1	1	—	1	1	—	1	1	9038-9 GX9
		Gold 71	P,D,C	1	1	—	1	1	—	1	1	9038-9 GY5
	Label No. 3548828											
		Blue 71	P,D,C,Y	—	—	—	—	—	2	—	—	9042 GB7
		Green 71	P,D,C,Y	—	—	—	—	—	2	—	—	9042 GF7
		Tan 71	P,D,C,Y	—	—	—	—	—	2	—	—	9042 GT6
		Black 71	P,D,C,Y	—	—	—	—	—	2	—	—	9042 GX9
		Red 71	P,D,C,Y	—	—	—	—	—	2	—	—	9042 GE9
		Gold 71	P,D,C,Y	—	—	—	—	—	2	—	—	9042 GY5
		Gray 71	P,D,C,Y	—	—	—	—	—	2	—	—	9042 GA6
	BELT, Frt. Seat Center Lap, Complete											
	Label No. 2999596	70 Blue	V,L,B,J,R	1	1	1	1	1	1	1	1	4760 FB7
		70 Green	V,L,B,J,R	1	1	1	1	1	1	1	1	4760 FF8
		70 Tan	V,L,B,J,R	1	1	1	1	1	1	1	1	4760 FT4
		70 Black	V,L,B,J,R	1	1	1	1	1	1	1	1	4760 FX9
		70 Blue	W,P,D,C	1	1	1	1	1	1	1	1	4760 FB7
		70 Green	W,P,D,C	1	1	1	1	1	1	1	1	4760 FF8
		70 Tan	W,P,D,C	1	1	1	1	1	1	1	1	4760 FT4
		70 Black	W,P,D,C	1	1	1	1	1	1	1	1	4760 FX9
	BELT, Frt. Seat Lap, Center, Deluxe (w/Push Button Buckle)											
	Label No. 2999601	70 Blue	V,L,B,J	—	1	—	1	1	—	—	—	4724 FB7
		70 Black	V,L,B,J	—	1	—	1	1	—	—	—	4724 FX9
		70 Green	V,L,B,J	—	1	—	1	1	—	—	—	4724 FF8
		70 Tan	V,L,B,J	—	1	—	1	1	—	—	—	4724 FT4
		70 Blue	P,D,C,Y	1	1	1	1	1	1	1	1	4724 FB7
		70 Green	P,D,C,Y	1	1	1	1	1	1	1	1	4724 FF8
		70 Burnt Orange	P,D,C,Y	1	1	1	1	1	1	1	1	4724 FK5
		70 Tan	P,D,C,Y	1	1	1	1	1	1	1	1	4724 FT4
		70 Black	P,D,C,Y	1	1	1	1	1	1	1	1	4724 FX9
		70 Gold	P,D,C,Y	1	1	1	1	1	1	1	1	4724 FY4
		70 Beige	C,Y	—	1	1	—	1	1	1	1	4724 FL4
		70 Teal	C,Y	—	1	1	—	1	1	1	1	4724 FP6
	BELT, Front Seat Center Lap											
	Label No. 3508257											
		Blue 71	V,L,B,J	—	1	—	1	1	—	—	—	9015 GB7
		Green 71	V,L,B,J	—	1	—	1	1	—	—	—	9015 GF7
		Black 71	V,L,B,J	—	1	—	1	1	—	—	—	9015 GX9
		Tan 71	V,L,B,J	—	1	—	1	1	—	—	—	9015 GT6
		Blue 71	R,W	—	1	—	1	1	—	1	1	9015 GB7
		Green 71	R,W	—	1	—	1	1	—	1	1	9015 GF7
		Black 71	R,W	—	1	—	1	1	—	1	1	9015 GX9
		Tan 71	R,W	—	1	—	1	1	—	1	1	9015 GT6
		Blue 71	P,D,C	1	1	—	1	1	1	1	1	9015 GB7
		Green 71	P,D,C	1	1	—	1	1	1	1	1	9015 GF7
		Tan 71	P,D,C	1	1	—	1	1	1	1	1	9015 GT6
		Black 71	P,D,C	1	1	—	1	1	1	1	1	9015 GX9
		Gold 71	P,D,C	1	1	—	1	1	1	1	1	9015 GY5
	Label No. 2999601											
		Blue 71	P,D,C,Y	1	1	—	1	1	1	1	1	4724 GB7

CARLINES J - Challenger, B - Barracuda, V - Valiant, L - Dart, R - Belvedere - Satallite, W - Coronet - Charger, P - Plymouth, D - Dodge, C - Chrysler, Y - Imperial

NUMERALS INDICATE: 21 - 2 DR. SED., 23 - 2 DR. H.T., 27 - CONV. CPE., 29 - FAST BACK, 41 - 4 DR. SED., 43 - 4 DR. H.T., 45 - 6 PASS. STA. WGN., 46 - 9 PASS. STA. WGN.

AR Indicates use as required.
\# Indicates parts not listed in any previous parts book
Numerals in parentheses ( ) refer to notes.
★ Indicates change or addition.

Printed in U.S.A.
January 1972

Right and left part numbers are on same line, first number is right, second number is left.

CODE	PART NAME	MODEL CODES	SEE BOTTOM NOTE 21	23	27	29	41	43	45	46	PART NUMBER
23-49-0	**SEAT BELTS Cont'd.**										
23-49-1	BELT Cont'd.										
	Green 71	P,D,C,Y	1	1	—	1	1	1	1	1	4724 GF7
	Tan 71	P,D,C,Y	1	1	—	1	1	1	1	1	4724 GT6
	Black 71	P,D,C,Y	1	1	—	1	1	1	1	1	4724 FX9
	Red 71	P,D,C,Y	1	1	—	1	1	1	1	1	4724 GE9
	Gold 71	P,D,C,Y	1	1	—	1	1	1	1	1	4724 GY5
	Gray 71	P,D,C,Y	1	1	—	1	1	1	1	1	4724 GA6
BELT, Rear Seat Lap, *Standard* Label No. 2999631	70 Blue	B,J	—	2	2	2	—	—	—	—	4770 FB7
	70 Green	B,J	—	2	2	2	—	—	—	—	4770 FF8
	70 Black	B,J	—	2	2	2	—	—	—	—	4770 FX9
BELT, Rear Seat Lap, Deluxe w/Push Button Buckle Label No. 3508581	70 Blue	B,J	—	2	2	2	—	—	—	—	4786 FB7
	70 Green	B,J	—	2	2	2	—	—	—	—	4786 FF8
	70 Black	B,J	—	2	2	2	—	—	—	—	4786 FX9
	70 Tan	B,J	—	2	2	2	—	—	—	—	4786 FT4
	70 Red	B,J	—	2	2	2	—	—	—	—	4786 FE5
	70 Orange	B,J	—	2	2	2	—	—	—	—	4786 FK5
BELT, Rr. Seat Lap, Deluxe w Push Button Buckle Label No. 3454610	70 Blue	V,L	—	2	—	2	2	—	—	—	4726 FB7
	70 Green	V,L	—	2	—	2	2	—	—	—	4726 FF8
	70 Black	V,L	—	2	—	2	2	—	—	—	4726 FX9
	70 Tan	V,L	—	2	—	2	2	—	—	—	4726 FT4
BELT, Rr. Seat Lap - Complete Label No. 2999622	70 Blue	V,L,R,W	2	2	2	2	2	—	2	2	4780 FB7
	70 Green	V,L,R,W	2	2	2	2	2	—	2	2	4780 FF8
	70 Black	V,L,R,W	2	2	2	2	2	—	2	2	4780 FX9
	70 Blue	P,D,C	2	2	2	2	2	2	2	2	4780 FB7
	70 Green	P,D,C	2	2	2	2	2	2	2	2	4780 FF8
	70 Tan	P,D,C	2	2	2	2	2	2	2	2	4780 FT4
	70 Black	P,D,C	2	2	2	2	2	2	2	2	4780 FX9
BELT, Rr. Seat Lap, Outer Deluxe w/Push Button Buckle Label No. 3454610	70 Blue	All	2	2	2	2	2	2	2	2	4726 FB7
	70 Green	All	—	2	2	2	2	2	2	2	4726 FF8
	70 Burnt Orange	All	—	2	—	2	—	2	—	—	4726 FK5
	70 Tan	All	2	2	2	2	2	2	2	2	4726 FT4
	70 Black	All	2	2	2	2	2	2	2	2	4726 FX9
	70 Gold	All	2	2	—	—	2	2	—	—	4726 FY4
	70 Teal	All	—	2	—	—	2	2	—	—	4726 FP6
	70 Beige	All	—	2	—	—	2	2	—	—	4726 FL4
BELT, Rear Seat Lap Label No. 3508259	Blue 71	V,L	—	2	—	2	2	—	—	—	9026 GB7
	Green 71	V,L	—	2	—	2	2	—	—	—	9026 GF7
	Black 71	V,L	—	2	—	2	2	—	—	—	9026 GX9
	Tan 71	V,L	—	2	—	2	2	—	—	—	9026 GT6
Label No. 3508281	Blue 71	B,J	—	2	2	—	—	—	—	—	9014 GB7
	Green 71	B,J	—	2	2	—	—	—	—	—	9014 GF7
	Black 71	B,J	—	2	2	—	—	—	—	—	9014 GX9
	Tan 71	B,J	—	2	2	—	—	—	—	—	9014 GT6
Label No. 3586446	Blue 71	R,W	—	2	—	2	2	—	2	2	9046 GB7
	Green 71	R,W	—	2	—	2	2	—	2	2	9046 GF7
	Black 71	R,W	—	2	—	2	2	—	2	2	9046 GX9

CARLINES: J - Challenger, B - Barracuda, V - Valiant, L - Dart, R - Belvedere - Satallite, W - Coronet - Charger, P - Plymouth, D - Dodge, C - Chrysler, Y - Imperial

NUMERALS INDICATE: 21 - 2 DR. SED., 23 - 2 DR. H.T., 27 - CONV. CPE., 29 - FAST BACK, 41 - 4 DR. SED., 43 - 4 DR. H.T., 45 - 6 PASS STA. WGN., 46 - 9 PASS. STA. WGN.

AR Indicates use as required.
\# Indicates parts not listed in any previous parts book
Numerals in parentheses ( ) refer to notes.
★ Indicates change or addition.

Printed in U.S.A.
January 1972

Right and left part numbers are on same line, first number is right, second number is left.

23-49-0 SEAT BELTS Cont'd.

23-49-1 BELT Cont'd.

CODE	PART NAME		MODEL CODES	SEE BOTTOM NOTE 21	23	27	29	41	43	45	46	PART NUMBER
		Tan 71	R,W	—	2	—	2	2	—	2	2	9046 GT6
	Label No. 3508259											
		Blue 71	P,D,C	2	2	—	2	2	2	2	2	9026 GB7
		Green 71	P,D,C	2	2	—	2	2	2	2	2	9026 GF7
		Tan 71	P,D,C	2	2	—	2	2	2	2	2	9026 GT6
		Black 71	P,D,C	2	2	—	2	2	2	2	2	9026 GX9
		Gold 71	P,D,C	2	2	—	2	2	2	2	2	9026 GY5
	Label No. 3454610											
		Blue 71	P,D,C,Y	2	2	—	2	2	2	2	2	4726 GB7
		Green 71	P,D,C,Y	2	2	—	2	2	2	2	2	4726 GF7
		Tan 71	P,D,C,Y	2	2	—	2	2	2	2	2	4726 GT6
		Black 71	P,D,C,Y	2	2	—	2	2	2	2	2	4726 FX9
		Red 71	P,D,C,Y	2	2	—	2	2	2	2	2	4726 GE9
		Gold 71	P,D,C,Y	2	2	—	2	2	2	2	2	4726 GY5
		Gray 71	P,D,C,Y	2	2	—	2	2	2	2	2	4726 GA6
	BELT, Rear Seat Shoulder											
	Label No. 2999632	70 Black	B,J	—	2	2	2	—	—	—	—	4762 FX9
	Label No. 3454603											
		71 Black	V,L	—	2	—	2	2	—	—	—	4738 FX9
	Label No. 2999632											
		71 Black	B,J,R,W	—	2	2	2	2	—	—	—	4762 FX9
	Label No. 3454612											
		70 Black	R,W	—	—	—	—	—	—	2	2	4742 FX9
	Label No. 3508303											
		71 Black	R,W	—	—	—	—	—	—	2	2	9043 GX9
	Label No. 3454603											
		71 Black	P,D,C,Y	2	2	—	2	2	2	—	—	4738 FX9
	Label No. 3454612											
		Black	P,D,C	—	—	—	—	—	—	2	2	4742 FX9
	BELT PACKAGE, Rear Seat Shoulder											
		Black	V,L	—	2	—	2	2	—	—	—	4779 GX9
		Black	B	—	2	—	—	—	—	—	—	4776 GX9
		Black	J	—	2	—	—	—	—	—	—	4777 GX9
		Black	R,W	—	2	—	2	2	—	—	—	4782 GX9
		Black	R,W	—	—	—	—	—	—	2	2	4780 GX9
		Black	P,D,C,Y	2	2	—	2	2	2	—	—	4778 GX9
		Black	P,D,C	—	—	—	—	—	—	2	2	4781 GX9
	BELT, Rr. Seat Center or 3rd Seat, Standard											
	Label No. 3454602	70 Blue	V,L	—	AR	—	AR	AR	—	—	—	4781 FB7
		70 Green	V,L	—	AR	—	AR	AR	—	—	—	4781 FF8
		70 Black	V,L	—	AR	—	AR	AR	—	—	—	4781 FX9
		70 Blue	P,D,C	AR	AR	AR	AR	AR	AR	AR	AR	4781 FB7
		70 Green	P,D,C	AR	AR	AR	AR	AR	AR	AR	AR	4781 FF8
		70 Tan	P,D,C	AR	AR	AR	AR	AR	AR	AR	AR	4781 FT4
		70 Black	P,D,C	AR	AR	AR	AR	AR	AR	AR	AR	4781 FX9
	BELT, Rr. Seat Center or 3rd Seat, Deluxe w/Push Button Buckle											
	Label No. 3454611	70 Blue	V,L,R,W	AR	AR	AR	AR	AR	—	AR	AR	4728 FB7
		70 Green	V,L,R,W	AR	AR	AR	AR	AR	—	AR	AR	4728 FF8
		70 Orange	V,L,R,W	AR	AR	AR	AR	AR	—	AR	AR	4728 FK5
		70 Tan	V,L,R,W	AR	AR	AR	AR	AR	—	AR	AR	4728 FT4
		70 Beige	V,L,R,W	AR	AR	AR	AR	AR	—	AR	AR	4728 FL4
		70 Black	V,L,R,W	AR	AR	AR	AR	AR	—	AR	AR	4728 FX9
		70 Blue	P,D,C,Y,	AR	AR	AR	AR	AR	AR	AR	AR	4728 FB7
		70 Green	P,D,C,Y	AR	AR	AR	AR	AR	AR	AR	AR	4728 FF8
		70 Orange	P,D,C,Y	AR	AR	AR	AR	AR	AR	AR	AR	4728 FK5
		70 Tan	P,D,C,Y	AR	AR	AR	AR	AR	AR	AR	AR	4728 FT4

CARLINES: J - Challenger, B - Barracuda, V - Valiant, L - Dart, R - Belvedere - Satallite, W - Coronet - Charger, P - Plymouth, D - Dodge, C - Chrysler, Y - Imperial

NUMERALS INDICATE: 21 - 2 DR. SED., 23 - 2 DR. H.T., 27 - CONV. CPE., 29 - FAST BACK, 41 - 4 DR. SED., 43 - 4 DR. H.T., 45 - 6 PASS. STA. WGN., 46 - 9 PASS. STA. WGN.

AR Indicates use as required.
\# Indicates parts not listed in any previous parts book
Numerals in parentheses ( ) refer to notes.
★ Indicates change or addition.

Printed in U.S.A.
January 1972

Right and left part numbers are on same line, first number is right, second number is left.

23-49-0 SEAT BELTS Cont'd.

CODE	PART NAME		MODEL CODES	SEE BOTTOM NOTE 21	23	27	29	41	43	45	46	PART NUMBER
23-49-1	BELT Cont'd.											
		70 Beige	P,D,C,Y	AR	AR	AR	AR	AR	AR	AR	AR	4728 FL4
		70 Black	P,D,C,Y	AR	AR	AR	AR	AR	AR	AR	AR	4728 FX9
		70 Gold	C,Y	—	AR	AR	—	AR	AR	AR	AR	4728 FY4
		70 Teal	C,Y	—	AR	AR	—	AR	AR	AR	AR	4728 FP6
	BELT, Rear Seat Center Lap											
	Label No. 3508258											
		Blue 71	V,L	—	1	—	1	1	—	—	—	9025 GB7
		Green 71	V,L	—	1	—	1	1	—	—	—	9025 GF7
		Black 71	V,L	—	1	—	1	1	—	—	—	9025 GX9
		Tan 71	V,L	—	1	—	1	1	—	—	—	9025 GT6
	Label No. 3508291											
		Blue 71	R,W	—	1	—	1	1	—	1	1	9031 GB7
		Green 71	R,W	—	1	—	1	1	—	1	1	9031 GF7
		Black 71	R,W	—	1	—	1	1	—	1	1	9031 GX9
		Tan 71	R,W	—	1	—	1	1	—	1	1	9031 GT6
	Label No. 3508258											
		Blue 71	P,D,C	1	1	—	1	1	1	1	1	9025 GB7
		Green 71	P,D,C	1	1	—	1	1	1	1	1	9025 GF7
		Tan 71	P,D,C	1	1	—	1	1	1	1	1	9025 GT6
		Black 71	P,D,C	1	1	—	1	1	1	1	1	9025 GX9
		Gold 71	P,D,C	1	1	—	1	1	1	1	1	9025 GY5
	Label No. 3454611											
		Blue 71	P,D,C,Y	1	1	—	1	1	1	1	1	4728 GB7
		Green 71	P,D,C,Y	1	1	—	1	1	1	1	1	4728 GF7
		Tan 71	P,D,C,Y	1	1	—	1	1	1	1	1	4728 GT6
		Black 71	P,D,C,Y	1	1	—	1	1	1	1	1	4728 FX9
		Red 71	P,D,C,Y	1	1	—	1	1	1	1	1	4728 GE9
		Gold 71	P,D,C,Y	1	1	—	1	1	1	1	1	4728 GY5
		Gray 71	P,D,C,Y	1	1	—	1	1	1	1	1	4728 GA6
	BELT, 3rd Seat Lap											
	Label No. 3508291											
		Blue 71	R,W	—	—	—	—	—	—	—	2	9031 GB7
		Green 71	R,W	—	—	—	—	—	—	—	2	9031 GF7
		Black 71	R,W	—	—	—	—	—	—	—	2	9031 GX9
		Tan 71	R,W	—	—	—	—	—	—	—	2	9031 GT6
	Label No. 3508258											
		Blue 71	P,D,C	—	—	—	—	—	—	—	2	9025 GB7
		Green 71	P,D,C	—	—	—	—	—	—	—	2	9025 GF7
		Tan 71	P,D,C	—	—	—	—	—	—	—	2	9025 GT6
		Black 71	P,D,C	—	—	—	—	—	—	—	2	9025 GX9
		Gold 71	P,D,C	—	—	—	—	—	—	—	2	9025 GY5
	SHOULDER BOLT, Seat Belt and Shoulder Belt Attaching											
	Stamping No. C-10 Clear	All		AR	AR	AR	AR	AR	AR	AR	AR	6027 310
	Stamping No. C-11 Black	All		AR	AR	AR	AR	AR	AR	AR	AR	6027 311
	Stamping No. C-12 Bronze	All		AR	AR	AR	AR	AR	AR	AR	AR	6027 312
	Stamping No. C-13 Clear	All		AR	AR	AR	AR	AR	AR	AR	AR	6029 171
23-49-3	COVER, Frt. Seat Shoulder Belt Stowage											
	Label No. 2999864	70 Blue	V,B,J,L	—	2	—	2	2	—	—	—	4796 FB7
		70 Green	V,B,J,L	—	2	—	2	2	—	—	—	4796 FF8
		70 Burnt Orange	V,B,J,L	—	2	—	2	2	—	—	—	4796 FK6
		70 Red	V,B,J,L	—	2	—	2	2	—	—	—	4796 FE5
		70 Tan	V,B,J,L	—	2	—	2	2	—	—	—	4796 FT4
		70 Black	V,B,J,L	—	2	—	2	2	—	—	—	4796 FX9
		70 Blue	R,W	2	2	—	—	2	—	2	2	4796 FB7
		70 Green	R,W	2	2	—	—	2	—	2	2	4796 FF8
		70 Black	R,W	2	2	—	—	2	—	2	2	4796 FX9

CARLINES: J - Challenger, B - Barracuda, V - Valiant, L - Dart, R - Belvedere - Satallite, W - Coronet - Charger, P - Plymouth, D - Dodge, C - Chrysler, Y - Imperial

NUMERALS INDICATE: 21 - 2 DR. SED., 23 - 2 DR. H.T., 27 - CONV. CPE., 29 - FAST BACK, 41 - 4 DR. SED., 43 - 4 DR. H.T., 45 - 6 PASS STA. WGN., 46 - 9 PASS. STA. WGN.

AR Indicates use as required.
\# Indicates parts not listed in any previous parts book
Numerals in parentheses ( ) refer to notes.
★ Indicates change or addition.

Printed in U.S.A.
January 1972

Right and left part numbers are on same line, first number is right, second number is left.

CODE	PART NAME		MODEL CODES	SEE BOTTOM NOTE 21	23	27	29	41	43	45	46	PART NUMBER
23-49-0	**SEAT BELTS Cont'd.**											
23-49-3	COVER Cont'd.											
		70 Tan	R,W	2	2	—	2	2	—	2	2	4796 FT4
		70 Blue	P,D,C,Y	2	2	—	2	2	2	2	2	4796 FB7
		70 Green	P,D,C,Y	2	2	—	2	2	2	2	2	4796 FF8
		70 Tan	P,D,C,Y	2	2	—	2	2	2	2	2	4796 FT4
		70 Black	P,D,C,Y	2	2	—	2	2	2	2	2	4796 FX9
		70 Beige	P,D,C,Y	2	2	—	2	2	2	2	2	4796 FL3
		70 Teal	P,D,C,Y	2	2	—	—	2	2	—	—	4796 FP6
		70 Gold	P,D,C,Y	2	2	—	—	2	2	—	—	4796 FY4
	Label No. 2999864											
		Blue 71	All	4	4	4	4	4	4	4	4	4796 GB7
		Green 71	All	4	4	4	4	4	4	4	4	4796 GF7
		Black 71	All	4	4	4	4	4	4	4	4	4796 FX9
		Tan 71	All	4	4	4	4	4	4	4	4	4796 GT6
		Red 71	All	4	4	4	4	4	4	4	4	4796 GE9
		Gold 71	All	4	4	4	4	4	4	4	4	4796 GY5
		Gray 71	All	4	4	4	4	4	4	4	4	4796 GA6
	COVER, Frt. Seat Shoulder Swivel Plate											
	Label No. 2945114	70 Blue	V,L,B,J	2	—	2	2	2	—	2	2	4757 FB7
		70 Green	V,L,B,J	2	—	2	2	2	—	2	2	4757 FF8
		70 Black	V,L,B,J	2	—	2	2	2	—	2	2	4757 FX9
		70 Blue	P,D,C,Y	2	2	—	2	2	2	2	2	4757 FB7
		70 Green	P,D,C,Y	2	2	—	2	2	2	2	2	4757 FF8
		70 Tan	P,D,C,Y	2	2	—	2	2	2	2	2	4757 FT4
		70 Black	P,D,C,Y	2	2	—	2	2	2	2	2	4757 FX9
		70 Beige	C,Y	—	2	—	—	2	2	2	2	4757 FL3
		70 Teal	C,Y	—	2	—	—	2	2	2	2	4757 FP6
		70 Burnt Orange	P,D	2	2	—	2	2	2	2	2	4757 FK6
	COVER, Front or Rear Seat Shoulder Belt Swivel Plate											
	Label No. 2945114											
		Black 71	All	4	4	4	4	4	4	4	4	4757 FX9
	COVER, Rear Seat Lap Belt											
	Label No. 3454660	70 Blue	V,L,R,W	2	2	2	2	2	—	2	2	4761 FB7
		70 Green	V,L,R,W	2	2	2	2	2	—	2	2	4761 FF8
		70 Black	V,L,R,W	2	2	2	2	2	—	2	2	4761 FX9
		70 Blue	P,D,C,Y	2	2	2	2	2	2	2	2	4761 FB7
		70 Green	P,D,C,Y	2	2	2	2	2	2	2	2	4761 FF8
		70 Burnt Orange	P,D,C,Y	2	2	2	2	2	2	2	2	4761 FK5
		70 Tan	P,D,C,Y	2	2	2	2	2	2	2	2	4761 FT4
		70 Black	P,D,C,Y	2	2	2	2	2	2	2	2	4761 FX9
		70 Gold	P,D,C,Y	2	2	2	2	2	2	2	2	4761 FY4
		70 Beige	P,D,C,Y	2	2	2	2	2	2	2	2	4761 FL3
		70 Teal	P,D,C,Y	2	2	2	2	2	2	2	2	4761 FP6
	Label No. 3454660											
		Black 71	All	2	2	2	2	2	2	2	2	4761 DX9
23-49-7	BRACKET, Front Seat Lap Belt Buckle Stowage											
		70 Deluxe	B,J	—	1	1	1	—	—	—	—	3508 878-9
	Single Type	70 Deluxe	P,D,C,Y	—	—	—	—	1	1	1	1	3508 655
	Double Type	70 Deluxe	P,D,C,Y	—	2	2	2	—	2	—	—	3508 653
	Double Type	Deluxe 70	V,L,B,J									
		70 R,W	R,W	—	2	2	2	2	—	2	2	3508 626
	Frt. or Rr. Single Type	Black 70	All	2	2	2	2	2	2	2	2	3454 616
	Frt. or Rr. Double Type	Black 70	All	2	2	2	2	2	2	2	2	3454 599
	FRONT SEAT	Single Type 71	All	AR	AR	AR	AR	AR	AR	AR	AR	3454 616
	w/Bucket Seats	Single Type 71	P,D,C,Y	—	2	—	2	2	2	—	—	3548 948
	w/Console	Single Type 71	P,D,C	—	2	—	2	—	2	—	—	9045 GX9

CARLINES J - Challenger, B - Barracuda, V - Valiant, L - Dart, R - Belvedere - Satallite, W - Coronet - Charger, P - Plymouth, D - Dodge, C - Chrysler, Y - Imperial

NUMERALS INDICATE: 21 - 2 DR. SED., 23 - 2 DP. H.T., 27 - CONV. CPE., 29 - FAST BACK, 41 - 4 DR. SED., 43 - 4 DR. H.T., 45 - 6 PASS. STA. WGN., 46 - 9 PASS. STA. WGN.

AR Indicates use as required.
\# Indicates parts not listed in any previous parts book
Numerals in parentheses ( ) refer to notes.
★ Indicates change or addition.

Printed in U.S.A.
January 1972

Right and left part numbers are on same line, first number is right, second number is left.

23-49-0 SEAT BELTS Cont'd.

CODE	PART NAME			MODEL CODES	SEE BOTTOM NOTE 21	23	27	29	41	43	45	46	PART NUMBER
23-49-7	BRACKET Cont'd.												
	w/Bucket Seats	Double Type	71	V,L	—	2	—	2	—	—	—	—	3508 626
		Double Type	71	All	AR	AR	AR	AR	AR	AR	AR	AR	3454 599
	REAR SEAT	Single Type	71	B,J	—	1	1	1	—	—	—	—	3508 878-9
		Single Type	71	V,L,R,W	—	AR	—	AR	AR	—	AR	AR	3454 616
		Single Type	71	P,D,C,Y	1	1	—	1	1	1	1	1	3454 616
		Double Type	71	V,L,R,W	—	1	—	1	1	—	1	1	3454 599
		Double Type	71	P,D,C,Y	1	1	—	1	1	1	1	1	3454 599
	BRACKET, Roof Side Rail Shoulder Harness Stowage			V,L	—	—	—	—	4	—	—	—	3445 725
				V,L	—	4	—	—	—	—	—	—	3445 724
				V,L	—	—	—	2	—	—	—	—	3446 059
				B,J	—	2	—	2	—	—	—	—	3504 158
			70	R,W	AR	AR	AR	AR	AR	—	—	—	3445 762
	Up To Approximately Nov. 1, 1969		70	R,W	—	—	—	—	—	—	AR	AR	3445 762
	After Approximately Nov. 1, 1969		70	R,W	—	—	—	—	—	—	AR	AR	3415 995
			71	R,W	—	2	—	2	—	—	—	—	3500 584
			71	R,W	—	—	—	—	AR	—	AR	AR	3446 964
		Frt.	71	R,W	—	—	—	—	—	—	2	2	3500 368
				P,D,C,Y	AR	AR	—	AR	AR	AR	AR	AR	3445 762
	BRACKET, W/Shield Opening Side Inner Corner Extension Shoulder Stowage		71	V,L,B,J	—	2	—	2	—	—	—	—	3446 059
	BRACKET and NUT, Center Floor Pan Seat Belt Anchor		70	R,W	—	—	1	—	—	—	—	—	3446 730-1
			70	P	—	—	1	—	—	—	—	—	3446 742-3
			70	D	—	—	1	—	—	—	—	—	3446 744-5
			70	C	—	—	1	—	—	—	—	—	3446 746-7
	BRACKET and NUT, Wheelhouse Inner Seat Belt			B,J	—	1	1	1	—	—	—	—	3446 538-9
	BRACKET, Qtr. Inside Panel 2nd Seat Shoulder Belt Anchor		71	R,W	—	—	—	—	—	—	1	1	3500 358-9
	BRACKET, Roof Rail Shoulder Belt Clip Mtg.		71	P,D,C	—	—	—	—	—	—	4	4	3445 762
	CLIP, Frt. or Rr. Seat Shoulder Belt Stowage		70	All	AR	AR	AR	AR	AR	AR	AR	AR	2999 865
	CLIP, Frt. Seat Shoulder Belt Stowage		71	All	4	4	—	4	4	4	4	4	2999 865
	CLIP, Center Pillar Cover Seat Belt Slit		71	P,D,C,Y	—	—	—	—	—	2	—	—	3509 341
23-49-8	PLUG, Seat Belt Retractor Trim Cover Hole	Black	70	P,D,C,Y	2	2	2	2	2	2	2	2	1605 DX9
			71	P,D,C	—	—	—	—	—	2	—	—	1605 EX9
	PLUG, Frt. Seat Lap Belt		71	B,J,R,W	—	2	2	2	2	—	2	2	4744 CX9
			71	P,D,C,Y	2	2	—	2	2	—	2	2	4744 CX9
	PLUG, Lap Belt Retractor Shoulder Bolt Access Hole		71	B,J	—	2	2	—	—	—	—	—	4797 GX9
			71	R,W	—	2	—	2	2	—	2	2	4797 GX9
	PLUG, Lap Belt Retractor Access Hole		71	P,D,C,Y	2	2	—	2	2	2	2	2	4797 GX9
	PLUG, Shelf Trim Shoulder Belt			Y	—	2	—	—	—	2	—	—	1339 DX9
23-49-9	REINFORCEMENT and NUT, Quarter Inside Panel Seat Belt		70	V,L	—	2	—	2	—	—	—	—	3445 473
			70	R,W	2	2	—	2	—	—	—	—	3445 475
			70	P	1	1	—	1	—	—	—	—	3446 462-3
			70	D,C,Y	—	1	—	—	—	—	—	—	3446 464-5
			71	V,L	—	1	—	1	—	—	—	—	3569 570-1

CARLINES: J - Challenger, B - Barracuda, V - Valiant, L - Dart, R - Belvedere - Satallite, W - Coronet - Charger, P - Plymouth, D - Dodge, C - Chrysler, Y - Imperial

NUMERALS INDICATE: 21 - 2 DR. SED., 23 - 2 DR. H.T., 27 - CONV. CPE., 29 - FAST BACK, 41 - 4 DR. SED., 43 - 4 DR. H.T., 45 - 6 PASS. STA. WGN., 46 - 9 PASS. STA. WGN.

AR Indicates use as required.
\# Indicates parts not listed in any previous parts book
Numerals in parentheses ( ) refer to notes.
★ Indicates change or addition.

Printed in U.S.A.
January 1972

Right and left part numbers are on same line, first number is right, second number is left.

23-49-0 SEAT BELTS Cont'd.

CODE	PART NAME		MODEL CODES	SEE BOTTOM NOTE 21	23	27	29	41	43	45	46	PART NUMBER
23-49-9	REINFORCEMENT Cont'd.											
		71	P,D,C,Y	1	1	—	1	—	—	—	—	3569 570-1
	REINFORCEMENT, Body Side Sill to Wheelhouse T/Plate Seat Belt											
	w/NUT		V	—	—	—	—	1	—	—	—	3446 374-5
	w/NUT	70	R,W	—	—	—	—	1	—	1	1	3446 376-7
	REINFORCEMENT, Center Floor Pan Seat Belt Anchor Outer w/NUT	70	R,W	—	—	1	—	—	—	—	—	3446 726-7
	REINFORCEMENT, Wheelhouse Inner Panel Shoulder Belt	70	R,W	—	—	—	—	—	—	2	2	3439 324
	REINFORCEMENT, Rear Seat Shoulder Belt Shelf Panel		B	—	1	—	—	—	—	—	—	3454 584-5
			J	—	1	—	1	—	—	—	—	3454 578-9
	REINFORCEMENT, Roof Rail Shoulder Belt Anchor		P,D,C	—	—	—	—	—	—	2	2	2894 983
	REINFORCEMENT, Quarter Panel Wheelhouse to Sill Panel T/Plate Seat Belt w/NUT		L	—	—	—	—	1	—	—	—	3446 372-3
	REINFORCEMENT, Body Side Sill to Wheelhouse T/Plate Seat Belt		D	—	—	—	—	1	1	—	—	3446 380-1
	REINFORCEMENT, PROTECTOR and NUT, Center Floor Pan Extension Seat Belt Outer	70	B,J	—	2	2	2	—	—	—	—	3444 102
		71	B,J	—	2	2	2	—	—	—	—	3570 564-5
	REINFORCEMENT, Front Floor Pan Seat Belt Inner											
		71	V,L,R,W	—	2	—	2	2	—	2	2	2483 098
		71	P,D,C,Y	2	2	—	2	2	2	2	2	2483 098
	REINFORCEMENT, Rear Shoulder Belt Shelf Extension											
		71	V,L	—	2	—	2	2	—	—	—	2999 030
	REINFORCEMENT, Rear Seat Shoulder Belt Shelf Panel											
		71	R,W	—	2	—	2	2	—	—	—	3548 851
	REINFORCEMENT w/Rod, Rear Seat Shoulder Belt Shelf											
		71	P,D,C,Y	2	2	—	2	2	2	—	—	2999 102
	REINFORCEMENT, 3rd Seat Lap Belt to Floor Pan											
		71	R,W	—	—	—	—	—	—	—	2	3548 926
	REINFORCEMENT, 3rd Seat Lap Belt Inboard											
		71	R,W	—	—	—	—	—	—	—	2	2862 441
		71	P,D,C	—	—	—	—	—	—	—	4	2862 441
	REINFORCEMENT, Center Floor Pan Front Extension Front Seat Belt Inner	71	B,J,R,W	—	2	2	2	2	—	2	2	2483 098
	REINFORCEMENT, Center Floor Pan Rear Seat Belt Inner											
		71	V,L,R,W	—	2	—	2	2	—	2	2	2839 001
		71	P,D,C,Y	2	2	—	2	2	2	2	2	2839 001
23-49-11	SPACER, Rr. Seat Lap Belt to Floor Att.	Inner	V,L,R,W, P,D,C,Y	2	2	2	2	2	2	2	2	2999 053
	SPACER, Front Seat Shoulder Belt to Rail Att.											
		71	P,D,C	—	—	—	—	—	—	2	2	2999 053
23-49-15	COVER, Frt. Seat Lap Belt Tunnel Anchor Bolt	Blue 70	All	2	2	2	2	2	2	2	2	4619 FB7
		Green 70	All	2	2	2	2	2	2	2	2	4619 EF8
		Black 70	All	2	2	2	2	2	2	2	2	4619 DX9

CARLINES J - Challenger, B - Barracuda, V - Valiant, L - Dart, R - Belvedere - Satallite, W - Coronet - Charger, P - Plymouth, D - Dodge, C - Chrysler, Y - Imperial

NUMERALS INDICATE: 21 - 2 DR. SED., 23 - 2 DR. H.T., 27 - CONV. CPE., 29 - FAST BACK, 41 - 4 DR. SED., 43 - 4 DR. H.T., 45 - 6 PASS. STA. WGN., 46 - 9 PASS. STA. WGN.

AR Indicates use as required.
\# Indicates parts not listed in any previous parts book
Numerals in parentheses ( ) refer to notes.
★ Indicates change or addition.

Printed in U.S.A.
January 1972

Right and left part numbers are on same line, first number is right, second number is left.

23-49-0 SEAT BELTS Cont'd.

CODE	PART NAME	MODEL CODES	SEE BOTTOM NOTE 21	23	27	29	41	43	45	46	PART NUMBER
23-49-15	COVER Cont'd.										
	Gold 70	All	2	2	2	2	2	—	2	2	4619 FY4
	Orange 70	All	2	2	2	2	2	2	2	2	4619 FK5
	Tan 70	All	2	2	2	2	2	2	2	2	4619 FT4
	Beige 70	All	2	2	2	2	2	2	2	2	4619 FL3
	Teal 70	All	2	2	2	2	2	2	2	2	4619 FP6
	71	All	2	2	2	2	2	2	2	2	4619 DX9
23-49-17	BEZEL and SPACER, Front Seat Lap Belt										
	Burnt Orange 70	P,D,C,Y	2	2	2	2	2	2	2	2	4605 FK6
	Tan 70	P,D,C,Y	2	2	2	2	2	2	2	2	4605 FT4
	Gold 70	P,D,C,Y	2	2	2	2	2	2	2	2	4605 FY4
	Teal 70	P,D,C,Y	2	2	2	2	2	2	2	2	4605 FP6
	Oxblood 70	P,D,C,Y	2	2	2	2	2	2	2	2	4605 FR8
	Dark Tan 70	P,D,C,Y	2	2	2	2	2	2	2	2	4605 FT8
	Light Green 70	P,D,C,Y	2	2	2	2	2	2	2	2	4605 FF4
	Blue 70	P,D,C,Y	2	2	—	2	2	2	2	2	4605 EB3
	Dark Blue 70	C-H	—	2	—	—	2	2	—	—	4605 EB7
	Dk. Green 70	P,D,C,Y	2	2	—	2	2	2	2	2	4605 EF8
	Beige 70	C	—	2	—	—	2	2	2	2	4605 EL3
	Black 70	P,D,C,Y	2	2	—	2	2	2	2	2	4605 EX9
	White 70	C,Y	—	2	—	—	2	2	—	—	4605 EW1
	Gray 70	Y	—	—	—	—	—	2	—	—	4605 FA5
	Saddle 70	Y	—	—	—	—	—	2	—	—	4605 FT2
	Burgundy 70	Y	—	—	—	—	—	2	—	—	4605 EM9
	BEZEL, Front Seat Lap Belt Retractor										
	Blue 70	B,J	—	2	2	2	—	—	—	—	4753 FB5
	Red 70	B,J	—	2	2	2	—	—	—	—	4753 FE5
	Green 70	B,J	—	2	2	2	—	—	—	—	4753 FF8
	Burnt Orange 70	B,J	—	2	2	2	—	—	—	—	4753 FK6
	Tan 70	B,J	—	2	2	2	—	—	—	—	4753 FT4
	Black 70	B,J	—	2	2	2	—	—	—	—	4753 FX9
	BEZEL, Front Seat Lap Belt Center Pillar										
	Burgundy 71	P,D,C,Y	—	—	—	—	—	2	—	—	4605 GM9
	Light Tan 71	P,D,C,Y	—	—	—	—	—	2	—	—	4605 GT1
	Light Blue 71	P,D,C,Y	—	—	—	—	—	2	—	—	4605 GB2
	Red 71	P,D,C,Y	—	—	—	—	—	2	—	—	4605 GE9
	Green 71	P,D,C,Y	—	—	—	—	—	2	—	—	4605 GF7
	Dark Tan 71	P,D,C,Y	—	—	—	—	—	2	—	—	4605 GT6
	Black 71	P,D,C,Y	—	—	—	—	—	2	—	—	4605 EX9
	Gold 71	P,D,C,Y	—	—	—	—	—	2	—	—	4605 GY5
	White 71	P,D,C,Y	—	—	—	—	—	2	—	—	4605 EW1
	Gray 71	P,D,C,Y	—	—	—	—	—	2	—	—	4605 GA6
	Medium Blue 71	P,D,C,Y	—	—	—	—	—	2	—	—	4605 GB7
	Beige 71	P,D,C,Y	—	—	—	—	—	2	—	—	4605 GL1
	Dark Blue 71	P,D,C,Y	—	—	—	—	—	2	—	—	4605 GB9
23-49-19	GROMMET, Frt. Seat Lap and Shoulder Belt Guide 70	R,W,P,D,C	2	2	2	2	2	2	2	2	3454 965
	GROMMET, Frt. Seat Lap and Shoulder Belt Guide Deluxe 70	V,L,R,W	2	2	2	2	2	2	2	2	3454 757
	Deluxe 70	P,D,C,Y	2	2	2	2	2	2	2	2	3454 757
	71	V,L	—	2	—	2	2	—	—	—	3454 757
	71	R,W	—	2	—	2	2	—	2	2	3454 965
	71	P,D,C,Y	2	2	—	2	2	2	2	2	3454 965
	GROMMET, Rear Seat Shoulder Belt Shelf Panel										
		V,L,R,W	—	2	—	2	2	—	—	—	2999 033
		P,D,C,Y	2	2	—	2	2	2	—	—	2999 033

CARLINES	J - Challenger B - Barracuda	V - Valiant L - Dart	R - Belvedere - Satallite W - Coronet - Charger	P - Plymouth D - Dodge	C - Chrysler Y - Imperial
NUMERALS INDICATE:	21 - 2 DR. SED. 23 - 2 DR. H.T.	27 - CONV. CPE. 29 - FAST BACK	41 - 4 DR. SED. 43 - 4 DR. H.T.	45 - 6 PASS. STA. WGN. 46 - 9 PASS. STA. WGN.	

AR Indicates use as required.
\# Indicates parts not listed in any previous parts book
Numerals in parentheses ( ) refer to notes.
★ Indicates change or addition.

Printed in U.S.A.
January 1972

Right and left part numbers are on same line, first number is right, second number is left.

CODE	PART NAME		MODEL CODES	SEE BOTTOM NOTE 21	23	27	29	41	43	45	46	PART NUMBER
23-49-0	**SEAT BELTS Cont'd.**											
23-49-22	EXTENSION, Wheelhouse Inner Seat Belt Brkt.	w/Nut	J	—	—	1	—	—	—	—	—	3446 542-3
23-49-23	PLUG, Floor Carpet Seat Belt Opening	70	B,J	—	2	2	2	—	—	—	—	1606 FX9
	PLUG, Roof Inside Finish Panel Shoulder Belt Hole	Black 71	P,D	—	—	—	—	—	—	AR	AR	4100 GX9
23-51-0	**ROCKER PANEL AND BELT BAR**											
23-51-5	PANEL, Rocker	Outer	V,L	—	—	—	1	—	—	—	—	2842 310-1
			V,L	—	1	—	—	—	—	—	—	2604 156-7
			V	—	—	—	—	1	—	—	—	2604 154-5
			L	—	—	—	—	1	—	—	—	2603 628-9
			B	—	1	1	—	—	—	—	—	2963 086-7
		Complete	B	—	—	1	—	—	—	—	—	3417 424-5
			J	—	1	1	1	—	—	—	—	2963 088-9
		Complete	J	—	—	1	—	—	—	—	—	3417 428-9
		70	R,W	1	1	1	1	—	—	—	—	2838 282-3
		Complete 70	R,W	—	—	1	—	—	—	—	—	2859 300-1
		70	R	—	—	—	—	1	—	—	—	2838 284-5
		70	W	—	—	—	—	1	—	—	—	2840 544-5
		70	R,W	—	—	—	—	—	—	1	1	2860 160-1
		71	R,W	—	1	—	1	—	—	—	—	3445 402-3
		71	R,W	—	—	—	—	1	—	—	—	3445 400-1
		71	R,W	—	—	—	—	—	—	1	1	3440 852-3
			P	1	1	1	1	—	—	—	—	3445 958-9
		Complete 70	P	—	—	1	—	—	—	—	—	3417 226-7
		70	P	—	—	—	—	1	—	—	—	3445 954-5
		70	P	—	—	—	—	—	1	—	—	3445 956-7
		71	P	—	—	—	—	1	—	—	—	3615 048-9
		71	P	—	—	—	—	—	1	—	—	3615 050-1
			D	—	1	1	—	—	—	—	—	3445 964-5
		Complete 70	D	—	—	1	—	—	—	—	—	3417 232-3
			D	—	—	—	—	1	—	—	—	3445 960-1
			D	—	—	—	—	—	1	—	—	3445 962-3
			C,Y	—	1	1	—	—	—	—	—	3445 970-1
		Complete 70	C	—	—	1	—	—	—	—	—	3417 236-7
			C	—	—	—	—	1	—	—	—	3445 966-7
			C,Y	—	—	—	—	—	1	—	—	3445 968-9
			P,D,C	—	—	—	—	—	—	1	1	3440 564-5
	INNER FRONT		V,L	—	1	—	1	1	—	—	—	2603 604-5
		70	B,J	—	1	1	1	—	—	—	—	2963 040-1
		71	B,J	—	1	1	1	—	—	—	—	3570 392-3
		70	R,W	1	1	1	1	1	—	1	1	2842 508-9
		71	R,W	—	1	—	1	1	—	1	1	3570 394-5
		70	P,D,C,Y	1	1	1	1	1	1	1	1	3505 212-3
		71	P,D,C,Y	1	1	—	1	1	1	1	1	3570 942-3
	INNER REAR		V	—	—	—	1	1	—	—	—	2604 170-1
		71	V	—	1	—	—	—	—	—	—	2603 624-5
			L	—	1	—	—	1	—	—	—	2603 624-5
		71	L	—	—	—	1	—	—	—	—	2604 170-1
		70	B	—	1	1	—	—	—	—	—	2963 042-3
		71	B	—	1	1	—	—	—	—	—	3570 414-5
		70	J	—	1	1	1	—	—	—	—	2963 044-5
		71	J	—	1	1	1	—	—	—	—	3570 416-7
		70	R,W	1	1	1	1	1	—	1	1	2527 112-3

CARLINES J - Challenger, B - Barracuda, V - Valiant, L - Dart, R - Belvedere - Satellite, W - Coronet - Charger, P - Plymouth, D - Dodge, C - Chrysler, Y - Imperial

NUMERALS INDICATE: 21 - 2 DR. SED., 23 - 2 DR H.T., 27 - CONV. CPE., 29 - FAST BACK, 41 - 4 DR. SED., 43 - 4 DR. H.T., 45 - 6 PASS. STA. WGN., 46 - 9 PASS. STA. WGN.

AR Indicates use as required.
\# Indicates parts not listed in any previous parts book
Numerals in parentheses ( ) refer to notes.
★ Indicates change or addition.

Printed in U.S.A.
January 1972

Right and left part numbers are on same line, first number is right, second number is left.

23-51-0 ROCKER PANEL AND BELT BAR Cont'd.

CODE	PART NAME		MODEL CODES	SEE BOTTOM NOTE 21	23	27	29	41	43	45	46	PART NUMBER
23-51-5	PANEL Cont'd.											
		71	R,W	—	1	—	1	—	—	—	—	3505 748-9
		71	R,W	—	—	—	—	1	—	1	1	3445 004-5
			P,D,C,Y	1	1	1	1	1	1	1	1	3445 972-3
23-51-6	REINFORCEMENT, Front Floor Pan Sill to Rail w/Manual Transmission		V,L	—	1	—	1	—	—	—	—	2604 900-1
	REINFORCEMENT, Floor Pan Side Sill to Cowl Side	70	R,W	—	—	1	—	—	—	—	—	2841 662-3
	REINFORCEMENT, Side Sill Inner Panel to Torsion Bar C/Member	70	P,Y	1	1	1	1	1	1	1	1	2483 252-3
		70	D,C	—	—	1	—	—	—	1	1	2483 252-3
		71	Y	—	1	—	—	—	1	—	—	2483 252-3
		Canada 70	D	—	1	—	—	1	—	—	—	2483 252-3
		Export Only 70	D	—	1	—	—	1	1	—	—	2483 252-3
	REINFORCEMENT, Frt. Floor Pan Side Sill Inner	70	D,C	—	1	—	—	1	1	—	—	3444 752-3
		71	P,D,C	1	1	—	1	1	1	1	1	3444 752-3
	REINFORCEMENT, Side Sill Inner to Rr. Seat C/Member Rr.	70	D,C	—	1	—	—	1	1	—	—	3444 288-9
		71	P,D,C	1	1	—	1	1	1	1	1	3444 288-9
	REINFORCEMENT, Body Side Sill Outer Panel		Y	—	1	—	—	—	—	—	—	2902 356-7
			Y	—	—	—	—	—	1	—	—	2901 288-9
23-51-12	TIE PLATE, Side Sill to Center Pillar		P,D,C,Y	—	—	—	—	—	1	—	—	2902 360-1
23-51-16	EXTENSION, Body Side Sill Outer Front		B,J	—	1	1	1	—	—	—	—	2963 940-1
		71	R,W	—	1	—	1	1	—	—	—	3446 416-7
23-51-19	GUSSET, Body Side Sill Outer Panel	Frt. 70	R,W	1	1	—	1	1	—	1	1	2838 276-7
		Frt. 71	R,W	—	2	—	2	2	—	2	2	3445 430
		Rr. 70	R,W	—	—	—	—	1	—	1	1	2838 278-9
		Rr. 71	R,W	—	1	—	1	—	—	—	—	3445 432-3
		Rr. 71	R,W	—	—	—	—	1	—	1	1	3445 502-3
		Rt. 71	R,W	—	—	—	—	3	—	3	3	3446 418
		Lt. 71	R,W	—	—	—	—	1	—	1	1	3570 391
		Frt. 70	P,D,C	2	2	—	2	2	2	2	2	2900 026
		Rr.	P,D,C	—	—	—	—	1	1	1	1	2900 030-1
		Center	P,D,C	1	1	—	1	—	—	—	—	2900 488-9
		Center 70	P,D,C	—	—	—	—	—	1	—	—	2902 364-5
		Frt.	Y	—	2	—	—	—	2	—	—	2901 276
		Rr.	Y	—	—	—	—	—	1	—	—	2901 282-3
	GUSSET, Qtr. Belt Bar to W/House to Rear Qtr. Pillar	70	R,W	—	—	1	—	—	—	—	—	2838 214-5
	GUSSET, Qtr. Belt Bar to W/House	70	C	—	—	1	—	—	—	—	—	2901 082-3
	GUSSET, Body Side Sill Reinforcement Center Rear		Y	—	1	—	—	—	—	—	—	2902 478-9
	GUSSET, Body Side Sill Outer Panel Reinforcement Center Front		Y	—	—	—	—	—	1	—	—	2901 280-1
	GUSSET, Body Side Sill Outer Panel Reinforcement Center Rear		Y	—	1	—	—	—	1	—	—	2902 366-7
	GUSSET, w/T/PLATE, Body Side Sill Qtr. Panel Front	70	P,D,C	2	2	—	2	2	2	2	2	2934 374
	GUSSET w/T/PLATE, Body Side Sill Outer Panel Reinforcement		Y	—	2	—	—	—	2	—	—	2934 458

NOTE: Also See Code 23-34-257

CARLINES: J - Challenger, B - Barracuda, V - Valiant, L - Dart, R - Belvedere - Satallite, W - Coronet - Charger, P - Plymouth, D - Dodge, C - Chrysler, Y - Imperial

NUMERALS INDICATE: 21 - 2 DR. SED., 23 - 2 DR. H.T., 27 - CONV. CPE., 29 - FAST BACK, 41 - 4 DR. SED., 43 - 4 DR. H.T., 45 - 6 PASS. STA. WGN., 46 - 9 PASS. STA. WGN.

AR Indicates use as required.
# Indicates parts not listed in any previous parts book
Numerals in parentheses ( ) refer to notes.
★ Indicates change or addition.

Printed in U.S.A.
January 1972

Right and left part numbers are on same line, first number is right, second number is left.

CODE	PART NAME		MODEL CODES	SEE BOTTOM NOTE 21	23	27	29	41	43	45	46	PART NUMBER
23-51-0	**ROCKER PANEL AND BELT BAR Cont'd.**											
23-51-41	BAR, Qtr. Panel Belt Front	70	R,W	—	—	—	—	—	—	1	1	2811 758-9
	BAR, Qtr. Panel Belt Rear	70	R,W	—	—	—	—	—	—	1	1	2811 760-1
	BAR, Qtr. Panel Belt Side Front		P,D,C	—	—	—	—	—	—	1	1	2893 244-5
	BAR, Qtr. Panel Belt Side Rear		P,D,C	—	—	—	—	—	—	1	1	2894 464-5
	BAR, Qtr. Panel Belt Side Upper and Lower		B	—	—	1	—	—	—	—	—	3444 320-1
			J	—	—	1	—	—	—	—	—	3444 322-3
		70	R	—	—	1	—	—	—	—	—	2841 062-3
		70	W	—	—	1	—	—	—	—	—	2841 048-9
		70	P	—	—	1	—	—	—	—	—	2902 664-5
		70	D	—	—	1	—	—	—	—	—	2902 666-7
		70	C	—	—	1	—	—	—	—	—	2964 104-5
	BAR, Deck Opening Belt Center		B	—	—	1	—	—	—	—	—	3444 166
			J	—	—	1	—	—	—	—	—	3444 168
		70	R,W	—	—	1	—	—	—	—	—	2841 052
		70	P,D	—	—	1	—	—	—	—	—	2902 604
		70	C	—	—	1	—	—	—	—	—	2902 605
23-51-43	CAP, Rocker Outer Panel Front		V,L	—	1	—	1	1	—	—	—	2782 844-5
			B,J	—	1	1	1	—	—	—	—	3444 086-7
		70	R,W	1	1	1	1	1	—	1	1	2840 820-1
		71	R,W	—	1	—	1	1	—	1	1	3445 428-9
			P,D,C,Y	1	1	1	1	1	1	1	1	2900 022-3
23-51-45	PLUG, Rocker Panel Outer Front Cap		All	2	2	2	2	2	2	2	2	2094 985
23-51-48	BRACE, Qtr. Panel Belt Bar to Pillar Support		P,D,C	—	—	—	—	—	—	1	1	2894 000-1
23-51-52	FILLER, Qtr. Belt Bar to	70	R,W	—	—	—	—	—	—	1	1	2811 762-3
23-52-0	**SEAT SPRING**											
23-52-1	HELPER SPRING, Front Seat Cushion (Coil Type)	70	W-T	—	—	—	—	1	—	—	—	3412 192
		71	W-T	—	—	—	—	1	—	—	—	3571 423
	HELPER SPRING, Rear Seat Cushion Heavy Duty	70	R,W	—	—	—	—	2	—	—	—	2767 468
23-54-0	**TAILGATE**											
23-54-1	LATCH T/Gate and Door	Upr. Rt. 70	All	—	—	—	—	—	—	1	1	2862 088
	T/Gate	Upr. Lt. 70	R,W	—	—	—	—	—	—	1	1	2862 077
	T/Gate	Upr. Lt. 70	P, D, C	—	—	—	—	—	—	1	1	2945 471
	T/Gate	Lwr. Rt. 70	R, W	—	—	—	—	—	—	1	1	2862 100
	T/Gate	Lwr. Rt. 70	P,D,C	—	—	—	—	—	—	1	1	2935 432
	T/Gate and Door, w/Manual T/Gate Up To Approximately Nov. 15, 1970	Upr. Rt. 71	R,W	—	—	—	—	—	—	1	1	3548 268
	After Approximately Nov. 15, 1970	Upr. Rt. 71	R,W	—	—	—	—	—	—	1	1	= 3670 078
	T/Gate and Door, w/Electric T/Gate Up To Approximately Nov. 15, 1970	Upr. Rt. 71	R,W	—	—	—	—	—	—	1	1	3508 058
	After Approximately Nov. 15, 1970	Upr. Rt. 71	R,W	—	—	—	—	—	—	1	1	= 3670 078
	T/Gate	Lwr. Rt. 71	R,W	—	—	—	—	—	—	1	1	3508 084
	T/Gate	Upr. Lt. 71	R,W	—	—	—	—	—	—	1	1	3508 059

CARLINES	J - Challenger B - Barracuda	V - Valiant L - Dart	R - Belvedere - Satallite W - Coronet - Charger	P - Plymouth D - Dodge	C - Chrysler Y - Imperial
NUMERALS INDICATE:	21 - 2 DR. SED. 23 - 2 DR. H.T.	27 - CONV. CPE. 29 - FAST BACK	41 - 4 DR. SED. 43 - 4 DR. H.T.	45 - 6 PASS. STA. WGN. 46 - 9 PASS. STA. WGN.	

AR Indicates use as required.
\# Indicates parts not listed in any previous parts book
Numerals in parentheses ( ) refer to notes.
★ Indicates change or addition.

Printed in U.S.A.
January 1972

Right and left part numbers are on same line, first number is right, second number is left.

CODE	PART NAME		MODEL CODES	SEE BOTTOM NOTE 21	23	27	29	41	43	45	46	PART NUMBER
23-54-0	**TAILGATE Cont'd.**											
23-54-1	LATCH Cont'd.											
	T/Gate and Door	Upr. Rt. 71	P,D,C	—	—	—	—	—	—	1	1	2862 088
	T/Gate	Lwr. Rt. 71	P,D,C	—	—	—	—	—	—	1	1	2935 432
	T/Gate	Upr. Lt. 71	P,D,C	—	—	—	—	—	—	1	1	2945 471
23-54-2	OVERLAY, T/Gate Outside											
	Panel	70	R-P	—	—	—	—	—	—	1	1	3444 822
		70	W-P	—	—	—	—	—	—	1	1	3444 834
		70	P-H	—	—	—	—	—	—	1	1	3444 846
		70	D-H	—	—	—	—	—	—	1	1	3444 860
		70	C	—	—	—	—	—	—	1	1	3444 874
		71	R-P	—	—	—	—	—	—	1	1	3569 984
		71	W-P	—	—	—	—	—	—	1	1	3569 994
		71	P-H	—	—	—	—	—	—	1	1	3612 387
		71	D-H	—	—	—	—	—	—	1	1	≈ 3569 975
		71	C	—	—	—	—	—	—	1	1	3506 610
23-54-3	TAILGATE	70	R	—	—	—	—	—	—	1	1	2859 220
		70	W	—	—	—	—	—	—	1	1	3417 944
		Manual 71	R,W	—	—	—	—	—	—	1	1	3482 297
		Electric 71	R,W	—	—	—	—	—	—	1	1	3482 284
			P-L	—	—	—	—	—	—	1	1	3417 632
			P-M,P-H	—	—	—	—	—	—	1	1	3417 634
	w/Ornamentation Pkg.		P-K	—	—	—	—	—	—	1	—	3417 634
	w/o Ornamentation Pkg.		P-K	—	—	—	—	—	—	1	—	3417 632
			D	—	—	—	—	—	—	1	1	3417 633
			C	—	—	—	—	—	—	1	1	3417 632
23-54-4	HINGE, T/Gate											
	T/Gate Half	Lt. 70	R,W	—	—	—	—	—	—	1	1	2945 162
	T/Gate Half	Lt. 71	R,W	—	—	—	—	—	—	1	1	3508 659
	HINGE, T/Gate Door Upper Body Half											
		Lt. 71	R,W	—	—	—	—	—	—	1	1	3548 019
	T/Gate	Lt.	P,D,C	—	—	—	—	—	—	1	1	3454 349
	HINGE, T/Gate Upper Body Half Up To											
	Approximately May 1, 1970	70	P,D,C	—	—	—	—	—	—	1	1	2999 962
	After Approximately May 1, 1970	70	P,D,C	—	—	—	—	—	—	1	1	3548 857
		71	P,D,C	—	—	—	—	—	—	1	1	3548 857
	STRAP, T/Gate Door Check Body											
	Half Hinge	70	R,W	—	—	—	—	—	—	1	1	2862 115
	BOLT, T/Gate Door Lower Hinge to Door											
		Lt. 71	R,W	—	—	—	—	—	—	1	1	6029 417
	PIN or STUD, T/Gate Lower Hinge											
	3/4" - 10 x 3 1/2"	70	All	—	—	—	—	—	—	1	1	6027 925
		71	P,D,C	—	—	—	—	—	—	1	1	6027 925
	NUT 3/4" - 10		All	—	—	—	—	—	—	1	1	272 919
	STUD, T/Gate Hinge Left											
	1/2" - 13 x 1 5/8"	Frt. 70	All	—	—	—	—	—	—	1	1	6026 976
	1/2" - 13 x 2"	Rr. 70	All	—	—	—	—	—	—	1	1	6026 977
		Frt. 71	R,W	—	—	—	—	—	—	1	1	6026 976
		Rr. 71	R,W	—	—	—	—	—	—	1	1	6029 093
	1/2" - 13 x 1 5/8"	Frt. 71	P,D,C	—	—	—	—	—	—	1	1	6026 976
	1/2" - 13 x 2"	Rr. 71	P,D,C	—	—	—	—	—	—	1	1	6026 977
	SCREW w/WASHER, T/Gate Door											
	Check Strap 10-24 x 1"	70	R,W	—	—	—	—	—	—	1	1	6024 072
	PIN, T/Gate Upper Hinge Body											
	Half Attaching 1/2" x 2 3/8"											
	(Knurled End)		R,W	—	—	—	—	—	—	1	1	6027 476
	PIN, T/Gate Door Check Strap											
	Attaching 1/4" x 1 1/8"	70	R,W	—	—	—	—	—	—	1	1	103 740

CARLINES J - Challenger, B - Barracuda, V - Valiant, L - Dart, R - Belvedere - Satallite, W - Coronet - Charger, P - Plymouth, D - Dodge, C - Chrysler, Y - Imperial

NUMERALS INDICATE: 21 - 2 DR. SED., 23 - 2 DR. H.T., 27 - CONV. CPE., 29 - FAST BACK, 41 - 4 DR. SED., 43 - 4 DR. H.T., 45 - 6 PASS. STA. WGN., 46 - 9 PASS. STA. WGN.

AR Indicates use as required.
\# Indicates parts not listed in any previous parts book
Numerals in parentheses ( ) refer to notes.
★ Indicates change or addition.

Printed in U.S.A.
January 1972

Right and left part numbers are on same line, first number is right, second number is left.

CODE	PART NAME		MODEL CODES	SEE BOTTOM NOTE 21	23	27	29	41	43	45	46	PART NUMBER
23-54-0	**TAILGATE Cont'd.**											
23-54-4	HINGE Cont'd.											
	SPRING PIN, T/Gate Door Check Strap Mtg. Bracket Attaching 1 5/8" Long	70	R,W	—	—	—	—	—	—	2	2	9420 947
23-54-5	SUPPORT, T/Gate Door Lower Hinge	Lt. 70	R,W	—	—	—	—	—	—	1	1	2862 129
		Lt. 71	R,W	—	—	—	—	—	—	1	1	3508 663
		Lt.	P,D,C	—	—	—	—	—	—	1	1	2945 813
	SUPPORT, T/Gate Lower Hinge	Lt. 70	R,W	—	—	—	—	—	—	1	1	2862 131
			P,D,C	—	—	—	—	—	—	1	1	3454 775
	SUPPORT, T/Gate Lower Hinge Gate Pivot	Lt. 71	R,W	—	—	—	—	—	—	1	1	3508 245
23-54-6	STRIKER, T/Gate Latch											
	T/Gate Upr. Latch	Rt.	All	—	—	—	—	—	—	1	1	3508 046
	T/Gate Lwr. Latch	Rt.	All	—	—	—	—	—	—	1	1	3454 480
	T/Gate Upr. Latch	Lt. 70	R,W	—	—	—	—	—	—	1	1	3454 477
	T/Gate Upr. Latch	Lt. 71	R,W	—	—	—	—	—	—	1	1	3508 801
	T/Gate Upr. Latch	Lt.	P,D,C	—	—	—	—	—	—	1	1	3454 481
	T/PLATE, Qtr. Panel T/Gate Upper Latch Striker	Rt.	All	—	—	—	—	—	—	1	1	2860 542
	PLATE, T/Gate Door Lower Latch Striker		All	—	—	—	—	—	—	AR	AR	3454 492
	PLATE, T/Gate Latch Striker	Rt.	All	—	—	—	—	—	—	1	1	3454 474
	T/PLATE, T/Gate Latch Striker	Lt. 70	All	—	—	—	—	—	—	1	1	2862 655
		Lt. 71	R,W	—	—	—	—	—	—	1	1	3548 029
		Lt. 71	P,D,C	—	—	—	—	—	—	1	1	2862 655
	PLATE, w/WELD SCREW Rear C/Member T/Gate Lower Hinge Support Attaching	71	R,W	—	—	—	—	—	—	1	1	3499 966
	SCREW, w/WASHER, T/Gate Lower Latch Striker Attaching 5/16"-18 x 1 1/8"	Rt.	All	—	—	—	—	—	—	4	4	6028 546
	SCREW w/WASHER, T/Gate Latch Striker Plate Attaching 5/16"-18 x 7/8"	Rt. 70	All	—	—	—	—	—	—	2	2	6026 067
		Rt. 71	P,D,C	—	—	—	—	—	—	1	1	6026 067
23-54-11	NAME PLATES, NAME LETTERS, ORNAMENTS and MEDALLIONS Tailgate (1)											
23-54-17	Pin, T Gate Hinge Up to Approximately May 1, 1970	70										
	Up To Approximately May 1, 1970		P,D,C	—	—	—	—	—	—	1	1	2999 959
	After Approximately May 1, 1970	70	P,D,C	—	—	—	—	—	—	1	1	3548 856
		71	P,D,C	—	—	—	—	—	—	1	1	3548 856
	SPRING PIN, T/Gate Door Hinge Upper Pin Retaining 3/16" x 7/8"		P,D,C	—	—	—	—	—	—	1	1	152 233
23-54-18	BASE, T/Gate Glass Stabilizer Slide	71	R,W	—	—	—	—	—	—	4	4	3581 890-1
23-54-20	BUSHING, T/Gate Upper Hinge Body Half		R,W	—	—	—	—	—	—	1	1	2862 122
		70	P,D,C	—	—	—	—	—	—	1	1	2999 650
	BUSHING, T/Gate Upper Hinge Pillar Half		P,D,C	—	—	—	—	—	—	1	1	2935 567
	BUSHING, T/Gate Door Lower Hinge		All	—	—	—	—	—	—	1	1	2862 127
	BUSHING, T/Gate Lower Hinge Support	Lt.	All	—	—	—	—	—	—	AR	AR	2862 133

CARLINES	J - Challenger B - Barracuda	V - Valiant L - Dart	R - Belvedere - Satallite W - Coronet - Charger	P - Plymouth D - Dodge	C - Chrysler Y - Imperial
NUMERALS INDICATE:	21 - 2 DR. SED. 23 - 2 DR. H.T.	27 - CONV. CPE. 29 - FAST BACK	41 - 4 DR. SED. 43 - 4 DR. H.T.	45 - 6 PASS. STA. WGN. 46 - 9 PASS. STA. WGN.	

AR Indicates use as required.
\# Indicates parts not listed in any previous parts book
Numerals in parentheses ( ) refer to notes.
★ Indicates change or addition.

Printed in U.S.A.
January 1972

Right and left part numbers are on same line, first number is right, second number is left.

23-54-0 TAILGATE Cont'd.

CODE	PART NAME		MODEL CODES	SEE BOTTOM NOTE 21	23	27	29	41	43	45	46	PART NUMBER
23-54-20	BUSHING Cont'd.											
	BUSHING, T/Gate Remote Control Intrusion Link	71	All	—	—	—	—	—	—	1	1	2583 429
	RING, T/Gate Lower Hinge Support Attaching	Lt.	All	—	—	—	—	—	—	1	1	6026 972
	RING, T/Gate Door Hinge to Anti-Slam Lever Torsion Spring	Lt. 71	All	—	—	—	—	—	—	1	1	1922 183
	ROLLER, T/Gate Door Upper Hinge Body Half	71	R,W	—	—	—	—	—	—	1	1	3548 018
23-54-21	WEDGE, T/Gate Door											
	Up to Approximately Nov. 1, 1969	Lt. 70	R,W	—	—	—	—	—	—	1	1	2862 275
	After Approximately Nov. 1, 1969	Lt. 70	R,W	—	—	—	—	—	—	1	1	3548 133
		Lt. 71	R,W	—	—	—	—	—	—	1	1	3548 025
	Up to Approximately Nov. 1, 1969	Lt. 70	P,D,C	—	—	—	—	—	—	1	1	3508 241
	After Approximately Nov. 1, 1969	Lt. 70	P,D,C	—	—	—	—	—	—	1	1	3548 135
		Lt. 71	P,D,C	—	—	—	—	—	—	1	1	3548 135
	SCREW, T/Gate Door Wedge and Upper Latch Attaching	Lt. 70	R,W	—	—	—	—	—	—	AR	AR	6022 245
		Lt.	P,D,C	—	—	—	—	—	—	AR	AR	6027 100
	SCREW, w/WASHER, T/Gate Door Wedge Attaching	Lt. 71	R,W	—	—	—	—	—	—	2	2	456 792
		Lt. 71	R,W	—	—	—	—	—	—	1	1	6027 838
23-54-22	ADJUSTER, T/Gate and Door Upper Latch Release Lever	Rt. 71	R,W	—	—	—	—	—	—	1	1	= 3670 084
23-54-27	SPACER, T/Gate and Door Upper Latch	Rt. 70	All	—	—	—	—	—	—	1	1	2935 850
		Rt. 71	P,D,C	—	—	—	—	—	—	1	1	2935 850
	SPACER, T/Gate Lower Hinge Support	Lt. 70	All	—	—	—	—	—	—	1	1	2862 130
		Lt. 71	P,D,C	—	—	—	—	—	—	1	1	2862 130
	SPACER, T/Gate Door Check Strap	70	R,W	—	—	—	—	—	—	1	1	2862 818
	SPACER, T/Gate Hinge Retaining		P,D,C	—	—	—	—	—	—	1	1	2945 860
	SHIM, T/Gate Upper Hinge Body Half	70	R,W	—	—	—	—	—	—	AR	AR	2862 124
23-54-28	SEAL, Qtr. Panel T/Gate Pillar Hinge Pivot Bracket to Rear Bumper Stone	Lt. 70	R,W	—	—	—	—	—	—	1	1	2860 645
	SEAL, Rear Floor T/Gate Opening Sill Panel to Rear Bumper	70	R,W	—	—	—	—	—	—	1	1	2860 644
	SEAL, Rear Floor T/Gate Opening Lower Sill to Bumper	71	R,W	—	—	—	—	—	—	1	1	3500 361
	SEAL, w/RETAINER, Rear Floor Pan T/Gate Opening Lower Sill to Bumper	71	R,W	—	—	—	—	—	—	1	1	3500 600
	SEAL, Rear T/Gate Opening Sill and Hinge Pillar Support to Bumper		P,D,C	—	—	—	—	—	—	1	1	3439 155
23-54-30	Plate, T/Gate Door Upper Hinge Shim Body Half	Lt. 71	R,W	—	—	—	—	—	—	AR	AR	3548 634
23-54-31	SPRING, T/Gate Door Check Strap	70	R,W	—	—	—	—	—	—	1	1	2862 274
	SPRING, T/Gate Door Anti-Slam Lever Torsion	71	R,W	—	—	—	—	—	—	1	1	3508 975

CARLINES: J - Challenger, B - Barracuda, V - Valiant, L - Dart, R - Belvedere - Satallite, W - Coronet - Charger, P - Plymouth, D - Dodge, C - Chrysler, Y - Imperial

NUMERALS INDICATE: 21 - 2 DR. SED., 23 - 2 DR. H.T., 27 - CONV. CPE., 29 - FAST BACK, 41 - 4 DR. SED., 43 - 4 DR. H.T., 45 - 6 PASS. STA. WGN., 46 - 9 PASS. STA. WGN.

AR Indicates use as required.
\# Indicates parts not listed in any previous parts book
Numerals in parentheses ( ) refer to notes.
★ Indicates change or addition.

Printed in U.S.A.
January 1972

Right and left part numbers are on same line, first number is right, second number is left.

CODE	PART NAME		MODEL CODES	SEE BOTTOM NOTE 21	23	27	29	41	43	45	46	PART NUMBER
23-54-0	**TAILGATE Cont'd.**											
23-54-31	SPRING Cont'd.											
	SPRING, T/Gate Glass Stabilizer Slide	71	R,W	—	—	—	—	—	—	8	8	3439 098
	RING, T/Gate Door Hinge to Anti-Slam Lever Torsion Spring	Lt. 71	R,W	—	—	—	—	—	—	1	1	1922 183
23-54-40	SLEEVE NUT, T/Gate Door Check Strap	70	R,W	—	—	—	—	—	—	1	1	2862 817
23-54-53	SEAL, T/Gate Inside Panel Cover to Inside Panel	70	R,W	—	—	—	—	—	—	1	1	2588 641
23-54-56	LINK, T/Gate Support	70	All	—	—	—	—	—	—	1	1	2862 118
		71	R,W	—	—	—	—	—	—	1	1	3508 667
		71	P,D,C	—	—	—	—	—	—	1	1	2862 118
	SHOULDER BOLT, T/Gate Support Link Attaching		All	—	—	—	—	—	—	2	2	6026 984
	WASHER		All	—	—	—	—	—	—	2	2	6024 888
23-54-70	LABEL, Caution T/Gate Glass	70	R,W	—	—	—	—	—	—	1	1	2861 773
	LABEL, T/Gate Door Hinge Release Direction	70	P,D,C	—	—	—	—	—	—	1	1	2895 183
		71	All	—	—	—	—	—	—	1	1	2895 183
23-54-72	REGULATOR, Window	Manual 70	R,W	—	—	—	—	—	—	1	—	2862 257
		Electric 70	R,W	—	—	—	—	—	—	1	1	2862 449
		Manual 71	R,W	—	—	—	—	—	—	1	1	3586 393
		Electric 71	R,W	—	—	—	—	—	—	1	1	3586 444
		Electric	P,D,C	—	—	—	—	—	—	1	1	3454 258
	SPRING NUT	70	R,W	—	—	—	—	—	—	AR	AR	6000 305
23-54-73	HANDLE, Manual Wdo. Regulator Outside	70	R,W	—	—	—	—	—	—	1	—	2583 331
		Complete 70	R,W	—	—	—	—	—	—	1	—	2583 022
	STUD, Manual Wdo. Regulator Outside Handle Base	70	R,W	—	—	—	—	—	—	3	—	6024 588
	STUD, Electric Wdo. Regulator Outside Ornament	70	R,W	—	—	—	—	—	—	2	2	6024 588
	HANDLE, T/Gate and Door Manual Wdo. Regulator Outside											
	Up To Approximately Jan. 1, 1971	71	R,W	—	—	—	—	—	—	1	1	3508 674
	After Approximately Jan. 1, 1971	71	R,W	—	—	—	—	—	—	1	1	= 3670 003
	HANDLE, T/Gate Door Outside	71	R,W	—	—	—	—	—	—	1	1	3508 662
23-54-74	SPRING, Wdo. Regulator Assist	Manual	R,W	—	—	—	—	—	—	1	—	2486 971
		Electric 70	R,W	—	—	—	—	—	—	1	1	2486 971
		Electric 71	R,W	—	—	—	—	—	—	1	1	2251 358
		Electric	P,D,C	—	—	—	—	—	—	1	1	2945 545
	SPRING, T/Gate and Door Upper Latch Override	71	P,D,C	—	—	—	—	—	—	1	1	3454 347
23-54-77	RING, Manual Wdo. Regulator Outside Handle Interlocking		R,W	—	—	—	—	—	—	1	1	2428 071
23-54-78	PAD, T/Gate Electric Wdo. Regulator Motor Bumper		P,D,C	—	—	—	—	—	—	1	1	2999 364
23-54-79	RETAINER, Manual Wdo. Regulator Outside Handle Knob	70	R,W	—	—	—	—	—	—	1	1	1775 164
	Up To Approximately Jan. 1, 1971	71	R,W	—	—	—	—	—	—	1	1	1775 164
	After Approximately Jan. 1, 1971	71	R,W	—	—	—	—	—	—	1	1	= 3670 005
	SNAP RING, T/Gate Door Handle Shaft	71	R,W	—	—	—	—	—	—	1	1	1626 749

CARLINES: J - Challenger, B - Barracuda, V - Valiant, L - Dart, R - Belvedere - Satallite, W - Coronet - Charger, P - Plymouth, D - Dodge, C - Chrysler, Y - Imperial

NUMERALS INDICATE: 21 - 2 DR. SED., 23 - 2 DR. H.T., 27 - CONV. CPE., 29 - FAST BACK, 41 - 4 DR. SED., 43 - 4 DR. H.T., 45 - 6 PASS. STA. WGN., 46 - 9 PASS. STA. WGN.

AR Indicates use as required.
# Indicates parts not listed in any previous parts book
Numerals in parentheses ( ) refer to notes.
★ Indicates change or addition.

Printed in U.S.A.
January 1972

Right and left part numbers are on same line, first number is right, second number is left.

23-54-0 TAILGATE Cont'd.

CODE	PART NAME	MODEL CODES	SEE BOTTOM NOTE 21	23	27	29	41	43	45	46	PART NUMBER
23-54-84	BUMPER, T/Gate Outside Manual Wdo. Regulator Handle 71	R,W	—	—	—	—	—	—	1	1	3586 427
23-54-88	SLIDE, T/Gate Wdo. Regulator Track										
	Manual 71	R,W	—	—	—	—	—	—	2	2	3454 363
	Electric 71	R,W	—	—	—	—	—	—	2	2	3454 363
	SLIDE, T/Gate Glass Stabilizer 71	R,W	—	—	—	—	—	—	8	8	3439 101
	SLEEVE-NUT, T/Gate Glass Stabilizer Slide 71	R,W	—	—	—	—	—	—	4	4	6028 417
	SCREW, T/Gate Glass Stabilizer Slide 71	R,W	—	—	—	—	—	—	4	4	6028 418
	SLIDE, T/Gate Electric Wdo. Regulator Track	P,D,C	—	—	—	—	—	—	2	2	2945 115
23-54-92	GASKET, Manual Wdo. Regulator Outside Handle 70	R,W	—	—	—	—	—	—	1	—	2583 023
	GASKET, T/Gate and Door Manual Wdo. Regulator Outside Handle 71	R,W	—	—	—	—	—	—	1	1	3508 675
	GASKET, T/Gate Door Outside Handle 71	R,W	—	—	—	—	—	—	1	1	3508 672
23-54-98	ROLLER, Manual Wdo. Regulator Arm to Glass 70	R,W	—	—	—	—	—	—	2	—	2486 874
	ROLLER, Electric Wdo. Regulator Arm 70	R,W	—	—	—	—	—	—	2	2	2486 874
23-54-100	HOUSING, Manual Wdo. Regulator Outside Handle Shaft 70	R,W	—	—	—	—	—	—	1	—	2802 796
	71	R,W	—	—	—	—	—	—	1	1	3548 243
23-54-102	SET SCREW, Manual Wdo. Regulator Outside Handle to Lever Pivot Pin	R,W	—	—	—	—	—	—	2	2	1960 017
23-54-103	BUMPER, Wdo. Glass Stop Down Position 70	R,W	—	—	—	—	—	—	2	2	2861 828
	71	R,W	—	—	—	—	—	—	2	2	3440 270
	BUMPER, T/Gate Glass Up Stop										
	Up To Approximately Feb. 1, 1971 71	R,W	—	—	—	—	—	—	2	2	3581 541
	After Approximately Feb. 1, 1971 71	R,W	—	—	—	—	—	—	2	2	# 3582 012
	BUMPER, Roof Rear Header Retainer T/Gate Glass 71	P,D,C	—	—	—	—	—	—	3	3	3500 643
		P,D,C	—	—	—	—	—	—	2	2	2484 941
23-54-107	PLATE, Electric Wdo. Regulator 70	R,W	—	—	—	—	—	—	1	1	2945 048
23-54-118	PLUG, T/Gate Sill Bumper Hole Black 70	P,D,C	—	—	—	—	—	—	4	4	4513 DX9
	PLUG, T/Gate Opening Lower Sill and Sill Extension 71	R,W	—	—	—	—	—	—	2	2	3499 913
	PLUG, T/Gate Glass Up Stop Adjusting Access Hole										
	Up To Approximately March 1, 1971 71	R,W	—	—	—	—	—	—	2	2	3581 445
	After Approximately March 1, 1971 71	R,W	—	—	—	—	—	—	2	2	2811 825
23-54-125	SPACER, T/Gate Wdo. Regulator w/T/Gate Wdo. Wiper and Washer 70	All	—	—	—	—	—	—	AR	AR	2822 993
	71	P,D,C	—	—	—	—	—	—	AR	AR	2822 993
23-54-126	PIN, T/Gate Glass Side Adjusting On Glass										
	Inner 71	R,W	—	—	—	—	—	—	1	1	2894 981
	Outer 71	R,W	—	—	—	—	—	—	1	1	2894 980
	PIN, T/Gate Glass Lateral Position										
	Inner 71	R,W	—	—	—	—	—	—	1	1	3581 864

CARLINES: J - Challenger, B - Barracuda, V - Valiant, L - Dart, R - Belvedere - Satallite, W - Coronet - Charger, P - Plymouth, D - Dodge, C - Chrysler, Y - Imperial

NUMERALS INDICATE: 21 - 2 DR. SED., 23 - 2 DR. H.T., 27 - CONV. CPE., 29 - FAST BACK, 41 - 4 DR. SED., 43 - 4 DR. H.T., 45 - 6 PASS. STA. WGN., 46 - 9 PASS. STA. WGN.

AR Indicates use as required.
# Indicates parts not listed in any previous parts book
Numerals in parentheses ( ) refer to notes.
★ Indicates change or addition.

Printed in U.S.A.
January 1972

Right and left part numbers are on same line, first number is right, second number is left.

23-54-0 TAILGATE Cont'd.

CODE	PART NAME		MODEL CODES	SEE BOTTOM NOTE 21	23	27	29	41	43	45	46	PART NUMBER
23-54-126	PIN Cont'd.											
		Outer 71	R,W	—	—	—	—	—	—	1	1	3581 865
23-54-128	CLIP, Manual Wdo. Regulator Handle Pawl Spring Retaining		R,W	—	—	—	—	—	—	1	1	1961 318
23-54-136	T 'PLATE, T/Gate Door Lower Hinge Support	Lt. 70	R,W	—	—	—	—	—	—	1	1	2862 437
	PLATE, Quarter Panel T/Gate Hinge Pivot Bracket	70	R,W	—	—	—	—	—	—	1	1	2934 099
	PLATE, T/Gate Door Upper Hinge Body Half	Lt. 71	R,W	—	—	—	—	—	—	AR	AR	3508 679
	PLATE, T/Gate Door Lower Hinge Pivot Support Shim											
	.054 Thick	Lt. 71	R,W	—	—	—	—	—	—	AR	AR	3508 665
	.108 Thick	Lt. 71	R,W	—	—	—	—	—	—	AR	AR	3586 051
23-54-140	BAR, T/Gate Hinge Torsion	70	R,W	—	—	—	—	—	—	1	1	2945 066
		71	R,W	—	—	—	—	—	—	1	1	3508 660
			P,D,C	—	—	—	—	—	—	1	1	2935 425
	BAR, T/Gate Door Torsion Check		P,D,C	—	—	—	—	—	—	1	1	3454 352
23-54-141	RETAINER, T/Gate Hinge Torsion Bar Center		R,W	—	—	—	—	—	—	1	1	2862 113
	RETAINER, T 'Gate Hinge,Torsion Bar Center Bearing		P,D,C	—	—	—	—	—	—	1	1	2945 899
	RETAINER, Rear T 'Gate Opening Sill and Hinge Pillar Support to Bumper Seal	70	P,D,C	—	—	—	—	—	—	12	12	2898 909
23-54-142	BEARING, T/Gate Hinge Torsion Bar Center		All	—	—	—	—	—	—	1	1	2583 614
	BEARING, T/Gate Door Hinge Torsion Bar Pivot	70	R,W	—	—	—	—	—	—	1	1	2945 065
	BEARING, T/Gate Hinge Torsion Bar Pivot Bracket	70	P,D,C	—	—	—	—	—	—	1	1	2935 571
		71	All	—	—	—	—	—	—	1	1	2935 571
23-54-143	BRACKET, Qtr. Panel T/Gate Hinge Pivot	70	R,W	—	—	—	—	—	—	1	1	2860 484
	BRACKET, T/Gate Door Check Strap Mtg.	70	R,W	—	—	—	—	—	—	1	1	2862 280
	BRACKET, T/Gate Door Check Torsion Bar		P,D,C	—	—	—	—	—	—	1	1	3454 350
	BRACKET, T 'Gate Opening Pillar Cover	70	P,D,C	—	—	—	—	—	—	1	1	2879 214-5
	BRACKET, T 'Gate Hinge Torsion Bar Clamp	71	R,W	—	—	—	—	—	—	1	1	3586 257
	BRACKET, T 'Gate Opening Upper Trim Cover	71	P,D,C	—	—	—	—	—	—	1	1	3509 058-9
	BRACKET, T/Gate Lock Pillar Glass Side Adjusting	Rt. 71	R,W	—	—	—	—	—	—	1	1	3440 251
	SLEEVE NUT	71	R,W	—	—	—	—	—	—	1	1	6029 337
	JAM NUT	71	R,W	—	—	—	—	—	—	1	1	271 502
23-54-144	CLAMP, T/Gate Hinge Torsion Bar End	70	R,W	—	—	—	—	—	—	1	1	2862 114
		71	R,W	—	—	—	—	—	—	1	1	3586 255
			P,D,C	—	—	—	—	—	—	1	1	2935 569
	CLAMP, T/Gate Lower Hinge Support Outer	Lt. 70	R,W	—	—	—	—	—	—	1	1	2862 295
		Lt. 71	R,W	—	—	—	—	—	—	1	1	3508 673

CARLINES	J - Challenger B - Barracuda	V - Valiant L - Dart	R - Belvedere - Satellite W - Coronet - Charger	P - Plymouth D - Dodge	C - Chrysler Y - Imperial
NUMERALS INDICATE:	21 - 2 DR. SED. 23 - 2 DR. H.T.		27 - CONV. CPE. 29 - FAST BACK	41 - 4 DR. SED. 43 - 4 DR. H.T.	45 - 6 PASS. STA. WGN. 46 - 9 PASS. STA. WGN.

AR Indicates use as required.
\# Indicates parts not listed in any previous parts book
Numerals in parentheses ( ) refer to notes.
★ Indicates change or addition.

Printed in U.S.A.
January 1972

Right and left part numbers are on same line, first number is right, second number is left.

23-54-0 TAILGATE Cont'd.

CODE	PART NAME		MODEL CODES	SEE BOTTOM NOTE 21	23	27	29	41	43	45	46	PART NUMBER
23-54-144	CLAMP Cont'd.											
	CLAMP, T/Gate Lower Hinge Support Outer		P,D,C	—	—	—	—	—	—	1	1	3454 776
23-54-149	REINFORCEMENT, Qtr. Panel T/Gate Hinge Bracket	70	R,W	—	—	—	—	—	—	1	1	2860 485
	REINFORCEMENT, T/Gate Opening Sill Panel to Qtr. Panel T/Gate Pillar Support	Lt.	P,D,C	—	—	—	—	—	—	1	1	2895 359
23-54-150	COVER, T/Gate Inside Panel Regulator Access Hole	70	R,W	—	—	—	—	—	—	1	1	2860 260
		71	R,W	—	—	—	—	—	—	1	1	3440 266
			P,D,C	—	—	—	—	—	—	1	1	2893 867
23-54-152	COUPLING, Electric Wdo. Regulator Motor to Mechanism		R,W	—	—	—	—	—	—	1	1	1778 955
			P,D,C	—	—	—	—	—	—	1	1	2486 072
23-54-159	RELAY w/BRACKET, T/GATE Wdo. Lift	70	R,W	—	—	—	—	—	—	1	1	3004 186
		71	R,W	—	—	—	—	—	—	1	1	2932 834
			P,D,C	—	—	—	—	—	—	1	1	2932 834
23-54-160	MOTOR, Electric Wdo. Regulator	70	All	—	—	—	—	—	—	1	1	2448 640
		71	R,W	—	—	—	—	—	—	1	1	3586 564
		71	P,D,C	—	—	—	—	—	—	1	1	2448 640
23-54-165	MECHANISM, Electric Wdo. Regulator	70	R,W	—	—	—	—	—	—	1	1	2486 882
			P,D,C	—	—	—	—	—	—	1	1	2935 751
	SCREW w WASHER, T/Gate Electric Wdo. Regulator Mechanism	70	R,W	—	—	—	—	—	—	1	1	6025 879
		70	R,W	—	—	—	—	—	—	3	3	6025 895
			P,D,C	—	—	—	—	—	—	4	4	6027 549
	DRIVE, Electric Wdo. Regulator	71	R,W	—	—	—	—	—	—	1	1	3548 134
23-54-167	SWITCH, Electric Wdo. Lift											
	On Inst. Panel	70	R,W	—	—	—	—	—	—	1	1	2864 489
	Lock On T/Gate	70	R,W	—	—	—	—	—	—	1	1	2661 565
	Limit On T/Gate	70	R,W	—	—	—	—	—	—	1	1	2857 842
	On Inst. Panel	71	R,W	—	—	—	—	—	—	1	1	3514 428
	Lock On T/Gate	71	R,W	—	—	—	—	—	—	1	1	3488 079
	On Inst. Panel		P,D	—	—	—	—	—	—	1	1	2864 491
	On Inst. Panel	70	C	—	—	—	—	—	—	1	1	2864 489
	On Inst. Panel	71	C	—	—	—	—	—	—	1	1	3488 164
	Lock On T/Gate		P,D,C	—	—	—	—	—	—	1	1	2926 695
	Limit On T/Gate		P,D,C	—	—	—	—	—	—	1	1	2926 698
	SWITCH, T/Gate Door Unlock On Inst. Panel Up To Approximately Sept. 1, 1970	71	R,W	—	—	—	—	—	—	1	1	3488 315
	On Inst. Panel After Approximately Sept. 1, 1970	71	R,W	—	—	—	—	—	—	1	1	= 3488 516
	On Inst. Panel	71	P	—	—	—	—	—	—	1	1	3488 139
23-54-169	KNOB, Electric Wdo. Lift Switch	70	R,W	—	—	—	—	—	—	1	1	2947 556
		70	C	—	—	—	—	—	—	1	1	2947 263
23-54-170	DECAL, T/Gate Wdo. Lift Switch		P,D	—	—	—	—	—	—	1	1	2947 187
	PLATE, T/Gate Wdo. Lift Switch Mtg.	70	R,W,C	—	—	—	—	—	—	1	1	2947 246
	BEZEL, T/Gate Wdo. Lift Switch	71	R,W	—	—	—	—	—	—	1	1	3488 528
	BEZEL, T/Gate Door Unlock Switch	71	R,W	—	—	—	—	—	—	1	1	3488 524
23-54-178	WIRING, T/Gate Wdo. Lift	70	R,W	—	—	—	—	—	—	1	1	2889 433

CARLINES: J - Challenger, B - Barracuda, V - Valiant, L - Dart, R - Belvedere - Satallite, W - Coronet - Charger, P - Plymouth, D - Dodge, C - Chrysler, Y - Imperial

NUMERALS INDICATE: 21 - 2 DR. SED., 23 - 2 DR. H.T., 27 - CONV. CPE., 29 - FAST BACK, 41 - 4 DR. SED., 43 - 4 DR. H.T., 45 - 6 PASS. STA. WGN., 46 - 9 PASS. STA. WGN.

AR Indicates use as required.
\# Indicates parts not listed in any previous parts book
Numerals in parentheses ( ) refer to notes.
★ Indicates change or addition.

Printed in U.S.A. January 1972

Right and left part numbers are on same line, first number is right, second number is left.

23-54-0 TAILGATE Cont'd.

CODE	PART NAME	MODEL CODES	SEE BOTTOM NOTE 21	23	27	29	41	43	45	46	PART NUMBER
23-54-178	WIRING Cont'd.										
		P	—	—	—	—	—	—	1	1	2926 417
		D	—	—	—	—	—	—	1	1	2926 418
		C	—	—	—	—	—	—	1	1	2926 419
	WIRING, Body and T/Gate Wdo. Lift and Lock 71	R,W	—	—	—	—	—	—	1	1	3513 311
	WIRING, Body and T/Gate Lock 71	R,W	—	—	—	—	—	—	1	1	3513 310
	WIRING, T/Gate Wdo. Lift and Lock 71	R,W	—	—	—	—	—	—	1	1	3513 595
	WIRING, T/Gate and Power Wdo.										
	Up To Approximately Jan. 15, 1971 71	R,W	—	—	—	—	—	—	1	1	3513 094
	After Approximately Jan. 15, 1971 71	R,W	—	—	—	—	—	—	1	1	= 3513 722
	WIRING, T/Gate Power Lock 71	R,W	—	—	—	—	—	—	1	1	3513 095
	WIRING, T/Gate Wdo. Lift Switch										
	w/o T/Gate Wdo. Wiper and Washer 70	R,W	—	—	—	—	—	—	1	1	2983 483
	71	P,D	—	—	—	—	—	—	1	1	3513 173
	w/T/Gate Wdo. Wiper and Washer 70	R,W	—	—	—	—	—	—	1	1	2983 482
	70	P	—	—	—	—	—	—	1	1	2983 445
	70	D	—	—	—	—	—	—	1	1	2983 444
	70	C	—	—	—	—	—	—	1	1	2983 506
	71	P,D	—	—	—	—	—	—	1	1	3513 174
	71	C	—	—	—	—	—	—	1	1	3513 362
23-54-179	SOLENOID, T/Gate and Door Latch Locking 71	R,W	—	—	—	—	—	—	1	1	3586 707
	U-NUT, T/Gate Door Latch Locking Solenoid 71	R,W	—	—	—	—	—	—	2	2	6025 508
23-54-187	BRACKET, T/Gate Latch Remote Control Intrusion Link Bearing 70	R,W	—	—	—	—	—	—	1	1	2862 467
	BRACKET, T/Gate and Door Automatic Electric Latch Locking Solenoid Mtg. 71	R,W	—	—	—	—	—	—	1	1	3548 306
	BRACKET, T/Gate and Door Latch Intrusion Link Guide 71	R,W	—	—	—	—	—	—	1	1	3508 103
	BRACKET w/CAM, T/Gate Door Release										
	Up To Approximately Feb. 15, 1971 71	R,W	—	—	—	—	—	—	1	1	3548 150
	After Approximately Feb. 15, 1971 71	R,W	—	—	—	—	—	—	1	1	= 3670 061
	BRACKET w/BUSHING, T/Gate Remote Control Link Bearing Intrusion	P,D,C	-	—	—	—	—	—	1	1	2945 362
23-54-189	LEVER w/SHAFT, T/Gate Door Anti-Slam 71	R,W	—	—	—	—	—	—	1	1	3508 671
23-54-205	BUMPER, T/Gate Latch Lwr. Hsg. Rt.	All	—	—	—	—	—	—	1	1	2583 849
	Upr. Hsg. Lt.	All	—	—	—	—	—	—	1	1	2583 849
	Door Upr. Rt.	All	—	—	—	—	—	—	1	1	2583 849
23-54-214	KNOB, Latch Remote Control Handle 70	R,W	—	—	—	—	—	—	1	1	2862 453
	71	R,W	—	—	—	—	—	—	1	1	3508 810
		P,D,C	—	—	—	—	—	—	1	1	2935 604
	KNOB PACKAGE, T/Gate and Door Latch Locking Control	R,W	—	—	—	—	—	—	1	1	3419 209
	NUT, T/Gate Door Latch Remote Control Handle Knob Attaching	P,D,C	—	—	—	—	—	—	1	1	6025 919
23-54-216	LINK, T/Gate Remote Control to Upper Latch Rt. 70	R,W	—	—	—	—	—	—	1	1	2935 923

CARLINES	J - Challenger B - Barracuda	V - Valiant L - Dart	R - Belvedere - Satellite W - Coronet - Charger	P - Plymouth D - Dodge	C - Chrysler Y - Imperial
NUMERALS INDICATE:	21 - 2 DR. SED. 23 - 2 DR. H.T.	27 - CONV. CPE. 29 - FAST BACK	41 - 4 DR. SED. 43 - 4 DR. H.T.	45 - 6 PASS. STA. WGN. 46 - 9 PASS. STA. WGN.	

AR Indicates use as required.
\# Indicates parts not listed in any previous parts book
Numerals in parentheses ( ) refer to notes.
★ Indicates change or addition.

Printed in U.S.A.
January 1972

Right and left part numbers are on same line, first number is right, second number is left.

23-54-0 TAILGATE Cont'd.

CODE	PART NAME		MODEL CODES	SEE BOTTOM NOTE 21	23	27	29	41	43	45	46	PART NUMBER
23-54-216	LINK Cont'd.											
	LINK, T/Gate and Door Remote Control Upper Latch	Rt. 70	R,W	—	—	—	—	—	—	1	1	2935 924
	LINK, T/Gate and Door Upper to Lower Latch	Rt. 70	R,W	—	—	—	—	—	—	1	1	2935 925
	LINK, T/Gate Remote Control Intrusion	70	R,W	—	—	—	—	—	—	1	1	2935 921
	LINK w/SLEEVE, T/Gate Remote Control to Upper Latch	Lt. 70	R,W	—	—	—	—	—	—	1	1	3454 135
	LINK, T/Gate and Door Latch Locking Control to Upper Latch	Rt. 71	R,W	—	—	—	—	—	—	1	1	3508 098
	LINK, T/Gate Latch Remote Control to Upper Latch	Rt. 71	R,W	—	—	—	—	—	—	1	1	3508 100
	LINK, T/Gate Door Remote Control Upper Latch	Rt. 71	R,W	—	—	—	—	—	—	1	1	3508 102
	LINK, T/Gate and Door Latch Intrusion	71	R,W	—	—	—	—	—	—	1	1	3586 636
	LINK, T/Gate Door Upper to Lower Latch Upper Half	Rt. 71	R,W	—	—	—	—	—	—	1	1	3586 256
	LINK, T/Gate Door Upper to Lower Latch Up To Approximately March 1, 1971	Rt. 71	R,W	—	—	—	—	—	—	1	1	3586 656
	After Approximately March 1, 1971	Rt. 71	R,W	—	—	—	—	—	—	1	1	= 3670 057
	LINK, T/Gate Automatic Electric Latch Locking Solenoid to Latch	71	R,W	—	—	—	—	—	—	1	1	3508 813
	LINK w/SLEEVE, T/Gate Latch Remote Control to Upper Latch	Lt. 71	R,W	—	—	—	—	—	—	1	1	3508 097
	LINK w/CONNECTOR, T/Gate Door Upper to Lower Latch Lower Half	71	R,W	—	—	—	—	—	—	1	1	3586 258
	LINK, T/Gate Door Latch Remote Control to Upper Latch	Rt.	P,D,C	—	—	—	—	—	—	1	1	2935 438
	LINK, T/Gate and Door Latch Remote Control to Upper Latch	Rt.	P,D,C	—	—	—	—	—	—	1	1	2935 440
	LINK, T/Gate Door Upper to Lower Latch	Rt.	P,D,C	—	—	—	—	—	—	1	1	2945 364
	LINK, T/Gate and Door Latch Remote Control Intrusion		P,D,C	—	—	—	—	—	—	1	1	2999 003
	LINK w/SLEEVE, T/Gate Door Latch Remote Control to Upper Latch	Lt.	P,D,C	—	—	—	—	—	—	1	1	3454 147
	SWIVEL, T/Gate Door Upper to Lower Latch Link	Rt.	All	—	—	—	—	—	—	1	1	6027 180
	SWIVEL, T/Gate Remote Control to Upper Latch Link Attaching	Rt.	All	—	—	—	—	—	—	1	1	6027 180
	SWIVEL, T/Gate Latch Remote Control to Upper Latch Link	Lt.	All	—	—	—	—	—	—	1	1	6027 180
	SWIVEL, T/Gate and Door Upper Latch Release Lever to Upper to Lower Latch Link	Rt. 71	R,W	—	—	—	—	—	—	1	1	3586 662
23-54-217	CLIP RETAINER, T/Gate Upper Latch Release Lever		R,W	—	—	—	—	—	—	1	1	2862 758
	CLIP RETAINER, T/Gate and Door Upper Latch	Rt.	All	—	—	—	—	—	—	1	1	2935 920

CARLINES J - Challenger, B - Barracuda, V - Valiant, L - Dart, R - Belvedere - Satallite, W - Coronet - Charger, P - Plymouth, D - Dodge, C - Chrysler, Y - Imperial

NUMERALS INDICATE: 21 - 2 DR. SED., 23 - 2 DR. H.T., 27 - CONV. CPE., 29 - FAST BACK, 41 - 4 DR. SED., 43 - 4 DR. H.T., 45 - 6 PASS. STA. WGN., 46 - 9 PASS. STA. WGN.

AR Indicates use as required.
# Indicates parts not listed in any previous parts book
Numerals in parentheses ( ) refer to notes.
★ Indicates change or addition.

Printed in U.S.A.
January 1972

Right and left part numbers are on same line, first number is right, second number is left.

23-54-0 TAILGATE Cont'd.

CODE	PART NAME	MODEL CODES	SEE BOTTOM NOTE 21	23	27	29	41	43	45	46	PART NUMBER
23-54-217	CLIP RETAINER Cont'd.										
	CLIP RETAINER, T/Gate Upper Latch Release Lever	All	—	—	—	—	—	—	1	1	6026 697
	CLIP RETAINER, T/Gate Lower Latch Locking Lever	All	—	—	—	—	—	—	1	1	2935 920
	CLIP RETAINER, T/Gate and Door Latch Remote Control	All	—	—	—	—	—	—	3	3	2862 758
	CLIP RETAINER, T/Gate Latch Remote Control to Upper Latch Link Attaching	All	—	—	—	—	—	—	1	1	2935 920
	CLIP, T/Gate Upper Latch Release Lever Lt.	R,W	—	—	—	—	—	—	1	1	2862 585
	CLIP, T/Gate Remote Control Upper Latch Link Inside Panel Anti-Rattle Lt. 70	R,W	—	—	—	—	—	—	1	1	2862 323
	CLIP, T/Gate and Door Upper Latch Retaining Rt.	All	—	—	—	—	—	—	2	2	2862 758
	CLIP, T/Gate and Door Upper Latch Rt.	All	—	—	—	—	—	—	3	3	2862 585
	CLIP, T/Gate Lower Latch Locking Lever Rt.	All	—	—	—	—	—	—	1	1	2862 585
	CLIP, T/Gate and Door Latch Remote Control	All	—	—	—	—	—	—	4	4	2862 585
	CLIP, T/Gate Upper Latch Release Lever Lt.	P,D,C	—	—	—	—	—	—	1	1	2486 040
	CLIP RETAINER, T/Gate and Door Latch Locking Control Push Rod Attaching 71	R,W	—	—	—	—	—	—	1	1	2862 758
	CLIP RETAINER, T/Gate and Door Latch Locking Control 71	R,W	—	—	—	—	—	—	2	2	2862 758
	CLIP, T/Gate and Door Latch Locking Control Push Rod Attaching 71	R,W	—	—	—	—	—	—	1	1	2862 585
	CLIP, T/Gate and Door Latch Locking Control Lever 71	R,W	—	—	—	—	—	—	2	2	2862 585
	CLIP, T/Gate and Door Latch Locking Control Lever to Solenoid Lock to Solenoid Attaching 71	R,W	—	—	—	—	—	—	1	1	629 792
23-54-218	CONTROL, T/Gate and Door Latch Remote 70	R,W	—	—	—	—	—	—	1	1	3454 139
	70	P,D,C	—	—	—	—	—	—	1	1	3454 141
	Manual 71	R,W	—	—	—	—	—	—	1	—	3508 083
	Electric 71	R,W	—	—	—	—	—	—	1	1	3508 815
	71	P,D,C	—	—	—	—	—	—	1	1	3508 485
	CONTROL, T/Gate and Door Latch Locking 71	R,W	—	—	—	—	—	—	1	1	3508 069
	SCREW w/WASHER, T/Gate and Door Latch Remote Control Attaching	All	—	—	—	—	—	—	3	3	6023 092
23-54-220	SLEEVE, T/Gate Latch Remote Control Handle	R,W	—	—	—	—	—	—	1	1	3548 511
23-54-221	BEZEL, Latch Remote Control Handle Black 70	R,W	—	—	—	—	—	—	1	1	4503 DX9
	Blue 70	R,W	—	—	—	—	—	—	1	1	4503 EB7
	Green 70	R,W	—	—	—	—	—	—	1	1	4503 EF8
	Tan 70	R,W	—	—	—	—	—	—	1	1	4503 FT4
	70	P,D,C	—	—	—	—	—	—	1	1	2935 603
	71	All	—	—	—	—	—	—	1	1	2935 603

CARLINES	J - Challenger B - Barracuda	V - Valiant L - Dart	R - Belvedere - Satallite W - Coronet - Charger	P - Plymouth D - Dodge	C - Chrysler Y - Imperial
NUMERALS INDICATE:	21 - 2 DR. SED. 23 - 2 DR. H.T.		27 - CONV. CPE. 29 - FAST BACK	41 - 4 DR. SED. 43 - 4 DR. H.T.	45 - 6 PASS. STA. WGN. 46 - 9 PASS. STA. WGN.

AR Indicates use as required.
\# Indicates parts not listed in any previous parts book
Numerals in parentheses ( ) refer to notes.
★ Indicates change or addition.

Printed in U.S.A.
January 1972

Right and left part numbers are on same line, first number is right, second number is left.

CODE	PART NAME		MODEL CODES	SEE BOTTOM NOTE 21	23	27	29	41	43	45	46	PART NUMBER
23-54-0	**TAILGATE Cont'd.**											
23-54-221	BEZEL Cont'd.											
	BEZEL, T Gate Release and Wdo. Lift											
		71	C	—	—	—	—	—	—	1	1	2985 575
	ESCUTCHEON, T Gate and Door Latch Locking Control Knob											
		71	R,W	—	—	—	—	—	—	1	1	2428 178
	SCREW, Latch Remote Control Handle Bezel Attaching	70	R,W	—	—	—	—	—	—	2	2	9415 537
		70	P,D,C	—	—	—	—	—	—	2	2	9416 208
		71	All	—	—	—	—	—	—	2	2	9416 208
23-54-222	BOOT, Latch Remote Control Handle Dust		P,D,C	—	—	—	—	—	—	1	1	2935 605
		71	R,W	—	—	—	—	—	—	1	1	3508 798
	WEATHERSTRIP, Latch Remote Control Handle	70	R,W	—	—	—	—	—	—	1	1	2945 110
23-54-223	ROD, T Gate and Door Latch Locking Control Push											
		71	R,W	—	—	—	—	—	—	1	1	3586 638
23-54-227	BUSHING, Remote Control Intrusion Link		All	—	—	—	—	—	—	1	1	2583 429
23-54-228	SPRING, T Gate Latch Remote Control Release Lever Return											
		71	All	—	—	—	—	—	—	1	1	3548 296
23-58-0	**FOLDING TOP**											
23-58-3	TOP, Folding, w o Mechanism or Soft Trim		B,J	—	—	1	—	—	—	—	—	2964 409
		70	R,W	—	—	1	—	—	—	—	—	1995 DX9
		70	P,D,C	—	—	1	—	—	—	—	—	2901 273
	NOTE: See Part Type Code 23-112-0 For Folding Top Soft Trim.											
23-58-75	BOW, Folding Top	No. 1	B,J	—	—	1	—	—	—	—	—	2964 313
		No. 2	B,J	—	—	1	—	—	—	—	—	2964 321
		No. 3	B,J	—	—	1	—	—	—	—	—	2964 326
		No. 1 70	R,W	—	—	1	—	—	—	—	—	2573 406
		No. 2 70	R,W	—	—	1	—	—	—	—	—	2573 407
		No. 3 70	R,W	—	—	1	—	—	—	—	—	2784 300
		No. 1 70	P,D,C	—	—	1	—	—	—	—	—	2902 397
		No. 2 70	P,D,C	—	—	1	—	—	—	—	—	2902 553
		No. 3 70	P,D,C	—	—	1	—	—	—	—	—	2902 841
23-58-76	LINK, Rear Bow to Rear Side Rail	70	R,W	—	—	1	—	—	—	—	—	2251 128-9
23-58-78	TAPPED PLATE, Control Link		B,J	—	—	2	—	—	—	—	—	3504 076
	PLATE, Outer Support to Control Link Adjustment		B,J	—	—	2	—	—	—	—	—	2902 312
		70	P,D,C	—	—	2	—	—	—	—	—	2902 312
	PLATE, Control Link Adjustment		B,J	—	—	2	—	—	—	—	—	2902 313
		70	P,D,C	—	—	2	—	—	—	—	—	2902 313
	PLATE, Control Link Support Attaching		B,J	—	—	2	—	—	—	—	—	2902 314
		70	P,D,C	—	—	2	—	—	—	—	—	2902 314
23-58-84	BRACKET, Bow	No. 1 70	R,W	—	—	1	—	—	—	—	—	2784 557
		No. 2 70	P,D,C	—	—	1	—	—	—	—	—	2963 482-3
	BRACKET, Side Rail Bow	No. 1	B-J	—	—	2	—	—	—	—	—	2964 317
		No. 2	B,J	—	—	1	—	—	—	—	—	3446 472-3
23-58-189	WIRING, Switch w/Power Wdos.	70	R-M	—	—	1	—	—	—	—	—	2983 652
	w/Power Wdos.	70	R-H	—	—	1	—	—	—	—	—	2983 484

CARLINES: J - Challenger, B - Barracuda, V - Valiant, L - Dart, R - Belvedere - Satallite, W - Coronet - Charger, P - Plymouth, D - Dodge, C - Chrysler, Y - Imperial

NUMERALS INDICATE: 21 - 2 DR. SED., 23 - 2 DR. H.T., 27 - CONV. CPE., 29 - FAST BACK, 41 - 4 DR. SED., 43 - 4 DR. H.T., 45 - 6 PASS. STA. WGN., 46 - 9 PASS. STA. WGN.

AR Indicates use as required.
\# Indicates parts not listed in any previous parts book
Numerals in parentheses ( ) refer to notes.
★ Indicates change or addition.

Printed in U.S.A. January 1972

Right and left part numbers are on same line, first number is right, second number is left.

CODE	PART NAME		MODEL CODES	SEE BOTTOM NOTE 21	23	27	29	41	43	45	46	PART NUMBER
23-58-0	**FOLDING TOP Cont'd.**											
23-58-189	WIRING Cont'd.											
	w/Power Wdos.	70	W-P	—	—	1	—	—	—	—	—	2983 484
	w/Power Wdos. and w/o Rallye Inst. Panel	70	W-S	—	—	1	—	—	—	—	—	2983 484
	w/Power Wdos. and w/Rallye Inst. Panel	70	W-S	—	—	1	—	—	—	—	—	2983 652
	WIRING, Top Lift w/Power Wdos.											
	Up To Approximately Jan. 15, 1971	71	B,J	—	—	1	—	—	—	—	—	2983 251
	After Approximately Jan. 15, 1971	71	B,J	—	—	1	—	—	—	—	—	=3513 720
23-58-200	CYLINDER w/YOKE, Top Lift Operating		B,J	—	—	2	—	—	—	—	—	3505 228
		70	R,W	—	—	2	—	—	—	—	—	3505 226
		70	P,D,C	—	—	2	—	—	—	—	—	3505 226
	CYLINDER w/SPRING, Top Lift Operating	Manual	B,J	—	—	2	—	—	—	—	—	3504 648
23-58-213	BUSHING, Cylinder and Yoke or Power Plate Plastic, Flange Dia. 13/16"		All	—	—	4	—	—	—	—	—	2573 690
	BUSHING, Power Guide Plate to Power Cylinder Rod Flange, Dia. 1"		B,J	—	—	2	—	—	—	—	—	2528 237
	BUSHING, Side Rail Power Plate Flange Dia. 1"	70	R,W	—	—	2	—	—	—	—	—	2528 237
	BUSHING, Cylinder Rod Attaching Flange, Dia. 1"	70	P,D,C	—	—	2	—	—	—	—	—	2528 237
	BUSHING, Power Link to Cylinder Flange, Dia. 1"	70	P,D,C	—	—	2	—	—	—	—	—	2528 237
	BUSHING, Folding Top Cam Plastic, 1" Dia.	70	P,D,C	—	—	2	—	—	—	—	—	6027 952
	WASHER, Folding Top Cam Plastic, 1" Dia.	70	P,D,C	—	—	2	—	—	—	—	—	6027 953
23-58-215	PLATE, Side Rails Cylinder Attaching		B,J	—	—	2	—	—	—	—	—	2605 684
		70	R,W	—	—	2	—	—	—	—	—	2573 470
		70	P,D,C	—	—	2	—	—	—	—	—	2605 684
23-58-220	HEADER, Complete		B,J	—	—	1	—	—	—	—	—	2964 307
		70	R,W	—	—	1	—	—	—	—	—	2605 327
		70	P,D,C	—	—	1	—	—	—	—	—	2963 681
23-58-227	MECHANISM, Header Locking	70	R,W	—	—	1	—	—	—	—	—	2520 610-1
23-58-228	DOWEL, Header		B,J	—	—	2	—	—	—	—	—	3445 306
		70	R,W	—	—	2	—	—	—	—	—	1758 839
23-58-230	BRACKET, Windshield Upper Frame Dowel		B,J	—	—	2	—	—	—	—	—	3445 307
	BRACKET, Windshield Upper Frame Folding Top Lock	70	B,J	—	—	1	—	—	—	—	—	2964 150-1
	BRACKET or Catch, Windshield Visor Arm Header Lock	70	R,W	—	—	1	—	—	—	—	—	2842 630-1
		70	P,D,C	—	—	1	—	—	—	—	—	2901 030-1
23-58-238	WEDGE, Folding Top Header Locating	70	P,D,C	—	—	2	—	—	—	—	—	2902 895
23-58-239	ANTI-RATTLER, Windshield Header Bracket Dowel	70	R,W	—	—	2	—	—	—	—	—	2484 635
	ANTI-RATTLER, Windshield Upper Frame Bracket	70	B,J	—	—	2	—	—	—	—	—	3445 308
		71	B,J	—	—	2	—	—	—	—	—	3570 965
23-58-262	LATCH, Header Locking Mechanism Handle		All	—	—	2	—	—	—	—	—	3454 383
	LATCH, Complete, Header Locking Mechanism Handle		B,J	—	—	2	—	—	—	—	—	2999 436

CARLINES: J - Challenger, B - Barracuda, V - Valiant, L - Dart, R - Belvedere - Satallite, W - Coronet - Charger, P - Plymouth, D - Dodge, C - Chrysler, Y - Imperial

NUMERALS INDICATE: 21 - 2 DR. SED., 23 - 2 DR. H.T., 27 - CONV. CPE., 29 - FAST BACK, 41 - 4 DR. SED., 43 - 4 DR. H.T., 45 - 6 PASS. STA. WGN., 46 - 9 PASS. STA. WGN.

AR Indicates use as required.
\# Indicates parts not listed in any previous parts book
Numerals in parentheses ( ) refer to notes.
★ Indicates change or addition.

Printed in U.S.A.
January 1972

Right and left part numbers are on same line, first number is right, second number is left.

23-58-0 FOLDING TOP Cont'd.

CODE	PART NAME	MODEL CODES	SEE BOTTOM NOTE 21	23	27	29	41	43	45	46	PART NUMBER
23-58-262	LATCH Cont'd.										
		70 P,D,C	—	—	1	—	—	—	—	—	2935 444-5
	SCREW, Header Locking Mechanism Latch Handle	70 P,D,C	—	—	2	—	—	—	—	—	6027 954
23-58-264	SUPPORT, Catch Manual Lift	B,J	—	—	2	—	—	—	—	—	3504 302
23-58-265	CATCH, Manual Lift (In Pocket Panel)	B,J	—	—	1	—	—	—	—	—	3504 576-7
23-58-266	SPRING, Header Locking Mechanism Latch	70 P,D,C	—	—	2	—	—	—	—	—	2945 404-5
23-58-333	LINKS w/PIN, Power	70 R,W	—	—	2	—	—	—	—	—	2484 888
23-58-357	MOTOR, w/End Plate	All	—	—	1	—	—	—	—	—	2573 838
23-58-381	ROTOR PACKAGE, Motor Pump	All	—	—	1	—	—	—	—	—	2573 840
23-58-388	BOLT PACKAGE, Reservoir	All	—	—	1	—	—	—	—	—	2573 839
23-58-395	PLUG, Reservoir Filler	All	—	—	1	—	—	—	—	—	1641 579
23-58-396	BRACKET, Motor Mtg.	All	—	—	1	—	—	—	—	—	2573 844
23-58-399	"O" RING, Pump Rotor	All	—	—	1	—	—	—	—	—	2480 451
	"O" RING, Reservoir	All	—	—	1	—	—	—	—	—	2573 837
23-58-400	RESERVOIR, w/BRACKET and GROMMET, Pump	All	—	—	1	—	—	—	—	—	2573 847
23-58-430	PLATE, Pump Cover	All	—	—	1	—	—	—	—	—	2480 453
23-58-434	SUPPORT, Qtr. Inside Panel Pocket Panel	70 R	—	—	1	—	—	—	—	—	2841 498-9
		70 W	—	—	1	—	—	—	—	—	2838 246-7
	SUPPORT, Qtr. Inside Panel Support to Outer Panel	70 R	—	—	1	—	—	—	—	—	3570 994-5
23-58-436	SCREW, Pump Cover Plate	All	—	—	6	—	—	—	—	—	2602 765
23-58-473	SUPPORT, Qtr. Inside Panel Folding Top Rear Side Rail	B	—	—	1	—	—	—	—	—	3444 198-9
		J	—	—	1	—	—	—	—	—	3444 200-1
		70 R,W	—	—	1	—	—	—	—	—	2841 360-1
		70 P	—	—	1	—	—	—	—	—	2902 756-7
		70 D	—	—	1	—	—	—	—	—	2902 758-9
		70 C	—	—	1	—	—	—	—	—	2902 760-1
23-58-480	REINFORCEMENT, Folding Top to Qtr. Outside Panel	71 B,J	—	—	1	—	—	—	—	—	3506 310-1
23-58-487	BUSHING, Thrust Link to Rear Rail and Spacer	70 R,W	—	—	2	—	—	—	—	—	2784 070
23-58-532	SWITCH	B,J	—	—	1	—	—	—	—	—	2947 406
		70 R,W	—	—	1	—	—	—	—	—	2864 489
		70 P,D	—	—	1	—	—	—	—	—	2864 491
		70 C	—	—	1	—	—	—	—	—	2864 489
23-58-534	KNOB, Switch	70 R,W	—	—	1	—	—	—	—	—	2947 556
		70 C	—	—	1	—	—	—	—	—	2947 263
23-58-543	DECAL, Top Lift Switch w/o Rallye Inst. Panel and w/o 3 Speed w/Shield Wipers	70 J-H	—	—	1	—	—	—	—	—	2947 665
		70 P	—	—	1	—	—	—	—	—	2947 185
23-58-548	PLATE, Top Lift Switch Mtg.	70 R,W,C	—	—	1	—	—	—	—	—	2947 246
23-58-555	HOSE	All	—	—	2	—	—	—	—	—	2573 658
23-58-557	CLIP, Top Lift Motor Pump and Cylinder Hose to Support	All	—	—	2	—	—	—	—	—	2842 848
23-58-569	WEATHERSTRIP, Header	B,J	—	—	1	—	—	—	—	—	2964 405
		70 R,W	—	—	1	—	—	—	—	—	2573 632
		70 P,D,C	—	—	1	—	—	—	—	—	2901 239
		Frt. B,J	—	—	1	—	—	—	—	—	2964 404
		Frt. 70 R,W	—	—	1	—	—	—	—	—	2841 069
		Frt. 70 P,D,C	—	—	1	—	—	—	—	—	2901 268

CARLINES	J - Challenger B - Barracuda	V - Valiant L - Dart	R - Belvedere - Satallite W - Coronet - Charger	P - Plymouth D - Dodge	C - Chrysler Y - Imperial
NUMERALS INDICATE:	21 - 2 DR. SED. 23 - 2 DR. H.T.		27 - CONV. CPE. 29 - FAST BACK	41 - 4 DR. SED. 43 - 4 DR. H.T.	45 - 6 PASS. STA. WGN. 46 - 9 PASS. STA. WGN.

AR Indicates use as required.
\# Indicates parts not listed in any previous parts book
Numerals in parentheses ( ) refer to notes.
★ Indicates change or addition.

Printed in U.S.A.
January 1972

Right and left part numbers are on same line, first number is right, second number is left.

23-58-0 FOLDING TOP Cont'd.

CODE	PART NAME		MODEL CODES	SEE BOTTOM NOTE 21	23	27	29	41	43	45	46	PART NUMBER
23-58-570	RETAINER, Header W Strip		B,J	—	—	1	—	—	—	—	—	2964 396
		70	P,D,C	—	—	1	—	—	—	—	—	2901 260
		Center 70	R,W	—	—	1	—	—	—	—	—	2573 882
23-58-571	SEAL, Center Side Rail	70	R,W	—	—	2	—	—	—	—	—	2784 693
		70	P,D,C	—	—	2	—	—	—	—	—	2784 693
23-58-572	WEATHERSTRIP, Side Rail	Frt.	B,J	—	—	1	—	—	—	—	—	2964 398-9
		Rr.	B,J	—	—	2	—	—	—	—	—	2964 402
		Center	B,J	—	—	1	—	—	—	—	—	2964 400-1
		Frt. 70	R,W	—	—	1	—	—	—	—	—	2528 286-7
		Rr. 70	R,W	—	—	2	—	—	—	—	—	2841 050
		Center 70	R,W	—	—	1	—	—	—	—	—	2573 536-7
		Frt. 70	P,D,C	—	—	1	—	—	—	—	—	2901 262-3
		Rr. 70	P,D,C	—	—	2	—	—	—	—	—	2901 266
		Center 70	P,D,C	—	—	1	—	—	—	—	—	2901 264-5
23-58-573	RETAINER, Side Rail Weatherstrip	Frt.	B,J	—	—	1	—	—	—	—	—	2964 388-9
		Rr.	B,J	—	—	1	—	—	—	—	—	2964 392-3
		Center	B,J	—	—	1	—	—	—	—	—	2964 390-1
		Frt. 70	R,W	—	—	1	—	—	—	—	—	2573 528-9
		Rr. 70	R,W	—	—	2	—	—	—	—	—	2840 210
		Center 70	R,W	—	—	1	—	—	—	—	—	2573 530-1
		Frt. 70	P,D,C	—	—	1	—	—	—	—	—	2964 448-9
		Rr. 70	P,D,C	—	—	1	—	—	—	—	—	2964 452-3
		Center 70	P,D,C	—	—	1	—	—	—	—	—	2964 450-1
23-58-603	CAM, Thrust Link to Rear Rail Adjusting		B,J	—	—	2	—	—	—	—	—	2964 344
	CAM, Rear Rail Adjusting Attaching Thrust Link	70	R,W	—	—	2	—	—	—	—	—	2784 071
		70	P,D,C	—	—	2	—	—	—	—	—	2902 473
	SET SCREW, Side Rail	Frt. 70	R,W	—	—	2	—	—	—	—	—	1964 260
		Center 70	R,W	—	—	2	—	—	—	—	—	1964 260
	SNAP RING, Thrust Link to Rear Rail Adjusting	70	P,D,C	—	—	2	—	—	—	—	—	6025 875
23-58-605	SPACER, Rear Rail to Strainer	70	R,W	—	—	2	—	—	—	—	—	2784 069
	SPACER, Power Guide Link to Power Link	70	R,W	—	—	2	—	—	—	—	—	1706 470
	SPACER, No. 1 Bow Bracket to Control Links	70	R,W	—	—	2	—	—	—	—	—	1952 983
	WASHER, Side Center Rail Extension to Control Link 1 1/16" x 7/8" O.D.		B,J	—	—	2	—	—	—	—	—	2528 192
	WASHER, to Secondary Rocker Link 1 1/16" x 7/8" O.D.	70	R,W	—	—	2	—	—	—	—	—	2528 192
23-58-606	FLAT WASHER Nylon, 1" O.D. x 1 1/2" I.D.		All	—	—	AR	—	—	—	—	—	2528 238
	SPRING WASHER Steel, 1 1/32" O.D. x 1 1/2" I.D.		All	—	—	AR	—	—	—	—	—	6022 989
23-58-607	CLEVIS PIN, Main Control Prop to Center Side Rail 1 1/2" x 7/8"	70	R,W	—	—	2	—	—	—	—	—	2251 600
	No. 1 Bow Link to Side Front Rail	70	R,W	—	—	2	—	—	—	—	—	2251 600
	No. 1 Bow to Front Side Rail	70	R,W	—	—	2	—	—	—	—	—	2251 600
	Rear Bow Link to Rear Side Rail	70	R,W	—	—	2	—	—	—	—	—	2251 600
	PIN, Power Guide Plate to Power Cylinder Rod		B,J	—	—	2	—	—	—	—	—	2528 236
	PIN, Side Rail Power Plate	70	R,W	—	—	2	—	—	—	—	—	2528 236
	PIN, Power Link to Cylinder	70	P,D,C	—	—	2	—	—	—	—	—	2528 236
	PIN, Cylinder Rod Attaching	70	P,D,C	—	—	2	—	—	—	—	—	2528 236

CARLINES	J - Challenger B - Barracuda	V - Valiant L - Dart	R - Belvedere - Satallite W - Coronet - Charger	P - Plymouth D - Dodge	C - Chrysler Y - Imperial
NUMERALS INDICATE:	21 - 2 DR. SED. 23 - 2 DR. H.T.	27 - CONV. CPE. 29 - FAST BACK	41 - 4 DR. SED. 43 - 4 DR. H.T.	45 - 6 PASS. STA. WGN. 46 - 9 PASS. STA. WGN.	

AR Indicates use as required.
\# Indicates parts not listed in any previous parts book

Numerals in parentheses ( ) refer to notes.
★ Indicates change or addition.

Printed in U.S.A.
January 1972

Right and left part numbers are on same line, first number is right, second number is left.

CODE	PART NAME		MODEL CODES	SEE BOTTOM NOTE 21	23	27	29	41	43	45	46	PART NUMBER
23-58-0	**FOLDING TOP Cont'd.**											
23-58-607	CLEVIS PIN Cont'd.											
	PIN, Self Locking, Power Guide Plate to Power Cylinder Rod		B,J	—	—	2	—	—	—	—	—	2528 239
	PIN, Self Locking, Side Rail Power Plate	70	R,W									2528 239
	PIN, Self Locking, Cylinder Rod Attaching	70	P,D,C	—	—	2	—	—	—	—	—	2528 239
	PIN, Self Locking, Power Link to Cylinder	70	P,D,C	—	—	2	—	—	—	—	—	2528 239
	PIN, Clevis, No. 1 Bow Bracket to Center Side Rail	70	R,W	—	—	2	—	—	—	—	—	1950 897
	PIN, Clevis, Front and Center Side Rail 3/8" x 1 5/8"	70	R,W	—	—	2	—	—	—	—	—	6000 319
23-59-0	**DRAIN TROUGH**											
23-59-35	TROUGH, Qtr. Deck Drain		J	—	1	1	1	—	—	—	—	2963 222-3
		70	W	—	—	—	1	—	—	—	—	2838 010-1
		71	R	—	1	—	—	—	—	—	—	3445 688-9
		71	R	—	—	—	—	1	—	—	—	3445 692-3
		71	W	—	1	—	1	—	—	—	—	3445 684-5
		71	W	—	—	—	—	1	—	—	—	3445 082-3
	TROUGH, Qtr. Deck Drain Side		V,L	—	—	—	1	—	—	—	—	2965 634-5
		71	V	—	1	—	—	—	—	—	—	2604 298-9
			L	—	1	—	—	1	—	—	—	2604 298-9
		70	R	—	—	1	—	—	—	—	—	2838 510-1
		70	R	1	1	—	—	1	—	—	—	2841 300-1
		70	W	—	—	1	—	—	—	—	—	2839 612-3
		70	W	1	1	—	—	1	—	—	—	2841 302-3
	TROUGH, Deck Opening Drain Upper		V,L	—	—	—	1	—	—	—	—	3444 210
	TROUGH, Qtr. Deck Upper Corner	70	V	—	—	—	—	1	—	—	—	2604 294-5
	Up To Approximately Oct. 1, 1970	71	V	—	—	—	—	1	—	—	—	2604 294-5
	After Approximately Oct. 1, 1970	71	V	—	—	—	—	1	—	—	—	= 3615 300-1
	Up To Approximately Dec. 1, 1970	71	V	—	1	—	—	—	—	—	—	2604 300-1
	After Approximately Dec. 1, 1970	71	V	—	1	—	—	—	—	—	—	= 3615 302-3
		70	L	—	1	—	—	1	—	—	—	2604 300-1
	Up To Approximately Dec. 1, 1970	71	L	—	1	—	—	1	—	—	—	2604 300-1
	After Approximately Dec. 1, 1970	71	L	—	1	—	—	1	—	—	—	= 3615 302-3
	TROUGH, Qtr. Deck Drain Lower Corner		V	—	—	—	—	1	—	—	—	2604 296-7
		71	V	—	1	—	—	—	—	—	—	2964 492-3
			L	—	1	—	—	1	—	—	—	2964 492-3
		70	R	1	1	1	—	1	—	—	—	2963 594-5
		70	W	1	1	1	—	1	—	—	—	2963 596-7
			P	1	1	1	1	1	1	—	—	2963 598-9
			D	—	1	1	—	1	1	—	—	2963 600-1
			C	—	1	1	—	1	1	—	—	2963 602-3
			Y	—	1	—	—	—	1	—	—	2900 088-9
	TROUGH, Qtr. Deck Drain Center		V	—	—	—	—	1	—	—	—	2604 298-9
	TROUGH, Qtr. Deck Drain Upper and Side		B	—	1	—	—	—	—	—	—	2963 220-1
			B	—	—	1	—	—	—	—	—	2965 808-9
	TROUGH, Qtr. Deck Drain Side and Upper Corner	70	P,D	—	—	1	—	—	—	—	—	2963 928-9
			P,D	1	1	—	1	1	1	—	—	2963 928-9

CARLINES: J - Challenger, B - Barracuda, V - Valiant, L - Dart, R - Belvedere - Satallite, W - Coronet - Charger, P - Plymouth, D - Dodge, C - Chrysler, Y - Imperial

NUMERALS INDICATE: 21 - 2 DR. SED., 23 - 2 DR. H.T., 27 - CONV. CPE., 29 - FAST BACK, 41 - 4 DR. SED., 43 - 4 DR. H.T., 45 - 6 PASS. STA. WGN., 46 - 9 PASS. STA. WGN.

AR Indicates use as required.
\# Indicates parts not listed in any previous parts book
Numerals in parentheses ( ) refer to notes.
★ Indicates change or addition.

Printed in U.S.A. January 1972

Right and left part numbers are on same line, first number is right, second number is left.

CODE	PART NAME		MODEL CODES	SEE BOTTOM NOTE 21	23	27	29	41	43	45	46	PART NUMBER
23-59-0	**DRAIN TROUGH Cont'd.**											
23-59-35	TROUGH Cont'd.											
			C,Y	—	1	1	—	1	1	—	—	2900 086-7
	NOTE: Also See Code 23-63-175											
23-59-37	SUPPORT, Qtr. Deck Drain Trough to W/House	Rt.	B	—	—	1	—	—	—	—	—	2964 184
		Lt.	B	—	—	1	—	—	—	—	—	3446 647
		Rt.	J	—	—	1	—	—	—	—	—	2964 186
		Lt.	J	—	—	1	—	—	—	—	—	3446 647
		70	R,W	—	—	1	—	—	—	—	—	2838 204-5
		71	R	—	—	—	—	1	—	—	—	3615 020
			P	1	1	1	1	1	1	—	—	2900 762-3
			D	—	1	1	—	1	1	—	—	2901 558-9
			C,Y	—	1	1	—	1	1	—	—	2900 764-5
	REINFORCEMENT, Qtr. Deck Drain Trough	70	W	—	—	—	2	—	—	—	—	2840 364
23-59-41	BRACE, Qtr. Deck Drain Trough to Support	70	W	—	—	—	1	—	—	—	—	2842 710-1
	BRACE, Deck Side Drain, Trough to Shelf Panel Extension		D	—	—	—	—	—	1	—	—	3504 422-3
	BRACE, Deck Side Drain Trough to Qtr. Inside Panel	71	R	—	—	—	—	1	—	—	—	3615 018
23-59-56	TROUGH, Front Pillar Drain											
		71	R,W	—	1	—	1	—	—	—	—	3499 180-1
		71	R,W	—	—	—	—	1	—	1	1	3440 532-3
	TROUGH, Roof Side Drain		V,L	—	—	—	—	1	—	—	—	2603 688-9
			V,L	—	—	—	1	—	—	—	—	3444 202-3
			V,L	—	1	—	—	—	—	—	—	2604 048-9
			J	—	1	—	1	—	—	—	—	2963 324-5
		70	R	1	1	—	—	—	—	—	—	2842 752-3
		70	W	1	1	—	—	—	—	—	—	2842 750-1
		70	W	—	—	—	1	—	—	—	—	2842 752-3
		70	R,W	—	—	—	—	1	—	—	—	2838 606-7
		71	R	—	1	—	—	—	—	—	—	3445 866-7
		71	W	—	1	—	1	—	—	—	—	3505 256-7
	FRONT		B	—	1	—	—	—	—	—	—	2963 322-3
		70	R,W	—	—	—	—	—	—	1	1	2529 840-1
		71	R,W	—	—	—	—	1	—	—	—	3445 110-1
		71	R,W	—	—	—	—	—	—	1	1	3440 110-1
		70	P	1	—	—	—	—	—	—	—	2900 282-3
		71	P	1	—	—	—	—	—	—	—	2900 284-5
			P,D	—	—	—	1	—	1	—	—	2900 282-3
			P,D,C,Y	—	1	—	—	—	—	—	—	2900 284-5
			P,D	—	—	—	—	1	—	—	—	2900 280-1
			C	—	—	—	—	1	—	—	—	2900 286-7
			C,Y	—	—	—	—	—	1	—	—	2900 124-5
			P,D,C	—	—	—	—	—	—	1	1	2893 292-3
	REAR		B	—	1	—	—	—	—	—	—	2963 426-7
		70	R,W	—	—	—	—	—	—	1	1	2860 628-9
		71	R,W	—	—	—	—	1	—	—	—	3445 112-3
		71	R,W	—	—	—	—	—	—	1	1	3440 114-5
		70	P	1	—	—	—	—	—	—	—	2900 290-1
		71	P	1	—	—	—	—	—	—	—	2900 292-3
			P	—	—	—	1	—	—	—	—	2900 290-1
			P,D	—	1	—	—	—	—	—	—	2900 292-3
			C,Y	—	1	—	—	—	—	—	—	2901 428-9
			P,D	—	—	—	—	1	—	—	—	2900 288-9
			C	—	—	—	—	1	—	—	—	2900 294-5
			P,D	—	—	—	—	—	1	—	—	2900 290-1

CARLINES J - Challenger V - Valiant R - Belvedere - Satallite P - Plymouth C - Chrysler
B - Barracuda L - Dart W - Coronet - Charger D - Dodge Y - Imperial

NUMERALS INDICATE: 21 - 2 DR. SED. 27 - CONV. CPE. 41 - 4 DR. SED. 45 - 6 PASS. STA. WGN.
23 - 2 DR. H.T. 29 - FAST BACK 43 - 4 DR. H.T. 46 - 9 PASS. STA. WGN.

AR Indicates use as required.
# Indicates parts not listed in any previous parts book
Numerals in parentheses ( ) refer to notes.
★ Indicates change or addition.

Printed in U.S.A.
January 1972

Right and left part numbers are on same line, first number is right, second number is left.

CODE	PART NAME		MODEL CODES	SEE BOTTOM NOTE 21	23	27	29	41	43	45	46	PART NUMBER
23-59-0	**DRAIN TROUGH Cont'd.**											
23-59-56	TROUGH Cont'd.											
			C,Y	—	—	—	—	—	1	—	—	2900 296-7
			P,D,C	—	—	—	—	—	—	1	1	2894 122-3
	INTERMEDIATE	70	R,W	—	—	—	—	—	—	1	1	2602 182-3
		71	R,W	—	—	—	—	—	—	1	1	3440 112-3
23-59-57	COVER, Front Pillar to Roof Side Drain Trough	70	V	—	—	—	2	—	—	—	—	2571 768
		70	V,L,R,W	—	—	—	—	2	—	2	2	2588 330
		71	V,L	—	—	—	—	2	—	—	—	2588 330
		71	L	—	2	—	—	—	—	—	—	2588 330
		71	V,L	—	—	—	2	—	—	—	—	2571 768
		71	R,W	—	2	—	—	2	—	2	2	2571 768
	COVER, Roof Side Drain Trough	Frt. 70	R, W	—	—	—	—	—	—	2	2	2605 208
		Rr. 70	R,W	—	—	—	—	—	—	2	—	2571 768
		Interm. 70	R,W	—	—	—	—	—	—	2	—	2571 768
		Frt. 71	R,W	—	—	—	—	AR	—	AR	AR	2571 768
		Rr. 71	R,W	—	—	—	—	AR	—	AR	AR	2571 768
	CAP or COVER, Roof Side Drain Trough Moulding (1)											
23-59-61	MOULDING, Roof Side Drain Trough (1)											
23-61-0	**COWL VENT OR AIR INTAKE**											
23-61-42	SEAL, Cowl Top to Hood Panel Fasteners		P,D,C,Y	1	1	1	1	1	1	1	1	3499 208
23-61-117	SCREEN, Cowl Top Windshield Wiper Opening	70	B,J	—	1	1	1	—	—	—	—	2895 786-7
		71	B,J	—	1	1	—	—	—	—	—	3500 760-1
		70	P,D,C,Y	1	1	1	1	1	1	1	1	3439 028
		71	P,D,C,Y	1	1	—	1	1	1	1	1	3500 734
	SCREW, Cowl Top Windshield Wiper Opening Screen to Cowl Top Panel		B,J	—	10	10	10	—	—	—	—	6028 307
			P,D,C,Y	5	5	5	5	5	5	5	5	6028 307
	SCREEN, Cowl Top Fresh Air Opening	71	R,W	—	1	—	1	1	—	1	1	3500 758-9
	SCREW, Cowl Top Fresh Air Opening	71	R,W	—	10	—	10	10	—	10	10	6029 230
23-61-120	HOUSING, Complete, Ventilation w/o Heater	Rt.	B,J,R,W	1	1	1	1	1	—	1	1	2607 002
	w/or w/o Heater	Lt. 70	B,J,R,W	1	1	1	1	1	—	1	1	2607 003
23-61-121	GRILLE, Ventilation Housing	Lt. 70	R,W	1	1	1	1	1	—	1	1	2607 006
23-61-122	HOUSING, Vent Mtg. Frame Mtg. w/o Heater	Rt. 70	R,W	1	1	1	1	1	—	1	1	2607 270
23-61-124	HOOK, Vent Housing Mtg. Frame Mtg. w/o Heater	Rt. 70	R,W	2	2	2	2	2	—	2	2	2607 004
23-63-0	**WEATHERSTRIP**											
23-63-14	WEATHERSTRIP, Wdo. Belt FRONT DOOR INNER		V,L	—	—	—	1	—	—	—	—	3439 102-3
			V,L	—	1	—	—	—	—	—	—	3440 556-7
			V,L	—	—	—	—	1	—	—	—	3440 558-9
			B,J	—	1	1	1	—	—	—	—	2879 950-1
		70	R,W	1	—	—	—	—	—	—	—	2860 530-1
		70	R,W	—	1	—	—	—	—	—	—	2860 522-3
		70	R,W	—	—	1	—	—	—	—	—	3439 152-3
		70	W-S	—	—	—	1	—	—	—	—	2876 268-9
	w/o Value Pkg.	70	W-P	—	—	—	1	—	—	—	—	2876 268-9

CARLINES	J - Challenger B - Barracuda	V - Valiant L - Dart	R - Belvedere - Satellite W - Coronet - Charger	P - Plymouth D - Dodge	C - Chrysler Y - Imperial
NUMERALS INDICATE:	21 - 2 DR. SED. 23 - 2 DR. H.T.	27 - CONV. CPE. 29 - FAST BACK	41 - 4 DR. SED. 43 - 4 DR. H.T.	45 - 6 PASS. STA. WGN. 46 - 9 PASS. STA. WGN.	

AR Indicates use as required.
\# Indicates parts not listed in any previous parts book
Numerals in parentheses ( ) refer to notes.
★ Indicates change or addition.

Printed in U.S.A.
January 1972

Right and left part numbers are on same line, first number is right, second number is left.

23-63-0 WEATHERSTRIP Cont'd.

CODE	PART NAME		MODEL CODES	SEE BOTTOM NOTE 21	23	27	29	41	43	45	46	PART NUMBER
23-63-14	WEATHERSTRIP Cont'd.											
	w Value Pkg.	70	W-P	—	—	—	1	—	—	—	—	2860 522-3
		70	R,W	—	—	—	—	2	—	2	2	2570 238
		71	R	—	1	—	—	—	—	—	—	3416 198-9
		71	W	—	1	—	1	—	—	—	—	3416 196-7
		71	R,W	—	—	—	—	2	—	2	2	3416 360
	w Vent Wdo.	70	P	1	—	—	—	—	—	—	—	2878 530-1
	w o Vent Wdo.	70	P	1	—	—	—	—	—	—	—	3509 294-5
		71	P	1	—	—	—	—	—	—	—	2878 422-3
			P,D	—	1	1	1	—	—	—	—	2878 422-3
			C,Y	—	1	1	—	—	—	—	—	2878 424-5
		70	P,D,C,Y	—	—	—	—	—	1	—	—	2878 418-9
		71	P,D,C,Y	—	—	—	—	—	1	—	—	3509 872-3
		70	P	—	—	—	—	2	—	2	2	2878 528
		70	D-L	—	—	—	—	2	—	2	2	2878 528
		70	D-H	—	—	—	—	1	—	1	1	2878 420-1
		70 Canada	D-M,D-H	—	—	—	—	2	—	2	2	2878 528
		70 Canada	D-P	—	—	—	—	2	—	—	—	2878 528
		70	C	—	—	—	—	1	—	1	1	2878 420-1
	w o Mldg.	71	P,D	—	—	—	—	1	—	1	1	= 3509 948-9
	w Mldg.	71	P,D,C	—	—	—	—	1	—	1	1	3509 866-7
	REAR DOOR INNER		V,L	—	—	—	—	2	—	—	—	2663 466
		70	R,W	—	—	—	—	1	—	—	—	2811 452-3
		70	R,W	—	—	—	—	—	—	1	1	2861 706-7
		71	R,W	—	—	—	—	2	—	2	2	3416 362
		70	P	—	—	—	—	2	—	2	2	2878 528
		70	D-L,D-M	—	—	—	—	2	—	2	2	2878 528
		70	D-H	—	—	—	—	2	—	2	2	2878 426
		70 Canada	D-H	—	—	—	—	—	—	2	2	2878 528
		70 Canada	D-P	—	—	—	—	2	—	—	—	2878 528
	w o Mldg.	71	P,D	—	—	—	—	2	—	2	2	2878 528
	w Mldg.	71	P,D	—	—	—	—	2	—	2	2	2878 426
			C	—	—	—	—	—	—	2	2	2878 426
			C	—	—	—	—	2	—	—	—	2878 430
		70	P,D	—	—	—	—	—	1	—	—	2878 428-9
		70	C,Y	—	—	—	—	—	2	—	—	2878 432
	Up To Approximately June 1, 1971	71	P,D	—	—	—	—	—	1	—	—	2878 428-9
	After Approximately June 1, 1971	71	P,D	—	—	—	—	—	1	—	—	= 3510 176-7
	Up To Approximately June 1, 1971	71	C,Y	—	—	—	—	—	2	—	—	2878 432
	After Approximately June 1, 1971	71	C,Y	—	—	—	—	—	1	—	—	= 3510 178-9
23-63-15	WEATHERSTRIP, Wdo. Belt											
	FRONT DOOR OUTER		V,L	—	—	—	1	—	—	—	—	3439 104-5
			V,L	—	1	—	—	—	—	—	—	2860 028-9
			V,L	—	—	—	—	1	—	—	—	2860 024-5
		70	B	—	1	1	—	—	—	—	—	2895 670-1
		70	J	—	1	1	1	—	—	—	—	3439 134-5
		71	B	—	1	1	—	—	—	—	—	3581 280-1
		71	J	—	1	1	—	—	—	—	—	3581 282-3
		70	R,W	1	—	—	—	—	—	—	—	2860 532-3
		70	R,W	—	1	—	—	—	—	—	—	2860 524-5
		70	R,W	—	—	1	—	—	—	—	—	2860 046-7
		70	W	—	—	—	1	—	—	—	—	2860 524-5
		70	R,W	—	—	—	—	1	—	1	1	2860 040-1
		71	R	—	1	—	—	—	—	—	—	3581 152-3
		71	W	—	1	—	1	—	—	—	—	3581 154-5
	Up To Approximately May 1, 1971	71	R,W	—	—	—	—	1	—	1	1	3581 470-1
	After Approximately May 1, 1971	71	R,W	—	—	—	—	1	—	1	1	= 3582 318-9

CARLINES	J - Challenger B - Barracuda	V - Valiant L - Dart	R - Belvedere - Satallite W - Coronet - Charger	P - Plymouth D - Dodge	C - Chrysler Y - Imperial
NUMERALS INDICATE:	21 - 2 DR. SED. 23 - 2 DR. H.T.	27 - CONV. CPE. 29 - FAST BACK	41 - 4 DR. SED. 43 - 4 DR. H.T.	45 - 6 PASS. STA. WGN. 46 - 9 PASS. STA. WGN.	

AR Indicates use as required.
\# Indicates parts not listed in any previous parts book
Numerals in parentheses ( ) refer to notes.
★ Indicates change or addition.

Printed in U.S.A.
January 1972

Right and left part numbers are on same line, first number is right, second number is left.

23-63-0 WEATHERSTRIP Cont'd.

CODE	PART NAME		MODEL CODES	SEE BOTTOM NOTE 21	23	27	29	41	43	45	46	PART NUMBER
23-63-15	WEATHERSTRIP Cont'd.											
		w/Vent Wdo. 70	P	1	—	—	—	—	—	—	—	2893 454-5
		w/o Vent Wdo.	P	1	—	—	—	—	—	—	—	2894 654-5
		70	P,D	—	—	1	—	—	—	—	—	2893 454-5
			P,D	—	1	—	1	—	—	—	—	2894 654-5
			C,Y	—	1	—	—	—	—	—	—	2895 090-1
		70	C	—	—	1	—	—	—	—	—	2893 456-7
		70	P,D,C	—	—	—	—	1	—	1	1	2893 460-1
		71	P,D,C	—	—	—	—	1	—	1	1	3440 970-1
		70	P,D,C,Y	—	—	—	—	—	1	—	—	2893 458-9
		71	P,D	—	—	—	—	—	1	—	—	3581 716-7
	w/o Power Vent Wdos.	71	C,Y	—	—	—	—	—	1	—	—	3581 716-7
	w/Power Vent Wdos.	71	C,Y	—	—	—	—	—	1	—	—	2893 458-9
	REAR DOOR OUTER		V,L	—	—	—	—	1	—	—	—	2860 024-5
		70	R,W	—	—	—	—	1	—	—	—	2811 454-5
		70	R,W	—	—	—	—	—	—	1	1	2861 708-9
		71	R,W	—	—	—	—	1	—	1	1	3440 062-3
			P,D	—	—	—	—	1	—	—	—	2893 796-7
			C	—	—	—	—	1	—	—	—	2893 798-9
			P,D	—	—	—	—	—	1	—	—	2893 792-3
			C,Y	—	—	—	—	—	1	—	—	2893 794-5
			P,D,C	—	—	—	—	—	—	1	1	2893 796-7
23-63-16	CLIP, Front Door Wdo. Belt Inner Weatherstrip		V,L	—	14	—	20	10	—	—	—	2217 508
		70	R,W	14	14	14	—	10	—	10	10	2217 508
	CLIP, Front Door Wdo. Belt Outer Weatherstrip		V,L	—	14	—	20	10	—	—	—	2217 508
		70	B,J	—	20	20	20	—	—	—	—	2217 508
		70	R,W	14	14	14	14	10	—	10	10	2217 508
		71	R,W	—	—	—	—	16	—	16	16	2861 594
			P,D,C,Y	18	18	18	24	12	AR	12	12	2861 594
	CLIP, Rear Door Wdo. Belt Inner Weatherstrip	70	V,L,R,W	—	—	—	—	10	—	10	10	2217 508
		71	V,L	—	—	—	—	10	—	—	—	2217 508
	CLIP, Rear Door Wdo. Belt Outer Weatherstrip	70	V,L,R,W	—	—	—	—	10	—	10	10	2217 508
		71	V,L	—	—	—	—	10	—	—	—	2217 508
		71	R,W	—	—	—	—	14	—	14	14	2861 594
			P,D,C,Y	—	—	—	—	AR	AR	14	14	2861 594
	CLIP, Quarter Wdo. Belt Inner Weatherstrip		V,L	—	16	—	—	—	—	—	—	2217 508
		70	R,W	—	—	10	—	—	—	—	—	2217 508
		71	R	—	8	—	—	—	—	—	—	2861 594
		71	W	—	6	—	6	—	—	—	—	3416 956
	CLIP, Quarter Wdo. Belt Outer Weatherstrip		V,L	—	2	—	—	—	—	—	—	2839 442
			B,J	—	6	6	6	—	—	—	—	2480 904
		70	R	—	14	10	—	—	—	—	—	2839 442
		70	W-M,W-H	—	2	—	—	—	—	—	—	2839 442
		70	W-P,W-S	—	2	—	—	—	—	—	—	2839 442
		70	W	—	—	—	16	—	—	—	—	2839 442
		71	R,W	—	AR	AR	—	—	—	—	—	2839 442
		71	P	2	—	—	—	—	—	—	—	2839 442
		70	P	10	—	—	10	—	—	—	—	2480 904
		71	P	—	—	—	10	—	—	—	—	2480 904
			P,D	—	2	2	—	—	—	—	—	2839 442
			C,Y	—	2	—	—	—	—	—	—	2839 442
		70	L,W	—	12	—	—	—	—	—	—	2217 508
		71	V,L	—	12	—	—	—	—	—	—	2217 508

CARLINES J - Challenger, B - Barracuda, V - Valiant, L - Dart, R - Belvedere - Satallite, W - Coronet - Charger, P - Plymouth, D - Dodge, C - Chrysler, Y - Imperial

NUMERALS INDICATE: 21 - 2 DR. SED., 23 - 2 DR. H.T., 27 - CONV. CPE., 29 - FAST BACK, 41 - 4 DR. SED., 43 - 4 DR. H.T., 45 - 6 PASS. STA. WGN., 46 - 9 PASS. STA. WGN.

AR Indicates use as required.
\# Indicates parts not listed in any previous parts book
Numerals in parentheses ( ) refer to notes.
★ Indicates change or addition.

Printed in U.S.A.
January 1972

Right and left part numbers are on same line, first number is right, second number is left.

23-63-0 WEATHERSTRIP Cont'd.

CODE	PART NAME		MODEL CODES	SEE BOTTOM NOTE 21	23	27	29	41	43	45	46	PART NUMBER
23-63-16	CLIP Cont'd.											
		71	R,W	—	AR	—	AR	—	—	—	—	2217 508
		71	P	8	—	—	—	—	—	—	—	2217 508
			P,D,C,Y	—	AR	AR	—	—	—	—	—	2217 508
	CLIP, Door Upper Trim Panel Belt Inner Weatherstrip Attaching w/o Valve Pkg.	70	W-P	—	—	—	14	—	—	—	—	2217 508
		70	W-S	—	—	—	14	—	—	—	—	2217 508
	CLIP, Front Door Glass Run Rear Inner		P,D,C,Y	8	8	8	8	—	8	—	—	2839 442
	CLIP, Front Door Glass Run Rear Outer		P,D,C,Y	10	10	10	10	—	10	—	—	2839 442
	FASTENER, Front Door Weatherstrip to Inside Panel		V,L	—	48	—	48	48	—	—	—	2664 040
			B,J	—	48	48	48	—	—	—	—	2664 040
			R,W	50	50	50	50	44	—	44	44	2664 040
			P,D,C,Y	46	46	46	46	42	40	42	42	2664 040
	FASTENER, Rear Door Weatherstrip to Inside Panel		V,L	—	—	—	—	38	—	—	—	2664 040
			R,W	—	—	—	—	34	—	34	34	2664 040
			P,D,C,Y	—	—	—	—	40	36	40	40	2664 040
	FASTENER, Front Door Weatherstrip	71	R,W	—	2	—	2	—	—	—	—	2964 547
23-63-20	WEATHERSTRIP, Wdo. Belt QUARTER INNER		V,L	—	1	—	—	—	—	—	—	2782 090-1
			B	—	2	—	—	—	—	—	—	2879 954
			B	—	—	2	—	—	—	—	—	3415 380
			J	—	2	—	2	—	—	—	—	2879 955
			J	—	—	2	—	—	—	—	—	3415 386
		70	R	—	1	—	—	—	—	—	—	2838 516-7
		70	W	—	1	—	—	—	—	—	—	2840 346-7
		70	R	—	—	1	—	—	—	—	—	2841 632-3
		70	W	—	—	1	—	—	—	—	—	2841 634-5
	w/o VALUE Pkg.	70	W-P	—	—	—	1	—	—	—	—	2876 270-1
	w/VALUE Pkg.	70	W-P	—	—	—	1	—	—	—	—	2838 516-7
		70	W-S	—	—	—	1	—	—	—	—	2876 270-1
	Up To Approximately Sept. 1, 1970	71	R	—	1	—	—	—	—	—	—	3416 366-7
	After Approximately Sept. 1, 1970	71	R	—	1	—	—	—	—	—	—	= 3509 900-1
	Up To Approximately Sept. 1, 1970	Rr. 71	R	—	1	—	—	—	—	—	—	3581 586-7
	After Approximately Sept. 1, 1970	Rr. 71	R	—	1	—	—	—	—	—	—	= 3581 904-5
	Up To Approximately Nov. 1, 1970	71	W	—	1	—	1	—	—	—	—	3416 368-9
	After Approximately Nov. 1, 1970	71	W	—	1	—	1	—	—	—	—	= 3509 916-7
		Upr. 71	W	—	1	—	1	—	—	—	—	3416 148-9
		w/o Mldg.	P	2	—	—	—	—	—	—	—	2878 528
		w/Mldg. 70	P	2	—	—	—	—	—	—	—	3509 126
		70	P,D	—	1	—	—	—	—	—	—	2878 436-7
		70	C,Y	—	1	—	—	—	—	—	—	2878 438-9
		70	P,D	—	—	1	—	—	—	—	—	2878 532-3
		70	C	—	—	1	—	—	—	—	—	2878 534-5
		70	P	—	—	—	1	—	—	—	—	2877 306-7
		71	P,D	1	1	—	—	—	—	—	—	3509 728-9
		71	C,Y	—	1	—	—	—	—	—	—	3509 732-3
		71	P	—	—	—	1	—	—	—	—	3509 730-1
23-63-21	WEATHERSTRIP, Wdo. Belt QUARTER OUTER		B	—	1	—	—	—	—	—	—	2963 228-9
			V,L	—	1	—	—	—	—	—	—	2839 568-9
			J	—	1	—	1	—	—	—	—	3444 222-3
			B,J	—	—	1	—	—	—	—	—	2964 270-1

CARLINES: J - Challenger, B - Barracuda, V - Valiant, L - Dart, R - Belvedere - Satallite, W - Coronet - Charger, P - Plymouth, D - Dodge, C - Chrysler, Y - Imperial

NUMERALS INDICATE: 21 - 2 DR. SED., 23 - 2 DR. H.T., 27 - CONV. CPE., 29 - FAST BACK, 41 - 4 DR. SED., 43 - 4 DR. H.T., 45 - 6 PASS. STA. WGN, 46 - 9 PASS. STA. WGN.

AR Indicates use as required.
\# Indicates parts not listed in any previous parts book
Numerals in parentheses ( ) refer to notes.
★ Indicates change or addition.

Printed in U.S.A.
January 1972

Right and left part numbers are on same line, first number is right, second number is left.

23-63-0 WEATHERSTRIP Cont'd.

CODE	PART NAME		MODEL CODES	SEE BOTTOM NOTE 21	23	27	29	41	43	45	46	PART NUMBER
23-63-21	WEATHERSTRIP Cont'd.											
		70	R	—	1	—	—	—	—	—	—	2838 514-5
		70	W	—	1	—	—	—	—	—	—	2841 746-7
		70	R	—	—	1	—	—	—	—	—	2841 624-5
		70	W	—	—	1	—	—	—	—	—	2841 626-7
		70	W	—	—	—	1	—	—	—	—	2838 086-7
		71	R	—	1	—	—	—	—	—	—	3445 696-7
		71	W	—	1	—	1	—	—	—	—	3445 698-9
		70	P	2	—	—	—	—	—	—	—	2901 626
		71	P	1	—	—	—	—	—	—	—	2900 796-7
			P,D	—	1	—	—	—	—	—	—	2900 796-7
			C,Y	—	1	—	—	—	—	—	—	2901 628-9
		70	P,D	—	—	1	—	—	—	—	—	2900 796-7
		70	C	—	—	1	—	—	—	—	—	2963 496-7
			P	—	—	—	1	—	—	—	—	2965 104-5
23-63-33	WEATHERSTRIP											
	ON FRONT DOOR		V,L	—	—	—	1	—	—	—	—	3439 040-1
			V,L	—	1	—	—	—	—	—	—	2663 456-7
			V,L	—	—	—	—	1	—	—	—	2860 004-5
			B,J	—	1	1	1	—	—	—	—	2895 478-9
		70	R,W	1	1	1	1	—	—	—	—	2860 400-1
		70	R,W	—	—	—	—	1	—	1	1	2860 492-3
		71	R,W	—	1	—	1	—	—	—	—	3439 734-5
		71	R,W	—	—	—	—	1	—	1	1	3439 736-7
	w. Vent Wdo.	70	P	1	—	—	—	—	—	—	—	2893 468-9
	w o Vent Wdo.	70	P	1	—	—	—	—	—	—	—	2895 248-9
		70	P,D,C	—	—	1	—	—	—	—	—	2893 468-9
		70	P,D,C,Y	—	1	—	1	—	—	—	—	2895 248-9
		70	P,D,C,Y	—	—	—	—	—	1	—	—	2893 470-1
		70	P,D,C	—	—	—	—	1	—	1	1	2893 464-5
		71	P,D,C,Y	1	1	—	1	—	—	—	—	2895 248-9
		71	P,D	—	—	—	—	—	1	—	—	3499 236-7
	w o Power Vent Wdos.	71	C,Y	—	—	—	—	—	1	—	—	3499 236-7
	w. Power Vent Wdos.	71	C,Y	—	—	—	—	—	1	—	—	2893 470-1
		71	P,D,C	—	—	—	—	1	—	1	1	2893 464-5
	ON REAR DOOR		V,L	—	—	—	—	1	—	—	—	2860 006-7
		70	R,W	—	—	—	—	1	—	—	—	2811 448-9
		70	R,W	—	—	—	—	—	—	1	1	2811 450-1
		71	R,W	—	—	—	—	1	—	—	—	3440 042-3
		71	R,W	—	—	—	—	—	—	1	1	3440 044-5
	Up To Approximately May 1, 1970	70	P,D	—	—	—	—	1	—	—	—	2893 806-7
	After Approximately May 1, 1970	70	P,D	—	—	—	—	1	—	—	—	3499 736-7
	Up To Approximately May 1, 1970	70	C	—	—	—	—	1	—	—	—	2893 802-3
	After Approximately May 1, 1970	70	C	—	—	—	—	1	—	—	—	3499 738-9
		70	P,D	—	—	—	—	—	1	—	—	2893 810-1
		70	C,Y	—	—	—	—	—	1	—	—	2893 812-3
	Up To Approximately May 1, 1970	70	P,D,C	—	—	—	—	—	—	1	1	2893 808-9
	After Approximately May 1, 1970	70	P,D,C	—	—	—	—	—	—	1	1	3499 740-1
		71	P,D	—	—	—	—	1	—	—	—	3499 736-7
		71	C	—	—	—	—	1	—	—	—	3499 738-9
		71	P,D	—	—	—	—	—	1	—	—	2893 810-1
		71	C,Y	—	—	—	—	—	1	—	—	2893 812-3
		71	P,D,C	—	—	—	—	—	—	1	1	3499 740-1
	FRONT DOOR ON FRONT EDGE OF GLASS WEATHERSTRIP PACKAGE	70	V,L,R,W	2	2	2	2	2	—	2	2	2932 230
		71	V,L	—	2	—	2	2	—	—	—	2932 230

CARLINES	J - Challenger B - Barracuda	V - Valiant L - Dart	R - Belvedere - Satallite W - Coronet - Charger	P - Plymouth D - Dodge	C - Chrysler Y - Imperial
NUMERALS INDICATE:	21 - 2 DR. SED. 23 - 2 DR. H.T.	27 - CONV. CPE. 29 - FAST BACK	41 - 4 DR. SED. 43 - 4 DR. H.T.	45 - 6 PASS. STA. WGN. 46 - 9 PASS. STA. WGN.	

AR Indicates use as required.
\# Indicates parts not listed in any previous parts book
Numerals in parentheses ( ) refer to notes.
★ Indicates change or addition.

Printed in U.S.A.
January 1972

Right and left part numbers are on same line, first number is right, second number is left.

CODE	PART NAME		MODEL CODES	SEE BOTTOM NOTE 21	23	27	29	41	43	45	46	PART NUMBER
23-63-0	**WEATHERSTRIP Cont'd.**											
23-63-33	WEATHERSTRIP Cont'd.											
	WEATHERSTRIP	70	P,D,C,Y	1	—	—	—	—	1	—	—	2894 922-3
	w/Power Vent Wdos.	71	C,Y	—	—	—	—	—	1	—	—	2894 922-3
		70	P,D,C	—	—	1	—	—	—	—	—	2894 926-7
		70	P,D,C	—	—	—	—	1	—	1	1	2894 928-9
	FRONT DOOR GLASS REAR FRAME ON BODY FRONT PILLAR	70	R,W	—	1	—	1	—	—	—	—	2811 622-3
		Upr.	B,J	—	—	1	—	—	—	—	—	2964 160-1
		Upr. 70	R,W	—	—	1	—	—	—	—	—	2573 642-3
		Upr. 70	P,D,C	—	—	1	—	—	—	—	—	2901 040-1
	ON ROOF SIDE RAIL		V,L	—	—	—	1	—	—	—	—	2965 870-1
			V,L	—	1	—	—	—	—	—	—	2604 106-7
	Up To Approximately May 1, 1970	70	B,J	—	1	—	1	—	—	—	—	2965 822-3
	After Approximately May 1, 1970	70	B,J	—	1	—	1	—	—	—	—	3500 306-7
	Up To Approximately March 1, 1971	71	B,J	—	1	—	—	—	—	—	—	3500 306-7
	After Approximately March 1, 1971	71	B,J	—	1	—	—	—	—	—	—	= 3582 356-7
		70	R,W	1	—	—	—	—	—	—	—	2841 440-1
		70	R,W	—	1	—	1	—	—	—	—	2838 642-3
	Up To Approximately Feb. 15, 1971	71	R,W	—	1	—	1	—	—	—	—	3445 868-9
	After Approximately Feb. 15, 1971	71	R,W	—	1	—	1	—	—	—	—	= 3581 958-9
	w/Vent Wdo.	70	P	1	—	—	—	—	—	—	—	2900 986-7
	w/o Vent Wdo.	70	P	1	—	—	—	—	—	—	—	3499 682-3
		70	P,D,C,Y	—	1	—	—	—	—	—	—	2902 950-1
		70	P	—	—	—	1	—	—	—	—	3444 230-1
		70	P,D	—	—	—	—	—	1	—	—	2900 814-5
		70	C,Y	—	—	—	—	—	1	—	—	2900 820-1
	Up To Approximately Jan. 1, 1971	71	P,D,C,Y	1	1	—	—	—	—	—	—	3581 422-3
	After Approximately Jan. 1, 1971	71	P,D,C,Y	1	1	—	—	—	—	—	—	= 3581 852-3
		71	P	—	—	—	1	—	—	—	—	3581 098-9
	Up To Nov. 1, 1970	71	P,D	—	—	—	—	—	1	—	—	3505 902-3
	From Nov. 1, 1970 To June 15, 1971	71	P,D	—	—	—	—	—	1	—	—	3581 990-1
	After June 15, 1971	71	P,D	—	—	—	—	—	1	—	—	3581 960-1
	w/o Power Vent Wdos.											
	Up To Nov. 1, 1970	71	C,Y	—	—	—	—	—	1	—	—	3505 904-5
	From Nov. 1, 1970 To June 15, 1971	71	C,Y	—	—	—	—	—	1	—	—	3581 992-3
	After June 15, 1971	71	C,Y	—	—	—	—	—	1	—	—	3581 962-3
	w/ Power Vent Wdos.											
	Up To Approximately Nov. 1, 1970	71	C,Y	—	—	—	—	—	1	—	—	2900 820-1
	After Approximately Nov. 1, 1970	71	C,Y	—	—	—	—	—	1	—	—	= 3581 994-5
	ON ROOF SIDE RAIL REAR AT BELT	70	V	—	—	—	1	—	—	—	—	2965 850-1
	SEAL, Front Door Lock Pillar at Belt		V,L	—	1	—	—	—	—	—	—	2663 470-1
			B,J	—	1	1	1	—	—	—	—	2895 664-5
		70	R,W	1	—	—	—	—	—	—	—	2861 472-3
		70	R,W	—	1	—	1	—	—	—	—	2861 474-5
		70	R,W	—	—	1	—	—	—	—	—	2860 842-3
		71	R	—	1	—	—	—	—	—	—	3581 894-5
		71	W	—	1	—	1	—	—	—	—	3581 896-7
			P,D,C,Y	—	—	—	—	—	1	—	—	2893 444-5
	SEAL, Front Door Hinge Pillar at Belt	71	R,W	—	1	—	1	—	—	—	—	3581 878-9
	SEAL, Front Door Inside Panel at Belt Lock Side		V,L	—	—	—	1	—	—	—	—	3439 044-5
			P,D,C,Y	1	1	1	1	—	—	—	—	2894 356-7
	SEAL, Rear Door Hinge Pillar at Belt		P,D,C,Y	—	—	—	—	—	1	—	—	2893 754-5

CARLINES: J - Challenger, B - Barracuda, V - Valiant, L - Dart, R - Belvedere - Satellite, W - Coronet - Charger, P - Plymouth, D - Dodge, C - Chrysler, Y - Imperial

NUMERALS INDICATE: 21 - 2 DR. SED., 23 - 2 DR. H.T., 27 - CONV. CPE., 29 - FAST BACK, 41 - 4 DR. SED., 43 - 4 DR. H.T., 45 - 6 PASS. STA. WGN., 46 - 9 PASS. STA. WGN.

AR Indicates use as required.
\# Indicates parts not listed in any previous parts book
Numerals in parentheses ( ) refer to notes.
★ Indicates change or addition.

Printed in U.S.A.
January 1972

Right and left part numbers are on same line, first number is right, second number is left.

23-63-0 WEATHERSTRIP Cont'd.

CODE	PART NAME		MODEL CODES	SEE BOTTOM NOTE 21	23	27	29	41	43	45	46	PART NUMBER
23-63-33	WEATHERSTRIP Cont'd.											
	SEAL, Rear Door Lock Pillar at Belt		P,D	—	—	—	—	—	1	—	—	3499 376-7
			C,Y	—	—	—	—	—	1	—	—	2893 746-7
	SEAL, Qtr. Panel Lock Pillar at Belt		V,L	—	1	—	—	—	—	—	—	2784 516-7
			B,J	—	1	1	1	—	—	—	—	2963 180-1
		70	R,W	—	1	—	1	—	—	—	—	2838 464-5
		70	R,W	—	—	1	—	—	—	—	—	2841 880-1
		71	R	—	1	—	—	—	—	—	—	3504 324-5
		71	W	—	1	—	1	—	—	—	—	3504 326-7
		70	P,D,C,Y	—	1	1	1	—	—	—	—	2900 724-5
		71	P,D,C,Y	1	1	—	1	—	—	—	—	3581 160-1
	SEAL, Qtr. Wdo. Belt w Strip	70	R,W	2	—	—	—	—	—	—	—	3506 325
	SEAL, Front Door W. Strip Hinge Pillar at Belt	71	V,L	—	—	—	1	—	—	—	—	3439 040-1
	SEAL, Front Door Glass at Belt Up To Approximately Nov. 1, 1970	71	P,D	—	—	—	—	—	1	—	—	3581 122-3
	After Approximately Nov. 1, 1970	71	P,D	—	—	—	—	—	1	—	—	= 3581 924-5
	Up To Approximately Nov. 1, 1970 w o Power Vent Wdos.	71	C,Y	—	—	—	—	—	1	—	—	3581 122-3
	After Approximately Nov. 1, 1970 w o Power Vent Wdos.	71	C,Y	—	—	—	—	—	1	—	—	= 3581 924-5
	SEAL, Rear Door Front Upper Corner	71	R,W	—	—	—	—	1	—	1	1	3499 232-3
23-63-37	SEAL, Roof Side Rail W Strip Retainers to Drain Trough		V,L	—	—	—	2	—	—	—	—	2965 676
		70	R,W	—	2	—	2	—	—	—	—	2839 139
		71	P	2	—	—	—	—	—	—	—	2839 139
			P,D	—	2	—	—	—	—	—	—	2839 139
			C,Y	—	2	—	—	—	2	—	—	2839 139
	SEAL, Roof Side Rail W Strip Retainers to Roof Rail	70	B,J	—	2	—	2	—	—	—	—	2963 318
	SEAL, Body Front Pillar W Strip Retainer		B,J	—	—	2	—	—	—	—	—	3446 442
	SEAL, Qtr. T/Gate Glass Run Retainer to Qtr. Pillar	70	P,D,C	—	—	—	—	—	—	2	2	3499 374
	SEAL, T/Gate Pillar at Belt	70	R,W	—	—	—	—	—	—	1	1	2860 844-5
			P,D,C	—	—	—	—	—	—	1	1	2894 538-9
	SEAL, T/Gate and Door Upper Body Half	70	P,D,C	—	—	—	—	—	—	1	1	2999 798
	SEAL, w REINFORCEMENT, T/Gate and Door Upper Hinge Body Half		P,D,C	—	—	—	—	—	—	1	1	3440 672
	SEAL, T/Gate Opening at Belt	71	R,W	—	—	—	—	—	—	1	1	3499 092-3
	RETAINER, T/Gate Opening at Belt Seal Attaching	71	R,W	—	—	—	—	—	—	2	2	2964 547
23-63-55	RETAINER, Front Pillar w Strip	70	B,J	—	1	—	1	—	—	—	—	2895 482-3
	w Vent Wdo.	70	P	1	—	—	—	—	—	—	—	2894 536-7
	w o Vent Wdo.	70	P	1	—	—	—	—	—	—	—	2895 476-7
		71	P	1	—	—	—	—	—	—	—	2893 120-1
		70	P,D,C,Y	—	—	—	—	—	1	—	—	2894 536-7
		71	P,D	—	—	—	—	—	1	—	—	3500 512-3
	w o Power Vent Wdos.	71	C,Y	—	—	—	—	—	1	—	—	3500 512-3
	w/Power Vent Wdos.	71	C,Y	—	—	—	—	—	1	—	—	2894 536-7

CARLINES	J - Challenger B - Barracuda	V - Valiant L - Dart	R - Belvedere - Satallite W - Coronet - Charger	P - Plymouth D - Dodge	C - Chrysler Y - Imperial
NUMERALS INDICATE:	21 - 2 DR. SED. 23 - 2 DR. H.T.	27 - CONV. CPE. 29 - FAST BACK	41 - 4 DR. SED. 43 - 4 DR. H.T.	45 - 6 PASS. STA. WGN. 46 - 9 PASS. STA. WGN.	

AR Indicates use as required.
\# Indicates parts not listed in any previous parts book
Numerals in parentheses ( ) refer to notes.
★ Indicates change or addition.

Printed in U.S.A.
January 1972

Right and left part numbers are on same line, first number is right, second number is left.

23-63-0 WEATHERSTRIP Cont'd.

CODE	PART NAME		MODEL CODES	SEE BOTTOM NOTE 21	23	27	29	41	43	45	46	PART NUMBER
23-63-55	RETAINER Cont'd.											
			P,D,C,Y	—	1	—	—	—	—	—	—	2893 120-1
			P	—	—	—	1	—	—	—	—	2895 476-7
	RETAINER, Front Pillar Upper W/Strip		V,L	—	1	—	—	—	—	—	—	2811 044-5
			B,J	—	—	1	—	—	—	—	—	3446 248-9
		70	R,W	—	—	1	—	—	—	—	—	2664 316-7
		70	P,D,C	—	—	1	—	—	—	—	—	2901 036-7
	RETAINER, Body Lock Pillar W/Strip	70	R,W	1	—	—	—	—	—	—	—	2842 800-1
		Upr. 70	P	1	—	—	—	—	—	—	—	2902 596-7
	RETAINER, Front Pillar and Side Rail W/Strip		V,L	—	—	—	1	—	—	—	—	3440 312-3
		70	B	—	1	—	—	—	—	—	—	3439 180-1
		70	J	—	1	—	1	—	—	—	—	3439 184-5
		70	R,W	1	—	—	—	—	—	—	—	2895 272-3
		70	R	—	1	—	—	—	—	—	—	2895 270-1
		70	W	—	1	—	—	—	—	—	—	2895 268-9
		70	W	—	—	—	1	—	—	—	—	2895 270-1
		71	R	—	1	—	—	—	—	—	—	3499 546-7
		71	W	—	1	—	1	—	—	—	—	3439 452-3
	RETAINER, Roof Side Rail w/Strip											
			V,L	—	1	—	—	—	—	—	—	2604 070-1
	Up To Approximately May 1, 1970	70	B	—	1	—	—	—	—	—	—	2965 844-5
	After Approximately May 1, 1970	70	B	—	1	—	—	—	—	—	—	3500 310-1
		71	B	—	1	—	—	—	—	—	—	3500 310-1
	Up To Approximately May 1, 1970	70	J	—	1	—	1	—	—	—	—	2963 314-5
	After Approximately May 1, 1970	70	J	—	1	—	1	—	—	—	—	3500 312-3
		71	J	—	1	—	—	—	—	—	—	3500 312-3
		70	P,D	—	1	—	—	—	—	—	—	2902 808-9
	Up to Approximately Aug. 31, 1970	71	P,D	—	1	—	—	—	—	—	—	3581 426-7
	After Approximately Aug. 31, 1970	71	P,D	1	1	—	—	—	—	—	—	3581 752-3
		70	C,Y	—	1	—	—	—	—	—	—	2902 810-1
	Up to Approximately Aug. 31, 1970	71	C,Y	—	1	—	—	—	—	—	—	3581 428-9
	After Approximately Aug. 31, 1970	71	C,Y	—	1	—	—	—	—	—	—	3581 754-5
		70	C,Y	—	—	—	—	—	1	—	—	2902 852-3
	w/Power Vent Wdos.	71	C,Y	—	—	—	—	—	1	—	—	2902 852-3
	w/o Power Vent Wdos.	71	C,Y	—	—	—	—	—	1	—	—	3581 886-7
	RETAINER, Roof Side Rail w/Ship Attaching		V,L	—	2	—	6	—	—	—	—	2964 547
	RETAINER, Roof Side Rail W/Strip Lower Attaching											
		71	R,W	—	2	—	2	—	—	—	—	2964 547
		71	P,D,C,Y	2	2	—	2	—	AR	—	—	2964 547
	RETAINER w/EXTENSION, Roof Side Rail W/Strip	70	P	—	—	—	1	—	—	—	—	3444 172-3
		71	P	—	—	—	1	—	—	—	—	3581 430-1
		70	P,D	—	—	—	—	—	1	—	—	2902 730-1
	Up To Approximately June 15, 1971	71	P,D	—	—	—	—	—	1	—	—	2902 730-1
	After Approximately June 15, 1971	71	P,D	—	—	—	—	—	1	—	—	# 3581 822-3
	RETAINER, Roof Side Rail W/Strip Front	70	B	—	1	—	—	—	—	—	—	2963 312-3
		70	P	1	—	—	—	—	—	—	—	2902 588-9
	RETAINER, Roof Side Rail W/Strip Rear	70	B	—	1	—	—	—	—	—	—	2963 428-9
	RETAINER, Roof Side Rail W/Strip (Glass Anti Blow Off)	71	B,J,R,W	—	2	—	2	—	—	—	—	6003 257
	Up To Approximately June 1, 1971	71	P,D,C,Y	2	2	—	2	—	2	—	—	3581 859

CARLINES: J - Challenger, B - Barracuda, V - Valiant, L - Dart, R - Belvedere - Satallite, W - Coronet - Charger, P - Plymouth, D - Dodge, C - Chrysler, Y - Imperial

NUMERALS INDICATE: 21 - 2 DR. SED., 23 - 2 DR. H.T., 27 - CONV. CPE., 29 - FAST BACK, 41 - 4 DR. SED., 43 - 4 DR. H.T., 45 - 6 PASS. STA. WGN., 46 - 9 PASS. STA. WGN.

AR Indicates use as required.
# Indicates parts not listed in any previous parts book
Numerals in parentheses ( ) refer to notes.
★ Indicates change or addition.

Printed in U.S.A.
January 1972

Right and left part numbers are on same line, first number is right, second number is left.

23-63-0 WEATHERSTRIP Cont'd.

CODE	PART NAME	MODEL CODES	SEE BOTTOM NOTE 21	23	27	29	41	43	45	46	PART NUMBER
23-63-55	RETAINER Cont'd.										
	After Approximately June 1, 1971	71 P,D,C,Y	2	2	—	2	—	2	—	—	= 3582 486
	RETAINER, Roof Side Rail Qtr. Wdo. (Glass Anti Blow Off)	71 B,J	—	2	—	—	—	—	—	—	6003 257
	RETAINER, Qtr. Panel Roof Rail Qtr. Wdo. Glass W 'Strip	P,D,C	—	—	—	—	—	—	1	1	2894 086-7
23-63-94	WEATHERSTRIP, Rear Door Wdo. Front Frame	70 P,D,C,Y	—	—	—	—	—	1	—	—	2893 800-1
	Up To Feb. 1, 1971	71 P,D,C,Y	—	—	—	—	—	1	—	—	3582 004-5
	From Feb. 1, 1971 To June 1, 1971	71 P,D,C,Y	—	—	—	—	—	1	—	—	3582 060-1
	After June 1, 1971	71 P,D,C,Y	—	—	—	—	--	1	—	—	3581 794-5
23-63-97	WEATHERSTRIP, Rear Door Rear Stationary Glass	V,L	—	—	—	—	2	—	—	—	2664 408
		70 R,W	—	—	—	—	2	—	—	—	2811 456
		70 R,W	—	—	—	—	—	—	2	2	2811 458
23-63-100	WEATHERSTRIP PACKAGE, Qtr. Wdo. Glass Front	70 R,W	2	2	—	2	—	—	—	—	2932 230
	WEATHERSTRIP, Qtr. Wdo. Glass Front	V,L	—	—	—	1	—	—	—	—	2965 638-9
	WEATHERSTRIP, Qtr. Wdo. Glass Upper	70 P	1	—	—	—	—	—	—	—	2901 614-5
	WEATHERSTRIP, Qtr. Wdo. Glass	V,L	—	—	—	1	—	—	—	—	2965 640-1
		70 R	1	—	—	—	—	—	—	—	2840 672-3
		70 W	1	—	—	—	—	—	—	—	2840 670-1
		70 R,W	—	—	—	—	—	—	1	1	2811 772-3
		P,D,C	—	—	—	—	—	—	1	1	2893 260-1
	WEATHERSTRIP, Qtr. Wdo. Lower	71 R,W	—	—	—	—	—	—	2	2	3500 986
23-63-104	WEATHERSTRIP, Qtr. Wdo. Glass Front Frame	V,L	—	1	—	—	—	—	—	—	2782 560-1
	Up To Approximately July 1, 1970	70 B,J	—	1	1	1	—	—	—	—	2963 232-3
	After Approximately July 1, 1970	70 B,J	—	1	1	1	—	—	—	—	3500 286-7
		70 R,W	—	—	1	—	—	—	—	—	2782 560-1
		70 P,D,C,Y	—	1	1	—	—	—	—	—	2965 880-1
		70 P	—	—	—	1	—	—	—	—	2965 122-3
		71 B,J	—	1	1	—	—	—	—	—	3500 286-7
		71 R,W	—	1	—	1	—	—	—	—	3581 170-1
		71 P,D,C,Y	1	1	—	—	—	—	—	—	3581 310-1
		71 P	—	—	—	1	—	—	—	—	3581 312-3
23-63-112	WEATHERSTRIP, Rear Wdo. Glass										
	NOTE: Weatherstripping is Not used with Cemented-in Type Rear Window Glass. See Part Type Code 23-64-1 for Installation Kit.										
		70 V	—	—	—	—	1	—	—	—	2963 972
		70 V	—	—	—	1	—	—	—	—	2965 866
		71 V	—	—	—	—	1	—	—	—	3500 480
		71 V,L	—	—	—	1	—	—	—	—	3500 481
	w/o Vinyl Roof	V,L	—	1	—	—	—	—	—	—	2604 115
	w/Vinyl Roof	V,L	—	1	—	—	—	—	—	—	2784 577
		L	—	—	—	—	1	—	—	—	2839 646
23-63-114	LOCKING STRIP, Rear Wdo. Glass W/Strip	V,L	—	—	—	1	—	—	—	—	3446 646
23-63-126	WEATHERSTRIP, Front Door V 'Wing	V,L	—	—	—	—	1	—	—	—	2663 472-3
		V,L	—	1	—	—	—	—	—	—	2663 474-5
		70 R,W	1	1	—	1	—	—	—	—	2811 306-7
		70 R,W	—	—	1	—	—	—	—	—	2570 786-7
		70 R,W	—	—	—	—	1	—	1	1	2570 784-5
		70 P,D,C,Y	1	—	—	—	—	1	—	—	2893 450-1
		70 P,D,C	—	—	1	—	—	—	—	—	2894 914-5

CARLINES: J - Challenger, B - Barracuda, V - Valiant, L - Dart, R - Belvedere - Satallite, W - Coronet - Charger, P - Plymouth, D - Dodge, C - Chrysler, Y - Imperial

NUMERALS INDICATE: 21 - 2 DR. SED., 23 - 2 DR. H.T., 27 - CONV. CPE., 29 - FAST BACK, 41 - 4 DR. SED., 43 - 4 DR. H.T., 45 - 6 PASS. STA. WGN., 46 - 9 PASS. STA. WGN.

AR Indicates use as required.
\# Indicates parts not listed in any previous parts book
Numerals in parentheses ( ) refer to notes.
★ Indicates change or addition.

Printed in U.S.A. January 1972

Right and left part numbers are on same line, first number is right, second number is left.

CODE	PART NAME		MODEL CODES	SEE BOTTOM NOTE 21	23	27	29	41	43	45	46	PART NUMBER
23-63-0	**WEATHERSTRIP Cont'd.**											
23-63-126	WEATHERSTRIP Cont'd.											
		70	P,D,C	—	—	—	—	1	—	1	1	2893 452-3
	w/Power Vent Wdos.	71	C,Y	—	—	—	—	—	1	—	—	2893 450-1
23-63-127	DIVISIONAL CHANNEL, Front Door V/Wing	70	P,D,C,Y	1	—	—	—	—	1	—	—	3499 004-5
	w/Power Vent Wdos.	71	C,Y	—	—	—	—	—	1	—	—	3499 004-5
		70	P,D,C	—	—	1	—	—	—	—	—	3499 008-9
		70	P,D,C	—	—	—	—	1	—	1	1	3440 996-7
	RETAINER w/Divisional Channel, Front Door V/Wing W/Strip		V,L	—	—	—	—	1	—	—	—	2663 558-9
		70	R,W	—	—	—	—	1	—	1	1	3499 112-3
		70	P,D,C	—	—	—	—	1	—	1	1	3439 148-9
	RETAINER, Front Door V/Wing W/Strip	70	P,D,C	—	—	—	—	1	—	1	1	2893 544-5
		Frt. 70	P,D,C,Y	1	—	—	—	—	1	—	—	2893 608-9
		Lwr. 70	P,D,C	—	—	1	—	—	—	—	—	2893 610-1
	w/Power Vent Wdos.	Frt. 71	C,Y	—	—	—	—	—	1	—	—	2893 608-9
	NOTE: Also See Code 23-64-48											
23-63-133	BRACKET, Qtr. Wdo. Rear Attaching		V,L	—	—	—	1	—	—	—	—	3446 072-3
		70	R,W	1	—	—	—	—	—	—	—	2842 620-1
	BRACKET, Qtr. Wdo. W/Strip Rear Corner Retaining	Rt. 70	R,W	—	—	—	—	—	—	1	1	2861 936
	BRACKET, Qtr. Wdo. Front W/Strip Retainer Attaching	70	P	2	—	—	—	—	—	—	—	2965 758
	BRACKET w/RETAINER, Qtr. Wdo. Front W/Strip	70	P	1	—	—	—	—	—	—	—	2965 760-1
	BRACKET, Qtr. Wdo. Mounting Support	71	B,J	—	2	—	—	—	—	—	—	= 3582 345
	BRACKET, Qtr. Wdo. Mounting	71	P	2	—	—	—	—	—	—	—	3586 441
	SUPPORT, Qtr. Wdo. Mounting Bracket	71	R,W	—	1	—	—	—	—	—	—	3581 734-5
		71	P	1	—	—	—	—	—	—	—	3586 624-5
23-63-134	DECAL, Qtr. Wdo. Glass Scat Pack Insignia		J	—	1	1	1	—	—	—	—	3505 100-1
		70	L	—	1	—	—	—	—	—	—	3505 100-1
		70	W	1	1	1	1	—	—	—	—	3505 100-1
23-63-136	RETAINER w/BRACKET, Qtr. Wdo. W/Strip		V,L	—	—	—	1	—	—	—	—	3446 548-9
		70	R	1	—	—	—	—	—	—	—	2842 616-7
		70	W	1	—	—	—	—	—	—	—	2842 618-9
	RETAINER, Qtr. Wdo. Front Frame W/Strip		V,L	—	—	—	1	—	—	—	—	2965 848-9
	RETAINER, Qtr. Wdo. Glass W/Strip	Frt. 70	R,W	—	—	—	—	—	—	1	1	2860 136-7
		Upr. 70	R,W	—	—	—	—	—	—	1	1	2588 824-5
	RETAINER, Qtr. Wdo. W/Strip	70	P	1	—	—	—	—	—	—	—	2965 762-3
	RETAINER, Qtr. Wdo. Glass W/Strip		V,L	—	—	—	2	—	—	—	—	2964 547
	RETAINER, Qtr. Wdo. Glass Upper Edge	71	P	2	—	—	—	—	—	—	—	3581 859
	RETAINER, Qtr. Panel Rear Door Lock Upper Pillar Qtr. Wdo. Glass W/Strip		P,D,C	—	—	—	—	—	—	1	1	2894 084-5
23-63-171	WEATHERSTRIP, T Gate Opening Lower	70	R,W	—	—	—	—	—	—	1	1	2860 363
		71	R,W	—	—	—	—	—	—	1	1	3581 168-9
			P,D,C	—	—	—	—	—	—	1	1	3439 282
23-63-172	WEATHERSTRIP, Deck Lid Opening	70	V	—	—	—	1	—	—	—	—	3445 380
		70	V	—	—	—	—	1	—	—	—	2784 477
		70	L	—	1	—	—	1	—	—	—	3445 273
	Up To Approximately Dec. 1, 1970	71	V,L	—	—	—	1	—	—	—	—	3445 380
	After Approximately Dec. 1, 1970	71	V,L	—	—	—	1	—	—	—	—	3445 900
	Up To Approximately Oct. 1, 1970	71	V,L	—	1	—	—	—	—	—	—	3445 273

CARLINES	J - Challenger	V - Valiant	R - Belvedere - Satallite	P - Plymouth	C - Chrysler
	B - Barracuda	L - Dart	W - Coronet - Charger	D - Dodge	Y - Imperial

NUMERALS INDICATE:	21 - 2 DR. SED.	27 - CONV. CPE.	41 - 4 DR. SED.	45 - 6 PASS. STA. WGN.
	23 - 2 DR. H.T.	29 - FAST BACK	43 - 4 DR. H.T.	46 - 9 PASS. STA. WGN.

AR Indicates use as required.
\# Indicates parts not listed in any previous parts book
Numerals in parentheses ( ) refer to notes.
★ Indicates change or addition.

Printed in U.S.A.
January 1972

Right and left part numbers are on same line, first number is right, second number is left.

CODE	PART NAME		MODEL CODES	SEE BOTTOM NOTE 21	23	27	29	41	43	45	46	PART NUMBER
23-63-0	**WEATHERSTRIP Cont'd.**											
23-63-172	WEATHERSTRIP Cont'd.											
	After Approximately Oct. 1, 1970	71	V,L	—	1	—	—	—	—	—	—	2963 376
	Up To Approximately Oct. 1, 1970	71	V	—	—	—	—	1	—	—	—	2784 477
	After Approximately Oct. 1, 1970	71	V	—	—	—	—	1	—	—	—	3445 900
	Up To Approximately Oct. 1, 1970	71	L	—	—	—	—	1	—	—	—	3445 273
	After Approximately Oct. 1, 1970	71	L	—	—	—	—	1	—	—	—	2963 376
			B	—	1	1	—	—	—	—	—	2963 375
			J	—	1	1	1	—	—	—	—	2963 376
		70	R,W	1	1	1	—	1	—	—	—	3445 379
		70	W	—	—	—	1	—	—	—	—	2838 149
		71	R	—	1	—	—	—	—	—	—	3445 899
		71	R	—	—	—	—	1	—	—	—	3445 901
		71	W	—	1	—	1	—	—	—	—	3445 900
		71	W	—	—	—	—	1	—	—	—	3445 140
			P	1	1	1	1	1	1	—	—	3445 376
			D	—	1	1	—	1	1	—	—	3445 377
			C,Y	—	1	1	—	1	1	—	—	3445 378
23-63-175	RETAINER, Deck Opening Lower Panel W/Strip											
		71	R	—	1	—	—	—	—	—	—	3446 530
		71	R,W	—	—	—	—	1	—	—	—	3446 527
23-63-181	WEATHERSTRIP, T Gate Glass											
	Inner Belt	70	R,W	—	—	—	—	—	—	1	1	2861 597
	Outer Belt	70	R,W	—	—	—	—	—	—	1	1	2860 362
	Inner Belt		P,D,C	—	—	—	—	—	—	1	1	2893 872
	Outer Belt		P,D,C	—	—	—	—	—	—	1	1	2893 873
	Inner Belt	71	R,W	—	—	—	—	—	—	1	1	3499 781
	Up To Approximately Dec. 1, 1970 Outer Belt	71	R,W	—	—	—	—	—	—	1	1	3499 783
	After Approximately Dec. 1, 1970 Outer Belt	71	R,W	—	—	—	—	—	—	1	1	=3581 909
	WEATHERSTRIP, T/Gate Glass Opening											
	Inner	71	R,W	—	—	—	—	—	—	1	1	3499 770-1
	Outer	71	R,W	—	—	—	—	—	—	1	1	3499 768
	Inner	71	P,D,C	—	—	—	—	—	—	1	1	3500 642
	Outer	71	P,D,C	—	—	—	—	—	—	1	1	3500 639
	GASKET, T/Gate Glass Lower Frame	70	R,W	—	—	—	—	—	—	1	1	2860 360
	Up To Approximately Aug. 31, 1970	71	R,W	—	—	—	—	—	—	2	2	3440 269
	After Approximately Aug. 31, 1970	71	R,W	—	—	—	—	—	—	4	4	3581 844
	GASKET, T/Gate Glass to Lower Frame Tee-Nut	71	R,W	—	—	—	—	—	—	4	4	3581 134
	GASKET, T/Gate Glass Lift Channel to Glass		P,D,C	—	—	—	—	—	—	2	2	3440 799
	GASKET, T/Gate Glass Lift Channel Tee-Nut to Glass		P,D,C	—	—	—	—	—	—	4	4	3440 623
	TEE-NUT, T/Gate Glass to Lower Frame Attaching	71	R,W	—	—	—	—	—	—	4	4	6029 135
23-63-183	CLIP, T/Gate Glass W/Strip											
	Inner Belt	70	P,D,C	—	—	—	—	—	—	9	9	2217 508
	Outer Belt	70	All	—	—	—	—	—	—	9	9	2217 508
	Inner Belt	71	P,D,C	—	—	—	—	—	—	9	9	2217 508
	Outer Belt	71	P,D,C	—	—	—	—	—	—	9	9	2217 508
23-64-0	**WINDOW AND VENT WING**											
23-64-1	KIT, Cemented In Rear Wdo. Installation		B,J	—	1	—	1	—	—	—	—	2807 425

CARLINES	J - Challenger B - Barracuda	V - Valiant L - Dart	R - Belvedere - Satallite W - Coronet - Charger	P - Plymouth D - Dodge	C - Chrysler Y - Imperial
NUMERALS INDICATE:	21 - 2 DR. SED. 23 - 2 DR. H.T.	27 - CONV. CPE. 29 - FAST BACK	41 - 4 DR. SED. 43 - 4 DR. H.T.	45 - 6 PASS. STA. WGN. 46 - 9 PASS. STA. WGN.	

AR *Indicates use as required.*
\# Indicates parts not listed in any previous parts book
Numerals in parentheses ( ) refer to notes.
★ Indicates change or addition.

Printed in U.S.A.
January 1972

Right and left part numbers are on same line, first number is right, second number is left.

CODE	PART NAME		MODEL CODES	SEE BOTTOM NOTE 21	23	27	29	41	43	45	46	PART NUMBER
23-64-0	**WINDOW AND VENT WING Cont'd.**											
23-64-1	KIT Cont'd.											
		71	R,W	—	1	—	1	1	—	—	—	2807 425
		71	P,D,C,Y	1	1	—	1	1	1	—	—	2807 425
	SPACER, Rear Wdo. Glass 15' Long	70	J	—	—	—	1	—	—	—	—	3445 241
		70	R,W	1	1	—	1	1	—	—	—	3445 241
			P,D,C,Y	1	1	—	1	1	1	—	—	3445 241
		Side 70	W	—	—	—	2	—	—	—	—	2842 569
		71	B,J,R,W	—	AR	—	AR	AR	—	—	—	2842 569
		Side	P,D,C,Y	AR	AR	—	AR	AR	AR	—	—	2842 569
		Top	P,D,C,Y	AR	AR	—	AR	AR	AR	—	—	2842 569
	SPACER, Rear Wdo. Opening Frame to Rear Wdo. Glass		J	—	2	—	2	—	—	—	—	2964 590
23-64-4	BUMPER, Front Door Glass Down Stop		B,J	—	2	2	2	—	—	—	—	3439 163
		71	R	—	2	—	—	—	—	—	—	3499 785
		71	W	—	2	—	2	—	—	—	—	3581 114
		71	R,W	—	—	—	—	2	—	2	2	3499 252
	w/o Power Vent Wdos.	71	P,D,C,Y	—	—	—	—	2	2	2	2	3581 479
	BUMPER, Front Door Glass Up Stop		V,L	—	—	—	2	—	—	—	—	3440 830
			B,J	—	2	2	2	—	—	—	—	3440 830
		71	R,W	—	4	—	4	—	—	—	—	3440 830
	w/o Power Vent Wdos.	71	P,D,C,Y	—	—	—	—	—	2	—	—	3440 830
	BUMPER, Front Door Inside Panel Brace Down Stop											
		71	V,L	—	—	—	2	—	—	—	—	2861 828
	BUMPER, Front Door Glass Belt											
		71	B,J	—	2	2	2	—	—	—	—	3581 579
	BUMPER, Front Door Glass Up Stop Rear		V,L	—	—	—	2	—	—	—	—	3499 130
	BUMPER, Qtr. Wdo. Glass Down Stop	70	R,W	—	2	—	2	—	—	—	—	2901 603
		71	R,W	—	2	—	2	—	—	—	—	3445 501
			B,J	—	2	2	2	—	—	—	—	2784 715
			P,D,C,Y	—	2	2	2	—	—	—	—	2901 603
	BUMPER, Elect. Wdo. Lift Down Stop	Frt. 70	R,W	—	2	2	2	—	—	—	—	1954 083
		Qtr. 70	R,W	—	—	2	—	—	—	—	—	2574 876
		Rr. 71	R,W	—	—	—	—	2	—	2	2	1954 083
	BUMPER, Door Elect. Wdo. Regulator	Frt.	P,D,C,Y	—	2	2	2	2	2	2	2	1954 083
		Rr.	P,D,C	—	—	—	—	2	—	2	2	3454 581
	BUMPER w/INSERT, Rear Door Glass Down Stop		P,D,C,Y	—	—	—	—	—	2	—	—	3499 234
23-64-10	GLASS, T/Gate Window Clear	70	R,W	—	—	—	—	—	—	1	1	2860 104
	Tinted	70	R,W	—	—	—	—	—	—	1	1	2860 105
	Clear	71	R,W	—	—	—	—	—	—	1	1	3581 900
	Tinted	71	R,W	—	—	—	—	—	—	1	1	= 3581 901
	Clear		P,D,C	—	—	—	—	—	—	1	1	2895 137
	Tinted		P,D,C	—	—	—	—	—	—	1	1	2895 138
23-64-11	LABEL, Caution T/Gate Glass	70	R,W	—	—	—	—	—	—	1	1	2861 773
	LABEL, T/Gate Door Hinge Release Direction		P,D,C	—	—	—	—	—	—	1	1	2895 183
		71	R,W	—	—	—	—	—	—	1	1	2895 183
23-64-12	STOP, Front Door Wdo. Glass Front Up		V,L	—	—	—	2	—	—	—	—	3439 275

CARLINES: J - Challenger, B - Barracuda, V - Valiant, L - Dart, R - Belvedere - Satallite, W - Coronet - Charger, P - Plymouth, D - Dodge, C - Chrysler, Y - Imperial

NUMERALS INDICATE: 21 - 2 DR. SED., 23 - 2 DR. H.T., 27 - CONV. CPE, 29 - FAST BACK, 41 - 4 DR. SED., 43 - 4 DR. H.T., 45 - 6 PASS. STA. WGN., 46 - 9 PASS. STA. WGN.

AR Indicates use as required.
\# Indicates parts not listed in any previous parts book
Numerals in parentheses ( ) refer to notes.
★ Indicates change or addition.

Printed in U.S.A.
January 1972

Right and left part numbers are on same line, first number is right, second number is left.

23-64-0 WINDOW AND VENT WING Cont'd.

CODE	PART NAME		MODEL CODES	SEE BOTTOM NOTE 21	23	27	29	41	43	45	46	PART NUMBER
23-64-12	STOP Cont'd.											
	STOP, Front Door Glass Up Position On Glass Rear		B,J	—	2	2	2	—	—	—	—	2895 447
	STOP, Front Door Wdo. Glass Rear Up		V,L	—	—	—	1	—	—	—	—	3440 562-3
	STOP, Front Door Glass Up Position On Glass		V,L	—	2	—	4	—	—	—	—	2894 599
		70	B,J,R,W	2	2	2	2	—	—	—	—	2894 599
		71	B,J	—	2	2	—	—	—	—	—	2894 599
		Manual 71	R,W	—	4	—	4	—	—	—	—	2965 900
		Electric 71	R,W	—	4	—	4	—	—	—	—	3582 011
		70	P,D,C,Y	—	2	—	2	—	—	—	—	2894 599
		w Vent Wdo. 70	P	1	—	—	—	—	—	—	—	3440 626-7
		w o Vent Wdo. 70	P	2	—	—	—	—	—	—	—	2894 599
		71	P,D,C,Y	1	1	—	1	—	—	—	—	3440 626-7
		w o Power Vent Wdos. 71	P,D,C,Y	2	2	—	2	—	2	—	—	2894 599
	STOP, Front Door Glass Front Upper											
	w o Power Vent Wdos.	71	P,D,C,Y	—	—	—	—	—	2	—	—	3440 966
	STOP, Front Door Glass Up Position On O Side Panel Belt Reinforcement		P,D,C,Y	2	2	—	2	—	—	—	—	2894 650
	STOP, Front Door Elect. Wdo. Regulator Down 70		R,W	—	2	2	2	—	—	—	—	2520 562
	STOP, Rear Door Glass Up Position On Glass		P,D,C,Y	—	—	—	—	—	2	—	—	2894 599
	STOP, Qtr. Wdo. Glass Up Position		B,J	—	1	1	1	—	—	—	—	3446 562-3
			V,L	—	4	—	—	—	—	—	—	2782 684
		70	R,W	—	—	2	—	—	—	—	—	2573 384
			P,D,C,Y	—	4	—	4	—	—	—	—	2963 494
	STOP, Qtr. Wdo. Glass Upper Rear		B,J	—	2	—	2	—	—	—	—	2963 185
	STOP, Qtr. Wdo. Glass Up Position Upper Rear											
	Up to Approximately Nov. 1, 1969	70	B,J	—	—	1	—	—	—	—	—	3504 036-7
	After Approximately Nov. 1, 1969	70	B,J	—	—	1	—	—	—	—	—	3499 542-3
		71	B,J	—	—	1	—	—	—	—	—	3499 542-3
	STOP, Qtr. Wdo. Glass Up Position On Glass		B,J	—	2	—	2	—	—	—	—	2965 900
	STOP, Qtr. Wdo. Glass Down		B,J	—	1	1	1	—	—	—	—	3444 718-9
		71	P,D,C,Y	—	2	—	2	—	—	—	—	3499 570
	STOP, Qtr. Wdo. Regulator Front Up Position	70	R,W	—	2	—	2	—	—	—	—	2839 547
	STOP, Qtr. Wdo. Glass Up											
	Up To Approximately March 1, 1971	71	R,W	—	4	—	4	—	—	—	—	3581 053
	After Approximately March 1, 1971	71	R,W	—	4	—	4	—	—	—	—	3582 115
	STOP, Qtr. Wdo. Glass Down Position	71	R,W	—	1	—	1	—	—	—	—	3506 254-5
	STOP, Qtr. Wdo. Glass Front Up Position 70		P,D,C	—	—	2	—	—	—	—	—	2963 494
	STOP, Qtr. Wdo. Glass Rear Up Position 70		R,W	—	2	—	2	—	—	—	—	2841 835
		70	P,D,C	—	—	2	—	—	—	—	—	2902 792
	STOP, Qtr. Wdo. Glass Down Position 70		P,D,C,Y	—	2	2	2	—	—	—	—	2965 124
	Position 70		R,W	—	2	—	2	—	—	—	—	3579 551
	BRACKET, Front Door Glass Up Stop											
		Rr. 71	V,L	—	2	—	2	2	—	—	—	2895 991
		Frt.	B,J	—	2	2	2	—	—	—	—	2895 991
		Rr.	B,J	—	2	2	2	—	—	—	—	2895 991
	BRACKET, Rear Door Glass Up Stop	Frt.	P,D,C,Y	—	—	—	—	—	1	—	—	2894 944-5

CARLINES: J - Challenger, B - Barracuda, V - Valiant, L - Dart, R - Belvedere - Satellite, W - Coronet - Charger, P - Plymouth, D - Dodge, C - Chrysler, Y - Imperial

NUMERALS INDICATE: 21 - 2 DR. SED., 23 - 2 DR. H.T., 27 - CONV. CPE., 29 - FAST BACK, 41 - 4 DR. SED., 43 - 4 DR. H.T., 45 - 6 PASS. STA. WGN., 46 - 9 PASS. STA. WGN.

AR Indicates use as required.
# Indicates parts not listed in any previous parts book
Numerals in parentheses ( ) refer to notes.
★ Indicates change or addition.

Printed in U.S.A. January 1972

Right and left part numbers are on same line, first number is right, second number is left.

23-64-0 WINDOW AND VENT WING Cont'd.

CODE	PART NAME		MODEL CODES	SEE BOTTOM NOTE 21	23	27	29	41	43	45	46	PART NUMBER
23-64-12	STOP Cont'd.											
		Rr.	P,D	—	—	—	—	—	1	—	—	2894 614-5
		Rr.	C,Y	—	—	—	—	—	1	—	—	2894 600-1
	BRACKET, Rear Door Elect. Wdo. Regulator		P,D,C,Y	—	—	—	—	2	2	2	2	2945 655
	BRACKET, Elect. Front Door Glass Channel Down Stop	70	R,W	—	2	2	2	—	—	—	—	2588 337
	BRACKET, Elect. Qtr. Wdo. Glass Lower Frame Down Stop	70	R,W	—	—	2	—	—	—	—	—	2860 854
	BRACKET, Qtr. Wdo. Glass Lower Frame Down Stop	70	R,W	—	2	—	2	—	—	—	—	2963 682
	BRACKET w WELD SCREW, Front Door Glass Up Stop	71	R,W	—	4	—	4	—	—	—	—	3581 439
	BRACKET, Front Door Outside Panel Belt Reinforcement Glass Bumper	71	R,W	—	1	—	1	—	—	—	—	3581 446-7
	BRACKET, Rear Door Glass Down Stop Electric Regulator	71	R,W	—	—	—	—	2	—	2	2	3581 488
	BRACKET, T Gate Glass Up Stop	71	R,W	—	—	—	—	—	—	2	2	3581 540
	BRACKET w UP STOP, Front Door Glass	71	P,D	—	—	—	—	—	1	—	—	3582 018-9
	w o Power Vent Wdos.	71	C,Y	—	—	—	—	—	1	—	—	3582 018-9
	SUPPORT, Elect. Qtr. Wdo. Glass Down Stop Bracket	70	R,W	—	—	2	—	—	—	—	—	2573 382
	SCREW, 1 4"-14 x 1 1 8"		B,J,V,L	—	AR	AR	AR	—	—	—	—	9428 368
			R,W	AR	AR	AR	AR	—	—	—	—	9428 368
			P,D,C,Y	AR	AR	AR	AR	—	AR	—	—	9428 368
	SCREW w WASHER, Hex. Socket Head, Pilot Point 1 4"-20 x 3 4"		B,J	—	AR	AR	AR	—	—	—	—	6027 992
			P,D,C,Y	AR	AR	—	AR	—	—	—	—	6027 992
	BOLT, T Gate Glass Up Stop Bracket Attaching	71	R,W	—	—	—	—	—	—	2	2	6029 462
	NUT w WASHER, T Gate Glass Up Stop Bracket Attaching	71	R,W	—	—	—	—	—	—	2	2	120 376
	SCREW, w WASHER, Front Door Glass Up Position On Glass Stop Attaching		P,D,C,Y	4	4	—	4	—	—	—	—	6028 619
	NUT, Front Door Glass Up Position On Glass Stop Attaching		P,D,C,Y	4	4	—	4	—	—	—	—	6028 587
	NOTE: Also See Code 23-39-15.											
23-64-14	WEDGE, Front Door Glass Stop Up Position		V,L	—	—	—	4	—	—	—	—	3440 764
			B,J	—	2	2	2	—	—	—	—	3439 317
		71	R,W	—	2	—	2	—	—	—	—	3440 764
			P,D,C,Y	2	2	2	2	—	2	—	—	2894 174
	WEDGE, Front Door Glass	70	R,W	—	1	—	1	—	—	—	—	3440 428-9
23-64-16	SPACER, Qtr. Wdo. Glass Up Stop		B,J	—	—	2	—	—	—	—	—	3581 322
23-64-17	ANTI-RATTLER, V Wing Adjusting Rod	70	V,L	—	2	—	—	2	—	—	—	2861 704
		70	R,W	2	2	2	2	2	—	2	2	2861 704

CARLINES: J - Challenger, B - Barracuda, V - Valiant, L - Dart, R - Belvedere - Satallite, W - Coronet - Charger, P - Plymouth, D - Dodge, C - Chrysler, Y - Imperial

NUMERALS INDICATE: 21 - 2 DR. SED., 23 - 2 DR. H.T., 27 - CONV. CPE., 29 - FAST BACK, 41 - 4 DR. SED., 43 - 4 DR. H.T., 45 - 6 PASS. STA. WGN., 46 - 9 PASS. STA. WGN.

AR Indicates use as required.
\# Indicates parts not listed in any previous parts book
Numerals in parentheses ( ) refer to notes.
★ Indicates change or addition.

Printed in U.S.A.
January 1972

Right and left part numbers are on same line, first number is right, second number is left.

23-64-0 WINDOW AND VENT WING Cont'd.

CODE	PART NAME	MODEL CODES	SEE BOTTOM NOTE 21	23	27	29	41	43	45	46	PART NUMBER
23-64-17	ANTI-RATTLER Cont'd.										
	70	P,D,C,Y	2	2	2	2	2	2	2	2	2861 704
	71	V	—	2	—	—	2	—	—	—	2861 704
	71	L	—	2	—	2	2	—	—	—	2861 704
w Power Vent Wdos.	71	C,Y	—	—	—	—	—	2	—	—	2861 704
Cross Arms											
Manual		B,J	—	2	2	2	—	—	—	—	3506 487
Electric		B,J	—	4	4	4	—	—	—	—	3506 487
ANTI-RATTLER, Front Door Wdo. Regulator Arm											
Manual		B,J	—	4	4	4	—	—	—	—	3506 486
Electric		B,J	—	2	2	2	—	—	—	—	3506 486
ANTI-RATTLER, Qtr. Wdo. Glass Stop		B,J	—	2	2	2	—	—	—	—	2782 878
ANTI-RATTLER, Qtr. Wdo. Glass Up Stop											
		B,J	—	—	2	—	—	—	—	—	2782 878
Electric	71	B,J	—	—	2	—	—	—	—	—	= 3581 316
ANTI-RATTLER, Qtr. Wdo. Glass Stop Up Position	70	L	—	4	—	—	—	—	—	—	2782 794
	71	V,L	—	4	—	—	—	—	—	—	3506 486
	70	P,D,C,Y	—	4	—	4	—	—	—	—	2784 957
	71	P,D,C,Y	—	4	—	4	—	—	—	—	3506 487
ANTI-RATTLER, Qtr. Wdo. Glass Front Stop	70	R,W	—	2	—	2	—	—	—	—	2782 878
ANTI-RATTLER, Qtr. Wdo. Glass Front Stop Up Position	70	P,D,C	—	—	2	—	—	—	—	—	2784 957
ANTI-RATTLER, Qtr. Wdo. Rear Up Stop		B,J	—	—	2	—	—	—	—	—	3506 033
Up To Approximately April 1, 1970	70	R,W	—	2	2	2	—	—	—	—	2784 957
After Approximately April 1, 1970	70	R,W	—	2	2	2	—	—	—	—	3506 487
ANTI-RATTLER, Qtr. Wdo. Glass Stop	71	R,W	—	4	—	4	—	—	—	—	3506 233
ANTI-RATTLER, Qtr. Wdo. Glass Rear Stop Up Position	70	P,D,C	—	—	2	—	—	—	—	—	2782 794
GASKET, Front Door Glass Up Position On Glass Stop	Inner 70	P	2	—	—	—	—	—	—	—	3440 646
	Outer 70	P	4	—	—	—	—	—	—	—	3440 623
	Inner 71	P,D,C,Y	2	2	—	2	—	—	—	—	3440 646
	Outer 71	P,D,C,Y	4	4	—	4	—	—	—	—	3440 623
GASKET, Front Door Glass Bracket w Up Stop	71	P,D	—	—	—	—	—	2	—	—	3581 482
w o Power Vent Wdos.	71	C,Y	—	—	—	—	—	2	—	—	3581 482
GASKET, Front Door Glass to Front Track Fastener											
	71	B,J,R,W	—	4	4	4	—	—	—	—	3440 623
GASKET, Front Door Glass to Up Stop Tee-Nut											
Electric	71	R,W	—	4	—	4	—	—	—	—	3440 623
GASKET, Door Wdo. Glass to Support Track and Guide											
Front	71	P,D,C,Y	4	4	—	4	4	4	4	4	3440 623
Rear	71	P,D,C,Y	—	—	—	—	—	6	—	—	3440 623
GASKET, Qtr. Wdo. Mtg. Bracket	71	P	8	—	—	—	—	—	—	—	3440 623
SPACER, Front Door Glass Up Position On Glass Stop to Glass	70	P	4	—	—	—	—	—	—	—	2216 544
	71	P,D,C,Y	4	4	—	4	—	—	—	—	2216 544
SPACER, Qtr. Wdo. Glass	71	R,W	—	—	—	—	—	—	AR	AR	3445 241

CARLINES: J - Challenger, B - Barracuda, V - Valiant, L - Dart, R - Belvedere - Satallite, W - Coronet - Charger, P - Plymouth, D - Dodge, C - Chrysler, Y - Imperial

NUMERALS INDICATE: 21 - 2 DR. SED., 23 - 2 DR. H.T., 27 - CONV. CPE., 29 - FAST BACK, 41 - 4 DR. SED., 43 - 4 DR. H.T., 45 - 6 PASS. STA. WGN., 46 - 9 PASS. STA. WGN.

AR Indicates use as required.
\# Indicates parts not listed in any previous parts book
Numerals in parentheses ( ) refer to notes.
★ Indicates change or addition.

Printed in U.S.A.
January 1972

Right and left part numbers are on same line, first number is right, second number is left.

23-64-0 WINDOW AND VENT WING Cont'd.

CODE	PART NAME		MODEL CODES	SEE BOTTOM NOTE 21	23	27	29	41	43	45	46	PART NUMBER
23-64-17	ANTI-RATTLER Cont'd.											
	Spacer, Qtr. Wdo. Fixed Glass	71	P	4	—	—	—	—	—	—	—	2216 544
23-64-28	RETAINER w/Weld SCREW, Front Door Elect. Glass Down Stop Bracket	70	R,W	2	2	2	2	2	—	2	2	2570 017
	RETAINER W/Weld Screw, Front Door Glass Track Bracket Bumper		P,D,C,Y	2	2	—	2	—	—	—	—	2895 233
	RETAINER, w/Weld SCREW, Rear Door Glass Track Lower Bracket Bumper		P,D,C,Y	—	—	—	—	—	4	—	—	2895 233
	RETAINER, Front Door Glass Blow Off	71	R,W	—	—	—	—	4	—	4	4	3581 888
	BRACKET, Rear Door Glass Track Panel Lower		P,D,C,Y	—	—	—	—	—	4	—	—	2893 906
23-64-40	ROD, Front Door V/Wing Adjusting Lower	70	V,L	—	2	—	—	2	—	—	—	2860 010
		70	R,W	2	2	—	2	2	—	2	2	2860 010
		71	V	—	2	—	—	2	—	—	—	2860 010
		71	L	—	2	—	2	2	—	—	—	2860 010
			P,D,C,Y	2	—	2	—	2	2	2	2	2894 475
	w/Power Vent Wdos.	71	C,Y	—	—	—	—	—	2	—	—	2894 475
	STUD, Adjusting Door V/Wing to Upper Hinge Reinforcement		V,L	—	2	—	—	—	—	—	—	6027 538
			P,D,C,Y	2	—	2	—	—	2	—	—	6027 538
	WASHER, Door V/Wing Lower Adjusting Rod to Inside Panel		P,D,C,Y	2	—	2	—	2	2	2	2	6027 525
	SCREW w/WASHER, Door V/Wing at Belt Front Attaching 5/16"-18 x 1"		P, D, C, Y	2	—	2	—	—	2	—	—	6027 972
	NUT, Door V/Wing Lower Adjusting Rod to Inside Panel		All	2	2	2	2	2	2	2	2	120 376
	NUT, Door V/Wing Adjusting Stud to Upper Hinge Reinforcement		V,L	—	2	—	—	2	—	—	—	120 376
			P,D,C,Y	2	—	2	—	—	2	—	—	120 376
23-64-42	T/PLATE, Front Door V/Wing Attaching at Belt	70	L,R,W	2	2	2	2	—	—	—	—	2860 956
		71	V,L	—	2	—	—	—	—	—	—	2860 956
	PLATE, Front Door V/Wing Belt Attaching	70	P,D,C	2	—	2	—	—	—	—	—	3581 456
	w/Power Vent Wdos.	71	C,Y	—	—	—	—	—	2	—	—	3581 456
23-64-44	RETAINER, Front Door V/Wing Lower Rod to Lower Brace	70	V,L	—	2	—	—	2	—	—	—	2860 036
		71	V	—	2	—	—	2	—	—	—	2860 036
		71	L	—	2	—	2	2	—	—	—	2860 036
		70	R,W	2	2	—	2	2	—	2	2	2860 036
23-64-48	FRAME w/Divisional CHANNEL, Front Door V/Wing		V,L	—	1	—	—	—	—	—	—	2861 352-3
		70	R,W	1	1	—	1	—	—	—	—	2811 338-9
		70	R,W	—	—	1	—	—	—	—	—	3499 110-1
		70	P,D,C,Y	1	—	—	—	—	1	—	—	3439 142-3
		70	P,D,C	—	—	1	—	—	—	—	—	3439 146-7
		71	C,Y	—	—	—	—	—	1	—	—	3439 142-3
	NOTE: Also See Code 23-63-127.											
23-64-66	FRAME, Rear Wdo. Opening		J	—	1	—	1	—	—	—	—	3444 076
			Y-M	—	1	—	—	—	—	—	—	2901 659
			Y-M	—	—	—	—	—	1	—	—	2901 658
	FRAME, Rear Wdo. Opening Upper		V,L	—	—	—	1	—	—	—	—	3417 754
			V	—	—	—	—	1	—	—	—	2604 024
			V,L	—	1	—	—	—	—	—	—	2769 490

CARLINES: J - Challenger, B - Barracuda, V - Valiant, L - Dart, R - Belvedere - Satallite, W - Coronet - Charger, P - Plymouth, D - Dodge, C - Chrysler, Y - Imperial

NUMERALS INDICATE: 21 - 2 DR. SED., 23 - 2 DR. H.T., 27 - CONV. CPE., 29 - FAST BACK, 41 - 4 DR. SED., 43 - 4 DR. H.T., 45 - 6 PASS. STA. WGN., 46 - 9 PASS. STA. WGN.

AR Indicates use as required.
\# Indicates parts not listed in any previous parts book
Numerals in parentheses ( ) refer to notes.
★ Indicates change or addition.

Printed in U.S.A.
January 1972

Right and left part numbers are on same line, first number is right, second number is left.

23-64-0 WINDOW AND VENT WING Cont'd.

CODE	PART NAME	MODEL CODES	SEE BOTTOM NOTE 21	23	27	29	41	43	45	46	PART NUMBER
23-64-66	FRAME Cont'd.										
		L	—	—	—	—	1	—	—	—	2603 675
		B	—	1	—	—	—	—	—	—	3417 036
		J	—	1	—	1	—	—	—	—	3417 049
	70	R,W	1	1	—	—	—	—	—	—	2838 564
	70	R,W	—	—	—	—	1	—	—	—	2838 553
	70	W	—	—	—	1	—	—	—	—	2838 132
	71	R,W	—	1	—	1	—	—	—	—	3482 546
	71	R,W	—	—	—	—	1	—	—	—	3445 107
	70	P,D	1	—	—	1	—	1	—	—	2900 167
	71	P,D	—	—	—	1	—	1	—	—	2900 167
		C,Y	—	—	—	—	—	1	—	—	2900 127
	70	P,D,C,Y	—	1	—	—	—	—	—	—	2900 168
	71	P,D,C,Y	1	1	—	—	—	—	—	—	2900 168
		P,D	—	—	—	—	1	—	—	—	2900 166
		C	—	—	—	—	1	—	—	—	2900 169
	FRAME, Rear Wdo. Opening Lower										
		V,L	—	—	—	1	—	—	—	—	2965 656
		V	—	—	—	—	1	—	—	—	2604 025
	70	R,W	1	1	—	—	—	—	—	—	2842 804
	70	R,W	—	—	—	—	1	—	—	—	2838 565
	70	W	—	—	—	1	—	—	—	—	2840 384
	70	P,D	1	—	—	1	—	1	—	—	2900 178
	71	P,D	—	—	—	1	—	1	—	—	2900 178
	70	P,D,C,Y	—	1	—	—	—	—	—	—	2900 146
	71	P,D,C,Y	1	1	—	—	—	—	—	—	2900 146
		P,D	—	—	—	—	1	—	—	—	2900 126
		C,Y	—	—	—	—	1	1	—	—	2900 180
	FRAME, Rear Wdo. Opening Lower Corner										
	70	P,D	1	—	—	1	—	1	—	—	2900 864-5
	70	P,D,C,Y	—	1	—	—	—	—	—	—	2901 426-7
	71	P,D	—	—	—	1	—	1	—	—	2900 864-5
	71	P,D,C,Y	1	1	—	—	—	—	—	—	2901 426-7
	FRAME, Rear Wdo. Opening Lower End										
	70	R,W	—	—	—	—	1	—	—	—	2838 568-9
23-64-67	SUPPORT, Rear Wdo. Upper Frame to Roof Side Rail										
	70	W	—	—	—	1	—	—	—	—	2840 714-5
23-64-68	EXTENSION, Rear Wdo. Opening Lower Frame										
		V,L	—	—	—	1	—	—	—	—	3444 206-7
		P,D	—	—	—	—	1	—	—	—	2901 640-1
	EXTENSION, Rear Wdo. Opening Lower Corner										
		C,Y	—	—	—	—	1	1	—	—	2900 576-7
23-64-71	BUMPER, V/WING Upper Frame	V,L	—	1	—	—	—	—	—	—	2811 992-3
	70	B,J	—	1	—	1	—	—	—	—	2895 658-9
	70	R,W	1	1	—	1	—	—	—	—	2811 312-3
	70	R,W	—	—	1	—	—	—	—	—	2860 086-7
	70	P,D,C,Y	1	—	—	—	—	1	—	—	2893 434-5
	70	P,D,C	—	—	1	—	—	—	—	—	2894 896-7
	w/Power Vent Wdos. 71	C,Y	—	—	—	—	—	1	—	—	2893 434-5
	SCREW, V/Wing Upper Bumper Attaching	All	2	2	2	2	—	2	—	—	449 603
	PLUG, Front Door Inside Panel Glass Rear Run Channel Lower Access Hole										
		V,L	—	2	—	—	—	—	—	—	2811 953
	70	R,W	2	2	2	2	—	—	—	—	2811 953
		P,D,C,Y	2	2	2	2	—	2	—	—	2811 953

CARLINES	J - Challenger B - Barracuda	V - Valiant L - Dart	R - Belvedere - Satallite W - Coronet - Charger	P - Plymouth D - Dodge	C - Chrysler Y - Imperial
NUMERALS INDICATE:	21 - 2 DR. SED. 23 - 2 DR. H.T.		27 - CONV. CPE. 29 - FAST BACK	41 - 4 DR. SED. 43 - 4 DR. H.T.	45 - 6 PASS. STA. WGN. 46 - 9 PASS. STA. WGN.

AR Indicates use as required.
\# Indicates parts not listed in any previous parts book
Numerals in parentheses ( ) refer to notes.
★ Indicates change or addition.

Printed in U.S.A.
January 1972

Right and left part numbers are on same line, first number is right, second number is left.

23-64-0 WINDOW AND VENT WING Cont'd.

23-64-71 BUMPER Cont'd.

CODE	PART NAME		MODEL CODES	SEE BOTTOM NOTE 21	23	27	29	41	43	45	46	PART NUMBER
	PLUG, Front Door Inside Panel Glass Track Lower Bracket Attaching Hole	70	P,D,C	2	—	2	—	—	—	—	—	2094 984
	PLUG, Front Door Inside Panel Front and Rear Track Lower Attaching Hole Sealing	70	B,J	—	AR	AR	AR	—	—	—	—	2895 498
	PLUG, Front Door Inside Panel V/Wing Attaching Access Hole	70	R,W	4	4	4	4	—	—	—	—	2811 953
	PLUG, Front Door Insiae Panel V Wing Attaching Access Hole	Upr.	V,L	—	2	—	—	—	—	—	—	1950 477
		Upr. 70	P,D,C,Y	2	—	2	—	—	2	—	—	1950 477
	w Power Vent Wdos.	Upr. 71	C,Y	—	—	—	—	—	2	—	—	1950 477
		Lwr. 70	V,L	—	2	—	—	2	—	—	—	2811 998
		Lwr. 71	V	—	2	—	—	2	—	—	—	2811 998
		Lwr. 71	L	—	2	—	2	2	—	—	—	2811 998
		Lwr. 70	R,W	2	2	2	2	2	—	2	2	2811 998
	Attaching Hole	70	B,J	—	2	2	2	—	—	—	—	2895 126
		70	P,D,C,Y	2	2	—	2	—	—	—	—	3440 647
	PLUG, Front Door Inside Panel V Wing Attaching Access Hole at Belt Vinyl	Black 70	L,R,W	2	2	2	2	—	—	—	—	4513 DX9
		Medium Blue 70	L,R,W	2	2	2	2	—	—	—	—	4513 EB5
		Dark Blue 70	L,R,W	2	2	2	2	—	—	—	—	4513 EB7
		Copper 70	L,R,W	2	2	2	2	—	—	—	—	4513 FK6
		Green 70	L,R,W	2	2	2	2	—	—	—	—	4513 EF8
		Tan 70	L,R,W	2	2	2	2	—	—	—	—	4513 FT4
		White 70	L,R,W	2	2	2	2	—	—	—	—	4513 EW1
	PLUG, Front Door Inside Panel V/Wing Attaching Access Hole Front	Black 70	R,W	4	4	4	4	—	—	—	—	4139 EX9
		Blue 70	R,W	4	4	4	4	—	—	—	—	4139 EB7
		Copper 70	R,W	4	4	4	4	—	—	—	—	4139 FK6
		Green 70	R,W	4	4	4	4	—	—	—	—	4139 EF8
		Tan 70	R,W	4	4	4	4	—	—	—	—	4139 FT4
		White 70	R,W	4	4	4	4	—	—	—	—	4139 EW1
	PLUG, Front Door Inside Panel Rear Track Upper Attaching Access Hole	Black 70	V	—	—	—	2	—	—	—	—	4513 DX9
		Medium Blue 70	V	—	—	—	2	—	—	—	—	4513 EB5
		Dark Blue 70	V	—	—	—	2	—	—	—	—	4513 EB7
		Copper 70	V	—	—	—	2	—	—	—	—	4513 FK6
		Green 70	V	—	—	—	2	—	—	—	—	4513 EF8
		Tan 70	V	—	—	—	2	—	—	—	—	4513 FT4
		White 70	V	—	—	—	2	—	—	—	—	4513 EW1
		Blue 71	V,L	—	—	—	2	—	—	—	—	4513 GB7
		Green 71	V,L	—	—	—	2	—	—	—	—	4513 GF7
		Black 71	V,L	—	—	—	2	—	—	—	—	4513 DX9
		Gold 71	V,L	—	—	—	2	—	—	—	—	4513 GY4
		Light Tan 71	V,L	—	—	—	2	—	—	—	—	4513 GT6
		Dark Tan 71	V,L	—	—	—	2	—	—	—	—	4513 GT8
	PLUG, Front Door Inside Panel V Wing Attaching Access Hole	Blue 71	V,L	—	2	—	—	—	—	—	—	4513 GB7
		Green 71	V,L	—	2	—	—	—	—	—	—	4513 GF7
		Black 71	V,L	—	2	—	—	—	—	—	—	4513 DX9

CARLINES J - Challenger, B - Barracuda, V - Valiant, L - Dart, R - Belvedere - Satallite, W - Coronet - Charger, P - Plymouth, D - Dodge, C - Chrysler, Y - Imperial

NUMERALS INDICATE: 21 - 2 DR. SED., 23 - 2 DR. H.T., 27 - CONV. CPE., 29 - FAST BACK, 41 - 4 DR. SED., 43 - 4 DR. H.T., 45 - 6 PASS. STA. WGN., 46 - 9 PASS. STA. WGN.

AR Indicates use as required.
\# Indicates parts not listed in any previous parts book
Numerals in parentheses ( ) refer to notes.
★ Indicates change or addition.

Printed in U.S.A.
January 1972

Right and left part numbers are on same line, first number is right, second number is left.

23-64-0 WINDOW AND VENT WING Cont'd.

CODE	PART NAME		MODEL CODES	SEE BOTTOM NOTE 21	23	27	29	41	43	45	46	PART NUMBER
23-64-71	BUMPER Cont'd.											
	Gold	71	V,L	—	2	—	—	—	—	—	—	4513 GY4
	Light Tan	71	V,L	—	—	—	2	—	—	—	—	4513 GT6
	Dark Tan	71	V,L	—	—	—	2	—	—	—	—	4513 GT8
	BUTTON PLUG, Qtr. Wdo. Regulator Hole											
	Blue	71	B,J	—	2	—	—	—	—	—	—	3497 GB4
	Green	71	B,J	—	2	—	—	—	—	—	—	3497 GF8
	Tan	71	B,J	—	2	—	—	—	—	—	—	3497 GT6
	White	71	B,J	—	2	—	—	—	—	—	—	3497 GW1
	Black	71	B,J	—	2	—	—	—	—	—	—	3497 GX9
23-64-74	SEAL, V Wing W Strip Retainer to Door Frame	70	V,L,R,W	—	—	—	—	2	—	2	2	2811 523
		71	V,L	—	—	—	—	2	—	—	—	2811 523
		70	P,D,C	—	—	—	—	2	—	2	2	3439 137
23-64-75	MOTOR w MECHANISM, Front Door Elect. V Wing	70	C,Y	—	—	1	—	1	1	1	1	2945 550-1
		71	C,Y	—	—	—	—	—	1	—	—	2945 550-1
23-64-76	BRACKET, Front Door Elect. V Wing Regulator	70	C,Y	—	—	1	—	1	1	1	1	2935 606-7
		71	C,Y	—	—	—	—	—	1	—	—	2935 606-7
23-64-77	SUPPORT, Front Door V Wing Elect. Motor	71	C,Y	—	—	—	—	—	1	—	—	3581 720-1
23-64-82	CLIP, Front Door Elect. V Wing Shaft Pivot Coupling Attaching	70	C,Y	—	—	2	—	2	2	2	2	2428 284
		71	C,Y	—	—	—	—	—	2	—	—	2428 284
	CLIP, Front Door Manual V Wing Wdo. Regulator Coupling Attaching	70	P,D,C,Y	2	—	2	—	2	2	2	2	2428 284
23-64-84	FILLER, Rear Wdo. Opening Lower Corner		V	—	—	—	—	1	—	—	—	2604 886-7
			V,L	—	1	—	—	—	—	—	—	2782 066-7
			L	—	—	—	—	1	—	—	—	2604 888-9
23-64-93	SHAFT, Front Door V Wing Lower Pivot to Regulator Socket	70	P,D,C,Y	2	—	2	—	2	2	2	2	2893 576
	w Power Vent Wdos.	71	C,Y	—	—	—	—	—	2	—	—	2893 576
23-64-95	BEARING, Front Door V Wing Lower Pivot to Regulator Socket Shaft	70	P,D,C,Y	4	—	4	—	4	4	4	4	2571 215
	w Power Vent Wdos.	71	C,Y	—	—	—	—	—	4	—	—	2571 215
23-64-159	RETAINER, Qtr. Wdo. Glass Pivot Bracket		V,L	—	—	—	2	—	—	—	—	2841 445
		70	R,W	2	—	—	—	—	—	—	—	2841 445
23-64-181	LATCH PACKAGE, Qtr. Wdo. Glass	70	V	—	—	—	2	—	—	—	—	3419 945
		71	V	—	—	—	2	—	—	—	—	3620 490
	LATCH, Qtr. Wdo. Glass		V,L	—	—	—	2	—	—	—	—	2841 447
		70	R,W	2	—	—	—	—	—	—	—	2841 447
	PIN, Handle to Bracket Qtr. Wdo. Rear Attaching		V,L	—	—	—	2	—	—	—	—	273 752
		70	R,W	2	—	—	—	—	—	—	—	273 752
23-64-187	GASKET, Qtr. Wdo. Glass Attaching	70	B	—	2	2	—	—	—	—	—	2965 901
		70	J	—	—	2	—	—	—	—	—	2965 901
		70	J	—	2	—	2	—	—	—	—	3444 139
	GASKET, Qtr. Wdo. Mtg. Bracket	71	B,J,R,W	—	2	—	—	—	—	—	—	3581 776
23-64-197	GUIDE w SUPPORT, Front Door Glass Rear Track Stabilizer	70	B,J	—	1	1	1	—	—	—	—	3439 124-5
	Up To Approximately Oct. 1, 1970	71	B,J	—	1	1	—	—	—	—	—	3439 124-5
	After Approximately Oct. 1, 1970	71	B,J	—	1	1	—	—	—	—	—	# 3582 042-3

CARLINES	J - Challenger	V - Valiant	R - Belvedere - Satallite	P - Plymouth	C - Chrysler
	B - Barracuda	L - Dart	W - Coronet - Charger	D - Dodge	Y - Imperial

NUMERALS INDICATE:	21 - 2 DR. SED.	27 - CONV. CPE.	41 - 4 DR. SED.	45 - 6 PASS. STA. WGN.
	23 - 2 DR. H.T.	29 - FAST BACK	43 - 4 DR. H.T.	46 - 9 PASS. STA. WGN.

AR Indicates use as required.
# Indicates parts not listed in any previous parts book
Numerals in parentheses ( ) refer to notes.
★ Indicates change or addition.

Printed in U.S.A.
January 1972

Right and left part numbers are on same line, first number is right, second number is left.

23-64-0 WINDOW AND VENT WING Cont'd.

CODE	PART NAME		MODEL CODES	SEE BOTTOM NOTE 21	23	27	29	41	43	45	46	PART NUMBER
23-64-197	GUIDE w/SUPPORT Cont'd.											
	GUIDE, Front Door Glass Front Track Stabilizer		B,J	—	4	4	4	—	—	—	—	2895 448
		70	P,D,C,Y	4	4	—	4	—	—	—	—	2895 092
		71	P,D	4	4	—	4	4	4	4	4	2895 092
		71	C,Y	—	4	—	—	4	—	4	4	2895 092
	w/o Power Vent Wdos.	71	C,Y	—	—	—	—	—	4	—	—	2895 092
	GUIDE, Rear Door Glass Stabilizer		P,D,C,Y	—	—	—	—	—	6	—	—	2894 340
	GUIDE, Qtr. Wdo. Front Track Roller		P,D,C,Y	—	4	4	4	—	—	—	—	3454 231
	GUIDE, Qtr. Wdo. Rear Track Roller	70	P,D,C	—	—	2	—	—	—	—	—	3454 231
	SHOULDER SCREW, Front Door Wdo. Glass Support Track Guide to Glass		B,J	—	4	4	4	—	—	—	—	6028 644
		70	P,D,C,Y	4	4	—	4	4	4	4	4	6027 372
		71	P,D,C,Y	4	4	—	4	4	4	4	4	6029 443
	SHOULDER SCREW, Rear Door Glass Track Guide to Track Panel and Glass		P,D,C,Y	—	—	—	—	—	6	—	—	6027 372
23-64-198	STABILIZER, Front Door Glass Outer	Frt. 70	B,J	—	2	2	2	—	—	—	—	3499 848
		Rr. 70	B,J	—	2	2	2	—	—	—	—	3499 849
	TRACK w. BRACKET, Qtr. Wdo. Rear Stabilizer	70	R,W	—	—	1	—	—	—	—	—	2840 336-7
23-64-199	GASKET, Front Door Stabilizer to Glass Plate		V,L	—	—	—	4	—	—	—	—	2895 986
	GASKET, Front Door Stabilizer to Glass		V,L	—	—	—	4	—	—	—	—	2895 979
	GASKET, Front Door Glass Stabilizer Guide and Support		B,J	—	2	2	2	—	—	—	—	3439 115
	Track Guide to Glass	70	B,J	—	4	4	4	—	—	—	—	2945 808
23-64-200	BRACKET, Front Door Glass Stabilizer Bracket											
	Up To Approximately May 1, 1970	70	B,J	—	4	4	4	—	—	—	—	3499 850
	After Approximately May 1, 1970	70	B,J	—	4	4	4	—	—	—	—	3581 174
	BRACKET, Front Door Glass Stabilizer											
	Up To Approximately March 1, 1971	71	B,J	—	4	4	—	—	—	—	—	3581 174
	After Approximately March 1, 1971	71	B,J	—	4	4	—	—	—	—	—	= 3581 975
	Up To Approximately March 1, 1971	71	R,W	—	4	—	4	4	—	4	4	3581 473
	After Approximately March 1, 1971	71	R,W	—	4	—	4	4	—	4	4	= 3581 974
		Frt. Door 71	P,D	AR	AR	—	AR	AR	AR	AR	AR	3581 469
	w/o Power Vent Wdos.	Frt. Door 71	C,Y	—	AR	—	—	AR	AR	AR	AR	3581 469
		Rr. Door 71	P,D,C,Y	—	—	—	—	—	2	—	—	3581 469
23-64-201	PLATE w/STUD, Front Door Stabilizer to Glass		V,L	—	—	—	4	—	—	—	—	2895 984
23-64-213	FILLER, Qtr. O/Side Panel Rear Wdo. Opening Corner		V,L	—	1	—	—	—	—	—	—	2782 164-5
			L	—	—	—	—	1	—	—	—	2782 162-3
		70	R,W	1	1	—	—	—	—	—	—	2838 386-7
		70	P,D	1	—	—	1	—	1	—	—	2900 574-5
		71	P,D	—	—	—	1	—	1	—	—	2900 574-5
	FILLER, Qtr. Wdo. Opening Rear Corner	70	P	1	—	—	—	—	—	—	—	2901 670-1
		70	P,D	—	1	—	—	—	—	—	—	2901 418-9
		71	P,D	1	1	—	—	—	—	—	—	2901 418-9
			C,Y	—	1	—	—	—	—	—	—	2901 420-1
	FILLER, Qtr. Panel Rear Wdo. Opening Lower Corner	70	W	—	—	—	1	—	—	—	—	2838 014-5

CARLINES	J - Challenger	V - Valiant	R - Belvedere - Satellite	P - Plymouth	C - Chrysler
	B - Barracuda	L - Dart	W - Coronet - Charger	D - Dodge	Y - Imperial

NUMERALS INDICATE:	21 - 2 DR. SED.	27 - CONV. CPE.	41 - 4 DR. SED.	45 - 6 PASS. STA. WGN.
	23 - 2 DR. H.T.	29 - FAST BACK	43 - 4 DR. H.T.	46 - 9 PASS. STA. WGN.

AR Indicates use as required.
\# Indicates parts not listed in any previous parts book
Numerals in parentheses ( ) refer to notes.
★ Indicates change or addition.

Printed in U.S.A.
January 1972

Right and left part numbers are on same line, first number is right, second number is left.

23-64-0 WINDOW AND VENT WING Cont'd.

CODE	PART NAME		MODEL CODES	SEE BOTTOM NOTE 21	23	27	29	41	43	45	46	PART NUMBER
23-64-213	FILLER Cont'd.											
	FILLER, Qtr. Wdo. Opening Lower Corner		V,L	—	—	—	1	—	—	—	—	2965 584-5
			P	—	—	—	1	—	—	—	—	2965 092-3
	FILLER, Qtr. Wdo. Opening Rear Lower Corner		P,D,C	—	—	—	—	—	—	1	1	2894 478-9
		71	R,W	—	—	—	—	—	—	1	1	3500 950-1
23-64-237	CLAMP, V 'Wing Upper Pivot	70	All	2	2	2	2	2	2	2	2	1708 998
		71	V,L	—	2	—	—	2	—	—	—	1708 998
	w/Power Vent Wdos.	71	C,Y	—	—	—	—	—	2	—	—	1708 998
23-64-240	PIVOT PACKAGE, V 'Wing Upper		V,L	—	1	—	—	1	—	—	—	2932 436-7
		70	R,W	2	2	—	2	—	—	—	—	2809 961
		70	R,W	—	—	1	—	1	—	1	1	2807 956-7
	PIVOT, V 'Wing Upper		V,L	—	1	—	—	1	—	—	—	2663 754-5
		70	R,W	—	—	1	—	1	—	1	1	2570 282-3
		70	P,D,C,Y	1	—	1	—	1	1	1	1	2893 566-7
	w 'Power Vent Wdos.	71	C,Y	—	—	—	—	—	1	—	—	2893 566-7
	STUD, V 'Wing Upper Pivot 1 1 '4" Long	70	R,W	2	2	—	2	—	—	—	—	6027 344
23-64-242	CLAMP, V 'Wing Lower Pivot Tension		V,L	—	2	—	—	2	—	—	—	2663 742
	CLAMP or BEARING, V 'Wing Lower Pivot	70	P,D,C,Y	2	—	2	—	2	2	2	2	2893 554
	w 'Power Vent Wdos.	71	C,Y	—	—	—	—	—	2	—	—	2893 554
	CLAMP, Qtr. Wdo. Mounting Bracket	71	B,J,R,W	—	2	—	—	—	—	—	—	3581 738
	BRACKET, Front Door Inside Panel to V 'Wing Frame Lower Front	70	R,W	1	1	1	1	—	—	—	—	2895 362-3
	BRACKET PACKAGE, Upper V 'Wing Pivot	70	P,D,C,Y	1	—	1	—	1	1	1	1	3419 350-1
	w 'Power Vent Wdos.	71	C,Y	—	—	—	—	—	1	—	—	3419 350-1
	SCREW, V 'Wing Clamp to Upper Pivot Bracket		All	2	2	2	2	2	2	2	2	6000 379
	PIN, V 'Wing Lower Pivot Stop	70	R,W	2	2	2	2	2	—	2	2	9409 639
	SPEED NUT, V 'Wing Lower Pivot Bracket to Clamp		All	2	2	2	2	2	2	2	2	6022 274
23-64-246	WASHER, V 'Wing Upper Clamp to Glass	70	All	2	2	2	2	2	2	2	2	1909 944
		71	V,L	—	2	—	—	2	—	—	—	1909 944
	w/Power Vent Wdos.	71	C,Y	—	—	—	—	—	2	—	—	1909 944
	WASHER, Qtr. Wdo. Glass to Latch		V,L	—	—	—	2	—	—	—	—	1909 944
		70	R,W	2	—	—	—	—	—	—	—	1909 944
23-64-254	TRACK w 'BRACKETS, Front Door Glass	Frt.	V,L	—	—	—	1	—	—	—	—	2895 956-7
		Rr.	V,L	—	—	—	1	—	—	—	—	2895 948-9
		Frt.	B,J	—	1	1	1	—	—	—	—	2895 996-7
		Rr.	B,J	—	1	1	1	—	—	—	—	2895 416-7
		Frt. 71	P,D	—	—	—	—	1	1	1	1	3499 058-9
	w 'o Power Vent Wdos.	Frt. 71	C,Y	—	—	—	—	1	1	1	1	3499 058-9
	TRACK w 'Upper BRACKET, Front Door Glass		P,D,C,Y	1	1	—	1	—	—	—	—	2933 244-5
	TRACK, Front Door Glass	Frt. 71	R,W	—	1	—	1	—	—	—	—	3581 116-7
	Up To Approximately Dec. 1, 1970	Rr. 71	R,W	—	1	—	1	—	—	—	—	3581 112-3
	After Approximately Dec. 1, 1970	Rr. 71	R,W	—	1	—	1	—	—	—	—	3581 912-3

CARLINES: J - Challenger, B - Barracuda, V - Valiant, L - Dart, R - Belvedere - Satellite, W - Coronet - Charger, P - Plymouth, D - Dodge, C - Chrysler, Y - Imperial

NUMERALS INDICATE: 21 - 2 DR. SED., 23 - 2 DR. H.T., 27 - CONV. CPE., 29 - FAST BACK, 41 - 4 DR. SED., 43 - 4 DR. H.T., 45 - 6 PASS STA. WGN., 46 - 9 PASS. STA. WGN.

AR Indicates use as required.
# Indicates parts not listed in any previous parts book
Numerals in parentheses ( ) refer to notes.
★ Indicates change or addition.

Printed in U.S.A. January 1972

Right and left part numbers are on same line, first number is right, second number is left.

23-64-0 WINDOW AND VENT WING Cont'd.

CODE	PART NAME		MODEL CODES	SEE BOTTOM NOTE 21	23	27	29	41	43	45	46	PART NUMBER
23-64-254	TRACK w/BRACKETS Cont'd.											
		71	R,W	—	—	—	—	1	—	1	1	3499 272-3
	TEE-BOLT	71	R,W	—	4	—	4	—	—	—	—	6027 541
	NUT w WASHER	71	R,W	—	4	—	4	—	—	—	—	120 376
	WASHER	71	R,W	—	4	—	4	—	—	—	—	6028 588
	TEE-NUT	71	P,D,C,Y	4	4	—	4	4	4	4	4	6028 587
23-64-266	BUMPER, Door Glass Front Track Upper Attaching Bracket		B,J	—	2	2	2	—	—	—	—	3440 798
	BUMPER, Door Glass Lift Channel	71	B,J	—	2	2	—	—	—	—	—	3440 798
	BUMPER, Door Inside Panel	71	B,J	—	4	4	4	—	—	—	—	3440 798
	BUMPER, Front Door Glass	71	R,W	—	2	—	2	2	—	2	2	3440 798
	BUMPER, Front Door Outside Panel Belt Reinforcement	Frt. 71	R,W	—	AR	—	AR	AR	—	AR	AR	3581 055
		Rr. 71	R,W	—	AR	—	AR	AR	—	AR	AR	3581 054
	BUMPER, Front Door Glass Track Upper Rear	71	R,W	—	2	—	2	—	—	—	—	3581 054
	BUMPER, Front Door Outside Panel Belt Reinforcement Glass	71	R,W	—	2	—	2	—	—	—	—	3581 054
	BUMPER, Rear Door Wdo. Glass Lift Channel	71	R,W	—	—	—	—	2	—	2	2	3440 798
	BUMPER, Front Door Glass Track Lower Bracket		P,D,C,Y	2	2	—	2	—	—	—	—	2895 218
	BUMPER, Rear Door Glass Track Lower Bracket Down Stop		P,D,C,Y	—	—	—	—	—	4	—	—	3440 301
	BUMPER, Rear Door Glass Track Panel		P,D,C,Y	—	—	—	—	—	4	—	—	2861 758
23-64-268	PANEL w REINFORCEMENT, Rear Door Glass Track		P,D,C,Y	—	—	—	—	—	1	—	—	3417 318-9
23-64-269	BRACKET w ROLLER and GUIDE, Qtr. Wdo. Track		V,L	—	2	—	—	—	—	—	—	2520 658
		70	R,W	—	4	—	4	—	—	—	—	2520 658
		70	R,W	—	—	4	—	—	—	—	—	2486 058
	BRACKET w ROLLER and GUIDE, Qtr. Wdo. Front Track		P,D,C,Y	—	4	4	4	—	—	—	—	3454 230
	BRACKET w ROLLER and GUIDE, Qtr. Wdo. Rear Track	70	P,D,C	—	—	2	—	—	—	—	—	3454 230
	BRACKET w ROLLER, Door Glass Front Adjusting		V,L	—	—	—	2	—	—	—	—	3439 212
	BRACKET w ROLLER, Qtr. Wdo. Track		V,L	—	2	—	—	—	—	—	—	2520 659
	BRACKET, Front Door Glass Track Lower	70	P,D,C,Y	1	1	—	1	—	—	—	—	2895 034-5
	Up To Approximately July 31, 1971	71	P,D,C,Y	1	1	—	1	—	—	—	—	2895 034-5
	After Approximately July 31, 1971	71	P,D,C,Y	1	1	—	1	—	—	—	—	3582 776-7
	Up To Approximately July 31, 1971	71	P,D	—	—	—	—	1	1	1	1	3499 090-1
	After Approximately July 31, 1971	71	P,D	—	—	—	—	1	1	1	1	3499 096-7
	Up To Approximately July 31, 1971 w o Power Vent Wdos.	71	C,Y	—	—	—	—	1	1	1	1	3499 090-1
	After Approximately July 31, 1971 w o Power Vent Wdos.	71	C,Y	—	—	—	—	1	1	1	1	3499 096-7
	SUPPORT w RETAINER, Front Door Glass Front Track Lower											
	Up to Approximately Oct. 1, 1969	70	B,J	—	2	2	2	—	—	—	—	3417 172
	After Approximately Oct. 1, 1969	70	B,J	—	2	2	2	—	—	—	—	3417 627

CARLINES J - Challenger, B - Barracuda, V - Valiant, L - Dart, R - Belvedere - Satallite, W - Coronet - Charger, P - Plymouth, D - Dodge, C - Chrysler, Y - Imperial

NUMERALS INDICATE: 21 - 2 DR. SED., 23 - 2 DR. H.T., 27 - CONV. CPE., 29 - FAST BACK, 41 - 4 DR. SED., 43 - 4 DR. H.T., 45 - 6 PASS. STA. WGN., 46 - 9 PASS. STA. WGN.

AR Indicates use as required.
\# Indicates parts not listed in any previous parts book
Numerals in parentheses ( ) refer to notes.
★ Indicates change or addition.

Printed in U.S.A.
January 1972

Right and left part numbers are on same line, first number is right, second number is left.

23-64-0 WINDOW AND VENT WING Cont'd.

CODE	PART NAME		MODEL CODES	SEE BOTTOM NOTE 21	23	27	29	41	43	45	46	PART NUMBER
23-64-269	BRACKET w/ROLLER and GUIDE Cont'd.											
		71	B,J	—	2	2	2	—	—	—	—	3417 627
	SUPPORT, Front Roller Track Brace to Side Sill Panel	70	R,W	—	2	2	2	—	—	—	—	2603 156
23-64-270	SEAL, Front Door Wdo. Glass Support Track Guide to Glass	70	B,J	—	4	4	4	—	—	—	—	1556 385
23-64-271	PLATE, Qtr. Wdo. Roller Track Lower Support	71	R,W	—	2	—	2	—	—	—	—	3581 286
23-64-272	FASTENER, Front Door Glass To Front Track											
	Up to Approximately May 4, 1970	70	B,J	—	4	4	4	—	—	—	—	2895 823
	After Approximately May 4, 1970	70	B,J	—	4	4	4	—	—	—	—	3499 812
		71	B,J	—	4	4	—	—	—	—	—	3499 812
	FASTENER, Front Door Glass to Lift Channel Front	70	B,J	—	2	2	2	—	—	—	—	2811 852
	FASTENER, Rear Door Glass Stabilizer and Channel Att.	Rr. 71	R,W	—	—	—	—	4	—	4	4	2811 852
	FASTENER, Door Glass to Lift Channel	Frt. 70	P,D,C,Y	4	4	4	4	4	4	4	4	2811 852
		Rr. 70	P,D,C,Y	—	—	—	—	4	4	4	4	2811 852
		Frt. 71	All	AR	AR	AR	AR	AR	AR	AR	AR	2811 852
		Rr. 71	R,W	—	—	—	—	AR	—	AR	AR	2811 852
		Rr. 71	P,D,C,Y	—	—	—	—	AR	AR	AR	AR	2811 852
	FASTENER, Front Door Wdo. Glass to Support Track and Guide											
	13 16" Long	70	P,D,C,Y	4	4	—	4	—	—	—	—	2861 680
	9 16" Long	70	P,P,C,Y	4	4	—	4	—	—	—	—	3499 813
		71	P,D	4	4	—	4	4	4	4	4	3499 813
	w o Power Vent Wdos.	71	C,Y	—	4	—	—	4	4	4	4	3499 813
	FASTENER, Rear Door Glass to Track and Guide											
	13 16" Long	70	P,D,C,Y	—	—	—	—	—	6	—	—	2861 680
	9 16" Long	70	P,D,C,Y	—	—	—	—	—	6	—	—	3499 813
		71	P,D,C,Y	—	—	—	—	—	6	—	—	3499 813
	FASTENER, Front Door Glass Lift Stabilizer to Glass Att.											
	Up To Approximately May 1, 1971	71	V,L	—	—	—	8	—	—	—	—	3581 596
	After Approximately May 1, 1971	71	V,L	—	—	—	8	—	—	—	—	3582 304
	Up To Approximately May 1, 1971	71	B,J	—	2	2	—	—	—	—	—	3581 596
	After Approximately May 1, 1971	71	B,J	—	2	2	—	—	—	—	—	3582 304
	Up To Approximately May 1, 1971	71	R,W	—	—	—	—	6	—	6	6	3581 596
	After Approximately May 1, 1971	71	R,W	—	—	—	—	6	—	6	6	3582 304
	Up To Approximately May 1, 1971	71	P,D,C,Y	4	4	—	4	4	4	4	4	3581 596
	After Approximately May 1, 1971	71	P,D,C,Y	4	4	—	4	4	4	4	4	3582 304
	FASTENER, Rear Door Glass to Lift Channel											
	Up To Approximately May 1, 1971	71	R,W	—	—	—	—	4	—	4	4	3581 596
	After Approximately May 1, 1971	71	R,W	—	—	—	—	4	—	4	4	3582 304
	Up To Approximately May 1, 1971	71	P,D,C,Y	—	—	—	—	4	4	4	4	3581 596
	After Approximately May 1, 1971	71	P,D,C,Y	—	—	—	—	4	4	4	4	3582 304
	FASTENER, Qtr. Wdo. Glass Frame Slide Guide		P	4	—	—	—	—	—	—	—	2811 852
	FASTENER, T Gate Glass to Lift Channel	70	R,W	—	—	—	—	—	—	3	3	2811 852
	Fastener	70	B,J	—	4	4	4	—	—	—	—	3440 623

CARLINES	J - Challenger B - Barracuda	V - Valiant L - Dart	R - Belvedere - Satallite W - Coronet - Charger	P - Plymouth D - Dodge	C - Chrysler Y - Imperial
NUMERALS INDICATE:	21 - 2 DR. SED. 23 - 2 DR. H.T.	27 - CONV. CPE. 29 - FAST BACK	41 - 4 DR. SED. 43 - 4 DR. H.T.	45 - 6 PASS. STA. WGN. 46 - 9 PASS. STA. WGN.	

AR Indicates use as required.
\# Indicates parts not listed in any previous parts book
Numerals in parentheses ( ) refer to notes.
★ Indicates change or addition.

Printed in U.S.A.
January 1972

Right and left part numbers are on same line, first number is right, second number is left.

23-64-0 WINDOW AND VENT WING Cont'd.

CODE	PART NAME		MODEL CODES	SEE BOTTOM NOTE 21	23	27	29	41	43	45	46	PART NUMBER
23-64-272	FASTENER Cont'd.											
	SPACER, Front Door Glass Rear Track Stabilizer Guide and Support to Glass		B,J	—	4	4	4	—	—	—	—	2216 544
	SPACER, Qtr. Wdo. Glass Lower											
	Up To June 1, 1970	71	R,W	—	—	—	—	—	—	4	4	3581 294
	From June 1, 1970 To June 1, 1971	71	R,W	—	—	—	—	—	—	4	4	3581 672
	After June 1, 1971	71	R,W	—	—	—	—	—	—	4	4	3674 325
	SPACER, T/Gate Glass to Lower Frame Att.	71	R,W	—	—	—	—	—	—	4	4	2216 544
	SPACER, T/Gate Glass Lift Channel Glass		P,D,C	—	—	—	—	—	—	4	4	2216 544
	WASHER, Front Door Glass Rear Track Stabilizer Guide and Support to Glass		B,J	—	4	4	4	—	—	—	—	2423 535
	SCREW, T/Gate Glass to Lower Frame	70	R,W	—	—	—	—	—	—	3	3	6026 756
	SCREW, T/Gate Glass Lift Channel to TEE-NUT, T/Gate Glass to Lower Frame Att.	71	R,W	—	—	—	—	—	—	4	4	6029 135
	SCREW, T/Gate Glass to Lower Frame Att.	71	R,W	—	—	—	—	—	—	4	4	6016 005
	Glass Attaching		P,D,C	—	—	—	—	—	—	4	4	6028 652
	TEE-NUT, T/Gate Glass Lift Channel to Glass Attaching 1/4"-20		P,D,C	—	—	—	—	—	—	4	4	6028 587
23-64-273	SUPPORT, Rear Door Glass Rear Run Channel Lower	70	V,L,R,W	—	—	—	—	2	—	2	2	2216 673
		71	V,L	—	—	—	—	2	—	—	—	2216 673
23-64-276	SPRING, Front Door Glass Wedge to Track	70	V,B,J	—	2	2	2	—	—	—	—	3439 311
	SPRING, Front Door Glass Wedge to Track Front and Rear	71	V,L	—	—	—	2	—	—	—	—	3439 311
		71	B,J,R,W	—	2	2	2	—	—	—	—	3439 311
	SPRING, Front Door Glass Frame Rear Wedge	70	R,W	—	2	—	2	—	—	—	—	3439 001
	SPRING, Front Door Glass Wedge to Rear Channel Upper Bracket		P,D,C,Y	2	2	2	2	—	2	—	—	2894 180
	SPRING, Qtr. Wdo. Lower Frame Slide		B,J	—	1	1	1	—	—	—	—	3505 728-9
	SPRING, Qtr. Wdo. Lower Slide											
	Up To Approximately July 31, 1970	70	B,J	—	2	2	2	—	—	—	—	3506 025
	After Approximately July 31, 1970	70	B,J	—	2	2	2	—	—	—	—	3581 664
		71	B,J	—	2	2	—	—	—	—	—	3581 664
	SPRING, Qtr. Wdo. Track Slide	71	R,W	—	4	—	4	—	—	—	—	3581 664
	SPRING, Qtr. Wdo. Regulator Arm Retaining to Glass Track Slide	71	R,W	—	2	—	2	—	—	—	—	3506 341
23-64-277	SPRING WASHER, Front Door Wdo. Regulator Track Slide		B,J	—	2	2	2	—	—	—	—	2983 010
23-64-278	GROMMET, V/Wing Pivot Bracket to Glass	70	All	2	2	2	2	2	2	2	2	1909 917
		71	V,L	—	2	—	—	2	—	—	—	1909 917
	w/Power Vent Wdos.	71	C,Y	—	—	—	—	—	2	—	—	1909 917
	GROMMET, Qtr. Wdo. Glass Lower Frame Attaching	70	B,J	—	4	4	4	—	—	—	—	3444 179
	GROMMET, Qtr. Wdo. to Latch		V,L	—	—	—	2	—	—	—	—	1708 996
		70	R,W	2	—	—	—	—	—	—	—	1708 996
23-64-280	FRAME w/BRACKET, Qtr. Wdo. Glass Front	70	R,W	1	—	—	—	—	—	—	—	2838 388-9

CARLINES: J - Challenger, B - Barracuda, V - Valiant, L - Dart, R - Belvedere - Satellite, W - Coronet - Charger, P - Plymouth, D - Dodge, C - Chrysler, Y - Imperial

NUMERALS INDICATE: 21 - 2 DR. SED., 23 - 2 DR. H.T., 27 - CONV. CPE., 29 - FAST BACK, 41 - 4 DR. SED., 43 - 4 DR. H.T., 45 - 6 PASS. STA. WGN., 46 - 9 PASS. STA. WGN.

AR Indicates use as required.
\# Indicates parts not listed in any previous parts book
Numerals in parentheses ( ) refer to notes.
★ Indicates change or addition.

Printed in U.S.A.
January 1972

Right and left part numbers are on same line, first number is right, second number is left.

CODE	PART NAME		MODEL CODES	SEE BOTTOM NOTE 21	23	27	29	41	43	45	46	PART NUMBER
23-64-0	**WINDOW AND VENT WING Cont'd.**											
23-64-280	FRAME w/BRACKET Cont'd.											
	FRAME, Qtr. Window Glass Front	CANADA	V,L	—	—	—	1	—	—	—	—	2965 588-9
23-64-281	BRACE, Qtr. Inside Panel to Front Roller Track		V,L	—	1	—	—	—	—	—	—	2840 300-1
		70	R,W	—	1	—	1	—	—	—	—	2603 154-5
	REINFORCEMENT, Qtr. Inside Panel Track Upper Attaching	70	B,J	—	1	—	1	—	—	—	—	3504 078-9
	Up To Approximately Feb. 15, 1970	70	B,J	—	—	1	—	—	—	—	—	3504 078-9
	After Approximately Feb. 15, 1970	70	B,J	—	—	1	—	—	—	—	—	3506 308-9
		71	B,J	—	1	1	—	—	—	—	—	3504 078-9
	REINFORCEMENT, Qtr. Wdo. Opening Lower Corner	70	R,W	1	1	—	1	—	—	—	—	2838 446-7
	REINFORCEMENT, Qtr. Outside Panel Qtr. Wdo. Opening											
		71	R	—	1	—	—	—	—	—	—	3445 630-1
		71	W	—	1	—	1	—	—	—	—	3445 632-3
23-64-282	SLIDE, Qtr. Wdo. Track Regulator Arm Inner and Outer	70	B,J	—	2	2	2	—	—	—	—	3505 066
	SLIDE, Qtr. Wdo. Regulator Arm to Glass Lower Frame	71	B,J	—	2	2	2	—	—	—	—	3445 149
	SLIDE, Qtr. Wdo. Track Lower Inner and Outer (2-Piece Type-Black Plastic)		B,J	—	2	2	2	—	—	—	—	3505 064
	(2-Piece Type-Black and White Plastic)		B,J	—	2	2	2	—	—	—	—	3506 031
	SLIDE, Qtr. Wdo. Rear Track		V,L	—	2	—	—	—	—	—	—	2802 211
		70	R,W	—	2	—	2	—	—	—	—	2583 552
	SLIDE, Qtr. Wdo. Glass Lower Frame to Stabilizer	70	R,W	—	—	6	—	—	—	—	—	2574 874
	SLIDE, Qtr. Wdo. Track Inner and Outer	71	R,W	—	4	—	4	—	—	—	—	3506 338
	SLIDE, Qtr. Wdo. Track Regulator Arm	71	R,W	—	2	—	2	—	—	—	—	3506 336
	SLIDE, Front Door Glass Front Edge	70	L,R,W	8	8	8	8	—	—	—	—	2841 646
		70	P,D,C,Y	8	—	8	—	8	8	8	8	2841 646
		71	V,L	—	8	—	—	—	—	—	—	2841 646
	w/Power Vent Wdos.	71	C,Y	—	—	—	—	—	8	—	—	2841 646
	SLIDE, Front Door Manual Wdo. Regulator Track											
		70	V,B,J	—	2	2	2	—	—	—	—	2945 115
		70	P,D,C	2	2	2	2	2	2	2	2	2945 115
	SLIDE, Front or Rear Door Wdo. Regulator	71	All	AR	AR	AR	AR	AR	AR	AR	AR	2945 115
	SLIDE, Rear Door Manual Wdo. Regulator Track	70	P,D,C	—	—	—	—	2	2	2	2	2945 115
	SLIDE, Front Door Electric Wdo. Regulator Front Arm	70	P,D,C,Y	—	2	—	2	—	—	—	—	2945 115
	SLIDE, Front Door Electric Wdo. Regulator Rear Arm	70	B,J	—	2	2	2	—	—	—	—	2945 115
		70	P,D,C,Y	—	2	—	2	—	—	—	—	2945 115
	SLIDE, Rear Door Electric Wdo. Regulator Front Arm	70	P,D,C,Y	—	—	—	—	2	2	2	2	2945 115
	SLIDE, Rear Door Electric Wdo. Regulator Rear Arm	70	P,D,C,Y	—	—	—	—	2	2	2	2	2945 115
	SLIDE, Qtr. Manual Wdo. Regulator Track		B,J	—	2	2	2	—	—	—	—	2945 115
		71	R,W	—	2	—	2	—	—	—	—	2945 115
			P,D,C	2	2	2	2	—	—	—	—	2945 115

CARLINES J - Challenger, B - Barracuda, V - Valiant, L - Dart, R - Belvedere - Satallite, W - Coronet - Charger, P - Plymouth, D - Dodge, C - Chrysler, Y - Imperial

NUMERALS INDICATE: 21 - 2 DR. SED., 23 - 2 DR. H.T., 27 - CONV. CPE., 29 - FAST BACK, 41 - 4 DR. SED., 43 - 4 DR. H.T., 45 - 6 PASS. STA. WGN., 46 - 9 PASS. STA. WGN.

AR Indicates use as required.
# Indicates parts not listed in any previous parts book
Numerals in parentheses ( ) refer to notes.
★ Indicates change or addition.

Printed in U.S.A.
January 1972

Right and left part numbers are on same line, first number is right, second number is left.

CODE	PART NAME		MODEL CODES	SEE BOTTOM NOTE 21	23	27	29	41	43	45	46	PART NUMBER
23-64-0	**WINDOW AND VENT WING Cont'd.**											
23-64-282	SLIDE Cont'd.											
	SLIDE, Qtr. Electric Wdo. Regulator Track		B,J	—	2	2	2	—	—	—	—	2945 115
		71	R,W	—	2	—	2	—	—	—	—	2945 115
			P,D,C,Y	—	4	4	4	—	—	—	—	2945 115
	SHOULDER BOLT, Qtr. Wdo. Track Regulator Arm Retaining Inner and Outer Slide Attaching 1/4" - 20 x 2"		B,J,R,W	—	2	2	2	—	—	—	—	6028 820
	SHOULDER BOLT, Qtr. Wdo. Slide Attaching 1 '4" - 20 x 1"		B,J	—	2	2	2	—	—	—	—	6028 303
	SLIDE, Qtr. Glass Rr. Track	Canada	P,D,C,Y	—	2	2	2	—	—	—	—	2842 316
	RIVET, Slide To Qtr. Glass Lower Frame	Canada	P,D,C,Y	—	2	2	2	—	—	—	—	6026 564
	SHOULDER BOLT, Qtr. Glass Slide Att. 1 5 '16" Long		B,J	—	2	2	2	—	—	—	—	6028 304
23-64-286	PIN, Front Door Glass Front Edge Slide	70	L,R,W	4	4	4	4	—	—	—	—	2861 744
		70	P,D,C,Y	4	—	4	—	4	4	4	4	2861 744
		71	V,L	—	4	—	—	—	—	—	—	2861 744
	w/Power Vent Wdos.	71	C,Y	—	—	—	—	—	4	—	—	2861 744
	PIN, Qtr. Wdo. Glass Front Retainer		V,L	—	—	—	4	—	—	—	—	2861 744
		70	R.W	4	—	—	—	—	—	—	—	2861 744
23-64-288	SHIELD, Qtr. Wdo. Opening Rear Corners		V,L	—	—	—	2	—	—	—	—	3505 339
		70	R,W	2	2	—	2	—	—	—	—	2842 909
23-64-290	STRIP, Front Door Inside Panel Lower Glass Protector		V	—	—	—	4	—	—	—	—	3440 734
23-64-291	ROLLER, Qtr. Wdo. Track Slide	70	R,W	—	2	—	2	—	—	—	—	2520 676
23-64-293	RETAINER, Qtr. Wdo. Regulator Arm to Glass Lower Frame Slide		B,J	—	2	2	2	—	—	—	—	3445 164
	RETAINER, Qtr. Wdo. Glass		V,L	—	—	—	8	—	—	—	—	2841 646
		70	R,W	8	—	—	—	—	—	—	—	2841 646
	RETAINER, Qtr. Wdo. Regulator Arm to Glass Track Slide	71	R,W	—	2	—	2	—	—	—	—	3506 339
23-64-294	CLIP, Front Door Wdo. Regulator Track Slide Anti-Rattle	Manual	B,J	—	4	4	4	—	—	—	—	3548 312
		Electric	B,J	—	4	4	4	—	—	—	—	3548 312
23-64-297	SLEEVE NUT, Qtr. Wdo. Roller Front and Rear Track		V,L	—	AR	—	—	—	—	—	—	2588 202
		70	R,W	—	AR	AR	AR	—	—	—	—	2588 202
			P,D,C,Y	—	AR	AR	AR	—	—	—	—	2588 202
23-64-299	TRACK w/SUPPORT, Qtr. Wdo. Slide		B	—	1	1	—	—	—	—	—	3504 148-9
			J	—	—	1	—	—	—	—	—	3504 148-9
			J	—	1	—	1	—	—	—	—	3504 150-1
	TRACK w/STUD and PLATE, Qtr. Wdo. Roller Front		V,L	—	1	—	—	—	—	—	—	2840 312-3
	TRACK w/STUD and BRACKET, Qtr. Wdo. Roller Front	70	R,W	—	—	1	—	—	—	—	—	2603 490-1
	TRACK, Qtr. Wdo. Roller Front	70	R,W	—	1	—	1	—	—	—	—	2784 170-1
	Up To Approximately Jan. 5, 1970	70	P,D,C,Y	—	1	1	1	—	—	—	—	3419 946-7
	After Approximately Jan. 5, 1970	70	P,D,C,Y	—	1	1	1	—	—	—	—	3499 608-9
		71	P,D,C,Y	—	1	—	1	—	—	—	—	3499 608-9
	TRACK, Qtr. Wdo. Roller Rear		V,L	—	2	—	—	—	—	—	—	2841 089
		70	R,W	—	2	—	2	—	—	—	—	2839 684
			P,D,C,Y	—	1	1	1	—	—	—	—	3419 426-7

CARLINES	J - Challenger B - Barracuda	V - Valiant L - Dart	R - Belvedere - Satallite W - Coronet - Charger	P - Plymouth D - Dodge	C - Chrysler Y - Imperial
NUMERALS INDICATE:	21 - 2 DR. SED. 23 - 2 DR. H.T.	27 - CONV. CPE. 29 - FAST BACK	41 - 4 DR. SED. 43 - 4 DR. H.T.	45 - 6 PASS. STA. WGN. 46 - 9 PASS. STA. WGN.	

AR Indicates use as required.
\# Indicates parts not listed in any previous parts book
Numerals in parentheses ( ) refer to notes.
★ Indicates change or addition.

Printed in U.S.A.
January 1972

Right and left part numbers are on same line, first number is right, second number is left.

23-64-0 WINDOW AND VENT WING Cont'd.

CODE	PART NAME		MODEL CODES	SEE BOTTOM NOTE 21	23	27	29	41	43	45	46	PART NUMBER
23-64-299	TRACK w/SUPPORT Cont'd.											
	TRACK, w/BRACKET, Qtr. Wdo. Slide	71	R,W	—	1	—	1	—	—	—	—	3445 672-3
	STUD, Qtr. Wdo. Slide Track Attaching	Upper	B,J	—	2	2	2	—	—	—	—	6027 538
		Lower	B,J	—	2	2	2	—	—	—	—	6028 359
	STUD & WASHER, Qtr Window Track Att.		B,J	—	4	4	4	—	—	—	—	6028 358
	WASHER, Qtr. Wdo. Roller Front and Rear Track		L	—	AR	—	—	—	—	—	—	6026 530
		70	R,W	—	AR	AR	AR	—	—	—	—	6026 530
			P,D,C,Y	—	AR	AR	AR	—	—	—	—	6026 530
23-64-300	BRACKET, Qtr. Wdo. Track to Outer Sill		B,J	—	1	1	1	—	—	—	—	3446 386-7
	BRACKET, Qtr. Wdo. Roller Front Track Lower Support	70	R,W	—	—	2	—	—	—	—	—	2603 877
	BRACKET, Qtr. Inside Panel Reinforcement Upper Track Att.	71	R,W	—	2	—	2	—	—	—	—	3505 895
	BRACKET, Qtr. Wdo. Mtg.	71	R,W	—	2	—	—	—	—	—	—	3581 737
	SUPPORT, Qtr. Wdo. Front Roller Track	70	R,W	—	2	—	2	—	—	—	—	2901 594
	SUPPORT, Qtr. Wdo. Track Lower Att.	71	R,W	—	1	—	1	—	—	—	—	3581 290-1
	SUPPORT, Qtr. Inside Panel Wdo. Roller Front Track Lower		P,D,C,Y	—	2	2	2	—	—	—	—	3499 568
	SUPPORT, Qtr. Wdo. Glass Rear Run Retainer	70	P	2	—	—	—	—	—	—	—	2901 594
	SUPPORT, Qtr. Wdo. Roller Rear Track Lower		P,D,C,Y	—	2	2	2	—	—	—	—	2901 594
	TEE-BOLT	71	R,W	—	4	—	4	—	—	—	—	6028 428
23-64-306	GLASS VENT WING											
	NOTE: All Glass Listed Below Includes Lower Pivot and Bracket.											
	Clear		V,L	—	1	—	—	1	—	—	—	2861 634-5
	Tinted		V,L	—	1	—	—	1	—	—	—	2861 636-7
	Clear	70	R,W	1	1	—	1	—	—	—	—	2811 358-9
	Tinted	70	R,W	1	1	—	1	—	—	—	—	2811 360-1
	Clear	70	R,W	—	—	1	—	1	—	1	1	3499 106-7
	Tinted	70	R,W	—	—	1	—	1	—	1	1	3499 108-9
	Clear	70	P,D,C,Y	1	—	1	—	1	1	1	1	2893 548-9
	Tinted	70	P,D,C,Y	1	—	1	—	1	1	1	1	2893 550-1
	Clear, w/Power Vent Wdos.	71	C,Y	—	—	—	—	—	1	—	—	2893 548-9
	Tinted, w/Power Vent Wdos.	71	C,Y	—	—	—	—	—	1	—	—	2893 550-1
23-64-308	GLASS FRONT DOOR WINDOW											
	NOTE: Glass Only Unless Otherwise Indicated.											
	Clear		V,L	—	—	—	1	—	—	—	—	2895 888-9
	Tinted		V,L	—	—	—	1	—	—	—	—	2895 890-1
	Clear		V,L	—	—	—	—	1	—	—	—	2663 734-5
	Tinted		V,L	—	—	—	—	1	—	—	—	2663 502-3
	Clear, w/Rr. FRAME		V,L	—	1	—	—	—	—	—	—	2861 898-9
	Tinted, w/Rr. FRAME		V,L	—	1	—	—	—	—	—	—	2861 900-1
	Clear		B,J	—	1	—	1	—	—	—	—	2895 686-7
	Tinted		B,J	—	1	—	1	—	—	—	—	2895 688-9
	Clear		B,J	—	—	1	—	—	—	—	—	3440 320-1
	Tinted		B,J	—	—	1	—	—	—	—	—	3440 322-3
	Clear	70	R,W	1	—	—	—	—	—	—	—	2895 286-7
	Tinted	70	R,W	1	—	—	—	—	—	—	—	2895 288-9
	Clear, w/Rr. FRAME	70	R,W	—	1	—	1	—	—	—	—	3440 424-5

CARLINES J - Challenger, B - Barracuda, V - Valiant, L - Dart, R - Belvedere - Satallite, W - Coronet - Charger, P - Plymouth, D - Dodge, C - Chrysler, Y - Imperial

NUMERALS INDICATE: 21 - 2 DR. SED., 23 - 2 DR. H.T., 27 - CONV. CPE., 29 - FAST BACK, 41 - 4 DR. SED., 43 - 4 DR. H.T., 45 - 6 PASS. STA. WGN., 46 - 9 PASS. STA. WGN.

AR Indicates use as required.
\# Indicates parts not listed in any previous parts book
Numerals in parentheses ( ) refer to notes.
★ Indicates change or addition.

Printed in U.S.A.
January 1972

Right and left part numbers are on same line, first number is right, second number is left.

23-64-0 WINDOW AND VENT WING Cont'd.

CODE	PART NAME		MODEL CODES	SEE BOTTOM NOTE 21	23	27	29	41	43	45	46	PART NUMBER
23-64-308	GLASS Cont'd.											
	Tinted, w/Rr. FRAME	70	R,W	—	1	—	1	—	—	—	—	3440 426-7
	Clear, w/Rr. FRAME	70	R,W	—	—	1	—	—	—	—	—	2895 298-9
	Tinted, w/Rr. FRAME	70	R,W	—	—	1	—	—	—	—	—	2895 300-1
	Clear	70	R,W	—	—	—	—	1	—	1	1	2570 240-1
	Tinted	70	R,W	—	—	—	—	1	—	1	1	2570 822-3
	Clear	71	R,W	—	1	—	1	—	—	—	—	3439 900-1
	Tinted	71	R,W	—	1	—	1	—	—	—	—	3439 902-3
	Clear	71	R,W	—	—	—	—	1	—	1	1	3581 768-9
	Tinted	71	R,W	—	—	—	—	1	—	1	1	3581 770-1
	Clear w/Vent Wdo.	70	P	1	—	—	—	—	—	—	—	3440 688-9
	Tinted w/Vent Wdo.	70	P	1	—	—	—	—	—	—	—	3440 690-1
	Clear w/o Vent Wdo.	70	P	1	—	—	—	—	—	—	—	3499 190-1
	Tinted w/o Vent Wdo.	70	P	1	—	—	—	—	—	—	—	3499 192-3
	Clear, w/Rr. FRAME	70	P,D,C,Y	—	1	—	—	—	—	—	—	2895 440-1
	Tinted, w/Rr. FRAME	70	P,D,C,Y	—	1	—	—	—	—	—	—	2895 442-3
	Clear, w/Rr. FRAME	70	P,D,C	—	—	1	—	—	—	—	—	3440 700-1
	Tinted, w/Rr. FRAME	70	P,D,C	—	—	1	—	—	—	—	—	3440 702-3
	Clear, w/Rr. FRAME	70	P	—	—	—	1	—	—	—	—	2895 378-9
	Tinted, w/Rr. FRAME	70	P	—	—	—	1	—	—	—	—	2895 380-1
	Clear, w/Rr. FRAME	70	P,D,C,Y	—	—	—	—	—	1	—	—	3440 704-5
	Tinted, w/Rr. FRAME	70	P,D,C,Y	—	—	—	—	—	1	—	—	3440 706-7
	Clear	70	P,D,C	—	—	—	—	1	—	1	1	2893 508-9
	Tinted	70	P,D,C	—	—	—	—	1	—	1	1	2893 510-1
	Clear	71	P,D,C,Y	1	1	—	—	—	—	—	—	3499 856-7
	Tinted	71	P,D,C,Y	1	1	—	—	—	—	—	—	3499 858-9
	Clear	71	P	—	—	—	1	—	—	—	—	3499 860-1
	Tinted	71	P	—	—	—	1	—	—	—	—	3499 862-3
	Clear, w/Rr. Frame	71	P,D	—	—	—	—	—	1	—	—	3440 944-5
	Tinted, w/Rr. Frame	71	P,D	—	—	—	—	—	1	—	—	3440 946-7
	Clear, w/o Rr. Frame	71	P,D	—	—	—	—	—	1	—	—	3581 484-5
	Tinted, w/o Rr. Frame	71	P,D	—	—	—	—	—	1	—	—	3581 486-7
	Clear, w/Rear Frame w/o Power Vent Wdos.	71	C,Y	—	—	—	—	—	1	—	—	3440 944-5
	Tinted, w/Rear Frame w/o Power Vent Wdos.	71	C,Y	—	—	—	—	—	1	—	—	3440 946-7
	Clear, w/o Rr. Frame w/o Power Vent Wdos.	71	C,Y	—	—	—	—	—	1	—	—	3581 484-5
	Tinted, w/o Rr. Frame w/o Power Vent Wdos.	71	C,Y	—	—	—	—	—	1	—	—	3581 486-7
	Clear, w/Rear Frame w/Power Vent Wdos.	71	C,Y	—	—	—	—	—	1	—	—	3440 704-5
	Tinted, w/Rear Frame w/Power Vent Wdos.	71	C,Y	—	—	—	—	—	1	—	—	3440 706-7
	Clear	71	P,D,C	—	—	—	—	1	—	1	1	3440 936-7
	Tinted	71	P,D,C	—	—	—	—	1	—	1	1	3440 938-9
	REAR DOOR WINDOW											
	NOTE: Glass Only Unless Otherwise Indicated											
	Clear		V,L	—	—	—	—	1	—	—	—	2663 782-3
	Tinted		V,L	—	—	—	—	1	—	—	—	2663 610-1
	Clear, Stationary		V,L	—	—	—	—	1	—	—	—	2663 784-5
	Tinted, Stationary		V,L	—	—	—	—	1	—	—	—	2663 612-3
	Clear	70	R,W	—	—	—	—	1	—	—	—	2811 460-1
	Tinted	70	R,W	—	—	—	—	1	—	—	—	2811 462-3
	Clear, Stationary	70	R,W	—	—	—	—	1	—	—	—	2811 464-5
	Tinted, Stationary	70	R,W	—	—	—	—	1	—	—	—	2811 466-7
	Clear	70	R,W	—	—	—	—	—	—	1	1	2570 370-1
	Tinted	70	R,W	—	—	—	—	—	—	1	1	2570 962-3

CARLINES J - Challenger, B - Barracuda, V - Valiant, L - Dart, R - Belvedere - Satallite, W - Coronet - Charger, P - Plymouth, D - Dodge, C - Chrysler, Y - Imperial

NUMERALS INDICATE: 21 - 2 DR. SED., 23 - 2 DR. H.T., 27 - CONV. CPE., 29 - FAST BACK, 41 - 4 DR. SED., 43 - 4 DR. H.T., 45 - 6 PASS. STA. WGN., 46 - 9 PASS. STA. WGN.

AR Indicates use as required.
# Indicates parts not listed in any previous parts book
Numerals in parentheses ( ) refer to notes.
★ Indicates change or addition.

Printed in U.S.A.
January 1972

Right and left part numbers are on same line, first number is right, second number is left.

23-64-0 WINDOW AND VENT WING Cont'd.

CODE	PART NAME		MODEL CODES	SEE BOTTOM NOTE 21	23	27	29	41	43	45	46	PART NUMBER
23-64-308	GLASS Cont'd.											
	Clear, Stationary	70	R,W	—	—	—	—	—	—	1	1	2811 472-3
	Tinted, Stationary	70	R,W	—	—	—	—	—	—	1	1	2811 474-5
	Clear	71	R,W	—	—	—	—	1	—	—	—	3440 070-1
	Tinted	71	R,W	—	—	—	—	1	—	—	—	3440 072-3
	Clear	71	R,W	—	—	—	—	—	—	1	1	3440 074-5
	Tinted	71	R,W	—	—	—	—	—	—	1	1	3440 076-7
	Clear		P,D	—	—	—	—	1	—	—	—	2893 912-3
	Tinted		P,D	—	—	—	—	1	—	—	—	2893 914-5
	Clear		C	—	—	—	—	1	—	—	—	2893 916-7
	Tinted		C	—	—	—	—	1	—	—	—	2893 918-9
	Clear, w 'Frt. FRAME and W 'STRIP	70	P,D	—	—	—	—	—	1	—	—	2893 842-3
	Tinted, w 'Frt. FRAME and W 'STRIP	70	P,D	—	—	—	—	—	1	—	—	2893 844-5
	Clear, w 'Frt. FRAME and W 'SRTIP	70	C,Y	—	—	—	—	—	1	—	—	2893 846-7
	Tinted, w 'Frt. FRAME and W 'STRIP	70	C,Y	—	—	—	—	—	1	—	—	2893 848-9
	Clear, w 'Frt. Frame and W 'Strip											
	Up To Feb. 1, 1971	71	P,D	—	—	—	—	—	1	—	—	3581 996-7
	From Feb. 1, 1971 To June 15, 1971	71	P,D	—	—	—	—	—	1	—	—	3582 062-3
	After June 15, 1971	71	P,D	—	—	—	—	—	1	—	—	3581 696-7
	Tinted, w 'Frt. Frame and W 'Strip											
	Up To Feb. 1, 1971	71	P,D	—	—	—	—	—	1	—	—	3581 998-9
	From Feb. 1, 1971 to June 15, 1971	71	P,D	—	—	—	—	—	1	—	—	3582 064-5
	After June 15, 1971	71	P,D	—	—	—	—	—	1	—	—	3581 694-5
	Clear, w 'Frt. Frame and W 'Strip											
	Up To Feb. 1, 1971	71	C,Y	—	—	—	—	—	1	—	—	3582 000-1
	From Feb. 1, 1971 To June 15, 1971	71	C,Y	—	—	—	—	—	1	—	—	3582 066-7
	After June 15, 1971	71	C,Y	—	—	—	—	—	1	—	—	3581 700-1
	Tinted, w 'Frt. Frame and W 'Strip											
	Up To Feb. 1, 1971	71	C,Y	—	—	—	—	—	1	—	—	3582 002-3
	From Feb. 1, 1971 To June 15, 1971	71	C,Y	—	—	—	—	—	1	—	—	3582 068-9
	After June 15, 1971	71	C,Y	—	—	—	—	—	1	—	—	3581 698-9
	Clear		P,D,C	—	—	—	—	—	—	1	1	2893 920-1
	Tinted		P,D,C	—	—	—	—	—	—	1	1	2893 922-3
23-64-311	GLASS											
	QUARTER WINDOW											
	NOTE: Glass Only Unless Otherwise Indicated.											
	Clear		V,L	—	—	—	1	—	—	—	—	2965 592-3
	Tinted		V,L	—	—	—	1	—	—	—	—	2965 594-5
	Clear, w 'Frt. FRAME		V,L	—	1	—	—	—	—	—	—	2840 802-3
	Tinted, w 'Frt. FRAME		V,L	—	1	—	—	—	—	—	—	2840 804-5
	Clear, Complete	70	B	—	1	—	—	—	—	—	—	3505 730-1
	Tinted, Complete	70	B	—	1	—	—	—	—	—	—	3505 732-3
	Clear, Complete	70	J	—	1	—	1	—	—	—	—	3505 738-9
	Tinted, Complete	70	J	—	1	—	1	—	—	—	—	3505 740-1
	Clear, Complete	70	B,J	—	—	1	—	—	—	—	—	3505 734-5
	Tinted, Complete	70	B,J	—	—	1	—	—	—	—	—	3505 736-7
	Clear, Complete	71	B	—	1	—	—	—	—	—	—	3500 272-3
	Tinted, Complete	71	B	—	1	—	—	—	—	—	—	3500 274-5
	Clear, Complete	71	J	—	1	—	—	—	—	—	—	3500 280-1
	Tinted, Complete	71	J	—	1	—	—	—	—	—	—	3500 282-3
	Clear, Complete	71	B,J	—	—	1	—	—	—	—	—	3500 276-7
	Tinted, Complete	71	B,J	—	—	1	—	—	—	—	—	3500 278-9
	Clear	70	R	1	—	—	—	—	—	—	—	2838 434-5
	Tinted	70	R	1	—	—	—	—	—	—	—	2838 436-7
	Clear	70	W	1	—	—	—	—	—	—	—	2840 708-9
	Tinted	70	W	1	—	—	—	—	—	—	—	2840 710-1
	Clear	70	R,W	—	1	—	1	—	—	—	—	2838 438-9
	Tinted	70	R,W	—	1	—	1	—	—	—	—	2838 440-1

CARLINES: J - Challenger, B - Barracuda, V - Valiant, L - Dart, R - Belvedere - Satellite, W - Coronet - Charger, P - Plymouth, D - Dodge, C - Chrysler, Y - Imperial

NUMERALS INDICATE: 21 - 2 DR. SED., 23 - 2 DR. H.T., 27 - CONV. CPE., 29 - FAST BACK, 41 - 4 DR. SED., 43 - 4 DR. H.T., 45 - 6 PASS. STA. WGN., 46 - 9 PASS. STA. WGN.

AR Indicates use as required.
# Indicates parts not listed in any previous parts book
Numerals in parentheses ( ) refer to notes.
★ Indicates change or addition.

Printed in U.S.A.
January 1972

Right and left part numbers are on same line, first number is right, second number is left.

CODE	PART NAME		MODEL CODES	SEE BOTTOM NOTE 21	23	27	29	41	43	45	46	PART NUMBER
23-64-0	**WINDOW AND VENT WING Cont'd.**											
23-64-311	GLASS Cont'd.											
	Clear, Complete	70	R,W	—	—	1	—	—	—	—	—	2603 700-1
	Tinted, Complete	70	R,W	—	—	1	—	—	—	—	—	2603 702-3
	Clear	70	R,W	—	—	—	—	—	—	1	1	2811 774-5
	Tinted	70	R,W	—	—	—	—	—	—	1	1	2811 776-7
	Clear, Complete Roll Down Type	71	R	—	1	—	—	—	—	—	—	3445 568-9
	Tinted, Complete Roll Down Type	71	R	—	1	—	—	—	—	—	—	3445 570-1
	Clear, w/Frt. Frame and W/Strip Stationary Type	71	R	—	1	—	—	—	—	—	—	3581 760-1
	Tinted, w/Frt. Frame and W/Strip Stationary Type	71	R	—	1	—	—	—	—	—	—	3581 762-3
	Clear, Complete Roll Down Type	71	W	—	1	—	—	—	—	—	—	3445 572-3
	Tinted, Complete Roll Down Type	71	W	—	1	—	—	—	—	—	—	3445 574-5
	Clear, w/Frt. Frame and W/Strip Stationary Type	71	W	—	1	—	—	—	—	—	—	3581 764-5
	Tinted, w/Frt. Frame and W Strip Stationary Type	71	W	—	1	—	—	—	—	—	—	3581 766-7
	Clear, Complete	71	W	—	—	—	1	—	—	—	—	3445 572-3
	Tinted, Complete	71	W	—	—	—	1	—	—	—	—	3445 574-5
	Clear	71	R,W	—	—	—	—	—	—	1	1	3440 204-5
	Tinted	71	R,W	—	—	—	—	—	—	1	1	3440 206-7
	Clear	70	P	1	—	—	—	—	—	—	—	2900 602-3
	Tinted	70	P	1	—	—	—	—	—	—	—	2900 604-5
	Clear, w/Frt. FRAME and W/STRIP	70	P,D,C,Y	—	1	—	—	—	—	—	—	2901 898-9
	Tinted, w/Frt. FRAME and W/STRIP	70	P,D,C,Y	—	1	—	—	—	—	—	—	2901 900-1
	Clear, w/Frt. FRAME and W/STRIP	70	P,D,C	—	—	1	—	—	—	—	—	2902 384-5
	Tinted, w/Frt. FRAME and W/STRIP	70	P,D,C	—	—	1	—	—	—	—	—	2902 386-7
	Clear, w/Frt. FRAME and W/STRIP	70	P	—	—	—	1	—	—	—	—	2965 928-9
	Tinted, w/Frt. FRAME and W/STRIP	70	P	—	—	—	1	—	—	—	—	2965 970-1
	Clear, w/Frt. Frame and W/Strip	71	P,D,C,Y	1	1	—	—	—	—	—	—	3615 072-3
	Tinted, w/Frt. Frame and W/Strip	71	P,D,C,Y	1	1	—	—	—	—	—	—	3615 074-5
	Clear, w/Frt. Frame and W/Strip	71	P	—	—	—	1	—	—	—	—	3581 062-3
	Tinted, w/Frt. Frame and W/Strip	71	P	—	—	—	1	—	—	—	—	3581 064-5
	Clear		P,D,C	—	—	—	—	—	—	1	1	2893 266-7
	Tinted		P,D,C	—	—	—	—	—	—	1	1	2893 268-9
23-64-314	GLASS REAR WINDOW											
	NOTE: For Convertible Coupe Rear Window Refer to Part Type Code 23-112-45.											
	Clear		V,L	—	—	—	1	—	—	—	—	2965 657
	Tinted		V,L	—	—	—	1	—	—	—	—	2965 658
	Clear		V	—	—	—	—	1	—	—	—	2963 970
	Tinted		V	—	—	—	—	1	—	—	—	2963 971
	Clear		V,L	—	1	—	—	—	—	—	—	2604 006
	Tinted		V,L	—	1	—	—	—	—	—	—	2604 007
	Clear		L	—	—	—	—	1	—	—	—	2603 690
	Tinted		L	—	—	—	—	1	—	—	—	2603 691
	Clear		B	—	1	—	—	—	—	—	—	2963 272
	Tinted		B	—	1	—	—	—	—	—	—	2963 273
	Clear, w/Formal Roof Pkg.		J	—	1	—	—	—	—	—	—	3444 077
	Tinted, w/Formal Roof Pkg.		J	—	1	—	—	—	—	—	—	3444 078
	Clear, w/o Formal Roof Pkg.		J	—	1	—	—	—	—	—	—	2963 274
	Tinted, w/o Formal Roof Pkg.		J	—	1	—	—	—	—	—	—	2963 275
	Clear	70	J	—	—	—	1	—	—	—	—	3444 077
	Tinted	70	J	—	—	—	1	—	—	—	—	3444 078

CARLINES: J - Challenger, B - Barracuda, V - Valiant, L - Dart, R - Belvedere - Satellite, W - Coronet - Charger, P - Plymouth, D - Dodge, C - Chrysler, Y - Imperial

NUMERALS INDICATE: 21 - 2 DR. SED., 23 - 2 DR. H.T., 27 - CONV. CPE., 29 - FAST BACK, 41 - 4 DR. SED., 43 - 4 DR. H.T., 45 - 6 PASS. STA. WGN., 46 - 9 PASS. STA. WGN.

AR Indicates use as required.
\# Indicates parts not listed in any previous parts book
Numerals in parentheses ( ) refer to notes.
★ Indicates change or addition.

Printed in U.S.A.
January 1972

Right and left part numbers are on same line, first number is right, second number is left.

23-64-0 WINDOW AND VENT WING Cont'd.

CODE	PART NAME		MODEL CODES	SEE BOTTOM NOTE 21	23	27	29	41	43	45	46	PART NUMBER
23-64-314	GLASS Cont'd.											
	Clear	70	R,W	1	1	—	—	—	—	—	—	2842 344
	Tinted	70	R,W	1	1	—	—	—	—	—	—	2842 345
	Clear	70	W	—	—	—	1	—	—	—	—	2838 130
	Tinted	70	W	—	—	—	1	—	—	—	—	2838 131
	Clear	70	R,W	—	—	—	—	1	—	—	—	2838 663
	Tinted	70	R,W	—	—	—	—	1	—	—	—	2838 664
	Clear	71	R,W	—	1	—	1	—	—	—	—	3445 827
	Tinted	71	R,W	—	1	—	1	—	—	—	—	3445 828
	Clear	71	R,W	—	—	—	—	1	—	—	—	3445 126
	Tinted	71	R,W	—	—	—	—	1	—	—	—	3445 127
	Clear	70	P,D	1	—	—	1	—	1	—	—	2900 183
	Tinted	70	P,D	1	—	—	1	—	1	—	—	2900 184
	Clear	70	P,D,C	—	1	—	—	—	—	—	—	2900 185
	Tinted	70	P,D,C	—	1	—	—	—	—	—	—	2900 186
	Clear	71	P,D,C	1	1	—	—	—	—	—	—	2900 185
	Tinted	71	P,D,C	1	1	—	—	—	—	—	—	2900 186
	Clear	70	Y-L	—	1	—	—	—	—	—	—	2900 185
	Tinted	70	Y-L	—	1	—	—	—	—	—	—	2900 186
	Clear		Y-M	—	1	—	—	—	—	—	—	2901 654
	Tinted		Y-M	—	1	—	—	—	—	—	—	2901 655
	Clear		P,D	—	—	—	—	1	—	—	—	2900 181
	Tinted		P,D	—	—	—	—	1	—	—	—	2900 182
	Clear		C	—	—	—	—	1	—	—	—	2900 187
	Tinted		C	—	—	—	—	1	—	—	—	2900 188
	Clear	71	P,D	—	—	—	1	—	1	—	—	2900 183
	Tinted	71	P,D	—	—	—	1	—	1	—	—	2900 184
	Clear		C	—	—	—	—	—	1	—	—	2900 128
	Tinted		C	—	—	—	—	—	1	—	—	2900 367
	Clear	70	Y-L	—	—	—	—	—	1	—	—	2900 128
	Tinted	70	Y-L	—	—	—	—	—	1	—	—	2900 367
	Clear		Y-M	—	—	—	—	—	1	—	—	2901 656
	Tinted		Y-M	—	—	—	—	—	1	—	—	2901 657
23-64-315	SUPPORT, Rear Wdo. Opening Frame to Rear Wdo. Glass		J	—	2	—	2	—	—	—	—	2964 592
	SUPPORT, Deck Opening Upper Panel to Rear Wdo. Glass	70	W	—	—	—	2	—	—	—	—	2842 347
			B,J,P,D	—	2	—	—	2	—	—	—	2964 592
			C,Y	—	2	—	—	2	2	—	—	2964 592
			P,D	2	—	—	2	—	2	—	—	2964 591
23-64-351	LOUVER PACKAGE, Rear Wdo. Outside		B	—	1	—	—	—	—	—	—	3499 842
			J	—	1	—	—	—	—	—	—	3499 843
		71	R	—	1	—	—	—	—	—	—	3570 575
		71	W	—	1	—	1	—	—	—	—	3570 576
23-64-352	LOUVER w/HINGE, Rear Wdo. Outside		B	—	1	—	—	—	—	—	—	3500 346
			J	—	1	—	—	—	—	—	—	3500 347
23-64-353	SLOTTED STUD PIN, Rear Wdo. Outside Louver		B,J	—	2	—	—	—	—	—	—	3500 349
	SPRING PIN, Rear Wdo. Outside Louver		B,J	—	2	—	—	—	—	—	—	3508 508
	NUT, Rear Wdo. Outside Louver		B,J	—	2	—	—	—	—	—	—	120 378
	LOCK WASHER, Rear Wdo. Outside Louver		B,J	—	2	—	—	—	—	—	—	135 629
23-64-354	JAM NUT, Rear Wdo. Outside Louver		B,J	—	2	—	—	—	—	—	—	3500 350
23-64-355	WASHER, Rear Wdo. Outside Louver		B,J	—	2	—	—	—	—	—	—	3500 351
23-64-356	CABLE, Rear Wdo. Outside Louver		B,J	—	2	—	—	—	—	—	—	3500 352
	SCREW, Cable Attaching		B,J	—	2	—	—	—	—	—	—	9417 732
23-64-358	SCREW, Rear Wdo. Outside Louver		B,J	—	6	—	—	—	—	—	—	3500 353
	WASHER, Rear Wdo. Outside Louver		B,J	—	2	—	—	—	—	—	—	6028 325
	NUT, Rear Wdo. Outside Louver		B,J	—	6	—	—	—	—	—	—	6026 292
23-64-359	GASKET, Rear Wdo. Outside Louver		B,J	—	2	—	—	—	—	—	—	3500 354
23-64-360	HINGE, Rear Wdo. Outside Louver		B,J	—	2	—	—	—	—	—	—	3500 348

CARLINES: J - Challenger, B - Barracuda, V - Valiant, L - Dart, R - Belvedere - Satallite, W - Coronet - Charger, P - Plymouth, D - Dodge, C - Chrysler, Y - Imperial

NUMERALS INDICATE: 21 - 2 DR. SED., 23 - 2 DR. H.T., 27 - CONV. CPE., 29 - FAST BACK, 41 - 4 DR. SED., 43 - 4 DR. H.T., 45 - 6 PASS. STA. WGN., 46 - 9 PASS. STA. WGN.

AR Indicates use as required.
\# Indicates parts not listed in any previous parts book
Numerals in parentheses ( ) refer to notes.
★ Indicates change or addition.

Printed in U.S.A.
January 1972

Right and left part numbers are on same line, first number is right, second number is left.

23-66-0 WINDSHIELD

CODE	PART NAME		MODEL CODES	SEE BOTTOM NOTE 21	23	27	29	41	43	45	46	PART NUMBER
23-66-65	FRAME, W. Shield Upper Outer	70	R,W	—	—	1	—	—	—	—	—	2529 827
		70	P,D,C	—	—	1	—	—	—	—	—	2901 010
			B,J	—	—	1	—	—	—	—	—	2964 134
	FRAME, W./Shield Upper Inner		B,J	—	—	1	—	—	—	—	—	3444 051
		70	P,D,C	—	—	1	—	—	—	—	—	3446 319
	FRAME, W./Shield Upper Center	70	R,W	1	1	—	1	—	—	—	—	2859 162
		70	R,W	—	—	—	—	1	—	1	1	2859 001
	FRAME, W./Shield Opening Upper											
		71	R,W	—	1	—	1	—	—	—	—	3482 145
		71	R,W	—	—	—	—	1	—	1	1	3482 144
	FRAME w./REINFORCEMENT, W./Shield Opening Upper		B,J	—	1	—	1	—	—	—	—	2934 740
	FRAME w./REINFORCEMENT, W./Shield Opening Upper Center		V,L	—	—	—	1	—	—	—	—	3417 358
			V,L	—	1	—	—	1	—	—	—	2769 208
		70	P,D,C,Y	1	1	—	1	1	1	1	1	2859 866
		71	P,D,C,Y	1	1	—	1	1	1	1	1	2859 843
	EXTENSION, W./Shield Opening Side Frame Upper Inner Corner		B,J	—	1	—	1	—	—	—	—	2895 534-5
		70	P,D,C,Y	—	1	—	—	—	—	—	—	2893 982-3
		70	P,D,C	—	—	—	—	1	—	1	1	3499 094-5
		71	P,D,C,Y	1	1	—	—	—	—	—	—	3500 520-1
		71	P,D,C	—	—	—	—	1	—	1	1	3500 518-9
	EXTENSION, W. Shield Opening Side Frame Upper Corner		V,L	—	—	—	—	1	—	—	—	2861 926-7
			V,L	—	1	—	—	—	—	—	—	2861 928-9
		70	R,W	1	1	—	1	—	—	—	—	2861 932-3
		70	R,W	—	—	—	—	1	—	1	1	2861 930-1
		71	R,W	—	1	—	1	—	—	—	—	3439 414-5
		71	R,W	—	—	—	—	1	—	1	1	3439 416-7
	EXTENSION, W./Shield Side Frame Upper Inner Corner	70	P,D,C,Y	1	—	—	1	—	1	—	—	2893 934-5
		71	P,D,C,Y	—	—	—	1	—	1	—	—	3500 522-3
	EXTENSION, W./Shield Side Inner Frame Upper		V,L	—	—	—	1	—	—	—	—	2895 856-7
23-66-69	SEAL, W./Shield Upper Frame		B,J	—	—	1	—	—	—	—	—	2964 125
	SEAL, W./Shield Upper Inner Frame	70	R,W	—	—	1	—	—	—	—	—	2839 318
23-66-71	ANTI-RATTLER, W./Shield Upper Frame Bracket	70	B,J	—	—	2	—	—	—	—	—	3445 308
		71	B,J	—	—	2	—	—	—	—	—	3570 965
	SILENCER, Frame W./Shield Opening Side Inner		P,D,C,Y	1	1	1	1	1	1	1	1	2893 106-7
	FASTENER, W./Shield Opening Side Inner Frame Silencer to Side Inner Frame		P,D,C,Y	2	2	2	2	2	2	2	2	2860 454
23-66-75	KIT, Cemented-in W./Shield Glass Installation		B,J	—	1	1	1	—	—	—	—	2807 425
		71	R,W	—	1	—	—	1	—	1	1	2807 425
		71	P,D,C,Y	1	1	—	1	1	1	1	1	2807 425
		70	P,D,C,Y	1	1	1	1	1	1	1	1	3419 959
	SPACER, W./Shield Glass 15' Long		B,J	—	1	1	1	—	—	—	—	3445 241
		71	R,W	—	1	—	—	1	—	1	1	3445 241
			P,D,C,Y	1	1	1	1	1	1	1	1	3445 241
	(Wedge Type)	Lower	B,J	—	2	2	2	—	—	—	—	2895 577
	(Wedge Type)	Lower	P,D,C,Y	2	2	2	2	2	2	2	2	2895 334
		Top	P,D,C,Y	2	2	2	2	2	2	2	2	2842 569
		Side	P,D,C,Y	2	2	2	2	2	2	2	2	2842 569

CARLINES J - Challenger, B - Barracuda, V - Valiant, L - Dart, R - Belvedere - Satallite, W - Coronet - Charger, P - Plymouth, D - Dodge, C - Chrysler, Y - Imperial

NUMERALS INDICATE: 21 - 2 DR. SED., 23 - 2 DR. H.T., 27 - CONV. CPE., 29 - FAST BACK, 41 - 4 DR. SED., 43 - 4 DR. H.T., 45 - 6 PASS. STA. WGN., 46 - 9 PASS. STA. WGN.

AR Indicates use as required.
\# Indicates parts not listed in any previous parts book
Numerals in parentheses ( ) refer to notes.
★ Indicates change or addition.

Printed in U.S.A.
January 1972

Right and left part numbers are on same line, first number is right, second number is left.

23-66-0 WINDSHIELD Cont'd.

CODE	PART NAME	MODEL CODES	SEE BOTTOM NOTE 21	23	27	29	41	43	45	46	PART NUMBER
23-66-75	KIT Cont'd.										
	Thick	B,J,R,W	AR	AR	AR	AR	AR	—	AR	AR	2842 569
	Normal 71	R,W	—	AR	—	AR	AR	—	AR	AR	≠3500 975
	Thin 71	R,W	—	AR	—	AR	AR	—	AR	AR	≠3500 976
	Thick	P,D,C,Y	AR	AR	AR	AR	AR	AR	AR	AR	2842 569
23-66-77	BRACKET, W/Shield Side Frame to Dash Panel Support	B,J	—	1	1	1	—	—	—	—	2895 788-9
	71	R,W	—	1	—	1	1	—	1	1	3439 404-5
	BRACKET, W/Shield Upper Frame Dowel	B,J	—	—	2	—	—	—	—	—	3445 307
	BRACKET, W/Shield Opening Side Frame Fender Mtg.										
	71	R,W	—	1	—	1	—	—	—	—	3500 816-7
23-66-78	SUPPORT, W/Shield Glass Lower Spacer	P,D,C,Y	2	2	2	2	2	2	2	2	2895 333
23-66-135	GLASS										
	WINDSHIELD										
	Clear	V,L	—	—	—	1	—	—	—	—	2895 862
	Tinted	V,L	—	—	—	1	—	—	—	—	2895 863
	Clear	V,L	—	—	—	—	1	—	—	—	2663 141
	Tinted	V,L	—	—	—	—	1	—	—	—	2663 142
	Clear	V,L	—	1	—	—	—	—	—	—	2663 149
	Tinted	V,L	—	1	—	—	—	—	—	—	2663 150
	Clear	B-J	—	1	1	1	—	—	—	—	2895 592
	Tinted	B-J	—	1	1	1	—	—	—	—	2895 593
	Clear 70	R,W	1	1	—	1	—	—	—	—	2811 265
	Tinted 70	R,W	1	1	—	1	—	—	—	—	2811 266
	Clear 70	R,W	—	—	1	—	—	—	—	—	2570 605
	Tinted 70	R,W	—	—	1	—	—	—	—	—	2570 606
	Clear 70	R,W	—	—	—	—	1	—	1	1	2570 295
	Tinted 70	R,W	—	—	—	—	1	—	1	1	2570 598
	Clear 71	R,W	—	1	—	1	—	—	—	—	3439 472
	Tinted 71	R,W	—	1	—	1	—	—	—	—	3439 473
	Clear 71	R,W	—	—	—	—	1	—	1	1	3439 480
	Tinted 71	R,W	—	—	—	—	1	—	1	1	3439 481
	Clear	P,D,C	1	1	1	1	—	1	—	—	2893 138
	Tinted	P,D,C	1	1	1	1	—	1	—	—	2893 139
	Clear	P,D,C	—	—	—	—	1	—	1	1	2893 130
	Tinted	P,D,C	—	—	—	—	1	—	1	1	2893 131
	Clear, w/o Radio	Y	—	1	—	—	—	1	—	—	2893 138
	Tinted, w/o Radio	Y	—	1	—	—	—	1	—	—	2893 139
	Clear, w/Radio 70	Y	—	1	—	—	—	1	—	—	3499 309
	Tinted, w/Radio	Y	—	1	—	—	—	1	—	—	3499 308
23-66-235	WEATHERSTRIP, W/Shield Glass										
	NOTE: Weatherstripping is Not used with Cemented-In Type Windshield Glass. See Part Type Code 23-66-75 for Installation Kit.										
		V,L	—	—	—	1	—	—	—	—	2895 870
		V,L	—	—	—	—	1	—	—	—	2861 408
		V,L	—	1	—	—	—	—	—	—	2861 409
	70	R,W	1	1	—	1	—	—	—	—	2811 263
	70	R,W	—	—	1	—	—	—	—	—	2842 790
	70	R,W	—	—	—	—	1	—	1	1	2861 217
23-66-239	STRIP, W/Shield Glass to Weatherstrip Filler 70	V,L	—	1	—	—	1	—	—	—	2861 116
	LOCKING STRIP, W/Shield Glass Weatherstrip	V,L	—	—	—	1	—	—	—	—	3440 791

CARLINES	J - Challenger B - Barracuda	V - Valiant L - Dart	R - Belvedere - Satellite W - Coronet - Charger	P - Plymouth D - Dodge	C - Chrysler Y - Imperial
NUMERALS INDICATE:	21 - 2 DR. SED. 23 - 2 DR. H.T.	27 - CONV. CPE. 29 - FAST BACK	41 - 4 DR. SED. 43 - 4 DR. H.T.	45 - 6 PASS. STA. WGN. 46 - 9 PASS. STA. WGN.	

AR Indicates use as required.
\# Indicates parts not listed in any previous parts book
Numerals in parentheses ( ) refer to notes.
★ Indicates change or addition.

Printed in U.S.A.
January 1972

Right and left part numbers are on same line, first number is right, second number is left.

CODE	PART NAME	MODEL CODES	SEE BOTTOM NOTE 21	23	27	29	41	43	45	46	PART NUMBER
23-67-0	**WINDSHIELD AND TAILGATE WINDOW WIPER AND WASHER**										
23-67-2	CAM RELEASE PACKAGE, Wiper Parking 2 Speed	B,J	—	1	1	1	—	—	—	—	2932 869
	2 Speed 71	R,W	—	1	—	1	1	—	1	1	2932 869
	2 Speed	P,D,C	1	1	1	1	1	1	1	1	2932 869
23-67-5	ARM, W/Shield Wiper w/o Blade	V,L	—	2	—	2	2	—	—	—	3431 041
		B,J	—	1	1	1	—	—	—	—	3420 816-7
	70	R,W	2	2	—	2	—	—	—	—	2822 999
	70	R,W	—	—	2	—	2	—	2	2	2857 903
	Rt. 71	R,W	—	1	—	1	1	—	1	1	3431 098
	Lt. 71	R,W	—	1	—	1	1	—	1	1	3431 097
	Anco Type 70	P,D,C,Y	1	1	1	1	1	1	1	1	2889 860-1
	Trico Type 70	P,D,C,Y	1	1	1	1	1	1	1	1	2983 086-7
	Rt. 71	P,D,C,Y	1	1	—	1	1	1	1	1	3431 356
	Up To Approximately May 15, 1971 Lt. 71	P,D,C,Y	1	1	—	1	1	1	1	1	2983 087
	After Approximately May 15, 1971 Lt. 71	P,D,C,Y	1	1	—	1	1	1	1	1	3431 254
	ARM, T/Gate Window Washer w/o Blade 70	R,W	—	—	—	—	—	—	1	1	2889 940
		P,D,C	—	—	—	—	—	—	1	1	2889 941
	CONTROL ARM, T/Gate Window Washer	P,D,C	—	—	—	—	—	—	1	1	3431 029
23-67-8	SPRING, T/Gate Window Washer Arm Support 70	R,W	—	—	—	—	—	—	2	2	2857 962
		P,D,C	—	—	—	—	—	—	2	2	2822 268
23-67-10	GEAR and SEAL PACKAGE, Wiper Motor Variable Speed or 3 Speed 70	All	1	1	1	1	1	1	1	1	3420 871
	GEAR and GASKET PACKAGE, Wiper Motor Variable Speed or 3 Speed 71	All	1	1	1	1	1	1	1	1	3620 735
	GEAR PACKAGE, Wiper Motor W/2770090 & 2926929 Chrysler Built 2 Spd. Motors Canada	All	1	1	1	1	1	1	1	1	3458 232
	INTERMEDIATE GEAR PACKAGE, Wiper Motor 2 Speed	All	1	1	1	1	1	1	1	1	3431 508
	OUTPUT GEAR PACKAGE, Wiper Motor 2 Speed	All	1	1	1	1	1	1	1	1	3431 511
23-67-12	WASHER, T/Gate Window Washer Blade Arm Retaining 70	All	—	—	—	—	—	—	1	1	2889 943
	71	P,D,C	—	—	—	—	—	—	1	1	2889 943
23-67-20	GROMMET and SPACER PACKAGE, Motor Mtg. 2 Speed	All	1	1	1	1	1	1	1	1	2932 708
	Variable Speed	B,J	—	1	1	1	—	—	—	—	2421 482
	Variable Speed 71	V,L,R,W	—	1	—	1	1	—	1	1	2421 482
	3 Speed	P,D,C,Y	1	1	1	1	1	1	1	1	2421 482
23-67-25	BLADE w/REFILL, W/Shield Wiper Trico	V,L	—	—	—	2	—	—	—	—	2822 989
	Anco Type 15"	V,L	—	2	—	—	2	—	—	—	2889 962
	Trico Type	V,L	—	2	—	—	2	—	—	—	2822 990
	Anco Type	B,J	—	2	2	2	—	—	—	—	2889 859
	Trico Type	B,J	—	2	2	2	—	—	—	—	2889 847
	Anco Type 70	R,W	2	2	—	2	—	—	—	—	2889 962
	Trico Type 70	R,W	2	2	—	2	—	—	—	—	2822 990
	70	R,W	—	—	2	—	2	—	2	2	2822 989
	Up To Approximately Sept. 30, 1970 71	R,W	—	2	—	2	2	—	2	2	3431 251
	After Approximately Sept. 30, 1970 71	R,W	—	2	—	2	2	—	2	2	3431 465
	70	P,D,C,Y	2	2	2	2	2	2	2	2	2889 859
	Anco Type 71	P,D,C,Y	2	2	—	2	2	2	2	2	2889 859
	Trico Type 71	P,D,C,Y	2	2	—	2	2	2	2	2	2889 847

CARLINES	J - Challenger B - Barracuda	V - Valiant L - Dart	R - Belvedere - Satellite W - Coronet - Charger	P - Plymouth D - Dodge	C - Chrysler Y - Imperial
NUMERALS INDICATE:	21 - 2 DR. SED. 23 - 2 DR. H.T.	27 - CONV. CPE. 29 - FAST BACK	41 - 4 DR. SED. 43 - 4 DR. H.T.	45 - 6 PASS. STA. WGN. 46 - 9 PASS. STA. WGN.	

AR Indicates use as required.
\# Indicates parts not listed in any previous parts book
Numerals in parentheses ( ) refer to notes.
★ Indicates change or addition.

Printed in U.S.A.
January 1972

Right and left part numbers are on same line, first number is right, second number is left.

23-67-0 WINDSHIELD AND TAILGATE WINDOW WIPER AND WASHER Cont'd.

CODE	PART NAME		MODEL CODES	SEE BOTTOM NOTE 21	23	27	29	41	43	45	46	PART NUMBER
23-67-25	BLADE w/REFILL Cont'd.											
	BLADE w/REFILL, T/Gate Window Washer	70	All	—	—	—	—	—	—	2	2	2884 398
		71	P,D,C	—	—	—	—	—	—	2	2	2884 398
	REFILL, W/Shield Wiper Blade											
	Anco Type		V,L	—	—	—	2	—	—	—	—	1818 892
	Trico Type		V,L	—	—	—	2	—	—	—	—	2857 904
	Anco Type		V,L	—	2	—	—	2	—	—	—	2771 967
	Trico Type		V,L	—	2	—	—	2	—	—	—	2889 964
	Anco Type		B,J	—	2	2	2	—	—	—	—	1818 892
	Trico Type		B,J	—	2	2	2	—	—	—	—	2889 857
	Anco Type	70	R,W	2	2	—	2	—	—	—	—	2771 967
	Trico Type	70	R,W	2	2	—	2	—	—	—	—	2889 964
	Anco Type	70	R,W	—	—	2	—	2	—	2	2	1818 892
	Trico Type	70	R,W	—	—	2	—	2	—	2	2	2857 904
	Up To Approximately Sept. 30, 1970	71	R,W	—	2	—	2	2	—	2	2	3431 255
	After Approximately Sept. 30, 1970	71	R,W	—	2	—	2	2	—	2	2	3431 466
		70	P,D,C,Y	2	2	2	2	2	2	2	2	1818 892
	Anco Type	71	P,D,C,Y	2	2	—	2	2	2	2	2	1818 892
	Trico Type	71	P,D,C,Y	2	2	—	2	2	2	2	2	2889 857
	REFILL, T/Gate Window Washer Blade	70	All	—	—	—	—	—	—	2	2	2884 399
		71	P,D,C	—	—	—	—	—	—	2	2	2884 399
	SCREW, T/Gate Window Washer Center Blade Mtg.	70	All	—	—	—	—	—	—	2	2	9415 920
	NUT, T/Gate Window Washer Center Blade Mtg.	70	All	—	—	—	—	—	—	2	2	6023 214
23-67-29	BUMPER, T/Gate Window Washer Blade Stop	70	R,W	—	—	—	—	—	—	4	4	2926 941
			P,D,C	—	—	—	—	—	—	4	4	2889 876
	FASTENER, T/Gate Window Washer Blade Bumper		P,D,C	—	—	—	—	—	—	4	4	2664 040
23-67-30	CLIP, T/Gate Window Washer Blade Arm Retaining	70	All	—	—	—	—	—	—	1	1	2857 966
		71	P,D,C	—	—	—	—	—	—	1	1	2857 966
	CLIP, W/Shield Washer Nozzle Hose		P,D,C,Y	3	3	3	3	3	3	3	3	2822 269
23-67-41	WIRING, W/Shield Wiper Motor Engine Compartment	2 Speed 70	V,L,R,W	1	1	1	1	1	—	1	1	2983 117
		2 Speed 71	V,L	—	1	—	1	1	—	—	—	2983 117
		2 Speed	B,J	—	1	1	1	—	—	—	—	2983 451
		2Speed 71	R,W	—	1	—	1	1	—	1	1	2983 451
		2 Speed	P,D,C	1	1	1	1	1	1	1	1	2926 478
23-67-76	CRANK w/PIN, Wiper Drive	Variable Speed	V,L	—	1	—	1	1	—	—	—	2822 272
		2 Speed	V,L	—	1	—	1	1	—	—	—	2889 966
		2 Speed	B,J	—	1	1	1	—	—	—	—	2822 290
		Variable Speed	B,J	—	1	1	1	—	—	—	—	2822 289
		2 Speed 70	R,W	1	1	1	1	1	—	1	1	2631 794
		3 Speed 70	R,W	1	1	1	1	1	—	1	1	2822 273
		2 Speed 71	R,W	—	1	—	1	1	—	1	1	2822 290
		Variable Speed 71	R,W	—	1	—	1	1	—	1	1	2822 289
		2 Speed	P,D,C	1	1	1	1	1	1	1	1	2983 013
		3 Speed	P,D,C,Y	1	1	1	1	1	1	1	1	2926 918
	NUT, w/WASHER, Crank Mounting 5/16" X 18 THD.		All	1	1	1	1	1	1	1	1	6026 492
23-67-79	LINK, Wiper Pivot Connecting		V,L	—	1	—	1	1	—	—	—	2857 937
			B,J	—	1	1	1	—	—	—	—	2822 291
		70	R,W	1	1	1	1	1	—	1	1	2857 922
		71	R,W	—	1	—	1	1	—	1	1	3431 103

CARLINES: J - Challenger, B - Barracuda, V - Valiant, L - Dart, R - Belvedere - Satallite, W - Coronet - Charger, P - Plymouth, D - Dodge, C - Chrysler, Y - Imperial

NUMERALS INDICATE: 21 - 2 DR. SED., 23 - 2 DR. H.T., 27 - CONV. CPE., 29 - FAST BACK, 41 - 4 DR. SED., 43 - 4 DR. H.T., 45 - 6 PASS. STA. WGN., 46 - 9 PASS. STA. WGN.

AR Indicates use as required.
\# Indicates parts not listed in any previous parts book
Numerals in parentheses ( ) refer to notes.
★ Indicates change or addition.

Printed in U.S.A.
January 1972

Right and left part numbers are on same line, first number is right, second number is left.

23-67-0 WINDSHIELD AND TAILGATE WINDOW WIPER AND WASHER Cont'd.

CODE	PART NAME	MODEL CODES	SEE BOTTOM NOTE 21	23	27	29	41	43	45	46	PART NUMBER
23-67-79	LINK Cont'd.										
		P,D,C,Y	1	1	1	1	1	1	1	1	2889 855
	LINK, Wiper Drive	V,L	—	1	—	1	1	—	—	—	2857 936
	2 Speed	B,J	—	1	1	1	—	—	—	—	2822 292
	Variable Speed	B,J	—	1	1	1	—	—	—	—	2822 293
	70	R,W	1	1	1	1	1	—	1	1	2857 919
	2 Speed 71	R,W	—	1	—	1	1	—	1	1	3431 101
	Variable Speed 71	R,W	—	1	—	1	1	—	1	1	3431 102
	2 Speed	P,D,C	1	1	1	1	1	1	1	1	2889 854
	3 Speed	P,D,C,Y	1	1	1	1	1	1	1	1	2926 924
23-67-80	RETAINER, Drive Link to Crank Arm 70	V,L,R,W	1	1	1	1	1	—	1	1	2580 929
	2 Speed (Contained in Crank Assy.) 70	B,J	—	1	1	1	—	—	—	—	2983 017
	70	P,D,C	1	1	1	1	1	1	1	1	2983 017
	Variable Speed (Contained in Crank Assy.) 70	B,J	—	1	1	1	—	—	—	—	2580 929
	3 Speed (Contained in Crank Assy.) 70	P,D,C,Y	1	1	1	1	1	1	1	1	2580 929
	2 or Variable Speed Mtg. 70	B,J	—	3	3	3	—	—	—	—	2580 929
	2 or 3 Speed Mtg. 70	P,D,C,Y	1	1	1	1	1	1	1	1	2580 929
	RETAINER, Drive Link to Lt. Pivot 70	P,D,C,Y	2	2	2	2	2	2	2	2	1642 029
	RETAINER, Drive Link to Crank Arm 71	V,L	—	1	—	1	1	—	—	—	2580 929
	Variable Speed 71	B,J,R,W	—	AR	AR	AR	AR	—	AR	AR	2580 929
	3 Speed 71	P,D,C,Y	1	1	—	1	1	1	1	1	2580 929
	2 Speed 71	B,J,R,W	—	1	1	1	1	—	1	1	2983 017
	2 Speed 71	P,D,C	1	1	—	1	1	1	1	1	2983 017
	RETAINER, Wiper Link Mtg. 71	P,D,C,Y	2	2	—	2	2	2	2	2	1642 029
	CLIP, Lock, Lt. Wiper Strut Arm To Cowl Pivot Pin CANADA 71	P,D,C,Y	1	1	—	1	1	1	1	1	3676 184
23-67-82	SPRING WASHER, Link Mtg. 70	V,L,R,W	1	1	1	1	1	—	1	1	2580 944
	71	V,L	—	1	—	1	1	—	—	—	2580 944
		P,D,C,Y	2	2	2	2	2	2	2	2	2983 010
	WASHER, Wiper Link Mtg. for Variable Speed (Sponge) 70	B,J	—	AR	AR	AR	—	—	—	—	2983 031
	2 or 3 Speed (Sponge) 70	P,D,C,Y	1	1	1	1	1	1	1	1	2983 031
	For Variable Speed (Steel) 70	B,J	—	AR	AR	AR	—	—	—	—	2983 034
	2 or 3 Speed (Steel) 70	P,D,C,Y	1	1	1	1	1	1	1	1	2983 034
	WASHER, Wiper Link Mtg. Sponge 71	B,J,R,W	—	AR	AR	AR	AR	—	AR	AR	2983 031
	Sponge 71	P,D,C,Y	1	1	—	1	1	1	1	1	2983 031
	Steel 71	B,J,R,W	—	AR	AR	AR	AR	—	AR	AR	2983 034
	Steel 71	P,D,C,Y	1	1	—	1	1	1	1	1	2983 034
	WASHER, Wiper Pivot Shaft Steel 71	R,W	—	2	—	2	2	—	2	2	2983 034
23-67-86	PIVOT Rt.	V,L	—	—	—	1	—	—	—	—	2857 934
	Lt.	V,L	—	—	—	1	—	—	—	—	3431 039
		V,L	—	1	—	—	1	—	—	—	2857 934-5
		B,J	—	1	1	1	—	—	—	—	3420 832-3
	70	R,W	1	1	1	1	1	—	1	1	2857 920-1
	71	R,W	—	1	—	1	1	—	1	1	3514 444-5
		P,D,C,Y	1	1	1	1	1	1	1	1	2889 848-9
23-67-98	MOTOR Variable Speed	V,L	—	1	—	1	1	—	—	—	2983 116
	2 Speed	V,L	—	1	—	1	1	—	—	—	2770 090
	2 Speed	B,J	—	1	1	1	—	—	—	—	2926 929
	Variable Speed	B,J	—	1	1	1	—	—	—	—	3431 077
	2 Speed 70	R,W	1	1	1	1	1	—	1	1	2770 090
	3 Speed 70	R,W	1	1	1	1	1	—	1	1	2983 116
	2 Speed 71	R,W	—	1	—	1	1	—	1	1	2926 929

CARLINES J - Challenger, B - Barracuda, V - Valiant, L - Dart, R - Belvedere - Satellite, W - Coronet - Charger, P - Plymouth, D - Dodge, C - Chrysler, Y - Imperial

NUMERALS INDICATE: 21 - 2 DR. SED. 23 - 2 DR. H.T. 27 - CONV. CPE. 29 - FAST BACK 41 - 4 DR. SED. 43 - 4 DR. H.T. 45 - 6 PASS. STA. WGN. 46 - 9 PASS. STA. WGN.

AR Indicates use as required.
# Indicates parts not listed in any previous parts book
Numerals in parentheses ( ) refer to notes.
★ Indicates change or addition.

Printed in U.S.A.
January 1972

Right and left part numbers are on same line, first number is right, second number is left.

23-67-0 WINDSHIELD AND TAILGATE WINDOW WIPER AND WASHER Cont'd.

CODE	PART NAME	MODEL CODES	SEE BOTTOM NOTE 21	23	27	29	41	43	45	46	PART NUMBER
23-67-98	MOTOR Cont'd.										
	Variable Speed 71	R,W	—	1	—	1	1	—	1	1	3431 077
	2 Speed	P,D,C	1	1	1	1	1	1	1	1	2926 929
	3 Speed	P,D,C,Y	1	1	1	1	1	1	1	1	2926 919
	NUT, Motor Mtg.	All	3	3	3	3	3	3	3	3	6025 413
23-67-104	SEAL and SPACER PACKAGE, Motor Mtg. Variable Speed	V,L	—	1	—	1	1	—	—	—	2808 831
	3 Speed 70	R,W	1	1	1	1	1	—	1	1	2808 831
	Variable Speed 71	B,J,R,W	—	1	1	1	1	—	1	1	2808 831
	3 Speed 71	P,D,C,Y	1	1	—	1	1	1	1	1	2808 831
	SEAL, Wiper Motor Mtg.										
	Variable Speed	V,L	—	1	—	1	1	—	—	—	2580 927
	2 Speed	All	1	1	1	1	1	1	1	1	2926 168
	Variable Speed	B,J	—	1	1	1	—	—	—	—	2926 923
	3 Speed 70	R,W	1	1	1	1	1	—	1	1	2580 927
	Variable Speed 71	R,W	—	1	—	1	1	—	1	1	2926 923
	3 Speed	P,D,C,Y	1	1	1	1	1	1	1	1	2926 923
	SEAL, Wiper Motor Output Shaft										
	2 Speed	B,J	—	1	1	1	—	—	—	—	2770 048
	2 Speed 71	R,W	—	1	—	1	1	—	1	1	2770 048
	2 Speed	P,D,C	1	1	1	1	1	1	1	1	2770 048
	"O" RING, Parking Mechanism										
	2 Speed	B-J	—	1	1	1	—	—	—	—	2983 016
	2 Speed 71	R,W	—	1	—	1	1	—	1	1	2983 016
	2 Speed	P,D,C	1	1	1	1	1	1	1	1	2983 016
23-67-106	ARMATURE PACKAGE, Wiper Motor										
	2 Speed	All	1	1	1	1	1	1	1	1	3431 510
23-67-107	LIMIT RESISTOR, W/Shield Wiper Motor 2 Speed	All	1	1	1	1	1	1	1	1	2822 261
23-67-112	HOUSING PACKAGE, Wiper Motor										
	2 Speed	All	1	1	1	1	1	1	1	1	3431 509
23-67-132	BUSHING, Drive Link to Crank Arm										
	Variable Speed Plastic	V,L	—	1	—	1	1	—	—	—	2580 200
	2 Speed Plastic; 70	V,L,R,W	1	1	1	1	1	—	1	1	2631 766
	2 Speed Plastic; 71	V,L	—	1	—	1	1	—	—	—	2631 766
	3 Speed Plastic; 70	R,W	1	1	1	1	1	—	1	1	2580 200
	BUSHING, Wiper Link and Pivot Connecting Plastic; 70	V,L,R,W	AR	AR	AR	AR	AR	—	AR	AR	2857 917
	Plastic; 71	V,L	—	AR	—	AR	AR	—	—	—	2857 917
23-67-160	SWITCH, W/Shield Wiper Variable Speed	V,L	—	1	—	1	1	—	—	—	2770 380
	2 Speed	V,L	—	1	—	1	1	—	—	—	2864 415
	2 Speed	B,J	—	1	1	1	—	—	—	—	2947 404
	Variable Speed	B,J	—	1	1	1	—	—	—	—	2770 380
	2 Speed 70	R	1	1	1	—	1	—	1	1	3420 814
	2 Speed 70	W	1	1	1	—	1	—	1	1	3420 814
	2 Speed 70	W	—	—	—	1	—	—	—	—	3004 177
	3 Speed, Except R-M, R-S 70	R	1	1	1	—	1	—	1	1	2947 920
	3 Speed 70	R-M,R-S	1	1	1	—	—	—	—	—	2864 014
	3 Speed, w/o Rallye Inst. Panel 70	W	1	1	1	—	1	—	1	1	2947 920
	3 Speed, w Rallye Inst. Panel 70	W	1	1	1	1	—	—	—	—	2864 014
	2 Speed, w/o Rallye Inst. Panel 71	R,W	—	1	—	1	1	—	1	1	3488 046
	2 Speed, w Rallye Inst. Panel 71	R,W	—	1	—	1	1	—	1	1	3488 047
	Variable Speed, w/o Rallye Inst. Panel 71	R,W	—	1	—	1	1	—	1	1	3488 073
	Variable Speed, w Rallye Inst. Panel 71	R,W	—	1	—	1	1	—	1	1	3488 043
	2 Speed 70	P,D,C	1	1	1	1	1	1	1	1	2932 872

CARLINES	J - Challenger B - Barracuda	V - Valiant L - Dart	R - Belvedere - Satellite W - Coronet - Charger	P - Plymouth D - Dodge	C - Chrysler Y - Imperial
NUMERALS INDICATE:	21 - 2 DR. SED. 23 - 2 DR. H.T.	27 - CONV. CPE. 29 - FAST BACK	41 - 4 DR. SED. 43 - 4 DR. H.T.	45 - 6 PASS. STA. WGN. 46 - 9 PASS. STA. WGN.	

AR Indicates use as required.
\# Indicates parts not listed in any previous parts book
Numerals in parentheses ( ) refer to notes.
★ Indicates change or addition.

Printed in U.S.A.
January 1972

Right and left part numbers are on same line, first number is right, second number is left.

23-67-0 WINDSHIELD AND TAILGATE WINDOW WIPER AND WASHER Cont'd.

CODE	PART NAME	MODEL CODES	SEE BOTTOM NOTE 21	23	27	29	41	43	45	46	PART NUMBER
23-67-160	SWITCH Cont'd.										
	3 Speed 70	P,D,C	1	1	1	1	1	1	1	1	2864 434
	3 Speed 70	Y	—	1	—	—	—	1	—	—	2947 256
	2 Speed 71	P,D	1	1	—	1	1	1	1	1	2932 872
	3 Speed 71	P,D	1	1	—	1	1	1	1	1	2864 434
	2 Speed 71	C	—	1	—	—	1	1	1	1	3514 426
	3 Speed 71	C	—	1	—	—	1	1	1	1	3488 196
	SWITCH w/PLATE, W/Shield Wiper and W/Shield Washer										
	3 Speed 71	P,D	1	1	—	1	1	1	1	1	3514 439
	3 Speed 71	C	—	1	—	—	1	1	1	1	3514 441
	3 Speed 71	Y	—	1	—	—	—	1	—	—	3514 442
	SWITCH, W/Shield Washer										
	Variable Speed	V,L	—	1	—	1	1	—	—	—	2770 380
	Variable Speed	B,J	—	1	1	1	—	—	—	—	2770 380
	w/o Rallye Inst. Panel 70	R,W	1	1	1	—	1	—	1	1	2932 807
	w/Rallye Inst. Panel 70	W	1	1	1	1	—	—	—	—	2809 009
	2 Speed, w/o Rallye Inst. Panel 71	R,W	—	1	—	1	1	—	1	1	3488 046
	2 Speed, w/Rallye Inst. Panel 71	R,W	—	1	—	1	1	—	1	1	3488 047
	Variable Speed, w o Rallye Inst. Panel 71	R,W	—	1	—	1	1	—	1	1	3488 073
	Variable Speed, w Rallye Inst. Panel 71	R,W	—	1	—	1	1	—	1	1	3488 043
	70	P,D,C	1	1	1	1	1	1	1	1	2932 807
	70	Y	—	1	—	—	—	1	—	—	2932 884
	71	P,D	1	1	—	1	1	1	1	1	3488 297
	71	C	—	1	—	—	1	1	1	1	3488 298
	71	Y	—	1	—	—	—	1	—	—	3488 299
	SWITCH, W/Shield and T/Gate Window Washer 70	R,W	—	—	—	—	—	—	1	1	2864 354
	70	P,D,C	—	—	—	—	—	—	1	1	2864 354
	SWITCH, T/Gate Window Washer										
	71	P,D	—	—	—	—	—	—	1	1	3488 139
	71	C	—	—	—	—	—	—	1	1	3488 298
23-67-161	NUT, Wiper Switch Mtg.	V,L	—	1	—	1	1	—	—	—	1887 603
	71	R,W	—	1	—	1	1	—	1	1	1887 603
	NUT, Wiper and Washer Switch Mtg.	B,J	—	2	2	2	—	—	—	—	6008 060
	71	R,W	—	1	—	1	1	—	1	1	3488 055
	NUT, T Gate Window Washer Switch Mtg. 71	P,D	—	—	—	—	—	—	1	1	2820 116
23-67-164	SWITCH PLATE and LATCH PACKAGE, Wiper Motor Variable Speed 70	V,L	—	1	—	1	1	—	—	—	3420 870
	Variable Speed 70	B,J	—	1	1	1	—	—	—	—	3420 918
	3 Speed 70	R,W	1	1	1	1	1	—	1	1	3420 870
	3 Speed 70	P,D,C,Y	1	1	1	1	1	1	1	1	3420 918
	SWITCH PLATE, BUSHING and LATCH PACKAGE, Wiper Motor Variable Speed or 3 Speed 71	All	1	1	1	1	1	1	1	1	3620 736
	PARK SWITCH PACKAGE, Wiper Motor (Non-Depressed) 2 Speed	V,L	—	1	—	1	1	—	—	—	3431 507
	(Depressed) 2 Speed	B,J,R,W	1	1	1	1	1	—	1	1	3431 506
	(Depressed) 2 Speed	P,D,C	1	1	1	1	1	1	1	1	3431 506
23-67-166	TERMINAL, Wiper Switch Wiring 70	R,W,P,D	AR	AR	AR	AR	AR	AR	AR	AR	2889 467
	71	R,W	—	AR	—	AR	AR	—	AR	AR	2889 467
	71	P,D,C,Y	AR	AR	—	AR	AR	AR	AR	AR	2889 467

CARLINES J - Challenger, B - Barracuda, V - Valiant, L - Dart, R - Belvedere - Satallite, W - Coronet - Charger, P - Plymouth, D - Dodge, C - Chrysler, Y - Imperial

NUMERALS INDICATE: 21 - 2 DR. SED., 23 - 2 DR. H.T., 27 - CONV. CPE., 29 - FAST BACK, 41 - 4 DR. SED., 43 - 4 DR. H.T., 45 - 6 PASS. STA. WGN., 46 - 9 PASS. STA. WGN.

AR Indicates use as required.
\# Indicates parts not listed in any previous parts book
Numerals in parentheses ( ) refer to notes.
★ Indicates change or addition.

Printed in U.S.A.
January 1972

Right and left part numbers are on same line, first number is right, second number is left.

23-67-0 WINDSHIELD AND TAILGATE WINDOW WIPER AND WASHER Cont'd.

CODE	PART NAME	MODEL CODES	SEE BOTTOM NOTE 21	23	27	29	41	43	45	46	PART NUMBER
23-67-169	INSULATOR, Wiring Terminal	V,L,B,J	—	AR	AR	AR	AR	—	—	—	2889 432
		R,W,P,D	AR	AR	AR	AR	AR	AR	AR	AR	2889 432
	INSULATOR, Wiper Switch Wiring	R,W,P,D	AR	AR	AR	AR	AR	AR	AR	AR	2889 044
	INSULATOR, Wiper Motor Wiring										
	3 Speed	P,D,C,Y	1	1	1	1	1	1	1	1	2926 255
23-67-194	KNOB, Wiper Switch										
	Variable Speed 70	V,L	—	—	—	1	1	—	—	—	2864 413
	Variable Speed 71	V,L	—	1	—	1	1	—	—	—	2864 413
	2 Speed	V,L	—	1	—	1	1	—	—	—	2864 411
	70	B,J	—	1	1	1	—	—	—	—	2947 439
	Up To Approximately May 15, 1971 71	B,J	—	1	1	—	—	—	—	—	2947 439
	After Approximately May 15, 1971 71	B,J	—	1	1	—	—	—	—	—	2947 380
	w/o Rallye Inst. Panel 71	R,W	—	1	—	1	1	—	1	1	3488 050
	w/Rallye Inst. Panel 71	R,W	—	1	—	1	1	—	1	1	3488 265
	KNOB, Washer Switch										
	Variable Speed 70	V,L	—	—	—	1	1	—	—	—	2864 413
	Variable Speed 71	V,L	—	1	—	1	1	—	—	—	2864 413
	70	B,J	—	1	1	1	—	—	—	—	2947 439
	Up To Approximately May 15, 1971 71	B,J	—	1	1	—	—	—	—	—	2947 439
	After Approximately May 15, 1971 71	B,J	—	1	1	—	—	—	—	—	2947 380
	w/o Rallye Inst. Panel 71	R,W	—	1	—	1	1	—	1	1	3488 050
	w/Rallye Inst. Panel 71	R,W	—	1	—	1	1	—	1	1	3488 265
23-67-195	BEZEL, Wiper Switch Mtg.	L	—	1	—	1	1	—	—	—	2580 774
23-67-200	RETAINER, Wiper Parking Mechanism Cover 2 Speed	B,J	—	1	1	1	—	—	—	—	2497 596
	2 Speed 71	R,W	—	1	—	1	1	—	1	1	2497 596
	2 Speed	P,D,C	1	1	1	1	1	1	1	1	2497 596
	RETAINER, Wiper Parking Mechanism										
	2 Speed	B,J	—	1	1	1	—	—	—	—	2983 014
	2 Speed 71	R,W	—	1	—	1	1	—	1	1	2983 014
	2 Speed	P,D,C	1	1	1	1	1	1	1	1	2983 014
23-67-201	COVER, Wiper Parking Mechanism										
	2 Speed	B,J	—	1	1	1	—	—	—	—	2983 015
	2 Speed 71	R,W	—	1	—	1	1	—	1	1	2983 015
	2 Speed	P,D,C	1	1	1	1	1	1	1	1	2983 015
23-67-240	RESERVOIR, W/Shield Washer										
	2 Speed	V,L	—	1	—	1	1	—	—	—	2983 067
	2 Speed	B,J	—	1	1	1	—	—	—	—	2983 092
	Variable Speed	B,J	—	1	1	1	—	—	—	—	3431 074
	71	R,W	—	1	—	1	1	—	1	1	3431 074
	RESERVOIR and SEAL PACKAGE, W/Shield Washer Variable Speed	V,L	—	1	—	1	1	—	—	—	2809 011
	70	R,W	1	1	1	1	1	—	1	1	2889 803
		P,D,C	1	1	1	1	1	1	1	1	3431 154
		Y	—	1	—	—	—	1	—	—	2932 830
	RESERVOIR and SEAL PACKAGE, T/Gate Window Washer 70	R,W	—	—	—	—	—	—	1	1	3004 120
		P,D,C	—	—	—	—	—	—	1	1	3420 873
23-67-241	CAP, W/Shield Washer Reservoir	All	1	1	1	1	1	1	1	1	2497 500
	CAP, T/Gate Window Washer Filler Bezel 70	All	—	—	—	—	—	—	1	1	3431 050
	71	P,D,C	—	—	—	—	—	—	1	1	3431 050
23-67-242	FILTER, W/Shield Washer Reservoir	All	1	1	1	1	1	1	1	1	2771 976
	FILTER, T/Gate Window Washer 70	All	—	—	—	—	—	—	1	1	2771 976
	71	P,D,C	—	—	—	—	—	—	1	1	2771 976
23-67-243	BEZEL, T/Gate Window Washer Reservoir Filler 70	R,W	—	—	—	—	—	—	1	1	2983 069

CARLINES J - Challenger, B - Barracuda, V - Valiant, L - Dart, R - Belvedere - Satallite, W - Coronet - Charger, P - Plymouth, D - Dodge, C - Chrysler, Y - Imperial

NUMERALS INDICATE: 21 - 2 DR. SED., 23 - 2 DR. H.T., 27 - CONV. CPE., 29 - FAST BACK, 41 - 4 DR. SED., 43 - 4 DR. H.T., 45 - 6 PASS. STA. WGN., 46 - 9 PASS. STA. WGN.

AR Indicates use as required.
\# Indicates parts not listed in any previous parts book
Numerals in parentheses ( ) refer to notes.
★ Indicates change or addition.

Printed in U.S.A.
January 1972

Right and left part numbers are on same line, first number is right, second number is left.

23-67-0 WINDSHIELD AND TAILGATE WINDOW WIPER AND WASHER Cont'd.

CODE	PART NAME		MODEL CODES	SEE BOTTOM NOTE 21	23	27	29	41	43	45	46	PART NUMBER
23-67-243	BEZEL Cont'd.											
			P,D,C	—	—	—	—	—	—	1	1	2822 275
	BEZEL, Rear Window											
	w/o Tailgate Wdo. Washer	71	C	—	—	—	—	—	—	1	1	2985 889
	w/Tailgate Wdo. Washer	71	C	—	—	—	—	—	—	1	1	2985 887
23-67-245	NAME PLATE, T/Gate Window Washer Switch											
		71	P,D	—	—	—	—	—	—	1	1	3488 448
23-67-246	NOZZLE, W/Shield Washer		V,L	—	1	—	1	1	—	—	—	2926 962-3
	w/o Fibreglass Hood		B,J	—	2	2	2	—	—	—	—	2983 078
	w/Fibreglass Hood		B,J	—	1	1	1	—	—	—	—	3431 452-3
		70	R,W	2	2	2	2	2	—	2	2	2889 888
		71	R,W	—	2	—	2	2	—	2	2	3431 160
		70	P,D,C,Y	1	1	1	1	1	1	1	1	2926 966-7
	NOZZLE w/BRACKET, W/Shield Washer											
		71	P,D,C,Y	2	2	—	2	2	2	2	2	3431 213
	NOZZLE and BRACKET PACKAGE, W/Shield Washer											
		71	P,D,C,Y	1	1	—	1	1	1	1	1	3579 482
	NOZZLE, T/Gate Window Washer	70	R,W	—	—	—	—	—	—	2	2	2926 932
			P,D,C	—	—	—	—	—	—	1	1	3431 004-5
23-67-247	PLUG, Button Dash Variable Speed		V,L	—	1	—	1	1	—	—	—	2889 843
	Variable Speed		B,J	—	1	1	1	—	—	—	—	2889 843
23-67-252	PUMP and SEAL PACKAGE, W/Shield Washer		All	1	1	1	1	1	1	1	1	2809 013
	PUMP and SEAL PACKAGE, T/Gate Window Washer	70	All	—	—	—	—	—	—	1	1	3004 121
		71	P,D,C	—	—	—	—	—	—	1	1	3004 121
	FOOT PUMP and CHECK VALVE PACKAGE, w/Shield Washer w/o Mtg. Brkt.		V,L,B,J	—	1	1	1	1	—	—	—	2932 868
	PUMP w/VALVE, w/Shield Washer (Foot Operated) w/Mtg. Brkt. 2 Speed		V,L	—	1	—	1	1	—	—	—	3431 058
	2 Speed		B,J	—	1	1	1	—	—	—	—	2983 076
	PUMP Only, w/Shield Washer Variable Speed	70	B,J	—	1	1	1	—	—	—	—	3431 295
23-67-254	PIN, T/Gate Window Washer Arm Support Pivot	70	All	—	—	—	—	—	—	2	2	2857 963
		71	P,D,C	—	—	—	—	—	—	2	2	2857 963
	PIN, T/Gate Window Washer Actuator	70	All	—	—	—	—	—	—	1	1	2857 965
		71	P,D,C	—	—	—	—	—	—	1	1	2857 965
23-67-255	GROMMET, W/Shield Washer Hose Dash 2 Speed		V,L,B,J	—	1	1	1	1	—	—	—	2889 809
23-67-258	BUTTON w/CLIP, W&Shield Washer Switch	70	R-M,R-S	1	1	1	—	—	—	—	—	2947 023
		70	W-M	1	1	—	—	—	—	—	—	2947 023
		70	W-P,W-S	—	—	—	1	—	—	—	—	2947 023
	w/Rallye Inst. Panel	70	W-P,W-S	—	1	1	—	—	—	—	—	2947 023
23-67-260	HOSE, W/Shield Washer Connector to Nozzle 3/16" O.D. x 127" Lgh.		All	2	2	2	2	2	2	2	2	2096 623
	HOSE, W/Shield Washer Foot Pump to Reservoir 2 Speed		V,L	—	1	—	1	1	—	—	—	3431 092
	HOSE, W/Shield Washer Reservoir to Foot Pump 7/16" O.D. x 96" Lgh. 2 Speed		V,L	—	1	—	1	1	—	—	—	2097 055
	9/32" O.D. x 90" Lgh. 2 Speed		V,L	—	1	—	1	1	—	—	—	2197 650
	HOSE, W/Shield Washer Reservoir to Connector 9/32" O.D. x 90" Lgh. Variable Speed		V,L	—	1	—	1	1	—	—	—	2197 650
	HOSE, W/Shield Washer Reservoir to Foot Pump 2 Speed		B,J	—	1	1	1	—	—	—	—	3431 092

CARLINES J - Challenger, B - Barracuda, V - Valiant, L - Dart, R - Belvedere - Satallite, W - Coronet - Charger, P - Plymouth, D - Dodge, C - Chrysler, Y - Imperial

NUMERALS INDICATE: 21 - 2 DR. SED., 23 - 2 DR. H.T., 27 - CONV. CPE., 29 - FAST BACK, 41 - 4 DR. SED., 43 - 4 DR. H.T., 45 - 6 PASS. STA. WGN., 46 - 9 PASS. STA. WGN.

AR Indicates use as required.
# Indicates parts not listed in any previous parts book
Numerals in parentheses ( ) refer to notes.
★ Indicates change or addition.

Printed in U.S.A.
January 1972

Right and left part numbers are on same line, first number is right, second number is left.

23-67-0 WINDSHIELD AND TAILGATE WINDOW WIPER AND WASHER Cont'd.

CODE	PART NAME		MODEL CODES	SEE BOTTOM NOTE 21	23	27	29	41	43	45	46	PART NUMBER
23-67-260	HOSE Cont'd.											
		70	B,J	—	1	1	1	—	—	—	—	3431 093
	Variable Speed	71	B,J	—	1	—	1	—	—	—	—	3431 093
	HOSE, W/Shield Washer Foot Pump to Connector and Reservoir	2 Speed	B,J	—	1	1	1	—	—	—	—	2983 097
	HOSE, W/Shield Washer Foot Pump to Connector 9/32" O.D. x 90" Lgh.	2 Speed	B,J	—	1	1	1	—	—	—	—	2197 650
	HOSE, W/Shield Washer Pump to Connector 9/32" O.D. x 90" Lgh.	70	R,W	1	1	1	1	1	—	1	1	2197 650
	HOSE, Reservoir to Connector	71	R,W	—	1	—	1	1	—	1	1	3431 093
	HOSE w/CLIP, W/Shield Washer	71	R,W	—	1	—	1	1	—	1	1	3431 385
	HOSE, W/Shield Washer Reservoir to "Y" Connector 9/32" O.D. x 90" Lgh.		P,D,C,Y	1	1	1	1	1	1	1	1	2197 650
	HOSE, T/Gate Window Washer Reservoir to Nozzle 9/32" O.D. x 90" Lgh.	70	All	—	—	—	—	—	—	2	2	2197 650
		71	P,D,C	—	—	—	—	—	—	1	1	3431 093
	HOSE, T/Gate Window Washer Reservoir Filling	70	R,W	—	—	—	—	—	—	1	1	2983 068
			P,D,C	—	—	—	—	—	—	1	1	2822 277
	STRAP, W/Shield Washer Hose Plastic	70	R,W	3	3	3	3	3	—	3	3	6015 149
23-67-261	"O" RING, T/Gate Filler Hose Retaining		P,D,C	—	—	—	—	—	—	1	1	3431 272
23-67-262	CONNECTOR, W/Shield Washer Hose		V,L	—	1	—	1	1	—	—	—	2258 912
			B,J	—	1	1	1	—	—	—	—	2983 077
		70	R,W	1	1	1	1	1	—	1	1	2631 702
		71	R,W	—	1	—	1	1	—	1	1	2983 077
	CONNECTOR, "Y" W/Shield Washer Hose		P,D,C,Y	1	1	1	1	1	1	1	1	2889 872
23-67-263	ACTUATOR, T/Gate Window Washer	70	R,W	—	—	—	—	—	—	1	1	2857 960
23-67-265	BUSHING, T/Gate Window Washer Pivot Pin	70	All	—	—	—	—	—	—	2	2	2857 964
		71	P,D,C	—	—	—	—	—	—	2	2	2857 964
	BUSHING, T/Gate Window Washer Blade Mtg. Arm	70	All	—	—	—	—	—	—	2	2	2822 270
		71	P,D,C	—	—	—	—	—	—	2	2	2822 270
	BUSHING, T/Gate Window Washer Control Arm Pin		P,D,C	—	—	—	—	—	—	1	1	3431 028
23-67-267	SUPPORT w/BRACKET, T/Gate Window Washer	70	R,W	—	—	—	—	—	—	1	1	2889 800
	SUPPORT, T/Gate Reservoir Mtg.		P,D,C	—	—	—	—	—	—	1	1	2889 885
	BRACKET, T/Gate Window Washer Reservoir Mtg.	70	R,W	—	—	—	—	—	—	1	1	2857 975
	BRACKET w/ACTUATOR, T/Gate Window Washer		P,D,C	—	—	—	—	—	—	1	1	3431 031
	SPACER, T/Gate Window Washer Mtg. Bracket		P,D,C	—	—	—	—	—	—	AR	AR	2822 993
	SPRING WASHER, Yoke Anti-Rattler		P,D,C	—	—	—	—	—	—	1	1	2580 944
	NUT, T/Gate Window Washer Pivot Pin Arm Support	70	All	—	—	—	—	—	—	2	2	120 376
		71	P,D,C	—	—	—	—	—	—	2	2	120 376
23-67-268	U-NUT, T/Gate Window Washer Reservoir Mtg.		P,D,C	—	—	—	—	—	—	1	1	2926 937

CARLINES: J - Challenger, B - Barracuda, V - Valiant, L - Dart, R - Belvedere - Satallite, W - Coronet - Charger, P - Plymouth, D - Dodge, C - Chrysler, Y - Imperial

NUMERALS INDICATE: 21 - 2 DR. SED., 23 - 2 DR. H.T., 27 - CONV. CPE., 29 - FAST BACK, 41 - 4 DR. SED., 43 - 4 DR. H.T., 45 - 6 PASS. STA. WGN., 46 - 9 PASS. STA. WGN.

AR Indicates use as required.
\# Indicates parts not listed in any previous parts book
Numerals in parentheses ( ) refer to notes.
★ Indicates change or addition.

Printed in U.S.A.
January 1972

Right and left part numbers are on same line, first number is right, second number is left.

NOTES

ROLLED STOCK INFORMATION

NOTES: VINYL AND CLOTH

Requirements must be ordered in INCH Quantities. I.E. 20 inches = 20 running inches of material

HIDE OR LEATHER

Requirements must be ordered by quantity of 1 indicating size of piece required I.E. 1 (part number) 24 x 12 inches.

VALIANT

Distribution Drawing Legend Pages Appear Following Illustration Section

1970 VALIANT FV-L 4 DOOR SEDAN, SP. 2 DOOR HARD TOP

CLOTH AND VINYL TRIM

ITEM	TYPE OF MATERIAL	CODE	MATERIAL WIDTH	PART NUMBERS AND COLORS						
				BLUE L1B	GREEN L1F	BLACK L1X				
1	Body Cloth	23-114-2	65 inches	0102 FB7	0102 FF8	0102 FX9				
2	Vinyl 34.5 oz.	23-114-15	54 inches	0672 EB7	0672 EF8	0672 EX9				

1970 VALIANT FV-L 4 DOOR SEDAN, SP. 2 DOOR HARD TOP

VINYL TRIM

ITEM	TYPE OF MATERIAL	CODE	MATERIAL WIDTH	PART NUMBERS AND COLORS						
				BLUE L2B	GREEN L2F	BLACK L2X				
1	Vinyl 32 oz.	23-114-15	54 inches	0750 FB3	0750 FF4	0750 FX9				
2	Vinyl 34.5 oz.	23-114-15	54 inches	0672 EB7	0672 EF8	0672 EX9				
3	Vinyl 19.7 oz.	23-114-15	56 inches	0783 FB3	0783 FF4	0783 FX9				

1970 VALIANT FV-L 4 DOOR SEDAN, SP. 2 DOOR HARD TOP

VINYL TRIM

ITEM	TYPE OF MATERIAL	CODE	MATERIAL WIDTH	PART NUMBERS AND COLORS						
				BLUE L4B	RED L4E	GREEN L4F	TAN L4T	BLACK L4X		
1	Not Serviced See Part Type Codes 23-108-5 and 23-108-16, 23-109-4 and 23-109-36									
2	Vinyl 34.5 oz.	23-114-15	54 inches	0672 EB7	0672 FE4	0672 EF8	0672 FT5	0672 EX9		
3	Vinyl 34.5 oz.	23-114-15	54 inches	0672 EB7	0672 FE4	0672 EF8	0672 FT5	0672 EX9		

1970 VALIANT FV-L 4 DOOR SEDAN, SP. 2 DOOR HARD TOP

VINYL TRIM

ITEM	TYPE OF MATERIAL	CODE	MATERIAL WIDTH	PART NUMBERS AND COLORS						
				BLACK L6X	BLUE, WHITE L6BW	RED, WHITE L6EW	BLACK WHITE L6XW			
1	Not Serviced See Part Type Codes 23-108-5 and 23-108-16, 23-109-4 and 23-109-36									
2	Vinyl 34.5 oz.	23-114-15	54 inches	0672 EX9	0672 EW1	0672 EW1	0672 EW1			

1970 VALIANT FV-L SP. 2 DOOR HARD TOP

VINYL TRIM

ITEM	TYPE OF MATERIAL	CODE	MATERIAL WIDTH	PART NUMBERS AND COLORS						
				BLUE D2B	GREEN D2F	BLACK D2X				
1	Vinyl 29 oz.	23-114-15	49 inches	0799 FB7	0799 FF8	0799 FX9				
2	Vinyl 34.5 oz.	23-114-15	54 inches	0672 EB7	0672 EF8	0672 EX9				
3	Vinyl 34.5 oz.	23-114-15	54 inches	0672 EB7	0672 EF8	0672 EX9				

NOTES

BARRACUDA

Distribution Drawing Legend Pages Appear Following Illustration Section.

1970 BARRACUDA FB-H, FB-S 2 DOOR HARD TOP

VINYL TRIM

ITEM	TYPE OF MATERIAL	CODE	MATERIAL WIDTH	PART NUMBERS AND COLORS						
				BLUE H4B	BLUE, WHITE H4BW	GREEN H4F	GREEN, WHITE H4FW	BLACK H4X	BLACK, WHITE H4XW	
1	Not Serviced See Part Type Codes 23-108-5 and 23-108-16, 23-109-4 and 23-109-36									
2	Vinyl 34.5 oz.	23-114-15	54 inches	0672 B5	0672 EW1	0672 EF8	0672 EW1	0672 EX9	0672 EW1	
3	Vinyl	23-114-15	54 inches	0714 EB5	0714 EW1	0714 EF8	0714 EW1	0714 EX9	0714 EW1	

1970 BARRACUDA FB-H, FB-S 2 DOOR HARD TOP, CONVERTIBLE

VINYL TRIM

ITEM	TYPE OF MATERIAL	CODE	MATERIAL WIDTH	PART NUMBERS AND COLORS						
				BLUE H6B	BLUE, WHITE H6BW	RED H6E	RED, WHITE H6EW	GREEN H6F	GREEN, WHITE H6FW	TAN H6T
1	Not Serviced See Part Type Codes 23-108-5 and 23-108-16, 23-109-4 and 23-109-36									
2	Vinyl 34.5 oz.	23-114-15	54 inches	0672 EB5	0672 EW1	0672 FE4	0672 EW1	0672 EF8	0672 EW1	0672 FT5
3	Vinyl 19.7 oz.	23-114-15	56 inches	0714 EB5	0714 EW1	0714 FE4	0714 EW1	0714 EF8	0714 EW1	0714 FT5

ITEM	TYPE OF MATERIAL	CODE	MATERIAL WIDTH	PART NUMBERS AND COLORS						
				BLACK H6X	BLACK, WHITE H6XW					
1	Not Serviced See Part Type Codes 23-108-5 and 23-108-16, 23-109-4 and 23-109-36									
2	Vinyl 34.5 oz.	23-114-15	54 inches	0672 EX9	0672 EW1					
3	Vinyl	23-114-15	54 inches	0714 EX9	0714 EW1					

1970 BARACUDA FB-P 2 DOOR HARD TOP

CLOTH AND VINYL TRIM

ITEM	TYPE OF MATERIAL	CODE	MATERIAL WIDTH	PART NUMBERS AND COLORS						
				ORANGE P5K	BLACK P5X					
1	Not Serviced See Part Type Codes 23-108-5 and 23-108-16, 23-109-4 and 23-109-36									
2	Vinyl 34.5 oz.	23-114-15	54 inches	0672 FK4	0672 EX9					
3	Vinyl 19.7 oz.	23-114-15	56 inches	0714 FK4	0714 EX9					

1970 BARRACUDA FB-P 2 DOOR HARD TOP, CONVERTIBLE

VINYL TRIM

ITEM	TYPE OF MATERIAL	CODE	MATERIAL WIDTH	PART NUMBERS AND COLORS						
				GREY P6A	BLUE P6B	BLUE, WHITE P6BW	RED P6E	RED, WHITE P6EW	GREEN P6F	GREEN, WHITE P6FW
1	Not Serviced See Part Type Codes 23-108-5 and 23-108-16, 23-109-4 and 23-109-36									
2	Vinyl 34.5 oz.	23-114-15	54 inches	0672 FA8	0672 EB5	0672 EW1	0672 FE4	0672 EW1	0672 EF8	0672 EW1
3	Vinyl 19.7 oz.	23-114-15	56 inches	0714 FA8	0714 EB5	0714 EW1	0714 FE4	0714 EW1	0714 EF8	0714 EW1

ITEM	TYPE OF MATERIAL	CODE	MATERIAL WIDTH	PART NUMBERS AND COLORS						
				ORANGE P6K	TAN P6T	BLACK, WHITE P6XW	GOLD, BLACK P6YX			
1	Not Serviced See Part Type Codes 23-108-5 and 23-108-16, 23-109-4 and 23-109-36									
2	Vinyl 34.5 oz.	23-114-15	54 inches	0672 FK4	0672 FT5	0672 EW1	0672 FY4			
3	Vinyl 19.7 oz.	23-114-15	56 inches	0714 FK4	0714 FT5	0714 EW1	0714 FY4			

Printed in U.S.A.
December 1970

BARRACUDA

Distribution Drawing Legend Pages Appear Following Illustration Section.

1970 BARRACUDA FB-H, FB-P, FB-S 2 DOOR HARD TOP, CONVERTIBLE

LEATHER TRIM

ITEM	TYPE OF MATERIAL	CODE	MATERIAL WIDTH	PART NUMBERS AND COLORS						
				TAN PRT	BLACK PRX	BLACK, WHITE PRXW				
1	Not Serviced See Part Type Codes 23-108-5 and 23-108-16, 23-109-4 and 23-109-36									
2	Vinyl 34.5 oz.	23-114-15	54 inches	0672 FT5	0672 EX9	0672 EW1				
3	Vinyl 19.7 oz.	23-114-15	56 inches	0714 FT5	0714 EX9	0714 EW1				

NOTES

Printed in U.S.A.
December 1970

DART

Distribution Drawing Legend Pages Appear Following Illustration Section.

1970 DART FL-L 4 DOOR SEDAN, 2 DOOR HARD TOP

VINYL TRIM

ITEM	TYPE OF MATERIAL	CODE	MATERIAL WIDTH	PART NUMBERS AND COLORS						
				BLUE L2B	GREEN L2F	BLACK L2X				
1	Vinyl 32 oz.	23-114-15	54 inches	0750 FB3	0750 FF4	0750 FX9				
2	Vinyl 34.5 oz.	23-114-15	54 inches	0672 EB7	0672 EF8	0672 EX9				
3	Vinyl 19.7 oz.	23-114-15	56 inches	0783 FB3	0783 FF4	0783 FX9				

1970 DART FL-H 4 DOOR SEDAN

CLOTH AND VINYL TRIM

ITEM	TYPE OF MATERIAL	CODE	MATERIAL WIDTH	PART NUMBERS AND COLORS						
				BLUE H1B	GREEN H1F	BLACK H1X				
1	Not Serviced See Part Type Codes 23-108-5 and 23-108-16, 23-109-4 and 23-109-36									
2	Vinyl 34.5 oz.	23-114-15	54 inches	0672 EB7	0672 EF8	0672 EX9				
3	Vinyl 19.7 oz.	23-114-15	56 inches	0783 FB7	0783 FF8	0783 FX9				

1970 DART FL-H 4 DOOR SEDAN, 2 DOOR HARD TOP

VINYL TRIM

ITEM	TYPE OF MATERIAL	CODE	MATERIAL WIDTH	PART NUMBERS AND COLORS						
				BLUE H2B	GREEN H2F	TAN H2T	BLACK H2X	BLACK, WHITE H2XW		
1	Not Serviced See Part Type Codes 23-108-5 and 23-108-16, 23-109-4 and 23-109-36									
2	Vinyl 34.5 oz.	23-114-15	54 inches	0672 EB7	0672 EF8	0672 FT5	0672 EX9	0672 EW1		
3	Vinyl 34.5 oz.	23-114-15	54 inches	0672 EB7	0672 EF8	0672 FT5	0672 EX9	0672 EW1		

1970 DART FL-L 2 DOOR HARD TOP

VINYL TRIM

ITEM	TYPE OF MATERIAL	CODE	MATERIAL WIDTH	PART NUMBERS AND COLORS						
				BLUE D2B	GREEN D2F	TAN D2T	BLACK D2X			
1	Not Serviced See Part Type Codes 23-108-5 and 23-108-16, 23-109-4 and 23-109-36									
2	Vinyl 34.5 oz.	23-114-15	54 inches	0672 EB7	0672 EF8	0672 FT5	0672 EX9			
3	Vinyl 19.7 oz.	23-114-15	56 inches	0783 FB3	0783 FF4	0783 FT4	0783 FX9			

1970 DART FL-H 2 DOOR HARD TOP

VINYL TRIM

ITEM	TYPE OF MATERIAL	CODE	MATERIAL WIDTH	PART NUMBERS AND COLORS						
				GREEN H6F	TAN H6T	BLACK H6X				
1	Not Serviced See Part Type Codes 23-108-5 and 23-108-16, 23-109-4 and 23-109-36									
2	Vinyl 34.5 oz.	23-114-15	54 inches	0672 EF8	0672 FT5	0672 EX9				
3	Vinyl 50 oz.	23-114-15	54 inches	0714 EF8	0714 FT5	0714 EX9				

NOTES

Printed in U.S.A.
December 1970

BELVEDERE

Distribution Drawing Legend Pages Appear Following Illustration Section.

1970 BELVEDERE FR-K, FR-L 2 DOOR SEDAN, 4 DOOR SEDAN

CLOTH AND VINYL TRIM

ITEM	TYPE OF MATERIAL	CODE	MATERIAL WIDTH	PART NUMBERS AND COLORS TAN K1T
1	Body Cloth	23-114-2	54 inches	0131 FT3
2	Vinyl 34.5 oz.	23-114-15	54 inches	0672 FT5
3	Vinyl 34.5 oz.	23-114-15	54 inches	0672 FT5

1970 BELVEDERE FR-K, FR-L, FR-W, FR-T 2 DOOR SEDAN, 4 DOOR SEDAN

VINYL TRIM

ITEM	TYPE OF MATERIAL	CODE	MATERIAL WIDTH	PART NUMBERS AND COLORS TAN K2T	TAN T2T	BLACK T2X	BLACK K2X
1	Vinyl 37 oz.	23-114-15	50 inches	0724 FT5	0724 FT5	0724 EX9	0724 EX9
2	Vinyl 34.5 oz.	23-114-15	54 inches	0672 FT5	0672 FT5	0672 EX9	0672 EX9
3	Vinyl 37 oz.	23-114-15	50 inches	0724 FT5	0724 FT5	0724 EX9	0724 EX9

1970 BELVEDERE FR-L, FR-K 4 DOOR SEDAN

CLOTH AND VINYL TRIM

ITEM	TYPE OF MATERIAL	CODE	MATERIAL WIDTH	PART NUMBERS AND COLORS BLUE L1B	GOLD L1Y
1	Body Cloth	23-114-2	54 inches	0127 FB3	0127 FY4
2	Vinyl 34.5 oz.	23-114-15	54 inches	0672 EB3	0672 FY4
3	Vinyl 34.5 oz.	23-114-15	54 inches	0672 EB3	0672 FY4

1970 BELVEDERE FR-L, FR-K 4 DOOR SEDAN, STATION WAGON 6 PASS.

VINYL TRIM

ITEM	TYPE OF MATERIAL	CODE	MATERIAL WIDTH	PART NUMBERS AND COLORS BLUE L2B	TAN L2T	BLACK L2X
1	Not Serviced See Part Type Codes 23-108-5 and 2 3-108-16, 23-109-4 and 23-109-36					
2	Vinyl 31.4 oz.	23-114-15	53 inches	0799 FB3	0799 FT5	0799 FX9
3	Vinyl 34.5 oz.	23-114-15	54 inches	0672 EB7	0672 FT5	0672 EX9
4	Vinyl 16.9 oz.	23-114-15	48 inches	0800 FB7	0800 FT4	0800 FX9

1970 BELVEDERE FR-K, FR-L, FR-M 2 DOOR SEDAN

VINYL TRIM

ITEM	TYPE OF MATERIAL	CODE	MATERIAL WIDTH	PART NUMBERS AND COLORS BLUE M2B	TAN M2T	BLACK M2X
1	Not Serviced See Part Type Codes 23-108-5 and 23-108-16, 23-109-4 and 23-109-36					
2	Vinyl 34.5 oz.	23-114-15	54 inches	0672 EB5	0672 FT5	0672 EX9
3	Vinyl 16.9 oz.	23-114-15	48 inches	0800 FB5	0800 FT4	0800 FX9

1970 BELVEDERE FR-H 4 DOOR SEDAN, 2 DOOR HARD TOP

CLOTH AND VINYL TRIM

ITEM	TYPE OF MATERIAL	CODE	MATERIAL WIDTH	PART NUMBERS AND COLORS BLUE H1B 2D.H.T.	BLUE H1B 4D.SED.	GREEN H1F	BLACK H1X	GOLD H1X
1	Not Serviced See Part Type Codes 23-108-5 and 23-108-16, 23-109-4 and 23-109-36							
2	Vinyl 34.5 oz.	23-114-15	54 inches	0672 EB5	0672 EB7	0672 EF8	0672 EX9	0672 FY4
3	Vinyl 34.5 oz.	23-114-15	54 inches	0672 EB5	0672 EB7	0672 EF8	0672 EX9	0672 FY4
4	Vinyl 16.9 oz.	23-114-15	48 inches	0800 FB5	0800 FB7	0800 FF8	0800 FX9	0800 FY4

Printed in U.S.A.
December 1970

BELVEDERE

Distribution Drawing Legend Pages Appear Following Illustration Section.

1970 BELVEDERE FR-H, FR-P 4 DOOR SEDAN, STATION WAGON

VINYL TRIM

ITEM	TYPE OF MATERIAL	CODE	MATERIAL WIDTH	PART NUMBERS AND COLORS						
				BLUE H2B	BLUE, WHITE H2BW	GREEN H2F	GREEN, WHITE H2FW	TAN H2T	TAN, WHITE H2TW	BLACK H2X
1	Not Serviced See Part Type Codes 23-108-5 and 23-108-16, 23-109-4 and 23-109-36									
2	Vinyl 34.5 oz.	23-114-15	54 inches	0672 EB7	0672 EW1	0672 EF8	0672 EW1	0672 FT5	0672 EW1	0672 EX9
3	Vinyl 34.5 oz.	23-114-15	54 inches	0672 EB7	0672 EW1	0672 EF8	0672 EW1	0672 FT5	0672 EW1	0672 EX9
4	Vinyl 16.9 oz.	23-114-15	54 inches	0800 FB7	0800 EW1	0800 FF8	0800 FW1	0800 FT4	0800 FW1	0800 FX9

ITEM	TYPE OF MATERIAL	CODE	MATERIAL WIDTH	PART NUMBERS AND COLORS						
				GOLD BLACK						
1	Not Serviced See Part Type Codes 23-108-5 and 23-108-16, 23-109-4 and 23-109-36									
2	Vinyl 34.5 oz.	23-114-15	54 inches	0672 FY4						
3	Vinyl 34.5 oz.	23-114-15	54 inches	0672 FY4						
4	Vinyl 16.9 oz.	23-114-15	54 inches	0800 FY4						

1970 BELVEDERE FR-M, FR-H 2 DOOR HARD TOP, CONVERTIBLE

VINYL TRIM

ITEM	TYPE OF MATERIAL	CODE	MATERIAL WIDTH	PART NUMBERS AND COLORS						
				BLUE H2B	BLUE, WHITE H2BW	GREEN H2F	ORANGE H2K	ORANGE WHITE H2KW	TAN H2T	BLACK H2X
1	Not Serviced See Part Type Codes 23-108-5 and 23-108-16, 23-109-4 and 23-109-36									
2	Vinyl 34.5 oz.	23-114-15	54 inches	0672 EB5	0672 EW1	0672 EF8	0672 FK4	0672 EW1	0672 FT5	0672 EX9
3	Vinyl 34.5 oz.	23-114-15	54 inches	0672 EB5	0672 EW1	0672 EF8	0672 FK4	0672 EW1	0672 FT5	0672 EX9
4	Vinyl 16.9 oz.	23-114-15	48 inches	0800 FB5	0800 FW1	0800 FF8	0800 FK5	0800 FW1	0800 FT4	0800 FX9

ITEM	TYPE OF MATERIAL	CODE	MATERIAL WIDTH	PART NUMBERS AND COLORS						
				BLACK, WHITE H2XW						
1	Not Serviced See Part Type Codes 23-108-5 and 23-108-16, 23-109-4 and 23-109-36									
2	Vinyl 34.5 oz.	23-114-15	54 inches	0672 EW1						
3	Vinyl 34.5 oz.	23-114-15	54 inches	0672 EW1						
4	Vinyl 16.9 oz.	23-114-15	48 inches	0800 FW1						

1970 BELVEDERE FR-L, FR-K STATION WAGON 6 PASS.

VINYL TRIM

ITEM	TYPE OF MATERIAL	CODE	MATERIAL WIDTH	PART NUMBERS AND COLORS						
				BLUE D2B	TAN D2T					
1	Vinyl 32 oz.	23-114-15	54 inches	0791 FB3	0791 FT5					
2	Vinyl 34.5 oz.	23-114-15	54 inches	0672 EB3	0672 FT5					
3	Vinyl 34.5 oz.	23-114-15	54 inches	0672 EB3	0672 FT5					

1970 BELVEDERE FR-P 4 DOOR SEDAN, STATION WAGON

CLOTH AND VINYL TRIM

ITEM	TYPE OF MATERIAL	CODE	MATERIAL WIDTH	PART NUMBERS AND COLORS						
				BLUE P3B	GREEN P3F	BURNT ORANGE P3K	BLACK P3X	GOLD P3Y		
1	Not Serviced See Part Type Codes 23-108-5 and 23-108-16, 23-109-4 and 23-109-36									
2	Vinyl 34.5 oz.	23-114-15	54 inches	0672 EB7	0672 EF8	0672 EX9	0672 FY4			

BELVEDERE

Distribution Drawing Legend Pages Appear Following Illustration Section.

1970 BELVEDERE FR-S, FR-P 2 DOOR HARD TOP

CLOTH AND VINYL TRIM

ITEM	TYPE OF MATERIAL	CODE	MATERIAL WIDTH	PART NUMBERS AND COLORS						
				BLUE P3B	BURNT ORANGE P3K	BLACK P3X				
1	Not Serviced See Part Type Codes 23-108-5 and 23-108-16, 23-109-4 and 23-109-36									
2	Vinyl 34.5 oz.	23-114-15	.54 inches	0672 FB5	0672 FK4	0672 EX9				

1970 BELVEDERE FR-P, 4 DOOR SEDAN

VINYL TRIM

ITEM	TYPE OF MATERIAL	CODE	MATERIAL WIDTH	PART NUMBERS AND COLORS						
				BLUE P6B	WHITE P6BW	TAN P6T	WHITE P6TW	BLACK GRAY P6XA		
1	Not Serviced See Part Type Codes 23-108-5 and 23-108-16, 23-109-4 and 23-109-36									
2	Vinyl 34.5 oz.	23-114-15	54 inches	0672 EB7	0672 EW1	0672 FT5	0672 EW1	0672 FA8		
3	Vinyl	23-114-15	54 inches	0714 EB7	0714 EW1	0714 FT5	0714 EW1	0714 FA8		

1970 BELVEDERE FR-M, FR-P, FR-S 2 DOOR SEDAN, STATION WAGON, 2 DOOR HARD TOP, CONVERTIBLE

VINYL TRIM

ITEM	TYPE OF MATERIAL	CODE	MATERIAL WIDTH	PART NUMBERS AND COLORS						
				BLUE P6B	WHITE P6BW	GREEN P6F	ORANGE P6K	WHITE P6KW	TAN P6T	GRAY P6XA
1	Not Serviced See Part Type Codes 23-108-5 and 23-108-16, 23-109-4 and 23-109-36									
2	Vinyl 34.5 oz.	23-114-15	54 inches	0672 EB5	0672 EW1	0672 EF8	0672 FK4	0672 EW1	0672 FT5	0672 FA8
3	Vinyl	23-114-15	54 inches	0714 FB5	0714 EW1	0714 EF8	0714 FK4	0714 EW1	0714 FT5	0714 FA8

ITEM	TYPE OF MATERIAL	CODE	MATERIAL WIDTH	PART NUMBERS AND COLORS						
				WHITE P6XW	GOLD P6XY					
2	Vinyl 34.5 oz.	23-114-15	54 inches	0672 EW1	0672 FY4					
3	Vinyl	23-114-15	54 inches	0714 EW1	0714 FY4					

NOTES

Printed in U.S.A.
December 1970

PLYMOUTH

Distribution Drawing Legend Pages Appear Following Illustration Section.

1970 PLYMOUTH FP-E, FP-K, FP-L 2 DOOR SEDAN, 4 DOOR SEDAN, STATION WAGON

VINYL TRIM

ITEM	TYPE OF MATERIAL	CODE	MATERIAL WIDTH	PART NUMBERS AND COLORS						
				BLUE E2B	TAN E2T					
1	Vinyl 38.5 oz.	23-114-15	65 inches	0784 FB7	0784 FL6					
2	Vinyl 34.5 oz.	23-114-15	54 inches	0672 EB3	0672 FT5					
3	Vinyl 34.5 oz.	23-114-15	54 inches	0672 EB3	0672 FT5					

1970 PLYMOUTH FP-E, FP-K, 2 DOOR SEDAN, 4 DOOR SEDAN

CLOTH AND VINYL TRIM

ITEM	TYPE OF MATERIAL	CODE	MATERIAL WIDTH	PART NUMBERS AND COLORS						
				TAN K1T						
1	Body CLOTH	23-114-2	54 inches	0131 FT3						
2	Vinyl 34.5 oz.	23-114-15	54 inches	0672 FT5						
3	Vinyl 34.5 oz.	23-114-15	54 inches	0672 FT5						

1970 PLYMOUTH FP-K, FP-E, FP-T 2 DOOR SEDAN, 4 DOOR SEDAN

VINYL TRIM

ITEM	TYPE OF MATERIAL	CODE	MATERIAL WIDTH	PART NUMBERS AND COLORS						
				TAN K2T						
1	Vinyl 37 oz.	23-114-15	50 inches	0724 FT5						
2	Vinyl 34.5 oz.	23-114-15	54 inches	0672 FT5						
3	Vinyl 37 oz.	23-114-15	50 inches	0724 FT5						

1970 PLYMOUTH FP-K, FP-E, FP-L 2 DOOR SEDAN, 4 DOOR SEDAN STATION WAGON

VINYL TRIM

ITEM	TYPE OF MATERIAL	CODE	MATERIAL WIDTH	PART NUMBERS AND COLORS						
				BLUE K2B, B2B	TAN K2T, B2T					
1	Vinyl 38.5 oz.	23-114-15	65 inches	0784 FB7	0784 FT6					
2	Vinyl 34.5 oz.	23-114-15	54 inches	0672 EB3	0672 FT5					
3	Vinyl 34.5 oz.	23-114-15	54 inches	0672 EB3	0672 FT5					

1970 PLYMOUTH FP-L, FP-K 2 DOOR SEDAN, 4 DOOR SEDAN, 2 DOOR HARD TOP

CLOTH AND VINYL TRIM

ITEM	TYPE OF MATERIAL	CODE	MATERIAL WIDTH	PART NUMBERS AND COLORS						
				BLUE L1B	GREEN L1F	GRAY L1XA	GOLD L1Y			
1	Not Serviced See Part Type Codes 23-108-5 and 23-108-16, 23-109-4 and 23-109-36									
2	Vinyl 34.5 oz.	23-114-15	54 inches	0672 EB3	0672 EF8	0672 FA8	0672 FY4			
3	Vinyl 34.5 oz.	23-114-15	54 inches	0672 EB3	0672 EF8	0672 FA8	0672 FY4			

1970 PLYMOUTH FP-L, FP-K, FP-M, 4 DOOR SEDAN, STATION WAGON, 2 DOOR HARD TOP

VINYL TRIM

ITEM	TYPE OF MATERIAL	CODE	MATERIAL WIDTH	PART NUMBERS AND COLORS						
				BLUE L2B D2B	GREEN L2F D2F	TAN L2T D2T	GRAY L2XA D2XA			
1	Not Serviced See Part Type Codes 23-108-5 and 23-108-16, 23-109-4 and 23-109-36									
2	Vinyl 34.5 oz.	23-114-15	54 inches	0672 EB3	0672 EF8	0672 FT5	0672 FA8			
3	Vinyl 34.5 oz.	23-114-15	54 inches	0672 EB3	0672 EF8	0672 FT5	0672 FA8			

Printed in U.S.A.
December 1970

PLYMOUTH

Distribution Drawing Legend Pages Appear Following Illustration Section.

1970 PLYMOUTH FP-M, 4 DOOR SEDAN, 4 DOOR HARD TOP, 2 DOOR HARD TOP, SPECIAL 2 DOOR HARD TOP

CLOTH AND VINYL TRIM

ITEM	TYPE OF MATERIAL	CODE	MATERIAL WIDTH	PART NUMBERS AND COLORS						
				BLUE M1B	GREEN M1F	ORANGE M1K	GRAY M1XA	GOLD M1Y		
1	Not Serviced See Part Type Codes 23-108-5 and 23-108-16, 23-109-4 and 23-109-36									
2	Vinyl 34.5 oz.	23-114-15	54 inches	0672 EB3	0672 EF8	0672 FK4	0672 FA8	0672 FY4		
3	Vinyl 34.5 oz.	23-114-15	54 inches	0672 EB3	0672 EF8	0672 FK4	0672 FA8	0672 FY4		

1970 PLYMOUTH FP-M, FP-H 4 DOOR SEDAN, 4 DOOR HARD TOP, STATION WAGON, 2 DOOR HARD TOP SPECIAL 2 DOOR HARD TOP, CONVERTIBLE

VINYL TRIM

ITEM	TYPE OF MATERIAL	CODE	MATERIAL WIDTH	PART NUMBERS AND COLORS						
				BLUE M4B	GREEN M4F	ORANGE M4K	TAN M4T	GRAY M4XA	BLACK and PEACOCK M4XP	WHITE M4XW
1	Not Serviced See Part Type Codes 23-108-5 and 23-108-16, 23-109-4 and 23-109-36									
2	Vinyl 34.5 oz.	23-114-15	54 inches	0672 EB3	0672 EF8	0672 FK4	0672 FT5	0672 FA8	0672 FP8	0672 EW1
3	Vinyl 34.5 oz.	23-114-15	54 inches	0672 EB3	0672 EF8	0672 FK4	0672 FT5	0672 FA8	0672 FP8	0672 EW1

1970 PLYMOUTH FP-M, FP-H 4 DOOR HARD TOP, 2 DOOR HARD TOP, SPECIAL 2 DOOR HARD TOP, CONVERTIBLE

VINYL TRIM

ITEM	TYPE OF MATERIAL	CODE	MATERIAL WIDTH	PART NUMBERS AND COLORS						
				BLUE M6B H6B	GREEN M6F H6F	ORANGE H6K	TAN H6T	GRAY M6XA H6XA		
1	Not Serviced See Part Type Codes 23-108-5 and 23-108-16, 23-109-4 and 23-109-36									
2	Vinyl 34.5 oz.	23-114-15	54 inches	0672 EB3	0672 EF8	0672 FK5	0672 FT4	0672 FA8		

1970 PLYMOUTH FP-H, STATION WAGON

CLOTH AND VINYL TRIM

ITEM	TYPE OF MATERIAL	CODE	MATERIAL WIDTH	PART NUMBERS AND COLORS						
				GREEN M7F						
1	Not Serviced See Part Type Codes 23-108-5 and 23-108-16, 23-109-4 and 23-109-36									
2	Vinyl 34.5 oz.	23-114-15	54 inches	0672 EF8						
3	Vinyl 34.5 oz.	23-114-15	54 inches	0672 EF8						

1970 PLYMOUTH FP-H STATION WAGON

VINYL TRIM

ITEM	TYPE OF MATERIAL	CODE	MATERIAL WIDTH	PART NUMBERS AND COLORS						
				GRAY M8XA						
1	Not Serviced See Part Type Codes 23-108-5 and 23-108-16, 23-109-4 and 23-109-36									
2	Vinyl 34.5 oz.	23-114-15	54 inches	0672 FA8						
3	Vinyl 34.5 oz.	23-114-15	54 inches	0672 FA8						

1970 PLYMOUTH FP-P 4 DOOR HARD TOP, 2 DOOR HARD TOP, SPECIAL 2 DOOR HARD TOP

CLOTH AND VINYL TRIM

ITEM	TYPE OF MATERIAL	CODE	MATERIAL WIDTH	PART NUMBERS AND COLORS						
				BLUE P3B	GREEN P3F	ORANGE P3K	GRAY P3XA			
1	Not Serviced See Part Type Codes 23-108-5 and 23-108-16, 23-109-4 and 23-109-36									
2	Vinyl 34.5 oz.	23-114-15	54 inches	0672 EB3	0672 EF8	0672 FK4	0672 FA8			

Printed in U.S.A.
December 1970

PLYMOUTH

Distribution Drawing Legend Pages Appear Following Illustration Section.

1970 PLYMOUTH FP-P 4 DOOR HARD TOP, 2 DOOR HARD TOP, SPECIAL 2 DOOR HARD TOP

VINYL TRIM

ITEM	TYPE OF MATERIAL	CODE	MATERIAL WIDTH	PART NUMBERS AND COLORS						
				BLUE P4B	ORANGE P4K	GRAY P4XA				

1 Not Serviced See Part Type Codes 23-108-5 and 23-108-16, 23-109-4 and 23-109-36
2 Vinyl 34.5 oz. 23-114-15 54 inches 0672 EB3 0672 FK4 0672 FA8

1970 PLYMOUTH FP-P 2 DOOR HARD TOP, SPECIAL 2 DOOR HARD TOP

CLOTH AND VINYL TRIM

ITEM	TYPE OF MATERIAL	CODE	MATERIAL WIDTH	PART NUMBERS AND COLORS						
				GRAY P5XA						

1 Not Serviced See Part Type Codes 23-108-5 and 23-108-16, 23-109-4 and 23-109-36
2 Vinyl 34.5 oz. 23-114-15 54 inches 0672 FA8

1970 PLYMOUTH FP-P 4 DOOR HARD TOP

CLOTH AND VINYL TRIM

ITEM	TYPE OF MATERIAL	CODE	MATERIAL WIDTH	PART NUMBERS AND COLORS						
				GRAY P7XA						

1 Not Serviced See Part Type Codes 23-108-5 and 23-108-16, 23-109-4 and 23-109-36
2 Vinyl 34.5 oz. 23-114-15 54 inches 0672 FA8

NOTES

Printed in U.S.A.
December 1970

CORONET

Distribution Drawing Legend Pages Appear Following Illustration Section.

1970 CORONET FW-K, FW-L, 2 DOOR SEDAN, 4 DOOR SEDAN

CLOTH AND VINYL TRIM

ITEM	TYPE OF MATERIAL	CODE	MATERIAL WIDTH	PART NUMBERS AND COLORS						
				TAN K1T						
1	Body Cloth	23-114-2	54 inches	0131 FT3						
2	Vinyl 34.5 oz.	23-114-15	54 inches	0672 FT5						
3	Vinyl 34.5 oz.	23-114-15	54 inches	0672 FT5						

1970 CORONET FW-K, FW-L, 2 DOOR SEDAN, 4 DOOR SEDAN

VINYL TRIM

ITEM	TYPE OF MATERIAL	CODE	MATERIAL WIDTH	PART NUMBERS AND COLORS						
				TAN K2T	BLACK K2X					
1	Vinyl 37 oz.	23-114-15	50 inches	0724 FT5	0724 EX9					
2	Vinyl 34.5 oz.	23-114-15	54 inches	0672 FT5	0672 EX9					
3	Vinyl 37 oz.	23-114-15	50 inches	0724 FT5	0724 EX9					

1970 CORONET, FW-L, FW-K, 2 DOOR SEDAN, 4 DOOR SEDAN, STATION WATON

VINYL TRIM

ITEM	TYPE OF MATERIAL	CODE	MATERIAL WIDTH	PART NUMBERS AND COLORS						
				BLUE L2B	TAN L2T	BLACK L2X				
1	Not Serviced See Part Type Codes 23-108-5 and 23-108-16, 23-109-4 and 23-109-36									
2	Vinyl 34.5 oz.	23-114-15	54 inches	0672 EB7	0672 FT5	0672 EX9				
3	Vinyl 16.9 oz.	23-114-15	48 inches	0800 FB7	0800 FT4	0800 FX9				

1970 CORONET FW-M, FW-P 2 DOOR SEDAN, 2 DOOR HARD TOP, CONVERTIBLE

VINYL TRIM

ITEM	TYPE OF MATERIAL	CODE	MATERIAL WIDTH	PART NUMBERS AND COLORS						
				BLUE M6B, D6B	GREEN M6F D6F	ORANGE M6K D6K	TAN M6T D6T	BLACK M6X D6X	WHITE M6XW D6XW	
1	Not Serviced See Part Type Codes 23-108-5 and 23-108-16, 23-109-4 and 23-109-36									
2	Vinyl 34.5 oz.	23-114-15	54 inches	0672 EB7	0672 EF8	0672 FK4	0672 FT5	0672 EX9	06 EW1	

1970 CORONET FW-H 4OOR SEDAN

CLOTH AND VINYL TRIM

ITEM	TYPE OF MATERIAL	CODE	MATERIAL WIDTH	PART NUMBERS AND COLORS						
				BLUE H1B	GREEN H1F	BLACK H1X	GOLD H1Y			
1	Not Serviced See Part Type Codes 23-108-5 and 23-108-16, 23-109-4 and 23-109-36									
2	Vinyl 34.5 oz.	23-114-15	54 inches	0672 EB7	0672 EF8	0672 EX9	0672 FY4			
3	Vinyl 34.5 oz.	23-114-15	54 inches	0672 EB7	0672 EF8	0672 EX9	0672 FY4			

1970 CORONET FW-M, FW-H 2 DOOR SEDAN, 4 DOOR SEDAN, STATION WAGON, 2 DOOR HARD TOP

VINYL TRIM

ITEM	TYPE OF MATERIAL	CODE	MATERIAL WIDTH	PART NUMBERS AND COLORS						
				BLUE H2B	GREEN H2F	ORANGE H2K	TAN H2T	BLACK H2X	WHITE H2XW	
1	Not Serviced See Part Type Codes 23-108-5 and 23-108-16, 23-109-4 and 23-109-36									
2	Vinyl 34.5 oz.	23-114-15	54 inches	0672 EB7	0672 EF8	0672 FK4	0672 FT5	0672 EX9	0672 EW1	
3	Vinyl 34.5 oz.	23-114-15	54 inches	0672 EB7	0672 EF8	0672 FK4	0672 FT5	0672 EX9	0672 EW1	

Printed in U.S.A.
December 1970

CORONET

Distribution Drawing Legend Pages Appear Following Illustration Section.

1970 CORONET FW-P 4 DOOR SEDAN

CLOTH AND VINYL TRIM

ITEM	TYPE OF MATERIAL	CODE	MATERIAL WIDTH	PART NUMBERS AND COLORS						
				BLUE P3B	GREEN P3F	ORANGE P3K	BLACK P3X	GOLD P3Y		
1	Not Serviced See Part Type Codes 23-108-5 and 23-108-16, 23-109-4 and 23-109-36									
2	Vinyl 34.5 oz.	23-114-15	54 inches	0672 EB7	0672 EF8	0672 FK4	0672 EX9	0672 FY4		
3	Vinyl 34.5 oz.	23-114-15	54 inches	0672 EB7	0672 EF8	0672 FK4	0672 FK4	0672 FY4		

1970 CORONET FW-P 4 DOOR SEDAN, STATION WAGON

VINYL TRIM

ITEM	TYPE OF MATERIAL	CODE	MATERIAL WIDTH	PART NUMBERS AND COLORS						
				BLUE P4B	GREEN P4F	TAN P4T	BLACK P4X			
1	Not Serviced See Part Type Codes 23-108-5 and 23-108-16, 23-109-4 and 23-109-36									
2	Vinyl 34.5 oz.	23-114-15	54 inches	0672 EB7	0672 EF8	0672 FT5	0672 EX9			
3	Vinyl 34.5 oz.	23-114-15	54 inches	0672 EB7	0672 EF8	0672 FT5	0672 EX9			

1970 CORONET FW-P STATION WAGON

VINYL TRIM

ITEM	TYPE OF MATERIAL	CODE	MATERIAL WIDTH	PART NUMBERS AND COLORS						
				BLUE P6B	TAN P6T	BLACK P6X				
1	Not Serviced See Part Type Codes 23-108-5 and 23-108-16, 23-109-4 and 23-109-36									
2	Vinyl 34.5 oz.	23-114-15	54 inches	0672 EB7	0672 FT5	0672 EX9				
2	Vinyl	23-114-15	54 inches	0714 EB7	0714 FT5	0714 EX9				

1970 CORONET FW-P SPECIAL 2 DOOR HARD TOP

VINYL TRIM

ITEM	TYPE OF MATERIAL	CODE	MATERIAL WIDTH	PART NUMBERS AND COLORS						
				BLUE C2B	GREEN C2F	ORANGE C2K	TAN C2T	GRAY C2XA	WHITE C2XW	
1	Not Serviced See Part Type Codes 23-108-5 and 23-108-16, 23-109-4 and 23-109-36									
2	Vinyl 34.5 oz.	23-114-15	54 inches	0764 FB5	0764 FF8	0764 FK4	0764 FT5	0764 FA8	0764 FW1	
3	Vinyl 34.5 oz.	23-114-15	54 inches	0764 FB5	0764 FF8	0764 FK4	0764 FT5	0764 FA8	0764 FW1	

1970 CORONET FW-P, FW-S SPECIAL 2 DOOR HARD TOP

VINYL TRIM

ITEM	TYPE OF MATERIAL	CODE	MATERIAL WIDTH	PART NUMBERS AND COLORS						
				BLUE C6B	GREEN C6F	ORANGE C6K	TAN C6T	GRAY C6XA	WHITE C6XW	
1	Not Serviced See Part Type Codes 23-108-5 and 23-108-16, 23-109-4 and 23-109-36									
2	Vinyl 34.5 oz.	23-114-15	54 inches	0764 FB5	0764 FF8	0764 FK4	0764 FT5	0764 FA8	0764 FW1	
3	Vinyl 34.5 oz.	23-114-15	54 inches	0764 FB5	0764 FF8	0764 FK4	0764 FT5	0764 FA8	0764 FW1	

1970 CORONET FW-P, FW-S SPECIAL 2 DOOR HARD TOP

LEATHER TRIM

ITEM	TYPE OF MATERIAL	CODE	MATERIAL WIDTH	PART NUMBERS AND COLORS						
				BLUE CRB	GREEN CRF	TAN CRT	GRAY CRXA			
1	Not Serviced See Part Type Codes 23-108-5 and 23-108-16, 23-109-4 and 23-109-36									
2	Leather	23-114-14	Hide	0305 FB5	0305 FF8	0305 FT5	0305 FA8			
3	Vinyl 34.5 oz.	23-114-15	54 inches	0764 FB5	0764 FF8	0764 FT5	0764 FA8			

Printed in U.S.A.
December 1970

CORONET

Distribution Drawing Legend Pages Appear Following Illustration Section.

1970 CORONET FW-P CONVERTIBLE

VINYL TRIM

ITEM	TYPE OF MATERIAL	CODE	MATERIAL WIDTH	PART NUMBERS AND COLORS						
				BLUE D4B	GREEN D4F	ORANGE D4K	TAN D4T	BLACK D4X	WHITE D4XW	
1	Not Serviced See Part Type Codes 23-108-5 and 23-108-16, 23-109-4 and 23-109-36									
2	Vinyl 34.5 oz.	23-114-15	54 inches	0672 EB7	0672 EF8	0672 FK4	0672 FT5	0672 EX9	0672 EW1	
3	Vinyl 34.5 oz.	23-114-15	54 inches	0672 EB7	0672 EF8	0672 FK4	0672 FT5	0672 EX9	0672 EW1	

NOTES

Printed in U.S.A.
December 1970

DODGE

Distribution Drawing Legend Pages Appear Following Illustration Section.

1970 DODGE FJ-H, 2 DOOR HARD TOP

VINYL TRIM

ITEM	TYPE OF MATERIAL	CODE	MATERIAL WIDTH	PART NUMBERS AND COLORS						
				BLUE H4B	BLACK H4X					
1	Not Serviced See Part Type Codes 23-108-5 and 23-108-16, 23-109-4 and 23-109-36									
2	Vinyl 34.5 oz.	23-114-15	54 inches	0672 EB5	0672 EX9					

1970 DODGE FJ-H, FJ-S, 2 DOOR HARD TOP, SPECIAL 2 DOOR HARD TOP

CLOTH AND VINYL TIRM

ITEM	TYPE OF MATERIAL	CODE	MATERIAL WIDTH	PART NUMBERS AND COLORS						
				BLUE H5B	GREEN H5F	ORANGE H5K	BLACK H5X			
1	Not Serviced See Part Type Codes 23-108-5 and 23-108-16, 23-109-4 and 23-109-36									
2	Vinyl 34.5 oz.	23-114-15	54 inches	0672 EB5	0672 EF8	0672 FK4	0672 EX9			
3	Vinyl	23-114-15	54 inches	0714 EB5	0714 EF8	0714 FK5	0714 EX9			

1970 DODGE FJ-H, FJ-S, 2 DOOR HARD TOP, CONVERTIBLE

VINYL TRIM

ITEM	TYPE OF MATERIAL	CODE	MATERIAL WIDTH	PART NUMBERS AND COLORS						
				BLUE H6B	RED H6E	GREEN H6F	ORANGE H6K	TAN H6T	BLACK H6X	WHITE H6XW
1	Not Serviced See Part Type Codes 23-108-5 and 23-108-16, 23-109-4 and 23-109-36									
2	Vinyl 34.5 oz.	23-114-15	54 inches	0672 EB5	0672 FE4	0672 EF8	0672 FK4	0672 FT5	0672 EX9	0672 EW1
3	Vinyl	23-114-15	54 inches	0714 FB5	0714 FE4	0714 EF8	0714 FK4	0714 FT5	0714 EX9	0714 EW1

1970 DODGE FJ-H, FJ-S, 2 DOOR HARD TOP, SPECIAL 2 DOOR HARD TOP, CONVERTIBLE

LEATHER TRIM

ITEM	TYPE OF MATERIAL	CODE	MATERIAL WIDTH	PART NUMBERS AND COLORS						
				ORANGE HRK	TAN HRT	BLACK HRX				
1	Not Serviced See Part Type Codes 23-108-5 and 23-108-16, 23-109-4 and 23-109-36									
2	Vinyl 34.5 oz.	23-114-15	54 inches	0672 FK4	0672 FT5	0672 EX9				
3	Vinyl	23-114-15	54 inches	0714 FK4	0714 FT5	0714 EX9				

1970 DODGE FD-K, FD-L, 4 DOOR SEDAN

CLOTH AND VINYL TRIM

ITEM	TYPE OF MATERIAL	CODE	MATERIAL WIDTH	PART NUMBERS AND COLORS						
				GRAY K1A						
1	Not Serviced See Part Type Codes 23-108-5 and 23-108-16, 23-109-4 and 23-109-36									
2	Vinyl 34.5 oz.	23-114-15	54 inches	0672 EA9						
3	Vinyl 34.5 oz.	23-114-15	54 inches	0672 EA9						

1970 DODGE FD-K, FD-L, 4 DOOR SEDAN

VINYL TRIM

ITEM	TYPE OF MATERIAL	CODE	MATERIAL WIDTH	PART NUMBERS AND COLORS						
				GRAY K2A						
1	Vinyl 37 oz.	23-114-15	50 inches	0724 EA9						
2	Vinyl 34.5 oz.	23-114-15	54 inches	0672 EA9						
3	Vinyl 34.5 oz.	23-114-15	54 inches	0672 EA9						

Printed in U.S.A.
December 1970

DODGE

Distribution Drawing Legend Pages Appear Following Illustration Section.

1970 DODGE FD-L, 4 DOOR SEDAN, STATION WAGON (6 Pass.)

VINYL TRIM

ITEM	TYPE OF MATERIAL	CODE	MATERIAL WIDTH	PART NUMBERS AND COLORS BLUE B2B	TAN B2T
1	Vinyl 38.5 oz.	23-114-15	65 inches	0784 FB7	0784 FT5
2	Vinyl 34.5 oz.	23-114-15	54 inches	0672 EB3	0672 FT5
3	Vinyl 34.5 oz.	23-114-15	54 inches	0672 EB3	0672 FT5

1970 DODGE FD-K, FD-L, 4 DOOR SEDAN, 4 DOOR HARD TOP, 2 DOOR HARD TOP

CLOTH AND VINYL TRIM

ITEM	TYPE OF MATERIAL	CODE	MATERIAL WIDTH	PART NUMBERS AND COLORS BLUE L1B	GREEN L1F	GOLD L1Y	BLACK L1X
1	Not Serviced See Part Type Codes 23-108-5 and 23-108-16, 23-109-4 and 23-109-36						
2	Vinyl 34.5 oz.	23-114-15	54 inches	0672 EB3	0672 FF4	0672 FY4	0672 EX9
3	Vinyl 34.5 oz.	23-114-15	54 inches	0672 EB3	0672 FF4	0672 FY4	0672 EX9

1970 DODGE FD-M, 4 DOOR SEDAN, 2 DOOR HARD TOP

CLOTH AND VINYL TRIM

ITEM	TYPE OF MATERIAL	CODE	MATERIAL WIDTH	PART NUMBERS AND COLORS BLUE F1B	GREEN F1F	GRAY F1XA	GOLD F1Y
1	Not Serviced See Part Type Codes 23-108-5 and 23-108-16, 23-109-4 and 23-109-36						
2	Vinyl 34.5 oz.	23-114-15	54 inches	0672 EB3	0672 EF8	0672 FA8	0672 FY4
3	Vinyl 34.5 oz.	23-114-15	54 inches	0672 EB3	0672 EF8	0672 FA8	0672 FY4

1970 DODGE FD-L, FD-M, DOOR SEDAN, STATION WAGON, 2 DOOR HARD TOP

VINYL TRIM

ITEM	TYPE OF MATERIAL	CODE	MATERIAL WIDTH	PART NUMBERS AND COLORS BLUE L2B F2B R2B	GREEN L2F F2F R2F	TAN L2T F2T R2T	GRAY L2XA F2XA R2XA
1	Not Serviced See Part Type Codes 23-108-5 and 23-108-16, 23-109-4 and 23-109-36						
2	Vinyl 34.5 oz.	23-114-15	54 inches	0672 EB3	0672 EF8	0672 FT5	0672 FA8
3	Vinyl 34.5 oz.	23-114-15	54 inches	0672 EB3	0672 F8	0672 FT5	0672 FA8

1970 DODGE FD-K, FD-L 4 DOOR SEDAN, 4 DOOR HARD TOP, 2 DOOR HARD TOP, CONVERTIBLE

VINYL TRIM

ITEM	TYPE OF MATERIAL	CODE	MATERIAL WIDTH	PART NUMBERS AND COLORS BLUE L2B	GREEN L2F	TAN L2T	BLACK L2X	WHITE L2XW
1	Not Serviced See Part Type Codes 23-108-5 and 23-108-16, 23-109-4 and 23-109-36							
2	Vinyl 34.5 oz.	23-114-15	54 inches	0672 EB3	0672 FF4	0672 FT5	0672 EX9	0672 EW1
3	Vinyl 34.5 oz.	23-114-15	54 inches	0672 EB3	0672 FF4	0672 FT5	0672 EX9	0672 EW1

1970 DODGE FD-L, CONVERTIBLE

VINYL TRIM

ITEM	TYPE OF MATERIAL	CODE	MATERIAL WIDTH	PART NUMBERS AND COLORS BLACK L6X
1	Not Serviced See Part Type Codes 23-108-5 and 23-109-4 and 23-109-36			
2	Vinyl 34.5 oz.	23-114-15	54 inches	0672 EX9

Printed in U.S.A.
December 1970

DODGE

Distribution Drawing Legend Pages Appear Following Illustration Section.

1970 DODGE FD-H, 4 DOOR SEDAN, 4 DOOR HARD TOP, 2 DOOR HARD TOP

CLOTH AND VINYL TRIM

ITEM	TYPE OF MATERIAL	CODE	MATERIAL WIDTH	PART NUMBERS AND COLORS						
				BLUE W1B	GREEN W1F	ORANGE W1K	GRAY W1XA	GOLD W1Y		
1	Not Serviced See Part Type Codes 23-108-5 and 23-108-16, 23-109-4 and 23-109-36									
2	Vinyl 34.5 oz.	23-114-15	54 inches	0672 EB3	0672 EF8	0672 FK4	0672 FA8	0672 FY4		
3	Vinyl 34.5 oz.	23-114-15	54 inches	0672 EB3	0672 EF8	0672 FK4	0672 FA8	0672 FY4		

1970 DODGE FD-M, FD-H, FD-P, STATION WAGON, 2 DOOR HARD TOP, SPECIAL 2 DOOR HARD TOP CONVERTIBLE

VINYL TRIM

ITEM	TYPE OF MATERIAL	CODE	MATERIAL WIDTH	PART NUMBERS AND COLORS						
				BLUE	GREEN	ORANGE	TAN	GRAY	CHAR-COAL	WHITE
				W4B	W4F	W4K	W4T	W4XA	W4XP	W4XW
				H4B	H4F	P4K	H4T	H4XA	H4XP	H4XW
				P4B	P4F	H4K	P4T	P4XA	P4XP	P4XW
1	Not Serviced See Part Type Codes 23-108-4 and 23-108-16, 23-109-4 and 23-109-36									
2	Vinyl 34.5 oz.	23-114-15	54 inches	0672 EB3	0672 EF8	0672 FK4	0672 FT5	0672 FA8	0672 FP8	0672 EW1
3	Vinyl 34.5 oz.	23-114-15	54 inches	0672 EB3	0672 EF8	0672 FK4	0672 FT5	0672 FA8	0672 FP8	0672 EW1

1970 DODGE FD-M, FD-H, FD-P, 4 DOOR SEDAN, 4 DOOR HARD TOP, STATION WAGON, 2 DOOR HARD TOP SPECIAL 2 DOOR HARD TOP, CONVERTIBLE

VINYL TRIM

ITEM	TYPE OF MATERIAL	CODE	MATERIAL WIDTH	PART NUMBERS AND COLORS						
				BLUE	GREEN	ORANGE	TAN	GRAY	BLACK and PEACOCK	WHITE
				W4B	W4F	W4K	W4T	W4XA	W4XP	W4XW
				H4B	H4F	H4K	H4T	H4XA	H4XP	H4XW
						P4K	P4T	P4XA	P4XP	
1	Not Serviced See Part Type Codes 23-108-5 and 23-108-16, 23-109-4 and 23-109-36									
2	Vinyl 34.5 oz.	23-114-15	54 inches	0672 EB3	0672 EF8	0672 FK4	0672 FT5	0672 FA8	0672 FP8	0672 EW1
3	Vinyl 34.5 oz.	23-114-15	54 inches	0672 EB3	0672 EF8	0672 FK4	0672 FT5	0672 FA8	0672 FP8	0672 EW1

1970 DODGE FD-H, STATION WAGON

CLOTH AND VINYL TRIM

ITEM	TYPE OF MATERIAL	CODE	MATERIAL WIDTH	PART NUMBERS AND COLORS						
				GREEN W1F						
1	Not Serviced See Part Type Codes 23-108-5 and 23-108-16, 23-109-4 and 23-109-36									
2	Vinyl 34.5 oz.	23-114-15	54 inches	0672 EF8						
3	Vinyl 34.5 oz.	23-114-15	54 inches	0672 EF8						

1970 DODGE FD-H, STATION WAGON

VINYL TRIM

ITEM	TYPE OF MATERIAL	CODE	MATERIAL WIDTH	PART NUMBERS AND COLORS						
				GRAY W8XA						
1	Not Serviced See Part Type Codes 23-108-5 and 23-108-16, 23-109-4 and 23-109-36									
2	Vinyl 34.5 oz.	23-114-15	54 inches	0672 FA8						
3	Vinyl 34.5 oz.	23-114-15	54 inches	0672 FA8						

DODGE

Distribution Drawing Legend Pages Appear Following Illustration Section.

1970 DODGE FD-H, FD-P, 4 DOOR HARD TOP, 2 DOOR HARD TOP, CONVERTIBLE

VINYL TRIM

ITEM	TYPE OF MATERIAL	CODE	MATERIAL WIDTH	PART NUMBERS AND COLORS						
				BLUE	GREEN	ORANGE	TAN	GRAY		
				H6B	H6F	H6K	H6T	H6XA		
				P6B	P6F	P6K	P6T	H6XA		
				W6B	W6F			P6XA		

1 Not Serviced See Part Type Codes 23-108-5 and 23-108-16, 23-109-4 and 23-109-36
2 Vinyl 34.5 oz. 23-114-15 54 inches 0672 EB3 0672 EF8 0672 FK4 0672 FT4 0672 FA8

1970 DODGE FD-L, 2 DOOR HARD TOP

VINYL TRIM

ITEM	TYPE OF MATERIAL	CODE	MATERIAL WIDTH	PART NUMBERS AND COLORS						
				BLACK	WHITE					
				D6X	D6XW					

1 Not Serviced See Part Type Codes 23-108-5 and 23-108-16, 23-109-4 and 23-109-36
2 Vinyl 34.5 oz. 23-114-15 54 inches 0790 FX9 0790 FW1

1970 DODGE FD-H, 4 DOOR SEDAN, 4 DOOR HARD TOP

CLOTH AND VINYL TRIM

ITEM	TYPE OF MATERIAL	CODE	MATERIAL WIDTH	PART NUMBERS AND COLORS						
				BLUE	GREEN	TAN	GOLD	BLACK		
				H1B	H1F	H1T	H1Y	H1X		

1 Not Serviced See Part Type Codes 23-108-5 and 23-108-16, 23-109-4 and 23-109-36
2 Vinyl 34.5 oz. 23-114-15 54 inches 0672 EB3 0672 FF8 0672 FT3 0672 FY4 0672 EX9
3 Vinyl 34.5 oz. 23-114-15 54 inches 0672 EB3 0672 FF8 0672 FT3 0672 FY4 0672 EX9

1970 DODGE FD-H, 2 DOOR HARD TOP

CLOTH AND VINYL TRIM

ITEM	TYPE OF MATERIAL	CODE	MATERIAL WIDTH	PART NUMBERS AND COLORS						
				BLUE	GREEN	BLACK				
				H3B	H3F	H3X				

1 Not Serviced See Part Type Codes 23-108-5 and 23-108-16, 23-109-4 and 23-109-36
2 Vinyl 34.5 oz. 23-114-15 54 inches 0672 EB3 0672 EF8 0672 EX9
3 Vinyl 34.5 oz. 23-114-15 54 inches 0672 EB5 0672 EF8 0672 EX9

1970 DODGE, FD-H, STATION WAGON, 2 DOOR HARD TOP

VINYL TRIM

ITEM	TYPE OF MATERIAL	CODE	MATERIAL WIDTH	PART NUMBERS AND COLORS						
				BLUE	GREEN	ORANGE	BLACK	GOLD	TAN	WHITE
				H4B	H4F	H4K	H4X	H4Y	H4T	H4TW

1 Not Serviced See Part Type Codes 23-108-5 and 23-108-16, 23-109-4 and 23-109-36
2 Vinyl 34.5 oz. 23-114-15 54 inches 0672 EB3 0672 EF8 0672 FK4 0672 EX9 0672 FY4 0672 FT5 0672 EW1
3 Vinyl 34.5 oz. 23-114-15 54 inches 0672 EB3 0672 EF8 0672 FK4 0672 EX9 0672 FY4 0672 FT5 0672 EW1

1970 DODGE FD-H, 4 DOOR SEDAN, 4 DOOR HARD TOP

CLOTH AND VINYL TRIM

ITEM	TYPE OF MATERIAL	CODE	MATERIAL WIDTH	PART NUMBERS AND COLORS						
				BLUE	GREEN	BLACK				
				H7B	H7F	H7X				

1 Not Serviced See Part Type Codes 23-108-5 and 23-108-16, 23-109-4 and 2-109-36
2 Vinyl 34.5 oz. 23-114-15 54 inches 0672 EB3 0672 EF8 0672 EX9
3 Vinyl 34.5 oz. 23-114-15 54 inches 0672 EB3 0672 EF8 0672 EX9

Printed in U.S.A.
December 1970

DODGE

Distribution Drawing Legend Pages Appear Following Illustration Section.

1970 DODGE FD-H, 4 DOOR HARD TOP, STATION WAGON

VINYL TRIM

ITEM	TYPE OF MATERIAL	CODE	MATERIAL WIDTH	PART NUMBERS AND COLORS						
				GREEN H8F	ORANGE H8K	BLACK H8X	TAN H8T			
1	Not Serviced See Part Type Codes 23-108-5 and 23-108-16, 23-109-4 and 23-109-36									
2	Vinyl 34.5 oz.	23-114-15	54 inches	0672 EF8	0672 FK4	0672 EX9	0672 FT5			
3	Vinyl 34.5 oz.	23-114-15	54 inches	0672 EF8	0672 FK4	0672 EX9	0672 FT5			

1970 DODGE FD-L, 4 DOOR SEDAN, STATION WAGON (6 Pass)

VINYL TRIM

ITEM	TYPE OF MATERIAL	CODE	MATERIAL WIDTH	PART NUMBERS AND COLORS						
				BLUE B2B	TAN B2T					
1	Vinyl 38.5 oz.	23-114-15	65 inches	0784 FB7	0784 FL6					
2	Vinyl 34.5 oz.	23-114-15	54 inches	0672 EB3	0672 FT5					
3	Vinyl 34.5 oz.	23-114-15	54 inches	0672 EB3	0672 FT5					

1970 DODGE FD-M, 4 DOOR SEDAN, 2 DOOR HARD TOP

CLOTH AND VINYL TRIM

ITEM	TYPE OF MATERIAL	CODE	MATERIAL WIDTH	PART NUMBERS AND COLORS						
				BLUE F1B	GREEN F1F	GOLD F1Y				
1	Not Serviced See Part Type Codes 23-108-5 and 23-108-16, 23-109-4 and 23-109-36									
2	Vinyl 34.5 oz.	23-114-15	54 inches	0672 EB3	0672 EF8	0672 FY4				
3	Vinyl 34.5 oz.	23-114-15	54 inches	0672 EB3	0672 EF8	0672 FY4				

NOTES

Printed in U.S.A.
December 1970

CHRYSLER

Distribution Drawing Legend Pages Appear Following Illustration Section.

1970 CHRYSLER FC-E, 4 DOOR SEDAN, 4 DOOR HARD TOP, 2 DOOR HARD TOP

CLOTH AND VINYL TRIM

ITEM	TYPE OF MATERIAL	CODE	MATERIAL WIDTH	PART NUMBERS AND COLORS						
				BLUE E1B	GREEN E1F	BEIGE E1L	TEAL E1P	BLACK E1X		
1	Not Serviced See Part Type Codes 23-108-5 and 23-108-16, 23-109-4 and 23-109-36									
2	Vinyl 34.5 oz.	23-114-15	54 inches	0672 EB3	0672 EF8	0672 EL2	0672 FP6	0672 EX9		
3	Vinyl 34.5 oz.	23-114-15	54 inches	0672 EB3	0672 EF8	0672 EL2	0672 FP6	0672 EX9		

1970 CHRYSLER FC-E, 4 DOOR SEDAN, 4 DOOR HARD TOP, 2 DOOR HARD TOP, CONVERTIBLE

VINYL TRIM

ITEM	TYPE OF MATERIAL	CODE	MATERIAL WIDTH	PART NUMBERS AND COLORS						
				BLUE E2B	TAN E2T	BLACK E2X	GOLD E2Y			
1	Not Serviced See Part Type Codes 23-108-5 and 23-108-16, 23-109-4 and 23-109-36									
2	Vinyl 34.5 oz.	23-114-15	54 inches	0672 EB3	0672 FT5	0672 EX9	0672 FY4			
3	Vinyl 34.5 oz.	23-114-15	54 inches	0672 EB3	0672 FT5	0672 EX9	0672 FY4			

1970 CHRYSLER FC-L, 4 DOOR SEDAN, 4 DOOR HARD TOP, 2 DOOR HARD TOP

CLOTH AND VINYL TRIM

ITEM	TYPE OF MATERIAL	CODE	MATERIAL WIDTH	PART NUMBERS AND COLORS						
				BLUE L3B	GREEN L3F	TEAL L3P	BLACK L3X	GOLD L3Y		
1	Not Serviced See Part Type Codes 23-108-5 and 23-108-16, 23-109-4 and 23-109-36									
2	Vinyl 34.5 oz.	23-114-15	54 inches	0672 EB3	0672 EF8	0672 FP6	0672 EX9	0672 FY4		
3	Vinyl 34.5 oz.	23-114-15	54 inches	0672 EB3	0672 EF8	0672 FP6	0672 EX9	0672 FY4		

1970 CHRYSLER FC-L, FC-M, FC-P, 4 DOOR SEDAN, 4 DOOR HARD TOP, STATION WAGON, 2 DOOR HARD TOP

VINYL TRIM

ITEM	TYPE OF MATERIAL	CODE	MATERIAL WIDTH	PART NUMBERS AND COLORS						
				BLUE L4B M4B P4B	GREEN P4F	RED L4R M4R P4R	TAN P4T	BLACK L4X M4X P4X		
1	Not Serviced See Part Type Codes 23-108-5 and 23-108-16, 23-109-4 and 23-109-36									
2	Vinyl 37.7 oz.	23-114-15	59 inches	0793 FB3	0793 FF8	0793 FR9	0793 FT5	0793 FX9		
3	Vinyl 34.5 oz.	23-114-15	54 inches	0672 EB3	0672 EF8	0672 FR9	0672 FT5	0672 EX9		

1970 CHRYSLER FC-L, FC-P, 4 DOOR SEDAN, 4 DOOR HARD TOP, STATION WAGON

CLOTH AND VINYL TRIM

ITEM	TYPE OF MATERIAL	CODE	MATERIAL WIDTH	PART NUMBERS AND COLORS						
				BEIGE L7L P7L	RED L7R					
1	Not Serviced See Part Type Codes 23-108-5 nd 23-108-16, 23-109-4 and 23-109-36									
2	Vinyl 34.5 oz.	23-114-15	54 inches	0672 EL2	0672 FR9					
3	Vinyl 34.5 oz.	23-114-15	54 inches	0672 EL2	0672 FR9					

1970 CHRYSLER FC-L, FC-P, 4 DOOR SEDAN, 4 DOOR HARD TOP, STATION WAGON

VINYL TRIM

ITEM	TYPE OF MATERIAL	CODE	MATERIAL WIDTH	PART NUMBERS AND COLORS						
				GREEN P8F	BLACK L8X P8X					
1	Not Serviced See Part Type Codes 23-108-5 and 23-108-16, 23-109-4 and 23-109-36									
2	Vinyl 37.7 oz.	23-114-15	59 inches	0793 FF8	0793 FX9					
3	Vinyl 34.5 oz.	23-114-15	54 inches	0672 EF8	0672 EX9					

Printed in U.S.A.
December 1970

CHRYSLER

Distribution Drawing Legend Pages Appear Following Illustration Section.

1970 CHRYSLER FC-M, 4 DOOR HARD TOP, 2 DOOR HARD TOP

CLOTH AND VINYL TRIM

ITEM	TYPE OF MATERIAL	CODE	MATERIAL WIDTH	PART NUMBERS AND COLORS						
				GREEN M3F	BLACK M3X	GOLD M3Y				
1	Not Serviced See Part Type Codes 23-108-5 and 23-108-16, 23-109-4 and 23-109-36									
2	Vinyl 34.5 oz.	23-114-15	54 inches	0672 EF8	0672 EX9	0672 FY4				
3	Vinyl 34.5 oz.	23-114-15	54 inches	0672 EF8	0672 EX9	0672 FY4				

1970 CHRYSLER FC-M, 4 DOOR HARD TOP, 2 DOOR HARD TOP

CLOTH AND VINYL TRIM

ITEM	TYPE OF MATERIAL	CODE	MATERIAL WIDTH	PART NUMBERS AND COLORS						
				BEIGE M5L						
1	Not Serviced See Part Type Codes 23-108-5 and 23-108-16, 23-109-4 and 23-109-36									
2	Vinyl 34.5 oz.	23-114-15	54 inches	0672 EL2						

1970 CHRYSLER FC-E, FC-M, 4 DOOR HARD TOP, 2 DOOR HARD TOP, CONVERTIBLE

VINYL TRIM

ITEM	TYPE OF MATERIAL	CODE	MATERIAL WIDTH	PART NUMBERS AND COLORS						
				BLUE P6B	GREEN M6F P6F	TAN E6T M6T P6T	BLACK E6X M6X P6X	WHITE E6XW M6XW P6XW		
1	Not Serviced See Part Type Codes 23-108-5 and 23-108-16, 23-109-4 and 23-109-36									
2	Vinyl 34.5 oz.	23-114-15	54 inches	0672	0672	0672	0672	0672		

1970 CHRYSLER FC-H, 4 DOOR SEDAN, 4 DOOR HARD TOP

CLOTH AND VINYL TRIM

ITEM	TYPE OF MATERIAL	CODE	MATERIAL WIDTH	PART NUMBERS AND COLORS						
				BLUE H1B	GREEN H1F	TEAL H1P	BLACK H1X	GOLD H1Y		
1	Not Serviced See Part Type Codes 23-108-5 and 23-108-16, 23-109-4 and 23-109-36									
2	Vinyl 34.5 oz.	23-114-15	54 inches	0672 EB7	0672 EF8	0672 FP6	0672 EX9	0672 FY4		

1970 CHRYSLER FC-H, 2 DOOR HARD TOP

CLOTH AND VINYL TRIM

ITEM	TYPE OF MATERIAL	CODE	MATERIAL WIDTH	PART NUMBERS AND COLORS						
				BLUE H3B	GREEN H3F	TEAL H3P	BLACK H3X	GOLD H3Y		
1	Not Serviced See Part Type Codes 23-108-5 and 23-108-16, 23-109-4 and 23-109-36									
2	Vinyl 34.5 oz.	23-114-15	54 inches	0672 EB7	0672 EF8	0672 FP6	0672 EX9	0672 FY4		

1970 CHRYSLER FC-H, 2 DOOR HARD TOP

VINYL TRIM

ITEM	TYPE OF MATERIAL	CODE	MATERIAL WIDTH	PART NUMBERS AND COLORS						
				BLUE H6B	TAN H6T	WHITE H6XW	BLACK H6X			
1	Not Serviced See Part Type Codes 23-108-5 and 23-108-16, 23-109-4 and 23-109-36									
2	Vinyl 34.5 oz.	23-114-15	54 inches	0672 EB7	0672 FT5	0672 EW1	0672 EX9			

Printed in U.S.A.
December 1970

CHRYSLER

Distribution Drawing Legend Pages Appear Following Illustration Section.

1970 CHRYSLER FC-H, 4 DOOR SEDAN, 4 DOOR HARD TOP

CLOTH AND VINYL TRIM

ITEM	TYPE OF MATERIAL	CODE	MATERIAL WIDTH	PART NUMBERS AND COLORS						
				BLUE H7B	BEIGE H7L	RED H7R				
1	Not Serviced See Part Type Codes 23-108-5 and 23-108-16, 23-109-4 and 23-109-36									
1	Vinyl 34.5 oz.	23-114-15	54 inches	0672 EB7	0672 EL2	0672 FR9				

1970 CHRYSLER FC-H, 4 DOOR HARD TOP

VINYL TRIM

ITEM	TYPE OF MATERIAL	CODE	MATERIAL WIDTH	PART NUMBERS AND COLORS						
				BEIGE H8L	BLACK H8X					
1	Not Serviced See Part Type Codes 23-108-5 and 23-108-16, 23-109-4 and 23-109-36									
2	Vinyl 34.5 oz.	23-114-15	54 inches	0672 EL2	0672 EX9					

1970 CHRYSLER FC-H, 4 DOOR SEDAN, 4 DOOR HARD TOP

LEATHER TRIM

ITEM	TYPE OF MATERIAL	CODE	MATERIAL WIDTH	PART NUMBERS AND COLORS						
				TAN HST						
1	Not Serviced See Part Type Codes 23-108-5 and 23-108-16, 23-109-4 and 23-109-36									
2	Vinyl 34.5 oz.	23-114-15	54 inches	0672 FT5						

NOTES

Printed in U.S.A.
December 1970

IMPERIAL

Distribution Drawing Legend Pages Appear Following Illustration Section.

1970 IMPERIAL FY-L, 4 DOOR HARD TOP

CLOTH AND VINYL TRIM

ITEM	TYPE OF MATERIAL	CODE	MATERIAL WIDTH	PART NUMBERS AND COLORS						
				BLUE L1B	GREEN L1F	BURGUNDY L1M	TEAL L1P	TAN L1T	BLACK L1X	
1	Not Serviced See Part Type Codes 23-108-5 and 23-108-16, 23-109-4 and 23-109-36									
2	Vinyl 34.5 oz.	23-114-15	54 inches	0672 EB7	0672 FF4	0672 EM9	0672 FP6	0672 FT9	0672 EX9	
3	Vinyl 34.5 oz.	23-114-15	54 inches	0672 EB7	0672 FF4	0672 EM9	0672 FP6	0672 FT9	0672 EX9	

1970 IMPERIAL FY-L, 2 DOOR HARD TOP

CLOTH AND VINYL TRIM

ITEM	TYPE OF MATERIAL	CODE	MATERIAL WIDTH	PART NUMBERS AND COLORS						
				BLUE L3B	GREEN L3F	BURGUNDY L3M	TEAL L3P	TAN L3TT	BLACK L3X	
1	Not Serviced See Part Type Codes 23-108-5 and 23-108-16, 23-109-4 and 23-109-36									
2	Vinyl 34.5 oz.	23-114-15	54 inches	0672 EB7	0672 FF4	0672 EM9	0672 FP6	0672 FT9	0672 EX9	
3	Vinyl 34.5 oz.	23-114-15	54 inches	0672 EB7	0672 FF4	0672 EM9	0672 FP6	0672 FT9	0672 EX9	

1970 IMPERIAL FY-M, 4 DOOR HARD TOP

CLOTH AND LEATHER TRIM

ITEM	TYPE OF MATERIAL	CODE	MATERIAL WIDTH	PART NUMBERS AND COLORS						
				GRAY MDA	BLUE MDB	GREEN MDF	BURGUNDY MDM	TEAL MDP	TAN MDTT	BLACK MDX
1	Not Serviced See Part Type Codes 23-108-5 and 23-108-16, 23-109-4 and 23-109-36									
2	Leather	23-114-14	Hide	0303 FA5	0303 EBT	0303 EF8	0303 EM9	0303 FP6	0303 FT9	0303 DX9
3	Vinyl 34.5 oz.	23-114-15	54 inches	0672 FA5	0672 EB7	0672 EF8	0672 EM9	0672 FP6	0672 FT9	0672 EX9
4	Vinyl 34.5 oz.	23-114-15	54 inches	0672 FA5	0672 FB7	0672 EF8	0672 EM9	062 FP6	0672 FT9	0672 EX9

ITEM	TYPE OF MATERIAL	CODE	MATERIAL WIDTH	PART NUMBERS AND COLORS						
				GOLD MDY						
1	Not Serviced See Part Type Codes 23-108-5 and 23-108-16, 23-109-4 and 23-109-36									
2	Leather	23-114-14	Hide	0303 FY4						
3	Vinyl 34.5 oz.	23-114-15	54 inches	0672 FY4						
4	Vinyl 34.5 oz.	23-114-15	54 inches	0672 FY4						

1970 IMPERIAL FY-M, 2 DOOR HARD TOP

CLOTH AND LEATHER TRIM

ITEM	TYPE OF MATERIAL	CODE	MATERIAL WIDTH	PART NUMBERS AND COLORS						
				BLUE MBB	GREEN MBF	BURGUNDY MBM	TEAL MBP	TAN MBTT	BLACK MBX	GOLD MBY
1	Not Serviced See Part Type Codes 23-108-5 and 23-108-16, 23-109-4 and 23-109-36									
2	Leather	23-114-14	Hide	0303 EB7	0303 EF8	0303 EM9	0303 FP6	0303 FT9	0303 DX9	0303 FY4
3	Vinyl 34.5 oz.	23-114-15	54 inches	0672 EB7	0672 EF8	0672 EM9	0672 FP6	0672 FT9	0672 EX9	0672 FY4

1970 IMPERIAL FY-M, 4 DOOR HARD TOP

LEATHER TRIM

ITEM	TYPE OF MATERIAL	CODE	MATERIAL WIDTH	PART NUMBERS AND COLORS						
				BLUE MSB	GREEN MSF	RED MSR	TAN MST	BLACK MSX	WHITE MSXW	GOLD MSY
1	Not Serviced See Part Type Codes 23-108-5 and 23-108-16, 23-109-4 and 23-109-36									
2	Vinyl 34.5 oz.	23-114-15	54 inches	0672 EB3	0672 EF8	0672 FR9	0672 FT5	0672 EX9	0672 EW1	0672 FY4
3	Vinyl 34.5 oz.	23-114-15	54 inches	0672 EB3	0672 EF8	0672 FR9	0672 FT5	0672 EX9	0672 EW1	0672 FY4

Printed in U.S.A.
December 1970

IMPERIAL

Distribution Drawing Legend Pages Appear Following Illustration Section.

1970 IMPERIAL FY-M, 2 DOOR HARD TOP

LEATHER TRIM

ITEM	TYPE OF MATERIAL	CODE	MATERIAL WIDTH	PART NUMBERS AND COLORS						
				BLUE MRB	GREEN MRF	TAN MRT	BLACK MRX	GOLD MRY	WHITE MRXW	
1	Not Serviced See Part Type Codes 23-108-5 and 23-108-16, 23-109-4 and 23-109-36									
2	Vinyl 34.5 oz.	23-114-15	54 inches	0672 EB3	0672 FT5	0672 EX9	0672	0672 FY4	0672 EW1	

NOTES

Printed in U.S.A.
December 1970

NOTE:

FOR COLUMN LEGENDS AND BODY CODES SEE HARD PARTS INFORMATION SECTION

VALIANT

TRIM CODE	MODEL	MATERIAL			COLOR	SED.	4 D.H.T.	STA. WGN.	2 D.H.T.	SP. 2 D.H.T.	CV. CP.
		Cloth	Vinyl	Leather							
L1B	VL	★	★	—	Blue	★	—	—	★	—	—
L1F	VL	★	★	—	Green	★	—	—	★	—	—
L1X	VL	★	★	—	Black	★	—	—	★	—	—
L2B	VL	—	★	—	Blue	★	—	—	—	★	—
L2F	VL	—	★	—	Green	★	—	—	—	★	—
L2X	VL	—	★	—	Black	★	—	—	—	★	—
L4B	VL	—	★	—	Blue	★	—	—	—	★	—
L4E	VL	—	★	—	Red	★	—	—	—	★	—
L4F	VL	—	★	—	Green	★	—	—	—	★	—
L4T	VL	—	★	—	Tan	★	—	—	—	★	—
L4X	VL	—	★	—	Black	★	—	—	—	★	—
L6X	VL	—	★	—	Black	★	—	—	—	★	—
L6BW	VL	—	★	—	Blue—White	★	—	—	—	★	—
L6EW	VL	—	★	—	Red—White	★	—	—	—	★	—
L6XW	VL	—	★	—	Black—White	★	—	—	—	★	—
D2B	VL	—	★	—	Blue	—	—	—	—	★	—
D2F	VL	—	★	—	Green	—	—	—	—	★	—
D2X	VL	—	★	—	Black	—	—	—	—	★	—

BARRACUDA

H4B	BH, BS	—	★	—	Blue	—	—	—	★	—	—
H4BW	BH, BS	—	★	—	Blue—White	—	—	—	★	—	—
H4F	BH, BS	—	★	—	Green	—	—	—	★	—	—
H4FW	BH, BS	—	★	—	Green—White	—	—	—	★	—	—
H4X	BH, BS	—	★	—	Black	—	—	—	★	—	—
H4XW	BH, BS	—	★	—	Black—White	—	—	—	★	—	—
H6B	BH, BS	—	★	—	Blue	—	—	—	★	—	★
H6BW	BH, BS	—	★	—	Blue—White	—	—	—	★	—	★
H6E	BH, BS	—	★	—	Red	—	—	—	★	—	★
H6EW	BH, BS	—	★	—	Red—White	—	—	—	★	—	★
H6F	BH, BS	—	★	—	Green	—	—	—	★	—	★
H6FW	BH, BS	—	★	—	Green—White	—	—	—	★	—	★
H6T	BH, BS	—	★	—	Tan	—	—	—	★	—	★
P5K	BP	★	★	—	Orange	—	—	—	★	—	—
P5X	BP	★	★	—	Black	—	—	—	★	—	—
P6A	BP	—	★	—	Gray	—	—	—	★	—	★
P6B	BP	—	★	—	Blue	—	—	—	★	—	★
P6BW	BP	—	★	—	Blue—White	—	—	—	★	—	★
P6E	BP	—	★	—	Red	—	—	—	★	—	★
P6EW	BP	—	★	—	Red—White	—	—	—	★	—	★
P6F	BP	—	★	—	Green	—	—	—	★	—	★
P6FW	BP	—	★	—	Green—White	—	—	—	★	—	★
PRT	BH, BP, BS	—	—	★	Tan	—	—	—	★	—	★
PRX	BH, BP, BS	—	—	★	Black	—	—	—	★	—	★
PRXW	BH, BP, BS	—	—	★	Black—White	—	—	—	★	—	★

DART

L2B	LL	—	★	—	Blue	★	—	—	★	—	—
L2F	LL	—	★	—	Green	★	—	—	★	—	—
L2X	LL	—	★	—	Black	★	—	—	★	—	—
H1B	LH	★	★	—	Blue	★	—	—	—	—	—
H1F	LH	★	★	—	Green	★	—	—	—	—	—
H1X	LH	★	★	—	Black	★	—	—	—	—	—

Printed in U.S.A.
December 1970

TRIM CODE	MODEL	MATERIAL: Cloth	MATERIAL: Vinyl	MATERIAL: Leather	COLOR	SED.	4 D.H.T.	STA. WGN.	2 D.H.T.	SP. 2 D.H.T.	CV. CP.
DART cont'd.											
H2B	LH	—	★	—	Blue	★	—	—	★	—	—
H2F	LH	—	★	—	Green	★	—	—	★	—	—
H2T	LH	—	★	—	Tan	★	—	—	★	—	—
H2X	LH	—	★	—	Black	★	—	—	★	—	—
H2XW	LH	—	★	—	Black—White	★	—	—	★	—	—
D2B	LL	—	★	—	Blue	—	—	—	★	—	—
D2F	LL	—	★	—	Green	—	—	—	★	—	—
D2T	LL	—	★	—	Tan	—	—	—	★	—	—
D2X	LL	—	★	—	Black	—	—	—	★	—	—
H6F	LH	—	★	—	Green	—	—	—	★	—	—
H6T	LH	—	★	—	Tan	—	—	—	★	—	—
H6X	LH	—	★	—	Black	—	—	—	★	—	—
CHALLENGER											
H4B	JH	—	★	—	Blue	—	—	—	★	—	—
H4X	JH	—	★	—	Black	—	—	—	★	—	—
H5B	JH, JS	★	★	—	Blue	—	—	—	★	★	—
H5F	JH, JS	★	★	—	Green	—	—	—	★	★	—
H5K	JH, JS	★	★	—	Burnt Orange	—	—	—	★	★	—
H5X	JH, JS	★	★	—	Black	—	—	—	★	★	—
H6B	JH, JS	—	★	—	Blue	—	—	—	★	—	★
H6E	JH, JS	—	★	—	Red	—	—	—	★	—	★
H6F	JH, JS	—	★	—	Green	—	—	—	★	—	★
H6K	JH, JS	—	★	—	Burnt Orange	—	—	—	★	—	★
H6T	JH, JS	—	★	—	Tan	—	—	—	★	—	★
H6X	JH, JS	—	★	—	Black	—	—	—	★	—	★
H6XW	JH, JS	—	★	—	Black—White	—	—	—	★	★	★
HRK	JH, JS	—	—	★	Burnt Orange	—	—	—	★	★	★
HRT	JH, JS	—	—	★	Tan	—	—	—	★	★	★
HRX	JH, JS	—	—	★	Black	—	—	—	★	★	★
BELVEDERE											
K1T	RK, RL	★	★	—	Tan	★	—	—	—	—	—
K2T	RK, RL, RW, RT	—	★	—	Tan	★	—	—	—	—	—
K2X	RK, RL, RW, RT	—	★	—	Black	★	—	—	—	—	—
T2T	RK, RL, RW, RT	—	★	—	Tan	★	—	—	—	—	—
T2X	RK, RL, RW, RT	—	★	—	Black	★	—	—	—	—	—
L1B	RL, RK	★	★	—	Blue	★	—	—	—	—	—
L1Y	RL, RK	★	★	—	Gold	★	—	—	—	—	—
L2B	RL, RK	—	★	—	Blue	★	—	—	★	—	—
L2T	RL, RK	—	★	—	Tan	★	—	—	★	—	—
L2X	RL, RK	—	★	—	Black	★	—	—	—	—	—
M2B	RK, RL, RM	—	★	—	Blue	★	—	—	—	—	—
M2T	RK, RL, RM	—	★	—	Tan	★	—	—	—	—	—
M2X	RK, RL, RM	—	★	—	Black	★	—	—	—	—	—
H1B	RH	★	★	—	Blue	★	—	—	—	★	—
H1F	RH	★	★	—	Green	★	—	—	—	★	—
H1X	RH	★	★	—	Black	★	—	—	—	★	—
H1Y	RH	★	★	—	Gold	★	—	—	—	★	—
H2B	RH, RP	—	★	—	Blue	★	—	—	★	—	—
H2BW	RH, RP	—	★	—	Blue—White	★	—	—	★	—	—
H2F	RH, RP	—	★	—	Green	★	—	—	★	—	—
H2FW	RH, RP	—	★	—	Green—White	★	—	—	★	—	—
H2T	RH, RP	—	★	—	Tan	★	—	—	★	—	—
H2TW	RH, RP	—	★	—	Tan—White	★	—	—	★	—	—
H2X	RH, RP	—	★	—	Black	★	—	—	★	—	—
H2YX	RH, RP	—	★	—	Gold—Black	—	—	—	★	★	★
H2B	RM, RH	—	★	—	Blue	—	—	—	★	★	★
H2BW	RM, RH	—	★	—	Blue—White	—	—	—	★	★	★

TRIM CODE	MODEL	MATERIAL			COLOR	SED.	4 D.H.T.	STA. WGN.	2 D.H.T.	SP. 2 D.H.T.	CV. CP.
		Cloth	Vinyl	Leather							
BELVEDERE cont'd.											
H2F	RM, RH	—	★	—	Green	—	—	—	★	—	★
H2K	RM, RH	—	★	—	Burnt Orange	—	—	—	★	—	★
H2KW	RM, RH	—	★	—	Burnt Orange—White	—	—	—	★	—	★
H2T	RM, RH	—	★	—	Tan	—	—	—	★	—	★
H2X	RM, RH	—	★	—	Black	—	—	—	★	—	★
D2B	RL, RK	—	★	—	Blue	—	—	★	—	—	—
D2T	RL, RK	—	★	—	Tan	—	—	★	—	—	—
P3B	RP	★	★	—	Blue	★	—	★	—	—	—
P3F	RP	★	★	—	Green	★	—	★	—	—	—
P3K	RP	★	★	—	Burnt Orange	★	—	★	—	—	—
P3X	RP	★	★	—	Black	★	—	★	—	—	—
P3Y	RP	★	★	—	Gold	★	—	★	—	—	—
P3B	RS, RP	★	★	—	Blue	—	—	—	★	—	—
P3K	RS, RP	★	★	—	Burnt Orange	—	—	—	★	—	—
P3X	RS, RP	★	★	—	Black	—	—	—	★	—	—
P6B	RM, RP, RS	—	★	—	Blue	★	—	—	★	—	★
P6BW	RM, RP, RS	—	★	—	Blue—White	★	—	★	★	—	★
P6T	RM, RP, RS	—	★	—	Tan	★	—	★	★	—	★
P6TW	RM, RP, RS	—	★	—	Tan—White	★	—	★	★	—	★
P6XA	RM, RP, RS	—	★	—	Black—Gray	★	—	★	★	—	★
P6XW	RM, RP, RS	—	★	—	Black—White	★	—	★	★	—	★
P6XY	RM, RP, RS	—	★	—	Black—Gold	★	—	★	★	—	★
PLYMOUTH											
E2B	PE, PK, PL	—	★	—	Blue	★	—	★	—	—	—
E2T	PE, PK, PL	—	★	—	Tan	★	—	★	—	—	—
K1T	PE, PK	★	★	—	Tan	★	—	—	—	—	—
K2T	PK, PE, PT	—	★	—	Tan	★	—	—	—	—	—
K2B, B2B	PK, PE, PL	—	★	—	Blue	★	—	★	—	—	—
K2T, B2T	PK, PE, PL	—	★	—	Tan	★	—	★	—	—	—
L2B, D2B	PL, PK, PM	—	★	—	Blue	★	—	★	★	—	—
L2F, D2F	PL, PK, PM	—	★	—	Green	★	—	★	★	—	—
L2T, D2T	PL, PK, PM	—	★	—	Tan	★	—	★	★	—	—
L2XA, D2XA	PL, PK, PM	—	★	—	Black—Charcoal	★	—	★	★	—	—
M1B	PM	★	★	—	Blue	★	★	—	★	★	—
M1F	PM	★	★	—	Green	★	★	—	★	★	—
M1K	PM	★	★	—	Burnt Orange	★	★	—	★	★	—
M1XA	PM	★	★	—	Black—Charcoal	★	★	—	★	★	—
M1Y	PM	★	★	—	Gold	★	★	—	★	★	—
M4B	PM, PH	—	★	—	Blue	★	★	★	★	★	★
M4F	PM, PH	—	★	—	Green	★	★	★	★	★	★
M4K	PM, PH	—	★	—	Burnt Orange	★	★	★	★	★	★
M4T	PM, PH	—	★	—	Tan	★	★	★	★	★	★
M4XA	PM, PH	—	★	—	Black—Charcoal	★	★	★	★	★	★
M4XP	PM, PH	—	★	—	Black—Peacock	★	★	★	★	★	★
M4XW	PM, PH	—	★	—	Black—White	★	★	★	★	★	★
M6B,H6B	PM, PH	—	★	—	Blue	—	★	—	★	★	★
M6F,H6F	PM, PH	—	★	—	Green	—	★	—	★	★	★
H6K	PM, PH	—	★	—	Burnt Orange	—	★	—	★	★	★
H6T	PM, PH	—	★	—	Tan	—	★	—	★	★	★
M6XA, H6XA	PM, PH	—	★	—	Black—Charcoal	—	★	—	★	★	★
M7F	P-H	★	★	—	Green	—	—	★	—	—	—
M8XA	P-H	—	★	—	Black—Charcoal	—	—	★	—	—	—
P3B	PP	★	★	—	Blue	—	★	—	★	★	—
P3F	PP	★	★	—	Green	—	★	—	★	★	—
P3K	PP	★	★	—	Burnt Orange	—	★	—	★	★	—
P3XA	PP	★	★	—	Black—Charcoal	—	★	—	★	★	—
P4B	PP	—	★	—	Blue	—	★	—	★	★	—
P4K	PP	—	★	—	Burnt Orange	—	★	—	★	★	—
P4XA	PP	—	★	—	Black—Charcoal	—	★	—	★	★	—
P5XA	PP	★	★	—	Black—Charcoal	—	—	—	★	★	—
P7XA	PP	★	★	—	Black—Charcoal	—	★	—	—	—	—

Printed in U.S.A.
December 1970

CORONET

TRIM CODE	MODEL	MATERIAL: Cloth	MATERIAL: Vinyl	MATERIAL: Leather	COLOR	SED.	4 D.H.T.	STA. WGN.	2 D.H.T.	SP. 2 D.H.T.	CV. CP.
K1T	WK, WL	★	★	—	Tan	★	—	—	—	—	—
K2T	WK, WL	—	★	—	Tan	★	—	—	—	—	—
K2X	WK, WL	—	★	—	Black	★	—	—	—	—	—
L2B	WK, WL	—	★	—	Blue	★	—	★	—	—	—
L2T	WK, WL	—	★	—	Tan	★	—	★	—	—	—
L2X	WK, WL	—	★	—	Black	★	—	★	—	—	—
M6F, D6F	WM, WP	—	★	—	Green	★	—	—	★	—	—
M6B, D6B	WM, WP	—	★	—	Blue	★	—	—	★	—	—
M6K, D6K	WM, WP	—	★	—	Burnt Orange	★	—	—	★	—	—
M6T, D6T	WM, WP	—	★	—	Tan	★	—	—	★	—	—
M6X, D6X	WM, WP	—	★	—	Black	★	—	—	★	—	—
M6XW	WM, WP	—	★	—	Black—White	★	—	—	★	—	—
D6XW	WM, WP	—	★	—	Black—White	★	—	—	★	—	—
H1B	WH	★	★	—	Blue	★	—	—	—	—	—
H1F	WH	★	★	—	Green	★	—	—	—	—	—
H1X	WH	★	★	—	Black	★	—	—	—	—	—
H1Y	WH	★	★	—	Gold	★	—	—	—	—	—
H2B	WM, WH	—	★	—	Blue	★	—	★	★	—	—
H2F	WM, WH	—	★	—	Green	★	—	★	★	—	—
H2K	WM, WH	—	★	—	Burnt Orange	★	—	★	★	—	—
H2T	WM, WH	—	★	—	Tan	★	—	★	★	—	—
H2X	WM, WH	—	★	—	Black	★	—	★	★	—	—
H2XW	WM, WH	—	★	—	Black—White	★	—	★	★	—	—
P3B	WP	★	★	—	Blue	★	—	—	—	—	—
P3F	WP	★	★	—	Green	★	—	—	—	—	—
P3K	WP	★	★	—	Burnt Orange	★	—	—	—	—	—
P3X	WP	★	★	—	Black	★	—	—	—	—	—
P3Y	WP	★	★	—	Gold	★	—	—	—	—	—
P4B	WP	—	★	—	Blue	★	—	★	—	—	—
P4F	WP	—	★	—	Green	★	—	★	—	—	—
P4T	WP	—	★	—	Tan	★	—	★	—	—	—
P4X	WP	—	★	—	Black	★	—	★	—	—	—
P6B	WP	—	★	—	Blue	—	—	★	—	—	—
P6T	WP	—	★	—	Tan	—	—	★	—	—	—
P6X	WP	—	★	—	Black	—	—	★	—	—	—
C2B	WP	—	★	—	Blue	—	—	—	—	★	—
C2F	WP	—	★	—	Green	—	—	—	—	★	—
C2K	WP	—	★	—	Burnt Orange	—	—	—	—	★	—
C2T	WP	—	★	—	Tan	—	—	—	—	★	—
C2XA	WP	—	★	—	Black—Charcoal	—	—	—	—	★	—
C2XW	WP	—	★	—	Black—White	—	—	—	—	★	—
C6B	WP, WS	—	★	—	Blue	—	—	—	—	★	—
C6F	WP, WS	—	★	—	Green	—	—	—	—	★	—
C6K	WP, WS	—	★	—	Burnt Orange	—	—	—	—	★	—
C6T	WP, WS	—	★	—	Tan	—	—	—	—	★	—
C6XA	WP, WS	—	★	—	Black—Charcoal	—	—	—	—	★	—
C6XW	WP, WS	—	★	—	Black—White	—	—	—	—	★	—
CRB	WP, WS	—	—	★	Blue	—	—	—	—	★	—
CRF	WP, WS	—	—	★	Green	—	—	—	—	★	—
CRT	WP, WS	—	—	★	Tan	—	—	—	—	★	—
CRXA	WP, WS	—	—	★	Black—Charcoal	—	—	—	—	★	—
D4B	WP	—	★	—	Blue	—	—	—	—	—	★
D4F	WP	—	★	—	Green	—	—	—	—	—	★
D4K	WP	—	★	—	Burnt Orange	—	—	—	—	—	★
D4T	WP	—	★	—	Tan	—	—	—	—	—	★
D4X	WP	—	★	—	Black	—	—	—	—	—	★
D4XW	WP	—	★	—	Black—White	—	—	—	—	—	★

Printed in U.S.A.
December 1970

DODGE

TRIM CODE	MODEL	MATERIAL: Cloth	MATERIAL: Vinyl	MATERIAL: Leather	COLOR	SED.	4 D.H.T.	STA. WGN.	2 D.H.T.	SP. 2 D.H.T.	CV. CP.
K1A	DK, DL	★	★	—	Dark Gray	★	—	—	—	—	—
K2A	DK, DL	—	★	—	Dark Gray	★	—	—	—	—	—
B2B	DL	—	★	—	Blue	★	—	★	—	—	—
B2T	DL	—	★	—	Tan	★	—	★	—	—	—
L1B	DK, DL	★	★	—	Blue	★	★	—	★	—	—
L1F	DK, DL	★	★	—	Green	★	★	—	★	—	—
L1Y	DK, DL	★	★	—	Gold	★	★	—	★	—	—
L1X	DK, DL	★	★	—	Black	★	★	—	★	—	—
F1B	DM	★	★	—	Blue	★	—	—	★	—	—
F1F	DM	★	★	—	Green	★	—	—	★	—	—
F1XA	DM	★	★	—	Black—Charcoal	★	—	—	★	—	—
F1Y	DM	★	★	—	Gold	★	—	—	★	—	—
L2B	DL, DM	—	★	—	Blue	★	—	★	★	—	—
F2B	DL, DM	—	★	—	Blue	★	—	★	★	—	—
R2B	DL, DM	—	★	—	Blue	★	—	★	★	—	—
L2F	DL, DM	—	★	—	Green	★	—	★	★	—	—
F2F	DL, DM	—	★	—	Green	★	—	★	★	—	—
R2F	DL, DM	—	★	—	Green	★	—	★	★	—	—
L2T	DL, DM	—	★	—	Tan	★	—	★	★	—	—
F2T	DL, DM	—	★	—	Tan	★	—	★	★	—	—
R2T	DL, DM	—	★	—	Tan	★	—	★	★	—	—
L2XA	DL, DM	—	★	—	Black—Charcoal	★	—	★	★	—	—
F2XA	DL, DM	—	★	—	Black—Charcoal	★	—	★	★	—	—
R2XA	DL, DM	—	★	—	Black—Charcoal	★	—	★	★	—	—
L2B	DK, DL	—	★	—	Blue	★	★	—	★	—	★
L2F	DK, DL	—	★	—	Green	★	★	—	★	—	★
L2T	DK, DL	—	★	—	Tan	★	★	—	★	—	★
L2X	DK, DL	—	★	—	Black	★	★	—	★	—	★
L2XW	DK, DL	—	★	—	Black—White	★	★	—	★	—	★
L6X	DL	—	★	—	Black	—	—	—	—	—	★
W1B	DH	★	★	—	Blue	★	★	—	★	—	—
W1F	DH	★	★	—	Green	★	★	—	★	—	—
W1K	DH	★	★	—	Burnt Orange	★	★	—	★	—	—
W1XA	DH	★	★	—	Black—Charcoal	★	★	—	★	—	—
W1Y	DH	★	★	—	Gold	★	★	—	★	—	—
W4B	DH	—	★	—	Blue	★	★	—	★	—	★
W4F	DH	—	★	—	Green	★	★	—	★	—	★
W4K	DH	—	★	—	Burnt Orange	★	★	—	★	—	★
W4T	DH	—	★	—	Tan	★	★	—	★	—	★
W4XA	DH	—	★	—	Black—Charcoal	★	★	—	★	—	★
W4XP	DH	—	★	—	lack—Peacock	★	★	—	★	—	★
W4XW	DH	—	★	—	Black—White	★	★	—	★	—	★
H4B	DH	—	★	—	Blue	—	—	★	★	★	—
H4F	DH	—	★	—	Green	—	—	★	★	★	—
H4K	DH	—	★	—	Burnt Orange	—	—	★	★	★	—
H4T	DH	—	★	—	Tan	—	—	★	★	★	—
H4XA	DH	—	★	—	Black—Charcoal	—	—	★	★	★	—
H4XP	DH	—	★	—	Black—Peacock	—	—	★	★	★	—
H4XW	DH	—	★	—	Black—White	—	—	★	★	★	—
P4B	DP	—	★	—	Blue	—	—	★	★	★	—
P4F	DP	—	★	—	Green	—	—	★	★	★	—
P4K	DP	—	★	—	Burnt Orange	—	—	★	★	★	—
P4T	DP	—	★	—	Tan	—	—	★	★	★	—
P4XA	DP	—	★	—	Black—Charcoal	—	—	★	★	★	—
P4XP	DP	—	★	—	Black—Peacock	—	—	★	★	★	—
P4XW	DP	—	★	—	Black—White	—	—	★	★	★	—
W7F	DH	★	★	—	Green	—	—	★	—	—	—
W8XA	DH	—	★	—	Black—Charcoal	—	—	★	—	—	—
W6B	DH	—	★	—	Blue	—	★	—	★	—	★
W6F	DH	—	★	—	Green	—	★	—	★	—	★
W6XA	DH	—	★	—	Black—Charcoal	—	★	—	★	—	★
H6B	DH	—	★	—	Blue	—	★	—	★	—	★
H6F	DH	—	★	—	Green	—	★	—	★	—	★
H6K	DH	—	★	—	Burnt Orange	—	★	—	★	—	★

Printed in U.S.A.
December 1970

DODGE cont'd.

TRIM CODE	MODEL	MATERIAL: Cloth	MATERIAL: Vinyl	MATERIAL: Leather	COLOR	SED.	4 D.H.T.	STA. WGN.	2 D.H.T.	SP. 2 D.H.T.	CV. CP.
H6T	DH	—	★	—	Tan	—	★	—	★	—	★
H6XA	DH	—	★	—	Black—Charcoal	—	★	—	★	—	★
P6B	DP	—	★	—	Blue	—	★	—	★	—	★
P6F	DP	—	★	—	Green	—	★	—	★	—	★
P6K	DP	—	★	—	Burnt Orange	—	★	—	★	—	★
P6T	DP	—	★	—	Tan	—	★	—	★	—	★
P6XA	DP	—	★	—	Black—Charcoal	—	★	—	★	—	★
D6X	DL	—	★	—	Black	—	—	—	★	—	—
D6XW	DL	—	★	—	Black—White	—	—	—	★	—	—
H1B	DH	★	★	—	Blue	★	★	—	—	—	—
H1F	DH	★	★	—	Green	★	★	—	—	—	—
H1T	DH	★	★	—	Tan	★	★	—	—	—	—
H1Y	DH	★	★	—	Gold	★	★	—	—	—	—
H1X	DH	★	★	—	Black	★	★	—	—	—	—
H3B	DH	★	★	—	Blue	—	—	—	★	—	—
H3F	DH	★	★	—	Green	—	—	—	★	—	—
H3X	DH	★	★	—	Black	—	—	—	★	—	—
H4B	DH	—	★	—	Blue	—	—	—	★	—	—
H4F	DH	—	★	—	Green	—	—	—	★	—	—
H4K	DH	—	★	—	Burnt Orange	—	—	—	★	—	—
H4X	DH	—	★	—	Black	—	—	—	★	—	—
H4Y	DH	—	★	—	Gold	—	—	—	★	—	—
H4T	DH	—	★	—	Tan	—	—	—	★	—	—
H4TW	DH	—	★	—	Tan—White	—	—	—	★	—	—
H7B	DH	★	★	—	Blue	★	★	—	—	—	—
H7F	DH	★	★	—	Green	★	★	—	—	—	—
H7X	DH	★	★	—	Black	★	★	—	—	—	—
H8F	DH	—	★	—	Green	—	★	★	—	—	—
H8K	DH	—	★	—	Burnt Orange	—	★	★	—	—	—
H8T	DH	—	★	—	Tan	—	★	★	—	—	—
H8X	DH	—	★	—	Black	—	★	★	—	—	—
B2B	DL	—	★	—	Blue	★	—	★	—	—	—
B2T	DL	—	★	—	Tan	★	—	★	—	—	—
F1B	DM	★	★	—	Blue	★	—	—	★	—	—
F1F	DM	★	★	—	Green	★	—	—	★	—	—
F1Y	DM	★	★	—	Gold	★	—	—	★	—	—

CHRYSLER

E1B	CE	★	★	—	Blue	★	★	—	★	—	—
E1F	CE	★	★	—	Green	★	★	—	★	—	—
E1L	CE	★	★	—	Champagne	★	★	—	★	—	—
E1P	CE	★	★	—	Teal	★	★	—	★	—	—
E1X	CE	★	★	—	Black	★	★	—	★	—	—
E2B	CE	—	★	—	Blue	★	★	—	★	—	★
E2T	CE	—	★	—	Tan	★	★	—	★	—	★
E2X	CE	—	★	—	Black	★	★	—	★	—	★
E2Y	CE	—	★	—	Gold	★	★	—	★	—	—
L3B	CL	★	★	—	Blue	★	★	—	★	—	—
L3F	CL	★	★	—	Green	★	★	—	★	—	—
L3P	CL	★	★	—	Teal	★	★	—	★	—	—
L3X	CL	★	★	—	Black	★	★	—	★	—	—
L3Y	CL	★	★	—	Gold	★	★	—	★	—	—
L4B	CL	—	★	—	Blue	★	★	★	★	—	—
L4R	CL	—	★	—	Red	★	★	★	★	—	—
L4X	CL	—	★	—	Black	★	★	★	★	—	—
M4B	CM	—	★	—	Blue	★	★	★	★	—	—
M4R	CM	—	★	—	Red	★	★	★	★	—	—
M4X	CM	—	★	—	Black	★	★	★	★	—	—
P4B	CP	—	★	—	Blue	★	★	★	★	—	—
P4F	CP	—	★	—	Green	★	★	★	★	—	—
P4R	CP	—	★	—	Red	★	★	★	★	—	—

Printed U.S.A.
December 1970

CHRYSLER cont'd.

TRIM CODE	MODEL	MATERIAL: Cloth	MATERIAL: Vinyl	MATERIAL: Leather	COLOR	SED.	4 D.H.T.	STA. WGN.	2 D.H.T.	SP. 2 D.H.T.	CV. CP.
P4T	CP	—	★	—	Tan	★	★	★	★	—	—
P4X	CP	—	★	—	Black	★	★	★	★	—	—
L7L	CL	★	★	—	Beige	★	★	★	—	—	—
L7R	CL	★	★	—	Red	★	★	★	—	—	—
P7L	CP	★	★	—	Beige	★	★	★	—	—	—
L8X	CL	—	★	—	Black	★	★	★	—	—	—
P8F	CP	—	★	—	Green	★	★	★	—	—	—
P8X	CP	—	★	—	Black	★	★	★	—	—	—
M3F	CM	★	★	—	Green	—	★	—	★	—	—
M3X	CM	★	★	—	Black	—	★	—	★	—	—
M3Y	CM	★	★	—	Gold	—	★	—	★	—	—
M5L	CM	★	★	—	Beige	—	★	—	★	—	—
E6T	CE	—	★	—	Tan	—	★	—	★	—	★
E6X	CE	—	★	—	Black	—	★	—	★	—	★
E6XW	CE	—	★	—	Black—White	—	★	—	★	—	★
M6F	CM	—	★	—	Green	—	★	—	★	—	★
M6T	CM	—	★	—	Tan	—	★	—	★	—	★
M6X	CM	—	★	—	Black	—	★	—	★	—	★
M6XW	CM	—	★	—	Black—White	—	★	—	★	—	★
P6B	CM	—	★	—	Blue	—	★	—	★	—	★
P6F	CM	—	★	—	Green	—	★	—	★	—	★
P6T	CM	—	★	—	Tan	—	★	—	★	—	★
P6X	CM	—	★	—	Black	—	★	—	★	—	★
P6XW	CM	—	★	—	Black—White	—	★	—	★	—	★
H1B	CH	★	★	—	Blue	★	★	—	—	—	—
H1F	CH	★	★	—	Green	★	★	—	—	—	—
H1P	CH	★	★	—	Teal	★	★	—	—	—	—
H1X	CH	★	★	—	Black	★	★	—	—	—	—
H1Y	CH	★	★	—	Gold	★	★	—	—	—	—
H3B	CH	★	★	—	Blue	—	—	—	★	—	—
H3F	CH	★	★	—	Green	—	—	—	★	—	—
H3P	CH	★	★	—	Teal	—	—	—	★	—	—
H3X	CH	★	★	—	Black	—	—	—	★	—	—
H3Y	CH	★	★	—	Gold	—	—	—	★	—	—
H6B	CH	—	★	—	Blue	—	—	—	★	—	—
H6T	CH	—	★	—	Tan	—	—	—	★	—	—
H6XW	CH	—	★	—	Black—White	—	—	—	★	—	—
H6X	CH	—	★	—	Black	—	—	—	★	—	—
H7B	CH	★	★	—	Blue	★	★	—	—	—	—
H7L	CH	★	★	—	Beige	★	★	—	—	—	—
H7R	CH	★	★	—	Red	★	★	—	—	—	—
H8L	CH	—	★	—	Beige	—	★	—	—	—	—
H8X	CH	—	★	—	Black	—	★	—	—	—	—
H5T	CH	—	—	★	Tan	★	★	—	—	—	—

IMPERIAL

TRIM CODE	MODEL	MATERIAL: Cloth	MATERIAL: Vinyl	MATERIAL: Leather	COLOR	SED.	4 D.H.T.	STA. WGN.	2 D.H.T.	SP. 2 D.H.T.	CV. CP.
L1B	YL	★	★	—	Blue	—	★	—	—	—	—
L1F	YL	★	★	—	Green	—	★	—	—	—	—
L1M	YL	★	★	—	Burgundy	—	★	—	—	—	—
L1P	YL	★	★	—	Teal	—	★	—	—	—	—
L1T	YL	★	★	—	Tan	—	★	—	—	—	—
L1X	YL	★	★	—	Black	—	★	—	—	—	—
L3B	YL	★	★	—	Blue	—	—	—	★	—	—
L3F	YL	★	★	—	Green	—	—	—	★	—	—
L3M	YL	★	★	—	Burgundy	—	—	—	★	—	—
L3P	YL	★	★	—	Teal	—	—	—	★	—	—
L3TT	YL	★	★	—	Tan	—	—	—	★	—	—
L3X	YL	★	★	—	Black	—	—	—	★	—	—
MDA	YM	★	—	★	Gray	—	★	—	—	—	—
MDB	YM	★	—	★	Blue	—	★	—	—	—	—
MDF	YM	★	—	★	Green	—	★	—	—	—	—

Printed U.S.A.
December 1970

IMPERIAL cont'd.

TRIM CODE	MODEL	MATERIAL			COLOR	SED.	4 D.H.T.	STA. WGN.	2 D.H.T.	SP. 2 D.H.T.	CV. CP.
		Cloth	Vinyl	Leather							
MDM	YM	★	—	★	Burgundy	—	★	—	—	—	—
MDP	YM	★	—	★	Teal	—	★	—	—	—	—
MDTT	YM	★	—	★	Tan	—	★	—	—	—	—
MDX	YM	★	—	★	Black	—	★	—	—	—	—
MBB	YM	★	—	★	Blue	—	—	—	★	—	—
MBF	YM	★	—	★	Green	—	—	—	★	—	—
MBM	YM	★	—	★	Burgundy	—	—	—	★	—	—
MBP	YM	★	—	★	Teal	—	—	—	★	—	—
MBTT	YM	★	—	★	Tan	—	—	—	★	—	—
MBX	YM	★	—	★	Black	—	—	—	★	—	—
MBY	YM	★	—	★	Gold	—	—	—	★	—	—
MSB	YM	—	—	★	Blue	—	★	—	—	—	—
MSF	YM	—	—	★	Green	—	★	—	—	—	—
MSR	YM	—	—	★	Red	—	★	—	—	—	—
MST	YM	—	—	★	Tan	—	★	—	—	—	—
MSX	YM	—	—	★	Black	—	★	—	—	—	—
MSXW	YM	—	—	★	Black—White	—	★	—	—	—	—
MSY	YM	—	—	★	Gold	—	★	—	—	—	—
MRB	YM	—	—	★	Blue	—	—	—	★	—	—
MRF	YM	—	—	★	Green	—	—	—	★	—	—
MRT	YM	—	—	★	Tan	—	—	—	★	—	—
MRX	YM	—	—	★	Black	—	—	—	★	—	—
MRXW	YM	—	—	★	Black—White	—	—	—	★	—	—
MRY	YM	—	—	★	Gold	—	—	—	★	—	—

NOTES

Printed U.S.A.
December 1970

NOTES

CODE	PART NAME	CAR LINE	PART NUMBER	Sed.	4 D.H.T.	Sta. Wgn.	2 D.H.T.	Sp. 2 D.H.T.	Conv.
23-71-1	CARPET, Console Side and Rear								
	CODES								
	L6BW	V	3563 EB9	1	—	—	—	1	—
	L6EW	V	3563 FE5	1	—	—	—	1	—
	H6F	L	3563 EF9	—	—	—	1	—	—
	H6T	L	3563 FT4	—	—	—	1	—	—
	L6X, L6XW, H6X	V,L	3563 BX8	1	—	—	1	1	—
	Side Molded Lt.								
	P6B, P6BW, D6B, C6B, M6B, CRB	R,W	4406 EB9	1	—	—	1	1	1
	P6F, D6F, C6F, M6F, CRF	R,W	4406 EF9	1	—	—	1	1	1
	P6K, P6KW, D6K, C6K, M6K	R,W	4406 FK6	1	—	—	1	—	1
	P6T, P6TW, D6T, C6T, M6T, CRT	R,W	4406 FT4	1	—	1	1	1	1
	P6XA, P6XW, P6XY, D6X, D6XW, D6XA								
	M6X, M6XW, M6XY, D6XY CRXA	R, W	4406 CX8	1	—	1	1	1	1
	M6B, D6B, C6B, CRB, P6B, P6BW	R,W	4987 FB9	1	—	—	1	1	1
	M6B, H6B, P6B	P,D	4987 FB4	—	—	—	1	1	1
	M6B	C	4987 FB4	—	—	—	—	—	1
	H6B	C	4987 FB9	—	—	—	1	—	—
	M6K, D6K, C6K, H6K, P6K, P6KW	R,W,P,D	4987 FK6	1	—	—	1	1	1
	M5L	C	4987 FL5	—	1	—	1	—	—
	M6F, C6F, D6F, CRF, H6F, P6F	W,R,P,D,C	4987 EF9	1	1	—	1	1	1
	P6T5, P6TW, M6T, D6T, C6T, CRT, H6T, E6T, M6T	R,W,P,D,C	*4987 FT4	1	1	1	1	1	1
	M6X, M6XW, M6XY, D6XY, D6XW, E6X, E6XW, C6XA, C6XW, C5XA, CRXA, H6X, H6XW, H6XA, P6X, P6XA, P6XW, P6XP, P6XY	W,R,P,D,C	4987 EX8	1	1	1	1	1	1
	w/AUTO. TRANS. Side Left								
	M6B, D6B, P6B, P6BW, C6B, CRB	R,W	3553 EB9	1	—	—	1	1	1
	M6F, D6F, P6F, C6F, CRF	R,W	3553 EF9	1	—	—	1	1	1
	M6K, D6K, P6K, P6KW, C6K	R,W	3553 FK6	1	—	—	1	1	1
	M6T, D6T, P6T, P6TW, CRT	R,W	3553 FT4	1	—	1	1	1	1
	M6X, M6XW, M6XY, D6XY, D6X, D6XW, P6XA, P6XW, P6XY, C6XA, C6XW, C5XA, CRXA	R,W	3553 BX8	1	—	1	1	1	1
	W6B, M6B, H6B, P6B	P,D,C	3551-2 FB4	—	1	1	1	1	1
	M6B, H6B, D6B, C6B, CRB, P6B, P6BW	R, W, C	3551-2 EB9	1	—	1	1	—	1
	M6K, H6K, P6K, P6KW, D6K, C6K	R, W, P, D	3551-2 FK6	1	—	—	1	1	1
	M6F, D6F, C6F, CRF, H6F, H6P, P6F	R, W, P, D, C	3551-2 EF9	1	—	—	1	1	1
	E6T, M6T, H6T, P6TW, D6T, C6T, CRT, P6T	R, W, P, D, C	3551-2 FT4	1	1	1	1	1	1
	E6X, E6XW, M6X, M6XW, H6X, H6XA, H6XW, H6XP, P6XA, P6XW, P6XP, P6XY, D6X, D6XA, D6XW, D6XY, C56A, C6XA, CRXA		3551-2 BX8	—	1	—	1	1	1
	M5L	C	3551-2 FL2	—	1	—	1	—	—
	END CAP EXTENSION								
	M6B, D6B, C6B, CRB, P6B, P6BW	R,W	3550 EB9	1	—	—	1	1	1
	M6F, D6F, C6F, CRF, P6F	R,W	3550 EF9	1	—	—	1	1	1
	M6K, D6K, C6K, P6K, P6KW	R,W	3550 FK6	1	—	—	1	1	1
	M6T, D6T, C6T, CRT, P6T, P6TW	R,W	3550 FT4	1	—	—	1	1	1
	M6X, M6XW, M6XY, M6XA, E6X, E6XW, D6X, D6XW D6XY, C5XA, C6XA, C6XW, CRXA, L6X, W6XA, H6X, H6XA, H6XW, P6XA	R,W,P,D,C	3550 EX8	1	1	—	1	1	1
	M6B, W6B, H6B, P6B	P,D,C	3550 FB4	1	1	—	—	1	1
	M6F, W6F, H6F, P6F	P,D,C	3550 EF9	—	1	—	1	1	1
	H6K, P6K	P,D	3550 FK6	—	—	—	1	1	—
	E6T, M6T, H6T, P6T	P,D,C	3550 FT4	—	1	—	1	1	1
	SCREW, Carpet Att.	V,L	6024 654	1	—	—	1	1	—
	CLIP, Carpet Mldg. Att.	R,W,P,D,C	6002 225	11	—	11	11	11	11
	SCREW, Carpet to Flr. Lt. Only	R,W	6026 741	1	—	1	1	1	1
	SCREW, Console to Ctr. and Rr. Flr. Brkts.	R,W,P,D,C	6026 800	4	—	4	4	4	4

NOTE: A letter code in the carline column indicates the carline for which the part is released as follows:

CARLINES Indicate: J - Challenger, B - Barracuda, V - Valiant, L - Dart, R - Belvedere, W - Coronet, P - Plymouth, D - Dodge, C - Chrysler, Y - Imperial

AR Indicates use as required.
★ Indicates change or addition.

Right and left part numbers are on same line, first number is right, second number is left.

Printed in U.S.A.
December 1970

CODE	PART NAME	CAR LINE	PART NUMBER	Sed.	4 D.H.T.	Sta. Wgn.	2 D.H.T.	Sp. 2 D.H.T.	Conv.
23-71-3	LID, Console Storage Compartment								
	CODES								
	Inner	B,J	3516 FX9	—	—	—	1	1	1
	Outer								
	H5B, H6B, H6BW, P6B, P6BW	B,J	3558 FB5	—	—	—	1	1	1
	H6E, H6EW, P6E, P6EW	B,J	3558 FE5	—	—	—	1	—	1
	H5F, H6F, H6FW, P6F, P6FW	B,J	3558 FF8	—	—	—	1	1	1
	H5K, H6K, P5K, P6K, HRK	B,J	3558 FK5	—	—	—	1	1	1
	H6T, HRT, PRT	B,J	3558 FT4	—	—	—	1	1	1
	H5X, H6X, H6XW, HRX, P5X, P6XW, P6YX, P6A, PRX, PRXW	B,J	3558 FX9	—	—	—	1	1	1
	M6B	C	4404 FB3	—	—	—	—	—	1
	M6F, H6F, P6F	P,D,C	4404 FF8	—	—	—	1	1	1
	H6K, P6K	P,D	4404 FK5	—	—	—	1	1	—
	M6T, H6T, P6T	P,D,C	4404 FT4	—	—	—	1	1	—
	M6X, M6XW, H6X, H6XW, H6XA, H6XP, E6X, E6XW, P6XA, P6XP, P6XW	P,D,C	4404 FX9	—	1	—	1	1	1
	M6B	C	4404 FB3	—	—	—	—	—	1
	H6B	C	4404 FB7	—	—	—	1	—	—
	M5L	C	4404 FL3	—	1	—	1	—	—
	SCREW, Storage Compt. Lid Latch to Wheelhouse Lwr. Qtr. Trm. Cvr. Att.	C	6028 170	—	—	4	—	—	—
23-71-5	PAD, Floor Console Front Trim								
	CODES								
	M6B	C	4407 FB3	—	1	—	1	—	1
	H6B	C	4407 FB7	—	—	—	1	—	—
	H6K	D	4407 FK5	—	—	—	1	—	—
	M6F	C	4407 FF8	—	1	—	1	—	1
	M5L	C	4407 FL3	—	1	—	1	—	—
	E6T, M6T, H6T	C	4407 FT4	—	1	—	1	—	1
	E6X, E6XW, M6X, M6XW, H6X, H6XW	C	4407 FX9	—	1	—	1	—	1
23-71-8	CLIP, Floor Tunnel Console Foundation	V,L	2788 700	—	—	—	1	1	—
	w/4 SPEED MAN. TRANS.	L	2788 700	—	—	—	1	—	—
23-76-2	LATCH, Front Door Arm Rest Lid								
	CODES								
	MDA	Y	4328 FA5	—	2	—	—	—	—
	MBF, MDF, MRF, MSF	Y	4328 FF8	—	2	—	2	—	—
	MBY, MDY, MRY, MSY	Y	4328 FY4	—	2	—	2	—	—
	MRB, MSB	Y	4328 FB3	—	2	—	2	—	—
	MRT, MST	Y	4328 FT4	—	2	—	2	—	—
	MRXW, MSXW	Y	4328 FW1	—	2	—	2	—	—
	MSR	Y	4328 FR8	—	2	—	—	—	—
	L1B, L3B, MBB, MDB	Y	4328 FB7	—	2	—	2	—	—
	L1F, L3F	Y	4328 FF4	—	2	—	2	—	—
	L1M, MDM	Y	4328 FM9	—	2	—	—	—	—
	L1P, MBP, MDP	Y	4328 FP6	—	2	—	2	—	—
	L1TT, L4TT, MBTT, MDTT	Y	4328 FT2	—	2	—	2	—	—
	L1X, L3X, MBX, MDX, MRX, MSX	Y	4328 FX9	—	2	—	2	—	—
23-76-7	BRACKET, Quarter Arm Rest to Quarter Inner Reinforcing	P,D,C	2878 710-1	—	—	—	—	—	1
23-76-9	BASE, Door and Quarter Arm Rest								
	CODES								
	L1B, D2B, L2B, L4B	V	1210-1 FB7	1	—	—	—	1	—
	L2B w/Wood Grained Trim	V	1210-1 FB7	1	—	—	—	1	—
	L2B, H1B, H2B	V,L	1210-1 FB3	1	—	—	—	—	—
	L4E, X1E, X2E, X3E, X4E	V,L	1210-1 FE5	1	—	—	1	1	—

NOTE: A letter code in the carline column indicates the carline for which the part is released as follows:

CARLINES Indicate: J - Challenger, B - Barracuda, V - Valiant, L - Dart, R - Belvedere, W - Coronet, P - Plymouth, D - Dodge, C - Chrysler, Y - Imperial

AR Indicates use as required.
★ Indicates change or addition.

Right and left part numbers are on same line, first number is right, second number is left.

Printed in U.S.A.
December 1970

CODE	PART NAME	CAR LINE	PART NUMBER	Sed.	4 D.H.T.	Sta. Wgn.	2 D.H.T.	Sp. 2 D.H.T.	Conv.
23-76-9	BASE Cont'd.								
	L1F, L2F, D2F, L4F	V	1210-1 FF8	1	—	—	—	1	—
	L2F, D2F, H2F, W/Wood Grained Trim, H1F, H6F	V,L	1210-1 FF4	1	—	—	—	—	—
	L4T, D2T, H2T, H6T	V,L	1210-1 FT4	1	—	—	1	1	—
	L6BW, L6EW, L6XW, H2XW	V,L	1210-1 EW1	1	—	—	1	1	—
	L1X, L2X, L4X, L6X, D2X, H1X, H2X H6X	V,L	1210-1 DX9	1	—	—	1	1	—
	QUARTER w/ASHTRAY								
	L1B, L2B, L4B, D2B	V	1208 FB7	—	—	—	—	2	—
	L4E, X1E, X2E, X3E, X4E	V,L	1208 FE5	—	—	—	2	2	—
	L1F, L2F, L4F, D2F	V	1208 FF8	—	—	—	—	2	—
	L4T, D2T, H2T, H6T	V,L	1208 FT4	—	—	—	2	2	—
	L6BW, L6EW, L6XW, H2XW	V,L	1208 EW1	—	—	—	2	2	—
	L2B, D2B, H2B	L	1208 EB3	—	—	—	2	—	—
	H2F, H6F, D2F	L	1208 FF4	—	—	—	2	—	—
	L1X, L4X, D2X, L2X, L6X, H2X, H6X	V,L	1208 DX9	—	—	—	2	2	—
	QUARTER ARM REST 2 DOOR								
	M2B	R	1250 EB7	2	—	—	—	—	—
	K1T, K2T, L2T, M2T	R,W	1250 FT4	2	—	—	—	—	—
	L2X, M2X	R,W	1250 DX9	2	—	—	—	—	—
	L2B	W	1250 EB3	2	—	—	—	—	—
	Bright	R,W	1250 BZ1	2	—	—	2	—	—
	E1B, E2B, F1B, L1B, L2B	P,D,C	1250 EB3	2	—	—	2	2	—
	E2T, E1T, E6T, F2T, K1T, K2T, L2T	P,D,C	1250 FT4	2	—	—	2	—	—
	F2Y, F1Y, E2Y, L1Y	P,D,C	1250 FY4	2	—	—	2	—	—
	E1F, F1F, L1F	P,D,C	1250 FF8	2	—	—	2	—	—
	E1X, E2X, E6X, F2XA, L1X, L2X, L2XA	P,D,C	1250 DX9	—	—	—	2	—	—
	Bright	P,D,C	1250 BZ1	—	—	—	2	2	—
	E1L	C	1250 EL3	—	—	—	2	—	—
	E1P	C	1250 FP6	—	—	—	2	—	—
	E6XW	C	1250 EW1	—	—	—	2	—	—
	L1F, L2F	D	1250 FF4	—	—	—	2	—	—
	FRT. AND RR. DOOR LONG								
	E1B, E2B	C	1212 FB3	4	4	—	2	—	2
	E1F	C	1212 FF8	4	4	—	2	—	—
	E1L	C	1212 EL3	4	4	—	2	—	—
	E1P	C	1212 FP6	4	4	—	2	—	—
	E2T, E6T, D2TY	C	1212 FT4	—	4	—	2	—	2
	E2Y	C	1212 FY4	4	4	—	2	—	2
	E6XW	C	1212 EW1	—	—	—	2	—	2
	E1X, E2X, E6X	C	1212 DX9	4	4	—	2	—	2
	Bright	W,P,D,C	1212 BZ1	4	4	4	2	2	2
	FRT. AND RR. DOOR SHORT								
	E2B, E1B, B1B, R2B, F1B, F2B, B2B, L1B, D2B, L2B	R,W,P,D	1213 EB3	4	—	4	2	—	—
	E2F, L1F, L2F, B2F	P,D	1213 FF4	—	—	4	2	—	—
	L1F, L2F, F1F, R2F, F2F	P,D	1213 FF8	4	—	4	2	—	—
	E2T, K1T, K2T, B2T, F2T, L2T, D2T, E1T, B1T, R2T, M2T, T2T	R,W,P,D	1213 FT4	4	—	4	2	—	—
	F2BW, F2TW, F2XW, L2BW, L2TW, L2XW	P,D	1213 EW1	—	—	4	—	—	—
	L1Y, F1Y	R,P,D	1213 FY4	4	—	—	2	—	—
	K2X, T2X, R2X, K1X, D2X, D2X, L6X, L2X, L1XA, L2XA, F1XA, F2XA	R,W,P,D	1213 DX9	4	—	4	2	—	—
	Bright	R,W,P,D	1213 BZ1	4	4	4	2	—	2
	DOOR								
	L1B, MDB, L3B, MBB	Y	1228-9 FB7	—	1	—	1	—	—
	MSB, MRB	Y	1228-9 FB3	—	1	—	1	—	—
	L1F, L3F	Y	1228-9 FF4	1	1	—	1	—	—
	L1M, MDM	Y	1228-9 FM9	1	1	—	1	—	—

NOTE: A letter code in the carline column indicates the carline for which the part is released as follows:

CARLINES Indicate: J - Challenger, B - Barracuda, V - Valiant, L - Dart, R - Belvedere, W - Coronet, P - Plymouth, D - Dodge, C - Chrysler, Y - Imperial

AR Indicates use as required.
★ Indicates change or addition.

Right and left part numbers are on same line, first number is right, second number is left.

Printed in U.S.A.
December 1970

CODE	PART NAME	CAR LINE	PART NUMBER	Sed.	4 D.H.T.	Sta. Wgn.	2 D.H.T.	Sp. 2 D.H.T.	Conv.
23-76-9	BASE Cont'd.								
	L1TT, L3TT, MDTT, MBTT	Y	1228-9 FT2	1	1	—	1	—	—
	L1P, MDP, MBP	Y	1228-9 FP6	1	1	—	1	—	—
	L1X, L3X, MDX, MBX, MSX, MRX	Y	1228-9 FX9	1	1	—	1	—	—
	MDA	Y	1228-9 FA5	—	1	—	—	—	—
	MSR	Y	1228-9 FR8	—	1	—	—	—	—
	MST, MRT	Y	1228-9 FT4	—	1	—	1	—	—
	MDY, MSY, MBY, MRY	Y	1228-9 FY4	—	1	—	1	—	—
	MDF, MSF, MBF, MRF	Y	1228-9 FF8	—	1	—	1	—	—
	MSXW, MRXW	Y	1228-9 FW1	—	1	—	1	—	—
	QUARTER								
	L3B, MBB	Y	1220-1 FB7	—	—	—	1	—	—
	MBP	Y	1220-1 FP6	—	—	—	1	—	—
	L3TT, MBTT	Y	1220-1 FT2	—	—	—	1	—	—
	L3F	Y	1220-1 FF4	—	—	—	1	—	—
23-76-10	PAD, Front Door Arm Rest Storage Compartment Lid CODES								
	MDA	Y	1232 FA3	—	2	—	—	—	—
	MSB, MRB	Y	1232 EB3	—	2	—	2	—	—
	L1B, L3B, MDB, MBB	Y	1232 FB7	—	2	—	2	—	—
	L1F, L3F	Y	1232 FF4	—	2	—	2	—	—
	MDF, MSF, MBF, MRF	Y	1232 FF8	—	2	—	2	—	—
	L1M, MDM	Y	1232 EM9	—	2	—	—	—	—
	MBY, MRY, MDY, MSY	Y	1232 FY4	—	2	—	2	—	—
23-76-11	PAD, Front Door Arm Rest CODES w/o ASH REC.								
	L1B, L2B, D2B, L4B	V	1214 FB7	2	—	—	—	2	—
	L2B w/Wood Grained Trim	V	1214 FB7	2	—	—	—	—	—
	L1F, L2F, D2F, L4F	V	1214 EF8	2	—	—	—	2	—
	L2F w/Wood Grained Trim	V	1214 EF8	2	—	—	—	—	—
	L4E, X1E, X2E, X3E, X4E	V,L	1214 FE5	2	—	—	2	2	—
	L4T, D2T, H2T, H6T	V,L	1214 FT4	2	—	—	2	2	—
	L6BW, L6EW, L6XW, H2XW	V,L	1214 EW1	2	—	—	2	2	—
	L1X, L2X, D2X, L4X, L6X, H1X, H2X H6X	V,L	1214 DX9	2	—	—	2	2	—
	L2B, D2B, H1B, H2B	V,L	1214 EB3	2	—	—	2	—	—
	L2F, D2F, H1F, H2F, H6F	V,L	1214 FF4	2	—	—	2	—	—
	H4B, H5B, H6B	J	1224-5 FB6	—	—	—	1	1	1
	H5F, H6F	J	1224-5 FF8	—	—	—	1	1	1
	H6T, HRT	J	1224-5 FT4	—	—	—	1	1	1
	H6E	J	1224-5 FE5	—	—	—	1	1	1
	H5K, H6K, HRK	J	1224-5 FK6	—	—	—	1	1	1
	H4X, H5X, H6X, HRX	J	1224-5 FX9	—	—	—	1	1	1
	H6XW	J	1224-5 FW1	—	—	—	1	1	1
	H4B, H6B, P6B	B	1222-3 FB6	—	—	—	1	—	1
	H4F, H6F, P6F	B	1222-3 FF7	—	—	—	1	—	1
	P6YX	B	1222-3 FY5	—	—	—	1	—	1
	H6E, P6E	B	1222-3 FE5	—	—	—	1	—	1
	P5K, P6K	B	1222-3 FK6	—	—	—	1	—	1
	H6T, P6T, PRT	B	1222-3 FT4	—	—	—	1	—	1
	H4BW, H4FW, H4XW, H6BW, H6EW, H6FW, PRXW, P6BW, P6EW, P6FW, P6XW	B	1222-3 FW1	—	—	—	1	—	1
	H4X, H6X, PRX, P6A	B	1222-3 FX9	—	—	—	1	—	1
	w/o ASH REC. D2B, L1B, L2B	R,W	1249 EB3	2	—	2	—	—	—
	H1B, H2B, P3B, P6B 2 DOOR	R	1249 FB5	2	—	—	2	—	2

NOTE: A letter code in the carline column indicates the carline for which the part is released as follows:

CARLINES Indicate: J - Challenger, B - Barracuda, V - Valiant, L - Dart, R - Belvedere, W - Coronet, P - Plymouth, D - Dodge, C - Chrysler, Y - Imperial

AR Indicates use as required.
★ Indicates change or addition.

Right and left part numbers are on same line, first number is right, second number is left.

Printed in U.S.A.
December 1970

CODE	PART NAME	CAR LINE	PART NUMBER	Sed.	4 D.H.T.	Sta. Wgn.	2 D.H.T.	Sp. 2 D.H.T.	Conv.
23-76-11	PAD Cont'd.								
	M2B, M6B, D6B, H1B, H2B, P3B P4B, P6B	R,W	1249 EB7	2	—	2	2	—	2
	E2B, L1B, L2B, B2B, R2B, F1B, F2B	P,D	1249 EB3	2	2	2	2	—	2
	L1F, L2F, F1F, F2F, D4F, D6F, M6F, H1F, H2F, P3F, P4F, P6F	R,W,P,D	1249 EF8	2	—	2	2	—	2
	E2F, B2F, M6F	P,D	1249 FF4	—	—	2	—	—	2
	M6K, D4K, D6K, H2K, P3K, P6K	R,W	1249 FK5	2	—	—	2	—	2
	E2T, K1T, K2T, T2T, D2T, D4T, D6T, F2T, B2T, L2T, M2T, M6T, H2T, P4T, P6T	R,W,P,D	1249 FT4	2	—	2	2	2	—
	F2BW, F2TW, F2XW, D4XW, D6XW, L2BW, L2TW, L2XW, M6XW, H2BW, H2KW, H2XW, H2FW, H2TW, P6BW, P6KW, P6TW, P6XW	R,W,P,D	1249 EW1	2	2	2	2	—	2
	K1A, K2A, F1XA, F2XA, T2X, L1X, L2X, L1XA, L2XA, M6X, M2X, H1X, H2X, P3X, P6XA, P4X, D4X, D6X	R,W,D,P	1249 DX9	2	—	2	2	—	2
	L1Y, H1Y, H2XY, F1Y, P3Y, P6XY, D1Y	R,W,D,P	1249 FY4	2	—	2	2	—	—
	C2B, C6B, CRB	W	1272-3 FB5	—	—	—	—	1	—
	C2F, C6F, CRF	W	1272-3 EF8	—	—	—	—	1	—
	C2K, C6K	W	1272-3 FK5	—	—	—	—	1	—
	C2T, C6T, CRT	W	1272-3 FT4	—	—	—	—	1	—
	C2XW, C6XW	W	1272-3 EW-1	—	—	—	—	1	—
	C2XA, C5XA, C6XA, CRXA	W	1272-3 DX9	—	—	—	—	1	—
	w/o ASH REC. W1B, W4B, L2B, M1B, M4B, R4B, H1B, H3B, H4B, H6B, H7B, P3B, P4B, D1B, L4B	P,D	1272-3 EB3	1	1	1	1	1	1
	W1F, W4F, L2F, M1F, M4F, H1F, H3F, H4F, H6F, H7F, H8F, D4F, R4F, F2F, H5F	P,D	1272-3 EF8	1	1	1	1	1	1
	W1K, W4K, M1K, M4K, H4K, H6K, H8K, P3K, P4K, P6K	P,D	1272-3 FK5	—	1	—	1	1	—
	W4XP, M4XP, H6XP, P6XP, H4XP	P,D	1272-3 FP6	—	—	—	1	1	—
	W4T, W6T, F2T, E2T, E6T, M4T, M6T, R4T, H1T, H4T, H6T, H8T, P6T, P8T, PRT, D6T, J6T, P4TT	P,D	1272-3 FT4	1	1	1	1	1	—
	W4BW, W4TW, W4XW, M4XW, H4TW, H6XW, P6XW, E6XW, M6XW, L4 XW, P6XW	P,D	1272-3 EW1	—	—	1	1	1	1
	W1Y, D1Y, M1Y, H1Y, H3Y, H4Y, P3Y	P,D	1272-3 FY4	1	1	—	1	—	—
	D1F, L4F	D	1272-3 FF4	1	1	—	1	—	—
	W1XA, W4XA, W6XA, W8XA, D1X, D6X, L4X, M1XA, M4XA, M6XA, M8XA, X1X, X2X, D6XA, H1X, H3X, H4X, H6X, H7X, H8X, H3XA, H4XA, P3XA, P4XA, P8XA, P6XA, J6XA, D4XA	P,D	1272-3 DX9	1	1	1	1	1	1
	E1B, E2B, L3B, L4B, M4B, M6B, P4B	C	1272-3 EB3	1	1	1	1	—	1
	H1B, H3B, H6B, H7B	C	1272-3 EB7	1	1	—	1	—	—
	E1F, L3F, M3F, M6F, H1F, H3F, P4F, P8F, H7F	C	1272-3 EF8	1	1	1	1	—	1
	E1L, L7L, M5L, H7L, H8L, P7L	C	1272-3 EL3	1	1	1	1	—	—
	E1P, L3P, H1P, H3P	C	1272-3 FP6	1	1	—	1	—	—
	L4R, L7R, M4R, H7R, P4R	C	1272-3 DR8	1	1	1	1	—	—
	E2T, E6T, M6T, H6T, HST, P4T, D2TY	C	1272-3 FT4	—	1	1	1	—	1
	E6XW, M6XW, H6XW	C	1272-3 EW1	—	1	—	1	—	1
	E2Y, L3Y, M3Y, H1Y	C	1272-3 FY4	1	1	—	1	—	1
	E1X, E2X, E6X, L3X, L4X, L8X, M3X, M4X, M6X, H1X, H6X, H8X, P4X, P8X	C	1272-3 DX9	1	1	1	1	—	1

NOTE: A letter code in the carline column indicates the carline for which the part is released as follows:

CARLINES Indicate: J - Challenger, B - Barracuda, V - Valiant, L - Dart, R - Belvedere, W - Coronet, P - Plymouth, D - Dodge, C - Chrysler, Y - Imperial

AR Indicates use as required.
★ Indicates change or addition.

Right and left part numbers are on same line, first number is right, second number is left.

Printed in U.S.A.
December 1970

CODE	PART NAME	CAR LINE	PART NUMBER	Sed.	4 D.H.T.	Sta. Wgn.	2 D.H.T.	Sp. 2 D.H.T.	Conv.
23-76-11	PAD Cont'd.								
	LID PAD								
	MDA	Y	1232 FA5	—	2	—	—	—	—
	MSB, MRB	Y	1232 EB3	—	2	—	2	—	—
	L1B, L3B, MDB, MBB	Y	1232 FB7	—	2	—	2	—	—
	L1F, L3F	Y	1232 FF4	—	2	—	2	—	—
	MDF, MSF, MBF, MRF	Y	1232 EF8	—	2	—	2	—	—
	L1M, L3M, MDM, MBM	Y	1232 EM9	—	2	—	2	—	—
	L1P, MDP, MBP	Y	1232 FP6	—	2	—	2	—	—
	MSR	Y	1232 FR8	—	2	—	—	—	—
	L1TT, L3TT, MBTT, MDTT	Y	1232 FT2	—	2	—	2	—	—
	MST	Y	1232 FT4	—	2	—	—	—	—
	MSXW	Y	1232 EW1	—	2	—	—	—	—
	L1X, L3X, MBX, MSX, MDX	Y	1232 EX9	—	2	—	2	—	—
	MBY, MRY, MDY, MSY	Y	1232 FY4	—	2	—	2	—	—
23-76-16	NUT, Door and Quarter Arm Rest Base Attaching	V,L,R,W,P,D,C,Y	1280 134	AR	AR	AR	AR	AR	—
23-76-17	HINGE, Door Arm Rest Storage Compartment Lid Pad	Y	2879 392	—	4	—	2	—	—
23-76-18	ARM REST, Front Seat Back Center								
	CODES								
	L4B	V	6604 F4B	1	—	—	—	1	—
	L4E	V	6604 F4E	1	—	—	—	1	—
	L4F	V	6604 F4F	1	—	—	—	1	—
	L4T	V	6604 F4T	1	—	—	—	1	—
	L4X	V	6604 F4X	1	—	—	—	1	—
	H4B	B,J	5739 F4B	—	—	—	1	—	—
	H4F	B	5739 F4F	—	—	—	1	—	—
	H4X	B,J	5739 F4X	—	—	—	1	—	—
	H4BW, H4FW, H4XW	B	5739 F4W	—	—	—	1	—	—
	P3B, D4B, P4B	R,W	6609 FB7	1	—	1	—	—	1
	P3B	R	6609 FB5	—	—	—	1	—	—
	P3F, P4F, D4F	R,W	6609 FF8	1	—	1	—	—	1
	P3K, D4K	R,W	6609 FK4	1	—	—	1	—	1
	P4T, D4T	W	6609 FT5	1	—	1	—	—	1
	P3X, P4X, D4X	R,W	6609 FX9	1	—	1	1	—	1
	P3Y	R,W	6609 FY4	1	—	—	—	—	—
	D4XW	W	6609 FW1	—	—	—	—	—	1
	P6B 2 DOOR	R	5197 FB5	1	—	—	1	—	1
	P6B 4 DOOR	R	5197 FB7	1	—	—	—	—	—
	P6B, M6B, D6B	W	5197 FB7	1	—	1	1	—	1
	P6F, M6F, D6F	R,W	5197 FF8	1	—	—	1	—	1
	P6K, M6K, D6K	R,W	5197 FK4	1	—	—	1	—	1
	P6T, M6T, D6T	R,W	5197 FT5	1	—	1	1	—	1
	P6XA	R	5197 FX9	1	—	1	1	—	1
	D6XY, M6XY, P6XY 2 DOOR	W	5197 FY4	1	—	—	1	—	—
	P6X, M6X, D6X 2 DOOR	W	5197 FX9	1	—	1	1	—	1
	P6BW, P6KW, P6XW, P6TW, M6XW, D6XW 2 DOOR	R,W	5197 FW1	1	—	—	1	—	1
	P3B	P	6610 FB3	—	1	—	1	1	—
	P3F	P	6610 FF8	—	1	—	1	1	—
	P3K	P	6610 FK4	—	1	—	1	1	—
	P3XA	P	6610 FX9	—	1	—	1	1	—
	M4B, W4B, H3B, H4B, D4B, R4B, P3B, P4B	P, D	6601 FB3	1	1	1	1	1	1
	M4F, W4F, H3F, H4F, D4F, R4F, P3F, P4F,	P, D	6601 FF8	1	1	1	1	1	1
	M4K, W4K, H3K, H4K, P3K, P4K	P, D	6001 FK4	—	1	—	1	1	—
	M4T, W4T, H4T, D4T, P3T, P4T, R4T,	P, D	6601 FT5	1	1	1	1	1	—
	M4XA, W4XA, H4XA, D4XA, R4XA, P3XA, P4XA	P, D	6601 FA8	1	1	1	1	1	1
	M4XP, W4XP, H4XP, P4XP	P, D	6601 FP8	—	—	—	1	1	—

NOTE: A letter code in the carline column indicates the carline for which the part is released as follows:

CARLINES Indicate: J - Challenger, B - Barracuda, V - Valiant, L - Dart, R - Belvedere, W - Coronet, P - Plymouth, D - Dodge, C - Chrysler, Y - Imperial

AR Indicates use as required.
★ Indicates change or addition.

Right and left part numbers are on same line, first number is right, second number is left.

Printed in U.S.A.
December 1970

CODE	PART NAME	CAR LINE	PART NUMBER	Sed.	4 D.H.T.	Sta. Wgn.	2 D.H.T.	Sp. 2 D.H.T.	Conv.
23-76-18	ARM REST Cont'd.								
	M4XW, M4BW, W4XW, W4BW, M4TW, W4TW, H4XW, P4XW	P, D	6601 FW 1	—	—	1	1	1	1
	M4Y, W4Y, H3Y, P3Y,	P, D	6601 FY4	1	1	—	—	—	—
	M7F, W7F	P,D	6607 F7F	—	—	2	—	—	—
	M8XA, W8XA, P7XA, W8XA	P, D	6607 F7X	2	2	2	—	—	—
	C6B, CRB	W	5197 FOB	—	—	—	—	1	—
	C6F, CRF	W	5197 FOF	—	—	—	—	1	—
	C6K	W	5197 FOK	—	—	—	—	1	—
	C6T, CRT	W	5197 FOT	—	—	—	—	1	—
	C6XW	W	5197 FOW	—	—	—	—	1	—
	C6XA, C5XA, CRXA	W	5197 FXA	—	—	—	—	1	—
	H1B	D	6624 F1B	1	1	—	—	—	—
	H1F	D	6624 F1F	1	1	—	—	—	—
	H1T	D	6624 F1T	1	1	—	—	—	—
	H1X	D	6624 F1X	1	1	—	—	—	—
	H1Y	D	6624 F1Y	1	1	—	—	—	—
	H3B	D	6606 FB3	—	—	—	1	—	—
	H3F	D	6606 FF8	—	—	—	1	—	—
	H3X	D	6606 FX9	—	—	—	1	—	—
	H4B	D	6608 FB3	—	—	1	1	—	—
	H4F	D	6608 FF8	—	—	1	1	—	—
	H4K	D	6608 FK4	—	—	—	1	—	—
	H4T	D	6608 FT5	—	—	1	—	—	—
	H4X	D	6608 FX9	—	—	1	1	—	—
	H4Y	D	6608 FY4	—	—	—	1	—	—
	M7F, H7F, W7F	P,D	6607 F7F	2	2	2	—	—	—
	H7B	P	6607 F7B	2	2	—	—	—	—
	H8T	P	6607 F7T	2	2	—	—	—	—
	M8XA, H8XA, W8XA	P,D	6607 F7X	2	2	2	—	—	—
	L4B	D	6635 F4B	1	1	—	1	—	—
	L4F	D	6635 F4F	1	1	—	1	—	—
	L4X	D	6635 F4X	1	1	—	1	—	—
	L4XW	D	6635 F4W	—	1	—	1	—	—
	D6X	D	6634 FX9	—	—	—	1	—	—
	D6XW	D	6634 FXW	—	—	—	1	—	—
	H6K	D	6613 FK4	—	—	—	1	—	—
	H6X	D	6613 FX9	—	—	—	1	—	—
	H7B	D	6626 F7B	2	2	—	—	—	—
	H7F	D	6626 F7F	2	2	—	—	—	—
	H7X	D	6626 F7X	2	2	—	—	—	—
	H8F	D	6625 F8F	—	2	2	—	—	—
	H8K	D	6625 F8K	—	2	—	—	—	—
	H8T	D	6625 F8T	—	—	2	—	—	—
	H8X	D	6625 F8X	—	2	2	—	—	—
	L3B	C	6600 F3B	1	1	—	1	—	—
	L3F	C	6600 F3F	1	1	—	1	—	—
	L3P	C	6600 F3P	1	1	—	1	—	—
	L3X	C	6600 F3X	1	1	—	1	—	—
	L3Y	C	6600 F3Y	1	1	—	1	—	—
	L7L, P7L	C	6603 F7L	2	2	2	—	—	—
	L7R	C	6603 F7R	2	2	—	—	—	—
	M3F	C	6602 F3F	—	1	—	1	—	—
	M3X	C	6602 F3X	—	1	—	1	—	—
	M3Y	C	6602 F3Y	—	1	—	1	—	—
	L4B, M4B, P4B	C	6621 FB3	1	1	1	—	—	—
	P4F	C	6621 FF8	—	—	1	—	—	—
	L4R, M4R, P4R	C	6621 FR9	1	1	1	—	—	—
	P4T	C	6621 FT5	—	—	1	—	—	—

NOTE: A letter code in the carline column indicates the carline for which the part is released as follows:

CARLINES Indicate: J - Challenger, B - Barracuda, V - Valiant, L - Dart, R - Belvedere, W - Coronet, P - Plymouth, D - Dodge, C - Chrysler, Y - Imperial

AR Indicates use as required.
★ Indicates change or addition.

Right and left part numbers are on same line, first number is right, second number is left.

Printed in U.S.A.
December 1970

CODE	PART NAME	CAR LINE	PART NUMBER	Sed.	4 D.H.T.	Sta. Wgn.	2 D.H.T.	Sp. 2 D.H.T.	Conv.
23-76-18	ARM REST Cont'd.								
	L4X, M4X, P4X	C	6621 FX9	1	1	1	—	—	—
	P8F	C	6620 FF8	—	—	2	—	—	—
	L8X, P8X	C	6620 FX9	2	2	2	—	—	—
	M6B, W6B, H6B, P6B	C	6613 FB2	—	—	—	—	—	1
	M6F, W6F, H6F, P6F	C	6613 FF8	—	1	—	1	—	1
	M5L	C	6613 FL2	—	1	—	1	—	—
	E6T, M6T, H6T, P6T	C	6613 FT5	—	1	—	1	—	1
	J6XA, E6XW, M6XW, M6XA, H6XA, D6XA, W6XA, P6XA	C	6613 FX9	—	1	—	1	—	1
	E6XW, M6XW	C	6613 FW1	—	1	—	1	—	1
	H6K, P6K	P,D	6613 FK4	—	—	—	1	1	—
	H1B	C	6618 F1B	1	1	—	—	—	—
	H1F	C	6618 F1F	1	1	—	—	—	—
	H1P	C	6618 F1P	1	1	—	—	—	—
	H1X	C	6618 F1X	1	1	—	—	—	—
	H1Y	C	6618 F1Y	1	1	—	—	—	—
	HST	C	6619 FST	2	2	—	—	—	—
	H6B	C	6615 FB7	—	—	—	1	—	—
	H6T	C	6615 FT5	—	—	—	1	—	—
	H6X	C	6615 FX9	—	—	—	1	—	—
	H6XW	C	6615 FW1	—	—	—	1	—	—
	H7B	C	6622 F7B	2	2	—	—	—	—
	H7L	C	6622 F7L	2	2	—	—	—	—
	H7R	C	6622 F7R	2	2	—	—	—	—
	H7F	C	6622 F7F	2	2	—	—	—	—
	H8L	C	6623 FLZ	—	2	—	—	—	—
	H8X	C	6623 FX9	—	2	—	—	—	—
	L1B	Y	5764 F1B	—	1	—	—	—	—
	L1F	Y	5764 F1F	—	1	—	—	—	—
	L1M	Y	5764 F1M	—	1	—	—	—	—
	L1P	Y	5764 F1P	—	1	—	—	—	—
	L1TT	Y	5764 F1T	—	1	—	—	—	—
	L1X	Y	5764 F1X	—	1	—	—	—	—
	L3B	Y	5845 F3B	—	—	—	1	—	—
	L3F	Y	5845 F3F	—	—	—	1	—	—
	L3TT	Y	5845 F3T	—	—	—	1	—	—
	MSB	Y	5610-1 FSB	—	1	—	—	—	—
	MSF	Y	5610-1 FSF	—	1	—	—	—	—
	MSR	Y	5610-1 FSR	—	1	—	—	—	—
	MST	Y	5610-1 FST	—	1	—	—	—	—
	MSX	Y	5610-1 FSX	—	1	—	—	—	—
	MSXW	Y	5610-1 FSW	—	1	—	—	—	—
	MSY	Y	5610-1 FSY	—	1	—	—	—	—
	MDA	Y	5936 FDA	—	2	—	—	—	—
	MDB	Y	5936 FDB	—	2	—	—	—	—
	MDF	Y	5936 FDF	—	2	—	—	—	—
	MDM	Y	5936 FDM	—	2	—	—	—	—
	MDP	Y	5936 FDP	—	2	—	—	—	—
	MDTT	Y	5936 FDT	—	2	—	—	—	—
	MDX	Y	5936 FDX	—	2	—	—	—	—
	MDY	Y	5936 FDY	—	2	—	—	—	—
	MBB	Y	5644 FBB	—	—	—	1	—	—
	MBF	Y	5644 FBF	—	—	—	1	—	—
	MBP	Y	5644 FBP	—	—	—	1	—	—
	MBTT	Y	5644 FBT	—	—	—	1	—	—
	MBX	Y	5644 FBX	—	—	—	1	—	—
	MBY	Y	5644 FBY	—	—	—	1	—	—
	MRB	Y	5725 FRB	—	—	—	1	—	—

NOTE: A letter code in the carline column indicates the carline for which the part is released as follows:

CARLINES Indicate: J - Challenger, B - Barracuda, V - Valiant, L - Dart, R - Belvedere, W - Coronet, P - Plymouth, D - Dodge, C - Chrysler, Y - Imperial

AR Indicates use as required.
★ Indicates change or addition.

Right and left part numbers are on same line, first number is right, second number is left.

Printed in U.S.A.
December 1970

CODE	PART NAME	CAR LINE	PART NUMBER	Sed.	4 D.H.T.	Sta. Wgn.	2 D.H.T.	Sp. 2 D.H.T.	Conv.
23-76-18	ARM REST Cont'd.								
	MRF	Y	5725 FRF	—	—	—	1	—	—
	MRT	Y	5725 FRT	—	—	—	1	—	—
	MRX	Y	5725 FRX	—	—	—	1	—	—
	MRXW	Y	5725 FRW	—	—	—	1	—	—
	MRY	Y	5725 FRY	—	—	—	1	—	—
23-76-19	FLAP, Front Seat Back Center Arm Rest CODES								
	H1B	D	8017 F1B	1	1	—	—	—	—
	H1F	D	8017 F1F	1	1	—	—	—	—
	H1T	D	8017 F1T	1	1	—	—	—	—
	H1X	D	8017 F1X	1	1	—	—	—	—
	H1Y	D	8017 F1Y	1	1	—	—	—	—
	H7B	D	8019 F7B	2	2	—	—	—	—
	H7F	D	8019 F7F	2	2	—	—	—	—
	H7X	D	8019 F7X	2	2	—	—	—	—
	H8F	D	8021 F8F	—	2	2	—	—	—
	H8K	D	8021 F8K	—	2	—	—	—	—
	H8T	D	8021 F8T	—	—	2	—	—	—
	H8X	D	8021 F8X	—	2	2	—	—	—
	M7F, W7F, H7F, P8F	P, D, C	7474 FF8	—	—	2	—	—	—
	H7B, P7B	P,D	7474 FB3	1	1	—	—	—	—
	M8XA, W8XA, P7XA	P,D	7474 FA8	1	1	1	—	—	—
	L7L, P7L	C	7474 FL2	1	1	1	—	—	—
	L7R	C	7474 FR9	1	1	—	—	—	—
	HST H8T, P8T	C	7474 FT5	1	1	—	—	—	—
	L8X, P8X	C	7474 FX9	1	1	1	—	—	—
	H1B	C	8026 FB7	1	1	—	—	—	—
	H1F	C	8026 FF8	1	1	—	—	—	—
	H1P	C	8026 FP6	1	1	—	—	—	—
	H1X	C	8026 FX9	1	1	—	—	—	—
	H1Y	C	8026 FY4	1	1	—	—	—	—
	H7B	C	8029 FB7	2	2	—	—	—	—
	H7L	C	8029 FL8	2	2	—	—	—	—
	H7R	C	8029 FR9	2	2	—	—	—	—
	H7F	C	8029 FF8	2	2	—	—	—	—
	H8L	C	8031 FL2	2	2	—	—	—	—
	H8X	C	8031 FX9	2	2	—	—	—	—
	P8F	C	8032 FF8	—	—	2	—	—	—
	L8X, P8X	C	8032 FX9	2	2	2	—	—	—
	L1B	Y	7548 FB7	—	1	—	—	—	—
	L1F	Y	7548 FB4	—	1	—	—	—	—
	L1M	Y	7548 FM9	—	1	—	—	—	—
	L1P	Y	7548 FP6	—	1	—	—	—	—
	L1TT	Y	7548 FT2	—	1	—	—	—	—
	L1X	Y	7548 FX9	—	1	—	—	—	—
	MDA	Y	7571 FA5	—	2	—	—	—	—
	MDB	Y	7571 FB7	—	2	—	—	—	—
	MDF	Y	7571 FF8	—	2	—	—	—	—
	MDM	Y	7571 FM9	—	2	—	—	—	—
	MDP	Y	7571 FP6	—	2	—	—	—	—
	MDTT	Y	7571 FT2	—	2	—	—	—	—
	MDX	Y	7571 FX9	—	2	—	—	—	—
	MDY	Y	7571 FY4	—	2	—	—	—	—
	MSB	Y	7474 FB3	—	2	—	—	—	—
	MDF, MSF	Y	7474 FF8	—	2	—	—	—	—
	MDM	Y	7474 FM9	—	2	—	—	—	—
	MSR	Y	7474 FR9	—	1	—	—	—	—

NOTE: A letter code in the carline column indicates the carline for which the part is released as follows:

CARLINES Indicate: J - Challenger, B - Barracuda, V - Valiant, L - Dart, R - Belvedere, W - Coronet, P - Plymouth, D - Dodge, C - Chrysler, Y - Imperial

AR *Indicates use as required.*
★ Indicates change or addition.

Right and left part numbers are on same line, first number is right, second number is left.

Printed in U.S.A.
December 1970

CODE	PART NAME	CAR LINE	PART NUMBER	Sed.	4 D.H.T.	Sta. Wgn.	2 D.H.T.	Sp. 2 D.H.T.	Conv.
23-76-19	FLAP Cont'd.								
	MST	Y	7474 FT5	—	2	—	—	—	—
	MDTT	Y	7474 FTT	—	2	—	—	—	—
	MSXW	Y	7474 FW1	—	2	—	—	—	—
	MDY, MSY	Y	7474 FY4	—	2	—	—	—	—
23-76-25	WASHER, Center Arm Rest Outer Link to Support	P,D,C,Y	2609 158	AR	AR	AR	AR	—	—
23-76-28	LOCK BAR, Front Seat Center Arm Rest	B,J	2942 698	—	—	—	1	—	—
	BENCH SEAT	R,W,P,D,C,Y	2270 102	1	1	1	1	1	1
	Bucket Seat	R,W,P,D,C,Y	2608 812	1	1	1	1	1	1
	Bench Seat	V	2767 653	1	—	—	—	1	—
23-76-30	HANDLE, Center Arm Rest Pull-Down	Y	2608 714	—	1	—	—	—	—
23-76-34	COVER, Front Seat Center Arm Rest								
	CODES								
	L4B	V	8006 F4B	1	—	—	—	1	—
	L4E	V	8006 F4E	1	—	—	—	1	—
	L4F	V	8006 F4F	1	—	—	—	1	—
	L4T	V	8006 F4T	1	—	—	—	1	—
	L4X	V	8006 F4X	1	—	—	—	1	—
	H4B	B,J	7483 F4B	—	—	—	1	—	—
	H4F	B	7483 F4F	—	—	—	1	—	—
	H4X	B,J	7483 F4X	—	—	—	1	—	—
	H4BW, H4FW, H4XW	B	7483 F4W	—	—	—	1	—	—
	D4B, P3B, P4B	R, W,	8010 FB7	1	—	—	—	—	—
	P3B	R	8010 FB5	—	—	—	1	—	—
	D3F, P3F, P4F,	R, W,	8010 FF8	—	—	1	—	—	—
	D4K, P3K	R, W,	8010 FK4	1	—	—	1	—	—
	D4X, P3X, P4X	R, W	8010 FX9	1	—	1	1	—	—
	P3Y	R	8010 FY4	1	—	—	—	—	—
	D4T, P4T	W	8010 FT5	1	—	1	—	—	1
	D4XW	W	8010 FW1	—	—	—	—	—	1
	2 DOOR								
	P6XA	R,W	8034 FA8	1	—	1	1	—	1
	P6B	R,W	8034 FB5	1	—	—	1	—	1
	M6B, D6B, P6B	W	8034 FB7	1	—	1	1	—	1
	M6F, P6F, D6F	R,W	8034 FF8	1	—	—	1	—	1
	M6K, P6K, D6K	R,W	8034 FK4	1	—	—	1	—	1
	M6T, P6T, D6T	R,W	8034 FT5	1	—	1	1	—	1
	M6XW, P6BW, P6KW, P6XW, D6XW, D4XW	R,W	8034 FW1	1	—	—	1	—	1
	P6XY	R	8034 FY4	1	—	—	1	—	—
	M6X, D6X, D6XY, M6XY, P6X9	W	8034 FX9	1	—	1	1	—	1
	C5XA, C6XA, CRXA	W	8034 FXA	—	—	—	—	1	—
	4 DOOR								
	P6XA	R	8034 FA8	1	—	—	—	—	—
	P6B	R	8034 FB7	1	—	—	—	—	—
	P6T	R	8034 FT5	1	—	—	—	—	—
	P6BW, P6TW	R	8034 FW1	1	—	—	—	—	—
	C6XA,	W	8034 FOX	—	—	—	—	1	—
	C6B, CRB	W	8034 FOB	—	—	—	—	1	—
	C6F, CRF	W	8034 FOF	—	—	—	—	1	—
	C6K	W	8034 FOK	—	—	—	—	1	—
	C6T, CRT	W	8034 FOT	—	—	—	—	1	—
	M4B, W4B, D4B, R4B, H3B, H4B, P3B, P4B	P, D	8001 FB3	1	1	1	1	1	1
	M4F, W4F, D4F, R4F, H3F, H4F, P3F, P4F	P, D	8001 FF8	1	1	1	1	1	1
	M4K, W4K, H3K, H4K, P3K, P4K	P, D	8001 FK4	—	1	—	1	1	—
	M4T, W4T, D4T, R4T, H3T, H4T, P3T, P4T	P, D	8001 FT5	1	1	1	1	1	—
	M4XA, W4XA, D4XA, R4XA, H3XA, H4XA, P3XA, P4XA	P, D	8001 FA8	—	—	—	1	1	—

NOTE: A letter code in the carline column indicates the carline for which the part is released as follows:

CARLINES *Indicate:* J - Challenger, B - Barracuda, V - Valiant, L - Dart, R - Belvedere, W - Coronet, P - Plymouth, D - Dodge, C - Chrysler, Y - Imperial

AR Indicates use as required.

★ Indicates change or addition.

Right and left part numbers are on same line, first number is right, second number is left.

Printed in U.S.A. December 1970

CODE	PART NAME	CAR LINE	PART NUMBER	Sed.	4 D.H.T.	Sta. Wgn.	2 D.H.T.	Sp. 2 D.H.T.	Conv.
23-76-34	COVER Cont'd.								
	M4XP, H4XP, P4XP, W4XP	P,D	8001 FP8	—	—	—	1	1	—
	M4XW, M4BW, M4TW, W4XW, W4BW, W4TW, H4XW, P4XW	P, D	8001 FW1	—	—	1	1	1	1
	M4Y, W 4Y, H3Y, P3Y	P, D	8001 FY4	1	1	—	—	—	—
	H4X	D	8001 FX9	—	—	1	—	—	—
	H4TW	D	8001 FTW	—	—	1	—	—	—
	M7F, H7F, W7F, P7F,	P, D	8008 FF8	1	1	1	—	—	—
	M8XA, H8XA, W8XA, P8XA, P7XA	P, D	8008 FA8	1	1	1	—	—	—
	H8T, P8T	P	8008 FT5	1	1	—	—	—	—
	H7B, P7B	P	8008 FB3	1	1	—	—	—	—
	L4B	D	8037 F4B	1	1	—	1	—	—
	L4X	D	8037 F4X	1	1	—	1	—	—
	L4F	D	8037 F4F	1	1	—	1	—	—
	L4XW	D	8037 F4W	—	1	—	1	—	—
	H1B	D	8016 F1B	1	1	—	—	—	—
	H1F	D	8016 F1F	1	1	—	—	—	—
	H1T	D	8016 F1T	1	1	—	—	—	—
	H1X	D	8016 F1X	1	1	—	—	—	—
	H1Y	D	8016 F1Y	1	1	—	—	—	—
	H3B	D	8013 F3B	—	—	—	1	—	—
	H3F	D	8013 F3F	—	—	—	1	—	—
	H3X	D	8013 F3X	—	—	—	1	—	—
	H7B	D	8018 F7B	2	2	—	—	—	—
	H7F	D	8018 F7F	2	2	—	—	—	—
	H7X	D	8018 F7X	2	2	—	—	—	—
	H8F	D	8020 F8F	—	2	2	—	—	—
	H8K	D	8020 F8K	—	2	—	—	—	—
	H8T	D	8020 F8T	—	—	2	—	—	—
	H8X	D	8020 F8X	—	2	2	—	—	—
	H6K	D	8025 FK4	—	—	—	1	—	—
	D6X	D	8036 FX9	—	—	—	1	—	—
	D6XW	D	8036 FW1	—	—	—	1	—	—
	L3B	C	8000 F3B	1	1	—	1	—	—
	L3F	C	8000 F3F	1	1	—	1	—	—
	L3P	C	8000 F3P	1	1	—	1	—	—
	L3X	C	8000 F3X	1	1	—	1	—	—
	L3Y	C	8000 F3Y	1	1	—	1	—	—
	L4B, M4B, P4B	C	8028 FB3	1	1	1	—	—	—
	P4F	C	8028 FF8	—	—	1	—	—	—
	L4R, M4R, P4R	C	8028 FR9	1	1	1	—	—	—
	P4T	C	8028 FT5	—	—	1	—	—	—
	L4X, M4X, P4X	C	8028 FX9	1	1	1	—	—	—
	M3F	C	8005 F3F	—	1	—	1	—	—
	M3X	C	8005 F3X	—	1	—	1	—	—
	M3Y	C	8005 F3Y	—	1	—	1	—	—
	M6B	C	8025 FB3	—	—	—	—	—	1
	M6F	C	8025 FF8	—	1	—	1	—	1
	M5L	C	8025 FL2	—	1	—	1	—	—
	E6T, M6T	C	8025 FT5	—	1	—	1	—	1
	E6X, M6X, H6X	C,D	8025 FX9	—	1	—	1	—	1
	E6XW, M6XW	C	8025 FW1	—	1	—	1	—	1
	M7F, W7F	P,D	8008 FF8	2	2	2	—	—	—
	M8XA, W8XA	P,D	8008 FA8	2	2	2	—	—	—
	P7L, L7L	C	8007 F7L	2	2	2	—	—	—
	L7R	C	8007 F7R	2	2	—	—	—	—
	HST	C	8004 FST	2	2	—	—	—	—
	H1B	C	8023 F1B	1	1	—	—	—	—
	H1F	C	8023 F1F	1	1	—	—	—	—

NOTE: A letter code in the carline column indicates the carline for which the part is released as follows:

CARLINES Indicate: J - Challenger, B - Barracuda, V - Valiant, L - Dart, R - Belvedere, W - Coronet, P - Plymouth, D - Dodge, C - Chrysler, Y - Imperial

AR Indicates use as required.
★ Indicates change or addition.

Right and left part numbers are on same line, first number is right, second number is left.

Printed in U.S.A.
December 1970

CODE	PART NAME	CAR LINE	PART NUMBER	Sed.	4 D.H.T.	Sta. Wgn.	2 D.H.T.	Sp. 2 D.H.T.	Conv.
23-76-34	COVER Cont'd.								
	H1P	C	8023 F1P	1	1	—	—	—	—
	H1X	C	8023 F1X	1	1	—	—	—	—
	H1Y	C	8023 F1Y	1	1	—	—	—	—
	H3B	C	8009 F3B	—	—	—	1	—	—
	H3F	C	8009 F3F	—	—	—	1	—	—
	H3P	C	8009 F3P	—	—	—	1	—	—
	H3X	C	8009 F3X	—	—	—	1	—	—
	H3Y	C	8009 F3Y	—	—	—	1	—	—
	H6B	C	8011 FB7	—	—	—	1	—	—
	H6T	C	8011 FT5	—	—	—	1	—	—
	H6X	C	8011 FX9	—	—	—	1	—	—
	H6XW	C	8011 FW1	—	—	—	1	—	—
	P8F	C	8027 FF8	—	—	2	—	—	—
	L8X, P8X	C	8027 FX9	2	2	2	—	—	—
	H7B	C	8022 F7B	2	2	—	—	—	—
	H7L	C	8022 F7L	2	2	—	—	—	—
	H7R	C	8022 F7R	2	2	—	—	—	—
	H7F	C	8022 F7F	2	2	—	—	—	—
	H8L	C	8030 FL2	2	2	—	—	—	—
	H8X	C	8030 FX9	2	2	—	—	—	—
	L1B	Y	7549 F1B	—	1	—	—	—	—
	L1F	Y	7549 F1F	—	1	—	—	—	—
	L1M	Y	7549 F1M	—	1	—	—	—	—
	L1P	Y	7549 F1P	—	1	—	—	—	—
	L1TT	Y	7549 F1T	—	1	—	—	—	—
	L1X	Y	7549 F1X	—	1	—	—	—	—
	L3B	Y	7570 F3B	—	—	—	1	—	—
	L3F	Y	7570 F3F	—	—	—	1	—	—
	L3TT	Y	7570 F3T	—	—	—	1	—	—
	L3X	Y	7570 F3X	—	—	—	1	—	—
	MDA	Y	7572 FDA	—	2	—	—	—	—
	MDB	Y	7572 FDB	—	2	—	—	—	—
	MDF	Y	7572 FDF	—	2	—	—	—	—
	MDM	Y	7572 FDM	—	2	—	—	—	—
	MDP	Y	7572 FDP	—	2	—	—	—	—
	MDTT	Y	7572 FDT	—	2	—	—	—	—
	MDX	Y	7572 FDX	—	2	—	—	—	—
	MDY	Y	7572 FDY	—	2	—	—	—	—
	MSB	Y	7484-5 FSB	—	1	—	—	—	—
	MSF	Y	7484-5 FSF	—	1	—	—	—	—
	MSR	Y	7484-5 FSR	—	1	—	—	—	—
	MST	Y	7484-5 FST	—	1	—	—	—	—
	MSX	Y	7484-5 FSX	—	1	—	—	—	—
	MSXW	Y	7484-5 FSW	—	1	—	—	—	—
	MSY	Y	7484-5 FSY	—	1	—	—	—	—
	MRB	Y	7543 FRB	—	—	—	1	—	—
	MRF	Y	7543 FRF	—	—	—	1	—	—
	MRT	Y	7543 FRT	—	—	—	1	—	—
	MRX	Y	7543 FRX	—	—	—	1	—	—
	MRXW	Y	7543 FRW	—	—	—	1	—	—
	MRY	Y	7543 FRY	—	—	—	1	—	—
	MBB	Y	7502 FBB	—	—	—	1	—	—
	MBF	Y	7502 FBF	—	—	—	1	—	—
	MBP	Y	7502 FBP	—	—	—	1	—	—
	MBTT	Y	7502 FBT	—	—	—	1	—	—
	MBX	Y	7502 FBX	—	—	—	1	—	—
	MBY	Y	7502 FBY	—	—	—	1	—	—

NOTE: A letter code in the carline column indicates the carline for which the part is released as follows:

CARLINES Indicate: J - Challenger, B - Barracuda, V - Valiant, L - Dart, R - Belvedere, W - Coronet, P - Plymouth, D - Dodge, C - Chrysler, Y - Imperial

AR Indicates use as required.
★ Indicates change or addition.

Right and left part numbers are on same line, first number is right, second number is left.

Printed in U.S.A.
December 1970

CODE	PART NAME	CAR LINE	PART NUMBER	Sed.	4 D.H.T.	Sta. Wgn.	2 D.H.T.	Sp. 2 D.H.T.	Conv.
23-76-35	COVER, Front Seat Center Arm Rest Finish	V	2762 EX9	1	—	—	—	1	—
		B,J	2776 FX9	—	—	—	1	—	—
		R,W	2761 EX9	1	—	1	1	1	1
	BUCKET SEATS	R,W	2760 EX9	1	—	1	1	—	1
		P,D,C,Y	2761 EX9	—	1	—	1	1	1
	BUCKET SEATS	P,D,C,Y	2760 EX9	1	1	1	1	1	1
	TRIM PANEL								
	50/50 SEAT	Y	2609 018	—	1	—	—	—	—
23-76-40	ARM REST, Rear Seat Back Center								
	CODES								
	H1B, H7B	C	7055 F1B	1	1	—	—	—	—
	H1F, H7F	C	7055 F1F	1	1	—	—	—	—
	H7L	C	7055 F1L	1	1	—	—	—	—
	H1P	C	7055 F1P	1	1	—	—	—	—
	H1X	C	7055 F1X	1	1	—	—	—	—
	H1Y	C	7055 F1Y	1	1	—	—	—	—
	H7R	C	7055 F1R	1	1	—	—	—	—
	H8L	C	7060 F8L	1	1	—	—	—	—
	H8X	C	7060 F8X	1	1	—	—	—	—
	HST	C	7056 FST	1	1	—	—	—	—
	L1B	Y	7015 F1B	—	1	—	—	—	—
	L1F	Y	7015 F1F	—	1	—	—	—	—
	L1M	Y	7015 F1M	—	1	—	—	—	—
	L1P	Y	7015 F1P	—	1	—	—	—	—
	L1TT	Y	7015 F1T	—	1	—	—	—	—
	L1X	Y	7015 F1X	—	1	—	—	—	—
	MSB	Y	6926 FSB	—	1	—	—	—	—
	MSF	Y	6926 FSF	—	1	—	—	—	—
	MSR	Y	6926 FSR	—	1	—	—	—	—
	MST	Y	6926 FST	—	1	—	—	—	—
	MSX	Y	6926 FSX	—	1	—	—	—	—
	MSXW	Y	6926 FSW	—	1	—	—	—	—
	MSY	Y	6926 FSY	—	1	—	—	—	—
	MBB	Y	6937 FBB	—	—	—	1	—	—
	MBF	Y	6937 FBF	—	—	—	1	—	—
	MBP	Y	6937 FBP	—	—	—	1	—	—
	MBTT	Y	6937 FBT	—	—	—	1	—	—
	MBX	Y	6937 FBX	—	—	—	1	—	—
	MBY	Y	6937 FBY	—	—	—	1	—	—
	MDA	Y	7082 FDA	—	1	—	—	—	—
	MDB	Y	7082 FDB	—	1	—	—	—	—
	MDF	Y	7082 FDF	—	1	—	—	—	—
	MDM	Y	7082 FDM	—	1	—	—	—	—
	MDP	Y	7082 FDP	—	1	—	—	—	—
	MDTT	Y	7082 FDT	—	1	—	—	—	—
	MDX	Y	7082 FDX	—	1	—	—	—	—
	MDY	Y	7082 FDY	—	1	—	—	—	—
	MRB	Y	7044 FRB	—	—	—	1	—	—
	MRF	Y	7044 FRF	—	—	—	1	—	—
	MRT	Y	7044 FRT	—	—	—	1	—	—
	MRX	Y	7044 FRX	—	—	—	1	—	—
	MRXW	Y	7044 FRW	—	—	—	1	—	—
	MRY	Y	7044 FRY	—	—	—	1	—	—
23-76-45	COVER, Rear Seat Back Center Arm Rest								
	CODES								
	H1B, H7B	C	8365 F1B	1	1	—	—	—	—
	H1F, H7F	C	8365 F1F	1	1	—	—	—	—
	H1P	C	8365 F1P	1	1	—	—	—	—
	H1X	C	8365 F1X	1	1	—	—	—	—

NOTE: A letter code in the carline column indicates the carline for which the part is released as follows:

CARLINES Indicate: J - Challenger, B - Barracuda, V - Valiant, L - Dart, R - Belvedere, W - Coronet, P - Plymouth, D - Dodge, C - Chrysler, Y - Imperial

AR Indicates use as required.
★ Indicates change or addition.

Right and left part numbers are on same line, first number is right, second number is left.

Printed in U.S.A.
December 1970

CODE	PART NAME	CAR LINE	PART NUMBER	Sed.	4 D.H.T.	Sta. Wgn.	2 D.H.T.	Sp. 2 D.H.T.	Conv.
23-76-45	COVER Cont'd.								
	H1Y	C	8365 F1Y	1	1	—	—	—	—
	H7L	C	8365 F1L	1	1	—	—	—	—
	H7R	C	8365 F1R	1	1	—	—	—	—
	H8L	C	8366 F8L	1	1	—	—	—	—
	H8X	C	8366 F8X	1	1	—	—	—	—
	HST	C	8302 FST	1	1	—	—	—	—
	L1B	Y	8343 F1B	—	1	—	—	—	—
	L1F	Y	8343 F1F	—	1	—	—	—	—
	L1M	Y	8343 F1M	—	1	—	—	—	—
	L1P	Y	8343 F1P	—	1	—	—	—	—
	L1TT	Y	8343 F1T	—	1	—	—	—	—
	L1X	Y	8343 F1X	—	1	—	—	—	—
	MDA	Y	8370 FDA	—	1	—	—	—	—
	MDB	Y	8370 FDB	—	1	—	—	—	—
	MDF	Y	8370 FDF	—	1	—	—	—	—
	MDM	Y	8370 FDM	—	1	—	—	—	—
	MDP	Y	8370 FDP	—	1	—	—	—	—
	MDTT	Y	8370 FDT	—	1	—	—	—	—
	MDX	Y	8370 FDX	—	1	—	—	—	—
	MDY	Y	8370 FDY	—	1	—	—	—	—
	MSB	Y	8273 FSB	—	1	—	—	—	—
	MSF	Y	8273 FSF	—	1	—	—	—	—
	MSR	Y	8273 FSR	—	1	—	—	—	—
	MST	Y	8273 FST	—	1	—	—	—	—
	MSX	Y	8273 FSX	—	1	—	—	—	—
	MSXW	Y	8273 FSW	—	1	—	—	—	—
	MSY	Y	8273 FSY	—	1	—	—	—	—
	MRB	Y	8362 FRB	—	—	—	1	—	—
	MRF	Y	8362 FRF	—	—	—	1	—	—
	MRT	Y	8362 FRT	—	—	—	1	—	—
	MRX	Y	8362 FRX	—	—	—	1	—	—
	MRXW	Y	8362 FRW	—	—	—	1	—	—
	MRY	Y	8362 FRY	—	—	—	1	—	—
	MBB	Y	8299 FBB	—	—	—	1	—	—
	MBF	Y	8299 FBF	—	—	—	1	—	—
	MBP	Y	8299 FBP	—	—	—	1	—	—
	MBTT	Y	8299 FBT	—	—	—	1	—	—
	MBX	Y	8299 FBX	—	—	—	1	—	—
	MBY	Y	8299 FBY	—	—	—	1	—	—
23-76-53	FLAP, Rear Seat Back Center Arm Rest								
	CODES								
	H1B, H7B	C	8359 FB7	1	1	—	—	—	—
	H1F, H7F	C	8359 FF8	1	1	—	—	—	—
	H7L	C	8359 FL2	1	1	—	—	—	—
	H1P	C	8359 FP6	1	1	—	—	—	—
	H1X	C	8359 FX9	1	1	—	—	—	—
	H1Y	C	8359 FY4	1	1	—	—	—	—
	H7R	C	8359 FR9	1	1	—	—	—	—
	H8L	C	8367 FL2	—	1	—	—	—	—
	HST	C	8272 FT5	1	1	—	—	—	—
	H8X	C	8367 FX9	—	1	—	—	—	—
	L1B	Y	8342 FB7	—	1	—	—	—	—
	L1F	Y	8342 FF4	—	1	—	—	—	—
	L1M	Y	8342 FM9	—	1	—	—	—	—
	L1P	Y	8342 FP6	—	1	—	—	—	—
	L1TT	Y	8342 FT2	—	1	—	—	—	—
	L1X	Y	8342 FX9	—	1	—	—	—	—
	MSB	Y	8272 FB3	—	1	—	—	—	—

NOTE: A letter code in the carline column indicates the carline for which the part is released as follows:

CARLINES Indicate: J - Challenger, B - Barracuda, V - Valiant, L - Dart, R - Belvedere, W - Coronet, P - Plymouth, D - Dodge, C - Chrysler, Y - Imperial

AR Indicates use as required.
★ Indicates change or addition.

Right and left part numbers are on same line, first number is right, second number is left.

Printed in U.S.A.
December 1970

CODE	PART NAME	CAR LINE	PART NUMBER	Sed.	4 D.H.T.	Sta. Wgn.	2 D.H.T.	Sp. 2 D.H.T.	Conv.
23-76-53	FLAP Cont'd.								
	MSF, MDF	Y	8272 FF8	—	1	—	—	—	—
	MSR	Y	8272 FR9	—	1	—	—	—	—
	MST	Y	8272 FT5	—	1	—	—	—	—
	MSX, MDX	Y	8272 FX9	—	1	—	—	—	—
	MSXW	Y	8272 FW1	—	1	—	—	—	—
	MSY, MDY	Y	8272 FXY	—	1	—	—	—	—
	MDA	Y	8369 FA5	—	1	—	—	—	—
	MDB	Y	8369 FB7	—	1	—	—	—	—
	MDF	Y	8369 FF8	—	1	—	—	—	—
	MDM	Y	8369 FM9	—	1	—	—	—	—
	MDP	Y	8369 FP6	—	1	—	—	—	—
	MDTT	Y	8369 FT2	—	1	—	—	—	—
	MDY	Y	8369 FY4	—	1	—	—	—	—
	MDX	Y	8369 FX9	—	1	—	—	—	—
	MBB	Y	8297 FB7	—	—	—	1	—	—
	MRB	Y	8297 FB3	—	—	—	1	—	—
	MRF, MBF	Y	8297 FF8	—	—	—	1	—	—
	MRT	Y	8297 FT5	—	—	—	1	—	—
	MBP	Y	8297 FP6	—	—	—	1	—	—
	MRX, MBX	Y	8297 FX9	—	—	—	1	—	—
	MBTT	Y	8297 FT9	—	—	—	1	—	—
	MRXW	Y	8297 FW1	—	—	—	1	—	—
	MRY	Y	8297 FY4	—	—	—	1	—	—
23-76-62	CUP, Door Arm Rest Pull								
	CODES								
	H4B, H6B, P6B, H5B	B	1258-9 FB6	—	—	—	1	1	1
	H4F, H6F, P6F	B	1258-9 FF7	—	—	—	1	1	1
	P6YX	B	1258-9 FY5	—	—	—	1	—	1
	H6E, P6E	B	1258-9 FE5	—	—	—	1	—	1
	P5K, P6K	B	1258-9 FK6	—	—	—	1	—	1
	H6T, P6T, PRT	B	1258-9 FT4	—	—	—	1	—	1
	H4BW, H4FW, H4XW, H6BW, H6EW, H6FW, H6XW, P6BW, P6EW, P6FW, P6XW, PRXW	B	1258-9 FW1	—	—	—	1	—	1
	H4X, H6X, PRX, P6A	B	1258-9 FX9	—	—	—	1	—	1
	H4B, H5B, H6B	J	1258-9 FB6	—	—	—	1	1	—
	H5F, H6F	J	1258-9 FF7	—	—	—	1	1	—
	H6T, HRT	J	1256-7 FT4	—	—	—	1	1	1
	H6E	J	1256-7 FE5	—	—	—	1	—	1
	H6K, HRK	J	1256-7 FK6	—	—	—	1	1	1
	H4X, H5X, H6X, HRX	J	1256-7 FX9	—	—	—	1	1	1
	H6XW	J	1256-7 FW1	—	—	—	1	—	1
	H4B, H5B, H6B	J	1256-7 FB6	—	—	—	1	1	1
	H5F, H6F	J	1256-7 FF7	—	—	—	1	1	1
23-76-63	PAD, Rear Door Arm Rest								
	CODES								
	w/ASH REC.								
	L1B, L4B	V	1216-7 FB7	1	—	—	—	—	—
	L2B w/Wood Grained Trim	V	1216-7 FB7	1	—	—	—	—	—
	L1F, L4F	V	1216-7 EF8	1	—	—	—	—	—
	L2F w/Wood Grained Trim	V	1216-7 EF8	1	—	—	—	—	—
	L4E, X1E, X2E, X3E, X4E	V,L	1216-7 FE5	1	—	—	—	—	—
	L4T, H2T	V,L	1216-7 FT4	1	—	—	—	—	—
	L6BW, L6EW, L6XW	V	1216-7 EW1	1	—	—	—	—	—
	L1X, L2X, L4X, L6X, H1X, H2X	V,L	1216-7 DX9	1	—	—	—	—	—
	L2B, H1B, H2B	V,L	1216-7 EB3	1	—	—	—	—	—
	L2F, H1F	V,L	1216-7 FF4	1	—	—	—	—	—
	w/o ASH REC.								
	L1B, L4B	V	1214 FB7	2	—	—	—	2	—

NOTE: A letter code in the carline column indicates the carline for which the part is released as follows:

CARLINES Indicate: J - Challenger, B - Barracuda, V - Valiant, L - Dart, R - Belvedere, W - Coronet, P - Plymouth, D - Dodge, C - Chrysler, Y - Imperial

AR Indicates use as required.
★ Indicates change or addition.

Right and left part numbers are on same line, first number is right, second number is left.

Printed in U.S.A. December 1970

CODE	PART NAME	CAR LINE	PART NUMBER	Sed.	4 D.H.T.	Sta. Wgn.	2 D.H.T.	Sp. 2 D.H.T.	Conv.
23-76-63	PAD Cont'd.								
	L2B w/Wood Grained Trim	V	1214 FB3	2	—	—	—	2	—
	L2B, D2B, H1B, H2B	V, L	1214 EB3	2	—	—	2	—	—
	L4E, X1E, X2E, X3E, X4E	V,L	1214 FE5	2	—	—	2	2	—
	L1F, L2F, L4F	V	1214 EF8	2	—	—	—	2	—
	L2F, D2F, H1F, H2F, H6F w/Wood Grained Trim	V,L	1214 FF4	2	—	—	2	—	—
	L4T, D2T, H2T, H6T	V,L	1214 FT4	2	—	—	2	2	—
	L6BW, L6EW, L6XW, H2XW	V,L	1214 EW1	2	—	—	2	2	—
	L1X, L2X, L4X, L6X, D2X, H1X, H2X, H6X	V,L	1214 DX9	2	—	—	2	2	—
	D2B, L1B, L2B	R,W	1276-7 EB3	1	—	1	—	—	—
	H1B, H2B, P3B, P4B, P6B	R,W	1276-7 EB7	1	—	1	—	—	—
	H1F, H2F, P3F, P4F	R,W	1276-7 EF8	1	—	1	—	—	—
	P3K	R,W	1276-7 FK5	1	—	—	—	—	—
	D2T, K1T, K2T, T2T, L2T, H2T, P4T, P6T	R,W	1276-7 FT4	1	—	1	—	—	—
	H2BW, H2FW, H2TW, P6BW, P6TW	R,W	1276-7 EW1	1	—	1	—	—	—
	K2X, T2X, L2X, H1X, H2X, P3X, P4X, P6X, P6XA	R,W	1276-7 DX9	1	—	1	—	—	—
	L1Y, H1Y, H2XY, P3Y	R,W	1276-7 FY4	1	—	1	—	—	—
	E2B, D1B, D2B, D4B, B2B, F1B, F2B, L1B, L2B, W1B, W4B, L4B, M1B, M4B, H1B, H4B, H7B, H3B, H6B, P3B, P4B, P6B, P7B	P,D	1276-7 EB3	1	1	1	—	—	—
	D1F, L1F, L2F, L4F	D	1276-7 FF4	1	1	1	—	—	—
	D2F, L1F, L2F, D4F, M1F, M4F, M7F, H3F, H4F, H6F, H7F	P	1276-7 EF8	1	1	1	—	—	—
	F1F, F2F, W1F, W4F, H1F, H4F, H7F, H8F	D	1276-7 EF8	1	1	1	—	—	—
	M4K, W4K, H8K, H4K, P4K	P,D	1276-7 FK5	—	1	—	—	—	—
	E2T, K1T, K2T, B2T, F2T, W4T, D2T, D4T, L1T, L2T, M4T, H1T, H4T, H8T, P4T, P8T	P,D	1276-7 FT4	1	1	1	—	—	—
	F2TW, W4TW, W4XW, L4XW, M4TW, M4XW	P,D	1276-7 EW1	—	—	1	1	—	—
	K1A, K2A, D1X, D2XA, D4XA, X1X, X2X, W1XA, W4XA, W8XA, F2XA, L1X, L2X, L4X, L2XA, M1XA, M4XA, M8XA, H1X, H4X, H7X, H8X, H3XA, H4XA, H6XA, H8XA, R2XA, R4XA	P,D	1276-7 DX9	1	1	1	—	—	—
	D1Y, F1Y, W1Y, L1Y, M1Y, H1Y, P3Y	P,D	1276-7 FY4	1	1	—	—	—	—
	W4XP, M4XP, H4XP, P4XP	P,D	1276-7 FP6	1	1	—	—	—	—
	P4B	C	1276-7 EB3	—	—	1	—	—	—
	P4F, P8F	C	1276-7 EF8	—	—	1	—	—	—
	P7L	C	1276-7 EL3	—	—	1	—	—	—
	P4R	C	1276-7 DR8	—	—	1	—	—	—
	P4T	C	1276-7 FT4	—	—	1	—	—	—
	P4X, P8X	C	1276-7 DX9	—	—	1	—	—	—
	E1B, E2B, L3B, L4B, M4B	C	1274-5 EB3	1	1	—	—	—	—
	H1B, H7B	C	1274-5 EB7	1	1	—	—	—	—
	E1F, L3F, M3F, M6F, H1F, H7F	C	1274-5 EF8	1	1	—	—	—	—
	E1L, L7L, M5L, H7L, H8L	C	1274-5 EL3	1	1	—	—	—	—
	E1P, L3P, H1P	C	1274-5 FP6	1	1	—	—	—	—
	L4R, L7R, M4R, H7R	C	1274-5 DR8	1	1	—	—	—	—
	E2T, M6T, HST	C	1274-5 FT4	1	1	—	—	—	—
	M6XW	C	1274-5 EW1	—	1	—	—	—	—
	E1X, E2X, L3X, L4X, L8X, M3X, M4X, M6X, H1X, H8X	C	1274-5 DX9	1	1	—	—	—	—
	E2Y, L3Y, M3Y, H1Y	C	1274-5 FY4	1	1	—	—	—	—

NOTE: A letter code in the carline column indicates the carline for which the part is released as follows:

CARLINES Indicate: J - Challenger, B - Barracuda, V - Valiant, L - Dart, R - Belvedere, W - Coronet, P - Plymouth, D - Dodge, C - Chrysler, Y - Imperial

AR Indicates use as required.
★ Indicates change or addition.

Right and left part numbers are on same line, first number is right, second number is left.

Printed in U.S.A.
December 1970

CODE	PART NAME	CAR LINE	PART NUMBER	Sed.	4 D.H.T.	Sta. Wgn.	2 D.H.T.	Sp. 2 D.H.T.	Conv.
23-76-66	ARM REST, Rear Quarter								
	CODES								
	E2B, L2B, W4B, M4B, M6B	P,D,C	1244-5 FB3	—	—	—	—	—	1
	L2F	D	1244-5 FF4	—	—	—	—	—	1
	W4F, M4F, M6F	P,D,C	1244-5 FF8	—	—	—	—	—	1
	E6XW, M6XW	C	1244-5 FW1	—	—	—	—	—	1
	L2X, L6X, E2X, E6X, W4XA, M4XA, M6X, M6XA	P,D,C	1244-5 FX9	—	—	—	—	—	1
	E6T, M6T	C	1244-5 FT4	—	—	—	—	—	1
	E2Y	C	1244-5 FY4	—	—	—	—	—	1
	PANEL	P,D,C,	2878 488-9	—	—	—	—	—	1
23-76-69	BEZEL, Rear Door A/Rest Compt. Opng.	Y	3509 020-1	—	1	—	—	—	—
23-76-76	PAD, Quarter Arm Rest								
	CODES								
	w/ASH REC.								
	L1B, D2B, L4B	V	1216-7 FB7	—	—	—	—	1	—
	L4E, X1E, X2E, X4E	V,L	1216-7 FE5	—	—	—	1	1	—
	L1F, D2F, L4F	V	1216-7 EF8	—	—	—	—	1	—
	D2T, L4T, H2T, H6T	V,L	1216-7 FT4	—	—	—	1	1	—
	L6BW, L6EW, L6XW, H2XW	V,L	1216-7 EW1	—	—	—	1	1	—
	L1X, D2X, L2X, L4X, L6X, H2X, H6X	V,L	1216-7 DX9	—	—	—	1	1	—
	L2B, D2B, H2B	L	1216-7 EB3	—	—	—	1	—	—
	D2F, H2F, H6F	L	1216-7 FF4	—	—	—	1	—	—
	w/ASH REC. 2 DOOR								
	L2B	W	1276-7 EB3	1	—	—	—	—	—
	H1B, H2B, P3B, P6B	R	1276-7 FB5	1	—	—	1	—	1
	H2B, D6B	W	1276-7 EB7	1	—	—	1	—	—
	M2B	R	1276-7 EB7	1	—	—	—	—	—
	C2B, C6B, CRB	W	1276-7 EB5	—	—	—	—	1	—
	D6F, H1F, H2F, P6F, C2F, C6F, CRF	R,W	1276-7 EF8	1	—	—	1	1	—
	D6K, H2K, P3K, P6K, C2K, C6K	R,W	1276-7 FK5	1	—	—	1	1	1
	K1T, K2T, D6T, H2T, P6T, L2T C2T, C6T, CRT	R,W	1276-7 FT4	1	—	—	1	1	—
	D6XW, H2BW, H2KW, H2XW, P6BW, P6KW, P6XW, C2XW, C6XW	R,W	1276-7 EW1	1	—	—	1	1	1
	D6X, M2X, H1X, H2X, L2X, P3X, P6XA, C2XA, C6XA, C5XA, CRXA	R,W	1276-7 DX9	1	—	—	1	1	1
	P6XY	R	1276-7 FY4	1	—	—	1	—	—
	E2B, D1B, W1B, W4B, W6B, F1B, L1B, L2B, M1B, M4B, M6B, L4B, H3B, H4B, H5B, P3B, P4B, P5B, P6B	P,D	1276-7 EB3	1	—	—	1	1	—
	F1F, W1F, W4F, W6F, L1F, M1F, M4F, M6F, H3F, H4F, H5F, H6F, P3F, P4F, P6F, P5F	P,D	1276-7 EF8	1	—	—	1	1	—
	W4K, M4K, H3K, H4K, H6K, P3K, P4K, P6K	P,D	1276-7 FK5	—	—	—	1	1	—
	W4XP, M4XP, H4XP, H6XP, P4XP	P,D	1276-7 FP6	—	—	—	1	1	—
	E2T, K1T, K2T, D6T, F2T, W4T, L2T, M4T, H4T, H6T, P4T, P6T, J6T	P,D	1276-7 FT4	1	—	—	1	1	—
	P6XW, W4XW, M4XW, L4XW, H4XW, H6XW, P4XW	P,D	1276-7 EW1	—	—	—	1	1	—
	D1X, D6X, D6XA, F1XA, F2XA, W1XA, W4XA, W6XA, L1X, L2X, L4X, L2XA, M1XA, M4XA, M6XA, H3X, H4X, H3XA, H4XA, H6XA, P3XA, P4XA, P6XA, J6XA	P,D	1276-7 DX9	—	—	—	1	1	—
	D1Y, F1Y, L1Y, H4Y	P,D	1276-7 FY4	1	—	—	1	—	—
	D1F, L1F, L2F, L4F	D	1276-7 FF4	—	—	—	1	—	—

NOTE: A letter code in the carline column indicates the carline for which the part is released as follows:

CARLINES Indicate: J - Challenger, B - Barracuda, V - Valiant, L - Dart, R - Belvedere, W - Coronet, P - Plymouth, D - Dodge, C - Chrysler, Y - Imperial

AR Indicates use as required.
★ Indicates change or addition.

Right and left part numbers are on same line, first number is right, second number is left.

Printed in U.S.A.
December 1970

CODE	PART NAME	CAR LINE	PART NUMBER	Sed.	4 D.H.T.	Sta. Wgn.	2 D.H.T.	Sp. 2 D.H.T.	Conv.
23-76-76	PAD Cont'd.								
	M4B, H6B, L2B, W4B, P6B, E2B	P,D,C	1244-5 FB3	—	—	—	—	—	1
	L2F, M6F	D	1244-5 FF4	—	—	—	—	—	1
	M4F, H6F, W4F, P6F, M6F	P,P,C	1244-5 FF8	—	—	—	—	—	1
	M4XW, H6XW, L2XW, M6XW, W4XW, P6XW, E6XW	P,D,C	1244-5 EW1	—	—	—	—	—	1
	E2X, E6X, L2X, M6X, M4XA, W4XA, H6XA, P6XA	P,D,C	1244-5 FX9	—	—	—	—	—	1
	E6T, M6T	C	1244-5 FT4	—	—	—	—	—	—
	E2Y	C	1244-5 FY4	—	—	—	—	—	1
	E1B, E2B, L3B, L4B, M4B	C	1276-7 EB3	—	—	—	1	—	—
	H3B, H6B	C	1276-7 EB7	—	—	—	1	—	—
	E1F, L3F, M3F, M6F, H3F	C	1276-7 EF8	—	—	—	1	—	—
	E1L, M5L	C	1276-7 EL3	—	—	—	1	—	—
	E1P, L3P, H3P	C	1276-7 FP6	—	—	—	1	—	—
	L4R, M4R	C	1276-7 DR8	—	—	—	1	—	—
	E2T, E6T, M6T, H6T, D2TY	C	1276-7 FT4	—	—	—	1	—	—
	E6XW, M6XW, H6XW	C	1276-7 EW1	—	—	—	1	—	—
	E1X, E2X, E6X, L3X, L4X, M3X, M4X, M6X, H3X, H6X	C	1276-7 DX9	—	—	—	1	—	—
	E2Y, L3Y, M3Y, H3Y	C	1276-7 FY4	—	—	—	1	—	—
	L3B, MBB	Y	1240 FB7	—	—	—	2	—	—
	L3M, MBM	Y	1240 EM9	—	—	—	2	—	—
	L3P, MBP	Y	1240 FP6	—	—	—	2	—	—
	L3TT, MBTT	Y	1240 FT2	—	—	—	2	—	—
	L3F	Y	1240 FF4	—	—	—	2	—	—
	MRB	Y	1240 EB3	—	—	—	2	—	—
	MRF, MBF	Y	1240 FF8	—	—	—	2	—	—
	MRT	Y	1240 FT4	—	—	—	2	—	—
	MRXW	Y	1240 EW1	—	—	—	2	—	—
	L3X, MRX, MBX	Y	1240 EX9	—	—	—	2	—	—
	MRY, MBY	Y	1240 FY4	—	—	—	2	—	—
23-76-79	BRACKET, Quarter Arm Rest to Quarter Inner Panel	P,D,C	2878 708-9	—	—	—	—	—	1
	SUPPORT, Quarter Inside Panel Arm Rest 2 DOOR	P,D,C,Y	2901 630-1	1	—	—	1	1	—
	BRACKET, Quarter Arm Rest to Quarter Panel	Y	2878 538	—	—	—	2	—	—
	BRACKET, Quarter Arm Rest to Floor	P,D,C	2878 492	—	—	—	—	—	2
23-77-3	STRAP, Assist CODES								
	K2T, T2T	R,W,P,D	4312 FT5	2	—	—	—	—	—
	T2X, K2A	R,W,P,D	4312 EX9	2	—	—	—	—	—
	MDA	Y	4107 FA5	—	2	—	—	—	—
	MSB	Y	4107 EB3	—	2	—	—	—	—
	MDB	Y	4107 FB7	—	2	—	—	—	—
	MDF, MSF	Y	4107 EF8	—	2	—	—	—	—
	MDM	Y	4107 EM9	—	2	—	—	—	—
	MDP	Y	4107 FP6	—	2	—	—	—	—
	MST	Y	4107 FT5	—	2	—	—	—	—
	MDTT	Y	4107 FT9	—	2	—	—	—	—
	MSXW	Y	4107 EW1	—	2	—	—	—	—
	MSR	Y	4107 FR9	—	2	—	—	—	—
	MDX, MSX	Y	4107 EX9	—	2	—	—	—	—
	MDY, MSY	Y	4107 FY4	—	2	—	—	—	—
23-77-5	SPACER, Center Pillar Assist Strap	P,D	2789 230	2	—	—	—	—	—

NOTE: A letter code in the carline column indicates the carline for which the part is released as follows:

CARLINES Indicate: J - Challenger, B - Barracuda, V - Valiant, L - Dart, R - Belvedere, W - Coronet, P - Plymouth, D - Dodge, C - Chrysler, Y - Imperial

AR Indicates use as required.

★ Indicates change or addition.

Right and left part numbers are on same line, first number is right, second number is left.

Printed in U.S.A.
December 1970

CODE	PART NAME	CAR LINE	PART NUMBER	Sed.	4 D.H.T.	Sta. Wgn.	2 D.H.T.	Sp. 2 D.H.T.	Conv.
23-77-7	BRACKET, Upper Quarter Trim Panel and Assist Strap Mounting Front	Y	2878 917	—	2	—	—	—	—
23-77-9	BRACKET w/PIVOT, Assist Strap Mounting	Y	2879 240-1	—	1	—	—	—	—
23-77-21	GRIP, Instrument Panel Assist								
	CODES								
	L1B, L3B, MDB, MBB, MSR, MRB	Y	4242 FB7	—	1	—	1	—	—
	L1F, L3F, MDF, MBF, MSF, MRF	Y	4242 FF8	—	1	—	1	—	—
	L1M, MDM	Y	4242 FM9	—	1	—	1	—	—
	L1P, MDP, MBP	Y	4242 FP6	—	1	—	1	—	—
	MSR	Y	4242 FR9	—	1	—	—	—	—
	MST, MRT	Y	4242 FT4	—	1	—	1	—	—
	L1TT, L3TT, MBTT	Y	4242 FT8	—	1	—	1	—	—
	L1X, L3X, MDA, MDX, MBX, MSX, MSXW, MRX, MRXW	Y	4242 FX9	—	1	—	1	—	—
	MDY, MBY, MSY, MRY	Y	4242 FY4	—	1	—	1	—	—
23-78-2	BUTTON, Tufting								
	CODES								
	FRONT BACK								
	P5K	B	4193 FK4	—	—	—	8	—	—
	P5X	B	4193 EX9	—	—	—	8	—	—
	PRT	B	4172 FT5	—	—	—	8	—	8
	PRXW	B	4172 FW1	—	—	—	8	—	8
	PRX	B	4172 FX9	—	—	—	8	—	8
	FRONT CUSHION								
	P5K	B	4193 FK4	—	—	—	6	—	—
	P5X	B	4193 EX9	—	—	—	6	—	—
	REAR BACK								
	P5K	B	4515 FK4	—	—	—	AR	—	—
	P5X, PRX	B	4515 EX9	—	—	—	AR	—	—
	PRT	B	4515 FT5	—	—	—	AR	—	AR
	PRXW	B	4515 FW1	—	—	—	AR	—	AR
	REAR CUSHION								
	P5K	B	4515 FK4	—	—	—	AR	—	—
	P5X, PRX	B	4515 FX9	—	—	—	AR	—	—
	PRT	B	4515 FT5	—	—	—	AR	—	AR
	PRW	B	4515 FW1	—	—	—	AR	—	AR
	FRT. and RR. BACK								
	P3B, P4B	P	4820 FB3	—	20	—	20	20	—
	P3F	P	4820 FF8	—	20	—	20	20	—
	P3K, P4K	P	4820 FK4	—	20	—	20	20	—
	PRT	P	4820 FT5	—	20	20	20	—	—
	P3XA, P4XA, P5XA, P7XA	P	4820 FA8	—	20	—	20	20	—
	SEAT BACK								
	L2B	D	4517 FB7	AR	AR	AR	AR	—	AR
	L2F	D	4517 FF8	AR	AR	AR	AR	—	AR
	L2T	D	4517 FT5	AR	AR	AR	AR	—	—
	L2X	D	4517 FX9	AR	AR	AR	AR	—	AR
	L6X REAR BACK	D	4517 FX9	—	—	—	—	—	2
	L6X FRONT BACK	D	4514 FX9	—	—	—	—	—	2
	FRT. BACK AND FRT. CUSHION								
	H1B, H2B, H7B	D	4480 FB3	16	16	—	16	—	—
	H1F, H3F, H7F	D	4480 FF8	16	16	—	16	—	—
	H1T	D	4480 FT3	16	16	—	—	—	—
	H1Y	D	4480 FY4	16	16	—	—	—	—
	H1X, H3X, H7X	D	4480 FX9	16	16	—	16	—	—
	RR. BACK								
	H1B, H3B, H7B	D	4821 FB3	8	8	—	8	—	—

NOTE: A letter code in the carline column indicates the carline for which the part is released as follows:

CARLINES Indicate: J - Challenger, B - Barracuda, V - Valiant, L - Dart, R - Belvedere, W - Coronet, P - Plymouth, D - Dodge, C - Chrysler, Y - Imperial

AR Indicates use as required.
★ Indicates change or addition.

Right and left part numbers are on same line, first number is right, second number is left.

Printed in U.S.A.
December 1970

CODE	PART NAME	CAR LINE	PART NUMBER	Sed.	4 D.H.T.	Sta. Wgn.	2 D.H.T.	Sp. 2 D.H.T.	Conv.
23-78-2	BUTTON Cont'd.								
	H1F, H3F, H7F	D	4821 FF8	8	8	—	8	—	—
	H1T	D	4821 FT3	8	8	—	—	—	—
	H1Y	D	4821 FY4	8	8	—	—	—	—
	H1X, H3X, H7X	D	4821 FX9	8	8	—	8	—	—
	E1B	C	4480 FB3	AR	AR	—	AR	—	—
	E1F	C	4480 FF8	AR	AR	—	AR	—	—
	E1X	C	4480 FX9	AR	AR	—	AR	—	—
	E1L	C	4480 FL2	AR	AR	—	AR	—	—
	E1P	C	4480 FP6	AR	AR	—	AR	—	—
	E2B	C	4522 FB3	AR	AR	—	AR	—	AR
	E2T	C	4522 FT5	—	AR	—	AR	—	—
	E2X	C	4522 FX9	AR	AR	—	AR	—	AR
	E2Y	C	4522 FY4	AR	AR	—	AR	—	AR
	FRT. CUSHION								
	L3B	C	4809 FB3	4	4	—	4	—	—
	L3F	C	4809 FF8	4	4	—	4	—	—
	L3P	C	4809 FP6	4	4	—	4	—	—
	L3X	C	4809 FX9	4	4	—	4	—	—
	L3Y	C	4809 FY4	4	4	—	4	—	—
	FRT. BACK								
	L3B	C	4810 FB3	8	8	—	8	—	—
	L3F	C	4810 FF8	8	8	—	8	—	—
	L3P	C	4810 FP6	8	8	—	8	—	—
	L3X	C	4810 FX9	8	8	—	8	—	—
	L3Y	C	4810 FY4	8	8	—	8	—	—
	RR. BACK AND RR. CUSHION								
	L3B	C	4811 FB3	12	12	—	12	—	—
	L3F	C	4811 FF8	12	12	—	12	—	—
	L3P	C	4811 FP6	12	12	—	12	—	—
	L3X	C	4811 FX9	12	12	—	12	—	—
	L3Y	C	4811 FY4	12	12	—	12	—	—
	FRONT SEAT BACK								
	L4B, M4B, P4B	C	4812 EB3	AR	AR	AR	AR	—	—
	M3F, P4F, P8F	C	4812 FF8	—	AR	AR	AR	—	—
	P4T	C	4812 FT5	—	—	AR	—	—	—
	L4X, L8X, M4X, P4X, P8X	C	4812 EX9	AR	AR	—	—	—	—
	M3Y	C	4812 FY4	—	AR	—	AR	—	—
	L7L, P7L	C	4812 FL2	AR	AR	AR	—	—	—
	L4R, L7R, M4R, P4R	C	4812 FR9	AR	AR	AR	AR	—	—
	FRONT and REAR BACK								
	H1B, H3B, H7B	C	4193 EB9	AR	AR	—	AR	—	—
	H1F, H3F	C	4193 EF8	AR	AR	—	AR	—	—
	H7L, H8L	C	4193 FL2	AR	AR	—	—	—	—
	H1P, H3P	C	4193 FP6	AR	AR	—	AR	—	—
	H7R	C	4193 FR9	AR	AR	—	—	—	—
	H1X, H3X, H8X	C	4193 EX9	AR	AR	—	AR	—	—
	H1Y, H3Y	C	4193 FY4	AR	AR	—	AR	—	—
	M6B	C	4505 FB3	—	—	—	—	—	AR
	M6F	C	4505 FF8	—	AR	—	AR	—	AR
	M5L	C	4505 FL2	—	AR	—	AR	—	—
	E6T, M6T	C	4505 FT5	—	AR	—	AR	—	AR
	E6XW, M6XW	C	4505 FW1	—	AR	—	AR	—	AR
	E6X, M6X	C	4505 FX9	—	AR	—	AR	—	AR
	FRONT BACK								
	H6B	C	4808 FB7	—	—	—	2	—	—
	MDB	Y	4808 FB7	—	6	—	—	—	—
	MDM	Y	4808 FM9	—	6	—	—	—	—
	MDP	Y	4808 FP6	—	6	—	—	—	—

NOTE: A letter code in the carline column indicates the carline for which the part is released as follows:

CARLINES Indicate: J - Challenger, B - Barracuda, V - Valiant, L - Dart, R - Belvedere, W - Coronet, P - Plymouth, D - Dodge, C - Chrysler, Y - Imperial

AR Indicates use as required.
★ Indicates change or addition.

Right and left part numbers are on same line, first number is right, second number is left.

Printed in U.S.A.
December 1970

CODE	PART NAME	CAR LINE	PART NUMBER	Sed.	4 D.H.T.	Sta. Wgn.	2 D.H.T.	Sp. 2 D.H.T.	Conv.
23-78-2	BUTTON Cont'd.								
	MDT	Y	4808 FT2	—	6	—	—	—	—
	HST, H6T	C	4808 FT2	2	2	—	2	—	—
	MDY	Y	4808 FY4	—	6	—	—	—	—
	MDA	Y	4808 FA5	—	6	—	—	—	—
	MDF	Y	4808 FF8	—	6	—	—	—	—
	H6XW	C	4808 FW1	—	—	—	2	—	—
	MDX	Y	4808 FX9	—	6	—	—	—	—
	H6X	C	4808 FX9	—	—	—	2	—	—
	FRONT and REAR BACK								
	L1B, L3B	Y	2710 FB7	—	12	—	12	—	—
	L1F, L3F	Y	2710 FF4	—	12	—	12	—	—
	L1M, L3M	Y	2710 FM9	—	12	—	12	—	—
	L1P, L3P	Y	2710 FP6	—	12	—	12	—	—
	L1TT, L3TT	Y	2710 FT2	—	12	—	12	—	—
	L1X, L3X	Y	2710 FX9	—	12	—	12	—	—
	FRT. CUSH., FRT. BACK AND RR. BACK								
	MRB	Y	2738 FB3	—	—	—	AR	—	—
	MRF	Y	2738 FF8	—	—	—	AR	—	—
	MRT	Y	2738 FT5	—	—	—	AR	—	—
	MRX	Y	2738 FX9	—	—	—	AR	—	—
	MRXW	Y	2738 FW1	—	—	—	AR	—	—
	MRY	Y	2738 FY4	—	—	—	AR	—	—
	RR. CUSHION								
	MRB	Y	2739 FB3	—	—	—	4	—	—
	MRF	Y	2739 FF8	—	—	—	4	—	—
	MRT	Y	2739 FT5	—	—	—	4	—	—
	MRX	Y	2739 FX9	—	—	—	4	—	—
	MRXW	Y	2739 FW1	—	—	—	4	—	—
	MRY	Y	2739 FY4	—	—	—	4	—	—
23-78-3	RETAINER, Tufting Button								
	CUSHION AND BACK								
	E1, E2, H1, H3, H7, H8, PR, P5	B,D,C	2577 194	AR	AR	—	AR	—	AR
	BACK								
	L2	D	2887 261	AR	AR	AR	AR	—	AR
	L6	D	2887 043	—	—	—	—	—	AR
	H5, H7, H8, D6, P5, P7, P8, J6	P,D	2851 090	AR	AR	—	AR	AR	—
	L4, L8, M3, M4, P4, P7, P8	C	2943 009	AR	AR	AR	AR	—	—
	H6, HS	C	2981 989	4	4	—	4	—	—
	L1, L3, MD	Y	2981 977	—	6	—	6	—	—
	CUSHION AND BACK								
	E6, M5, M6	C	2981 090	—	AR	—	AR	—	AR
23-79-3	CARPET								
	FRONT FLOOR								
	CODES								
	L1B, L4B, L6BW, L2B, D2B, H1B, H2B	V,L	1678 EB9	1	—	—	—	1	—
	L4E, L6EW	V	1678 FE5	1	—	—	—	1	—
	L1F, L2F, L4F, D2F, H1F, H2F, H6F	V,L	1678 EF9	1	—	—	—	1	—
	L4T, D2T, H2T, H6T	V,L	1678 FT4	1	—	—	—	1	—
	L1X, L2X, L4X, L6X, L6XW, D2X, H1X, H2X, H2XW, H6X	V,L	1678 CX8	1	—	—	—	1	—
	w/CONSOLE, 4 on Floor	V,L	1679 CX8	1	—	—	—	1	—
	BENCH OR BUCKET SEATS								
	w/AUTO. TRANS.								
	H5B	J	1665 FB6	—	—	—	—	1	—
	H4B, H4BW, H6B, H6BW, P6B, P6BW	B	1665 FB6	—	—	—	1	—	1
	H6E, H6EW, P6E, P6EW	B,J	1665 FE5	—	—	—	1	—	1
	H4F, H4FW, H5F, H6F, H6FW, P6F, P6FW	B,J	1665 FF9	—	—	—	1	1	1
	H5K, H6K, HRK, P5K, P6K	B,J	1665 FK6	—	—	—	1	1	1

NOTE: A letter code in the carline column indicates the carline for which the part is released as follows:

CARLINES Indicate: J - Challenger, B - Barracuda, V - Valiant, L - Dart, R - Belvedere, W - Coronet, P - Plymouth, D - Dodge, C - Chrysler, Y - Imperial

AR Indicates use as required.
★ Indicates change or addition.

Right and left part numbers are on same line, first number is right, second number is left.

Printed in U.S.A.
December 1970

CODE	PART NAME	CAR LINE	PART NUMBER	Sed.	4 D.H.T.	Sta. Wgn.	2 D.H.T.	Sp. 2 D.H.T.	Conv.
23-79-3	CARPET Cont'd.								
	H6T, P6T, HRT	B,J	1665 FT4	—	—	—	1	1	1
	H4X, H4XW, H5X, H6X, H6XW, P5X, P6A, P6XW, P6YX, PRX, PRXW, HRX	B,J	1665 FX8	—	—	—	1	1	1
	BENCH OR BUCKET SEATS MANUAL TRANS. 3 or 4 on Floor								
	H4B, H4BW, H5B, H6B, H6BW, P6B, P6BW	B,J	1666 FB6	—	—	—	1	1	1
	H6E, H6EW, P6E, P6EW	B,J	1666 FE5	—	—	—	1	—	1
	H4F, H4FW, H5F, H6F, H6FW, P6F, P6FW	B,J	1666 FF9	—	—	—	1	1	1
	H5K, H6K, P5K, P6K, HRK	B,J	1666 FK6	—	—	—	1	1	1
	H6T, P6T, HRT, PRT	B,J	1666 FT4	—	—	—	1	1	1
	H4X, H4XW, H5X, H6X, H6XW, P5X, P6X, P6A, P6XW, P6YX, PRX, PRXW, HRX	B,J	1666 FX8	—	—	—	1	1	1
	CONSOLE w/AUTO. TRANS.								
	H5B, H6B, H6BW, P6B, P6BW	B,J	1667 FB6	—	—	—	1	—	1
	H6E, H6EW, P6E, P6EW	B,J	1667 FE5	—	—	—	1	—	1
	H5F, H6F, H6FW, P6F, P6FW	B,J	1667 FF9	—	—	—	1	1	1
	H5K, H6K, PSK, P6K, HRK	B,J	1667 FK6	—	—	—	1	1	1
	H6T, P6T, HRT, PRT	B,J	1667 FT4	—	—	—	1	1	1
	H5X, H6X, H6XW, P5X, P6X, P6A, PRX, PRXW, HRX, P6YX	B,J	1667 FX8	—	—	—	1	1	1
	BUCKET SEATS w/CONSOLE and 3 or 4 on Floor								
	H5B, H6B, H6BW, P6B, P6BW	B,J	1668 FB6	—	—	—	1	1	1
	H6E, H6EW, P6E, P6EW	B,J	1668 FE5	—	—	—	1	—	1
	H5F, H6F, H6FW, P6F, P6FW	B,J	1668 FF9	—	—	—	1	1	1
	H6T, P6T, PRT, HRT	B,J	1668 FT4	—	—	—	1	1	1
	H5X, H6X, H6XW, P5X, P6A, P6XW, P6YX, PRX, PRXW, HRX	B,J	1668 FX8	—	—	—	1	1	1
	H5K, H6K, HRK, P5K, P6K	B,J	1668 FK6	—	—	—	1	1	1
	W/3 SPEED OR 4 SPEED ON FLOOR MANUAL TRANS. on FLOOR	R,W	1782 CX8	1	—	—	1	1	1
	Blue	R,W	1686 EB9	1	—	1	1	1	1
	Green	R,W	1686 EF9	1	—	1	1	1	1
	Burnt Orange	R,W	1686 FK6	1	—	1	1	1	1
	Tan	R,W	1686 FT4	1	—	1	1	1	1
	Gold	R,W	1686 FY5	1	—	1	1	1	1
	Black	R,W	1686 BX8	1	—	1	1	1	1
	AUTOMATIC TRANS.								
	Blue	R,W	1685 EB9	1	—	1	1	1	1
	Green	R,W	1685 EF9	1	—	1	1	1	1
	Burnt Orange	R,W	1685 FK6	1	—	1	1	1	1
	Tan	R,W	1685 FT4	1	—	1	1	1	1
	Gold	R,W	1685 FY5	1	—	1	1	1	1
	Black	R,W	1685 BX8	1	—	1	1	1	1
	E1B, E2B, B2B, F1B, F2B, F2BW, W1B, W4B, W4BW, W6B, L1B, L2B, L2BW, L3B, M6B, L4B, M1B, M4B, M4BW, H4B, H5B, H6B, H7B, P3B, P4B, H1B, H3B, P5B, P6B, P7B,	P,D,C	1747 FB4	1	1	1	1	1	1
	H1B, H3B	C	1747 EB9	1	1	—	1	—	—
	E1F, E2F, B2F, F1F, F2F, W1F, H7F, W4F, W6F, L1F, L2F, L3F, M1F, M3F, M6F, H6F, M4F, H1F, H3F, H4F, P3F, P4F, P5F, P6F, P8F,	P, D, C	1747 EF9	1	1	1	1	1	1
	W1K, W4K, M1K, M4K, H4K, H6K, P3K, P4K, P6K, H3K	P, D	1747 FK6	—	1	—	1	1	—

NOTE: A letter code in the carline column indicates the carline for which the part is released as follows:

CARLINES Indicate: J - Challenger, B - Barracuda, V - Valiant, L - Dart, R - Belvedere, W - Coronet, P - Plymouth, D - Dodge, C - Chrysler, Y - Imperial

AR Indicates use as required.
★ Indicates change or addition.

Right and left part numbers are on same line, first number is right, second number is left.

Printed in U.S.A.
December 1970

CODE	PART NAME	CAR LINE	PART NUMBER	Sed.	4 D.H.T.	Sta. Wgn.	2 D.H.T.	Sp. 2 D.H.T.	Conv.
23-79-3	CARPET Cont'd.								
	E2T, E6T, B2T, K1T, K2T, F2T, F2TW, W4T, L2T, L2TW, M4T, M4TW, M6T, H1T, H4T, H4TW, H6T, HST, P4T, D2TY	P, D	1747 FT4	1	—	1	1	1	—
	E1X, E2X, F1XA, F2XA, F2XW, W1XA, W4XA, W4XP, W4XW, K1A, K2A, L1X, L1XA, L2X, L2XA, L2XW, M1X, M3X, M4X, M4XA, M4XW, M4XP, H1X, H3X, H4X, H8X, L3X, L4X, P3XA, P4X, P4XA	P,D,C	1747 EX8	1	1	1	1	1	1
	F1Y, W1Y, W4Y, E2Y, L1Y, L3Y, M1Y, M3Y, M4Y, H1Y, H4Y	P,D,C	1747 FY5	1	1	—	1	—	—
	E1L, L7L, M5L, H7L, H8L, P7L,	P,C	1747 FL5	1	1	—	1	—	—
	E1P, L3P, H1P, H3P	C	1747 FQ6	1	1	—	1	—	—
	L4R, L7R, M4R, H7R, P4R	C	1747 FR7	1	1	1	1	—	—
	MRB, MSB	Y	1735 FB4	—	1	—	1	—	—
	L1B, MDB	Y	1754 EB9	—	1	—	—	—	—
	L1F, MRF, MDF, MSF	Y	1754 EF9	—	1	—	1	—	—
	L1M, MDM	Y	1754 EM9	—	1	—	—	—	—
	L1P, MDP	Y	1754 EQ6	—	1	—	—	—	—
	MSR	Y	1735 FR7	—	1	—	—	—	—
	MRT, MST	Y	1735 FT4	—	1	—	1	—	—
	L1T, MDTT	Y	1754 FT7	—	1	—	—	—	—
	L1X, MRX, MRXW, MDA, MDX, MSX, MSXW	Y	1754 EX9	—	1	—	1	—	—
	MBY, MRY, MDY, MSY	Y	1735 FY5	—	1	—	1	—	—
	L3B, MBB	Y	1754 EB9	—	—	—	1	—	—
	L3F, MBF	Y	1754 EF9	—	—	—	1	—	—
	MBM, L3M	Y	1754 EM9	—	—	—	1	—	—
	L3P, MBP	Y	1754 EQ6	—	—	—	1	—	—
	L3TT, MBTT	Y	1754 FT7	—	—	—	1	—	—
	L3X, MBX	Y	1754 EX9	—	—	—	1	—	—
23-79-33	CARPET, REAR FLOOR AND REAR FLOOR WELL								
	CODES								
	L1B, L2B, L4B, L6BW, D2B	V	1681 EB9	1	—	—	—	1	—
	L4E, L6EW	V	1681 FE5	1	—	—	—	1	—
	L1F, L2F, L4F, D2F,	V	1681 EF9	1	—	—	—	1	—
	L4T	V	1681 FT4	1	—	—	—	1	—
	L1X, L2X, D2X, L4X, L6XW, L6X, L6BW, L6EW, w/o CONSOLE or w/CONSOLE	V	1681 CX8	1	—	—	—	1	—
	H5B, H6B, H4B	J	1669 FB6	—	—	—	1	1	1
	H6E	J	1669 FE5	—	—	—	1	—	1
	H5F, H6F	J	1669 FF9	—	—	—	1	1	1
	H5K, H6K, HRK	J	1669 FK6	—	—	—	1	1	1
	H6T, HRT	J	1669 FT4	—	—	—	1	1	1
	H5X, H6X, H6XW, HRX, H4X, L6X, L6XW BENCH OR BUCKET w/o CONSOLE	J	1669 FX8	—	—	—	1	1	1
	H4B, H4BW, H6B, H6BW, P6B, P6BW	B	1670 FB6	—	—	—	1	—	1
	H6E, H6EW, P6E, P6EW	B	1670 FE5	—	—	—	1	—	1

NOTE: A letter code in the carline column indicates the carline for which the part is released as follows:

CARLINES Indicate: J - Challenger, B - Barracuda, V - Valiant, L - Dart, R - Belvedere, W - Coronet, P - Plymouth, D - Dodge, C - Chrysler, Y - Imperial

AR Indicates use as required.
★ Indicates change or addition.

Right and left part numbers are on same line, first number is right, second number is left.

Printed in U.S.A.
December 1970

CODE	PART NAME	CAR LINE	PART NUMBER	Sed.	4 D.H.T.	Sta. Wgn.	2 D.H.T.	Sp. 2 D.H.T.	Conv.
23-79-33	CARPET, Rear Cont'd.								
	H4F, H4FW, H6F, H6FW, P6F, P6FW	B	1670 FF9	—	—	—	1	—	1
	P5K, P6K	B	1670 FK6	—	—	—	1	—	1
	H6T, P6T, PRT	B	1670 FT4	—	—	—	1	—	1
	H4X, H4XW, H6X, H6XW, P5X, P6A, P6XW, P6YX, PRX, PRXW	B	1670 FX8	—	—	—	1	—	1
	L2B, D2B, H1B, H2B	L	1682 EB9	1	—	—	1	—	—
	L2F, D2F, H2F, H6F	L	1682 EF9	1	—	—	1	—	—
	D2T, H2T, H6T	L	1682 FT4	1	—	—	1	—	—
	L2X, D2X, H2X, H6X	L	1682 CX8	1	—	—	1	—	—
	RR. FLR. WELL, 9 PASS.								
	H2B, P4B, P6B	R,W	1786 EB9	—	—	1	—	—	—
	H2F, H2FW, P3F, P4F	R,W	1786 EF9	—	—	1	—	—	—
	H2T, H2TW, P4T, P6T	R,W	1786 ET4	—	—	1	—	—	—
	H2X, H2XY, P3X, P4X, P6X, P6XA	R,W	1786 BX8	—	—	1	—	—	—
	Blue	R,W	1688 EB9	1	—	1	1	1	1
	Green	R,W	1688 EF9	1	—	1	1	1	1
	Burnt Orange	R,W	1688 FK6	1	—	1	1	1	1
	Tan	R,W	1688 FT4	1	—	1	1	1	1
	Black	R,W	1766 CX8	1	—	1	1	1	1
	Gold	R,W	1688 FY5	1	—	1	1	1	1
	CENTER FLOOR PAN COVER PANEL INSERT								
	D2B, L2B, H2B, P4B, P6B	R,W	1800 EB9	—	—	1	—	—	—
	H2F, H2FW, P3F, P4F	R,W	1800 EF9	—	—	1	—	—	—
	D2T, H2T, H2TW, L2T, P4T, P6T	R,W	1800 FT4	—	—	1	—	—	—
	L2X, H2X, H2XY, P3X, P4X, P6X, P6XA	R,W	1800 BX9	—	—	1	—	—	—
	REAR FLOOR PAN COVER PANEL INSERT (6 pass.)								
	D2B, H2B, L2B, P4B, P6B	R,W	1801 EB9	—	—	1	—	—	—
	H2F, H2FW, P3F, P4F	R,W	1801 EF9	—	—	1	—	—	—
	D2T, L2T, H2T, H2TW, P4T, P6T	R,W	1801 FT4	—	—	1	—	—	—
	L2X, H2X, H2XY, P3X, P4X, P6X, P6XA	R,W	1801 BX9	—	—	1	—	—	—
	BENCH SEAT								
	E2B, R2B, R4B, D2B, D4B, L2B, L2BW, B2B, F2B, F2BW, W4B, W4BW, M4B, M4BW, H4B, P4B	P,D,C	1706 FB4	—	—	1	—	—	—
	E2F, R2F, R4F, D2F, D4F, L2F, B2F, F2F, W4F, M4F, H4F, P4F	P, D,C	1706 EF9	—	—	1	—	—	—
	P4R	C	1706 FR7	—	—	1	—	—	—
	E2T, L2T, L2TW, R2T, R4T, D2T, D4T, B2T, F2T, F2TW, W4T, W4TW, M4T, M4TW, H4T, H4TW, P4T	P,D,C	1706 FT4	—	—	1	—	—	—
	L2XA, L2XW, L2X, F2XA, F2XW, R2XA, R4XA, D2XA, D4XA, W4XA, W4XW, M4XA, M4XW, H4X, P4X	P,D,C	1706 EX8	—	—	1	—	—	—
	P7L	C	1706 FL5	—	—	1	—	—	—
	BENCH SEAT 2 DOOR, 4 DOOR								
	E2B, L1B, M1B, M4B, H3B, H4B, P3B, P4B	P	1772 FB4	1	—	—	1	1	1
	L1F, M1F, M4F, H3F, H4F, P3F	P	1772 FF9	1	—	—	1	1	1
	E2T, K1T, K2T, L2T, M4T, H4T	P	1772 FT4	1	—	—	1	1	—
	L1XA, L2XA, M4XA, M4XW, M4XP, H3XA, H4XA, H4XP, H4XW, P3XA, P4XA	P	1772 FX8	1	—	—	1	1	1
	M1K, M4K, H3K, H4K, P3K, P4K	P	1772 FK6	1	—	—	1	1	—
	L1Y, M1Y, M4Y,	P	1772 FY5	1	—	—	1	1	—
	BENCH SEAT								
	M1B, M4B, H3B, H4B, P3B, P4B	P	1701 FB4	—	1	—	—	—	—
	M1F, M4F, H3F, H4F, P3F, P3F	P	1701 FF9	—	1	—	—	—	—
	M4K, H4K, P3K, P4K	P	1701 FK6	—	1	—	—	—	—
	M4T, H4T,	P	1701 FT4	—	1	—	—	—	—

NOTE: A letter code in the carline column indicates the carline for which the part is released as follows:

CARLINES Indicate: J - Challenger, B - Barracuda, V - Valiant, L - Dart, R - Belvedere, W - Coronet, P - Plymouth, D - Dodge, C - Chrysler, Y - Imperial

AR Indicates use as required.
★ Indicates change or addition.

Right and left part numbers are on same line, first number is right, second number is left.

Printed in U.S.A.
December 1970

CODE	PART NAME	CAR LINE	PART NUMBER	Sed.	4 D.H.T.	Sta. Wgn.	2 D.H.T.	Sp. 2 D.H.T.	Conv.
23-79-33	CARPET, Rear Cont'd.								
	M1XA, M4XP, M4XA, H3XA, H4XA, P3XA, P4XA,	P	1701 FX8	—	1	—	—	—	—
	M1Y, H3Y, M4Y	P	1701 FY5	—	1	—	—	—	—
	BUCKET SEATS w/CENTER CUSHION								
	H6B	P	1762 FB4	—	1	—	—	—	—
	H6F	P	1762 FF9	—	1	—	—	—	—
	H6XA	P	1762 FX8	—	1	—	—	—	—
	PRT	P	1762 FT4	—	1	—	—	—	—
	50-50 SEATS								
	H7B	P	1798 FB4	—	1	—	—	—	—
	H7F	P	1798 FF9	—	1	—	—	—	—
	H7T	P	1798 FT4	—	1	—	—	—	—
	H8XA, P7XA	P	1798 FX8	—	1	—	—	—	—
	BENCH SEATS								
	L1B, L2B, L4B, D1B, W1B, W4B, H1B, H7B, P6B, P7B	D	1705 FB4	—	1	—	—	—	—
	L1F, L2F, L4F, D1F, W1F, W4F, H1F, H7F, H8F	D	1705 FF9	1	1	—	—	—	—
	H7XA, H8X, W8XA, P8XA, P4X, P3X, P6XA	D	1705 FX8	—	1	—	—	—	—
	L1Y, D1Y, W1Y, P3Y, H1Y	D	1705 FY5	—	1	—	—	—	—
	H6B	P	1705 FB4	—	1	—	—	—	—
	H6F	P	1705 FF9	—	1	—	—	—	—
	H6XA	P	1705 FX8	—	1	—	—	—	—
	W4K, H8K	D	1705 FK6	—	1	—	—	—	—
	L2T, W4T, H1T	D	1705 FT4	—	1	—	—	—	—
	M8XA, P8XA	P	1798 FX8	—	1	—	—	—	—
	CTR. and RR. FLR. PAN CVR. PANEL INSERT VINOLEUM								
	E2B, D2B, D4B, B2B, R2B, R4B, F2B, F2BW, L2B, W4B, W4BW, M4B	P, D	1810 FB4	—	—	1	—	—	—
	E2F, D2F, D4F, L2F, R2F, R4F, B2F, F2F, W4F, L2F, W7F, M4F, M7F	P,D	1810 EF9	—	—	1	—	—	—
	E2T, D2T, D4T, B2T, R2T, R4T, F2T, F2TW, L2T, L2TW, W4T, W4TW, M4T, M4TW D2XA, D4XA, R2XA, R4XA	P, D	1810 FT4	—	—	1	—	—	—
	W4XA, W8XA, L2X, L2XA, L2XW, M4XW, W4XW, M4XA, M8XA	P,D	1810 EX9	—	—	1	—	—	—
	BENCH SEAT 4 DOOR								
	L1B, L2B, M6B, F1B, B2B, W1B, W4B, D1B, W6B, P6B, P7B								
	H3B, H4B, H7B, P3B, P4B, P5B	D	1716 FB4	1	—	—	1	—	1
	L1F, L2F, D1F, F1F, W1F, W4F, M6F, H6F, H7F, P3F, P4F, P5F, P6F, P7F, H3F, H4F		1716 FF9	1	—	—	1	—	1
	H4K, W1K, W4K, P3K, P4K,	D	1716 FK6	1	—	—	1	—	—
	L2T, F2T, W4T, P4T, P6T, P8T, J6T,	D	1716 FT4	1	—	—	1	—	—
	L1X, L2X, L2XW, F1XA, F2XA, W1XA, W4XA, W4XW, W4XP, P4XA, P4XW, P4XP, P8XA								
	H3X, H4X, H7X, H8X	D	1716 FX8	1	—	—	1	—	1
	L1Y, D1Y, F1Y, H4Y	D	1716 FY5	1	—	—	0	—	—
	W/O HOLES FOR SEAT BELTS								
	E1B, E2B, L3B, L4B, M4B	C	*1707 FB4	1	—	—	1	—	1
	H1B, H3B, H7B	C	*1707 EB9	1	—	—	1	—	—
	E1F, L3F, M3F, H1F, H3F, H7F8	C	*1707 EF9	1	—	—	1	—	—
	E1L, L7L, H7L	C	*1707 FL5	1	—	—	1	—	—
	E1P, L3P, H1P, H3P	C	*1707 FQ6	1	—	—	1	—	—
	L4R, L7R, M4R, H7R	C	*1707 FR7	1	—	—	1	—	—

NOTE: A letter code in the carline column indicates the carline for which the part is released as follows:

CARLINES Indicate: J - Challenger, B - Barracuda, V - Valiant, L - Dart, R - Belvedere, W - Coronet, P - Plymouth, D - Dodge, C - Chrysler, Y - Imperial

AR Indicates use as required.
★ Indicates change or addition.

Right and left part numbers are on same line, first number is right, second number is left.

Printed in U.S.A.
December 1970

CODE	PART NAME	CAR LINE	PART NUMBER	Sed.	4 D.H.T.	Sta. Wgn.	2 D.H.T.	Sp. 2 D.H.T.	Conv.
23-79-33	CARPET, Rear Cont'd.								
	E2T, HST	C	*1707 FT4	1	—	—	1	—	—
	E1X, E2X, L3X, L4X, L8X, M3X, M4X, H1X, H3X, H8X	C	*1707 EX8	1	—	—	1	—	1
	E2Y, L3Y, M3Y, H1Y, H3Y	C	*1707 FY5	1	—	—	1	—	1
	E1B, E2B, L3B, L4B, M4B, H1B	C	1717 FB4	—	1	—	—	—	—
	E1F, L3F, M3F, M6F, H1F, H7F	C	1717 FF9	—	1	—	—	—	—
	E1P, L3P, H1P	C	1717 FQ6	—	1	—	—	—	—
	E1L, M5L, H7L	C	1717 FL5	—	1	—	—	—	—
	E1X, E2X, L3X, L4X, M3X, M4X, M6X, M6XW, H1X	C	1717 FX8	—	1	—	—	—	—
	E2Y, L3Y, M3Y, H1Y	C	1717 FY5	—	1	—	—	—	—
	E2T, E6T, D2TY	C	1717 FT4	—	1	—	—	—	—
	H1B	C	1717 FB9	—	1	—	—	—	—
	L4R, M4R	C	1717 FR7	—	1	—	—	—	—
	BENCH SEAT W/HOLES FOR SEAT BELTS								
	E1B, E2B, L3B, L4B, M4B, H3B,	C	1738 FB4	—	—	—	1	—	1
	E1F, L3F, H3F	C	1738 FF9	—	—	—	1	—	—
	E1P, L3P, H3P	C	1738 FQ6	—	—	—	1	—	—
	E2T, D2TY	C	1738 FT4	—	—	—	1	—	—
	E1X, E2X, L3X, L4X, M3X, M4X, H3X, H4X								
	H8X	C	1738 FX8	—	—	—	1	—	1
	E2Y, L3Y, M3Y, H3Y	C	1738 FY5	—	—	—	1	—	1
	H3B	C	1738 FB9	—	—	—	1	—	—
	E1L	C	1738 FL5	—	—	—	1	—	—
	L4R, M4R	C	1738 FR7	—	—	—	1	—	—
	RR. FLR. WELL 9 PASS.								
	E2B, L2B, L2BW, B2B, F2B, F2BW, W4B, W4BW, M4B, M4BW, R2B, R4B, D2B, D4B, H4B, P4B	P, D, C	1700 FB4	—	—	1	—	—	—
	E2F, B2F, R2F, R4F, D2F, D4F, F2F, L2F, W4F, W7F, M4F, H4F, H8F, P7F, P8F	P,D,C	1700 EF9	—	—	1	—	—	—
	P7L	C	1700 FL5	—	—	1	—	—	—
	P4R	C	1700 FR7	—	—	1	—	—	—
	H4TW, H8T, P4T	P,D,C	1700 FT4	—	—	1	—	—	—
	L2X, L2XW, F2XA, F2XW, W4XA, W4XW, W8XA, R2XA, R4XA, D2XA, D4XA, P4X, P8X	P, D, C	1700 EX8	—	—	1	—	—	—
	CTR. and RR. FLR. PAN CVR. PNL. CARPET								
	E2B, L2B, L2BW, B2B, F2B, D2B, D4B, R2B, R4B, F2BW, W4B, W4BW, M4B, M4BW, H4B	P,D	1840 FB4	—	—	1	—	—	—
	E2F, L2F, B2F, D2F, D4F, R2F, R4F, F2F, M4F, M7F, H4F, H8F, W4F, W7F	P,D	1840 EF9	—	—	1	—	—	—
	E2T, L2T, L2TW, W4T, W4TW, F2T, F2TW, D2T, D4T, R2T, R4T, B2T, M4T, M4TW, H4T, H4TW, H8T	P,D	1840 FT4	—	—	1	—	—	—
	L2X, L2XA, L2XW, D2XA, D4XA, R2XA, R4XA, F2XA, F2XW, W4XA, W4XW, W8XA, M4XA, M4XW, H4X, H7X, H8X	P,D	1840 EX8	—	—	1	—	—	—
	Axle Kick-Up Frt. Pnl.	P,D,C	4320 EX9	—	—	1	—	—	—
	CTR. and RR. FLR. PAN CVR. PNL. CARPET and MLDG. INSERT								
	P4B	C	1813 FB4	—	—	1	—	—	—
	P4F, P8F	C	1813 EF9	—	—	1	—	—	—
	P7L	C	1813 FL5	—	—	1	—	—	—
	P4R	C	1813 FR7	—	—	1	—	—	—
	P4T	C	1813 FT4	—	—	1	—	—	—
	P4X, P8X	C	1813 EX9	—	—	1	—	—	—

NOTE: A letter code in the carline column indicates the carline for which the part is released as follows:

CARLINES Indicate: J - Challenger, B - Barracuda, V - Valiant, L - Dart, R - Belvedere, W - Coronet, P - Plymouth, D - Dodge, C - Chrysler, Y - Imperial

AR Indicates use as required.
★ Indicates change or addition.

Right and left part numbers are on same line, first number is right, second number is left.

Printed in U.S.A.
December 1970

CODE	PART NAME	CAR LINE	PART NUMBER	Sed.	4 D.H.T.	Sta. Wgn.	2 D.H.T.	Sp. 2 D.H.T.	Conv.
23-79-33	CARPET, Rear Cont'd.								
	REAR FLOOR WELL (6 pass.)	C	1725 EX8	—	—	1	—	—	—
	BENCH SEAT								
	L3B, MBB, MRB	Y	1785 EB9	—	—	—	1	—	—
	L3F, MBF, MRF	Y	1785 EF9	—	—	—	1	—	—
	MRT, L3M	Y	1785 FT4	—	—	—	1	—	—
	L3P, MBP	Y	1785 EQ6	—	—	—	1	—	—
	L3TT, MBTT	Y	1785 FT7	—	—	—	1	—	—
	L3X9, MRX, MBX9	Y	1785 EX9	—	—	—	1	—	—
	MBY, MRY	Y	1785 FY5	—	1	—	—	—	—
	50/50 SEAT								
	L1B, MDB	Y	1740 FB9	—	1	—	—	—	—
	MSB	Y	1740 FB4	—	1	—	—	—	—
	L1M, MDM	Y	1740 FM9	—	1	—	—	—	—
	L1F, MSF, MDF	Y	1740 FF9	—	1	—	—	—	—
	L1P, MDP	Y	1740 FQ6	—	1	—	—	—	—
	MSR	Y	1740 FR7	—	1	—	—	—	—
	L1TT, MDTT	Y	1740 FT7	—	1	—	—	—	—
	MST	Y	1740 FT4	—	1	—	—	—	—
	L1X, MDA, MDX, MSX, MSXW	Y	1740 FX9	—	1	—	—	—	—
	MDY, MSY	Y	1740 FY5	—	1	—	—	—	—
23-79-34	RETAINER, Rear Floor Well Carpet								
		B,J	3509 190	—	—	—	1	1	1
	Rear	R,W	2656 819	—	—	AR	—	—	—
		R,W	2657 922	—	—	1	—	—	—
	Side	P,D,C	2878 314-5	—	—	1	—	—	—
23-79-64	CARPET, Luggage Compartment Floor								
	CODES								
	Black	D	1744 FX9	1	1	—	1	—	—
	Black	Y	7669 EX9	—	1	—	1	—	—
	w/REAR SEAT HEATER	C	1783 EX9	1	1	—	1	—	—
	SPARE TIRE COVER								
	L2B, D2B, H2B, P4B, P6B	R,W	4323 EB7	—	—	1	—	—	—
	H2F, H2FW, P3F, P4F	R,W	4323 EF8	—	—	1	—	—	—
	L2T, D2T, H2T, H2TW, P4T, P6T	R,W	4323 FT4	—	—	1	—	—	—
	L2X, H2X, H2XY, P3X, P4X, P6X, P6XA	R,W	4323 DX9	—	—	1	—	—	—
	E2B, L2B, B2B, F2B, W4B, M4B, H4B, P4B, R2B, R4B	P,D,C	4152 FB3	—	—	1	—	—	—
	L2F, F2F, W4F, W7F, M4F, M7F, H4F, H8F, P4F	P,D,C	4152 EF8	—	—	1	—	—	—
	E2T, L2T, B2T, F2T, W4T, M4T, H4T, H8T, P4T, R2T, R4T	P,D,C	4152 FT4	—	—	1	—	—	—
	P7L	C	4152 EL3	—	—	1	—	—	—
	P4R	C	4152 FR8	—	—	1	—	—	—
	L2X, L2XA, F2XA, W4XA, W8XA M4XA, M8XA, H4X, H7X, H8X, P4X P8X, R2XA, R4XA	P,D,C	4152 EX9	—	—	1	—	—	—
	Rear Seat Heater Curtain	C,Y	7664 EX9	1	1	—	1	—	—
	SPARE TIRE COVER, Black	D,C,Y	4919 EX9	1	1	—	1	—	1
23-79-65	BRACKET, Spare Tire Cover Latching Frt.	P,D,C	2878 450	—	—	1	—	—	—
23-79-67	HANDLE, Spare Tire Cover	P,D,C	4183 AX9	—	—	1	—	—	—
23-79-68	GROMMET, Spare Tire Cover Latching	R,W,P,D,C	2656 731	—	—	4	—	—	—
23-79-79	CARPET, Tailgate Inside Panel								
	CODES								
	P4B	C	1834 FB4	—	—	1	—	—	—
	P4F, P8F	C	1834 EF9	—	—	1	—	—	—

NOTE: A letter code in the carline column indicates the carline for which the part is released as follows:

CARLINES Indicate: J - Challenger, B - Barracuda, V - Valiant, L - Dart, R - Belvedere, W - Coronet, P - Plymouth, D - Dodge, C - Chrysler, Y - Imperial

AR Indicates use as required.
★ Indicates change or addition.

Right and left part numbers are on same line, first number is right, second number is left.

Printed in U.S.A.
December 1970

CODE	PART NAME	CAR LINE	PART NUMBER	Sed.	4 D.H.T.	Sta. Wgn.	2 D.H.T.	Sp. 2 D.H.T.	Conv.
23-79-79	CARPET Cont'd.								
	P7L	C	1834 FL5	—	—	1	—	—	—
	P4R	C	1834 FR7	—	—	1	—	—	—
	P4T	C	1834 FT4	—	—	1	—	—	—
	P4X, P8X	C	1834 EX8	—	—	1	—	—	—
23-81-3	HANDLE, Door Pull								
	CODES								
	Rear Rt.	R,W,P,D	1697 413	1	—	—	—	—	—
	M4B, M6B	C	4704 FB3	—	4	—	4	—	4
	H1B, H3B, H6B, H7B	C	4704 FB7	4	4	—	4	—	—
	M3F, M6F, H1F, H3F	C	4704 FF8	4	4	—	4	—	4
	M6T, H6T, HST	C	4704 FT5	4	4	—	4	—	4
	M5L, H7L, H8L	C	4704 FL2	4	4	—	4	—	—
	M4R, H7R	C	4704 FR9	4	4	—	4	—	—
	H1P, H3P	C	4704 FP6	4	4	—	4	—	—
	M6XW, H6XW	C	4704 FW1	—	4	—	4	—	4
	M3X, M4X, M6X, H1X, H3X, H6X, H8X	C	4704 FX9	4	4	—	4	—	4
	L1B, L3B, MBB, MDB	Y	4705 FB7	4	4	—	4	—	—
	L1F, L3F	Y	4705 FF4	4	4	—	4	—	—
	L1M, MDM	Y	4705 FM9	4	4	—	4	—	—
	L1P, MBP, MDP	Y	4705 FP6	4	4	—	4	—	—
	L1TT, L3TT, MBTT, MDTT	Y	4705 FT2	4	4	—	4	—	—
	MRB, MSB	Y	4705 FB3	—	4	—	4	—	—
	MSR	Y	4705 FR9	—	4	—	—	—	—
	MRT, MST	Y	4705 FT5	—	4	—	4	—	—
	MRXW, MSXW	Y	4705 FW1	—	4	—	4	—	—
	MBY, MRY, MDY, MSY	Y	4705 FY4	—	4	—	4	—	—
	MBF, MRF, MDF, MSF	Y	4705 FF8	—	4	—	4	—	—
	L1X, L3X, MBX, MRX, MDX, MSX	Y	4705 FX9	4	4	—	4	—	—
	MDA	Y	4705 FA5	—	4	—	—	—	—
23-82-3	STRAP, Front Seat Back Robe								
	CODES								
	MSB	Y	2711 FB3	—	2	—	—	—	—
	MSF	Y	2711 FF8	—	2	—	—	—	—
	MSR	Y	2711 FR9	—	2	—	—	—	—
	MST	Y	2711 FT5	—	2	—	—	—	—
	MSXW	Y	2711 FW1	—	2	—	—	—	—
	MSX	Y	2711 FX9	—	2	—	—	—	—
	MSY	Y	2711 FY4	—	2	—	—	—	—
23-82-26	BRACKET, Front Seat Back Robe Strap Attaching	Y	*3447 264	—	2	—	—	—	—
23-82-30	COVER, Coat Hook Outer								
	CODES								
	L1B, L2B, L3B, L4B, L6B, D2B, D6B, M2B, MBB, MDB M6B, H1B, H2B, H2BW, H4B, H5B, H7B, H6B, P3B, P4B, P6B, P6BW, C2B, C6B, CRB	V, L, B, J, R, W, Y	4121 EB8	2	2	—	2	2	—
	E1B, E2B, B2B, F1B, F2B, W1B, D1B, D4B, D2B, W4B, L1B, L2B, L3B, L4B, M1B, M4B, M6B, H1B, H3B, H4B, H5B, H6B, H7B, P3B, P4B, P6B, P7B, MBB, MDB, MRB, MSB	P,D,C,Y	4121 EB2	2	2	2	2	2	—
	L4E, L6EW, H6E, P6E, X1E, X2E, X3E, X4E	V,B,J,L	4121 FE5	2	—	—	2	2	—

NOTE: A letter code in the carline column indicates the carline for which the part is released as follows:

CARLINES Indicate: J - Challenger, B - Barracuda, V - Valiant, L - Dart, R - Belvedere, W - Coronet, P - Plymouth, D - Dodge, C - Chrysler, Y - Imperial

AR Indicates use as required.
★ Indicates change or addition.

Right and left part numbers are on same line, first number is right, second number is left.

Printed in U.S.A.
December 1970

CODE	PART NAME	CAR LINE	PART NUMBER	Sed.	4 D.H.T.	Sta. Wgn.	2 D.H.T.	Sp. 2 D.H.T.	Conv.
23-82-30	COVER Cont'd.								
	E1F, E2F, D4F, L1F, L2F, D2F, D6F, B2F, F1F, F2F, L4F, W1F, W4F, W7F, M1F, M4F, M6F, M7F, H1F, H2F, H3F, H4F, H6F, H7F, H8F, P3F, P4F, P6F, P8F, C6F, CRF, C2F, MBF, MRF, MDF, MSF	V,B,J,L,R,W, P,D,C,Y	4121 EF7	2	2	2	2	2	—
	E2T, E6T, L2T, L4T, K1T, K2T, D2T, B2T, R2T, R4T, D6T, F2T, W2T, W6T, M2T, W4T, M4T, M6T, HST, H2T, H4T, H6T, H2TW, H8T, P4T, P6T, P6TW, HRT, PRT, C6T, CRT, C2T, MRT, MST	V,B,J,L,R,W, P,D,C,Y	4121 FT1	2	2	—	2	2	—
	L1TT, L3TT, MBTT, MDTT	Y	4121 ET1	—	2	—	2	—	—
	E1X, E2X, E6X, K2X,D2X, D6X, W1XA, W4XA, W4XP, W8XA, L1X, L1XA, L2X, L2XA, L3X, L4X, L6X, L6XW, L8X, F1XA, F2XA, M2X, M3X, M1XA, M4XA, M4XP, M6X, M8XA, H1X, H2X, H3X, H2XW, H4X, H5X, H6X, H8X, P3X, P4X, P5X, P6XA, P6XY, PRX, C5XA, C6XA, C2XA, CRXA, MBM, MBX, MRX, MDM, MDX, MSX	V,B,J,L,R,W, P,D,C,Y	4121 DX9	2	2	2	2	2	—
	2 DOOR								
	M6W, D6W, C2XW, C6XW, H2XW, H4BW, H4FW, H4XW, H6BW, H6EW, H6XW, P6BW, P6EW, P6FW, P6XW, PRXW	B,J,R,W	4121 EW1	2	—	—	2	—	—
		R,W	4121 EW1	—	—	2	—	—	—
	E6XW, L2XW, M4XW, M6XW, H6XW, P6XW	P,D,C	4121 EW1	—	2	—	2	2	—
	w/AIR COND.	P,D,C	4121 EW1	—	—	2	—	—	—
	MRXW, MSXW	Y	4121 EW1	—	2	—	2	—	—
	W4K, M1K, M4K, M6K, D6K, C2K, C6K, H2K, H2KW, H5K, H6K, H4K, H8K, HRK, P3K, P4K, P5K, P6K, P6KW	B,J,W,P,D	4121 FK6	2	2	—	2	2	—
	E2Y, D1Y, F1Y, D6XY, W1Y, W4Y, L1Y, M1Y, L3Y, M3Y, M4Y, M6XY, H1Y, H4Y, P3Y, P6YX, MBY, MRY, MDY, MSY	B,R,W,P,D,C,Y	4121 FY5	2	2	—	2	—	—
	K1A, K2A, MDA	D,Y	4121 EA2	2	2	—	—	—	—
	E1P, L1P, L3P, MBP, MDP, H1P	C,Y	4121 FP7	2	2	—	2	—	—
	E1L, L7L, M5L, H7L, H8L	C	4121 EL3	2	2	—	2	—	—
	L4R, L7R, M4R, H7R, P4R, MSR	C,Y	4121 FR7	2	2	2	2	—	—
	L1F, L3F	Y	4121 EF2	—	2	—	2	—	—
23-82-39	SUPPORT, Coat Hook Inner	V,L,B,J,R,W, P,D,C,Y	2876 976	2	2	2	2	2	—
23-84-3	PAD, Instrument Panel Trim								
	CODES								
	L1B, L2B, L4B, L6B, D2B, H1B, H2B	V,L	4239 EB7	1	—	—	1	1	—
	L4E, L6E, X1E, X2E, X3E, X4E,	V	4239 FE5	1	—	—	—	1	—
	L1F, L2F, L4F, L6F, D2F, H1F, H2F	V,L	4239 EF8	1	—	—	1	1	—
	L4T, D2T, H2T, H6T	V,L	4239 FT4	1	—	—	1	1	—
	L1X, L2X, L4X, L6X, D2X, H1X, H2X H6X, L6XW, H2XW	V,L	4239 EX9	1	—	—	1	1	—
	WITH AIR COND.								
	H4B, H4BW, H6BW, P6B, P6BW	B	4201 FB5	—	—	—	1	—	1

NOTE: A letter code in the carline column indicates the carline for which the part is released as follows:

CARLINES Indicate: J - Challenger, B - Barracuda, V - Valiant, L - Dart, R - Belvedere, W - Coronet, P - Plymouth, D - Dodge, C - Chrysler, Y - Imperial

AR Indicates use as required.
★ Indicates change or addition.

Right and left part numbers are on same line, first number is right, second number is left.

Printed in U.S.A.
December 1970

CODE	PART NAME	CAR LINE	PART NUMBER	Sed.	4 D.H.T.	Sta. Wgn.	2 D.H.T.	Sp. 2 D.H.T.	Conv.
23-84-3	PAD Cont'd.								
	H6E, H6EW, P6E, P6EW	B	4201 FE5	—	—	—	1	—	1
	H4F, H4FW, H6F, H6FW, P6F, P6FW	B	4201 FF8	—	—	—	1	—	1
	P5K, P6K	B	4201 FK5	—	—	—	1	—	1
	H6T, P6T, PRT	B	4201 FT4	—	—	—	1	—	1
	H4X, H4XW, H6X, H6XW, P5X, P6A, P6XW, P6YX, PRX, PRXW	B	4201 FX9	—	—	—	1	—	1
	H4B, H5B, H6B	J	4123 FB5	—	—	—	1	1	1
	H6E	J	4123 FE5	—	—	—	1	—	1
	H5F, H6F	J	4123 FF8	—	—	—	1	1	1
	H5K, H6K	J	4123 FK5	—	—	—	1	1	1
	H6T, HRT	J	4123 FT4	—	—	—	1	1	1
	H4X, H5X, H6X, H6XW, HRX	J	4123 FX9	—	—	—	1	1	1
	w/o AIR COND.								
	H4B, H4BW, H6BW, P6B, P6BW	B	4200 FB5	—	—	—	1	—	1
	H6E, H6EW, P6E, P6EW	B	4200 FE5	—	—	—	1	—	1
	H4F, H4FW, H6F, H6FW, P6F, P6FW	B	4200 FF8	—	—	—	1	—	1
	P5K, P6K	B	4200 FK5	—	—	—	1	—	1
	H6T, P6T, PRT	B	4200 FT4	—	—	—	1	—	1
	H4X, H4XW, H6X, H6XW, P5X, P6A, P6XW, P6YX, PRX, PRXW	B	4200 FX9	—	—	—	1	—	1
	H4B, H5B, H6B	J	4122 FB5	—	—	—	1	1	1
	H6E	J	4122 FE5	—	—	—	1	—	1
	H5F, H6F	J	4122 FF8	—	—	—	1	1	1
	H5K, H6K	J	4122 FK5	—	—	—	1	1	1
	H6T, HRT	J	4122 FT4	—	—	—	1	1	1
	H4X, H5X, H6X, H6XW, HRX	J	4122 FX9	—	—	—	1	1	1
	PLASTIC PANEL LOWER LT.								
	H4B, H4BW, H6B, H6BW, P6B, P6BW	B	4279 FB5	—	—	—	1	—	1
	H6E, H6EW, P6E, P6EW	B	4279 FE5	—	—	—	1	—	1
	H4F, H4FW, H6F, H6FW, P6F, P6FW	B	4279 FF8	—	—	—	1	—	1
	P5K, P6K	B	4279 FK5	—	—	—	1	—	1
	H6T, P6T, PRT	B	4279 FT4	—	—	—	1	—	1
	H4X, H4XW, H6X, H6XW, P5X, P6A, P6XW, P6YX, PRX, PRXW	B	4279 FX9	—	—	—	1	—	1
	PLASTIC PANEL LOWER CTR.								
	w/AM Radio and Stereo Player								
	H4B, H4BW, H6B, H6BW, P6B, P6BW	B	4281 FB5	—	—	—	1	—	1
	H6E, H6EW, P6E, P6EW	B	4281 FE5	—	—	—	1	—	1
	H4F, H4FW, H6F, H6FW, P6F, P6FW	B	4281 FF8	—	—	—	1	—	1
	P5K, P6K	B	4281 FK5	—	—	—	1	—	1
	H6T, P6T, PRT	B	4281 FT4	—	—	—	1	—	1
	H4X, H4XW, H6X, H6XW, P5X, P6A, P6XW, P6YX, PRX, PRXW	B	4281 FX9	—	—	—	1	—	1
	w/o AM Radio and Stereo Player								
	H4B, H4BW, H6B, H6BW, P6B, P6BW	B	4280 FB5	—	—	—	1	—	1
	H6E, H6EW, P6E, P6EW	B	4280 FE5	—	—	—	1	—	1
	H4F, H4FW, H6F, H6FW, P6F, P6FW	B	4280 FF8	—	—	—	1	—	1
	P5K, P6K	B	4280 FK5	—	—	—	1	—	1
	H6T, P6T, PRT	B	4280 FT4	—	—	—	1	—	1
	H4X, H4XW, H6X, H6XW, P5X, P6A, P6XW, P6YX, PRX, PRXW	B	4280 FX9	—	—	—	1	—	1
	PLASTIC PANEL LOWER LT.								
	H4B, H5B, H6B	J	4287 FB5	—	—	—	1	1	1
	H6E	J	4287 FE5	—	—	—	1	—	1
	H5F, H6F	J	4287 FF8	—	—	—	1	1	1
	H5K, H6K, HRK	J	4287 FK5	—	—	—	1	1	1

NOTE: A letter code in the carline column indicates the carline for which the part is released as follows:

CARLINES Indicate: J - Challenger, B - Barracuda, V - Valiant, L - Dart, R - Belvedere, W - Coronet, P - Plymouth, D - Dodge, C - Chrysler, Y - Imperial

AR Indicates use as required.
★ Indicates change or addition.

Right and left part numbers are on same line, first number is right, second number is left.

Printed in U.S.A.
December 1970

CODE	PART NAME	CAR LINE	PART NUMBER	Sed.	4 D.H.T.	Sta. Wgn.	2 D.H.T.	Sp. 2 D.H.T.	Conv.
23-84-3	PAD Cont'd.								
	H6T, HRT	J	4287 FT4	—	—	—	1	—	1
	H4X, H5X, H6X, HRX	J	4287 FX9	—	—	—	1	1	1
	PLASTIC PANEL LOWER CTR.								
	w/Stereo Player								
	H4B, H5B, H6B	J	4289 FB5	—	—	—	1	1	1
	H6E	J	4289 FE5	—	—	—	1	—	1
	H5F, H6F	J	4289 FF8	—	—	—	1	1	1
	H5K, H6K, HRK	J	4289 FK5	—	—	—	1	1	1
	H6T, HRT	J	4289 FT4	—	—	—	1	—	1
	H4X, H5X, H6X, HRX	J	4289 FX9	—	—	—	1	1	1
	w/o Stereo Player								
	H4B, H5B, H6B	J	4288 FB5	—	—	—	1	1	1
	H6E	J	4288 FE5	—	—	—	1	—	1
	H5F, H6F	J	4288 FF8	—	—	—	1	1	1
	H5K, H6K, HRK	J	4288 FK5	—	—	—	1	1	1
	H6T, HRT	J	4288 FT4	—	—	—	1	—	1
	H4X, H5X, H6X, HRX	J	4288 FX9	—	—	—	1	1	1
	L1B, L2B, D2B, D4B, M2B, M6B, H1B, H2B, C2B, P3B, P4B, P6B, H2BW, P6BW, D6B, CRB	R,W	4203 EB7	1	—	1	1	1	1
	H1F, H2F, H2FW, M6F, D4F, C2F, C6F, CRF, P3F, P4F, P6F	R,W	4203 EF8	1	—	1	1	1	1
	M6K, H2K, H2KW, C2K, C6K, D4K, D6K, P3K, P6K, P6KW	R,W	4203 FK5	1	—	—	1	1	1
	L2T, K1T, K2T, M6T, C2T, C6T, D4T, D6T, CRT, H2T, P6T, P6TW, P4T	R,W	4203 FT4	1	—	1	1	1	1
	L2X, K2X, T2X, M2X, H2X, H2XW, H1X, D4X, D4XW, M6XY C2XA, C2XW, C6XA, C6XW, D6X, D6XW, C5XA, CRXA, P3X, P6X, P6XA, P6XW	R,W	4203 EX9	1	—	1	1	1	1
	PLASTIC PANEL LOWER LT.								
	w/o Air Cond.								
	L1B, L2B, D4B, D6B, M2B, H1B, H2B, H2BW, P3B, P4B, P6B, P6BW	R,W	4296 FB7	1	—	1	1	—	1
	D4F, D6F, L2F, H1F, H2F, H2FW, P3F, P6F	R,W	4296 FF8	1	—	1	1	—	—
	D4K, D6K, H2K, H2KW, P3K, P6K, P6KW	R,W	4296 FK5	1	—	—	1	—	1
	L2T, K1T, K2T, T2T, D4T, D6T, M2T, H2T, H2TW, D2T, P4T, P6T, P6TW	R,W	4296 FT4	1	—	1	1	—	1
	L2X, K2X, T2X, D4XW, D6X, D6XW, D6XY, M2X, H1X, H2X, H2XW, P3X, P4X, P6X, P6XA, P6XW	R,W	4296 FX9	1	—	1	1	—	1
	L1Y, H1Y, P3Y	R,W	4296 FY4	1	—	—	—	—	—
	PLASTIC PANEL LOWER LT.								
	w/Air Cond.								
	L1B, L2B, D4B, D6B, M2B, H1B, H2B, H2BW, P3B, P4B, P6B, P6BW	R,W	4295 FB7	1	—	1	1	—	1
	D4F, D6F, L2F, H1F, H2F, H2FW, P3F, P6F	R,W	4295 FF8	1	—	1	1	—	—
	D4K, D6K, H2K, H2KW, P3K, P6K, P6KW	R,W	4295 FK5	1	—	—	1	—	1

NOTE: A letter code in the carline column indicates the carline for which the part is released as follows:

CARLINES Indicate: J - Challenger, B - Barracuda, V - Valiant, L - Dart, R - Belvedere, W - Coronet, P - Plymouth, D - Dodge, C - Chrysler, Y - Imperial

AR Indicates use as required.
★ Indicates change or addition.

Right and left part numbers are on same line, first number is right, second number is left.

Printed in U.S.A.
December 1970

CODE	PART NAME	CAR LINE	PART NUMBER	Sed.	4 D.H.T.	Sta. Wgn.	2 D.H.T.	Sp. 2 D.H.T.	Conv.
23-84-3	PAD Cont'd.								
	L2T, K1T, K2T, T2T, D4T, D6T, M2T, H2T, H2TW, D2T, P4T, P6T, P6TW	R,W	4295 FT4	1	—	1	1	—	1
	L2X, T2X, K2X, D4XW, D6X, D6XW, D6XY M2X, H1X, H2X, H2XW, P3X, P4X, P6X, P6XA, P6XW	R,W	4295 FX9	1	—	1	1	—	1
	L1Y, H1Y, P3Y	R,W	4295 FY4	1	—	—	—	—	—
	PLASTIC PANEL GLOVE BOX DOOR L1B, L2B, D4B, D6B, M2B, H1B H2BW, P3B, P4B, P6B, P6BW	R,W	4294 FB7	1	—	1	1	—	1
	D4F, D6F, L2F, H1F, H2F, H2FW, P3F, P6F	R,W	4294 FF8	1	—	1	1	—	—
	D4K, D6K, H2K, H2KW, P3K, P6K, P6KW	R,W	4294 FK5	1	—	—	1	—	1
	L2T, K1T, K2T, D4T, D6T, T2T, M2T, H2T, D2T, H2TW, P6T, P6TW, P4T	R,W	4294 FT4	1	—	1	1	—	1
	L2X, T2X, K2X, D4XW, D6X, D6XW, D6XY M2X, H1X, H2X, H2XW, P3X, P4X, P6X, P6XA, P6XW	R,W	4294 FX9	1	—	1	1	—	1
	L1Y, H1Y, P3Y	R,W	4294 FY4	1	—	—	—	—	—
	E2B, L1B, L2B, M1B, M4B, M4BW, M6B, H3B, H4B, H5B, L2BW, H6B, P3B, P4B	P	4220 FB7	1	1	1	1	1	1
	E2F, L1F, L2F, M1F, M4F, M6F, M7F, H3F, H4F, H5F, H6F, H7F, P3F, P4F, D4F	P	4220 FF8	1	1	1	1	1	1
	M1K, M4K, P3K, P4K, H3K, H4K, H6K	P	4220 FK5	—	1	—	1	1	—
	E2T, K1T, K2T, L2T, L2TW, M4T, M4TW, M6T, H4T, H6T, H8T, D6T, PRT, P4TT	P	4220 FT4	1	1	1	1	1	—
	L1XA, L2XA, L2XW, M1XA, M4XA, M4XP, M8XA, M4XW, H6XA, H6XP, H4XW, H4XA, H6XW, H8XA, P3XA, P4XA, P5XA, P7XA	P	4220 FX9	1	1	1	1	1	1
	L1Y, M1Y, M4Y	P	4220 FY4	1	1	—	1	—	—
	PLASTIC PANEL LOWER CTR. w/Air Cond. 2 DOOR M6B, H2B, C2B, C6B, CRB, D6B	W	4292 FB7	1	—	—	1	1	1
	M6F, H2F, C2F, C6F, CRF, D6F	W	4292 FF8	1	—	—	1	1	1
	M6K, H2K, C2K, C6K, D6K	W	4292 FK5	1	—	—	1	1	1
	M6T, H2T, C2T, C6T, CRT, D6T	W	4292 FT4	1	—	—	1	1	1
	M6X, M6XW, H2X, H2XW, C2XA, C2XW, C5XA, C6XA, C6XW, CRXA, D6X, D6XY, D6XW	W	4292 FX9	1	—	—	1	1	1
	w/o Air Cond. M6B, H2B, C6B, CRB, C2B, D6B	W	4293 FB7	1	—	—	1	1	1
	M6F, H2F, C6F, CRF, C2F, D6F	W	4293 FF8	1	—	—	1	1	1
	M6K, H2K, C6K, C2K, D6K	W	4293 FK5	1	—	—	1	1	1
	M6T, H2T, C6T, C2T, CRT, D6T	W	4293 FT4	1	—	—	1	1	1
	M6X, M6XW, H2X, H2XW, C2XA, C2XW, C5XA, C6XA, C6XW, CRXA, D6X, D6XY, D6XW	W	4293 FX9	1	—	—	1	1	1
	PLASTIC PANEL GLOVE BOX DOOR LOWER M6B, H2B, C6B, CRB, C2B, D6B	W	4290-1 FB7	1	—	—	1	1	1
	M6F, H2F, C6F, C2F, CRF, D6F	W	4290-1 FF8	1	—	—	1	1	1
	M6K, H2K, C2K, C6K, D6K	W	4290-1 FK5	1	—	—	1	1	1
	M6T, H2T, C2T, C6T, CRT, D6T	W	4290-1 FT4	1	—	—	1	1	1
	M6X, M6XW, H2X, H2XW, C2XA, C2XW, C6XA, C6XW, CRXA, D6X, D6XY, M6XY, D6XW	W	4290-1 FX9	1	—	—	1	1	1

NOTE: A letter code in the carline column indicates the carline for which the part is released as follows:

CARLINES Indicate: J - Challenger, B - Barracuda, V - Valiant, L - Dart, R - Belvedere, W - Coronet, P - Plymouth, D - Dodge, C - Chrysler, Y - Imperial

AR Indicates use as required.
★ Indicates change or addition.

Right and left part numbers are on same line, first number is right, second number is left.

Printed in U.S.A.
December 1970

CODE	PART NAME	CAR LINE	PART NUMBER	Sed.	4 D.H.T.	Sta. Wgn.	2 D.H.T.	Sp. 2 D.H.T.	Conv.
23-84-3	PAD Cont'd.								
	W/AIR COND. AND HEATER								
	L1B, L2B, D1B, F1B, B2B, R2B, R4B, L4B, H1B, H3B, H4B, H7B, W1B, W4B, W6B, P4B, P5B, P6B, P7B	D	4233 FB7	1	1	1	1	—	1
	R2F, R4F, F1F, H1F, H3F, H4F, H7F, H8F, W1F, W4F, W6F, W7F, P3F, P4F, P5F, P6F, P7F	D	4233 FF8	1	1	1	1	—	1
	L1F, L2F, L4F, D1F	D	4233 FFF	1	1	1	1	—	1
	H4K, H6K, H8K, W4K, P3K, P4K, P6K	D	4233 FK5	—	1	1	1	—	1
	L2T, H1T, H4T, H8T, B2T, R2T, R4T, F2T, W4T, P4T, P6T, P8T, J6T	D	4233 FT4	1	1	1	1	—	—
	L1Y, D1Y, H1Y, H4Y, F1Y, W1Y, P3Y	D	4233 FY4	1	1	—	1	—	—
	L1X, L2X, L4X, L4XW, K1A, K2A, D6X, D6XW, L6X, H1X, H3X, H4X, H6X, H7X, H8X, R2XA, R4XA, F2XA, W1XA, W4XA, WRXP, W4XW, W6XA, W8XA, P3XA, P4XA, P4XP, P6XA, P8XA, J6XA	D	4233 FX9	1	1	1	1	—	1
	W/O AIR COND. AND HEATER								
	L1B, L2B, D1B, F1B, B2B, R2B, R4B, L4B, H1B, H3B, H4B, H7B, W1B, W4B, W6B, P4B, P5B, P6B, P7B	D	4232 FB7	1	1	1	1	—	1
	L1F, L2F, L4F, D1F	D	4232 FFF	1	1	1	1	—	1
	R2F, R4F, F1F, H1F, H3F, H4F, H7F, H8F, W1F, W4F, W6F, W7F, P3F, P4F, P5F, P6F, P7F	D	4232 FF8	1	1	1	1	—	1
	H4K, H6K, H8K, W4K, P3K, P4K, P6K	D	4232 FK5	—	1	1	1	—	1
	L2T, H1T, H4T, H8T, B2T, R2T, R4T, F2T, W4T, P4T, P6T, P8T, J6T	D	4232 FT4	1	1	1	1	—	—
	L1Y, D1Y, H1Y, H4Y, F1Y, W1Y, P3Y	D	4232 FY4	1	1	—	1	—	—
	L1X, L2X, L4X, L4XW, K1A, K2A, D6X, D6XW, L6X, H1X, H3X, H4X, H6X, H7X, H8X, R2XA, R4XA, F2XA, W1XA, W4XA, W4XP, W4XW, W6XA, W8XA, P3XA, P4XA, P4XP, P6XA, P8XA, J6XA	D	4232 FX9	1	1	1	1	—	1
	INSTRUMENT PANEL CLUSTER								
	L1B, L2B, L4B, D1B, B2B, R2B, W1B, W4B, W6B, H1B, H3B, H4B, H7B	D	4260 FB7	1	1	1	1	—	—
	L1F, L2F, L4F, D1F, R2F, W1F, W4F, W6F, H1F, H3F, H4F, H7F, H8F	D	4260 FF8	1	1	1	1	—	1
	H4K, H6K, H8K, W4K	D	4260 FK5	—	1	—	1	—	—
	L2T, B2T, R2T, W4T, H1T, H4T, H8T	D	4260 FT4	1	1	1	1	—	—
	L1Y, D1Y, H1Y, H4Y, W1Y	D	4260 FY4	1	1	1	1	—	—
	L1X, L2X, L4X, L4XW, K1A, K2A, D1X, D6X, D6XW, L6X, R2X, W1XA, W4XP, W4XA, W6XA, W8XA, H1X, H3X, H4X, H6X, H7X, H8X	D	4260 EX9	1	1	1	1	—	—
	UPPER								
	E1B, E2B, L3B, L4B, M4B, M6B, H1B, H3B, H6B, H7B, P4B	C	4210 FB7	1	1	1	1	—	1
	E1F, L3F, M3F, M6F, H1F, H3F, P4F, H7F, P8F	C	4210 EF8	1	1	1	1	—	1
	E1L, L7L, M5L, H7L, H8L, P7L	C	4210 EY8	1	1	1	1	—	1
	E1P, L3P, H1P, H3P, H7F8	C	4210 FP6	1	1	—	1	—	—
	L4R, L7R, M4R, H7R, P4R	C	4210 FR9	1	1	1	1	—	—
	E2T, E6T, M6T, HST, H6T, P4T, D2TY	C	4210 FT4	1	1	1	1	—	1

NOTE: A letter code in the carline column indicates the carline for which the part is released as follows:

CARLINES Indicate: J - Challenger, B - Barracuda, V - Valiant, L - Dart, R - Belvedere, W - Coronet, P - Plymouth, D - Dodge, C - Chrysler, Y - Imperial

AR Indicates use as required.
★ Indicates change or addition.

Right and left part numbers are on same line, first number is right, second number is left.

Printed in U.S.A.
December 1970

CODE	PART NAME	CAR LINE	PART NUMBER	Sed.	4 D.H.T.	Sta. Wgn.	2 D.H.T.	Sp. 2 D.H.T.	Conv.
23-84-3	PAD Cont'd.								
	E2Y, L3Y, ~~B2T~~, M3Y, H1Y, H3Y	C	4210 FY4	1	1	—	1	—	1
	E1X, E2X, E6X, E6XW, L3X, L4X, L8X, M3X, M4X, M6X, M6XW, H1X, H3X, H6X, H6XW, H8X, P4X, P8X	C	4210 EX9	1	1	1	1	—	1
	PAD w/FIN. PLATE w/Air Cond.								
	M4B, M6B	C	4118 FB7	—	1	—	1	—	1
	M3F, M6F	C	4118 FF8	—	1	—	1	—	1
	M5L	C	4118 FY8	—	1	—	1	—	—
	M4R	C	4118 FR9	—	1	—	1	—	—
	M6T	C	4118 FT4	—	1	—	1	—	1
	M3X, M4X, M6X, M6XW	C	4118 FX9	—	1	—	1	—	1
	M3Y	C	4118 FY4	—	1	—	1	—	—
	UPPER								
	L1B, L3B, MBB, MRB, MDB, MSB	Y	4206 FB7	—	1	—	1	—	—
	L1F, L3F, MBF, MRF, MDF, MSF	Y	4206 FF8	—	1	—	1	—	—
	L1P, MBP, MDP	Y	4206 FP6	—	1	—	1	—	—
	MSR	Y	4206 FR9	—	1	—	1	—	—
	MRT, MST	Y	4206 FT4	—	1	—	1	—	—
	L1X, L3X, MBX, MRX, MRXW, MDA, MDX, MSX, MSXW	Y	4206 FX9	—	1	—	1	—	—
	MBY, MRY, MDY, MSY	Y	4206 FY4	—	1	—	1	—	—
	L1M, MDM	Y	4206 FM9	—	1	—	1	—	—
	L1TT, L3TT, MBTT, MDTT	Y	4206 FT8	—	1	—	1	—	—
	FLR. CONSOLE PAD FRT.								
	M6B	C	4407 FB3	—	1	—	1	—	1
	H6B	C	4407 FB7	—	—	—	1	—	—
	M6F	C	4407 FF8	—	1	—	1	—	1
	M5L	C	4407 FL3	—	1	—	1	—	—
	E6T, M6T, H6T	C	4407 FT4	—	1	—	1	—	1
	E6X, E6XW, M6X, M6XW, H6X, H6XW	C	4407 FX9	—	1	—	1	—	1
23-84-5	INSERT, I/Panel Trim Pad	P	*2985 280	1	1	1	1	—	1
23-84-9	COVER, Door Belt Inner Mirror Control Trim Pad Left Side Only								
	CODES								
	CRB, C6B	W	3411 FB5	—	—	—	—	1	—
	CRF, C6F	W	3411 EF8	—	—	—	—	1	—
	CRT, C6T	W	3411 FT4	—	—	—	—	1	—
	C6XW	W	3411 EW1	—	—	—	—	1	—
	CRXA, C6XA, C5XA	W	3411 BX9	—	—	—	—	1	—
	C6K	W	3411 FK5	—	—	—	—	1	—
23-86-1	PAD, Rear Window Outside Trim								
	Upper	Y	2879 344	—	—	—	1	—	—
	Lower	Y	2879 345	—	—	—	1	—	—
	Lower	Y	2879 340	—	1	—	—	—	—
23-86-2	COVER, Roof Outside								
	4 DOOR								
	Green	V	8796 FF8	1	—	—	—	—	—
	White	V	8796 FW1	1	—	—	—	—	—
	Black	V	8796 DX9	1	—	—	—	—	—
	Green	V	7197 FF8	—	—	—	—	1	—
	White	V	7197 FW1	—	—	—	—	1	—
	Black	V	7197 FX9	—	—	—	—	1	—
	Green	B	7196 FF8	—	—	—	1	—	—
	White	B	7196 FW1	—	—	—	1	—	—
	Black	B	7196 FX9	—	—	—	1	—	—

NOTE: A letter code in the carline column indicates the carline for which the part is released as follows:

CARLINES Indicate: J - Challenger, B - Barracuda, V - Valiant, L - Dart, R - Belvedere, W - Coronet, P - Plymouth, D - Dodge, C - Chrysler, Y - Imperial

AR Indicates use as required.
★ Indicates change or addition.

Right and left part numbers are on same line, first number is right, second number is left.

Printed in U.S.A.
December 1970

CODE	PART NAME	CAR LINE	PART NUMBER	Sed.	4 D.H.T.	Sta. Wgn.	2 D.H.T.	Sp. 2 D.H.T.	Conv.
23-86-2	COVER Cont'd.								
	Tan	B	7196 FT9	—	—	—	1	—	—
	Blue and Turq.	B	7196 FBQ	—	—	—	1	—	—
	Gold and Green	B	7196 FYF	—	—	—	1	—	—
	Tan (GATOR GRAINED)	J	7195 FT9	—	—	—	1	1	—
	4 DOOR								
	Green	L	8754 FF8	1	—	—	—	—	—
	White	L	8754 FW1	1	—	—	—	—	—
	Black	L	8754 DX9	1	—	—	—	—	—
	Black	L	7334 DX9	—	—	—	1	—	—
	Green	L	7334 FF8	—	—	—	1	—	—
	White	L	7334 FW1	—	—	—	1	—	—
	Green	J	7194 FF8	—	—	—	1	—	—
	White	J	7194 FW1	—	—	—	1	—	—
	Black (BOAR GRAINED)	J	7194 FX9	—	—	—	1	—	—
	Green	W	6108 FF8	—	—	—	—	1	—
	White	W	6108 FW1	—	—	—	—	1	—
	Tan (GATOR GRAINED)	W	6108 FT9	—	—	—	—	1	—
	Black	W	6108 DX9	—	—	—	—	1	—
	Green	R,W	6109 FF8	—	—	—	1	—	—
	White	R,W	6109 FW1	—	—	—	1	—	—
	Tan (GATOR GRAINED)	R,W	6109 FT9	—	—	—	1	—	—
	Black	R,W	6109 DX9	—	—	—	1	—	—
	Green	R,W	*6110 FF8	1	—	—	—	—	—
	White	R,W	*6110 FW1	1	—	—	—	—	—
	Tan	R,W	*6110 FT9	1	—	—	—	—	—
	Black	R,W	6110 DX9	1	—	—	—	—	—
	Green	P,D	7178 FF8	1	—	—	—	—	—
	White	P,D	7178 FW1	1	—	—	—	—	—
	Black	P,D	7178 EX9	1	—	—	—	—	—
	Light Tan	P,D	7178 ET5	1	—	—	—	—	—
	Dark Tan	P,D	7178 FT9	1	—	—	—	—	—
	Green	P,D	7190 FF8	—	—	—	1	—	—
	White	P,D	7190 FW1	—	—	—	1	—	—
	Black	P,D	7190 EX9	—	—	—	1	—	—
	Light Tan	P,D	7190 ET5	—	—	—	1	—	—
	Dark Tan	P,D	7190 FT9	—	—	—	1	—	—
	Champagne	P,D	7190 FL1	—	—	—	1	—	—
	Gold	P	7190 FGG	—	—	—	1	—	—
	Tan	P	7190 FTT	—	—	—	1	—	—
	2 DOOR								
	Green	P,D	7192 FF8	1	1	—	—	1	—
	White	P,D	7192 FW1	1	1	—	—	1	—
	Tan	V1G P, D	7192 FT9	—	1	—	—	1	—
	Tan (GRAIN COUPE)	V1J P	7192 FTT	1	1	—	—	1	—
	Champagne	P,D	7192 FL1	1	1	—	—	1	—
	Black	P,D	7192 EX9	1	1	—	—	1	—
	Gold	P	7192 FGG	—	1	—	—	1	—
	4 DOOR								
	Black	P,D	7178 EX9	1	—	—	—	—	—
	Light Tan	P, D	7178 ET5	1	—	—	—	—	—
	Dark Tan	P,D	7178 FT9	1	—	—	—	—	—
	Green	P,D	7178 FF8	1	—	—	—	—	—
	White	P,D	7178 FW1	1	—	—	—	—	—
	Champagne	C,Y	7188 EL1	1	—	—	—	—	—
	Gold	C	7188 FGG	1	—	—	—	—	—
	Green	C,Y	7188 FF8	1	—	—	—	—	—
	White	C,Y	7188 FW1	1	—	—	—	—	—
	Black	C,Y	7188 EX9	1	—	—	—	—	—

NOTE: A letter code in the carline column indicates the carline for which the part is released as follows:

CARLINES Indicate: J - Challenger, B - Barracuda, V - Valiant, L - Dart, R - Belvedere, W - Coronet, P - Plymouth, D - Dodge, C - Chrysler, Y - Imperial

AR Indicates use as required.
★ Indicates change or addition.

Right and left part numbers are on same line, first number is right, second number is left.

Printed in U.S.A.
December 1970

CODE	PART NAME	CAR LINE	PART NUMBER	Sed.	4 D.H.T.	Sta. Wgn.	2 D.H.T.	Sp. 2 D.H.T.	Conv.
23-86-2	COVER Cont'd.								
	Tan	C	7188 FTY	1	—	—	—	—	—
	Tan	C	7185 FTY	—	1	—	—	—	—
	Champagne	C	7185 EL1	—	1	—	—	—	—
	Green	C	7185 FF8	—	1	—	—	—	—
	White	C	7185 FW1		—	1	—	—	—
	Black	C	7185 EX9	—	1	—	—	—	—
	Gold	C	7185 FGG	—	1	—	—	—	—
	Gold	C	7191 FGG	—	—	—	1	—	—
	Champagne	C	7191 EL1	—	—	—	1	—	—
	Green	C	7191 FF8	—	—	—	1	—	—
	White	C	7191 FW1	—	—	—	1	—	—
	Black	C	7191 EX9	—	—	—	1	—	—
	Tan	C	*7191 FTY	—	—	—	1	—	—
	Blue	Y	7186 EB9	—	1	—	—	—	—
	Green	Y	7186 EF9	—	1	—	—	—	—
	Champagne	Y	7186 EL1	—	1	—	—	—	—
	White	Y	7186 EW1	—	1	—	—	—	—
	Black	Y	7186 EX9	—	1	—	—	—	—
	Dark Tan	Y	7186 FT9	—	1	—	—	—	—
	Blue	Y	7187 EB9	—	—	—	1	—	—
	Green	Y	7187 EF9	—	—	—	1	—	—
	Champagne	Y	7187 EL1	—	—	—	1	—	—
	White	Y	7187 EW1	—	—	—	1	—	—
	Black	Y	7187 EX9	—	—	—	1	—	—
	Dark Tan	Y	7187 FT9	—	—	—	1	—	—
23-86-3	HEADLINING and LISTING CODES								
	L1B, L2B, L4B, D2B, L6BW	V	7100 FB8	1	—	—	—	—	—
	L4E, L6EW	V	7100 FE5	1	—	—	—	—	—
	L4T	V	7100 FT1	1	—	—	—	—	—
	L1F, L2F, L4F,	V	7100 EF7	1	—	—	—	—	—
	L1X, L2X, L4X, L6XW	V	7100 EX9	1	—	—	—	—	—
	L1B, L2B, L4B, L6BW, D2B	V,L	7111 FB8	—	—	—	—	1	—
	L4E, L6EW	V,L	7111 FE5	—	—	—	—	1	—
	L1F, L2F, L4F, D2F	V,L	7111 FF7	—	—	—	—	1	—
	L4T	V,L	7111 FT1	—	—	—	—	1	—
	L1X, L2X, L4X, L6X, L6XW, D2X	V,L	7111 FX9	—	—	—	—	1	—
	H4B, H6B	B	7102 FB6	—	—	—	1	—	—
	H6E	B	7102 FE5	—	—	—	1	—	—
	H4F, H6F	B	7102 FF7	—	—	—	1	—	—
	H6T, PRT	B	7102 FT1	—	—	—	1	—	—
	H4XW, H4BW, H4FW, H6XW, H6BW, H6EW, H6FW, PRXW	B	7102 FW1	—	—	—	1	—	—
	H4X, H6X	B	7102 FX9	—	—	—	1	—	—
	MOULDED HD-LINING								
	P6B	B	1014 FB6	—	—	—	1	—	—
	P6E	B	1014 FE5	—	—	—	1	—	—
	P6F	B	1014 FF7	—	—	—	1	—	—
	P5K, P6K	B	1014 FK6	—	—	—	1	—	—
	P6T, PRT	B	1014 FT1	—	—	—	1	—	—
	P6YX	B	1014 FY5	—	—	—	1	—	—
	P6BW, P6EW, P6FW, P6XW, PRXW	B	1014 FW1	—	—	—	1	—	—
	P5X, P6A, PRX	B	1014 FX9	—	—	—	1	—	—
	H4B, H5B, H6B	J	7103 FB6	—	—	—	1	—	—
	H6E	J	7103 FE5	—	—	—	1	—	—
	H5F, H6F	J	7103 FF7	—	—	—	1	—	—
	H5K, H6K, HRK	J	7103 FK6	—	—	—	1	—	—

NOTE: A letter code in the carline column indicates the carline for which the part is released as follows:

CARLINES Indicate: J - Challenger, B - Barracuda, V - Valiant, L - Dart, R - Belvedere, W - Coronet, P - Plymouth, D - Dodge, C - Chrysler, Y - Imperial

AR Indicates use as required.
★ Indicates change or addition.

Right and left part numbers are on same line, first number is right, second number is left.

Printed in U.S.A.
December 1970

CODE	PART NAME	CAR LINE	PART NUMBER	Sed.	4 D.H.T.	Sta. Wgn.	2 D.H.T.	Sp. 2 D.H.T.	Conv.
23-86-3	HEADLINING Cont'd.								
	H6XW, L6W	J	7103 FW1	—	—	—	1	—	—
	H6T, HRT	J	7103 FT1	—	—	—	1	—	—
	H4X, H5X, H6X, HRX	J	7103 FX9	—	—	—	1	—	—
	w/Slits For Shoulder Belts								
	H5X, HRX	J	1015 FX9	—	—	—	—	1	—
	H5B	J	1015 FB6	—	—	—	—	1	—
	H5F	J	1015 FF7	—	—	—	—	1	—
	H5K, H6K	J	1015 FK6	—	—	—	—	1	—
	H6T	J	1015 FT1	—	—	—	—	1	—
	H5X, H6X	J	1015 FX9	—	—	—	—	1	—
	w/o Slits For Shoulder Belts								
	H5B	J	1015 FB6	—	—	—	—	1	—
	H5F	J	1015 FF7	—	—	—	—	1	—
	H5K, HRK	J	1015 FK6	—	—	—	—	1	—
	HRT	J	1015 FT1	—	—	—	—	1	—
	H5X, HRX	J	1015 FX9	—	—	—	—	1	—
	RR. WINDOW OPNG. TRIM PANEL								
	H5B	J	3527 FB6	—	—	—	—	1	—
	H5F	J	3527 FF7	—	—	—	—	1	—
	H5K, HRK	J	3527 FK6	—	—	—	—	1	—
	HRT	J	3527 FT1	—	—	—	—	1	—
	H5X, HRX	J	3527 FX9	—	—	—	—	1	—
	4 DOOR								
	H4B	J	3534 FB6	—	—	—	1	—	—
	H6E	J	3534 FE5	—	—	—	1	—	—
	H5F, H6F	J	3534 FF7	—	—	—	1	—	—
	H5K, H6K, HRK	J	3534 FK6	—	—	—	1	—	—
	H6T, HRT	J	3534 FT1	—	—	—	1	—	—
	L6XW, H6XW	J	3534 FW1	—	—	—	1	—	—
	H4X, L6X, H5X, H6X, HRX	J	3534 FX9	—	—	—	1	—	—
	L2B, H1B, H2B	L	7101 FB8	1	—	—	—	—	—
	L2F, H1F	L	7101 FF7	1	—	—	—	—	—
	H2T	L	7101 FT1	1	—	—	—	—	—
	L2X, H1X, H2X	L	7101 FX9	1	—	—	—	—	—
	L2B, D2B, H2B	L	7115 EB8	—	—	—	1	—	—
	D2F, H2F, H6F	L	7115 EF7	—	—	—	1	—	—
	D2T, H2T, H6T	L	7115 FT1	—	—	—	1	—	—
	L2X, D2X, H2X, X2XW, H6X	L	7115 EX9	—	—	—	1	—	—
	2 DOOR								
	L2B, M2B, M6B, H1B, H2B, H2BW, D6B, P3B, P6B, P6BW	R,W	7147 EB8	1	—	—	1	—	—
	M6F, H2F, H1F, P6F, D6F, M6F, D6F, H2F, P6F	R,W	7147 EF7	1	—	—	1	—	—
	L2X, M2X, M6XW, D6XW, H2XW, P6XW	R,W	7147 EW1	1	—	—	1	—	—
	M2X, M6X, H1X, H2X, P3X, P6XA								
	P6XY, D6X, D6XY, M6XY,	R, W	7147 EX9	1	—	—	1	—	—
	M6K, H2K, H2KW, D6K, P6K, P6KW	R,W	7147 FK6	1	—	—	1	—	—
	K1T, K2T, M2T, M6T, H2T, D6T, P6T, P6TW, L2T	R,W	7147 FT1	1	—	—	1	—	—
	4 DOOR								
	L1B, L2B, H1B, H2B, H2BW, P3B, P4B, P6B, P6BW	R,W	7131 EB8	1	—	—	—	—	—
	H1F, H2F, H2FW, P3F, P4F	R,W	7131 EF7	1	—	—	—	—	—
	K2X, T2X, H1X, H2X, P3X, P4X, P6XA	R,W	7131 EX9	1	—	—	—	—	—
	P3K	R,W	7131 FK6	1	—	—	—	—	—
	K1T, K2T, T2T, L2T, H2T, H2TW, P4T, P6T, P6TW	R,W	7131 FT1	1	—	—	—	—	—
	L1Y, H1Y, P3Y	R,W	7131 FY5	1	—	—	—	—	—

NOTE: A letter code in the carline column indicates the carline for which the part is released as follows:

CARLINES Indicate: J - Challenger, B - Barracuda, V - Valiant, L - Dart, R - Belvedere, W - Coronet, P - Plymouth, D - Dodge, C - Chrysler, Y - Imperial

AR Indicates use as required.
★ Indicates change or addition.

Right and left part numbers are on same line, first number is right, second number is left.

Printed in U.S.A.
December 1970

CODE	PART NAME	CAR LINE	PART NUMBER	Sed.	4 D.H.T.	Sta. Wgn.	2 D.H.T.	Sp. 2 D.H.T.	Conv.
23-86-3	HEADLINING Cont'd.								
	PANEL, NEW YORK TAXI TYPE T2X								
	No. 1	W	1011 FWW	1	—	—	—	—	—
	No. 2	W	1012 FWW	1	—	—	—	—	—
	No. 3	W	1013 FWW	1	—	—	—	—	—
	REAR QUARTER UPPER EXTENSION PANEL	W	3596-7 EX9	1	—	—	—	—	—
		W	4318-9 EX9	1	—	—	—	—	—
	No. 1	R,W	1002 EWW	—	—	1	—	—	—
	No. 2	R,W	1073 CWW	—	—	1	—	—	—
	No. 3	R,W	1074 CWW	—	—	1	—	—	—
	No. 4	R,W	1075 CWW	—	—	1	—	—	—
	ROOF RR. SIDE QTR.	R,W	1088-9 DWW	—	—	1	—	—	—
	C2B, C6B, CRB	W	7130 FB6	—	—	—	—	1	—
	C2F, C6F, CRF	W	7130 EF7	—	—	—	—	1	—
	C2XW, C6XW	W	7130 EW1	—	—	—	—	1	—
	C2XA, C6XA, CRXA	W	7130 EX9	—	—	—	—	1	—
	C2K, C6K	W	7130 FK6	—	—	—	—	1	—
	C2T, C6T, CRT w ZIPPER	W	7130 FT1	—	—	—	—	1	—
	2 DOOR								
	E2B	P	7112 FB2	1	—	—	—	—	—
	E2T	P	7112 FT1	1	—	—	—	—	—
	4 DOOR								
	E2B, B2B	P,D	7113 FB2	1	—	—	—	—	—
	E2T, B2T	P,D	7113 FT1	1	—	—	—	—	—
	2 DOOR								
	E2B, L1B, L2B, M1B, M4B, D1B, W1B, W4B, M6B, H1B, H3B, H4B, H5B, H6B, H7B	P,D	7108 FB2	1	1	—	—	1	—
	L1F, L2F, D1F, W1F, W4F, L4F M1F, M4F, M6F, P4F8, H1F, H3F, H4F H5F, H6F, H7F, H8F	P,D	7108 FF7	—	1	—	—	1	—
	K1T, K2T, E2T, L2T, W4T, M4T, P4TT, H4T, H1T, H6T, H8T, D6T	P,D	7108 FT1	1	1	—	—	1	—
	L4XW, M4XW	P,D	7108 FW1	—	1	—	—	1	—
	L1X, L2X, L4X, W1XA, W4XA, W4XP, M1XA, M4XA, M4XP, M6XA, P4XA, H1X, H3XA, H4XA, H7X, H4XP, D6XA, H6XA, D1X, H8X, H8XA	D,P	7108 FX9	—	1	—	—	1	—
	L1Y, D1Y, W1Y, M1Y, H1Y, H3Y	D,P	7108 FY5	1	1	—	—	—	—
	W4K, M4K, H3K, H4K, H6K, H8K	P,D	7108 FK6	—	1	—	—	1	—
	4 DOOR								
	E2B, D1B, B2B, F1B, W1B, W4B, L1B, L2B, L4B, M1B, M4B, H3B, H4B, H7B, P3B, D4B, P7B,	P, D	7109 FB2	1	—	—	—	—	—
	F1F, W1F, W4F, D1F, L1F, L2F, L4F, M1F, M4F, H1F, H3F, H4F, H7F, P3F, P4F, P7F,	P, D	7109 FF7	1	—	—	—	—	—
	E2T, K1T, K2T, B2T, F2T, W4T, L2T, M4T, H1T, H4T, H8T, P4T, P8T,	P, D	7109 FT1	1	—	—	—	—	—
	F1Y, W1Y, D1Y, L1Y, M1Y, H1Y, H3Y	P,D	7109 FY5	1	—	—	—	—	—
	K1A, K2A	D	7109 FA2	1	—	—	—	—	—

NOTE: A letter code in the carline column indicates the carline for which the part is released as follows:

CARLINES Indicate: J - Challenger, B - Barracuda, V - Valiant, L - Dart, R - Belvedere, W - Coronet, P - Plymouth, D - Dodge, C - Chrysler, Y - Imperial

AR Indicates use as required.
★ Indicates change or addition.

Right and left part numbers are on same line, first number is right, second number is left.

Printed in U.S.A.
December 1970

CODE	PART NAME	CAR LINE	PART NUMBER	Sed.	4 D.H.T.	Sta. Wgn.	2 D.H.T.	Sp. 2 D.H.T.	Conv.
23-86-3	HEADLINING Cont'd.								
	D1X, L1X, L2X, L4X, L2XA, F2XA, W1XA, W4XA, W4XP, M1XA, M4XA, M4XP, H3XA, H4XA, H4XP, H8XA, H1X, H7X, P3XA, P4XA, P4XP, P8XA	P, D	7109 FX9	1	—	—	—	—	—
	AXLE KICK-UP FRONT PANEL	P,D	4320 EX9	—	—	1	—	—	—
	DUAL AIR COND. w/FRT. HEATER E2F, E2B, E2T, F2B, F2F, F2BW, F2T, F2TW, F2XA, F2XW, B2B, B2F, B2T, W4B, W4F, W4T, W4BW, W4TW, W4XA, W4XW, W7F, W8XA, M4XA, M4B, M4F, M4T, M7F, M8XA, L2X, L2B, L2F, L2T, H4X, H4TW, H4B, H4F, H8X, H8F, H8T, P4B, P4F, P4T, P4R, P4X, P7L, P8F, P8X								
	No. 1	P,D,C	1044 FW2	—	—	1	—	—	—
	No. 2	P,D,C	1045 FW2	—	—	1	—	—	—
	No. 3	P,D,C	1049 EW2	—	—	1	—	—	—
	No. 4	P,D,C	1050 EW2	—	—	1	—	—	—
	No. 5	P,D,C	1051 EW2	—	—	1	—	—	—
	w/o AIR COND. E2B, L2B, F2B, W4B, M4B, B2B, D2B, D4B, R2B, R4B, W4B, H4B, P4B								
	No. 1	P,D,C	1044 FB2	—	—	1	—	—	—
	No. 2	P,D,C	1045 FB2	—	—	1	—	—	—
	No. 3	P,D,C	1049 EB2	—	—	1	—	—	—
	No. 4	P,D,C	1050 EB2	—	—	1	—	—	—
	No. 5	P,D,C	1051 EB2	—	—	1	—	—	—
	E2F, F2F, B2F, W4F, W7F, D2F, D4F, R2F, R4F, L2F, M4F, M7F, H4F, H8F, P4F, P8F								
	No. 1	P,D,C	1044 FF7	—	—	1	—	—	—
	No. 2	P,D,C	1045 FF7	—	—	1	—	—	—
	No. 3	P,D,C	1049 EF7	—	—	1	—	—	—
	No. 4	P,D,C	1050 EF7	—	—	1	—	—	—
	No. 5	P,D,C	1051 EF7	—	—	1	—	—	—
	E2T, F2T, B2T, W4T, L2T, M4T, D2T, D4T, F2T, R2T, R4T, H4T, H8T, P4T								
	No. 1	P,D,C	1044 FT4	—	—	1	—	—	—
	No. 2	P,D,C	1045 FT4	—	—	1	—	—	—
	No. 3	P,D,C	1049 ET4	—	—	1	—	—	—
	No. 4	P,D,C	1050 ET4	—	—	1	—	—	—
	No. 5	P,D,C	1051 ET4	—	—	1	—	—	—
	P4R								
	No. 1	C	1044 FR7	—	—	1	—	—	—
	No. 2	C	1045 FR7	—	—	1	—	—	—
	No. 3	C	1049 FR7	—	—	1	—	—	—
	No. 4	C	1050 FR7	—	—	1	—	—	—
	No. 5	C	1052 FR7	—	—	1	—	—	—
	RR. QTR. UPPER 2 DOOR								
	E2B, L1B, L2B, L4B, D1B, W1B, W4B, M1B, M4B, M6B, H1B, H3B, H4B, H5B, H6B, H7B, P7B	P,D	3586-7 FB2	1	1	—	—	1	—
	L1F, L2F, D1F, W1F, W4F, M1F, M4F, M6F, H1F, H3F, H4F, H5F, H6F, H7F, P4F8, P7F	P,D	3586-7 FF7	—	1	—	—	1	—
	L4XW, M4XW, H4XW	P,D	3586-7 FW1	—	1	—	—	1	—
	E2T, K1T, K2T, L2T, W4T, M4T, H1T, H6T, P4TT, PRT	P,D	3586-7 FT1	1	1	—	—	1	—
	L1X, L2X, L4X, D1X, D6XA, W4XA, W1XA, W4XP, M1XA, M4XA, M4XP, M6XA, H1X, H3XA, H4XA, H4XP, H6XA, H8XA, P4XA, P8XA	P,D	3586-7 FX9	—	1	—	—	1	—

NOTE: A letter code in the carline column indicates the carline for which the part is released as follows:

CARLINES Indicate: J - Challenger, B - Barracuda, V - Valiant, L - Dart, R - Belvedere, W - Coronet, P - Plymouth, D - Dodge, C - Chrysler, Y - Imperial

AR Indicates use as required.
★ Indicates change or addition.

Right and left part numbers are on same line, first number is right, second number is left.

Printed in U.S.A.
December 1970

CODE	PART NAME	CAR LINE	PART NUMBER	Sed.	4 D.H.T.	Sta. Wgn.	2 D.H.T.	Sp. 2 D.H.T.	Conv.
23-86-3	HEADLINING Cont'd.								
	W4K, M4K, H3K, H4K, H6K, H8K	P,D	3586-7 FK6	—	1	—	—	1	—
	L1Y, D1Y, W1Y, M1Y, H1Y, H3Y	P,D	3586-7 FY5	—	1	—	—	1	—
	PANEL w/o AIR COND.								
	E2B, L2B, M4B, F2B, W4B, B2B, H4B, P4B								
	No. 1	P,D,C	1076 EB2	—	—	1	—	—	—
	No. 2	P,D,C	1077 EB2	—	—	1	—	—	—
	E2F, L2F, M4F, M7F, F2F, W4F, W7F, B2F, H4F, H8F, P4F, P8F								
	No. 1	P,D,C	1076 EF7	—	—	1	—	—	—
	No. 2	P,D,C	1077 EF7	—	—	1	—	—	—
	E2T, L2T, M4T, F2T, W4T, B2T, H4T, H8T, P4T								
	No. 1	P,C,D	1076 ET4	—	—	1	—	—	—
	No. 2	P,C,D	1077 ET4	—	—	1	—	—	—
	P4R								
	No. 1	C	1076 FR7	—	—	1	—	—	—
	No. 2	C	1077 FR7	—	—	1	—	—	—
	RR. QTR. UPR. 4 DOOR, W/HEADLINING MATERIAL								
	E1B, E2B, F1B, W1B, B2B, L1B, L2B, B1B, D1B, L4B, W1B, W4B, M1B, M4B, H1B, H3B, H4B, H7B	P,D	3568-9 EB2	1	—	—	—	—	—
	K1T, K2T, E1T, E2T, F2T, W4T, B1T, B2T, L2T, M4T, H1T, H4T, H8T,	P, D	3568-9 FT1	1	—	—	—	—	—
	W1F, W4F, D1F, F1F, L1F, L2F, L4F, M1F, M4F, H1F, H3F, H4F, H7E	P, D	3568-9 FF7	1	—	—	—	—	—
	K1A, K2A	D	3568-9 EA2	1	—	—	—	—	—
	F1XA, F2XA, W1XA, W4XA, W8XA, L1X L2X, L1XA, L2XA, M1XA, M4XA, M8XA, H1X, H7X	P,D	3568-9 FX9	1	—	—	—	—	—
	F1Y, W1Y, W4Y, L1Y, M1Y, M4Y, H1Y	P,D	3568-9 FY5	1	—	—	—	—	—
	W/PLASTIC MATERIAL								
	E1B, E2B, F1B, W1B, B2B, L1B, L2B, B1B, D1B, L4B, W4B, M1B, M4B, H1B, H3B, H4B, H7B	P,D	*3580-1 FB2	1	—	—	—	—	—
	K1T, K2T, E1T, E2T, F2T, W4T, B1T, B2T, L2T, M4T, H1T, H4T, H8T	P,D	*3580-1 FT1	1	—	—	—	—	—
	W1F, W4F, D1F, F1F, L1F, L2F, L4F, M1F, M4F, H1F, H3F, H4F, H7F	P,D	*3580-1 FF7	1	—	—	—	—	—
	K1A, K2A	P,D	*3580-1 FA2	1	—	—	—	—	—
	F1XA, F2XA, W1XA, W4XA, W8XA, L1X, L2X, L1XA, L2XA, M1XA, M4XA, M8XA, H1X, H7X	P,D	*3580-1 FX9	1	—	—	—	—	—
	F1Y, W1Y, W4Y, L1Y, M1Y, M4Y, H1Y	P,D	*3580-1 FY5	1	—	—	—	—	—
	L1B, L2B, L4B, F1B, W1B, W4B, W6B, M1B, D1B, M4B, M6B, H3B, H4B, H5B, H6B, P3B, P4B, P6B	P,D	7120 FB2	—	—	—	1	—	—
	L1F, L2F, F1F, D1F, W1F, W4F, W6F, M1F, M4F, M6F, H3F, H4F, H5F, H6F, P3F, P4F, P5F, P6F	P,D	7120 EF7	—	—	—	1	—	—
	L1X, L2X, L1XA, L2XA, L4X, F1XA, F2XA, W1XA, W4XA, W4XP, M1XA, M4XA, M4XP, M6XA, D6X, D6XA, D6X, D1X, H3X, H3XA, H4XA, H4XP, H4X, H6X, H6XA, H6XP, P3XA, P4XA, P4XP, P5XA, P6XA, P6XP J6XA,	P, D	7120 EX9	—	—	—	1	—	—
	L2XW, L4XW, D6XW, W4XW, M4XW, M6XW, H4XW, H6XW, P4XW, P6XW	P, D	7120 EW1	—	—	—	1	—	—
	M4K, H3K, H4K, H6K, W4K	P,D	7120 FK6	—	—	—	1	—	—

NOTE: A letter code in the carline column indicates the carline for which the part is released as follows:

CARLINES Indicate: J - Challenger, B - Barracuda, V - Valiant, L - Dart, R - Belvedere, W - Coronet, P - Plymouth, D - Dodge, C - Chrysler, Y - Imperial

AR Indicates use as required.
★ Indicates change or addition.

Right and left part numbers are on same line, first number is right, second number is left.

Printed in U.S.A.
December 1970

CODE	PART NAME	CAR LINE	PART NUMBER	Sed.	4 D.H.T.	Sta. Wgn.	2 D.H.T.	Sp. 2 D.H.T.	Conv.
23-86-3	HEADLINING Cont'd.								
	L2T, W4T, D6T, M4T, H4T, H6T	P,D	7120 FT1	—	—	—	1	—	—
	L1Y, D1Y, H4Y	D	7120 FY5	—	—	—	1	—	—
	M1K, M4K, W1K, W4K, H4K, H6K, P3K, P6K, P4K	P,D	7120 FK6	—	—	—	1	—	—
	L4R, M4R	C	7120 FR7	—	—	—	1	—	—
	E2T, E6T, L2T, F2T, W4T, W6T, M4T, M6T, H6T, D2TY, P6T, PRT	P,D,C	7120 FT1	—	—	—	1	—	—
	L1Y, F1Y, E2Y, L3Y, M3Y, H4Y	P,D,C	7120 FY5	—	—	—	1	—	—
	4 DOOR								
	E1B, E2B, L3B, L4B	C	7137 FB2	1	—	—	—	—	—
	H1B, H7B	C	7137 FBB	1	—	—	—	—	—
	E1F, L3F	C	7137 FF7	1	—	—	—	—	—
	L4R, L7R, H7R	C	7137 FR7	1	—	—	—	—	—
	E1L, E7L	C	7137 FL1	1	—	—	—	—	—
	E1P, L3P, H1P	C	7137 FP7	1	—	—	—	—	—
	E2Y, L3Y, H1Y	C	7137 FY5	1	—	—	—	—	—
	E1X, E2X, L3X, L4X, L8X	C	7137 FX9	1	—	—	—	—	—
	HST	C	7137 FT1	1	—	—	—	—	—
	REAR QUARTER UPPER								
	E1B, E2B, L3B, L4B	C	3758-9 FB2	1	—	—	—	—	—
	E1F, L3F, H1F, H7F8	C	3758-9 FF7	1	—	—	—	—	—
	E1L, L7L, H7L	C	3758-9 FL1	1	—	—	—	—	—
	E1P, L3P, H1P	C	3758-9 FP7	1	—	—	—	—	—
	L4R, L7R, H7R	C	3758-9 FR7	1	—	—	—	—	—
	E1X, E2X, L3X, L4X, L8X, H1X	C	3758-9 FX9	1	—	—	—	—	—
	E2Y, L3Y, H1Y	C	3758-9 FY5	1	—	—	—	—	—
	H1B, H7B	C	3758-9 FBB	1	—	—	—	—	—
	HST	C	3758-9 FT1	1	—	—	—	—	—
	L1B, H1B, H7B, MDB	C,Y	7167 FB8	—	1	—	—	—	—
	MSB	Y	7167 EB2	—	1	—	—	—	—
	H7L, H8L	C	7167 FL1	—	1	—	—	—	—
	MDF, MSF,	Y	7167 EF7	—	1	—	—	—	—
	L1M, MDM	Y	7167 EM9	—	1	—	—	—	—
	L1F	C	7167 EF2	—	1	—	—	—	—
	H7R, MSR	C,Y	7167 FR7	—	1	—	—	—	—
	HST, MST	C,Y	7167 FT1	—	1	—	—	—	—
	H1P, L1P, MDP	C,Y	7167 FP7	—	1	—	—	—	—
	L1X, H1X, H8X, MDX, MSX	C,Y	7167 EX9	—	1	—	—	—	—
	L1F	Y	7167 EF2	—	1	—	—	—	—
	H1Y, MDY, MSY	C,Y	7167 EY5	—	1	—	—	—	—
	L1TT, MDTT	Y	*7167 FT2	—	1	—	—	—	—
	MDA5	Y	*7167 FA4	—	1	—	—	—	—
	RR. QTR. UPR.								
	H1F	C	3542-3 EF7	1	—	—	—	—	—
	H1X	C	3542-3 EX9	1	—	—	—	—	—
	H1Y	C	3542-3 EY5	1	—	—	—	—	—
	E1B, E2B, L3B, L4B, M4B	C	7105 FB2	—	1	—	—	—	—
	H1B, H7B, L1B,	C, Y	7105 FB8	—	1	—	—	—	—
	E1F, L3F, M3F, H1F	C	7105 FF7	—	1	—	—	—	—
	E1L, L7L, M5L, H7L, H8L	C	7105 FL1	—	1	—	—	—	—
	E2T, M6T, HST, D2TY	C	7105 FT1	—	1	—	—	—	—
	L4R, L7R, M4R, H7R,	C	7105 FR7	—	1	—	—	—	—
	E1P, L3P, H1P	C, Y	7105 FP7	—	1	—	—	—	—
	E2Y, L3Y, M3Y, H1T,	C	7105 FY5	—	1	—	—	—	—
	M6XW	C	7105 FW1	—	1	—	—	—	—
	E1X, E2X, L3X, L4X, L8X, L1X, M3X, M4X, M6X, H1X, H8X	C	7105 FX9	—	1	—	—	—	—

NOTE: A letter code in the carline column indicates the carline for which the part is released as follows:

CARLINES Indicate: J - Challenger, B - Barracuda, V - Valiant, L - Dart, R - Belvedere, W - Coronet, P - Plymouth, D - Dodge, C - Chrysler, Y - Imperial

AR Indicates use as required.
★ Indicates change or addition.

Right and left part numbers are on same line, first number is right, second number is left.

Printed in U.S.A.
December 1970

CODE	PART NAME	CAR LINE	PART NUMBER	Sed.	4 D.H.T.	Sta. Wgn.	2 D.H.T.	Sp. 2 D.H.T.	Conv.
23-86-3	HEADLINING Cont'd.								
	REAR QUARTER UPPER								
	E1B, E2B, L3B, L4B, M4B	C	3546-7 FB2	—	1	—	—	—	—
	H1B, H7B	C	3546-7 FB8	—	1	—	—	—	—
	E1F, L3F, M3F, M6F, H1F, H7F8	C	3546-7 FF7	—	1	—	—	—	—
	E1L, L7L, M5L, H7L, H8L	C	3546-7 FL1	—	1	—	—	—	—
	E1P, L3P, H1P	C	3546-7 FP7	—	1	—	—	—	—
	L4R, L7R, M4R, H7R	C	3546-7 FR7	—	1	—	—	—	—
	E2T, M6T, D2TY, HST	C	3546-7 FT1	—	1	—	—	—	—
	E2Y, L3Y, M3Y, H1Y	C	3546-7 FY5	—	1	—	—	—	—
	M6XW	C	3546-7 FW1	—	1	—	—	—	—
	E1X, E2X, L3X, L4X, L8X, M3X, M4X, M6X, H1X, H8X	C	3546-7 FX9	—	1	—	—	—	—
	L1B	Y	4444-5 FB8	—	1	—	—	—	—
	L1P	Y	4444-5 FP7	—	1	—	—	—	—
	L1TT	Y	4444-5 FT2	—	1	—	—	—	—
	L1F	Y	4444-5 FF5	—	1	—	—	—	—
	L1X	Y	4444-5 EX9	—	1	—	—	—	—
	L1M	Y	4444-5 FM9	—	1	—	—	—	—
	L1B, MDB	Y	7122 FB8	—	1	—	—	—	—
	MBB	Y	7122 FB2	—	1	—	—	—	—
	MDA	Y	7122 FA2	—	1	—	—	—	—
	MSY4	Y	7122 FY5	—	1	—	—	—	—
	L1F	Y	7122 FF5	—	1	—	—	—	—
	MDF, MSF	Y	7122 FF7	—	1	—	—	—	—
	L1P, MDP	Y	7122 FP7	—	1	—	—	—	—
	MST	Y	7122 FT1	—	1	—	—	—	—
	L1TT, MDTT	Y	7122 FT2	—	1	—	—	—	—
	L1M, MDM	Y	7122 FM9	—	1	—	—	—	—
	MSR	Y	7122 FR7	—	1	—	—	—	—
	L1X, MDX, MSX	Y	7122 FX9	—	1	—	—	—	—
	MSXW	Y	7122 FW1	—	1	—	—	—	—
	MRB	Y	7121 FB2	—	—	—	1	—	—
	L3B, MBB	Y	7121 FB8	—	—	—	1	—	—
	L3F	Y	7121 FF5	—	—	—	1	—	—
	MBF, MRF	Y	7121 FF7	—	—	—	1	—	—
	L3X, MBX, MRX	Y	7121 FX9	—	—	—	1	—	—
	MRXW	Y	7121 FW1	—	—	—	1	—	—
	L3TT, MBTT	Y	7121 FT2	—	—	—	1	—	—
	MRT	Y	7121 FT1	—	—	—	1	—	—
	M3P	Y	7121 FP7	—	—	—	1	—	—
	MBY, MRY	Y	7121 FY5	—	—	—	1	—	—
	E1B, E2B, L3B, L4B, M4B	C	7120 FB2	—	—	—	1	—	—
	H3B, H6B	C	7120 EB8	—	—	—	1	—	—
	E1F	C	7120 EF7	—	—	—	1	—	—
	E1L, M5L	C	7120 EL1	—	—	—	1	—	—
	E6XW, M6XW, H6XW	C	7120 EW1	—	—	—	1	—	—
	E1P, L3P	C	7120 FP7	—	—	—	1	—	—
	E1X, E2X, E6X, L3X, L4X, M3X, M4X, M6X	C	7120 EX9	—	—	—	1	—	—
	E2T, E6T, M6T, H6T	C	7120 FT1	—	—	—	1	—	—
	L4R, M4R	C	7120 FR7	—	—	—	1	—	—
	E2Y, L3Y, M3Y, H3Y	C	7120 FY5	—	—	—	1	—	—
	RR. QTR. UPR. HLDG.								
	D1B, F1B, W1B, W4B, W6B, L1B, L2B, L4B, M1B, M4B, M6B, H6B, H3B, H4B, H5B, P3B, P4B, P5B, P6B	P,D	2094-5 FB3	—	—	—	1	—	—
	E1B, E2B, L3B, L4B, M4B	C,Y	2094-5 FB3	—	—	—	1	—	—
	H3B, H7B	C	2094-5 FB7	—	—	—	1	—	—

NOTE: A letter code in the carline column indicates the carline for which the part is released as follows:

CARLINES Indicate: J - Challenger, B - Barracuda, V - Valiant, L - Dart, R - Belvedere, W - Coronet, P - Plymouth, D - Dodge, C - Chrysler, Y - Imperial

AR Indicates use as required.
★ Indicates change or addition.

Right and left part numbers are on same line, first number is right, second number is left.

Printed in U.S.A.
December 1970

CODE	PART NAME	CAR LINE	PART NUMBER	Sed.	4 D.H.T.	Sta. Wgn.	2 D.H.T.	Sp. 2 D.H.T.	Conv.
23-86-3	HEADLINING Cont'd.								
	E1F, F1F, W1F, W4F, W6F, L1F, L2F, L3F, L4F, M3F, M4F, M6F, H3F, H4F, H5F, H6F, P3F, P4F, P5F, P6F	P, D, C	2094-5 EF8	—	—	—	1	—	—
	W1K, W4K, M1K, M4K, H4K, H6K, P3K, P4K, P6K, E2T, E6T, W4T, W6T, L2T, M4T, M6T, H6T, P6T, PRT, D2TY	P, D	2094-5 FK5	—	—	—	1	—	—
		P,D,C	2094-5 FT4	—	—	—	1	—	—
	E1P, L3P, H3P	C	2094-5 FP6	—	—	—	1	—	—
	L4R, M4R	C	2094-5 FR8	—	—	—	1	—	—
	E1L, M51	C	2094-5 EL1	—	—	—	1	--	—
	E6XW, D6XW, W4XW, L2XW, M4XW, M6XW, H4XW, H6XW, P4XW, P6XW	P,D,C	2094-5 EW1	—	—	—	1	—	—
	E1X, E2X, E6X, W1A, W4XA, W4XP, W6XA, L1X, L2X, L3X, M1XA, M4XA, M4XP, M6X, H3X, H4X, H6X, H6XA, L4X, H6XP, P3XA, P4XA, P4XP, P5XA, P6XA, P6XP, M3X, M4X, M6X	P,D,C,Y	2094-5 EX9	—	—	—	1	—	—
	E2Y, F1Y, D1Y, L3Y, M3Y, H3Y, H4Y	P, D, C	2094-5 FY4	—	—	—	1	—	—
	RR. QTR. UPR.								
	MSB	Y	4448-9 FB2	—	1	—	—	—	—
	MSF, MDF	Y	4448-9 FF7	—	1	—	—	—	—
	MDM	Y	4448-9 FM9	—	1	—	—	—	—
	MSX, MDX	Y	4448-9 FX9	—	1	—	—	—	—
	MSY, MDY	Y	4448-9 FY5	—	1	—	—	—	—
	MSXW	Y	4448-9 FW1	—	1	—	—	—	—
	MDA	Y	*4448-9 FA2	—	1	—	—	—	—
	MDB	Y	*4448-9 FB8	—	1	—	—	—	—
	MDP	Y	*4448-9 FP7	—	1	—	—	—	—
	MTT	Y	*4448-9 FT2	—	1	—	—	—	—
	MST	Y	*4448-9 FT1	—	1	—	—	—	—
	RR. QTR. UPPER RR. WINDOW OPNG.								
	MSB	Y	4447 FB2	—	1	—	—	—	—
	MSF, MDF	Y	4447 FF7	—	1	—	—	—	—
	MDM	Y	4447 FM9	—	1	—	—	—	—
	MSX, MDX	Y	4447 FX9	—	1	—	—	—	—
	MSY, MDY	Y	4447 FY5	—	1	—	—	—	—
	MDB	Y	4447 FB8	—	1	—	—	—	—
	MDTT	Y	4447 FT2	—	1	—	—	—	—
	MDA	Y	4447 FA2	—	1	—	—	—	—
	MST	Y	4447 FT1	—	1	—	—	—	—
	MSR	Y	4447 FR7	—	1	—	—	—	—
	MSXW	Y	4447 FW1	—	1	—	—	—	—
	MRXW	Y	4446 FW1	—	—	—	1	—	—
	MBB	Y	4446 FB8	—	—	—	1	—	—
	MBP	Y	4446 FP7	—	—	—	1	—	—
	MRT	Y	4446 FT1	—	—	—	1	—	—
	MBTT	Y	4446 FT2	—	—	—	1	—	—
	MBA	Y	4446 FA4	—	—	—	1	—	—
	MRB	Y	4446 FB2	—	—	—	1	—	—
	MBF, MRF	Y	4446 FF7	—	—	—	1	—	—
	MBM	Y	4446 FM9	—	—	—	1	—	—
	MBY, MRY	Y	4446 FY5	—	—	—	1	—	—
	MBX, MRX	Y	4446 FX9	—	—	—	1	—	—
23-86-4	PILLOW, Upper Quarter Trim CODES								
	MDA	Y	3548-9 FA5	—	1	—	—	—	—
	MDB	Y	3548-9 FB7	—	1	—	—	—	—
	MDP	Y	3548-9 FP6	—	1	—	—	—	—
	MDTT	Y	3548-9 FT2	—	1	—	—	—	—

NOTE: A letter code in the carline column indicates the carline for which the part is released as follows:

CARLINES Indicate: J - Challenger, B - Barracuda, V - Valiant, L - Dart, R - Belvedere, W - Coronet, P - Plymouth, D - Dodge, C - Chrysler, Y - Imperial

AR Indicates use as required.
★ Indicates change or addition.

Right and left part numbers are on same line, first number is right, second number is left.

Printed in U.S.A.
December 1970

CODE	PART NAME	CAR LINE	PART NUMBER	Sed.	4 D.H.T.	Sta. Wgn.	2 D.H.T.	Sp. 2 D.H.T.	Conv.
23-86-4	PILLOW Cont'd.								
	MST	Y	3548-9 FT5	—	1	—	—	—	—
	MSR	Y	3548-9 FR9	—	1	—	—	—	—
	MDY, MSY	Y	3548-9 FY4	—	1	—	—	—	—
	MSB	Y	3548-9 EB3	—	1	—	—	—	—
	MDF, MSF	Y	3548-9 EF8	—	1	—	—	—	—
	MDM	Y	3548-9 EM9	—	1	—	—	—	—
	MSXW	Y	3548-9 EW1	—	1	—	—	—	—
	MDX, MSX	Y	3548-9 EX9	—	1	—	—	—	—
23-86-8	RETAINER, Deck Opening Upper								
	Panel Vinyl	J	3446 351	—	—	—	1	1	—
		Y	2963 408	—	1	—	—	—	—
		Y	2963 407	—	—	—	1	—	—
	End	Y	3445 753	—	2	—	2	—	—
23-86-10	BOW, Roof	V,L	2604 056	1	—	—	1	—	—
		V	2965 652	—	—	—	—	1	—
		B	2963 268	—	—	—	1	—	—
		J	2963 268	—	—	—	1	1	—
	2 DOOR								
	No. 1	R,W	2841 196	1	—	—	1	1	—
	No. 2	R,W	2841 196	1	—	—	1	1	—
		P	2900 117	1	1	—	—	—	1
	4 DOOR								
	No. 1	R,W	2840 812	1	—	3	—	—	—
	No. 1	R,W	2784 283	1	—	—	—	—	—
		P,D,C	2893 295	—	—	2	—	—	—
	No. 2	P,D,C	2895 157	—	—	1	—	—	—
		P,D, C	2901 674	—	—	—	1	—	—
		P,D,C	2900 117	1	—	—	—	—	—
		Y	2900 117	—	2	—	—	—	—
		Y	2901 674	—	—	—	2	—	—
23-86-11	RETAINER, Side Rail Roof Bow								
	No. 1	V,L,R,W,P,D,C,Y	2605 112	4	4	—	4	4	—
	No. 1	R,W,P,D,C	2605 112	—	—	6	—	—	—
		R,W,P,D,C,Y	2482 281	AR	AR	AR	AR	AR	—
23-86-14	PAD, Air Conditioning Roof Unit Trim	P,D,C	2936 416	—	—	1	—	—	—
23-86-19	RETAINER, Headlining								
	Short	V,L,B,J,R,W, P,D,C,Y			AR	AR	—	AR	AR
	Med.	V,L,B,J,R,W, P,D,C,Y			AR	AR	—	AR	AR
	Long	V,L,B,J,R,W, P,D,C,Y			AR	AR	—	AR	AR
	Hard Hd-Lining to Qtr. Pnl.	B	3415 354-5	—	—	—	1	—	—
	Soft Hd-Lining to Qtr. Pnl.	B	3415 614-5	—	—	—	1	—	—
	Hd-Lining to Lwr. Qtr. Pnl.	B	3415 276-7	—	—	—	1	—	—
	Hd-Lining to Upr. Qtr. Pnl.	J	3415 454-5	—	—	—	1	1	—
	Hd-Lining to Upr. Qtr. Pnl.	J	3415 356-7	—	—	—	1	1	—
	Side	W	3446 238-9	1	—	—	—	—	—
	N. Y. Taxi Side	W	2861 698-9	1	—	—	—	—	—
	Front	W	1009 FWW	1	—	—	—	—	—
	Rear	W	1010 FWW	1	—	—	—	—	—
	Side Frt.	R,W	2861 698-9	—	—	1	—	—	—
	Side Rr.	R,W	2861 528-9	—	—	1	—	—	—
	Soft Hd-Lining to Upr. Qtr. Pnl.								
	2 DOOR	R,W	2877 196-7	1	—	—	1	—	—
	Nos. 2, 3 and 4 Pnls.	P,D,C	2877 998	—	—	3	—	—	—
	Rr.	P,D,C	2894 510-1	—	—	1	—	—	—

NOTE: A letter code in the carline column indicates the carline for which the part is released as follows:

CARLINES Indicate: J - Challenger, B - Barracuda, V - Valiant, L - Dart, R - Belvedere, W - Coronet, P - Plymouth, D - Dodge, C - Chrysler, Y - Imperial

AR Indicates use as required.
★ Indicates change or addition.

Right and left part numbers are on same line, first number is right, second number is left.

Printed in U.S.A.
December 1970

CODE	PART NAME	CAR LINE	PART NUMBER	Sed.	4 D.H.T.	Sta. Wgn.	2 D.H.T.	Sp. 2 D.H.T.	Conv.
23-86-19	RETAINER Cont'd.								
	Soft Hd-Lining to Upr. Qtr. Pnl.	P,D,C,Y	2878 416	—	2	—	—	—	—
	Soft Hd-Lining to Lwr. Qtr. Pnl.	P,D,C,Y	2789 277	—	—	—	2	—	—
	REAR WINDOW								
	2 DOOR Upr.	R,W	2842 738-9	1	—	—	1	—	—
	2 DOOR Side	R,W	2842 792-3	1	—	—	1	—	—
	4 DOOR Upr.	R,W	2838 587	1	—	—	—	—	—
	4 DOOR Side	R,W	2842 988-9	1	—	—	—	—	—
	Upr.	W	2840 790	—	—	—	—	1	—
	Side	W	2840 788-9	—	—	—	—	1	—
	Upr.	L	2782 726	1	—	—	—	—	—
	Side	L	2782 724-5	1	—	—	—	—	—
	2 DOOR Upr.	P,D	2900 238	1	1	—	—	—	—
	2 DOOR Side	P,D	2900 244-5	1	—	—	1	—	—
	4 DOOR Upr.	P,D	2902 858-9	1	—	—	—	—	—
	4 DOOR Side	P,D	3445 372-3	1	—	—	—	—	—
	Side	P,D	2900 244-5	—	1	—	—	1	—
	Upr.	C,Y	2900 240	1	—	—	—	—	—
	Upr.	C,Y	2900 241	—	1	—	—	—	—
	Side Upr.	C,Y	3445 374-5	1	—	—	—	—	—
	Side Upr.	C,Y	2900 250-1	—	1	—	—	—	—
	Side Lwr.	C,Y	2901 522-3	1	1	—	—	—	—
23-86-21	PLATE, No. 6 Headlining Retainer	P,D,C,Y	3415 879	2	2	—	—	—	—
23-86-24	RETAINER, Headlining Moulding								
	N. Y. Taxi Sect. No. 1	W	2877 229	1	—	—	—	—	—
	N. Y. Taxi Sect. No. 2	W	2877 230	1	—	—	—	—	—
	REAR WINDOW								
	Lower	R,W	2876 532	1	—	—	—	—	—
	Lower	W	2840 791	—	—	—	—	1	—
	Sec. 1 thru Sec. 3	R,W	2589 382	—	—	3	—	—	—
	Sec. 4	R,W	2657 233	—	—	1	—	—	—
	No. 1 Pnl.	P,D,C	2581 461	—	—	2	—	—	—
	No. 3 Pnl.	P,D,C	2877 427	—	—	1	—	—	—
23-82-26	BRACKET, Front Seat Back Robe Strap Attaching	Y	3447 264-5	—	2	—	—	—	—
23-86-29	CLIP, Formed Headlining Retainer	B,J	3415 649	—	—	—	4	4	—
23-86-33	SPACER, Head-Lining Moulding Retainer to Roof Rail	P,D,C	2877 430	—	—	AR	—	—	—
23-86-35	MOULDING, Roof Headlining								
	Rear Window	L	3705 FX9	2	—	—	—	—	—
	2 DOOR	R,W	3782 DX9	1	—	—	1	—	—
	4 DOOR	R,W	3783 DX9	1	—	—	—	—	—
	UPPER								
	C2B, C6B, CRB	W	*3732-3 FB5	—	—	—	—	1	—
	C2F, C6F, CRF	W	*3732-3 FF8	—	—	—	—	1	—
	C2K, C6K	W	*3732-3 FK5	—	—	—	—	1	—
	C2T, C6T, CRT	W	*3732-3 FT4	—	—	—	—	1	—
	C2XW, C6XW	W	*3732-3 EW1	—	—	—	—	1	—
	C2XA, C5XA, C6XA, CRXA	W	3732-3 DX9	—	—	—	—	1	—
	1 and 2	R,W	1070 BW1	2	—	4	—	—	—
	Rear Section to Tailgate Window	R,W	2877 077	—	—	1	—	—	—
	w/Cargo Compartment Lamp	R,W	2877 076	—	—	1	—	—	—
	Rear Window Lower								
	C2B, C6B, CRB	W	*3721 FB5	—	—	—	—	1	—
	C2F, C6F, CRF	W	*3721 FF8	—	—	—	—	1	—
	C2K, C6K	W	*3721 FK5	—	—	—	—	1	—
	C2T, C6T, CRT	W	*3721 FT4	—	—	—	—	1	—
	C2XW, C6XW	W	3721 EW1	—	—	—	—	1	—

NOTE: A letter code in the carline column indicates the carline for which the part is released as follows:

CARLINES Indicate: J - Challenger, B - Barracuda, V - Valiant, L - Dart, R - Belvedere, W - Coronet, P - Plymouth, D - Dodge, C - Chrysler, Y - Imperial

AR Indicates use as required.
★ Indicates change or addition.

Right and left part numbers are on same line, first number is right, second number is left.

Printed in U.S.A.
December 1970

CODE	PART NAME	CAR LINE	PART NUMBER	Sed.	4 D.H.T.	Sta. Wgn.	2 D.H.T.	Sp. 2 D.H.T.	Conv.
23-86-35	MOULDING Cont'd.								
	C2XA, C5XA, C6XA, CRXA	W	3700 DX9	—	—	—	—	1	—
	Nos. 1, 2, 3 and 4 Panels	P,D,C	1064 EZ1	—	—	4	—	—	—
	RR. WINDOW 4 DOOR	P,D	3708-9 EX9	1	—	—	—	—	—
	E2B, E1B, L1B, M1B, M4B, H3B, H4B, H7B, L2B, D1B, L4B, B2B, B1B, F1B, H1B, W1B, W4B, P3B, P4B, P7B	P,D	3708-9 EB3	1	—	—	—	—	—
	L1F, M1F, M4F, H3F, H4F, H7F, L2F, D1F, L4F, F1F, H1F, W1F, W4F, P3F, P4F, P7F	P,D	3708-9 EF8	1	—	—	—	—	—
	E2T, E1T, K1T, L2T, K2T, M4T, H4T, H8T, B2T, B1T, F2T, H1T, W4T, P4T, P8T	P,D	*3708-9 FT4	1	—	—	—	—	—
	L1Y, M1Y, H3Y, D1Y, F1Y, H1Y, W1Y, P3Y	P,D	*3708-9 FY4	1	—	—	—	—	—
		C	3722-3 EX9	1	—	—	—	—	—
	E1B, E2B, L3B, L4B	C	3722-3 EB3	1	—	—	—	—	—
	H1B, H7B	C	3722-3 EB7	1	—	—	—	—	—
	E1F, L3F, H1F	C	3722-3 EF8	1	—	—	—	—	—
	E1L, L7L, H7L	C	3722-3 EL3	1	—	—	—	—	—
	E1P, L3P, H1P	C	*3722-3 FP6	1	—	—	—	—	—
	L4R, L7R, H7R	C	*3722-3 FR8	1	—	—	—	—	—
	HST	C	*3722-3 FT4	1	—	—	—	—	—
	E2Y, L3Y, H1Y	C	*3722-3 FY4	1	—	—	—	—	—
	UPPER and SIDE 2 DOOR 1 PIECE								
	E2B, E1B, L1B, M1B, M4B, M6B, H6B, H3B, H4B, H5B, H7B, D1B, L2B, L4B, H1B, W1B, W4B	P,D	3710 EB3	1	1	—	—	1	—
	M1F, M4F, M6F, H6F, H3F, H4F, H5F, H7F, L1F, D1F, L2F, L4F, H1F, H8F, W1F, W4F	P,D	3710 EF8	—	1	—	—	1	—
	E2T, E1T, K1T, K2T, M4T, H6T, H4T, D6T, H8T, L2T, H1T, W4T	P,D	*3710 FT4	1	1	—	—	1	—
	M1XA, M4XA, M4XP, M6XA, H6XA, H3XA, H4XA, H4XP, D6XA, H8XA, X2X, L1X, D1X, L2X, H1X, H7X, H8X9, W1XA, W4XA, W4XP	P,D	3710 EX9	—	1	—	—	1	—
	M4XW, H4XW, L4XW	P,D	3710 EW1	—	1	—	—	1	—
	L1Y, M1Y, H3Y, D1Y, H1Y, W1Y	P,D	*3710 FY4	1	1	—	—	1	—
	M4K, H6K, H3K, H4K, H8K, W4K	P,D	*3710 FK5	—	1	—	—	1	—
	UPPER and SIDE 2 DOOR 2 PIECE								
	E1B, E2B, M1B, M4B, M6B, H3B, H4B, H5B, H6B, H7B, W1B, W4B, L1B, L2B, L4B, D1B, H1B	P,D	*3764-5 FB3	1	1	—	—	1	—
	E1T, E2T, K1T, K2T, M4T, H4T, H6T, D6T, H8T, W4T, L2T, H1T, P4TT	P,D	*3764-5 FT4	1	1	—	—	1	—
	L1Y, M1Y, H3Y, W1Y, D1Y, H1Y	P,D	*3764-5 FY4	1	1	—	—	1	—
	M1F, M4F, M6F, H3F, H4F, H5F, H6F, H7F, W1F, W4F, L1F, L2F, L4F, D1F, H1F, H7F, H8F, P4F8	P,D	*3764-5 FF8	—	1	—	—	1	—
	M1XA, M4XA, M4XP, M6XA, H3XA, H4XA, H4XP, H6XA, H8XA, D6XA, W1XA, W4XA, W4XP, L1X, L2X, L4X, D1X, H1X, H7X, H8X, P4XA	P,D	*3764-5 FX9	1	1	—	—	1	—
	M4XW, H4XW, L4XW	P,D	*3764-5 FW1	—	1	—	—	1	—
	M4K, H3K, H4K, H6K, H8K, W4K	P,D	*3764-5 FK5	—	1	—	—	1	—
		Y, C	3734 EX9	—	1	—	—	—	—
	E1B, E2B, L3B, L4B, M4B	C	3734 EB3	—	1	—	—	—	—
	H1B, H7B, L1B	C,Y	3734 EB9	—	1	—	—	—	—
	E1F, L3F, H1F, M3F, M6F	C	3734 EF8	—	1	—	—	—	—
	L1F	Y	*3734 FF4	—	1	—	—	—	—
	E1L, L7L, H7L, H8L, M5L	C	3734 EL3	—	1	—	—	—	—
	E1P, L3P, H1P, L1P	C,Y	*3734 FP6	—	1	—	—	—	—
	L4R, L7R, H7R, M4R	C	*3734 FR8	—	1	—	—	—	—
	E2T, HST, M6T, D2TY	C	*3734 FT4	—	1	—	—	—	—
	E2Y, L3Y, H1Y, M3Y	C	*3734 FY4	—	1	—	—	—	—
	L1M	Y	3734 EM9	—	1	—	—	—	—
	L1T	Y	*3734 FT2	—	1	—	—	—	—

NOTE: A letter code in the carline column indicates the carline for which the part is released as follows:

CARLINES Indicate: J - Challenger, B - Barracuda, V - Valiant, L - Dart, R - Belvedere, W - Coronet, P - Plymouth, D - Dodge, C - Chrysler, Y - Imperial

AR Indicates use as required.
★ Indicates change or addition.

Right and left part numbers are on same line, first number is right, second number is left.

Printed in U.S.A.
December 1970

CODE	PART NAME	CAR LINE	PART NUMBER	Sed.	4 D.H.T.	Sta. Wgn.	2 D.H.T.	Sp. 2 D.H.T.	Conv.
23-86-35	MOULDING Cont'd.								
	M6XW	C	3734 EW1	—	1	—	—	—	—
	CTR. LWR.	P,D,Y	2877 382	1	—	—	—	—	—
		C	2877 382	1	1	—	—	—	—
	CTR. UPPER								
	2 DOOR	P	2877 382	1	1	—	—	1	—
		D,C,Y	2877 382	—	1	—	—	—	—
23-86-36	CAP, Headlining Moulding								
	Center	L	3711 FX9	1	—	—	—	—	—
	REAR WINDOW								
	Joint	R,W	3784 EX9	1	—	—	—	—	—
	Lower Corner	W	3716-7 DX9	—	—	—	—	1	—
	C2B, C6B, CRB	W	*3716-7 FB5	—	—	—	—	1	—
	C2F, C6F, CRF	W	*3716-7 FF8	—	—	—	—	1	—
	C2K, C6K	W	*3716-7 FK5	—	—	—	—	1	—
	C2T, C6T, CRT	W	*3716-7 FT4	—	—	—	—	1	—
	C2XW, C6XW	W	*3716-7 EW1	—	—	—	—	1	—
	Upper Center								
	C2B, C6B, CRB	W	3737 FB5	—	—	—	—	1	—
	C2F, C6F, CRF	W	3737 FF8	—	—	—	—	1	—
	C2K, C6K	W	3737 FK5	—	—	—	—	1	—
	C2T, C6T, CRT	W	3737 FT4	—	—	—	—	1	—
	C2XW, C6XW	W	3737 EW1	—	—	—	—	1	—
	C2XA, C5XA, C6XA, CRXA	W	3737 DX9	—	—	—	—	1	—
	Joint	R,W	2879 288	1	—	—	—	—	—
	N. Y. Taxi	W	2876 949	4	—	—	—	—	—
	Sec. No. 1	R,W	2876 949	—	—	2	—	—	—
	Sec. No. 2	R,W	2876 949	—	—	2	—	—	—
	Sec. No. 3	R,W	2876 949	—	—	2	—	—	—
	Sec. No. 4	R,W	2876 950	—	—	2	—	—	—
	REAR WINDOW								
	Ctr. Lwr.	P, D, C, Y	3415 938	1	1	—	—	1	1
		P,D,C	2879 310	—	—	AR	—	—	—
23-86-40	BRACKET, Rear Window Trim Panel								
	Upr. Ret.	Y	2879 208	—	7	—	—	—	—
	Upr. Ret.	Y	2877 391	—	3	—	—	—	—
	Upr. Ret.	Y	2877 395	—	3	—	—	—	—
	Lwr. Ret.	Y	2877 392-3	—	1	—	—	—	—
	Lwr. Ret.	Y	2879 207	—	2	—	—	—	—
	Side Ret.	Y	2879 209	—	8	—	9	—	—
	Outer Ret.	Y	2877 338-9	—	1	—	—	—	—
	Lwr.	Y	2877 396-7	—	—	—	1	—	—
23-91-6	PANEL, Cowl Trim								
	Paint as Req'd.	B,J	1404-5 FX9	—	—	—	1	1	1
		V, L	1402-3 CX9	1	—	—	—	1	1
	CODES								
	L1B, L2B, D4B, D6B, M2B, M6B, H1B, H2B, H2BW, P3B, P4B, P6B, P6BW, C2B, C6B, CRB	R,W	1410-1 EB7	1	—	1	1	1	1
	M6F, H1F, H2F, H2FW, P3F, P6F, D4F, D6F, C2F, C6F, CRF	R,W	1410-1 EF8	1	—	1	1	1	1
	M6K, H2K, H2KW, P3K, P6K, P6KW, D4K, D6K, C2K, C6K	R,W	1410-1 FK6	1	—	—	1	1	1
	K1T, K2T, T2T, D2T, D4T, L2T, M2T, M6T, H2T, H2TW, P6T, P6TW, C2T, C6T, CRT	R,W	1410-1 FT4	1	—	1	1	1	1
	L1Y, H1Y, P3Y	R,W	1410-1 FY4	1	—	—	—	—	—

NOTE: A letter code in the carline column indicates the carline for which the part is released as follows:

CARLINES Indicate: J - Challenger, B - Barracuda, V - Valiant, L - Dart, R - Belvedere, W - Coronet, P - Plymouth, D - Dodge, C - Chrysler, Y - Imperial

AR Indicates use as required.
★ Indicates change or addition.

Right and left part numbers are on same line, first number is right, second number is left.

Printed in U.S.A.
December 1970

CODE	PART NAME	CAR LINE	PART NUMBER	Sed.	4 D.H.T.	Sta. Wgn.	2 D.H.T.	Sp. 2 D.H.T.	Conv.
23-91-6	PANEL Cont'd.								
	K2X, T2X, L2X, D4X, D4XW, M2X, M6X, M6XY M6XW, H1X, H2X, H2XW, D6XW, D6X, D6XY, P3X, P4X, P6XA, P6XW, P6XY, P6X, C2XA, C2XW, C5XA, C6XA, C6XW, CRXA	R,W	1410-1 BX9	1	—	1	1	1	1
	E2B, B2B, F1B, F2B, F2BW, W1B, W4B, W4BW, L1B, L2B, L2BW, R2B, R4B, M1B, M4B, M4BW, M6B, H1B, H3B, H4B, H6B, H7B, P3B, P4B, P5B, P6B, P7B,	P, D	1420-1 FB3	1	1	1	1	1	1
	E2F, B2F, F1F, F2F, W1F, W4F, W7F, L1F, L2F, M1F, M4F, M6F, M7F, H1F, H3F, D4F, R2F, R4F, P7F, H4F, H6F, H7F, P3F, P6F	P,D	1420-1 EF8	1	1	1	1	1	1
	E2T, K1T, K2T, B2T, F2T, F2TW W4T, W4TW, W6T, L2T, L2TW, M4T, M4TW, M6T, H1T, H4T, H4TW, H6T, H8T, P6T, P8T,	P, D	1420-1 FT4	1	1	1	1	1	—
	W1K, W4K, M1K, M4K, H3K, H4K, H6K, P3K, P4K, P6K	P,D	1420-1 FK6	—	1	—	1	1	—
	F1XA, F2XA, W1XA, W4XA, W4XP, W4XW, W6XA, W8XA, L1XA, L2X, L2XA, L2XW, L4X, L4XW, D1X, D2XA, D4XA, D6XA, D6X, D6XW, X1X, X2X, M1XA, M4XA, M4XW, M4XP, M6XA, R2XA, J6XA, M6X, M6XW, M8XA, H1X, H3X, H3XA, H4XP, H4XW, H6XA, H8XA, H4X, H6X, H6XW, H7X, P3XA, P4XA, P4XP, P4XW, P5XA, P6XA, P6XW, P6XP, P7XA, P8XA, K1A, K2A	P, D	1420-1 EX9	1	1	1	1	1	1
	F1Y, W1Y, W4Y, L1Y, M1Y, M4Y, H1Y, H4Y	P,D	1420-1 FY4	1	1	—	1	—	—
	E1B, E2B, L3B, L4B, M4B, M6B, P4B	C	1438-9 FB3	1	1	1	1	—	1
	H1B, H3B, H6B, H7B	C	1438-9 FB7	1	1	—	1	—	—
	E1F, L3F, M3F, M6F, H1F, H3F, P4F, P8F, H7F	C	1438-9 EF8	1	1	1	1	—	1
	E1L, L7L, M5L, H7L, H8L, P7L	C	1438-9 FL3	1	1	1	1	—	—
	E1P, L3P, H1P, H3P	C	1438-9 FP6	1	1	—	1	—	—
	L4R, L7R, M4R, H7R, P4R	C	1438-9 FR8	1	1	1	1	—	—
	E2T, E6T, M6T, HST, H6T, P4T, D2TY	C	1438-9 FT4	—	1	—	1	—	1
	E1X, E2X, E6X, E6XW, L3X, L4X, L8X M3X, M4X, M6X, M6XW, H1X, H3X, H6X, H6XW, H8X, P4X, P8X	C	1438-9 EX9	1	1	1	1	—	1
	E2Y, L3Y, M3Y, H1Y, H3Y	C	1438-9 FY4	1	1	—	1	—	1
	CARPETED								
	MRB, MSB	Y	1434-5 FB4	—	1	—	1	—	—
	L1B, L3B, MDB, MBB	Y	1434-5 FB9	1	1	—	—	—	—
	L1F, L3F, MDF, MSF, MBF, MRF	Y	1434-5 EF9	1	1	—	1	—	—
	L1M, MDM,	Y	1434-5 EM9	1	1	—	1	—	—
	L1P, MDP, MBP	Y	1434-5 FQ6	1	1	—	1	—	—
	MSR	Y	1434-5 FR7	—	1	—	—	—	—
	L1TT, L3TT, MDTT, MBTT	Y	1434-5 FT7	1	1	—	1	—	—
	MST, MRT	Y	1434-5 FT4	—	1	—	1	—	—
	L1X, L3X, MDA, MDX, MBX, MSX, MSXW, MRX, MRXW	Y	1434-5 EX9	1	1	—	1	—	—
	MDY, MBY, MSY, MRY	Y	1434-5 FY5	—	1	—	1	—	—
23-91-11	SILENCER, Cowl Side Trim Panel	R,W	2588 236-7	1	—	1	1	1	—
23-92-5	PANEL, Door Trim								
	w/WOOD GRAIN TRIM CODES								
	L1B, L2B, L4B Frt.	V	4706-7 FB7	1	—	—	—	—	—
	Rr.	V	4708-9 FB7	1	—	—	—	—	—

NOTE: A letter code in the carline column indicates the carline for which the part is released as follows:

CARLINES Indicate: J - Challenger, B - Barracuda, V - Valiant, L - Dart, R - Belvedere, W - Coronet, P - Plymouth, D - Dodge, C - Chrysler, Y - Imperial

AR Indicates use as required.
★ Indicates change or addition.

Right and left part numbers are on same line, first number is right, second number is left.

Printed in U.S.A.
December 1970

CODE	PART NAME		CAR LINE	PART NUMBER	Sed.	4 D.H.T.	Sta. Wgn.	2 D.H.T.	Sp. 2 D.H.T.	Conv.
23-92-5	PANEL Cont'd.									
	L4E	Frt.	V	4706-7 FE4	1	—	—	—	—	—
		Rr.	V	4708-9 FE4	1	—	—	—	—	—
	L1F, L2F, L4F	Frt.	V	4706-7 FF8	1	—	—	—	—	—
		Rr.	V	4708-9 FF8	1	—	—	—	—	—
	L4T	Frt.	V	4706-7 FT5	1	—	—	—	—	—
		Rr.	V	4708-9 FT5	1	—	—	—	—	—
	L6BW, L6EW, L6XW	Frt.	V	4706-7 FW1	1	—	—	—	—	—
		Rr.	V	4708-9 FW1	1	—	—	—	—	—
	L1X, L2X, L4X, L6X	Frt.	V	4706-7 FX9	1	—	—	—	—	—
		Rr.	V	4708-9 FX9	1	—	—	—	—	—
	w/o WOOD GRAINED TRIM									
	L1B, L4B	Frt.	V	*1476-7 FB7	1	—	—	—	—	—
		Rr.	V	4708-9 FB7	1	—	—	—	—	—
	L4E	Frt.	V	*1476-7 FE4	1	—	—	—	—	—
		Rr.	V	4708-9 FE4	1	—	—	—	—	—
	L1F, L4F	Frt.	V	*1476-7 FF8	1	—	—	—	—	—
		Rr.	V	4708-9 FF8	1	—	—	—	—	—
	L4T	Frt.	V	*1476-7 FT5	1	—	—	—	—	—
		Rr.	V	4708-9 FT5	1	—	—	—	—	—
	L6BW, L6EW, L6XW	Frt.	V	*1476-7 FW1	1	—	—	—	—	—
		Rr.	V	4708-9 FW1	1	—	—	—	—	—
	L1X, L4X, L6X	Frt.	V	*1476-7 FX9	1	—	—	—	—	—
		Rr.	V	4708-9 FX9	1	—	—	—	—	—
	w/o WOOD GRAIN TRIM									
	L2B	Frt.	V,L	3152-3 EOB	1	—	—	—	—	—
		Rr.	V,L	3234-5 EOB	1	—	—	—	—	—
	L2F	Frt.	V,L	3152-3 FOF	1	—	—	—	—	—
		Rr.	V,L	3234-5 FOF	1	—	—	—	—	—
	L2X	Frt.	V,L	3152-3 EOX	1	—	—	—	—	—
		Rr.	V,L	3234-5 EOX	1	—	—	—	—	—
	w/WOOD GRAINED TRIM									
	L1B, D2B, L4B		V	4714-5 FB7	—	—	—	—	1	—
	L4E		V	4714-5 FE4	—	—	—	—	1	—
	L1F, D2F, L4F		V	4714-5 FF8	—	—	—	—	1	—
	L4T		V	4714-5 FT5	—	—	—	—	1	—
	L1X, D2X, L4X		V	4714-5 FX9	—	—	—	—	1	—
	L6BW, L6EW, L6XW		V	4714-5 FW1	—	—	—	—	1	—
	w/o WOOD GRAINED TRIM W/MYLAR MLDG.									
	L1B, D2B, L4B		V	4700-1 FB7	—	—	—	—	1	—
	L4E		V	4700-1 FE4	—	—	—	—	1	—
	L1F, D2F, L4F		V	4700-1 FF8	—	—	—	—	1	—
	L4T		V	4700-1 FT5	—	—	—	—	1	—
	L1X, D2X, L4X		V	4700-1 FX9	—	—	—	—	1	—
	L6BW, L6FW, L6XW		V	4700-1 FW1	—	—	—	—	1	—
	W/O WOOD GRAINED TRIM W/O MYLAR MLDG.									
	L1B, D2B, L4B, L2B		V	*1474-5 FB7	—	—	—	—	1	—
	L1F, D2F, L4F, L2F		V	*1474-5 FF8	—	—	—	—	1	—
	L4E		V	*1474-5 FE4	—	—	—	—	1	—
	L4T		V	*1474-5 FT5	—	—	—	—	1	—
	L6BW, L6EW, L6XW		V	*1474-5 FW1	—	—	—	—	1	—
	L1X, D2X, L4X, L2X, L6X		V	*1474-5 FX9	—	—	—	—	1	—
	W/O MLDG. HOLES									
	H4B, H6B		B	3170-1 FB6	—	—	—	1	—	1
	H4F, H6F		B	3170-1 FF7	—	—	—	1	—	1
	H4F, H6F		B	3170-1 FF8	—	—	—	1	—	1
	H6E		B	3170-1 FE5	—	—	—	1	—	1
	H6T, PRT		B	3170-1 FT1	—	—	—	1	—	1

NOTE: A letter code in the carline column indicates the carline for which the part is released as follows:

CARLINES Indicate: J - Challenger, B - Barracuda, V - Valiant, L - Dart, R - Belvedere, W - Coronet, P - Plymouth, D - Dodge, C - Chrysler, Y - Imperial

AR Indicates use as required.
★ Indicates change or addition.

Right and left part numbers are on same line, first number is right, second number is left.

Printed in U.S.A.
December 1970

CODE	PART NAME		CAR LINE	PART NUMBER	Sed.	4 D.H.T.	Sta. Wgn.	2 D.H.T.	Sp. 2 D.H.T.	Conv.
23-92-5	PANEL Cont'd.									
	H4BW, H4FW, H4XW, H6BW, H6FW, H6XW		B	3170-1 FW1	—	—	—	1	—	1
	H4X, H6X, PRX		B	3170-1 FX9	—	—	—	1	—	1
	W/MLDG. HOLES									
	P6B		B	4676-7 FB6	—	—	—	1	—	1
	P6F		B	4676-7 FF7	—	—	—	1	—	1
	P6YX		B	4676-7 FY5	—	—	—	1	—	1
	P6E		B	4676-7 FE5	—	—	—	1	—	1
	P5K, P6K		B	4676-7 FK6	—	—	—	1	—	1
	P6T, PRT		B	4676-7 FT1	—	—	—	1	—	1
	P6BW, P6EW, P6FW, P6XW, PRXW		B	4676-7 FW1	—	—	—	1	—	1
	P5X, P6A, PRX		B	4676-7 FX9	—	—	—	1	—	1
	W/O ORNAMENT HOLES									
	H4B, H6B		J	3112-3 FB6	—	—	—	1	—	1
	H6F		J	3112-3 FF7	—	—	—	1	—	1
	H6T		J	3112-3 FT1	—	—	—	1	—	1
	H6E		J	3112-3 FE5	—	—	—	1	—	1
	H6K		J	3112-3 FK6	—	—	—	1	—	1
	H4X, H6X		J	3112-3 FX9	—	—	—	1	—	1
	H6XW		J	3112-3 FW1	—	—	—	1	—	1
	W/ORNAMENT HOLES									
	H4B, H6B		J	*4634-5 FB6	—	—	—	1	—	1
	H6F		J	*4634-5 FF7	—	—	—	1	—	1
	H6T		J	*4634-5 FT1	—	—	—	1	—	1
	H6E		J	*4634-5 FE5	—	—	—	1	—	1
	H6K		J	*4634-5 FK6	—	—	—	1	—	1
	H4X, H6X, L6X		J	*4634-5 GX9	—	—	—	1	—	1
	H6XW		J	*4634-5 GW1	—	—	—	1	—	1
	w/ORNAMENT HOLES									
	H5B		J	4546-7 FB6	—	—	—	1	1	—
	H5F		J	4546-7 FF7	—	—	—	1	1	—
	HRT		J	4546-7 FT1	—	—	—	1	1	1
	H5K, HRK		J	4546-7 FK6	—	—	—	1	1	—
	H5X, HRX		J	4546-7 FX9	—	—	—	1	1	1
	L2B, D2B		L	3150-1 EOB	—	—	—	1	—	—
	D2F		L	3150-1 FOF	—	—	—	1	—	—
	D2T		L	3150-1 FOT	—	—	—	1	—	—
	L2X, D2X		L	3150-1 EOX	—	—	—	1	—	—
	H1B, H2B	Frt.	L	3120-1 FB3	1	—	—	—	—	—
		Rr.	L	3216-7 FB3	1	—	—	—	—	—
	H1F	Frt.	L	3120-1 FF4	1	—	—	—	—	—
		Rr.	L	3216-7 FF4	1	—	—	—	—	—
	H2T	Frt.	L	3120-1 FT5	1	—	—	—	—	—
		Rr.	L	3216-7 FT5	1	—	—	—	—	—
	H1X, H2X	Frt.	L	3120-1 FX9	1	—	—	—	—	—
		Rr.	L	3216-7 FX9	1	—	—	—	—	—
	H2B		L	3154-5 FB3	—	—	—	1	—	—
	H2F, H6F,		L	3154-5 FF4	—	—	—	1	—	—
	H2T, H6T,		L	3154-5 FT5	—	—	—	1	—	—
	H2X, H6X,		L	3154-5 FX9	—	—	—	1	—	—
	H2W		L	3154-5 FW1	—	—	—	1	—	—
		2 DOOR								
	M2B		R	3182-3 FOB	1	—	—	—	—	—
	M2T		R	3182-3 FOT	1	—	—	—	—	—
	M2X		R	3182-3 FOX	1	—	—	—	—	—
	L2B		W	3132-3 FOB	1	—	—	—	—	—
	K1T, K2T, L2T		R,W	3132-3 FOT	1	—	—	—	—	—
	L2X		W	3132-3 FOX	1	—	—	—	—	—

NOTE: A letter code in the carline column indicates the carline for which the part is released as follows:

CARLINES Indicate: J - Challenger, B - Barracuda, V - Valiant, L - Dart, R - Belvedere, W - Coronet, P - Plymouth, D - Dodge, C - Chrysler, Y - Imperial

AR Indicates use as required.
★ Indicates change or addition.

Right and left part numbers are on same line, first number is right, second number is left.

Printed in U.S.A.
December 1970

CODE	PART NAME		CAR LINE	PART NUMBER	Sed.	4 D.H.T.	Sta. Wgn.	2 D.H.T.	Sp. 2 D.H.T.	Conv.
23-92-5	PANEL Cont'd.									
	H1X, H2X		R	3190-1 FAX	1	—	—	1	—	1
	H1B, H2B		R	3190-1 FBB	1	—	—	1	—	1
	H1F, H2F		R	3190-1 FFF	1	—	—	1	—	—
	H2K		R	3190-1 FKK	1	—	—	1	—	1
	H2T		R	3190-1 FTL	1	—	—	1	—	—
	H2W		R	3190-1 FOW	1	—	—	1	—	1
		6 PASS. WGN.								
	L1B, L2B, D2B	Frt.	R,W	3130-1 FOB	1	—	1	—	—	—
		Rr.	R,W	3224-5 FOB	1	—	1	—	—	—
	K1T, K2T, T2T, L2T,									
	D2T	Frt.	R,W	3130-1 FOT	1	—	1	—	—	—
		Rr.	R,W	3224-5 FOT	1	—	1	—	—	—
	K2X, T2X, L2X	Frt.	R,W	3130-1 FOX	1	—	1	—	—	—
		Rr.	R,W	3224-5 FOX	1	—	1	—	—	—
	L1Y	Frt.	R	3130-1 FOY	1	—	—	—	—	—
		Rr.	R	3224-5 FOY	1	—	—	—	—	—
	H1X, H2X	Frt.	R	3176-7 FAX	1	—	1	—	—	—
		Rr.	R	3248-9 FAX	1	—	1	—	—	—
	H1B, H2B	Frt.	R	3176-7 FBB	1	—	1	—	—	—
		Rr.	R	3248-9 FBB	1	—	1	—	—	—
	H1F, H2F	Frt.	R	3176-7 FFF	1	—	1	—	—	—
		Rr.	R	3248-9 FFF	1	—	1	—	—	—
	H2T	Frt.	R	3176-7 FTL	1	—	1	—	—	—
		Rr.	R	3248-9 FTL	1	—	1	—	—	—
	H1Y, H2Y	Frt.	R	3176-7 FOY	1	—	1	—	—	—
		Rr.	R	3248-9 FOY	1	—	1	—	—	—
	H2W	Frt.	R	3176-7 FOW	1	—	1	—	—	—
		Rr.	R	3248-9 FOW	1	—	1	—	—	—
	P3B, P6B	Frt.	R	3142-3 FB7	1	—	1	—	—	—
		Rr.	R	3220-1 FB7	1	—	1	—	—	—
	P3F	Frt.	R	3142-3 FF8	1	—	1	—	—	—
		Rr.	R	3220-1 FF8	1	—	1	—	—	—
	P3K	Frt.	R	3142-3 FK4	1	—	—	—	—	—
		Rr.	R	3220-1 FK4	1	—	—	—	—	—
	P6T	Frt.	R	3142-3 FT5	1	—	1	—	—	—
		Rr.	R	3220-1 FT5	1	—	1	—	—	—
	P6BW, P6TW	Frt.	R	3142-3 FW1	1	—	—	—	—	—
		Rr.	R	3220-1 FW1	1	—	—	—	—	—
	P6XA	Frt.	R	3142-3 FA8	1	—	1	—	—	—
		Rr.	R	3220-1 FA8	1	—	1	—	—	—
	P3X	Frt.	R	3142-3 FX9	1	—	1	—	—	—
		Rr.	R	3220-1 FX9	1	—	1	—	—	—
	P3Y	Frt.	R	3142-3 FY4	1	—	—	—	—	—
		2 DOOR		3220-1 FY4	1	—	—	—	—	—
	P6XA		R	3188-9 FA5	1	—	—	1	—	—
	P6B		R	3188-9 FB5	1	—	—	1	—	—
	P6F		R	3188-9 FF8	1	—	—	1	—	—
	P6K, P3K		R	3188-9 FK4	1	—	—	1	—	—
	P6T		R	3188-9 FT5	1	—	—	1	—	—
	P6BW, P6KW, P6TW, P6XW		R	3188-9 FW1	1	—	—	1	—	—
	P3X		R	3188-9 FX9	—	—	—	1	—	—
	P6XY		R	3188-9 FY4	1	—	—	1	—	—
	P6XA		R	*3188-9 FA8	1	—	—	1	—	1
		2 DOOR								
	L2B		W	3132-3 FOB	1	—	—	—	—	—
	K1T, K2T, L2T		R,W	3132-3 FOT	1	—	—	—	—	—
	L2X		W	3132-3 FOX	1	—	—	—	—	—
	H1X, H2X		R	3190-1 FAX	1	—	—	1	—	1

NOTE: A letter code in the carline column indicates the carline for which the part is released as follows:

CARLINES Indicate: J - Challenger, B - Barracuda, V - Valiant, L - Dart, R - Belvedere, W - Coronet, P - Plymouth, D - Dodge, C - Chrysler, Y - Imperial

AR Indicates use as required.
★ Indicates change or addition.

Right and left part numbers are on same line, first number is right, second number is left.

Printed in U.S.A.
December 1970

CODE	PART NAME	CAR LINE	PART NUMBER	Sed.	4 D.H.T.	Sta. Wgn.	2 D.H.T.	Sp. 2 D.H.T.	Conv.
23-92-5	PANEL Cont'd.								
	H1B, H2B	R	3190-1 FBB	1	—	—	1	—	1
	H1F, H2F	R	3190-1 FFF	1	—	—	1	—	—
	H2K	R	3190-1 FKK	1	—	—	1	—	1
	H2T	R	3190-1 FTL	1	—	—	1	—	—
	H2W	R	3190-1 FOW	1	—	—	1	—	1
	2 DOOR								
	M6B, D4B, D6B	W	3488-9 FOB	1	—	—	1	—	1
	M6F, D4F, D6F	W	3488-9 FOF	1	—	—	1	—	1
	M6K, D4K, D6K	W	3488-9 FOK	1	—	—	1	—	1
	M6T, D4T, D6T	W	3488-9 FOT	1	—	—	1	—	1
	M6XW, D4XW, D6XW	W	3488-9 FOW	1	—	—	1	—	1
	M6X, D4X, D6X	W	3488-9 FOX	1	—	—	1	—	1
	M6XY, D6XY	W	3488-9 FOY	1	—	—	1	—	1
	H2B	W	3144-5 FOB	1	—	—	1	—	—
	H2F	W	3144-5 FOF	1	—	—	1	—	—
	H2K	W	3144-5 FOK	1	—	—	1	—	—
	H2T	W	3144-5 FOT	1	—	—	1	—	—
	H2W	W	3144-5 FOW	1	—	—	1	—	—
	H2X	W	3144-5 FOX	1	—	—	1	—	—
	UPPER								
	C5X, C6X, CRX	W	3374-5 FA8	—	—	—	—	1	—
	C6B, CRB	W	3374-5 FB5	—	—	—	—	1	—
	C6F, CRF	W	3374-5 FF8	—	—	—	—	1	—
	C6K	W	3374-5 FK4	—	—	—	—	1	—
	C6T, CRT	W	3374-5 FT5	—	—	—	—	1	—
	C6W	W	3374-5 FW1	—	—	—	—	1	—
	LOWER								
	C2XA, C5XA, C6XA	W	3490-1 FA8	—	—	—	—	1	—
	C2B, C6B	W	3490-1 FB5	—	—	—	—	1	—
	C2F, C6F	W	3490-1 FF8	—	—	—	—	1	—
	C2K, C6K	W	3490-1 FK4	—	—	—	—	1	—
	C2T, C6T	W	3490-1 FT5	—	—	—	—	1	—
	C2XW, C6XW	W	3490-1 FW1	—	—	—	—	1	—
	LOWER								
	CRXA	W	4702-3 FA8	—	—	—	—	1	—
	CRB	W	4702-3 FB5	—	—	—	—	1	—
	CRF	W	4702-3 FF8	—	—	—	—	1	—
	CRT	W	4720-3 FT5	—	—	—	—	1	—
	H1B, H2B Frt.	W	3140-1 FOB	1	—	1	—	—	—
	Rr.	W	3228-9 FOB	1	—	1	—	—	—
	H1F, H2F Frt.	W	3140-1 FOF	1	—	1	—	—	—
	Rr.	W	3228-9 FOF	1	—	1	—	—	—
	H2T Frt.	W	3140-1 FOT	1	—	1	—	—	—
	Rr.	W	3228-9 FOT	1	—	1	—	—	—
	H1X, H2X Frt.	W	3140-1 FOX	1	—	1	—	—	—
	Rr.	W	3228-9 FOX	1	—	1	—	—	—
	H1Y Frt.	W	3140-1 FOY	1	—	1	—	—	—
	Rr.	W	3228-9 FOY	1	—	1	—	—	—
	P3B, P4B, P6B Frt.	W	3124-5 FOB	1	—	1	—	—	—
	Rr.	W	3236-7 FOB	1	—	1	—	—	—
	P3F, P4F Frt.	W	3124-5 FOF	1	—	1	—	—	—
	Rr.	W	3236-7 FOF	1	—	1	—	—	—
	P3K Frt.	W	3124-5 FOK	1	—	1	—	—	—
	Rr.	W	3236-7 FOK	1	—	1	—	—	—
	P4T, P6T Frt.	W	3124-5 FOT	1	—	1	—	—	—
	Rr.	W	3236-7 FOT	1	—	1	—	—	—
	P3X, P4X, P6X Frt.	W	3124-5 FOX	1	—	1	—	—	—
	Rr.	W	3236-7 FOX	1	—	1	—	—	—

NOTE: A letter code in the carline column indicates the carline for which the part is released as follows:

CARLINES Indicate: J - Challenger, B - Barracuda, V - Valiant, L - Dart, R - Belvedere, W - Coronet, P - Plymouth, D - Dodge, C - Chrysler, Y - Imperial

AR Indicates use as required.
★ Indicates change or addition.

Right and left part numbers are on same line, first number is right, second number is left.

Printed in U.S.A.
December 1970

CODE	PART NAME		CAR LINE	PART NUMBER	Sed.	4 D.H.T.	Sta. Wgn.	2 D.H.T.	Sp. 2 D.H.T.	Conv.
23-92-5	PANEL Cont'd.									
	P3Y	Frt.	W	3124-5 FOY	1	—	—	—	—	—
		Rr.	W	3236-7 FOY	1	—	—	—	—	—
	E2B, D2B, E1B	Frt.	P	3414-5 FB3	1	—	1	—	—	—
		Rr.	P	3270-1 FB3	1	—	1	—	—	—
	K1T, K2T, E2T, D2T	Frt.	P	3414-5 FT5	1	—	1	—	—	—
		Rr.	P	3270-1 FT5	1	—	1	—	—	—
	D2F	Frt.	P	3414-5 FF8	—	—	1	—	—	—
		Rr.	P	3270-1 FF8	—	—	1	—	—	—
	D2XA	Frt.	P	3414-5 FA8	—	—	1	—	—	—
		Rr.	P	3270-1 FA8	—	—	1	—	—	—
	L2B, D4B	Frt.	P	3180-1 FB3	—	—	1	—	—	—
		Rr.	P	3274-5 FB3	—	—	1	—	—	—
	L2F, D4F	Frt.	P	3180-1 FF8	—	—	1	—	—	—
		Rr.	P	3274-5 FF8	—	—	1	—	—	—
	L2T, D4T	Frt.	P	3180-1 FT5	—	—	1	—	—	—
		Rr.	P	3274-5 FT5	—	—	1	—	—	—
	L2XA, D4XA	Frt.	P	3180-1 FA8	—	—	1	—	—	—
		Rr.	P	3274-5 FA8	—	—	1	—	—	—
	L1B		P	3408-9 FB3	1	—	—	—	—	—
	L1Y		P	3408-9 FY4	1	—	—	—	—	—
	LESS NAME PLATE									
	L1B		P	1452-3 FB3	1	—	—	—	—	—
	L1Y		P	1452-3 FY4	1	—	—	—	—	—
	K1T, K2T, E2T		P	3444-5 FT5	1	—	—	—	—	—
	E2B		P	3444-5 FB3	1	—	—	—	—	—
		4 DOOR								
	L1B	Frt.	P	3422-3 FB3	1	—	—	—	—	—
		Rr.	P	3274-5 FB3	1	—	—	—	—	—
	L1F	Frt.	P	3422-3 FF8	1	—	—	—	—	—
		Rr.	P	3274-5 FF8	1	—	—	—	—	—
	L2T	Frt.	P	3422-3 FT5	1	—	—	—	—	—
		Rr.	P	3274-5 FT5	1	—	—	—	—	—
	L2XA	Frt.	P	3422-3 FA8	1	—	—	—	—	—
		Rr.	P	3274-5 FA8	1	—	—	—	—	—
	L1Y	Frt.	P	3422-3 FY4	1	—	—	—	—	—
		Rr.	P	3274-5 FY4	1	—	—	—	—	—
	LESS NAME PLATE, Front Only									
	L1B	Frt.	P	1456-7 FB3	1	—	—	—	—	—
		Rr.	P	3274-5 FB3	1	—	—	—	—	—
	L1F	Frt.	P	1456-7 FF8	1	—	—	—	—	—
		Rr.	P	3274-5 FF8	1	—	—	—	—	—
	L2T	Frt.	P	1456-7 FT5	1	—	—	—	—	—
		Rr.	P	3274-5 FT5	1	—	—	—	—	—
	L2XA	Frt.	P	1456-7 FA8	1	—	—	—	—	—
		Rr.	P	3274-5 FA8	1	—	—	—	—	—
	L1Y	Frt.	P	1456-7 FY4	1	—	—	—	—	—
		Rr.	P	3274 FY4	1	—	—	—	—	—
	M1B, M4B	Frt.	P	3428-9 FBB	1	—	—	—	—	—
		Rr.	P	3276-7 FBB	1	—	—	—	—	—
	M1F, M4F	Frt.	P	3428-9 FFF	1	—	—	—	—	—
		Rr.	P	3276-7 FFF	1	—	—	—	—	—
	M4T	Frt.	P	3428-9 FT5	1	—	—	—	—	—
		Rr.	P	3276-7 FT5	1	—	—	—	—	—
	M1X, M4X, M8X	Frt.	P	3428-9 FAX	1	—	—	—	—	—
		Rr.	P	3276-7 FAX	1	—	—	—	—	—
	M1Y, M4Y	Frt.	P	3428-9 FY4	1	—	—	—	—	—
		Rr.	P	3276-7 FY4	1	—	—	—	—	—

NOTE: A letter code in the carline column indicates the carline for which the part is released as follows:

CARLINES Indicate: J - Challenger, B - Barracuda, V - Valiant, L - Dart, R - Belvedere, W - Coronet, P - Plymouth, D - Dodge, C - Chrysler, Y - Imperial

AR Indicates use as required.
★ Indicates change or addition.

Right and left part numbers are on same line, first number is right, second number is left.

Printed in U.S.A.
December 1970

CODE	PART NAME		CAR LINE	PART NUMBER	Sed.	4 D.H.T.	Sta. Wgn.	2 D.H.T.	Sp. 2 D.H.T.	Conv.
23-92-5	PANEL Cont'd.									
	M4XP	Frt.	P	3428-9 FP8	1	—	—	—	—	—
		Rr.	P	3276-7 FP8	1	—	—	—	—	—
	H3B, H4B, H7B	Frt.	P	3110-1 FB3	1	—	—	—	—	—
		Rr.	P	3146-7 FB3	1	—	—	—	—	—
	H3F, H4F, H7F	Frt.	P	3110-1 FF8	1	—	—	—	—	—
		Rr.	P	3146-7 FF8	1	—	—	—	—	—
	H4T, H8T	Frt.	P	3110-1 FT5	1	—	—	—	—	—
		Rr.	P	3146-7 FT5	1	—	—	—	—	—
	H3XA, H4XA, H8XA	Frt.	P	3110-1 FA8	1	—	—	—	—	—
		Rr.	P	3146-7 FA8	1	—	—	—	—	—
	H4XP	Frt.	P	3110-1 FP6	1	—	—	—	—	—
		Rr.	P	3146-7 FP6	1	—	—	—	—	—
	H3Y	Frt.	P	3110-1 FY4	1	—	—	—	—	—
		Rr.	P	3146-7 FY4	1	—	—	—	—	—
	P4XA		P	*9706-7 FAX	1	—	—	—	—	—
	P4F8		P	*9706-7 FFF	1	—	—	—	—	—
	P4TT		P	*9706-7 FTT	1	—	—	—	—	—
	L1B		P	3158-9 FB3	—	—	—	1	—	—
	L1Y		P	3158-9 FY4	—	—	—	1	—	—
	L1F		P	3158-9 FF8	—	—	—	1	—	—
	L1XA, L2XA		P	3158-9 FA8	—	—	—	1	—	—
	L2T		P	3158-9 FT5	—	—	—	1	—	—
	M1XA, M4XA, M8XA	Frt.	P	3400-1 FAX	1	—	1	—	—	—
		Rr.	P	3276-7 FAX	1	—	1	—	—	—
	M4B	Frt.	P	3400-1 FBB	1	—	1	—	—	—
		Rr.	P	3276-7 FBB	1	—	1	—	—	—
	M4F, M7F	Frt.	P	3400-1 FFF	1	—	1	—	—	—
		Rr.	P	3276-7 FFF	1	—	1	—	—	—
	M4T	Frt.	P	3400-1 FT5	1	—	1	—	—	—
		Rr.	P	3276-7 FT5	1	—	1	—	—	—
	M1B, M4B		P	3432-3 FBB	—	—	—	1	1	1
	M1F, M4F		P	3432-3 FFF	—	—	—	1	1	1
	M1K, M4K		P	3432-3 FK4	—	—	—	1	1	—
	M4P, M4XP		P	3432-3 FP8	—	—	—	1	1	—
	M4W, M4XW		P	3432-3 FW1	—	—	—	1	1	1
	M1XA, M4XA, M6XA,		P	3432-3 FAX	—	—	—	1	1	1
	M4T, M6T		P	3432-3 FT5	—	—	—	1	1	—
	H3B, H4B, H5B, H6B		P	4710-1 FB3	—	—	—	1	1	1
	H3F, H4F, H5F, H6F		P	4710-1 FF8	—	—	—	1	1	1
	H6K, H3K, P4K, H4K		P	4710-1 FK4	—	—	—	—	1	1
	H4T, H5T, D6T, H6T, H6T		P	4710-1 FT5	—	—	—	1	1	—
	H3XA, H4XA, H6XA		P	4710-1 FA8	—	—	—	1	1	1
	H4XW		P	4710-1 FWX	—	—	—	1	1	1
	H4XP		P	4710-1 FPX	—	—	—	1	1	1
	M1XA, M4XA, W1XA, W4XA	Frt.	P	3430-1 FAX	—	1	—	—	—	—
		Rr.	P	3278-9 FAX	—	1	—	—	—	—
	M4XP	Frt.	P	3430-1 FP8	—	1	—	—	—	—
		Rr.	P	3278-9 FP8	—	1	—	—	—	—
	M1B, M4B, W1B, W4B	Frt.	P	3430-1 FBB	—	1	—	—	—	—
		Rr.	P	3278-9 FBB	—	1	—	—	—	—
	M1F, M4F, W1F, W4F,	Frt.	P	3430-1 FFF	—	1	—	—	—	—
		Rr.	P	3278-9 FFF	—	1	—	—	—	—
	M4K, W4K	Frt.	P	3430-1 FK4	—	1	—	—	—	—
		Rr.	P	3278-9 FK4	—	1	—	—	—	—

NOTE: A letter code in the carline column indicates the carline for which the part is released as follows:

CARLINES Indicate: J - Challenger, B - Barracuda, V - Valiant, L - Dart, R - Belvedere, W - Coronet, P - Plymouth, D - Dodge, C - Chrysler, Y - Imperial

AR Indicates use as required.
★ Indicates change or addition.

Right and left part numbers are on same line, first number is right, second number is left.

Printed in U.S.A.
December 1970

CODE	PART NAME		CAR LINE	PART NUMBER	Sed.	4 D.H.T.	Sta. Wgn.	2 D.H.T.	Sp. 2 D.H.T.	Conv.
23-92-5	PANEL Cont'd.									
	M4T, W4T,	Frt.	P	3430-1 FT5	—	1	—	—	—	—
		Rr.	P	3278-9 FT5	—	1	—	—	—	—
	M1Y, W1Y,	Frt.	P	3430-1 FY4	—	1	—	—	—	—
		Rr.	P	3278-9 FY4	—	1	—	—	—	—
	H3B, H4B, H6B, H7B	Frt.	P	3156-7 FB3	—	1	—	—	—	—
		Rr.	P	3250-1 FB3	—	1	—	—	—	—
	H3F, H4F, H6F, H7F	Frt.	P	3156-7 FF8	—	1	—	—	—	—
		Rr.	P	3250-1 FF8	—	1	—	—	—	—
	H4K	Frt.	P	3156-7 FK4	—	1	—	—	—	—
		Rr.	P	3250-1 FK4	—	1	—	—	—	—
	H4T, H8T	Frt.	P	3156-7 FT5	—	1	—	—	—	—
		Rr.	P	3250-1 FT5	—	1	—	—	—	—
	H3XA, H4XA, H6XA, H8XA	Frt.	P	3156-7 FA8	—	1	—	—	—	—
		Rr.	P	3250-1 FA8	—	1	—	—	—	—
	H4XP	Frt.	P	3156-7 FPX	—	1	—	—	—	—
		Rr.	P	3250-1 FPX	—	1	—	—	—	—
	H3Y	Frt.	P	3156-7 FY4	—	1	—	—	—	—
		Rr.	P	3250-1 FY4	—	1	—	—	—	—
		Rr.	P	3278-9 FY4	—	1	—	—	—	—
	L1B, L2B	Frt.	D	3438-9 FBB	1	—	1	—	—	—
		Rr.	D	3282-3 FBB	1	—	1	—	—	—
	L1F, L2F	Frt.	D	3438-9 FFF	1	—	1	—	—	—
		Rr.	D	3282-3 FFF	1	—	1	—	—	—
	L2T	Frt.	D	3438-9 FT5	1	—	1	—	—	—
		Rr.	D	3282-3 FT5	1	—	1	—	—	—
	K1A, K2A	Frt.	D	3438-9 FAX	1	—	1	—	—	—
		Rr.	D	3282-3 FAX	1	—	1	—	—	—
	L1X, L2X	Frt.	D	3438-9 FX9	1	—	1	—	—	—
		Rr.	D	3282-3 FX9	1	—	1	—	—	—
	L1Y	Frt.	D	3438-9 FY4	1	—	—	—	—	—
		Rr.	D	3282-3 FY4	1	—	—	—	—	—
	L1B, L2B	Frt.	D	3458-9 FBB	—	1	—	—	—	—
		Rr.	D	3288-9 FBB	—	1	—	—	—	—
	L1F, L2F	Frt.	D	3458-9 FFF	—	1	—	—	—	—
		Rr.	D	3288-9 FFF	—	1	—	—	—	—
	L2T	Frt.	D	3458-9 FT5	—	1	—	—	—	—
		Rr.	D	3288-9 FT5	—	1	—	—	—	—
	L2XW	Frt.	D	3458-9 FW1	—	1	—	—	—	—
		Rr.	D	3288-9 FW1	—	1	—	—	—	—
	L1X, L2X	Frt.	D	3458-9 FX9	—	1	—	—	—	—
		Rr.	D	3288-9 FX9	—	1	—	—	—	—
	L1Y	Frt.	D	3458-9 FY4	—	1	—	—	—	—
		Rr.	D	3288-9 FY4	—	1	—	—	—	—
	UP TO BUILD DATE - 9-1-69									
	H1B, H4B, H7B	Frt.	D	3118-9 FB3	1	—	1	—	—	—
		Rr.	D	3218-9 FB3	1	—	1	—	—	—
	H1F, H7F, H4F, H8F,	Frt.	D	3118-9 FF8	1	—	1	—	—	—
		Rr.	D	3218-9 FF8	1	—	1	—	—	—
	H1T, H4T, H8T,	Frt.	D	3118-9 FT3	1	—	1	—	—	—
		Rr.	D	3218-9 FT3	1	—	1	—	—	—
	H1X, H4X, H7X, H8X,	Frt.	D	3118-9 FX9	—	—	1	—	—	—
		Rr.	D	3218-9 FX9	1	—	1	—	—	—
	H1Y	Frt.	D	3118-9 FY4	1	—	1	—	—	—
		Rr.	D	3218-9 FY4	1	—	1	—	—	—
	AFTER BUILD DATE - 9-1-69									
	H1B, H4B, H7B	Frt.	D	*4622-3 FB3	1	—	1	—	—	—

NOTE: A letter code in the carline column indicates the carline for which the part is released as follows:

CARLINES Indicate: J - Challenger, B - Barracuda, V - Valiant, L - Dart, R - Belvedere, W - Coronet, P - Plymouth, D - Dodge, C - Chrysler, Y - Imperial

AR Indicates use as required.
★ Indicates change or addition.

Right and left part numbers are on same line, first number is right, second number is left.

Printed in U.S.A.
December 1970

CODE	PART NAME		CAR LINE	PART NUMBER	Sed.	4 D.H.T.	Sta. Wgn.	2 D.H.T.	Sp. 2 D.H.T.	Conv.
23-92-5	PANEL Cont'd.									
		Rr.	D	*4624-5 FB3	1	—	1	—	—	—
	H1F, H7F, H4F, H8F	Frt.	D	*4622-3 FF8	1	—	1	—	—	—
		Rr.	D	*4624-5 FF8	1	—	1	—	—	—
	H1T, H4T, H8T	Frt.	D	*4622-3 FT3	1	—	1	—	—	—
		Rr.	D	*4624-5 FT3	1	—	1	—	—	—
	H1X, H4X, H7X, H8X	Frt.	D	*4622-3 FX9	1	—	1	—	—	—
		Rr.	D	*4624-5 FX9	1	—	1	—	—	—
	H1Y	Frt.	D	*4622-3 FY4	1	—	1	—	—	—
		Rr.	D	*4624-5 FY4	1	—	1	—	—	—
	BROUGHAM PACKAGE	UP TO BUILD DATE 9-1-69								
	H7B	Frt.	D	3186-7 FB3	1	—	—	—	—	—
		Rr.	D	3194-5 FB3	1	—	—	—	—	—
	H7F	Frt.	D	3186-7 FF8	1	—	—	—	—	—
		Rr.	D	3194-5 FF8	1	—	—	—	—	—
	H7X	Frt.	D	3186-7 FX9	1	—	—	—	—	—
		Rr.	D	3194-5 FX9	1	—	—	—	—	—
	AFTER BUILD DATE 9-1-69									
	H7B	Frt.	D	*4626-7 FB3	1	—	—	—	—	—
		Rr.	D	*4628-9 FB3	1	—	—	—	—	—
	H7F	Frt.	D	*4626-7 FF8	1	—	—	—	—	—
		Rr.	D	*4628-9 FF8	1	—	—	—	—	—
	H7X	Frt.	D	*4626-7 FX9	1	—	—	—	—	—
		Rr.	D	*4628-9 FX9	1	—	—	—	—	—
	BROUGHAM PACKAGE	UP TO BUILD DATE 9-1-69								
	H7B	Frt.	D	3164-5 FB3	—	1	—	—	—	—
		Rr.	D	3168-9 FB3	—	1	—	—	—	—
	H7F, H8F	Frt.	D	3164-5 FF8	—	1	—	—	—	—
		Rr.	D	3168-9 FF8	—	1	—	—	—	—
	H8K	Frt.	D	3164-5 FK4	—	1	—	—	—	—
		Rr.	D	3168-9 FK4	—	1	—	—	—	—
	H7X, H8X	Frt.	D	3164-5 FX9	—	1	—	—	—	—
		Rr.	D	3168-9 FX9	—	1	—	—	—	—
	AFTER BUILD DATE 9-1-69									
	H7B	Frt.	D	*4630-1 FB3	—	1	—	—	—	—
		Rr.	D	*4632-3 FB3	—	1	—	—	—	—
	H7F, H8F	Frt.	D	*4630-1 FF8	—	1	—	—	—	—
		Rr.	D	*4632-3 FF8	—	1	—	—	—	—
	H8K	Frt.	D	*4630-1 FK4	—	1	—	—	—	—
		Rr.	D	*4632-3 FK4	—	1	—	—	—	—
	H7X, H8X	Frt.	D	*4630-1 FX9	—	1	—	—	—	—
		Rr.	D	*4632-3 FX9	—	1	—	—	—	—
	UP TO BUILD DATE 9-1-69									
	H1B, H7B	Frt.	D	3448-9 FB3	—	1	—	—	—	—
		Rr.	D	3286-7 FB3	—	1	—	—	—	—
	H1F, H7F, H8F	Frt.	D	3448-9 FF8	—	1	—	—	—	—
		Rr.	D	3286-7 FF8	—	1	—	—	—	—
	H8K	Frt.	D	3448-9 FK4	—	1	—	—	—	—
		Rr.	D	3286-7 FK4	—	1	—	—	—	—
	H1T	Frt.	D	3448-9 FT3	—	1	—	—	—	—
		Rr.	D	3286-7 FT3	—	1	—	—	—	—
	H1X, H7X, H8X	Frt.	D	3448-9 FX9	—	1	—	—	—	—
		Rr.	D	3286-7 FX9	—	1	—	—	—	—
	H1Y	Frt.	D	3448-9 FY4	—	1	—	—	—	—
		Rr.	D	3286-7 FY4	—	1	—	—	—	—
	AFTER BUILD DATE 9-1-69									
	H1B, H7B	Frt.	D	*4616-7 FB3	—	1	—	—	—	—
		Rr.	D	*4620-1 FB3	—	1	—	—	—	—
	H1F, H7F, H8F	Frt.	D	*4616-7 FF8	—	1	—	—	—	—

NOTE: A letter code in the carline column indicates the carline for which the part is released as follows:

CARLINES Indicate: J - Challenger, B - Barracuda, V - Valiant, L - Dart, R - Belvedere, W - Coronet, P - Plymouth, D - Dodge, C - Chrysler, Y - Imperial

AR Indicates use as required.
★ Indicates change or addition.

Right and left part numbers are on same line, first number is right, second number is left.

Printed in U.S.A.
December 1970

CODE	PART NAME		CAR LINE	PART NUMBER	Sed.	4 D.H.T.	Sta. Wgn.	2 D.H.T.	Sp. 2 D.H.T.	Conv.
23-92-5	PANEL Cont'd.									
		Rr.	D	*4620-1 FF8	—	1	—	—	—	—
	H8K	Frt.	D	*4616-7 FK4	—	1	—	—	—	—
		Rr.	D	*4620-1 FK4	—	1	—	—	—	—
	H1T	Frt.	D	*4616-7 FT3	—	1	—	—	—	—
		Rr.	D	*4620-1 FT3	—	1	—	—	—	—
	H1X, H7X, H8X	Frt.	D	*4616-7 FX9	—	1	—	—	—	—
		Rr.	D	*4620-1 FX9	—	1	—	—	—	—
	H1Y	Frt.	D	*4616-7 FY4	—	1	—	—	—	—
		Rr.	D	*4620-1 FY4	—	1	—	—	—	—
	B2B	Frt.	D	3192-3 FB3	1	—	1	—	—	—
		Rr.	D	3270-1 FB3	1	—	1	—	—	—
	B2F	Frt.	D	3192-3 FF4	—	—	1	—	—	—
		Rr.	D	3270-1 FF4	—	—	1	—	—	—
	B2T	Frt.	D	3192-3 FT5	1	—	1	—	—	—
		Rr.	D	3270-1 FT5	1	—	1	—	—	—
	F1B, F2B, R4B	Frt.	D	3128-9 FB3	1	—	1	—	—	—
		Rr.	D	3274-5 FB3	1	—	1	—	—	—
	F1F, F2F, R4F,	Frt.	D	3128-9 FF8	1	—	1	—	—	—
		Rr.	D	3274-5 FF8	1	—	1	—	—	—
	F2T, R4T,	Frt.	D	3128-9 FT5	1	—	1	—	—	—
		Rr.	D	3274-5 FT5	1	—	1	—	—	—
	F1X, F2X	Frt.	D	3128-9 FA8	1	—	1	—	—	—
		Rr.	D	3274-5 FA8	1	—	1	—	—	—
	F1Y	Frt.	D	3128-9 FY4	1	—	—	—	—	—
		Rr.	D	3274-5 FY4	1	—	—	—	—	—
	LESS NAME PLATE, Front Only									
	F1B, F2B, R4B	Frt.	D	1456-7 FB3	1	—	1	—	—	—
		Rr.	D	3274-5 FB3	1	—	1	—	—	—
	F1F, F2F, R4F	Frt.	D	1456-7 FF8	1	—	1	—	—	—
		Rr.	D	3274-5 FF8	1	—	1	—	—	—
	F2T, R4T	Frt.	D	1456-7 FT5	1	—	1	—	—	—
		Rr.	D	3274-5 FT5	1	—	1	—	—	—
	F2XA, R4XA	Frt.	D	1456-7 FA8	1	—	1	—	—	—
		Rr.	D	3274-5 FA8	1	—	1	—	—	—
	F1Y	Frt.	D	1456-7 FY4	1	—	—	—	—	—
		Rr.	D	3274-5 FY4	1	—	—	—	—	—
	W1XA, W4XA, W8XA	Frt.	D	3178-9 FAX	1	—	1	—	—	—
		Rr.	D	3276-7 FAX	1	—	1	—	—	—
	W1B, W4B	Frt.	D	3178-9 FBB	1	—	1	—	—	—
		Rr.	D	3276-7 FBB	1	—	1	—	—	—
	W1F, W4F, W7F	Frt.	D	3178-9 FFF	1	—	1	—	—	—
		Rr.	D	3276-7 FFF	1	—	1	—	—	—
	W4T	Frt.	D	3178-9 FT5	1	—	1	—	—	—
		Rr.	D	3276-7 FT5	1	—	1	—	—	—
	W4XP	Frt.	D	3178-9 FF6	1	—	1	—	—	—
		Rr.	D	3276-7 FF6	1	—	1	—	—	—
	W4BW, W4TW, W4XW	Frt.	D	3178-9 FW1	1	—	1	—	—	—
		Rr.	D	3276-7 FW1	1	—	1	—	—	—
	W1Y, W4Y	Frt.	D	3178-9 FY4	1	—	—	—	—	—
		Rr.	D	3276-7 FY4	—	1	—	—	—	—
	W1X, W4X, W8X	Frt.	D	3114-5 FAX	—	1	—	—	—	—
		Rr.	D	3278-9 FAX	—	1	—	—	—	—
	W1B, W4B	Frt.	D	3114-5 FB3	—	1	—	—	—	—
		Rr.	D	3278-9 FB3	—	1	—	—	—	—
	W1F, W4F	Frt.	D	3114-5 FF8	—	1	—	—	—	—

NOTE: A letter code in the carline column indicates the carline for which the part is released as follows:

CARLINES Indicate: J - Challenger, B - Barracuda, V - Valiant, L - Dart, R - Belvedere, W - Coronet, P - Plymouth, D - Dodge, C - Chrysler, Y - Imperial

AR Indicates use as required.
★ Indicates change or addition.

Right and left part numbers are on same line, first number is right, second number is left.

Printed in U.S.A.
December 1970

CODE	PART NAME		CAR LINE	PART NUMBER	Sed.	4 D.H.T.	Sta. Wgn.	2 D.H.T.	Sp. 2 D.H.T.	Conv.
23-92-5	PANEL Cont'd.									
		Rr.	D	3278-9 FF8	—	1	—	—	—	—
	W4K	Frt.	D	3114-5 FK4	—	1	—	—	—	—
		Rr.	D	3278-9 FK4	—	1	—	—	—	—
	W4T	Frt.	D	3114-5 FT5	—	1	—	—	—	—
		Rr.	D	3278-9 FT5	—	1	—	—	—	—
	W1Y, W4Y	Frt.	D	3114-5 FY4	—	1	—	—	—	—
		Rr.	D	3278-9 FY4	—	1	—	—	—	—
	F1B		D	3122-3 FB3	—	—	—	1	—	—
	F1Y		D	3122-3 FY4	—	—	—	1	—	—
	F1F		D	3122-3 FF8	—	—	—	1	—	—
	F1XA		D	3122-3 FA8	—	—	—	1	—	—
	F2T		D	3122-3 FT5	—	—	—	1	—	—
	B2B, R2B	Frt.	D	3192-3 FB3	1	—	1	—	—	—
		Rr.	D	*3270-1 FB3	1	—	1	—	—	—
	B2T, R2T	Frt.	D	3192-3 FT5	1	—	1	—	—	—
		Rr.	D	*3270-1 FT5	1	—	1	—	—	—
	R2F	Frt.	D	3192-3 FF8	—	—	1	—	—	—
		Rr.	D	*3270-1 FF8	1	—	1	—	—	—
	R2XA	Frt.	D	3192-3 FA8	—	—	1	—	—	—
		Rr.	D	*3270-1 FA8	1	—	1	—	—	—
	D1B, L4B	Frt.	D	4562-3 FBB	1	—	—	—	—	—
		Rr.	D	3282-3 FBB	1	—	—	—	—	—
	D1F, L4F	Frt.	D	4562-3 FFF	1	—	—	—	—	—
		Rr.	D	3282-3 FFF	1	—	—	—	—	—
	D1X, L4X	Frt.	D	4562-3 FX9	1	—	—	—	—	—
		Rr.	D	3282-3 FX9	1	—	—	—	—	—
	D1Y	Frt.	D	4562-3 FY4	1	—	—	—	—	—
		Rr.	D	3282-3 FY4	1	—	—	—	—	—
	D1B, L4B	Frt.	D	4564-5 FBB	—	1	—	—	—	—
		Rr.	D	3288-9 FBB	—	—	1	—	—	—
	D1F, L4F	Frt.	D	4564-5 FF1	—	1	—	—	—	—
		Rr.	D	3288-9 FF1	—	1	—	—	—	—
	L4XW	Frt.	D	4564-5 FW1	—	1	—	—	—	—
		Rr.	D	3288-9 FW1	—	1	—	—	—	—
	D1X, L4X	Frt.	D	4564-5 FX9	—	1	—	—	—	—
		Rr.	D	3288-9 FX9	—	1	—	—	—	—
	D1Y	Frt.	D	4564-5 FY4	—	1	—	—	—	—
		Rr.	D	3288-9 FY4	—	1	—	—	—	—
	D1B, L4B		D	4560-1 FBB	—	—	—	1	—	—
	D1F, L4F		D	4560-1 FFF	—	—	—	1	—	—
	D6XW, L4XW		D	4560-1 FW1	—	—	—	1	—	—
	D1X, D6X, L4X		D	4560-1 FX9	—	—	—	1	—	—
	D1Y		D	4560-1 FY4	—	—	—	1	—	—
	P6XA		D	3172-3FA8	—	—	—	1	—	1
	P6B		D	3172-3 FB3	—	—	—	1	—	1
	P6F		D	3172-3 FF8	—	—	—	1	—	1
	P6K		D	3172-3 FK4	—	—	—	1	—	—
	P6XP		D	3172-3 FP8	—	—	—	1	—	—
	P6T		D	3172-3 FT5	—	—	—	1	—	—
	P6XW		D	3172-3 FW1	—	—	—	1	—	1
	L1B, L2B, M6B		D	3460-1 FBB	—	—	—	1	—	—
	L1F, L2F, M6F		D	3460-1 FFF	—	—	—	1	—	—
	L2T, M6T		D	3460-1 FT5	—	—	—	1	—	—
	L1X, L2X, M6X		D	3460-1 FX9	—	—	—	1	—	—
	L1Y		D	3460-1 FY4	—	—	—	1	—	—
	P6B		D	3172-3 FB3	—	—	—	1	—	1

NOTE: A letter code in the carline column indicates the carline for which the part is released as follows:

CARLINES Indicate: J - Challenger, B - Barracuda, V - Valiant, L - Dart, R - Belvedere, W - Coronet, P - Plymouth, D - Dodge, C - Chrysler, Y - Imperial

AR Indicates use as required.
★ Indicates change or addition.

Right and left part numbers are on same line, first number is right, second number is left.

Printed in U.S.A.
December 1970

CODE	PART NAME		CAR LINE	PART NUMBER	Sed.	4 D.H.T.	Sta. Wgn.	2 D.H.T.	Sp. 2 D.H.T.	Conv.
23-92-5	PANEL Cont'd.									
	P6F		D	3172-3 FF8	—	—	—	1	—	1
	P6K		D	3172-3 FK4	—	—	—	1	—	—
	P6T		D	3172-3 FT5	—	—	—	1	—	—
	P6XA		D	3172-3 FA8	—	—	—	1	—	1
	P6XP		D	3172-3 FP8	—	—	—	1	—	—
	P6XW		D	3172-3 FW1	—	—	—	1	—	1
	UP TO BUILD DATE 9-1-69									
	H3B, H4B		D	3454-5 FB3	—	—	—	1	—	—
	H6XW		D	*3454-5 FXW	—	—	—	1	—	—
	H3F, H4F, H6F		D	3454-5 FF8	—	—	—	1	—	—
	H4K, H6K		D	3454-5 FK4	—	—	—	1	—	—
	H3X, H4X, H6X		D	3454-5 FX9	—	—	—	1	—	—
	H4Y		D	3454-5 FY4	—	—	—	1	—	—
	AFTER BUILD DATE 9-1-69									
	H3B, H4B		D	*4612-3 FB3	—	—	—	1	—	—
	H3F, H4F, H6F		D	*4612-3 FF8	—	—	—	1	—	—
	H6XW		D	*4612-3 FXW	—	—	—	1	—	—
	H4K, H6K		D	*4612-3 FK4	—	—	—	1	—	—
	H3X, H4X, H6X		D	*4612-3 FX9	—	—	—	1	—	—
	H4Y		D	*4612-3 FY4	—	—	—	1	—	—
	F1B		D	3122-3 FB3	—	—	—	1	—	—
	F1Y		D	3122-3 FY4	—	—	—	1	—	—
	E1B, E2B	Frt.	C	3100-1 FBB	1	—	—	—	—	—
		Rr.	C	3200-1 FBB	1	—	—	—	—	—
	E1L	Frt.	C	3100-1 FLL	1	—	—	—	—	—
		Rr.	C	3200-1 FLL	1	—	—	—	—	—
	E1F	Frt.	C	3100-1 FFF	1	—	—	—	—	—
		Rr.	C	3200-1 FFF	1	—	—	—	—	—
	E1P	Frt.	C	3100-1 FPQ	1	—	—	—	—	—
		Rr.	C	3200-1 FPQ	1	—	—	—	—	—
	E1X, E2X	Frt.	C	3100-1 FOX	1	—	—	—	—	—
		Rr.	C	3200-1 FOX	1	—	—	—	—	—
	E2Y	Frt.	C	3100-1 FYY	1	—	—	—	—	—
		Rr.	C	3200-1 FYY	1	—	—	—	—	—
	L3B, L4B	Frt.	C	3126-7 FBB	1	—	—	—	—	—
		Rr.	C	3208-9 FBB	1	—	—	—	—	—
	L3F	Frt.	C	3126-7 FFF	1	—	—	—	—	—
		Rr.	C	3208-9 FFF	1	—	—	—	—	—
	L7L	Frt.	C	3126-7 FLL	1	—	—	—	—	—
		Rr.	C	3208-9 FLL	1	—	—	—	—	—
	L3P	Frt.	C	3126-7 FPQ	1	—	—	—	—	—
		Rr.	C	3208-9 FPQ	1	—	—	—	—	—
	L4R, L7R	Frt.	C	3126-7 FRR	1	—	—	—	—	—
		Rr.	C	3208-9 FRR	1	—	—	—	—	—
	L3X, L4X, L8X	Frt.	C	3126-7 FOX	1	—	—	—	—	—
		Rr.	C	3208-9 FOX	1	—	—	—	—	—
	L3Y	Frt.	C	3126-7 FYY	1	—	—	—	—	—
		Rr.	C	3208-9 FYY	1	—	—	—	—	—
	E1B, E2B	Frt.	C	3102-3 FBB	—	1	—	—	—	—
		Rr.	C	3202-3 FBB	—	1	—	—	—	—
	E1L	Frt.	C	3102-3 FLL	—	1	—	—	—	—
		Rr.	C	3202-3 FLL	—	1	—	—	—	—
	E2T	Frt.	C	3102-3 FTT	—	1	—	—	—	—
		Rr.	C	3202-3 FTT	—	1	—	—	—	—
	E1F	Frt.	C	3102-3 FFF	—	1	—	—	—	—
		Rr.	C	3202-3 FFF	—	1	—	—	—	—
	E1P	Frt.	C	3102-3 FPQ	—	1	—	—	—	—

NOTE: A letter code in the carline column indicates the carline for which the part is released as follows:

CARLINES Indicate: J - Challenger, B - Barracuda, V - Valiant, L - Dart, R - Belvedere, W - Coronet, P - Plymouth, D - Dodge, C - Chrysler, Y - Imperial

AR Indicates use as required.
★ Indicates change or addition.

Right and left part numbers are on same line, first number is right, second number is left.

Printed in U.S.A.
December 1970

CODE	PART NAME	CAR LINE	PART NUMBER	Sed.	4 D.H.T.	Sta. Wgn.	2 D.H.T.	Sp. 2 D.H.T.	Conv.
23-92-5 PANEL Cont'd.									
	Rr.	C	3202-3 FPQ	—	1	—	—	—	—
E1X, E2X	Frt.	C	3102-3 FOX	—	1	—	—	—	—
	Rr.	C	3202-3 FOX	—	1	—	—	—	—
E2Y	Frt.	C	3102-3 FYY	—	1	—	—	—	—
	Rr.	C	3202-3 FYY	—	1	—	—	—	—
E1B, E2B		C	3104-5 FBB	—	—	—	1	—	1
E1L		C	3104-5 FLL	—	—	—	1	—	—
E1F		C	3104-5 FFF	—	—	—	1	—	—
E1P		C	3104-5 FPQ	—	—	—	1	—	—
E1X, E2X, E6X		C	3104-5 FOX	—	—	—	1	—	1
E2Y		C	3104-5 FYY	—	—	—	1	—	1
E2T, E6T		C	3104-5 FTT	—	—	—	1	—	1
E6XW		C	3104-5 FXW	—	—	—	1	—	1
L3B, L4B	Frt.	C	3134-5 FBB	—	1	—	—	—	—
	Rr.	C	3210-1 FBB	—	1	—	—	—	—
L3F	Frt.	C	3134-5 FFF	—	1	—	—	—	—
	Rr.	C	3210-1 FFF	—	1	—	—	—	—
L7L	Frt.	C	3134-5 FLL	—	1	—	—	—	—
	Rr.	C	3210-1 FLL	—	1	—	—	—	—
L3P	Frt.	C	3134-5 FPQ	—	1	—	—	—	—
	Rr.	C	3210-1 FPQ	—	1	—	—	—	—
L7R	Frt.	C	3134-5 FRR	—	1	—	—	—	—
	Rr.	C	3210-1 FRR	—	1	—	—	—	—
L3X, L4X, L8X	Frt.	C	3134-5 FOX	—	1	—	—	—	—
	Rr.	C	3210-1 FOX	—	1	—	—	—	—
L3Y	Frt.	C	3134-5 FYY	—	1	—	—	—	—
	Rr.	C	3210-1 FYY	—	1	—	—	—	—
L3B, L4B		C	3138-9 FBB	—	—	—	1	—	—
L3F		C	3138-9 FFF	—	—	—	1	—	—
L3P		C	3138-9 FP3	—	—	—	1	—	—
L4R		C	3138-9 FRR	—	—	—	1	—	—
L3X, L4X		C	3138-9 FOX	—	—	—	1	—	—
L3Y		C	3138-9 FYY	—	—	—	1	—	—
D2TY		C	*3290-1 FT5	—	—	—	1	—	—
D2TY	Frt.	C	*3294-5 FT5	—	1	—	—	—	—
	Rr.	C	*3296-7 FT5	—	1	—	—	—	—
M4B	Frt.	C	3106-7 FBB	—	1	—	—	—	—
	Rr.	C	3206-7 FBB	—	1	—	—	—	—
M3F, M6F	Frt.	C	3106-7 FFF	—	1	—	—	—	—
	Rr.	C	3206-7 FFF	—	1	—	—	—	—
M5L	Frt.	C	3106-7 FLL	—	1	—	—	—	—
	Rr.	C	3206-7 FLL	—	1	—	—	—	—
M4R	Frt.	C	3106-7 FRR	—	1	—	—	—	—
	Rr.	C	3206-7 FRR	—	1	—	—	—	—
M6T	Frt.	C	3106-7 FTT	—	1	—	—	—	—
	Rr.	C	3206-7 FTT	—	1	—	—	—	—
M3Y	Frt.	C	3106-7 FY4	—	1	—	—	—	—
	Rr.	C	3206-7 FY4	—	1	—	—	—	—
M6XW	Frt.	C	3106-7 FXW	—	1	—	—	—	—
	Rr.	C	3206-7 FXW	—	1	—	—	—	—
M3X, M4X, M6X	Frt.	C	3106-7 FOX	—	1	—	—	—	—
	Rr.	C	3206-7 FOX	—	1	—	—	—	—
M4B, M6B		C	3108-9 FBB	—	—	—	1	—	1
M3F, M6F		C	3108-9 FFF	—	—	—	1	—	1
M5L		C	3108-9 FLL	—	—	—	1	—	—
M4R		C	3108-9 FRR	—	—	—	1	—	—

NOTE: A letter code in the carline column indicates the carline for which the part is released as follows:

CARLINES Indicate: J - Challenger, B - Barracuda, V - Valiant, L - Dart, R - Belvedere, W - Coronet, P - Plymouth, D - Dodge, C - Chrysler, Y - Imperial

AR Indicates use as required.
★ Indicates change or addition.

Right and left part numbers are on same line, first number is right, second number is left.

Printed in U.S.A.
December 1970

CODE	PART NAME		CAR LINE	PART NUMBER	Sed.	4 D.H.T.	Sta. Wgn.	2 D.H.T.	Sp. 2 D.H.T.	Conv.
23-92-5	PANEL Cont'd.									
	M6T		C	3108-9 FTT	—	—	—	1	—	1
	M3X, M4X, M6X		C	3108-9 FOX	—	—	—	1	—	1
	M3Y		C	3108-9 FYY	—	—	—	1	—	—
	M6XW		C	3108-9 FXW	—	—	—	1	—	1
	H1B, H7B	Frt.	C	3136-7 FBB	1	—	—	—	—	—
		Rr.	C	3254-5 FBB	1	—	—	—	—	—
	H1F, H7F	Frt.	C	3136-7 FFF	1	—	—	—	—	—
		Rr.	C	3254-5 FFF	1	—	—	—	—	—
	H7L	Frt.	C	3136-7 FLL	1	—	—	—	—	—
		Rr.	C	3254-5 FLL	1	—	—	—	—	—
	HST	Frt.	C	3136-7 FTT	1	—	—	—	—	—
		Rr.	C	3254-5 FTT	1	—	—	—	—	—
	H1P	Frt.	C	3136-7 FPQ	1	—	—	—	—	—
		Rr.	C	3254-5 FPQ	1	—	—	—	—	—
	H7R	Frt.	C	3136-7 FRR	1	—	—	—	—	—
		Rr.	C	3254-5 FRR	1	—	—	—	—	—
	H1X, H8X	Frt.	C	3136-7 FOX	1	—	—	—	—	—
		Rr.	C	3254-5 FOX	1	—	—	—	—	—
	H1Y	Frt.	C	3136-7 FYY	1	—	—	—	—	—
		Rr.	C	3254-5 FYY	1	—	—	—	—	—
	H1B, H7B	Frt.	C	3148-9 FBB	—	1	—	—	—	—
		Rr.	C	3244-5 FBB	—	1	—	—	—	—
	H1F, H7F	Frt.	C	3148-9 FFF	—	1	—	—	—	—
		Rr.	C	3244-5 FFF	—	1	—	—	—	—
	H7L, H8L	Frt.	C	3148-9 FLL	—	1	—	—	—	—
		Rr.	C	3244-5 FLL	—	1	—	—	—	—
	H1P	Frt.	C	3148-9 FPQ	—	1	—	—	—	—
		Rr.	C	3244-5 FPQ	—	1	—	—	—	—
	H7R	Frt.	C	3148-9 FRR	—	1	—	—	—	—
		Rr.	C	3244-5 FRR	—	1	—	—	—	—
	HST	Frt.	C	3148-9 FTT	—	1	—	—	—	—
		Rr.	C	3244-5 FTT	—	1	—	—	—	—
	H1X, H8X	Frt.	C	3148-9 FOX	—	1	—	—	—	—
		Rr.	C	3244-5 FOX	—	1	—	—	—	—
	H1Y	Frt.	C	3148-9 FYY	—	1	—	—	—	—
		Rr.	C	3244-5 FYY	—	1	—	—	—	—
	H3B, H6B		C	3196-7 FBB	—	—	—	1	—	—
	H3F		C	3196-7 FFF	—	—	—	1	—	—
	H3P		C	3196-7 FPQ	—	—	—	1	—	—
	H6T		C	3196-7 FTT	—	—	—	1	—	—
	H3X, H6X		C	3196-7 FOX	—	—	—	1	—	—
	H6XW		C	3196-7 FXW	—	—	—	1	—	—
	H3Y		C	3196-7 FYY	—	—	—	1	—	—
	P4B	Frt.	C	3420-1 FBB	—	—	1	—	—	—
		Rr.	C	3230-1 FBB	—	—	1	—	—	—
	P7L	Frt.	C	3420-1 FLL	—	—	1	—	—	—
		Rr.	C	3230-1 FLL	—	—	1	—	—	—
	P4F, P8F	Frt.	C	3420-1 FFF	—	—	1	—	—	—
		Rr.	C	3230-1 FFF	—	—	1	—	—	—
	P4T	Frt.	C	3420-1 FTT	—	—	1	—	—	—
		Rr.	C	3230-1 FTT	—	—	1	—	—	—
	P4R	Frt.	C	3420-1 FRR	—	—	1	—	—	—
		Rr.	C	3230-1 FRR	—	—	1	—	—	—
	P4X, P8X	Frt.	C	3420-1 FOX	—	—	1	—	—	—
		Rr.	C	3230-1 FOX	—	—	1	—	—	—
	L1B, MDB	Frt.	Y	3256-7 FB7	—	1	—	—	—	—
		Rr.	Y	3258-9 FB7	—	1	—	—	—	—

NOTE: A letter code in the carline column indicates the carline for which the part is released as follows:

CARLINES Indicate: J - Challenger, B - Barracuda, V - Valiant, L - Dart, R - Belvedere, W - Coronet, P - Plymouth, D - Dodge, C - Chrysler, Y - Imperial

AR Indicates use as required.
★ Indicates change or addition.

Right and left part numbers are on same line, first number is right, second number is left.

Printed in U.S.A.
December 1970

CODE	PART NAME		CAR LINE	PART NUMBER	Sed.	4 D.H.T.	Sta. Wgn.	2 D.H.T.	Sp. 2 D.H.T.	Conv.
23-92-5	PANEL Cont'd.									
	MSB	Frt.	Y	3256-7 FB3	—	1	—	—	—	—
		Rr.	Y	3258-9 FB3	—	1	—	—	—	—
	MDA	Frt.	Y	3256-7 FA5	—	1	—	—	—	—
		Rr.	Y	3258-9 FA5	—	1	—	—	—	—
	L1F	Frt.	Y	3256-7 FF4	—	1	—	—	—	—
		Rr.	Y	3258-9 FF4	—	1	—	—	—	—
	MDF, MSF	Frt.	Y	3256-7 FF8	—	1	—	—	—	—
		Rr.	Y	3258-9 FF8	—	1	—	—	—	—
	L1M, MDM	Frt.	Y	3256-7 FM9	—	1	—	—	—	—
		Rr.	Y	3258-9 FM9	—	1	—	—	—	—
	L1P, MDP	Frt.	Y	3256-7 FP6	—	1	—	—	—	—
		Rr.	Y	3258-9 FP6	—	1	—	—	—	—
	MSR	Frt.	Y	3256-7 FR9	—	1	—	—	—	—
		Rr.	Y	3258-9 FR9	—	1	—	—	—	—
	L1TT, MDTT	Frt.	Y	3256-7 FTT	—	1	—	—	—	—
		Rr.	Y	3258-9 FTT	—	1	—	—	—	—
	MST	Frt.	Y	3256-7 FT5	—	1	—	—	—	—
		Rr.	Y	3258-9 FT5	—	1	—	—	—	—
	MSXW	Frt.	Y	3256-7 FXW	—	1	—	—	—	—
		Rr.	Y	3258-9 FXW	—	1	—	—	—	—
	L1X, MDX, MSX	Frt.	Y	3256-7 FX9	—	1	—	—	—	—
		Rr.	Y	3258-9 FX9	—	1	—	—	—	—
	MDY, MSY	Frt.	Y	3256-7 FY4	—	1	—	—	—	—
		Rr.	Y	3258-9 FY4	—	1	—	—	—	—
	MRB		Y	3260-1 FB3	—	—	—	1	—	—
	MBF, MRF		Y	3260-1 FF8	—	—	—	1	—	—
	MRT		Y	3260-1 FT5	—	—	—	1	—	—
	MRXW		Y	3260-1 FXW	—	—	—	1	—	—
	L3X, MBX, MRX		Y	3260-1 FX9	—	—	—	1	—	—
	MBY, MRY		Y	3260-1 FY4	—	—	—	1	—	—
	L3B, MBB		Y	3260-1 FB7	—	—	—	1	—	—
	L3F		Y	3260-1 FF4	—	—	—	1	—	—
	MBP		Y	3260-1 FP6	—	—	—	1	—	—
	L3TT, MBTT		Y	3260-1 FTT	—	—	—	1	—	—
23-92-8	FASTENER, Door and Quarter Trim Panel		V,L,R,W,P,D,C,Y	1623 945	AR	AR	AR	AR	AR	AR
		QTR. PNL.	P,D,C,Y	6002 444	—	—	—	AR	AR	AR
	CLIP, Door Belt Retaining, Door and Qtr.		B	3415 888	—	—	—	2	—	2
			J	3509 041	—	—	—	2	—	2
23-93-8	STRIP, Tailgate Header to Headlining									
23-93-9	PANEL, Rear Window Header Trim									
	CODES									
	T2X	N.Y. Taxi	W	3599 EX9	1	—	—	—	—	—
23-93-15	PANEL, Windshield Header Trim									
	CODES									
	T2X	N.Y. Taxi	W	3598 EX9	1	—	—	—	—	—
	Anti-Rattle		R,W	2602 924	—	—	2	—	—	—
23-96-1	COVER, Luggage Compartment Deck Opening Lower		W	2879 506	—	—	—	—	1	—
23-96-3	PANEL, Luggage Compartment Front Lining		V,L	2787 855	1	—	—	1	—	—
			V	2879 897	—	—	—	—	1	—
			B,J	2879 896	—	—	—	1	1	—
			R,W	2656 272	1	—	—	1	1	—
			P,D,C,Y	2878 160	1	1	—	—	1	—
			P, D, CM	2878 158	—	—	—	1	—	—
			CH,Y	2879 414	—	—	—	1	—	—
			C,Y	2878 171	1	1	—	—	—	—
			P,D,C	2878 161	—	—	—	—	—	1

NOTE: A letter code in the carline column indicates the carline for which the part is released as follows:

CARLINES Indicate: J - Challenger, B - Barracuda, V - Valiant, L - Dart, R - Belvedere, W - Coronet, P - Plymouth, D - Dodge, C - Chrysler, Y - Imperial

AR Indicates use as required.
★ Indicates change or addition.

Right and left part numbers are on same line, first number is right, second number is left.

Printed in U.S.A.
December 1970

CODE	PART NAME	CAR LINE	PART NUMBER	Sed.	4 D.H.T.	Sta. Wgn.	2 D.H.T.	Sp. 2 D.H.T.	Conv.
23-96-8	PANEL, Luggage Compartment Side Lining								
	CODES								
	WHEEL HOUSE and LWR. QTR.								
	D2B, L2B, H2B, P4B, P6B	R, W	2032-3 FB7	—	—	1	—	—	—
	H2F, H2FW, P3F, P4F	R, W	2032-3 FF8	—	—	1	—	—	—
	D2T, L2T, H2T, H2TW, P4T, P6T	R,W	2032-3 FT4	—	—	1	—	—	—
	L2X, H2X, H2XY, P3X, P4X, P6X, P6XA	R,W	2032-3 FX9	—	—	1	—	—	—
	Lwr. Lt.								
	L2B, D2B, H2B, P4B, P6B	R,W	3517 EB7	—	—	1	—	—	—
	H2F, H2FW, H2TW, P4F	R,W	3517 EF8	—	—	1	—	—	—
	L2T, D2T, H2T, H2TW, P4T, P6T	R,W	3517 FT4	—	—	1	—	—	—
	L2X, D2X, H2X, H2XY, P3X, P4X, P6X	R,W	3517 BX9	—	—	1	—	—	—
	WHEEL HOUSE and LWR. QTR.								
	E2B, B2B, F2B, W4B, L2B, D2B, D4B, R2B, R4B, M4B, H4B	P,D	2028-9 EB3	—	—	1	—	—	—
	E2F, B2F, F2F, W4F, W7F, D2F, D4F, R2F, R4F, L2F, M4F, M7F, H4F, H8F	P,D	2028-9 EF8	—	—	1	—	—	—
	E2T, B2T, F2T, W4T, L2T, D2T, D4T, R2T, R4T, M4T, H4T, H8T	P,D	2028-9 FT4	—	—	1	—	—	—
	F2XA, W4XA, W8XA, L2XA, D2XA, D4XA, R2XA, R4XA, M4XA, M8XA, L2X, H4X, H7X, H8X	P,D	2028-9 EX9	—	—	1	—	—	—
	L2BW, L2TW, L2XW, M4BW, M4TW, M4XW, F2BW, F2TW, F2XW, H4TW, W4TW, W4XW, W4BW	P,D	2028-9 EW1	—	—	1	—	—	—
	Lower Lt.								
	E2B, B2B, F2B, R2B, R4B, L2B, W4B, M4B, H4B	P, D	3583 EB3	—	—	1	—	—	—
	E2F, B2F, F2F, R2F, R4F, L2F, W4F, W7F, M4F, M7F, H4F, H8F	P,D	3583 EF8	—	—	1	—	—	—
	E2T, B2T, L2T, R2T, R4T, F2T, W4T, M4T, H4T, H8T	P,D	3583 FT4	—	—	1	—	—	—
	L2BW, L2XW, L2TW, F2TW, F2BW, F2XW, W4TW, W4BW, W4XW, M4BW, M4TW, M4XW, H4TW	P,D	3583 EW1	—	—	1	—	—	—
	L2X, L2XA, R2XA, R4XA, F2XA, W4XA, W8XA, M4XA, M8XA, H4X, H7X, H8X	P,D	3583 EX9	—	—	1	—	—	—
	P4B	C	2027 EB3	—	—	1	—	—	—
	P4F, P8F	C	2027 EF8	—	—	1	—	—	—
	P7L	C	2027 EL3	—	—	1	—	—	—
	P4R	C	2027 ER8	—	—	1	—	—	—
	P4X, P8X	C	2027 EX9	—	—	1	—	—	—
	COVER, Wheelhouse and Lower								
	AFTER BUILD DATE 10-15-69								
	P4B	C	2076-7 FB3	—	—	1	—	—	—
	P4F, P8F	C	2076-7 FF8	—	—	1	—	—	—
	P7L	C	2076-7 FL3	—	—	1	—	—	—
	P4R	C	2076-7 FR8	—	—	1	—	—	—
	P4T	C	2076-7 FT4	—	—	1	—	—	—
	P4X, P8X	C	2076-7 FX9	—	—	1	—	—	—
	COVER, Lower Quarter Trim Panel Lt.								
	P4B	C	2058 FB3	—	—	1	—	—	—
	P4F, P8F	C	2058 FF8	—	—	1	—	—	—
	P7L	C	2058 FL3	—	—	1	—	—	—
	P4R	C	2058 FR8	—	—	1	—	—	—
	P4T	C	2058 FT4	—	—	1	—	—	—
	P4X, P8X	C	2058 FX9	—	—	1	—	—	—

NOTE: A letter code in the carline column indicates the carline for which the part is released as follows:

CARLINES Indicate: J - Challenger, B - Barracuda, V - Valiant, L - Dart, R - Belvedere, W - Coronet, P - Plymouth, D - Dodge, C - Chrysler, Y - Imperial

AR Indicates use as required.
★ Indicates change or addition.

Right and left part numbers are on same line, first number is right, second number is left.

Printed in U.S.A.
December 1970

CODE	PART NAME	CAR LINE	PART NUMBER	Sed.	4 D.H.T.	Sta. Wgn.	2 D.H.T.	Sp. 2 D.H.T.	Conv.
23-96-8	PANEL Cont'd.								
	COVER, Wheelhouse and Lower Quarter Trim Panel								
	UP TO BUILD DATE 10-15-69								
	P4B	C	2018-9 EB3	—	—	1	—	—	—
	R2T, R4T, M4T, H1T, H4T, H8T, HST, P4T, P8T, P8T	P,D,C	2824-5 FT4	1	—	1	—	—	4
	P7L	C	2018-9 EL3	—	—	1	—	—	—
	P4R	C	2018-9 FR8	—	—	1	—	—	—
	P4T	C	2018-9 FT4	—	—	1	—	—	—
	P4X, P8X	C	2018-9 EX9	—	—	1	—	—	—
	COVER, Lower Quarter Trim Panel Lt.								
	P4B	C	3583 EB3	—	—	1	—	—	—
	P4F, P8F	C	3583 EF8	—	—	1	—	—	—
	P7L	C	3583 EL3	—	—	1	—	—	—
	P4R	C	2027 FR8	—	—	1	—	—	—
	P4T	C	3583 FT4	—	—	1	—	—	—
	P4X, P8X	C	3583 EX9	—	—	1	—	—	—
	Side Rear	C	3415 656-7	1	1	—	1	—	—
	Side Rear Right	Y	2879 700	—	1	—	1	—	—
	Side Rear Left	Y	2878 173	—	1	—	—	—	—
	Side Rear Left	Y	2879 427	—	—	—	1	—	—
	Side Rr.	Y	*3509 078-9	—	—	—	1	—	—
	Lining Fastener	P,D,C,Y	6000 903	AR	AR	—	AR	—	AR
23-96-10	COVER, Luggage Compartment Deck Opening Lower	W	2879 592	—	—	—	—	1	—
		Y	2877 992	—	1	—	1	—	—
23-96-12	PANEL, Luggage Compartment Jack Storage Door w/Air Cond.	Y	2878 890	—	1	—	1	—	—
	w/o Air Cond.	Y	2878 889	—	1	—	1	—	—
23-96-15	PANEL, Luggage Compartment Air Conditioning Cover								
	Black	Y	2879 410	—	1	—	—	—	—
	Black	Y	2879 411	—	—	—	1	—	—
23-96-21	LATCH, Wheelhouse and Lower Quarter Trim Storage Compartment Lid	C	2879 220	—	—	2	—	—	—
23-96-26	LID, Lower Quarter Trim Cover Storage Compartment								
	CODES								
	Lt.								
	P4B	C	2037 FB3	—	—	1	—	—	—
	P4F, P8F	C	2037 EF8	—	—	1	—	—	—
	P7L	C	2037 EL3	—	—	1	—	—	—
	P4R	C	2037 FR8	—	—	1	—	—	—
	P4T	C	2037 FT4	—	—	1	—	—	—
	P4X, P8X	C	2037 EX9	—	—	1	—	—	—
	LID and LATCH PLATE, Storage Compartment Lower Qtr. Trim Cover Left								
	CODES								
	P4B	C	2059 FB3	—	—	1	—	—	—
	P4F, P8F	C	2059 FF8	—	—	1	—	—	—
	P7L	C	2059 FL3	—	—	1	—	—	—
	P4R	C	2059 FR8	—	—	1	—	—	—
	P4T	C	2059 FT4	—	—	1	—	—	—
	P4X, P8X	C	2059 FX9	—	—	1	—	—	—
	Wheelhouse COVER Left								
	P4B	C	2078-9 FB3	—	—	1	—	—	—
	P4F, P8F	C	2078-9 FF8	—	—	1	—	—	—

NOTE: A letter code in the carline column indicates the carline for which the part is released as follows:

CARLINES Indicate: J - Challenger, B - Barracuda, V - Valiant, L - Dart, R - Belvedere, W - Coronet, P - Plymouth, D - Dodge, C - Chrysler, Y - Imperial

AR Indicates use as required.
★ Indicates change or addition.

Right and left part numbers are on same line, first number is right, second number is left.

Printed in U.S.A.
December 1970

CODE	PART NAME	CAR LINE	PART NUMBER	Sed.	4 D.H.T.	Sta. Wgn.	2 D.H.T.	Sp. 2 D.H.T.	Conv.
23-96-26	LID Cont'd.								
	P7L	C	2078-9 FL3	—	—	1	—	—	—
	P4R	C	2078-9 FR8	—	—	1	—	—	—
	P4T	C	2078-9 FT4	—	—	1	—	—	—
	P4X, P8X	C	2078-9 FX9	—	—	1	—	—	—
23-96-31	GRILLE, Wheelhouse Cover (Paint as Reqd.)								
	Rt.	P,D,C	2066 FX9	—	—	1	—	—	—
	Lt.	P,D,C	2067 FX9	—	—	1	—	—	—
	Wheelhouse COVER LID w/REAR SEAT SPEAKER	C	2068 FX9	—	—	1	—	—	—
	w/AM RADIO and STEREO PLAYER	C	2068 FX9	—	—	2	—	—	—
23-99-4	COVER, Center Pillar Trim LOWER WIRING CODES	R,W	2813 BX9	2	—	2	—	—	—
	E1B, E2B, L1B, L2B, L3B, L4B, D1B, D2B, D4B, R2B, R4B B1B, B2B, F1B, F2B, W1B, W4B, M1B, M4B, H1B, H7B H4B, H7B, P4B, P7B,	P, D, C	2824-5 EB3	1	—	1	—	—	—
	H1B, H7B	D	2824-5 EB3	1	—	1	—	—	—
	H1B, H7B	C	2824-5 EB7	1	—	—	—	—	—
	E2F, B2F	P,D	2824-5 FF4	1	—	1	—	—	—
	L1F, L2F, D2F	P	2824-5 EF8	1	—	1	—	—	—
	L1F, L2F, D1F, L4F	D	2824-5 FF4	1	—	1	—	—	—
	M1F, M4F, M7F, B3F, F1F, F2F, W1F W4F, W7F, D2F, D4F, R2F, R4F, H1F, H3F, H4F, H7F, H8F, E1F, L3F, P4F, P7F, P8F, H7F	P,D,C	2824-5 EF8	1	—	1	—	—	—
	K1T, K2T, E1T, E2T, L2T, B1T, B2T, F2T, W4T, D2T, D4T, R2T, R4T, M4T, H1T, H4T, H8T, HST, P4T, P8T	P,D,C	2824-5 FT4	1	—	1	—	—	—
	E1L, L7L, H7L, P7L	C	2824-5 EL3	1	—	1	—	—	—
	E1P, M4XP, H4XP, W4XP, L3P, H1P	P,D,C	2824-5 FP6	1	—	1	—	—	—
	E1X, E2X, L3X, L4X, L8X, L1XA, L2XA, L1X, L2X, K1A, K2A, M1XA, M4XA, M8XA, B3XA, F2XA, W1XA, W4XA, W8XA, H1X, H4X, H7X, H8X, P3XA, P4X, P4XA, P8XA, P8X	P,D,C	2824-5 EX9	1	—	1	—	—	—
	L2BW, L2TW, L2XW, M4BW, M4TW, M4XW, F2BW, F2TW, F2XW, W4BW, W4TW, W4XW, H4TW	P,D	2824-5 EW1	—	—	1	—	—	—
	L1Y, E2Y, L3Y, M1Y, M4Y, B3Y, D1Y, F1Y, W1Y, W4Y, H1Y, H3Y, P3Y,	P, D, C	2824-5 FY4	1	—	—	—	—	—
	L4R, L7R, H7R, P4R	C	2824-5 FR8	1	—	1	—	—	—
	E1B, E2B, L1B, L2B, L3B, L4B, M1B, M4B, W1B, W4B, H1B, H7B, P3B, P4B, MSB	P,D,C,Y	2842-3 EB3	—	1	—	—	—	—
	MDB	Y	2842-3 EB7	—	1	—	—	—	—
	L1F, L2F	D	2842-3 FF4	—	1	—	—	—	—
	E1B, E2B, W1B, W4B, D1B, L1B, L2B L3B, L4B, M1B, M4B, H1B, H3B, H4B, H6B, H7B, P3B, P4B, P6B, P7B, MSB	P, D, C, Y	2842-3 FB3	—	1	—	—	—	—
	H1B, H7B	C	2842-3 FB7	—	1	—	—	—	—
	E1F, W1F, W4F, L3F, M1F, M3F, M4F, M6F, H1F, H3F, H4F, H6F, H7F, H8F, P3F, P4F, P6F, P7F, MDF, MSF, H7F	P, D, C, Y	2842-3 FF8	—	1	—	—	—	—
	W4K, M4K, H4K, H8K, P4K	P, D	2842-3 FK6	—	1	—	—	—	—
	E2T, L2T, M4T, W4T, H1T, M6T, H4T, H8T, P4T, P8T, HST, D2TY	P, D, C	2842-3 FT4	—	1	—	—	—	—

NOTE: A letter code in the carline column indicates the carline for which the part is released as follows:

CARLINES Indicate: J - Challenger, B - Barracuda, V - Valiant, L - Dart, R - Belvedere, W - Coronet, P - Plymouth, D - Dodge, C - Chrysler, Y - Imperial

AR Indicates use as required.
★ Indicates change or addition.

Right and left part numbers are on same line, first number is right, second number is left.

Printed in U.S.A.
December 1970

CODE	PART NAME	CAR LINE	PART NUMBER	Sed.	4 D.H.T.	Sta. Wgn.	2 D.H.T.	Sp. 2 D.H.T.	Conv.
23-99-4	COVER Cont'd.								
	E1X, E2X, X2X, W1XA, W4XA, D1X, L1X, L2X, L3X, L4X, M1XA, M3X, M4XA, L8X, H1X, H3XA, H4XA, H6XA, H8XA, H7X, P3XA, P4XA, P6XA, P8XA, H8X, MDX, MSX	P,D,C,Y	2842-3 FX9	—	1	—	—	—	—
	E2Y, W1Y, D1Y, L1Y, L3Y, M1Y, M3Y, P3Y, H1Y, H3Y, MDY, MSY	P,D,C,Y	2842-3 FY4	—	1	—	—	—	—
	E1L, M5L, L7L, H7L, H8L	C	2842-3 FL3	—	1	—	—	—	—
	L1F, L2F, L4F, D1F	D	2842-3 FF4	—	1	—	—	—	—
	L4XW, M6XW, MSXW	D,C,Y	2842-3 FW1	—	1	—	—	—	—
	E1P, W4XP, L3P, M4XP, H1P, H4XP, P4XP, L1P, MDP	P,D,Y	2842-3 FP6	—	1	—	—	—	—
	L4R, L7R, M4R, H7R, MSR	C,Y							
	L1M, MDM	Y	2842-3 FM9	—	1	—	—	—	—
	MDA	Y	2842-3 FA5	—	1	—	—	—	—
	L1B, MDB	Y	2842-3 FB7	—	1	—	—	—	—
	L1TT, MDTT	Y	2842-3 FT2	—	1	—	—	—	—
	E1X, E2X, L1X, L2X, L3X, L4X, L8X, W1XA, W4XA, W8XA, M3X, M4X, M6X, M1XA, M4XA, M8XA, H1X, H7X, H8X, P3XA, P4XA, P7XA, MDX, MSX	P,D,C,Y	2838-9 EX9	—	1	—	—	—	—
	LOWER								
23-99-6	COVER, Rear Door Lock Pillar								
	CODES								
	DUAL AIR COND. w/FRT. HEATER RT.								
	E2F, B2F, F2F, W4F, W7F, L2F, M4F, M7F, H4F, H8F, P4F, P8F	P,D,C	1508 EF8	—	—	1	—	—	—
	F2BW, F2TW, F2XW, W4BW, W4TW, W4XW, L2BW, L2TW, L2XW, M4BW, M4TW, M4XW, H4TW	P,D	1508 EW1	—	—	1	—	—	—
	F2XA, W4XA, W8XA, L2XA, M4XA, H4X, H7X, H8X, P4X, P8X	P,D,C	1508 EX9	—	—	1	—	—	—
	DUAL AIR COND. w/FRONT HEATER Right Side								
	E2B, B2B, D2B, R2B, D4B, W4B, L2B, M4B, H4B, P4B	P,D,C	1558 FB3	—	—	1	—	—	—
	D2F, D4F, R2F, W4F, W7F, L2F, M4F, M7F, H4F, H8F, P4F, P8F	P,D,C	1558 FF8	—	—	1	—	—	—
	E2T, D2T, B2T, D4T, R2T, W4T, L2T, M4T H4T, H8T, P4T	P,D,C	1558 FT4	—	—	1	—	—	—
	D2XA, D4XA, L2X, L2XA, R2XA, W4XA, W8XA, M4XA, M8XA, H4X, H8X, P4X, P8X	P,D,C	1558 FX9	—	—	1	—	—	—
	P7L	C	1558 FL3	—	—	1	—	—	—
	P4R	C	1558 FR8	—	—	1	—	—	—
	UPPER 2 DOOR	P	2820 EX9	2	—	—	—	—	—
	CODES LOCK PILLAR UPPER								
	E2B, L2B, B2B, F2B, W4B, M4B, H4B, P4B	P,D,C	2840-1 EB7	—	—	1	—	—	—
	E2F, L2F, B2F, W4F, F2F, W7F, M4F, M7F, H4F, H8F, P4F, P8F	P,D,C	2840-1 EF8	—	—	1	—	—	—
	E2T, L2T, B2T, F2T, W4T, M4T, H4T, H8T, P4T	P,D,C	2840-1 FT4	—	—	1	—	—	—
	L2X, L2XA, F2X, W4XA, W8XA, M4XA, M8XA, H4X, H7X, H8X, P4X, P8X	P,D,C	2840-1 EX9	—	—	1	—	—	—
	P4R	C	2840-1 FR8	—	—	1	—	—	—
	P7L	C	2840-1 EL3	—	—	1	—	—	—

NOTE: A letter code in the carline column indicates the carline for which the part is released as follows:

CARLINES Indicate: J - Challenger, B - Barracuda, V - Valiant, L - Dart, R - Belvedere, W - Coronet, P - Plymouth, D - Dodge, C - Chrysler, Y - Imperial

AR Indicates use as required.
★ Indicates change or addition.

Right and left part numbers are on same line, first number is right, second number is left.

Printed in U.S.A.
December 1970

CODE	PART NAME	CAR LINE	PART NUMBER	Sed.	4 D.H.T.	Sta. Wgn.	2 D.H.T.	Sp. 2 D.H.T.	Conv.
23-99-6	COVER Cont'd.								
	L2BW, L2TW, L2XW, F2BW, F2TW, F2XW, W4TW, W4BW, W4XW, M4BW, M4TW, M4XW, H4TW	P,D	2840-1 EW1	—	—	1	—	—	—
23-99-9	RETAINER, Tailgate Pillar Trim	R,W	2860 853	—	—	1	—	—	—
	Frt. Support	P,D,C	2894 154	—	—	1	—	—	—
23-99-17	COVER, Tailgate Opening Pillar Upper								
	CODES								
	E2B, L2B, B2B, F2B, M4B, W4B, H4B, P4B	P,D,C	2834-5 EB7	—	—	1	—	—	—
	E2F, L2F, B2F, W4F, W7F, M4F, M7F, H4F, H8F, P4F, P8F	P,D,C	2834-5 EF8	—	—	1	—	—	—
	E2T, L2T, B2T, W4T, M4T, H4T, H8T, P4T	P,D,C	2834-5 FT4	—	—	1	—	—	—
	P4R	C	2834-5 FR8	—	—	1	—	—	—
	L2BW, L2TW, L2XW, F2BW, F2TW, F2XW, W4BW, W4TW, W4XW, W4BW, M4TW, M4XW, H4TW	P,D	2834-5 EW1	—	—	1	—	—	—
	L2X, L2XA, M4XA, M8XA, F2XA, W4XA, W8XA, H4X, H7X, H8X, P4X, P8X	P,D,C	2834-5 EX9	—	—	1	—	—	—
	P7L	C	2834-5 EL3	—	—	1	—	—	—
23-99-41	COVER, Tailgate Opening Pillar								
	CODES								
	UPPER								
	E2B, D2B, D4B, B2B, F2B, R2B, R4B, L2B, W4B, M4B, H4B, P4B	P,D,C	2834-5 EB3	—	—	1	—	—	—
	D2F, D4F, F2F, R2F, R4F, L2F, W4F, W7F, M4F, H4F, H8F, P4F, P8F	P,D.C	2834-5 EF8	—	—	1	—	—	—
	E2T, D2T, D4T, B2T, F2T, R2T, R4T, W4T, L2T, M4T, H4T, P4T	P,D,C	2834-5 FT4	—	—	1	—	—	—
	P7L	C	2834-5 EL3	—	—	1	—	—	—
	D2XA, D4XA, F2XA, R2XA, R4XA, W4XA, W8XA, M4XA, M8XA, H4XA, H8XA, P4XA, P8XA	P,D,C	2834-5 EX9	—	—	1	—	—	—
	P4R	C	2834-5 FR8	—	—	1	—	—	—
23-101-3	PANEL, Rear Quarter Trim								
	CODES								
	L1B, D2B, L4B	V	4716-7 FB7	—	—	—	—	1	—
	L4E	V	4716-7 FE4	—	—	—	—	1	—
	L1F, D2F, L4F	V	4716-7 FF8	—	—	—	—	1	—
	L4T	V	4716-7 FT5	—	—	—	—	1	—
	L1X, D2X, L4X, L6X	V	4716-7 FX9	—	—	—	—	1	—
	L6BW, L6EW, L6XW	V	4716-7 FW1	—	—	—	—	1	—
	H4B, H6B	B	4678-9 FB6	—	—	—	1	—	—
	H4F, H6F	B	4678-9 FF7	—	—	—	1	—	—
	H6E	B	4678-9 FE5	—	—	—	1	—	—
	H6T	B	4678-9 FT1	—	—	—	1	—	—
	H4BW, H4FW, H4XW, H6BW, H6FW, H6XW	B	4678-9 FW1	—	—	—	1	—	—
	H4X, H6X, P5X9	B	4678-9 FX9	—	—	—	1	—	—
	P6B	B	4680-1 FB6	—	—	—	1	—	—
	P6F	B	4680-1 FF7	—	—	—	1	—	—
	P6YX	B	4680-1 FY5	—	—	—	1	—	—
	P6E	B	4680-1 FE5	—	—	—	1	—	—
	P5K, P6K	B	4680-1 FK6	—	—	—	1	—	—
	P6T, PRT	B	4680-1 FT1	—	—	—	1	—	—
	P6BW, P6EW, P6FW, P6XW, PRXW	B	4680-1 FW1	—	—	—	1	—	—
	P5X, P6A, PRX	B	4680-1 FX9	—	—	—	1	—	—
	FORMED UPPER								
	H4B, H6B	B	2064-5 FB6	—	—	—	1	—	—
	H6E	B	2064-5 FE5	—	—	—	1	—	—

NOTE: A letter code in the carline column indicates the carline for which the part is released as follows:

CARLINES Indicate: J - Challenger, B - Barracuda, V - Valiant, L - Dart, R - Belvedere, W - Coronet, P - Plymouth, D - Dodge, C Chrysler, Y - Imperial

AR Indicates use as required.
★ Indicates change or addition.

Right and left part numbers are on same line, first number is right, second number is left.

Printed in U.S.A.
December 1970

CODE	PART NAME	CAR LINE	PART NUMBER	Sed.	4 D.H.T.	Sta. Wgn.	2 D.H.T.	Sp. 2 D.H.T.	Conv.
23-101-3	PANEL Cont'd.								
	H4F, H6F	B	2064-5 FF7	—	—	—	1	—	—
	H6T	B	2064-5 FT1	—	—	—	1	—	—
	H4BW, H4FW, H4XW, H6BW, H6FW, H6EW, H6XW, PRXW	B	2064-5 FW1	—	—	—	1	—	—
	H4X, H6X, PRX, P5X	B	2064-5 FX9	—	—	—	1	—	—
	P6B	B	2062-3 FB6	—	—	—	1	—	—
	P6E	B	2062-3 FE5	—	—	—	1	—	—
	P6F	B	2062-3 FF7	—	—	—	1	—	—
	P5K, P6K	B	2062-3 FK6	—	—	—	1	—	—
	P6T, PRT	B	2062-3 FT1	—	—	—	1	—	—
	P6BW, P6EW, P6FW, P6XW, PRXW	B	2062-3 FW1	—	—	—	1	—	—
	P5X, P6A, PRX, P6YX	B	2062-3 FX9	—	—	—	1	—	—
	w/o, Ash Rec.								
	H4B, H6B	J	3322-3 FB6	—	—	—	1	—	—
	H6F	J	3322-3 FF7	—	—	—	1	—	—
	H6T	J	3322-3 FT1	—	—	—	1	—	—
	H6E	J	3322-3 FE5	—	—	—	1	—	—
	H6K	J	3322-3 FK6	—	—	—	1	—	—
	L6X, H4X, H6X	J	3322-3 FX9	—	—	—	1	—	—
	L6XW, H6XW	J	3322-3 FW1	—	—	—	1	—	—
	w/o ASH REC.								
	H5B	J	4554-5 FB6	—	—	—	1	1	—
	H5F	J	4554-5 FF7	—	—	—	1	1	—
	H5K, HRK	J	4554-5 FK6	—	—	—	1	1	—
	HRT	J	4554-5 FT4	—	—	—	1	1	—
	H5X, HRX	J	4554-5 FX9	—	—	—	1	1	—
	H2B	L	3334-5 FB3	—	—	—	1	—	—
	H2F, H6F	L	3334-5 FF4	—	—	—	1	—	—
	H2XW	L	3334-5 FW1	—	—	—	1	—	—
	H2X, H6X	L	3334-5 FX9	—	—	—	1	—	—
	H2T, H6T	L	3334-5 FT5	—	—	—	1	—	—
	2 DOOR								
	L2B	W	3338-9 FOB	1	—	—	—	—	—
	K1T, K2T, L2T	R,W	3338-9 FOT	1	—	—	—	—	—
	L2X	W	3338-9 FOX	1	—	—	—	—	—
	2 DOOR								
	M2B	R	3352-3 FOB	1	—	—	—	—	—
	M2T	R	3352-3 FOT	1	—	—	—	—	—
	M2X	R	3352-3 FOX	1	—	—	—	—	—
	2 DOOR								
	H1X, H2X	R	3362-3 FAX	1	—	—	1	—	—
	H1B, H2B	R	3362-3 FBB	1	—	—	1	—	—
	H1F, H2F	R	3362-3 FFF	1	—	—	1	—	—
	H2K	R	3362-3 FKK	1	—	—	1	—	—
	H2T	R	3362-3 FTL	1	—	—	1	—	—
	H2BW, H2KW, H2XW	R	3362-3 FOW	1	—	—	1	—	—
	2 DOOR								
	P3B, P6B	R	3358-9 FB5	1	—	—	1	—	—
	P6XA	R	3358-9 FA8	1	—	—	1	—	—
	P6F	R	3358-9 FF8	1	—	—	1	—	—
	P3K, P6K	R	3358-9 FK4	1	—	—	1	—	—
	P6T	R	3358-9 FT5	1	—	—	1	—	—
	P6BW, P6KW, P6TW, P6XW	R	3358-9 FW1	1	—	—	1	—	—
	P3X	R	3358-9 FX9	—	—	—	1	—	—
	P6XY	R	3358-9 FY4	1	—	—	1	—	—
	H2X	R	3364-5 FAX	—	—	—	—	—	1
	H2B	R	3364-5 FBB	—	—	—	—	—	1

NOTE: A letter code in the carline column indicates the carline for which the part is released as follows:

CARLINES Indicate: J - Challenger, B - Barracuda, V - Valiant, L - Dart, R - Belvedere, W - Coronet, P - Plymouth, D - Dodge, C - Chrysler, Y - Imperial

AR Indicates use as required.
★ Indicates change or addition.

Right and left part numbers are on same line, first number is right, second number is left.

Printed in U.S.A.
December 1970

CODE	PART NAME	CAR LINE	PART NUMBER	Sed.	4 D.H.T.	Sta. Wgn.	2 D.H.T.	Sp. 2 D.H.T.	Conv.
23-101-3	PANEL Cont'd.								
	H2K	R	3364-5 FKK	—	—	—	—	—	1
	H2BW, H2KW, H2XW	R	3364-5 FOW	—	—	—	—	—	1
	P6B	R	3360-1 FB5	—	—	—	—	—	1
	P6XA	R	3360-1 FA8	—	—	—	—	—	1
	P6K	R	3360-1 FK4	—	—	—	—	—	1
	P6BW, P6KW, P6TW, P6XW	R	3360-1 FW1	—	—	—	—	—	1
	2 DOOR								
	UPPER								
	M2B, H1B, H2B, H2BW, P3B, P6B, P6BW, D6B	W	7150-1 EB8	1	—	—	1	—	—
	M6F, H1F, H2F, P6F, D6F	W	7150-1 EF7	1	—	—	1	—	—
	L2X, M2X, M6X, M6XY, D6XY, H1X, H2X, P3X, P6XA, P6XY	W	7150-1 EX9	1	—	—	1	—	—
	H2K, H2KW, P6KW, P3K, P6K, M6K, D6K	R,W	7150-1 FK6	1	—	—	1	—	—
	K1T, K2T, H2T, P6T, P6TW, L2T, M6T, D6T	R,W	7150-1 FT1	1	—	—	1	—	—
	H2XW, P6XW, M6XW, D6XW	R,W	7150-1 FW1	1	—	—	1	—	—
		L	2070-1 FX9	1	—	—	—	—	—
	L2B, D2B	L	3388-9 FOB	—	—	—	1	—	—
	D2F	L	3388-9 FOF	—	—	—	1	—	—
	D2T	L	3388-9 FOT	—	—	—	1	—	—
	L2X, D2X	L	3388-9 FOX	—	—	—	1	—	—
	LOWER QUARTER TRIM COVER	L	2056-7 CX9	1	—	—	—	—	—
	2 DOOR								
	M6B, D6B	W	3324-5 FOB	1	—	—	1	—	—
	M6F, D6F	W	3324-5 FOF	1	—	—	1	—	—
	M6K, D6K	W	3324-5 FOK	1	—	—	1	—	—
	M6T, D6T	W	3324-5 FOT	1	—	—	1	—	—
	M6XW, D6XW	W	3324-5 FOW	1	—	—	1	—	—
	M6X, D6X	W	3324-5 FOX	1	—	—	1	—	—
	2 DOOR								
	H2B	W	3320-1 FOB	1	—	—	1	—	—
	H2F	W	3320-1 FOF	1	—	—	1	—	—
	H2K	W	3320-1 FOK	1	—	—	1	—	—
	H2T	W	3320-1 FOT	1	—	—	1	—	—
	H2XW	W	3320-1 FOW	1	—	—	1	—	—
	H2X	W	3320-1 FOX	1	—	—	1	—	—
	D4B, D6B	W	3326-7 FOB	—	—	—	—	—	1
	D4F, D6F	W	3326-7 FOF	—	—	—	—	—	1
	D4K, D6K	W	3326-7 FOK	—	—	—	—	—	1
	D4T, D6T	W	3326-7 FOT	—	—	—	—	—	1
	D4XW, D6XW	W	3326-7 FOW	—	—	—	—	—	1
	D4X, D6X	W	3326-7 FOX	—	—	—	—	—	1
	UPPER								
	C5XA, C6XA, CRXA	W	3312-3 FA8	—	—	—	—	1	—
	C6B, CRB	W	3312-3 FB5	—	—	—	—	1	—
	C6F, CRF	W	3312-3 FF8	—	—	—	—	1	—
	C6K	W	3312-3 FK4	—	—	—	—	1	—
	C6T, CRT	W	3312-3 FT5	—	—	—	—	1	—
	C6XW	W	3312-3 FW1	—	—	—	—	1	—
	LOWER								
	CRXA	W	3472-3 FA8	—	—	—	—	1	—
	CRB	W	3472-3 FB5	—	—	—	—	1	—
	CRF	W	3472-3 FF8	—	—	—	—	1	—
	CRT	W	3472-3 FT5	—	—	—	—	1	—
	LOWER								
	C2XA, C5XA, C6XA	W	4722-3 FA8	—	—	—	—	1	—

NOTE: A letter code in the carline column indicates the carline for which the part is released as follows:

CARLINES Indicate: J - Challenger, B - Barracuda, V - Valiant, L - Dart, R - Belvedere, W - Coronet, P - Plymouth, D - Dodge, C - Chrysler, Y - Imperial

AR Indicates use as required.
★ Indicates change or addition.

Right and left part numbers are on same line, first number is right, second number is left.

Printed in U.S.A.
December 1970

CODE	PART NAME	CAR LINE	PART NUMBER	Sed.	4 D.H.T.	Sta. Wgn.	2 D.H.T.	Sp. 2 D.H.T.	Conv.
23-101-3	PANEL Cont'd.								
	C2B, C6B	W	4722-3 FB5	—	—	—	—	1	—
	C2F, C6F	W	4722-3 FF8	—	—	—	—	1	—
	C2K, C6K	W	4722-3 FK4	—	—	—	—	1	—
	C2T, C6T	W	4722-3 FT5	—	—	—	—	1	—
	C2XW, C6XW	W	4722-3 FW1	—	—	—	—	1	—
	2 DOOR								
	E1B, E2B	P	3376-7 FB3	1	—	—	—	—	—
	K1T, K2T, E1T, E2T	P	3376-7 FT5	1	—	—	—	—	—
	L2B	P	3380-1 FB3	1	—	—	—	—	—
	L2Y	P	3380-1 FY4	1	—	—	—	—	—
	P4XA	P	*9708-9 FAX	1	—	—	—	—	—
	P4F8	P	*9708-9 FFF	1	—	—	—	—	—
	P4TT	P	*9708-9 FTT	1	—	—	—	—	—
	L1B (CANADA)	P	3348-9 FB3	—	—	—	1	—	—
	L1Y (CANADA)	P	3348-9 FY4	—	—	—	1	—	—
	L1F (CANADA)	P	3348-9 FF8	—	—	—	1	—	—
	L2XA (CANADA)	P	3348-9 FA8	—	—	—	1	—	—
	L2T (CANADA)	P	3348-9 FT5	—	—	—	1	—	—
	LWR. QTR. FRT. TRM. COVER								
	E2B, L1B, M1B, M4B, P3B, P4B	P	3518-9 FB3	1	1	—	—	—	—
	L1F, M1F, M4F, P3F	P	3518-9 FF8	1	1	—	—	—	—
	M4K, P3K, P4K	P	3518-9 FK6	—	1	—	—	—	—
	E2T, L2T, K1T, K2T, M4T, PRT	P	3518-9 FT4	1	1	—	—	—	—
	L1XA, L2XA, M1XA, M4XA, M8XA, P3XA, P4XA, P7XA, X1X, X2X	P	3518-9 FX9	1	1	—	—	—	—
	L1Y, M1Y, M4Y	P	3518-9 FY4	1	1	—	—	—	—
	M4XP, H4XP	P	3518-9 FP6	1	1	—	—	—	—
	M1XA, M4XA	P	3308-9 FAX	—	—	—	1	—	—
	M1B, M4B	P	3308-9 FBB	—	—	—	1	—	—
	M1F, M4F	P	3308-9 FFF	—	—	—	1	—	—
	M1K, M4K	P	3308-9 FK4	—	—	—	1	—	—
	M4T, M6T	P	3308-9 FT5	—	—	—	1	—	—
	M4XW	P	3308-9 FW1	—	—	—	1	—	—
	M4XP	P	3308-9 FP8	—	—	—	1	—	—
	M1XA, M4XA, M6XA	P	3390-1 FAX	—	—	—	—	1	—
	M1B, M4B	P	3390-1 FBB	—	—	—	—	1	—
	M1F, M4F	P	3390-1 FFF	—	—	—	—	1	—
	M1K, M4K	P	3390-1 FK4	—	—	—	—	1	—
	M4XP	P	3390-1 FP8	—	—	—	—	1	—
	M4T, M6T, M4XW	P	3390-1 FT5	—	—	—	—	1	—
		P	3390-1 FW1	—	—	—	—	1	—
	2 DOOR								
	UPPER								
	E2B, L1B, L2B, W1B, W4B, M1B, M4B, H1B, H7B, H6B	P,D	3554-5 EB2	1	1	—	1	1	—
	L1F, L2F, W1F, W4F, M1F, M4F, H1F, H6F, H7F, H8F, P3F	P,D	3554-5 EF7	—	1	—	1	1	—
	M1K, M4K, H6K, W4K, H8K, P3K, P4K	P,D	3554-5 FK6	—	1	—	1	1	—
	E2T, K1T, K2T, L2T, W4T, M4T, M6T, H1T, H6T, P4T	P,D	3554-5 FT1	1	1	—	1	1	—
	L1Y, W1Y, W4Y, M1Y, M4Y, H1Y	P,D	3554-5 FY5	1	1	—	1	—	—
	L1X, L2X, W1XA, W4XA, W8XA, M1XA, M4XA, M8XA, M4XP, H1X, H6XA, H6XP, H7X, H8X, P3XA, P4XA, P5XA, P7XA	P,D	3554-5 EX9	—	1	—	1	1	—
	H3B, H4B, H5B, H6B,	P	3316-7 FB3	—	—	—	1	—	—

NOTE: A letter code in the carline column indicates the carline for which the part is released as follows:

CARLINES Indicate: J - Challenger, B - Barracuda, V - Valiant, L - Dart, R - Belvedere, W - Coronet, P - Plymouth, D - Dodge, C - Chrysler, Y - Imperial

AR Indicates use as required.
★ Indicates change or addition.

Right and left part numbers are on same line, first number is right, second number is left.

Printed in U.S.A.
December 1970

CODE	PART NAME	CAR LINE	PART NUMBER	Sed.	4 D.H.T.	Sta. Wgn.	2 D.H.T.	Sp. 2 D.H.T.	Conv.
23-101-3	PANEL Cont'd.								
	H3F, H4F, H5F, H6F	P	3316-7 FF8	—	—	—	1	—	—
	H3K, H4K, H6K	P	3316-7 FK4	—	—	—	1	—	—
	D6T, H4T, H6T	P	3316-7 FT5	—	—	—	1	—	—
	H4XP	P	3316-7 FPX	—	—	—	1	—	—
	H4XW	P	3316-7 FWX	—	—	—	1	—	—
	H3XA, H4XA, H6XA, D6XA P5XA	P	3316-7 FA8	—	—	—	1	—	—
	H3XA, H4XA, D6XA, H6XA	P	3396-7 FA8	—	—	—	—	1	—
	H3B, H4B, H5B, H6B	P	3396-7 FB3	—	—	—	—	1	—
	H3F, H4F, H5F, H6F	P	3396-7 FF8	—	—	—	—	1	—
	H3K, H4K, H6K	P	3396-7 FK4	—	—	—	—	1	—
	H6XP	P	3396-7 FP8	—	—	—	—	1	—
	H4T, H6T, D6T,	P	3396-7 FT5	—	—	—	—	1	—
	H6XW	P	3392-3 FW1	—	—	—	—	1	—
	H4XW	P	3396-7 FWX	—	—	—	—	1	—
	M4XA, M6XA,	P, D	3386-7 FAX	—	—	—	—	—	1
	M4B, M6B,	P, D	3386-7 FBB	—	—	—	—	—	1
	M4F, M6F,	P, D	3386-7 FFF	—	—	—	—	—	1
	H6XA, P6XA	P,D	3382-3 FA8	—	—	—	—	—	1
	H6B, P6B	P,D	3382-3 FB3	—	—	—	—	—	1
	H6F, P6F	P,D	3382-3 FF8	—	—	—	—	—	1
	H6XW, P6XW	P,D	3382-3 FW1	—	—	—	—	—	1
	LOWER QTR. FRT.								
	2 DOOR								
	E1B, E2B, L1B, L2B, F1B, W1B, W4B, W6B, M1B, M4B, M6B, L3B, L4B, H3B, H4B, H6B, P3B, P4B, P5B, P6B	P, D, C	3584-5 EB3	1	—	—	1	1	1
	E1F, L3F, M1F, M3F, M4F, W1F, W4F, M6F, H3F, H4F, H6F, P3F, P4F, P5F, P6F	P, D, C	3584-5 EF8	—	—	—	1	1	1
	H6T, P6T, PRT J6T, D2TY	P, D, C	3584-5 FT4	1	—	—	1	1	1
	W4K, P3K, P4K, P6K	D	3584-5 FK6	—	—	—	1	—	—
	L1Y, F1Y, D1Y, E2Y, L3Y, M3Y, H3Y, H4Y	P,D,C	3584-5 FY4	1	—	—	1	1	1
	E1X, E2X, E6X, L1X, L2X, L3X, L4X, J6XA, D6XA, F2XA, D1X, L6X, W1XA, W4XA, M3X, M4X, M6X, M1XA, M4XA, H3X, H4X, H6X, H6XP, H6XA, H3XA, H3X, H4X, H6X, H6XP, H6XA, H3XA, H4XA, H6XW, H4XA, H6XW, P3XA, P4XA, P5XA, P6XA, P6XW	P,D,C	3584-5 EX9	—	—	—	1	1	1
	4 DOOR								
	LWR. QTR. FRONT TRIM COVER L1B, L2B, L4B, B2B, F1B, D1B, W1B, W4B, H1B, P3B, P4B, P6B, P7B, H7B	D	3514-5 EB3	1	1	—	—	—	—
	L1F, L2F, L4F, D1F, W1F, W4F, H1F, H7F, H8F, P3F	D	3514-5 FF4	1	1	—	—	—	—
	F1F, W1F, W4F, H1F, H7F, H8F	D	3514-5 FF8	1	1	—	—	—	—
	W4K, H8K, P4F, P6F, P7F,	D	3514-5 FK6	1	1	—	—	—	—
	L2T, B2T, F2T, W4T, H1T	D	3514-5 FT4	1	1	—	—	—	—
	L1X, L2X, L4X, K1A, K2A, F1XA, F2XA, W1XA, W4XA, H1X, H7X, H8X, P3XA, P4XA, P6XA, P8XA,	D	3514-5 FX9	1	1	—	—	—	—
	F1B	D	3366-7 FB3	—	—	—	1	—	—
	F1Y	D	3366-7 FY4	—	—	—	1	—	—
	F1XA, F2XA	D	3366-7 FA8	—	—	—	1	—	—
	F1F	D	3366-7 FF8	—	—	—	1	—	—
	F2T	D	3366-7 FT5	—	—	—	1	—	—
	L1B, L2B, L4B, M6B, D1B,	D	3350-1 FBB	—	—	—	1	—	—
	L1F, L2F, L4F, D1F, M6F	D	3350-1 FFF	—	—	—	1	—	—
	L2T,	D	3350-1 FT5	—	—	—	1	—	—
	L4XW, D6XW,	D	3350-1 FW1	—	—	—	1	—	—

NOTE: A letter code in the carline column indicates the carline for which the part is released as follows:

CARLINES Indicate: J - Challenger, B - Barracuda, V - Valiant, L - Dart, R - Belvedere, W - Coronet, P - Plymouth, D - Dodge, C - Chrysler, Y - Imperial

AR Indicates use as required.
★ Indicates change or addition.

Right and left part numbers are on same line, first number is right, second number is left.

Printed in U.S.A.
December 1970

CODE	PART NAME	CAR LINE	PART NUMBER	Sed.	4 D.H.T.	Sta. Wgn.	2 D.H.T.	Sp. 2 D.H.T.	Conv.
23-101-3	PANEL Cont'd.								
	L1X, L2X, L4X, D6X, D1X	D	3350-1 FX9	—	—	—	1	—	—
	L1Y, D1Y,	D	3350-1 FY4	—	—	—	1	—	—
	W1XA, W4XA	D	3384-5 FAX	—	—	—	1	—	—
	W1B, W4B	D	3384-5 FBB	—	—	—	1	—	—
	W1F, W4F	D	3384-5 FFF	—	—	—	1	—	—
	W1K, W4K	D	3384-5 FK4	—	—	—	1	—	—
	W4XP	D	3384-5 FP8	—	—	—	1	—	—
	W4T, W6T	D	3384-5 FT5	—	—	—	1	—	—
	W4XW	D	3384-5 FW1	—	—	—	1	—	—
	UP TO BUILD DATE 9-1-69								
	H3B, H4B	D	3398-9 FB3	—	—	—	1	—	—
	H3F, H4F, H6F	D	3398-9 FF8	—	—	—	1	—	—
	H4K, H6K	D	3398-9 FK4	—	—	—	1	—	—
	H3X, H4X, H6X	D	3398-9 FX9	—	—	—	1	—	—
	H4Y	D	3398-9 FY4	—	—	—	1	—	—
	AFTER BUILD DATE 9-1-69								
	H3B, H4B	D	*4566-7 FB3	—	—	—	1	—	—
	H3F, H4F, H6F	D	*4566-7 FF8	—	—	—	1	—	—
	H4K, H6K	D	*4566-7 FK4	—	—	—	1	—	—
	H3X, H4X, H6X	D	*4566-7 FX9	—	—	—	1	—	—
	H4Y	D	*4566-7 FY4	—	—	—	1	—	—
	P6XA	D	3354-5 FA8	—	—	—	1	—	—
	P6B	D	3354-5 FB3	—	—	—	1	—	—
	P6F	D	3354-5 FF8	—	—	—	1	—	—
	P6K	D	3354-5 FK4	—	—	—	1	—	—
	P6XP	D	3354-5 FP8	—	—	—	1	—	—
	P6T	D	3354-5 FT5	—	—	—	1	—	—
	P6XW	D	3354-5 FW1	—	—	—	1	—	—
	L2B,	D	3368-9 FBB	—	—	—	—	—	1
	L2F,	D	3368-9 FFF	—	—	—	—	—	1
	L2X, L6X	D	3368-9 FX9	—	—	—	—	—	1
	E1B, E2B	C	3300-1 FBB	—	—	—	1	—	—
	E1L	C	3300-1 FLL	—	—	—	1	—	—
	E1F	C	3300-1 FFF	—	—	—	1	—	—
	E1P	C	3300-1 FPQ	—	—	—	1	—	—
	E1X, E2X, E6X	C	3300-1 FOX	—	—	—	1	—	—
	E2Y	C	3300-1 FYY	—	—	—	1	—	—
	E2T, E6T	C	3300-1 FTT	—	—	—	1	—	—
	E6XW	C	3300-1 FXW	—	—	—	1	—	—
	L3B, L4B	C	3378-9 FBB	—	—	—	1	—	—
	L3F	C	3378-9 FFF	—	—	—	1	—	—
	L3P	C	3378-9 FPQ	—	—	—	1	—	—
	L4R	C	3378-9 FRR	—	—	—	1	—	—
	L3X, L4X	C	3378-9 FOX	—	—	—	1	—	—
	L3Y	C	3378-9 FYY	—	—	—	1	—	—
	D2TY	C	*3292-3 FT5	—	—	—	1	—	—
	M4B	C	3304-5 FBB	—	—	—	1	—	—
	M3F, M6F	C	3304-5 FFF	—	—	—	1	—	—
	M5L	C	3304-5 FLL	—	—	—	1	—	—
	M4R	C	3304-5 FRR	—	—	—	1	—	—
	M6T	C	3304-5 FTT	—	—	—	1	—	—
	M3X, M4X, M6X	C	3304-5 FOX	—	—	—	1	—	—
	M3Y	C	3304-5 FYY	—	—	—	1	—	—
	M6XW	C	3304-5 FXW	—	—	—	1	—	—
	H3B, H6B	C	3478-9 FBB	—	—	—	1	—	—
	H3F	C	3478-9 FFF	—	—	—	1	—	—
	H3P	C	3478-9 FQQ	—	—	—	1	—	—
	H6T	C	3478-9 FTT	—	—	—	1	—	—

NOTE: A letter code in the carline column indicates the carline for which the part is released as follows:

CARLINES Indicate: J - Challenger, B - Barracuda, V - Valiant, L - Dart, R - Belvedere, W - Coronet, P - Plymouth, D - Dodge, C - Chrysler, Y - Imperial

AR Indicates use as required.
★ Indicates change or addition.

Right and left part numbers are on same line, first number is right, second number is left.

Printed in U.S.A.
December 1970

CODE	PART NAME	CAR LINE	PART NUMBER	Sed.	4 D.H.T.	Sta. Wgn.	2 D.H.T.	Sp. 2 D.H.T.	Conv.
23-101-3	PANEL Cont'd.								
	H3X, H6X	C	3478-9 FOX	—	—	—	1	—	—
	H6XW	C	3478-9 FXW	—	—	—	1	—	—
	H3Y	C	3478-9 FYY	—	—	—	1	—	—
	E2B	C	3302-3 FBB	—	—	—	—	—	1
	E2X, E6X	C	3302-3 FOX	—	—	—	—	—	1
	E2Y	C	3302-3 FYY	—	—	—	—	—	1
	E6T	C	3302-3 FTT	—	—	—	—	—	1
	E6XW	C	3302-3 FXW	—	—	—	—	—	1
	M6B	C	3306-7 FBB	—	—	—	—	—	1
	M6F	C	3306-7 FFF	—	—	—	—	—	1
	M6T	C	3306-7 FTT	—	—	—	—	—	1
	M6X	C	3306-7 FOX	—	—	—	—	—	1
	M6XW	C	3306-7 FXW	—	—	—	—	—	1
	LWR. QTR. FRONT TRIM								
	E1B, E2B, L3B, L4B, M4B, M5B	C,Y	3530-1 FB3	1	1	—	—	—	—
	H1B, H7B, M1B, MDB, L1B	C,Y	3530-1 FB7	1	1	—	—	—	—
	E1F, L3F, M3F, M6F, MDF, MSF, H1F, H7F8	C,Y	3530-1 FF8	1	1	—	—	—	—
	M1F, L1F	Y	3530-1 FF4	1	—	—	—	—	—
	E2T, M6T, HST, MST	C,Y	3530-1 FT4	1	1	—	—	—	—
	M1TT, MDTT, L1TT	Y	3530-1 FT2	1	1	—	—	—	—
	M6XW, MSXW	C,Y	3530-1 FW1	—	1	—	—	—	—
	E2Y, L3Y, M3Y, H1Y MDY, MSY	C,Y	3530-1 FY4	1	1	—	—	—	—
	L4R, L7R, M4R, H7R, MSR	C,Y	3530-1 FR8	1	1	—	—	—	—
	E1P, L3P, H1P, M1P, MDP, L1P	C,Y	3530-1 FP6	1	1	—	—	—	—
	M1M, MDM	Y	3530-1 FM9	1	1	—	—	—	—
	MDA	Y	3530-1 FA5	—	1	—	—	—	—
	E1L, L7L, M5L, H7L, H8L	C	3530-1 FL3	1	1	—	—	—	—
	E1X, E2X, L3X, L4X, L8X, M3X, M4X, M6X, M1X, MDX, MSX, H1X, H8X, L1X	C,Y	3530-1 FX9	1	1	—	—	—	—
	L3B	Y	3332-3 FB7	—	—	—	1	—	—
	L3F	Y	3332-3 FF4	—	—	—	1	—	—
	L3M	Y	3332-3 FM9	—	—	—	1	—	—
	L3P	Y	3332-3 FP6	—	—	—	1	—	—
	L3TT	Y	3332-3 FTT	—	—	—	1	—	—
	L3X	Y	3332-3 FX9	—	—	—	1	—	—
	MRB	Y	3372-3 FB3	—	—	—	1	—	—
	MRF, MBF	Y	3372-3 FF8	—	—	—	1	—	—
	MRT	Y	3372-3 FT5	—	—	—	1	—	—
	MRXW	Y	3372-3 FXW	—	—	—	1	—	—
	MRX, MBX	Y	3372-3 FX9	—	—	—	1	—	—
	MRY, MBY	Y	3372-3 FY4	—	—	—	1	—	—
	MBB	Y	3372-3 FB7	—	—	—	1	—	—
	MBM	Y	3372-3 FM9	—	—	—	1	—	—
	MBP	Y	3372-3 FP6	—	—	—	1	—	—
	MBTT	Y	3372-3 FTT	—	—	—	1	—	—
	LWR. QTR. FRT. TRIM								
	H3B, H6B, MBB, L3B	C,Y	3584-5 EB7	—	—	—	1	—	—
	MRB	Y	3584-5 EB3	—	—	—	1	—	—
	L1F, L2F, M6F	D	3584-5 FF4	—	—	—	1	—	1
	MBF, MRF	Y	3584-5 EF8	—	—	—	1	—	—
	E1L, MSL	C	3584-5 EL3	—	—	—	1	—	—
	E1P, L3P, H3P, MBP	C,Y	3584-5 FP6	—	—	—	1	—	—
	L4R, M4R	C	3584-5 FR8	—	—	—	1	—	—
	L3M,	Y	3584-5 EM9	—	—	—	1	—	—
	L3TT, MBTT	Y	3584-5 FT2	—	—	—	1	—	—
	L3F	Y	3584-5 FF4	—	—	—	1	—	—

NOTE: A letter code in the carline column indicates the carline for which the part is released as follows:

CARLINES Indicate: J - Challenger, B - Barracuda, V - Valiant, L - Dart, R - Belvedere, W - Coronet, P - Plymouth, D - Dodge, C - Chrysler, Y - Imperial

AR Indicates use as required.
★ Indicates change or addition.

Right and left part numbers are on same line, first number is right, second number is left.

Printed in U.S.A.
December 1970

CODE	PART NAME	CAR LINE	PART NUMBER	Sed.	4 D.H.T.	Sta. Wgn.	2 D.H.T.	Sp. 2 D.H.T.	Conv.
23-101-3	PANEL Cont'd.								
	MBY, MRY	Y	3584-5 FY4	—	—	—	1	—	—
	E6XW, L2XW, M6XW, H6XW, MRXW	D,C,Y	3584-5 EW1	—	—	—	1	—	1
	MBX, MRX, L3X	Y	3584-5 EX9	—	—	—	1	—	—
	BRACKET, Quarter Trim and Pocket Panel to Floor	B,J	2879 840	—	—	—	2	2	2
	BRACKET, Qtr. Trm. Panel to Qtr. Inner	P,D	2879 488-9	—	—	—	—	—	1
		C	2879 486-7	—	—	—	—	—	1
23-101-33	EXTENSION, Quarter Trim Support to Quarter Panel	W	2876 194-5	—	—	—	—	1	—
	BRACKET, QUARTER Trim and Pocket Panel to Floor	B,J	3415 967	—	—	—	2	2	2
23-102-3	PANEL, Shelf Trim								
	w/Rear Seat SPEAKER	V	1314 FX8	—	—	—	—	1	—
	w/RR. WINDOW DEFOGGER	V	1301 EX8	1	—	—	—	—	—
		B	1332 FX8	—	—	—	1	—	—
		J	1334 FX8	—	—	—	1	1	—
		L	1321 EX8	1	—	—	—	—	—
		L	1318 EX8	—	—	—	1	—	—
	2 DOOR	R,W	1361 EX8	1	—	—	1	—	—
	4 DOOR	R,W	1306 EX8	1	—	—	—	—	—
		W	1368 EX8	—	—	—	—	1	—
	4 DOOR								
		P,D	1373 FX9	1	—	—	—	—	—
		P,D,C	1375 FX9	—	—	—	1	—	—
		P,D	1337 FX9	1	1	—	—	1	—
		C	1363 EX9	1	1	—	—	—	—
	4 DOOR			—	—				
		C	1377 FX9	1	1	—	—	—	—
		P,D,C	1304 EX9	—	—	—	1	—	—
	w/DUAL AIR COND.	Y	1325 EX9	—	—	—	1	—	—
		YL	1341 EX9	—	1	—	—	—	—
		YM	1366 EX9	—	1	—	—	—	—
		YL	1379 FX9	—	1	—	—	—	—
		YL	1381 FX9	—	—	—	1	—	—
		YM	1378 FX9	—	—	—	1	—	—
	FASTENER	V,L	6000 903	2	—	—	2	2	—
		P,D	*4343 FX9	1	1	—	1	1	—
23-102-11	CLAMP, Shelf Trim Panel	B,J,R,W	2876 665	2	—	—	4	4	—
23-103-3	PANEL, Visor Trim								
	CODES								
	L1B, L2B, L4B, L6BW, D2B, H1B, H2B	V,L	1112 EB5	1	—	—	1	—	—
	L4E, L6EW, X1E, X2E	V,L	1112 FE4	1	—	—	1	—	—
	L1F, L2F, L4F, D2F, H1F, H2F, H6F	V,L	1112 EF8	1	—	—	1	—	—
	L4T, D2T, H2T, H6T	V,L	1112 FT5	1	—	—	1	—	—
	L1X, L2X, L4X, L6X, L6XW, D2X, H1X, H2X	V,L	1112 EX9	1	—	—	1	—	—
	D2B, L1B, L2B, L4B, L6BW	V	1103 FB7	—	—	—	—	1	—
	L4E, L6EW	V	1103 FE4	—	—	—	—	1	—
	D2F, L1F, L2F, L4F	V	1103 FF8	—	—	—	—	1	—
	L4T	V	1103 FT5	—	—	—	—	1	—
	D2X, L1X, L2X, L4X, L6X, L6XW	V	1103 FX9	—	—	—	—	1	—
	H4B, H5B, H6B, P6B	B,J	1102 FB5	—	—	—	2	2	—
	H4F, H5F, H6F, P6F	B,J	1102 FF8	—	—	—	2	2	—
	H5K, H6K, HRK, P5K, P6K	B,J	1102 FK4	—	—	—	2	2	—
	H6E, P6E	B,J	1102 FE4	—	—	—	2	—	—
	P6YX	B	1102 FY4	—	—	—	2	—	—

NOTE: A letter code in the carline column indicates the carline for which the part is released as follows:

CARLINES Indicate: J - Challenger, B - Barracuda, V - Valiant, L - Dart, R - Belvedere, W - Coronet, P - Plymouth, D - Dodge, C - Chrysler, Y - Imperial

AR Indicates use as required.
★ Indicates change or addition.

Right and left part numbers are on same line, first number is right, second number is left.

Printed in U.S.A.
December 1970

CODE	PART NAME	CAR LINE	PART NUMBER	Sed.	4 D.H.T.	Sta. Wgn.	2 D.H.T.	Sp. 2 D.H.T.	Conv.
23-103-3	PANEL Cont'd.								
	H4X, H6X, P6A8, P5X9, PRX9, H5X, HRX, P5X	B,J	*1102 FX9	—	—	—	2	2	—
	H6T, P6T, PRT, HRT5	B,J	*1102 FT5	—	—	—	2	2	—
	H4BW, H4FW, H4XW, H6BW, H6EW, H6FW, H6XW, P6BW, P6EW, P6FW, P6XW, PRXW	B,J	*1102 FW1	—	—	—	2	2	—
	H6B, P6B	B,J	1120 FB5	—	—	—	—	—	2
	H6E, P6E	B,J	1120 FE4	—	—	—	—	—	2
	H6F, P6F	B,J	1120 FF8	—	—	—	—	—	2
	H6K, P6K	B,J	1120 FK4	—	—	—	—	—	2
	H6BW, H6EW, H6FW, H6XW, P6BW, P6EW, P6FW, P6XW, PRXW	B,J	1120 FW1	—	—	—	—	—	2
	H6X, HRX, P6A	B,J	1120 FX9	—	—	—	—	—	2
	H6T, P6T, PRT, HRT	B,J	1120 FT5	—	—	—	—	—	2
	P6XX	B	1120 FY4	—	—	—	—	—	2
	P6B, P6BW, D6B, L2B	R,W	1112 EB7	2	—	—	2	—	—
	H1F, H2F, H2FW, P3F, P4F, P6F, M6F, C2F, CRF, C6F	R,W	1112 EF8	2	—	—	2	2	—
	H2K, H2KW, M6K, D6K, P3K, P6K, P6KW, C2K, C6K	R,W	1112 FK4	2	—	—	2	2	—
	K1T, K2T, T2T, L2T, M2T, M6T, D6T, H2T, P4T, P6T, C2T, CRT, C6T	R,W	1112 FT5	2	—	—	2	2	—
	K2X, T2X, L2X, M2X, H1X, H2X, M6X, M6XY, D6X, D6XY, P3X, P4X, P6X, P6XA, P6XY, C2XA, C5XA, C6XA, CRXA	R,W	1112 DX9	2	—	—	2	2	—
	L1Y, H1Y, P3Y	R,W	1112 FY4	2	—	—	—	—	—
	2 DOOR								
	C2B, CRB, C6B	W	1112 EB5	—	—	—	—	2	—
	M6XW, D6XW, H2XW, P6XW, X1X, X2X, K1A, K2A, B2XA, F2XA, D1X, D6X, W1XA, W4XA, W4XP, W8XA, L1X, L2X, L2XA, L4X, M1XA, M4XA, M4XP, M8XA, H1X H3X, H4X, H6X, H6XA, H7X, H6XP, H8X, P6XA, P6XP	R, W P,D	1112 EW1 1192 FX9	2 2	— 2	2 —	2 2	— 2	— —
	F1Y, W1Y, W4Y, D1Y, L1Y, M1Y, H1Y, H4Y	P,D	1192 FY4	2	2	—	2	—	—
	H2B, D4B, D6B, H2BW, P6B, P6BW	R,W	1109 EB7	—	—	—	—	—	1
	D4F, D6F	W	1109 EF8	—	—	—	—	—	1
	H2K, H2KW, D4K, D6K, P6K, P6KW	R,W	1109 FK4	—	—	—	—	—	1
	D4T, D6T	W	1109 FT5	—	—	—	—	—	1
	H2XW, D4XW, D6XW	R,W	1109 EW1	—	—	—	—	—	1
	H2X, H2XA, D4X, D6X	R,W	1109 DX9	—	—	—	—	—	1
	E2B, B2B, F1B, W1B, W4B, W6B, L1B, L2B, M1B, M4B, M6B, H1B, H4B, H6B, H7B, P3B, P4B, P6B	P,D	1192 FB3	2	2	2	2	2	—
	E2F, F1F, F2F, W1F, W4F, W6F, W7F, L1F, L2F, R2F, R4F, M1F, M4F, M6F, M7F, D1F, H1F, H3F, H4F, H5F, H6F, H7F, H8F, D2F, D4F, P4F, P5F, P3F, P6F, P7F,	1192 FF8	2	2	2	2	2	—	—
	M1K, M4K, W1K, W4K, H3K, H4K, H6K, H8K, P3K, P4K, P6K	P,D	1192 FK4	—	2	—	2	2	—
	E2T, F2T, B2T, K1T, K2T, W4T, W6T, D4T, L2T, M4T, M6T, H4T, H6T, H8T, P4T, J6T, P6T, P8T, R2T, R4T, PRT, H1T	P,D	1192 FT5	2	2	2	2	2	—

NOTE: A letter code in the carline column indicates the carline for which the part is released as follows:

CARLINES Indicate: J - Challenger, B - Barracuda, V - Valiant, L - Dart, R - Belvedere, W - Coronet, P - Plymouth, D - Dodge, C - Chrysler, Y - Imperial

AR Indicates use as required.
★ Indicates change or addition.

Right and left part numbers are on same line, first number is right, second number is left.

Printed in U.S.A.
December 1970

CODE	PART NAME	CAR LINE	PART NUMBER	Sed.	4 D.H.T.	Sta. Wgn.	2 D.H.T.	Sp. 2 D.H.T.	Conv.
23-103-3	PANEL Cont'd.								
	L2BW, L2TW, L2XW, L2XA, M4XW, H6XW, M4BW, M4TW, M4XA, M4XW, M8XA, L2X, L2XW, M6XW, H8X, H4X, H4TW, H6XW, W4XW, P6XW, F2BW, F2TW, F2XA, W4BW, W4TW, W4XW, W4XA, W8XA	P,D	1192 FW1	—	—	2	2	2	—
	L2X, H8X, H4X, H7X, H3X, H1X, P6XA, H6XA, L1X w/AIR COND.	P,D	1192 FX9	2	2	2	2	2	—
	E2B, E2F, E2T, L2B, L2F, L2T, M4B, M4F, M4T, M7F, H8F, H8K, H4B, H4F, H4T, B2B, B2T, F2B, F2F, F2T, W4B, W4F, W4T, W7F	P,D	1192 EW1	—	—	2	—	—	—
	E2B, L2B, W4B, M4B, M6B, H6B, P6B	P,D,C	1111 EB3	—	—	—	—	—	1
	L2F, W4F, M4F, M6F, H6F, P6F	P,D,C	1111 EF8	—	—	—	—	—	1
	E6T, M6T	C	1111 FT5	—	—	—	—	—	1
	E2X, E6X, L2X, W4X, M4XA, M6X, H6XA, P6XA	P,D,C	1111 EX9	—	—	—	—	—	1
	E6XW, L2XW, W4XA, M4XW, M6XW, H6XW, P6XW	P,D,C	1111 EW1	—	—	—	—	—	1
	E2Y	C	1111 FY4	—	—	—	—	—	1
	E1B, E2B, L3B, L4B, M4B, P4B	C	1192 FB3	2	2	2	2	—	—
	E1F, L3F, M3F, M6F, H1F, H3F, P4F, P8F, H7F	C	1192 EF8	2	2	2	2	—	—
	E1X, E2X, E6X, L3X, L4X, L8X, M4X, M6X, E2Y, L1Y, L3Y, F1Y, M1Y, M3Y, W1Y, P3Y, D1Y, H3Y	C	1192 FX9	2	2	—	—	2	—
		P,D,C	1192 FY4	2	2	—	2	—	—
	E1P, L3P, HiP, H3P	C	1192 FP6	2	2	—	2	—	—
	E2T, E6T, M6T, HST, H6T, P4T, D2TY	C	1192 FT5	2	2	2	2	—	—
	E1L, L7L, M5L, H7L, H8L	C	1192 FL2	2	2	—	2	—	—
	H1B, H3B, H7B, H6B	C	1192 FB7	2	2	—	2	—	—
	L4R, L7R, M4R, H7R, P4R	C	1192 FR9	2	2	2	2	—	—
	E6XW, M6XW, H6XW, P4X, P7L, P8X w/Air Cond.	C	1192 FW1	—	2	2	2	—	—
	P4B, P4F, P4R, P4T, P8F	C	1192 FW1	—	—	2	—	—	—
	MDA	Y	1192 FA5	—	2	—	—	—	—
	MSB, MRB	Y	1192 FB3	—	2	—	2	—	—
	L1B, L3B, MDB, MBB	Y	1192 FB7	2	2	—	2	—	—
	L1F, L3F	Y	1192 FF4	2	2	—	2	—	—
	MDF, MBF, MSF, MRF	Y	1192 FF8	—	2	—	2	—	—
	L1M, L3M, MDM, MBM	Y	1192 FM9	2	2	—	2	—	—
	L1P, L3P, MDP, MBP	Y	1192 FP6	2	2	—	2	—	—
	MSR	Y	1192 FR9	—	2	—	—	—	—
	MST, MRT	Y	1192 FT5	—	2	—	2	—	—
	L1TT, L3TT, MDTT, MBTT	Y	1192 FT2	2	2	—	2	—	—
	MSXW, MRXW	Y	1192 FW1	—	2	—	2	—	—
	L1X, L3X, MDX, MBX, MSX, MRX	Y	1192 FX9	2	2	—	2	—	—
	MDY, MBY, MSY, MRY	Y	1192 FY4	—	2	—	2	—	—
23-103-10	ARM and BRACKET, Visor								
	Painted	V	3454 814-5	—	—	—	—	1	—
	UP TO BUILD DATE 6-1-69	B,J	2999 547	—	—	—	2	2	—
	AFTER BUILD DATE 6-1-69	B,J	3548 942	—	—	—	2	2	—
		B,J	3454 248-9	—	—	—	—	—	1
		V,L,R,W	2999 670-1	1	—	1	1	1	—
		P,D,C,Y	2878 882	2	2	2	2	2	—
		P,D,C	2945 890-1	—	—	—	—	—	1
	Painted	V	3454 814-5	—	—	—	—	1	—

NOTE: A letter code in the carline column indicates the carline for which the part is released as follows:

CARLINES Indicate: J - Challenger, B - Barracuda, V - Valiant, L - Dart, R - Belvedere, W - Coronet, P - Plymouth, D - Dodge, C - Chrysler, Y - Imperial

AR Indicates use as required.
★ Indicates change or addition.

Right and left part numbers are on same line, first number is right, second number is left.

Printed in U.S.A.
December 1970

CODE	PART NAME	CAR LINE	PART NUMBER	Sed.	4 D.H.T.	Sta. Wgn.	2 D.H.T.	Sp. 2 D.H.T.	Conv.
23-103-11	COVER, Visor Bracket								
	Paint as Req'd.	B,J	1121 FX9	—	—	—	2	2	—
23-103-18	NUT, Visor Arm and Bracket Mounting	B,J	2129 684	—	—	—	2	2	2
23-103-48	SUPPORT, Visor Inner	V,B,J,L,R,W, P,D,C,Y	2789 036	2	2	2	2	2	2
		V,L,B,J,R,W, P,D,C,Y	2789 036	—	—	—	—	—	1
	Center								
	L2B, E2B, W4B, M4B, M6B, H6B, P6B, H6BW, P6BW	B, J, P, D, C	3701 FB3	—	—	—	—	—	1
	W4F, L2F, M4F, M6F, H6F, H6FW, P6F, P6FW	B,J,P,D,C	3701 EF8	—	—	—	—	—	1
	H6E, H6EW, P6E, P6EW	B,J	3701 FE5	—	—	—	—	—	1
	P6K, H6K	B,J	3701 FK5	—	—	—	—	—	1
	E6T, M6T, H6T, HRT, P6T, PRT	B,J,C	3701 FT4	—	—	—	—	—	1
	E6XW, L2XW, W4XW, M4XW, M6XW, P6XW, H6XW	P,D,C	3701 EW1	—	—	—	—	—	1
	E2X, E6X, L2X, M4XA, M6XW, H6X, H6XW, H6XA, M6X, HRX, PRX, PRXW, P6XW, P6YX, P6A	B,J,D,C	3701 EX9	—	—	—	—	—	1
	E2Y	C	3701 FY4	—	—	—	—	—	1
23-103-49	TIP, Visor Inner Support	V,B,J,L,R,W, P,D,C,Y	2789 037	2	2	2	2	2	2
23-108-4	CUSHION, Front Seat								
	FOR COMPLETE ASSEMBLY ORDER BY DESCRIPTION, VEHICLE SERIAL NUMBER and TRIM CODE: FOR COVER ONLY SEE PART TYPE CODE 23-108-5								
23-108-5	COVER, Front Seat Cushion								
	CODES								
	L1B	V	7237 F1B	1	—	—	—	—	—
	L1F	V	7237 F1F	1	—	—	—	—	—
	L1X	V	7237 F1X	1	—	—	—	—	—
	L1B	V	7238 F1B	—	—	—	—	1	—
	L1F	V	7238 F1F	—	—	—	—	1	—
	L1X	V	7238 F1X	—	—	—	—	1	—
	4 DOOR								
	L2B	V,L	7226 F2B	1	—	—	—	—	—
	L2F	V,L	7226 F2F	1	—	—	—	—	—
	L2X	V,L	7226 F2X	1	—	—	—	—	—
	L2B	V,L	7227 F2B	—	—	—	1	1	—
	L2X	V,L	7227 F2X	—	—	—	1	1	—
	L2F	V	7227 F2F	—	—	—	—	1	—
	D2B	V	7266 F2B	—	—	—	—	1	—
	D2F	V	7266 F2F	—	—	—	—	1	—
	D2X	V	7266 F2X	—	—	—	—	1	—
	L4B	V	7255 F4B	1	—	—	—	1	—
	L4E	V	7255 F4E	1	—	—	—	1	—
	L4F	V	7255 F4F	1	—	—	—	1	—
	L4T	V	7255 F4T	1	—	—	—	1	—
	L4X	V	7255 F4X	1	—	—	—	1	—
	L6X	V	7286 F6X	2	—	—	—	2	—
	L6BW, L6EW, L6XW	V	7286 F6W	2	—	—	—	2	—
	H4B	B	7297 F6B	—	—	—	1	—	—
	H4F	B	7297 F6F	—	—	—	1	—	—
	H4X	B	7297 F6X	—	—	—	1	—	—
	H4BW, H4FW, H4XW	B	7297 F6W	—	—	—	1	—	—
	H6B	B	7279 F6B	—	—	—	2	—	2
	H6E	B	7279 F6E	—	—	—	2	—	2

NOTE: A letter code in the carline column indicates the carline for which the part is released as follows:

CARLINES Indicate: J - Challenger, B - Barracuda, V - Valiant, L - Dart, R - Belvedere, W - Coronet, P - Plymouth, D - Dodge, C - Chrysler, Y - Imperial

AR Indicates use as required.
★ Indicates change or addition.

Right and left part numbers are on same line, first number is right, second number is left.

Printed in U.S.A.
December 1970

CODE	PART NAME	CAR LINE	PART NUMBER	Sed.	4 D.H.T.	Sta. Wgn.	2 D.H.T.	Sp. 2 D.H.T.	Conv.
23-108-5	COVER Cont'd.								
	H6F	B	7279 F6F	—	—	—	2	—	2
	H6T	B	7279 F6T	—	—	—	2	—	2
	H6X	B	7279 F6X	—	—	—	2	—	2
	H6BW, H6EW, H6FW, H6XW	B	7279 F6W	—	—	—	2	—	2
	P5K	B	7276 F5K	—	—	—	2	—	—
	P5X	B	7276 F5X	—	—	—	2	—	—
	P6A	B	7278 F6A	—	—	—	2	—	2
	P6B	B	7278 F6B	—	—	—	2	—	2
	P6E	B	7278 F6E	—	—	—	2	—	2
	P6F	B	7278 F6F	—	—	—	2	—	2
	P6K	B	7278 F6K	—	—	—	2	—	2
	P6BW, P6EW, P6FW, P6XW	B	7278 F6W	—	—	—	2	—	2
	P6T	B	7278 F6T	—	—	—	2	—	2
	P6YX	B	7278 F6Y	—	—	—	2	—	2
	PRT	B	7285 FRT	—	—	—	2	—	2
	PRX	B	7285 FRX	—	—	—	2	—	2
	PRXW	B	7285 FRW	—	—	—	2	—	2
	L6X	B,J	7340 F6X	—	—	—	2	—	—
	L6XW	B,J	7340 F6W	—	—	—	2	—	—
	H4B	J	7298 F4B	—	—	—	1	—	—
	H4X	J	7298 F4X	—	—	—	1	—	—
	H5B	J	7290 F5B	—	—	—	1	1	—
	H5F	J	7290 F5F	—	—	—	1	1	—
	H5K	J	7290 F5K	—	—	—	1	1	—
	H5X	J	7290 F5X	—	—	—	1	1	—
	H6B	J	7291 F6B	—	—	—	2	—	2
	H6E	J	7291 F6E	—	—	—	2	—	2
	H6F	J	7291 F6F	—	—	—	2	—	2
	H6K	J	7291 F6K	—	—	—	2	—	2
	H6T	J	7291 F6T	—	—	—	2	—	2
	H6X	J	7291 F6X	—	—	—	2	—	2
	H6XW	J	7291 F6W	—	—	—	2	—	2
	HRK	J	7289 FRK	—	—	2	—	2	—
	HRT	J	7289 FRT	—	—	2	—	2	2
	HRX	J	7289 FRX	—	—	2	—	2	2
	L2B	L	7227 F2B	—	—	—	1	—	—
	L2X	L	7227 F2X	—	—	—	1	—	—
	H1B	L	7236 F1B	1	—	—	—	—	—
	H1F	L	7236 F1F	1	—	—	—	—	—
	H1X	L	7236 F1X	1	—	—	—	—	—
	4 DOOR								
	H2B	L	7240 F2B	1	—	—	—	—	—
	H2T	L	7240 F2T	1	—	—	—	—	—
	H2X	L	7240 F2X	1	—	—	—	—	—
	H2B	L	7241 F2B	—	—	—	1	—	—
	H2F	L	7241 F2F	—	—	—	1	—	—
	H2T	L	7241 F2T	—	—	—	1	—	—
	H2X	L	7241 F2X	—	—	—	1	—	—
	H2XW	L	7241 F2W	—	—	—	1	—	—
	H6F	L	7293 F6F	—	—	—	2	—	—
	H6T	L	7293 F6T	—	—	—	2	—	—
	H6X	L	7293 F6X	—	—	—	2	—	—
	D2B	L	7229 F2B	—	—	—	1	—	—
	D2F	L	7229 F2F	—	—	—	1	—	—
	D2T	L	7229 F2T	—	—	—	1	—	—
	D2X	L	7229 F2X	—	—	—	1	—	—
	4 DOOR								
	L1B	R	7248 F1B	1	—	—	—	—	—

NOTE: A letter code in the carline column indicates the carline for which the part is released as follows:

CARLINES Indicate: J - Challenger, B - Barracuda, V - Valiant, L - Dart, R - Belvedere, W - Coronet, P - Plymouth, D - Dodge, C - Chrysler, Y - Imperial

AR Indicates use as required.
★ Indicates change or addition.

Right and left part numbers are on same line, first number is right, second number is left.

Printed in U.S.A.
December 1970

CODE	PART NAME	CAR LINE	PART NUMBER	Sed.	4 D.H.T.	Sta. Wgn.	2 D.H.T.	Sp. 2 D.H.T.	Conv.
23-108-5	COVER Cont'd.								
	L1Y	R	7248 F1Y	1	—	—	—	—	—
	2 DOOR								
	K1T (UP TO BUILD DATE 2-1-70)	R,W	7317 F1T	1	—	—	—	—	—
	K1T (AFTER BUILD DATE 2-1-70)	R,W	7317 FTT	1	—	—	—	—	—
	K2T	R,W	7318 F2T	1	—	—	—	—	—
	4 DOOR								
	K1T (UP TO BUILD DATE 2-1-70)	R,W	7316 F1T	1	—	—	—	—	—
	K1T (AFTER BUILD DATE 2-1-70)	R,W	7316 FTT	1	—	—	—	—	—
	K2T, T2T	R,W	7319 F2T	1	—	—	—	—	—
	K2X, T2X	R,W	7319 F2X	1	—	—	—	—	—
	2 DOOR								
	M2B	R	7301 F2B	1	—	—	—	—	—
	M2T	R	7301 F2T	1	—	—	—	—	—
	M2X	R	7301 F2X	1	—	—	—	—	—
	4 DOOR								
	H1B	R	7252 F1B	1	—	—	—	—	—
	H1F	R	7252 F1F	1	—	—	—	—	—
	W/DIAMOND DESIGN IN INSERT								
	H1X	R	7252 F1X	1	—	—	—	—	—
	H1Y	R	7252 F1Y	1	—	—	—	—	—
	W/O DIAMOND DESIGN IN INSERT								
	H1X	R	*7252 FXX	1	—	—	—	—	—
	H1B	R	*7275 F1B	—	—	—	1	—	—
	H1F	R	*7275 F1F	—	—	—	1	—	—
	W/DIAMOND DESIGN IN INSERT H1X	R	*7275 F1X	—	—	—	1	—	—
	W/O DIAMOND DESIGN IN INSERT H1X	R	*7275 FXX	—	—	—	1	—	—
	2 DOOR								
	H2B	R	7258 F2B	1	—	—	1	—	1
	H2F	R	7258 F2F	1	—	—	1	—	—
	H2K	R	7258 F2K	1	—	—	1	—	1
	H2T	R	7258 F2T	1	—	—	1	—	—
	H2X	R	7258 F2X	1	—	—	1	—	1
	H2BW, H2KW, H2XW	R	7258 F2W	1	—	—	1	—	1
	4 DOOR								
	H2B	R	7259 F2B	1	—	1	—	—	—
	H2F	R	7259 F2F	1	—	1	—	—	—
	H2T	R	7259 F2T	1	—	1	—	—	—
	H2X	R	7259 F2X	1	—	1	—	—	—
	H2XY	R	7259 F2Y	—	—	1	—	—	—
	H2BW, H2FW, H2TW	R	7259 F2W	1	—	1	—	—	—
	6 PASS.								
	D2B	R	7251 F2B	—	—	1	—	—	—
	D2T	R	7251 F2T	—	—	1	—	—	—
	P3B5	R	*7274 FBB	—	—	—	1	—	—
	P3B7	R	*7274 F3B	1	—	—	—	—	—
	P3F8	R	*7274 F3F	1	—	1	—	—	—
	P3K4	R	*7274 F3K	1	—	—	1	—	—
	P3X	R	*7274 F3X	1	—	1	1	—	—
	P3Y4	R	*7274 F3Y	1	—	—	—	—	—
	P6B	R	7287 FBB	2	—	—	—	—	—
	P6B 2 DOOR	R	7287 F6B	2	—	—	2	—	2
	P6BW, P6KW, P6TW, P6XW	R	7287 F6W	2	—	—	2	—	2
	P6F 2 DOOR	R	7287 F6F	2	—	—	2	—	—
	P6K 2 DOOR	R	7287 F6K	2	—	—	2	—	2
	P6T	R	7287 F6T	2	—	2	2	—	—
	P6XA	R	7287 F6X	2	—	—	2	—	2
	P6XY	R	7287 F6Y	—	—	—	2	—	—

NOTE: A letter code in the carline column indicates the carline for which the part is released as follows:

CARLINES Indicate: J - Challenger, B - Barracuda, V - Valiant, L - Dart, R - Belvedere, W - Coronet, P - Plymouth, D - Dodge, C - Chrysler, Y - Imperial

AR Indicates use as required.
★ Indicates change or addition.

Right and left part numbers are on same line, first number is right, second number is left.

Printed in U.S.A.
December 1970

CODE	PART NAME	CAR LINE	PART NUMBER	Sed.	4 D.H.T.	Sta. Wgn.	2 D.H.T.	Sp. 2 D.H.T.	Conv.
23-108-5	COVER Cont'd.								
	CENTER CUSHION								
	P6B	R	8033 FB5	1	—	—	1	—	1
	P6F	R	8033 FF8	1	—	—	1	—	—
	P6K	R	8033 FK4	1	—	—	1	—	1
	P6T	R	8033 FT5	1	—	1	1	—	—
	P6XA	R	8033 FA8	1	—	1	1	—	1
	P6BW, P6KW, P6TW, P6XW	R	8033 FW1	1	—	—	1	—	—
	P6XY	R	8033 FY4	1	—	—	1	—	—
	4 DOOR								
	K1T (UP TO BUILD DATE 2-1-70)	P	7306 F1T	1	—	—	—	—	—
	K1T (AFTER BUILD DATE 2-1-70)	P	7306 FTT	1	—	—	—	—	—
	K1A (UP TO BUILD DATE 2-1-70)	D	7306 F1A	1	—	—	—	—	—
	K1A (AFTER BUILD DATE 2-1-70)	D	7306 FAA	1	—	—	—	—	—
	2 DOOR								
	K1T (UP TO BUILD DATE 2-1-70)	P	7307 F1T	1	—	—	—	—	—
	K1T (AFTER BUILD DATE 2-1-70)	P	7307 FTT	1	—	—	—	—	—
	K2T	P	7310 F2T	1	—	—	—	—	—
	4 DOOR								
	K2T	P	7311 F2T	1	—	—	—	—	—
	K2A	D	7311 F2A	1	—	—	—	—	—
	E2B, B2B	P,D	7225 F2B	1	—	1	—	—	—
	E2T, B2T	P,D	7225 F2T	1	—	1	—	—	—
	2 DOOR								
	E2B	P	7224 F2B	1	—	—	—	—	—
	E2T	P	7224 F2T	1	—	—	—	—	—
	E1B, B1B	P,D	7330 F1B	1	—	—	—	—	—
	E1T, B1T	P,D	7330 F1T	1	—	—	—	—	—
	2 DOOR								
	UP TO BUILD DATE 11-1-69 L1B, F1B	P,D	7231 F1B	1	—	—	1	—	—
	UP TO BUILD DATE 11-1-69 L1Y, F1Y	P,D	7231 F1Y	1	—	—	1	—	—
	L1F, F1F	P,D	7231 F1F	—	—	—	1	—	—
	AFTER BUILD DATE 11-1-69 - L1B, F1B	P,D	*7231 F1F1D	1	—	—	1	—	—
	AFTER BUILD DATE 11-1-69 - L1Y, F1Y	P,D	*7231 F1Z	1	—	—	1	—	—
	4 DOOR								
	UP TO BUILD DATE 11-1-69 L1B, F1B	P,D	7230 F1B	1	—	—	—	—	—
	UP TO BUILD DATE 11-1-69 L1F, F1F	P,D	7230 F1F	1	—	—	—	—	—
	UP TO BUILD DATE 11-1-69 L1Y, F1Y	P,D	7230 F1Y	1	—	—	—	—	—
	AFTER BUILD DATE 11-1-69 L1B, F1B	P,D	*7230 F1D	1	—	—	—	—	—
	AFTER BUILD DATE 11-1-69 L1F, F1F	P,D	*7230 F1C	1	—	—	—	—	—
	AFTER BUILD DATE 11-1-69 L1Y, F1Y	P,D	*7230 F1Z	1	—	—	—	—	—
	UP TO BUILD DATE 10-1-69 L2T, F2T	P,D	*7273 F2T	—	—	—	1	—	—
	UP TO BUILD DATE 10-1-69 L2X, F2X	P,D	*7273 F2X	—	—	—	1	—	—
	AFTER BUILD DATE 10-1-69 L2T, F2T	P,D	*7335 F2T	—	—	—	1	—	—
	AFTER BUILD DATE 10-1-69 L2X, F2X	P,D	*7335 F2X	—	—	—	1	—	—
	UP TO BUILD DATE 10-1-69 L2B, D2B, R2B, F2B	P,D	7228 F2B	1	—	1	—	—	—
	UP TO BUILD DATE 10-1-69 L2F, D2F, R2F, F2F	P,D	7228 F2F	1	—	1	—	—	—
	UP TO BUILD DATE 10-1-69 L2T, D2F, R2F, F2T	P,D	7228 F2T	1	—	1	—	—	—
	UP TO BUILD DATE 10-1-69 L2XA, D2X, R2X, F2X	P,D	7228 F2X	1	—	1	—	—	—
	AFTER BUILD DATE 10-1-69 L2B, D2B, F2B, R2B	P,D	*7336 F2B	1	—	1	—	—	—
	AFTER BUILD DATE 10-1-69 L2F, D2F, F2F, R2F	P,D	*7336 F2F	1	—	1	—	—	—
	AFTER BUILD DATE 10-1-69 L2T, D2T, F2T, R2T	P,D	*7336 F2T	1	—	1	—	—	—
	AFTER BUILD DATE 10-1-69 L2X, D2X, F2X, R2X	P,D	*7336 F2X	1	—	1	—	—	—
	M1B, W1B	P,D	7268 F1B	1	1	—	—	—	—
	M1F, W1F	P,D	7268 F1F	1	1	—	—	—	—
	M1XA, W1XA	P,D	7268 F1X	1	1	—	—	—	—
	M1Y, W1Y	P,D	7268 F1Y	1	1	—	—	—	—
	M1B, W1B	P,D	7267 F1B	—	—	—	1	1	—
	M1F, W1F	P,D	7267 F1F	—	—	—	1	1	—

NOTE: A letter code in the carline column indicates the carline for which the part is released as follows:

CARLINES Indicate: J - Challenger, B - Barracuda, V - Valiant, L - Dart, R - Belvedere, W - Coronet, P - Plymouth, D - Dodge, C - Chrysler, Y - Imperial

AR Indicates use as required.
★ Indicates change or addition.

Right and left part numbers are on same line, first number is right, second number is left.

Printed in U.S.A.
December 1970

CODE	PART NAME	CAR LINE	PART NUMBER	Sed.	4 D.H.T.	Sta. Wgn.	2 D.H.T.	Sp. 2 D.H.T.	Conv.
23-108-5	COVER Cont'd.								
	M1XA, W1XA	P,D	7267 F1X	—	—	—	1	1	—
	M4B, W4B, D4B, R4B, H4B, P4B	P, D	7239 F4B	1	1	1	1	1	1
	M4F, W4F, D4F, R4F, H4F, P4F	P, D	7239 F4F	1	1	1	1	1	1
	M4K, W4K, H4K, P4K	P, D	7239 F4K	—	1	—	1	1	—
	M4T, W4T, D4T, H4T,	P, D	7239 F4T	1	1	1	1	1	—
	M4XA, W4XA, H4XA	P,D	7239 F4X	1	1	1	1	1	1
	M4XW, M4TW, M4BW, W4XW, W4TW, P4XW, W4BW	P,D	7239 F4W	—	—	1	1	1	1
	M4XP, W4XP, H4XP, P4XP,	P, D	7239 F4P	—	—	—	1	—	—
	P4TT	P	*7239 F4N	1	—	—	—	—	—
	M7F, W7F	P,D	7246-7 F7F	—	—	1	—	—	—
	M8XA, W8XA	P,D	7242-3 F8X	1	1	1	—	—	—
	H3B	P	7322 F3B	1	1	—	1	1	—
	H3F	P	7322 F3F	1	1	—	1	1	—
	H3K	P	7322 F3K	—	—	—	1	1	—
	H3XA	P	7322 F3X	1	1	—	1	1	—
	H3Y	P	7322 F3Y	1	1	—	—	—	—
	D6T	P	7325 F6T	—	—	—	2	2	—
	D6XA	P	7325 F6X	—	—	—	2	2	—
	UP TO BUILD DATE 11-1-69 H5B	P	7262 F5B	—	—	—	2	2	—
	UP TO BUILD DATE 11-1-69 H5F	P	7262 F5F	—	—	—	2	2	—
	AFTER BUILD DATE 11-1-69 H5B	P	*7262 F5D	—	—	—	2	2	—
	AFTER BUILD DATE 11-1-69 H5F	P	*7262 F5G	—	—	—	2	2	—
	M6B, H6B, P6B	P, D	7271 F6B	—	2	—	2	2	2
	M6F, H6F, P6F	P, D	7271 F6F	—	2	—	2	2	2
	H6K,	P,	7271 F6K	—	—	—	2	2	2
	H6T, P6T	P, D	7271 F6T	—	—	—	2	2	2
	M6XA, H6XA, P6XA	P, D	7271 F/X	—	—	—	2	2	2
	H6XP,	P, D	7271 F6P	—	—	—	2	2	2
	P6K	D	7271 F6K	—	—	—	2	—	—
	H6K	D	7272 F6K	—	—	—	2	—	—
	H6X	D	7272 F6X	—	—	—	2	—	—
	UP TO BUILD DATE 11-1-69 H7B	P,D	7264-5 F7B	1	1	—	—	—	—
	UP TO BUILD DATE 11-1-69 H7F	P,D	7264-5 F7F	1	1	—	—	—	—
	AFTER BUILD DATE 11-1-69 H7B	P,D	*7264-5 F7D	1	1	—	—	—	—
	AFTER BUILD DATE 11-1-69 H7F	P,D	*7264-5 F7G	1	1	—	—	—	—
	H8T	P	7326-7 F8T	1	1	—	—	—	—
	H8XA	P	7326-7 F8X	1	1	—	—	—	—
	2 DOOR								
	L2B	W	7245 F2B	1	—	—	—	—	—
	L2T	W	7245 F2T	1	—	—	—	—	—
	L2X	W	7245 F2X	1	—	—	—	—	—
	6 Pass. 4 DOOR								
	L2B	W	7244 F2B	1	—	1	—	—	—
	L2T	W	7244 F2T	1	—	1	—	—	—
	L2X	R,W	7244 F2X	1	—	1	—	—	—
	2 DOOR								
	M6B, D6B, P6B	R, W	8033 FB7	1	—	1	1	—	1
	M6F, D6F	W	8033 FF8	1	—	—	1	—	1
	M6K, D6K	W	8033 FK4	1	—	—	1	—	1
	M6T, D6T, P6T	W	8033 FT5	1	—	1	1	—	1
	D6XW	W	8033 FW1	—	—	—	1	1	1
	M6X, D6X, P6X	W	8033 FX9	1	—	—	1	—	—
	4 DOOR								
	H1B	W	7249 F1B	1	—	—	—	—	—
	H1F	W	7249 F1F	1	—	—	—	—	—
	H1X	W	7249 F1X	1	—	—	—	—	—
	H1Y	W	7249 F1Y	1	—	—	—	—	—

NOTE: A letter code in the carline column indicates the carline for which the part is released as follows:

CARLINES Indicate: J - Challenger, B - Barracuda, V - Valiant, L - Dart, R - Belvedere, W - Coronet, P - Plymouth, D - Dodge, C - Chrysler, Y - Imperial

AR Indicates use as required.
★ Indicates change or addition.

Right and left part numbers are on same line, first number is right, second number is left.

Printed in U.S.A.
December 1970

CODE	PART NAME	CAR LINE	PART NUMBER	Sed.	4 D.H.T.	Sta. Wgn.	2 D.H.T.	Sp. 2 D.H.T.	Conv.
23-108-5	COVER Cont'd.								
	H2B	W	7253 F2B	1	—	1	—	—	—
	H2F	W	7253 F2F	1	—	1	—	—	—
	H2T	W	7253 F2T	1	—	1	—	—	—
	H2X	W	7253 F2X	1	—	1	—	—	—
	2 DOOR								
	H2B	W	7254 F2B	1	—	—	1	—	—
	H2F	W	7254 F2F	1	—	—	1	—	—
	H2K	W	7254 F2K	1	—	—	1	—	—
	H2T	W	7254 F2T	1	—	—	1	—	—
	H2X	W	7254 F2X	1	—	—	1	—	—
	H2XW	W	7254 FW1	1	—	—	1	—	—
	UP TO BUILD DATE 11-1-69 P3B	W	7292 F3B	1	—	—	—	—	—
	UP TO BUILD DATE 11-1-69 P3F	W	7292 F3F	1	—	—	—	—	—
	UP TO BUILD DATE 11-1-69 P3K	W	7292 F3K	1	—	—	—	—	—
	UP TO BUILD DATE 11-1-69 P3X	W	7292 F3X	1	—	—	—	—	—
	UP TO BUILD DATE 11-1-69 P3Y	W	7292 F3Y	1	—	—	—	—	—
	AFTER BUILD DATE 11-1-69 - P3B	W	*7292 F3D	1	—	—	—	—	—
	AFTER BUILD DATE 11-1-69 - P3F	W	*7292 F3G	1	—	—	—	—	—
	AFTER BUILD DATE 11-1-69 - P3K	W	*7292 F3C	1	—	—	—	—	—
	AFTER BUILD DATE 11-1-69 - P3X	W	*7292 F3A	1	—	—	—	—	—
	AFTER BUILD DATE 11-1-69 - P3Y	W	*7292 F3Z	1	—	—	—	—	—
	2 DOOR								
	M6B, D6B, P6B	W	7295 F6B	2	—	—	2	—	2
	M6F, D6F	W	7295 F6F	2	—	—	2	—	2
	M6K, D6K	W	7295 F6K	2	—	—	2	—	2
	M6T, D6T, P6T,	W	7295 F6T	2	—	—	2	—	2
	M6X, D6X	W	7295 F6X	2	—	—	2	—	2
	M6XW, D6XW, P6X	W	7295 F6W	2	—	—	2	—	2
	M6XY	W	7295 F6Y	2	—	—	2	—	—
	P4B	W	7288 F4B	1	—	1	—	—	—
	P4F	W	7288 F4F	1	—	1	—	—	—
	P4T	W	7288 F4T	1	—	1	—	—	—
	P4X	W	7288 F4X	1	—	1	—	—	—
	CRB	W	7302 FRB	—	—	—	—	2	—
	CRF	W	7302 FRF	—	—	—	—	2	—
	CRT	W	7302 FRT	—	—	—	—	2	—
	CRX	W	7302 FRX	—	—	—	—	2	—
	C2B	W	7304 F2B	—	—	—	—	1	—
	C2F	W	7304 F2F	—	—	—	—	1	—
	C2K	W	7304 F2K	—	—	—	—	1	—
	C2T	W	7304 F2T	—	—	—	—	1	—
	C2XA	W	7304 F2X	—	—	—	—	1	—
	C2XW	W	7304 F2W	—	—	—	—	1	—
	C5XA	W	7305 F5X	—	—	—	—	2	—
	C6B	W	7303 F6B	—	—	—	—	2	—
	C6F	W	7303 F6F	—	—	—	—	2	—
	C6K	W	7303 F6K	—	—	—	—	2	—
	C6T	W	7303 F6T	—	—	—	—	2	—
	C6XA	W	7303 F6X	—	—	—	—	2	—
	C6XW	W	7303 F6W	—	—	—	—	2	—
	CENTER CUSHION								
	C6B, CRB	W	8033 FOB	—	—	—	—	1	—
	C6F, CRF	W	8033 FOF	—	—	—	—	1	—
	C6K	W	8033 FOK	—	—	—	—	1	—
	C6T	W	8033 FOT	—	—	—	—	1	—
	C6XW	W	8033 FOW	—	—	—	—	1	—
	C5XA, C6XA, CRXA	W	8033 FXA	—	—	—	—	1	—
	C6XW	W	8033 FW1	—	—	—	—	1	—

NOTE: A letter code in the carline column indicates the carline for which the part is released as follows:

CARLINES Indicate: J - Challenger, B - Barracuda, V - Valiant, L - Dart, R - Belvedere, W - Coronet, P - Plymouth, D - Dodge, C - Chrysler, Y - Imperial

AR Indicates use as required.
★ Indicates change or addition.

Right and left part numbers are on same line, first number is right, second number is left.

Printed in U.S.A.
December 1970

CODE	PART NAME	CAR LINE	PART NUMBER	Sed.	4 D.H.T.	Sta. Wgn.	2 D.H.T.	Sp. 2 D.H.T.	Conv.
23-108-5	COVER Cont'd.								
	D4B	W	7269 F4B	—	—	—	—	—	1
	D4F	W	7269 F4F	—	—	—	—	—	1
	D4K	W	7269 F4K	—	—	—	—	—	1
	D4T	W	7269 F4T	—	—	—	—	—	1
	D4X	W	7269 F4X	—	—	—	—	—	1
	D4XW	W	7269 F4W	—	—	—	—	—	1
	L1B	D	7233 F1B	1	1	—	—	—	—
	UP TO BUILD DATE 11-1-69 L1F	D	7233 F1F	1	1	—	—	—	—
	UP TO BUILD DATE 11-1-69 L1X	D	7233 F1X	1	1	—	—	—	—
	UP TO BUILD DATE 11-1-69 L1Y	D	7233 F1Y	1	1	—	—	—	—
	AFTER BUILD DATE 11-1-69 L1F	D	*7233 F1G	1	1	—	—	—	—
	AFTER BUILD DATE 11-1-69 L1X	D	*7233 F1A	1	1	—	—	—	—
	AFTER BUILD DATE 11-1-69 L1Y	D	*7233 F1Z	1	1	—	—	—	—
	L1B	D	7232 F1B	—	—	—	1	—	—
	UP TO BUILD DATE 11-1-69 L1F	D	7232 F1F	—	—	—	1	—	—
	UP TO BUILD DATE 11-1-69 L1X	D	7232 F1X	—	—	—	1	—	—
	UP TO BUILD DATE 11-1-69 L1Y	D	7232 F1Y	—	—	—	1	—	—
	AFTER BUILD DATE 11-1-69 L1F	D	*7232 F1G	—	—	—	1	—	—
	AFTER BUILD DATE 11-1-69 L1X	D	*7232 F1A	—	—	—	1	—	—
	AFTER BUILD DATE 11-1-69 L1Y	D	*7232 F1Z	—	—	—	1	—	—
	L2B	D	7235 F2B	1	1	1	—	—	—
	L2F	D	7235 F2F	1	1	1	—	—	—
	L2T	D	7235 F2T	1	1	1	—	—	—
	L2X	D	7235 F2X	1	1	1	—	—	—
	L2B	D	7234 F2B	—	—	—	1	—	1
	L2F	D	7234 F2F	—	—	—	1	—	1
	L2T	D	7234 F2T	—	—	—	1	—	—
	L2X	D	7234 F2X	—	—	—	1	—	1
	L4B	D	7321 F4B	1	1	—	1	—	—
	L4F	D	7321 F4F	1	1	—	1	—	—
	L4X	D	7321 F4X	1	1	—	1	—	—
	L4XW	D	7321 F4W	—	1	—	1	—	—
	M6X	D	7250 F6X	—	—	—	1	—	1
	H1B	D	7299 F1B	1	1	—	—	—	—
	H1F	D	7299 F1F	1	1	—	—	—	—
	H1T	D	7299 F1T	1	1	—	—	—	—
	H1X	D	7299 F1X	1	1	—	—	—	—
	H1Y	D	7299 F1Y	1	1	—	—	—	—
	H3B	D	7296 F3B	—	—	—	1	—	—
	H3F	D	7296 F3F	—	—	—	1	—	—
	H3X	D	7296 F3X	—	—	—	1	—	—
	H4B	D	7294 F4B	—	—	1	1	—	—
	H4F	D	7294 F4F	—	—	1	1	—	—
	H4T	D	7294 F4T	—	—	1	—	—	—
	H4X	D	7294 F4X	—	—	1	1	—	—
	H4K	D	7294 F4K	—	—	—	1	—	—
	H4Y	D	7294 FY4	—	—	—	1	—	—
	H7B	D	7280-1 F7B	1	1	—	—	—	—
	H7F	D	7280-1 F7F	1	1	—	—	—	—
	H7X	D	7280-1 F7X	1	1	—	—	—	—
	H8F	D	7282-3 F8F	—	1	1	—	—	—
	H8K	D	7282-3 F8K	—	1	—	—	—	—
	H8T	D	7282-3 F8T	—	—	1	—	—	—
	H8X	D	7282-3 F8X	—	1	1	—	—	—
	UP TO BUILD DATE 11-1-69 D1B	D	7320 F1B	1	1	—	—	—	—
	UP TO BUILD DATE 11-1-69 D1F	D	7320 F1F	1	1	—	—	—	—
	UP TO BUILD DATE 11-1-69 D1X	D	7320 F1X	1	1	—	—	—	—
	AFTER BUILD DATE 11-1-69 D1B	D	*7320 F1D	1	1	—	—	—	—

NOTE: A letter code in the carline column indicates the carline for which the part is released as follows:

CARLINES Indicate: J - Challenger, B - Barracuda, V - Valiant, L - Dart, R - Belvedere, W - Coronet, P - Plymouth, D - Dodge, C - Chrysler, Y - Imperial

AR Indicates use as required.
★ Indicates change or addition.

Right and left part numbers are on same line, first number is right, second number is left.

Printed in U.S.A.
December 1970

CODE	PART NAME	CAR LINE	PART NUMBER	Sed.	4 D.H.T.	Sta. Wgn.	2 D.H.T.	Sp. 2 D.H.T.	Conv.
23-108-5	COVER Cont'd.								
	CENTER CUSHION								
	M6B, W6B, H5B, H6B, P5B, P6B,	C	8024 FB3	—	—	—	—	—	1
	M6F W6F, H5F, H6F, P5F, P6F,	C	8024 FF8	—	1	—	1	—	1
	M5L	C	8024 FL2	—	1	—	1	—	—
	E6T, M6T, D6T, J6T, H6T, P6T,	C	8024 FT5	—	1	—	1	—	1
	E6X, L6X, M6X, H6X	C, D	8024 FX9	—	1	—	1	—	1
	E6XW, M6XW	C	8024 FW1	—	1	—	1	—	1
	H6K	P,D	8024 FK4	—	1	—	1	1	1
	M6A, H6A, D6XA, W6XA, P6XA, J6XA	P,D	8024 FA8	—	1	—	1	1	1
	H1B	C	7214 F1B	1	1	—	—	—	—
	H1F	C	7214 F1F	1	1	—	—	—	—
	H1P	C	7214 F1P	1	1	—	—	—	—
	H1X	C	7214 F1X	1	1	—	—	—	—
	H1Y	C	7214 F1Y	1	1	—	—	—	—
	H3B	C	*7215 F3B	—	—	—	1	—	—
	H3F	C	*7215 F3F	—	—	—	1	—	—
	H3P	C	*7215 F3P	—	—	—	1	—	—
	H3X	C	*7215 F3X	—	—	—	1	—	—
	H3Y	C	*7215 F3Y	—	—	—	1	—	—
	H7B	C	7218-9 F7B	1	1	—	—	—	—
	H7L	C	7218-9 F7L	1	1	—	—	—	—
	H7R	C	7218-9 F7R	1	1	—	—	—	—
	H7F	C	7218-9 F7F	1	1	—	—	—	—
	H6B	C	7216 F6B	—	—	—	1	—	—
	H6T	C	7216 F6T	—	—	—	1	—	—
	H6XW	C	7216 F6W	—	—	—	1	—	—
	H6X	C	7216 F6X	—	—	—	1	—	—
	CENTER CUSHION								
	H6B	C	8012 FB7	—	—	—	1	—	—
	H6T	C	8012 FT5	—	—	—	1	—	—
	H6X	C	8012 FX9	—	—	—	1	—	—
	H6XW	C	8012 FW1	—	—	—	1	—	—
	M5L	C	7207 F5L	—	2	—	2	—	—
	H8L	C	7220-1 F8L	1	1	—	—	—	—
	H8X	C	7220-1 F8X	1	1	—	—	—	—
	HST	C	7222-3 FST	1	1	—	—	—	—
	L1B	Y	7300 F1B	—	1	—	—	—	—
	L1F	Y	7300 F1F	—	1	—	—	—	—
	L1M	Y	7300 F1M	—	1	—	—	—	—
	L1P	Y	7300 F1P	—	1	—	—	—	—
	L1TT	Y	7300 F1T	—	1	—	—	—	—
	L1X	Y	7300 F1X	—	1	—	—	—	—
	MDA	Y	7314-5 FDA	—	1	—	—	—	—
	MDB	Y	7314-5 FDB	—	1	—	—	—	—
	MDF	Y	7314-5 FDF	—	1	—	—	—	—
	MDM	Y	7314-5 FDM	—	1	—	—	—	—
	MDP	Y	7314-5 FDP	—	1	—	—	—	—
	MDTT	Y	7314-5 FDT	—	1	—	—	—	—
	MDX	Y	7314-5 FDX	—	1	—	—	—	—
	MDY	Y	7314-5 FDY	—	1	—	—	—	—
	L3B	Y	7312 F3B	—	—	—	1	—	—
	L3F	Y	7312 F3F	—	—	—	1	—	—
	L3TT	Y	7312 F3T	—	—	—	1	—	—
	L3X	Y	7312 F3X	—	—	—	1	—	—
	MSB	Y	7256-7 FSB	—	1	—	—	—	—
	MSF	Y	7256-7 FSF	—	1	—	—	—	—
	MSR	Y	7256-7 FSR	—	1	—	—	—	—
	MST	Y	7256-7 FST	—	1	—	—	—	—

NOTE: A letter code in the carline column indicates the carline for which the part is released as follows:

CARLINES Indicate: J - Challenger, B - Barracuda, V - Valiant, L - Dart, R - Belvedere, W - Coronet, P - Plymouth, D - Dodge, C - Chrysler, Y - Imperial

AR *Indicates use as required.*
★ **Indicates change or addition.**

Right and left part numbers are on same line, first number is right, second number is left.

Printed in U.S.A.
December 1970

CODE	PART NAME	CAR LINE	PART NUMBER	Sed.	4 D.H.T.	Sta. Wgn.	2 D.H.T.	Sp. 2 D.H.T.	Conv.
23-108-5	COVER Cont'd.								
	MSXW	Y	7256-7 FSW	—	1	—	—	—	—
	MSX	Y	7256-7 FSX	—	1	—	—	—	—
	MSY	Y	7256-7 FSY	—	1	—	—	—	—
	MBB	Y	7270 FBB	—	—	—	1	—	—
	MBF	Y	7270 FBF	—	—	—	1	—	—
	MBP	Y	7270 FBP	—	—	—	1	—	—
	MBTT	Y	7270 FBT	—	—	—	1	—	—
	MBX	Y	7270 FBX	—	—	—	1	—	—
	MBY	Y	7270 FBY	—	—	—	1	—	—
	CENTER CUSHION								
	MRB	Y	7308 FRB	—	—	—	1	—	—
	MRF	Y	7308 FRF	—	—	—	1	—	—
	MRT	Y	7308 FRT	—	—	—	1	—	—
	MRX	Y	7308 FRX	—	—	—	1	—	—
	MRXW	Y	7308 FRW	—	—	—	1	—	—
	MRY	Y	7308 FRY	—	—	—	1	—	—
	CUSHION								
	MRB	Y	7309 FRB	—	—	—	2	—	—
	MRF	Y	7309 FRF	—	—	—	2	—	—
	MRT	Y	7309 FRT	—	—	—	2	—	—
	MRX	Y	7309 FRX	—	—	—	2	—	—
	MRXW	Y	7309 FRW	—	—	—	2	—	—
	MRY	Y	7309 FRY	—	—	—	2	—	—
23-108-12	BACK, Front Seat								
	NOTE:								
	FOR COMPLETE ASSEMBLY ORDER BY DESCRIPTION, VEHICLE SERIAL NUMBER and TRIM CODE: FOR COVER ONLY SEE PART TYPE CODE 23-108-16								
23-108-15	SPRING and COVER, Front Seat Back								
	NOTE:								
	FOR COMPLETE ASSEMBLY ORDER BY DESCRIPTION, VEHICLE SERIAL NUMBER and TRIM CODE: FOR COVER ONLY SEE PART TYPE CODE 23-108-16								
23-108-16	COVER, Front Seat Back								
	CODES								
	L1B	V	7449 F1B	1	—	—	—	—	—
	L1F	V	7449 F1F	1	—	—	—	—	—
	L1X	V	7449 F1X	1	—	—	—	—	—
	L1B	V	7450-1 F1B	—	—	—	—	1	—
	L1F	V	7450-1 F1F	—	—	—	—	1	—
	L1X	V	7450-1 F1X	—	—	—	—	1	—
	L2B	V,L	7433 F2B	1	—	—	—	—	—
	L2F	V,L	7433 F2F	1	—	—	—	—	—
	L2X	V,L	7433 F2X	1	—	—	—	—	—
	L2B	V,L	7434-5 F2B	—	—	—	1	1	—
	L2X	V,L	7434-5 F2X	—	—	—	1	1	—
	L2F	V	7434-5 F2F	—	—	—	—	1	—
	L4B	V	7472-3 F4B	1	—	—	—	1	—
	L4E	V	7472-3 F4E	1	—	—	—	1	—
	L4F	V	7472-3 F4F	1	—	—	—	1	—
	L4T	V	7472-3 F4T	1	—	—	—	1	—
	L4X	V	7472-3 F4X	1	—	—	—	1	—
	L6X	V	7530 F6X	—	2	—	—	2	—
	L6BW, L6EW, L6XW	V	7530 F6W	—	2	—	—	2	—

NOTE: A letter code in the carline column indicates the carline for which the part is released as follows:

CARLINES Indicate: J - Challenger, B - Barracuda, V - Valiant, L - Dart, R - Belvedere, W - Coronet, P - Plymouth, D - Dodge, C - Chrysler, Y - Imperial

AR **Indicates use as required.**
★ **Indicates change or addition.**

Right and left part numbers are on same line, first number is right, second number is left.

Printed in U.S.A.
December 1970

CODE	PART NAME	CAR LINE	PART NUMBER	Sed.	4 D.H.T.	Sta. Wgn.	2 D.H.T.	Sp. 2 D.H.T.	Conv.
23-108-16	COVER Cont'd.								
	D2B	V	7496-7 F2B	—	—	—	—	1	—
	D2F	V	7496-7 F2F	—	—	—	—	1	—
	D2X	V	7496-7 F2X	—	—	—	—	1	—
	H4B, H6B	B	7534 F6B	—	—	—	2	—	2
	H6E	B	7534 F6E	—	—	—	*2	—	2
	H4F, H6F	B	7534 F6F	—	—	—	2	—	2
	H6T	B	7534 F6T	—	—	—	2	—	2
	H4X, H6X	B	7534 F6X	—	—	—	2	—	2
	H4BW, H4FW, H4XW, H6BW, H6FW, H6XW	B	7534 F6W	—	—	—	2	—	2
	P5K	B	7501 F5K	—	—	—	2	—	—
	P5X	B	7501 F5X	—	—	—	2	—	—
	P6A	B	7522 F6A	—	—	—	2	—	2
	P6B	B	7522 F6B	—	—	—	2	—	2
	P6E	B	7522 F6E	—	—	—	2	—	2
	P6F	B	7522 F6F	—	—	—	2	—	2
	P6K	B	7522 F6K	—	—	—	2	—	2
	P6BW, P6EW, P6FW, P6XW	B	7522 F6W	—	—	—	2	—	2
	F6T	B	7522 F6T	—	—	—	2	—	2
	F6Y	B	7522 F6Y	—	—	—	2	—	2
	PRT	B	7539 FRT	—	—	—	2	—	2
	PRX	B	7539 FRX	—	—	—	2	—	2
	PRXW	B	7539 FRW	—	—	—	2	—	2
	P6T	B	7522 F6T	—	—	—	2	—	2
	P6YX	B	7522 F6Y	—	—	—	2	—	2
	L6X	B,J	7587 F6X	—	—	—	2	—	—
	L6XW	B,J	7587 F6W	—	—	—	2	—	—
	HRK	J	7509 FRK	—	—	—	2	2	—
	HRT	J	7509 FRT	—	—	—	2	2	2
	HRX	J	7509 FRX	—	—	—	2	2	2
	H4B, H6B	J	7541 F6B	—	—	—	2	—	2
	H5B	J	7508 F5B	—	—	—	2	2	—
	H5F	J	7508 F5F	—	—	—	2	2	—
	H5K	J	7508 F5K	—	—	—	2	2	—
	H5X	J	7508 F5X	—	—	—	2	2	—
	H6E	J	7541 F6E	—	—	—	2	—	2
	H6F	J	7541 F6F	—	—	—	2	—	2
	H6K	J	7541 F6K	—	—	—	2	—	2
	H6T	J	7541 F6T	—	—	—	2	—	2
	H4X, H6X	J	7541 F6X	—	—	—	2	—	2
	H6XW	J	7541 F6W	—	—	—	2	—	2
	L2B	L	7434-5 F2B	—	—	—	1	—	—
	L2X	L	7434-5 F2X	—	—	—	1	—	—
	H1B	L	7448 F1B	1	—	—	—	—	—
	H1F	L	7448 F1F	1	—	—	—	—	—
	H1X	L	7448 F1X	1	—	—	—	—	—
	H2B	L	7456 F2B	1	—	—	—	—	—
	H2T	L	7456 F2T	1	—	—	—	—	—
	H2X	L	7456 F2X	1	—	—	—	—	—
	H2B	L	7454-5 F2B	—	—	—	1	—	—
	H2F	L	7454-5 F2F	—	—	—	1	—	—
	H2T	L	7454-5 F2T	—	—	—	1	—	—
	H2X	L	7454-5 F2X	—	—	—	1	—	—
	H2XW	L	7454-5 F2W	—	—	—	1	—	—
	D2B	L	7438-9 F2B	—	—	—	1	—	—
	D2F	L	7438-9 F2F	—	—	—	1	—	—
	D2T	L	7438-9 F2T	—	—	—	1	—	—
	D2X	L	7438-9 F2X	—	—	—	1	—	—
	H6F	L	7538 F6F	—	—	—	2	—	—

NOTE: A letter code in the carline column indicates the carline for which the part is released as follows:

CARLINES Indicate: J - Challenger, B - Barracuda, V - Valiant, L - Dart, R - Belvedere, W - Coronet, P - Plymouth, D - Dodge, C - Chrysler, Y - Imperial

AR Indicates use as required.
★ Indicates change or addition.

Right and left part numbers are on same line, first number is right, second number is left.

Printed in U.S.A.
December 1970

CODE	PART NAME	CAR LINE	PART NUMBER	Sed.	4 D.H.T.	Sta. Wgn.	2 D.H.T.	Sp. 2 D.H.T.	Conv.
23-108-16	COVER Cont'd.								
	H6T	L	7538 F6T	—	—	—	2	—	—
	H6X	L	7538 F6X	—	—	—	2	—	—
	K1T (UP TO BUILD DATE 2-1-70)	R,W	7576 F1T	1	—	—	—	—	—
	K1T (UP TO BUILD DATE 2-1-70)	R,W	7576 FTT	1	—	—	—	—	—
	K2T, T2T	R,W	7577 F2T	1	—	—	—	—	—
	K2X, T2X	R,W	7577 F2X	1	—	—	—	—	—
	2 DOOR								
	K1T (UP TO BUILD DATE 2-1-70)	R,W	7578-9 F1T	1	—	—	—	—	—
	K1T (UP TO BUILD DATE 2-1-70)	R,W	7578-9 FTT	1	—	—	—	—	—
	K2T	R,W	7580-1 F1T	1	—	—	—	—	—
	4 DOOR								
	L1B	R	7464 F1B	1	—	—	—	—	—
	L1Y	R	7464 F1Y	1	—	—	—	—	—
	2 DOOR								
	M2B	R	7552-3 F2B	1	—	—	—	—	—
	M2T	R	7552-3 F2T	1	—	—	—	—	—
	M2X	R	7552-3 F2X	1	—	—	—	—	—
	6 PASS.								
	D2B	R	7467 F2B	—	—	1	—	—	—
	D2T	R	7467 F2T	—	—	1	—	—	—
	H1B	R	7468 F1B	1	—	—	—	—	—
	H1F	R	7468 F1F	1	—	—	—	—	—
	W/DIAMOND DESIGN IN INSERT H1X	R	7468 F1X	1	—	—	—	—	—
	W/O DIAMOND DESIGN IN INSERT H1X	R	*7468 FXX	1	—	—	—	—	—
	H1Y	R	7468 F1Y	1	—	—	—	—	—
	H1B	R	7524-5 F1B	—	—	—	1	—	—
	W/DIAMOND DESIGN IN INSERT H1F	R	7524-5 F1F	—	—	—	1	—	—
	H1X	R	7524-5 F1X	—	—	—	1	—	—
	W/O DIAMOND DESIGN IN INSERT H1X	R	*7524-5 FXX	—	—	—	1	—	—
	4 DOOR								
	H2B	R	7482 F2B	1	—	1	—	—	—
	H2F	R	7482 F2F	1	—	1	—	—	—
	H2T	R	7482 F2T	1	—	1	—	—	—
	H2X	R	7482 F2X	1	—	1	—	—	—
	H2BW, H2FW, H2TW	R	7482 F2W	1	—	1	—	—	—
	H2XY	R	7482 F2Y	—	—	1	—	—	—
	2 DOOR								
	H2B	R	7476-7 F2B	1	—	—	1	—	1
	H2F	R	7476-7 F2F	1	—	—	1	—	—
	H2K	R	7476-7 F2K	1	—	—	1	—	1
	H2T	R	7476-7 F2T	1	—	—	1	—	—
	H2X	R	7476-7 F2X	1	—	—	1	—	1
	H2BW, H2KW, H2XW	R	7476-7 F2W	1	—	—	1	—	1
	P3B	R	7520-1 FBB	—	—	—	1	—	—
	P3B	R	7520-1 F3B	1	—	—	—	—	—
	P3F	R	7520-1 F3F	1	—	1	—	—	—
	P3K	R	7520-1 F3K	1	—	—	1	—	—
	P3X	R	7520-1 F3X	1	—	1	1	—	—
	P3Y	R	7520-1 F3Y	1	—	—	—	—	—
	P6B 2 DOOR	R	7531 F6B	2	—	—	2	—	2
	P6B 4 DOOR	R	7531 FBB	2	—	—	—	—	—
	P6BW, P6KW, P6XW, P6TW, P6XW	R	7531 F6W	2	—	—	2	—	2
	P6F	R	7531 F6F	2	—	—	2	—	—
	P6K	R	7531 F6K	2	—	—	2	—	2
	P6T	R	7531 F6T	2	—	—	2	—	—
	P6XA	R	7531 F6X	2	—	—	2	—	2

NOTE: A letter code in the carline column indicates the carline for which the part is released as follows:

CARLINES Indicate: J - Challenger, B - Barracuda, V - Valiant, L - Dart, R - Belvedere, W - Coronet, P - Plymouth, D - Dodge, C - Chrysler, Y - Imperial

AR Indicates use as required.
★ Indicates change or addition.

Right and left part numbers are on same line, first number is right, second number is left.

Printed in U.S.A.
December 1970

CODE	PART NAME	CAR LINE	PART NUMBER	Sed.	4 D.H.T.	Sta. Wgn.	2 D.H.T.	Sp. 2 D.H.T.	Conv.
23-108-16	COVER Cont'd.								
	2 DOOR								
	E2B, B2B	P,D	7432 F2B	1	—	1	—	—	—
	E2T, B2T	P,D	7432 F2T	1	—	1	—	—	—
	2 DOOR								
	E2B	P	7430-1 F2B	1	—	—	—	—	—
	E1B	P	7596-7 F1B	1	—	—	—	—	—
	E1T	P	7596-7 F1T	1	—	—	—	—	—
	E2T	P	7430-1 F2T	1	—	—	—	—	—
	2 DOOR								
	UP TO BUILD DATE 11-1-69 L1B, F1B	P,D	7440-1 F1B	1	—	—	1	—	—
	UP TO BUILD DATE 11-1-69 L1Y, F1Y	P,D	7440-1 F1Y	1	—	—	1	—	—
	L1F, F1F	P,D	7440-1 F1F	1	—	—	1	—	—
	AFTER BUILD DATE 11-1-69 L1B, F1B	P,D	*7440-1 F1D	1	—	—	1	—	—
	AFTER BUILD DATE 11-1-69 L1Y, F1Y	P,D	*7440-1 F1Z	1	—	—	1	—	—
	4 DOOR								
	E1B, B1B	P,D	7598 F1B	1	—	—	—	—	—
	E1T, B1T	P,D	7598 F1T	1	—	—	—	—	—
	UP TO BUILD DATE 11-1-69 L1B, F1B	P,D	7437 F1B	1	—	—	—	—	—
	UP TO BUILD DATE 11-1-69 L1F, F1F	P,D	7437 F1F	1	—	—	—	—	—
	UP TO BUILD DATE 11-1-69 L1Y, F1Y	P,D	7437 F1Y	1	—	—	—	—	—
	AFTER BUILD DATE 11-1-69 L1B, F1B	P,D	*7437 F1D	1	—	—	—	—	—
	AFTER BUILD DATE 11-1-69 L1F, F1F	P,D	*7437 F1C	1	—	—	—	—	—
	AFTER BUILD DATE 11-1-69 L1Y, F1Y	P,D	*7437 F1Z						
	4 DOOR								
	L2B, F2B, D2B, R2B	P, D	7436 F2B	—	—	1	—	—	—
	L2F, D2F, R2F, F2F	P, D	7436 F2F	—	—	1	—	—	—
	L2XA, D2XA, R2XA, F2XA	P, D	7436 F2X	1	—	1	—	—	—
	L2T, D2T, R2T, F2T	P, D	7436 F2T	1	—	1	—	—	—
	2 DOOR								
	K1T (UP TO BUILD DATE 2-1-70)	P	7560-1 F1T	1	—	—	—	—	—
	K1T (AFTER BUILD DATE 2-1-70)	P	7560-1 FTT	1	—	—	—	—	—
	K2T	P	7564-5 F2T	1	—	—	—	—	—
	4 DOOR								
	K1T (UP TO BUILD DATE 2-1-70)	P	7559 F1T	1	—	—	—	—	—
	K1T (AFTER BUILD DATE 2-1-70)	P	7559 FTT	1	—	—	—	—	—
	K1A (UP TO BUILD DATE 2-1-70)	D	7559 F1A	1	—	—	—	—	—
	K1A (AFTER BUILD DATE 2-1-70)	D	7559 FAA	1	—	—	—	—	—
	K2T	P	7566 F2T	1	—	—	—	—	—
	K2A	D	7566 F2A	1	—	—	—	—	—
	L2T, F2T	P,D	7512-3 F2T	—	—	—	1	—	—
	L2XA, F2XA	P,D	7512-3 F2X	—	—	—	1	—	—
	M1B, W1B	P,D	7500 F1B	1	1	—	—	—	—
	M1F, W1F	P,D	7500 F1F	1	1	—	—	—	—
	M1XA, W1XA	P,D	7500 F1X	1	1	—	—	—	—
	M1Y, W1Y	P,D	7500 F1Y	1	1	—	—	—	—
	M1B, W1B	P,D	7498-9 F1B	—	—	—	1	1	—
	M1F, W1F	P,D	7498-9 F1F	—	—	—	1	1	—
	M1XA, W1XA	P,D	7498-9 F1X	—	—	—	1	1	—
	M4B, D4B, R4B, P4B, H4B, W4B	P, D	7452-3 F4B	1	1	1	1	1	1
	M4F, D4F, R4F, H4F, P4F, W4F	P, D	7452-3 F4F	1	1	1	1	1	1
	M4K, H4K, P4K, W4K	P, D	7452-3 F4K	—	1	—	1	1	—
	M4T, D4T, H4T, R4T, P4T, W4T	P, D	7452-3 F4T	1	1	1	1	1	—
	M4XA, P4XW, W4XA, H4XA	P, D	7452-3 F4X	1	1	1	1	1	1
	M4XW, M4BW, M4TW, W4XW, W4BW, W4TW	P,D	7452-3 F4W	—	—	1	1	1	1
	M4XP, H4XP, P4XP, W4XP	P, D	7452-3 F4P	1	1	—	1	1	1
	P4TT	P	*7452-3 F4N	1	—	—	—	—	—

NOTE: A letter code in the carline column indicates the carline for which the part is released as follows:

CARLINES Indicate: J - Challenger, B - Barracuda, V - Valiant, L - Dart, R - Belvedere, W - Coronet, P - Plymouth, D - Dodge, C - Chrysler, Y - Imperial

AR *Indicates use as required.*
★ *Indicates change or addition.*

Right and left part numbers are on same line, first number is right, second number is left.

Printed in U.S.A.
December 1970

CODE	PART NAME	CAR LINE	PART NUMBER	Sed.	4 D.H.T.	Sta. Wgn.	2 D.H.T.	Sp. 2 D.H.T.	Conv.
23-108-16	COVER Cont'd.								
	M7F, W7F	P, D	7462-3 F7F	—	—	1	—	—	—
	M8XA, W8XA	P,D	7458-9 F8X	1	1	1	—	—	—
	M6B, H6B, W6B, P6B	P,D	7514 F6B	—	2	—	2	2	—
	M6F, H6F, W6F, P6F	P,D	7514 F6F	—	2	—	2	2	—
	H6K, P6K	P,D	7514 F6K	—	—	—	—	2	—
	H6T, P6T	P,D	7514 F6T	—	—	—	2	2	—
	M6XA, H6XA, W6XA, P6XA	P,D	7514 F6X	—	2	—	2	2	—
	H4B	D	7526-7 F4B	—	—	—	1	1	—
	H4F	D	7526-7 F4F	—	—	—	1	1	—
	H4T	D	7526-7 F4T	—	—	—	1	—	—
	H4X	D	7526-7 F4X	—	—	—	1	1	—
	H4K	D	7526-7 F4K	—	—	—	1	1	—
	H4Y	D	7526-7 FY4	—	—	—	1	1	—
	H6K	D	7511 F6K	—	—	—	—	2	—
	H6X	D	7511 F6X	—	—	—	—	2	—
	H3B	P	7584-5 F3B	1	1	—	1	1	—
	H3F	P	7584-5 F3F	1	1	—	1	1	—
	H3K	P	7584-5 F3K	—	—	—	1	1	—
	H3XA	P	7584-5 F3X	1	1	—	1	1	—
	H3Y	P	7584-5 F3Y	1	1	—	—	—	—
	UP TO BUILD DATE 11-1-69 H5B	P	7516-7 F5B	—	—	—	1	1	—
	UP TO BUILD DATE 11-1-69 H5F	P	7516-7 F5F	—	—	—	1	1	—
	AFTER BUILD DATE 11-1-69 H5B	P	*7516-7 F5D	—	—	—	1	1	—
	AFTER BUILD DATE 11-1-69 H5F	P	*7516-7 F5G	—	—	—	1	1	—
	UP TO BUILD DATE 11-1-69 H7B	P	7494-5 F7B	1	1	—	—	—	—
	UP TO BUILD DATE 11-1-69 H7F	P	7494-5 F7F	1	1	—	—	—	—
	AFTER BUILD DATE 11-1-69 H7B	P	*7494-5 F7D	1	1	—	—	—	—
	AFTER BUILD DATE 11-1-69 H7F	P	*7494-5 F7G	1	1	—	—	—	—
	H8T	P	7592-3 F8T	1	1	—	—	—	—
	H8X	P	7592-3 F8X	1	1	—	—	—	—
	D6T	P	7588-9 F6T	—	—	—	1	1	—
	D6XA	P	7588-9 F6X	—	—	—	1	1	—
	6 PASS. 4 DOOR								
	L2B	W	7457 F2B	1	—	1	—	—	—
	L2T	W	7457 F2T	1	—	1	—	—	—
	L2X	R,W	7457 F2X	1	—	1	—	—	—
	2 DOOR								
	L2B	W	7460-1 F2B	1	—	—	—	—	—
	L2T	W	7460-1 F2T	1	—	—	—	—	—
	L2X	W	7460-1 F2X	1	—	—	—	—	—
	2 DOOR								
	M6B, D6B	W	7540 F6B	2	—	—	2	—	2
	M6F, D6F	W	7540 F6F	2	—	—	2	—	2
	M6K, D6K	W	7540 F6K	2	—	—	2	—	2
	M6T, D6T, P6T	W	7540 F6T	2	—	—	2	—	2
	M6X, D6X, P6X,	W	7540 F6X	2	—	—	2	—	2
	M6XW, D6XW	W	7540 F6W	2	—	—	2	—	2
	M6XY, D6XY	W	7540 F6Y	2	—	—	2	—	—
	H1B	W	7465 F1B	1	—	—	—	—	—
	H1F	W	7465 F1F	1	—	—	—	—	—
	H1X	W	7465 F1X	1	—	—	—	—	—
	H1Y	W	7465 F1Y	1	—	—	—	—	—
	2 DOOR								
	H2B	W	7470-1 F2B	1	—	—	1	—	—
	H2F	W	7470-1 F2F	1	—	—	1	—	—
	H2K	W	7470-1 F2K	1	—	—	1	—	—
	H2T	W	7470-1 F2T	1	—	—	1	—	—

NOTE: A letter code in the carline column indicates the carline for which the part is released as follows:

CARLINES Indicate: J - Challenger, B - Barracuda, V - Valiant, L - Dart, R - Belvedere, W - Coronet, P - Plymouth, D - Dodge, C - Chrysler, Y - Imperial

AR Indicates use as required.
★ Indicates change or addition.

Right and left part numbers are on same line, first number is right, second number is left.

Printed in U.S.A.
December 1970

CODE	PART NAME	CAR LINE	PART NUMBER	Sed.	4 D.H.T.	Sta. Wgn.	2 D.H.T.	Sp. 2 D.H.T.	Conv.
23-108-16	COVER Cont'd.								
	H2X	W	7470-1 F2X	1	—	—	1	—	—
	H2XW	W	7470-1 FW1	1	—	—	1	—	—
	4 DOOR								
	H2B	W	7469 F2B	1	—	1	—	—	—
	H2F	W	7469 F2F	1	—	1	—	—	—
	H2T	W	7469 F2T	1	—	1	—	—	—
	H2X	W	7469 F2X	1	—	1	—	—	—
	UP TO BUILD DATE 11-1-69 P3B	W	*7536-7 F3B	1	—	—	—	—	—
	UP TO BUILD DATE 11-1-69 P3F	W	*7536-7 F3F	1	—	—	—	—	—
	UP TO BUILD DATE 11-1-69 P3K	W	*7536-7 F3K	1	—	—	—	—	—
	UP TO BUILD DATE 11-1-69 P3X	W	*7536-7 F3X	1	—	—	—	—	—
	UP TO BUILD DATE 11-1-69 P3Y	W	*7536-7 F3Y	1	—	—	—	—	—
	AFTER BUILD DATE 11-1-69 P3B	W	*7536-7 F3D	1	—	—	—	—	—
	AFTER BUILD DATE 11-1-69 P3F	W	*7536-7 F3G	1	—	—	—	—	—
	AFTER BUILD DATE 11-1-69 P3K	W	*7536-7 F3C	1	—	—	—	—	—
	AFTER BUILD DATE 11-1-69 P3X	W	*7536-7 F3A	1	—	—	—	—	—
	AFTER BUILD DATE 11-1-69 P3Y	W	*7536-7 F3Z	1	—	—	—	—	—
	P4B	W	*7532-3 F4B	1	—	1	—	—	—
	P4F	W	*7532-3 F4F	1	—	1	—	—	—
	P4T	W	*7532-3 F4T	1	—	1	—	—	—
	P4X	W	*7532-3 F4X	1	—	1	—	—	—
	C5XA	W	7558 F5X	—	—	—	—	2	—
	C6B	W	7555 F6B	—	—	—	—	2	—
	C6F	W	7555 F6F	—	—	—	—	2	—
	C6K	W	7555 F6K	—	—	—	—	2	—
	C6T	W	7555 F6T	—	—	—	—	2	—
	C6XA	W	7555 F6X	—	—	—	—	2	—
	C6XW	W	7555 F6W	—	—	—	—	2	—
	CRB	W	7554 FRB	—	—	—	—	2	—
	CRF	W	7554 FRF	—	—	—	—	2	—
	CRT	W	7554 FRT	—	—	—	—	2	—
	CRXA	W	7554 FRX	—	—	—	—	2	—
	C2B	W	7556-7 F2B	—	—	—	—	1	—
	C2F	W	7556-7 F2F	—	—	—	—	1	—
	C2K	W	7556-7 F2K	—	—	—	—	1	—
	C2T	W	7556-7 F2T	—	—	—	—	1	—
	C2XA	W	7556-7 F2X	—	—	—	—	1	—
	C2XW	W	7556-7 F2W	—	—	—	—	1	—
	UP TO BUILD DATE 11-1-69 D1B	D	7594-5 F1B	—	—	—	1	—	—
	UP TO BUILD DATE 11-1-69 D1F	D	7594-5 F1F	—	—	—	1	—	—
	UP TO BUILD DATE 11-1-69 D1X	D	7594-5 F1X	—	—	—	1	—	—
	D1Y	D	7594-5 F1Y	—	—	—	1	—	—
	AFTER BUILD DATE 11-1-69 D1B	D	*7594-5 F1D	—	—	—	1	—	—
	AFTER BUILD DATE 11-1-69 D1F	D	*7594-5 F1G	—	—	—	1	—	—
	AFTER BUILD DATE 11-1-69 D1X	D	*7594-5 F1A	—	—	—	1	—	—
	UP TO BUILD DATE 11-1-69 D1B	D	7582 F1B	1	1	—	—	—	—
	UP TO BUILD DATE 11-1-69 D1F	D	7582 F1F	1	1	—	—	—	—
	UP TO BUILD DATE 11-1-69 D1X	D	7582 F1X	1	1	—	—	—	—
	D1Y	D	7582 F1Y	1	1	—	—	—	—
	AFTER BUILD DATE 11-1-69 D1B	D	*7582 F1D	1	1	—	—	—	—
	AFTER BUILD DATE 11-1-69 D1F	D	*7582 F1G	1	1	—	—	—	—
	AFTER BUILD DATE 11-1-69 D1X	D	*7582 F1A	1	1	—	—	—	—
	D4B	W	7506-7 F4B	—	—	—	—	—	1
	D4F	W	7506-7 F4F	—	—	—	—	—	1
	D4K	W	7506-7 F4K	—	—	—	—	—	1
	D4T	W	7506-7 F4T	—	—	—	—	—	1
	D4X	W	7506-7 F4X	—	—	—	—	—	1
	D4XW	W	7506-7 F4W	—	—	—	—	—	1

NOTE: A letter code in the carline column indicates the carline for which the part is released as follows:

CARLINES Indicate: J - Challenger, B - Barracuda, V - Valiant, L - Dart, R - Belvedere, W - Coronet, P - Plymouth, D - Dodge, C - Chrysler, Y - Imperial

AR Indicates use as required.
★ Indicates change or addition.

Right and left part numbers are on same line, first number is right, second number is left.

Printed in U.S.A.
December 1970

CODE	PART NAME	CAR LINE	PART NUMBER	Sed.	4 D.H.T.	Sta. Wgn.	2 D.H.T.	Sp. 2 D.H.T.	Conv.
23-108-16	COVER Cont'd.								
	4 DOOR								
	L1B	D	7444 F1B	1	1	—	—	—	—
	UP TO BUILD DATE 11-1-69 L1F	D	7444 F1F	1	1	—	—	—	—
	UP TO BUILD DATE 11-1-69 L1X	D	7444 F1X	1	1	—	—	—	—
	UP TO BUILD DATE 11-1-69 L1Y	D	7444 F1Y	1	1	—	—	—	—
	AFTER BUILD DATE 11-1-69 L1F	D	*7444 F1G	1	1	—	—	—	—
	AFTER BUILD DATE 11-1-69 L1X	D	*7444 F1A	1	1	—	—	—	—
	AFTER BUILD DATE 11-1-69 L1Y	D	*7444 F1Z	1	1	—	—	—	—
	L1B	D	7442-3 F1B	—	—	—	1	—	—
	UP TO BUILD DATE 11-1-69 L1F	D	7442-3 F1F	—	—	—	1	—	—
	UP TO BUILD DATE 11-1-69 L1X	D	7442-3 F1X	—	—	—	1	—	—
	UP TO BUILD DATE 11-1-69 L1Y	D	7442-3 F1Y	—	—	—	1	—	—
	AFTER BUILD DATE 11-1-69 L1F	D	*7442-3 F1G	—	—	—	1	—	—
	AFTER BUILD DATE 11-1-69 L1X	D	*7442-3 F1A	—	—	—	1	—	—
	AFTER BUILD DATE 11-1-69 L1Y	D	*7442-3 F1Z	—	—	—	1	—	—
	L2B	D	7445 F2B	1	1	1	—	—	—
	L2F	D	7445 F2F	1	1	1	—	—	—
	L2T	D	7445 F2T	1	1	1	—	—	—
	L2X	D	7445 F2X	1	1	1	—	—	—
	L2XW	D	7445 F2W	—	1	—	—	—	—
	L2B	D	7446-7 F2B	—	—	—	1	—	1
	L2F	D	7446-7 F2F	—	—	—	1	—	1
	L2T	D	7446-7 F2T	—	—	—	1	—	—
	L2X	D	7446-7 F2X	—	—	—	1	—	1
	L4B	D	7590-1 F4B	1	1	—	1	—	—
	L4F	D	7590-1 F4F	1	1	—	1	—	—
	L4X	D	7590-1 F4X	1	1	—	1	—	—
	L4XW	D	7590-1 F4W	—	1	—	1	—	—
	L6X	D	*7466 F6X	—	—	—	2	—	2
	D6X	D	7586 F6X	—	—	—	2	—	—
	D6XW	D	7586 F6W	—	—	—	2	—	—
	H1B	D	7542 F1B	1	1	—	—	—	—
	H1F	D	7542 F1F	1	1	—	—	—	—
	H1T	D	7542 F1T	1	1	—	—	—	—
	H1X	D	7542 F1X	1	1	—	—	—	—
	H1Y	D	7542 F1Y	1	1	—	—	—	—
	H7B	D	7544-5 F7B	1	1	—	—	—	—
	H7F	D	7544-5 F7F	1	1	—	—	—	—
	H7X	D	7544-5 F7X	1	1	—	—	—	—
	H8F	D	7546-7 F8F	—	1	1	—	—	—
	H8K	D	7546-7 F8K	—	1	—	—	—	—
	H8T	D	7546-7 F8T	—	—	1	—	—	—
	H8X	D	7546-7 F8X	—	1	1	—	—	—
	H3B	D	7528-9 F3B	—	—	—	1	—	—
	H3F	D	7528-9 F3F	—	—	—	1	—	—
	H3X	D	7528-9 F3X	—	—	—	1	—	—
	H4B	D	7526-7 F4B	—	—	1	1	—	—
	H4F	D	7526-7 F4F	—	—	1	1	—	—
	H4T	D	7526-7 F4T	—	—	1	—	—	—
	H4TW	D	7526-7 F4W	—	—	1	—	—	—
	H4X	D	7526-7 F4X	—	—	1	1	—	—
	H4K	D	7526-7 F4K	—	—	—	1	—	—
	H4Y	D	7526-7 FY4	—	—	—	1	—	—
	E1B	C	7402 F1B	1	1	—	—	—	—
	E1F	C	7402 F1F	1	1	—	—	—	—
	E1L	C	7402 F1L	1	1	—	—	—	—
	E1P	C	7402 F1P	1	1	—	—	—	—

NOTE: A letter code in the carline column indicates the carline for which the part is released as follows:

CARLINES Indicate: J - Challenger, B - Barracuda, V - Valiant, L - Dart, R - Belvedere, W - Coronet, P - Plymouth, D - Dodge, C - Chrysler, Y - Imperial

AR Indicates use as required.
★ Indicates change or addition.

Right and left part numbers are on same line, first number is right, second number is left.

Printed in U.S.A.
December 1970

CODE	PART NAME	CAR LINE	PART NUMBER	Sed.	4 D.H.T.	Sta. Wgn.	2 D.H.T.	Sp. 2 D.H.T.	Conv.
23-108-16	COVER Cont'd.								
	E1X	C	7402 F1X	1	1	—	—	—	—
	E1B	C	7400-1 F1B	—	—	—	1	—	—
	E1F	C	7400-1 F1F	—	—	—	1	—	—
	E1L	C	7400-1 F1L	—	—	—	1	—	—
	E1P	C	7400-1 F1P	—	—	—	1	—	—
	E1X	C	7400-1 F1X	—	—	—	1	—	—
	E2B	C	7403 F2B	1	1	—	—	—	—
	E2T	C	7403 F2T	—	1	—	—	—	—
	E2Y	C	7403 F2Y	1	1	—	—	—	—
	E2X	C	7403 F2X	1	1	—	—	—	—
	E2B	C	7404-5 F2B	—	—	—	1	—	1
	E2T	C	7404-5 F2T	—	—	—	1	—	—
	E2Y	C	7404-5 F2Y	—	—	—	1	—	1
	E2X	C	7404-5 F2X	—	—	—	1	—	1
	Reclining Rt.								
	E6X, M6X	C	7412 F6X	—	1	—	1	—	1
	Lt.								
	E6X, M6X	C	7413 F6X	—	1	—	1	—	1
	Std.								
	M6B	C	7413 F6B	—	—	—	—	—	2
	M6F	C	7413 F6F	—	2	—	2	—	2
	E6T, M6T	C	7413 F6T	—	2	—	2	—	2
	E6XW, M6XW	C	7413 F6W	—	2	—	2	—	2
	E6X, M6X	C	7413 F6X	—	2	—	2	—	—
	L3B	C	7490-1 F3B	1	1	—	1	—	—
	L3F	C	7490-1 F3F	1	1	—	1	—	—
	L3P	C	7490-1 F3P	1	1	—	1	—	—
	L3X	C	7490-1 F3X	1	1	—	1	—	—
	L3Y	C	7490-1 F3Y	1	1	—	1	—	—
	L4B, M4B, P4B	C	7408-9 F4B	1	1	1	1	—	—
	P4F	C	7408-9 F4F	—	—	1	—	—	—
	L4R, M4R, P4R	C	7408-9 F4R	1	1	—	1	—	—
	P4T	C	7408-9 F4T	—	—	1	—	—	—
	L4X, M4X, P4X	C	7408-9 F4X	1	1	—	1	—	—
	L7L, P7L	C	7414-5 F7L	1	1	1	—	—	—
	L7R	C	7414-5 F7R	1	1	—	—	—	—
	L8X, P8X	C	*7416-7 F8X	1	1	1	—	—	—
	P8F	C	*7416-7 F8F	—	—	1	—	—	—
	M3F	C	7492-3 F3F	—	1	—	1	—	—
	M3X	C	7492-3 F3X	—	1	—	1	—	—
	M3Y	C	7492-3 F3Y	—	1	—	1	—	—
	M5L	C	7410-1 F5L	—	1	—	1	—	—
	D2TY	C	*7523 F2T	—	1	—	—	—	—
	D2TY	C	*8042-3 F2T	—	—	—	1	—	—
	H1B	C	7418 F1B	1	1	—	—	—	—
	H1F	C	7418 F1F	1	1	—	—	—	—
	H1P	C	7418 F1P	1	1	—	—	—	—
	H1X	C	7418 F1X	1	1	—	—	—	—
	H1Y	C	7418 F1Y	1	1	—	—	—	—
	HST	C	7428-9 FST	1	1	—	—	—	—
	H3B	C	7420-1 F3B	—	—	—	1	—	—
	H3F	C	7420-1 F3F	—	—	—	1	—	—
	H3P	C	7420-1 F3P	—	—	—	1	—	—
	H3X	C	7420-1 F3X	—	—	—	1	—	—
	H3Y	C	7420-1 F3Y	—	—	—	1	—	—
	H6B	C	7422-3 F6B	—	—	—	1	—	—
	H6T	C	7422-3 F6T	—	—	—	1	—	—

NOTE: A letter code in the carline column indicates the carline for which the part is released as follows:

CARLINES Indicate: J - Challenger, B - Barracuda; V - Valiant, L - Dart; R - Belvedere, W - Coronet; P - Plymouth, D - Dodge; C - Chrysler, Y - Imperial

AR Indicates use as required.
★ Indicates change or addition.

Right and left part numbers are on same line, first number is right, second number is left.

Printed in U.S.A.
December 1970

CODE	PART NAME	CAR LINE	PART NUMBER	Sed.	4 D.H.T.	Sta. Wgn.	2 D.H.T.	Sp. 2 D.H.T.	Conv.
23-108-16	COVER Cont'd.								
	H4XW	C	7422-3 F6W	—	—	—	1	—	—
	H6X	C	7422-3 F6X	—	—	—	1	—	—
	H7B	C	7424-5 F7B	1	1	—	—	—	—
	H7L	C	7424-5 F7L	1	1	—	—	—	—
	H7R	C	7424-5 F7R	1	1	—	—	—	—
	H7F	C	*7424-5 F7F	1	1	—	—	—	—
	H8L	C	7426-7 F8L	—	1	—	—	—	—
	H8X	C	7426-7 F8X	1	1	—	—	—	—
	L1B	Y	7551 F1B	—	1	—	—	—	—
	L1F	Y	7551 F1F	—	1	—	—	—	—
	L1M	Y	7551 F1M	—	1	—	—	—	—
	L1P	Y	7551 F1P	—	1	—	—	—	—
	L1TT	Y	7551 F1T	—	1	—	—	—	—
	L1X	Y	7551 F1X	—	1	—	—	—	—
	MRB	Y	7562-3 FRB	—	—	—	1	—	—
	MRF	Y	7562-3 FRF	—	—	—	1	—	—
	MRT	Y	7562-3 FRT	—	—	—	1	—	—
	MRX	Y	7562-3 FRX	—	—	—	1	—	—
	MRXW	Y	7562-3 FRW	—	—	—	1	—	—
	MRXY	Y	7562-3 FRY	—	—	—	1	—	—
	L3B	Y	7568-9 F3B	—	—	—	1	—	—
	L3F	Y	7568-9 F3F	—	—	—	1	—	—
	L3TT	Y	7568-9 F3T	—	—	—	1	—	—
	L3X	Y	7568-9 F3X	—	—	—	1	—	—
	MDA	Y	7574-5 FDA	—	1	—	—	—	—
	MDB	Y	7574-5 FDB	—	1	—	—	—	—
	MDF	Y	7574-5 FDF	—	1	—	—	—	—
	MDM	Y	7574-5 FDM	—	1	—	—	—	—
	MDP	Y	7574-5 FDP	—	1	—	—	—	—
	MDTT	Y	7574-5 FDT	—	1	—	—	—	—
	MDX	Y	7574-5 FDX	—	1	—	—	—	—
	MDY	Y	7574-5 FDY	—	1	—	—	—	—
	MSB	Y	7480-1 FSB	—	1	—	—	—	—
	MSF	Y	7480-1 FSF	—	1	—	—	—	—
	MSR	Y	7480-1 FSR	—	1	—	—	—	—
	MST	Y	7480-1 FST	—	1	—	—	—	—
	MSX	Y	7480-1 FSX	—	1	—	—	—	—
	MSXW	Y	7480-1 FSW	—	1	—	—	—	—
	MSY	Y	7480-1 FSY	—	1	—	—	—	—
	MBB	Y	7504-5 FBB	—	—	—	1	—	—
	MBF	Y	7504-5 FBF	—	—	—	1	—	—
	MBP	Y	7504-5 FBP	—	—	—	1	—	—
	MBTT	Y	7504-5 FBT	—	—	—	1	—	—
	MBX9	Y	7504-5 FBX	—	—	—	1	—	—
	MBY	Y	7504-5 FBY	—	—	—	1	—	—
23-108-19	HEADREST, Front Seat Back								
	CODES								
	L1B, L2B, D2B, L4B, D1B, H2B	V,L	2791 FB7	2	—	—	2	2	—
	L4E	V	2791 FE5	—	—	—	—	2	—
	L1F, L2F, L4F, D2F, H1F, H2F	V,L	2791 FF8	2	—	—	2	2	—
	D2T, L4T, H2T	V,L	2791 FT4	—	—	—	2	2	—
	L1X, L2X, L4X, D2X, H1X, H2X	V,L	2791 FX9	2	—	—	2	2	—
	H2XW	L	2791 FW1	—	—	—	2	—	—
	L1B 4 DOOR		2789 FB3	2	—	—	—	—	—
	D2B 6 PASS.		2789 FB3	—	—	2	—	—	—
	H2K, P3K, D4K, C2K		2789 FK5	2	—	—	2	—	2
	L1Y, H1Y, H2XY, P3Y 4 DOOR		2789 FY4	2	—	2	—	—	—

NOTE: A letter code in the carline column indicates the carline for which the part is released as follows:

CARLINES Indicate: J - Challenger, B - Barracuda, V - Valiant, L - Dart, R - Belvedere, W - Coronet, P - Plymouth, D - Dodge, C - Chrysler, Y - Imperial

AR Indicates use as required.
★ Indicates change or addition.

Right and left part numbers are on same line, first number is right, second number is left.

Printed in U.S.A.
December 1970

CODE	PART NAME	CAR LINE	PART NUMBER	Sed.	4 D.H.T.	Sta. Wgn.	2 D.H.T.	Sp. 2 D.H.T.	Conv.
23-108-19	HEADREST Cont'd.								
	H1B, H2B, P3B 4 DOOR	R	2789 FB7	2	—	2	—	—	—
	M2B, H2B 2 DOOR	R	2789 FB5	2	—	—	—	—	—
	H2B 2 DOOR	W	2789 FB7	2	—	—	—	—	—
	H1B, H2B, P3B	R	2789 FB5	—	—	—	2	—	2
	C2B	W	2789 FB5	—	—	—	—	2	—
	L2B, H1B, H2B, P3B, P4B, D4B	W	2789 FB7	2	—	2	2	—	2
	H1F, H2F, P3F, P4F, D4F, C2F	R,W	2789 FF8	—	—	2	2	2	—
	K1T, K2T, M2T, L2T, H2T, P4T, D4T, C2T	R,W	2789 FT4	2	—	2	2	2	—
	K2X, L2X, M2X, H1X, H2X, P3X, P4X, D4X, C2XA	R,W	2789 FX9	2	—	2	2	2	2
	H2BW, H2KW, H2XW, H2TW, H2FW, D4XW, C2XW	R,W	2789 FW1	—	—	—	—	—	—
	T2T	R,W	2790 FT4	2	—	—	—	—	—
	T2X	R,W	2790 FX9	2	—	—	—	—	—
	w/o Cover								
	BENCH SEAT	V,L,R,W,P,D,C,Y	2888 651	2	2	2	2	2	2
	w/Airfoam Pad BENCH SEAT	V,L,R,W,P,D,C,Y	2888 651	2	2	2	2	2	2
	50-50 SEAT	P,D,C,Y	2888 652	2	2	2	—	—	—
	RCL. BUCKET SEAT	P,D,C,Y	2888 653	—	2	—	2	2	2
	BENCH SEAT	R,W	2942 820	2	—	—	—	—	—
	E2B, D1B, D2B, D4B, L1B, L2B, M1B, M4B, M2B, R2B, R4B, W1B, W4B, H1B, H3B, H4B	P,D	2788 FB3	2	2	2	2	2	2
	L4B, H1B, H3B, H7B, L1B, L3B, MBB, MDB	D,C,Y	2788 FB7	2	2	—	2	—	—
	L1F, L2F, L4F, D1F	D	2788 FF4	2	2	—	2	—	—
	L1F, L2F, D2F, D4F, R2F, W1F, W4F, M1F, M4F, H3F, H4F	P	2788 FF8	2	2	2	2	2	2
	L2T, R2T, H4T, E2T, HST, P4T, MST, H1T, H8T, D2TY	P,D,C,Y	2788 FT4	2	2	2	2	2	—
	W4K, M4K, H3K, H4K	P,D	2788 FK5	2	2	2	2	2	—
	L1XA, L2XA, L1X, L2X, D1X, D2XA, D4XA, M1XA, M4XA, K1A, K2A, B2XA, W1XA, W4XA, H3X, H4X, H3XA, H4XA	P,D	2788 FX9	2	2	2	2	2	2
	L1T, L3T, MBT, MDT	Y	*2788 FT9	—	2	—	2	—	—
	L1F, L3F	Y	*2788 FF4	—	2	—	—	—	—
	L1M, MDM	Y	*2788 FM9	—	2	—	—	—	—
	L4R, L7R, M4R, H7R, P4R, MSR	C,Y	*2788 FR8	2	2	2	2	—	—
	MDA5	Y	*2788 FA5	—	2	—	—	—	—
	L3XW, M3XW, W4XW, M8XW, P3XW	P,D,Y	2788 FW1	—	2	—	2	2	—
	W4XP, M4XP, H4XP, P4XP	P,D	2788 FP6	2	2	—	2	2	—
	E1B, E2B, L3B, L4B, M4B, P4B	C	2788 FB3	2	2	2	2	—	—
	E1F, L3F, M3F, H1F, H3F, P4F, MBF	C,Y	2788 FF8	2	2	2	2	—	—
	E1X, E2X, L2X, L4X, M3X, M4X, H1X, H3X, P4X, L1X, MBX, H8X	C,Y	2788 FX9	2	2	2	2	—	—
	E1P, L3P, H1P, H3P, L1P, MBP	C,Y	2788 FP6	2	2	—	2	—	—
	E1L, L7L, H7L, H8L, P7L	C	2788 FL3	2	2	—	2	—	—
	E2Y, L3Y, M3Y, H1Y, H3Y, MBY	C,Y	2788 FY4	2	2	—	2	—	—
	BUCKET SEATS w/COVER								
	H5B, MRB, P5B	P,Y	*2798 FB3	—	—	—	2	2	—
	H6B	C	*2798 FB7	—	—	—	2	—	—
	H5F, MRF, P5F	P,Y	*2798 FF8	—	—	—	2	2	—
	D6T, MRT	P,C,Y	*2798 FT4	—	—	—	2	2	—
	D6XA, MRX	P,Y	*2798 FX9	—	2	—	2	2	—
	MRXW	Y	*2798 FW1	—	—	—	2	—	—
	MRY	Y	*2798 FY4	—	—	—	2	—	—
	M5L	C	*2798 FL3	—	2	—	2	—	—
	M6B, W6B, H6B, P6B	P, D, C	8496 EB3	—	2	—	2	2	2
	M6F, W6F, H6F, P6F	P, D, C	8496 EF8	—	2	—	2	2	2
	H6K, P6K	P,D,C	8496 FK5	—	2	—	2	2	—
	M6T, H6T, P6T, E6T	P,D,C	8496 FT4	—	2	—	2	2	2

NOTE: A letter code in the carline column indicates the carline for which the part is released as follows:

CARLINES Indicate: J - Challenger, B - Barracuda, V - Valiant, L - Dart, R - Belvedere, W - Coronet, P - Plymouth, D - Dodge, C - Chrysler, Y - Imperial

AR Indicates use as required.
★ Indicates change or addition.

Right and left part numbers are on same line, first number is right, second number is left.

Printed in U.S.A.
December 1970

CODE	PART NAME	CAR LINE	PART NUMBER	Sed.	4 D.H.T.	Sta. Wgn.	2 D.H.T.	Sp. 2 D.H.T.	Conv.
23-108-19	HEADREST Cont'd.								
	E6X, L6X, D6X, W6XA, M6X, H6X, H6XA, H6XP, P6XA, P6XP	P,D,C	8496 DX9	—	2	—	2	2	2
	M6XW, E6XW, D6XW, H6XW, P6XW	P, D, C	8496 EW1	—	2	—	2	2	2
23-108-20	COVER, Front Seat Head Rest								
	CODES								
	L1F, L2F, D1F, L4F, L3F	D,Y	*4929 FF4	2	2	2	2	—	2
	M4K, H3K, H4K, W4K, H8K	P,D	*4929 FK4	2	2	—	2	2	2
	M4XP, H4XP, W4XP	P,D	*4929 FP8	2	2	—	2	2	—
	H1T	D	*4929 FT3	2	2	—	—	—	—
	MDA5	Y	*4929 FA5	—	2	—	—	—	—
	E2B, F1B, F2B, B2B, W1B, W4B, L1B, L2B, M1B, M4B, P3B, P4B	P,D	4929 EB3	2	2	2	2	2	—
	F1F, F2F, W1F, W4F, W7F, L1F, L2F, M1F, M4F, M7F, P3F	P,D	4929 EF8	2	2	2	2	2	—
	E2T, K1T, K2T, F1T, F2T, B2T, W4T, M4T, PRT	P,D	4929 FT5	2	2	2	2	2	—
	F1XA, F2XA, W1XA, W4XA, W8XA, L1XA, L2XA, M1XA, M4XA, P3XA, P4XA, P5XA, P7XA	P,D	4929 FA8	2	2	2	2	2	—
	F2BW, F2TW, F2XW, W4XW, W4TW, L2BW, L2TW, L2XW, M4BW, M4TW, M4XW	P,D	4929 EW1	—	—	2	2	2	2
	F1Y, W1Y, W4Y, L1Y, M1Y, M4Y	P,D	4929 FY4	2	2	—	2	2	—
	L1B, L3B, MDB, MBB, H1B, H3B, H7B	C,Y	4929 EB7	2	2	—	2	—	—
	E1L, L7L, M5L, H7L, H8L	C	4929 EL2	2	2	—	2	—	—
	E1P, L1P, L3P, MDP, MBP, H1P, H3P	C,Y	4929 FP6	2	2	—	2	—	—
	L4R, L7R, MSR, M4R, H7R, P4R	C,Y	4929 FR9	2	2	2	2	—	—
	L1M, L3M, MDM, MBM	Y	4929 EM9	—	2	—	2	—	—
	L1TT, L3TT, MDTT, MBTT	Y	4929 FT9	—	2	—	2	—	—
23-108-25	REINFORCEMENT, Head Rest								
	BENCH SEAT	V,L,R,W,P,D,C,Y	2888 586	2	2	2	—	—	—
23-108-27	GUIDE, Head Rest								
	BUCKET SEATS								
	Upr.	P,D,C,Y	2888 491	—	4	4	4	4	4
	Lwr.	P,D,C,Y	2888 492	—	4	4	4	4	4
	BENCH or 50/50 SEATS								
	Lwr.	V,L,R,W,P,D,C,Y	2888 584	4	4	4	4	4	4
23-108-29	CATCH, Head Rest								
	BUCKET SEATS	P,D,C,Y	2888 490	—	4	4	4	4	4
	BENCH or 50/50 SEATS	V,L,R,W,P,D,C,Y	2858 180	4	4	4	4	4	4
23-108-30	SUPPORT, Front Seat Back Kick Pad	D,C	2888 064-5	1	1	—	—	—	—
23-108-31	SPACER, Headrest								
	BENCH SEATS	V,L,R,W	2888 486	4	—	4	4	4	4
	50-50 SEATS	P,D,C,Y	2888 715	4	4	4	4	4	4
	BUCKET SEATS	P,D,C	2888 488	—	4	—	4	4	4
	BUCKET SEATS	Y	2888 489	—	—	—	4	—	—
23-108-32	PANEL, Back of Front Seat Back								
	CODES								
	P3B, P4B, D4B	R,W	2731 FB7	2	—	2	—	—	2
	P3B	R	2731 FB5	—	—	—	2	—	—
	P3F, P4F, D4F	R,W	2731 FF8	2	—	2	—	—	2
	P3K, D4K	R,W	2731 FK4	2	—	—	2	—	2
	P3X, P4X, D4X	R,W	2731 FX9	2	—	2	2	—	2
	P3Y	R,W	2731 FY4	2	—	—	—	—	—

NOTE: A letter code in the carline column indicates the carline for which the part is released as follows:

CARLINES Indicate: J - Challenger, B - Barracuda, V - Valiant, L - Dart, R - Belvedere, W - Coronet, P - Plymouth, D - Dodge, C - Chrysler, Y - Imperial

AR Indicates use as required.
★ Indicates change or addition.

Right and left part numbers are on same line, first number is right, second number is left.

Printed in U.S.A.
December 1970

CODE	PART NAME	CAR LINE	PART NUMBER	Sed.	4 D.H.T.	Sta. Wgn.	2 D.H.T.	Sp. 2 D.H.T.	Conv.
34-108-32	PANEL Cont'd.								
	D4T, P4T	W	2731 FT5	2	—	2	—	—	2
	D4XW	W	2731 FW1	—	—	—	—	—	2
	M7F, W7F, P8F	P,D,C	6162-3 EF8	—	—	1	—	—	—
	M8XA, W8XA, P7XA	P,D	6162-3 FA8	1	1	1	—	—	—
	L7L, P7L	C	6162-3 EL2	1	1	1	—	—	—
	L7R	C	6162-3 FR9	1	1	—	—	—	—
	L8X, P8X	C	6162-3 EX9	1	1	1	—	—	—
	H7B	P	5970-1 FB3	1	1	—	—	—	—
	H7F	P	5970-1 FF8	1	1	—	—	—	—
	H8T	P	5970-1 FT5	1	1	—	—	—	—
	H8XA	P	5970-1 FA8	1	1	—	—	—	—
	H1B	D	5926 FB3	1	1	—	—	—	—
	H1F	D	5926 FF8	1	1	—	—	—	—
	H1T	D	5926 FT3	1	1	—	—	—	—
	H1X	D	5926 FX9	1	1	—	—	—	—
	H1Y	D	5926 FY4	1	1	—	—	—	—
	H7B	D	5924-5 FB3	1	1	—	—	—	—
	H7F, H8F	D	5924-5 FF8	1	1	—	—	—	—
	H8K	D	5924-5 FK4	—	1	—	—	—	—
	H8T	D	5924-5 FT5	—	—	1	—	—	—
	H7X, H8X	D	5924-5 FX9	1	1	1	—	—	—
	H3B, H4B	D	5710 F4B	—	—	2	2	—	—
	H3F, H4F	D	5710 F4F	—	—	2	2	—	—
	H4K	D	5710 F4K	—	—	—	2	—	—
	H4T	D	5710 F4T	—	—	2	—	—	—
	H3X, H4X	D	5710 F4X	—	—	2	2	—	—
	H4Y	D	5710 F4Y	—	—	—	2	—	—
	L3B	C	5669 FB3	2	2	—	2	—	—
	L3F	C	5669 FF8	2	2	—	2	—	—
	L3P	C	5669 FP6	2	2	—	2	—	—
	L3X	C	5669 FX9	2	2	—	2	—	—
	L3Y	C	5669 FY4	2	2	—	2	—	—
	H3B	C	5657 FB7	—	—	—	2	—	—
	H3F	C	5657 FF8	—	—	—	2	—	—
	H3P	C	5657 FP6	—	—	—	2	—	—
	H3X	C	5657 FX9	—	—	—	2	—	—
	H3Y	C	5657 FY4	—	—	—	2	—	—
	H7B	C	5776-7 FB7	1	1	—	—	—	—
	H7L, H8L	C	5776-7 FL2	1	1	—	—	—	—
	H7R	C	5776-7 FR9	1	1	—	—	—	—
	H7F	C	5776-7 FF8	1	1	—	—	—	—
	H8X	C	5776-7 FX9	—	1	—	—	—	—
	HST	C	5778-9 FT5	1	1	—	—	—	—
	H1B	C	5645 FB7	1	1	—	—	—	—
	H1F	C	5645 FF8	1	1	—	—	—	—
	H1P	C	5645 FP6	1	1	—	—	—	—
	H1X	C	5645 FX9	1	1	—	—	—	—
	H1Y	C	5645 FY4	1	1	—	—	—	—
	L1B	Y	5767 FB7	—	1	—	—	—	—
	L1F	Y	5767 FF4	—	1	—	—	—	—
	L1M	Y	5767 FM9	—	1	—	—	—	—
	L1P	Y	5767 FP6	—	1	—	—	—	—
	L1TT	Y	5767 FT9	—	1	—	—	—	—
	L1X	Y	5767 FX9	—	1	—	—	—	—
	MRB	Y	5822 FB4	—	—	—	2	—	—
	MRF	Y	5822 FF9	—	—	—	2	—	—
	MRT	Y	5822 FT4	—	—	—	2	—	—

NOTE: A letter code in the carline column indicates the carline for which the part is released as follows:

CARLINES Indicate: J - Challenger, B - Barracuda, V - Valiant, L - Dart, R - Belvedere, W - Coronet, P - Plymouth, D - Dodge, C - Chrysler, Y - Imperial

AR Indicates use as required.
★ Indicates change or addition.

Right and left part numbers are on same line, first number is right, second number is left.

Printed in U.S.A.
December 1970

CODE	PART NAME	CAR LINE	PART NUMBER	Sed.	4 D.H.T.	Sta. Wgn.	2 D.H.T.	Sp. 2 D.H.T.	Conv.
23-108-32	PANEL Cont'd.								
	MRX, MRXW	Y	5822 FX9	—	—	—	2	—	—
	MRY	Y	5822 FY5	—	—	—	2	—	—
	L3B	Y	5899 FB9	—	—	—	2	—	—
	L3F	Y	5899 FF9	—	—	—	2	—	—
	L3F4	Y	*5898 FF4	—	—	—	2	—	—
	L3P	Y	5899 FQ6	—	—	—	2	—	—
	L3TT	Y	5899 FT7	—	—	—	2	—	—
	L3X	Y	5899 FX9	—	—	—	2	—	—
	MBB	Y	5898 FB9	—	—	—	2	—	—
	MBF	Y	5898 FF9	—	—	—	2	—	—
	MBP	Y	5898 FQ6	—	—	—	2	—	—
	MBTT	Y	5898 FT7	—	—	—	2	—	—
	MBX	Y	5898 FX9	—	—	—	2	—	—
	MBY	Y	5898 FY5	—	—	—	2	—	—
	MDA	Y	5678-9 FA5	—	1	—	—	—	—
	MDB	Y	5678-9 FB7	—	1	—	—	—	—
	MDF	Y	5678-9 FF8	—	1	—	—	—	—
	MDM	Y	5678-9 FM9	—	1	—	—	—	—
	MDP	Y	5678-9 FP6	—	1	—	—	—	—
	MDTT	Y	5678-9 FT9	—	1	—	—	—	—
	MDX	Y	5678-9 FX9	—	1	—	—	—	—
	MDY	Y	5678-9 FY4	—	1	—	—	—	—
	MSB	Y	5616-7 FSB	—	1	—	—	—	—
	MSF	Y	5616-7 FSF	—	1	—	—	—	—
	MSR	Y	5616-7 FSR	—	1	—	—	—	—
	MST	Y	5616-7 FST	—	1	—	—	—	—
	MSX	Y	5616-7 FSX	—	1	—	—	—	—
	MSXW	Y	5616-7 FSW	—	1	—	—	—	—
	MSY	Y	5616-7 FSY	—	1	—	—	—	—
23-108-34	PLATE, Headrest Finish								
	BENCH SEAT	V,L,R,W	2942 847	4	—	4	4	4	4
	50/50 or BUCKET SEAT	P,D,C,Y	2942 848	4	4	4	4	4	4
	FINISH COVER								
	BENCH SEAT	P,D,C,Y	3447 864	2	2	2	2	2	2
23-108-39	STOP, Head Rest								
	BENCH SEAT	V,L,R,W	3447 865	2	—	2	2	2	2
23-108-66	COVER, Center Cushion Arm Rest								
	Stanchion	B,J	2786-7 FX9	—	—	—	1	—	—
		R,W,P,C,C,Y	4388 BX9	2	2	2	2	2	2
23-108-71	BRACKET, Side Shield Attaching								
	BENCH SEAT								
	Frt.	P,D,C,Y	2888 742	2	2	2	2	2	2
	50/50 SEAT								
	Frt.	P,D,C,Y	2609 238-9	1	1	1	—	—	—
	BUCKET SEAT								
	Support	P,D,C,Y	2858 612	—	2	—	2	2	2
	CTR. CUSH. MTG. RR.	R,W	2784 598	1	—	1	1	1	1
	Frt.	R,W	2784 600	1	—	1	1	1	1
23-108-75	CAP, Front Seat Back Robe Strap	Y	3415 465	—	4	—	—	—	—
23-108-84	COVER, Front Seat Back Hinge Arm								
	Inner	B,J	2766-7 FX9	—	—	—	1	—	—
	Inner	V,B,J,L,R,W	2764-5 FX9	1	—	1	1	1	1
	Outer w/Seat Back Adjuster								
	UP TO BUILD DATE 3-1-70								
	P6B, H5B 2 DOOR	J,R	2774-5 FB5	1	—	—	—	—	—
	P6B, M6B, D6B 4 DOOR	R,W	2774-5 FB7	1	—	1	1	—	1
	H4B, H5B, H6B, C6B, CRB	B,J,R,W	2774-5 FB5	—	—	—	1	1	1

NOTE: A letter code in the carline column indicates the carline for which the part is released as follows:

CARLINES Indicate: J - Challenger, B - Barracuda, V - Valiant, L - Dart, R - Belvedere, W - Coronet, P - Plymouth, D - Dodge, C - Chrysler, Y - Imperial

AR Indicates use as required.
★ Indicates change or addition.

Right and left part numbers are on same line, first number is right, second number is left.

Printed in U.S.A.
December 1970

CODE	PART NAME	CAR LINE	PART NUMBER	Sed.	4 D.H.T.	Sta. Wgn.	2 D.H.T.	Sp. 2 D.H.T.	Conv.
23-108-84	COVER Cont'd.								
	H6E, P6E	B,J	2774-5 FE5	—	—	—	1	—	1
	M6F, D6F, C6F, CRF, H6F, P6F, H5F	B,J,L,R,W	2774-5 FF8	1	—	—	1	1	1
	M6T, D6T, C6T, CRT, HRT, H6T, P6T	B,J,L,R,W	2774-5 FT4	1	—	1	1	1	1
	P5K, C6K, P6K, H5K, H6K, HRK, M6K, D6K	B,J,R,W	2774-5 FK5	1	—	—	1	1	1
	L6BW, L6EW, L6XW, M6XW, D6XW, C6XW, H4BW, H4FW, H4XW, H6BW, H6EW, H6FW, H6XW, P6BW, P6EW, P6FW, P6XW, PRXW, P6KW, P6TW	B,J,R,W	2774-5 FW1	1	—	—	1	1	1
	L6X, M6X, D6X, C5XA, C6XA, CRXA, H5X, H6X, H4X, HRX, P5X, P6A, P6XA, P6X	B,J,L,R,W	2774-5 FX9	1	—	1	1	1	1
	P6XY, P6YX	B,R	2774-5 FY4	1	—	—	1	—	1
	AFTER BUILD DATE 3-1-70								
	P6B, H5B	J,R	*2796-7 FB5	1	—	—	—	1	—
	P6B, M6B, D6B	R,W	*2796-7 FB7	1	—	1	1	—	1
	H4B, H5B, H6B, C6B, CRB	B,J,R,W	*2796-7 FB5	—	—	—	1	1	1
	H6E, P6E	B,J	*2796-7 FE5	—	—	—	1	—	1
	M6F, D6F, C6F, CRF, H6F, P6F, H5F	L,B,J,R,W	*2796-7 FF8	1	—	—	1	1	1
	M6T, D6T, C6T, CRT, HRT, H6T, P6T	B,J,L,R,W	*2796-7 FT4	1	—	1	1	1	1
	P5K, C6K, P6K, H5K, H6K, HRK, M6K, D6K	B,J,R,W	*2796-7 FK5	1	—	—	1	1	1
	L6BW, L6EW, L6XW, M6XW, D6XW, C6XW, H4BW, H4FW, H4XW, H6BW, H6EW, H6FW, H6XW, P6BW, P6EW, P6FW, P6XW, PRXW, P6KW, P6TW	V,B,J,R,W	*2796-7 FW1	1	—	—	1	1	1
	L6X, M6X, D6X, C5XA, C6XA, CRXA, H5X, H6X, H4X, HRX, P5X, P6A, P6XA, P6X	V,B,J,L,R,W	*2796-7 FX9	1	—	1	1	1	1
	P6XY, P6YX	B,R	*2796-7 FY4	1	—	—	1	—	1
	W/O BUCKET SEATS	V,L	2782-3 EX9	1	—	—	1	1	—
		R,W	*2778-9 EX9	1	—	1	1	1	1
		P,D,C	2780-1 EX9	1	1	1	1	1	1
	W/SIDE SHIELD	P,D,C,Y	*3447 886-7	1	—	—	1	1	1
23-108-98	SHIELD, Front Seat Side								
	BENCH SEAT								
	CODES								
	BACK								
	H4B, H5B	B,J	2770-1 FB5	—	—	—	1	—	—
	H4F	B	2770-1 FF8	—	—	—	1	—	—
	H4BW, H4FW, H4X	B,J	2770-1 FW1	—	—	—	1	—	—
	H4XW	B	2770-1 FX9	—	—	—	1	—	—
	BUCKET SEAT BACK								
	H5B, H6B, P6B, C6B, CRB 2 D.	B,J,R,W	2769 FB5	2	—	—	2	2	2
	H5F, H6F, P6F	B,J,L	2769 FF8	—	—	—	2	2	2
	H6T, HRT, P6T, M6T, D6T, C6T, CRT	B,J,L,R,W	2769 FT4	2	—	2	2	2	2
	L6BW, L6EW, L6XW, H6BW, H6EW, H6FW, H6XW, P6BW, P6EW, P6FW, P6XW, PRXW	V,B,J	2769 FW1	2	—	—	2	2	2
	L6X, H5X, H6X, HRX, P5X, P6A, P6YX, PRX	V,B,J,L	2769 FX9	2	—	—	2	2	2
	H6E, P6E	B,J	2769 FE5	—	—	—	2	—	2
	H5K, H6K, HRK, P5K, P6K, M6K, D6K, C6K	B,J,R,W	2769 FK6	—	—	—	2	2	2
	P6B 4 D.	R	2769 FB7	2	—	—	—	—	—
	M6B, P6B, D6B	W	2769 FB7	2	—	2	2	2	2
	M6F, D6F, C6F, CRF, P6F	R,W	2769 FF8	2	—	—	2	2	2
	M6XW, C6XW, D6XW, P6BW, P6KW, P6TW, P6XW	R,W	2769 FW1	2	—	—	2	2	2
	M6X, M6XY, C5XA, CRXA, D6X, D6XY, P6X, P6XA	R, W	2769 FX9	2	—	2	2	2	2
	P6XY	R	2769 FY4	2	—	—	2	—	—
	CUSHION, BENCH TYPE								
	4 DOOR Manual Rt.	P,D,C	2858 628	1	1	1	—	—	—
	2 DOOR Manual Rt.	P,D,C,Y	2858 632	1	—	—	1	1	1

NOTE: A letter code in the carline column indicates the carline for which the part is released as follows:

CARLINES Indicate: J - Challenger, B - Barracuda, V - Valiant, L - Dart, R - Belvedere, W - Coronet, P - Plymouth, D - Dodge, C - Chrysler, Y - Imperial

AR Indicates use as required.
★ Indicates change or addition.

Right and left part numbers are on same line, first number is right, second number is left.

CODE	PART NAME	CAR LINE	PART NUMBER	Sed.	4 D.H.T.	Sta. Wgn.	2 D.H.T.	Sp. 2 D.H.T.	Conv.
23-108-98	SHIELD Cont'd.								
	Manual Lt.	C,Y	2858 633	—	—	—	1	—	1
	Manual Lt.	C	2858 629	1	1	1	—	—	—
	Power Lt.	P,D,C	2942 127	1	1	1	—	—	—
	2 DOOR Power Lt.	P,D,C,Y	2942 131	1	—	—	1	1	1
	50/50 SEAT								
	Manual Rt.	P,D,C	2767 570	1	1	1	—	—	—
	Power Rt.	P,D,C	2942 136	1	1	1	—	—	—
	Manual Lt.	P,D,C	2767 9'9	1	1	1	—	—	—
	Power Lt.	P,D,C	2942 137	1	1	1	—	—	—
	BACK, 50/50 SEAT								
	Rt.	P,D,C	2888 456	1	1	1	—	—	—
	Lt.	P,D,C	2888 457	1	1	1	—	—	—
	BUCKET SEAT CUSHION								
	MANUAL	P,D,C	7920-1 DX9	—	1	—	1	1	1
	POWER	P,D,C	7922-3 EX9	—	1	—	1	1	1
	BUCKET SEAT BACK	P,D,C	7928 DX9	—	2	—	2	2	2
	MANUAL BENCH SEAT Rt.								
L1B		Y	2700 FB7	—	1	—	—	—	—
L1F		Y	2700 FF4	—	1	—	—	—	—
L1M		Y	2700 FM9	—	1	—	—	—	—
L1P		Y	2700 FP6	—	1	—	—	—	—
L1TT		Y	2700 FT8	—	1	—	—	—	—
L1X		Y	2700 FX9	—	1	—	—	—	—
	Lt.								
L1B		Y	2703 FB7	—	1	—	—	—	—
L1F		Y	2703 FF4	—	1	—	—	—	—
L1M		Y	2703 FM9	—	1	—	—	—	—
L1TT		Y	2703 FT8	—	1	—	—	—	—
L1P		Y	2703 FP6	—	1	—	—	—	—
L1X		Y	2703 FX9	—	1	—	—	—	—
	POWER BENCH SEAT								
	Lt.								
L1B		Y	2705 FB7	—	1	—	—	—	—
L1F		Y	2705 FF4	—	1	—	—	—	—
L1M		Y	2705 FM9	—	1	—	—	—	—
L1TT		Y	2705 FT8	—	1	—	—	—	—
L1P		Y	2705 FP6	—	1	—	—	—	—
L1X		Y	2705 FX9	—	1	—	—	—	—
	MANUAL BUCKET or SPLIT SEAT Rt.								
MDA		Y	2750 FA4	—	1	—	—	—	—
MSB		Y	2750 FB3	—	1	—	—	—	—
MDB		Y	2750 FB7	—	1	—	—	—	—
MDF, MSF		Y	2750 FF8	—	1	—	—	—	—
MDM		Y	2750 EM9	—	1	—	—	—	—
MDP		Y	2750 FP6	—	1	—	—	—	—
MSR		Y	2750 FR8	—	1	—	—	—	—
MST		Y	2750 FT4	—	1	—	—	—	—
MDTT		Y	2750 FT8	—	1	—	—	—	—
MSXW		Y	2750 FW1	—	1	—	—	—	—
MDX, MSX		Y	2750 FX9	—	1	—	—	—	—
MDY, MSY		Y	2750 FY4	—	1	—	—	—	—
	MANUAL BUCKET or SPLIT SEAT Lt.								
MDA		Y	2701 FA4	—	1	—	—	—	—
MSB		Y	2701 FB3	—	1	—	—	—	—
MDB		Y	2701 FB7	—	1	—	—	—	—

NOTE: A letter code in the carline column indicates the carline for which the part is released as follows:

CARLINES Indicate: J - Challenger, B - Barracuda, V - Valiant, L - Dart, R - Belvedere, W - Coronet, P - Plymouth, D - Dodge, C - Chrysler, Y - Imperial

AR Indicates use as required.
★ Indicates change or addition.

Right and left part numbers are on same line, first number is right, second number is left.

Printed in U.S.A.
December 1970

CODE	PART NAME	CAR LINE	PART NUMBER	Sed.	4 D.H.T.	Sta. Wgn.	2 D.H.T.	Sp. 2 D.H.T.	Conv.
23-108-98	SHIELD Cont'd.								
	MDF, MSF	Y	2701 FF8	—	1	—	—	—	—
	MDM	Y	2701 FM9	—	1	—	—	—	—
	MDP	Y	2701 FP6	—	1	—	—	—	—
	MSR	Y	2701 FR8	—	1	—	—	—	—
	MST	Y	2701 FT4	—	1	—	—	—	—
	MDTT	Y	2701 FT8	—	1	—	—	—	—
	MSXW	Y	2701 FW1	—	1	—	—	—	—
	MDX, MSX	Y	2701 FX9	—	1	—	—	—	—
	MDY, MSY	Y	2701 FY4	—	1	—	—	—	—
	UPPER Rt.								
	MDA	Y	2754 FA4	—	1	—	—	—	—
	MSB	Y	2754 FB3	—	1	—	—	—	—
	MDB	Y	2754 FB7	—	1	—	—	—	—
	MDF, MSF	Y	2754 FF8	—	1	—	—	—	—
	MDM	Y	2784 FM9	—	1	—	—	—	—
	MDP	Y	2754 FP6	—	1	—	—	—	—
	MSR	Y	2754 FR8	—	1	—	—	—	—
	MST	Y	2754 FT4	—	1	—	—	—	—
	MDTT	Y	2754 FT8	—	1	—	—	—	—
	MSXW	Y	2754 FW1	—	1	—	—	—	—
	MDX, MSX	Y	2754 FX9	—	1	—	—	—	—
	MDY, MSY	Y	2754 FY4	—	1	—	—	—	—
	BACK SHIELD								
	MRB	Y	7918-9 EB3	—	—	—	1	—	—
	MRF	Y	7918-9 EF8	—	—	—	1	—	—
	MRT	Y	7918-9 FT4	—	—	—	1	—	—
	MRX	Y	7918-9 EX9	—	—	—	1	—	—
	MRW	Y	7918-9 EW1	—	—	—	1	—	—
	MRY	Y	7918-9 FY4	—	—	—	1	—	—
	POWER BUCKET or SPLIT SEAT Rt.								
	MDA	Y	2749 FA4	—	1	—	—	—	—
	MSB	Y	2749 FB3	—	1	—	—	—	—
	MDB	Y	2749 FB7	—	1	—	—	—	—
	MDF, MSF	Y	2749 FF8	—	1	—	—	—	—
	MDM	Y	2749 FM9	—	1	—	—	—	—
	MDP	Y	2749 FP6	—	1	—	—	—	—
	MSR	Y	2749 FR8	—	1	—	—	—	—
	MST	Y	2749 FT4	—	1	—	—	—	—
	MDTT	Y	2749 FT8	—	1	—	—	—	—
	MSXW	Y	2749 FW1	—	1	—	—	—	—
	MDX, MSX	Y	2749 FX9	—	1	—	—	—	—
	MDY, MSY	Y	2749 FY4	—	1	—	—	—	—
	POWER BUCKET or SPLIT SEAT Lt.								
	MDA	Y	2702 FA4	—	1	—	—	—	—
	MSB	Y	2702 FB3	—	1	—	—	—	—
	MDB	Y	2702 FB7	—	1	—	—	—	—
	MDF, MSF	Y	2702 FF8	—	1	—	—	—	—
	MDM	Y	2702 FM9	—	1	—	—	—	—
	MDP	Y	2702 FP6	—	1	—	—	—	—
	MSR	Y	2702 FR8	—	1	—	—	—	—
	MST	Y	2702 FT4	—	1	—	—	—	—
	MDTT	Y	2702 FT8	—	1	—	—	—	—
	MSXW	Y	2702 FW1	—	1	—	—	—	—
	MDX, MSX	Y	2702 FX9	—	1	—	—	—	—
	MDY, MSY	Y	2702 FY4	—	1	—	—	—	—

NOTE: A letter code in the carline column indicates the carline for which the part is released as follows:

CARLINES Indicate: J - Challenger, B - Barracuda, V - Valiant, L - Dart, R - Belvedere, W - Coronet, P - Plymouth, D - Dodge, C - Chrysler, Y - Imperial

AR Indicates use as required.
★ Indicates change or addition.

Right and left part numbers are on same line, first number is right, second number is left.

Printed in U.S.A.
December 1970

CODE	PART NAME	CAR LINE	PART NUMBER	Sed.	4 D.H.T.	Sta. Wgn.	2 D.H.T.	Sp. 2 D.H.T.	Conv.
23-108-98	SHIELD Cont'd.								
	POWER BUCKET SEATS								
	Pass. SIDE Rt.	Y	7924 EX9	—	—	—	1	—	—
	DRIVERS SIDE Lt.	Y	7925 EX9	—	—	—	1	—	—
	MANUAL BUCKET SEATS								
	DRIVERS SIDE	Y	7926 DX9	—	—	—	1	—	—
	PASSENGER SIDE	Y	7927 DX9	—	—	—	1	—	—
23-108-100	WASHER, Seat Button Stud	C	2981 998	AR	AR	—	AR	—	—
23-108-142	BRACKET, Bucket Seat Back Shield Lower Attaching								
	RECLINER	P,D,C,Y	2888 360	—	3	—	3	—	3
23-109-3	BACK, REAR SEAT								
	NOTE: FOR COMPLETE ASSEMBLY ORDER BY DESCRIPTION, VEHICLE SERIAL NUMBER and TRIM CODE: FOR COVER ONLY SEE PART TYPE CODE 23-109-4								
23-109-4	COVER, Rear Seat Back								
	CODES								
	L1B	V	8251 F1B	1	—	—	—	—	—
	L1F	V	8251 F1F	1	—	—	—	—	—
	L1X	V	8251 F1X	1	—	—	—	—	—
	L1B	V	8252 F1B	—	—	—	—	1	—
	L1F	V	8252 F1F	—	—	—	—	1	—
	L1X	V	8252 F1X	—	—	—	—	1	—
	4 DOOR								
	L2B	V	8229 F2B	1	—	—	—	—	—
	L2F	V	8229 F2F	1	—	—	—	—	—
	L2X	V	8229 F2X	1	—	—	—	—	—
	L2B	V	8347 F2B	—	—	—	—	1	—
	L2F	V	8347 F2F	—	—	—	—	1	—
	L2X	V	8347 F2X	—	—	—	—	1	—
	4 DOOR								
	L4B	V	8284 F4B	1	—	—	—	—	—
	L4E	V	8284 F4E	1	—	—	—	—	—
	L4F	V	8284 F4F	1	—	—	—	—	—
	L4T	V	8284 F4T	1	—	—	—	—	—
	L4X, L6X	V	8284 F4X	1	—	—	—	—	—
	L6BW, L6EW, L6XW	V	8284 F4W	1	—	—	—	—	—
	L4B	V	8283 F4B	—	—	—	—	1	—
	L4E	V	8283 F4E	—	—	—	—	1	—
	L4F	V	8283 F4F	—	—	—	—	1	—
	L4T	V	8283 F4T	—	—	—	—	1	—
	L4X, L6X	V	8283 F4X	—	—	—	—	1	—
	L6BW, L6EW, L6XW	V	8283 F4W	—	—	—	—	1	—
	D2B	V	8292 F2B	—	—	—	—	1	—
	D2F	V	8292 F2F	—	—	—	—	1	—
	D2X	V	8292 F2X	—	—	—	—	1	—
	H4B, H6B	B	8327 F6B	—	—	—	1	—	—
	H6E	B	8327 F6E	—	—	—	1	—	—
	H4F, H6F	B	8327 F6F	—	—	—	1	—	—
	H6T	B	8327 F6T	—	—	—	1	—	—
	H4X, H6X	B	8327 F6X	—	—	—	1	—	—
	H4BW, H4FW, H4XW, H6BW, H6FW, H6XW	B	8327 F6W	—	—	—	1	—	—
	H6B	B	8338 F6B	—	—	—	—	—	1
	H6E	B	8338 F6E	—	—	—	—	—	1
	H6F	B	8338 F6F	—	—	—	—	—	1

NOTE: A letter code in the carline column indicates the carline for which the part is released as follows:

CARLINES Indicate: J - Challenger, B - Barracuda, V - Valiant, L - Dart, R - Belvedere, W - Coronet, P - Plymouth, D - Dodge, C - Chrysler, Y - Imperial

AR Indicates use as required.
★ Indicates change or addition.

Right and left part numbers are on same line, first number is right, second number is left.

Printed in U.S.A.
December 1970

CODE	PART NAME	CAR LINE	PART NUMBER	Sed.	4 D.H.T.	Sta. Wgn.	2 D.H.T.	Sp. 2 D.H.T.	Conv.
23-109-4	COVER Cont'd.								
	H6T	B	8338 F6T	—	—	—	—	—	1
	H6X	B	8338 F6X	—	—	—	—	—	1
	H6BW, H6EW, H6FW, H6XW	B	8338 F6W	—	—	—	—	—	1
	P5K	B	8324 F5K	—	—	—	1	—	—
	P5X	B	8324 F5X	—	—	—	1	—	—
	P6A	B	8325 F6A	—	—	—	1	—	—
	P6B	B	8325 F6B	—	—	—	1	—	—
	P6E	B	8325 F6E	—	—	—	1	—	—
	P6F	B	8325 F6F	—	—	—	1	—	—
	P6K	B	8325 F6K	—	—	—	1	—	—
	P6T	B	8325 F6T	—	—	—	1	—	—
	P6BW, P6EW, P6FW, P6XW	B	8325 F6W	—	—	—	1	—	—
	P6YX	B	8325 F6Y	—	—	—	1	—	—
	P6A	B	8331 F6A	—	—	—	—	—	1
	P6B	B	8331 F6B	—	—	—	—	—	1
	P6E	B	8331 F6E	—	—	—	—	—	1
	P6F	B	8331 F6F	—	—	—	—	—	1
	P6K	B	8331 F6K	—	—	—	—	—	1
	P6T	B	8331 F6T	—	—	—	—	—	1
	P6BW, P6EW, P6FW, P6XW	B	8331 F6W	—	—	—	—	—	1
	P6YX	B	8331 F6Y	—	—	—	—	—	1
	PRT	B	8326 FRT	—	—	—	1	—	—
	PRX	B	8326 FRX	—	—	—	1	—	—
	PRXW	B	8326 FRW	—	—	—	1	—	—
	PRT	B	8337 FRT	—	—	—	—	—	1
	PRX	B	8337 FRX	—	—	—	—	—	1
	PRXW	B	8337 FRW	—	—	—	—	—	1
	L6X	B,J	8070 F6X	—	—	—	1	—	—
	L6XW	B,J	8070 F6W	—	—	—	1	—	—
	H5B	J	8309 F5B	—	—	—	1	1	—
	H5F	J	8309 F5F	—	—	—	1	1	—
	H5K	J	8309 F5K	—	—	—	1	1	—
	H5X	J	8309 F5X	—	—	—	1	1	—
	H4B, H6B	J	8291 F6B	—	—	—	1	—	—
	H6E	J	8291 F6E	—	—	—	1	—	—
	H6F	J	8291 F6F	—	—	—	1	—	—
	H6K	J	8291 F6K	—	—	—	1	—	—
	H6T	J	8291 F6T	—	—	—	1	—	—
	H4X, H6X	J	8291 F6X	—	—	—	1	—	—
	H6XW	J	8291 F6W	—	—	—	1	—	—
	H6B	J	8339 F6B	—	—	—	—	—	1
	H6E	J	8339 F6E	—	—	—	—	—	1
	H6F	J	8339 F6F	—	—	—	—	—	1
	H6K	J	8339 F6K	—	—	—	—	—	1
	H6T	J	8339 F6T	—	—	—	—	—	1
	H6X	J	8339 F6X	—	—	—	—	—	1
	H6W	J	8339 F6W	—	—	—	—	—	1
	UP TO BUILD DATE 10-1-69 HRK	J	8310 FRK	—	—	—	1	1	—
	UP TO BUILD DATE 10-1-69 HRT	J	8310 FRT	—	—	—	1	1	—
	UP TO BUILD DATE 10-1-69 HRX	J	8310 FRX	—	—	—	1	1	—
	AFTER BUILD DATE 10-1-69 HRK	J	*7792 FRK	—	—	—	1	1	—
	AFTER BUILD DATE 10-1-69 HRT	J	*7792 FRT	—	—	—	1	1	—
	AFTER BUILD DATE 10-1-69 HRX	J	*7792 FRX	—	—	—	1	1	—
	UP TO BUILD DATE 10-1-69 HRT	J	*8341 FRT	—	—	—	—	—	1
	UP TO BUILD DATE 10-1-69 HRX	J	*8341 FRX	—	—	—	—	—	1
	AFTER BUILD DATE 10-1-69 HRT	J	*7794 FRT	—	—	—	—	—	1
	AFTER BUILD DATE 10-1-69 HRX	J	*7794 FRX	—	—	—	—	—	—

NOTE: A letter code in the carline column indicates the carline for which the part is released as follows:

CARLINES Indicate: J - Challenger, B - Barracuda, V - Valiant, L - Dart, R - Belvedere, W - Coronet, P - Plymouth, D - Dodge, C - Chrysler, Y - Imperial

AR Indicates use as required.
★ Indicates change or addition.

Right and left part numbers are on same line, first number is right, second number is left.

Printed in U.S.A.
December 1970

CODE	PART NAME	CAR LINE	PART NUMBER	Sed.	4 D.H.T.	Sta. Wgn.	2 D.H.T.	Sp. 2 D.H.T.	Conv.
23-109-4	COVER Cont'd.								
	4 DOOR								
	L2B	L	8230 F2B	1	—	—	—	—	—
	L2F	L	8230 F2F	1	—	—	—	—	—
	L2X	L	8230 F2X	1	—	—	—	—	—
	L2B	L	8231 F2B	—	—	—	1	—	—
	L2X	L	8231 F2X	—	—	—	1	—	—
	D2B	L	8235 F2B	—	—	—	1	—	—
	D2F	L	8235 F2F	—	—	—	1	—	—
	D2T	L	8235 F2T	—	—	—	1	—	—
	D2X	L	8235 F2X	—	—	—	1	—	—
	H1B	L	8247 F1B	1	—	—	—	—	—
	H1F	L	8247 F1F	1	—	—	—	—	—
	H1X	L	8247 F1X	1	—	—	—	—	—
	H2B	L	8259 F2B	1	—	—	—	—	—
	H2T	L	8259 F2T	1	—	—	—	—	—
	H2X	L	8259 F2X	1	—	—	—	—	—
	H2B	L	8260 F2B	—	—	—	1	—	—
	H2F, H6F	L	8260 F2F	—	—	—	1	—	—
	H2T, H6T	L	8260 F2T	—	—	—	1	—	—
	H2X, H6X	L	8260 F2X	—	—	—	1	—	—
	H2XW	L	8260 F2W	—	—	—	1	—	—
	K2T, T2T	R,W	8376 F2T	1	—	—	—	—	—
	K2X, T2X	R,W	8376 F2X	1	—	—	—	—	—
	2 DOOR								
	K1T (UP TO BUILD DATE 2-1-70)	R,W	8373 F1T	1	—	—	—	—	—
	K1T (AFTER BUILD DATE 2-1-70)	R,W	8373 FTT	1	—	—	—	—	—
	K2T	R,W	8375 F2T	1	—	—	—	—	—
	4 DOOR								
	K1T (UP TO BUILD DATE 2-1-70)	R,W	8374 F1T	1	—	—	—	—	—
	K1T (AFTER BUILD DATE 2-1-70)	R,W	8374 FTT	1	—	—	—	—	—
	L1B	R	8263 F1B	1	—	—	—	—	—
	L1Y	R	8263 F1Y	1	—	—	—	—	—
	2 DOOR								
	M2B	R	8345 F2B	1	—	—	—	—	—
	M2T	R	8345 F2T	1	—	—	—	—	—
	M2X	R	8345 F2X	1	—	—	—	—	—
	4 DOOR								
	H1B	R	8266 F1B	1	—	—	—	—	—
	H1F	R	8266 F1F	1	—	—	—	—	—
	W/DIAMOND DESIGN IN INSERT H1X	R	8266 F1X	1	—	—	—	—	—
	W/O DIAMOND DESIGN IN INSERT H1X	R	*8266 FXX	1	—	—	—	—	—
	H1Y	R	8266 F1Y	1	—	—	—	—	—
	H1B	R	8267 F1B	—	—	—	1	—	—
	H1F	R	8267 F1F	—	—	—	1	—	—
	W/DIAMOND DESIGN IN INSERT H1X	R	8267 F1X	—	—	—	1	—	—
	W/O DIAMOND DESIGN IN INSERT H1X	R	*8267 FXX	—	—	—	1	—	—
	2 DOOR								
	H2B	R	8276 F2B	1	—	—	1	—	—
	H2F	R	8276 F2F	1	—	—	1	—	—
	H2K	R	8276 F2K	1	—	—	1	—	—
	H2T	R	8276 F2T	1	—	—	1	—	—
	H2X	R	8276 F2X	1	—	—	1	—	—
	H2BW, H2KW, H2XW	R	8276 F2W	1	—	—	1	—	—
	4 DOOR								
	H2B	R	8278 F2B	1	—	—	—	—	—
	H2F	R	8278 F2F	1	—	—	—	—	—
	H2T	R	8278 F2T	1	—	—	—	—	—

NOTE: A letter code in the carline column indicates the carline for which the part is released as follows:

CARLINES Indicate: J - Challenger, B - Barracuda, V - Valiant, L - Dart, R - Belvedere, W - Coronet, P - Plymouth, D - Dodge, C - Chrysler, Y - Imperial

AR Indicates use as required.
★ Indicates change or addition.

Right and left part numbers are on same line, first number is right, second number is left.

Printed in U.S.A.
December 1970

CODE	PART NAME	CAR LINE	PART NUMBER	Sed.	4 D.H.T.	Sta. Wgn.	2 D.H.T.	Sp. 2 D.H.T.	Conv.
23-109-4	COVER Cont'd.								
	H2X	R	8278 F2X	1	—	—	—	—	—
	H2BW, H2FW, H2TW	R	8278 F2W	1	—	—	—	—	—
	2ND SEAT								
	H2B	R	8279 F2B	—	—	1	—	—	—
	H2F	R	8279 F2F	—	—	1	—	—	—
	H2T	R	8279 F2T	—	—	1	—	—	—
	H2X	R	8279 F2X	—	—	1	—	—	—
	H2XY	R	8279 F2Y	—	—	1	—	—	—
	H2FW, H2TW	R	8279 F2W	—	—	1	—	—	—
	3RD SEAT								
	H2B	R	8280 F2B	—	—	1	—	—	—
	H2F	R	8280 F2F	—	—	1	—	—	—
	H2T	R	8280 F2T	—	—	1	—	—	—
	H2X	R	8280 F2X	—	—	1	—	—	—
	H2XY	R	8280 F2Y	—	—	1	—	—	—
	H2FW, H2TW	R	8280 F2W	—	—	1	—	—	—
	H2B	R	8277 F2B	—	—	—	—	—	1
	H2K	R	8277 F2K	—	—	—	—	—	1
	H2X	R	8277 F2X	—	—	—	—	—	1
	H2BW, H2KW, H2XW	R	8277 F2W	—	—	—	—	—	1
	2ND SEAT 6 PASS.								
	D2B	R	8265 F2B	—	—	1	—	—	—
	D2T	R	8265 F2T	—	—	1	—	—	—
	P3B	R	8321 F3B	1	—	—	—	—	—
	P3F	R	8321 F3F	1	—	—	—	—	—
	P3K	R	8321 F3K	1	—	—	—	—	—
	P3X	R	8321 F3X	1	—	—	—	—	—
	P3Y	R	8321 F3Y	1	—	—	—	—	—
	P3B	R	8320 FBB	—	—	—	1	—	—
	P3K	R	8320 F3K	—	—	—	1	—	—
	P3X	R	8320 F3X	—	—	—	1	—	—
	2ND SEAT								
	P3F	R	8322 F3F	—	—	1	—	—	—
	P3X	R	8322 F3X	—	—	1	—	—	—
	3RD SEAT								
	P3F	R	8323 F3F	—	—	1	—	—	—
	P3X	R	8323 F3X	—	—	1	—	—	—
	2 DOOR								
	P6B	R	8306 F6B	1	—	—	1	—	—
	P6BW, P6KW, P6XW	R	8306 F6W	1	—	—	1	—	—
	P6F	R	8306 F6F	1	—	—	1	—	—
	P6K	R	8306 F6K	1	—	—	1	—	—
	P6T	R	8306 F6T	1	—	—	1	—	—
	P6XA	R	8306 F6X	1	—	—	1	—	—
	P6XY	R	8306 F6Y	1	—	—	1	—	—
	P6B	R	8307 F6B	—	—	—	—	—	1
	P6BW, P6KW, P6XW	R	8307 F6W	—	—	—	—	—	1
	P6K	R	8307 F6K	—	—	—	—	—	1
	P6XA	R	8307 F6X	—	—	—	—	—	1
	4 DOOR								
	P6B	R	8308 FBB	1	—	—	—	—	—
	P6BW, P6TW	R	8308 F6W	1	—	—	—	—	—
	P6T	R	8308 F6T	1	—	—	—	—	—
	P6XA	R	8308 F6X	1	—	—	—	—	—
	2ND SEAT								
	P6T	R	8332 F6T	—	—	1	—	—	—
	P6XA	R	8332 F6X	—	—	1	—	—	—

NOTE: A letter code in the carline column indicates the carline for which the part is released as follows:

CARLINES Indicate: J - Challenger, B - Barracuda, V - Valiant, L - Dart, R - Belvedere, W - Coronet, P - Plymouth, D - Dodge, C - Chrysler, Y - Imperial

AR Indicates use as required.
★ Indicates change or addition.

Right and left part numbers are on same line, first number is right, second number is left.

Printed in U.S.A.
December 1970

CODE	PART NAME	CAR LINE	PART NUMBER	Sed.	4 D.H.T.	Sta. Wgn.	2 D.H.T.	Sp. 2 D.H.T.	Conv.
23-109-4	COVER Cont'd.								
	3RD SEAT								
	P6T	R	8333 F6T	—	—	1	—	—	—
	P6XA	R	8333 F6X	—	—	1	—	—	—
	K1T (UP TO BUILD DATE 2-1-70)	P	8357 F1T	1	—	—	—	—	—
	K1T (AFTER BUILD DATE 2-1-70)	P	8357 FTT	1	—	—	—	—	—
	K2T	P	8363 F2T	1	—	—	—	—	—
	4 DOOR								
	K1A (UP TO BUILD DATE 2-1-70)	D	8358 F1A	1	—	—	—	—	—
	K1A (AFTER BUILD DATE 2-1-70)	D	8358 FAA	1	—	—	—	—	—
	K2A	P	8364 F2A	1	—	—	—	—	—
	E1B	P	8393 F1B	1	—	—	—	—	—
	E1T	P	8393 F1T	1	—	—	—	—	—
	E2B	P	8226 F2B	1	—	—	—	—	—
	E2T	P	8226 F2T	1	—	—	—	—	—
	D6T	P	8390 F6T	1	1	—	—	1	—
	D6XA	P	8390 F6X	1	1	—	—	1	—
	D6T	P	8388 F6T	—	—	—	1	—	—
	D6XA	P	8388 F6X	—	—	—	1	—	—
	2ND SEAT								
	E2B, B2B	P,D	8227 F2B	—	—	1	—	—	—
	E2T, B2T	P,D	8227 F2T	—	—	1	—	—	—
	UP TO BUILD DATE 11-1-69 L1B	P	8236 F1B	1	—	—	—	—	—
	UP TO BUILD DATE 11-1-69 L1F	P	8236 F1F	1	—	—	—	—	—
	UP TO BUILD DATE 11-1-69 L1Y	P	8236 F1Y	1	—	—	—	—	—
	AFTER BUILD DATE 11-1-69 L1B	P	*8236 F1D	1	—	—	—	—	—
	AFTER BUILD DATE 11-1-69 L1F	P	*8236 F1C	1	—	—	—	—	—
	AFTER BUILD DATE 11-1-69 L1Y	P	*8236 F1Z	1	—	—	—	—	—
	L1B	P	8316 F1B	—	—	—	1	—	—
	L1F	P	8316 F1F	—	—	—	1	—	—
	L1Y	P	8316 F1Y	—	—	—	1	—	—
	L2T	P	8232 F2T	1	—	—	—	—	—
	L2X	P	8232 F2X	1	—	—	—	—	—
	L2T	P	8318 F2T	—	—	—	1	—	—
	L2XA	P	8318 F2X	—	—	—	1	—	—
	2ND SEAT								
	L2B, F2B, R2B,	P, D	8233 F2B	—	—	1	—	—	—
	L2F, F2F, R2F,	P, D	8233 F2F	—	—	1	—	—	—
	L2T, F2T, R2T,	P, D	8233 F2T	—	—	1	—	—	—
	L2XA, F2XA, R2XA,	P, D	8233 F2X	—	—	1	—	—	—
	3RD SEAT								
	L2B, D2B, R2B,	P, D	8234 F2B	—	—	1	—	—	—
	L2BW, L2TW, L2XW, F2BW, F2TW, F2XW	P,D	8234 F2W	—	—	1	—	—	—
	L2F, B2F, R2F	P, D	8234 F2F	—	—	1	—	—	—
	L2T, B2T, R2T,	P, D	8234 F2T	—	—	1	—	—	—
	L2XA, R2XA, F2XA	P, D	8234 F2X	—	—	1	—	—	—
	M1B	P	8294 F1B	1	1	—	—	1	—
	M1F	P	8294 F1F	1	1	—	—	1	—
	M1XA	P	8294 F1X	1	1	—	—	1	—
	M1Y	P	8294 F1Y	1	1	—	—	—	—
	M1B	P	8293 F1B	—	—	—	1	—	—
	M1F	P	8293 F1F	—	—	—	1	—	—
	M1XA	P	8293 F1X	—	—	—	1	—	—
	M4B, H4B	P	8250 F4B	1	1	—	—	1	—
	M4F, H4F, P4F	P	8250 F4F	1	1	—	—	1	—
	M4K, H4K,	P	8250 F4K	1	1	—	—	1	—
	M4T, H4T,	P	8250 F4T	1	1	—	—	1	—
	M4XA, M8XA, H4X, P4XA	P	8250 F4X	1	1	—	—	1	—

NOTE: A letter code in the carline column indicates the carline for which the part is released as follows:

CARLINES Indicate: J - Challenger, B - Barracuda, V - Valiant, L - Dart, R - Belvedere, W - Coronet, P - Plymouth, D - Dodge, C - Chrysler, Y - Imperial

AR Indicates use as required.
★ Indicates change or addition.

Right and left part numbers are on same line, first number is right, second number is left.

Printed in U.S.A.
December 1970

CODE	PART NAME	CAR LINE	PART NUMBER	Sed.	4 D.H.T.	Sta. Wgn.	2 D.H.T.	Sp. 2 D.H.T.	Conv.
23-109-4	COVER Cont'd.								
	M4XP, H4XP	P	8250 F4P	1	1	—	—	1	—
	M4XW, H4W	P	8250 F4W	—	—	—	—	1	—
	P4TT	P	*8250 F4N	1	—	—	—	—	—
	2ND SEAT								
	M4B, W4B, D4B, R4B	P, D	8253 F4B	—	—	1	—	—	—
	M4F, W4F, D4F, R4F	P, D	8253 F4F	—	—	1	—	—	—
	M4T, W4T, D4T, R4T	P, D	8253 F4T	—	—	1	—	—	—
	M4XA, M8XA, D4XA, R4XA, W4XA, W8XA	P, D	8253 F4X	—	—	1	—	—	—
	3RD SEAT								
	M4B, W4B, D4B, R4B	P, D	8254 F4B	—	—	1	—	—	—
	M4F, W4F, D4F, R4F	P, D	8254 F4F	—	—	1	—	—	—
	M4T, W4T, D4T, R4T	P, D	8254 F4T	—	—	1	—	—	—
	M4XA, M8XA, W4XA, W8XA, R4XA, D4XA	P, D	8254 F4X	—	—	1	—	—	—
	M4B, H4B	P	8248 F4B	—	—	—	1	—	—
	M4F, H4F	P	8248 F4F	—	—	—	1	—	—
	M4K, H4K	P	8248 F4K	—	—	—	1	—	—
	M4T, H4T	P	8248 F4T	—	—	—	1	—	—
	M4XA, H4XA	P	8248 F4X	—	—	—	1	—	—
	M4XP, H4XP	P	8248 F4P	—	—	—	1	—	—
	M4XW, H4XW	P	8284 F4W	—	—	—	1	—	—
	M4B	P	8249 F4B	—	—	—	—	—	1
	M4F	P	8249 F4F	—	—	—	—	—	1
	M4X	P	8249 F4X	—	—	—	—	—	1
	2ND SEAT								
	M7F, W7F	P,D	8261 F7F	—	—	1	—	—	—
	3RD SEAT			—	—	—	—	—	—
	M7F, W7F	P,D	8262 F7F	—	—	1	—	—	—
	H8T	P	*8390 F6T	—	1	—	—	—	—
	H3B	P	8386 F3B	1	1	—	—	1	—
	H3F	P	8386 F3F	1	1	—	—	1	—
	H3K	P	8386 F3K	—	—	—	—	1	—
	H3XA	P	8386 F3X	1	1	—	—	1	—
	H3Y	P	8386 F3Y	1	1	—	—	—	—
	H3B	P	8384 F3B	—	—	—	1	—	—
	H3F	P	8384 F3F	—	—	—	1	—	—
	H3K	P	8384 F3K	—	—	—	1	—	—
	H3XA	P	8384 F3X	—	—	—	1	—	—
	UP TO BUILD DATE 11-1-69 H5B, H7B	P	8288 F5B	1	1	—	—	1	—
	UP TO BUILD DATE 11-1-69 H5F, H7F	P	8288 F5F	1	1	—	—	1	—
	AFTER BUILD DATE 11-1-69 H5B, H7B	P	*8288 F5D	1	1	—	—	1	—
	AFTER BUILD DATE 11-1-69 H5F, H7F	P	*8288 F5G	1	1	—	—	1	—
	UP TO BUILD DATE 11-1-69 H5B	P	8285 F5B	—	—	—	1	—	—
	UP TO BUILD DATE 11-1-69 H5F	P	8285 F5F	—	—	—	1	—	—
	AFTER BUILD DATE 11-1-69 H5B	P	*8285 F5D	—	—	—	1	—	—
	AFTER BUILD DATE 11-1-69 H5F	P	*8285 F5G	—	—	—	1	—	—
	M6B, H6B	P	8303 F6B	—	—	—	1	—	—
	M6F, H6F	P	8303 F6F	—	—	—	1	—	—
	H6K	P	8303 F6K	—	—	—	1	—	—
	M6T, H6T	P	8303 F6T	—	—	—	1	—	—
	M6XA, H6XA	P	8303 F6X	—	—	—	1	—	—
	H6B	P	8305 F6B	—	—	—	—	1	—
	H6F	P	8305 F6F	—	—	—	—	1	—
	H6K	P	8305 F6K	—	—	—	—	1	—
	M6T, H6T	P	8305 F6T	—	—	—	—	1	—
	H6XA	P	8305 F6X	—	—	—	—	1	—
	M6B	P	8304 F6B	—	—	—	—	—	1
	M6F	P	8304 F6F	—	—	—	—	—	1
	M6XA	P	8304 F6X	—	—	—	—	—	1

NOTE: A letter code in the carline column indicates the carline for which the part is released as follows:

CARLINES Indicate: J - Challenger, B - Barracuda, V - Valiant, L - Dart, R - Belvedere, W - Coronet, P - Plymouth, D - Dodge, C - Chrysler, Y - Imperial

AR Indicates use as required.
★ Indicates change or addition.

Right and left part numbers are on same line, first number is right, second number is left.

CODE	PART NAME	CAR LINE	PART NUMBER	Sed.	4 D.H.T.	Sta. Wgn.	2 D.H.T.	Sp. 2 D.H.T.	Conv.
23-109-4	COVER Cont'd.								
	D6T	P	8388 F6T	—	—	—	1	1	—
	D6XA	P	8388 F6X	—	—	—	1	1	—
	2 DOOR								
	L2B	W	8244 F2B	1	—	—	—	—	—
	L2T	W	8244 F2T	1	—	—	—	—	—
	L2X	W	8244 F2X	1	—	—	—	—	—
	4 DOOR								
	L2B	W	8245 F2B	1	—	—	—	—	—
	L2T	W	8245 F2T	1	—	—	—	—	—
	L2X	R,W	8245 F2X	1	—	—	—	—	—
	2ND SEAT 6 PASS.								
	L2B	W	8246 F2B	—	—	1	—	—	—
	L2T	W	8246 F2T	—	—	1	—	—	—
	L2X	R,W	8246 F2X	—	—	1	—	—	—
	2 DOOR								
	M6B, D6B	W	8296 F6B	1	1	—	—	—	—
	M6F, D6F	W	8296 F6F	1	1	—	—	—	—
	M6K, D6K	W	8296 F6K	1	1	—	—	—	—
	M6T, D6T	W	8296 F6T	1	1	—	—	—	—
	M6X, D6X	W	8296 F6X	1	1	—	—	—	—
	M6XW, D6XW	W	8296 F6W	1	1	—	—	—	—
	M6XY, D6XY	W	8296 FXY	1	—	—	1	—	—
	4 DOOR								
	H1B	W	8264 F1B	1	—	—	—	—	—
	H1F	W	8264 F1F	1	—	—	—	—	—
	M6T, D6T	W	8296 F6T	1	1	—	—	—	—
	M6X, D6X	W	8296 F6X	1	1	—	—	—	—
	M6XW, D6XW	W	8296 F6W	1	1	—	—	—	—
	M6XY, D6XY	W	8296 FXY	1	—	—	1	—	—
	H1B	W	8264 F1B	1	—	—	—	—	—
	H1F	W	8264 F1F	1	—	—	—	—	—
	H1X	W	8264 F1X	1	—	—	—	—	—
	H1Y	W	8264 F1Y	1	—	—	—	—	—
	2 DOOR								
	H2B	W	8269 F2B	1	—	—	1	—	—
	H2F	W	8269 F2F	1	—	—	1	—	—
	H2K	W	8269 F2K	1	—	—	1	—	—
	H2T	W	8269 F2T	1	—	—	1	—	—
	H2X	W	8269 F2X	1	—	—	1	—	—
	H2XW	W	8269 FW1	1	—	—	1	—	—
	4 DOOR								
	H2B	W	8268 F2B	1	—	—	—	—	—
	H2F	W	8268 F2F	1	—	—	—	—	—
	H2T	W	8268 F2T	1	—	—	—	—	—
	H2X	W	8268 F2X	1	—	—	—	—	—
	2ND SEAT								
	H2B	W	8270 F2B	—	—	1	—	—	—
	H2F	W	8270 F2F	—	—	1	—	—	—
	H2T	W	8270 F2T	—	—	1	—	—	—
	H2H	W	8270 F2X	—	—	1	—	—	—
	3RD SEAT								
	H2B	W	8271 F2B	—	—	1	—	—	—
	H2F	W	8271 F2F	—	—	1	—	—	—
	H2T	W	8271 F2T	—	—	1	—	—	—
	H2X	W	8271 F2X	—	—	1	—	—	—
	C2B, C6B, CRB	W	8348 F2B	—	—	—	—	1	—
	C2F, C6F, CRF	W	8348 F2F	—	—	—	—	1	—

NOTE: A letter code in the carline column indicates the carline for which the part is released as follows:

CARLINES Indicate: J - Challenger, B - Barracuda, V - Valiant, L - Dart, R - Belvedere, W - Coronet, P - Plymouth, D - Dodge, C - Chrysler, Y - Imperial

AR Indicates use as required.
★ Indicates change or addition.

Right and left part numbers are on same line, first number is right, second number is left.

Printed in U.S.A.
December 1970

CODE	PART NAME	CAR LINE	PART NUMBER	Sed.	4 D.H.T.	Sta. Wgn.	2 D.H.T.	Sp. 2 D.H.T.	Conv.
23-109-4	COVER Cont'd.								
	C2K, C6K	W	8348 F2K	—	—	—	—	1	—
	C2T, C6T, CRT	W	8348 F2T	—	—	—	—	1	—
	C2XA, C6XA, CRXA	W	8348 F2X	—	—	—	—	1	—
	C2XW, C6XW	W	8348 F2W	—	—	—	—	1	—
	C5XA	W	8353 F5X	—	—	—	—	1	—
	D4B	W	8295 F4B	—	—	—	—	—	1
	D4F	W	8295 F4F	—	—	—	—	—	1
	D4K	W	8295 F4K	—	—	—	—	—	1
	D4T	W	8295 F4T	—	—	—	—	—	1
	D4X	W	8295 F4X	—	—	—	—	—	1
	D4XW	W	8295 F4W	—	—	—	—	—	1
	UP TO BUILD DATE 11-1-69 P3B	W	8340 F3B	1	—	—	—	—	—
	UP TO BUILD DATE 11-1-69 P3F	W	8340 F3F	1	—	—	—	—	—
	UP TO BUILD DATE 11-1-69 P3K	W	8340 F3K	1	—	—	—	—	—
	UP TO BUILD DATE 11-1-69 P3X	W	8340 F3X	1	—	—	—	—	—
	UP TO BUILD DATE 11-1-69 P3Y	W	8340 F3Y	1	—	—	—	—	—
	AFTER BUILD DATE 11-1-69 P3B	W	*8340 F3D	1	—	—	—	—	—
	AFTER BUILD DATE 11-1-69 P3F	W	*8340 F3G	1	—	—	—	—	—
	AFTER BUILD DATE 11-1-69 P3K	W	*8340 F3C	1	—	—	—	—	—
	AFTER BUILD DATE 11-1-69 P3X	W	*8340 F3A	1	—	—	—	—	—
	AFTER BUILD DATE 11-1-69 P3Y	W	*8340 F3Z	1	—	—	—	—	—
	P4B	W	8334 F4B	1	—	—	—	—	—
	P4F	W	8334 F4F	1	—	—	—	—	—
	P4T	W	8334 F4T	1	—	—	—	—	—
	P4X	W	8334 F4X	1	—	—	—	—	—
	2ND SEAT								
	P4B	W	8335 F4B	—	—	1	—	—	—
	P4F	W	8335 F4F	—	—	1	—	—	—
	P4T	W	8335 F4T	—	—	1	—	—	—
	P4X	W	8335 F4X	—	—	1	—	—	—
	3RD SEAT								
	P4B, P6B,	W	8336 F4B	—	—	1	—	—	—
	P4F	W	8336 F4F	—	—	1	—	—	—
	P4T, P6T	W	8336 F4T	—	—	1	—	—	—
	P4X, P6X,	W	8336 F4X	—	—	1	—	—	—
	B1B	D	8394 F1B	1	—	—	—	—	—
	B1T	D	8394 F1T	1	—	—	—	—	—
	B2B	D	8356 F2B	1	—	—	—	—	—
	B2T	D	8356 F2T	1	—	—	—	—	—
	UP TO BUILD DATE 11-1-69 D1B	D	8377 F1B	1	1	—	—	—	—
	UP TO BUILD DATE 11-1-69 D1F	D	8377 F1F	1	1	—	—	—	—
	UP TO BUILD DATE 11-1-69 D1X	D	8377 F1X	1	1	—	—	—	—
	D1Y	D	8377 F1Y	1	1	—	—	—	—
	AFTER BUILD DATE 11-1-69 D1B	D	*8377 F1D	1	1	—	—	—	—
	AFTER BUILD DATE 11-1-69 D1F	D	*8377 F1G	1	1	—	—	—	—
	AFTER BUILD DATE 11-1-69 D1X	D	*8377 F1A	1	1	—	—	—	—
	UP TO BUILD DATE 11-1-69 D1B	D	8392 F1B	—	—	—	1	—	—
	UP TO BUILD DATE 11-1-69 D1F	D	8392 F1F	—	—	—	1	—	—
	UP TO BUILD DATE 11-1-69 D1X	D	8392 F1X	—	—	—	1	—	—
	AFTER BUILD DATE 11-1-69 D1B	D	*8392 F1D	—	—	—	1	—	—
	AFTER BUILD DATE 11-1-69 D1F	D	*8392 F1G	—	—	—	1	—	—
	AFTER BUILD DATE 11-1-69 D1X	D	*8392 F1A	—	—	—	1	—	—
	D1Y	D	8392 F1Y	—	—	—	1	—	—
	F1B	D	8349 F1B	1	—	—	—	—	—
	F1F	D	8349 F1F	1	—	—	—	—	—
	F1Y	D	8349 F1Y	1	—	—	—	—	—
	F2T	D	8350 F2T	1	—	—	—	—	—

NOTE: A letter code in the carline column indicates the carline for which the part is released as follows:

CARLINES *Indicate:* J - Challenger, B - Barracuda, V - Valiant, L - Dart, R - Belvedere, W - Coronet, P - Plymouth, D - Dodge, C - Chrysler, Y - Imperial

AR Indicates use as required.
★ Indicates change or addition.

Right and left part numbers are on same line, first number is right, second number is left.

Printed in U.S.A.
December 1970

CODE	PART NAME	CAR LINE	PART NUMBER	Sed.	4 D.H.T.	Sta. Wgn.	2 D.H.T.	Sp. 2 D.H.T.	Conv.
23-109-4	COVER Cont'd.								
	F2XA	D	8350 F2X	1	—	—	—	—	—
	F1B	D	8317 F1B	—	—	—	1	—	—
	F1F	D	8317 F1F	—	—	—	1	—	—
	F1Y	D	8317 F1Y	—	—	—	1	—	—
	F2T	D	8319 F2T	—	—	—	1	—	—
	F2XA	D	8319 F2X	—	—	—	1	—	—
	W1B	D	8352 F1B	1	1	—	—	—	—
	W1F	D	8352 F1F	1	1	—	—	—	—
	W1XA	D	8352 F1X	1	1	—	—	—	—
	W1Y	D	8352 F1Y	1	1	—	—	—	—
	W1B	D	8351 F1B	—	—	—	1	—	—
	W1F	D	8351 F1F	—	—	—	1	—	—
	W1XA	D	8351 F1X	—	—	—	1	—	—
	W4B, P4B,	D	8355 F4B	1	1	—	—	—	—
	W4F, P4F,	D	8355 F4F	1	1	—	—	—	—
	W4K, P4K,	D	8355 F4K	—	1	—	—	—	—
	W4T, P4T,	D	8355 F4T	1	1	—	—	—	—
	P4XP, W4XP	D	8355 F4P	1	1	—	—	—	—
	W4XA, P4XA	D	8355 F4X	1	1	—	—	—	—
	W4Y	D	8355 F4Y	1	1	—	—	—	—
	W4B	D	8354 F4B	—	—	—	1	—	—
	W4F	D	8354 F4F	—	—	—	1	—	—
	W4K	D	8354 F4K	—	—	—	1	—	—
	W4T	D	8354 F4T	—	—	—	1	—	—
	W4XA	D	8354 F4X	—	—	—	1	—	—
	W4XP	D	8354 F4P	—	—	—	1	—	—
	W4XW	D	8354 F4W	—	—	—	1	—	—
	L1B	D	8238 F1B	1	1	—	—	—	—
	UP TO BUILD DATE 11-1-69 L1F	D	8238 F1F	1	1	—	—	—	—
	UP TO BUILD DATE 11-1-69 L1X	D	8238 F1X	1	1	—	—	—	—
	UP TO BUILD DATE 11-1-69 L1Y	D	8238 F1Y	1	1	—	—	—	—
	AFTER BUILD DATE 11-1-69 L1F	D	*8238 F1G	1	1	—	—	—	—
	AFTER BUILD DATE 11-1-69 L1X	D	*8238 F1A	1	1	—	—	—	—
	AFTER BUILD DATE 11-1-69 L1Y	D	*8238 F1Z	1	1	—	—	—	—
	L2B	D	8241 F2B	1	1	—	—	—	—
	L2F	D	8241 F2F	1	1	—	—	—	—
	L2T	D	8241 F2T	1	1	—	—	—	—
	L2X	D	8241 F2X	1	1	—	—	—	—
	2ND SEAT								
	L2B	D	8243 F2B	—	—	1	—	—	—
	L2F	D	8243 F2F	—	—	1	—	—	—
	L2T	D	8243 F2T	—	—	1	—	—	—
	L2X	D	8243 F2X	—	—	1	—	—	—
	3RD SEAT								
	L2B	D	8242 F2B	—	—	1	—	—	—
	L2F	D	8242 F2F	—	—	1	—	—	—
	L2T	D	8242 F2T	—	—	1	—	—	—
	L2X	D	8242 F2X	—	—	1	—	—	—
	L1B	D	8237 F1B	—	—	—	1	—	—
	UP TO BUILD DATE 11-1-69 L1F	D	8237 F1F	—	—	—	1	—	—
	UP TO BUILD DATE 11-1-69 L1X	D	8237 F1X	—	—	—	1	—	—
	UP TO BUILD DATE 11-1-69 L1Y	D	8237 F1Y	—	—	—	1	—	—
	AFTER BUILD DATE 11-1-69 L1F	D	*8237 F1G	—	—	—	1	—	—
	AFTER BUILD DATE 11-1-69 L1X	D	*8237 F1A	—	—	—	1	—	—
	AFTER BUILD DATE 11-1-69 L1Y	D	*8237 F1Z	—	—	—	1	—	—
	L2B	D	8239 F2B	—	—	—	1	—	—
	L2F	D	8239 F2F	—	—	—	1	—	—

NOTE: A letter code in the carline column indicates the carline for which the part is released as follows:

CARLINES Indicate: J - Challenger, B - Barracuda, V - Valiant, L - Dart, R - Belvedere, W - Coronet, P - Plymouth, D - Dodge, C - Chrysler, Y - Imperial

AR Indicates use as required.
★ Indicates change or addition.

Right and left part numbers are on same line, first number is right, second number is left.

Printed in U.S.A.
December 1970

CODE	PART NAME	CAR LINE	PART NUMBER	Sed.	4 D.H.T.	Sta. Wgn.	2 D.H.T.	Sp. 2 D.H.T.	Conv.
23-109-4	COVER Cont'd.								
	L2T	D	8239 F2T	—	—	—	1	—	—
	L2X	D	8239 F2X	—	—	—	1	—	—
	L2B	D	8240 F2B	—	—	—	—	—	1
	L2F	D	8240 F2F	—	—	—	—	—	1
	L2X, L6X,	D	8240 F2X	—	—	—	—	—	1
	L4B	D	8381 F4B	1	1	—	—	—	—
	L4F	D	8381 F4F	1	1	—	—	—	—
	L4X	D	8381 F4X	1	1	—	—	—	—
	L4XW	D	8381 F4W	—	1	—	—	—	—
	L4B	D	8379 F4B	—	—	—	1	—	—
	L4F	D	8379 F4F	—	—	—	1	—	—
	L4X, D4X	D	8379 F4X	—	—	1	—	—	—
	L4XW, D4XW	D	8379 F4W	—	—	—	1	—	—
	H1B, H7B	D	8311 F1B	1	1	—	—	—	—
	H1F, H7F	D	8311 F1F	1	1	—	—	—	—
	H1T	D	8311 F1T	1	1	—	—	—	—
	H1X, H7X	D	8311 F1X	1	1	—	—	—	—
	H1Y	D	8311 F1Y	1	1	—	—	—	—
	H3B	D	8315 F3B	—	—	—	1	—	—
	H3F	D	8315 F3F	—	—	—	1	—	—
	H3X	D	8315 F3X	—	—	—	1	—	—
	UP TO BUILD DATE 11-1-69 P7B	D	*8383 F3B	1	1	—	—	—	—
	UP TO BUILD DATE 11-1-69 P7F	D	*8383 F3F	1	1	—	—	—	—
	AFTER BUILD DATE 11-1-69 P7B	D	*8383 F3D	1	1	—	—	—	—
	AFTER BUILD DATE 11-1-69 P7F	D	*8383 F3G	1	1	—	—	—	—
	UP TO BUILD DATE 11-1-69 P5B	D	*8382 F3B	—	—	—	1	—	—
	UP TO BUILD DATE 11-1-69 P5F	D	*8382 F3F	—	—	—	1	—	—
	AFTER BUILD DATE 11-1-69 P5B	D	*8382 F3D	—	—	—	1	—	—
	AFTER BUILD DATE 11-1-69 P5F	D	*8382 F3G	—	—	—	1	—	—
	2ND SEAT								
	H4B	D	8313 F4B	—	—	1	—	—	—
	H4F, H8F	D	8313 F4F	—	—	1	—	—	—
	H4T, H8T	D	8313 F4T	—	—	1	—	—	—
	H4TW	D	8313 F4W	—	—	1	—	—	—
	H4X, H8X	D	8313 F4X	—	—	1	—	—	—
	3RD SEAT								
	H4B	D	8281 F4B	—	—	1	—	—	—
	H4F, H8F	D	8281 F4F	—	—	1	—	—	—
	H4T, H8T	D	8281 F4T	—	—	1	—	—	—
	H4X, H8X	D	8281 F4X	—	—	1	—	—	—
	H4B, H6B	D	8314 F4B	—	—	—	1	—	—
	H4F, H6F	D	8314 F4F	—	—	—	1	—	—
	H4K, H6K	D	8314 F4K	—	—	—	1	—	—
	H4X, H6X	D	8314 F4X	—	—	—	1	—	—
	H4Y	D	8314 F4Y	—	—	—	1	—	—
	H8F	D	8312 F8F	—	1	—	—	—	—
	H8K	D	8312 F8K	—	1	—	—	—	—
	H8X	D	8312 F8X	—	1	—	—	—	—
	W6B, P6B	D	8346 F6B	—	—	—	1	—	—
	W6F, P6F	D	8346 F6F	—	—	—	1	—	—
	P6K	D	8346 F6K	—	—	—	1	—	—
	P6T	D	8346 F6T	—	—	—	1	—	—
	W6XA, P6XA	D	8346 F6X	—	—	—	1	—	—
	P6XP	D	8346 F6P	—	—	—	1	—	—
	P6XW	D	8346 F6W	—	—	—	1	—	—
	E1B	C	8201 F1B	1	1	—	—	—	—
	E1L	C	8201 F1L	1	1	—	—	—	—

NOTE: A letter code in the carline column indicates the carline for which the part is released as follows:

CARLINES Indicate: J - Challenger, B - Barracuda, V - Valiant, L - Dart, R - Belvedere, W - Coronet, P - Plymouth, D - Dodge, C - Chrysler, Y - Imperial

AR Indicates use as required.
★ Indicates change or addition.

Right and left part numbers are on same line, first number is right, second number is left.

Printed in U.S.A.
December 1970

CODE	PART NAME	CAR LINE	PART NUMBER	Sed.	4 D.H.T.	Sta. Wgn.	2 D.H.T.	Sp. 2 D.H.T.	Conv.
23-109-4	COVER Cont'd.								
E1F		C	8201 F1F	1	1	—	—	—	—
E1P		C	8201 F1P	1	1	—	—	—	—
E1X		C	8201 F1X	1	1	—	—	—	—
E1B		C	8200 F1B	—	—	—	1	—	—
E1F		C	8200 F1F	—	—	—	1	—	—
E1L		C	8200 F1L	—	—	—	1	—	—
E1P		C	8200 F1P	—	—	—	1	—	—
E1X		C	8200 F1X	—	—	—	1	—	—
E2B		C	8204 F2B	1	1	—	—	—	—
E2T		C	8204 F2T	—	1	—	—	—	—
E2Y		C	8204 F2Y	1	1	—	—	—	—
E2X		C	8204 F2X	1	1	—	—	—	—
E2B		C	8202 F2B	—	—	—	1	—	—
E2T		C	8202 F2T	—	—	—	1	—	—
E2Y		C	8202 F2Y	—	—	—	1	—	—
E2X		C	8202 F2X	—	—	—	1	—	—
E2B		C	8203 F2B	—	—	—	—	—	1
E2T		C	8203 F2T	—	—	—	—	—	1
E2Y		C	8203 F2Y	—	—	—	—	—	1
E2X		C	8203 F2X	—	—	—	—	—	1
L3B		C	8206 F3B	1	1	—	—	—	—
L3F		C	8206 F3F	1	1	—	—	—	—
L3P		C	8206 F3P	1	1	—	—	—	—
L3X		C	8206 F3X	1	1	—	—	—	—
L3Y		C	8206 F3Y	1	1	—	—	—	—
L3B		C	8205 F3B	—	—	—	1	—	—
L3F		C	8205 F3F	—	—	—	1	—	—
L3P		C	8205 F3P	—	—	—	1	—	—
L3X		C	8205 F3X	—	—	—	1	—	—
L3Y		C	8205 F3Y	—	—	—	1	—	—
L4B, M4B		C	8210 F4B	1	1	—	—	—	—
L4R, M4R		C	8210 F4R	1	1	—	—	—	—
L4X, L8X, M4X		C	8210 F4X	1	1	—	—	—	—
L4B, M4B		C	8209 F4B	—	—	—	1	—	—
L4R, M4B		C	8209 F4R	—	—	—	1	—	—
L4X, M4X		C	8209 F4X	—	—	—	1	—	—
	4 DOOR								
L7L		C	8208 F3L	1	1	—	—	—	—
L7R		C	8208 F3R	1	1	—	—	—	—
M3F		C	8208 F3F	—	1	—	—	—	—
M3X		C	8208 F3X	—	1	—	—	—	—
M3Y		C	8208 F3Y	—	1	—	—	—	—
M3F		C	8207 F3F	—	—	—	1	—	—
M3X		C	8207 F3X	—	—	—	1	—	—
M3Y		C	8207 F3Y	—	—	—	1	—	—
M5L		C	8214 F5L	—	1	—	—	—	—
M5L		C	8213 F5L	—	—	—	1	—	—
H8L		C	8224 F8L	—	1	—	—	—	—
H8X		C	8224 F8X	—	1	—	—	—	—
M6F		C	8217 F6F	—	1	—	—	—	—
M6T		C	8217 F6T	—	1	—	—	—	—
M6X		C	8217 F6X	—	1	—	—	—	—
M6XW		C	8217 F6W	—	1	—	—	—	—
M6F		C	8215 F6F	—	—	—	1	—	—
E6T, M6T		C	8215 F6T	—	—	—	1	—	—
E6X, M6X		C	8215 F6X	—	—	—	1	—	—
E6XW, M6XW		C	8215 F6W	—	—	—	1	—	—

NOTE: A letter code in the carline column indicates the carline for which the part is released as follows:

CARLINES Indicate: J - Challenger, B - Barracuda, V - Valiant, L - Dart, R - Belvedere, W - Coronet, P - Plymouth, D - Dodge, C - Chrysler, Y - Imperial

AR Indicates use as required.

★ Indicates change or addition.

Right and left part numbers are on same line, first number is right, second number is left.

Printed in U.S.A.
December 1970

CODE	PART NAME	CAR LINE	PART NUMBER	Sed.	4 D.H.T.	Sta. Wgn.	2 D.H.T.	Sp. 2 D.H.T.	Conv.
23-109-4	COVER Cont'd.								
	M6B	C	8216 F6B	—	—	—	—	—	1
	M6F	C	8216 F6F	—	—	—	—	—	1
	E6T, M6T	C	8216 F6T	—	—	—	—	—	1
	E6X, M6X	C	8216 F6X	—	—	—	—	—	1
	E6XW, M6XW	C	8216 F6W	—	—	—	—	—	1
	D2TY	C	*8044 F2T	—	1	—	—	—	—
	D2TY	C	*8399 F2T	—	—	—	1	—	—
	H1B, H7B,	C	8223 F1B	1	1	—	—	—	—
	H1F, H7F	C	8223 F1F	1	1	—	—	—	—
	H1P	C	8223 F1P	1	1	—	—	—	—
	H1X	C	8223 F1X	1	1	—	—	—	—
	H1Y	C	8223 F1Y	1	1	—	—	—	—
	H7B	C	8223 F1B	1	1	—	—	—	—
	H7L	C	8223 F1L	1	1	—	—	—	—
	H7R	C	8223 F1R	1	1	—	—	—	—
	H3B	C	8221 F3B	—	—	—	1	—	—
	H3F	C	8221 F3F	—	—	—	1	—	—
	H3P	C	8221 F3P	—	—	—	1	—	—
	H3X	C	8221 F3X	—	—	—	1	—	—
	H3Y	C	8221 F3Y	—	—	—	1	—	—
	H6B	C	8222 F6B	—	—	—	1	—	—
	H6T	C	8222 F6T	—	—	—	1	—	—
	H6XW	C	8222 F6W	—	—	—	1	—	—
	H6X	C	8222 F6X	—	—	—	1	—	—
	HST	C	8222 ST	1	1	—	—	—	—
	2ND SEAT								
	P4B	C	8211 F4B	—	—	1	—	—	—
	P4F, P8F	C	8211 F4F	—	—	1	—	—	—
	P4R	C	8211 F4R	—	—	1	—	—	—
	P4T	C	8211 F4T	—	—	1	—	—	—
	P4X, P8X	C	8211 F4X	—	—	1	—	—	—
	P7L	C	8218 F7L	—	—	1	—	—	—
	3RD SEAT								
	P4B	C	8212 F4B	—	—	1	—	—	—
	P4F, P8F	C	8212 F4F	—	—	1	—	—	—
	P4R	C	8212 F4R	—	—	1	—	—	—
	P4T	C	8212 F4T	—	—	1	—	—	—
	P4X, P8X	C	8212 F4X	—	—	1	—	—	—
	P7L	C	8219 F7L	—	—	1	—	—	—
	L1B	Y	8344 F1B	—	1	—	—	—	—
	L1F	Y	8344 F1F	—	1	—	—	—	—
	L1M	Y	8344 F1M	—	1	—	—	—	—
	L1P	Y	8344 F1P	—	1	—	—	—	—
	L1TT	Y	8344 F1T	—	1	—	—	—	—
	L1X	Y	8344 F1X	—	1	—	—	—	—
	L3B	Y	8368 F3B	—	—	—	1	—	—
	L3F	Y	8368 F3F	—	—	—	1	—	—
	L3TT	Y	8368 F3T	—	—	—	1	—	—
	L3X	Y	8368 F3X	—	—	—	1	—	—
	MSB	Y	8274 FSB	—	1	—	—	—	—
	MSF	Y	8274 FSF	—	1	—	—	—	—
	MSR	Y	8274 FSR	—	1	—	—	—	—
	MST	Y	8274 FST	—	1	—	—	—	—
	MSXW	Y	8274 FSW	—	1	—	—	—	—
	MSX	Y	8274 FSX	—	1	—	—	—	—
	MSY	Y	8274 FSY	—	1	—	—	—	—
	MDA	Y	8371 FDA	—	1	—	—	—	—

NOTE: A letter code in the carline column indicates the carline for which the part is released as follows:

CARLINES Indicate: J - Challenger, B - Barracuda, V - Valiant, L - Dart, R - Belvedere, W - Coronet, P - Plymouth, D - Dodge, C - Chrysler, Y - Imperial

AR Indicates use as required.
★ Indicates change or addition.

Right and left part numbers are on same line, first number is right, second number is left.

CODE	PART NAME	CAR LINE	PART NUMBER	Sed.	4 D.H.T.	Sta. Wgn.	2 D.H.T.	Sp. 2 D.H.T.	Conv.
23-109-4	COVER Cont'd.								
	MDB	Y	8371 FDB	—	1	—	—	—	—
	MDF	Y	8371 FDF	—	1	—	—	—	—
	MDM	Y	8371 FDM	—	1	—	—	—	—
	MDP	Y	8371 FDP	—	1	—	—	—	—
	MDTT	Y	8371 FDT	—	1	—	—	—	—
	MDX	Y	8371 FDX	—	1	—	—	—	—
	MDY	Y	8371 FDY	—	1	—	—	—	—
	MBB	Y	8300-1 FBB	—	—	—	1	—	—
	MBF	Y	8300-1 FBF	—	—	—	1	—	—
	MBP	Y	8300-1 FBP	—	—	—	1	—	—
	MBTT	Y	8300-1 FBT	—	—	—	1	—	—
	MBX9	Y	8300-1 FBX	—	—	—	1	—	—
	MBY	Y	8300-1 FBY	—	—	—	1	—	—
	MRB	Y	8360-1 FRB	—	—	—	1	—	—
	MRF	Y	8360-1 FRF	—	—	—	1	—	—
	MRT	Y	8360-1 FRT	—	—	—	1	—	—
	MRX	Y	8360-1 FRX	—	—	—	1	—	—
	MRXW	Y	8360-1 FRW	—	—	—	1	—	—
	MRY	Y	8360-1 FRY	—	—	—	1	—	—
23-109-5	INSERT, Rear Seat Back Panel								
	CODES								
	2ND SEAT BACK SUPPORT CARPET INSERT								
	E2B, B2B, F2B, F2BW, W4B, W4BW, L2B, L2BW, M4B, M4BW, H4B	P,D	1839 FB4	—	—	1	—	—	—
	E2F, B2F, F2F, L2F, M4F, M7F, W4F, W7F, H4F, H8F	P,D	1839 EF9	—	—	1	—	—	—
	E2T, B2T, F2T, F2TW, W4T, W4TW, L2T, L2TW, M4T, M4TW, H4T, H4TW, H8T	P,D	1839 FT4	—	—	1	—	—	—
	L2XA, L2XW, F2XA, F2XW, W4XA, W4XW, W8XA, H4X, H7X, H8X	P,D	1839 EX8	—	—	1	—	—	—
	3RD SEAT BACK PNL. INSERT								
	E2B, B2B, F2B, F2BW, W4B, W4BW, L2B, L2BW, M4B, M4BW, H4B	P,D	1817 FB4	—	—	1	—	—	—
	E2F, B2F, W4F, W7F, F2F, L2F, M4F, H4F, H8F	P,D	1817 EF8	—	—	1	—	—	—
	E2T, B2T, F2T, F2TW, W4T, W4TW, L2T, L2TW, M4T, M4TW, H4T, H4TW, H8T	P,D	1817 FT4	—	—	1	—	—	—
	F2XA, F2XW, L2XA, L2XW, M4XA, M4XW, W4XA, W4XW, W8XA, H4X, H7X, H8X	P,D	1817 EX8	—	—	1	—	—	—
	2ND SEAT BACK PNL. CARPET INSERT								
	E2B, F2B, F2BW, B2B, W4B, W4BW, L2B, L2BW, M4B, M4BW, H4B	P,D	1844 FB4	—	—	1	—	—	—
	E2F, F2F, B2F, W4F, W7F, L2F, M4F, M7F, H4F, H8F	P,D	1844 EF9	—	—	1	—	—	—
	E2T, B2T, F2T, F2TW, W4T, W4TW L2T, L2TW, M4T, M4TW, H4T, H4TW, H8T	P,D	1844 FT4	—	—	1	—	—	—
	F2XA, F2XW, L2X, L2XA, L2XW, W4XA, W4XW, W8XA, M4XA, M4XW M8XA, H4X, H7X, H8X	P,D	1844 EX8	—	—	1	—	—	—

NOTE: A letter code in the carline column indicates the carline for which the part is released as follows:

CARLINES Indicate: J - Challenger, B - Barracuda, V - Valiant, L - Dart, R - Belvedere, W - Coronet, P - Plymouth, D - Dodge, C - Chrysler, Y - Imperial

AR Indicates use as required.
★ Indicates change or addition.

Right and left part numbers are on same line, first number is right, second number is left.

Printed in U.S.A.
December 1970

CODE	PART NAME	CAR LINE	PART NUMBER	Sed.	4 D.H.T.	Sta. Wgn.	2 D.H.T.	Sp. 2 D.H.T.	Conv.
23-109-5	INSERT Cont'd.								
	2ND SEAT SUPPORT PNL. CARPET INSERT								
	E2B, B2B, F2B, F2BW, W4B, W4BW, L2B, L2BW, M4B, M4BW, H4B	P,D	1843 FB4	—	—	1	—	—	—
	E2F, B2F, F2F, W4F, W7F, M4F, H4F, H8F	P,D	1843 EF9	—	—	1	—	—	—
	E2T, B2T, F2T, F2TW, W4T, W4TW, M4T, M4TW, H4T, H4TW, H8T	P,D	1843 FT4	—	—	1	—	—	—
	L2XA, L2XW, F2XA, F2XW, W4XA, W4XW, W8XA, M4XA, M4XW, H4X, M8XA, H7X, H8X	P,D	1843 EX8	—	—	1	—	—	—
	3RD SEAT BACK PNL. CARPET INSERT								
	E2B, B2B, F2BW, W4B, W4BW, L2B, L2BW, M4B, M4BW, H4B	P,D	1841 FB4	—	—	1	—	—	—
	E2F, B2F, W4F, W7F, L2F, M4F, M7F, H4F	P,D	1841 EF9	—	—	1	—	—	—
	E2T, B2T, F2TW, W4T, W4TW, L2T, L2TW, M4T, M4TW, H4T, H4TW, H8T	P,D	1841 FT4	—	—	1	—	—	—
	L2X, L2XA, L2XW, W4XA, W4XW, F2XW, W8XA, M4XA, M4XW, M8XA, H4X, H8X, H7X	P,D	1841 EX8	—	—	1	—	—	—
	3RD SEAT BACK SUPPORT PNL. CARPET INSERT								
	E2B, B2B, F2B, F2BW, W4B, W4BW, L2B, L2BW, M4B, M4BW, H4B	P,D	1842 FB4	—	—	1	—	—	—
	E2F, B2F, F2F, W4F, W7F, L2F, M4F, M7F, H4F, H8F	P,D	1842 EF9	—	—	1	—	—	—
	E2T, B2T, F2T, F2TW, W4T, W4TW, L2T, L2TW, M4T, M4TW, H4T, H4TW, H8T	P,D	1842 FT4	—	—	1	—	—	—
	L2XA, L2XW, F2XA, F2XW, W4XA, W4XW, W8XA, M4XA, M4XW, M8XA, H4X, H7X, H8X	P,D	1842 EX8	—	—	1	—	—	—
	2ND SEAT BACK CARPET and MLDG. INSERT								
	P4B	C	1808 FB4	—	—	1	—	—	—
	P4F, P8F	C	1808 EF9	—	—	1	—	—	—
	P7L	C	1808 FL5	—	—	1	—	—	—
	P4R	C	1808 FR7	—	—	1	—	—	—
	P4T	C	1808 FT4	—	—	1	—	—	—
	P4X, P8X	C	1808 EX9	—	—	1	—	—	—
	2ND SEAT BACK SUPPORT CARPET INSERT								
	P4B	C	1826 FB4	—	—	1	—	—	—
	P4F, P8F	C	1826 EF9	—	—	1	—	—	—
	P7L	C	1826 FL5	—	—	1	—	—	—
	P4R	C	1826 FR7	—	—	1	—	—	—
	P4T	C	1826 FT4	—	—	1	—	—	—
	P4X, P8X	C	1826 EX8	—	—	1	—	—	—
	2ND SEAT SUPPORT PNL. CARPET and MLDG. INSERT								
	P4B	C	1807 FB4	—	—	1	—	—	—
	P4F, P8F	C	1807 EF9	—	—	1	—	—	—
	P7L	C	1807 FL5	—	—	1	—	—	—

NOTE: A letter code in the carline column indicates the carline for which the part is released as follows:

CARLINES Indicate: J - Challenger, B - Barracuda, V - Valiant, L - Dart, R - Belvedere, W - Coronet, P - Plymouth, D - Dodge, C - Chrysler, Y - Imperial

AR Indicates use as required.
★ Indicates change or addition.

Right and left part numbers are on same line, first number is right, second number is left.

Printed in U.S.A.
December 1970

CODE	PART NAME	CAR LINE	PART NUMBER	Sed.	4 D.H.T.	Sta. Wgn.	2 D.H.T.	Sp. 2 D.H.T.	Conv.
23-109-5	INSERT Cont'd.								
P4R		C	1807 FR7	—	—	1	—	—	—
P4T		C	1807 FT4	—	—	1	—	—	—
P4X, P8X		C	1807 EX8	—	—	1	—	—	—
	3RD SEAT BACK PNL. CARPET and MLDG. INSERT								
P4B		C	1818 FB4	—	—	1	—	—	—
P4F, P8F		C	1818 EF9	—	—	1	—	—	—
P7L		C	1818 FL5	—	—	1	—	—	—
P4R		C	1818 FR7	—	—	1	—	—	—
P4T		C	1818 FT4	—	—	1	—	—	—
P4X, P8X		C	1818 EX8	—	—	1	—	—	—
	3RD SEAT BACK SUPPORT PNL. CARPET and MLDG. INSERT								
P4B		C	1812 FB4	—	—	1	—	—	—
P4F, P8F		C	1812 EF9	—	—	1	—	—	—
P7L		C	1812 FL5	—	—	1	—	—	—
P4R		C	1812 FR7	—	—	1	—	—	—
P4X, P8X		C	1812 EX9	—	—	1	—	—	—
P4T			1812 FT4	—	—	1	—	—	—
COVER		P,D,C	2942 026	—	—	—	—	—	1
INSERT, Rear Seat Back Panel									
CODES									
	2ND. SEAT BACK COVER PANEL								
L2B, D2B, H2B, P4B, P6B		R,W	1803 EB9	—	—	1	—	—	—
H2F, P3F, P4F, H2FW		R,W	1803 EF9	—	—	1	—	—	—
L2T, D2T, H2T, H2TW, P4T, P6T		R,W	1803 FT4	—	—	1	—	—	—
L2X, H2X, H2XY, P3X, P4X, P6X, P6XA		R,W	1803 BX9	—	—	1	—	—	—
	2ND. SEAT BACK PANEL								
L2B, D2B, H2B, P4B, P6B		R,W	1804 EB9	—	—	1	—	—	—
H2F, P3F, P4F, H2FW		R,W	1804 EF9	—	—	1	—	—	—
L2T, D2T, H2T, H2TW, P4T, P6T		R,W	1804 FT4	—	—	1	—	—	—
L2X, H2X, H2XY, P3X, P4X, P6X, P6XA		R,W	1804 BX9	—	—	1	—	—	—
	3RD. SEAT BACK PANEL								
H2B, P4B, P6B		R,W	1805 EB9	—	—	1	—	—	—
H2F, H2FW, P3F, P4F		R,W	1805 EF9	—	—	1	—	—	—
H2T, H2TW, P4T, P6T		R,W	1805 FT4	—	—	1	—	—	—
H2X, H2XY, P3X, P4X, P6X, P6XA		R,W	1805 BX9	—	—	1	—	—	—
	3RD. SEAT BACK SUPPORT PANEL								
H2B, P4B, P6B		R,W	1806 EB9	—	—	1	—	—	—
H2F, H2FW, P3F, P4F		R,W	1806 EF9	—	—	1	—	—	—
H2T, H2TW, P4T, P6T		R,W	1806 FT4	—	—	1	—	—	—
H2X, H2XY, P3X, P4X, P6X, P6XA		R,W	1806 BX9	—	—	1	—	—	—
	2ND. SEAT BACK PANEL								
E2B, D2B, D4B, L2B, B2B, R2B, R4B, W4B, M4B		P,D	1816 FB4	—	—	1	—	—	—
D2F, D4F, L2F, R2F, R4F, W4F, W7F, M4F		P,D	1816 EF9	—	—	1	—	—	—
E2T, D2T, D4T, L2T, B2T, R2T, R4T, W4T, M4T		P,D	1816 FT4	—	—	1	—	—	—
D2XA, D4XA, L2XA, R2XA, B4XA, W4XA, W8XA, M4XA		P,D	1816 EX9	—	—	1	—	—	—
	2ND. SEAT BACK SUPPORT								
E2B, D2B, D4B, L2B, B2B, R2B, R4B, W4B, M4B		P,D	1825 FB4	—	—	1	—	—	—
D2F, D4F, R4F, B4F, L2F, W4F, W7F, M4F		P,D	1825 EF9	—	—	1	—	—	—
E2T, D2T, D4T, L2T, B2T, R2T, R4T, W4T, M4T		P,D	1825 FT4	—	—	1	—	—	—

NOTE: A letter code in the carline column indicates the carline for which the part is released as follows:

CARLINES Indicate: J - Challenger, B - Barracuda, V - Valiant, L - Dart, R - Belvedere, W - Coronet, P - Plymouth, D - Dodge, C - Chrysler, Y - Imperial

AR Indicates use as required.
★ Indicates change or addition.

Right and left part numbers are on same line, first number is right, second number is left.

Printed in U.S.A.
December 1970

CODE	PART NAME	CAR LINE	PART NUMBER	Sed.	4 D.H.T.	Sta. Wgn.	2 D.H.T.	Sp. 2 D.H.T.	Conv.
23-109-5	INSERT Cont'd.								
	D2XA, D4XA, L2XA, R2XA, R4XA, W4XA, W4XA, W8XA, M4XA	P,D	1825 EX9	—	—	1	—	—	—
	2ND. SEAT SUPPORT PANEL								
	E2B, D2B, D4B, L2B, B2B, R2B, R4B, W4B, M4B	P,D	1821 FB4	—	—	1	—	—	—
	D2F, D4F, L2F, R2F, R4F, W4F, W7F, M4P	P,D	1821 EF9	—	—	1	—	—	—
	E2T, D2T, D4T, L2T, B2T, R2T, R4T, W4T, M4T	P,D	1821 FT4	—	—	1	—	—	—
	D2XA, D4XA, L2XA, R2XA, R4XA, W4XA, W8XA, M4XA	P,D	1821 EX9	—	—	1	—	—	—
	3RD. SEAT BACK PANEL								
	E2B, D2B, D4B, L2B, R2B, R4B, W4B, M4B	P,D	1814 FB4	—	—	1	—	—	—
	D2F, D4F, L2F, R2F, R4F, W4F, W7F, M4F	P,D	1814 EF9	—	—	1	—	—	—
	E2T, D2T, D4T, L2T, B2T, R2T, R4T, W4T, M4T	P,D	1814 FT4	—	—	1	—	—	—
	D2XA, D4XA, L2XA, R2XA, R2XA, R4XA, F2XA, M4XA, M8XA, W4XA, W8XA	P,D	1814 EX9	—	—	1	—	—	—
	3RD. SEAT BACK PANEL SUPPORT								
	E2B, D2B, D4B, L2B, R2B, R4B, W4B, M4B	P,D	1822 FB4	—	—	1	—	—	—
	D2F, D4F, L2F, R2F, R4F, W4F, M4F, W7F	P,D	1822 EF9	—	—	1	—	—	—
	E2T, D2T, D4T, L2T, B2T, R2T, R4T, W4T, M4T	P,D	1822 FT4	—	—	1	—	—	—
	D2XA, D4XA, L2XA, R2XA, R4XA, M4XA, M8XA, W4XA, W8XA	P,D	1822 EX9	—	—	1	—	—	—
	3RD. SEAT BACK PANEL CARPET AND MOULDING INSERT								
	P4B	C	1818 FB4	—	—	1	—	—	—
	P4F, P8F	C	1818 EF9	—	—	1	—	—	—
	P7L	C	1818 FL5	—	—	1	—	—	—
	P4R	C	1818 FR7	—	—	1	—	—	—
	P4T	C	1818 FT4	—	—	1	—	—	—
	P4X, P8X	C	1818 EX8	—	—	1	—	—	—
	CARGO COMPARTMENT DRESS-UP								
	2ND. SEAT BACK PANEL								
	E2B, D2B, D4B, L2B, F2B, R2B, R4B, M4B, W4B, H4B, B2B	P,D	1844 FB4	—	—	1	—	—	—
	E2F, D2F, D4F, L2F, F2F, R2F, R4F, M4F, W4F, W7F, M7F, H4F, H8F	P,D	1844 EF9	—	—	1	—	—	—
	E2T, D2T, D4T, L2T, F2T, R2T, R4T, M4T, W4T, H4T, H8T, B2T	P,D	1844 FT4	—	—	1	—	—	—
	D2XA, D4XA, L2X, L2XA, W4XA, W8XA, M4XA, M8XA, F2XA, R2XA, R4XA, H4X, H8X	P,D	1844 EX8	—	—	1	—	—	—
	2ND. SEAT SUPPORT PANEL								
	E2B, D2B, D4B, L2B, F2B, R2B, R4B, B2B, M4B, W4B, H4B	P,D	1843 FB4	—	—	1	—	—	—
	E2F, D2F, D4F, L2F, F2F, R2F, R4F, M4F, M7F, W4F, W7F, H4F, H8F	P,D	1843 EF9	—	—	1	—	—	—
	E2T, D2T, D4T, L2T, F2T, R2T, R4T, W4T, M4T, B2T, H4T, H8T	P,D	1843 FT4	—	—	1	—	—	—
	D2XA, D4XA, L2X, L2XA, M4XA, M8XA, W4XA, W8XA, F2XA, R2XA, R4XA, H4X, H8X	P,D	1843 EX8	—	—	1	—	—	—
	3RD. SEAT BACK SUPPORT PANEL								
	E2B, D2B, D4B, L2B, F2B, R2B, R4B, B2B, M4B, W4B, H4B	P,D	1839 FB4	—	—	1	—	—	—
	E2F, D2F, D4F, L2F, F2F, R2F, R4F, M4F, M7F, W4F, W7F, H4F, H8F	P,D	1839 EF9	—	—	1	—	—	—
	E2T, D2T, D4T, L2T, F2T, R2T, R4T, W4T, M4T, B2T, H4T, H8T	P,D	1839 FT4	—	—	1	—	—	—

NOTE: A letter code in the carline column indicates the carline for which the part is released as follows:

CARLINES Indicate: J - Challenger, B - Barracuda, V - Valiant, L - Dart, R - Belvedere, W - Coronet, P - Plymouth, D - Dodge, C - Chrysler, Y - Imperial

AR Indicates use as required.
★ Indicates change or addition.

Right and left part numbers are on same line, first number is right, second number is left.

Printed in U.S.A.
December 1970

CODE	PART NAME	CAR LINE	PART NUMBER	Sed.	4 D.H.T.	Sta. Wgn.	2 D.H.T.	Sp. 2 D.H.T.	Conv.
23-109-5	INSERT Cont'd.								
	D2XA, D4XA, L2X, L2XA, M4XA, M8XA, W4XA, W8XA, F2XA, R2XA, R4XA, H4XA, H8XA	P,D	1839 EX8	—	—	1	—	—	—
	3RD. SEAT BACK PANEL								
	E2B, D2B, D4B, L2B, F2B, R2B, R4B, B2B, W4B, M4B, H4B	P,D	1817 FB4	—	—	1	—	—	—
	L2F, D2F, D4F, R2F, R4F, F2F, W4F, W7F, M4F, H4F, H8F	P,D	1817 EF9	—	—	1	—	—	—
	E2T, D2T, D4T, L2T, B2T, R2T, R4T, F2T, M4T, W4T, H4T, H8T	P,D	1817 FT4	—	—	1	—	—	—
	L2X, L2XA, D2XA, D4XA, R2XA, R4XA, M4XA, M8XA, W4XA, W8XA, F2XA, H4X, H8X	P,D	1817 EX8	—	—	1	—	—	—
23-109-7	COVER, Rear Seat Back Upper Frame	Y	4807 EX9	—	—	—	1	—	—
23-109-10	FILLER, Rear Seat Back To Quarter Trim Panel								
	L1B, M1B, M6B, M4B, H3B, H4B, H5B, H6B, L2B, D1B, L4B, F1B, W1B, W6B, E1B, E2B, L3B, MRB	P,D,C,Y	4308-9 FB3	—	—	—	1	—	—
	H6B, H3B, L3B, MBB	C,Y	4308-9 FB7	—	—	—	1	—	—
	L1F, M1F, M6F, M4F, H3F, H4F, H5F, H6F, F1F, W1F, W6F, E1F, L3F, M3F, MRF, MBF	P,D,C,Y	4308-9 FF8	—	—	—	1	—	—
	L1F, L2F, D1F, L4F, L3F	D,Y	4308-9 FF4	—	—	—	1	—	—
	E1L, M5L	C	4308-9 FL2	—	—	—	1	—	—
	L2T, M4T, H4T, H6T, D6T, F2T, E2T, E6T, D2TY, M6T, MRT	P,D,C,Y	4308-9 FT5	—	—	—	1	—	—
	L3TT, MBTT	Y	4308-9 FT9	—	—	—	1	—	—
	L1X, L2X, D1X, D6X, L4X, H3X, H4X, H6X, E1X, E2X E6X, L3X, M4X, M3X, M6X, MRX, MBX	D,C,Y	4308-9 FX9	—	—	—	1	—	—
	L1Y, D1Y, F1Y, H4Y, E2Y, L3Y, M3Y, H3Y, MRY, MBY	P,D,C,Y	4308-9 FY4	—	—	—	1	—	—
	E1P, L3P, H3P, MBP	C,Y	4308-9 FP6	—	—	—	1	—	—
	M4XP, H4XP, W4XP	P,D	4308-9 FP8	—	—	—	1	—	—
	M4XW, H4XW, D6XW, L4XW, W4XW, E6XW, M6XW, H6XW, MRXW	P,D,C,Y	4308-9 FW1	—	—	—	1	—	—
	L4R, M4R,	C	4308-9 FR9	—	—	—	1	—	—
	M4K, H3K, H4K, H6K, W4K	P,D	4308-9 FK4	—	—	—	1	—	—
	L2XA, M1XA, M6XA, M4XA, H3XA, H4XA, H6XA, D6XA, F2XA, W1XA, W6XA, W4XA	P,D	4308-9 FA8	—	—	—	1	—	—
23-109-23	COVER, Seat Back Hinge Bracket								
	2ND SEAT	R,W	4430-1 BX9	—	—	1	—	—	—
	LATCH COVER	P,D,C	2031 EX9	—	—	2	—	—	—
23-109-35	CUSHION, Rear Seat								
	NOTE: FOR COMPLETE ASSEMBLY ORDER BY DESCRIPTION, VEHICLE SERIAL NUMBER and TRIM CODE: FOR COVER ONLY SEE PART TYPE CODE 23-109-36								
23-109-36	COVER, Rear Seat Cushion								
	CODES								
	L1B	V	7652 F1B	1	—	—	—	—	—
	L1F	V	7652 F1F	1	—	—	—	—	—
	L1X	V	7652 F1X	1	—	—	—	—	—
	L1B	V	7653 F1B	—	—	—	—	1	—
	L1F	V	7653 F1F	—	—	—	—	1	—
	L1X	V	7653 F1X	—	—	—	—	1	—
	L2B	V	7630 F2B	1	—	—	—	—	—
	L2F	V	7630 F2F	1	—	—	—	—	—
	L2X	V	7630 F2X	1	—	—	—	—	—
	L2B	V	7746 F2B	—	—	—	—	1	—
	L2F	V	7746 F2F	—	—	—	—	1	—

NOTE: A letter code in the carline column indicates the carline for which the part is released as follows:

CARLINES Indicate: J - Challenger, B - Barracuda, V - Valiant, L - Dart, R - Belvedere, W - Coronet, P - Plymouth, D - Dodge, C - Chrysler, Y - Imperial

AR Indicates use as required.
★ Indicates change or addition.

Right and left part numbers are on same line, first number is right, second number is left.

Printed in U.S.A.
December 1970

CODE	PART NAME	CAR LINE	PART NUMBER	Sed.	4 D.H.T.	Sta. Wgn.	2 D.H.T.	Sp. 2 D.H.T.	Conv.
23-109-36	COVER Cont'd.								
	L2X	V	7746 F2X	—	—	—	—	1	—
	4 DOOR								
	L4B	V	7692 F4B	1	—	—	—	—	—
	L4E	V	7692 F4E	1	—	—	—	—	—
	L4F	V	7692 F4F	1	—	—	—	—	—
	L4T	V	7692 F4T	1	—	—	—	—	—
	L4X, L6X	V	7692 F4X	1	—	—	—	—	—
	L6BW, L6EW, L6XW	V	7692 F4W	1	—	—	—	—	—
	L4B	V	7691 F4B	—	—	—	—	1	—
	L4E	V	7691 F4E	—	—	—	—	1	—
	L4F	V	7691 F4F	—	—	—	—	1	—
	L4T	V	7691 F4T	—	—	—	—	1	—
	L4X, L6X	V	7691 F4X	—	—	—	—	1	—
	L6BW, L6EW, L6XW	V	7691 F4W	—	—	—	—	1	—
	D2B	V	7694 F2B	—	—	—	—	1	—
	D2F	V	7694 F2F	—	—	—	—	1	—
	D2X	V	7694 F2X	—	—	—	—	1	—
	H4B, H6B	B	7722 F6B	—	—	—	1	—	—
	H6E	B	7722 F6E	—	—	—	1	—	—
	H4F, H6F	B	7722 F6F	—	—	—	1	—	—
	H6T	B	7722 F6T	—	—	—	1	—	—
	H4X, H6X	B	7722 F6X	—	—	—	1	—	—
	H4BW, H4FW, H4XW, H6BW, H6FW, H6XW	B	7722 F6W	—	—	—	1	—	—
	H6B	B	7730 F6B	—	—	—	—	—	1
	H6E	B	7730 F6E	—	—	—	—	—	1
	H6F	B	7730 F6F	—	—	—	—	—	1
	H6T	B	7730 F6T	—	—	—	—	—	1
	H6X	B	7730 F6X	—	—	—	—	—	1
	H6BW, H6EW, H6FW, H6XW	B	7730 F6W	—	—	—	—	—	1
	PRT	B	7736 FRT	—	—	—	1	—	—
	PRX	B	7736 FRX	—	—	—	1	—	—
	PRXW	B	7736 FRW	—	—	—	1	—	—
	PRT	B	7731 FRT	—	—	—	—	—	1
	PRX	B	7731 FRX	—	—	—	—	—	1
	PRXW	B	7731 FRW	—	—	—	—	—	1
	P5K	B	7721 F5K	—	—	—	1	—	—
	P5X	B	7721 F5X	—	—	—	1	—	—
	P6A	B	7723 F6A	—	—	—	1	—	—
	P6B	B	7723 F6B	—	—	—	1	—	—
	P6E	B	7723 F6E	—	—	—	1	—	—
	P6F	B	7723 F6F	—	—	—	1	—	—
	P6K	B	7723 F6K	—	—	—	1	—	—
	P6T	B	7723 F6T	—	—	—	1	—	—
	P6BW, P6EW, P6FW, P6XW	B	7723 F6W	—	—	—	1	—	—
	P6YX	B	7723 F6Y	—	—	—	1	—	—
	P6A	B	7729 F6A	—	—	—	—	—	1
	P6B	B	7729 F6B	—	—	—	—	—	1
	P6E	B	7729 F6E	—	—	—	—	—	1
	P6F	B	7729 F6F	—	—	—	—	—	1
	P6K	B	7729 F6K	—	—	—	—	—	1
	P6T	B	7729 F6T	—	—	—	—	—	1
	P6BW, P6EW, P6FW, P6XW	B	7729 F6W	—	—	—	—	—	1
	P6YX	B	7729 F6Y	—	—	—	—	—	1
	L6X	B,J	8072 F6X	—	—	—	1	—	—
	L6XW	B,J	8072 F6W	—	—	—	1	—	—
	UP TO BUILD DATE 10-1-69 HRK	J	7717 FRK	—	—	—	1	1	—
	UP TO BUILD DATE 10-1-69 HRT	J	7717 FRT	—	—	—	1	1	—

NOTE: A letter code in the carline column indicates the carline for which the part is released as follows:

CARLINES Indicate: J - Challenger, B - Barracuda, V - Valiant, L - Dart, R - Belvedere, W - Coronet, P - Plymouth, D - Dodge, C - Chrysler, Y - Imperial

AR Indicates use as required.
★ Indicates change or addition.

Right and left part numbers are on same line, first number is right, second number is left.

Printed in U.S.A.
December 1970

CODE	PART NAME	CAR LINE	PART NUMBER	Sed.	4 D.H.T.	Sta. Wgn.	2 D.H.T.	Sp. 2 D.H.T.	Conv.
23-109-36	COVER Cont'd.								
	UP TO BUILD DATE 10-1-69 HRX	J	7717 FRX	—	—	—	1	1	—
	UP TO BUILD DATE 10-1-69 HRT	J	7735 FRT	—	—	—	—	—	1
	UP TO BUILD DATE 10-1-69 HRX	J	7735 FRX	—	—	—	—	—	1
	AFTER BUILD DATE 10-1-69 HRK	J	*7791 FRK	—	—	—	1	1	—
	AFTER BUILD DATE 10-1-69 HRT	J	*7791 FRT	—	—	—	1	1	—
	AFTER BUILD DATE 10-1-69 HRX	J	*7791 FRX	—	—	—	1	1	—
	AFTER BUILD DATE 10-1-69 HRT	J	*7793 FRT	—	—	—	—	—	1
	AFTER BUILD DATE 10-1-69 HRX	J	*7793 FRX	—	—	—	—	—	1
	H5B	J	7718 F5B	—	—	1	—	1	—
	H5F	J	7718 F5F	—	—	1	—	1	—
	H5K	J	7718 F5K	—	—	1	—	1	—
	H5X	J	7718 F5X	—	—	1	—	1	—
	H4B, H6B	J	7693 F6B	—	—	—	1	—	—
	H6E	J	7693 F6E	—	—	—	1	—	—
	H6F	J	7693 F6F	—	—	—	1	—	—
	H6K	J	7693 F6K	—	—	—	1	—	—
	H6T	J	7693 F6T	—	—	—	1	—	—
	H4X, H6X	J	7693 F6X	—	—	—	1	—	—
	H6XW	J	7693 F6W	—	—	—	1	—	—
	H6B	J	7733 F6B	—	—	—	—	—	1
	H6E	J	7733 F6E	—	—	—	—	—	1
	H6F	J	7733 F6F	—	—	—	—	—	1
	H6K	J	7733 F6K	—	—	—	—	—	1
	H6T	J	7733 F6T	—	—	—	—	—	1
	H6X	J	7733 F6X	—	—	—	—	—	1
	H6XW	J	7733 F6W	—	—	—	—	—	1
	L2B	L	7631 F2B	1	—	—	—	—	—
	L2F	L	7631 F2F	1	—	—	—	—	—
	L2X	L	7631 F2X	1	—	—	—	—	—
	L2B	L	7632 F2B	—	—	—	1	—	—
	L2X	L	7632 F2X	—	—	—	1	—	—
	D2B	L	7636 F2B	—	—	—	1	—	—
	D2F	L	7636 F2F	—	—	—	1	—	—
	D2T	L	7636 F2T	—	—	—	1	—	—
	D2X	L	7636 F2X	—	—	—	1	—	—
	H1B	L	7648 F1B	1	—	—	—	—	—
	H1F	L	7648 F1F	1	—	—	—	—	—
	H1X	L	7648 F1X	1	—	—	—	—	—
	H2B	L	7660 F2B	1	—	—	—	—	—
	H2T	L	7660 F2T	1	—	—	—	—	—
	H2X	L	7660 F2X	1	—	—	—	—	—
	H2B, H6B	L	7661 F2B	—	—	—	1	—	—
	H2F, H6F	L	7661 F2F	—	—	—	1	—	—
	H2T, H6T,	L	7661 F2T	—	—	—	1	—	—
	H2X, H6X	L	7661 F2X	—	—	—	1	—	—
	H2XW	L	7661 F2W	—	—	—	1	—	—
	2 DOOR								
	K1T (UP TO BUILD DATE 2-1-70)	R,W	7758 F1T	1	—	—	—	—	—
	K1T (AFTER BUILD DATE 2-1-70)	R,W	7758 FTT	1	—	—	—	—	—
	K2T	R,W	7760 F2T	1	—	—	—	—	—
	4 DOOR								
	K1T (UP TO BUILD DATE 2-1-70)	R,W	7759 F1T	1	—	—	—	—	—
	K1T (AFTER BUILD DATE 2-1-70)	R,W	7759 FTT	1	—	—	—	—	—
	K2T, T2T	R,W	7761 F2T	1	—	—	—	—	—
	K2X, T2X	R,W	7761 F2X	1	—	—	—	—	—
	L1B	R	7667 F1B	1	—	—	—	—	—
	L1Y	R	7667 F1Y	1	—	—	—	—	—

NOTE: A letter code in the carline column indicates the carline for which the part is released as follows:

CARLINES Indicate: J - Challenger, B - Barracuda, V - Valiant, L - Dart, R - Belvedere, W - Coronet, P - Plymouth, D - Dodge, C - Chrysler, Y - Imperial

AR Indicates use as required.
★ Indicates change or addition.

Right and left part numbers are on same line, first number is right, second number is left.

Printed in U.S.A.
December 1970

CODE	PART NAME	CAR LINE	PART NUMBER	Sed.	4 D.H.T.	Sta. Wgn.	2 D.H.T.	Sp. 2 D.H.T.	Conv.
23-109-36	COVER Cont'd.								
	6 PASS.								
	D2B	R	7670 F2B	—	—	1	—	—	—
	D2T	R	7670 F2T	—	—	1	—	—	—
	2 DOOR								
	M2B	R	7743 F2B	1	—	—	—	—	—
	M2T	R	7743 F2T	1	—	—	—	—	—
	M2X	R	7743 F2X	1	—	—	—	—	—
	2ND SEAT								
	P6T	R	7724 F6T	—	—	1	—	—	—
	P6XA	R	7724 F6X	—	—	1	—	—	—
	3RD SEAT								
	P6T	R	7725 F6T	—	—	1	—	—	—
	P6XA	R	7725 F6X	—	—	1	—	—	—
	4 DOOR								
	H1B	R	7671 F1B	1	—	—	—	—	—
	H1F	R	7671 F1F	1	—	—	—	—	—
	W/DIAMOND DESIGN IN INSERT H1X	R	7671 F1X	1	—	—	—	—	—
	W/O DIAMOND DESIGN IN INSERT	R	*7671 FXX	1	—	—	—	—	—
	H1Y	R	7671 F1Y	1	—	—	—	—	—
	H1B	R	7672 F1B	—	—	—	1	—	—
	H1F	R	7672 F1F	—	—	—	1	—	—
	W/DIAMOND DESIGN IN INSERT H1X	R	7672 F1X	—	—	—	1	—	—
	W/O DIAMOND DESIGN IN INSERT	R	*7672 FXX	—	—	—	1	—	—
	2 DOOR								
	H2B	R	7678 F2B	1	—	—	1	—	—
	H2F	R	7678 F2F	1	—	—	1	—	—
	H2K	R	7678 F2K	1	—	—	1	—	—
	H2T	R	7678 F2T	1	—	—	1	—	—
	H2X	R	7678 F2X	1	—	—	1	—	—
	H2BW, H2KW, H2XW	R	7678 F2W	1	—	—	1	—	—
	4 DOOR								
	H2B	R	7680 F2B	1	—	—	—	—	—
	H2F	R	7680 F2F	1	—	—	—	—	—
	H2T	R	7680 F2T	1	—	—	—	—	—
	H2X	R	7680 F2X	1	—	—	—	—	—
	H2BW, H2FW, H2TW	R	7680 F2W	1	—	—	—	—	—
	2ND SEAT								
	H2B	R	7681 F2B	—	—	1	—	—	—
	H2F	R	7681 F2F	—	—	1	—	—	—
	H2T	R	7681 F2T	—	—	1	—	—	—
	H2X	R	7681 F2X	—	—	1	—	—	—
	H2XY	R	7681 F2Y	—	—	1	—	—	—
	H2TW, H2FW	R	7681 F2W	—	—	1	—	—	—
	3RD SEAT								
	H2B	R	7682 F2B	—	—	1	—	—	—
	H2F	R	7682 F2F	—	—	1	—	—	—
	H2T	R	7682 F2T	—	—	1	—	—	—
	H2X	R	7682 F2X	—	—	1	—	—	—
	H2XY	R	7682 F2Y	—	—	1	—	—	—
	H2TW, H2FW	R	7682 F2W	—	—	1	—	—	—
	H2B	R	7679 F2B	—	—	—	—	—	1
	H2K	R	7679 F2K	—	—	—	—	—	1
	H2X	R	7679 F2X	—	—	—	—	—	1
	H2BW, H2KW, H2XW	R	7679 F2W	—	—	—	—	—	1
	P3B	R	7710 F3B	1	—	—	—	—	—
	P3F	R	7710 F3F	1	—	—	—	—	—
	P3K	R	7710 F3K	1	—	—	—	—	—

NOTE: A letter code in the carline column indicates the carline for which the part is released as follows:

CARLINES Indicate: J - Challenger, B - Barracuda, V - Valiant, L - Dart, R - Belvedere, W - Coronet, P - Plymouth, D - Dodge, C - Chrysler, Y - Imperial

AR Indicates use as required.
★ Indicates change or addition.

Right and left part numbers are on same line, first number is right, second number is left.

Printed in U.S.A.
December 1970

CODE	PART NAME	CAR LINE	PART NUMBER	Sed.	4 D.H.T.	Sta. Wgn.	2 D.H.T.	Sp. 2 D.H.T.	Conv.
23-109-36	COVER Cont'd.								
	P3X	R	7710 F3X	1	—	—	—	—	—
	P3Y	R	7710 F3Y	1	—	—	—	—	—
	2ND SEAT								
	P3F	R	7711 F3F	—	—	1	—	—	—
	P3X	R	7711 F3X	—	—	1	—	—	—
	3RD SEAT								
	P3F	R	7712 F3F	—	—	1	—	—	—
	P3X	R	7712 F3X	—	—	1	—	—	—
	P3B	R	7709 FBB	—	—	—	1	—	—
	P3K	R	7709 F3K	—	—	—	1	—	—
	P3X	R	7709 F3X	—	—	—	1	—	—
	P6B	R	7705 FBB	1	—	—	—	—	—
	P6BW, P6TW	R	7705 F6W	1	—	—	—	—	—
	P6T	R	7705 F6T	1	—	—	—	—	—
	P6XA	R	7705 F6X	1	—	—	—	—	—
	P6B	R	7704 F6B	—	—	—	—	—	1
	P6BW, P6KW, P6XW	R	7704 F6W	—	—	—	—	—	1
	P6K	R	7704 F6K	—	—	—	—	—	1
	P6XA	R	7704 F6X	—	—	—	—	—	1
	2 DOOR								
	P6B	R	7703 F6B	1	—	—	1	—	—
	P6BW, P6KW, P6XW	R	7703 F6W	1	—	—	1	—	—
	P6F	R	7703 F6F	1	—	—	1	—	—
	P6K	R	7703 F6K	1	—	—	1	—	—
	P6T	R	7703 F6T	1	—	—	1	—	—
	P6XA	R	7703 F6X	1	—	—	1	—	—
	P6XY	R	7703 F6Y	1	—	—	1	—	—
	E2B	P	7626 F2B	1	—	—	—	—	—
	E2T	P	7626 F2T	1	—	—	—	—	—
	2ND SEAT, 6 PASS								
	E2B, B2B	P,D	7627 F2B	—	—	1	—	—	—
	E2F, B2F	P,D	7627 F2F	—	—	1	—	—	—
	E2T, B2T	P,D	7627 F2T	—	—	1	—	—	—
	3RD SEAT								
	2ND SEAT								
	UP TO BUILD DATE 10-1-69 L2B, F2B, D2B, R2B	P,D	7634 F2B	—	—	1	—	—	—
	UP TO BUILD DATE 10-1-69 L2F, F2F, D2F, R2F	P,D	7634 F2F	—	—	1	—	—	—
	UP TO BUILD DATE 10-1-69 L2T, F2T, D2T, R2T	P,D	7634 F2T	—	—	1	—	—	—
	UP TO BUILD DATE 10-1-69 L2XA, F2XA, D2XA, R2XA	P,D	7634 F2X	—	—	1	—	—	—
	2nd Cushion								
	AFTER BUILD DATE 10-1-69 L2B, D2B, F2B, R2B	P,D	*7783 F2B	—	—	1	—	—	—
	AFTER BUILD DATE 10-1-69 L2F, D2F, F2F, R2F	P,D	*7783 F2F	—	—	1	—	—	—
	AFTER BUILD DATE 10-1-69 L2T, D2T, F2T, R2T	P,D	*7783 F2T	—	—	1	—	—	—
	AFTER BUILD DATE 10-1-69 L2XA, D2XA, F2XA, R2XA	P,D	*7783 F2X	—	—	1	—	—	—
	3RD SEAT								
	UP TO BUILD DATE 10-1-69 L2B, F2B, D2B, R2B	P, D	7635 F2B	—	—	1	—	—	—
	UP TO BUILD DATE 10-1-69 L2F, F2F, D2F, R2F	P, D	7635 F2F	—	—	1	—	—	—
	UP TO BUILD DATE 10-1-69 L2T, F2T, D2T, R2T	P, D	7635 F2T	—	—	1	—	—	—
	UP TO BUILD DATE 10-1-69 L2XA, F2XA, D2XA, R2XA	P, D	7635 F2X	—	—	1	—	—	—
	3rd Cushion								
	AFTER BUILD DATE 10-1-69 L2B, D2B, F2B, R2B	P,D	*7784 F2B	—	—	1	—	—	—
	AFTER BUILD DATE 10-1-69 L2F, D2F, F2F, R2F	P,D	*7784 F2F	—	—	1	—	—	—
	AFTER BUILD DATE 10-1-69 L2T, D2T, F2T, R2T	P,D	*7784 F2T	—	—	1	—	—	—
	AFTER BUILD DATE 10-1-69 L2XA, D2XA, F2XA, R2XA	P,D	*7784 F2X	—	—	1	—	—	—
	2ND SEAT								
	M4B, W4B, D4B, R4B,	P, D	7654 F4B	—	—	1	—	—	—
	M4F, W4F, D4F, R4F	P, D	7654 F4F	—	—	1	—	—	—
	M4T, W4T, D4T, R4T	P, D	7654 F4T	—	—	1	—	—	—

NOTE: A letter code in the carline column indicates the carline for which the part is released as follows:

CARLINES Indicate: J - Challenger, B - Barracuda, V - Valiant, L - Dart, R - Belvedere, W - Coronet, P - Plymouth, D - Dodge, C - Chrysler, Y - Imperial

AR Indicates use as required.
★ Indicates change or addition.

Right and left part numbers are on same line, first number is right, second number is left.

Printed in U.S.A.
December 1970

CODE	PART NAME	CAR LINE	PART NUMBER	Sed.	4 D.H.T.	Sta. Wgn.	2 D.H.T.	Sp. 2 D.H.T.	Conv.
23-109-36	COVER Cont'd.								
	M4XA, W4XA, W8XA, D4XA, R4XA	P, D	7654 F4X	—	—	1	—	—	—
	3RD SEAT			—	—	—	—	—	—
	M4B, W4B, D4B, R4B	P, D	7655 F4B	—	—	1	—	—	—
	M4F, W4F, D4F, R4F	P, D	7655 F4F	—	—	1	—	—	—
	M4T, W4T, D4T, R4T	P, D	7655 F4T	—	—	1	—	—	—
	M4XA, W4XA, W8XA, D4XA, R4XA	P, D	7655 F4X	—	—	1	—	—	—
	2ND SEAT								
	M7F, W7F	P,D	7665 F7F	—	—	1	—	—	—
	3RD SEAT								
	M7F, W7F	P,D	7666 F7F	—	—	1	—	—	—
	E1B	P	7777 F1B	1	—	—	—	—	—
	E1T	P	7777 F1T	1	—	—	—	—	—
	UP TO BUILD DATE 11-1-69 L1B	P	7637 F1B	1	—	—	—	—	—
	UP TO BUILD DATE 11-1-69 L1F	P	7637 F1F	1	—	—	—	—	—
	UP TO BUILD DATE 11-1-69 L1Y	P	7637 F1Y	1	—	—	—	—	—
	AFTER BUILD DATE 11-1-69 L1B	P	*7637 F1D	1	—	—	—	—	—
	AFTER BUILD DATE 11-1-69 L1F	P	*7637 F1C	1	—	—	—	—	—
	AFTER BUILD DATE 11-1-69 L1Y	P	*7637 F1Z	1	—	—	—	—	—
	L1B	P	7715 F1B	—	—	—	1	—	—
	L1F	P	7715 F1F	—	—	—	1	—	—
	L1Y	P	7715 F1Y	—	—	—	1	—	—
	UP TO BUILD DATE 10-1-69 L2T	P	7633 F2T	1	—	—	—	—	—
	UP TO BUILD DATE 10-1-69 L2XA	P	7633 F2X	1	—	—	—	—	—
	AFTER BUILD DATE 10-1-69 L2T	P	*7781 F2T	1	—	—	—	—	—
	AFTER BUILD DATE 10-1-69 L2XA	P	*7781 F2X	1	—	—	—	—	—
	UP TO BUILD DATE 10-1-69 L2T	P	7719 F2T	—	—	—	1	—	—
	UP TO BUILD DATE 10-1-69 L2XA	P	7719 F2X	—	—	—	1	—	—
	AFTER BUILD DATE 10-1-69 L2T	P	*7779 F2T	—	—	—	1	—	—
	AFTER BUILD DATE 10-1-69 L2XA	P	*7779 F2X	—	—	—	1	—	—
	M1B	P	7696 F1B	1	1	—	—	1	—
	M1F	P	7696 F1F	1	1	—	—	1	—
	M1XA	P	7696 F1X	1	1	—	—	1	—
	M1Y	P	7696 F1Y	1	1	—	—	—	—
	M1B	P	7695 F1B	—	—	—	1	—	—
	M1F	P	7695 F1F	—	—	—	1	—	—
	M1XA	P	7695 F1X	—	—	—	1	—	—
	M4B, H4B	P	7651 F4B	1	1	—	—	1	—
	M4F, H4F, P4F	P	7651 F4F	1	1	—	—	1	—
	M4K, H4K	P	7651 F4K	—	1	—	—	1	—
	M4T, H4T,	P	7651 F4T	1	1	—	—	1	—
	M4XA, H4XA, P4XA	P	7651 F4X	1	1	—	—	1	—
	M4XP, H4XP,	P	7651 F4P	—	—	—	—	1	—
	M4XW, H4XW,	P	7651 F4W	—	—	—	—	1	—
	P4TT	P	*7651 F4N	1	—	—	—	—	—
	M4B, H4B,	P	7649 F4B	—	—	—	1	—	—
	M4F, H4F,	P	7649 F4F	—	—	—	1	—	—
	M4K, H4K	P	7649 F4K	—	—	—	1	—	—
	M4T, H4T,	P	7649 F4T	—	—	—	1	—	—
	M4XA, H4XA,	P	7649 F4X	—	—	—	1	—	—
	M4XP, H4XP,	P	7649 F4P	—	—	—	1	—	—
	M4XW, H4XW,	P	7649 F4W	—	—	—	1	—	—
	M4B	P	7650 F4B	—	—	—	—	—	1
	M4F	P	7650 F4F	—	—	—	—	—	1
	M4XA	P	7650 F4X	—	—	—	—	—	1
	H3B	P	7770 F3B	1	1	—	—	1	—
	H3F	P	7770 F3F	1	1	—	—	1	—
	H3K	P	7770 F3K	—	—	—	—	1	—

NOTE: A letter code in the carline column indicates the carline for which the part is released as follows:

CARLINES Indicate: J - Challenger, B - Barracuda, V - Valiant, L - Dart, R - Belvedere, W - Coronet, P - Plymouth, D - Dodge, C - Chrysler, Y - Imperial

AR Indicates use as required.
★ Indicates change or addition.

Right and left part numbers are on same line, first number is right, second number is left.

Printed in U.S.A.
December 1970

CODE	PART NAME	CAR LINE	PART NUMBER	Sed.	4 D.H.T.	Sta. Wgn.	2 D.H.T.	Sp. 2 D.H.T.	Conv.
23-109-36	COVER Cont'd.								
	H3XA	P	7770 F3X	1	1	—	—	1	—
	H3Y	P	7770 F3Y	1	1	—	—	1	—
	H3B	P	7768 F3B	—	—	—	1	—	—
	H3F	P	7768 F3F	—	—	—	1	—	—
	H3K	P	7768 F3K	—	—	—	1	—	—
	H3XA	P	7768 F3X	—	—	—	1	—	—
	UP TO BUILD DATE 11-1-69 H5B, H7B	P	7688 F5B	1	1	—	—	1	—
	UP TO BUILD DATE 11-1-69 H5F, H7F	P	7688 F5F	1	1	—	—	1	—
	AFTER BUILD DATE 11-1-69 H5B, H7B	P	*7688 F5D	1	1	—	—	1	—
	AFTER BUILD DATE 11-1-69 H5F, H7F	P	*7688 F5G	1	1	—	—	1	—
	UP TO BUILD DATE 11-1-69 H5B	P	7685 F5B	—	—	—	1	—	—
	UP TO BUILD DATE 11-1-69 H5F	P	7685 F5F	—	—	—	1	—	—
	AFTER BUILD DATE 11-1-69 H5B	P	*7685 F5D	—	—	—	1	—	—
	AFTER BUILD DATE 11-1-69 H5F	P	*7685 F5G	—	—	—	1	—	—
	H6B, M6B,	P	7700 F6B	—	—	—	1	—	—
	M6F, H6F	P	7700 F6F	—	—	—	1	—	—
	H6K	P	7700 F6K	—	—	—	1	—	—
	M6T, H6T	P	7700 F6T	—	—	—	1	—	—
	M6XA, H6XA	P	7700 F6X	—	—	—	1	—	—
	M6B, H6B	P	7702 F6B	—	—	—	—	1	—
	M6F, H6F	P	7702 F6F	—	—	—	—	1	—
	H6K	P	7702 F6K	—	—	—	—	1	—
	M6T, H6T	P	7702 F6T	—	—	—	—	1	—
	M6XA, H6XA	P	7702 F6X	—	—	—	—	1	—
	M6B, H6B	P	7701 F6B	—	—	—	—	—	1
	M6F, H6F	P	7701 F6F	—	—	—	—	—	1
	M6XA, H6XA	P	7701 F6X	—	—	—	—	—	1
	D6T, H8T	P	7774 F6T	1	1	—	—	1	—
	D6XA, H8XA	P	7774 F6X	1	1	—	—	1	—
	D6T	P	7772 F6T	—	—	—	1	—	—
	D6XA	P	7772 F6X	—	—	—	1	—	—
	2 DOOR								
	L2B	W	7644 F2B	1	—	—	—	—	—
	L2T	W	7644 F2T	1	—	—	—	—	—
	L2X	W	7644 F2X	1	—	—	—	—	—
	4 DOOR								
	L2B	W	7645 F2B	1	—	—	—	—	—
	L2T	W	7645 F2T	1	—	—	—	—	—
	L2X	R,W	7645 F2X	1	—	—	—	—	—
	L2B	W	7646 F2B	—	—	1	—	—	—
	L2T	W	7646 F2T	—	—	1	—	—	—
	L2X	R,W	7646 F2X	—	—	1	—	—	—
	H1B	W	7662 F1B	1	—	—	—	—	—
	H1F	W	7662 F1F	1	—	—	—	—	—
	H1X	W	7662 F1X	1	—	—	—	—	—
	H1Y	W	7662 F1Y	1	—	—	—	—	—
	2 DOOR								
	H2B	W	7674 F2B	1	—	—	1	—	—
	H2F	W	7674 F2F	1	—	—	1	—	—
	H2K	W	7674 F2K	1	—	—	1	—	—
	H2T	W	7674 F2T	1	—	—	1	—	—
	H2X	W	7674 F2X	1	—	—	1	—	—
	H2XW	W	7674 FW1	1	—	—	1	—	—
	4 DOOR								
	H2B	W	7673 F2B	1	—	—	—	—	—
	H2F	W	7673 F2F	1	—	—	—	—	—
	H2T	W	7673 F2T	1	—	—	—	—	—
	H2X	W	7673 F2X	1	—	—	—	—	—

NOTE: A letter code in the carline column indicates the carline for which the part is released as follows:

CARLINES Indicate: J - Challenger, B - Barracuda, V - Valiant, L - Dart, R - Belvedere, W - Coronet, P - Plymouth, D - Dodge, C - Chrysler, Y - Imperial

AR Indicates use as required.
★ Indicates change or addition.

Right and left part numbers are on same line, first number is right, second number is left.

Printed in U.S.A.
December 1970

CODE	PART NAME	CAR LINE	PART NUMBER	Sed.	4 D.H.T.	Sta. Wgn.	2 D.H.T.	Sp. 2 D.H.T.	Conv.
23-109-36	COVER Cont'd.								
	2ND SEAT								
	H2B	W	7675 F2B	—	—	1	—	—	—
	H2F	W	7675 F2F	—	—	1	—	—	—
	H2T	W	7675 F2T	—	—	1	—	—	—
	H2X	W	7675 F2X	—	—	1	—	—	—
	3RD SEAT								
	H2B	W	7676 F2B	—	—	1	—	—	—
	H2F	W	7676 F2F	—	—	1	—	—	—
	H2T	W	7676 F2T	—	—	1	—	—	—
	H2X	W	7676 F2X	—	—	1	—	—	—
	D4B, D6B,	W	7697 F4B	—	—	—	—	—	1
	D4F, D6F	W	7697 F4F	—	—	—	—	—	1
	D4K, D6K	W	7697 F4K	—	—	—	—	—	1
	D4T, D6T,	W	7697 F4T	—	—	—	—	—	1
	D4X, D6X	W	7697 F4X	—	—	—	—	—	1
	D4XW, D6XW	W	7697 F4W	—	—	—	—	—	1
	D6B, M6B	W	7698 F6B	1	—	—	1	—	—
	D6F, M6F	W	7698 F6F	1	—	—	1	—	—
	D6K, M6K	W	7698 F6K	1	—	—	1	—	—
	D6T, M6T	W	7698 F6T	1	—	—	1	—	—
	D6X, M6X	W	7698 F6X	1	—	—	1	—	—
	D6XW, M6XW	W	7698 F6W	1	—	—	1	—	—
	D6XW, M6XW	W	7698 F6Y	1	—	—	1	—	—
	UP TO BUILD DATE 11-1-69 P3B	W	7734 F3B	1	—	—	—	—	—
	UP TO BUILD DATE 11-1-69 P3F	W	7734 F3F	1	—	—	—	—	—
	UP TO BUILD DATE 11-1-69 P3K	W	7734 F3K	1	—	—	—	—	—
	UP TO BUILD DATE 11-1-69 P3X	W	7734 F3X	1	—	—	—	—	—
	UP TO BUILD DATE 11-1-69 P3Y	W	7734 F3Y	1	—	—	—	—	—
	AFTER BUILD DATE 11-1-69 P3B	W	*7734 F3D	1	—	—	—	—	—
	AFTER BUILD DATE 11-1-69 P3F	W	*7734 F3G	1	—	—	—	—	—
	AFTER BUILD DATE 11-1-69 P3K	W	*7734 F3C	1	—	—	—	—	—
	AFTER BUILD DATE 11-1-69 P3X	W	*7734 F3A	1	—	—	—	—	—
	AFTER BUILD DATE 11-1-69 P3Y	W	*7734 F3Z	1	—	—	—	—	—
	P4B	W	7726 F4B	1	—	—	—	—	—
	P4F	W	7726 F4F	1	—	—	—	—	—
	P4T	W	7726 F4T	1	—	—	—	—	—
	P4X	W	7726 F4X	1	—	—	—	—	—
	2ND SEAT								
	P4B, P6B,	W	7727 F4B	—	—	1	—	—	—
	P4F	W	7727 F4F	—	—	1	—	—	—
	P4T, P6T	W	7727 F4T	—	—	1	—	—	—
	P4X, P6X,	W	7727 F4X	—	—	1	—	—	—
	3RD SEAT								
	P4B, P6B	W	7728 F4B	—	—	1	—	—	—
	P4F	W	7728 F4F	—	—	1	—	—	—
	P4T, P6T	W	7728 F4T	—	—	1	—	—	—
	P4X, P6X	W	7728 F4X	—	—	1	—	—	—
	C5XA	W	7748 F5X	—	—	—	—	1	—
	C2B, C6B, CRB	W	7747 F2B	—	—	—	—	1	—
	C2F, C6F, CRF	W	7747 F2F	—	—	—	—	1	—
	C2K, C6K	W	7747 F2K	—	—	—	—	1	—
	C2T, C6T, CRT	W	7747 F2T	—	—	—	—	1	—
	C2XA, C6XA, CRXA	W	7747 F2X	—	—	—	—	1	—
	C2XW, C6XW	W	7747 F2W	—	—	—	—	1	—
	K1T (UP TO BUILD DATE 2-1-70)	P	7752 F1T	1	—	—	—	—	—
	K1T (AFTER BUILD DATE 2-1-70)	P	7752 FTT	1	—	—	—	—	—
	K2T	P	7754 F2T	1	—	—	—	—	—

NOTE: A letter code in the carline column indicates the carline for which the part is released as follows:

CARLINES Indicate: J - Challenger, B - Barracuda, V - Valiant, L - Dart, R - Belvedere, W - Coronet, P - Plymouth, D - Dodge, C - Chrysler, Y - Imperial

AR Indicates use as required.
★ Indicates change or addition.

Right and left part numbers are on same line, first number is right, second number is left.

Printed in U.S.A.
December 1970

CODE	PART NAME	CAR LINE	PART NUMBER	Sed.	4 D.H.T.	Sta. Wgn.	2 D.H.T.	Sp. 2 D.H.T.	Conv.
23-109-36	COVER Cont'd.								
	4 DOOR								
	K1A (UP TO BUILD DATE 2-1-70)	D	7753 F1A	1	—	—	—	—	—
	K1A (AFTER BUILD DATE 2-1-70)	D	7753 FAA	1	—	—	—	—	—
	K2A	D	7755 F2A	1	—	—	—	—	—
	B1B	D	7778 F1B	1	—	—	—	—	—
	B1T	D	7778 F1T	1	—	—	—	—	—
	L1B	D	7639 F1B	1	1	—	—	—	—
	UP TO BUILD DATE 11-1-69 L1F	D	7639 F1F	1	1	—	—	—	—
	UP TO BUILD DATE 11-1-69 L1X	D	7639 F1X	1	1	—	—	—	—
	UP TO BUILD DATE 11-1-69 L1Y	D	7639 F1Y	1	1	—	—	—	—
	AFTER BUILD DATE 11-1-69 L1F	D	*7639 F1G	1	1	—	—	—	—
	AFTER BUILD DATE 11-1-69 L1X	D	*7639 F1A	1	1	—	—	—	—
	AFTER BUILD DATE 11-1-69 L1Y	D	*7639 F1Z	1	1	—	—	—	—
	L1B	D	7638 F1B	—	—	—	1	—	—
	UP TO BUILD DATE 11-1-69 L1F	D	7638 F1F	—	—	—	1	—	—
	UP TO BUILD DATE 11-1-69 L1X	D	7638 F1X	—	—	—	1	—	—
	UP TO BUILD DATE 11-1-69 L1Y	D	7638 F1Y	—	—	—	1	—	—
	AFTER BUILD DATE 11-1-69 L1F	D	*7638 F1G	—	—	—	1	—	—
	AFTER BUILD DATE 11-1-69 L1X	D	*7638 F1A	—	—	—	1	—	—
	AFTER BUILD DATE 11-1-69 L1Y	D	*7638 F1Z	—	—	—	1	—	—
	L2B	D	7641 F2B	1	1	—	—	—	—
	L2F	D	7641 F2F	1	1	—	—	—	—
	L2T	D	7641 F2T	1	1	—	—	—	—
	L2X	D	7641 F2X	1	1	—	—	—	—
	L2B	D	7640 F2B	—	—	—	1	—	—
	L2F	D	7640 F2F	—	—	—	1	—	—
	L2T	D	7640 F2T	—	—	—	1	—	—
	L2X	D	7640 F2X	—	—	—	1	—	—
	2ND SEAT								
	L2B	D	7647 F2B	—	—	1	—	—	—
	L2F	D	7647 F2F	—	—	1	—	—	—
	L2T	D	7647 F2T	—	—	1	—	—	—
	L2X	D	7647 F2X	—	—	1	—	—	—
	3RD SEAT								
	L2B	D	7642 F2B	—	—	1	—	—	—
	L2F	D	7642 F2F	—	—	1	—	—	—
	L2T	D	7642 F2T	—	—	1	—	—	—
	L2X	D	7642 F2X	—	—	1	—	—	—
	L2B	D	7643 F2B	—	—	—	—	—	1
	L2F	D	7643 F2F	—	—	—	—	—	1
	L2X, L6X	D	7643 F2X	—	—	—	—	—	1
	UP TO BUILD DATE 11-1-69 D1B	D	7763 F1B	1	1	—	—	—	—
	UP TO BUILD DATE 11-1-69 D1F	D	7763 F1F	1	1	—	—	—	—
	UP TO BUILD DATE 11-1-69 D1X	D	7763 F1X	1	1	—	—	—	—
	AFTER BUILD DATE 11-1-69 D1B	D	*7763 F1D	1	1	—	—	—	—
	AFTER BUILD DATE 11-1-69 D1F	D	*7763 F1G	1	1	—	—	—	—
	AFTER BUILD DATE 11-1-69 D1X	D	*7763 F1A	1	1	—	—	—	—
	D1Y	D	7763 F1Y	1	1	—	—	—	—
	UP TO BUILD DATE 11-1-69 D1B	D	7776 F1B	—	—	—	1	—	—
	UP TO BUILD DATE 11-1-69 D1F	D	7776 F1F	—	—	—	1	—	—
	UP TO BUILD DATE 11-1-69 D1X	D	7776 F1X	—	—	—	1	—	—
	AFTER BUILD DATE 11-1-69 D1B	D	*7776 F1D	—	—	—	1	—	—
	AFTER BUILD DATE 11-1-69 D1F	D	*7776 F1G	—	—	—	1	—	—
	AFTER BUILD DATE 11-1-69 D1X	D	*7776 F1A	—	—	—	1	—	—
	D1Y	D	7776 F1Y	—	—	—	1	—	—
	L4B	D	7765 F4B	1	1	—	—	—	—
	L4F	D	7765 F4F	1	1	—	—	—	—

NOTE: A letter code in the carline column indicates the carline for which the part is released as follows:

CARLINES Indicate: J - Challenger, B - Barracuda, V - Valiant, L - Dart, R - Belvedere, W - Coronet, P - Plymouth, D - Dodge, C - Chrysler, Y - Imperial

AR Indicates use as required.
★ Indicates change or addition.

Right and left part numbers are on same line, first number is right, second number is left.

Printed in U.S.A.
December 1970

CODE	PART NAME	CAR LINE	PART NUMBER	Sed.	4 D.H.T.	Sta. Wgn.	2 D.H.T.	Sp. 2 D.H.T.	Conv.
23-109-36	COVER Cont'd.								
	L4X	D	7765 F4X	1	1	—	—	—	—
	L4XW	D	7765 F4W	—	1	—	—	—	—
	L4X, D6X	D	7764 F4X	—	—	—	1	—	—
	L4XW, D6XW	D	7764 F4W	—	—	—	1	—	—
	L4B	D	7764 F4B	—	—	—	1	—	—
	L4F	D	7764 F4F	—	—	—	1	—	—
	H1B, H7B	D	7706 F1B	1	1	—	—	—	—
	H1F, H7F	D	7706 F1F	1	1	—	—	—	—
	H1T	D	7706 F1T	1	1	—	—	—	—
	H1X, H7X	D	7706 F1X	1	1	—	—	—	—
	H1Y	D	7706 F1Y	1	1	—	—	—	—
	H3B	D	7714 F3B	—	—	—	1	—	—
	H3F	D	7714 F3F	—	—	—	1	—	—
	H3X	D	7714 F3X	—	—	—	1	—	—
	2ND SEAT								
	H4B	D	7708 F4B	—	—	1	—	—	—
	H4F, H8F	D	7708 F4F	—	—	1	—	—	—
	H4T, H8T	D	7708 F4T	—	—	1	—	—	—
	H4X, H8X	D	7708 F4X	—	—	1	—	—	—
	3RD SEAT								
	H4B	D	7683 F4B	—	—	1	—	—	—
	H4F, H8F	D	7683 F4F	—	—	1	—	—	—
	H4T, H8T	D	7683 F4T	—	—	1	—	—	—
	H4X, H8X	D	7683 F4X	—	—	1	—	—	—
	H4B, H6B	D	7713 F4B	—	—	—	1	—	—
	H4F, H6F	D	7713 F4F	—	—	—	1	—	—
	H4K, H6K	D	7713 F4K	—	—	—	1	—	—
	H4X, H6X	D	7713 F4X	—	—	—	1	—	—
	H4Y	D	7713 F4Y	—	—	—	1	—	—
	H8F	D	7707 F8F	—	1	—	—	—	—
	H8K	D	7707 F8K	—	1	—	—	—	—
	H8X	D	7707 F8X	—	1	—	—	—	—
	P6B	D	7741 F6B	—	—	—	1	—	—
	P6F	D	7741 F6F	—	—	—	1	—	—
	P6K	D	7741 F6K	—	—	—	1	—	—
	W6T, P6T	D	7741 F6T	—	—	—	1	—	—
	P6XA	D	7741 F6X	—	—	—	1	—	—
	P6XP	D	7741 F6P	—	—	—	1	—	—
	P6XW	D	7741 F6W	—	—	—	1	—	—
	P6B	D	7740 F6B	—	—	—	—	—	1
	P6F	D	7740 F6F	—	—	—	—	—	1
	P6XA	D	7740 F6X	—	—	—	—	—	1
	P6XW	D	7740 F6W	—	—	—	—	—	1
	B2B	D	7750 F2B	1	—	—	—	—	—
	B2T	D	7750 F2T	1	—	—	—	—	—
	UP TO BUILD DATE 10-1-69 F2T	D	7745 F2T	1	—	—	—	—	—
	UP TO BUILD DATE 10-1-69 F2XA	D	7745 F2X	1	—	—	—	—	—
	AFTER BUILD DATE 10-1-69 F2T	D	★7782 F2T	1	—	—	—	—	—
	AFTER BUILD DATE 10-1-69 F2XA	D	★7782 F2X	1	—	—	—	—	—
	F1B	D	7744 F1B	1	—	—	—	—	—
	F1F	D	7744 F1F	1	—	—	—	—	—
	F1XA	D	7744 F1X	1	—	—	—	—	—
	F1Y	D	7744 F1Y	1	—	—	—	—	—
	F1B	D	7716 F1B	—	—	—	1	—	—
	F1F	D	7716 F1F	—	—	—	1	—	—
	F1Y	D	7716 F1Y	—	—	—	1	—	—
	UP TO BUILD DATE 10-1-69 F2T	D	7720 F2T	—	—	—	1	—	—

NOTE: A letter code in the carline column indicates the carline for which the part is released as follows:

CARLINES Indicate: J - Challenger, B - Barracuda, V - Valiant, L - Dart, R - Belvedere, W - Coronet, P - Plymouth, D - Dodge, C - Chrysler, Y - Imperial

AR Indicates use as required.

★ Indicates change or addition.

Right and left part numbers are on same line, first number is right, second number is left.

Printed in U.S.A.
December 1970

CODE	PART NAME	CAR LINE	PART NUMBER	Sed.	4 D.H.T.	Sta. Wgn.	2 D.H.T.	Sp. 2 D.H.T.	Conv.
23-109-36	COVER Cont'd.								
	UP TO BUILD DATE 10-1-69 F2XA	D	7720 F2X	—	—	—	1	—	—
	AFTER BUILD DATE 10-1-69 F2T	D	*7780 F2T	—	—	—	1	—	—
	AFTER BUILD DATE 10-1-69 F2XA	D	*7780 F2X	—	—	—	1	—	—
	W1B	D	7738 F1B	1	1	—	—	—	—
	W1F	D	7738 F1F	1	1	—	—	—	—
	W1XA	D	7738 F1X	1	1	—	—	—	—
	W1Y	D	7738 F1Y	1	1	—	—	—	—
	W4B	D	7739 F4B	—	—	—	1	—	—
	W4F	D	7739 F4F	—	—	—	1	—	—
	W4K	D	7739 F4K	—	—	—	1	—	—
	W4T	D	7739 F4T	—	—	—	1	—	—
	W4XA	D	7739 F4X	—	—	—	1	—	—
	W4XP	D	7739 F4D	—	—	—	1	—	—
	W4XW	D	7739 F4W	—	—	—	1	—	—
	W1B	D	7737 F1B	—	—	—	1	—	—
	W1F	D	7737 F1F	—	—	—	1	—	—
	W1K	D	7737 F1K	—	—	—	1	—	—
	W1XA	D	7737 F1X	—	—	—	1	—	—
	W4B	D	7749 F4B	1	1	—	—	—	—
	W4F	D	7749 F4F	1	1	—	—	—	—
	W4K	D	7749 F4K	—	1	—	—	—	—
	W4T	D	7749 F4T	1	1	—	—	—	—
	W4XA, W8XA	D	7749 F4X	1	1	—	—	—	—
	W4Y	D	7749 F4Y	1	1	—	—	—	—
	UP TO BUILD DATE 11-1-69 P7B	D	*7767 F7B	1	1	—	—	—	—
	UP TO BUILD DATE 11-1-69 P7F	D	*7767 F7F	1	1	—	—	—	—
	AFTER BUILD DATE 11-1-69 P7B	D	*7767 F7D	1	1	—	—	—	—
	AFTER BUILD DATE 11-1-69 P7F	D	*7767 F7G	1	1	—	—	—	—
	UP TO BUILD DATE 11-1-69 P5B	D	*7766 F5B	—	—	—	1	—	—
	UP TO BUILD DATE 11-1-69 P5F	D	*7766 F5F	—	—	—	1	—	—
	AFTER BUILD DATE 11-1-69 P5B	D	*7766 F5D	—	—	—	1	—	—
	AFTER BUILD DATE 11-1-69 P5F	D	*7766 F5G	—	—	—	1	—	—
	E1B	C	7601 F1B	1	1	—	—	—	—
	E1F	C	7601 F1F	1	1	—	—	—	—
	E1L	C	7601 F1L	1	1	—	—	—	—
	E1P	C	7601 F1P	1	1	—	—	—	—
	E1X	C	7601 F1X	1	1	—	—	—	—
	E1B	C	7600 F1B	—	—	—	1	—	—
	E1F	C	7600 F1F	—	—	—	1	—	—
	E1L	C	7600 F1L	—	—	—	1	—	—
	E1P	C	7600 F1P	—	—	—	1	—	—
	E1X	C	7600 F1X	—	—	—	1	—	—
	E2B	C	7604 F2B	1	1	—	—	—	—
	E2T	C	7604 F2T	—	1	—	—	—	—
	E2Y	C	7604 F2Y	1	1	—	—	—	—
	E2X	C	7604 F2X	1	1	—	—	—	—
	E2B	C	7602 F2B	—	—	—	1	—	—
	E2T	C	7602 F2T	—	—	—	1	—	—
	E2Y	C	7602 F2Y	—	—	—	1	—	—
	E2X	C	7602 F2X	—	—	—	1	—	—
	E2B	C	7603 F2B	—	—	—	—	—	1
	E2Y	C	7603 F2Y	—	—	—	—	—	1
	E2X	C	7603 F2X	—	—	—	—	—	1
	L3B	C	7606 F3B	1	1	—	—	—	—
	L3F	C	7606 F3F	1	1	—	—	—	—
	L3P	C	7606 F3P	1	1	—	—	—	—
	L3X	C	7606 F3X	1	1	—	—	—	—

NOTE: A letter code in the carline column indicates the carline for which the part is released as follows:

CARLINES Indicate: J - Challenger, B - Barracuda, V - Valiant, L - Dart, R - Belvedere, W - Coronet, P - Plymouth, D - Dodge, C - Chrysler, Y - Imperial

AR Indicates use as required.
★ Indicates change or addition.

Right and left part numbers are on same line, first number is right, second number is left.

Printed in U.S.A.
December 1970

CODE	PART NAME	CAR LINE	PART NUMBER	Sed.	4 D.H.T.	Sta. Wgn.	2 D.H.T.	Sp. 2 D.H.T.	Conv.
23-109-36	COVER Cont'd.								
	L3Y	C	7606 F3Y	1	1	—	—	—	—
	L3B	C	7605 F3B	—	—	—	1	—	—
	L3F	C	7605 F3F	—	—	—	1	—	—
	L3P	C	7605 F3P	—	—	—	1	—	—
	L3X	C	7605 F3X	—	—	—	1	—	—
	L3Y	C	7605 F3Y	—	—	—	1	—	—
	L4B, M4B	C	7610 F4B	1	1	—	—	—	—
	L4R, M4R	C	7610 F4R	1	1	—	—	—	—
	L4X, L8X, M4X	C	7610 F4X	1	1	—	—	—	—
	L4B, M4B	C	7609 F4B	—	—	—	1	—	—
	L4R, M4R	C	7609 F4R	—	—	—	1	—	—
	L4X, M4X	C	7609 F4X	—	—	—	1	—	—
	L7L	C	7608 F3L	1	1	—	—	—	—
	L7R	C	7608 F3R	1	1	—	—	—	—
	M3F	C	7608 F3F	—	1	—	—	—	—
	M3X	C	7608 F3X	—	1	—	—	—	—
	M3Y	C	7608 F3Y	—	1	—	—	—	—
	M3F	C	7607 F3F	—	—	—	1	—	—
	M3X	C	7607 F3X	—	—	—	1	—	—
	M3Y	C	7607 F3Y	—	—	—	1	—	—
	D2TY	C	*7663 F2T	—	—	—	1	—	—
	D2T	C	*7796 F2T	—	1	—	—	—	—
	M6F	C	7617 F6F	—	1	—	—	—	—
	M6T	C	7617 F6T	—	1	—	—	—	—
	M6X	C	7617 F6X	—	1	—	—	—	—
	M6XW	C	7617 F6W	—	1	—	—	—	—
	M6F	C	7615 F6F	—	—	—	1	—	—
	E6T, M6T	C	7615 F6T	—	—	—	1	—	—
	E6X, M6X	C	7615 F6X	—	—	—	1	—	—
	E6XW, M6XW	C	7615 F6W	—	—	—	1	—	—
	M6B	C	7616 F6B	—	—	—	—	—	1
	M6F	C	7616 F6F	—	—	—	—	—	1
	E6T, M6T	C	7616 F6T	—	—	—	—	—	1
	E6X, M6X	C	7616 F6X	—	—	—	—	—	1
	E6XW, M6XW	C	7616 F6W	—	—	—	—	—	1
	H1B	C	7623 F1B	1	1	—	—	—	—
	H1F, H7F	C	7623 F1F	1	1	—	—	—	—
	H1P	C	7623 F1P	1	1	—	—	—	—
	H1X	C	7623 F1X	1	1	—	—	—	—
	H1Y	C	7623 F1Y	1	1	—	—	—	—
	H7B	C	7623 F1B	1	1	—	—	—	—
	H7L	C	7623 F1L	1	1	—	—	—	—
	H7R	C	7623 F1R	1	1	—	—	—	—
	HST	C	7625 FST	1	1	—	—	—	—
	H8L	C	7624 F8L	—	1	—	—	—	—
	H8X	C	7624 F8X	—	1	—	—	—	—
	M5L	C	7614 F5L	—	1	—	—	—	—
	M5L	C	7613 F5L	—	—	—	1	—	—
	H3B	C	7621 F3B	—	—	—	1	—	—
	H3F	C	7621 F3F	—	—	—	1	—	—
	H3P	C	7621 F3P	—	—	—	1	—	—
	H3X	C	7621 F3X	—	—	—	1	—	—
	H3Y	C	7621 F3Y	—	—	—	1	—	—
	H6B	C	7622 F6B	—	—	—	1	—	—
	H6T	C	7622 F6T	—	—	—	1	—	—
	H6XW	C	7622 F6W	—	—	—	1	—	—
	H6X	C	7622 F6X	—	—	—	1	—	—

NOTE: A letter code in the carline column indicates the carline for which the part is released as follows:

CARLINES Indicate: J - Challenger, B - Barracuda, V - Valiant, L - Dart, R - Belvedere, W - Coronet, P - Plymouth, D - Dodge, C - Chrysler, Y - Imperial

AR Indicates use as required.
★ Indicates change or addition.

Right and left part numbers are on same line, first number is right, second number is left.

Printed in U.S.A.
December 1970

CODE	PART NAME	CAR LINE	PART NUMBER	Sed.	4 D.H.T.	Sta. Wgn.	2 D.H.T.	Sp. 2 D.H.T.	Conv.
23-109-36	COVER Cont'd.								
	2ND SEAT								
	P4B	C	7611 F4B	—	—	1	—	—	—
	P4F, P8F	C	7611 F4F	—	—	1	—	—	—
	P4R	C	7611 F4R	—	—	1	—	—	—
	P4T	C	7611 F4T	—	—	1	—	—	—
	P4X, P8X	C	7611 F4X	—	—	1	—	—	—
	P7L	C	7618 F7L	—	—	1	—	—	—
	3RD SEAT								
	P4B	C	7612 F4B	—	—	1	—	—	—
	P4F, P8F	C	7612 F4F	—	—	1	—	—	—
	P4R	C	7612 F4R	—	—	1	—	—	—
	P4T	C	7612 F4T	—	—	1	—	—	—
	P4X, P8X	C	7612 F4X	—	—	1	—	—	—
	P7L	C	7619 F7L	—	—	1	—	—	—
	L1B	Y	7742 F1B	—	1	—	—	—	—
	L1F	Y	7742 F1F	—	1	—	—	—	—
	L1M	Y	7742 F1M	—	1	—	—	—	—
	L1P	Y	7742 F1P	—	1	—	—	—	—
	L1TT	Y	7742 F1T	—	1	—	—	—	—
	L1X	Y	7742 F1X	—	1	—	—	—	—
	MDA	Y	7757 FDA	—	1	—	—	—	—
	MDB	Y	7757 FDB	—	1	—	—	—	—
	MDF	Y	7757 FDF	—	1	—	—	—	—
	MDM	Y	7757 FDM	—	1	—	—	—	—
	MDP	Y	7757 FDP	—	1	—	—	—	—
	MDTT	Y	7757 FDT	—	1	—	—	—	—
	MDX	Y	7757 FDX	—	1	—	—	—	—
	MDY	Y	7757 FDY	—	1	—	—	—	—
	MSB	Y	7677 FSB	—	1	—	—	—	—
	MSF	Y	7677 FSF	—	1	—	—	—	—
	MSR	Y	7677 FSR	—	1	—	—	—	—
	MST	Y	7677 FST	—	1	—	—	—	—
	MSXW	Y	7677 FSW	—	1	—	—	—	—
	MSX	Y	7677 FSX	—	1	—	—	—	—
	MSY	Y	7677 FSY	—	1	—	—	—	—
	L3B	Y	7756 F3B	—	—	—	1	—	—
	L3F	Y	7756 F3F	—	—	—	1	—	—
	L3TT	Y	7756 F3T	—	—	—	1	—	—
	L3X	Y	7756 F3X	—	—	—	1	—	—
	MBB	Y	7699 FBB	—	—	—	1	—	—
	MBF	Y	7699 FBF	—	—	—	1	—	—
	MBP	Y	7699 FBP	—	—	—	1	—	—
	MBTT	Y	7699 FBT	—	—	—	1	—	—
	MBX	Y	7699 FBX	—	—	—	1	—	—
	MBY	Y	7699 FBY	—	—	—	1	—	—
	MRB	Y	7751 FRB	—	—	—	1	—	—
	MRF	Y	7751 FRF	—	—	—	1	—	—
	MRT	Y	7751 FRT	—	—	—	1	—	—
	MRX	Y	7751 FRX	—	—	—	1	—	—
	MRXW	Y	7751 FRW	—	—	—	1	—	—
	MRY	Y	7751 FRY	—	—	—	1	—	—
23-109-38	RETAINER, Cushion Center Floor Pan Rear	V,L,R,W,P,D,C,Y	3446 302	2	2	2	2	2	2
	Floor Pan to 3RD Seat Cushion	R,W,P,D,C	3446 302	—	—	2	—	—	—

NOTE: A letter code in the carline column indicates the carline for which the part is released as follows:

CARLINES Indicate: J - Challenger, B - Barracuda, V - Valiant, L - Dart, R - Belvedere, W - Coronet, P - Plymouth, D - Dodge, C - Chrysler, Y - Imperial

AR Indicates use as required.
★ Indicates change or addition.

Right and left part numbers are on same line, first number is right, second number is left.

Printed in U.S.A.
December 1970

CODE	PART NAME		CAR LINE	PART NUMBER	Sed.	4 D.H.T.	Sta. Wgn.	2 D.H.T.	Sp. 2 D.H.T.	Conv.
23-111-6	RETAINER, Folding Top to Belt Bar Side		J	2964 436-7	—	—	—	—	—	1
			B	2964 434-5	—	—	—	—	—	1
	RET. and STRIP	Center	J	2964 439	—	—	—	—	—	1
			B	2964 438	—	—	—	—	—	1
		Side	R,W	2841 016-7	—	—	—	—	—	1
		Ctr.	R,W	2841 054	—	—	—	—	—	1
			R,W	2784 613	—	—	—	—	—	1
		Side	P,D	2902 716-7	—	—	—	—	—	1
		Ctr.	P,D	2902 657	—	—	—	—	—	1
		Side	C	2902 726-7	—	—	—	—	—	1
		Corner	C	2964 642-3	—	—	—	—	—	1
	RETAINER and TACKING STRIP FOLD. TOP to BELT BAR	Ctr.	R,W	2784 613	—	—	—	—	—	1
		Side	R,W	2603 740-1	—	—	—	—	—	1
23-111-37	STRIP, Tacking									
		No. 1 and No. 2 Bow	R,W	2603 705	—	—	—	—	—	2
		No. 3 Bow, Ctr.	R,W	2603 557	—	—	—	—	—	1
		No. 2 Bow	P,D,C	2901 218	—	—	—	—	—	2
		End No. 3 Bow	B,J,P,D,C	2901 220	—	—	—	—	—	2
23-112-4	RETAINER, Folding Top Rear Side Rail Top Material		B,J	2964 394-5	—	—	—	—	—	1
			R,W	2841 390-1	—	—	—	—	—	1
			P,D,C	2902 832-3	—	—	—	—	—	1
	RETAINER, Rear Rail Top Material		R,W	2605 182-3	—	—	—	—	—	4
23-112-12	BOOT, Folding Top Dust									
	H6B, P6B		B	1954 FB5	—	—	—	—	—	1
	H6E, P6E		B	1954 FE4	—	—	—	—	—	1
	H6F, P6F		B	1954 FF8	—	—	—	—	—	1
	P6K		B	1954 FK4	—	—	—	—	—	1
	H6T, P6T, PRT		B	1954 FT5	—	—	—	—	—	1
	P6A		B	1954 FA8	—	—	—	—	—	1
	H6BW, H6EW, H6FW, H6XW, P6BW, P6EW, P6FW, P6XW, PRXW		B	1954 FW1	—	—	—	—	—	1
	H6X, PRX		B	1954 FX9	—	—	—	—	—	1
	P6YX		B	1954 FY4	—	—	—	—	—	1
	H6B		J	1964 FB5	—	—	—	—	—	1
	H6E		J	1964 FE4	—	—	—	—	—	1
	H6F		J	1964 FF8	—	—	—	—	—	1
	H6T, HRT		J	1964 FT5	—	—	—	—	—	1
	H6XW		J	1964 FW1	—	—	—	—	—	1
	H6K		J	1964 FK4	—	—	—	—	—	1
	H6X, HRX		J	1964 FX9	—	—	—	—	—	1
	H2B, H2BW, D4B, D6B		R,W	1915 EB7	—	—	—	—	—	1
	D4F, D6F		W	1915 EF8	—	—	—	—	—	1
	H2XW, P6XW, D4XW, D6XW		R,W	1915 EW1	—	—	—	—	—	1
	H2X, P6XA, D4X, D6X		R,W	1915 EX9	—	—	—	—	—	1
	H2K, H2KW, P6K, P6KW, D4K, D6K		R,W	1915 FK4	—	—	—	—	—	1
	D4T, D6T		W	1915 FT5	—	—	—	—	—	1
	M4B, M6B, L2B		P,D	*1943 EB3	—	—	—	—	—	1
	M4F, M6F		P,D	*1943 FF8	—	—	—	—	—	1
	M4XA, M6XA		P	*1943 FA8	—	—	—	—	—	1
	L2F		D	*1943 FF8	—	—	—	—	—	1
	L2X, L6X		D	*1943 EX9	—	—	—	—	—	1
	E2B, M6B		C	*1912 EB3	—	—	—	—	—	1
	M6F		C	*1912 EF8	—	—	—	—	—	1
	E6XW, M6XW		C	*1912 EW1	—	—	—	—	—	1
	E2X, E6X, M6X		C	*1912 EX9	—	—	—	—	—	1

NOTE: A letter code in the carline column indicates the carline for which the part is released as follows:

CARLINES Indicate: J - Challenger, B - Barracuda, V - Valiant, L - Dart, R - Belvedere, W - Coronet, P - Plymouth, D - Dodge, C - Chrysler, Y - Imperial

AR Indicates use as required.
★ Indicates change or addition.

Right and left part numbers are on same line, first number is right, second number is left.

Printed in U.S.A.
December 1970

CODE	PART NAME	CAR LINE	PART NUMBER	Sed.	4 D.H.T.	Sta. Wgn.	2 D.H.T.	Sp. 2 D.H.T.	Conv.
23-112-12	BOOT Cont'd.								
	E6T, M6T	C	*1912 FT5	—	—	—	—	—	1
	E2Y	C	*1912 FY4	—	—	—	—	—	1
23-112-18	RETAINER, Seat Back Dust Boot	B,J	2942 642	—	—	—	—	—	1
		R,W	2656 615	—	—	—	—	—	1
		P,D,C	2942 027	—	—	—	—	—	1
23-112-21	FASTENER, Dust Boot to Belt	B,J	3415 721	—	—	—	—	—	21
		R,W	2788 807	—	—	—	—	—	20
		P,D,C	2878 583	—	—	—	—	—	29
23-112-45	CURTAIN, Folding Top Rear								
	White	B,J	1992 FW1	—	—	—	—	—	1
	Black	B,J	1992 FX9	—	—	—	—	—	1
	White	R,W	1902 EW1	—	—	—	—	—	1
	Black	R,W	1902 EX9	—	—	—	—	—	1
	W/GLASS BACKLITE								
		P,D,C	1987 EW1	—	—	—	—	—	1
		P,D,C	1987 EX9	—	—	—	—	—	1
	W/VINYL BACKLITE								
		P,D,C	1988 EW1	—	—	—	—	—	1
		P,D,C	1988 EX9	—	—	—	—	—	1
23-112-46	ZIPPER, Rear Curtain								
		B,J	1923 CX8	—	—	—	—	—	1
		R,W	1972 EX8	—	—	—	—	—	1
		P,D,C	1968 EX8	—	—	—	—	—	1
23-112-75	TIP, Wire-on Binding End	R,W,P,D,C	1158 977	—	—	—	—	—	2
23-112-88	CABLE, Cover Side Tension	B,J	2879 874-5	—	—	—	—	—	1
		R, W	2657 672-3	—	—	—	—	—	1
		P,D,C	2878 214-5	—	—	—	—	—	1
23-112-108	DECK and SIDE QUARTER, Folding Top								
	White	B,J	1935 FW1	—	—	—	—	—	1
	Black	B,J	1935 FX9	—	—	—	—	—	1
	White	R,W	1937 DW1	—	—	—	—	—	1
	Black	R,W	1937 DX9	—	—	—	—	—	1
	White	P,D,C	1980 EW1	—	—	—	—	—	1
	Black	P,D,C	1980 EX9	—	—	—	—	—	1
23-112-112	PAD, Folding Top Stay								
		R,W	1952-3 DX9	—	—	—	—	—	1
		P,D,C	1982-3 EX9	—	—	—	—	—	1
	Black	B,J	2086-7 FX9	—	—	—	—	—	1
23-112-153	PANEL, Folding Top Pocket								
	CODES								
	P6B	B	2046-7 FB6	—	—	—	—	—	1
	P6F	B	2046-7 FF7	—	—	—	—	—	1
	P6YX	B	2046-7 FY5	—	—	—	—	—	1
	P6E	B	2046-7 FE5	—	—	—	—	—	1
	P6K	B	2046-7 FK6	—	—	—	—	—	1
	P6T, PRT	B	2046-7 FT1	—	—	—	—	—	1
	P6BW, P6EW, P6FW, P6XW, PRXW	B	2046-7 FW1	—	—	—	—	—	1
	P6A, PRX	B	2046-7 FX9	—	—	—	—	—	1
	WELL COVER Black	B,J	1940 FX9	—	—	—	—	—	1
	H6B	B	2004-5 FB6	—	—	—	—	—	1
	H6F	B	2004-5 FF7	—	—	—	—	—	1
	H6E	B	2004-5 FE5	—	—	—	—	—	1
	H6T, PRT	B	2004-5 FT1	—	—	—	—	—	1
	H6BW, H6EW, H6FW, H6XW, PRXW	B	2004-5 FW1	—	—	—	—	—	1
	H6X, PRX	B	2004-5 FX9	—	—	—	—	—	1
	H6B	J	2008-9 FB6	—	—	—	—	—	1
	H6F	J	2008-9 FF7	—	—	—	—	—	1

NOTE: A letter code in the carline column indicates the carline for which the part is released as follows:

CARLINES Indicate: J - Challenger, B - Barracuda, V - Valiant, L - Dart, R - Belvedere, W - Coronet, P - Plymouth, D - Dodge, C - Chrysler, Y - Imperial

AR Indicates use as required.
★ Indicates change or addition.

Right and left part numbers are on same line, first number is right, second number is left.

Printed in U.S.A.
December 1970

CODE	PART NAME	CAR LINE	PART NUMBER	Sed.	4 D.H.T.	Sta. Wgn.	2 D.H.T.	Sp. 2 D.H.T.	Conv.
23-112-153	PANEL Cont'd.								
	H6E	J	2008-9 FE5	—	—	—	—	—	1
	H6K	J	2008-9 FK6	—	—	—	—	—	1
	H6T	J	2008-9 FT1	—	—	—	—	—	1
	H6XW	J	2008-9 FW1	—	—	—	—	—	1
	H6X	J	2008-9 FX9	—	—	—	—	—	1
	HRT	J	2042-3 FT1	—	—	—	—	—	1
	HRX	J	2042-3 FX9	—	—	—	—	—	1
		R	2074-5 FX9	—	—	—	—	—	1
		W	2072-3 FX9	—	—	—	—	—	1
	FOLDING TOP WELL COVER	R,W	1942 EX9	—	—	—	—	—	1
	FOLDING TOP WELL COVER	P	1944 EX9	—	—	—	—	—	1
	FOLDING TOP WELL	D	1994 EX9	—	—	—	—	—	1
	FOLDING TOP WELL COVER	C	1960 EX9	—	—	—	—	—	1
23-112-160	PAD, Pocket Panel Arm Rest								
	CODES								
	H2B, P6B	R	1202-3 FB5	—	—	—	—	—	1
	D4B, D6B	W	1202-3 EB7	—	—	—	—	—	1
	D4F, D6F	W	1202-3 EF8	—	—	—	—	—	1
	H2K, P6K, D4K, D6K	R,W	1202-3 FK5	—	—	—	—	—	1
	D4T, D6T	W	1202-3 FT4	—	—	—	—	—	1
	H2BW, H2KW, H2XW, P6BW, P6KW, P6XW, D4XW, D6XW	R,W	1202-3 EW1	—	—	—	—	—	1
	H2X9, P6XA, D4X9, D6X9	R,W	1202-3 DX9	—	—	—	—	—	1
23-113-2	WEATHERCORD Door								
	CODES								
	FRONT and REAR DOOR								
	L1B, L2B, L4B, L6BW, D2B, H1B, H2B	V,L	1548 EB7	AR	—	—	AR	AR	—
	L4E, L6EW, X1E, X2E, X3E, X4E	V	1548 FE5	AR	—	—	AR	AR	—
	L1F, L2F, L4F, H1F, H2F, H6F, D2F	V,L	1548 EF8	AR	—	—	AR	AR	—
	L4T, H2T, H4T, D2T	V,L	1548 FT4	AR	—	—	AR	AR	—
	L1X, L2X, L4X, L6X, L6XW, H1X, H2X, H2XW, H6X, D2X	V,L	1548 EX9	AR	—	—	AR	AR	—
	C6B, CRB, C2B	W	*1548 EB5	—	—	—	—	AR	—
	L1B, L2B, D2B, H1B, H2B, P3B, P4B, P6B, H2BW, P6BW, M2B, M6B, D4B, D6B	R,W	1548 EB7	AR	—	AR	AR	AR	AR
	M6F, H1F, H2F, P3F, P4F, D4F, D6F, C6F, CRF, C2F	R,W	1548 EF8	AR	—	AR	AR	AR	AR
	M6K, H2K, H2KW, P3K, P6K, P6KW, D4K, D6K, C6K, C2K	R,W	*1548 FK5	AR	—	AR	AR	AR	AR
	K1T, K2T, D2T, H2T, H2TW, L2T, P6T, P6TW, P6TS, T2T, P4T, D4T, D6T, C6T, CRT, C2T	R,W	1548 FT4	AR	—	AR	AR	AR	AR
	M6XW, D4XW, D6XW, C6XW, C2XW, H2XW, P6XW	R,W	1548 EW1	AR	—	AR	AR	AR	AR
	K2X, T2X, L2X, M2X, M6X, H1X, H2X, H2XY, P3X, P4X, P6XA, P6XY, C6X, CRX, C2X	R,W	1548 EX9	AR	—	AR	AR	AR	AR
	L1Y, H1Y, P3Y	R,W	*1548 FY4	AR	—	—	—	—	—
23-113-3	COVER, Door Pinchweld								
	CODES								
	FRONT DOOR								
	Front Pillar Lower								
	L1X, L2X, D2X, L4X, L6X, L6XW	V	1533 FX9	—	—	—	—	2	—
	E1B, E2B, F1B, F2B, W1B, W4B, B2B, M1B, M4B, L1B, L2B, L3B, L4B, H4B, P4B	P, D, C	1556-7 FB3	1	—	1	—	—	—
	H1B, H7B	C	1552-3 FB7	1	—	—	—	—	—
	E1F, E2F, F1F, F2F, W1F, W4F, H1F, H4F, H7F, H8F, P4F, P8F	P, D, C	1556-7 FF8	1	—	1	—	—	—
	E2T, B2T, F2T, W4T, K1T, K2T, L2T, M4T, H1T, H4T, H8T, P4T, HST	P, D	1556-7 FT4	1	—	1	—	—	—

NOTE: A letter code in the carline column indicates the carline for which the part is released as follows:

CARLINES Indicate: J - Challenger, B - Barracuda, V - Valiant, L - Dart, R - Belvedere, W - Coronet, P - Plymouth, D - Dodge, C - Chrysler, Y - Imperial

AR Indicates use as required.
★ Indicates change or addition.

Right and left part numbers are on same line, first number is right, second number is left.

CODE	PART NAME	CAR LINE	PART NUMBER	Sed.	4 D.H.T.	Sta. Wgn.	2 D.H.T.	Sp. 2 D.H.T.	Conv.
23-113-3	COVER Cont'd.								
	K1A, K2A, E1X, E2X, F1XA, F2XA, W1XA, W4XA, W8XA, L1XA, L2XA, L3X, L4X, M1XA, M4XA, M8XA, X1X, L8X, H1X, H4X, H7X, H8X, P4X P8X	P, D, C	1556-7 FX9	1	—	1	—	—	—
	F1Y, W1Y, W4Y, L1Y, L3Y, E2Y, M1Y, M4Y, H1Y	P, D, C	1552-3 FY4	1	—	—	—	—	—
	E1L, L7L, H7L, P7L	C	1556-7 FL3	1	—	1	—	—	—
	E1P, L3P, H1P	C	1552-3 FP6	1	—	—	—	—	—
	L4R, L7R, H7R, P4R	C	1556-7 FR8	1	—	1	—	—	—
	REAR DOOR								
	E2B, D1B, F1B, B2B, W1B, W4B, L1B, L2B, L4B, M1B, M4B, H1B, H3B, H4B, H7B, P3B, P4B, P7B	P,D	1560-1 FB3	1	—	—	—	—	—
	D1F, F1F, W1F, W4F, L1F, L2F, L4F, M1F, M4F, H1F, H3F, H4F, H7F, P3F, P4F, P7F	P,D	1560-1 FF8	1	—	—	—	—	—
	E2T, K1T, K2T, B2T, F2T, W4T, L2T, M4T, H1T, H4T, P4T, P8T	P,D	1560-1 FT4	1	—	—	—	—	—
	X1X, D1X, K1A, K2A, F2XA, W1XA, W4XA, W4XP, L1X, L2X, L2XA, M1XA, M4XA, M4XP, H1X, H3XA, H4XA, H4XP, H7X, H8XA, P3XA, P4XA, P4XP, P8XA	P,D	1560-1 FX9	1	—	—	—	—	—
	D1Y, F1Y, W1Y, L1Y, M1Y, H1Y, H3Y, P3Y	P,D	1560-1 FY4	1	—	—	—	—	—
	E2B, D2B, D4B, B2B, R2B, R4B, F2B, W4B, L2B, M4B, H4B	P,D	1556-7 FB3	—	—	1	—	—	—
	D2F, D4F, R2F, R4F, F2F, W4F, L2F, M4F, H4F, H8F	P,D	1556-7 FF8	—	—	1	—	—	—
	E2T, D2T, D4T, B2T, R2T, R4T, F2T, W4T, L2T, M4T, H4T, H8T	P,D	1556-7 FT4	—	—	1	—	—	—
	D2XA, D4XA, R2XA, R4XA, L2X, L2XA, M4XA, M8XA, H4X, H8X	P,D	1556-7 EX9	—	—	1	—	—	—
	P4B	C	1556-7 FB3	—	—	1	—	—	—
	P4F, P8F	C	1556-7 FF8	—	—	1	—	—	—
	P7L	C	1556-7 FL3	—	—	1	—	—	—
	P4R	C	1556-7 FR8	—	—	1	—	—	—
	P4T	C	1556-7 FT4	—	—	1	—	—	—
	P4X, P8X	C	1556-7 EX9	—	—	1	—	—	—
	E1B, E2B, L3B, L4B	C	1560-1 FB3	1	—	—	—	—	—
	H1B, H7B	C	1560-1 FB7	1	—	—	—	—	—
	E1F, L3F, H1F	C	1560-1 FF8	1	—	—	—	—	—
	E1L, L7L, H7L	C	1560-1 EL3	1	—	—	—	—	—
	E1P, L3P, H1P	C	1560-1 FP 6	1	—	—	—	—	—
	L4R, L7R, H7R	C	1560-1 FR8	1	—	—	—	—	—
	E2Y, L3Y, H1Y	C	1560-1 FY4	1	—	—	—	—	—
	E1X, E2X, L3X, L4X, L7X, L8X, H1X	C	1560-1 EX9	1	—	—	—	—	—
23-113-45	WEATHERCORD, Door Opening Upper								
	2 DOOR								
	M2B, H2B, H2BW, P6B, P6BW, L2B, M6B	R,W	*1572-3 EB7	2	—	—	—	—	—
	H2F, P6F, M6F	R,W	*1572-3 EF8	2	—	—	—	—	—
	H2K, H2KW, P6K, P6KW, M6K	R,W	*1572-3 FK5	2	—	—	—	—	—
	M2T, K1T, K2T, H2T, P6T, L2T, M6T	R,W	*1572-3 FT4	2	—	—	—	—	—
	H2XW, P6XW, M6XW	R,W	*1572-3 EW1	2	—	—	—	—	—
	M2X, H2X, P6XA, P6XY, L2X, M6X, M6XY	R,W	*1572-3 DX9	2	—	—	—	—	—
23-113-84	WELT, Dust Boot to Rear Seat Back	B,J,R,W,P,D,C	2572 166	—	—	—	—	—	AR
	HEADER WELT								
	Center	B,J	1904 FX8	—	—	—	—	—	1
	End	B,J	1997 FX8	—	—	—	—	—	1
	Center	P,D,C	1993 EX8	—	—	—	—	—	1
	End	P,D,C	1996 EX8	—	—	—	—	—	2

NOTE: A letter code in the carline column indicates the carline for which the part is released as follows:

CARLINES Indicate: J - Challenger, B - Barracuda, V - Valiant, L - Dart, R - Belvedere, W - Coronet, P - Plymouth, D - Dodge, C - Chrysler, Y - Imperial

AR Indicates use as required.
★ Indicates change or addition.

Right and left part numbers are on same line, first number is right, second number is left.

Printed in U.S.A.
December 1970

CODE	PART NAME	CAR LINE	PART NUMBER	Sed.	4 D.H.T.	Sta. Wgn.	2 D.H.T.	Sp. 2 D.H.T.	Conv.
23-115-6	PIN, Seat Back to Cushion								
	50-50 Pass. Seat	P,D,C,Y	2767 865	1	1	1	—	—	—
23-115-8	CLIP, Wheelhouse Cover to Quarter								
	Inside Front Panel	R,W	2405 049	—	—	2	—	—	—
23-115-10	SCREW, Center Arm Rest to Stanchion								
	BUCKET SEAT	R,W,P,D,C,Y	2092 212	2	2	2	2	2	2
	BENCH SEAT	V,R,W,P,D,C,Y	2092 212	2	2	2	2	2	2

NOTE: A letter code in the carline column indicates the carline for which the part is released as follows:

CARLINES Indicate: J - Challenger, B - Barracuda, V - Valiant, L - Dart, R - Belvedere, W - Coronet, P - Plymouth, D - Dodge, C - Chrysler, Y - Imperial

AR Indicates use as required.
★ Indicates change or addition.

Right and left part numbers are on same line, first number is right, second number is left.

Printed in U.S.A.
December 1970

NOTES

1971

PASSENGER CAR TRIM

APPLICATION SECTION

JANUARY 1972

LOOSE-LEAF PARTS CATALOG

PARTS DIVISION CHRYSLER MOTORS CORPORATION

SUPERSEDES
81-690-0948

81-690-1001

Printed in U.S.A.

GENERAL TRIM INFORMATION

COLOR CODED OR MIXED PART NUMBERS

Appearing throughout this catalog are part numbers containing both letters and numbers. For example: 2000VB5 or 6700FX9. These are good serviceable part numbers. The combination of letters and numbers merely indicates the parts are keyed to the interior color of the vehicles on which they are used.

BODY CODE PLATE

The body code plate located in the engine compartment contains information relative to the vehicle trim and paint codes which are required to specify proper trim items. A sample plate and description follows:

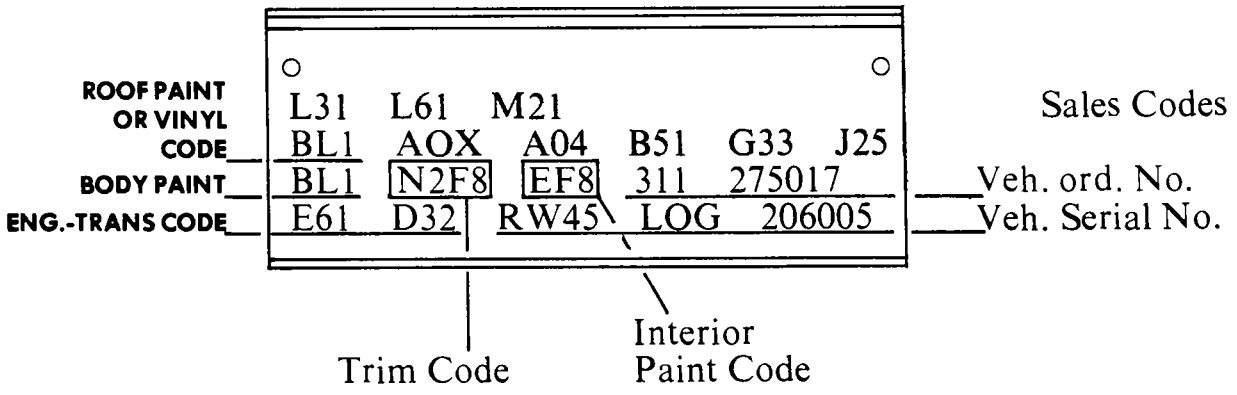

INTERIOR TRIM GRAPHICS

The Graphics Included in this section are typical.

The LETTERS Shown on Graphics indicate the Description of the part and the part type code in which the part may be located. Refer to Page INF-4 for letter index.

The NUMBERS shown on Graphics indicate the distribution and type of material. Refer to Roll stock information Section for the particular carline for number identification.

TYPE OF TRIM MATERIAL AND SEAT (TRIM CODE)

	BENCH	BENCH SP. BACK W/CAR	BUCKET	50/50	SPEC. DESIGN
CLOTH & VINYL	1	3	5	7	9
ALL VINYL	2	4	6	8	0
CLOTH & LEATHER	A	B	C	D	E
ALL LEATHER	M	P	R	S	T
ALL CLOTH	V	W	X	Y	Z

EXAMPLE

M2B3

- M — MEDIUM PRICE CLASS
- 2 — ALL VINYL BENCH SEAT
- B — LIGHT BLUE

COLOR SUFFIXES

A-GRAY OR GUNMETAL
B-BLUE
C-
D-
E-RUSSET
F-GREEN
G-
H-
J-
K-
L-BEIGE
M-BURGUNDY
N-
O-
P-
Q-
R-
S-
T-(TAN) OR (SADDLE)
U-
V-ORANGE
W-WHITE
X-BLACK
Y-GOLD
Z-BRIGHT

PART NO. SUFFIXES BELOW SERVE AS SUFFIXES TO BASIC PART NO. AND INDICATES COLOR OR CODE

OB - ALL BLUE

BA - BLUE & GRAY

BB - TWO TONE BLUE

B5 - MEDIUM BLUE

IB - COMB. TRIM BLUE

B1
B2 LT. BLUE
B3

B4
B5 MED. BLUE
B6

B7
B8 DK. BLUE
B9

SIGNIFICANT PART NO'S.

4006 F B3

BASIC PART NO. - SERIES - COLOR SUFFIX

4006 F AB

BASIC PART NO. SERIES - COLOR CODE
(CLO. & LEA. TRIM - BLUE)

4006 F 1B

BASIC PART NO. - SERIES - COLOR CODE
(CLO. & VINYL TR. - BLUE)

PRICE CLASS

C - CHARGER
E - ECONOMY
H - HIGH
K - POLICE
L - LOW
M - MEDIUM
P - PREMIUM
S - SPORT
T - TAXI

1971 TRIM DATA

COLOR CHART "G" SERIES TRIM CODES

	V	L	B	J	R	W	P	D	C	Y
A6 - GUN METAL								X	X	X
A9 - GRAY								X		
B2 - LT. BLUE		X			X		X	X	X	X
B5 - BRITE BLUE			X	X	X	X				
B7 - DK. BLUE	X	X			X	X			X	
B9 - DK. BLUE										X
E8 - RUSSET							X	X	X	X
F3 - LT. GREEN		X								
F7 - DK. GREEN	X	X	X	X	X	X	X	X	X	X
L2 - BEIGE									X	
M9 - BURGUNDY										X
T3 - LT. TAN					X					
T7 - DK. SADDLE	X	X	X	X	X	X	X	X	X	X
TT - SADDLE & TAN										X
X9 - BLACK	X	X	X	X	X	X	X	X	X	X
XA - BLACK & GUN METAL					X	X	X	X		
XL - BLACK & BEIGE									X	
XV - BLACK & ORANGE	X	X	X		X	X				
XW - BLACK & WHITE		X	X	X	X	X	X	X	X	X
XX - BLACK & WHITE B/CLOTH				X						
Y3 - GOLD	X	X	X	X	X	X				
Y5 - GOLD							X	X	X	X

1971 GRAPHIC LETTER INDEX

Letter	Description	Code
A	Panel, Door Trim	23-92-5
B	Arm Rest, Front Door Pad & Plate	23-76-11
	Base	23-76-9
	Arm Rest, Rear Door Pad & Plate	23-76-63
	Base	23-76-9
	Arm Rest, Rear Quarter Pad & Plate	23-76-76
	Base	23-76-9
	Arm Rest, Front Seat Back Center	23-76-18
	Rear Seat Back Center	23-76-40
C	Headlining	23-86-3
	Cover, Roof Outside	23-86-2
D	Floor Cover, Front, Carpet	23-79-3
	Rear, Carpet	23-79-33
E	Panel, Shelf Trim	23-102-3
F	Panel, Cowl Trim	23-91-6
G	Visor	23-103-3
H	Panel, Luggage Compartment Front	23-96-3
J	Carpet, Luggage Compartment Floor	23-79-33
K	Cover, Front Seat Cushion	23-108-5
L	Cover, Front Seat Back	23-108-16
M	Shield, Front Seat Side or Back	23-108-98
N	Cover, Rear Seat Cushion	23-109-36
P	Cover, Rear Seat Back	23-109-4
Q	Insert, Rear Seat Cushion Bottom Panel	23-109-5
R	Weathercord, Door	23-113-2
S	Panel, Quarter Trim	23-101-3
T	Panel or Cover, Luggage Compt. Side Lining	23-96-8
U	Top Deck and Side Quarter	23-112-108
V	Curtain, Folding Top Back	23-112-45
	Zipper, Folding Top Back Curtain	23-112-46
W	Cover, Center Pillar	23-99-4
	Cover, Rear Upper Pillar	23-99-38
X	Well, Pocket Panel, Pocket Panel Cover, Pocket Shelf Panel, Folding Top	23-112-153
Y	Pad, Pocket Panel Arm Rest	23-112-60
Z	Dust Boot, Folding Top	23-112-12
AA	Insert, Back of Front Seat Back	23-108-32
BB	Insert, 2nd. Seat Back Panel	23-109-5
BC	Insert, 2nd. Seat Back Support Panel	23-109-5
CD	Moulding, Headlining Finish	23-86-35
DD	Insert, Axle Kick-Up Center Floor Pan Rear Panel	23-79-33
EE	Insert, Center and Rear Floor Pan Cover Panel	23-79-33
EG	Insert, Rear Floor Pan Cover Panel (6 pass. only)	23-109-5
FF	Insert, 3rd. Seat Back Support Panel	23-109-5
GG	Cover, Rear Floor, Well Side	23-79-33
HH	Insert, 3rd. Seat Back Panel	23-109-5
LL	Insert, Tailgate Inside Panel	23-79-79
MM	Assist Strap, Tailgate	23-77-3
NN	Cover, Spare Tire	23-79-64
PP	Cover, Wheelhouse	23-96-8
QQ	Cover, Tailgate Opening Pillar	23-99-41

NOTE: The following complete assemblies and codes must be ordered by description to be specified by the parts depot specifier:

CODE	DESCRIPTION
23-108-4	FRONT SEAT CUSHION
23-108-12	FRONT SEAT BACK
23-108-15	FRONT SEAT BACK SPRING & COVER
23-109-3	REAR SEAT BACK
23-109-35	REAR SEAT CUSHION

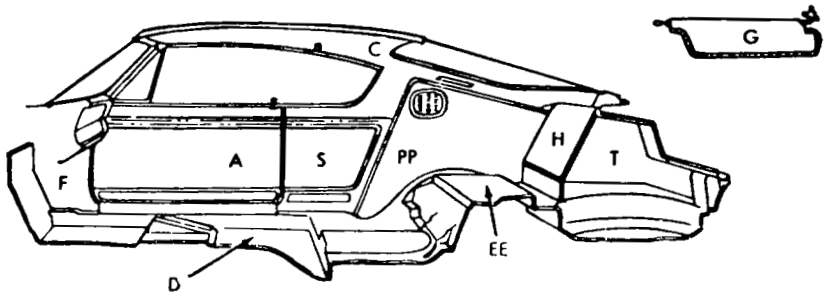

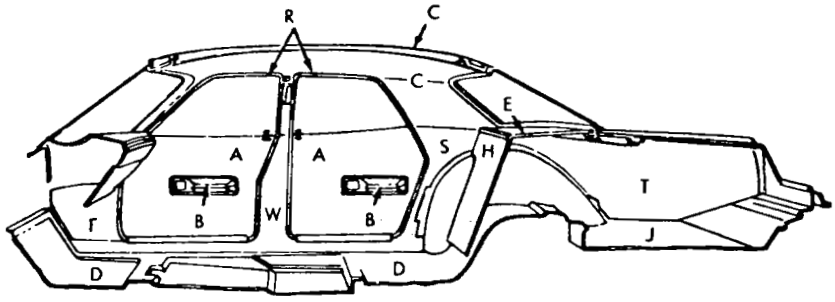

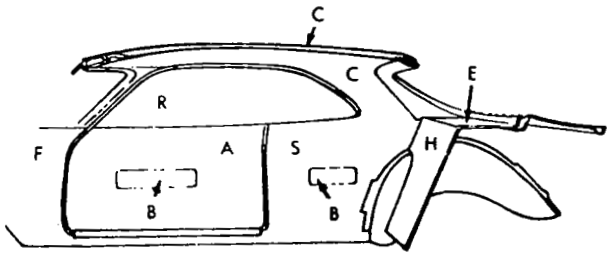

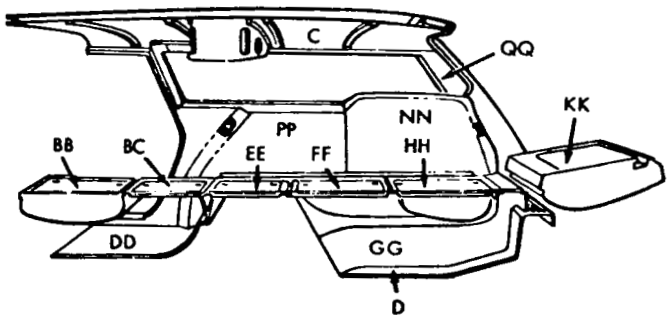

VALIANT, DART, CHALLENGER, BARRACUDA, SATELLITE, CORONET, PLYMOUTH, DODGE AND CHRYSLER DOOR AND QUARTER AREA

Printed in U.S.A.
January 1972

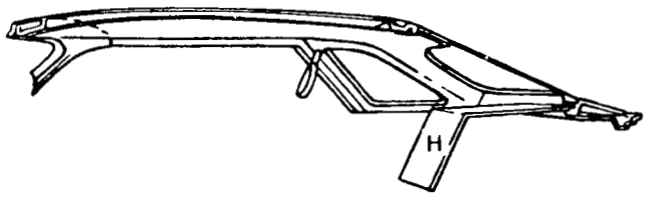

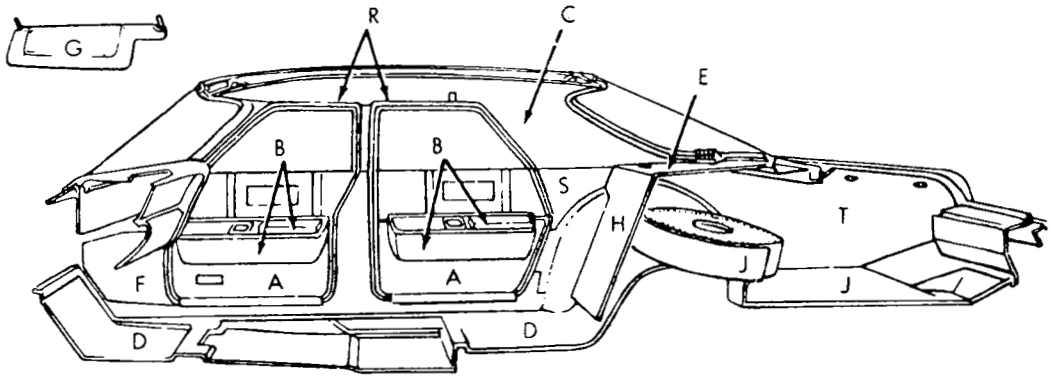

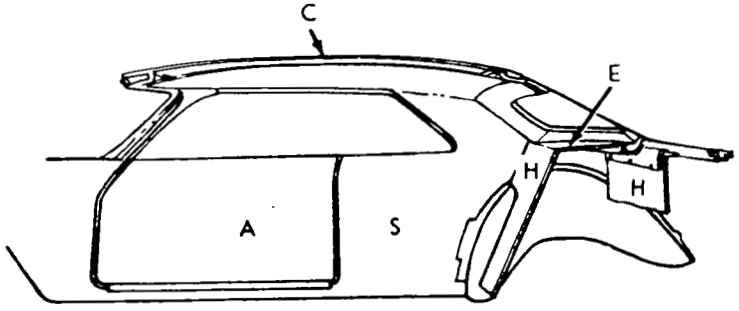

IMPERIAL DOOR AND QUARTER AREA

Printed in U.S.A.
January 1972

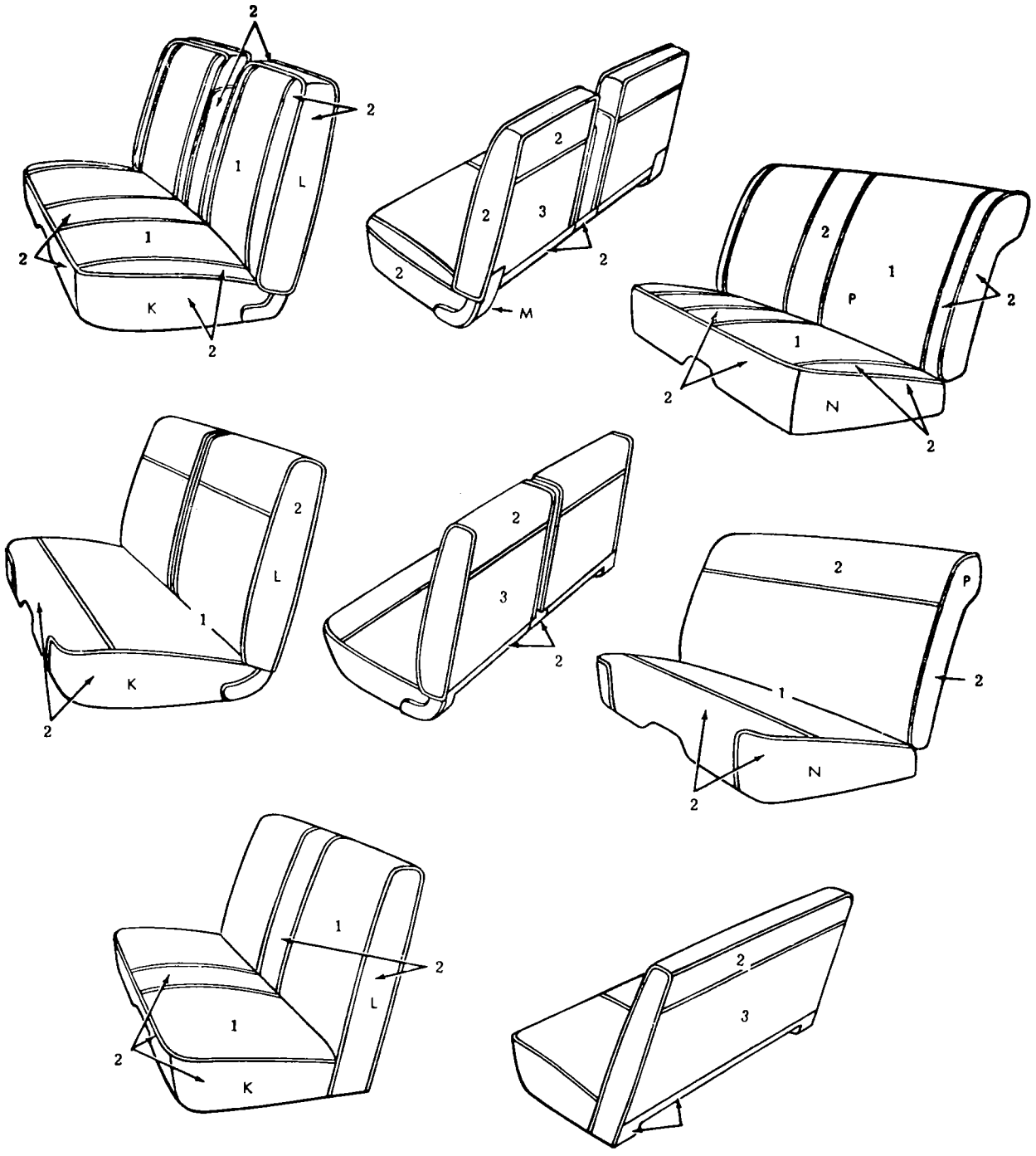

VALIANT, DART, CHALLENGER AND BARRACUDA SEAT AREA

Printed in U.S.A.
January 1972

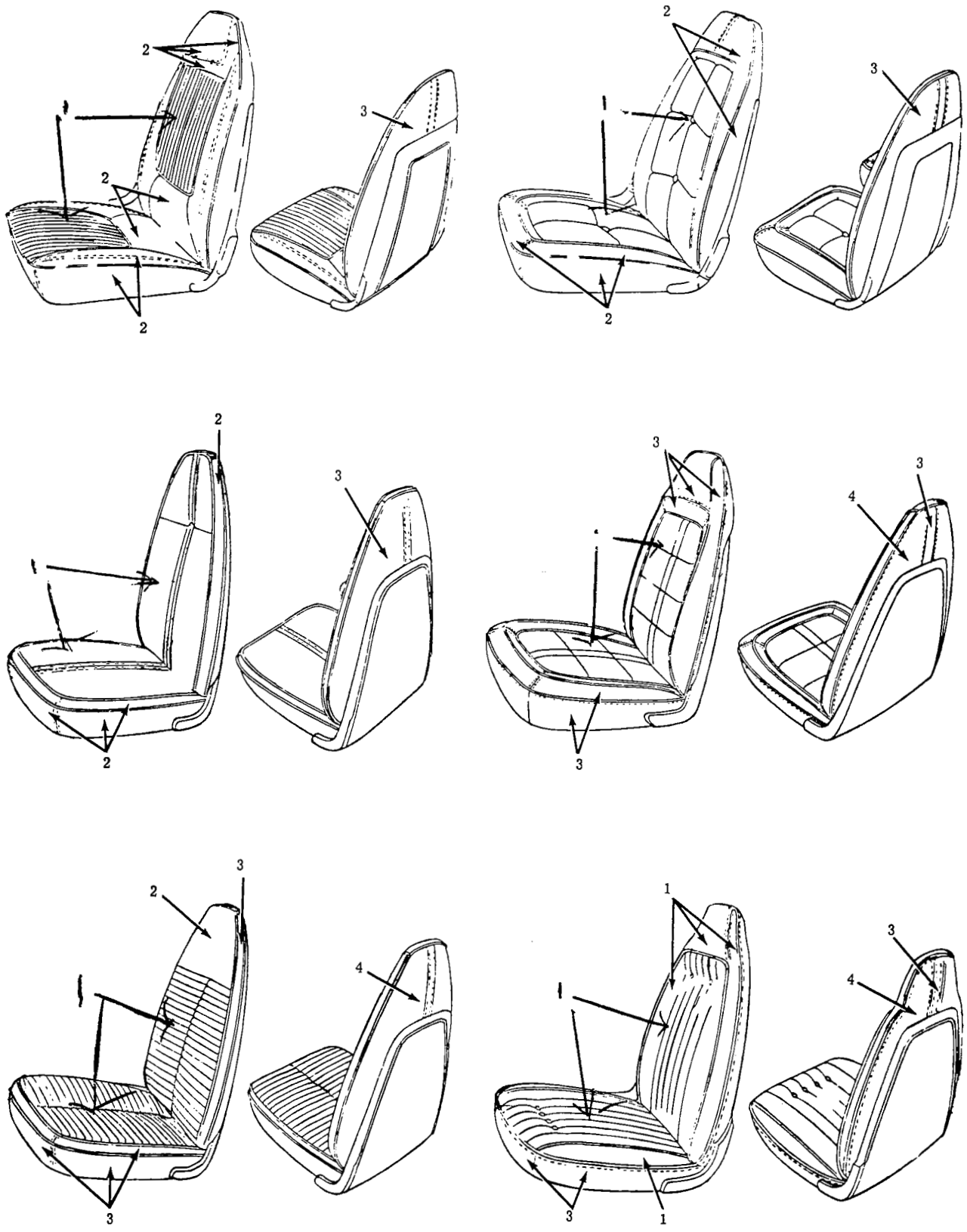

VALIANT, DART, BARRACUDA AND CHALLENGER BUCKET SEAT AREA

Printed in U.S.A.
January 1972

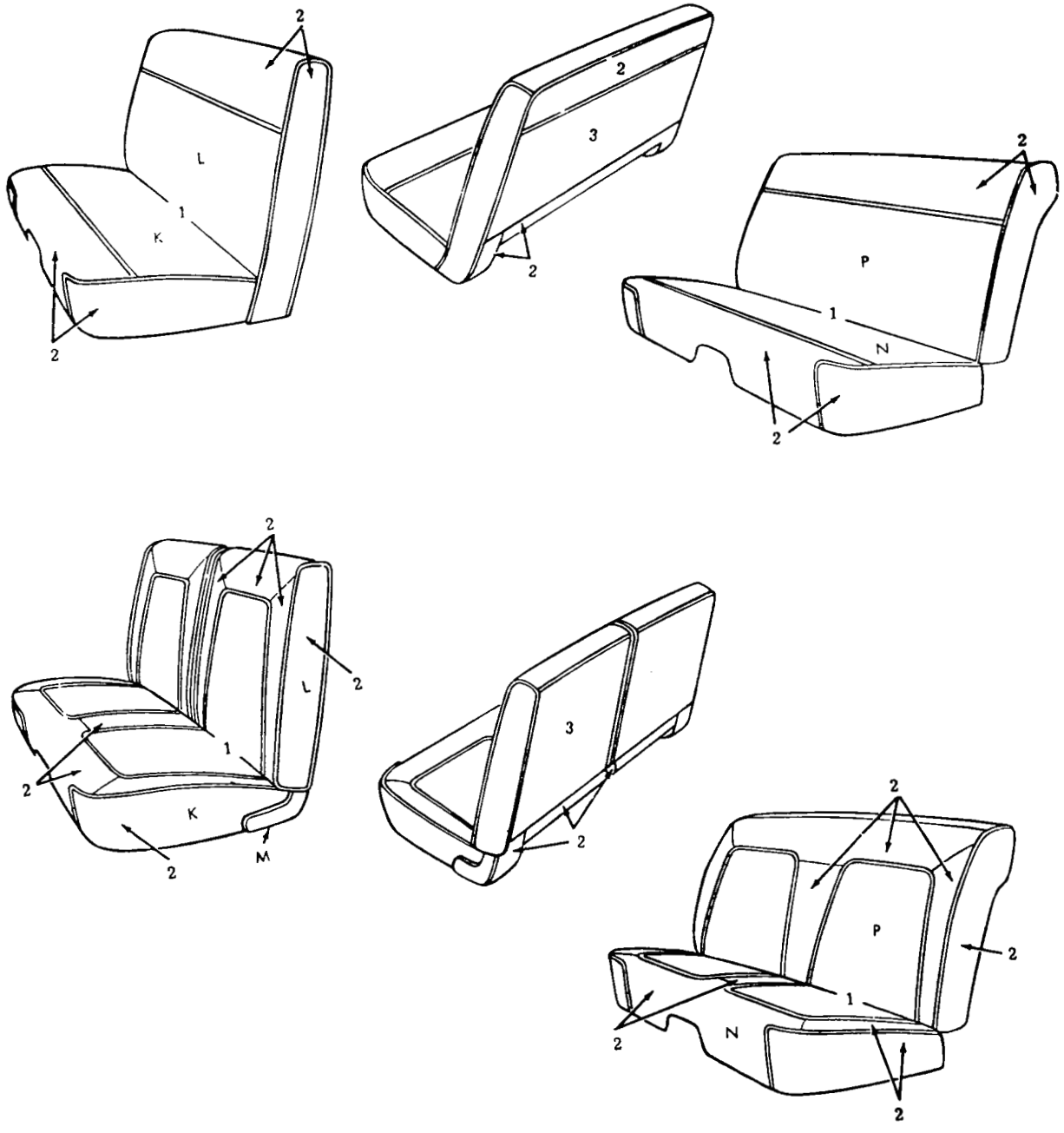

SATELLITE AND CORONET SEAT AREA

Printed in U.S.A.
January 1972

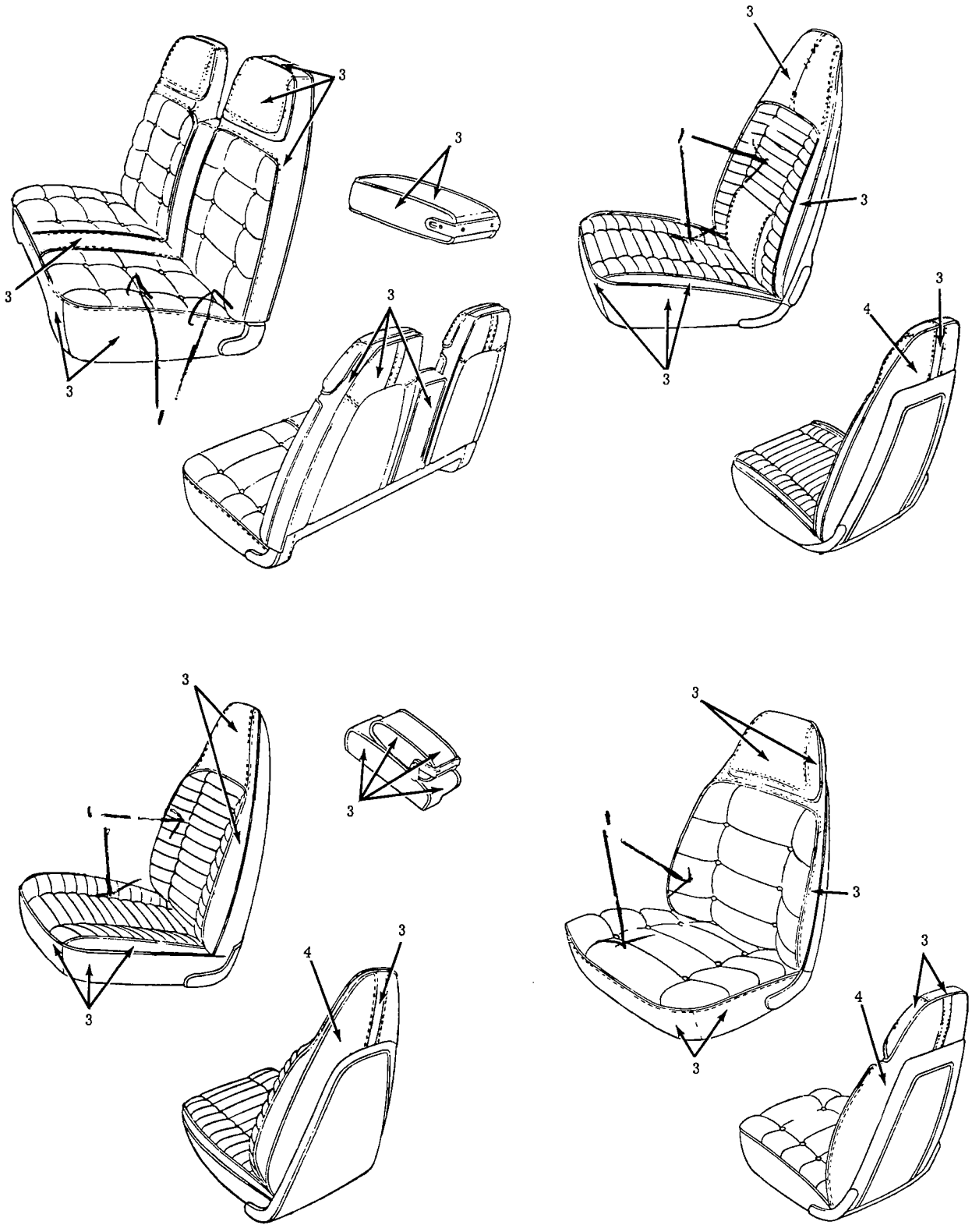

SATELLITE AND CORONET BUCKET SEAT AREA

Printed in U.S.A.
January 1972

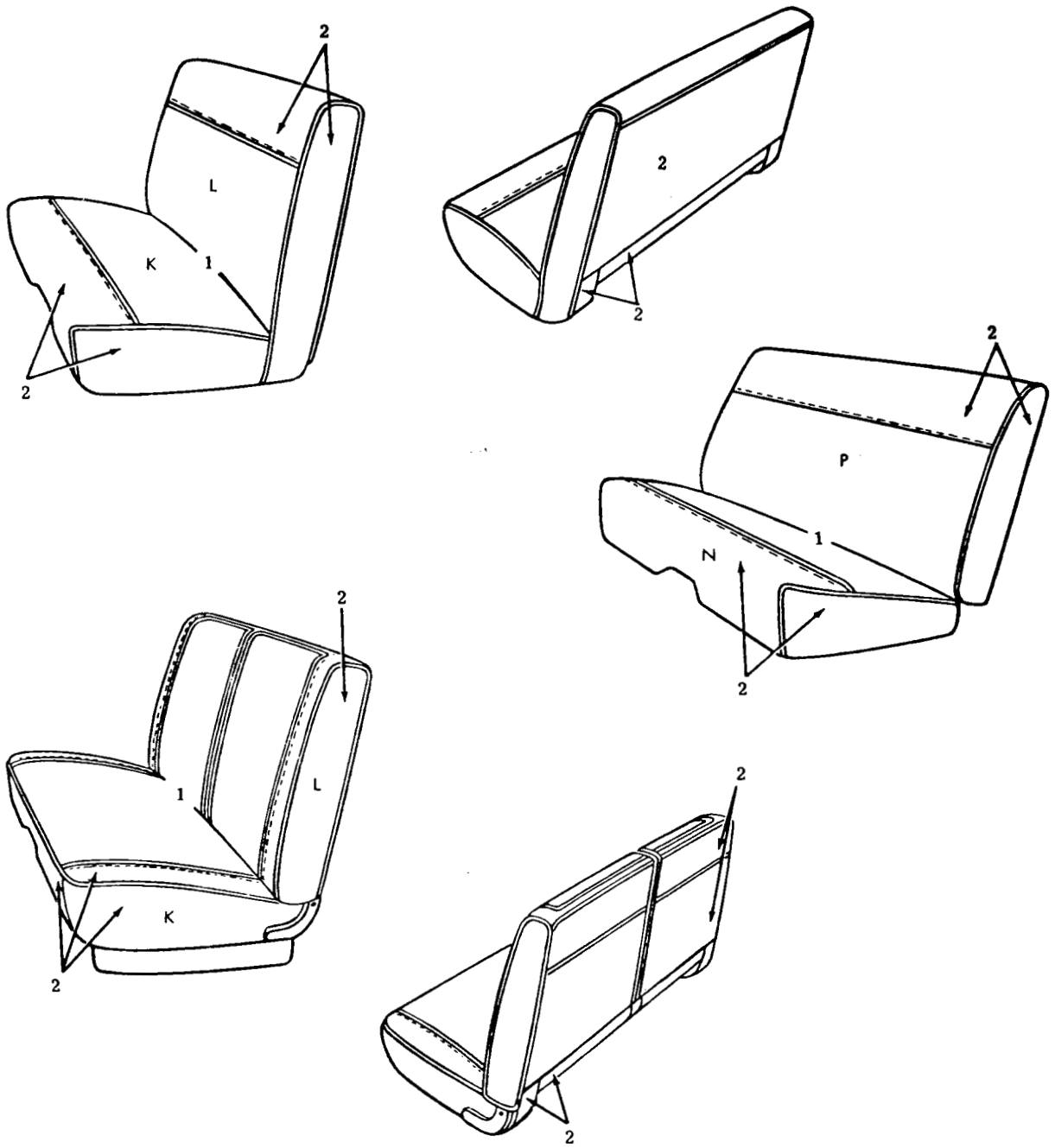

PLYMOUTH AND DODGE SEAT AREA

Printed in U.S.A.
January 1972

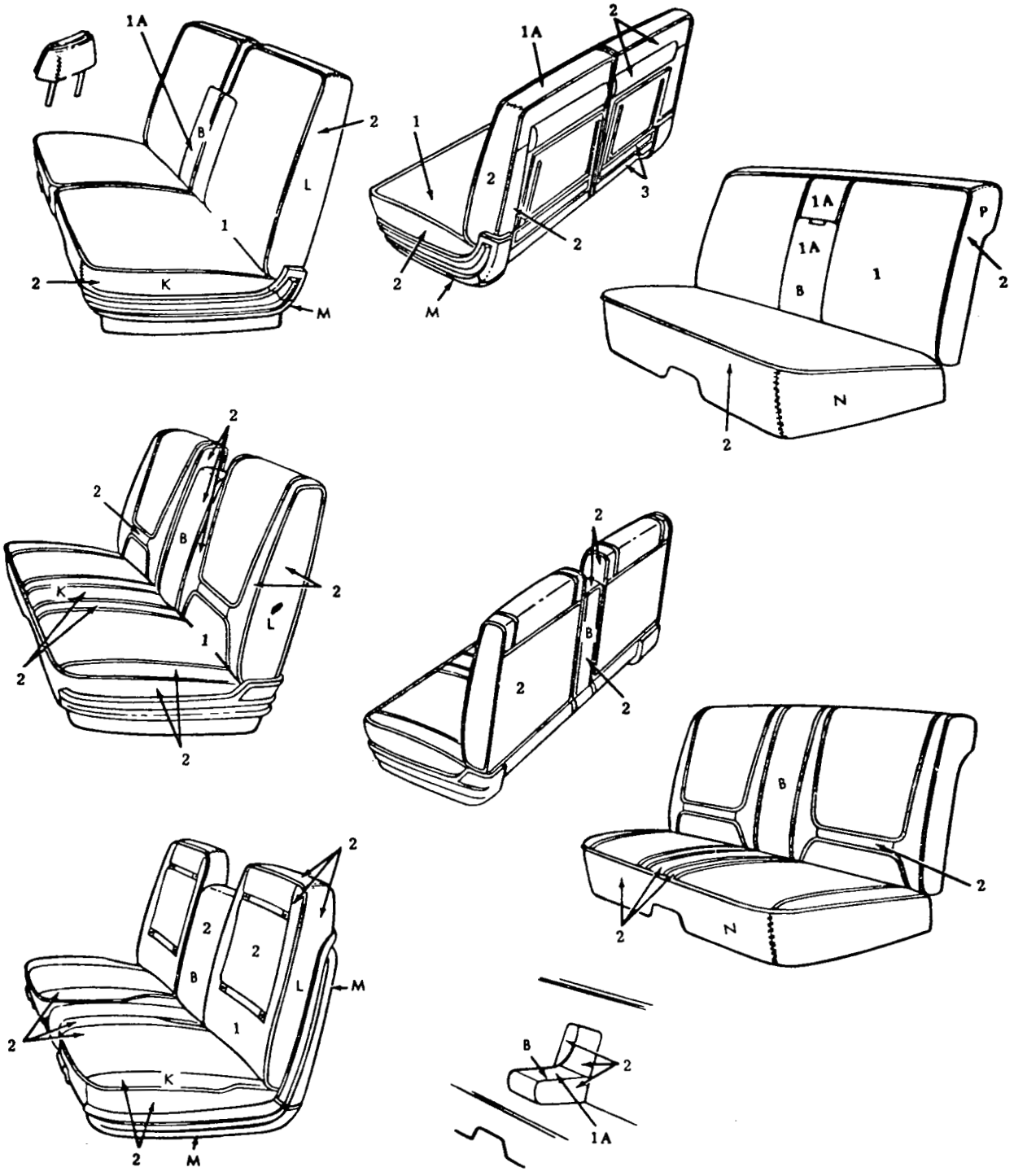

CHRYSLER SEAT AREA

Printed in U.S.A.
January 1972

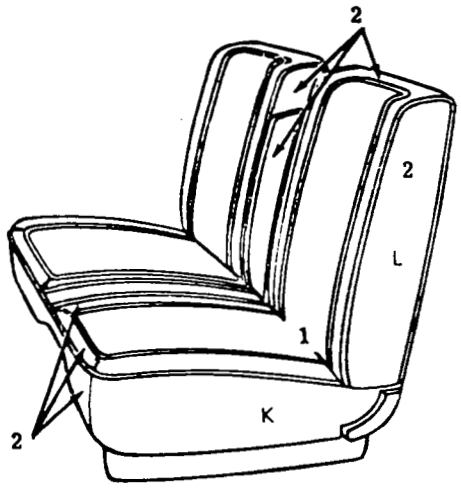

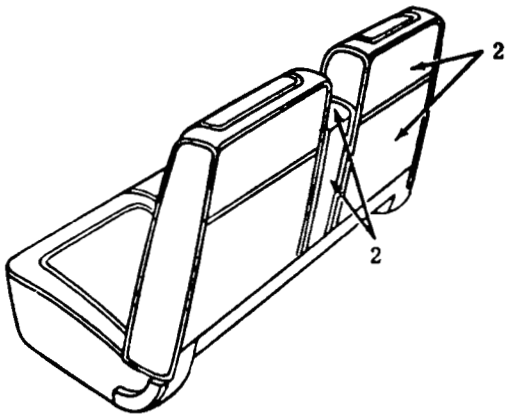

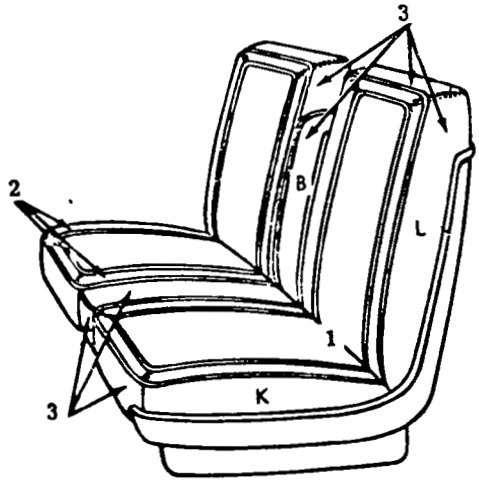

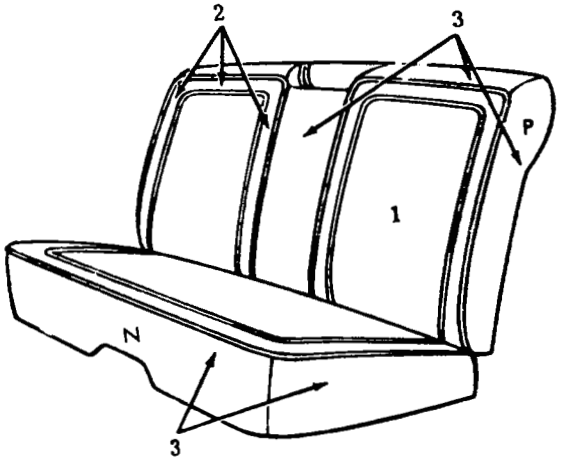

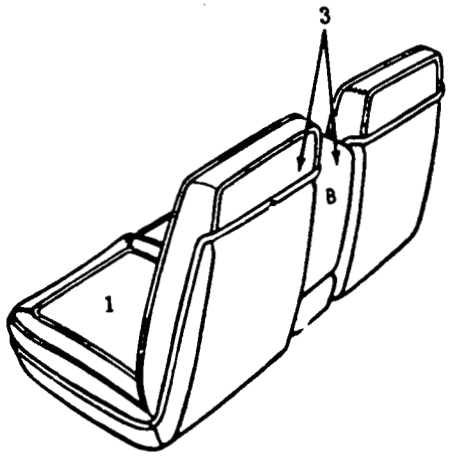

PLYMOUTH AND DODGE SEAT AREA

Printed in U.S.A.
January 1972

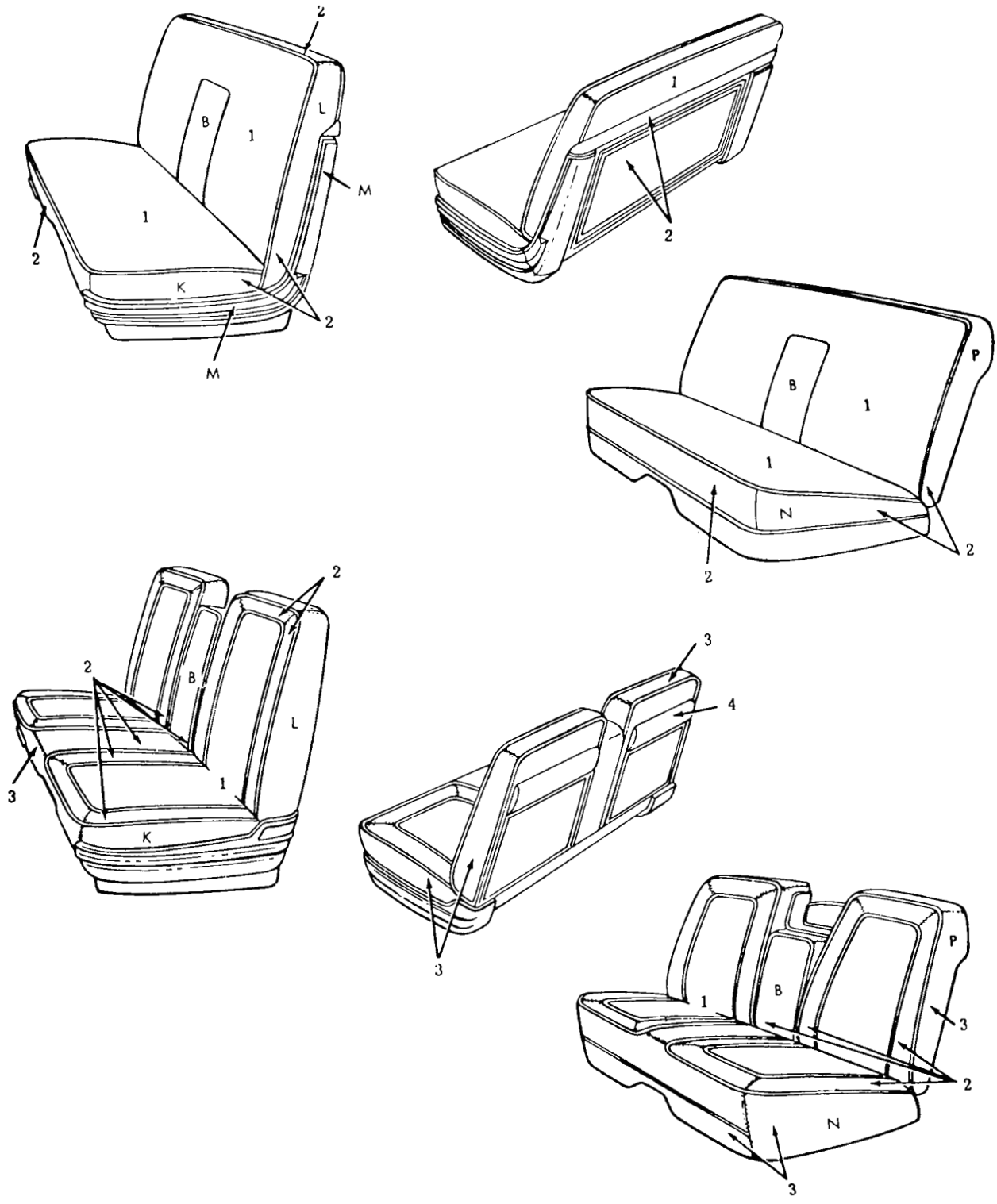

IMPERIAL SEAT AREA

Printed in U.S.A.
January 1972

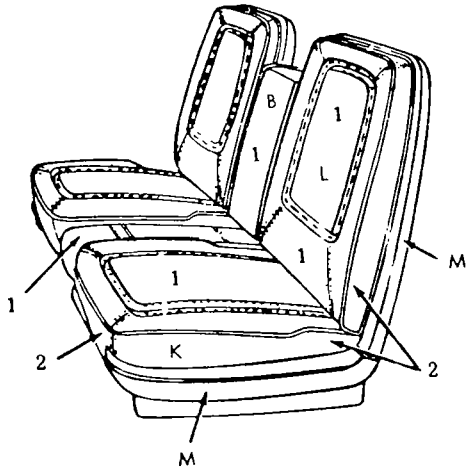

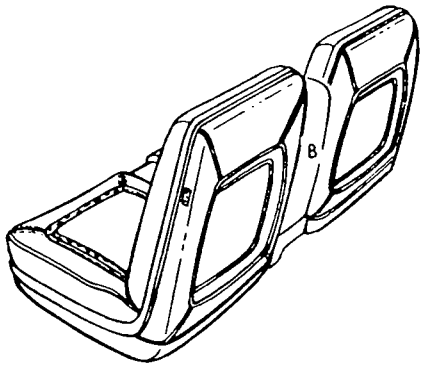

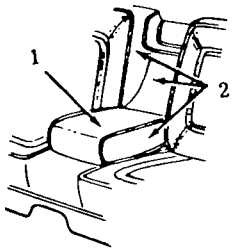

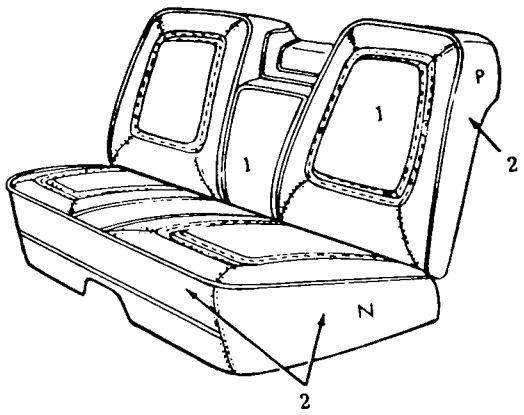

IMPERIAL SEAT AREA

Printed in U.S.A.
January 1972

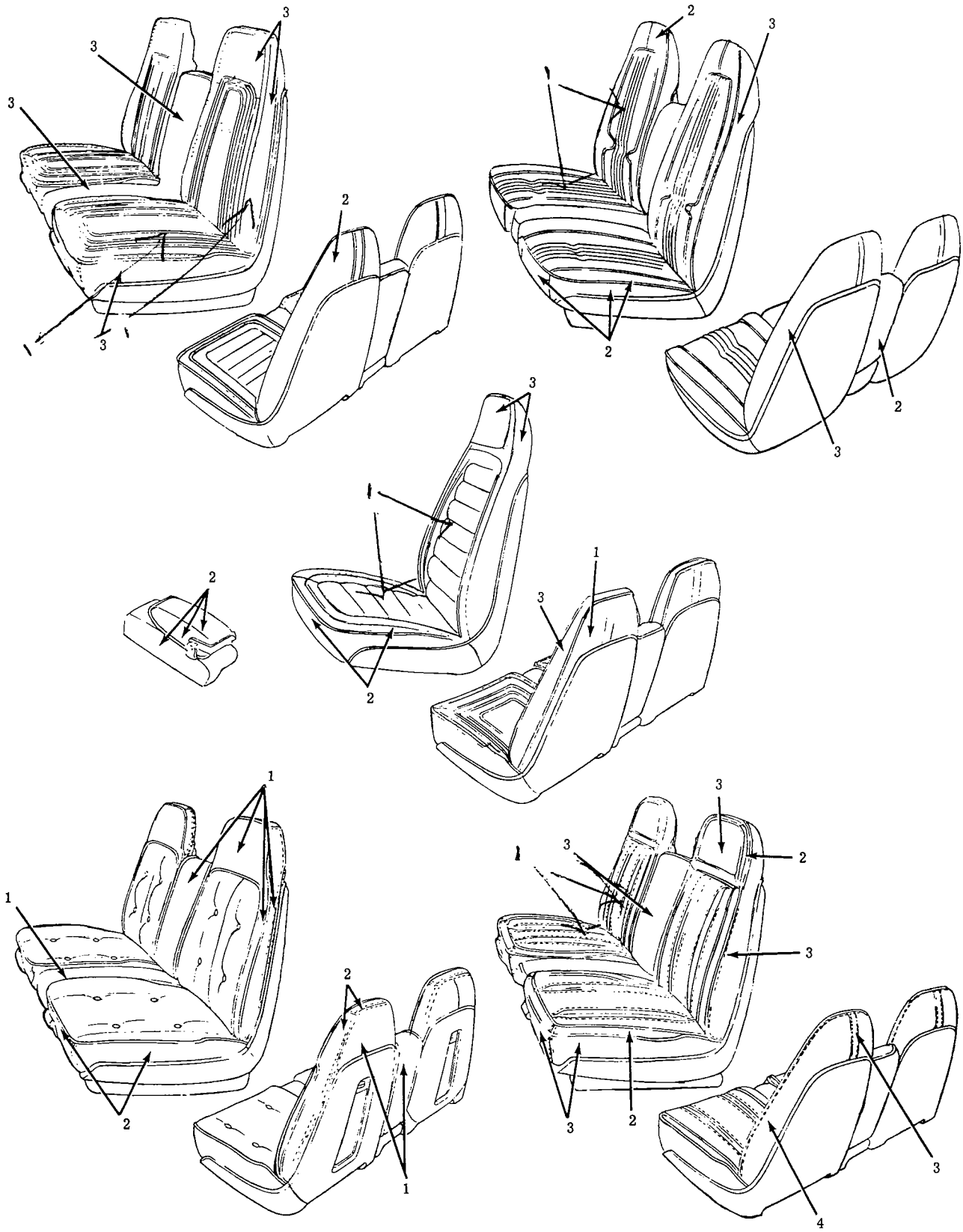

PLYMOUTH, DODGE, CHRYSLER AND IMPERIAL BUCKET SEAT AREA

Printed in U.S.A.
January 1972

ROLLED STOCK INFORMATION

NOTES: VINYL AND CLOTH

Requirements must be ordered in inch quantities.
i.e. 20 Inches = 20 Running Inches of Material

HIDE OR LEATHER

Requirements must be ordered by quantity 1.
Indicating size of piece required.
i.e. 1 (part number) - 24 x 12 Inches

VALIANT

1971 GV-L SP. 2 DOOR H.T. TRIM

REF.	TYPE OF MATERIAL	INCHES WIDE	PART NUMBERS AND COLORS						
			DK. BLUE LIB	DK. GREEN LIF	BLACK & ORANGE LIX	BLACK & WHITE LIXX			
1	CLOTH	65"	134 GBQ	134 GFY	134 GVX	134 GWX			
3	VINYL	54"	675 GB7	675 GF7	672 EX9	672 EX9			
4	VINYL	48"	672 GB7	672 GF7	672 EX9	672 EX9			

1971 GV-L 4 DOOR-SP. 2 DOOR H.T.

REF.	TYPE OF MATERIAL	INCHES WIDE	PART NUMBERS AND COLORS						
			DK. BLUE L2B	DK. SADDLE L2T	BLACK L2X				
1	VINYL	58"	750 GB2	750 GT6	750 FX9				
2	VINYL	54"	675 GB7	675 GT7	672 EX9				
3	VINYL	56"	783 GB2	783 GT6	783 FX9				

1971 GV-L 4 DOOR SEDAN TRIM

REF.	TYPE OF MATERIAL	INCHES WIDE	PART NUMBERS AND COLORS						
			DK. BLUE L3B	DK. GREEN L3F	BLACK L3X				
1	NOT SERVICED SEE PART TYPE CODE 23-108-5 AND 23-108-16 AND 23-109-4 AND 23-109-36								
3	VINYL	54"	675 GB7	675 GF7	672 EX9				
4	VINYL	48"	672 GB7	672 GF7	672 EX9				

1971 GV-L, GV-S 4 DOOR, SP. 2 DOOR H.T. TRIM

REF.	TYPE OF MATERIAL	INCHES WIDE	PART NUMBERS AND COLORS						
			DK. BLUE L4B	DK. GREEN L4F	DK. SADDLE L4T	BLACK L4X	GOLD L4Y		
1	NOT SERVICED SEE PART TYPE CODE 23-108-5 AND 23-108-16 AND 23-109-4 AND 23-109-36								
3	VINYL	54"	675 GB7	675 GF7	675 GT7	672 EX9	672 GY3		
4	VINYL	48"	672 GB7	672 GF7	672 GT7	672 EX9	672 GY3		

1971 GV-L, GV-S SP. 2 DOOR H.T. TRIM

REF.	TYPE OF MATERIAL	INCHES WIDE	PART NUMBERS AND COLORS						
			BLACK L6X	BLACK & ORANGE L6XV					
1	NOT SERVICED SEE PART TYPE CODE 23-108-5 AND 23-108-16								
3	VINYL	54"	672 EX9	672 GV1					
4	VINYL	54"	714 EX9	714 GV1					

1971 GV-H 2 DOOR H.T. TRIM

REF.	TYPE OF MATERIAL	INCHES WIDE	PART NUMBERS AND COLORS						
			LT. BLUE D2B	LT. GREEN D2F	BLACK D2X	BLACK & WHITE D2XW	GOLD D2Y		
1	NOT SERVICED SEE PART TYPE CODE 23-108-5 AND 23-108-16 AND 23-109-4 AND 23-109-36								
3	VINYL	54"	672 GB2	672 GF3	672 EX9	672 EW1	672 GY3		
4	VINYL	48"	672 GB2	672 GF3	672 EX9	672 EW1	672 GY3		

Printed in U.S.A.
January 1972

VALIANT

1971 GV-H 2 DOOR H.T. TRIM

REF.	TYPE OF MATERIAL	INCHES WIDE	PART NUMBERS AND COLORS						
			BLACK D6X	BLACK & WHITE D6XW					
1	NOT SERVICED SEE PART TYPE CODE 23-108-5 AND 23-108-16 AND 23-109-4 AND 23-109-36								
2	VINYL	54"	807 GX9	787 FW1					
3	VINYL	54"	672 EX9	672 EW1					
4	VINYL	54"	672 EX9	672 EW1					
5	VINYL	54"	714 EX9	714 EW1					

1971 GV-L SP. 2 DOOR H.T. TRIM

REF.	TYPE OF MATERIAL	INCHES WIDE	PART NUMBERS AND COLORS						
			BLACK & WHITE L6XW						
1	NOT SERVICED SEE PART TYPE CODE 23-108-5 AND 23-108-16 AND 23-109-4 AND 23-109-36								
3	VINYL	54"	672 EW1						
4	VINYL	54"	714 EW1						
12	VINYL	54"	672 EW1						

NOTES

Printed in U.S.A.
January 1972

DART

1970 GL-L, GL-M SP. 2 DOOR H.T. TRIM

REF.	TYPE OF MATERIAL	INCHES WIDE	PART NUMBERS AND COLORS						
			DK. BLUE E2B	DK. SADDLE E2T	BLACK E2X				
1	VINYL	54"	750 GB2	750 GT6	750 FX9				
2	VINYL	54"	675 GB7	675 GT7	672 EX9				
3	VINYL	56"	783 GB2	783 GT6	783 FX9				

1971 GL-L 4 DOOR SEDAN TRIM

REF.	TYPE OF MATERIAL	INCHES WIDE	PART NUMBERS AND COLORS						
			DK. BLUE L2B	DK. GREEN L2F	BLACK L2X				
1	VINYL	54"	750 GB2	750 GT6	750 FX9				
2	VINYL	54"	675 GB7	675 GT7	672 EX9				
3	VINYL	56"	783 GB2	783 GT6	783 FX9				

1971 GL-L, GL-M SP. 2 DOOR H.T. TRIM

REF.	TYPE OF MATERIAL	INCHES WIDE	PART NUMBERS AND COLORS						
			DK. BLUE M1B	DK. GREEN M1F	BLACK & ORANGE M1X	BLACK & WHITE M1XX			
1	CLOTH	65"	134 GBQ	134 GFY	134 GVX	134 GWX			
3	VINYL	54"	675 GB7	675 GF7	672 EX9	672 EX9			
4	VINYL	48"	672 GB7	672 GF7	672 EX9	672 EX9			

1971 GL-L, GL-M SP. 2 DOOR H.T. TRIM

REF.	TYPE OF MATERIAL	INCHES WIDE	PART NUMBERS AND COLORS						
			BLACK M6X	BLACK & ORANGE M6XV	BLACK & WHITE M6XW				
1	NOT SERVICED SEE PART TYPE CODE 23-108-5 AND 23-108-16 AND 23-109-4 AND 23-109-36								
3	VINYL	54"	672 EX9	672 GV1	672 EW1				
4	VINYL	54"	714 EX9	714 GV1	672 EW1				

1971 GL-H 4 DOOR SEDAN TRIM

REF.	TYPE OF MATERIAL	INCHES WIDE	PART NUMBERS AND COLORS						
			LT. BLUE H1B	LT. GREEN H1F	BLACK H1X				
1	NOT SERVICED SEE PART TYPE CODE 23-108-5 AND 23-108-16 AND 23-109-4 AND 23-109-36								
3	VINYL	54"	672 GB2	672 GF3	672 EX9				
4	VINYL	56"	672 GB2	672 GF3	672 EX9				

1971 GL-H 4 DOOR, 2 DOOR H.T. TRIM

REF.	TYPE OF MATERIAL	INCHES WIDE	PART NUMBERS AND COLORS						
			LT. BLUE H2B	LT. GREEN H2F	BLACK H2X	BLACK & WHITE H2XW	GOLD H2Y		
1	NOT SERVICED SEE PART TYPE CODE 23-108-5 AND 23-108-16 AND 23-109-4 AND 23-109-36								
3	VINYL	54"	672 GB2	672 GF3	672 EX9	672 EW1	672 GY3		
4	VINYL	56"	672 GB2	672 GF3	672 EX9	672 EW1	672 GY3		

DART

1971 GL-H 2 DOOR H.T. TRIM

REF.	TYPE OF MATERIAL	INCHES WIDE	PART NUMBERS AND COLORS						
			BLACK H6X	BLACK & WHITE H6XW					
1	NOT SERVICED SEE PART TYPE CODE 23-108-5 AND 23-108-16 AND 23-109-4 AND 23-109-36								
2	VINYL	54"	807 GX9	787 FW1					
3	VINYL	54"	672 EX9	672 EW1					
4	VINYL	54"	672 EX9	672 EW1					
5	VINYL	54"	714 EX9	714 EW1					

NOTES

Printed in U.S.A.
January 1972

BARRACUDA

1971 GB-H, GB-S 2 DOOR H.T. TRIM

REF.	TYPE OF MATERIAL	INCHES WIDE	PART NUMBERS AND COLORS						
			BRITE BLUE H4B	DK. GREEN H4F	DK. SADDLE H4T	BLACK H4X	BLACK & WHITE H4XW		
1	NOT SERVICED SEE PART TYPE CODE 23-108-5 AND 23-108-16 AND 23-109-4 AND 23-109-36								
2	VINYL	54"	672 GB5	672 GF7	672 GT7	672 EX9	672 EW1		
3	VINYL	54"	714 GB5	714 GF7	714 GT7	714 EX9	714 EW1		

1971 GB-H, GB-S 2 DOOR H.T. TRIM

REF.	TYPE OF MATERIAL	INCHES WIDE	PART NUMBERS AND COLORS						
			BLACK H5X	BLACK & ORANGE H5XV					
1	NOT SERVICED SEE PART TYPE CODE 23-108-5 AND 23-108-16 AND 23-109-4 AND 23-109-36								
2	VINYL	54"	672 EX9	672 GV1					
3	VINYL	54"	714 EX9	714 GV1					

1971 GB-H, GB-S 2 DOOR CONV., 2 DOOR H.T. TRIM

REF.	TYPE OF MATERIAL	INCHES WIDE	PART NUMBERS AND COLORS						
			BRITE BLUE H6B	DK. GREEN H6F	DK. SADDLE H6T	BLACK H6X	BLACK & ORANGE H6XV	BLACK & WHITE H6XW	
1	NOT SERVICED SEE PART TYPE CODE 23-108-5 AND 23-108-16 AND 23-109-4 AND 23-109-36								
2	VINYL	54"	672 GB5	672 GF7	672 GT7	o72 EX9	672 GV1	672 EW1	
3	VINYL	54"	714 GB5	714 GF7	714 GT7	714 EX9	714 GV1	714 EW1	

1971 GB-P 2 DOOR H.T. TRIM

REF.	TYPE OF MATERIAL	INCHES WIDE	PART NUMBERS AND COLORS						
			BLACK P5X						
1	NOT SERVICED SEE PART TYPE CODE 23-108-5 AND 23-108-16 AND 23-109-4 AND 23-109-36								
2	VINYL	54"	672 EX9						
3	VINYL	54"	714 EX9						

1971 GB-P 2 DOOR H.T. TRIM

REF.	TYPE OF MATERIAL	INCHES WIDE	PART NUMBERS AND COLORS						
			BRITE BLUE P6B	DK. GREEN P6F	DK. SADDLE P6T	BLACK P6X	GOLD P6Y		
1	NOT SERVICED SEE PART TYPE CODE 23-108-5 AND 23-108-16 AND 23-109-4 AND 23-109-36								
2	VINYL	54"	853 GB5	851 GF7	853 GT6	853 GX9	853 GY3		
3	VINYL	54"	672 GB5	672 GF7	672 GT7	672 EX9	672 GY3		
4	VINYL	54"	714 GB5	714 GF7	714 GT7	714 EX9	714 GY3		

1971 GB-P, 2 DOOR H.T. TRIM

REF.	TYPE OF MATERIAL	INCHES WIDE	PART NUMBERS AND COLORS						
			DK. SADDLE PRT	BLACK PRX	GOLD PRY				
1	HIDE		303 GT7	303 DX9	303 GY3				
2	NOT SERVICED SEE PART TYPE CODE 23-109-4 AND 23-109-36								
3	VINYL	54"	672 GT7	672 EX9	672 GY3				
4	VINYL	54"	714 GT7	714 EX9	714 GY3				
5	VINYL	54"	672 GT7	672 EX9	672 GY3				

Printed in U.S.A.
January 1972

BARRACUDA

1971 GB-S 2 DOOR CONV. 2 DOOR H.T. TRIM

REF.	TYPE OF MATERIAL	INCHES WIDE	PART NUMBERS AND COLORS						
			DK. SADDLE SRT	BLACK SRX					
1	HIDE		303 GT7	303 DX9					
2	NOT SERVICED SEE PART TYPE CODE 23-109-4 AND 23-109-36								
3	VINYL	54"	672 GT7	672 EX9					
4	VINYL	54"	714 GT7	714 EX9					
5	VINYL	54"	672 GT7	672 EX9					

NOTES

Printed in U.S.A.
January 1972

CHALLENGER

1971 GJ-H 2 DOOR H.T. TRIM

REF.	TYPE OF MATERIAL	INCHES WIDE	PART NUMBERS AND COLORS						
			BRITE BLUE L6B	DK. GREEN L6F	DK. SADDLE L6T	BLACK L6X	BLACK & WHITE L6XW		
1	NOT SERVICED SEE PART TYPE CODE 23-108-5 AND 23-108-16 AND 23-109-4 AND 23-109-36								
2	VINYL	54"	672 GB5	672 GF7	672 GT7	672 EX9	672 EW1		
3	VINYL	54"	714 GB5	714 GF7	714 GT7	714 EX9	714 EW1		

1971 GJ-H 2 DOOR H.T. TRIM

REF.	TYPE OF MATERIAL	INCHES WIDE	PART NUMBERS AND COLORS						
			DK. GREEN H4F	BLACK H4X					
1	NOT SERVICED SEE PART TYPE CODE 23-108-5 AND 23-108-16 AND 23-109-4 AND 23-109-36								
2	VINYL	54"	672 GF7	672 EX9					
3	VINYL	54"	714 GF7	714 EX9					

1971 GJ-H, GJ-S 2 DOOR H.T. TRIM

REF.	TYPE OF MATERIAL	INCHES WIDE	PART NUMBERS AND COLORS						
			DK. GREEN H5F	BLACK H5X	BLACK & WHITE H5XX				
1	NOT SERVICED SEE PART TYPE CODE 23-108-5 AND 23-108-16 AND 23-109-4 AND 23-109-36								
2	VINYL	54"	672 GF7	672 EX9	672 EX9				
3	VINYL	54"	714 GF7	714 EX9	714 EX9				

1971 GJ-H, GJ-S 2 DOOR CONV., 2 DOOR H.T. TRIM

REF.	TYPE OF MATERIAL	INCHES WIDE	PART NUMBERS AND COLORS						
			BRITE BLUE H6B	DK. GREEN H6F	DK. SADDLE H6T	BLACK H6X	BLACK & WHITE H6XW	GOLD H6Y	
1	NOT SERVICED SEE PART TYPE CODE 23-108-5 AND 23-108-16 AND 23-109-4 AND 23-109-36								
2	VINYL	54"	672 GB5	672 GF7	672 GT7	672 EX9	672 EW1	672 GY3	
3	VINYL	54"	714 GB5	714 GF7	714 GT7	714 EX9	714 EW1	714 GY3	

1971 GJ-H, GJ-S 2 DOOR CONV., 2 DOOR H.T. TRIM

REF.	TYPE OF MATERIAL	INCHES WIDE	PART NUMBERS AND COLORS						
			BLACK HRX						
1	HIDE		303 DX9						
2	NOT SERVICED SEE PART TYPE CODE 23-109-4 AND 23-109-36								
3	VINYL	54"	672 EX9						
4	VINYL	54"	714 EX9						
5	VINYL	54"	672 EX9						

1971 GR-L, GR-K 4 DOOR SEDAN, 4 DOOR STATION WAGON

REF.	TYPE OF MATERIAL	INCHES WIDE	PART NUMBERS AND COLORS						
			BLACK D2X						
1	NOT SERVICED SEE PART TYPE CODE 23-108-5 AND 23-108-16 AND 23-109-4 AND 23-109-36								
3	VINYL	54"	672 EX9						
4	VINYL	54 '	672 EX9						
5	VINYL	56"	864 GX9						

CHALLENGER

1971 GJ-H 2 DOOR H.T. TRIM

REF.	TYPE OF MATERIAL	INCHES WIDE	PART NUMBERS AND COLORS						
			GREEN & WHITE L5FW						
1	NOT SERVICED SEE PART TYPE CODE 23-108-5 AND 23-108-16 AND 23-109-4 AND 23-109-36								
2	VINYL	54"	672 EW1						
3	VINYL	54"	714 EW1						

NOTES

Printed in U.S.A.
January 1972

SATELLITE

1971 GR-P 4 DOOR STATION WAGON TRIM

REF.	TYPE OF MATERIAL	INCHES WIDE	PART NUMBERS AND COLORS						
			DK. BLUE D3B	DK. GREEN D3F	DK. SADDLE D3T				
1	NOT SERVICED SEE PART TYPE CODE 23-108-5 AND 23-108-16 AND 23-109-4 AND 23-109-36								
3	VINYL	54"	697 GB6	697 GF8	697 GT6				
4	VINYL	54"	672 GB7	672 GF7	672 GT7				

1971 GR-H, 2 DOOR H.T. TRIM

REF.	TYPE OF MATERIAL	INCHES WIDE	PART NUMBERS AND COLORS						
			BRITE BLUE E2B	DK. SADDLE E2T	BLACK E2X				
1	NOT SERVICED SEE PART TYPE CODE 23-108-5 AND 23-108-16 AND 23-109-4 AND 23-109-36								
3	VINYL	54"	672 GB5	675 GT7	672 EX9				
4	VINYL	54"	672 GB5	672 GT7	672 EX9				

1971 GR-L, GR-K 4 DOOR SEDAN, 4 DOOR STATION WAGON TRIM

REF.	TYPE OF MATERIAL	INCHES WIDE	PART NUMBERS AND COLORS						
			LT. BLUE L2B	LT. TAN L2T					
1	VINYL	47"	858 GB7	858 GT7					
3	VINYL	54"	672 GB2	672 GT3					
4	VINYL	54"	672 GB2	672 GT3					

1971 GR-K, GR-L 4 DOOR SEDAN TRIM

REF.	TYPE OF MATERIAL	INCHES WIDE	PART NUMBERS AND COLORS						
			DK. SADDLE K1T						
1	CLOTH	62"	123 GT7						
3	VINYL	54"	675 GT7						
4	VINYL	54"	672 GT7						

1971 GR-K, GR-L 4 DOOR SEDAN TRIM

REF.	TYPE OF MATERIAL	INCHES WIDE	PART NUMBERS AND COLORS						
			DK. SADDLE K2T	BLACK K2X					
1	VINYL	50"	724 GT7	724 EX9					
2	VINYL	54"	672 GT7	672 EX9					

1971 GR-T 4 DOOR SEDAN TRIM

REF.	TYPE OF MATERIAL	INCHES WIDE	PART NUMBERS AND COLORS						
			DK. SADDLE T2T	BLACK T2X					
1	VINYL	50"	724 GT7	724 EX9					
2	VINYL	54"	672 GT7	672 EX9					

Printed in U.S.A.
January 1972

SATELLITE

1971 GR-H, 4 DOOR SEDAN, 2 DOOR H.T. TRIM

REF.	TYPE OF MATERIAL	INCHES WIDE	PART NUMBERS AND COLORS						
			BRITE BLUE H1B	DK. BLUE H1B	DK. GREEN H1F	DK. SADDLE H1T	BLACK H1X	GOLD H1Y	
1	NOT SERVICED SEE PART TYPE CODE 23-108-5 AND 23-108-16 AND 23-109-4 AND 23-109-36								
2	VINYL	54"	843 GB5	843 GB2	843 GF3	843 GT7	843 GA8	843 GY3	
3	VINYL	54"	672 GB5	675 GB7	675 GF7	675 GT7	672 EX9	672 GY3	
4	VINYL	54"	672 GB5	672 GB7	672 GF7	672 GT7	672 EX9	672 GY3	

1971 GR-M, GR-H 2 DOOR H.T., 4 DOOR SEDAN, 4 DOOR STATION WAGON TRIM

REF.	TYPE OF MATERIAL	INCHES WIDE	PART NUMBERS AND COLORS						
			BRITE BLUE H2B	DK. BLUE H2B	DK. GREEN H2F	DK. SADDLE H2T	BLACK H2X	BLACK & GUNMETAL H2XA	BLACK & WHITE H2XW
1	NOT SERVICED SEE PART TYPE CODE 23-108-5 AND 23-108-16 AND 23-109-4 AND 23-109-36								
3	VINYL	54"	672 GB5	675 GB7	675 GF7	675 GT7	672 EX9	672 GA6	672 EW1
4	VINYL	54"	672 GB5	672 GB7	672 GF7	672 GT7	672 EX9	672 GA6	672 EW1

1971 GR-M, GR-H 2 DOOR H.T., 4 DOOR SEDAN, 4 DOOR STATION WAGON TRIM

REF.	TYPE OF MATERIAL	INCHES WIDE	PART NUMBERS AND COLORS						
			GOLD H2Y						
1	NOT SERVICED SEE PART TYPE CODE 23-108-5 AND 23-108-16 AND 23-109-4 AND 23-109-36								
3	VINYL	54"	672 GY3						
4	VINYL	54"	672 GY3						

1971 GR-M 2 DOOR H.T. TRIM

REF.	TYPE OF MATERIAL	INCHES WIDE	PART NUMBERS AND COLORS						
			BRITE BLUE M2B	DK. SADDLE M2T	BLACK M2X				
1	NOT SERVICED SEE PART TYPE CODE 23-108-5 AND 23-108-16 AND 23-109-4 AND 23-109-36								
3	VINYL	54"	672 GB5	675 GT7	672 EX9				
4	VINYL	54"	672 GB5	672 GT7	672 EX9				

1971 GR-M 2 DOOR H.T. TRIM

REF.	TYPE OF MATERIAL	INCHES WIDE	PART NUMBERS AND COLORS						
			BLACK M5X						
1	NOT SERVICED SEE PART TYPE CODE 23-108-5 AND 23-108-16 AND 23-109-4 AND 23-109-36								
3	VINYL	54"	672 EX9						
4	VINYL	54"	714 EX9						

1971 GR-M 2 DOOR H.T. TRIM

REF.	TYPE OF MATERIAL	INCHES WIDE	PART NUMBERS AND COLORS						
			BRITE BLUE M6B	DK. GREEN M6F	DK. SADDLE M6T	BLACK M6X	BLACK & GUNMETAL M6XA	BLACK & WHITE M6XW	GOLD M6Y
1	NOT SERVICED SEE PART TYPE CODE 23-108-5 AND 23-108-16 AND 23-109-4 AND 23-109-36								
3	VINYL	54"	672 GB5	672 GF7	672 GT7	672 EX9	672 GA6	672 EW1	672 GY3
4	VINYL	54"	714 GB5	714 GF7	714 GT7	714 EX9	714 GA6	714 EW1	714 GY3

Printed in U.S.A.
January 1972

SATELLITE

1971 GR-M 2 DOOR H.T. TRIM

REF.	TYPE OF MATERIAL	INCHES WIDE	PART NUMBERS AND COLORS						
			BLACK & ORANGE M6XV						
1	NOT SERVICED SEE PART TYPE CODE 23-108-5 AND 23-108-16 AND 23-109-4 AND 23-109-36								
3	VINYL	54"	672 EX9						
4	VINYL	54"	714 EX9						

1971 GR-P 4 DOOR STATION WAGON TRIM

REF.	TYPE OF MATERIAL	INCHES WIDE	PART NUMBERS AND COLORS						
			DK. BLUE P2B	DK. GREEN P2F	DK. SADDLE P2T	BLACK P2X			
1	NOT SERVICED SEE PART TYPE CODE 23-108-5 AND 23-108-16 AND 23-109-4 AND 23-109-36								
3	VINYL	54"	672 GB5	675 GF7	675 GT7	672 EX9			
4	VINYL	54"	672 GB5	672 GF7	672 GT7	672 EX9			

1971 GR-P, GR-S 4 DOOR SEDAN 2 DOOR H.T. TRIM

REF.	TYPE OF MATERIAL	INCHES WIDE	PART NUMBERS AND COLORS						
			BRITE BLUE P3B	DK. BLUE P3B	DK. GREEN P3F	DK. SADDLE P3T	BLACK P3X		
1	NOT SERVICED SEE PART TYPE CODE 23-108-5 AND 23-108-16 AND 23-109-4 AND 23-109-36								
3	VINYL	54"	672 GB5	672 GB7	672 GF7	672 GT7	672 EX9		

1971 GR-P, GR-S 2 DOOR H.T. TRIM

REF.	TYPE OF MATERIAL	INCHES WIDE	PART NUMBERS AND COLORS						
			BLACK P5X						
1	NOT SERVICED SEE PART TYPE CODE 23-108-5 AND 23-108-16 AND 23-109-4 AND 23-109-36								
3	VINYL	54"	672 EX9						
4	VINYL	54"	714 EX9						

1971 GR-P, GR-S 2 DOOR H.T. TRIM

REF.	TYPE OF MATERIAL	INCHES WIDE	PART NUMBERS AND COLORS						
			BRITE BLUE P6B	DK. GREEN P6F	DK. SADDLE P6T	BLACK P6X	BLACK & GUNMETAL P6XA	BLACK & WHITE P6XW	GOLD P6Y
1	NOT SERVICED SEE PART TYPE CODE 23-108-5 AND 23-108-16 AND 23-109-4 AND 23-109-36								
3	VINYL	54"	672 GB5	672 GF7	672 GT7	672 EX9	672 GA6	672 EW1	672 GY3
4	VINYL	54"	714 GB5	714 GF7	714 GT7	714 EX9	714 GA6	714 EW1	714 GY3

NOTES

Printed in U.S.A.
January 1972

CORONET

1971 GW-L, 4 DOOR SEDAN 4 DOOR STATION WAGON TRIM

REF.	TYPE OF MATERIAL	INCHES WIDE	PART NUMBERS AND COLORS						
			DK. BLUE L2B	DK. SADDLE L2T	BLACK L2X				
1	NOT SERVICED SEE PART TYPE CODE 23-108-5 AND 23-108-16 AND 23-109-4 AND 23-109-36								
3	VINYL	54"	675 GB7	675 GT7	672 EX9				
4	VINYL	54"	672 GB7	672 GT7	672 EX9				
5	VINYL	56"	864 GB2	864 GT6	864 GX9				

1971 GW-K, GW-L 4 DOOR SEDAN TRIM

REF.	TYPE OF MATERIAL	INCHES WIDE	PART NUMBERS AND COLORS						
			DK. SADDLE K1T						
1	CLOTH	62"	123 GT7						
3	VINYL	54"	675 GT7						
4	VINYL	54"	672 GT7						

1971 GW-K, GW-L 4 DOOR SEDAN TRIM

REF.	TYPE OF MATERIAL	INCHES WIDE	PART NUMBERS AND COLORS						
			DK. SADDLE K2T	BLACK K2X					
1	VINYL	50"	724 GT7	724 EX9					
2	VINYL	54"	672 GT7	672 EX9					

1971 GR-T 4 DOOR SEDAN TRIM

REF.	TYPE OF MATERIAL	INCHES WIDE	PART NUMBERS AND COLORS						
			DK. SADDLE T2T	BLACK T2X					
1	VINYL	50"	724 GT7	724 EX9					
2	VINYL	54"	672 GT7	672 EX9					

1971 GW-H 4 DOOR SEDAN TRIM

REF.	TYPE OF MATERIAL	INCHES WIDE	PART NUMBERS AND COLORS						
			DK. BLUE H1B	DK. GREEN H1F,H1X	BLACK H1Y	GOLD			
1	NOT SERVICED SEE PART TYPE CODE 23-108-5 AND 23-108-16 AND 23-109-4 AND 23-109-36								
3	VINYL	54"	675 GB7	675 GF7	672 EX9	672 GY3			
4	VINYL	54"	672 GB7	672 GF7	672 EX9	672 GY3			

1971 GW-H 4 DOOR SEDAN, 4 DOOR STATION WAGON TRIM

REF.	TYPE OF MATERIAL	INCHES WIDE	PART NUMBERS AND COLORS						
			DK. BLUE H2B	DK. GREEN H2F	DK. SADDLE H2T	BLACK H2X	GOLD H2Y		
1	NOT SERVICED SEE PART TYPE CODE 23-108-5 AND 23-108-16 AND 23-109-4 AND 23-109-36								
3	VINYL	54"	675 GB7	675 GF7	675 GT7	672 EX9	672 GY3		
4	VINYL	54"	672 GB7	672 GF7	672 GT7	672 EX9	672 GY3		

Printed in U.S.A.
January 1972

CORONET

1971 GW-P 4 DOOR SEDAN, 4 DOOR STATION WAGON TRIM

REF.	TYPE OF MATERIAL	INCHES WIDE	PART NUMBERS AND COLORS						
			DK. BLUE P3B	DK. GREEN P3F	DK. SADDLE P3T	BLACK P3X	GOLD P3Y		
1	NOT SERVICED SEE PART TYPE CODE 23-108-5 AND 23-108-16 AND 23-109-4 AND 23-109-36								
3	VINYL	54"	697 GB6	697 GF8	697 GT6	697 EX9	697 GY4		
4	VINYL	54"	672 GB7	672 GF7	672 GT7	672 EX9	672 GY3		

1971 GW-P 4 DOOR STATION WAGON TRIM

REF.	TYPE OF MATERIAL	INCHES WIDE	PART NUMBERS AND COLORS						
			DK. BLUE P4B	DK. GREEN P4F	DK. SADDLE P4T	BLACK P4X			
1	NOT SERVICED SEE PART TYPE CODE 23-108-5 AND 23-108-16 AND 23-109-4 AND 23-109-36								
3	VINYL	54"	697 GB6	697 GF8	697 GT6	697 EX9			
4	VINYL	54"	672 GB7	672 GT7	672 GT7	672 EX9			

1971 GW-H 2 DOOR H.T. TRIM

REF.	TYPE OF MATERIAL	INCHES WIDE	PART NUMBERS AND COLORS						
			BRITE BLUE E2B	DK. SADDLE E2T	BLACK E2X				
1	NOT SERVICED SEE PART TYPE CODE 23-108-5 AND 23-108-16 AND 23-109-4 AND 23-109-36								
3	VINYL	54"	672 GB5	675 GT7	672 EX9				
4	VINYL	54"	672 GB5	672 GT7	672 EX9				

1971 GW-M, GW-H 2 DOOR H.T. TRIM

REF	TYPE OF MATERIAL	INCHES WIDE	PART NUMBERS AND COLORS						
			BRITE BLUE C2B	DK. GREEN C2F	DK. SADDLE C2T	BLACK C2X	BLACK & WHITE C2XW	GOLD C2Y	
1	NOT SERVICED SEE PART TYPE CODE 23-108-5 AND 23-108-16 AND 23-109-4 AND 23-109-36								
3	VINYL	54"	672 GB5	675 GF7	675 GT7	672 EX9	672 EW1	672 GY3	
4	VINYL	56"	863 GB5	863 GF7	863 GT7	863 GX9	863 GW1	863 GY3	
5	VINYL	54"	672 GB5	672 GF7	672 GT7	672 EX9	672 EW1	672 GY3	

1971 GW-P 2 DOOR H.T. TRIM

REF.	TYPE OF MATERIAL	INCHES WIDE	PART NUMBERS AND COLORS						
			BRITE BLUE C3B	DK. GREEN C3F	BLACK C3X				
1	NOT SERVICED SEE PART TYPE CODE 23-108-5 AND 23-108-16 AND 23-109-4 AND 23-109-36								
3	VINYL	54"	672 GB5	672 GF7	672 EX9				

1971 GW-M 2 DOOR H.T. TRIM

REF.	TYPE OF MATERIAL	INCHES WIDE	PART NUMBERS AND COLORS						
			DK. SADDLE C5F	BLACK C5X	BLACK & ORANGE C5XV				
1	NOT SERVICED SEE PART TYPE CODE 23-108-5 AND 23-108-16 AND 23-109-4 AND 23-109-36								
3	VINYL	54"	672 GF7	672 EX9	672 EX9				
4	VINYL	54"	714 GF7	714 EX9	714 EX9				

CORONET

1971 GW-M 2 DOOR H.T. TRIM

REF.	TYPE OF MATERIAL	INCHES WIDE	PART NUMBERS AND COLORS						
			BRITE BLUE C6B	DK. GREEN C6F	DK. SADDLE C6T	BLACK C6X	BLACK & GUNMETAL C6XA	BLACK & WHITE C6XW	GOLD C6Y
1	NOT SERVICED SEE PART TYPE CODE 23-108-5 AND 23-108-16 AND 23-109-4 AND 23-109-36								
3	VINYL	54"	672 GB5	672 GF7	672 GT7	672 EX9	672 GA6	672 EW1	672 GY3
4	VINYL	54"	714 GB5	714 GF7	714 GT7	714 EX9	714 GA6	714 EW1	714 GY3

1971 GW-P, GW-S 2 DOOR H.T. TRIM

REF.	TYPE OF MATERIAL	INCHES WIDE	PART NUMBERS AND COLORS						
			DK. GREEN D5F	BLACK D5X	BLACK & ORANGE D5XV				
1	NOT SERVICED SEE PART TYPE CODE 23-108-5 AND 23-108-16 AND 23-109-4 AND 23-109-36								
3	VINYL	54"	672 GF7	672 EX9	672 EX9				
4	VINYL	54"	714 GF7	714 EX9	714 EX9				

1971 GW-P, GW-S 2 DOOR H.T. TRIM

REF.	TYPE OF MATERIAL	INCHES WIDE	PART NUMBERS AND COLORS						
			BRITE BLUE D6B	DK. GREEN D6F	DK. SADDLE D6T	BLACK D6X	BLACK & GUNMETAL D6XA	BLACK & WHITE D6XW	GOLD D6Y
1	NOT SERVICED SEE PART TYPE CODE 23-108-5 AND 23-108-16 AND 23-109-4 AND 23-109-36								
3	VINYL	54"	672 GB5	672 GF7	672 GT7	672 EX9	672 GA6	672 EW1	672 GY3
4	VINYL	54"	714 GB5	714 GF7	714 GT7	714 EX9	714 GA6	714 EW1	714 GY3

1971 GW-P SP. 2 DOOR H.T. TRIM

REF.	TYPE OF MATERIAL	INCHES WIDE	PART NUMBERS AND COLORS						
			BRITE BLUE E5B	DK. GREEN E5F	BLACK E5X	GOLD E5Y			
1	NOT SERVICED SEE PART TYPE CODE 23-108-5 AND 23-108-16 AND 23-109-4 AND 23-109-36								
3	VINYL	54"	842 GB5	842 GF7	842 GX9	842 GY3			
4	VINYL	54"	842 GB5	842 GF7	842 GX9	842 GY3			

1971 GW-P SP. 2 DOOR H.T. TRIM

REF.	TYPE OF MATERIAL	INCHES WIDE	PART NUMBERS AND COLORS						
			DK. SADDLE CRT	BLACK CRX	BLACK & GUNMETAL CRXA				
1	NOT SERVICED SEE PART TYPE CODE 23-108-5 AND 23-108-16 AND 23-109-4 AND 23-109-36								
4	VINYL	54"	842 GT7	842 GX9	842 GA6				
5	VINYL	54"	842 GT7	842 GX9	842 GA6				

1971 GW-P SP. 2 DOOR H.T. TRIM

REF.	TYPE OF MATERIAL	INCHES WIDE	PART NUMBERS AND COLORS						
			BRITE BLUE D3B	DK. GREEN D3F	BLACK D3X	GOLD D3Y			
1	NOT SERVICED SEE PART TYPE CODE 23-108-5 AND 23-108-16 AND 23-109-4 AND 23-109-36								
3	VINYL	54"	842 GB5	842 GF7	842 GX9	842 GY3			

Printed in U.S.A.
January 1972

PLYMOUTH

1971 GP-E 2 DOOR SEDAN, 4 DOOR SEDAN TRIM

REF.	TYPE OF MATERIAL	INCHES WIDE	PART NUMBERS AND COLORS						
			LT. BLUE E1B	DK. SADDLE E1T					
1	CLOTH	54"	137 GBX	137 GTX					
3	VINYL	54"	672 GB2	672 GT7					
4	VINYL	54"	672 GB2	672 GT7					

1971 GP-E, GP-K, GP-L 2 DOOR SEDAN, 4 DOOR SEDAN, 4 DOOR STATION WAGON TRIM

REF.	TYPE OF MATERIAL	INCHES WIDE	PART NUMBERS AND COLORS						
			LT. BLUE E2B	DK. SADDLE E2T	BLACK & CHARCOAL E2XA				
1	VINYL	65"	855 GB7	855 GT1	855 GX9				
3	VINYL	54"	672 GB2	672 GT7	672 FA8				
4	VINYL	54"	672 GB2	672 GT7	672 FA8				

1971 GP-E 2 DOOR SEDAN, 4 DOOR SEDAN TRIM

REF.	TYPE OF MATERIAL	INCHES WIDE	PART NUMBERS AND COLORS						
			BLACK & CHARCOAL D2XA						
1	VINYL	54"	283 GA8						
2	VINYL	54"	672 FA8						
4	VINYL	54"	672 FA8						

1971 GP-K, GP-E 4 DOOR SEDAN TRIM

REF.	TYPE OF MATERIAL	INCHES WIDE	PART NUMBERS AND COLORS						
			DK. SADDLE K1T						
1	CLOTH	62"	123 GT7						
3	VINYL	54"	672 GT7						
4	VINYL	54"	672 GT7						

1971 GP-K, GP-E, GP-T 4 DOOR SEDAN TRIM

REF.	TYPE OF MATERIAL	INCHES WIDE	PART NUMBERS AND COLORS						
			DK. SADDLE K2T	BLACK K2X					
1	VINYL	50"	724 GT7	724 EX9					
2	VINYL	54"	672 GT7	672 EX9					

1971 GP-K, GP-E 4 DOOR SEDAN TRIM

REF.	TYPE OF MATERIAL	INCHES WIDE	PART NUMBERS AND COLORS						
			DK. SADDLE K5T						
1	CLOTH	62"	123 GT7						
2	VINYL	54"	672 GT7						

PLYMOUTH

1971 GP-K, GP-E 4 DOOR SEDAN TRIM

REF.	TYPE OF MATERIAL	INCHES WIDE	PART NUMBERS AND COLORS						
			DK. SADDLE K6T						
1	VINYL	50"	724 GT7						
2	VINYL	54"	672 GT7						

1971 GP-L, GP-K, 2 DOOR H.T. 4 DOOR SEDAN TRIM

REF.	TYPE OF MATERIAL	INCHES WIDE	PART NUMBERS AND COLORS						
			LT. BLUE L1B	DK. GREEN L1F	DK. SADDLE L1T				
1	CLOTH	64"	106 GB2	106 GF7	106 GT7				
3	VINYL	54"	672 GB2	672 GF7	672 GT7				
4	VINYL	54"	672 GB2	672 GF7	672 GT7				

1971 GP-L, GP-K 2 DOOR H.T., 4 DOOR SEDAN, 4 DOOR STATION WAGON TRIM

REF.	TYPE OF MATERIAL	INCHES WIDE	PART NUMBERS AND COLORS						
			LT. BLUE L2B	DK. GREEN L2F	DK. SADDLE L2T	BLACK & CHARCOAL L2XA			
1	NOT SERVICED SEE PART TYPE CODE 23-108-5 AND 23-108-16 AND 23-109-4 AND 23-109-36								
3	VINYL	54"	672 GB2	672 GF7	672 GT7	672 FA8			
4	VINYL	54"	672 GB2	672 GF7	672 GT7	672 FA8			

1971 GP-M 2 DOOR H.T., SP. 2 DOOR H.T., 4 DOOR SEDAN, 4 DOOR H.T. TRIM

REF.	TYPE OF MATERIAL	INCHES WIDE	PART NUMBERS AND COLORS						
			LT. BLUE M1B	DK. GREEN M1F	BLACK & CHARCOAL M1XA	GOLD M1Y			
1	NOT SERVICED SEE PART TYPE CODE 23-108-5 AND 23-108-16 AND 23-109-4 AND 23-109-36								
3	VINYL	54"	672 GB2	672 GF7	672 FA8	672 GY5			
4	VINYL	54"	672 GB2	672 GF7	672 FA8	672 GY5			

1971 GP-M 4 DOOR STATION WAGON TRIM

REF.	TYPE OF MATERIAL	INCHES WIDE	PART NUMBERS AND COLORS						
			LT. BLUE M2B	DK. GREEN M2F	DK. SADDLE M2T	BLACK & CHARCOAL M2XA			
1	NOT SERVICED SEE PART TYPE CODE 23-108-5 AND 23-108-16 AND 23-109-4 AND 23-109-36								
3	VINYL	54"	672 GB2	672 GF7	672 GT7	672 FA8			
4	VINYL	54"	672 GB2	672 GF7	672 GT7	672 FA8			

1971 GP-M, 2 DOOR H.T., SP. 2 DOOR H.T., 4 DOOR SEDAN, 4 DOOR H.T. TRIM

REF.	TYPE OF MATERIAL	INCHES WIDE	PART NUMBERS AND COLORS						
			LT. BLUE M4B	RUSSET M4E	DK. GREEN M4F	DK. SADDLE M4T	BLACK & CHARCOAL M4XA	BLACK & WHITE M4XW	GOLD M4Y
1	NOT SERVICED SEE PART TYPE CODE 23-108-5 AND 23-108-16 AND 23-109-4 AND 23-109-36								
3	VINYL	54"	672 GB2	672 GE8	672 GF7	672 GT7	672 FA8	672 EW1	672 GY5
4	VINYL	54"	827 GB2	827 GE8	827 GF7	827 GT7	827 FA8	672 FW1	672 GY5

Printed in U.S.A.
January 1972

PLYMOUTH

1971 GP-M 2 DOOR H.T., SP. 2 DOOR H.T. TRIM

REF.	TYPE OF MATERIAL	INCHES WIDE	PART NUMBERS AND COLORS						
			DK. GREEN M6F	BLACK & CHARCOAL M6XA	BLACK & WHITE M6XW				
1	NOT SERVICED SEE PART TYPE CODE 23-108-5 AND 23-108-16 AND 23-109-4 AND 23-109-36								
2	VINYL	54"	807 GF7	807 GX9	807 FW1				
3	VINYL	54"	844 GF7	844 GX9	844 GW1				

1971 GP-M 4 DOOR SEDAN, 4 DOOR H.T. TRIM

REF.	TYPE OF MATERIAL	INCHES WIDE	PART NUMBERS AND COLORS						
			BLACK & CHARCOAL M8XA						
1	NOT SERVICED SEE PART TYPE CODE 23-108-5 AND 23-108-16 AND 23-109-4 AND 23-109-36								
3	VINYL	54"	672 FA8						

1971 GP-H, GP-P, 2 DOOR H.T., SP. 2 DOOR H.T., 4 DOOR SEDAN, 4 DOOR H.T.

REF.	TYPE OF MATERIAL	INCHES WIDE	PART NUMBERS AND COLORS						
			LT. BLUE H3B	DK. GREEN H3F	DK. SADDLE H3T	BLACK & CHARCOAL H3XA	GOLD H3Y		
1	NOT SERVICED SEE PART TYPE CODE 23-108-5 AND 23-108-16 AND 23-109-4 AND 23-109-36								
3	VINYL	54"	672 GB2	672 GF7	672 GT7	672 FA8	672 GY5		

1971 GP-M-GP-H 2 DOOR H.T., SP. 2 DOOR H.T., 4 DOOR SEDAN, 4 DOOR H.T., 4 DOOR STATION WAGON

REF.	TYPE OF MATERIAL	INCHES WIDE	PART NUMBERS AND COLORS						
			LT. BLUE H4B	RUSSET H4E	DK. GREEN H4F	DK. SADDLE H4T	BLACK & CHARCOAL H4XA	BLACK & WHITE H4XW	GOLD H4Y
1	NOT SERVICED SEE PART TYPE CODE 23-108-5 AND 23-108-16 AND 23-109-4 AND 23-109-36								
3	VINYL	54"	672 GB2	672 GE8	672 GF7	672 GT7	672 FA8	672 EW1	672 GY5

1971 GP-H, GP-P 2 DOOR H.T., SP. 2 DOOR H.T. TRIM

REF.	MATERIAL	WIDE	PART NUMBERS AND COLORS						
			INCHES H5B	LT. BLUE H5F	DK. GREEN CHARCOAL H5XA	BLACK & H5Y	GOLD		
	NOT SERVICED SEE PART TYPE CODE 23-108-5 AND 23-108-16 AND 23-109-4 AND 23-109-36								
2	VINYL	54"	672 GB2	672 GF7	672 FA8	672 GY5			
3	VINYL	54"	714 GB2	714 GF7	714 FA8	714 GY5			

1971 GP-H, GP-P, 2 DOOR H.T., SP. 2 DOOR H.T., 4 DOOR H.T. TRIM

REF.	TYPE OF MATERIAL	INCHES WIDE	PART NUMBERS AND COLORS						
			LT. BLUE H6B	DK. GREEN H6F	BLACK 7 CHARCOAL H6XA	BLACK 7 WHITE H6XW			
1	NOT SERVICED SEE PART CODE 23-108-5 AND 23-108-16 AND 23-109-4 AND 23-109-36								
2	VINYL	54"	807 GB2	807 GF7	807 GX9	807 FW1			
3	VINYL	54"	844 GB2	844 GF7	844 GX9	844 GW1			

PLYMOUTH

1971 GP-M, GP-H 4 DOOR SEDAN, 4 DOOR H.T., 4 DOOR STATION WAGON TRIM

REF.	TYPE OF MATERIAL	INCHES WIDE	PART NUMBERS AND COLORS						
			LT. BLUE H7B	DK. GREEN H7F	BLACK & CHARCOAL H7XA	GOLD H7Y			
1	NOT SERVICED SEE PART TYPE CODE 23-108-5 AND 23-108-16 AND 23-109-4 AND 23-109-36								
2	VINYL	54"	672 GB2	672 GF7	672 FA8	672 GY5			

1971 GP-M, GP-H 4 DOOR STATION WAGON TRIM

REF.	TYPE OF MATERIAL	INCHES WIDE	PART NUMBERS AND COLORS						
			DK. SADDLE H8T	BLACK & CHARCOAL H8XA					
1	NOT SERVICED SEE PART TYPE CODE 23-108-5 AND 23-108-16 AND 23-109-4 AND 23-109-36								
2	VINYL	54"	672 GT7	672 FA8					

NOTES

Printed in U.S.A.
January 1972

DODGE

1971 GD-S, GD-K 4 DOOR SEDAN TRIM

REF.	TYPE OF MATERIAL	INCHES WIDE	PART NUMBERS AND COLORS						
			LT. BLUE B1B	DK. SADDLE B1T					
1	CLOTH	54"	137 GBX	137 GTX					
3	VINYL	54"	672 GB2	672 GT7					
4	VINYL	54"	672 GB2	672 GT7					

1971 GD-S, GD-K 4 DOOR SEDAN, 4 DOOR STATION WAGON TRIM

REF.	TYPE OF MATERIAL	INCHES WIDE	PART NUMBERS AND COLORS						
			LT. BLUE B2B	DK. SADDLE B2T					
1	VINYL	65"	855 GB7	855 GT1					
3	VINYL	54"	672 GB2	672 GT7					
4	VINYL	54"	672 GB2	672 GT7					

1971 GD-E, GD-K 2 DOOR H.T., 4 DOOR SEDAN TRIM

REF.	TYPE OF MATERIAL	INCHES WIDE	PART NUMBERS AND COLORS						
			LT. BLUE F1B	DK. GREEN F1F	DK. SADDLE F1T				
1	NOT SERVICED SEE PART TYPE CODE 23-108-5 AND 23-108-16 AND 23-109-4 AND 23-109-36								
3	VINYL	54"	672 GB2	672 GF7	672 GT7				
4	VINYL	54"	672 GB2	672 GF7	672 GT7				

1971 GD-S, GD-E, GD-K 2 DOOR H.T., 4 DOOR SEDAN, 4 DOOR STATION WAGON TRIM

REF.	TYPE OF MATERIAL	INCHES WIDE	PART NUMBERS AND COLORS						
			LT. BLUE F2B	DK. GREEN F2F	DK. SADDLE F2T	BLACK & GUNMETAL F2XA			
1	NOT SERVICED SEE PART TYPE CODE 23-108-5 AND 23-108-16 AND 23-109-4 AND 23-109-36								
3	VINYL	54"	672 GB2	672 GF7	672 GT7	672 FA8			
4	VINYL	54"	672 GB2	672 GF7	672 GT7	672 FA8			

1971 GD-K, GD-E, GD-8 4 DOOR SEDAN TRIM

REF.	TYPE OF MATERIAL	INCHES WIDE	PART NUMBERS AND COLORS						
			GRAY K1A						
1	CLOTH	62	123 GA9						
3	VINYL	54"	672 EA9						
4	VINYL	54"	672 EA9						

1971 GD-K, GD-T, GD-E, GD-S 4 DOOR SEDAN TRIM

REF.	TYPE OF MATERIAL	INCHES WIDE	PART NUMBERS AND COLORS						
			GRAY K2A						
1	VINYL	50"	724 EA9						
2	VINYL	54"	672 EA9						

DODGE

1971 GD-K, GD-E, GD-S 4 DOOR SEDAN TRIM

REF.	TYPE OF MATERIAL	INCHES WIDE	PART NUMBERS AND COLORS						
			GRAY K5A						
1	CLOTH	62"	123 GA9						
2	VINYL	54"	672 EA9						

1971 GD-K, GD-E, GD-S 4 DOOR SEDAN TRIM

REF.	TYPE OF MATERIAL	INCHES WIDE	PART NUMBERS AND COLORS						
			GRAY K6A						
1	VINYL	50"	724 EA9						
2	VINYL	54"	672 EA9						

1971 GD-L 2 DOOR H.T., 4 DOOR SEDAN, 4 DOOR H.T. TRIM

REF.	TYPE OF MATERIAL	INCHES WIDE	PART NUMBERS AND COLORS						
			LT. BLUE L1B	DK. GREEN L1F	BLACK L1X	GOLD L1Y			
1	NOT SERVICED SEE PART TYPE CODE 23-108-5 AND 23-108-16 AND 23-109-4 AND 23-109-36								
2	VINYL	54"	672 GB2	672 GF7	672 EX9	672 GY5			
3	VINYL	54"	672 GB2	672 GF7	672 EX9	672 GY5			

1971 GD-L 2 DOOR H.T., 4 DOOR SEDAN, 4 DOOR H.T., 4 DOOR STATION WAGON TRIM

REF.	TYPE OF MATERIAL	INCHES WIDE	PART NUMBERS AND COLORS						
			LT. BLUE L2B	DK. GREEN L2F	DK. SADDLE L2T	BLACK L2X			
1	NOT SERVICED SEE PART TYPE CODE 23-108-5 AND 23-108-16 AND 23-109-4 AND 23-109-36								
2	VINYL	54"	672 GB2	672 GF7	672 GT7	672 EX9			
3	VINYL	54"	672GB2	672 GF7	672 GT7	672 EX9			

1971 GD-M 2 DOOR H.T., 4 DOOR H.T. TRIM

REF.	TYPE OF MATERIAL	INCHES WIDE	PART NUMBERS AND COLORS						
			LT. BLUE M3B	DK. GREEN M3F	BLACK M3X	GOLD M3Y			
1	NOT SERVIDED SEE PART TYPE CODE 23-108-5 AND 23-108-16 AND 23-109-4 AND 23-109-36								
2	VINYL	54"	842 GB2	842 GF7	842 GX9	842 GY5			
3	VINYL	54"	672 GB2	672 GF7	672 EX9	672 GY5			

1971 GD-M 2 DOOR H.T., 4 DOOR H.T. TRIM

REF.	TYPE OF MATERIAL	INCHES WIDE	PART NUMBERS AND COLORS						
			LT. BLUE M4B	RUSSET M4E	DK. GREEN M4F	BLACK M4X	BLACK & WHITE M4XW		
1	NOT SERVICED SEE PART TYPE CODE 23-108-5 AND 23-108-16 AND 23-109-4 AND 23-109-36								
3	VINYL	54"	672 GB2	672 GE8	672 GF7	672 EX9	672 EW1		

DODGE

1971 GD-M 2 DOOR H.T. TRIM

REF.	TYPE OF MATERIAL	INCHES WIDE	PART NUMBERS AND COLORS						
			RUSSET M6E	BLACK M6X	BLACK & WHITE M6XW				
1	NOT SERVICED SEE PART TYPE CODE 23-108-5 AND 23-108-16 AND 23-109-4 AND 23-109-36								
2	VINYL	54"	807 GE8	807 GX9	807 GW1				
3	VINYL	54"	844 GE8	844 GX9	844 GW1				

1971 GD-H, 2 DOOR H.T., 4 DOOR SEDAN, 4 DOOR H.T. TRIM

REF.	TYPE OF MATERIAL	INCHES WIDE	PART NUMBERS AND COLORS						
			GUNMETAL H3A	LT. BLUE H3B	DK. GREEN H3F	BLACK H3X	GOLD H3Y		
1	NOT SERVICED SEE PART TYPE CODE 23-108-5 AND 23-108-16 AND 23-109-4 AND 23-109-36								
2	VINYL	54"	807 GA6	807 GB2	807 GF7	807 GX9	807 GY5		

1971 GD-H, 2 DOOR H.T., 4 DOOR H.T., 4 DOOR STATION WAGON TRIM

REF.	TYPE OF MATERIAL	INCHES WIDE	PART NUMBERS AND COLORS						
			LT. BLUE H4B	RUSSET H4E	DK. GREEN H4F	DK. SADDLE H4T	BLACK H4X		
1	NOT SERVICED SEE PART TYPE CODE 23-108-5 AND 23-108-16 AND 23-109-4 AND 23-109-36								
2	VINYL	54"	807 GB2	807 GE8	807 GF7	807 GT7	807 GX9		

1971 GD-H 2 DOOR H.T. TRIM

REF.	TYPE OF MATERIAL	INCHES WIDE	PART NUMBERS AND COLORS						
			RUSSET H6E	BLACK H6X	BLACK & WHITE H6XW				
1	NOT SERVICED SEE PART TYPE CODE 23-108-5 AND 23-108-16 AND 23-109-4 AND 23-109-36								
2	VINYL	54"	807 GE8	807 GX9	807 GW1				
3	VINYL	54"	844 GE8	844 GX9	807 GW1				

1971 GD-H 4 DOOR SEDAN, 4 DOOR H.T., 4 DOOR STATION WAGON TRIM

REF.	TYPE OF MATERIAL	INCHES WIDE	PART NUMBERS AND COLORS						
			GUNMETAL H7A	LT. BLUE H7B	DK. GREEN H7F	BLACK H7X			
1	NOT SERVICED SEE PART TYPE CODE 23-108-5 AND 23-108-16 AND 23-109-4 AND 23-109-36								
3	VINYL	54"		854 GB2	854 GF7	854 GX9			
4	VINYL	54"	807 GA6	807 GB2	807 GF7	807 GX9			

1971 GD-H 4 DOOR STATION WAGON TRIM

REF.	TYPE OF MATERIAL	INCHES WIDE	PART NUMBERS AND COLORS						
			DK. SADDLE H8T	BLACK H8X					
2	VINYL	50"	854 GT7	854 GX9					

CHRYSLER

1971 GC-E 2 DOOR H.T., 4 DOOR SEDAN, 4 DOOR H.T. TRIM

REF.	TYPE OF MATERIAL	INCHES WIDE	PART NUMBERS AND COLORS						
			GUNMETAL E1A	LT. BLUE E1B	DK. GREEN E1F	BEIGE E1L	BLACK E1X	GOLD E1Y	
1	NOT SERVICED SEE PART TYPE CODE 23-108-5 AND 23-108-16 AND 23-109-4 AND 23-109-36								
3	VINYL	54"	672 GA6	672 GB2	672 GF7	672 ZL2	672 EX9	672 GY5	
4	VINYL	54"	672 GA6	672 GB2	672 GF7	672 ZL2	672 EX9	672 GY5	
5	VINYL	53"	865 GA6	865 GB2	865 GF7	865 GL2	865 GX9	865 GY5	

1971 GC-E, 2 DOOR H.T., 4 DOOR SEDAN, 4 DOOR H.T. TRIM

REF.	TYPE OF MATERIAL	INCHES WIDE	PART NUMBERS AND COLORS						
			RUSSET E2E	DK. GREEN E2F	BEIGE E2L	BLACK E2X			
1	NOT SERVICED SEE PART TYPE CODE 23-108-5 AND 23-108-16 AND 23-109-4 AND 23-109-36								
3	VINYL	54"	672 GE8	672 GF7	672 ZL2	672 EX9			
4	VINYL	54"	672 GE8	672 GF7	672 ZL2	672 EX9			

1971 GC-E 2 DOOR H.T. TRIM

REF.	TYPE OF MATERIAL	INCHES WIDE	PART NUMBERS AND COLORS						
			DK. SADDLE E6T	BLACK E6X	BLACK WHITE E6XW				
2	VINYL	54"	672 GT7	672 EX9	672 EW1				
3	VINYL	54"	638 GT7	638 DX9	638 GW1				
4	VINYL	54"	829 GT7	829 GX9	829 GW1				

1971 GC-L 2 DOOR H.T., 4 DOOR SEDAN, 4 DOOR H.T. TRIM

REF.	TYPE OF MATERIAL	INCHES WIDE	PART NUMBERS AND COLORS						
			LT. BLUE L3B	DK. GREEN L3F	BEIGE L3L	BLACK L3X	GOLD L3Y		
1	NOT SERVICED SEE PART TYPE CODE 23-108-5 AND 23-108-16 AND 23-109-4 AND 23-109-36								
3	VINYL	54"	672 GB2	672 GF7	672 ZL2	672 EX9	672 GY5		

1971 GC-L 2 DOOR H.T., 4 DOOR SEDAN, 4 DOOR H.T. TRIM

REF.	TYPE OF MATERIAL	INCHES WIDE	PART NUMBERS AND COLORS						
			LT. BLUE L4B	RUSSET L4E	BLACK L4X				
1	NOT SERVICED SEE PART TYPE CODE 23-108-5 AND 23-108-16 AND 23-109-4 AND 23-109-36								
3	VINYL	54"	672 GB2	672 GE8	672 EX9				

1971 GC-L 4 DOOR SEDAN, 4 DOOR H.T. TRIM

REF.	TYPE OF MATERIAL	INCHES WIDE	PART NUMBERS AND COLORS						
			LT. BLUE L7B	DK. GREEN L7F	BLACK & BEIGE L7XL				
1	NOT SERVICED SEE PART TYPE CODE 23-108-5 AND 23-108-16 AND 23-109-4 AND 23-109-36								
3	VINYL	54"	672 GB2	672 GF7	672 ZL2				

Printed in U.S.A.
January 1972

CHRYSLER

1971 GC-L 4 DOOR SEDAN, 4 DOOR H.T. TRIM

REF.	TYPE OF MATERIAL	INCHES WIDE	PART NUMBERS AND COLORS						
			DK. GREEN L8F	BLACK L8X					
1	NOT SERVICED SEE PART TYPE CODE 23-108-5 AND 23-108-16 AND 23-109-4 AND 23-109-36								
3	VINYL	54"	672 GF7	672 EX9					

1971 GC-H 2 DOOR H.T. TRIM

REF.	TYPE OF MATERIAL	INCHES WIDE	PART NUMBERS AND COLORS						
			GUNMETAL H3A	DK. BLUE H3B	DK. GREEN H3F	BLACK H3X	GOLD H3Y		
1	NOT SERVICED SEE PART TYPE CODE 23-108-5 AND 23-108-16 AND 23-109-4 AND 23-109-36								
3	VINYL	54"	672 GA6	672 GB7	672 GF7	672 EXY	672 GY5		

1971 GC-H 2 DOOR H.T. TRIM

REF.	TYPE OF MATERIAL	INCHES WIDE	PART NUMBERS AND COLORS						
			DK. GREEN H6F	DK. SADDLE H6T	BLACK H6X	BLACK & WHITE H6XW			
1	NOT SERVICED SEE PART TYPE CODE 23-108-5 AND 23-108-16 AND 23-109-4 AND 23-109-36								
3	VINYL	54"	672 GF7	672 GT7	672 EX9	672 EW1			

1971 GC-H 4 DOOR SEDAN, 4 DOOR H.T. TRIM

REF.	TYPE OF MATERIAL	INCHES WIDE	PART NUMBERS AND COLORS						
			GUNMETAL H9A	DK. BLUE H9B	DK. GREEN H9F	BLACK H9X	GOLD H9Y		
1	NOT SERVICED SEE PART TYPE CODE 23-108-5 AND 23-108-16 AND 23-109-4 AND 23-109-36								
3	VINYL	54"	672 GA6	672 GR7	672 GF7	672 EX9	672 GY5		

1971 GC-H 4 DOOR SEDAN, 4 DOOR H.T. TRIM

REF.	TYPE OF MATERIAL	INCHES WIDE	PART NUMBERS AND COLORS						
			GUNMETAL H7A	DK. BLUE H7B	DK. GREEN H7F	BLACK H7X			
1	NOT SERVICED SEE PART TYPE CODE 23-108-5 AND 23-108-16 AND 23-109-4 AND 23-109-36								
3	VINYL	54"	672 GA6	672 GB7	672 GF7	672 EX9			

1971 GC-H 4 DOOR SEDAN, 4 DOOR H.T. TRIM

REF.	TYPE OF MATERIAL	INCHES WIDE	PART NUMBERS AND COLORS						
			DK. GREEN H8F	BEIGE H8L	BLACK H8X				
1	VINYL	54"	672 GF7	672 ZL2	672 EX9				

1971 GC-H 4 DOOR SEDAN, 4 DOOR H.T. TRIM

REF.	TYPE OF MATERIAL	INCHES WIDE	PART NUMBERS AND COLORS						
			DK. SADDLE HLT						
1	HIDE		303 GT7						
3	VINYL	54"	672 GT7						

CHRYSLER

1971 GC-P 4 DOOR STATION WAGON TRIM

REF.	TYPE OF MATERIAL	INCHES WIDE	PART NUMBERS AND COLORS						
			LT. BLUE L4B	DK. GREEN L4F	DK. SADDLE L4T	BLACK L4X			
1	NOT SERVICED SEE PART TYPE CODE 23-108-5 AND 23-108-16 AND 23-109-4 AND 23-109-36								
3	VINYL	54"	672 GB2	672 GF7	672 GT7	672 EX9			

1971 GC-P 4 DOOR STATION WAGON TRIM

REF.	TYPE OF MATERIAL	INCHES WIDE	PART NUMBERS AND COLORS						
			BLACK & BEIGE L7XL						
1	NOT SERVICED SEE PART TYPE CODE 23-108-5 AND 23-108-16 AND 23-109-4 AND 23-109-36								
3	VINYL	54"	672 ZL2						

1971 GC-P 4 DOOR STATION WAGON TRIM

REF.	TYPE OF MATERIAL	INCHES WIDE	PART NUMBERS AND COLORS						
			DK. GREEN L8F	DK. SADDLE L8T	BLACK L8X	GOLD L8Y			
1	NOT SERVICED SEE PART TYPE CODE 23-108-5 AND 23-108-16 AND 23-109-4 AND 23-109-36								
3	VINYL	54"	672 GF7	672 GT7	672 EX9	672 GY5			

1971 GC-S 2 DOOR H.T., 4 DOOR H.T. TRIM

REF.	TYPE OF MATERIAL	INCHES WIDE	PART NUMBERS AND COLORS						
			DK. GREEN S6F	BEIGE S6L	DK. SADDLE S6T	BLACK S6X	BLACK & WHITE S6XW		
2	VINYL	54"	672 GF7	672 ZL2	672 GT7	672 EX9	672 EW1		
3	VINYL	54"	638 GF7	638 GL2	638 GT7	638 DX9	638 GW1		
4	VINYL	54"	829 GF7	829 GL2	829 GT7	829 GX9	829 GW1		

1971 GC-S 2 DOOR H.T., 4 DOOR H.T. TRIM

REF.	TYPE OF MATERIAL	INCHES WIDE	PART NUMBERS AND COLORS						
			DK. SADDLE S3F	BEIGE S3L	GOLD S3Y				
1	NOT SERVICED SEE PART TYPE CODE 23-108-5 AND 23-108-16 AND 23-109-4 AND 23-109-36								
3	VINYL	54"	672 GF7	672 ZL2	672 GY5				

1971 GC-S 2 DOOR H.T., 4 DOOR H.T. TRIM

REF.	TYPE OF MATERIAL	INCHES WIDE	PART NUMBERS AND COLORS						
			LT. BLUE S4B	RUSSET S4E	BLACK S4X				
1	NOT SERVICED SEE PART TYPE CODE 23-108-5 AND 23-108-16 AND 23-109-4 AND 23-109-36								
3	VINYL	54"	672 GB2	672 GE8	672 EX9				

Printed in U.S.A.
January 1972

CHRYSLER

1971 GC-E 2 DOOR H.T., 4 DOOR SEDAN, 4 DOOR H.T. TRIM

REF.	TYPE OF MATERIAL	INCHES WIDE	PART NUMBERS AND COLORS						
			GUNMETAL G1A	LT. BLUE G1B	DK. GREEN G1F	BEIGE G1L	BLACK G1X	GOLD G1Y	
1	NOT SERVICED SEE PART TYPE CODE 23-108-5 AND 23-108-16 AND 23-109-4 AND 23-109-36								
3	VINYL	54"	672 GA6	672 GB2	672 GF7	672 ZL2	672 EX9	672 GY5	
4	VINYL	54"	672 GA6	672 GB2	672 GF7	672 ZL2	672 EX9	672 GY5	
5	VINYL	54"	865 GA6	865 GB2	865 GF7	865 GL2	865 GX9	865 GY5	

1971 GC-E 2 DOOR H.T., 4 DOOR SEDAN, 4 DOOR H.T. TRIM

REF.	TYPE OF MATERIAL	INCHES WIDE	PART NUMBERS AND COLORS						
			RUSSET G2E	DK. GREEN G2F	BEIGE G2L	BLACK G2X			
1	NOT SERVICED SEE PART TYPE CODE 23-108-5 AND 23-108-16 AND 23-109-4 AND 23-109-36								
3	VINYL	54"	672 GE8	672 GF7	672 ZL2	672 EX9			
4	VINYL	54"	672 GE8	672 GF7	672 ZL2	672 EX9			

1971 GC-E 2 DOOR H.T. TRIM

REF.	TYPE OF MATERIAL	INCHES WIDE	PART NUMBERS AND COLORS						
			DK. SADDLE G6T	BLACK G6X	BLACK & WHITE G6XW				
2	VINYL	54"	672 GT7	672 EX9	672 EW1				
3	VINYL	54"	638 GT7	638 DX9	638 GW1				
4	VINYL	54"	829 GT7	829 GX9	829 GW1				

NOTES

Printed in U.S.A.
January 1972

IMPERIAL

1971 GY-M 2 DOOR H.T. TRIM

REF.	TYPE OF MATERIAL	INCHES WIDE	PART NUMBERS AND COLORS						
			GUNMETAL MBA	DK. BLUE MBB	DK. GREEN MBF	BURGUNDY MBM	SADDLE & TAN MBTT	BLACK MBX	GOLD MBY
1	NOT SERVICED SEE PART TYPE CODE 23-108-5 AND 23-108-16 AND 23-109-4 AND 23-109-36								
2	VINYL		303 GA6	303 GB9	303 GF7	303 GM9	303 GT7	303 DX9	303 GY5
3	VINYL	54"	672 GA6	672 GB9	672 GF7	672 GM9	672 GT7	672 EX9	672 GY5

1971 GY-M 2 DOOR H.T. TRIM

REF.	TYPE OF MATERIAL	INCHES WIDE	PART NUMBERS AND COLORS						
			LT. BLUE MRB	RUSSET MRE	DK. GREEN MRF	DK. SADDLE MRT	BLACK MRX	BLACK & WHITE MRXW	GOLD MRY
1	HIDE		303 GB2	303 GE8	303 GF7	303 GT7	303 DX9	303 EW1	303 GYF
2	VINYL	54"	672 GY2	672 GE8	672 GF7	672 GT7	672 EX9	672 EW1	672 GY5

1971 GY-M 4 DOOR H.T. TRIM

REF.	TYPE OF MATERIAL	INCHES WIDE	PART NUMBERS AND COLORS						
			GUNMETAL MDA	DK. BLUE MDB	DK. GREEN MDF	BURGUNDY MDM	SADDLE & TAN MDTT	BLACK MDX	GOLD MDY
1	NOT SERVICED SEE PART TYPE CODE 23-108-5 AND 23-108-16 AND 23-109-4 AND 23-109-36								
2	HIDE		303 GA6	303 GB9	303 GF7	303 GM9	303 GT7	303 DX9	303 GY5
3	VINYL	54"	672 GA6	672 GB9	672 GF7	672 GM9	672 GT7	672 EX9	672 GY5

1971 GY-M 4 DOOR H.T. TRIM

REF.	TYPE OF MATERIAL	INCHES WIDE	PART NUMBERS AND COLORS						
			GUNMETAL MLA	DK. BLUE MLD	RUSSET MLE	DK. GREEN MLF	BURGUNDY MLM	DK. SADDLE MLT	BLACK MLX
1	HIDE		303 GA6	303 GB9	303 GE8	303 GF7	303 GM9	303 GT7	303 DX9
2	VINYL	54"	672 GA6	672 GB9	672 GE8	672 GF7	672 GM9	672 GT7	672 EX9

1971 GY-M 4 DOOR H.T. TRIM

REF.	TYPE OF MATERIAL	INCHES WIDE	PART NUMBERS AND COLORS						
			BLACK & WHITE MLXW	GOLD MLY					
1	HIDE		303 EW1	303 GY5					
2	VINYL	54"	672 EW1	672 GY5					

CODE	PART NAME	MODEL CODES	SEE BOTTOM NOTE 21	23	27	29	41	43	45	46	PART NUMBER
23-71-1	CARPET, Console Side and Rear										
	L6X9, L6XV, H6X9, H6XW, M6X9, M6XV, L6XW, M6XW	V,L	—	1	—	1	—	—	—	—	3563 BX8
	Console to Rear Floor										
	H6B	P	—	1	—	—	—	—	—	—	4987 GB3
	M6F, H6F, S6F	P,C	—	1	—	1	—	1	—	—	4987 GF8
	E6T, H6T, S6T, S6L	C	—	1	—	—	—	—	—	—	4987 GT6
	M6XA, M6XW, H6XA, H6XW, M6X, H6X, E6X9, E6XW, S6X, S6XW	P,D,C	—	1	—	1	—	1	—	—	4987 EX8
	Side										
	M6F, H6F, S6F	P,C	—	1	—	1	—	1	—	—	3551-2 GF8
	M6XA, M6XW, H6XA, H6XW, M6X9, H6X, E6X9, E6XW, H5XL, S6X, S6XW	P,D,C	—	1	—	1	—	1	—	—	3551-2 BX8
	H6B	P	—	1	—	1	—	1	—	—	3551-2 GB3
	E6T, S6T, S6L, H6T	C	—	1	—	—	—	—	—	—	3551-2 GT6
	End, Cap Ext.										
	H6F, M6F, S6F	P,C	—	1	—	1	—	1	—	—	3550 GF8
	H6B	P	—	1	—	—	—	—	—	—	3550 GB3
	E6T, S6T, S6L, H6T	C	—	1	—	—	—	—	—	—	3550 GT6
	H6XA, H6XW, M6XA, M6XW, H6X9, H6XW, M6X, E6X, E6XW, H5XL, S6X, S6XW	P,D,C	—	1	—	1	—	1	—	—	3550 EX8
23-71-3	LID, Console Storage Compartment										
	INNER	B,J,R,W	—	1	1	1	—	—	—	—	3516 FX9
	OUTER										
	H6B, P6B, L6B, M6B, P6B, C6B, E5B, D6B	B,J,R,W	—	1	1	1	—	—	—	—	3558 GB5
	H6F, P6F, H5F, L6F, M6F, P6F, C5F, C6F, E5F, D5F, D6F, L5FW	B,J,R,W	—	1	1	1	—	—	—	—	3558 GF7
	H6T, P6T, PRT, SRT, L6T, M6T, C6T, CRT, D6T	B,J,R,W	—	1	1	1	—	—	—	—	3558 GT6
	H5X, H5XV, H6X, H6XV, H6XW, P5X, P6X, PRX, SRX, H5XX, HRX, L6X, L6XW, M5X, M6X, M6XA, M6XW, M6XV, P6XA, P6XW, C5X, C5XV, C6X, C6XA, C6XW, E5X, CRX, CRXA, D5X, D5XV, D6X, D6XA, D6XW	B,J,R,W	—	1	1	1	—	—	—	—	3558 GX9
	P6Y, PRY, H6Y, M6Y, C6Y, E5Y, D6Y	B,J,R,W	—	1	1	1	—	—	—	—	3558 GY4
	H5F, H6F, S6F	C	—	1	—	—	—	1	—	—	4404 GF7
	E6T, S6T, S6L	C	—	1	—	—	—	1	—	—	4404 GT6
	M6X, M6XW, H5X, H6X, H6XW, E6X9, E6XW, H5XL, S6X, S6XW	C	—	1	—	—	—	1	—	—	4404 FX9
23-71-5	PAD, Console Front Trim										
	H5F, H6F, S6F	C	—	1	—	—	—	1	—	—	4407 GF7
	E6T, S6T, S6L	C	—	1	—	—	—	1	—	—	4407 GT6
	M6X, M6XW, H5X, H6X, H6XW, E6X, E6XW, H5XL, S6X, S6XW	C	—	1	—	—	—	1	—	—	4407 FX9
23-71-8	CLIP, Console Foundation - Export	V,L	—	—	—	1	—	—	—	—	2788 700
23-76-2	LATCH, Front Door Arm Rest Lid										
	MDA, MLA	Y	—	—	—	—	—	2	—	—	4328 GA6
	MDB, MLB	Y	—	—	—	—	—	2	—	—	4328 GB9
	MLE	Y	—	—	—	—	—	2	—	—	4328 GE9
	MDF, MLF	Y	—	—	—	—	—	2	—	—	4328 GF7
	MDM, MLM	Y	—	—	—	—	—	2	—	—	4328 GM9
	MDT	Y	—	—	—	—	—	2	—	—	4328 GT1
	MLT	Y	—	—	—	—	—	2	—	—	4328 GT6
	MDX, MLX, MLXW	Y	—	—	—	—	—	2	—	—	4328 FX9
	MDY, MLY	Y	—	—	—	—	—	2	—	—	4328 GY5

TYPE LETTERS Indicates: J - Challenger; B - Barracuda; V - Valiant; L - Dart; R - Belvedere; W - Coronet; P - Plymouth; D - Dodge; C - Chrysler; Y - Imperial

NUMERALS INDICATE: 21 - 2 DR. SED.; 23 - 2 DR. H.T.; 27 - CONV. CPE.; 29 - FAST BACK; 41 - 4 DR. SED.; 43 - 4 DR. H.T.; 45 - 6 PASS. STA. WGN.; 46 - 9 PASS. STA. WGN.

AR Indicates use as required.
= Indicates parts not listed in any previous parts book
Numerals in parentheses ( ) refer to notes.
★ Indicates change or addition.

Printed in U.S.A.
January 1972

Right and left part numbers are on same line, first number is right, second number is left.

CODE	PART NAME	MODEL CODES	SEE BOTTOM NOTE 21	23	27	29	41	43	45	46	PART NUMBER
23-76-9	BASE, Arm Rest Front & Rear Door										
	Bright	P,D,C	—	2	—	2	2	2	2	2	1212 BZ1
	E1A	C	—	2	—	—	2	2	—	—	1212 GA6
	E6XW	C	—	2	—	—	—	—	—	—	1212 EW1
	E1Y	C	—	2	—	—	2	2	—	—	1212 GY5
	E1B	C	—	2	—	—	2	2	—	—	1212 GB2
	E2E	C	—	2	—	—	2	2	—	—	1212 GE9
	E1F, E2F	C	—	2	—	—	2	2	—	—	1212 GF7
	E1L, E2L	C	—	2	—	—	2	2	—	—	1212 GL1
	E6T	C	—	2	—	—	—	—	—	—	1212 GT6
	E1X, E2X, E6X	C	—	2	—	—	2	2	—	—	1212 DX9
	Bright, Front and Rear Short	R,W,P, D,C	2	2	—	2	2	2	2	2	1213 BZ1
	L2B	R,W	—	—	—	—	2	—	2	2	1213 GB7
	E1B, E2B, L1B, L2B, B1B, B2B, F2B, F1B, L2T, K1T, K2T, T2T, E1T, E2T, K5T, K6T, L1T, B1T, B2T, F2T, F1T	R,W,P,D	2	2	—	2	2	2	2	2	1213 GT6
	K2X, T2X, L2X, L2XA, L1X, K1A, K2A, K5A, K6A, F2XA, B2XA	R,W,P,D	2	2	—	2	2	2	2	2	1213 DX9
	L1F, L2F, F2F, F1F	P,D	2	2	—	—	2	2	2	2	1213 GF7
	L1Y	D	—	2	—	—	2	2	—	—	1213 GY5
	L3B, L2B, L4B, D2B, H1B, H2B, E2B, L1B, M1B	V,L	—	1	—	1	1	—	—	—	1210-1 GB7
	H2XW, H6XW, D2XA, D6XW, L6XW, M6XW	V,L	—	1	—	—	—	—	—	—	1210-1 EW1
	L3F, L4F, D2F, H1F, H2F, L1F, L2F, M1F	V,L	—	1	—	1	1	—	—	—	1210-1 GF7
	L2T, L4T, D2T, E2T, L1T	V,L	—	—	—	1	—	—	—	—	1210-1 GT6
	L6XV, M6XV	V,L	—	—	—	1	—	—	—	—	1210-1 GV1
	L4Y, D2Y, H2Y	V,L	—	1	—	1	1	—	—	—	1210-1 GY4
	L3X, L2X, L4X, L6X, D2X, H1X, H2X, H6X, E2X, M6X	V,L	—	1	—	1	1	—	—	—	1210-1 DX9
	MDA, MLA, MBA	Y	—	1	—	—	—	1	—	—	1228-9 GA6
	MRB	Y	—	1	—	—	—	—	—	—	1228-9 GB2
	MBB, MDB, MLB	Y	—	1	—	—	—	1	—	—	1228-9 GB9
	MRE, MLE	Y	—	1	—	—	—	1	—	—	1228-9 GE9
	MRF, MDF, MLF, MBF	Y	—	1	—	—	—	1	—	—	1228-9 GF7
	MDM, MLM, MBM	Y	—	1	—	—	—	1	—	—	1228-9 GM9
	MBTT, MDTT	Y	—	1	—	—	—	1	—	—	1228-9 GT1
	MLT, MRT	Y	—	1	—	—	—	1	—	—	1228-9 GT6
	MLXW, MRXW	Y	—	1	—	—	—	1	—	—	1228-9 FW1
	MBY, MLY, MDY, MRY	Y	—	1	—	—	—	1	—	—	1228-9 GY5
	MBX, MLX, MDX, MRX	Y	—	1	—	—	—	1	—	—	1228-9 FX9
	Quarter, w/Ash Rec.										
	L2B, L4B, D2B, H2B, E2B, L1B, M1B (Up to Build Date 3-1-71)	V,L	—	2	—	2	—	—	—	—	1208 GB7
	L4F, L2F, H2F, L1F, D2F, M1F (Up to Build Date 3-1-71)	V,L	—	2	—	2	—	—	—	—	1208 GF7
	L2T, L4T, D2T, E2T, L1T (Up to Build Date 3-1-71)	V,L	—	—	—	2	—	—	—	—	1208 GT6
	L6XV, M6XV (Up to Build Date 3-1-71)	V,L	—	—	—	2	—	—	—	—	1208 GV1
	L2X, L4X, L6X, D2X, H2X, H6X, E2X, M1XX, M6X, D6X, L1X, L1XX, M1X (Up to Build Date 3-1-71)	V,L	—	2	—	2	—	—	—	—	1208 DX9
	L4Y, H2Y, D2Y (Up to Build Date 3-1-71)	V,L	—	2	—	2	—	—	—	—	1208 GY4
	H2XW, H6XW, D2XW, D6XW, L6XW, M6XW (Up to Build Date 3-1-71)	L	—	2	—	—	—	—	—	—	1208 EW1
	L2B, L4B, L1B, D2B, H2B, E2B, M1B										

TYPE LETTERS Indicates: J - Challenger, B - Barracuda, V - Valiant, L - Dart, R - Belvedere, W - Coronet, P - Plymouth, D - Dodge, C - Chrysler, Y - Imperial

NUMERALS INDICATE: 21 - 2 DR. SED., 23 - 2 DR. H.T., 27 - CONV. CPE., 29 - FAST BACK, 41 - 4 DR. SED., 43 - 4 DR. H.T., 45 - 6 PASS. STA. WGN., 46 - 9 PASS. STA. WGN.

AR Indicates use as required.
≠ Indicates parts not listed in any previous parts book
Numerals in parentheses ( ) refer to notes.
★ Indicates change or addition.

Printed in U.S.A.
January 1972

Right and left part numbers are on same line, first number is right, second number is left.

CODE	PART NAME	MODEL CODES	SEE BOTTOM NOTE 21	23	27	29	41	43	45	46	PART NUMBER
23-76-9	BASE, Arm Rest Front & Rear Door Cont'd.										
	(After Build Date 3-1-71)	V,L	—	2	—	2	—	—	—	—	1209 GB7
	L4F, L2F, D2F, H2F, M1F, L1F (After Build Date 3-1-71)	V,L	—	2	—	2	—	—	—	—	1209 GF7
	L2T, L4T, L1T, E2T (After Build Date 3-1-71)	V,L	—	2	—	2	—	—	—	—	1209 GT6
	L6XV, M6XV (After Build Date 3-1-71)	V,L	—	—	—	2	—	—	—	—	1209 GV1
	L2X, L4X, L6X, L1X, L1XX, D2X, D6X, H2X, E2X, M6X, M1X, M1XX (After Build Date 3-1-71)	V,L	—	2	—	2	—	—	—	—	1209 GX9
	L4Y, D2Y, H2Y (After Build Date 3-1-71)	V,L	—	2	—	2	—	—	—	—	1209 GY4
	D2XW, D6XW, L6XW, H2XW, H6XW, M6XW (After Build Date 3-1-71)	V,L	—	2	—	2	—	—	—	—	1209 GW1
	Bright (Up to Build Date 5-1-71)	P,D,C	—	2	—	2	—	—	—	—	1250 BZ1
	E1B, E2B, L1B, L2B, F1B, F2B, B1B, B2B (Up to Build Date 5-1-71)	P,D,C	2	2	—	—	—	—	—	—	1250 GB2
	L1F, L2F, F1F, E1F, E2F (Up to Build Date 5-1-71)	P,D,C	—	2	—	—	—	—	—	—	1250 GF7
	E1T, E2T, L1T, L2T, F1T, E6T, B1T, B2T (Up to Build Date 5-1-71)	P,D,C	2	2	—	—	—	—	—	—	1250 GT6
	L1Y, E1Y (Up to Build Date 5-1-71)	D,C	—	2	—	—	—	—	—	—	1250 GY5
	L2XA, L1X, L2X, F2XA, E1X, E2X, E6X, B2XA (Up to Build Date 5-1-71)	P,D,C	—	2	—	—	—	—	—	—	1250 DX9
	Bright (After Build Date 5-1-71)	P,D	—	2	—	2	—	—	—	—	1251 GZ1
	E1B, E2B, L1B, L2B, L3B, L4B, F1B, F2B, B1B, B2B (After Build Date 5-1-71)	P,D	2	2	—	—	—	—	—	—	1251 GB2
	L1F, L2F, L3F, L4F, F1F (After Build Date 5-1-71)		—	2	—	—	—	—	—	—	1251 GF7
	E1T, E2T, L1T, L2T, F1T, B1T, B2T (After Build Date 5-1-71)	P,D	2	2	—	—	—	—	—	—	1251 GT6
	L1Y, L3Y (After Build Date 5-1-71)	D	—	2	—	—	—	—	—	—	1251 GY5
	E2XA, L2XA, L1X, L2X, L3X, L4X, F2XA, B2XA (After Build Date 5-1-71	P,D	2	2	—	—	—	—	—	—	1251 GX9
	E1A	C	—	2	—	—	—	—	—	—	1250 GA6
	E2L	C	—	2	—	—	—	—	—	—	1250 GL1
	E6XW	C	—	2	—	—	—	—	—	—	1250 EW1
	MBTT	Y	—	1	—	—	—	—	—	—	1220-1 GT1
	MRT	Y	—	1	—	—	—	—	—	—	1220-1 GT6
	MRY, MBY	Y	—	1	—	—	—	—	—	—	1220-1 GY5
	MBA	Y	—	1	—	—	—	—	—	—	1220-1 GA6
	MRX, MBX	Y	—	1	—	—	—	—	—	—	1220-1 EX9
	MRXW	Y	—	1	—	—	—	—	—	—	1220-1 EW1
	MRB	Y	—	1	—	—	—	—	—	—	1220-1 GB2
	MBB	Y	—	1	—	—	—	—	—	—	1220-1 GB9
	MRE	Y	—	1	—	—	—	—	—	—	1220-1 GE9
	MRF, MBF	Y	—	1	—	—	—	—	—	—	1220-1 GF7
	MBM	Y	—	1	—	—	—	—	—	—	1220-1 GM9
23-76-10	PAD, Front Door Arm Rest Storage Compartment Lid										
	MDB, MLB, MBB, MDB	Y	—	2	—	—	—	2	—	—	1232 GB9
	MBA, MDA, MLA	Y	—	2	—	—	—	2	—	—	1232 GA6
	MRB	Y	—	2	—	—	—	—	—	—	1232 GB2
	MLE, MRE	Y	—	2	—	—	—	2	—	—	1232 GE9
	MDF, MLF, MBF, MRF	Y	—	2	—	—	—	2	—	—	1232 GF7
	MBM, MDM, MLM	Y	—	2	—	—	—	2	—	—	1232 GM9
	MBTT, MDTT	Y	—	2	—	—	—	2	—	—	1232 GT1
	MRT, MLT	Y	—	2	—	—	—	2	—	—	1232 GT6

TYPE LETTERS Indicates: J - Challenger; B - Barracuda; V - Valiant; L - Dart; R - Belvedere; W - Coronet; P - Plymouth; D - Dodge; C - Chrysler; Y - Imperial

NUMERALS INDICATE: 21 - 2 DR. SED.; 23 - 2 DR. H.T.; 27 - CONV. CPE.; 29 - FAST BACK; 41 - 4 DR. SED.; 43 - 4 DR. H.T.; 45 - 6 PASS. STA. WGN.; 46 - 9 PASS. STA. WGN.

AR Indicates use as required.
= Indicates parts not listed in any previous parts book
Numerals in parentheses ( ) refer to notes.
★ Indicates change or addition.

Printed in U.S.A.
January 1972

Right and left part numbers are on same line, first number is right, second number is left.

CODE	PART NAME	MODEL CODES	SEE BOTTOM NOTE 21	23	27	29	41	43	45	46	PART NUMBER
23-76-10	PAD, Front Door Arm Rest Cont'd. Storage Compartment Lid										
	MDX, MLX, MBX, MRX	Y	—	2	—	—	—	2	—	—	1232 EX9
	MRXW, MLXW	Y	—	2	—	—	—	2	—	—	1232 EW1
	MLY, MDY, MRY, MBY	Y	—	2	—	—	—	2	—	—	1232 GY5
23-76-11	PAD and PLATE, Front Door Arm Rest (w/o A/Rec.)										
	L3B, L2B, D2B, L4B, H1B, H2B, E2B, L1B, M1B	V,L	—	2	—	2	2	—	—	—	1214 GB7
	L3F, L4F, L2F, H1F, H2F, L1F, D2F, M1F	V,L	—	2	—	2	2	—	—	—	1214 GF7
	L2T, D2T, L4T, E2T	V,L	—	—	—	2	2	—	—	—	1214 GT6
	L6XV, M6XV	V,L	—	—	—	2	—	—	—	—	1214 GV1
	L3X, L2X, D2X, L4X, L6X, H1X, H2X, L1X, L1XX, H6X, E2X, M6X, D6X, M1X, M1XX	V,L	—	2	—	2	2	—	—	—	1214 DX9
	L4Y, H2Y, D2Y	V,L	—	2	—	2	2	—	—	—	1214 GY4
	H2XW, H6XW, D2XW, D6XW, L6XW, M6XW	V,L	—	2	—	2	—	—	—	—	1214 EW1
	H4B, H6B, P6B	B	—	1	1	—	—	—	—	—	1222-3 GB4
	H4F, H6F, P6F	B	—	1	1	—	—	—	—	—	1222-3 GF8
	H4T, H6T, P6T, PRT, SRT	B	—	1	1	—	—	—	—	—	1222-3 GT6
	H4XW, H6XW	B	—	1	1	—	—	—	—	—	1222-3 FW1
	H4X, H5XV, H6X, H6XV, P5X, P6X, PRX, SRX	B	—	1	1	—	—	—	—	—	1222-3 FX9
	PRY, P6Y	B	—	1	—	—	—	—	—	—	1222-3 GY4
	H5B, H6B	J	—	1	1	—	—	—	—	—	1224-5 GB4
	H4F, H5F, H6F, HRF	J	—	1	1	—	—	—	—	—	1224-5 GF8
	H6T, HRT	J	—	1	1	—	—	—	—	—	1224-5 GT6
	H6XW	J	—	1	1	—	—	—	—	—	1224-5 FW1
	H4X, H5X, H5XX, H6X, HRX	J	—	1	1	—	—	—	—	—	1224-5 FX9
	H6Y	J	—	1	1	—	—	—	—	—	1224-5 GY4
	L2B, H2B, H1B, P2B, D3B, P3B, P4B	R,W	—	—	—	—	2	—	2	2	1249 GB7
	E1B, E2B, L1B, L2B, B1B, B2B, F2B, F1B, R2B, P4B, P8B	P,D	—	2	—	—	2	2	2	2	1249 GB2
	H2F, H1F, P2F, D3F, P3F, P4F, L1F, L2F, F2F, F1F, R2F, P7F	R,W,P,D	—	2	—	—	2	2	2	2	1249 GF7
	L2T, K1T, K2T, T2T, H2T, H1T, P2T, D3T, P3T, P4T, L1T, B1T, B2T, F2T, F1T, R2T, P4T, P8T	R,W,P,D	2	2	—	—	2	2	2	2	1249 GT6
	H2Y, H1Y, P3Y	R,W	—	—	—	—	2	—	—	—	1249 GY4
	L1Y	D	—	2	—	—	2	2	—	—	1249 GY5
	R2XC, P4XC	D	—	—	—	—	—	—	2	2	1249 GC8
	L2E	D	—	2	—	—	—	2	—	—	1249 GE9
	D2X, K2X, T2X, H2X, H1X, P2X, L4XA, P3X, L2X, H1X, P3X, P4X, L2XA, K1A, L3XA, K2A, K5A, K6A, L1X, F2XA, R2XA, P4XA, P7XA, B2XA	R,W,P,D	—	2	—	—	2	2	2	2	1249 DX9
	M2B, M6B, H2B, H1B, P6B, P3B, C2B, C6B, C3B, D6B, E5B, D3B	R,W	—	1	—	1	—	—	—	—	1200-1 GB4
	M6F, H2F, H1F, P6F, P3F, C2F, C5F, C6F, C3F, D5F, D6F, E5F, D3F	R,W	—	1	—	1	—	—	—	—	1200-1 GF8
	M2T, M6T, H2T, H1T, P6T, P3T, C2T, C6T, D6T, CRT	R,W	—	1	—	1	—	—	—	—	1200-1 GT6
	M6Y, H2Y, P6Y, C2Y, C6Y, D6Y, E5Y, D3Y	R,W	—	1	—	1	—	—	—	—	1200-1 GY4
	M2X, M5X, M6X, M6XA, M6XV, H2X, H2XA, H1X, P6X, P6XA, P3X, P5X, C2X, C5X, C5XV, C6X, C6XA, C3X, D5X, D5XV, D6X, D6XA, E5X, CRX, CRXA, D3X	R,W	—	1	—	1	—	—	—	—	1200-1 GX9

TYPE LETTERS Indicates: J - Challenger, B - Barracuda, V - Valiant, L - Dart, R - Belvedere, W - Coronet, P - Plymouth, D - Dodge, C - Chrysler, Y - Imperial

NUMERALS INDICATE: 21 - 2 DR. SED., 23 - 2 DR. H.T., 27 - CONV. CPE., 29 - FAST BACK, 41 - 4 DR. SED., 43 - 4 DR. H.T., 45 - 6 PASS. STA. WGN., 46 - 9 PASS. STA. WGN.

AR Indicates use as required.
# Indicates parts not listed in any previous parts book
Numerals in parentheses ( ) refer to notes.
★ Indicates change or addition.

Printed in U.S.A.
January 1972

Right and left part numbers are on same line, first number is right, second number is left.

CODE	PART NAME	MODEL CODES	SEE BOTTOM NOTE 21	23	27	29	41	43	45	46	PART NUMBER
23-76-11	PAD and PLATE, Front Door Arm Rest - w o A Rec.) Cont'd.										
	M6XW, H2XW, P6XW, C2XW, C6XW, D6XW	R,W	—	1	—	—	—	—	—	—	1200-1 GW1
	M1B, M2B, M4B, H3B, H4B, H5B, H2B, G1B, H6B, H7B, M3B, W1B, W4B, P4B, P8B, P3B, P6B, J2B, E1B, L3B, L4B, L7B, S4B	P,D,C	—	1	—	1	1	1	1	1	1272-3 GB2
	M1F, M2F, M4F, M6F, H3F, H4F, H5F, H6F, H7F, M3F, M4F, W1F, P4F, P3F, P5F, P6F, P7F, E1F, E2F, L3F, L7F, L8F, H9F, H8F, L4F, S3F, S6F, D4F, G1F	P,D,C	—	1	—	1	1	1	1	1	1272-3 GF7
	M2T, M4T, H3T, H4T, H8T, W4T, W6T, P4T, P8T, P3T, P6T, J6T, E6T, H6T, HLT, L4T, L8T, S6T	P,D,C	—	1	—	1	1	1	1	1	1272-3 GT6
	M8XA, M1XA, M2XA, M4XA, M6XA, H3XA, H4XA, H5XA, H6XA, H7XA, H8XA, M3X, M4X, M6X, H3X, H4X, H5X, H6X, H7X, H8X, W1XA, W4XA, W6XA, P4XA, P7X3, P3XA, P4XA, P5XA, P6XA, P7XA, E1X, E2X, E6X, L3X, L4X, L8X, H9X, S4X, S6X, D2XA, D4X, GX9	P,D,C	—	1	—	1	1	1	1	1	1272-3 DX9
	M1Y, M4Y, H3Y, H4Y, H5Y, H7Y, M3Y, W1Y, W4Y, P3Y, P4Y, E1Y, L3Y, H9Y, L8Y, S3Y, D3Y, M4Y, G1Y	P,D,C	—	1	—	1	1	1	1	1	1272-3 GY5
	H3A, H5A, H7A, E1A, H9A	D,C	—	1	—	—	1	1	—	—	1272-3 GA6
	M4E, H4E, M6E, H6E, E2E, L4E, S4E, G2E	P,D,C	—	1	—	—	1	1	—	—	1272-3 GE9
	M6XW, M4XW, H4XW, H6XW, E6XW, S6XW	P,D,C	—	1	—	—	—	1	—	—	1272-3 EW1
	H9B, H7B, H3B	C	—	1	—	—	1	1	—	—	1272-3 GB7
	E1L, E2L, L3L, L7XL, H8L, S6L, S3L	C	—	1	—	—	1	1	—	—	1272-3 GL1
23-76-17	HINGE ASSY., Door Arm Rest Storage Compartment Lid Pad	Y	—	2	—	—	—	4	—	—	2879 392
23-76-18	ARM REST, Front Back Center										
	L4B, L3B	V	—	—	—	1	1	—	—	—	6604 GB7
	L4F, L3F	V	—	—	—	1	1	—	—	—	6604 GF7
	L4T	V	—	—	—	1	1	—	—	—	6604 GT7
	L4X, L3X	V	—	—	—	1	1	—	—	—	6604 GX9
	L4Y	V	—	—	—	1	1	—	—	—	6604 GY3
	H4B	B	—	1	—	—	—	—	—	—	5739 G4B
	H4F	B,J	—	1	—	—	—	—	—	—	5739 G4F
	H4T	B	—	1	—	—	—	—	—	—	5739 G4T
	H4X	B,J	—	1	—	—	—	—	—	—	5739 G4X
	H4XW	B	—	1	—	—	—	—	—	—	5739 G4W
	P3B, C3B	R,W	—	1	—	—	—	—	—	—	6658 GB5
	P3B	R	—	—	—	—	1	—	—	—	6658 GB7
	P3F, C3F	R,W	—	1	—	—	1	—	—	—	6658 GF7
	P3T	R	—	1	—	—	1	—	—	—	6658 GT7
	P3X, C3X	R,W	—	1	—	—	1	—	—	—	6658 GX9
	D3B	W	—	—	—	1	—	—	—	—	6657 GB5
	D3F	W	—	—	—	1	—	—	—	—	6657 GF7
	D3X	W	—	—	—	1	—	—	—	—	6657 GX9
	D3Y	W	—	—	—	1	—	—	—	—	6657 GY3
	D3B, P3B, P4B	R,W	—	—	—	—	1	—	1	1	6609 GB6
	D3F, P3F, P4F	R,W	—	—	—	—	1	—	1	1	6609 GF8
	D3T, P3T, P4T	R,W	—	—	—	—	—	—	1	1	6609 GT6
	P3X, P4X	W	—	—	—	—	1	—	1	1	6609 GX9
	P3Y	W	—	—	—	—	1	—	—	—	6609 GY4
	P6B, M6B, C6B, D6B	R,W	—	1	—	—	—	—	—	—	5197 GB5

TYPE LETTERS Indicates: J - Challenger, B - Barracuda, V - Valiant, L - Dart, R - Belvedere, W - Coronet, P - Plymouth, D - Dodge, C - Chrysler, Y - Imperial

NUMERALS INDICATE: 21 - 2 DR. SED., 23 - 2 DR. H.T., 27 - CONV. CPE., 29 - FAST BACK, 41 - 4 DR. SED., 43 - 4 DR. H.T., 45 - 6 PASS. STA. WGN., 46 - 9 PASS. STA. WGN.

AR Indicates use as required.
= Indicates parts not listed in any previous parts book

Numerals in parentheses ( ) refer to notes.
★ Indicates change or addition.

Printed in U.S.A.
January 1972

Right and left part numbers are on same line, first number is right, second number is left.

CODE	PART NAME	MODEL CODES	SEE BOTTOM NOTE 21	23	27	29	41	43	45	46	PART NUMBER
23-76-18	*ARM REST, Front Back Center Cont'd.*										
	P6F, M6F, C6F, D6F	R,W	—	1	—	—	—	—	—	—	5197 GF7
	P6T, M6T, C6T, D6T	R,W	—	1	—	—	—	—	—	—	5197 GT7
	P6X, M6X, M6XV, M5X, P5X, C6X, D6X, C5X, D5X, C5XV, D5XV	R,W	—	1	—	—	—	—	—	—	5197 GX9
	P6XA, M6XA, C6XA, D6XA	R,W	—	1	—	—	—	—	—	—	5197 GA6
	P6XW, M6XW, C6XW, D6XW	R,W	—	1	—	—	—	—	—	—	5197 GW1
	P6Y, M6Y, C6Y, D6Y	R,W	—	1	—	—	—	—	—	—	5197 GY3
	E5B	W	—	—	—	1	—	—	—	—	5574 GB5
	E5F	W	—	—	—	1	—	—	—	—	5574 GF7
	CRT	W	—	—	—	1	—	—	—	—	5574 GT7
	E5X, CRX	W	—	—	—	1	—	—	—	—	5574 GX9
	CRXA	W	—	—	—	1	—	—	—	—	5574 GA6
	E5Y	W	—	—	—	1	—	—	—	—	5574 GY3
	H4B, H3B, M4B, M3B, L3B, L4B	P,D	—	1	—	1	1	1	1	1	6601 GB2
	H4F, H3F, M4F, M3F, L3F, L4F, P4F	P,D	—	1	—	1	1	1	1	1	6601 GF7
	H4T, H3T, M4T, P4T	P	—	1	—	1	1	1	1	1	6601 GT7
	H4XA, H3XA, M4XA	P	—	1	—	1	1	1	1	1	6601 GA8
	H4Y, H3Y, M3Y, L3Y	P,D	—	1	—	1	1	1	—	—	6601 GY5
	M4E, H4E	P,D	—	1	—	1	—	1	—	—	6601 GE8
	M4XW, H4XW	P,D	—	1	—	1	—	1	—	—	6601 GW1
	M3X, M4X	D	—	1	—	—	—	1	—	—	6601 GX9
	H6B	P	—	1	—	—	—	—	—	—	6634 GB7
	M6E, H6E	D	—	1	—	—	—	—	—	—	6634 GE8
	M6F, H6F	P	—	1	—	1	—	1	—	—	6634 GF7
	M6XA, H6XA, M6X, H6X	P,D	—	1	—	1	—	1	—	—	6634 GX9
	M6XW, H6XW	P,D	—	1	—	1	—	1	—	—	6634 GW1
	H5B	P	—	1	—	1	—	—	—	—	6613 GB2
	H5F, H6F	P,C	—	1	—	1	—	—	—	—	6613 GF7
	H5XA	P	—	1	—	1	—	—	—	—	6613 FA8
	H5Y	P	—	1	—	1	—	—	—	—	6613 GY5
	H6T	C	—	1	—	—	—	—	—	—	6613 GT7
	H6X	C	—	1	—	—	—	—	—	—	6613 FX9
	H6XW	C	—	1	—	—	—	—	—	—	6613 FW1
	M8XA, H7XA, H8XA	P	—	—	—	—	1	1	1	1	6607 GA8
	H7B	P	—	—	—	—	1	1	—	—	6607 GB2
	H7F	P	—	—	—	—	1	1	—	—	6607 GF7
	H7Y	P	—	—	—	—	1	1	—	—	6607 GY5
	H7T, H8T	P	—	—	—	—	1	1	1	1	6607 GT7
	H3A	D	—	1	—	—	1	1	—	—	6606 GA6
	H3B, H4B	D	—	1	—	—	1	1	1	1	6606 GB2
	H4E	D	—	1	—	—	—	1	—	—	6606 GE8
	H3F, H4F, D4F	D	—	1	—	—	1	1	1	1	6606 GF7
	H4T	D	—	—	—	—	—	—	1	1	6606 GT7
	H3X, H4X, D4X	D	—	1	—	—	1	1	1	1	6606 GX9
	H3Y	D	—	1	—	—	1	1	—	—	6606 GY5
	H7A	D	—	—	—	—	1	1	—	—	6626 G7A
	H7B	D	—	—	—	—	1	1	1	1	6626 G7B
	H7F	D	—	—	—	—	1	1	1	1	6626 G7F
	H7X	D	—	—	—	—	1	1	1	1	6626 G7X
	H8T	D	—	—	—	—	—	—	1	1	6625 G8T
	H8X	D	—	—	—	—	—	—	1	1	6625 G8X
	L3B, L4B, S4B	C	—	1	—	—	1	1	1	1	6621 GB2
	L4E, S4E	C	—	1	—	—	1	1	—	—	6621 GE8
	L3F, L4F, S3F	C	—	1	—	—	1	1	1	1	6621 GF7
	L3L, S3L	C	—	1	—	—	1	1	—	—	6621 GL2
	L4T	C	—	—	—	—	—	—	1	1	6621 GT7
	L3X, L4X, S4X	C	—	1	—	—	1	1	1	1	6621 GX9
	L3Y, S3Y	C	—	1	—	—	1	1	—	—	6621 GY5
	S6F	C	—	1	—	—	—	—	—	—	6615 GF7

TYPE LETTERS Indicates: J - Challenger, B - Barracuda, V - Valiant, L - Dart, R - Belvedere, W - Coronet, P - Plymouth, D - Dodge, C - Chrysler, Y - Imperial

NUMERALS INDICATE: 21 - 2 DR. SED., 23 - 2 DR. H.T., 27 - CONV. CPE., 29 - FAST BACK, 41 - 4 DR. SED., 43 - 4 DR. H.T., 45 - 6 PASS. STA. WGN., 46 - 9 PASS. STA. WGN.

AR Indicates use as required.
# Indicates parts not listed in any previous parts book
Numerals in parentheses ( ) refer to notes.
★ Indicates change or addition.

Printed in U.S.A.
January 1972

Right and left part numbers are on same line, first number is right, second number is left.

CODE	PART NAME	MODEL CODES	SEE BOTTOM NOTE 21	23	27	29	41	43	45	46	PART NUMBER
23-76-18	ARM REST, Front Back Center Cont'd.										
	S6L	C	—	1	—	—	—	—	—	—	6615 GL2
	E6T, S6T, G6T	C	—	1	—	—	—	—	—	—	6615 GT7
	E6X, S6X, G6X	C	—	1	—	—	—	—	—	—	6615 GX9
	E6XW, S6XW, G6XW	C	—	1	—	—	—	—	—	—	6615 GW1
	H3A	C	—	1	—	—	—	—	—	—	6605 GA6
	H3B	C	—	1	—	—	—	—	—	—	6605 GB7
	H3F	C	—	1	—	—	—	—	—	—	6605 GF7
	H3X	C	—	1	—	—	—	—	—	—	6605 GX9
	H3Y	C	—	1	—	—	—	—	—	—	6605 GY5
	HLT (Sample of Material Req'd.)	C	—	—	—	—	1	1	—	—	6619 GT7
	HLT (Sample of Material Req'd.)	C	—	—	—	—	2	2	—	—	6619 GLJ
	H9X	C	—	—	—	—	1	1	—	—	6618 GX9
	H9A	C	—	—	—	—	1	1	—	—	6618 GA6
	H9B	C	—	—	—	—	1	1	—	—	6618 GB7
	H9F	C	—	—	—	—	1	1	—	—	6618 GF7
	H9Y	C	—	—	—	—	1	1	—	—	6618 GY5
	H7A	C	—	—	—	—	2	2	—	—	6622 GA6
	H7B	C	—	—	—	—	2	2	—	—	6622 GB7
	H7F, H8F	C	—	—	—	—	2	2	—	—	6622 GF7
	H8L	C	—	—	—	—	2	2	—	—	6622 GL2
	H7X, H8X	C	—	—	—	—	2	2	—	—	6622 GX9
	L7B	C	—	—	—	—	2	2	—	—	6603 GB2
	L7F, L8F	C	—	—	—	—	2	2	2	2	6603 GF7
	L7XL	C	—	—	—	—	2	2	2	2	6603 GL2
	L8T	C	—	—	—	—	—	—	2	2	6603 GT7
	L8X	C	—	—	—	—	2	2	2	2	6603 GX9
	L8Y	C	—	—	—	—	—	—	2	2	6603 GY5
	MLA	Y	—	—	—	—	—	2	—	—	5610 GLA
	MLB	Y	—	—	—	—	—	2	—	—	5610 GLB
	MLE	Y	—	—	—	—	—	2	—	—	5610 GLE
	MLF	Y	—	—	—	—	—	2	—	—	5610 GLF
	MLM	Y	—	—	—	—	—	2	—	—	5610 GLM
	MLT	Y	—	—	—	—	—	2	—	—	5610 GLT
	MLX	Y	—	—	—	—	—	2	—	—	5610 GLX
	MLXW	Y	—	—	—	—	—	2	—	—	5610 GLW
	MLY	Y	—	—	—	—	—	2	—	—	5610 GLY
	MDA	Y	—	—	—	—	—	2	—	—	5936 GDA
	MDB	Y	—	—	—	—	—	2	—	—	5936 GDB
	MDF	Y	—	—	—	—	—	2	—	—	5936 GDF
	MDM	Y	—	—	—	—	—	2	—	—	5936 GDM
	MDTT	Y	—	—	—	—	—	2	—	—	5936 GDT
	MDX	Y	—	—	—	—	—	2	—	—	5936 GDX
	MDY	Y	—	—	—	—	—	2	—	—	5936 GDY
	MBA	Y	—	1	—	—	—	—	—	—	5644 GBA
	MBB	Y	—	1	—	—	—	—	—	—	5644 GBB
	MBF	Y	—	1	—	—	—	—	—	—	5644 GBF
	MBM	Y	—	1	—	—	—	—	—	—	5644 GBM
	MBTT	Y	—	1	—	—	—	—	—	—	5644 GBT
	MBX	Y	—	1	—	—	—	—	—	—	5644 GBX
	MBY	Y	—	1	—	—	—	—	—	—	5644 GBY
	MRB	Y	—	1	—	—	—	—	—	—	5725 GRB
	MRE	Y	—	1	—	—	—	—	—	—	5725 GRE
	MRF	Y	—	1	—	—	—	—	—	—	5725 GRF
	MRT	Y	—	1	—	—	—	—	—	—	5725 GRT
	MRX	Y	—	1	—	—	—	—	—	—	5725 GRX
	MRXW	Y	—	1	—	—	—	—	—	—	5725 GRW
	MRY	Y	—	1	—	—	—	—	—	—	5725 GRY

TYPE LETTERS Indicates: J - Challenger, B - Barracuda, V - Valiant, L - Dart, R - Belvedere, W - Coronet, P - Plymouth, D - Dodge, C - Chrysler, Y - Imperial

NUMERALS INDICATE: 21 - 2 DR. SED., 23 - 2 DR. H.T., 27 - CONV. CPE., 29 - FAST BACK, 41 - 4 DR. SED., 43 - 4 DR. H.T., 45 - 6 PASS. STA. WGN., 46 - 9 PASS. STA. WGN.

AR Indicates use as required.
= Indicates parts not listed in any previous parts book
Numerals in parentheses ( ) refer to notes.
★ Indicates change or addition.

Printed in U.S.A.
January 1972

Right and left part numbers are on same line, first number is right, second number is left.

CODE	PART NAME	MODEL CODES	SEE BOTTOM NOTE 21	23	27	29	41	43	45	46	PART NUMBER
23-76-19	FLAP, Front Back Center Arm Rest										
	H7A	D	—	—	—	—	2	2	—	—	8019 GA6
	H7B	D	—	—	—	—	2	2	2	2	8019 GB2
	H7F	D	—	—	—	—	2	2	2	2	8019 GF7
	H7X	D	—	—	—	—	2	2	2	2	8019 GX9
	H8T	D	—	—	—	—	—	—	2	2	8021 GT7
	H8X	D	—	—	—	—	—	—	2	2	8021 GX9
	H9A	C	—	—	—	—	1	1	—	—	8026 GA6
	H9B	C	—	—	—	—	1	1	—	—	8026 GB7
	H9F	C	—	—	—	—	1	1	—	—	8026 GF7
	H9X	C	—	—	—	—	1	1	—	—	8026 GX9
	H9Y	C	—	—	—	—	1	1	—	—	8026 GY5
	L7B	C	—	—	—	—	2	2	—	—	8032 GB2
	L7F, L8F	C	—	—	—	—	2	2	2	2	8032 GF7
	L7XL, L8L	C	—	—	—	—	2	2	2	2	8032 GL2
	L8X	C	—	—	—	—	2	2	2	2	8032 FX9
	L8Y	C	—	—	—	—	—	—	2	2	8032 GY5
	L8T	C	—	—	—	—	—	—	2	2	8032 GT7
	MDA	Y	—	—	—	—	—	2	—	—	7571 GA6
	MDB	Y	—	—	—	—	—	2	—	—	7571 GB9
	MDF	Y	—	—	—	—	—	2	—	—	7571 GF7
	MDM	Y	—	—	—	—	—	2	—	—	7571 GM9
	MDTT	Y	—	—	—	—	—	2	—	—	7571 GT7
	MDX	Y	—	—	—	—	—	2	—	—	7571 GX9
	H7A	C	—	—	—	—	2	2	—	—	7474 GA6
	MLB	Y	—	—	—	—	—	2	—	—	7474 GB9
	ML8	Y	—	—	—	—	—	2	—	—	7474 GE8
	H7F, H8F, MLF	P,C,Y	—	—	—	—	2	2	—	—	7474 GF7
	MLM	Y	—	—	—	—	—	2	—	—	7474 GM9
	H8T, MLT	P,Y	—	—	—	—	2	2	2	2	7474 GT7
	HLT (Sample of Material Req'd.)	C	—	—	—	—	2	2	—	—	7474 GT7
	HLT (Sample of Material Req'd.)	C	—	—	—	—	2	2	—	—	7474 GT5
	H7B	C	—	—	—	—	2	2	—	—	7474 GB7
	H7X, H8X, MLX	C,Y	—	—	—	—	2	2	—	—	7474 GX9
	MLXW	Y	—	—	—	—	—	2	—	—	7474 GW1
	H7Y, MLY	P,Y	—	—	—	—	2	2	—	—	7474 GY5
	H7B	P	—	—	—	—	2	2	—	—	7474 GB2
	M8XA, H7XA, H8XA	P	—	—	—	—	2	2	2	2	7474 GA8
	H8L	C	—	—	—	—	2	2	—	—	7474 GL2
23-76-22	PANEL, Front Back Center Arm Rest Rear										
	H3A	C	—	1	—	—	—	—	—	—	6645 GA6
	L3B, L4B, S4B	C	—	1	—	—	1	1	1	1	6645 GB2
	H4B	C	—	1	—	—	—	—	—	—	6645 GB7
	L4E, H4E, S4E	C	—	1	—	—	1	1	—	—	6645 GE8
	L3F, H3F, L4F, S3F, MBF	C,Y	—	1	—	—	1	1	—	—	6645 GF7
	L3L, S3L	C	—	1	—	—	1	1	—	—	6645 GL2
	L3X, L4X, H3X, H4X, MBX	C,Y	—	1	—	—	1	1	1	1	6645 GX9
	L3Y, H3Y, MBY	C,Y	—	1	—	—	1	1	—	—	6645 GY5
	L4T, MBTT	C,Y	—	1	—	—	—	—	1	1	6645 GT7
	MBB	Y	—	1	—	—	—	—	—	—	6645 GB9
	MBM	Y	—	1	—	—	—	—	—	—	6645 GM9
23-76-25	WASHER, Front Seat C/A/R Hinge Assy. to Supt. Assy.	P,D,C,Y	—	2	—	—	4	4	4	4	2609 158
23-76-28	LOCK BAR, Front Seat C/A/R Bench Seat	V,L	—	AR	—	AR	—	—	—	—	2767 653
	Bucket Seat	B,J,R,W	—	1	—	1	1	—	1	1	2942 698
	Bucket Seat	P,D,C,Y	—	AR	—	AR	AR	AR	AR	AR	2608 812
	Bench Seat	P,D,C,Y	—	AR	—	AR	AR	AR	AR	AR	2270 102
23-76-30	HANDLE, Front Seat C/A/R Pull Down	D,C,Y	—	—	—	—	1	1	—	—	2608 714

TYPE LETTERS Indicates	J - Challenger B - Barracuda	V - Valiant L - Dart	R - Belvedere W - Coronet	P - Plymouth D - Dodge	C - Chrysler Y - Imperial
NUMERALS INDICATE:	21 - 2 DR. SED. 23 - 2 DR. H.T.	27 - CONV. CPE. 29 - FAST BACK	41 - 4 DR. SED. 43 - 4 DR. H.T.	45 - 6 PASS. STA. WGN. 46 - 9 PASS. STA. WGN.	

AR Indicates use as required.
# Indicates parts not listed in any previous parts book
Numerals in parentheses ( ) refer to notes.
★ Indicates change or addition.

Printed in U.S.A.
January 1972

Right and left part numbers are on same line, first number is right, second number is left.

CODE	PART NAME	MODEL CODES	SEE BOTTOM NOTE 21	23	27	29	41	43	45	46	PART NUMBER
23-76-34	COVER, Front Back C A R										
	L4B, L3B	V	—	—	—	1	1	—	—	—	8006 GB7
	L4F, L3F	V	—	—	—	1	1	—	—	—	8006 GF7
	L4T	V	—	—	—	1	1	—	—	—	8006 GT7
	L4X, L3X	V	—	—	—	1	1	—	—	—	8006 GX9
	L4Y, L3Y	V	—	—	—	1	1	—	—	—	8006 GY3
	H4B	B	—	1	—	—	—	—	—	—	7483 G4B
	H4F	B,J	—	1	—	—	—	—	—	—	7483 G4F
	H4T	B	—	1	—	—	—	—	—	—	7483 G4T
	H4X	B,J	—	1	—	—	—	—	—	—	7483 G4X
	H4XW	B	—	1	—	—	—	—	—	—	7483 G4W
	M6B, P6B, C6B, D6B	R,W	—	1	—	—	—	—	—	—	8034 GB5
	M6F, P6F, C5F, C6F, D5F, D6F	R,W	—	1	—	—	—	—	—	—	8034 GF7
	M6T, P6T, C6T, D6T	R,W	—	1	—	—	—	—	—	—	8034 GT7
	M5X, M6X, M6XV, P5X, P6X, C5X, C5XV, C6X, D5X, D5XV, D6X	R,W	—	1	—	—	—	—	—	—	8034 GX9
	M6XA, P6XA, C6XA, D6XA	R,W	—	1	—	—	—	—	—	—	8034 GA6
	M6XW, P6XW, C6XW, D6XW	R,W	—	1	—	—	—	—	—	—	8034 GW1
	M6Y, P6Y, C6Y, D6Y, P3B, C3B	R,W	—	1	—	—	—	—	—	—	5279 GB5
	P3B	R	—	—	—	—	1	—	—	—	5279 GB7
	P3F, C3F	R,W	—	1	—	—	1	—	—	—	5279 GF7
	P3T	R	—	1	—	—	1	—	—	—	5279 GT7
	P3X, C3X	R,W	—	1	—	—	1	—	—	—	5279 GX9
	D3B	W	—	—	—	1	—	—	—	—	5278 GB5
	D3F	W	—	—	—	1	—	—	—	—	5278 GF7
	D3X	W	—	—	—	1	—	—	—	—	5278 GX9
	D3Y	W	—	—	—	1	—	—	—	—	5278 GY3
	D3B, P3B, P4B	R,W	—	—	—	—	1	—	1	1	8010 GB6
	D3F, P3F, P4F	R,W	—	—	—	—	1	—	1	1	8010 GF8
	D3T, P3T, P4T	R,W	—	—	—	—	—	—	1	1	8010 GT6
	P3X, P4X	W	—	—	—	—	1	—	1	1	8010 GX9
	P3Y	W	—	—	—	—	1	—	—	—	8010 GY4
	E5B	W	—	—	—	1	—	—	—	—	6031 GB5
	E5F	W	—	—	—	1	—	—	—	—	6031 GF7
	CRT	W	—	—	—	1	—	—	—	—	6031 GT7
	E5X, CRX	W	—	—	—	1	—	—	—	—	6031 GX9
	CRXA	W	—	—	—	1	—	—	—	—	6031 GA6
	E5Y	W	—	—	—	1	—	—	—	—	6031 GY3
	H7B	P	—	—	—	—	2	2	—	—	8008 GB2
	H7F	P	—	—	—	—	2	2	—	—	8008 GF7
	H7XA, H8XA, M8AX	P	—	—	—	—	2	2	2	2	8008 GA8
	H7Y	P	—	—	—	—	2	2	—	—	8008 GY5
	H8T	P	—	—	—	—	—	—	2	2	8008 GT7
	M4B, H4B, H3B, M3B	P,D	—	1	—	1	1	1	1	1	8001 GB2
	M4E, H4E	P,D	—	1	—	1	—	1	—	—	8001 GE8
	M4F, H4F, H3F, M3F	P,D	—	1	—	1	1	1	1	1	8001 GF7
	M4T, H4T, H3T, P4T	P	—	1	—	1	1	1	1	1	8001 GT7
	M4XA, H4XA, H3XA	P	—	1	—	1	1	1	1	1	8001 GA8
	M4XW, H4XW	P,D	—	1	—	1	—	1	—	—	8001 GW1
	M4Y, H4Y, H3Y, M3Y	P,D	—	1	—	1	1	1	1	1	8001 GY5
	M3X, M4X	D	—	1	—	—	—	1	—	—	8001 GX9
	H3A	D	—	1	—	—	1	1	—	—	8013 GA6
	H3B, H4B	D	—	1	—	—	1	1	1	1	8013 GB2
	H4E	D	—	1	—	—	—	1	—	—	8013 GE8
	H3F, H4F, D4F	D	—	1	—	—	1	1	1	1	8013 GF7
	H4T	D	—	—	—	—	—	—	1	1	8013 GT7
	H3X, H4X, D4X	D	—	1	—	—	1	1	1	1	8013 GX9
	H3Y	D	—	1	—	—	1	1	—	—	8013 GY5
	H7A	D	—	—	—	—	2	2	—	—	8018 GA6

TYPE LETTERS Indicates J - Challenger, B - Barracuda, V - Valiant, L - Dart, R - Belvedere, W - Coronet, P - Plymouth, D - Dodge, C - Chrysler, Y - Imperial

NUMERALS INDICATE: 21 - 2 DR. SED., 23 - 2 DR. H.T., 27 - CONV. CPE., 29 - FAST BACK, 41 - 4 DR. SED., 43 - 4 DR. H.T., 45 - 6 PASS. STA. WGN., 46 - 9 PASS. STA. WGN.

AR Indicates use as required.
= Indicates parts not listed in any previous parts book
Numerals in parentheses ( ) refer to notes.
★ Indicates change or addition.

Printed in U.S.A.
January 1972

Right and left part numbers are on same line, first number is right, second number is left.

CODE	PART NAME	MODEL CODES	SEE BOTTOM NOTE 21	23	27	29	41	43	45	46	PART NUMBER
23-76-34	COVER, Front Back C. A. R Cont'd.										
	H7B	D	—	—	—	—	2	2	2	2	8018 GB2
	H7F	D	—	—	—	—	2	2	2	2	8018 GF7
	H7X	D	—	—	—	—	2	2	2	2	8018 GX9
	H8T	D	—	—	—	—	—	—	2	2	8020 GT7
	H8X	D	—	—	—	—	—	—	2	2	8020 GX9
	H5B	P	—	1	—	1	—	—	—	—	8025 GB2
	H5F, H6F	P,C	—	1	—	—	—	—	—	—	8025 GF7
	H5XA	P	—	1	—	1	—	—	—	—	8025 FA8
	H5Y	P	—	1	—	1	—	—	—	—	8025 GY5
	H6T	C	—	1	—	—	—	—	—	—	8025 GT7
	H6X	C	—	1	—	—	—	—	—	—	8025 FX9
	H6XW	C	—	1	—	—	—	—	—	—	8025 FW1
	H6B	P	—	1	—	—	—	—	—	—	8036 GB2
	M6E, H6E	D	—	1	—	—	—	—	—	—	8036 GE8
	M6F, H6F	P	—	1	—	1	—	1	—	—	8036 GF7
	M6XA, H6XA, M6X, H6X	P,D	—	1	—	1	—	1	—	—	8036 GX9
	M6XW, H6XW	P,D	—	1	—	1	—	1	—	—	8036 GW1
	HLT (Sample of Material Req'd.)	C	—	—	—	—	2	2	—	—	8004 GT7
	HLT (Sample of Material Req'd.)	C	—	—	—	—	2	2	—	—	8004 GT5
	H3A	C	—	1	—	—	—	—	—	—	8005 GA6
	H3F	C	—	1	—	—	—	—	—	—	8005 GF7
	H3X	C	—	1	—	—	—	—	—	—	8005 GX9
	H3Y	C	—	1	—	—	—	—	—	—	8005 GY5
	H3B	C	—	1	—	—	—	—	—	—	8005 GB7
	S6F	C	—	1	—	—	—	1	—	—	8011 GF7
	E6XW, S6XW, G6XW	C	—	1	—	—	—	1	—	—	8011 GW1
	S6L	C	—	1	—	—	—	1	—	—	8011 GL2
	E6T, S6T, G6T	C	—	1	—	—	—	1	—	—	8011 GT7
	E6X, S6X, G6X	C	—	1	—	—	—	1	—	—	8011 GX9
	H7A	C	—	—	—	—	2	2	—	—	8022 GA6
	H7B	C	—	—	—	—	2	2	—	—	8022 GB7
	H7F, H8F	C	—	—	—	—	2	2	—	—	8022 GF7
	H8L	C	—	—	—	—	2	2	—	—	8022 GL2
	H7X, H8X	C	—	—	—	—	2	2	—	—	8022 GX9
	H9A	C	—	—	—	—	1	1	—	—	8023 GA6
	H9B	C	—	—	—	—	1	1	—	—	8023 GB7
	H9F	C	—	—	—	—	1	1	—	—	8023 GF7
	H9X	C	—	—	—	—	1	1	—	—	8023 GX9
	H9Y	C	—	—	—	—	1	1	—	—	8023 GY5
	L7B	C	—	—	—	—	2	2	—	—	8027 GB2
	L7F, L8F	C	—	—	—	—	2	2	2	2	8027 GF7
	L7XL	C	—	—	—	—	2	2	2	2	8027 GL2
	L8X	C	—	—	—	—	2	2	2	2	8027 GX9
	L8Y	C	—	—	—	—	—	—	2	2	8027 GY5
	L8T	C	—	—	—	—	—	—	2	2	8027 GT7
	L3B, L4B	C	—	1	—	—	1	1	1	1	8038 GB2
	L3F, L4F	C	—	1	—	—	1	1	1	1	8038 GF7
	L3L	C	—	1	—	—	1	1	1	1	8038 GL2
	L4T	C	—	—	—	—	—	—	1	1	8038 GT7
	L3X, L4X	C	—	1	—	—	1	1	1	1	8038 GX9
	L3Y	C	—	1	—	—	1	1	—	—	8038 GY5
	L4E, S4E	C	—	1	—	—	—	1	—	—	8038 GE8
	MRB	Y	—	1	—	—	—	—	—	—	7543 GRB
	MRE	Y	—	1	—	—	—	—	—	—	7543 GRE
	MRF	Y	—	1	—	—	—	—	—	—	7543 GRF
	MRT	Y	—	1	—	—	—	—	—	—	7543 GRT
	MRX	Y	—	1	—	—	—	—	—	—	7543 GRX
	MRXW	Y	—	1	—	—	—	—	—	—	7543 GRW

TYPE LETTERS Indicates: J - Challenger, B - Barracuda, V - Valiant, L - Dart, R - Belvedere, W - Coronet, P - Plymouth, D - Dodge, C - Chrysler, Y - Imperial

NUMERALS INDICATE: 21 - 2 DR. SED., 23 - 2 DR. H.T., 27 - CONV. CPE., 29 - FAST BACK, 41 - 4 DR. SED., 43 - 4 DR. H.T., 45 - 6 PASS. STA. WGN., 46 - 9 PASS. STA. WGN.

AR Indicates use as required.
≠ Indicates parts not listed in any previous parts book
Numerals in parentheses ( ) refer to notes.
★ Indicates change or addition.

Printed in U.S.A.
January 1972

Right and left part numbers are on same line, first number is right, second number is left.

CODE	PART NAME	MODEL CODES	SEE BOTTOM NOTE 21	23	27	29	41	43	45	46	PART NUMBER
23-76-34	COVER, Front Back C'A'R Cont'd.										
	MRY	Y	—	1	—	—	—	—	—	—	7543 GRY
	MLA	Y	—	—	—	—	—	2	—	—	7484 GA6
	MLB	Y	—	—	—	—	—	2	—	—	7484 GB9
	MLE	Y	—	—	—	—	—	2	—	—	7484 GE8
	MLF	Y	—	—	—	—	—	2	—	—	7484 GF7
	MLM	Y	—	—	—	—	—	2	—	—	7484 GM9
	MLT	Y	—	—	—	—	—	2	—	—	7484 GT7
	MLX	Y	—	—	—	—	—	2	—	—	7484 GX9
	MLXW	Y	—	—	—	—	—	2	—	—	7484 GW1
	MLY	Y	—	—	—	—	—	2	—	—	7484 GY5
	MDA	Y	—	—	—	—	—	2	—	—	7572 GDA
	MDB	Y	—	—	—	—	—	2	—	—	7572 GDB
	MDF	Y	—	—	—	—	—	2	—	—	7572 GDF
	MDM	Y	—	—	—	—	—	2	—	—	7572 GDM
	MDTT	Y	—	—	—	—	—	2	—	—	7572 GDT
	MDX	Y	—	—	—	—	—	2	—	—	7572 GDX
	MDY	Y	—	—	—	—	—	2	—	—	7572 GDY
	MBA	Y	—	1	—	—	—	—	—	—	7502 GBA
	MBB	Y	—	1	—	—	—	—	—	—	7502 GBB
	MBF	Y	—	1	—	—	—	—	—	—	7502 GBF
	MBM	Y	—	1	—	—	—	—	—	—	7502 GBM
	MBTT	Y	—	1	—	—	—	—	—	—	7502 GBT
	MBX	Y	—	1	—	—	—	—	—	—	7502 GBX
	MBY	Y	—	1	—	—	—	—	—	—	7502 GBY
23-76-35	COVER, Front Back Center Arm Rest Finish	V	—	—	—	1	1	—	—	—	2762 EX9
	w/Bucket Seats	B,J,R,W	—	1	—	1	1	—	1	1	2776 FX9
		P,D,C,Y	—	1	—	1	—	1	—	—	2761 EX9
	E6T, S6T, H6T, MRT	C,Y	—	1	—	—	—	1	—	—	2761 GT6
	S6L	C	—	1	—	—	—	1	—	—	2761 GL2
	w/Split Back	R,W	—	1	—	1	1	—	1	1	2763 GX9
		P,D	—	1	—	1	1	1	1	1	2760 GX9
	Free Standing Center Arm Rest Finish	P,D,C,Y	—	1	—	1	1	1	1	1	3520 190
	PANEL, Front Seat Center Arm Trim w/50/50	Y	—	—	—	—	—	1	—	—	2609 018-9
	For Police Cars Only										
	Panel, Front Seat Back w/50-50 Split	P,D	—	—	—	—	2	—	—	—	3571 372
23-76-40	ARM REST, Rear Back Center										
	H7A	D	—	—	—	—	1	1	—	—	7363 G7A
	H7B	D	—	—	—	—	1	1	—	—	7363 G7B
	H7F	D	—	—	—	—	1	1	—	—	7363 G7F
	H7X	D	—	—	—	—	1	1	—	—	7363 G7X
	HLT (Sample of Material Req'd.)	C	—	—	—	—	1	1	—	—	7056 GT7
	HLT (Sample of Material Req'd.)	C	—	—	—	—	1	1	—	—	7056 GLJ
	H6F	C	—	1	—	—	—	—	—	—	7066 GF7
	H6T	C	—	1	—	—	—	—	—	—	7066 GT7
	H6X	C	—	1	—	—	—	—	—	—	7066 GX9
	H6XW	C	—	1	—	—	—	—	—	—	7066 GW1
	H8A	C	—	—	—	—	1	1	—	—	7060 GA6
	H8B	C	—	—	—	—	1	1	—	—	7060 GB7
	H8F	C	—	—	—	—	1	1	—	—	7060 GF7
	H8L	C	—	—	—	—	1	1	—	—	7060 GL2
	H8X	C	—	—	—	—	1	1	—	—	7060 GX9
	H9A	C	—	—	—	—	1	1	—	—	7055 GA6
	H9B	C	—	—	—	—	1	1	—	—	7055 GB7
	H9F	C	—	—	—	—	1	1	—	—	7055 GF7
	H9X	C	—	—	—	—	1	1	—	—	7055 GX9
	H9Y	C	—	—	—	—	1	1	—	—	7055 GY5
	MBA	Y	—	1	—	—	—	—	—	—	6937 GBA
	MBB	Y	—	1	—	—	—	—	—	—	6937 GBB

TYPE LETTERS Indicates: J - Challenger; V - Valiant; R - Belvedere; P - Plymouth; C - Chrysler; B - Barracuda; L - Dart; W - Coronet; D - Dodge; Y - Imperial

NUMERALS INDICATE: 21 - 2 DR. SED.; 23 - 2 DR. H.T.; 27 - CONV. CPE.; 29 - FAST BACK; 41 - 4 DR. SED.; 43 - 4 DR. H.T.; 45 - 6 PASS. STA. WGN.; 46 - 9 PASS. STA. WGN.

AR Indicates use as required.
= Indicates parts not listed in any previous parts book

Numerals in parentheses ( ) refer to notes.
★ Indicates change or addition.

Printed in U.S.A.
January 1972

Right and left part numbers are on same line, first number is right, second number is left.

CODE	PART NAME	MODEL CODES	SEE BOTTOM NOTE 21	23	27	29	41	43	45	46	PART NUMBER
23-76-40	ARM REST, Rear Back Center Cont'd.										
	MBF	Y	—	1	—	—	—	—	—	—	6937 GBF
	MBM	Y	—	1	—	—	—	—	—	—	6937 GBM
	MBTT	Y	—	1	—	—	—	—	—	—	6937 GBT
	MBX	Y	—	1	—	—	—	—	—	—	6937 GBX
	MBY	Y	—	1	—	—	—	—	—	—	6937 GBY
	MRB	Y	—	1	—	—	—	—	—	—	7044 GRB
	MRE	Y	—	1	—	—	—	—	—	—	7044 GRE
	MRF	Y	—	1	—	—	—	—	—	—	7044 GRF
	MRT	Y	—	1	—	—	—	—	—	—	7044 GRT
	MRX	Y	—	1	—	—	—	—	—	—	7044 GRX
	MRXW	Y	—	1	—	—	—	—	—	—	7044 GRW
	MRY	Y	—	1	—	—	—	—	—	—	7044 GRY
	MDA	Y	—	—	—	—	—	1	—	—	7082 GDA
	MDB	Y	—	—	—	—	—	1	—	—	7082 GDB
	MDF	Y	—	—	—	—	—	1	—	—	7082 GDF
	MDM	Y	—	—	—	—	—	1	—	—	7082 GDM
	MDTT	Y	—	—	—	—	—	1	—	—	7082 GDT
	MDX	Y	—	—	—	—	—	1	—	—	7082 GDX
	MDY	Y	—	—	—	—	—	1	—	—	7082 GDY
	MLA	Y	—	—	—	—	—	1	—	—	6926 GLA
	MLB	Y	—	—	—	—	—	1	—	—	6926 GLB
	MLE	Y	—	—	—	—	—	1	—	—	6926 GLE
	MLF	Y	—	—	—	—	—	1	—	—	6926 GLF
	MLM	Y	—	—	—	—	—	1	—	—	6926 GLM
	MLT	Y	—	—	—	—	—	1	—	—	6926 GLT
	MLX	Y	—	—	—	—	—	1	—	—	6926 GLX
	MLXW	Y	—	—	—	—	—	1	—	—	6926 GLW
	MLY	Y	—	—	—	—	—	1	—	—	6926 GLY
23-76-45	COVER, Rear Back C/A/R										
	H7A	D	—	—	—	—	1	1	—	—	8061 GA6
	H7B	D	—	—	—	—	1	1	—	—	8061 GB2
	H7F	D	—	—	—	—	1	1	—	—	8061 GF7
	H7X	D	—	—	—	—	1	1	—	—	8061 GX9
	H6F	C	—	1	—	—	—	—	—	—	8222 GF7
	H6T	C	—	1	—	—	—	—	—	—	8222 GT7
	H6X	C	—	1	—	—	—	—	—	—	8222 GX9
	H6XW	C	—	1	—	—	—	—	—	—	8222 GW1
	HLT (Sample of Material Req'd.)	C	—	—	—	—	1	1	—	—	8302 GT7
	HLT (Sample of Material Req'd.)	C	—	—	—	—	—	1	—	—	8302 GT5
	H9A	C	—	—	—	—	1	1	—	—	8366 GA6
	H9B	C	—	—	—	—	1	1	—	—	8366 GB7
	H9F	C	—	—	—	—	1	1	—	—	8366 GF7
	H9X	C	—	—	—	—	1	1	—	—	8366 GX9
	H9Y	C	—	—	—	—	1	1	—	—	8366 GY5
	H7A	C	—	—	—	—	1	1	—	—	8365 GA6
	H7B	C	—	—	—	—	1	1	—	—	8365 GB7
	H7F, H8F	C	—	—	—	—	1	1	—	—	8365 GF7
	H8L	C	—	—	—	—	1	1	—	—	8365 GL2
	H7X, H8X	C	—	—	—	—	1	1	—	—	8365 GX9
	MRB	Y	—	1	—	—	—	—	—	—	8362 GRB
	MRE	Y	—	1	—	—	—	—	—	—	8362 GRE
	MRF	Y	—	1	—	—	—	—	—	—	8362 GRF
	MRT	Y	—	1	—	—	—	—	—	—	8362 GRT
	MRX	Y	—	1	—	—	—	—	—	—	8362 GRX
	MRXW	Y	—	1	—	—	—	—	—	—	8362 GRW
	MRY	Y	—	1	—	—	—	—	—	—	8362 GRY
	MBA	Y	—	1	—	—	—	—	—	—	8299 GBA
	MBB	Y	—	1	—	—	—	—	—	—	8299 GBB

TYPE LETTERS Indicates: J - Challenger; B - Barracuda; V - Valiant; L - Dart; R - Belvedere; W - Coronet; P - Plymouth; D - Dodge; C - Chrysler; Y - Imperial

NUMERALS INDICATE: 21 - 2 DR. SED.; 23 - 2 DR. H.T.; 27 - CONV. CPE.; 29 - FAST BACK; 41 - 4 DR. SED.; 43 - 4 DR. H.T.; 45 - 6 PASS. STA. WGN.; 46 - 9 PASS. STA. WGN.

AR Indicates use as required.
# Indicates parts not listed in any previous parts book
Numerals in parentheses ( ) refer to notes.
★ Indicates change or addition.

Printed in U.S.A.
January 1972

Right and left part numbers are on same line, first number is right, second number is left.

CODE	PART NAME	MODEL CODES	SEE BOTTOM NOTE 21	23	27	29	41	43	45	46	PART NUMBER
23-76-45	COVER, Rear Back C A R Cont'd.										
	MBF	Y	—	1	—	—	—	—	—	—	8299 GBF
	MBM	Y	—	1	—	—	—	—	—	—	8299 GBM
	MBTT	Y	—	1	—	—	—	—	—	—	8299 GBT
	MBX	Y	—	1	—	—	—	—	—	—	8299 GBX
	MBY	Y	—	1	—	—	—	—	—	—	8299 GBY
	MLA	Y	—	—	—	—	—	1	—	—	8273 GLA
	MLB	Y	—	—	—	—	—	1	—	—	8273 GLB
	MLE	Y	—	—	—	—	—	1	—	—	8273 GLE
	MLF	Y	—	—	—	—	—	1	—	—	8273 GLF
	MLM	Y	—	—	—	—	—	1	—	—	8273 GLM
	MLT	Y	—	—	—	—	—	1	—	—	8273 GLT
	MLX	Y	—	—	—	—	—	1	—	—	8273 GLX
	MLXW	Y	—	—	—	—	—	1	—	—	8273 GLW
	MLY	Y	—	—	—	—	—	1	—	—	8273 GLY
23-76-52	FLAP, Rear Seat Back Center Arm Rest Opening Lower										
	H7A	D	—	—	—	—	1	1	—	—	8063 GA6
	H7B	D	—	—	—	—	1	1	—	—	8063 GB2
	H7F	D	—	—	—	—	1	1	—	—	8063 GF7
	H7X	D	—	—	—	—	1	1	—	—	8063 GX9
	MRB	Y	—	1	—	—	—	—	—	—	6639 GB2
	MBB	Y	—	1	—	—	—	—	—	—	6639 GB9
	MRE	Y	—	1	—	—	—	—	—	—	6639 GE8
	H6F, MRF, MBF	C,Y	—	1	—	—	—	—	—	—	6639 GF7
	H6T, MRT, MBTT	C,Y	—	1	—	—	—	—	—	—	6639 GT7
	H6X, MRX, MBX	C,Y	—	1	—	—	—	—	—	—	6639 GX9
	H6XW, MRXW	C,Y	—	1	—	—	—	—	—	—	6639 GW1
	MRY, MBY	Y	—	1	—	—	—	—	—	—	6639 GY5
	MBA	Y	—	1	—	—	—	—	—	—	6639 GA6
	MBM	Y	—	1	—	—	—	—	—	—	6639 GM9
23-76-53	FLAP, Rear Back C/A/R										
	H7A	D	—	—	—	—	1	1	—	—	8062 GA6
	H7B	D	—	—	—	—	1	1	—	—	8062 GB2
	H7F	D	—	—	—	—	1	1	—	—	8062 GF7
	H7X	D	—	—	—	—	1	1	—	—	8062 GX9
	H9A	C	—	—	—	—	1	1	—	—	8359 GA6
	H9B	C	—	—	—	—	1	1	—	—	8359 GB7
	H9F	C	—	—	—	—	1	1	—	—	8359 GF7
	H9X	C	—	—	—	—	1	1	—	—	8359 GX9
	H9Y	C	—	—	—	—	1	1	—	—	8359 GY5
	MRB	Y	—	1	—	—	—	—	—	—	6640 GB2
	MBB	Y	—	1	—	—	—	—	—	—	6640 GB9
	MRE	Y	—	1	—	—	—	—	—	—	6640 GE8
	H6F, MRF, MBF	C,Y	—	1	—	—	—	—	—	—	6640 GF7
	H6T, MRT, MBT	C,Y	—	1	—	—	—	—	—	—	6640 GT7
	H6X, MRX, MBX	C,Y	—	1	—	—	—	—	—	—	6640 GX9
	H6XW, MRXW	C,Y	—	1	—	—	—	—	—	—	6640 GW1
	MRY, MBY	Y	—	1	—	—	—	—	—	—	6640 GY5
	MBA	Y	—	1	—	—	—	—	—	—	6640 GA6
	MBM	Y	—	1	—	—	—	—	—	—	6640 GM9
	H6A, MLA	C,Y	—	—	—	—	1	1	—	—	8272 GA6
	H7B	C	—	—	—	—	1	1	—	—	8272 GB7
	MLB	Y	—	—	—	—	—	1	—	—	8272 GB9
	MLE	Y	—	—	—	—	—	1	—	—	8272 GE8
	H7F, H8F, MLF	C,Y	—	—	—	—	1	1	—	—	8272 GF7
	MLM	Y	—	—	—	—	—	1	—	—	8272 GM9
	HLT, MLT (Sample of Material Req'd.)	C,Y	—	—	—	—	1	1	—	—	8272 GT7

TYPE LETTERS Indicates: J - Challenger; B - Barracuda; V - Valiant; L - Dart; R - Belvedere; W - Coronet; P - Plymouth; D - Dodge; C - Chrysler; Y - Imperial

NUMERALS INDICATE: 21 - 2 DR. SED.; 23 - 2 DR. H.T.; 27 - CONV. CPE.; 29 - FAST BACK; 41 - 4 DR. SED.; 43 - 4 DR. H.T.; 45 - 6 PASS. STA. WGN.; 46 - 9 PASS. STA. WGN.

AR Indicates use as required.

= Indicates parts not listed in any previous parts book

Numerals in parentheses ( ) refer to notes.

★ Indicates change or addition.

Printed in U.S.A. January 1972

Right and left part numbers are on same line, first number is right, second number is left.

CODE	PART NAME	MODEL CODES	SEE BOTTOM NOTE 21	23	27	29	41	43	45	46	PART NUMBER
23-76-53	FLAP, Rear Back C A R Cont'd.										
	HLT (Sample of Material Req'd.)	C	—	—	—	—	1	1	—	—	8272 GT5
	H7X, H8X, MLX	C,Y	—	—	—	—	1	1	—	—	8272 GX9
	MLXW	Y	—	—	—	—	—	1	—	—	8272 GW1
	MLY	Y	—	—	—	—	—	1	—	—	8272 GY5
	H8L	C	—	—	—	—	1	1	—	—	8272 GL2
23-76-62	CUP, Door Arm Rest Pull										
	H4B, H6B, P6B	B	—	1	1	—	—	—	—	—	1258-9 GB4
	H4F, H6F, P6F	B	—	1	1	—	—	—	—	—	1258-9 GF8
	H4T, H6T, SRT, P6T, PRT, SRT	B	—	1	1	—	—	—	—	—	1258-9 GT6
	H4XW, H6XW	B	—	1	1	—	—	—	—	—	1258-9 FW1
	H4X, H5XV, H6X, H6XV, P5X, SRX, P6X, PRX	B	—	1	1	—	—	—	—	—	1258-9 FX9
	PRY, P6Y-Up to Build Date 10-1-70	B	—	1	1	—	—	—	—	—	1258-9 GY4
	PRY, P6Y-After Build Date 10-1-70	B	—	1	—	—	—	—	—	—	1262-3 GY4
	H5B, H6B	J	—	1	1	—	—	—	—	—	1256-7 GB4
	H4F, H5F, H6F, HRF	J	—	1	1	—	—	—	—	—	1256-7 GF8
	H6T, HRT	J	—	1	1	—	—	—	—	—	1256-7 GT6
	H6XW	J	—	1	1	—	—	—	—	—	1256-7 FW1
	H4X, H5X, H5XX, H6X, HRX	J	—	1	1	—	—	—	—	—	1256-7 FX9
	H5Y, H6Y	J	—	1	1	—	—	—	—	—	1256-7 GY4
23-76-63	PAD and PLATE, Rear Door Arm Rest w/o Ash Rec.										
	L3B, L2B, L4B	V,L	—	—	—	—	2	—	—	—	1214 GB7
	L3F, L4F, L2F	V,L	—	—	—	—	2	—	—	—	1214 GF7
	L2T, L4T	V	—	—	—	—	2	—	—	—	1214 GT6
	L3X, L2X, L4X	V,L	—	—	—	—	2	—	—	—	1214 DX9
	L4Y	V	—	—	—	—	2	—	—	—	1214 GY4
	w/Ash Rec.										
	L3B, L2B, L4B, H1B, H2B	V,L	—	—	—	—	1	—	—	—	1216-7 GB7
	L3F, L4F, L2F, H1F, H2F	V,L	—	—	—	—	1	—	—	—	1216-7 GF7
	L2T, L4T	V	—	—	—	—	1	—	—	—	1216-7 GT6
	L2X, L3X, L4X, H1X, H2X	V,L	—	—	—	—	1	—	—	—	1216-7 DX9
	L4Y, H2Y	V,L	—	—	—	—	1	—	—	—	1216-7 GY4
	L2B, H2B, H1B, P3B, P2B, D3B, P4B, H3B	R,W,C	—	1	—	—	1	—	1	1	1276-7 GB7
	E1B, E2B, L1B, M1B, M2B, M4B, H3B, H4B, H7B, B1B, L2B, B2B, F2B, M3B, F1B, L4B	P,D,C	—	—	—	—	1	1	1	1	1276-7 GB2
	H2F, H1F, P2F, D3F, P3F, P4F, L1F, L2F, M1F, M2F, M4F, H3F, H4F, H6F, H7F, F2F, M3F, F1F, H7F, L4F, L8F	R,W,P,D,C	—	—	—	—	1	1	1	1	1276-7 GF7
	L2T, K1T, K2T, T2T, H2T, H1T, H2T, P2T, D3T, P3T, P4T, E1T, E2T, K5T, K6T, L1T, M2T, M4T, H3T, H4T, H8T, B1T, B2T, F2T, F1T, L4T, L8T	R,W,P,D,C	—	—	—	—	1	1	1	1	1276-7 GT6
	D2X, K2X, T2X, H2X, H1X, P2X, P3X, L2X, P4X, E2XA, L2XA, M1XA, M2XA, M4XA, M8XA, H3XA, H4XA, H6XA, H7XA, L1X, L2X, K1A, K2A, K5A, K6A, F2XA, M3X, M4X, H3X, H4X, H7X, H8X, L4X, L8X, D2XA	R,W, P,D,C	—	—	—	—	1	1	1	1	1276-7 DX9
	H2Y, H1Y, P3Y	R,W	—	—	—	—	1	—	—	—	1276-7 GY4
	M1Y, M4Y, H3Y, H4Y, H7Y, L1Y, M3Y, L8Y, G1Y	P,D,C	—	—	—	—	1	1	1	1	1276-7 GY5
	E1A, H9A, H7A, G1A	C	—	—	—	—	1	1	—	—	1274-5 GA6
	E1B, L3B, L4B, L7B, S4B, G1B	C	—	—	—	—	1	1	—	—	1274-5 GB2
	E2E, L4E, S4E, G2E	C	—	—	—	—	1	1	—	—	1274-5 GE9

TYPE LETTERS Indicates: J - Challenger, B - Barracuda, V - Valiant, L - Dart, R - Belvedere, W - Coronet, P - Plymouth, D - Dodge, C - Chrysler, Y - Imperial

NUMERALS INDICATE: 21 - 2 DR. SED., 23 - 2 DR. H.T., 27 - CONV. CPE., 29 - FAST BACK, 41 - 4 DR. SED., 43 - 4 DR. H.T., 45 - 6 PASS. STA. WGN., 46 - 9 PASS. STA. WGN.

AR Indicates use as required.
# Indicates parts not listed in any previous parts book
Numerals in parentheses ( ) refer to notes.
★ Indicates change or addition.

Printed in U.S.A.
January 1972

Right and left part numbers are on same line, first number is right, second number is left.

CODE	PART NAME	MODEL CODES	SEE BOTTOM NOTE 21	23	27	29	41	43	45	46	PART NUMBER
23-76-63	PAD and PLATE, Rear Door Arm Rest w o Ash Rec. Cont'd.										
	E1F, E2F, L3F, L7F, L8F, H9F, H7F H8F, S6F, S3F, G1F, G2F	C	—	—	—	—	1	1	—	—	1274-5 GF7
	E1X, E2X, L3X, L4X, L8X, H9X, H7X, H8X, S6X, S4X, G1X, G2X	C	—	—	—	—	1	1	—	—	1274-5 DX9
	E1Y, L3Y, H9Y, S3Y, G1Y	C	—	—	—	—	1	1	—	—	1274-5 GY5
	H9B, H7B	C	—	—	—	—	1	1	—	—	1274-5 GB7
	E1L, E2L, L3L, L7XL, H8L, S6L, S3L, G1L, G2L	C	—	—	—	—	1	1	—	—	1274-5 GL1
	S6XW	C	—	—	—	—	—	1	—	—	1274-5 EW1
	HLT, S6T	C	—	—	—	—	1	1	—	—	1274-5 GT6
23-76-64	PAD, Rear Door Arm Rest Storage Compartment Lid										
	MDB, MLB	Y	—	—	—	—	—	2	—	—	1232 GB9
	MDA, MLA	Y	—	—	—	—	—	2	—	—	1232 GA6
	MLE	Y	—	—	—	—	—	2	—	—	1232 GE9
	MDF, MLF	Y	—	—	—	—	—	2	—	—	1232 GF7
	MDM, MLM	Y	—	—	—	—	—	2	—	—	1232 GM9
	MDTT	Y	—	—	—	—	—	2	—	—	1232 GT1
	MLT	Y	—	—	—	—	—	2	—	—	1232 GT6
	MDX, MLX	Y	—	—	—	—	—	2	—	—	1232 EX9
	MLXW	Y	—	—	—	—	—	2	—	—	1232 EW1
	MDY, MLY	Y	—	—	—	—	—	2	—	—	1232 GY5
23-76-76	PAD and PLATE, Quarter Arm Rest										
	D2B, L4B, L2B, H2B, E2B, L1B, M1B	V,L	—	1	—	1	—	—	—	—	1216-7 GB7
	L4F, H2F, L1F, M1F, D2F	V,L	—	1	—	1	—	—	—	—	1216-7 GF7
	D2T, L4T, L2T, E2T	V,L	—	1	—	1	—	—	—	—	1216-7 GT6
	D2XV, L6XV, M6XV	V,L	—	—	—	1	—	—	—	—	1216-7 GV1
	H2XW, H6XW, D2XW, D6XW, L6XW, M6XW	V,L	—	1	—	—	—	—	—	—	1216-7 EW1
	D2X, L4X, L6X, L2X, H2X, H2X, H6X, M6X, E2X, L1X, M1X, D6X, M1XX	V,L	—	1	—	1	—	—	—	—	1216-7 DX9
	L4Y, H2Y, D2Y	V,L	—	1	—	1	—	—	—	—	1216-7 GY4
	M2B, M6B, H2B, H1B, P6B, P3B, C2B, C6B, C3B, D6B, E5B, D3B (Up to Build Date 8-1-70)	R,W	—	1	—	1	—	—	—	—	1204-5 GB5
	M2B, M6B, H2B, H1B, P6B, P3B, C2B, C6B, C3B, D6B, E5B, D3B (After Build Date 8-1-70)	R,W	—	1	—	1	—	—	—	—	1204-5 GB4
	M6F, H2F, H1F, P6F, P3F, C2F, C5F, C6F, C3F, D5F, D6F, E5F, D3F (Up to Build Date 8-1-70)	R,W	—	1	—	1	—	—	—	—	1204-5 GF7
	M6F, H2F, H1F, P6F, P3F, C2F, C5F, C6F, C3F, D5F, D6F, E5F, D3F (After Build Date 8-1-70)	R,W	—	1	—	1	—	—	—	—	1204-5 GF8
	F2B, S4B, L4B, B1B, B2B, E1B, G1B	P,D,C	1	1	—	1	—	—	—	—	1276-7 GB2
	L1F, M1F, M4F, M6F, H3F, H4F, H5F, H6F, L2F, L3F, L4F, M3F, F1F, E1F, E2F, S6F, S3F, L8F, D4F	P,D,C	—	1	—	1	—	—	—	—	1276-7 GF7
	E1T, E2T, L1T, M4T, H3T, H4T, L2T, F1T, E6T, H6T, S6T, L4T, L8T, B1T, B2T, G6T	P,D,C	1	1	—	1	—	—	—	—	1276-7 GT6
	E2XA, L2XA, M1XA, M4XA, M6XA, H3XA, H4XA, H5XA, H6XA, L1X, L2X, D2XA, L3X, L4X, M3X, M4X, M6X, F2XA, H3X, H4X, H6X, E1X, E2X, E6X, S6X, S4X, L4X, L8X, B2XA, D2XA, D4X	P,D,C	1	1	—	1	—	—	—	—	1276-7 DX9
	M4XW, M6XW, H4XW, H6XW, E6XW, S6XW	P,D,C	—	1	—	1	—	—	—	—	1276-7 EW1
	M4Y, H3Y, H4Y, H5Y, L1Y, L3Y, S3Y, E1Y, D3Y	P,D,C	—	1	—	1	—	—	—	—	1276-7 GY5

TYPE LETTERS Indicates J - Challenger, B - Barracuda, V - Valiant, L - Dart, R - Belvedere, W - Coronet, P - Plymouth, D - Dodge, C - Chrysler, Y - Imperial

NUMERALS INDICATE: 21 - 2 DR. SED., 23 - 2 DR. H.T., 27 - CONV. CPE., 29 - FAST BACK, 41 - 4 DR. SED., 43 - 4 DR. H.T., 45 - 6 PASS. STA. WGN., 46 - 9 PASS. STA. WGN.

AR Indicates use as required.
= Indicates parts not listed in any previous parts book

Numerals in parentheses ( ) refer to notes.
★ Indicates change or addition.

Printed in U.S.A.
January 1972

Right and left part numbers are on same line, first number is right, second number is left.

CODE	PART NAME	MODEL CODES	SEE BOTTOM NOTE 21	23	27	29	41	43	45	46	PART NUMBER
23-76-76	PAD and PLATE, Quarter Arm Rest Cont'd.										
	M4E, H4E, M6E, H6E, E2E, L4E, S6E, G2E	P,D,C	—	1	—	1	—	—	—	—	1276-7 GE9
	H3A, E1A, G1A	D,C	—	1	—	—	—	—	—	—	1276-7 GA6
	E2L, L3L, S6L, S3L, G2L	C	—	1	—	—	—	—	—	—	1276-7 GL1
	H3B	C	—	1	—	—	—	—	—	—	1276-7 GB7
	MBA	Y	—	2	—	—	—	—	—	—	1240 GA6
	MRB	Y	—	2	—	—	—	—	—	—	1240 GB2
	MBB	Y	—	2	—	—	—	—	—	—	1240 GB9
	MRE	Y	—	2	—	—	—	—	—	—	1240 GE9
	MRF, MBF	Y	—	2	—	—	—	—	—	—	1240 GF7
	MBM	Y	—	2	—	—	—	—	—	—	1240 GM9
	MBTT	Y	—	2	—	—	—	—	—	—	1240 GT1
	MRT	Y	—	2	—	—	—	—	—	—	1240 GT6
	MRX, MBX	Y	—	2	—	—	—	—	—	—	1240 EX9
	MRXW	Y	—	2	—	—	—	—	—	—	1240 EW1
	MRY, MBY	Y	—	2	—	—	—	—	—	—	1240 GY5
	M2T, M6T, H2T, H1T, P6T, P3T, C2T, C6T, D6T, CRT	R,W	—	1	—	1	—	—	—	—	1204-5 GT6
	M2X, M5X, M6X, M6XA, M6XV, H2X, H2XA, H1X, P6X, P6XA, P3X, P5X, C2X, C5X, C5XV, C6X, C6XA, C3X, D5X, D5XV, D6X, D6XA, E5X, CRX, CRXA, D3X	R,W	—	1	—	1	—	—	—	—	1204-5 GX9
	M6XW, H2XW, P6XW, C2XW, C6XW, D6XW	R,W	—	1	—	—	—	—	—	—	1204-5 GW1
	M6Y, H2Y, P6Y, C2Y, C6Y, D6Y, E5Y, D3Y	R,W	—	1	—	1	—	—	—	—	1204-5 GY4
23-76-79	SUPPORT, Quarter I/S Panel Arm Rest	P,D,C,Y	1	1	—	1	—	—	—	—	2901 630-1
	BRACKET, Quarter Arm Rest To Quarter Panel Att.	Y	—	2	—	—	—	—	—	—	2878 538
23-77-3	STRAP, Center Pillar Assist										
	T2T, K2T	R,W,P	—	—	—	—	2	—	—	—	4312 GT7
	T2X, K2X, K2A	R,W,P,D	—	—	—	—	2	—	—	—	4312 EX9
	Assist										
	MLT	Y	—	—	—	—	—	2	—	—	4107 GT7
	MLXW	Y	—	—	—	—	—	2	—	—	4107 EW1
	MDX, MLX	Y	—	—	—	—	—	2	—	—	4107 EX9
	MDY, MLY	Y	—	—	—	—	—	2	—	—	4107 GY5
	MDA, MLA	Y	—	—	—	—	—	2	—	—	4107 GA6
	MDB, MLB	Y	—	—	—	—	—	2	—	—	4107 GB9
	MLE	Y	—	—	—	—	—	2	—	—	4107 GE8
	MDF, MLF	Y	—	—	—	—	—	2	—	—	4107 GF7
	MDM, MLM	Y	—	—	—	—	—	2	—	—	4107 GM9
	MDTT	Y	—	—	—	—	—	2	—	—	4107 GT3
23-77-5	SPACER, Center Panel Assist Strap	P,D	—	—	—	—	2	—	—	—	2789 230
23-77-7	BRACKET, Upper Quarter Panel and Assist Strap Mtg. Frt.	Y	—	—	—	—	—	2	—	—	2878 917
23-77-9	BRACKET and PIVOT MECH. ASSY., Strap Mtg.	Y	—	—	—	—	—	1	—	—	2879 240-1
23-78-2	BUTTON, Front and Rear Back										
	H2B	L	—	AR	—	—	AR	—	—	—	4816 GB7
	H6F, H2F	L	—	AR	—	—	AR	—	—	—	4816 GF7
	H6X, H2X	L	—	AR	—	—	AR	—	—	—	4816 GX9
	H6XW, H2XW	L	—	AR	—	—	—	—	—	—	4816 GW1
	H6Y, H2Y	L	—	AR	—	—	AR	—	—	—	4816 GY3
	Front Cushion and Back										
	HRF	J	—	AR	AR	AR	—	—	—	—	4172 GF7
	SRT, PRT, HRT	B,J	—	16	16	16	—	—	—	—	4172 GT7
	SRX, PRX, HRX	B,J	—	16	16	16	—	—	—	—	4172 FX9

TYPE LETTERS Indicates: J - Challenger; B - Barracuda; V - Valiant; L - Dart; R - Belvedere; W - Coronet; P - Plymouth; D - Dodge; C - Chrysler; Y - Imperial

NUMERALS INDICATE: 21 - 2 DR. SED.; 23 - 2 DR. H.T.; 27 - CONV. CPE.; 29 - FAST BACK; 41 - 4 DR. SED.; 43 - 4 DR. H.T.; 45 - 6 PASS. STA. WGN.; 46 - 9 PASS. STA. WGN.

AR Indicates use as required.
≠ Indicates parts not listed in any previous parts book
Numerals in parentheses ( ) refer to notes.
★ Indicates change or addition.

Printed in U.S.A.
January 1972

Right and left part numbers are on same line, first number is right, second number is left.

CODE	PART NAME	MODEL CODES	SEE BOTTOM NOTE 21	23	27	29	41	43	45	46	PART NUMBER
23-78-2	BUTTON, Front and Rear Back Cont'd.										
	PRY	B	—	16	—	—	—	—	—	—	4172 GY3
	Rear Cushion & Rear Back										
	HRF	J	—	8	—	—	—	—	—	—	4515 GF7
	PRT, SRT, HRT	B,J	—	8	8	—	—	—	—	—	4515 GT7
	PRX, SRX, HRX	B,J	—	8	8	—	—	—	—	—	4515 EX9
	PRY	B	—	8	—	—	—	—	—	—	4515 GY3
	Front Cushion & Back, Rear Cushion & Back										
	H4B, H5B, H6B, L6B	B,J	—	6	6	6	—	—	—	—	4480 GB5
	H4F, H5F, H6F, L6F	B,J	—	6	6	6	—	—	—	—	4480 GF7
	H6T, L6T	B,J	—	6	6	—	—	—	—	—	4480 GT3
	H4X, H5X, H6X, L6X, H5XX	B,J	—	6	6	6	—	—	—	—	4480 FX9
	H6XV	B	—	6	6	—	—	—	—	—	4480 GV1
	H4XW, H6XW, L6XW, L5FW	B,J	—	6	6	—	—	—	—	—	4480 GW1
	Rear Cushion and Back										
	H5F	J	—	6	—	6	—	—	—	—	4839 GF7
	H5X, H5XX	J	—	6	—	6	—	—	—	—	4839 EX9
	L5FW	J	—	2	—	—	—	—	—	—	4839 EW1
	Front Cushion and Back										
	P3B	R	—	8	—	—	8	—	—	—	4838 GB5
	P3F	R	—	8	—	—	8	—	—	—	4838 GF7
	P3T	R	—	8	—	—	8	—	—	—	4838 GT7
	P3X	R	—	8	—	—	8	—	—	—	4838 EX9
	Front Cushion and Back										
	CRT (Up to Build Date 9-1-70)	W	—	—	—	AR	—	—	—	—	4819 GT7
	CRX (Up to Build Date 9-1-70)	W	—	—	—	AR	—	—	—	—	4819 GX9
	CRXA (Up to Build Date 9-1-70)	W	—	—	—	AR	—	—	—	—	4819 GA6
	CRT (After Build Date 9-1-70)	W	—	—	—	AR	—	—	—	—	4172 GT7
	CRX (After Build Date 9-1-70)	W	—	—	—	AR	—	—	—	—	4172 FX9
	CRXA (After Build Date 9-1-70)	W	—	—	—	AR	—	—	—	—	4172 GA6
	Front Back and Rear Back										
	C2B	W	—	4	—	—	—	—	—	—	4507 GB5
	C2F	W	—	4	—	—	—	—	—	—	4507 GF7
	C2T	W	—	4	—	—	—	—	—	—	4507 GT7
	C2X	W	—	4	—	—	—	—	—	—	4507 GX9
	C2XW	W	—	4	—	—	—	—	—	—	4507 GW1
	C2Y	W	—	4	—	—	—	—	—	—	4507 GY3
	Front Cushion and Back, Rear Cushion and Back										
	CRT (Up to Build Date 9-1-70)	W	—	—	—	AR	—	—	—	—	4193 GT7
	CRX (Up to Build Date 9-1-70)	W	—	—	—	AR	—	—	—	—	4193 GX9
	CRXA (Up to Build Date 9-1-70)	W	—	—	—	AR	—	—	—	—	4193 GA6
	CRT (After Build Date 9-1-70)	W	—	—	—	AR	—	—	—	—	4864 GT7
	CRX (After Build Date 9-1-70)	W	—	—	—	AR	—	—	—	—	4864 GX9
	CRXA (After Build Date 9-1-70)	W	—	—	—	AR	—	—	—	—	4864 GA6
	Front Cushion and Back										
	E5B, D3B (Up to Build Date 9-1-70)	W	—	—	—	AR	—	—	—	—	4193 GB5
	E5F, D3F (Up to Build Date 9-1-70)	W	—	—	—	AR	—	—	—	—	4193 GF7
	E5X, D3X (Up to Build Date 9-1-70)	W	—	—	—	AR	—	—	—	—	4193 GX9
	E5Y, D3Y (Up to Build Date 9-1-70)	W	—	—	—	AR	—	—	—	—	4193 GY3
	E5B, D3B (After Build Date 9-1-70)	W	—	—	—	AR	—	—	—	—	4864 GB5
	E5F, D3F (After Build Date 9-1-70)	W	—	—	—	AR	—	—	—	—	4864 GF7
	E5X, D3X (After Build Date 9-1-70	W	—	—	—	AR	—	—	—	—	4864 GX9
	E5Y, D3Y (After Build Date 9-1-70)	W	—	—	—	AR	—	—	—	—	4864 GY3
	Front Back and Rear Back										
	H2B	W	—	—	—	—	4	—	4	4	4517 GB7
	H2F	W	—	—	—	—	4	—	4	4	4517 GF7
	H2T	W	—	—	—	—	4	—	4	4	4517 GT7

TYPE LETTERS Indicates: J - Challenger, B - Barracuda, V - Valiant, L - Dart, R - Belvedere, W - Coronet, P - Plymouth, D - Dodge, C - Chrysler, Y - Imperial

NUMERALS INDICATE: 21 - 2 DR. SED., 23 - 2 DR. H.T., 27 - CONV. CPE., 29 - FAST BACK, 41 - 4 DR. SED., 43 - 4 DR. H.T., 45 - 6 PASS. STA. WGN., 46 - 9 PASS. STA. WGN.

AR Indicates use as required.

≠ Indicates parts not listed in any previous parts book

Numerals in parentheses ( ) refer to notes.

★ Indicates change or addition.

Printed in U.S.A. January 1972

Right and left part numbers are on same line, first number is right, second number is left.

CODE	PART NAME	MODEL CODES	SEE BOTTOM NOTE 21	23	27	29	41	43	45	46	PART NUMBER
23-78-2	BUTTON, Front and Rear Back Cont'd.										
	H2X	W	—	—	—	—	4	—	4	4	4517 GX9
	H2Y	W	—	—	—	—	4	—	4	4	4517 GY3
	E1A, G1A	C	—	4	—	—	4	4	—	—	4517 GA6
	E1B, G1B	C	—	4	—	—	4	4	—	—	4517 GB2
	E2E, G2E	C	—	4	—	—	4	4	—	—	4517 GE8
	E1F, E2F, G1F, G2F	C	—	4	—	—	4	4	—	—	4517 GF7
	E1L, E2L, G1L, G2L	C	—	4	—	—	4	4	—	—	4517 GL2
	E1X, E2X, G1X, G2X	C	—	4	—	—	4	4	—	—	4517 GX9
	E1Y, G1Y, G2Y	C	—	4	—	—	4	4	—	—	4517 GY5
	Rear Back										
	E5B, D3B	W	—	—	—	12	—	—	—	—	4818 GB5
	E5F, D3F	W	—	—	—	12	—	—	—	—	4818 GF7
	E5X, D3X	W	—	—	—	12	—	—	—	—	4818 GX9
	E5Y, D3Y	W	—	—	—	12	—	—	—	—	4818 GY3
	Front Back, Rear Back										
	L2B (Up to Build Date 9-1-70)	D	—	2	—	—	2	2	2	2	4522 GB2
	L2F (Up to Build Date 9-1-70)	D	—	2	—	—	2	2	2	2	4522 GF3
	L2T (Up to Build Date 9-1-70)	D	—	2	—	—	2	2	2	2	4522 GT7
	L2X (Up to Build Date 9-1-70)	D	—	2	—	—	2	2	2	2	4522 GX9
	L2B (After Build Date 9-1-70)	D	—	2	—	—	2	2	2	2	4867 GB2
	L2F (After Build Date 9-1-70)	D	—	2	—	—	2	2	2	2	4867 GF3
	L2T (After Build Date 9-1-70)	D	—	2	—	—	2	2	2	2	4867 GT7
	L2X (After Build Date 9-1-70)	D	—	2	—	—	2	2	2	2	4867 GX9
	Front Back										
	H4B, H6B, L6B	B	—	2	2	—	—	—	—	—	4856 GB5
	H4F, H6F, L6F	B	—	2	2	—	—	—	—	—	4856 GF7
	H4T, H6T, L6T	B	—	2	2	—	—	—	—	—	4856 GT3
	H4X, H6X, L6X	B	—	2	2	—	—	—	—	—	4856 GX9
	H6XV	B	—	2	2	—	—	—	—	—	4856 GV1
	H4XW, H6XW, L6XW	B	—	2	2	—	—	—	—	—	4856 GW1
	Front Cushion, Rear Cushion, Rear Back										
	H7A (Up to Build Date 9-1-70)	D	—	—	—	—	6	6	—	—	4840 GA6
	H7B (Up to Build Date 9-1-70)	D	—	—	—	—	6	6	6	6	4840 GB2
	H7F (Up to Build Date 9-1-70)	D	—	—	—	—	6	6	6	6	4840 GF7
	H8T (Up to Build Date 9-1-70)	D	—	—	—	—	—	—	6	6	4840 GT7
	H7X, H8X (Up to Build Date 9-1-70)	D	—	—	—	—	6	6	6	6	4840 GX9
	H7A (After Build Date 9-1-70)	D	—	—	—	—	6	6	—	—	4865 GA6
	H7B (After Build Date 9-1-70)	D	—	—	—	—	6	6	6	6	4865 GB2
	H7F (After Build Date 9-1-70)	D	—	—	—	—	6	6	6	6	4865 GF7
	H8T (After Build Date 9-1-70)	D	—	—	—	—	—	—	6	6	4865 GT7
	H7X, H8X (After Build Date 9-1-70)	D	—	—	—	—	6	6	6	6	4865 GX9
	Front Back										
	H7A (Up to Build Date 9-1-70)	D	—	—	—	—	6	6	—	—	4843 GA6
	H7B (Up to Build Date 9-1-70)	D	—	—	—	—	6	6	6	6	4843 GB2
	H7F (Up to Build Date 9-1-70)	D	—	—	—	—	6	6	6	6	4843 GF7
	H8T (Up to Build Date 9-1-70)	D	—	—	—	—	—	—	6	6	4843 GT7
	H8X, H7X (Up to Build Date 9-1-70)	D	—	—	—	—	6	6	6	6	4843 GX9
	H7A (After Build Date 9-1-70	D	—	—	—	—	6	6	—	—	4866 GA6
	H7B (After Build Date 9-1-70)	D	—	—	—	—	6	6	6	6	4866 GB2
	H7F (After Build Date 9-1-70)	D	—	—	—	—	6	6	6	6	4866 GF7
	H8T (After Build Date 9-1-70)	D	—	—	—	—	—	—	6	6	4866 GT7
	H7X, H8X (After Build Date 9-1-70)	D	—	—	—	—	6	6	6	6	4866 GX9
	Front Back, Rear Back										
	H3A (Up to Build Date 9-1-70)	D	—	2	—	—	2	2	—	—	4817 GA6
	H3B (Up to Build Date 9-1-70)	D	—	2	—	—	2	2	—	—	4817 GB2
	H3F (Up to Build Date 9-1-70)	D	—	2	—	—	2	2	—	—	4817 GF7
	H3X (Up to Build Date 9-1-70)	D	—	2	—	—	2	2	—	—	4817 GX9
	H3Y (Up to Build Date 9-1-70)	D	—	2	—	—	2	2	—	—	4817 GY5

TYPE LETTERS Indicates: J - Challenger, B - Barracuda, V - Valiant, L - Dart, R - Belvedere, W - Coronet, P - Plymouth, D - Dodge, C - Chrysler, Y - Imperial

NUMERALS INDICATE: 21 - 2 DR. SED., 23 - 2 DR. H.T., 27 - CONV. CPE., 29 - FAST BACK, 41 - 4 DR. SED., 43 - 4 DR. H.T., 45 - 6 PASS. STA. WGN., 46 - 9 PASS. STA. WGN.

AR Indicates use as required.
# Indicates parts not listed in any previous parts book
Numerals in parentheses ( ) refer to notes.
★ Indicates change or addition.

Printed in U.S.A.
January 1972

Right and left part numbers are on same line, first number is right, second number is left.

CODE	PART NAME	MODEL CODES	SEE BOTTOM NOTE 21	23	27	29	41	43	45	46	PART NUMBER
23-78-2	BUTTON, Front and Rear Back Cont'd.										
	H3A (After Build Date 9-1-70)	D	—	2	—	—	2	2	—	—	4515 GA6
	H3B (After Build Date 9-1-70)	D	—	2	—	—	2	2	—	—	4515 GB2
	H3F (After Build Date 9-1-70)	D	—	2	—	—	2	2	—	—	4515 GF7
	H3Y (After Build Date 9-1-70)	D	—	2	—	—	2	2	—	—	4515 GY5
	H3X (After Build Date 9-1-70)	D	—	2	—	—	2	2	—	—	4515 FX9
	Rear Cushion, Rear Back										
	P3B	R	—	4	—	—	—	—	—	—	4838 GB5
	P3B	R	—	—	—	—	4	4	—	—	4838 GB7
	P3F	R	—	4	—	—	4	4	—	—	4838 GF7
	P3T	R	—	4	—	—	4	4	—	—	4838 GT7
	P3X	R	—	4	—	—	4	—	—	—	4838 GX9
	H7F (Up to Build Date 9-1-70)	D	—	—	—	—	—	—	—	3	4845 GF7
	H8T, H7T (Up to Build Date 9-1-70)	D	—	—	—	—	—	—	—	3	4845 GT7
	H7B (Up to Build Date 9-1-70)	D	—	—	—	—	—	—	—	3	4845 GB2
	H7X, H8X (Up to Build Date 9-1-70)	D	—	—	—	—	—	—	—	3	4845 GX9
	H7F (After Build Date 9-1-70)	D	—	—	—	—	—	—	—	3	4838 GF7
	H7T, H8T (After Build Date 9-1-70)	D	—	—	—	—	—	—	—	3	4838 GT7
	H7B (After Build Date 9-1-70)	D	—	—	—	—	—	—	—	3	4838 GB2
	H7X, H8X (After Build Date 9-1-70)	D	—	—	—	—	—	—	—	3	4838 GX9
	Front Back, Rear Back										
	H7A	C	—	—	—	—	2	2	—	—	4808 GA6
	H7B	C	—	—	—	—	2	2	—	—	4808 GB7
	H7F, H8F	C	—	—	—	—	2	2	—	—	4808 GF7
	H8L	C	—	—	—	—	2	2	—	—	4808 GL2
	H7X, H8X	C	—	—	—	—	2	2	—	—	4808 FX9
	Front Back, Rear Cushion and Rear Back										
	H3A	C	—	12	—	—	12	12	—	—	4842 GA6
	H3B	C	—	12	—	—	12	12	—	—	4842 GB7
	H3F	C	—	12	—	—	12	12	—	—	4842 GF7
	H3X	C	—	12	—	—	12	12	—	—	4842 GX9
	H3Y	C	—	12	—	—	12	12	—	—	4842 GY5
	Front Back										
	H9A	C	—	—	—	—	12	12	—	—	4844 GA6
	H9B	C	—	—	—	—	12	12	—	—	4844 GB7
	H9F	C	—	—	—	—	12	12	—	—	4844 GF7
	H9X	C	—	—	—	—	12	12	—	—	4844 GX9
	H9Y	C	—	—	—	—	12	12	—	—	4844 GY5
	Rear Cushion & Rear Back										
	H9A	C	—	—	—	—	12	12	—	—	4842 GA6
	H9B	C	—	—	—	—	12	12	—	—	4842 GB7
	H9F	C	—	—	—	—	12	12	—	—	4842 GF7
	H9X	C	—	—	—	—	12	12	—	—	4842 GX9
	H9Y	C	—	—	—	—	12	12	—	—	4842 GY5
	Front Cushion										
	H3A, H9A	C	—	12	—	—	12	12	—	—	4841 GA6
	H3B, H9B	C	—	12	—	—	12	12	—	—	4841 GB7
	H3F, H9F	C	—	12	—	—	12	12	—	—	4841 GF7
	H3X, H9X	C	—	12	—	—	12	12	—	—	4841 GX9
	H3Y, H9Y	C	—	12	—	—	12	12	—	—	4841 GY5
	Front Back, Rear Back										
	MD6	Y	—	—	—	—	—	8	—	—	4836 GA6
	MDB	Y	—	—	—	—	—	8	—	—	4836 GB9
	MDF	Y	—	—	—	—	—	8	—	—	4836 GF7
	MDM	Y	—	—	—	—	—	8	—	—	4836 GM9
	MDTT	Y	—	—	—	—	—	8	—	—	4836 GT3
	MDX	Y	—	—	—	—	—	8	—	—	4836 GX9
	MDY	Y	—	—	—	—	—	8	—	—	4836 GY5

TYPE LETTERS Indicates: J - Challenger, B - Barracuda, V - Valiant, L - Dart, R - Belvedere, W - Coronet, P - Plymouth, D - Dodge, C - Chrysler, Y - Imperial

NUMERALS INDICATE: 21 - 2 DR. SED., 23 - 2 DR. H.T., 27 - CONV. CPE., 29 - FAST BACK, 41 - 4 DR. SED., 43 - 4 DR. H.T., 45 - 6 PASS. STA. WGN., 46 - 9 PASS. STA. WGN.

AR Indicates use as required.
= Indicates parts not listed in any previous parts book

Numerals in parentheses ( ) refer to notes.
★ Indicates change or addition.

Printed in U.S.A.
January 1972

Right and left part numbers are on same line, first number is right, second number is left.

CODE	PART NAME	MODEL CODES	SEE BOTTOM NOTE 21	23	27	29	41	43	45	46	PART NUMBER
23-78-2	BUTTON, Front and Rear Back Cont'd.										
	Front Cushion, Rear Cushion										
	MDA	Y	—	—	—	—	—	AR	—	—	4834 GA6
	MDB	Y	—	—	—	—	—	AR	—	—	4834 GB9
	MDF	Y	—	—	—	—	—	AR	—	—	4834 GF7
	MDM	Y	—	—	—	—	—	AR	—	—	4834 GM9
	MDTT	Y	—	—	—	—	—	AR	—	—	4834 GT3
	MX9	Y	—	—	—	—	—	AR	—	—	4834 GX9
	MDY	Y	—	—	—	—	—	AR	—	—	4834 GY5
	Rear Cushion										
	MDA	Y	—	—	—	—	—	12	—	—	4835 GA6
	MDB	Y	—	—	—	—	—	12	—	—	4835 GB9
	MDF	Y	—	—	—	—	—	12	—	—	4835 GF7
	MDM	Y	—	—	—	—	—	12	—	—	4835 GM9
	MDTT	Y	—	—	—	—	—	12	—	—	4835 GT3
	MDX	Y	—	—	—	—	—	12	—	—	4835 GX9
	MDY	Y	—	—	—	—	—	12	—	—	4835 GY5
	Front Cushion & Front Back All Button, Walnut Finish	C	—	8	—	—	—	—	—	—	4821 GUU
	Rear Back, All Button, Walnut Finish	C	—	8	—	—	—	—	—	—	4476 GUU
	Front Back	Y	—	8	—	—	—	—	—	—	4855 GUU
	Rear Back	Y	—	8	—	—	—	—	—	—	4476 GUU
	Door Trim Panel Front										
	P3B, P4B	W	—	—	—	—	4	—	4	4	4418 GB7
	P3F, P4F	W	—	—	—	—	4	—	4	4	4418 GF7
	P3T, P4T	W	—	—	—	—	—	—	4	4	4418 GT7
	P3X, P4X	W	—	—	—	—	4	—	4	4	4418 GX9
	P3Y	W	—	—	—	—	4	—	—	—	4418 GY3
23-78-3	RETAINER, Button										
	All Codes	V,L	—	AR	—	—	AR	—	—	—	2981 989
	All Codes	B,J,R, W,D	—	AR	AR	AR	AR	AR	AR	AR	2577 194
	All Codes	W	—	—	—	—	AR	—	AR	AR	2887 261
		C	—	AR	—	—	AR	AR	—	—	2887 261
	All Codes	C	—	—	—	—	AR	AR	—	—	2981 977
		C	—	AR	—	—	AR	AR	AR	AR	3520 659
23-78-4	WASHER, Cushion, Back Button Stud										
	All Codes	C,Y	—	AR	—	—	AR	AR	—	—	2981 998
23-79-3	CARPET										
	FRONT FLOOR										
	w/or w/o Console										
	L2B, D2B, L3B, L4B, H1B, H2B, E2B, M1B	V,L	—	1	—	1	1	—	—	—	1678 GB6
	L3F, L4F, H1F, H2F, H6F, M1F	V,L	—	1	—	1	1	—	—	—	1678 GF8
	L2T, D2T, L4T, E2T	V,L	—	1	—	1	1	—	—	—	1678 GT6
	L4Y, H2Y, H6Y	V,L	—	1	—	1	1	—	—	—	1678 GY7
	L2X, D2X, L3X, L4X, H1X, H2X, L6XW, H2XW, E2X, L6X, M6X, H6X, M6XW, M1X, M1XX	V,L	—	1	—	1	1	—	—	—	1678 CX8
	w/4 Speed, Trans., All Codes	V,L	—	1	—	1	1	—	—	—	1679 CX8
	w/Auto. Trans.										
	H4B, H6B, P6B, L6B	B,J	—	1	1	—	—	—	—	—	1665 GB6
	H4F, H6F, P6F, H5F, L6F, L5FW	B,J	—	1	1	—	—	—	—	—	1665 GF8
	H4T, H6T, P6T, PRT, SRT, L6T	B,J	—	1	1	—	—	—	—	—	1665 GT6
	P6Y, PRY, H6Y	B,J	—	1	1	—	—	—	—	—	1665 GY7
	H4X, H4XW, H5X, H5XV, H6X, H6XV, H6XW, P5X, P6X, PRX, SRX, H5XX, HRX, L6X, L6XW	B,J	—	1	1	—	—	—	—	—	1665 FX8
	w/3 Speed or 4 Speed Trans. w/o Console										
	H6B, P6B, L6B	B,J	—	1	1	—	—	—	—	—	1666 GB6

TYPE LETTERS Indicates: J - Challenger, B - Barracuda, V - Valiant, L - Dart, R - Belvedere, W - Coronet, P - Plymouth, D - Dodge, C - Chrysler, Y - Imperial

NUMERALS INDICATE: 21 - 2 DR. SED., 23 - 2 DR. H.T., 27 - CONV. CPE., 29 - FAST BACK, 41 - 4 DR. SED., 43 - 4 DR. H.T., 45 - 6 PASS. STA. WGN., 46 - 9 PASS. STA. WGN.

AR Indicates use as required.
# Indicates parts not listed in any previous parts book
Numerals in parentheses ( ) refer to notes.
★ Indicates change or addition.

Printed in U.S.A.
January 1972

Right and left part numbers are on same line, first number is right, second number is left.

CODE	PART NAME	MODEL CODES	SEE BOTTOM NOTE 21	23	27	29	41	43	45	46	PART NUMBER
23-79-3	CARPET, Front Floor Cont'd.										
	H6F, P6F, H5F, L6F, L5FW	B,J	—	1	1	—	—	—	—	—	1666 GF8
	H6T, P6T, PRT, SRT, L6T	B,J	—	1	1	—	—	—	—	—	1666 GT6
	P6Y, PRY, H6Y	B,J	—	1	1	—	—	—	—	—	1666 GY7
	H5X, H5X, H6X, H6XV, H6XW, P5X, P6X, PRX, SRX, H5XX, HRX, L6X, L6XW	B,J	—	1	1	—	—	—	—	—	1666 FX8
	w/Auto. Trans., w Console										
	H6B, P6B, L6B	B,J	—	1	1	—	—	—	—	—	1667 GB6
	H6F, P6F, H5F, L6F, L5FW	B,J	—	1	1	—	—	—	—	—	1667 GF8
	H6T, P6T, PRT, SRT, L6T	B,J	—	1	1	—	—	—	—	—	1667 GT6
	P6Y, PRY, H6Y	B,J	—	1	1	—	—	—	—	—	1667 GY7
	H5X, H5XV, H6X, H6XV, H6XW, P5X, P6X, PRX, SRX, H5XX, HRX, L6X, L6XW	B,J	—	1	1	—	—	—	—	—	1667 FX8
	w/3 Speed or 4 Speed Trans. w/Console										
	H6B, P6B, H5B, L6B	B,J	—	1	1	—	—	—	—	—	1668 GB6
	H6F, P6F, H5F, L6F, L5FW	B,J	—	1	1	—	—	—	—	—	1668 GF8
	H6T, P6T, PRT, SRT, L6T	B,J	—	1	1	—	—	—	—	—	1668 GT6
	P6Y, PRY, H6Y	B,J	—	1	1	—	—	—	—	—	1668 GY7
	H5X, H5XV, H6X, H6XV, H6XW, P5X, P6X, PRX, SRX, H5XX, HRX, L6X, L6XW	B,J	—	1	1	—	—	—	—	—	1668 FX8
	w/Auto. Trans. w Bench Seat										
	M2B, H2B, H1B, P2B, P3B, C2B, P4B, E3B, C3B, D3B, E2B	R,W	—	1	—	1	1	—	1	1	1730 GB6
	H2F, H1F, P2F, P3F, D3F, C2F, P4F, C3F	R,W	—	1	—	1	1	—	1	1	1730 GF8
	M2T, H2T, H1T, P2T, P3T, D3T, C2T, P4T, E2T	R,W	—	1	—	1	1	—	1	1	1730 GT6
	H2Y, H1Y, C2Y, P3Y, D3Y	R,W	—	1	—	1	1	—	—	—	1730 GY7
	M2X, H2X, H2XA, H2XW, H1X, P2X, P3X, C2X, C2XW, P4X, D3X, E2X	P,W	—	1	—	1	1	—	1	1	1730 GX8
	w/3 Speed or 4 Speed Trans. on Floor w/Bench Seat	R,W	—	1	—	1	1	—	1	1	1734 GX8
	w/3 Speed or 4 Speed Trans. on Floor w/Bucket Seat	R,W	—	1	—	1	1	—	1	1	1654 GX8
	w/Auto. Trans. w/Center Arm Rest w/Bucket Seat										
	M6B, P6B, C6B, D6B, E5B	R,W	—	1	—	1	—	—	—	—	1736 GB6
	M6F, P6F, C5F, C6F, D5F, D6F, E5F	R,W	—	1	—	1	—	—	1	1	1736 GF8
	M6T, P6T, C6T, D6T, CRT	R,W	—	1	—	1	—	—	1	1	1736 GT6
	M6Y, P6Y, C6Y, D6Y, E5Y	R,W	—	1	—	1	—	—	—	—	1736 GY7
	M5X, M6X, M6XA, M6XW, M6XV, P5X, P6X, P6XA, P6XW, C5X, C5XV, C6X, C6XA, C6XW, D5X, D5XV, D6X, D6XA, D6XW, E5X, CRX, CRXA	R,W	—	1	—	1	—	—	1	1	1736 GX8
	w/3 Speed or 4 Speed Trans. w/Console Mounted, w/Bucket Seat										
	M6B, P6B, C6B, D6B, E5B	R,W	—	1	—	1	—	—	—	—	1748 GB6
	M6F, P6F, C6F, D5F, D6F, E5F	R,W	—	1	—	1	1	—	1	1	1748 GF8
	M6T, P6T, C6T, D6T, CRT	R,W	—	1	—	1	1	—	1	1	1748 GT6
	M6Y, P6Y, C6Y, D6Y, E5Y	R,W	—	1	—	1	—	—	—	—	1748 GY7
	M5X, M6X, M6XA, M6XW, M6XV, P5X, P6X, P6XA, P6XW, C5X, C5XV, C6X, C6XA, C6XW, D5X, D5XV, D6X, D6XA, D6XW, E5X, CRX, CRXA	R,W	—	1	—	1	1	—	1	1	1748 GX8
	w/Auto. Trans. w/Console, w/Bucket Seat										
	M6B, P6B, C5B, C6B, E5B, D5B	R,W	—	1	—	1	—	—	—	—	1749 GB6
	M6F, P6F, C5F, C6F, E5F, P6F, D5F, D6F	R,W	—	1	—	1	1	—	1	1	1749 GF8

TYPE LETTERS Indicates: J - Challenger; B - Barracuda; V - Valiant; L - Dart; R - Belvedere; W - Coronet; P - Plymouth; D - Dodge; C - Chrysler; Y - Imperial

NUMERALS INDICATE: 21 - 2 DR. SED.; 23 - 2 DR. H.T.; 27 - CONV. CPE.; 29 - FAST BACK; 41 - 4 DR. SED.; 43 - 4 DR. H.T.; 45 - 6 PASS. STA. WGN.; 46 - 9 PASS. STA. WGN.

AR Indicates use as required.
= Indicates parts not listed in any previous parts book

Numerals in parentheses ( ) refer to notes.
★ Indicates change or addition.

Printed in U.S.A.
January 1972

Right and left part numbers are on same line, first number is right, second number is left.

CODE	PART NAME	MODEL CODES	SEE BOTTOM NOTE 21	23	27	29	41	43	45	46	PART NUMBER
23-79-3	CARPET, Front Floor Cont'd.										
	M6T, P6T, C6T, CRT, D6T	R,W	—	1	—	1	1	—	1	1	1749 GT6
	M6Y, P6Y, C6Y, E5Y, D6Y	R,W	—	1	—	1	—	—	—	—	1749 GY7
	M5X, M6X, M6XA, M6XW, M6XV, P5X, P6X, P6XA, P6XW, C5X, C5XV, C6X, C6XA, C6XW,E5X, CRX, CRXA, D5X, D5XV, D6X, D6XA, D6XW	R,W	—	1	—	1	1	—	1	1	1749 GX8
	w/Auto. Trans. w/Col. Shift w/Bucket Seat										
	M6B, P6B, C6B, D6B, E5B	R,W	—	1	—	1	—	—	—	—	1782 GB6
	M6F, P6F, C5F, C6F, D5F, D6F, E5F	R,W	—	1	—	1	—	—	—	—	1782 GF8
	M6T, P6T, C6T, D6T, CRT	R,W	—	1	—	1	—	—	—	—	1782 GT6
	M6Y, P6Y, C6Y, D6Y, E5Y	R,W	—	1	—	1	—	—	—	—	1782 GY7
	M5X, M6X, M6XA, M6XW, M6XV, P5X, P6X, P6XA, P6XW, C5X, C5XV, C6X, C6XA, C6XW, D5X, D5XV, D6X, D6XA, D6XW, E5X, CRX, CRXA	R,W	—	1	—	1	—	—	—	—	1782 GX8
	w/Bench or Bucket Seat										
	E2B, E1B, H6B, H5B, H7B, L1B, L2B, M2B, M1B, M4B, H4B, H3B, H5B, B1B, B2B, F2B, M3B, F1B, F2B, H7B, E1B, L3B, L4B, L7B, S4B, G1B	P,D,C	1	1	—	1	1	1	1	1	1747 GB3
	E2T, E1T, K1T, K2T, E2T, L1T, H8T, L2T, M2T, M4T, H4T, H3T, B1T, B2T, F2T, F1T, E1L, E2L, L3L, E6T, H6T, S6T, H8L, S8L, L4T, S3L, G1L, G2L, G6T, P4T, L8T	P,D,C	1	1	—	1	1	1	1	1	1747 GT6
	M6F, H6F, H5F, H7F, L1F, L2F, M2F, M1F, M4F, H4F, H3F, H9F, F2F, M3F, F1F, E1F, E2F, L3F, L7F, L8F, S6F, S7F, L4F, S3F, G1F, G2F, D4F	P,D,C	—	1	—	1	1	1	1	1	1747 GF8
	M1Y, M4Y, H3Y, H4Y, L1Y, M3Y, E1Y, L3Y, H9Y, S3Y, L8Y, G1Y, H5Y, D3Y	P,D,C	—	1	—	1	1	1	1	1	1747 GY7
	M4E, H4E, M6E, H6E, E2E, L4E, S6E, S7E, S4E, G2E	P,D,C	—	1	—	1	1	1	1	1	1747 GE9
	H3A, H7A, E1A, S7A, H9A, G1A	D,C	—	1	—	—	1	1	—	—	1747 GA7
	H3B, H9B, H7B	C	—	1	—	—	1	1	—	—	1747 GB6
	K1A, K2A, F2XA, M3X, M4X, E2X, G6XW, H3X, H4X, M6X, H6X, H7X, H8X, E1X, E6X, E6XW, L7XL, L8X, L3X, S6X, S6XW, H9X, L4X, S4X, G2X, G6X, D2XA, D4X, B2XA										
	K2X, L2XA, M2XA, M1XA, M4XA, M4XC, M4XW, H4XA, H4XC, H3XA, H4XW, M6XA, M6XW, H6XA, H6XW, H5XA, H7XA, H8XA, M8XA, L1X, L2X,	P,D,C	—	1	—	1	1	1	1	1	1747 GX8
	MBA, MDA, MLA	Y	—	1	—	—	—	1	—	—	1754 GA7
	MRB	Y	—	1	—	—	—	—	—	—	1735 GB3
	MBB, MDB, MLB	Y	—	1	—	—	—	1	—	—	1754 GB8
	MRE, MLE	Y	—	1	—	—	—	1	—	—	1754 GE9
	MBF, MRF, MDF, MLF	Y	—	1	—	—	—	1	—	—	1754 GF8
	MBM, MDM, MLM	Y	—	1	—	—	—	1	—	—	1754 GM9
	MBTT, MRT, MDTT, MLT	Y	—	1	—	—	—	1	—	—	1754 GT6
	MRY, MDY, MLY	Y	—	1	—	—	—	1	—	—	1754 GY7
	MRX, MDX, MRXW, MLX, MLXW	Y	—	1	—	—	—	1	—	—	1754 EX9
23-79-33	CARPET, REAR FLOOR										
	L2B, L3B, L4B, E2B, M1B	V,L	—	—	—	1	1	—	—	—	1681 GB6
	L3F, L4F, M1F	V,L	—	—	—	1	1	—	—	—	1681 GF8
	L2T, L4T	V	—	—	—	1	1	—	—	—	1681 GT6

TYPE LETTERS Indicates: J - Challenger, B - Barracuda, V - Valiant, L - Dart, R - Belvedere, W - Coronet, P - Plymouth, D - Dodge, C - Chrysler, Y - Imperial

NUMERALS INDICATE: 21 - 2 DR. SED., 23 - 2 DR. H.T., 27 - CONV. CPE., 29 - FAST BACK, 41 - 4 DR. SED., 43 - 4 DR. H.T., 45 - 6 PASS. STA. WGN., 46 - 9 PASS. STA. WGN.

AR Indicates use as required.
# Indicates parts not listed in any previous parts book
Numerals in parentheses ( ) refer to notes.
★ Indicates change or addition.

Printed in U.S.A.
January 1972

Right and left part numbers are on same line, first number is right, second number is left.

CODE	PART NAME	MODEL CODES	SEE BOTTOM NOTE 21	23	27	29	41	43	45	46	PART NUMBER
23-79-33	CARPET, Rear Floor Cont'd.										
	L3Y, L4Y	V	—	—	—	1	1	—	—	—	1681 GY7
	L2X, L3X, L3XV, L4X, L6X, L6XV, M6X, M6XV, M6XW, L6XW, M1X, M1XX	V,L	—	—	—	1	1	—	—	—	1681 CX8
	w/Console, w/Auto. Trans.										
	L6X, L6XV, M6X, M6XV, L6XW, M6XW	V,L	—	—	—	1	—	—	—	—	1791 CX8
	L2B, D2B, H2B, H1B	V,L	—	1	—	—	1	—	—	—	1682 GB6
	L2F, D2F, H2F, H1F	V,L	—	1	—	—	1	—	—	—	1682 GF8
	D2Y, H2Y	V,L	—	1	—	—	1	—	—	—	1682 GY7
	L2X, D2X, H2X, H2XW, H6X, H6XW, D2XW, D6X, D6XW, X2X, H1X	L,V	—	1	—	—	1	—	—	—	1682 CX8
	w/Console, w/Auto. Trans.										
	H6X, H6XW	L	—	1	—	—	—	—	—	—	1793 CX8
	H4B, H6B, P6B	B	—	1	1	—	—	—	—	—	1670 GB6
	H4F, H6F, P6F	B	—	1	1	—	—	—	—	—	1670 GF8
	H4T, H6T, P6T, PRT, SRT	B	—	1	1	—	—	—	—	—	1670 GT6
	P6Y, PRY	B	—	1	—	—	—	—	—	—	1670 GY7
	H4X, H4XW, H5X, H5XV, H6X, H6XV, H6XW, P5X, P6X, PRX, SRX	B	—	1	1	—	—	—	—	—	1670 GX8
	H5B, H6B	J	—	1	1	—	—	—	—	—	1669 GB6
	H4F, H5F, H6F, HRF, L5FW	J	—	1	1	—	—	—	—	—	1669 GF8
	H6T, HRT	J	—	1	1	—	—	—	—	—	1669 GT6
	H5Y, H6Y	J	—	1	1	—	—	—	—	—	1669 GY7
	H4X, H5X, H6X, H6XW, HRX, L6X, L6XW	J	—	1	1	—	—	—	—	—	1669 GX8
	w/Console										
	M6B, P6B, C6B, D6B, E5B	R,W	—	1	—	1	—	—	—	—	1702 GB6
	M6F, P6F, C5F, C6F, D5F, D6F, E5F	R,W	—	1	—	1	—	—	—	—	1702 GF8
	M6T, P6T, C6T, D6T, CRT	R,W	—	1	—	1	—	—	—	—	1702 GT6
	M6Y, P6Y, C6Y, D6Y, E5Y	R,W	—	1	—	1	—	—	—	—	1702 GY7
	M5X, M6X, M6XA, M6XW, M6XV, P5X, P6X, P6XA, P6XW, C5X, C5XV, C6X, C6XA, C6XW, D5X, D5XV, D6X, D6XA, D6XW, E5X, CRX, CRXA	R,W	—	1	—	1	—	—	—	—	1702 GX8
	H1B, H2B, P3B	R,W	—	—	—	—	1	—	—	—	1703 GB6
	H1F, H2F, P3F, P6F	R,W	—	—	—	—	1	—	—	—	1703 GF8
	H1T, H2T, P3T, P6T	R,W	—	—	—	—	1	—	—	—	1703 GT6
	H1Y, H2Y, P3Y	R,W	—	—	—	—	1	—	—	—	1703 GY7
	H1X, H2X, P3X	R,W	—	—	—	—	1	—	—	—	1703 GX8
	M2B, M6B, H2B, H1B, P3B, P6B, C5B, C5B, C6B, C3B, D3B, D6B, E5B, E2B	R,W	—	1	—	1	—	—	—	—	1704 GB6
	M6F, H2F, H1F, H2F, P3F, P6F, C2F, C5F, C6F, C3F, D3F, D5F, D6F, E5F	R,W	—	1	—	1	—	—	—	—	1704 GF8
	M2T, M6T, H2T, H1T, P3T, P6T, C2T, C6T, D6T, CRT, E2T	R,W	—	1	—	1	—	—	—	—	1704 GT6
	M6Y, H2Y, P6Y, C2Y, C6Y, D5Y, D6Y, E5Y	R,W	—	1	—	1	—	—	—	—	1704 GY7
	M2X, M5X, M6X, M6XA, M6XW, M6XV, H1X, H2X, H2XA, H2XW, P5X, P6X, P6XA, P6XW, C2X, C2XW, C5X, C5XV, C6X, C6XA, C6XW, C3X, D3X, D5X, D5XV, D6X, D6XA, D6XW, E5X, CRX, CRXA, E2X	R,W	—	1	—	1	—	—	—	—	1704 GX8
	H2B, P2B, D3B, P3B, P4B	R,W	—	—	—	—	—	—	1	1	1710 GB6
	H2F, P2F, D3F, P3F, P4F	R,W	—	—	—	—	—	—	1	1	1710 GF8
	H2T, P2T, D3T, P3T, P4T	R,W	—	—	—	—	—	—	1	1	1710 GT6

TYPE LETTERS Indicates J - Challenger, B - Barracuda, V - Valiant, L - Dart, R - Belvedere, W - Coronet, P - Plymouth, D - Dodge, C - Chrysler, Y - Imperial

NUMERALS INDICATE: 21 - 2 DR. SED., 23 - 2 DR. H.T., 27 - CONV. CPE., 29 - FAST BACK, 41 - 4 DR. SED., 43 - 4 DR. H.T., 45 - 6 PASS. STA. WGN., 46 - 9 PASS. STA. WGN.

AR Indicates use as required.
= Indicates parts not listed in any previous parts book

Numerals in parentheses ( ) refer to notes.
★ Indicates change or addition.

Printed in U.S.A.
January 1972

Right and left part numbers are on same line, first number is right, second number is left.

CODE	PART NAME	MODEL CODES	SEE BOTTOM NOTE 21	23	27	29	41	43	45	46	PART NUMBER
23-79-33	CARPET, Rear Floor Cont'd.										
	H2X, P2X, H2X, P4X	R,W	—	—	—	—	—	—	1	1	1710 GX8
	E2B, L2B, M2B, H4B, B2B, F2B, H7B, L4B	P,D,C	—	—	—	—	—	—	1	1	1706 GB3
	L2F, M2F, H4F, F2F, H7F, L4F, L8F, D4F	P,D,C	—	—	—	—	—	—	1	1	1706 GF8
	E2T, L2T, M2T, H4T, H8T, B2T, F2T, L4T, L8T	P,D,C	—	—	—	—	—	—	1	1	1706 GT6
	L8Y	C	—	—	—	—	—	—	1	1	1706 GY7
	E2XA, L2XA, M2XA, H4XA, H7XA, H8XA, L2X, F2XA, H4X, H7X, H8X, L4X, L7XL, L8X, D4X	P,D,C	—	—	—	—	—	—	1	1	1706 GX8
	E1B, E2B, L1B, L2B, M1B, M4B, H3B, H4B, H5B, H6B	P	1	1	—	1	1	—	—	—	1772 GB3
	M4E, H4E	P	—	1	—	1	—	—	—	—	1772 GE9
	L1F, M1F, M4F, H3F, H4F, M6F, H6F, H5F	P	—	1	—	1	1	—	—	—	1772 GF8
	E1T, E2T, L1T, M4T, H3T, H4T, P4T	P	1	1	—	1	1	—	—	—	1772 GT6
	M4Y, H3Y, H4Y, H5Y	P	—	1	—	1	1	—	—	—	1772 GY7
	E2XA, L2XA, M1XA, M4XA, M4XA, M4XW, H3XA, H4XA, H4XW, H6XA, M6XA, M6XW, H6XW, H5XA, H6XW, D2XA	P	1	1	—	1	1	—	—	—	1772 GX8
	H7B, M1B, M4B, H3B, H4B	P	—	—	—	—	—	1	—	—	1701 GB3
	M4E, H4E	P	—	—	—	—	—	1	—	—	1701 GE9
	H6F, H7F, M1F, M4F, H3F, H4F	P	—	—	—	—	—	1	—	—	1701 GF8
	M4T, H3T, H4T, P4T	P	—	—	—	—	—	1	—	—	1701 GT6
	H7Y, M1Y, M4Y, H3Y, H4Y	P	—	—	—	—	—	1	—	—	1701 GY7
	H6XA, H6XW, M8XA, H7XA, M1XA, M4XA, M4XW, H3XA, H4XA, H4XW	P	—	—	—	—	—	1	—	—	1701 GX8
	L1B, L2B, M4B, F1B, F2B, H3B, W1B, M3B, W4B, P3B, P4B, B1B, B2B, H7B, B1B, B2B	D	—	1	—	—	1	—	—	—	1716 GB3
	M4E, H4E, W4E, P4E, M6E, H6E	D	—	1	—	—	—	—	—	—	1716 GE9
	L1F, L2F, M4F, F1F, H3F, H4F, W1F, W4F, P3F, P4F, H7F, D4F, M3F	D	—	1	—	—	1	—	—	—	1716 GF8
	L2T, F1T, W4T, P3T, P4T, B1T, B2T	D	—	1	—	—	1	—	—	—	1716 GT6
	L1Y, M4Y, H3Y, W4Y, P4Y, D3Y, M3Y	D	—	1	—	—	1	—	—	—	1716 GY7
	L1X, L2X, M4X, M4XW, F2XA, H3X, H4X, W1XA, W4XA, M6X, M6XW, H6X, H6XW, K1A, K2A, H7X, D4X, M3X	D	—	1	—	—	1	—	—	—	1716 GX8
	L1B, L2B, M3B, M4B, H3B, H7B, F1B, D4F	D	—	—	—	—	—	1	—	—	1705 GB3
	M4E, H4E	D	—	—	—	—	—	1	—	—	1705 GE9
	L1F, L2F, M3F, M4F, H3F, H4F, H7F, F1F	D	—	—	—	—	—	1	—	—	1705 GF8
	L2T	D	—	—	—	—	—	1	—	—	1705 GT6
	L1Y, M3Y, H3Y, D3Y	D	—	—	—	—	—	1	—	—	1705 GY7
	H3A	D	—	—	—	—	—	1	—	—	1705 GA7
	L1X, L2X, M3X, M4X, M4XW, H3X, H4X, H7X, D4X, F2XA	D	—	—	—	—	—	1	—	—	1705 FX8
	H3B	C	—	1	—	—	—	—	—	—	1738 GB6
	E2L, L3L, E6T, H6T, S6T, S6L, S3L, G2L, G6T	C	—	1	—	—	—	—	—	—	1738 GT6
	S6E, S4E, L4E, E2E, G2E	C	—	1	—	—	—	—	—	—	1738 GE9
	S6F, E1F, E2F, L3F, H3F, S3F, H6F,										

TYPE LETTERS Indicates: J - Challenger, B - Barracuda, V - Valiant, L - Dart, R - Belvedere, W - Coronet, P - Plymouth, D - Dodge, C - Chrysler, Y - Imperial

NUMERALS INDICATE: 21 - 2 DR. SED., 23 - 2 DR. H.T., 27 - CONV. CPE., 29 - FAST BACK, 41 - 4 DR. SED., 43 - 4 DR. H.T., 45 - 6 PASS. STA. WGN., 46 - 9 PASS. STA. WGN.

AR Indicates use as required.
# Indicates parts not listed in any previous parts book
Numerals in parentheses ( ) refer to notes.
★ Indicates change or addition.

Printed in U.S.A.
January 1972

Right and left part numbers are on same line, first number is right, second number is left.

CODE	PART NAME	MODEL CODES	SEE BOTTOM NOTE 21	23	27	29	41	43	45	46	PART NUMBER
23-79-33	CARPET, Rear Floor Cont'd.										
	G1F, G2F	C	—	1	—	—	—	—	—	—	1738 GF8
	E6X, E6XW, H5XL, H6X, H6XW, S6X, S6XW, E1X, E2X, L3X, L4XH3X, S4X, G1X, G2X, G6X, G6XW	C	—	1	—	—	—	—	—	—	1738 GX8
	E1A, H3A, G1A	C	—	1	—	—	—	—	—	—	1738 GA7
	E1B, L4B, S4B, G1B	C	—	1	—	—	—	—	—	—	1738 GB3
	E1Y, G1Y	C	—	1	—	—	—	—	—	—	1738 GY7
	E1B, L3B, L7B, G1B	C	—	—	—	—	1	—	—	—	1713 GB3
	H9B, H7B	C	—	—	—	—	1	—	—	—	1713 GB6
	E2E, L4E, G2E	C	—	—	—	—	1	—	—	—	1713 GE9
	E1F, E2F, L3F, H9F, H7F, L7F, L8F, H8F, G1F, G2F	C	—	—	—	—	1	—	—	—	1713 GF8
	E1L, L3L, H8L, HLT, G2L	C	—	—	—	—	1	—	—	—	1713 GT6
	E1Y, L3Y, H9Y, G1Y	C	—	—	—	—	1	—	—	—	1713 GY7
	E1A, H9A, H7A, G1A	C	—	—	—	—	1	—	—	—	1713 GA7
	E1X, E2X, L3X, L4X, H9X, H7X, L7XL, L8X, H8X, G1X, G2X	C	—	—	—	—	1	—	—	—	1713 GX8
	E1A, H9A, H7A	C	—	—	—	—	—	1	—	—	1717 GA7
	E1B, L4B, S4B, L7B	C	—	—	—	—	—	1	—	—	1717 GB3
	H9B, H7B	C	—	—	—	—	—	1	—	—	1717 GB6
	E2E, L4E, S4E	C	—	—	—	—	—	1	—	—	1717 GE9
	E1F, E2F, L3F, H9F, S3F, L8F, L7F, H7F, H8F	C	—	—	—	—	—	1	—	—	1717 GF8
	E2L, L3L, S3L, S6T, S6L, H8L, HLT	C	—	—	—	—	—	1	—	—	1717 GT6
	E1Y, L3Y, H9Y, S3Y, G1Y	C	—	—	—	—	—	1	—	—	1717 GY7
	E1X, E2X, L3X, L4X, H9X, S4X, S6X, S6XW, L8X, L7XL, H7X, H8X	C	—	—	—	—	—	1	—	—	1717 GX8
	MBA	Y	—	1	—	—	—	—	—	—	1785 GA7
	MBB	Y	—	1	—	—	—	—	—	—	1785 GB8
	MRB	Y	—	1	—	—	—	—	—	—	1741 GB3
	MBF, MRF	Y	—	1	—	—	—	—	—	—	1785 GF8
	MBM	Y	—	1	—	—	—	—	—	—	1785 GM9
	MBTT, MRT	Y	—	1	—	—	—	—	—	—	1785 GT6
	MBX, MRX, MRXW	Y	—	1	—	—	—	—	—	—	1785 GX9
	MBY, MRY	Y	—	1	—	—	—	—	—	—	1785 GY7
	MRE	Y	—	1	—	—	—	—	—	—	1741 GE9
	MDA, MLA	Y	—	—	—	—	—	1	—	—	1740 GA7
	MDB, MLB	Y	—	—	—	—	—	1	—	—	1740 GB8
	MLE	Y	—	—	—	—	—	1	—	—	1740 GE9
	MDF, MLF	Y	—	—	—	—	—	1	—	—	1740 GF8
	MDM, MLM	Y	—	—	—	—	—	1	—	—	1740 GM9
	MDTT, MLT	Y	—	—	—	—	—	1	—	—	1740 GT6
	MDY, MLY	Y	—	—	—	—	—	1	—	—	1740 GY7
	MDX, MLX, MLXW	Y	—	—	—	—	—	1	—	—	1740 FX9
	Lugg. Compartment Floor	W	—	—	—	1	—	—	—	—	2905 GX9
		D	—	1	—	—	1	1	—	—	1744 GX9
		C	—	1	—	—	1	1	—	—	1783 GX9
	(w/o Air Cond.)	Y	—	1	—	—	—	1	—	—	7669 EX9
	(with Air Cond.)	Y	—	1	—	—	—	1	—	—	7668 EX9
	Rear, Floor Well										
	H2B, P2B, D3B, P3B, P4B	R,W	—	—	—	—	—	—	—	1	1786 GB6
	H2F, P2F, D3F, P3F, P4F	R,W	—	—	—	—	—	—	—	1	1786 GF8
	H2T, P2T, D3T, P3T, P4T	R,W	—	—	—	—	—	—	—	1	1786 GT6
	H2X, P2X, P4X	R,W	—	—	—	—	—	—	—	1	1786 GX8
	M2B, L2B, H4B, F2B, H7B, L4B	P,D,C	—	—	—	—	—	—	—	1	1700 GB3
	M2F, L2F, H4F, F2F, H7F, L4F, L8F, D4F	P,D,C	—	—	—	—	—	—	—	1	1700 GF8

TYPE LETTERS Indicates J - Challenger, B - Barracuda, V - Valiant, L - Dart, R - Belvedere, W - Coronet, P - Plymouth, D - Dodge, C - Chrysler, Y - Imperial

NUMERALS INDICATE: 21 - 2 DR. SED., 23 - 2 DR. H.T., 27 - CONV. CPE., 29 - FAST BACK, 41 - 4 DR. SED., 43 - 4 DR. H.T., 45 - 6 PASS. STA. WGN., 46 - 9 PASS. STA. WGN.

AR Indicates use as required.
= Indicates parts not listed in any previous parts book

Numerals in parentheses ( ) refer to notes.
★ Indicates change or addition.

Printed in U.S.A.
January 1972

Right and left part numbers are on same line, first number is right, second number is left.

CODE	PART NAME	MODEL CODES	SEE BOTTOM NOTE 21	23	27	29	41	43	45	46	PART NUMBER
23-79-64	COVER, Spare Tire Cont'd.										
	D2X, H2X, P2X, L2X, P4X	R,W	—	—	—	—	—	—	1	1	4323 GX9
	E2B, L2B, M2B, H4B, B2B, F2B, H7B, L4B	P,D,C	—	—	—	—	—	—	1	1	4152 GB3
	L2F, M2F, H4F, F2F, H7F, L4F, L8F, D4F	P,D,C	—	—	—	—	—	—	1	1	4152 GF8
	E2T, L2T, M2T, H4T, B2T, F2T, H8T, L4T, L8T	P,D,C	—	—	—	—	—	—	1	1	4152 GT6
	L8Y	C	—	—	—	—	—	—	1	1	4152 GY7
	L7XL	C	—	—	—	—	—	—	1	1	4152 GL1
	E2XA, L2XA, M2XA, H4XA, H7XA, H8XA, F2XA, H7X, L2X, H4X, H8X, L4X, L8X, D4X	P,D,C	—	—	—	—	—	—	1	1	4152 EX9
	Up to Build Date 10-1-70	W	—	—	—	1	—	—	—	—	2906 GX9
	After Build Date 10-1-70	W	—	—	—	1	—	—	—	—	2907 GX9
	Up to Build Date 3-1-71	D,C,Y	—	1	—	—	1	1	—	—	4919 EX9
	After Build Date 3-1-71	D,C,Y	—	1	—	—	1	1	—	—	4920 GX9
	Handle, Spare Tire Cover	P,D,C	—	—	—	—	—	—	1	1	4183 AX9
	Latch, Spare Tire Cover										
	L2B, H2B, P2B, D3B, P3B, P4B	R,W	—	—	—	—	—	—	2	2	3544 GB6
	H2F, P2F, D3F, P3F, P4F	R,W	—	—	—	—	—	—	2	2	3544 GF8
	L2T, H2T, P2T, D3T, P3T, P4T	R,W	—	—	—	—	—	—	2	2	3544 GT6
	D2X, H2X, P2X, L2X, P4X	R,W	—	—	—	—	—	—	2	2	3544 GX9
23-79-65	BRACKET, Spare Tire Cover Latching Frt.	P,D,C	—	—	—	—	—	—	1	1	2878 450
23-79-68	GROMMET, Spare Tire Cover Latching	P,D,C	—	—	—	—	—	—	4	4	2656 731
23-79-76	Dowel, Spare Tire Cover Latching										
	Canada	P,D,C	—	—	—	—	—	—	4	4	2657484
23-79-78	Bumper, Quarter I/side Center Panel S/Tire Cover Latching	R,W	—	—	—	—	—	—	2	2	882875
23-79-79	CARPET ASSY., T/Gate Inside Panel										
	L4B	C	—	—	—	—	—	—	1	1	1854 GB3
	L4F, L8F	C	—	—	—	—	—	—	1	1	1854 GF8
	L4T, L8T	C	—	—	—	—	—	—	1	1	1854 GT6
	L8Y	C	—	—	—	—	—	—	1	1	1854 GY7
	L4X, L7XL, L8X	C	—	—	—	—	—	—	1	1	1854 GX8
23-81-3	HANDLE ASSY., Rear Door Pull To, Rt. Taxi	R,P,D	—	—	—	—	1	—	—	—	1697 413
	Up to Build Date 2-1-71										
	H3A, H9A, H7A	C	—	2	—	—	2	2	—	—	4705 GA6
	H3B, H9B, H7B	C	—	2	—	—	2	2	—	—	4705 GB7
	H3F, H6F, H9F, H7F, H8F	C	—	2	—	—	2	2	—	—	4705 GF7
	H8L	C	—	-	—	—	2	2	—	—	4705 FL2
	H6T, HLT	C	—	2	—	—	2	2	—	—	4705 GT7
	H3X, H6X, H9X, H7X, H8X	C	—	2	—	—	2	2	—	—	4705 FX9
	H6XW	C	—	2	—	—	—	—	—	—	4705 FW1
	H3Y, H9Y	C	—	2	—	—	2	2	—	—	4705 GY5
	After Build Date 2-1-71										
	Front & Rear Door Pull										
	H3B, H4B, H5B, H6B, H7B, S4B, H7B	P,C	—	2	—	2	2	2	2	2	4743 GB2
	H4E, S4E	P,C	—	2	—	2	2	2	—	—	4743 GE9
	H3F, H4F, H5F, H6F, H7F, S6F, S3F, H8F	P,C	—	2	—	2	2	2	2	2	4743 GF7
	H3T, H4T, H8T, S6T, HLT	P,C	—	2	—	2	2	2	2	2	4743 GT6
	H3XA, H4XA, H5XA, H6XA, H7XA, H8XA, H3A, H7A, H9A	P	—	2	—	2	2	2	2	2	4743 GA6
	H4XW, H6XW, S6XW	P,C	—	2	—	2	2	2	—	—	4743 GW1
	H3Y, H4Y, H5Y, H7Y, S3Y	P,C	—	2	—	2	2	2	—	—	4743 GY5
	S6L, H8L	C	—	2	—	—	—	2	—	—	4743 GL1
	S6X, S4X	C	—	2	—	—	—	2	—	—	4743 GX9
	H3B, H9B, H7B	C	—	2	—	—	2	2	—	—	4743 GB7

TYPE LETTERS Indicates: J - Challenger, B - Barracuda, V - Valiant, L - Dart, R - Belvedere, W - Coronet, P - Plymouth, D - Dodge, C - Chrysler, Y - Imperial

NUMERALS INDICATE: 21 - 2 DR. SED., 23 - 2 DR. H.T., 27 - CONV. CPE., 29 - FAST BACK, 41 - 4 DR. SED., 43 - 4 DR. H.T., 45 - 6 PASS. STA. WGN., 46 - 9 PASS. STA. WGN.

AR Indicates use as required.
= Indicates parts not listed in any previous parts book
Numerals in parentheses ( ) refer to notes.
★ Indicates change or addition.

Printed in U.S.A.
January 1972

Right and left part numbers are on same line, first number is right, second number is left.

CODE	PART NAME	MODEL CODES	SEE BOTTOM NOTE 21	23	27	29	41	43	45	46	PART NUMBER
23-79-33	CARPET, Rear Floor Cont'd.										
	M2T, L2T, H8T, H4T, F2T, L4T, L8T	P,D,C	—	—	—	—	—	—	—	1	1700 GT6
	L8Y	C	—	—	—	—	—	—	—	1	1700 GY7
	M2XA, L2XA, H8XA, H4XA, H7XA, F2XA, L2X, H4X, H7X, H8X, L4X, L7XL, L8X, D4X	C	—	—	—	—	—	—	—	1	1700 EX8
	PANEL, Floor Pan, Axle Kickup Front	C	—	—	—	—	—	—	1	—	1725 EX8
	Trim	P,D,C	—	—	—	—	—	—	1	1	4320 EX9
	INSERT, Center Floor Pan Cover Panel Vinyl										
	L2B, H2B, D3B, P2B, P3B, P4B	R,W	—	—	—	—	—	—	1	1	1802 GB6
	H2F, D3F, P2F, P3F, P4F	R,W	—	—	—	—	—	—	1	1	1802 GF8
	L2T, H2T, D3T, P2T, P3T, P4T	R,W	—	—	—	—	—	—	1	1	1802 GT6
	D2X, H2X, P2X, L2X, P4X, P6X	R,W	—	—	—	—	—	—	1	1	1802 GX9
	Insert, Center Floor Pan Cover Panel, Carpet										
	L2B, H2B, D3B, P2B, P3B, P4B	R,W	—	—	—	—	—	—	1	1	1860 GB6
	H2F, D3F, P2F, P3F, P4F	R,W	—	—	—	—	—	—	1	1	1860 GF8
	L2T, H2T, D3T, P2T, P3T, P4T	R,W	—	—	—	—	—	—	1	1	1860 GT6
	D2X, H2X, P2X, L2X, P4X, P6X	R,W	—	—	—	—	—	—	1	1	1860 GX8
	Insert, Rear Floor Pan Cover Panel Vinyl										
	L2B, H2B, P2B, D3B, P3B, P4B	R,W	—	—	—	—	—	—	1	—	1801 GB6
	H2F, P2F, D3F, P3F, P4F	R,W	—	—	—	—	—	—	1	—	1801 GF8
	L2T, H2T, P2T, D3T, P3T, P4T	R,W	—	—	—	—	—	—	1	—	1801 GT6
	D2X, H2X, P2X, L2X, P4X	R,W	—	—	—	—	—	—	1	—	1801 GX9
	Insert, Rear Floor Pan Cover Panel, Carpet										
	L2B, H2B, P2B, D3B, P3B, P4B	R,W	—	—	—	—	—	—	1	—	1857 GB6
	H2F, P2F, D3F, P3F, P4F	R,W	—	—	—	—	—	—	1	—	1857 GF8
	L2T, H2T, P2T, D3T, P3T, P4T	R,W	—	—	—	—	—	—	1	—	1857 GT6
	D2X, H2X, P2X, L2X, P4X	R,W	—	—	—	—	—	—	1	—	1857 GX8
	Insert, Center Floor Pan Cover Panel—Vinyl										
	E2B, L2B, M2B, H4B, B2B, F2B, H7B	P,D	—	—	—	—	—	—	1	1	1810 GB3
	L2F, M2F, H4F, F2F, H7F, D4F	P,D	—	—	—	—	—	—	1	1	1810 GF8
	E2T, L2T, M2T, H4T, H8T, B2T, F2T	P,D	—	—	—	—	—	—	1	1	1810 GT6
	E2XA, L2XA, M2XA, H4XA, H7XA, H8XA, F2XA, L2X, H4X, H7X, H8X, D4X	P,D	—	—	—	—	—	—	1	1	1810 EX9
	Carpet Insert, Center Floor Pan Cover Panel										
	E2B, L2B, H4B, B2B, F2B, H7B	P,D	—	—	—	—	—	—	1	1	1840 GB3
	L2F, H4F, F2F, H7F	P,D	—	—	—	—	—	—	1	1	1840 GF8
	E2T, L2T, H8T, H4T, B2T, F2T	P,D	—	—	—	—	—	—	1	1	1840 GT6
	E2XA, L2XA, H8XA, H4XA, H7XA L2X, F2XA, H4X, H7X, H8X	P,D	—	—	—	—	—	—	1	1	1840 EX8
	Insert Carpet & Mldg., Center & Rear Floor Pan Cover Panel										
	L4B	C	—	—	—	—	—	—	1	1	1852 GB3
	L4F, L8F	C	—	—	—	—	—	—	1	1	1852 GF8
	L4T, L8T	C	—	—	—	—	—	—	1	1	1852 GT6
	L4X, L7XL, L8X	C	—	—	—	—	—	—	1	1	1852 GX8
	L8Y	C	—	—	—	—	—	—	1	1	1852 GY7
23-79-34	RETAINER, Rear Floor Carpet Ext. Att. Rt.	B,J	—	1	1	1	—	—	—	—	3509 190
	Mldg., Rear Floor Well Carpet Retainer, Side & Front	R,W	—	—	—	—	—	—	6	6	3509 468
	Retainer, Rear Floor Well Carpet Side	P,D,C	—	—	—	—	—	—	1	1	2878 314-5
23-79-64	COVER, Spare Tire										
	L2B, H2B, P2B, D3B, P3B, P4B	R,W	—	—	—	—	—	—	1	1	4323 GB6
	H2F, P2F, D3F, P3F, P4F	R,W	—	—	—	—	—	—	1	1	4323 GF8
	L2T, H2T, P2T, D3T, P3T, P4T	R,W	—	—	—	—	—	—	1	1	4323 GT6

TYPE LETTERS Indicates: J - Challenger; B - Barracuda; V - Valiant; L - Dart; R - Belvedere; W - Coronet; P - Plymouth; D - Dodge; C - Chrysler; Y - Imperial

NUMERALS INDICATE: 21 - 2 DR. SED.; 23 - 2 DR. H.T.; 27 - CONV. CPE.; 29 - FAST BACK; 41 - 4 DR. SED.; 43 - 4 DR. H.T.; 45 - 6 PASS. STA. WGN.; 46 - 9 PASS. STA. WGN.

AR Indicates use as required.
# Indicates parts not listed in any previous parts book
Numerals in parentheses ( ) refer to notes.
★ Indicates change or addition.

Printed in U.S.A.
January 1972

Right and left part numbers are on same line, first number is right, second number is left.

CODE	PART NAME	MODEL CODES	SEE BOTTOM NOTE 21	23	27	29	41	43	45	46	PART NUMBER
23-82-3	STRAP, Front Seat Back Robe										
	MLA	Y	—	—	—	—	—	2	—	—	2711 GA6
	MLB	Y	—	—	—	—	—	2	—	—	2711 GB9
	MLE	Y	—	—	—	—	—	2	—	—	2711 GE8
	MLF	Y	—	—	—	—	—	2	—	—	2711 GF7
	MLM	Y	—	—	—	—	—	2	—	—	2711 GM9
	MLT	Y	—	—	—	—	—	2	—	—	2711 GT7
	MLXW	Y	—	—	—	—	—	2	—	—	2711 GW1
	MLX	Y	—	—	—	—	—	2	—	—	2711 GX9
	MLY	Y	—	—	—	—	—	2	—	—	2711 GY5
23-82-5	CAP, Front Seat Back Robe Strap, w Walnut Insert	Y	—	—	—	—	—	4	—	—	3594 099
23-82-6	RETAINER, Front Seat Back Robe Strap Cap	Y	—	—	—	—	—	4	—	—	3509 860
	Bracket, Front Seat Back Robe Strap Att.	Y	—	—	—	—	—	2	—	—	3447 264
23-82-30	COVER, Coat Hook										
	E1B, E2B, L1B, L2B, M1B, M2B, M4B, H3B, H4B, H5B, H6B, H7B, B1B, B2B, F2B, F1B, M3B, L3B, L4B, L7B, MRB	P,D,C,Y	2	2	—	2	2	2	2	2	4121 GB1
	L2B, M2B, M6B, H2B, H1B, E2B, P2B, D3B, P3B, P6B, C6B, C2B, P4B, C3B, E5B, D6B, L3B, D2B, L4B, H4B, H6B, H5B, H6B, H3B, H9B, H7B, L9B, MB9, MDB, MLB	V,L,B, J,C,Y	—	2	—	2	2	2	2	2	4121 GB6
	L3F, L4F, L2F, H1F, H2F, H4F, H6F, P6F, H5F, HRF, L1F, M1F, M2F, M4F, M6F, H3F, H5F,H7F, F2F, F1F, M3F, E1F, E2F, L7F, L8F, H9F, L4F, S6F, S7F, L9F, MBF, MDF, MRF, P2F, D3F, P3F, P6F, C5F, C6F, C2F, P4F, C3F, E5F, D5F, D6F	V,L,B,J, R,W,P, D,C,Y	2	2	—	2	2	2	2	2	4121 GF8
	L2T, D2T, L4T, E2T, H4T, H6T, P6T, PRT, SRT, HRT, E1T, E2T, L1T, K1T, K2T, K5T, K6T, M2T, M4T, H3T, H8T, B1T, B2T, F2T, F1T, E6T, S6T, SLT, MRT, MLT, M6T, H2T, H1T, P2T, D3T, P3T, C6T, C2T, P4T, CRT, D6T	V,L,B,J, R,W,P, D,C,Y	2	2	—	2	2	2	2	2	4121 GT6
	H4XW, H6XW, E2XA, L2XA, M2XA, M4XW, H4XA, H7XA, H8XA, E6XW, F2XA, M6XW, S6XW, MRXW, MLXW, H2XW, P6XW, C6XW, C2XW, D6XW	V,L,B,J, R,W,P, D,C,Y	2	2	—	2	2	2	2	2	4121 EW1
	L2X, L3X, L3XV, D2X, D2XV, L4X, L6X, L6XV, H1X, H2X, H6X, E2X, M6X, M6XV, H4X, H5X, H5XV, H6XV, P5X, P6X, PRX, SRX, H5XX, HRX, E2XA, L2XA, K2X, M1XA, M4XA, M6XA, M8XA, H3XA, H4XA, H5XA, H6XA, H7XA, K1A, K2A, K5A, K6A, L1X, F2XA, M3X, M4X, H7X, E1X, E6X, L8X, H3X, H9X, S6X, S7X, S8X, L9X, M8X, MDX, MRX, MLX, D3X, M2X, M5X, P2X, P3X, P5X, K2X, C5X, C5XV, C6X, C2X, C3X,										

TYPE LETTERS Indicates	J - Challenger B - Barracuda	V - Valiant L - Dart	R - Belvedere W - Coronet	P - Plymouth D - Dodge	C - Chrysler Y - Imperial
NUMERALS INDICATE:	21 - 2 DR. SED. 23 - 2 DR. H.T.	27 - CONV. CPE. 29 - FAST BACK	41 - 4 DR. SED. 43 - 4 DR. H.T.	45 - 6 PASS. STA. WGN. 46 - 9 PASS. STA. WGN.	

AR Indicates use as required.
≠ Indicates parts not listed in any previous parts book

Numerals in parentheses ( ) refer to notes.
★ Indicates change or addition.

Printed in U.S.A.
January 1972

Right and left part numbers are on same line, first number is right, second number is left.

CODE	PART NAME	MODEL CODES	SEE BOTTOM NOTE 21	23	27	29	41	43	45	46	PART NUMBER
23-82-30	COVER, Coat Hook Cont'd.										
	P4X, E5X, CRX, D5X, D5XV, D6X	V,L,B, J,R,W, P,D,C,Y	2	2	—	2	2	2	2	2	4121 DX9
	L3Y, L4Y, H2Y, P6Y, PRY, H5Y, H6Y, M1Y, M4Y, H3Y, H4Y, H7Y, L1Y, M3Y, E1Y, H9Y, L8Y, S7Y, S8Y, L9Y, MBY, MDY, MRY, MLY, M6Y, H1Y, C6Y, C2Y, P3Y, E5Y, D3Y, D6Y	V,L,B,J, R,W,P, D,C,Y	2	2	—	2	2	2	2	2	4121 GY7
	M6XA, H2XA, P6XA, C6XA, CRXA, D6XA	R,W	—	2	—	2	—	—	—	—	4121 GAT
	H3A, H7A, E1A, H9A, MBA, MDA, MLA	D,C,Y	—	2	—	—	2	2	—	—	4121 GA7
	M4E, H4E, M6E, H6E, E2E, L4E, S6E, L9E, MRE, MLE	P,D,C,Y	—	2	—	2	2	2	—	—	4121 GE9
	E1L, E2L, L3L, L7XL, S6L, H8L, S3L	C	—	2	—	—	2	2	2	2	4121 EL3
	MBM, MDM, MLM	Y	—	2	—	—	—	2	—	—	4121 GM9
23-82-39	SUPPORT, Coat Hook Inner	V,L,B,J, R,W,P, D,C,Y	2	2	—	2	2	2	2	2	2876 976
23-84-3	PAD, Instrument Panel Trim										
	L3B, L4B, D2B, L4B, L2B, H2B, H1B, E2B	V,L	—	1	—	1	1	—	—	—	4239 GB7
	L3F, L4F, L2F, D2F, H2F, H1F	V,L	—	1	—	1	1	—	—	—	4239 GF7
	L4T, D2T, L2T, E2T	V,L	—	—	—	1	1	—	—	—	4239 GT6
	L4Y, D2Y, H2Y	V,L	—	1	—	1	1	—	—	—	4239 GY6
	L3X, L4X, D2X, D2XV, L6X, L6XV, L2X, H6X, H6XW, H2X, H2XW, H1X, M6X, M6XV, E2X, L6XW, M6XW	V,L	—	1	—	1	1	—	—	—	4239 GX9
	w/O. A/C										
	H4B, H6B, P6B, L6B	B,J	—	1	1	—	—	—	—	—	4200 GB7
	H4F, H6F, P6F, H5F, L6F, L5FW	B,J	—	1	1	—	—	—	—	—	4200 GF7
	H4T, H6T, P6T, L6T	B,J	—	1	1	—	—	—	—	—	4200 GT6
	P6Y, H6Y	B,J	—	1	1	—	—	—	—	—	4200 GY6
	H4X, H4XW, H6X, H6XV, H6XW, P5X, P6X, H5X, H5XV, PRX, SRX, H5XX, HRX, L6X, L6XW	B,J	—	1	1	—	—	—	—	—	4200 GX9
	w/Air Cond.										
	H4B, H6B, P6B, L6B	B,J	—	1	1	—	—	—	—	—	4201 GB7
	H4F, H6F, P6F, H5F, L6F, L5FW	B,J	—	1	1	—	—	—	—	—	4201 GF7
	H4T, H6T, P6T, PRT, SRT, L6T	B,J	—	1	1	—	—	—	—	—	4201 GT6
	P6Y, PRY, H6Y	B,J	—	1	1	—	—	—	—	—	4201 GY6
	H4X, H4XW, H6X, H6XV, H6XW, P5X, P6X, H5X, H5XV, PRX, SRX, H5XX, HRX, L6X, L6XW	B,J	—	1	1	—	—	—	—	—	4201 GX9
	L2B, M2B, M6B, H1B, H2B, P2B, P3B, D3B, P6B, P4B, C2B, C2B, C6B, D6B, E5B, E2B	R,W	—	1	—	1	1	—	1	1	4203 GB7
	M6F, H1F, H2F, P2F, P3F, D3F, P6F, H1F, P4F, C2F, C3F, C5F, C6F, D5F, D6F, E5F	R,W	—	1	—	1	1	—	1	1	4203 GF7
	L2T, K1T, K2T, T2T, M2T, M6T, H1T, H2T, P2T, P3T, D3T, P6T, P4T, C2T, D6T, CRT, E2T	R,W	—	1	—	1	1	—	1	1	4203 GT6
	M6Y, H1Y, H2Y, P6Y, P3Y, C2Y, C6Y, D6Y, E5Y, D3Y	R.W	—	1	—	1	1	—	—	—	4203 GY6

TYPE LETTERS Indicates J - Challenger, B - Barracuda, V - Valiant, L - Dart, R - Belvedere, W - Coronet, P - Plymouth, D - Dodge, C - Chrysler, Y - Imperial

NUMERALS INDICATE: 21 - 2 DR. SED., 23 - 2 DR. H.T., 27 - CONV. CPE., 29 - FAST BACK, 41 - 4 DR. SED., 43 - 4 DR. H.T., 45 - 6 PASS. STA. WGN., 46 - 9 PASS. STA. WGN.

AR Indicates use as required.
= Indicates parts not listed in any previous parts book
Numerals in parentheses ( ) refer to notes.
★ Indicates change or addition.

Printed in U.S.A.
January 1972

Right and left part numbers are on same line, first number is right, second number is left.

CODE	PART NAME	MODEL CODES	SEE BOTTOM NOTE 21	23	27	29	41	43	45	46	PART NUMBER
23-84-3	PAD, Instrument Panel Trim Cont'd.										
	D2X, K2X, T2X, M2X, M5X, M6X, M6XA, M6XW, M6XV, H1X, H2X, H2XA, H2XW, P2X, P3X, P5X, P6X, P6XA, P6XW, L2X, P4X, C2X, C3X, C5X, C5XV, C6X, C6XA, C6XW, D5X, D5XV, D6X, D6XW, D6XA, E5X, CRX, CRXA, D3X, E2X	R,W	—	1	—	1	1	—	1	1	4203 GX9
	E1B, E2B, L1B, L2B, M1B, M2B, M4B, H3B, H4B, H5B, H6B, H7B, B1B, B2B, F2B, M3B, F1B	P,D	1	1	—	1	1	1	1	1	4220 GB7
	M4E, H4E, M6E, H6E	P,D	—	1	—	1	—	1	—	—	4220 GE9
	L1F, L2F, M1F, M2F, M4F, M6F, D4F, H3F, H4F, H5F, H6F, H7F, F2F, M3F, F1F	P,D	—	1	—	1	1	1	1	1	4220 GF7
	E1T, E2T, K1T, K2T, K5T, K6T, L1T, L2T, M2T, M4T, H3T, H4T, H8T, B1T, B2T, F2T, F1T, P4T	P,D	1	1	—	1	1	1	1	1	4220 GT6
	M1Y, M4Y, H3Y, H4Y, H5Y, H7Y, L1Y, M3Y, D3Y	P,D	—	1	—	1	1	1	—	—	4220 GY6
	H3A, H7A	D	—	1	—	—	1	1	—	—	4220 GA6
	K2X, L2XA, M1XA, M2XA, M4XA, M4XW, M6XA, M6XW, M8XA, H3XA, H4XA, H4XW, H5XA, H6XA, H6XW, H7XA, H8XA, L1X, L2X, F2XA, M3X, D4X, M4X, M6X, H4X, H6X, H7X, H8X, K1A, K2A, K5A, K6A, E2XA, D2XA, B2XA	P,D	—	1	—	1	1	1	1	1	4220 GX9
	E1A, G1A	C	—	1	—	—	1	1	—	—	4210 GA6
	E1B, L3B, L4B, L7B, S4B, G1B	C	—	1	—	—	1	1	—	—	4210 GB7
	E2E, L4E, S4E, G2E	C	—	1	—	—	1	1	—	—	4210 GE9
	E1F, E2F, L3F, L8F, L7F, S6F, S3F, G1F, G2F	C	—	1	—	—	1	1	—	—	4210 GF7
	E1T, E2T, E6T, L3L, S6T, S6L, S3L, G1L, G2L, E2L, E1L	C	—	1	—	—	1	1	—	—	4210 GT6
	E1X, E2X, E6XW, E6X, L3X, L8X, L4X, L7XL, S6X, S6XW, S4X, G6XW, G6X, G2X	C	—	1	—	—	1	1	—	—	4210 GX9
	E1Y, L3Y, S3Y, G1Y	C	—	1	—	—	1	1	—	—	4210 GY6
	H3A, H7A, H9A	C	—	1	—	—	1	1	—	—	4211 GA6
	H3B, H7B, H9B, L4B	C	—	1	—	—	1	1	1	1	4211 GB7
	H3F, H6F, H9F, L4F, L8F, H7F, H8F	C	—	1	—	—	1	1	1	1	4211 GF7
	H6T, H8L, HLT, L4T, L8T	C	—	1	—	—	1	1	—	—	4211 GT6
	H3Y, H9Y, L8Y	C	—	1	—	—	1	1	1	1	4211 GY6
	H3X, H6X, H6XW, H9X, L4X, L7XL, L8X, H7X, H8X	C	—	1	—	—	1	1	1	1	4211 GX9
	MBA, MDA, MLA	Y	—	1	—	—	—	1	—	—	4206 GA6
	MRB	Y	—	1	—	—	—	—	—	—	4206 GB7
	MBB, MDB, MLB	Y	—	1	—	—	—	1	—	—	4206 GB9
	MRE, MLE	Y	—	1	—	—	—	1	—	—	4206 GE9
	MBF, MRF, MDF, MLF	Y	—	1	—	—	—	1	—	—	4206 GF7
	MBM, MDM, MLM	Y	—	1	—	—	—	1	—	—	4206 GM9
	MBTT, MDTT	Y	—	1	—	—	—	1	—	—	4206 GT6
	MBY, MRY, MDY, MLY	Y	—	1	—	—	—	1	—	—	4206 GY6
	MBX, MRX, MRXW, MDX, MLX, MLXW	Y	—	1	—	—	—	1	—	—	4206 GX9
	Right Hand Drive All Codes	D	—	—	—	—	1	1	—	—	4262 GX9

TYPE LETTERS Indicates	J - Challenger B - Barracuda	V - Valiant L - Dart	R - Belvedere W - Coronet	P - Plymouth D - Dodge	C - Chrysler Y - Imperial
NUMERALS INDICATE:	21 - 2 DR. SED. 23 - 2 DR. H.T.	27 - CONV. CPE. 29 - FAST BACK	41 - 4 DR. SED. 43 - 4 DR. H.T.		45 - 6 PASS. STA. WGN. 46 - 9 PASS. STA. WGN.

AR Indicates use as required.
# Indicates parts not listed in any previous parts book

Numerals in parentheses ( ) refer to notes.
★ Indicates change or addition.

Printed in U.S.A.
January 1972

Right and left part numbers are on same line, first number is right, second number is left.

CODE	PART NAME	MODEL CODES	SEE BOTTOM NOTE 21	23	27	29	41	43	45	46	PART NUMBER
23-84-3	PAD, Instrument Panel Trim Cont'd.										
	Lower Left										
	H4B, H6B, P6B, L6B	B,J	—	1	1	—	—	—	—	—	4279 GB7
	H4F, H6F, P6F, H5F, L6F, L5FW	B,J	—	1	1	—	—	—	—	—	4279 GF7
	H4T, H6T, P6T, PRT, SRT, L6T	B,J	—	1	1	—	—	—	—	—	4279 GT6
	P6Y, PRY, H6Y	B,J	—	1	1	—	—	—	—	—	4279 GY6
	H4X, H4XW, H6X, H6XV, H5X, H6XW, P5X, P6X, H5XV, PRX, SRX, H5XX, HRX, L6X, L6XW	B,J	—	1	1	—	—	—	—	—	4279 GX9
	Lower Center										
	H4B, H6B, P6B, L6B	B,J	—	1	1	—	—	—	—	—	4280 GB7
	H4F, H6F, P6F, H5F, L6F, L5FW	B,J	—	1	1	—	—	—	—	—	4280 GF7
	H4T, H6T, P6T, PRT, SRT, L6T	B,J	—	1	1	—	—	—	—	—	4280 GT6
	P6Y, PRY, H6Y	B,J	—	1	1	—	—	—	—	—	4280 GY6
	H4X, H4XW, H6X, H6XV, H6XW, P5X, P6X, PRX, SRX, H5X, H5XV, H5XX, HRX, L6X, L6XW	B,J	—	1	1	—	—	—	—	—	4280 GX9
	Ash Receiver										
	L2B, M2B, M6B, H1B, H2B, P2B, D3B, P3B, P6B, C6B, C2B, C3B, D6B, P4B, E5B	R,W	—	1	—	1	1	—	1	1	4218 GB7
	M6F, H1F, H2F, P2F, D3F, P3F, P6F, C5F, C6F, C2F, C3F, D6F, P4F, D5F, E5F	R,W	—	1	—	1	1	—	1	1	4218 GF7
	L2T, K1T, K2T, T2T, M2T, M6T, H1T, H2T, P2T, D3T, P3T, P6T, C6T, C2T, D6T, P4T, CRT	R,W	—	1	—	1	1	—	1	1	4218 GT6
	M6Y, H1Y, H2Y, P6Y, C6Y, C2Y, D6Y, P3Y, E5Y, D3Y	R,W	—	1	—	1	1	—	—	—	4218 GY6
	D2X, K2X, T2X, M2X, M5X, M6X, M6XA, M6XW, M6XV, H1X, H2X, H2XA, H2XW, P2X, P3X, P5X, P6X, P6XA, P6XW, L2X, C5X, C5XV, C6X, C6XA, C6XW, C2X, C2XW, C3X, D6X, D6XA, P4X, D5X, D5XV, D6XW, E5X, CRX, CRXA, D3X	R,W	—	1	—	1	1	—	1	1	4218 GX9
23-84-11	BRACKET, I/Panel Trim Pad Ret. to Glove Box	C	—	1	—	—	1	1	1	1	2985 894
23-84-15	INSERT, Instrument Panel Trim Pad	D	—	—	—	—	1	1	—	—	2985 911
23-84-16	BASE, I/Panel Trim Pad Name Plate	B,J	—	1	1	1	—	—	—	—	2985 886
23-86-2	COVER, Roof Outside Boar Grain										
	Green	V	—	—	—	—	1	—	—	—	8796 GG9
	White	V	—	—	—	—	1	—	—	—	8796 GW1
	Black	V	—	—	—	—	1	—	—	—	8796 GX9
	Gold	V	—	—	—	—	1	—	—	—	8796 GY8
	Boar Grain										
	Green	V,L	—	—	—	1	—	—	—	—	7197 GG9
	White	V,L	—	—	—	1	—	—	—	—	7197 GW1
	Black	V,L	—	—	—	1	—	—	—	—	7197 GX9
	Gold	V,L	—	—	—	1	—	—	—	—	7197 GY8
	Boar Grain										
	Green	L	—	—	—	—	1	—	—	—	8754 GG9
	White	L	—	—	—	—	1	—	—	—	8754 GW1
	Black	L	—	—	—	—	1	—	—	—	8754 GX9
	Gold	L	—	—	—	—	1	—	—	—	8754 GY8
	Boar Grain										
	Green	V,L	—	1	—	—	—	—	—	—	7334 GG9
	White	V,L	—	1	—	—	—	—	—	—	7334 GW1
	Black	V,L	—	1	—	—	—	—	—	—	7334 GX9
	Gold	V,L	—	1	—	—	—	—	—	—	7334 GY8
	Blue	V	—	1	—	—	—	—	—	—	7334 GB9

TYPE LETTERS Indicates: J - Challenger; B - Barracuda; V - Valiant; L - Dart; R - Belvedere; W - Coronet; P - Plymouth; D - Dodge; C - Chrysler; Y - Imperial

NUMERALS INDICATE: 21 - 2 DR. SED.; 23 - 2 DR. H.T.; 27 - CONV. CPE.; 29 - FAST BACK; 41 - 4 DR. SED.; 43 - 4 DR. H.T.; 45 - 6 PASS. STA. WGN.; 46 - 9 PASS. STA. WGN.

AR Indicates use as required.
= Indicates parts not listed in any previous parts book

Numerals in parentheses ( ) refer to notes.
★ Indicates change or addition.

Printed in U.S.A.
January 1972

Right and left part numbers are on same line, first number is right, second number is left.

CODE	PART NAME	MODEL CODES	SEE BOTTOM NOTE 21	23	27	29	41	43	45	46	PART NUMBER
23-86-2	COVER, Roof Outside Boar Grain Cont'd.										
	Boar Grain										
	Green	B	—	1	—	—	—	—	—	—	7196 GG9
	White	B	—	1	—	—	—	—	—	—	7196 GW1
	Black	B	—	1	—	—	—	—	—	—	7196 GX9
	Gold	B	—	1	—	—	—	—	—	—	7196 GY8
	Boar Grain										
	Green	J	—	1	—	—	—	—	—	—	7194 GG9
	White	J	—	1	—	—	—	—	—	—	7194 GW1
	Black	J	—	1	—	—	—	—	—	—	7194 GX9
	Gold	J	—	1	—	—	—	—	—	—	7194 GY8
	White (Vis)	J	—	1	—	—	—	—	—	—	7194 GWW
	Boar Grain w/Full Roof										
	Green	R	—	1	—	—	—	—	—	—	6112 GG9
	White	R	—	1	—	—	—	—	—	—	6112 GW1
	Black	R	—	1	—	—	—	—	—	—	6112 GX9
	Blue	R	—	1	—	—	—	—	—	—	6112 GB9
	Gold	R	—	1	—	—	—	—	—	—	6112 GY8
	Boar Grain w/Canopy Roof										
	Green	R	—	1	—	—	—	—	—	—	6110 GG9
	White	R	—	1	—	—	—	—	—	—	6110 GW1
	Black	R	—	1	—	—	—	—	—	—	6110 GX9
	Gold	R	—	1	—	—	—	—	—	—	6110 GY8
	Boar Grain, w/Canopy Roof										
	Green	R,W	—	1	—	—	1	—	—	—	6111 GG9
	White	R,W	—	1	—	—	1	—	—	—	6111 GW1
	Black	R,W	—	1	—	—	1	—	—	—	6111 GX9
	Boar Grain w/Full Roof										
	Green	W	—	1	—	1	—	—	—	—	6109 GG9
	White	W	—	1	—	1	—	—	—	—	6109 GW1
	Black	W	—	1	—	1	—	—	—	—	6109 GX9
	Gold	W	—	1	—	1	—	—	—	—	6109 GY8
	Boar Grain w/Canopy Roof										
	Green	W	—	—	—	1	—	—	—	—	6108 GG9
	White	W	—	—	—	1	—	—	—	—	6108 GW1
	Black	W	—	—	—	1	—	—	—	—	6108 GX9
	Gold	W	—	—	—	1	—	—	—	—	6108 GY8
	Boar Grain										
	Green	P,D	1	1	—	—	—	—	—	—	7190 GG9
	White	P,D	1	1	—	—	—	—	—	—	7190 GW1
	Black	P,D	1	1	—	—	—	—	—	—	7190 GX9
	Blue	P,D	1	1	—	—	—	—	—	—	7190 GB9
	Gold	P,D	1	1	—	—	—	—	—	—	7190 GY8
	Tan	P,D	1	1	—	—	—	—	—	—	7190 FTT
	Boar Grain										
	Green	P,D	—	—	—	—	1	—	—	—	7178 GG9
	White	P,D	—	—	—	—	1	—	—	—	7178 GW1
	Black	P,D	—	—	—	—	1	—	—	—	7178 GX9
	Boar Grain										
	Green	P,D	—	—	—	1	—	1	—	—	7192 GG9
	White	P,D	—	—	—	1	—	1	—	—	7192 GW1
	Black	P,D	—	—	—	1	—	1	—	—	7192 GX9
	Blue	P,D	—	—	—	1	—	1	—	—	7192 GB9
	Gold	P,D	—	—	—	1	—	1	—	—	7192 GY8
	Tan Gran Coupe	P,D	—	—	—	1	—	1	—	—	7192 FTT
	Boar Grain										
	Green	C	—	—	—	—	1	1	—	—	7184 GG9
	White	C	—	—	—	—	1	1	—	—	7184 GW1
	Black	C	—	—	—	—	1	1	—	—	7184 GX9

TYPE LETTERS Indicates: J - Challenger, B - Barracuda, V - Valiant, L - Dart, R - Belvedere, W - Coronet, P - Plymouth, D - Dodge, C - Chrysler, Y - Imperial

NUMERALS INDICATE: 21 - 2 DR. SED., 23 - 2 DR. H.T., 27 - CONV. CPE., 29 - FAST BACK, 41 - 4 DR. SED., 43 - 4 DR. H.T., 45 - 6 PASS. STA. WGN, 46 - 9 PASS. STA. WGN.

AR Indicates use as required.
# Indicates parts not listed in any previous parts book
Numerals in parentheses ( ) refer to notes.
★ Indicates change or addition.

Printed in U.S.A.
January 1972

Right and left part numbers are on same line, first number is right, second number is left.

CODE	PART NAME	MODEL CODES	SEE BOTTOM NOTE 21	23	27	29	41	43	45	46	PART NUMBER
23-86-2	COVER, Roof Outside Boar Grain Cont'd.										
	Blue	C	—	—	—	—	1	1	—	—	7184 GB9
	Gold	C	—	—	—	—	1	1	—	—	7184 GY8
	Tan	C	—	—	—	—	1	1	—	—	7184 GTT
	Gray	C	—	—	—	—	1	1	—	—	7184 GA9
	Boar Grain										
	Green	C	—	1	—	—	—	—	—	—	7191 GG9
	White	C	—	1	—	—	—	—	—	—	7191 GW1
	Black	C	—	1	—	—	—	—	—	—	7191 GX9
	Blue	C	—	1	—	—	—	—	—	—	7191 GB9
	Gold	C	—	1	—	—	—	—	—	—	7191 GY8
	Tan	C	—	1	—	—	—	—	—	—	7191 GTT
	Gray	C	—	1	—	—	—	—	—	—	7191 GA9
	Green	Y	—	—	—	—	—	1	—	—	7186 GG9
	White	Y	—	—	—	—	—	1	—	—	7186 GW1
	Black	Y	—	—	—	—	—	1	—	—	7186 GX9
	Gold	Y	—	—	—	—	—	1	—	—	7186 GY8
	Tan	Y	—	—	—	—	—	1	—	—	7186 GT9
	Burgundy	Y	—	—	—	—	—	1	—	—	7186 GMM
	Green	Y	—	1	—	—	—	—	—	—	7187 GG9
	White	Y	—	1	—	—	—	—	—	—	7187 GW1
	Black	Y	—	1	—	—	—	—	—	—	7187 GX9
	Gold	Y	—	1	—	—	—	—	—	—	7187 GY8
	Tan	Y	—	1	—	—	—	—	—	—	7187 GT9
	Burgundy	Y	—	1	—	—	—	—	—	—	7187 GMM
	w/Sun Roof										
	White	V,L	—	—	—	1	—	—	—	—	9545 GW1
	Black	V,L	—	—	—	1	—	—	—	—	9545 GX9
23-86-3	HEADLINING & LISTING ASSY.										
	L3B, L2B, L4B (with 6 Hdlg. Sect.)	V	—	—	—	—	1	—	—	—	7100 GB6
	L3F, L4F (with 6 Hldg. Sect.)	V	—	—	—	—	1	—	—	—	7100 GF8
	L2T, L4T (with 6 Hldg. Sect.)	V	—	—	—	—	1	—	—	—	7100 GT6
	L4Y (with 6 Hldg. Sect.)	V	—	—	—	—	1	—	—	—	7100 GY4
	L3X, L2X, L4X (with 6 Hldg. Sect.)	V	—	—	—	—	1	—	—	—	7100 EX9
	L2B, L3B, L4B (with 5 Hldg. Sect.)	V	—	—	—	—	1	—	—	—	7146 GB6
	L3F, L4F (with 5 Hldg. Sect.)	V	—	—	—	—	1	—	—	—	7146 GF8
	L2T, L4T (with 5 Hldg. Sect.)	V	—	—	—	—	1	—	—	—	7146 GT6
	L4Y (with 5 Hldg. Sect.)	V	—	—	—	—	1	—	—	—	7146 GY4
	L2X, L3X, L4X (with 5 Hldg. Sect.)	V	—	—	—	—	1	—	—	—	7146 GX9
	L3B, L2B, L4B, E2B, M1B (with 7 Hldg. Sect.)	V,L	—	—	—	1	—	—	—	—	7111 GB6
	L3F, L4F, M1F (with 7 Hldg. Sect.)	V	—	—	—	1	—	—	—	—	7111 GF8
	L2T, L4T, E2T (with 7 Hldg. Sect.)	V,L	—	—	—	1	—	—	—	—	7111 GT6
	L2X, L4X, L6X, L6XV, M6X, E2X, L1XX, M1XX, L1X, M1X, M6XV, L6XW, M6XW (with 7 Hldg. Sect.)	V,L	—	—	—	1	—	—	—	—	7111 FX9
	L4Y (with 7 Hldg. Sect.)	V	—	—	—	1	—	—	—	—	7111 GY4
	L2B, L4B, L1B, E2B, M1B (with 5 Hldg. Sect.)	V,L	—	—	—	1	—	—	—	—	7172 GB6
	L4F, L1F, M1F (with 5 Hldg. Sect.)	V,L	—	—	—	1	—	—	—	—	7172 GF8
	L2T, L4T, E2T (with 5 Hldg. Sect.)	V,L	—	—	—	1	—	—	—	—	7172 GT6
	L4Y (with 5 Hldg. Sect.)	V	—	—	—	1	—	—	—	—	7172 GY4
	L2X, L4X, L6X, L6XV, L1X, L1XX, L6XW, E2X, M6X, M6XV, M1X, M1XX, M6XW (with 5 Hldg. Sect.)	V,L	—	—	—	1	—	—	—	—	7172 GX9
	L2B, H1B, H2B (with 6 Hldg. Sect.)	L	—	—	—	—	1	—	—	—	7101 GB6
	L2F, H1F, H2F (with 6 Hldg. Sect.)	L	—	—	—	—	1	—	—	—	7101 GF8
	H2Y (with 6 Hldg. Sect.)	L	—	—	—	—	1	—	—	—	7101 GY4
	L2X, H1X, H2X (with 6 Hldg. Sect.)	L	—	—	—	—	1	—	—	—	7101 FX9

TYPE LETTERS Indicates: J - Challenger, B - Barracuda, V - Valiant, L - Dart, R - Belvedere, W - Coronet, P - Plymouth, D - Dodge, C - Chrysler, Y - Imperial

NUMERALS INDICATE: 21 - 2 DR. SED., 23 - 2 DR. H.T., 27 - CONV. CPE., 29 - FAST BACK, 41 - 4 DR. SED., 43 - 4 DR. H.T., 45 - 6 PASS. STA. WGN., 46 - 9 PASS. STA. WGN.

AR Indicates use as required.
= Indicates parts not listed in any previous parts book
Numerals in parentheses ( ) refer to notes.
★ Indicates change or addition.

Printed in U.S.A.
January 1972

Right and left part numbers are on same line, first number is right, second number is left.

CODE	PART NAME	MODEL CODES	SEE BOTTOM NOTE 21	23	27	29	41	43	45	46	PART NUMBER
23-86-3	HEADLINING & LISTING ASSY. Cont'd.										
	L2B, H1B, H2B (with 5 Hldg. Sect.)	L	—	—	—	—	1	—	—	—	7168 GB6
	L2F, H1F, H2F (with 5 Hldg. Sect.)	L	—	—	—	—	1	—	—	—	7168 GF8
	H2Y (with 5 Hldg. Sect.)	L	—	—	—	—	1	—	—	—	7168 GY4
	L2X, H1X, H2X (with 5 Hldg. Sect.)	L	—	—	—	—	1	—	—	—	7168 GX9
	H2B, D2B, L2B	V,L	—	1	—	—	—	—	—	—	7115 GB6
	H2F, D2F, L2F	V,L	—	1	—	—	—	—	—	—	7115 GF8
	H2Y, D2Y	V,L	—	1	—	—	—	—	—	—	7115 GY4
	H2X, H2XW, H6X, H6XW, D2X, D6X, L2X	V,L	—	1	—	—	—	—	—	—	7115 EX9
	H4B, H6B (with 6 Hldg. Sect.)	B	—	1	—	—	—	—	—	—	7102 GB4
	H4F, H6F (with 6 Hldg. Sect.)	B	—	1	—	—	—	—	—	—	7102 GF8
	H4T, H6T, SRT (with 6 Hldg. Sect.)	B	—	1	—	—	—	—	—	—	7102 GT6
	H4X, H6X, H6XV, SRX (with 6 Hldg. Sect.)	B	—	1	—	—	—	—	—	—	7102 FX9
	H4XW, H6XW (with 6 Hldg. Sect.)	B	—	1	—	—	—	—	—	—	7102 FW1
	H4B, H6B (with 5 Hldg. Sect.)	B	—	1	—	—	—	—	—	—	7176 GB4
	H4X, H6X, H6XV, SRX (with 5 Hldg. Sect.)	B	—	1	—	—	—	—	—	—	7176 GX9
	H4F, H6F (with 5 Hldg. Sect.)	B	—	1	—	—	—	—	—	—	7176 GF8
	H4T, H6T, SRT (with 5 Hldg. Sect.)	B	—	1	—	—	—	—	—	—	7176 GT6
	H4XW, H6XW (with 5 Hldg. Sect.)	B	—	1	—	—	—	—	—	—	7176 GW1
	H6B, L6B (with 6 Hldg. Sect.)	J	—	1	—	—	—	—	—	—	7103 GB4
	H5F, H6F, H4F, L6F (with 6 Hldg. Sect.)	J	—	1	—	—	—	—	—	—	7103 GF8
	H6T, L6T (with 6 Hldg. Sect.)	J	—	1	—	—	—	—	—	—	7103 GT6
	H6Y (with 6 Hldg. Sect.)	J	—	1	—	—	—	—	—	—	7103 GY4
	H6XW, L6XW (with 6 Hldg. Sect.)	J	—	1	—	—	—	—	—	—	7103 FW1
	H4X, H5X, H5XX, H6X, HRX, L6X (with 6 Hldg. Sect.)	J	—	1	—	—	—	—	—	—	7103 FX9
	L6B, H6B (with 5 Hldg. Sect.)	J	—	1	—	—	—	—	—	—	7177 GB4
	L6F, H4F, H5F, H6F (with 5 Hldg. Sect.)	J	—	1	—	—	—	—	—	—	7177 GF8
	L6T, H6T (with 5 Hldg. Sect.)	J	—	1	—	—	—	—	—	—	7177 GT6
	H6Y (with 5 Hldg. Sect.)	J	—	1	—	—	—	—	—	—	7177 GY4
	H6XW, L6XW (with 5 Hldg. Sect.)	J	—	1	—	—	—	—	—	—	7177 GW1
	L6X, H4X, H5X, H5XX, H6X, HRX (with 5 Hldg. Sect.)	J	—	1	—	—	—	—	—	—	7177 GX9
	L2B, H1B, H2B, P3B	R,W	—	—	—	—	1	—	—	—	7155 GB6
	H1F, H2F, P3F	R,W	—	—	—	—	1	—	—	—	7155 GF8
	K1T, K2T, T2T, L2T, H1T, H2T, P3T	R,W	—	—	—	—	1	—	—	—	7155 GT6
	H1Y, H2Y, P3Y	R,W	—	—	—	—	1	—	—	—	7155 GY4
	D2X, K2X, T2X, H1X, H2X, P3X, L2X	R,W	—	—	—	—	1	—	—	—	7155 GX9
	M2B, M6B, H2B, H1B, P3B, P6B, C6B, C2B, C3B, D6B, E5B, D3B, E2B	R,W	—	1	—	1	—	—	—	—	7154 GB4
	M6F, H2F, H1F, P3F, P6F, C6F, C5F, C2F, C3F, D5F, D6F, E5F, D3F	R,W	—	1	—	1	—	—	—	—	7154 GF8
	M2T, M6T, H2T, H1T, P3T, P6T, C2T, D6T, CRT, E2T	R,W	—	1	—	1	—	—	—	—	7154 GT6
	M6XA, H2XA, P6XA, C6XA, D6XA, CRXA	R,W	—	1	—	1	—	—	—	—	7154 GA7
	M6XW, H2XW, P6XW, C2XW, D6XW	R,W	—	1	—	1	—	—	—	—	7154 GW1
	M6Y, H2Y, P6Y, C2Y, D6Y, E5Y, D3Y	R,W	—	1	—	1	—	—	—	—	7154 GY4
	M2X, M5X, M6X, M6XV, H2X, H1X, P3X, P5X, P6X, C6X, C5X, C5XV, C2X, C3X, D5X, D5XV, D6X, E5X, CRX, D3X, E2X	R,W	—	1	—	1	—	—	—	—	7154 GX9

TYPE LETTERS Indicates: J - Challenger, B - Barracuda, V - Valiant, L - Dart, R - Belvedere, W - Coronet, P - Plymouth, D - Dodge, C - Chrysler, Y - Imperial

NUMERALS INDICATE: 21 - 2 DR. SED., 23 - 2 DR. H.T., 27 - CONV. CPE., 29 - FAST BACK, 41 - 4 DR. SED., 43 - 4 DR. H.T., 45 - 6 PASS. STA. WGN., 46 - 9 PASS. STA. WGN.

AR Indicates use as required.
Ⱡ Indicates parts not listed in any previous parts book
Numerals in parentheses ( ) refer to notes.
★ Indicates change or addition.

Printed in U.S.A.
January 1972

Right and left part numbers are on same line, first number is right, second number is left.

CODE	PART NAME	MODEL CODES	SEE BOTTOM NOTE 21	23	27	29	41	43	45	46	PART NUMBER
23-86-3	HEADLINING & LISTING ASSY. Cont'd.										
	H3A, H7A (with 7 Hldg. Sect.)	D	—	—	—	—	1	—	—	—	7109 GA7
	K1A, K5A, K2A, K6A (with 7 Hldg. Sect.)	D	—	—	—	—	1	—	—	—	7109 GA2
	E1B, E2B, L1B, L2B, M1B, M4B, H3B, H4B, H7B, H8B, B1B, B2B, F1B, F2B (with 7 Hldg. Sect.)	P,D	—	—	—	—	1	—	—	—	7109 GB1
	L1F, M1F, M4F, H3F, H4F, H7F, F1F (with 7 Hldg. Sect.)	P,D	—	—	—	—	1	—	—	—	7109 GF8
	E1T, E2T, K1T, K2T, K5T, K6T, L1T, M4T, H3T, H4T, H8T, B1T, B2T, F1T (with 7 Hldg. Sect.)	P,D	—	—	—	—	1	—	—	—	7109 GT6
	M1Y, M4Y, H3Y, H4Y, H7Y (with 7 Hldg. Sect.)	P	—	—	—	—	1	—	—	—	7109 GY7
	K2X, L2XA, M1XA, M4XA, H3XA, H4XA, H4XC, H7XA, F2XA, D2XA (with 7 Hldg. Sect.)	P,D	—	—	—	—	1	—	—	—	7109 GX9
	K1A, K5A, K2A, K6A (with 5 Hldg. Sect.)	D	—	—	—	—	1	—	—	—	7179 GA2
	E1B, E2B, L1B, L2B, M1B, M4B, H3B, H4B, H7B, L3B, L4B, H7B, B2B, B1B, F1B, F2B (with 5 Hldg. Sect.)	P,D	—	—	—	—	1	—	—	—	7179 GB1
	L1F, M1F, M4F, H3F, H4F, H7F, L2F, L3F, L4F, F1F (with 5 Hldg. Sect.)	P,D	—	—	—	—	1	—	—	—	7179 GF8
	E1T, E2T, K1T, K2T, K5T, K6T, L1T, M4T, H3T, H4T, L2T, B2T, B1T, F1T (with 5 Hldg. Sect.)	P,D	—	—	—	—	1	—	—	—	7179 GT6
	E2XA, K2X, D2XA, L2XA, M1XA, M4XA, H3XA, H4XA, H7XA, L1X, L2X, L3X, L4X, H3X, H7X, B2XA, F2XA (with 5 Hldg. Sect.)										
	M1Y, M4Y, H3Y, H4Y, H7Y, L1Y, L3Y (with 5 Hldg. Sect.)	P,D	—	—	—	—	1	—	—	—	7179 GY7
	H3A, H7A (with 5 Hldg. Sect.)	D	—	—	—	—	1	—	—	—	7179 GA7
	H3A, H7A (with 7 Hldg. Sect.)	D	—	—	—	—	—	1	—	—	7108 GA7
	E1B, M1B, M4B, H3B, H4B, H5B, H7B (with 7 Hldg. Sect.)	P,D	—	—	—	1	—	1	—	—	7108 GB1
	M4E, H4E (with 7 Hldg. Sect.)	P,D	—	—	—	1	—	1	—	—	7108 GE9
	M1F, M4F, M6F, H3F, H4F, H5F, H6F, H7F (with 7 Hldg. Sect.)	P,D	—	—	—	1	—	1	—	—	7108 GF8
	E1T, M4T, H3T, H4T, P4T, L2T (with 7 Hldg. Sect.)	P,D	—	—	—	1	—	1	—	—	7108 GT6
	M1XA, M4XA, M6XA, M8XA, H3XA, H4XA, H5XA, H6XA, H7XA, L1X, L2X, M3X, M4X, H3X, H4X, H7X (with 7 Hldg. Sect.) F2XA	P,D	—	—	—	1	—	1	—	—	7108 GX9
	M4XW, M6XW, H4XW, H6XW (with 7 Hldg. Sect.)	P,D	—	—	—	1	—	1	—	—	7108 GW1
	M1B, M4B, H3B, H4B, H5B, H7B, L1B, L2B, M3B, L3B, L4B, F1F (with 5 Hldg. Sect.)	P,D	—	—	—	1	—	1	—	—	7173 GB1
	M4E, H4E (with 5 Hldg. Sect.)	P,D	—	—	—	1	—	1	—	—	7173 GE9
	M1F, M4F, M6F, H6F, H3F, H4F, H5F, H7F, L1F, L2F, M3F, L3F, L4F, F1F (with 5 Hldg. Sect.)	P,D	—	—	—	1	—	1	—	—	7173 GF8
	M4T, H3T, H4T, P4T, L2T (with 5 Hldg. Sect.)	P,D	—	—	—	1	—	1	—	—	7173 GT6
	M4XW, M6XW, H6XW, H4XW (with 5 Hldg. Sect.)	P,D	—	—	—	1	—	1	—	—	7173 GW1

TYPE LETTERS Indicates J - Challenger, B - Barracuda, V - Valiant, L - Dart, R - Belvedere, W - Coronet, P - Plymouth, D - Dodge, C - Chrysler, Y - Imperial

NUMERALS INDICATE: 21 - 2 DR. SED., 23 - 2 DR. H.T., 27 - CONV. CPE., 29 - FAST BACK, 41 - 4 DR. SED., 43 - 4 DR. H.T., 45 - 6 PASS. STA. WGN., 46 - 9 PASS. STA. WGN.

AR Indicates use as required.
= Indicates parts not listed in any previous parts book
Numerals in parentheses ( ) refer to notes.
★ Indicates change or addition.

Printed in U.S.A.
January 1972

Right and left part numbers are on same line, first number is right, second number is left.

CODE	PART NAME	MODEL CODES	SEE BOTTOM NOTE 21	23	27	29	41	43	45	46	PART NUMBER
23-86-3	HEADLINING & LISTING ASSY. Cont'd.										
	M1XA, M4XA, M6XA, H6XA, H3XA, H4XA, H5XA, M8XA, H7XA, L1X, L2X, M3X, M4X, H3X, H4X, H7X, L3X, L4X, F2XA (with 5 Hldg. Sect.)	P,D	—	—	—	1	—	1	—	—	7173 GX9
	M4Y, H3Y, H4Y, H5Y, M1Y, H7Y, L1Y, M3Y, L3Y (with 5 Hldg. Sect.)	P,D	—	—	—	1	—	1	—	—	7173 GY7
	H3A, H7A (with 5 Hldg. Sect.) w/Zipper	D	—	—	—	—	—	1	—	—	7173 GA7
	E1B, E2B, B1B, B2B (with 7 Hldg. Sect.)	P,D	—	—	—	—	1	—	—	—	7113 GB1
	E1T, E2T, B1T, B2T (with 7 Hldg. Sect.)	P,D	—	—	—	—	1	—	—	—	7113 GT6
	E2XA, D2XA (with 7 Hldg. Sect.)	P	—	—	—	—	1	—	—	—	7113 GX9
	K1A, K2A, K5A, K6A (with 5 Hldg. Sect.)	D	—	—	—	—	1	—	—	—	7167 GA2
	E1T, E2T, K1T, K2T, K5T, K6T, B1T, B2T (with 5 Hldg. Sect.)	P,D	—	—	—	—	1	—	—	—	7167 GT6
	E1B, E2B (with 5 Hldg. Sect.)	P,D	—	—	—	—	1	—	—	—	7167 GB1
	E2XA, D2XA, K2X, B2X (with 5 Hldg. Sect.)	P,D	—	—	—	—	1	—	—	—	7167 GX9
	L1B, L2B, M3B, M4B, H3B, E1B, E2B, L4B, S4B, MRB, M1B, H5B, H6B, H4B, G1B (with 7 Hldg. Sect.)	P,D,C,Y	1	1	—	—	—	—	—	—	7121 GB1
	H3B (with 7 Hldg. Sect.)	C	—	1	—	—	—	—	—	—	7121 GB6
	MBB (with 7 Hldg. Sect.)	Y	—	1	—	—	—	—	—	—	7121 GB8
	M4E, M6E, H4E, H6E, E2E, L4E, S4E, MRE, G2E (with 7 Hldg. Sect.)	P,D,C,Y	—	1	—	—	—	—	—	—	7121 GE9
	L1F, L2F, M3F, M4F, H3F, H4F, E1F, E2F, L3F, H6F, S6F, S3F, MBF, MPF, G1F, G2F (up to Build Date 9-30-70 with 7 Hldg. Sect.)	P,D,C,Y	—	1	—	—	—	—	—	—	7121 GF8
	L1X, L2X, M3X, M4X, M6X, H3X, H4X, H6X, E1X, E2X, E6X, L3X, L4X, S6X, S4X, MBX, G1X, G2X, G6X, D2XA (Up to Build Date 9-30-70 with 7 Hldg. Sect.)	P,D,C,Y	—	1	—	—	—	—	—	—	7121 FX9
	M4XW, M6XW, H6XW, E6XW, S6XW, MRXW, G6XW (with 7 Hldg. Sect.)	P,D,C,Y	—	1	—	—	—	—	—	—	7121 FW1
	L1Y, M3Y, H3Y, E1Y, L3Y, S3Y, MBY, MRY, G1Y (with 7 Hldg. Sect.)	D,C,Y	—	1	—	—	—	—	—	—	7121 GY7
	H3A, E1A, MBA (with 7 Hldg. Sect.)	D,C,Y	—	1	—	—	—	—	—	—	7121 GA7
	E2L, L3L, S6E, S3L (with 7 Hldg. Sect.)	C	—	1	—	—	—	—	—	—	7121 GL1
	E6T, H6T, S6T, MRT, L2T (with 7 Hldg. Sect.)	P,D,C,Y	—	1	—	—	—	—	—	—	7121 GT6
	MBTT (with 7 Hldg. Sect.)	Y	—	1	—	—	—	—	—	—	7121 GT1
	MBM (with 7 Hldg. Sect.)	Y	—	1	—	—	—	—	—	—	7121 GM9
	L1F, M1F, H3F, M4F, M6F, H5F, H6F, H4F, L2F, F1F, M3F, L3F, L4F, E1F, G1F, E2F, G2F, D4F, S6F, S3F, MBF, MRF (From Build Date 9-30-70 to 1-25-71 with 7 Hldg. Sect.)	P,D,C,Y	—	1	—	—	—	—	—	—	7125 GF8

TYPE LETTERS Indicates	J - Challenger B - Barracuda	V - Valiant L - Dart	R - Belvedere W - Coronet	P - Plymouth D - Dodge	C - Chrysler Y - Imperial
NUMERALS INDICATE:	21 - 2 DR. SED. 23 - 2 DR. H.T.	27 - CONV. CPE. 29 - FAST BACK	41 - 4 DR. SED. 43 - 4 DR. H.T.		45 - 6 PASS. STA. WGN. 46 - 9 PASS. STA. WGN.

AR Indicates use as required.
≠ Indicates parts not listed in any previous parts book
Numerals in parentheses ( ) refer to notes.
★ Indicates change or addition.
Printed in U.S.A.
January 1972

· Right and left part numbers are on same line, first number is right, second number is left.

CODE	PART NAME	MODEL CODES	SEE BOTTOM NOTE 21	23	27	29	41	43	45	46	PART NUMBER
23-86-3	HEADLINING & LISTING ASSY. Cont'd.										
	D2XA, E2XA, L2XA, M1XA, H3XA, M4XA, M6XA, H5XA, H6XA, H4XA, L1X, L2X, F2XA, B2XA, M3X, M4F, M6X, H3X, H4X, H6X, L3X, L4X, E1X, G1X, E2X, G2X, E6X, G6X, S6X, D4X, S4X, MBX, MRX (Fro. Build Date 9-30-70 to 1-25-71 with 7 Hldg. Sect.)	P,D,C,Y	1	1	—	—	—	—	—	—	7125 GX9
	E1B, E2B, L1B, L2B, M1B, H3B, M4B, H5B, H6B, H4B, F1B, F2B, B1B, B2B, M3B, L3B, L4B, G1B, S4B, MRB (with 5 Hldg. Sect.)	P,D,C,Y	1	1	—	—	—	—	—	—	7123 GB1
	M4E, H4E, M6E, H6E, E2E, G2E, L4E, S4E, MRE (with 5 Hldg. Sect.)	P,D,C,Y	—	1	—	—	—	—	—	—	7123 GE9
	L1F, M1F, H3F, M4F, M6F, H5F, H6F, H4F, L2F, F1F, M3F, L3F, L4F, E1F, G1F, E2F, G2F, S6F, S3F, MBF, MRF (After Build Date 1-25-71 with 5 Hldg. Sect.)	P,D,C,Y	—	1	—	—	—	—	—	—	7123 GF8
	D2XA, E2XA, L2XA, M1XA, H3XA, M4XA, M6XA, H5XA, H6XA, H4XA, L1X, L2X, F2XA, B2XA, M3X, M4X, H3X, H4X, H6X, L3X, L4X, E1X, G1X, E2X, G2X, E6X, G6X, H3X, S6X, S4X, MBX, MRX (with 5 Hldg. Sect.)	P,D,C,Y	—	1	—	—	—	—	—	—	7123 GX9
	M6XW, H6XW, M4XW, E6XW, G6XW, S6XW, MRXW (with 5 Hldg. Sect.)	P,D,C,Y	—	1	—	—	—	—	—	—	7123 GW1
	M4Y, H5Y, H4Y, L1Y, M3Y, H3Y, L3Y, E1Y, G1Y, S3Y, MBY, MRY (with 5 Hldg. Sect.)	P,D,C,Y	—	1	—	—	—	—	—	—	7123 GY7
	H3A, E1A, G1A, MBA (with 5 Hldg. Sect.)	D,C,Y	—	1	—	—	—	—	—	—	7123 GA7
	H3B (with 5 Hldg. Sect.)	C	—	1	—	—	—	—	—	—	7123 GB6
	E2L, G2L, L3L, S6L, S3L (with 5 Hldg. Sect.)	C	—	1	—	—	—	—	—	—	7123 GL1
	E1T, E2T, L1T, M4T, H4T, L2T, F1T, B1T, B2T, E6T, G6T, H6T, S6T, MRT (with 5 Hldg. Sect.)	P,D,C,Y	—	1	—	—	—	—	—	—	7123 GT6
	MBB (with 5 Hldg. Sect.)	Y	—	1	—	—	—	—	—	—	7123 GB8
	MBTT (with 5 Hldg. Sect.)	Y	—	1	—	—	—	—	—	—	7123 GT1
	MBM (with 5 Hldg. Sect.)	Y	—	1	—	—	—	—	—	—	7123 GM9
	E1B, L3B, L7B (with 7 Hldg. Sect.) G1B	C	—	—	—	—	1	—	—	—	7137 GB1
	H9B, H7B (with 7 Hldg. Sect.)	C	—	—	—	—	1	—	—	—	7137 GB6
	E1A, H9A, H7A (with 7 Hldg. Sect.)	C	—	—	—	—	1	—	—	—	7137 GA7
	E2E, L4E (with 7 Hldg. Sect.)	C	—	—	—	—	1	—	—	—	7137 GE9
	E1F, E2F, L3F, L7F, L8F, H9F, H7F, H8F (Up to Build Date 9-30-70 with 7 Hldg. Sect.)	C	—	—	—	—	1	—	—	—	7137 GF8
	E1L, L3L, L7XL, H8L (with 7 Hldg. Sect.)	C	—	—	—	—	1	—	—	—	7137 GL1
	E1Y, L3Y, H9Y, G1Y (with 7 Hldg. Sect.)	C	—	—	—	—	1	—	—	—	7137 GY7
	HLT (with 7 Hldg. Sect.)	C	—	—	—	—	1	—	—	—	7137 GT6
	E1X, E2X, L3X, L4X, L8X, H9X, H7X, H8X, G1X, G2X (Up to Build Date 9-30-70 with 7 Hldg. Sect.)	C	—	—	—	—	1	—	—	—	7137 GX9

TYPE LETTERS Indicates	J - Challenger B - Barracuda	V - Valiant L - Dart	R - Belvedere W - Coronet	P - Plymouth D - Dodge	C - Chrysler Y - Imperial
NUMERALS INDICATE:	21 - 2 DR. SED. 23 - 2 DR. H.T.	27 - CONV. CPE. 29 - FAST BACK	41 - 4 DR. SED. 43 - 4 DR. H.T.	45 - 6 PASS. STA. WGN. 46 - 9 PASS. STA. WGN.	

AR Indicates use as required.
= Indicates parts not listed in any previous parts book
Numerals in parentheses ( ) refer to notes.
★ Indicates change or addition.

Printed in U.S.A.
January 1972

Right and left part numbers are on same line, first number is right, second number is left.

CODE	PART NAME	MODEL CODES	SEE BOTTOM NOTE 21	23	27	29	41	43	45	46	PART NUMBER
23-86-3	HEADLINING & LISTING ASSY. Cont'd.										
	E1F, G1F, E2F, G2F, L3F, L7F, L8F, H9F, H7F, H8F (From Build Date 9-30-70 to 1-25-71 with 7 Hldg. Sect.)	C	—	—	—	—	1	—	—	—	7128 GF8
	E1X, G1X, E2X, G2X, L3X, L4X, L8X, H9X, H7X, H8X (From Build Date 9-30-70 to 1-25-71 with 7 Hldg. Sect.)	C	—	—	—	—	1	—	—	—	7128 GX9
	E1A, G1A, H9A, H7A (with 5 Hldg. Sect.)	C	—	—	—	—	1	—	—	—	7152 GA7
	E1B, G1B, L3B, L7B (with 5 Hldg. Sect.)	C	—	—	—	—	1	—	—	—	7152 GB1
	E2E, G2E, L4E (with 5 Hldg. Sect.)	C	—	—	—	—	1	—	—	—	7152 GE9
	E1F, G1F, E2F, G2F, L3F, L7F, L8F, H9F, H7F, H8F (After Build Date 1-25-71 with 5 Hldg. Sect.)	C	—	—	—	—	1	—	—	—	7152 GF8
	E1L, G1L, L3L, L7XL, H8L (with 5 Hldg. Sect.)	C	—	—	—	—	1	—	—	—	7152 GL1
	E1X, G1X, E2X, G2X, L3X, L4X, L8X, H9X, H7X, H8X (After Build Date 1-25-71 with 5 Hldg. Sect.)	C	—	—	—	—	1	—	—	—	7152 GX9
	E1Y, G1Y, L3Y, H9Y (with 5 Hldg. Sect.)	C	—	—	—	—	1	—	—	—	7152 GY7
	H9B, H7B (with 5 Hldg. Sect.)	C	—	—	—	—	1	—	—	—	7152 GB6
	HLT (with 5 Hldg. Sect.)	C	—	—	—	—	1	—	—	—	7152 GT6
	E1B, L4B, L7B, S4B, G1B (with 7 Hldg. Sect.)	C	—	—	—	—	—	1	—	—	7122 GB1
	H7B, H9B (with 7 Hldg. Sect.)	C	—	—	—	—	—	1	—	—	7122 GB6
	E1A, H7A, H9A, G1A, MDA, MLA (with 7 Hldg. Sect.)	C,Y	—	—	—	—	—	1	—	—	7122 GA7
	MDB, MLB (with 7 Hldg. Sect.)	Y	—	—	—	—	—	1	—	—	7122 GB8
	E2E, L4E, S4E, G2E, MLE	C,Y	—	—	—	—	—	1	—	—	7122 GE9
	E1F, E2F, L3F, L7F, L8F, H7F, H8F, S6F, H9F, S3F, G1F, G2F, MDF, MLF (Up to Build Date 9-30-70 with 7 Hldg. Sect.)	C,Y	—	—	—	—	—	1	—	—	7122 GF8
	E2L, L3L, L7XL, H8L, S6L, S3L, B2L	C	—	—	—	—	—	1	—	—	7122 GL1
	S6T, HLT, MLT (with 7 Hldg. Sect.)	C,Y	—	—	—	—	—	1	—	—	7122 GT6
	MDTT (with 7 Hldg. Sect.)	Y	—	—	—	—	—	1	—	—	7122 GT1
	E1X, E2X, L4X, L8X, H7X, H8X, S6X, H9X, S3X, S4X, G1X, G2X, MDX, MLX (Up to Build Date 9-30-70 with 7 Hldg. Sect.)	C,Y	—	—	—	—	—	1	—	—	7122 FX9
	S6XW, MLXW (with 7 Hldg. Sect.)	C,Y	—	—	—	—	—	1	—	—	7122 FW1
	E1Y, L3Y, H9Y, S3Y, G1Y, MDY, MLY (with 7 Hldg. Sect.)	C,Y	—	—	—	—	—	1	—	—	7122 GY7
	MDM, MLM (with 7 Hldg. Sect.)	Y	—	—	—	—	—	1	—	—	7122 GM9
	MDX, MLX (From 9-30-70 to 1-25-71 with 7 Hldg. Sect.)	Y	—	—	—	—	—	1	—	—	7129 GX9
	MDF, MLF (From 9-30-70 to 1-25-71 with 7 Hldg. Sect.)	Y	—	—	—	—	—	1	—	—	7129 GF8
	MDB, MLB (with Cord Hldg.)	Y	—	—	—	—	—	1	—	—	7129 GB8
	MDTT (with Cord Hldg.)	Y	—	—	—	—	—	1	—	—	7129 GT1
	MDM, MLM (with Cord Hldg.)	Y	—	—	—	—	—	1	—	—	7129 GM9
	E1A, G1A, H7A, H9A, MDA, MLA (with 5 Hldg. Sect.)	C,Y	—	—	—	—	—	1	—	—	7124 GA7
	E1B, G1B, L4B, L7B, S4B (with 5 Hldg. Sect.)	C	—	—	—	—	—	1	—	—	7124 GB1
	E2E, G2E, L4E, S4E, MLE (with 5 Hldg. Sect.)	C,Y	—	—	—	—	—	1	—	—	7124 GE9

TYPE LETTERS Indicates: J - Challenger; B - Barracuda; V - Valiant; L - Dart; R - Satellite; W - Coronet; P - Belvedere; D - Dodge; C - Chrysler; Y - Imperial

NUMERALS INDICATE: 21 - 2 DR. SED.; 23 - 2 DR. H.T.; 27 - CONV. CPE.; 29 - FAST BACK; 41 - 4 DR. SED.; 43 - 4 DR. H.T.; 45 - 6 PASS. STA. WGN.; 46 - 9 PASS. STA. WGN.

AR Indicates use as required.
# Indicates parts not listed in any previous parts book
Numerals in parentheses ( ) refer to notes.
★ Indicates change or addition.

Printed in U.S.A.
January 1972

Right and left part numbers are on same line, first number is right, second number is left.

CODE	PART NAME		MODEL CODES	SEE BOTTOM NOTE 21	23	27	29	41	43	45	46	PART NUMBER
23-86-3	HEADLINING & LISTING ASSY. Cont'd.											
	E1F, E2F, G1F, G2F, L3F, L7F, L8F, H7F, H8F, S6F, H9F, S3F, MDF, MLF (After Build Date 1-25-71 with 5 Hldg. Sect.)		C,Y	—	—	—	—	—	1	—	—	7124 GF8
	E1X, E2X, G1X, G2X, L3X, L4X, L8X, H7X, H8X, S6X, H9X, MDX, MLX (After Build Date 1-25-71 with 5 Hldg. Sect.)		C,Y	—	—	—	—	—	1	—	—	7124 GX9
	E2L, G2L, L3L, L7XL, H8L, S6L, S3L (with 5 Hldg. Sect.)		C	—	—	—	—	—	1	—	—	7124 GL1
	H7B, H9B (with 5 Hldg. Sect.)		C	—	—	—	—	—	1	—	—	7124 GB6
	S6T, HLT, MLT (with 5 Hldg. Sect.)		C,Y	—	—	—	—	—	1	—	—	7124 GT6
	S6XW, MLXW (with 5 Hldg. Sect.)		C,Y	—	—	—	—	—	1	—	—	7124 GW1
	E1Y, G1Y, L3Y, H9Y, MDY, MLY (with 5 Hldg. Sect.)		C,Y	—	—	—	—	—	1	—	—	7124 GY7
	Panel, Roof											
	All Codes	= 1	R,W	—	—	—	—	—	—	1	1	1002 GW2
		= 2	R,W	—	—	—	—	—	—	1	1	1081 GW2
		= 3	R,W	—	—	—	—	—	—	1	1	1082 GW2
		= 4	R,W	—	—	—	—	—	—	1	1	1075 GW2
	w/Rear Roof Lamp	= 5	R,W	—	—	—	—	—	—	1	1	1028 GW2
	w/o Rear Roof Lamp	= 5	R,W	—	—	—	—	—	—	1	1	1029 GW2
	E2B, L2B, M2B, H4B, H7B, B2B, F2B, L4B	= 1	P,D,C	—	—	—	—	—	—	1	1	1044 GB1
		= 2	P,D,C	—	—	—	—	—	—	1	1	1045 GB1
		= 3	P,D,C	—	—	—	—	—	—	1	1	1049 GB1
		= 4	P,D,C	—	—	—	—	—	—	1	1	1050 GB1
		= 5	P,D,C	—	—	—	—	—	—	1	1	1051 GB1
	L2F, M2F, H4F, H7F, F2F, L4F, L8F, D4F	= 1	P,D,C	—	—	—	—	—	—	1	1	1044 GF8
		= 2	P,D,C	—	—	—	—	—	—	1	1	1045 GF8
		= 3	P,D,C	—	—	—	—	—	—	1	1	1049 GF8
		= 4	P,D,C	—	—	—	—	—	—	1	1	1050 GF8
		= 5	P,D,C	—	—	—	—	—	—	1	1	1051 GF8
	E2T, L2T, M2T, H4T, H8T, B2T, F2T, L4T, L8T	= 1	P,D,C	—	—	—	—	—	—	1	1	1044 GT6
		= 2	P,D,C	—	—	—	—	—	—	1	1	1045 GT6
		= 3	P,D,C	—	—	—	—	—	—	1	1	1049 GT6
		= 4	P,D,C	—	—	—	—	—	—	1	1	1050 GT6
		= 5	P,D,C	—	—	—	—	—	—	1	1	1051 GT6
	E2XA, L2XA, M2XA, H4XA, H7XA, H8XA, L2X, F2XA, H4X, H7X, H8X, L4X, L7XL, L8X, D4X - All w/Air Conditioning	= 1	P,D,C	—	—	—	—	—	—	1	1	1044 FW2
		= 2	P,D,C	—	—	—	—	—	—	1	1	1045 FW2
		= 3	P,D,C	—	—	—	—	—	—	1	1	1049 EW2
		= 4	P,D,C	—	—	—	—	—	—	1	1	1050 EW2
		= 5	P,D,C	—	—	—	—	—	—	1	1	1051 EW2
	L7XL	= 1	C	—	—	—	—	—	—	1	1	1044 GL1
		= 2	C	—	—	—	—	—	—	1	1	1045 GL1
		= 3	C	—	—	—	—	—	—	1	1	1049 GL1
		= 4	C	—	—	—	—	—	—	1	1	1050 GL1
		= 5	C	—	—	—	—	—	—	1	1	1052 GL1
	L8Y	= 1	C	—	—	—	—	—	—	1	1	1044 GY7
		= 2	C	—	—	—	—	—	—	1	1	1045 GY7
		= 3	C	—	—	—	—	—	—	1	1	1049 GY7
		= 4	C	—	—	—	—	—	—	1	1	1050 GY7
		= 5	C	—	—	—	—	—	—	1	1	1052 GY7

TYPE LETTERS Indicates: J - Challenger; B - Barracuda; V - Valiant; L - Dart; R - Belvedere; W - Coronet; P - Plymouth; D - Dodge; C - Chrysler; Y - Imperial

NUMERALS INDICATE: 21 - 2 DR. SED.; 23 - 2 DR. H.T.; 27 - CONV. CPE.; 29 - FAST BACK; 41 - 4 DR. SED.; 43 - 4 DR. H.T.; 45 - 6 PASS. STA. WGN.; 46 - 9 PASS. STA. WGN.

AR Indicates use as required.
= Indicates parts not listed in any previous parts book

Numerals in parentheses ( ) refer to notes.
★ Indicates change or addition.

Printed in U.S.A.
January 1972

Right and left part numbers are on same line, first number is right, second number is left.

CODE	PART NAME	MODEL CODES	SEE BOTTOM NOTE 21	23	27	29	41	43	45	46	PART NUMBER
23-86-3	HEADLINING & LISTING ASSY. *Cont'd.*										
	Moulded										
	P6B	B	—	1	—	—	—	—	—	—	1014 GB4
	P6F	B	—	1	—	—	—	—	—	—	1014 FF7
	P6T, PRT	B	—	1	—	—	—	—	—	—	1014 FT1
	P5X, P6X, PRX	B	—	1	—	—	—	—	—	—	1014 FX9
	P6Y, PRY	B	—	1	—	—	—	—	—	—	1014 GY4
	L6B, H6B	J	—	1	—	—	—	—	—	—	1015 GB4
	L6X, L6XW, H4X, H5X, H5XX, H6X, H6XW,										
	HRX, L5FW	J	—	1	—	—	—	—	—	—	1015 FX9
	H6Y	J	—	1	—	—	—	—	—	—	1015 GY4
	L6F, H4F, H5F, H6F	J	—	1	—	—	—	—	—	—	1015 FF7
	L6T, H6T	J	—	1	—	—	—	—	—	—	1015 FT1
	w/Sun Roof										
	L1B, L2B, L4B, E2B, M1B	V,L	—	—	—	1	—	—	—	—	9548 GB6
	L1F, L4F, M1F	V,L	—	—	—	1	—	—	—	—	9548 GF8
	L2T, L4T, E2T	V,L	—	—	—	1	—	—	—	—	9548 GT6
	L1X, L1XX, L2X, L4X, L6X, L6XV, L6XW, M6X, M6XV, M6XW, E2X, M1X, M1XX, X6X	V,L	—	—	—	1	—	—	—	—	9548 GX9
	L4Y	V	—	—	—	1	—	—	—	—	9548 GY4
	Folding Top Sun Roof										
	L1B, L2B, L4B, E2B, M1B	V,L	—	—	—	1	—	—	—	—	9547 GB6
	L1F, L4F, M1F	V,L	—	—	—	1	—	—	—	—	9547 GF8
	L2T, L4T, E2T	V,L	—	—	—	1	—	—	—	—	9547 GT6
	L1X, L1XX, L2X, L4X, L6X, L6XV, L6XW, M6X, M6XV, M6XW, E2X, M1X, M1XX, X6X	V,L	—	—	—	1	—	—	—	—	9547 GX9
	L4Y	V	—	—	—	1	—	—	—	—	9547 GY4
	Panel Assy., Rear Window Opening Trim										
	L6B, H6B	J	—	1	—	1	—	—	—	—	3527 GB4
	L6X, L6XW, H4X, H5X, H5XX, H6X, H6XW, HRX, L5FW	J	—	1	—	1	—	—	—	—	3527 FX9
	H6Y	J	—	1	—	1	—	—	—	—	3527 GY4
	L6F, H4F, H5F, H6F	J	—	1	—	1	—	—	—	—	3527 GF8
	L6T, H6T	J	—	1	—	1	—	—	—	—	3527 GT6
	MBA	Y	—	1	—	—	—	—	—	—	4446 GA7
	MRB	Y	—	1	—	—	—	—	—	—	4446 GB1
	MBB	Y	—	1	—	—	—	—	—	—	4446 GB8
	MRE	Y	—	1	—	—	—	—	—	—	4446 GE9
	MBF, MRF	Y	—	1	—	—	—	—	—	—	4446 GF8
	MBM	Y	—	1	—	—	—	—	—	—	4446 GM9
	MBTT	Y	—	1	—	—	—	—	—	—	4446 GT1
	MRT	Y	—	1	—	—	—	—	—	—	4446 GT6
	MRXW	Y	—	1	—	—	—	—	—	—	4446 GW1
	MBX, MRX	Y	—	1	—	—	—	—	—	—	4446 GX9
	MBY, MRY	Y	—	1	—	—	—	—	—	—	4446 GY7
	MLB, MDB	Y	—	—	—	—	—	1	—	—	4447 GB8
	MLA, MDA	Y	—	—	—	—	—	1	—	—	4447 GA7
	MLE	Y	—	—	—	—	—	1	—	—	4447 GE9
	MLF, MDF (Up to Build Date 11-1-70)	Y	—	—	—	—	—	1	—	—	4447 GF8
	MLM, MDM	Y	—	—	—	—	—	1	—	—	4447 GM9
	MDTT	Y	—	—	—	—	—	1	—	—	4447 GT1
	MLT	Y	—	—	—	—	—	1	—	—	4447 GT6
	MDY, MLY	Y	—	—	—	—	—	1	—	—	4447 GY7
	MLXW	Y	—	—	—	—	—	1	—	—	4447 FW1

TYPE LETTERS Indicates: J - Challenger, B - Barracuda, V - Valiant, L - Dart, R - Belvedere, W - Coronet, P - Plymouth, D - Dodge, C - Chrysler, Y - Imperial

NUMERALS INDICATE: 21 - 2 DR. SED., 23 - 2 DR. H.T., 27 - CONV. CPE., 29 - FAST BACK, 41 - 4 DR. SED., 43 - 4 DR. H.T., 45 - 6 PASS. STA. WGN., 46 - 9 PASS. STA. WGN.

AR Indicates use as required.
# Indicates parts not listed in any previous parts book
Numerals in parentheses ( ) refer to notes.
★ Indicates change or addition.

Printed in U.S.A.
January 1972

Right and left part numbers are on same line, first number is right, second number is left.

CODE	PART NAME	MODEL CODES	SEE BOTTOM NOTE 21	23	27	29	41	43	45	46	PART NUMBER
23-86-3	HEADLINING & LISTING ASSY. Cont'd.										
	Panel Assy., Quarter Trim Upper										
	H4B, H6B	B	—	1	—	—	—	—	—	—	2090-1 GB4
	H4F, H6F	B	—	1	—	—	—	—	—	—	2090-1 GF8
	H4T, H6T, SRT	B	—	1	—	—	—	—	—	—	2090-1 GT6
	H4XW, H6XW	B	—	1	—	—	—	—	—	—	2090-1 GW1
	H4X, H6X, SRX, H6XV, H5X, H5XV	B	—	1	—	—	—	—	—	—	2090-1 GX9
	L6B, H6B	J	—	1	—	—	—	—	—	—	7138 GB4
	L6X, L6XW, H4X, H5X, H5XX, H6X, H6XW, HRX	J	—	1	—	—	—	—	—	—	7138-9 FX9
	H6Y	J	—	1	—	—	—	—	—	—	7138-9 GY4
	L6F, H4F, H5F, H6F	J	—	1	—	—	—	—	—	—	7138-9 FF7
	L6T, H6T	J	—	1	—	—	—	—	—	—	7138-9 FT1
	M2B, M6B, H1B, H2B, P3B, P6B	R	—	1	—	—	—	—	—	—	1016-7 GB4
	M6XA, H2XA, P6XA	R	—	1	—	—	—	—	—	—	1016-7 GA7
	M6F, H1F, H2F, P3F, P6F	R	—	1	—	—	—	—	—	—	1016-7 GF8
	M2T, M6T, H1T, H2T, P3T, P6T	R	—	1	—	—	—	—	—	—	1016-7 GT6
	M6XW, H2XW, P6XW	R	—	1	—	—	—	—	—	—	1016-7 GW1
	M6Y, H2Y, P6Y	R	—	1	—	—	—	—	—	—	1016-7 GY4
	M2X, M5X, M6X, M6XV, H1X, H2X, P2X, P5X, P6X	R	—	1	—	—	—	—	—	—	1016-7 GX9
	C5B, C2B, C3B, C6B, D5B, D6B, E5B, D3B	W	—	1	—	1	—	—	—	—	3512-3 GB5
	C2F, C3F, C6F, D5F, D6F, E5F, CRF, D3F	W	—	1	—	1	—	—	—	—	3512-3 GF7
	C2X, C3X, C5X, C5XV, C6X, D5X, D5XV, D6X, E5X, CRX, D3X, E2X	W	—	1	—	1	—	—	—	—	3512-3 GX9
	C2XW, C6XW, D6XW	W	—	1	—	—	—	—	—	—	3512-3 GW1
	C2Y, C3Y, C6Y, D6Y, E5Y, D3Y	W	—	1	—	1	—	—	—	—	3512-3 GY4
	C6XA, D6XA, CRXA	W	—	1	—	1	—	—	—	—	3512-3 GA6
	C2T, C6T, D6T, CRT, E2T	W	—	1	—	1	—	—	—	—	3512-3 GT6
	E2B, E1B, L1B, L2B, M1B, M4B, H3B, H4B, H8B, B2B, B1B, M3B, M4B, L1B, F1B, F2B, W1B, W4B, H7B, P3B, P4B, P8B	P,D	—	—	—	—	1	—	—	—	3580-1 GB1
	H3A, H7A	D	—	—	—	—	1	—	—	—	3580-1 GA7
	K1A, K2A, K5A, K6A	D	—	—	—	—	1	—	—	—	3580-1 FA2
	M4E	D	—	—	—	—	1	—	—	—	3580-1 GE9
	L1F, M1F, M4F, H3F, H4F, H7F, D4F, M3F, L2F, F1F, W1F, W4F, P3F, P4F, P7F	P,D	—	—	—	—	1	—	—	—	3580-1 GF8
	E2T, E1T, L1T, M4T, K1T, K2T, K5T, K6T, H3T, H4T, H8T, B2T, B1T, L2T, F1T, W4T, P3T, P4T, P8T	P,D	—	—	—	—	1	—	—	—	3580-1 GT6
	L2XA, M1XA, M4XA, K2X, H3XA, H4XA, H7XA, M3X, M4X, L1X, F2XA, W1XA, W4XA, H3X, H7X, P3XA, P4XA, P7XA, D2XA, B2XA, D4X	P,D	—	—	—	—	1	—	—	—	3580-1 FX9
	M1Y, H3Y, L1Y, M3Y, W1Y, P3Y, L3Y, D3Y	P,D	—	—	—	—	1	—	—	—	3580-1 GY7
	M1B, M4B, H3B, H4B, H6B, H5B, L1B, L2B, M3B, H7B, L3B, L4B, F1B	P,D	—	—	—	1	—	1	—	—	3586-7 GB1
	M4E, H4E	P,D	—	—	—	1	—	1	—	—	3586-7 GE9
	M1F, M4F, M6F, H3F, H4F, H6F, H5F, L1F, L2F, M3F, H7F, F1F, D4F	P,D	—	—	—	1	—	1	—	—	3586-7 GF8
	M4T, H3T, H4T, L2T, P4T	P,D	—	—	—	1	—	1	—	—	3586-7 GT6
	M1Y, M4Y, H3Y, H4Y, H5Y, L1Y, M3Y, H7Y, D3Y	P,D	—	—	—	1	—	1	—	—	3586-7 GY7

TYPE LETTERS Indicates	J - Challenger B - Barracuda	V - Valiant L - Dart	R - Belvedere W - Coronet	P - Plymouth D - Dodge	C - Chrysler Y - Imperial
NUMERALS INDICATE:	21 - 2 DR. SED. 23 - 2 DR. H.T.	27 - CONV. CPE. 29 - FAST BACK	41 - 4 DR. SED. 43 - 4 DR. H.T.	45 - 6 PASS. STA. WGN. 46 - 9 PASS. STA. WGN.	

AR Indicates use as required.
= Indicates parts not listed in any previous parts book

Numerals in parentheses ( ) refer to notes.
★ Indicates change or addition.

Printed in U.S.A.
January 1972

Right and left part numbers are on same line, first number is right, second number is left.

CODE	PART NAME	MODEL CODES	SEE BOTTOM NOTE 21	23	27	29	41	43	45	46	PART NUMBER
23-86-3	HEADLINING & LISTING ASSY. Cont'd.										
	M1XA, M4XA, H3XA, H4XA, H5XA, L1X, L2X, M3X, M4X, H7X, H3X, H4X, H7XA, F2XA, D4X	P,D	—	—	—	1	—	1	—	—	3586-7 FX9
	H3A, H7A	D	—	—	—	—	—	1	—	—	3586-7 GA7
	M4XW, M6XW, H4XW, H6XW	P,D	—	—	—	1	—	1	—	—	3586-7 FW1
	E1A, H9A, H7A, G1A	C	—	—	—	—	1	—	—	—	3758-9 GA7
	E1B, L3B, L7B, G1B	C	—	—	—	—	1	—	—	—	3758-9 GB1
	E2E, L4E, G2E	C	—	—	—	—	1	—	—	—	3758-9 GE9
	E1F, E2F, L3F, L7F, L8F, H9F, H7F, H8F, G1F, G2F (Up to Build Date 11-1-70)	C	—	—	—	—	1	—	—	—	3758-9 GF8
	E1L, L3L, L7XL, H8L, G1L	C	—	—	—	—	1	—	—	—	3758-9 GL1
	E1X, E2X, L3X, L4X, L8X, H9X, H7X, H8X, G1X, G2X (Up to Build Date 11-1-70)	C	—	—	—	—	1	—	—	—	3758-9 GX9
	E1Y, L3Y	C	—	—	—	—	1	—	—	—	3758-9 GY7
	H9B, H7B	C	—	—	—	—	1	—	—	—	3758-9 GB6
	HLT	C	—	—	—	—	1	—	—	—	3758-9 GT6
	E1F, G1F, E2F, G2F, L3F, L7F, L8F, H9F, H7F, H8F (After Build Date 11-1-70)	C	—	—	—	—	1	—	—	—	7162-3 GF8
	E1X, G1X, E2X, G2X, L3X, L4X, L8X, H9X, H7X, H8X (After Build Date 11-1-70)	C	—	—	—	—	1	—	—	—	7162-3 GX9
	E1A, H9A, H7A, G1A	C	—	—	—	—	—	1	—	—	4444-5 GA7
	E1B, L4B, L7B, S4B, G1B	C	—	—	—	—	—	1	—	—	4444-5 GB1
	H3B, H4B, S7B, H9B	C	—	—	—	—	—	1	—	—	4444-5 GB6
	E2E, L4E, S4E, G2E	C	—	—	—	—	—	1	—	—	4444-5 GE9
	E1F, E2F, L3F, L7F, L8F, H9F, H7F, H8F, S3F, S6F, G1F, G2F (Up to Build Date 11-1-70)	C	—	—	—	—	—	1	—	—	4444-5 GF8
	E2L, L3L, L7XL, H8L, S3L, S6L, G2L	C	—	—	—	—	—	1	—	—	4444-5 GL1
	E1X, E2X, L3X, L8X, L4X, H9X, H7X, H8X, S4X, S6X, G1X, G2X (up to Build Date 11-1-70)	C	—	—	—	—	—	1	—	—	4444-5 FX9
	E1Y, L3Y, H9Y, S7Y, S8Y, G1Y	C	—	—	—	—	—	1	—	—	4444-5 GY7
	H6T, SLT	C	—	—	—	—	—	1	—	—	4444-5 GT6
	H6XW	C	—	—	—	—	—	1	—	—	4444-5 FW1
	E1F, E2F, L3F, L7F, L8F, H9F, H7F, H8F, S3F, S6F, G1F, G2F (After Build Date 11-1-70)	C	—	—	—	—	—	1	—	—	7164-5 GF8
	E1X, E2X, L3X, L8X, L4X, H9X, H7X, H8X, S4X, S6X, G1X, G2X (After Build Date 11-1-70)	C	—	—	—	—	—	1	—	—	7164-5 GX9
	MLA, MDA	Y	—	—	—	—	—	1	—	—	4448-9 GA7
	MLB, MDB	Y	—	—	—	—	—	1	—	—	4448-9 GB8
	MLE	Y	—	—	—	—	—	1	—	—	4448-9 GE9
	MLF, MDF (Up to Build Date 11-1-70)	Y	—	—	—	—	—	1	—	—	4448-9 GF8
	MLM, MDM	Y	—	—	—	—	—	1	—	—	4448-9 GM9
	MDTT	Y	—	—	—	—	—	1	—	—	4448-9 GT1
	MLF, MDF (After Build Date 11-1-70)	Y	—	—	—	—	—	1	—	—	7170-1 GF8
	MLT	Y	—	—	—	—	—	1	—	—	4448-9 GT6
	MLY, MDY	Y	—	—	—	—	—	1	—	—	4448-9 GY7
	MLXW	Y	—	—	—	—	—	1	—	—	4448-9 FW1
	MLX, MDX (Up to Build Date 11-1-70)	Y	—	—	—	—	—	1	—	—	4448-9 FX9

TYPE LETTERS Indicates: J - Challenger, B - Barracuda, V - Valiant, L - Dart, R - Belvedere, W - Coronet, P - Plymouth, D - Dodge, C - Chrysler, Y - Imperial

NUMERALS INDICATE: 21 - 2 DR. SED., 23 - 2 DR. H.T., 27 - CONV. CPE., 29 - FAST BACK, 41 - 4 DR. SED., 43 - 4 DR. H.T., 45 - 6 PASS. STA. WGN., 46 - 9 PASS. STA. WGN.

AR Indicates use as required.
£ Indicates parts not listed in any previous parts book
Numerals in parentheses ( ) refer to notes.
★ Indicates change or addition.

Printed in U.S.A.
January 1972

Right and left part numbers are on same line, first number is right, second number is left.

CODE	PART NAME	MODEL CODES	SEE BOTTOM NOTE 21	23	27	29	41	43	45	46	PART NUMBER
23-86-3	HEADLINING & LISTING ASSY. Cont'd.										
	MDX, MLX (After Build Date 11-1-70)	Y	—	—	—	—	—	1	—	—	7170-1 GX9
	Panel & Retainer Assy., Rear Quarter Hldg. Trim										
	H3A, E1A, G1A	D,C	—	1	—	—	—	—	—	—	2094-5 GA6
	L1B, L2B, E1B, E2B, M1B, M4B, H6B, G1B, H3B, H4B, H5B, F1B, F2B, M3B, L4B, S4B, B1B, B2B	P,D,C	1	1	—	—	—	—	—	—	2094-5 GB2
	M4E, H4E, H6E, M6E, E2E, L4E, S4E, G2E	P,D,C	—	1	—	—	—	—	—	—	2094-5 GE9
	H3B	C	—	1	—	—	—	—	—	—	2094-5 GB7
	L1F, M1F, M4F, M6F, H6F, H3F, H4F, H5F, F1F, L2F, M3F, E1F, E2F, L3F, H6F, S6F, S3F, G1F, G2F, D4F	P,D,C	—	1	—	—	—	—	—	—	2094-5 GF7
	L1T, E1T, E2T, M4T, H4T, F1F, L2T, E6T, H6T, S6T, G6T, B1T, B2T	P,D, C	1	1	—	—	—	—	—	—	2094-5 GT6
	L2XA, E2XA, M1XA, M4XA, M6XA, G6X, H6XA, H3XA, H4XA, H5XA, F2XA, L1X, G1X, L2X, H3X, H4X, H6X, M6X, M4X, M3X, G2X, E1X, E2X, E6X, L3X, L4X, S6X, S4X, D2XA, B2XA, D4X	P,D,C	1	1	—	—	—	—	—	—	2094-5 GX9
	M6XW, H6XW, M4XW, E6XW, S6XW, G6XW	P,D,C	—	1	—	—	—	—	—	—	2094-5 GW1
	M4Y, H4Y, H5Y, MEY, L1Y, H3Y, E1Y, L3Y, S3Y, G1Y	P,D,C	—	1	—	—	—	—	—	—	2094-5 GY5
	E2L, L3L, S6L, S3L, G2L	C	—	1	—	—	—	—	—	—	2094-5 GL1
23-86-4	PILLOW ASSY., Upper Quarter Trim										
	MDA, MLA	Y	—	—	—	—	—	1	—	—	3548-9 GA6
	MDB, MLB	Y	—	—	—	—	—	1	—	—	3548-9 GB9
	MLE	Y	—	—	—	—	—	1	—	—	3548-9 GE8
	MDF, MLF	Y	—	—	—	—	—	1	—	—	3548-9 GF7
	MDM, MLM	Y	—	—	—	—	—	1	—	—	3548-9 GM9
	MDTT	Y	—	—	—	—	—	1	—	—	3548-9 GT3
	MLT	Y	—	—	—	—	—	1	—	—	3548-9 GT7
	MDY, MLY	Y	—	—	—	—	—	1	—	—	3548-9 GY5
	MDX, MLX	Y	—	—	—	—	—	1	—	—	3548-9 EX9
	MLXW	Y	—	—	—	—	—	1	—	—	3548-9 EW1
23-86-8	RETAINER, Deck Opening Upper Panel	Y	—	1	—	—	—	—	—	—	2963 407
	End	Y	—	2	—	—	—	—	—	—	3445 753
23-86-10	BOW, Roof	V,L	—	—	—	1	—	—	—	—	2965 652
		V,L	—	1	—	—	1	—	—	—	2604 056
		B,J	—	1	—	—	—	—	—	—	2963 268
		R,W	—	1	—	1	—	—	—	—	3445 812
		R,W	—	—	—	—	1	—	—	—	3445 814
		R,W	—	—	—	—	—	—	4	4	3440 102
		P,D,C	1	1	—	—	—	—	—	—	2901 674
		Y	—	2	—	—	—	—	—	—	2901 674
		P,D,C	1	—	—	1	1	1	—	—	2900 117
		Y	—	—	—	—	—	2	—	—	2900 117
		P,D,C	—	—	—	—	—	—	6	6	2893 295
23-86-11	RETAINER, Roof Side Rail Roof Bow	V,L,P, D,C,Y	4	4	—	4	4	4	—	—	2605 112
		P,D,C	—	—	—	—	—	—	6	6	2605 112
		R,W	—	4	—	4	—	—	—	—	3445 855
	Rear	R,W	—	—	—	—	2	—	—	—	3445 108
23-86-14	PAD, A/C Roof Unit Trim	P,D,C	—	—	—	—	—	—	1	1	2936 416

TYPE LETTERS Indicates	J - Challenger B - Barracuda	V - Valiant L - Dart	R - Belvedere W - Coronet	P - Plymouth D - Dodge	C - Chrysler Y - Imperial
NUMERALS INDICATE:	21 - 2 DR. SED. 23 - 2 DR. H.T.	27 - CONV. CPE. 29 - FAST BACK	41 - 4 DR. SED. 43 - 4 DR. H.T.		45 - 6 PASS. STA. WGN. 46 - 9 PASS. STA. WGN.

AR Indicates use as required.
= Indicates parts not listed in any previous parts book

Numerals in parentheses ( ) refer to notes.
★ Indicates change or addition.

Printed in U.S.A.
January 1972

Right and left part numbers are on same line, first number is right, second number is left.

CODE	PART NAME	MODEL CODES	SEE BOTTOM NOTE 21	23	27	29	41	43	45	46	PART NUMBER
23-86-19	RETAINER, Roof Hldg. Sid3 Rear	R,W	—	—	—	—	—	—	1	1	3499 536-7
		P,D,C	—	—	—	—	—	—	1	1	2894 510-1
	Front	R,W	—	—	—	—	—	—	1	1	3500 716-7
	Hldg. to Lower Quarter Panel	B	—	1	—	—	—	—	—	—	3415 276-7
		J	—	1	—	—	—	—	—	—	3415 356-7
	Soft Hldg. to Quarter Panel Upper	B	—	1	—	—	—	—	—	—	3509 626-7
	Lower	P,D,C	2	2	—	—	—	—	—	—	2879 591
	Headlining & Listing										
	Short	V,L,B, P,D,C,Y	—	AR	—	AR	AR	AR	—	—	2581 273
	Med.	V,L,B, P,D,C,Y	—	AR	—	AR	AR	AR	—	—	2581 274
	Long	V,L,B, P,D,C,Y	—	AR	—	AR	AR	AR	—	—	2581 275
	Rear Window Hldg. Side	L	—	—	—	—	1	—	—	—	2782 724-5
		P,D	—	—	—	—	1	—	—	—	3445 372-3
		P,D	—	—	—	1	—	1	—	—	2900 244-5
	Upper	L	—	—	—	—	1	—	—	—	2782 726
		P,D	—	—	—	—	1	—	—	—	2902 858-9
		P,D	—	—	—	1	—	1	—	—	2900 238
		C	—	—	—	—	1	—	—	—	3445 374-5
		C,Y	—	—	—	—	—	1	—	—	2900 250-1
	Lower	C,Y	—	—	—	—	1	1	—	—	2901 522-3
23-86-21	PLATE = 6, Hldg. Retainer	P,D,C,Y	—	—	—	2	2	2	—	—	3415 897
23-86-24	RETAINER, Roof I/S Finish Panel Mldg.										
	Sec. = 1 thru = 4	R,W	—	—	—	—	—	—	4	4	3416 267
	Sec. = 1 thru = 4	P,D,C	—	—	—	—	—	—	4	4	2877 427
23-86-29	CLIP, Formed Hldg. Retainer	B	—	4	—	—	—	—	—	—	3415 649
23-86-33	SPACER, Hldg. Mldg. Retainer to Roof Rail W/Shield Opening Ext. to H/Lining Panel	P,D,C	—	—	—	—	—	—	AR	AR	2877 430
		P,D,C	—	—	—	—	—	—	1	1	3509 882-3
23-86-35	MOULDING, Rear Window Hldg. Trim										
	All Codes	L	—	—	—	—	2	—	—	—	3705 FX9
	E1B, E2B, M1B, M4B, H3B, H4B, H5B, H7B, L1B, L2B, M3B, F1B	P,D	—	—	—	1	—	1	—	—	3764-5 GB2
	M4E, H4E	P,D	—	—	—	1	—	1	—	—	3764-5 GE9
	M1F, M4F, M6F, H3F, H4F, H5F, H6F, H7F, L1F, L2F, M3F, F1F, D4F	P,D	—	—	—	1	—	1	—	—	3764-5 GF7
	E1T, E2T, M4T, H3T, H4T, H5T, H6T, H7T, L1T, L2T, M3T, P4T	P,D	—	—	—	1	—	1	—	—	3764-5 GT6
	M1XA, M4XA, M6XA, M8XA, H3XA, H4XA, H5XA, H6XA, H7XA, L1X, L2X, M3X, M4X, H3X, H4X, H7X, F2XA, D4X	P,D	—	—	—	1	—	1	—	—	3764-5 GX9
	M1Y, M4Y, H3Y, H4Y, H5Y, H7Y, L1Y, M3Y, D3Y	P,D	—	—	—	1	—	1	—	—	3764-5 GY5
	H3A, H7A	D	—	—	—	—	—	1	—	—	3764-5 GA6
	M4XW, M6XW, H4XW, H6XW	P,D	—	—	—	1	—	1	—	—	3764-5 GW1
	H3A, H7A	D	—	—	—	—	1	—	—	—	3708-9 GA6
	E2B, E1B, L1B, L2B, M1B, M4B, H3B, H4B, H7B, B2B, B1B, F1B, F2B, P4B, P8B, B2B	P,D	—	—	—	—	1	—	—	—	3708-9 GB2
	L1F, M1F, M4F, H3F, H4F, H7F, L2F, F1F, P4F, P7F, D4F	P,D	—	—	—	—	1	—	—	—	3708-9 GF7
	E2T, E1T, K1T, K2T, K5T, K6T, L1T, M4T, H3T, L2T, B2T, B1T, F1T, P4T, P8T	P,D	—	—	—	—	1	—	—	—	3708-9 GT6

TYPE LETTERS Indicates	J - Challenger B - Barracuda	V - Valiant L - Dart	R - Belvedere W - Coronet	P - Plymouth D - Dodge	C - Chrysler Y - Imperial
NUMERALS INDICATE:	21 - 2 DR. SED. 23 - 2 DR. H.T.	27 - CONV. CPE. 29 - FAST BACK	41 - 4 DR. SED. 43 - 4 DR. H.T.	45 - 6 PASS. STA. WGN. 46 - 9 PASS. STA. WGN.	

AR Indicates use as required.
# Indicates parts not listed in any previous parts book
Numerals in parentheses ( ) refer to notes.
★ Indicates change or addition.

Printed in U.S.A.
January 1972

Right and left part numbers are on same line, first number is right, second number is left.

CODE	PART NAME	MODEL CODES	SEE BOTTOM NOTE 21	23	27	29	41	43	45	46	PART NUMBER
23-86-35	MOULDING, Rear Window Hldg. Trim Cont'd.										
	K2X, L2XA, M1XA, M4XA, H3XA, H4XA, H7XA, L1X, L2X, H3X, F2XA, D2XA, H7X, K1A, K2A, K5A, K6A, P4XA, P7XA, B2XA, D4X	P,D	—	—	—	—	1	—	—	—	3708-9 GX9
	M1Y, M4Y, H3Y, H4Y, H&Y, L1Y, D3Y	P,D	—	—	—	—	1	—	—	—	3708-9 GY5
	E1A, H9A, H7A, G1A	C	—	—	—	—	1	1	—	—	3700 GA6
	E1B, L3B, L7B, L4B, G1B	C	—	—	—	—	1	1	—	—	3700 GB2
	H9B, H7B	C	—	—	—	—	1	1	—	—	3700 GB7
	E2E, L4E, G2E	C	—	—	—	—	1	1	—	—	3700 GE9
	E1F, E2F, L3F, L7F, L8F, H9F, H7F, H8F, G1F, G2F, S6F	C	—	—	—	—	1	1	—	—	3700 GF7
	E1L, L3L, L7XL, H8L, E2L, G1L, S6L	C	—	—	—	—	1	1	—	—	3700 GL1
	HLT	C	—	—	—	—	1	1	—	—	3700 GT6
	E2X, E1X, L3X, L4X, L8X, H8X, H9X, H7X, G1X, G2X	C	—	—	—	—	1	1	—	—	3700 GX9
	E1Y, L3Y, H9Y	C	—	—	—	—	1	1	—	—	3700 GY5
	S6XW	C	—	—	—	—	1	1	—	—	3700 GW1
	Moulding, Roof Inside Finish										
	Sec. = 1 thru = 4	R,W	—	—	—	—	—	—	AR	AR	1070 BW1
		P,D,C	—	—	—	—	—	—	AR	AR	1064 EZ1
23-86-36	CAP, Rear Window Trim Mldg.	P,D,C,Y	1	—	—	1	1	1	—	—	2877 382
	Center Lower	P,D	—	—	—	1	1	1	—	—	3415 938
	Roof I/S Finish Mldg.	P,D,C	—	—	—	—	—	—	AR	AR	2879 310
		R,W	—	—	—	—	—	—	AR	AR	2876 949
	Center	L	—	—	—	—	1	—	—	—	3711 FX9
23-86-40	BRACKET, Rear Window Opening Trim Panel										
	Upper	Y	—	—	—	—	—	3	—	—	2877 391
	Lower	Y	—	1	—	—	—	—	—	—	2877 396-7
	Upper Retainer	Y	—	3	—	—	—	—	—	—	2877 395
	Lower Retainer	Y	—	—	—	—	—	1	—	—	2877 392-3
23-86-41	COVER, Roof Header Trim Retainer Sun Roof										
	L1B, L2B, L4B, E2B, M1B	V,L	—	—	—	1	—	—	—	—	9546 GB6
	L1F, L4F, M1F	V,L	—	—	—	1	—	—	—	—	9546 GF8
	L2T, L4T, E2T	V,L	—	—	—	1	—	—	—	—	9546 GT6
	L1X, L1XX, L2X, L4X, L6X, L6XV, L6XW, M6X, M6XV, M6XW, E2X, M1X, M1XX, X6X	V,L	—	—	—	1	—	—	—	—	9546 GX9
	L4Y	V	—	—	—	1	—	—	—	—	9546 GY4
23-91-6	PANEL, Cowl Trim										
	All Codes	V,L	—	1	—	1	1	—	—	—	1402-3 CX9
	All Codes	B,J	—	1	1	1	—	—	—	—	1404-5 FX9
	M2B, M6B, P6B, H1B5, H2B5, P3B5, C2B, C6B, C3B, D6B, E5B, D3B	R,W	—	1	—	1	1	—	1	1	1410-1 GB5
	L2B, H1B7, H2B7, P2B, P3B7, D3B, P4B	R,W	—	—	—	—	1	—	1	1	1410-1 GB7
	M6F, P6F, H1F, H2F, P2F, P3F, D3F, P4F, C2F, C5F, C6F, C3F, D5F, D6F, E5F	R,W	—	1	—	1	1	—	1	1	1410-1 GF7
	L2T, M2T, M6T, P6T, H1T, H2T, P2T, P3T, K1T, K2T, T2T, D3T, P4T, C2T, C6T, D6T, CRT	R,W	—	1	—	1	1	—	1	1	1410-1 GT6
	M6XW, P6XW, H2XW, C2XW, C6XW, D6XW	R,W	—	1	—	—	—	—	—	—	1410-1 GW1
	D2X, M2X, M5X, M6X, M6XA, M6XV, P6X, P6XA, P5X, H1X, H2X, H2XA, P2X, P3X, K2X, T2X, L2X, P4X, C2X, C5X, C5XV, C6X, D5X, D5XV, D6X, D6XA, E5X, CRX, CRXA, D3X, K2X	R,W	—	1	—	1	1	—	1	1	1410-1 GX9

TYPE LETTERS Indicates	J - Challenger B - Barracuda	V - Valiant L - Dart	R - Belvedere W - Coronet	P - Plymouth D - Dodge	C - Chrysler Y - Imperial
NUMERALS INDICATE:	21 - 2 DR. SED. 23 - 2 DR. H.T.	27 - CONV. CPE. 29 - FAST BACK	41 - 4 DR. SED. 43 - 4 DR. H.T.		45 - 6 PASS. STA. WGN. 46 - 9 PASS. STA. WGN.

AR Indicates use as required.
= Indicates parts not listed in any previous parts book

Numerals in parentheses ( ) refer to notes.
★ Indicates change or addition.

Printed in U.S.A.
January 1972

Right and left part numbers are on same line, first number is right, second number is left.

CODE	PART NAME		MODEL CODES	SEE BOTTOM NOTE 21	23	27	29	41	43	45	46	PART NUMBER
23-91-6	PANEL, Cowl Trim Cont'd.											
	M6Y, P6Y, H1Y, H2Y, P3Y, C2Y, D6Y, E5Y, D3Y		R,W	—	1	—	1	1	—	—	—	1410-1 GY4
	H3A, H7A		D	—	1	—	—	1	1	—	—	1420-1 GA6
	H4B, H5B, H6B, H7B, E1B, E2B, L1B, L2B, M1B, M2B, M4B, H3B, B1B, B2B, F2B, F1B, M3B		P,D	1	1	—	1	1	1	1	1	1420-1 GB2
	H4E, M4E, M6E, H6E		P,D	—	1	—	1	—	1	—	—	1420-1 GE9
	H4F, H5F, H6F, H7F, L1F, L2F, M1F, M2F, M4F, M6F, H3F, F2F, F1F, M3F, D4F		P,D	—	1	—	1	1	1	1	1	1420-1 GF7
	H4T, H8T, E1T, E2T, L1T, L2T, M2T, M4T, H3T, K1T, K2T, K5T, K6T, B1T, B2T, F2T, F1T, P4T		P,D	1	1	—	1	1	1	1	1	1420-1 GT6
	H4XA, H4XW, H4XA, H5XA, H6XA, H6XW, H7XA, H8XA, E2XA, L2XA, M1XA, M2XA, M4XA, M4XW, M6XA, M6XW, M8KA, H3XA, K2X, K1A, K2A, K5A, K6A, F2XA, L1X, L2X, M3X, M4X, M6X, H3X, H4X, H6X, H7X, H8X, D2XA		P,D	1	1	—	1	1	1	1	1	1420-1 EX9
	H4Y, M1Y, M4Y, H3Y, H5Y, H7Y, L1Y, M3Y, D4Y, D3Y		P,D	—	1	—	1	1	1	—	—	1420-1 GY5
	E1A, H9A, H3A, H7A, G1A		C	—	1	—	—	1	1	—	—	1438-9 GA6
	E1B, L7B, L4B, L3B, S4B, G1B		C	—	1	—	—	1	1	1	1	1438-9 GB2
	H9B, H3B, H7B		C	—	1	—	—	1	1	—	—	1438-9 GB7
	E2E, L4E, S4E, G2E, G6E		C	—	1	—	—	1	1	—	—	1438-9 GE9
	E1F, E2F, L7F, L8F, L3F, H9F, L4F, H3F, H6F, S6F, S3F, H7F, H8F, G1F, G2F, G6F		C	—	1	—	—	1	1	1	1	1438-9 GF7
	E1L, E2L, E6T, L3L, L8T, HLT, L4T, H6T, S6T, S6L, S3L, H8L, G1L, G2L		C	—	1	—	—	1	1	1	1	1438-9 GT6
	E1Y, L3Y, H9Y, H3Y, P7Y, S3Y, G1Y		C	—	1	—	—	1	1	1	1	1438-9 GY5
	E1X, E2X, E6X, E6XW, L3X, L4X, G6XW, L8X, L7XL, S6X, S6XW, H7X, H9X, H3X, G1X, H8X, H6X, H6XW, S4X, P7X, G2X, G6X		C	—	1	—	—	1	1	1	1	1438-9 EX9
	MDA, MBA, MLA		Y	—	1	—	—	—	1	—	—	1434-5 GA7
	MRB		Y	—	1	—	—	—	—	—	—	1434-5 GB3
	MDB, MBB, MLB		Y	—	1	—	—	—	1	—	—	1434-5 GB8
	MRE, MLE		Y	—	1	—	—	—	1	—	—	1434-5 GE9
	MDF, MBF, MRF, MLF		Y	—	1	—	—	—	1	—	—	1434-5 GF8
	MDM, MBM, MLM		Y	—	1	—	—	—	1	—	—	1434-5 GM9
	MBTT, MRT, MDTT, MLT		Y	—	1	—	—	—	1	—	—	1434-5 GT6
	MBX, MRX, MRXW, MDX, MLX, MLXW		Y	—	1	—	—	—	1	—	—	1434-5 EX9
	MBY, MRY, MDY, MLY		Y	—	1	—	—	—	1	—	—	1434-5 GY7
23-92-5	PANEL, Door Trim											
	w/o Walnut Grain											
	L3B, L4B	Frt.	V	—	—	—	—	1	—	—	—	4558-9 GB7
		Rr.	V	—	—	—	—	1	—	—	—	4600-1 GB7
	L3F, L4F	Frt.	V	—	—	—	—	1	—	—	—	4558-9 GF7
		Rr.	V	—	—	—	—	1	—	—	—	4600-1 GF7
	L4T	Frt.	V	—	—	—	—	1	—	—	—	4558-9 GT7
		Rr.	V	—	—	—	—	1	—	—	—	4600-1 GT7
	L3X, L4X	Frt.	V	—	—	—	—	1	—	—	—	4558-9 GX9
		Rr.	V	—	—	—	—	1	—	—	—	4600-1 GX9
	L4Y	Frt.	V	—	—	—	—	1	—	—	—	4558-9 GY3
		Rr.	V	—	—	—	—	1	—	—	—	4600-1 GY3

TYPE LETTERS Indicates	J - Challenger B - Barracuda	V - Valiant L - Dart	R - Belvedere W - Coronet	P - Plymouth D - Dodge	C - Chrysler Y - Imperial
NUMERALS INDICATE:	21 - 2 DR. SED. 23 - 2 DR. H.T.	27 - CONV. CPE. 29 - FAST BACK	41 - 4 DR. SED. 43 - 4 DR. H.T.	45 - 6 PASS. STA. WGN. 46 - 9 PASS. STA. WGN.	

AR Indicates use as required.
# Indicates parts not listed in any previous parts book
Numerals in parentheses ( ) refer to notes.
★ Indicates change or addition.

Printed in U.S.A.
January 1972

Right and left part numbers are on same line, first number is right, second number is left.

CODE	PART NAME		MODEL CODES	SEE BOTTOM NOTE 21	23	27	29	41	43	45	46	PART NUMBER
23-92-5	PANEL, Door Trim Cont'd.											
	w/o Walnut Grain											
	L2B	Frt.	V	—	—	—	—	1	—	—	—	3152-3 GOB
		Rr.	V	—	—	—	—	1	—	—	—	3234-5 GOB
	L2T	Frt.	V	—	—	—	—	1	—	—	—	3152-3 GOT
		Rr.	V	—	—	—	—	1	—	—	—	3234-5 GOT
	L2X	Frt.	V	—	—	—	—	1	—	—	—	3152-3 EOX
		Rr.	V	—	—	—	—	1	—	—	—	3234-5 EOX
	w/Walnut Grain											
	L2B, L3B, L4B	Frt.	V	—	—	—	—	1	—	—	—	4706-7 GB7
		Rr.	V	—	—	—	—	1	—	—	—	4708-9 GB7
	L3F, L4F	Frt.	V	—	—	—	—	1	—	—	—	4706-7 GF7
		Rr.	V	—	—	—	—	1	—	—	—	4708-9 GF7
	L2T, L4T	Frt.	V	—	—	—	—	1	—	—	—	4706-7 GT7
		Rr.	V	—	—	—	—	1	—	—	—	4708-9 GT7
	L2X, L3X, L4X	Frt.	V	—	—	—	—	1	—	—	—	4706-7 GX9
		Rr.	V	—	—	—	—	1	—	—	—	4708-9 GX9
	L4Y	Frt.	V	—	—	—	—	1	—	—	—	4706-7 GY3
		Rr.	V	—	—	—	—	1	—	—	—	4708-9 GY3
	w/o Walnut Grain											
	L4B, L2B, E2B, M1B, L1B		V,L	—	—	—	1	—	—	—	—	4700-1 GB7
	L4F, M1F, L1F		V	—	—	—	1	—	—	—	—	4700-1 GF7
	L2T, L4T, E2T		V,L	—	—	—	1	—	—	—	—	4700-1 GT7
	L6XV, M6XV		V,L	—	—	—	1	—	—	—	—	4700-1 GV1
	L4X, L2X, L6X, E2X, M6X, M1X, M1XX		V,L	—	—	—	1	—	—	—	—	4700-1 GX9
	L4Y		V	—	—	—	1	—	—	—	—	4700-1 GY3
	L6XW, M6XW		V,L	—	—	—	1	—	—	—	—	4700-1 GW1
	w/Walnut Grain											
	L2B, L4B, E2B, M1B, L1B		V,L	—	—	—	1	—	—	—	—	4714-5 GB7
	L4F, M1F, L1F		V	—	—	—	1	—	—	—	—	4714-5 GF7
	L2T, L4T, E2T		V,L	—	—	—	1	—	—	—	—	4714-5 GT7
	L6XV, M6XV		V,L	—	—	—	1	—	—	—	—	4714-5 GV1
	L2X, L4X, L6X, E2X, M6X, M1X, M1XX		V,L	—	—	—	1	—	—	—	—	4714-5 GX9
	L4Y		V	—	—	—	1	—	—	—	—	4714-5 GY3
	L6XW, M6XW		V,L	—	—	—	1	—	—	—	—	4714-5 GW1
	L2B	Frt.	L	—	—	—	—	1	—	—	—	3152-3 GOB
		Rr.	L	—	—	—	—	1	—	—	—	3234-5 GOB
	L2F	Frt.	L	—	—	—	—	1	—	—	—	3152-3 GOF
		Rr.	L	—	—	—	—	1	—	—	—	3234-5 GOF
	L2X	Frt.	L	—	—	—	—	1	—	—	—	3152-3 EOX
		Rr.	L	—	—	—	—	1	—	—	—	3234-5 EOX
	H1B, H2B	Frt.	L	—	—	—	—	1	—	—	—	3120-1 GB2
		Rr.	L	—	—	—	—	1	—	—	—	3216-7 GB2
	H1F, H2F	Frt.	L	—	—	—	—	1	—	—	—	3120-1 GF3
		Rr.	L	—	—	—	—	1	—	—	—	3216-7 GF3
	H1X, H2X	Frt.	L	—	—	—	—	1	—	—	—	3120-1 GX9
		Rr.	L	—	—	—	—	1	—	—	—	3216-7 GX9
	H2Y	Frt.	L	—	—	—	—	1	—	—	—	3120-1 GY3
		Rr.	L	—	—	—	—	1	—	—	—	3216-7 GY3
	H2B, D2B, L2B		V,L	—	1	—	—	—	—	—	—	3154-5 GB2
	H2F, D2F, L2F		V,L	—	1	—	—	—	—	—	—	3154-5 GF3
	H2XW, H6XW, D2XW, D6XW		V,L	—	1	—	—	—	—	—	—	3154-5 GW1
	H2X, H6X, D2X, D6X, L2X		V,L	—	1	—	—	—	—	—	—	3154-5 GX9
	H2Y, D2Y		V,L	—	1	—	—	—	—	—	—	3154-5 GY3
	H4B, H6B		B	—	1	1	—	—	—	—	—	3170-1 GB4
	H4F, H6F		B	—	1	1	—	—	—	—	—	3170-1 GF8
	H4T, H6T		B	—	1	1	—	—	—	—	—	3170-1 GT6

TYPE LETTERS Indicates: J - Challenger, B - Barracuda, V - Valiant, L - Dart, R - Belvedere, W - Coronet, P - Plymouth, D - Dodge, C - Chrysler, Y - Imperial

NUMERALS INDICATE: 21 - 2 DR. SED., 23 - 2 DR. H.T., 27 - CONV. CPE., 29 - FAST BACK, 41 - 4 DR. SED., 43 - 4 DR. H.T., 45 - 6 PASS. STA. WGN., 46 - 9 PASS. STA. WGN.

AR Indicates use as required.
= Indicates parts not listed in any previous parts book
Numerals in parentheses ( ) refer to notes.
★ Indicates change or addition.

Printed in U.S.A.
January 1972

Right and left part numbers are on same line, first number is right, second number is left.

CODE	PART NAME	MODEL CODES	SEE BOTTOM NOTE 21	23	27	29	41	43	45	46	PART NUMBER
23-92-5	PANEL, Door Trim Cont'd.										
	H4XW, H6XW	B	—	1	1	—	—	—	—	—	3170-1 FW1
	H4X, H5X, H5XV, H6X, H6XV	B	—	1	1	—	—	—	—	—	3170-1 FX9
	P6B	B	—	1	—	—	—	—	—	—	4676-7 GB4
	P6F	B	—	1	—	—	—	—	—	—	4676-7 GF8
	P6T, PRT	B	—	1	1	—	—	—	—	—	4676-7 GT6
	P5X, P6X, PRX	B	—	1	1	—	—	—	—	—	4676-7 FX9
	P6Y, PRY	B	—	1	—	—	—	—	—	—	4676-7 GY4
	SRT	B	—	1	1	—	—	—	—	—	4650-1 GT6
	SRX	B	—	1	1	—	—	—	—	—	4650-1 GX9
	H6B	J	—	1	1	—	—	—	—	—	4634-5 GB4
	H4F, H6F, L5FW, L6F	J	—	1	1	—	—	—	—	—	4634-5 GF8
	H6T, L6T	J	—	1	1	—	—	—	—	—	4634-5 GT6
	H6XW, L6XW	J	—	1	1	—	—	—	—	—	4634-5 GW1
	H4X, H6X, L6X	J	—	1	1	—	—	—	—	—	4634-5 GX9
	H6Y	J	—	1	1	—	—	—	—	—	4634-5 GY4
	H5F	J	—	1	—	—	—	—	—	—	4546-7 GF8
	H5X, H5XX, HRX	J	—	1	1	—	—	—	—	—	4546-7 FX9
	Upper										
	M2B, E2B	R	—	1	—	—	—	—	—	—	9700-1 GOB
	M2T, E2T	R	—	1	—	—	—	—	—	—	9700-1 GOT
	M2X, E2X	R	—	1	—	—	—	—	—	—	9700-1 GOX
	M6B, H1B, H2B	R	—	1	—	—	—	—	—	—	3190-1 GOB
	M6XA, H2XA	R	—	1	—	—	—	—	—	—	3190-1 GOA
	M6F, H1F, H2F	R	—	1	—	—	—	—	—	—	3190-1 GFF
	M6T, H1T, H2T	R	—	1	—	—	—	—	—	—	3190-1 GTT
	M5X, M6X, M6XV, H1X, H2X	R	—	1	—	—	—	—	—	—	3190-1 GOX
	M6XW, H2XW	R	—	1	—	—	—	—	—	—	3190-1 GXW
	M6Y, H2Y	R	—	1	—	—	—	—	—	—	3190-1 GOY
	P3B, P6B	R	—	1	—	—	—	—	—	—	3188-9 GBU
	P6XA	R	—	1	—	—	—	—	—	—	3188-9 GAU
	P3F, P6F	R	—	1	—	—	—	—	—	—	3188-9 GFU
	P3T, P6T	R	—	1	—	—	—	—	—	—	3188-9 GTU
	P3X, P5X, P6X	R	—	1	—	—	—	—	—	—	3188-9 GXU
	P6XW	R	—	1	—	—	—	—	—	—	3188-9 GWU
	P6Y	R	—	1	—	—	—	—	—	—	3188-9 GYU
	Lower w/o Arm Rest										
	M2B, M6B, P6B, H1B, H2B, P3B, C2B, C6B, C3B, D6B, E5B, D3B (Up to Build Date 9-1-70)	R,W	—	1	—	1	—	—	—	—	3222-3 GOB
	M6F, P6F, H1F, H2F, P3F, C2F, C5F, C6F, C3F, D5F, D6F, E5F, D3F (Up to Build Date 9-1-70)	R,W	—	1	—	1	—	—	—	—	3222-3 GOF
	M2B, M6B, P6B, H1B, H2B, P3B, C2B, C6B, C3B, D6B, E5B, D3B (After Build Date 9-1-70)	R,W	—	1	—	1	—	—	—	—	3222-3 GB4
	M6F, P6F, H1F, H2F, P3F, C2F, C5F, C6F, C3F, D5F, D6F, E5F, D3F (After Build Date 9-1-70)	R,W	—	1	—	1	—	—	—	—	3222-3 GF8
	M2T, M6T, P6T, H1T, H2T, P3T, C2T, C6T, D6T, CRT, E2T	R,W	—	1	—	1	—	—	—	—	3222-3 GOT
	M2X, M6X, M6XA, P6X, P6XA, H1X, H2X, H2XA, P3X, M5X, M6XV, P5X, C2X, C5X, C5XV, C6X, C6XV, C3X, D5X, D5XV, D6X, D6XA, E5X, CRX, CRXA, D3X, E2X	R,W	—	1	—	1	—	—	—	—	3222-3 GOX
	M6XW, P6XW, H2XW, C2XW, C6XW, D6XW	R,W	—	1	—	—	—	—	—	—	3222-3 GOW

TYPE LETTERS Indicates J - Challenger, B - Barracuda, V - Valiant, L - Dart, R - Belvedere, W - Coronet, P - Plymouth, D - Dodge, C - Chrysler, Y - Imperial

NUMERALS INDICATE: 21 - 2 DR. SED., 23 - 2 DR. H.T., 27 - CONV. CPE., 29 - FAST BACK, 41 - 4 DR. SED., 43 - 4 DR. H.T., 45 - 6 PASS. STA. WGN., 46 - 9 PASS. STA. WGN.

AR Indicates use as required.
F Indicates parts not listed in any previous parts book
Numerals in parentheses ( ) refer to notes.
★ Indicates change or addition.

Printed in U.S.A.
January 1972

Right and left part numbers are on same line, first number is right, second number is left.

CODE	PART NAME		MODEL CODES	SEE BOTTOM NOTE 21	23	27	29	41	43	45	46	PART NUMBER
23-92-5	PANEL, Door Trim Cont'd.											
	M6Y, P6Y, H2Y, C2Y, C6Y, D6Y, E5Y, D3Y		R,W	—	1	—	1	—	—	—	—	3222-3 GOY
	K1T, K2T, T2T	Frt.	R,W	—	—	—	—	1	—	1	—	3130-1 GOT
		Rr.	R,W	—	—	—	—	1	—	1	—	3224-5 GOT
	D2X, K2X, T2X	Frt.	R,W	—	—	—	—	1	—	1	—	3130-1 GOX
		Rr.	R,W	—	—	—	—	1	—	1	—	3224-5 GOX
	L2B	Frt.	R	—	—	—	—	1	—	1	—	4794-5 GOB
		Rr.	R	—	—	—	—	1	—	1	—	3240-1 GOB
	L2T	Frt.	R	—	—	—	—	1	—	1	—	4794-5 GOT
		Rr.	R	—	—	—	—	1	—	1	—	3240-1 GOT
	H1B, H2B	Frt.	R	—	—	—	—	1	—	1	—	3176-7 GBB
		Rr.	R	—	—	—	—	1	—	1	—	3248-9 GBB
	H1F, H2F	Frt.	R	—	—	—	—	1	—	1	—	3176-7 GFF
		Rr.	R	—	—	—	—	1	—	1	—	3248-9 GFF
	H1T, H2T	Frt.	R	—	—	—	—	1	—	1	—	3176-7 GTT
		Rr.	R	—	—	—	—	1	—	1	—	3248-9 GTT
	H1X, H2X	Frt.	R	—	—	—	—	1	—	1	—	3176-7 GAX
		Rr.	R	—	—	—	—	1	—	1	—	3248-9 GAX
	H1Y, H2Y	Frt.	R	—	—	—	—	1	—	—	—	3176-7 GYY
		Rr.	R	—	—	—	—	1	—	—	—	3248-9 GYY
	P3B, P2B, D3B	Frt.	R	—	—	—	—	1	—	1	1	3142-3 GBU
		Rr.	R	—	—	—	—	1	—	1	1	3220-1 GBU
	P3F, P2F, D3F	Frt.	R	—	—	—	—	1	—	1	1	3142-3 GFU
		Rr.	R	—	—	—	—	1	—	1	1	3220-1 GFU
	P3T, P2T, D3T	Frt.	R	—	—	—	—	1	—	1	1	3142-3 GTU
		Rr.	R	—	—	—	—	1	—	1	1	3220-1 GTU
	P3X, P2X	Frt.	R	—	—	—	—	1	—	1	1	3142-3 GXU
		Rr.	R	—	—	—	—	1	—	1	1	3220-1 GXU
	Upper											
	C3B, D6B		W	—	1	—	—	—	—	—	—	3488-9 GBU
	D6XA		W	—	1	—	—	—	—	—	—	3488-9 GAU
	C3F, D5F, D6F		W	—	1	—	—	—	—	—	—	3488-9 GFU
	C3X, D5X, D5XV, D6X		W	—	1	—	—	—	—	—	—	3488-9 GXU
	D6Y		W	—	1	—	—	—	—	—	—	3488-9 GYU
	D6T		W	—	1	—	—	—	—	—	—	3488-9 GTU
	D6XW		W	—	1	—	—	—	—	—	—	3488-9 GWU
	C2B, C6B, E2B		W	—	1	—	—	—	—	—	—	3144-5 GBU
	C6XA		W	—	1	—	—	—	—	—	—	3144-5 GAU
	C2F, C5F, C6F		W	—	1	—	—	—	—	—	—	3144-5 GFU
	C2T, C6T, E2T		W	—	1	—	—	—	—	—	—	3144-5 GTU
	C2XW, C6XW		W	—	1	—	—	—	—	—	—	3144-5 GWU
	C2X, C5X, C5XV, C6X, E2X		W	—	1	—	—	—	—	—	—	3144-5 GXU
	C2Y, C6Y		W	—	1	—	—	—	—	—	—	3144-5 GYU
	E5B, D3B		W	—	—	—	1	—	—	—	—	3374-5 GOB
	CRXA		W	—	—	—	1	—	—	—	—	3374-5 GOA
	E5F, D3F		W	—	—	—	1	—	—	—	—	3374-5 GOF
	E5Y, D3Y		W	—	—	—	1	—	—	—	—	3374-5 GOY
	E5X, CRX, D3X		W	—	—	—	1	—	—	—	—	3374-5 GOX
	CRT		W	—	—	—	1	—	—	—	—	3374-5 GOT
	L2B	Frt.	W	—	—	—	—	1	—	1	—	3130-1 GOB
		Rr.	W	—	—	—	—	1	—	1	—	3224-5 GOB
	L2T	Frt.	W	—	—	—	—	1	—	1	—	3130-1 GOT
		Rr.	W	—	—	—	—	1	—	1	—	3224-5 GOT
	L2X	Frt.	W	—	—	—	—	1	—	1	—	3130-1 GOX
		Rr.	W	—	—	—	—	1	—	1	—	3224-5 GOX
	P3B, P4B	Frt.	W	—	—	—	—	1	—	1	1	3124-5 GBU
		Rr.	W	—	—	—	—	1	—	1	1	3236-7 GBU

TYPE LETTERS Indicates	J - Challenger B - Barracuda	V - Valiant L - Dart	R - Belvedere W - Coronet	P - Plymouth D - Dodge	C - Chrysler Y - Imperial
NUMERALS INDICATE:	21 - 2 DR. SED. 23 - 2 DR. H.T.	27 - CONV. CPE. 29 - FAST BACK	41 - 4 DR. SED. 43 - 4 DR. H.T.	45 - 6 PASS. STA. WGN. 46 - 9 PASS. STA. WGN.	

AR Indicates use as required.
= Indicates parts not listed in any previous parts book

Numerals in parentheses ( ) refer to notes.
★ Indicates change or addition.

Printed in U.S.A.
January 1972

Right and left part numbers are on same line, first number is right, second number is left.

CODE	PART NAME		MODEL CODES	SEE BOTTOM NOTE 21	23	27	29	41	43	45	46	PART NUMBER
23-92-5	PANEL, Door Trim Cont'd.											
	P3F, P4F	Frt.	W	—	—	—	—	1	—	1	1	3124-5 GFU
		Rr.	W	—	—	—	—	1	—	1	1	3236-7 GFU
	P3T, P4T	Frt.	W	—	—	—	—	—	—	1	1	3124-5 GTU
		Rr.	W	—	—	—	—	—	—	1	1	3236-7 GTU
	P3X, P4X	Frt.	W	—	—	—	—	1	—	1	1	3124-5 GXU
		Rr.	W	—	—	—	—	1	—	1	1	3236-7 GXU
	P3Y	Frt.	W	—	—	—	—	1	—	—	—	3124-5 GYU
		Rr.	W	—	—	—	—	1	—	—	—	3236-7 GYU
	H1B, H2B	Frt.	W	—	—	—	—	1	—	1	1	3140-1 GOB
		Rr.	W	—	—	—	—	1	—	1	1	3228-9 GOB
	H1F, H2F	Frt.	W	—	—	—	—	1	—	1	1	3140-1 GOF
		Rr.	W	—	—	—	—	1	—	1	1	3228-9 GOF
	H2T	Frt.	W	—	—	—	—	1	—	1	1	3140-1 GOT
		Rr.	W	—	—	—	—	1	—	1	1	3228-9 GOT
	H1X, H2X	Frt.	W	—	—	—	—	1	—	1	1	3140-1 GOX
		Rr.	W	—	—	—	—	1	—	1	1	3228-9 GOX
	H1Y, H2Y	Frt.	W	—	—	—	—	1	—	1	1	3140-1 GOY
		Rr.	W	—	—	—	—	1	—	1	1	3228-9 GOY
	K1T, K2T, K5T, K6T, E2T	Frt.	P	—	—	—	—	1	—	1	—	3262-3 GT7
		Rr.	P	—	—	—	—	1	—	1	—	3270-1 GT7
	E1B, E2B	Frt.	P	—	—	—	—	1	—	1	—	3262-3 GB2
		Rr.	P	—	—	—	—	1	—	1	—	3270-1 GB2
	K2X, E2XA, D2XA	Frt.	P	—	—	—	—	1	—	1	—	3262-3 GA8
		Rr.	P	—	—	—	—	1	—	1	—	3270-1 GA8
	B1B, B2B	Frt.	D	—	—	—	—	1	—	1	—	3272-3 GB2
		Rr.	D	—	—	—	—	1	—	1	—	3270-1 GB2
	B1T, B2T	Frt.	D	—	—	—	—	1	—	1	—	3272-3 GT7
		Rr.	D	—	—	—	—	1	—	1	—	3270-1 GT7
	K1A, K2A, K5A, K6A	Frt.	D	—	—	—	—	1	—	—	—	3272-3 GA9
		Rr.	D	—	—	—	—	1	—	—	—	3270-1 GA9
	B2XA	Frt.	D	—	—	—	—	1	—	—	—	3272-3 GA8
		Rr.	D	—	—	—	—	1	—	—	—	3270-1 GA8
	E1B, E2B		P	1	—	—	—	—	—	—	—	3494-5 GB2
	E1T, E2T		P	1	—	—	—	—	—	—	—	3494-5 GT7
	E2XA, D2XA		P	1	—	—	—	—	—	—	—	3494-5 GA8
	L1B, L2B, F1B, F2B		P,D	—	1	—	—	—	—	—	—	3158-9 GB2
	L1F, F1F		P,D	—	1	—	—	—	—	—	—	3158-9 GF7
	L1T, F1T		P,D	—	1	—	—	—	—	—	—	3158-9 GT7
	L2XA, F2XA		P,D	—	1	—	—	—	—	—	—	3158-9 GA8
	M1B, M4B		P	—	1	—	1	—	—	—	—	3432-3 GB2
	M1F, M4F, M6F		P	—	1	—	1	—	—	—	—	3432-3 GF7
	M4T		P	—	1	—	1	—	—	—	—	3432-3 GT7
	M1XA, M4XA, M6XA		P	—	1	—	1	—	—	—	—	3432-3 GXA
	M4E		P	—	1	—	1	—	—	—	—	3432-3 GE8
	M4XW, M6XW		P	—	1	—	1	—	—	—	—	3432-3 GW1
	M4Y		P	—	1	—	1	—	—	—	—	3432-3 GY5
	P4T		P	—	—	—	1	—	—	—	—	3432-3 GTT
	H3B, H4B, H5B, H6B		P	—	1	—	1	—	—	—	—	4710-1 GB2
	H3F, H4F, H5F, H6F		P	—	1	—	1	—	—	—	—	4710-1 GF7
	H3T, H4T		P	—	1	—	1	—	—	—	—	4710-1 GT7
	H3XA, H4XA, H5XA, H6XA		P	—	1	—	1	—	—	—	—	4710-1 GXA
	H4XW, H6XW		P	—	1	—	1	—	—	—	—	4710-1 GXW
	H3Y, H4Y, H5Y		P	—	1	—	1	—	—	—	—	4710-1 GY5
	H4E		P	—	1	—	1	—	—	—	—	4710-1 GE8
	L1B, L2B	Frt.	P	—	—	—	—	1	—	1	1	3422-3 GB2
		Rr.	P	—	—	—	—	1	—	1	1	3274-5 GB2
	L1F, L2F	Frt.	P	—	—	—	—	1	—	1	1	3422-3 GF7

TYPE LETTERS Indicates: J - Challenger, B - Barracuda, V - Valiant, L - Dart, R - Belvedere, W - Coronet, P - Plymouth, D - Dodge, C - Chrysler, Y - Imperial

NUMERALS INDICATE: 21 - 2 DR. SED., 23 - 2 DR. H.T., 27 - CONV. CPE., 29 - FAST BACK, 41 - 4 DR. SED., 43 - 4 DR. H.T., 45 - 6 PASS. STA. WGN., 46 - 9 PASS. STA. WGN.

AR Indicates use as required.
# Indicates parts not listed in any previous parts book
Numerals in parentheses ( ) refer to notes.
★ Indicates change or addition.

Printed in U.S.A.
January 1972

Right and left part numbers are on same line, first number is right, second number is left.

CODE	PART NAME		MODEL CODES	SEE BOTTOM NOTE 21	23	27	29	41	43	45	46	PART NUMBER
23-92-5	PANEL, Door Trim Cont'd.											
		Rr.	P	—	—	—	—	1	—	1	1	3274-5 GF7
	L1T, L2T	Frt.	P	—	—	—	—	1	—	1	1	3422-3 GT7
		Rr.	P	—	—	—	—	1	—	1	1	3274-5 GT7
	M1B, M2B, M4B	Frt.	P	—	—	—	—	1	—	1	1	3428-9 GB2
		Rr.	P	—	—	—	—	1	—	1	1	3276-7 GB2
	M1F, M2F, M4F	Frt.	P	—	—	—	—	1	—	1	1	3428-9 GF7
		Rr.	P	—	—	—	—	1	—	1	1	3276-7 GF7
	M2T, M4T	Frt.	P	—	—	—	—	1	—	1	1	3428-9 GT7
		Rr.	P	—	—	—	—	1	—	1	1	3276-7 GT7
	M1XA, M2XA, M4XA, M8XA	Frt.	P	—	—	—	—	1	—	1	1	3428-9 GXA
		Rr.	P	—	—	—	—	1	—	1	1	3276-7 GXA
	M1Y, M4Y	Frt.	P	—	—	—	—	1	—	—	—	3428-9 GY5
		Rr.	P	—	—	—	—	1	—	—	—	3276-7 GY5
	H3B, H4B, H7B	Frt.	P	—	—	—	—	1	—	1	1	3110-1 GB2
		Rr.	P	—	—	—	—	1	—	1	1	3146-7 GB2
	H3F, H4F, H7F	Frt.	P	—	—	—	—	1	—	1	1	3110-1 GF7
		Rr.	P	—	—	—	—	1	—	1	1	3146-7 GF7
	H3T, H4T, H8T	Frt.	P	—	—	—	—	1	—	1	1	3110-1 GT7
		Rr.	P	—	—	—	—	1	—	1	1	3146-7 GT7
	H3XA, H4XA, H7XA, H8XA	Frt.	P	—	—	—	—	1	—	1	1	3110-1 GXA
		Rr.	P	—	—	—	—	1	—	1	1	3146-7 GXA
	H3Y, H4Y, H7Y	Frt.	P	—	—	—	—	1	—	—	—	3110-1 GY5
		Rr.	P	—	—	—	—	1	—	—	—	3146-7 GY5
	M1B, M4B	Frt.	P	—	—	—	—	—	1	—	—	3430-1 GB2
		Rr.	P	—	—	—	—	—	1	—	—	3470-1 GB2
	M1F, M4F	Frt.	P	—	—	—	—	—	1	—	—	3430-1 GF7
		Rr.	P	—	—	—	—	—	1	—	—	3470-1 GF7
	M1XA, M4XA, M8XA	Frt.	P	—	—	—	—	—	1	—	—	3430-1 GXA
		Rr.	P	—	—	—	—	—	1	—	—	3470-1 GXA
	M1Y, M4Y	Frt.	P	—	—	—	—	—	1	—	—	3430-1 GY5
		Rr.	P	—	—	—	—	—	1	—	—	3470-1 GY5
	M4E	Frt.	P	—	—	—	—	—	1	—	—	3430-1 GE8
		Rr.	P	—	—	—	—	—	1	—	—	3470-1 GE8
	M4XW	Frt.	P	—	—	—	—	—	1	—	—	3430-1 GW1
		Rr.	P	—	—	—	—	—	1	—	—	3470-1 GW1
	M4T	Frt.	P	—	—	—	—	—	1	—	—	3430-1 GT7
		Rr.	P	—	—	—	—	—	1	—	—	3470-1 GT7
	P4T	Frt.	P	—	—	—	—	—	1	—	—	3430-1 GTT
		Rr.	P	—	—	—	—	—	1	—	—	3470-1 GTT
	H3B, H4B, H7B	Frt.	P	—	—	—	—	—	1	—	—	3156-7 GB2
		Rr.	P	—	—	—	—	—	1	—	—	3472-3 GB2
	H4E	Frt.	P	—	—	—	—	—	1	—	—	3156-7 GE8
		Rr.	P	—	—	—	—	—	1	—	—	3472-3 GE8
	H3F, H4F, H6F, H7F	Frt.	P	—	—	—	—	—	1	—	—	3156-7 GF7
		Rr.	P	—	—	—	—	—	1	—	—	3472-3 GF7
	H3T, H4T	Frt.	P	—	—	—	—	—	1	—	—	3156-7 GT7
		Rr.	P	—	—	—	—	—	1	—	—	3472-3 GT7
	H3XA, H4XA, H6XA, H7XA	Frt.	P	—	—	—	—	—	1	—	—	3156-7 GXA
		Rr.	P	—	—	—	—	—	1	—	—	3472-3 GXA
	H4XW, H6XW	Frt.	P	—	—	—	—	—	1	—	—	3156-7 GXW
		Rr.	P	—	—	—	—	—	1	—	—	3472-3 GXW
	H3Y, H4Y, H7Y	Frt.	P	—	—	—	—	—	1	—	—	3156-7 GY5
		Rr.	P	—	—	—	—	—	1	—	—	3472-3 GY5
	D3Y	Frt.	D	—	—	—	—	1	—	—	—	3422-3 GY5
		Rr.	D	—	—	—	—	1	—	—	—	3274-5 GY5
	F1B, F2B	Frt.	D	—	—	—	—	1	—	1	1	3422-3 GB2
		Rr.	D	—	—	—	—	1	—	1	1	3274-5 GB2

TYPE LETTERS Indicates	J - Challenger B - Barracuda	V - Valiant L - Dart	R - Belvedere W - Coronet	P - Plymouth D - Dodge	C - Chrysler Y - Imperial
NUMERALS INDICATE:	21 - 2 DR. SED. 23 - 2 DR. H.T.	27 - CONV. CPE. 29 - FAST BACK	41 - 4 DR. SED. 43 - 4 DR. H.T.	45 - 6 PASS. STA. WGN. 46 - 9 PASS. STA. WGN.	

AR Indicates use as required.
= Indicates parts not listed in any previous parts book

Numerals in parentheses ( ) refer to notes.
★ Indicates change or addition.

Printed in U.S.A.
January 1972

Right and left part numbers are on same line, first number is right, second number is left.

CODE	PART NAME		MODEL CODES	SEE BOTTOM NOTE 21	23	27	29	41	43	45	46	PART NUMBER
23-92-5	PANEL, Door Trim Cont'd.											
	F1F, F2F, D4F	Frt.	D	—	—	—	—	1	—	1	1	3422-3 GF7
		Rr.	D	—	—	—	—	1	—	1	1	3274-5 GF7
	F1T, F2T	Frt.	D	—	—	—	—	1	—	1	1	3422-3 GT7
		Rr.	D	—	—	—	—	1	—	1	1	3274-5 GT7
	L2XA, F2XA, D4X	Frt.	P,D	—	—	—	—	1	—	1	1	3422-3 GA8
		Rr.	P,D	—	—	—	—	1	—	1	1	3274-5 GA8
	B1B, B2B		D	—	1	—	—	—	—	—	—	3280-1 GB2
	B1T, B2T		D	—	1	—	—	—	—	—	—	3280-1 GT7
	B2XA		D	—	1	—	—	—	—	—	—	3280-1 GA8
	D3Y		D	—	1	—	—	—	—	—	—	3158-9 GY5
	L1B, L2B, L3B, L4B, M3B, M4B		D	—	1	—	—	—	—	—	—	3476-7 GB2
	M4E, M6E		D	—	1	—	—	—	—	—	—	3476-7 GE8
	L1F, L2F, L3F, L4F, M3F, M4F		D	—	1	—	—	—	—	—	—	3476-7 GF7
	L2T		D	—	1	—	—	—	—	—	—	3476-7 GT7
	M4XW, M6XW		D	—	1	—	—	—	—	—	—	3476-7 GW1
	L1X, L2X, L3X, L4X, M3X, M4X, M6X		D	—	1	—	—	—	—	—	—	3476-7 GX9
	L1Y, L3Y, M3Y		D	—	1	—	—	—	—	—	—	3476-7 GY5
	L1B, L2B, L3B, L4B	Frt.	D	—	—	—	—	1	—	1	1	3336-7 GB2
		Rr.	D	—	—	—	—	1	—	1	1	3282-3 GB2
	L1F, L2F, L3F, L4F	Frt.	D	—	—	—	—	1	—	1	1	3336-7 GF7
		Rr.	D	—	—	—	—	1	—	1	1	3282-3 GF7
	L2T	Frt.	D	—	—	—	—	1	—	1	1	3336-7 GT7
		Rr.	D	—	—	—	—	1	—	1	1	3282-3 GT7
	L1X, L2X, L3X, L4X	Frt.	D	—	—	—	—	1	—	1	1	3336-7 GX9
		Rr.	D	—	—	—	—	1	—	1	1	3282-3 GX9
	L1Y, L3Y	Frt.	D	—	—	—	—	1	—	—	—	3336-7 GY5
		Rr.	D	—	—	—	—	1	—	—	—	3282-3 GY5
	H3B		D	—	1	—	—	—	—	—	—	3454-5 GB2
	H3A		D	—	1	—	—	—	—	—	—	3454-5 GA6
	H4E, H6E		D	—	1	—	—	—	—	—	—	3454-5 GE8
	H3F, H4F		D	—	1	—	—	—	—	—	—	3454-5 GF7
	H6XW		D	—	1	—	—	—	—	—	—	3454-5 GXW
	H3X, H4X, H6X		D	—	1	—	—	—	—	—	—	3454-5 GX9
	H3Y		D	—	1	—	—	—	—	—	—	3454-5 GY5
	H3B, H4B, H7B	Frt.	D	—	—	—	—	1	—	1	1	3118-9 GB2
		Rr.	D	—	—	—	—	1	—	1	1	3218-9 GB2
	H3A, H7A	Frt.	D	—	—	—	—	1	—	—	—	3118-9 GA6
		Rr.	D	—	—	—	—	1	—	—	—	3218-9 GA6
	H3F, H4F, H7F	Frt.	D	—	—	—	—	1	—	1	1	3118-9 GF7
		Rr.	D	—	—	—	—	1	—	1	1	3218-9 GF7
	H4T, H8T	Frt.	D	—	—	—	—	—	—	1	1	3118-9 GT7
		Rr.	D	—	—	—	—	—	—	1	1	3218-9 GT7
	H3X, H4X, H7X, H8X	Frt.	D	—	—	—	—	1	—	1	1	3118-9 GX9
		Rr.	D	—	—	—	—	1	—	1	1	3218-9 GX9
	H3Y	Frt.	D	—	—	—	—	1	—	—	—	3118-9 GY5
		Rr.	D	—	—	—	—	1	—	—	—	3218-9 GY5
	F1B	Frt.	D	—	—	—	—	—	1	—	—	4580-1 GB2
		Rr.	D	—	—	—	—	—	1	—	—	3480-1 GB2
	F1F, D4F	Frt.	D	—	—	—	—	—	1	—	—	4580-1 GF7
		Rr.	D	—	—	—	—	—	1	—	—	3480-1 GF7
	F2XA, D4X	Frt.	D	—	—	—	—	—	1	—	—	4580-1 GA8
		Rr.	D	—	—	—	—	—	1	—	—	3480-1 GA8
	D3Y	Frt.	D	—	—	—	—	—	1	—	—	4580-1 GY5
		Rr.	D	—	—	—	—	—	1	—	—	4582-3 GY5
	L1B, L2B, M3B, M4B	Frt.	D	—	—	—	—	—	1	—	—	3284-5 GB2
		Rr.	D	—	—	—	—	—	1	—	—	3474-5 GB2
	M4E	Frt.	D	—	—	—	—	—	1	—	—	3284-5 GE8
		Rr.	D	—	—	—	—	—	1	—	—	3474-5 GE8

TYPE LETTERS Indicates: J - Challenger; B - Barracuda; V - Valiant; L - Dart; R - Belvedere; W - Coronet; P - Plymouth; D - Dodge; C - Chrysler; Y - Imperial

NUMERALS INDICATE: 21 - 2 DR. SED.; 23 - 2 DR. H.T.; 27 - CONV. CPE.; 29 - FAST BACK; 41 - 4 DR. SED.; 43 - 4 DR. H.T.; 45 - 6 PASS. STA. WGN.; 46 - 9 PASS. STA. WGN.

AR Indicates use as required.
# Indicates parts not listed in any previous parts book
Numerals in parentheses ( ) refer to notes.
★ Indicates change or addition.

Printed in U.S.A.
January 1972

Right and left part numbers are on same line, first number is right, second number is left.

CODE	PART NAME		MODEL CODES	SEE BOTTOM NOTE 21	23	27	29	41	43	45	46	PART NUMBER
23-92-5	PANEL, Door Trim Cont'd.											
	L1F, L2F, M3F, M4F	Frt.	D	—	—	—	—	—	1	—	—	3284-5 GF7
		Rr.	D	—	—	—	—	—	1	—	—	3474-5 GF7
	L2T	Frt.	D	—	—	—	—	—	1	—	—	3284-5 GT7
		Rr.	D	—	—	—	—	—	1	—	—	3474-5 GT7
	M4XW	Frt.	D	—	—	—	—	—	1	—	—	3284-5 GW1
		Rr.	D	—	—	—	—	—	1	—	—	3474-5 GW1
	L1X, L2X, M3X, M4X	Frt.	D	—	—	—	—	—	1	—	—	3284-5 GX9
		Rr.	D	—	—	—	—	—	1	—	—	3474-5 GX9
	L1Y, M3Y	Frt.	D	—	—	—	—	—	1	—	—	3284-5 GY5
		Rr.	D	—	—	—	—	—	1	—	—	3474-5 GY5
	H3B, H7B	Frt.	D	—	—	—	—	—	1	—	—	3448-9 GB2
		Rr.	D	—	—	—	—	—	1	—	—	3482-3 GB2
	H3A, H7A	Frt.	D	—	—	—	—	—	1	—	—	3448-9 GA6
		Rr.	D	—	—	—	—	—	1	—	—	3482-3 GA6
	H4E	Frt.	D	—	—	—	—	—	1	—	—	3448-9 GE8
		Rr.	D	—	—	—	—	—	1	—	—	3482-3 GE8
	H3F, H4F, H7F	Frt.	D	—	—	—	—	—	1	—	—	3448-9 GF7
		Rr.	D	—	—	—	—	—	1	—	—	3482-3 GF7
	H3X, H4X, H7X	Frt.	D	—	—	—	—	—	1	—	—	3448-9 GX9
		Rr.	D	—	—	—	—	—	1	—	—	3482-3 GX9
	H3Y	Frt.	D	—	—	—	—	—	1	—	—	3448-9 GY5
		Rr.	D	—	—	—	—	—	1	—	—	3482-3 GY5
	E1B (Up to Build Date 9-1-70)		C	—	1	—	—	—	—	—	—	3104-5 GOB
	E1A (Up to Build Date 9-1-70)		C	—	1	—	—	—	—	—	—	3104-5 GOA
	E2E (Up to Build Date 9-1-70)		C	—	1	—	—	—	—	—	—	3104-5 GOE
	E1F, E2F (Up to Build Date 9-1-70)		C	—	1	—	—	—	—	—	—	3104-5 GOF
	E2L (Up to Build Date 9-1-70)		C	—	1	—	—	—	—	—	—	3104-5 GOL
	E6T (Up to Build Date 9-1-70)		C	—	1	—	—	—	—	—	—	3104-5 GOT
	E2X, E1X, E6X (Up to Build Date 9-1-70)		C	—	1	—	—	—	—	—	—	3104-5 GOX
	E6XW (Up to Build Date 9-1-70)		C	—	1	—	—	—	—	—	—	3104-5 GOW
	E1Y (Up to Build Date 9-1-70)		C	—	1	—	—	—	—	—	—	3104-5 GOY
	E1A (After Build Date 9-1-70)		C	—	1	—	—	—	—	—	—	3172-3 GOA
	E1B (After Build Date 9-1-70)		C	—	1	—	—	—	—	—	—	3172-3 GOB
	E2E (After Build Date 9-1-70)		C	—	1	—	—	—	—	—	—	3172-3 GOE
	E1F, E2F (After Build Date 9-1-70)		C	—	1	—	—	—	—	—	—	3172-3 GOF
	E2L (After Build Date 9-1-70)		C	—	1	—	—	—	—	—	—	3172-3 GOL
	E6T (After Build Date 9-1-70)		C	—	1	—	—	—	—	—	—	3172-3 GOT
	E1X, E2X, E6X (After Build Date 9-1-70)		C	—	1	—	—	—	—	—	—	3172-3 GOX
	E6XW (After Build Date 9-1-70)		C	—	1	—	—	—	—	—	—	3172-3 GOW
	E1Y (After Build Date 9-1-70)		C	—	1	—	—	—	—	—	—	3172-3 GOY
	G1A		C	—	1	—	—	—	—	—	—	3116-7 GA6
	G1B		C	—	1	—	—	—	—	—	—	3116-7 GB2
	G2E		C	—	1	—	—	—	—	—	—	3116-7 GE8
	G1F, G2F		C	—	1	—	—	—	—	—	—	3116-7 GF7
	G2L		C	—	1	—	—	—	—	—	—	3116-7 GL2
	G6T		C	—	1	—	—	—	—	—	—	3116-7 GT7
	G1X, G2X, G3X		C	—	1	—	—	—	—	—	—	3116-7 GX9
	G6XW		C	—	1	—	—	—	—	—	—	3116-7 GW1
	G1Y		C	—	1	—	—	—	—	—	—	3116-7 GY5
	L4B		C	—	1	—	—	—	—	—	—	4496-7 GBB
	L4E		C	—	1	—	—	—	—	—	—	4496-7 GEE
	L3F		C	—	1	—	—	—	—	—	—	4496-7 GFF
	L3L		C	—	1	—	—	—	—	—	—	4496-7 GLL
	L3X, L4X		C	—	1	—	—	—	—	—	—	4496-7 GOX
	L3Y		C	—	1	—	—	—	—	—	—	4496-7 GYY
	H3B		C	—	1	—	—	—	—	—	—	3196-7 GBB

TYPE LETTERS Indicates	J - Challenger B - Barracuda	V - Valiant L - Dart	R - Belvedere W - Coronet	P - Plymouth D - Dodge	C - Chrysler Y - Imperial
NUMERALS INDICATE:	21 - 2 DR. SED. 23 - 2 DR. H.T.	27 - CONV. CPE. 29 - FAST BACK	41 - 4 DR. SED. 43 - 4 DR. H.T.		45 - 6 PASS. STA. WGN. 46 - 9 PASS. STA. WGN.

AR Indicates use as required.
= Indicates parts not listed in any previous parts book

Numerals in parentheses ( ) refer to notes.
★ Indicates change or addition.

Printed in U.S.A.
January 1972

Right and left part numbers are on same line, first number is right, second number is left.

CODE	PART NAME		MODEL CODES	SEE BOTTOM NOTE 21	23	27	29	41	43	45	46	PART NUMBER
23-92-5	PANEL, Door Trim Cont'd.											
	H3A		C	—	1	—	—	—	—	—	—	3196-7 GAA
	H3F, H6F		C	—	1	—	—	—	—	—	—	3196-7 GFF
	H6T		C	—	1	—	—	—	—	—	—	3196-7 GTT
	H3X, H6X		C	—	1	—	—	—	—	—	—	3196-7 GOX
	H6XW		C	—	1	—	—	—	—	—	—	3196-7 GXW
	H3Y		C	—	1	—	—	—	—	—	—	3196-7 GYY
	S4B (Up to Build Date 9-1-70)		C	—	1	—	—	—	—	—	—	4456-7 GBB
	S4E (Up to Build Date 9-1-70)		C	—	1	—	—	—	—	—	—	4456-7 GEE
	S3F, S6F (Up to Build Date 9-1-70)		C	—	1	—	—	—	—	—	—	4456-7 GFF
	S3L, S6L (Up to Build Date 9-1-70)		C	—	1	—	—	—	—	—	—	4456-7 GLL
	S6T (Up to Build Date 9-1-70)		C	—	1	—	—	—	—	—	—	4456-7 GTT
	S4X, S6X (Up to Build Date 9-1-70)		C	—	1	—	—	—	—	—	—	4456-7 GOX
	S6XW (Up to Build Date 9-1-70)		C	—	1	—	—	—	—	—	—	4456-7 GXW
	S3Y (Up to Build Date 9-1-70)		C	—	1	—	—	—	—	—	—	4456-7 GYY
	S4B (After Build Date 9-1-70)		C	—	1	—	—	—	—	—	—	4420-1 GBB
	S4E (After Build Date 9-1-70)		C	—	1	—	—	—	—	—	—	4420-1 GEE
	S3F, S6F (After Build Date 9-1-70)		C	—	1	—	—	—	—	—	—	4420-1 GFF
	S3L, S6L (After Build Date 9-1-70)		C	—	1	—	—	—	—	—	—	4420-1 GLL
	S6T (After Build Date 9-1-70)		C	—	1	—	—	—	—	—	—	4420-1 GTT
	S4X, S6X (After Build Date 9-1-70)		C	—	1	—	—	—	—	—	—	4420-1 GOX
	S6XW (After Build Date 9-1-70)		C	—	1	—	—	—	—	—	—	4420-1 GXW
	S3Y (After Build Date 9-1-70)		C	—	1	—	—	—	—	—	—	4420-1 GYY
	E1B (Up to Build Date 9-1-70)	Frt.	C	—	—	—	—	1	—	—	—	3100-1 GOB
		Rr.	C	—	—	—	—	1	—	—	—	3200-1 GOB
	E1A (Up to Build Date 9-1-70)	Frt.	C	—	—	—	—	1	—	—	—	3100-1 GOA
		Rr.	C	—	—	—	—	1	—	—	—	3200-1 GOA
	E2E (Up to Build Date 9-1-70)	Frt.	C	—	—	—	—	1	—	—	—	3100-1 GOE
		Rr.	C	—	—	—	—	1	—	—	—	3200-1 GOE
	E1F, E2F (Up to Build Date 9-1-70)	Frt.	C	—	—	—	—	1	—	—	—	3100-1 GOF
		Rr.	C	—	—	—	—	1	—	—	—	3200-1 GOF
	E1L (Up to Build Date 9-1-70)	Frt.	C	—	—	—	—	1	—	—	—	3100-1 GOL
		Rr.	C	—	—	—	—	1	—	—	—	3200-1 GOL
	E1X, E2X (Up to Build Date 9-1-70)	Frt.	C	—	—	—	—	1	—	—	—	3100-1 GOX
		Rr.	C	—	—	—	—	1	—	—	—	3200-1 GOX
	E1Y (Up to Build Date 9-1-70)	Frt.	C	—	—	—	—	1	—	—	—	3100-1 GOY
		Rr.	C	—	—	—	—	1	—	—	—	3200-1 GOY
	E1A (After Build Date 9-1-70)	Frt.	C	—	—	—	—	1	—	—	—	3174-5 GOA
		Rr.	C	—	—	—	—	1	—	—	—	3290-1 GOA
	E1B (After Build Date 9-1-70)	Frt.	C	—	—	—	—	1	—	—	—	3174-5 GOB
		Rr.	C	—	—	—	—	1	—	—	—	3290-1 GOB
	E2E (After Build Date 9-1-70)	Frt.	C	—	—	—	—	1	—	—	—	3174-5 GOE
		Rr.	C	—	—	—	—	1	—	—	—	3290-1 GOE
	E1F, E2F (After Build Date 9-1-70)	Frt.	C	—	—	—	—	1	—	—	—	3174-5 GOF
		Rr.	C	—	—	—	—	1	—	—	—	3290-1 GOF
	E1L (After Build Date 9-1-70)	Frt.	C	—	—	—	—	1	—	—	—	3174-5 GOL
		Rr.	C	—	—	—	—	1	—	—	—	3290-1 GOL
	E1X, E2X (After Build Date 9-1-70)	Frt.	C	—	—	—	—	1	—	—	—	3174-5 GOX
		Rr.	C	—	—	—	—	1	—	—	—	3290-1 GOX
	E1Y (After Build Date 9-1-70)	Frt.	C	—	—	—	—	1	—	—	—	3174-5 GOY
		Rr.	C	—	—	—	—	1	—	—	—	3290-1 GOY
	G1A	Frt	C	—	—	—	—	1	—	—	—	3132-3 GA6
		Rr	C	—	—	—	—	1	—	—	—	3226-7 GA6
	G1B	Frt.	C	—	—	—	—	1	—	—	—	3132-3 GB2
		Rr	C	—	—	—	—	1	—	—	—	3226-7 GB2

TYPE LETTERS Indicates: J - Challenger, B - Barracuda, V - Valiant, L - Dart, R - Belvedere, W - Coronet, P - Plymouth, D - Dodge, C - Chrysler, Y - Imperial

NUMERALS INDICATE: 21 - 2 DR. SED., 23 - 2 DR. H.T., 27 - CONV. CPE., 29 - FAST BACK, 41 - 4 DR. SED., 43 - 4 DR. H.T., 45 - 6 PASS. STA. WGN., 46 - 9 PASS. STA. WGN.

AR Indicates use as required.
# Indicates parts not listed in any previous parts book
Numerals in parentheses ( ) refer to notes.
★ Indicates change or addition.

Printed in U.S.A.
January 1972

Right and left part numbers are on same line, first number is right, second number is left.

CODE	PART NAME		MODEL CODES	SEE BOTTOM NOTE 21	23	27	29	41	43	45	46	PART NUMBER
23-92-5	PANEL, *Door Trim Cont'd.*											
	G2E	Frt	C	—	—	—	—	1	—	—	—	3132-3 GE8
		Rr	C	—	—	—	—	1	—	—	—	3226-7 GE8
	G1F, G2F	Frt	C	—	—	—	—	1	—	—	—	3132-3 GF7
		Rr	C	—	—	—	—	1	—	—	—	3226-7 GF7
	G1L	Frt	C	—	—	—	—	1	—	—	—	3132-3 GL2
		Rr	C	—	—	—	—	1	—	—	—	3226-7 GL2
	G1X, G2X	Frt	C	—	—	—	—	1	—	—	—	3132-3 GX9
		Rr	C	—	—	—	—	1	—	—	—	3226-7 GX9
	G1Y	Frt	C	—	—	—	—	1	—	—	—	3132-3 GY5
		Rr	C	—	—	—	—	1	—	—	—	3226-7 GY5
	L3B, L7B	Frt.	C	—	—	—	—	1	—	—	—	3126-7 GBB
		Rr.	C	—	—	—	—	1	—	—	—	3208-9 GBB
	L4E	Frt.	C	—	—	—	—	1	—	—	—	3126-7 GEE
		Rr.	C	—	—	—	—	1	—	—	—	3208-9 GEE
	L3F, L7F, L8F	Frt.	C	—	—	—	—	1	—	—	—	3126-7 GFF
		Rr.	C	—	—	—	—	1	—	—	—	3208-9 GFF
	L3L	Frt.	C	—	—	—	—	1	—	—	—	3126-7 GLL
		Rr.	C	—	—	—	—	1	—	—	—	3208-9 GLL
	L3X, L4X, L8X	Frt.	C	—	—	—	—	1	—	—	—	3126-7 GOX
		Rr.	C	—	—	—	—	1	—	—	—	3208-9 GOX
	L7XL	Frt.	C	—	—	—	—	1	—	—	—	3126-7 GXL
		Rr.	C	—	—	—	—	1	—	—	—	3208-9 GXL
	L3Y	Frt.	C	—	—	—	—	1	—	—	—	3126-7 GYY
		Rr.	C	—	—	—	—	1	—	—	—	3208-9 GYY
	H7B, H9B	Frt.	C	—	—	—	—	1	—	—	—	3136-7 GBB
		Rr.	C	—	—	—	—	1	—	—	—	3254-5 GBB
	H7A, H9A	Frt.	C	—	—	—	—	1	—	—	—	3136-7 GAA
		Rr.	C	—	—	—	—	1	—	—	—	3254-5 GAA
	H8L	Frt.	C	—	—	—	—	1	—	—	—	3136-7 GLL
		Rr.	C	—	—	—	—	1	—	—	—	3254-5 GLL
	H7F, H8F, H9F	Frt.	C	—	—	—	—	1	—	—	—	3136-7 GFF
		Rr.	C	—	—	—	—	1	—	—	—	3254-5 GFF
	H7X, H8X, H9X	Frt.	C	—	—	—	—	1	—	—	—	3136-7 GOX
		Rr.	C	—	—	—	—	1	—	—	—	3254-5 GOX
	H9Y	Frt.	C	—	—	—	—	1	—	—	—	3136-7 GYY
		Rr.	C	—	—	—	—	1	—	—	—	3254-5 GYY
	HLT	Frt.	C	—	—	—	—	1	—	—	—	3136-7 GTT
		Rr.	C	—	—	—	—	1	—	—	—	3254-5 GTT
	L4B	Frt.	C	—	—	—	—	—	—	1	1	3420-1 GBB
		Rr.	C	—	—	—	—	—	—	1	1	3230-1 GBB
	L4F, L8F	Frt.	C	—	—	—	—	—	—	1	1	3420-1 GFF
		Rr.	C	—	—	—	—	—	—	1	1	3230-1 GFF
	L4X, L8X	Frt.	C	—	—	—	—	—	—	1	1	3420-1 GOX
		Rr.	C	—	—	—	—	—	—	1	1	3230-1 GOX
	L7XL	Frt.	C	—	—	—	—	—	—	1	1	3420-1 GXL
		Rr.	C	—	—	—	—	—	—	1	1	3230-1 GXL
	L8Y	Frt.	C	—	—	—	—	—	—	1	1	3420-1 GYY
		Rr.	C	—	—	—	—	—	—	1	1	3230-1 GYY
	L4T, L8T	Frt.	C	—	—	—	—	—	—	1	1	3420-1 GTT
		Rr.	C	—	—	—	—	—	—	1	1	3230-1 GTT
	E1B (Up to Build Date 9-1-70)	Frt.	C	—	—	—	—	—	1	—	—	3102-3 GOB
		Rr.	C	—	—	—	—	—	1	—	—	3202-3 GOB
	E1A (Up to Build Date 9-1-70)	Frt.	C	—	—	—	—	—	1	—	—	3102-3 GOA
		Rr.	C	—	—	—	—	—	1	—	—	3202-3 GOA
	E2E (Up to Build Date 9-1-70)	Frt.	C	—	—	—	—	—	1	—	—	3102-3 GOE
		Rr.	C	—	—	—	—	—	1	—	—	3202-3 GOE
	E1F, E2F (Up to Build Date 9-1-70)		C	—	—	—	—	—	1	—	—	3102-3 GOF
		Rr.	C	—	—	—	—	—	1	—	—	3202-3 GOF

TYPE LETTERS Indicates: J - Challenger, B - Barracuda, V - Valiant, L - Dart, R - Belvedere, W - Coronet, P - Plymouth, D - Dodge, C - Chrysler, Y - Imperial

NUMERALS INDICATE: 21 - 2 DR. SED., 23 - 2 DR. H.T., 27 - CONV. CPE., 29 - FAST BACK, 41 - 4 DR. SED., 43 - 4 DR. H.T., 45 - 6 PASS. STA. WGN., 46 - 9 PASS. STA. WGN.

AR Indicates use as required.
= Indicates parts not listed in any previous parts book
Numerals in parentheses ( ) refer to notes.
★ Indicates change or addition.

Printed in U.S.A.
January 1972

Right and left part numbers are on same line, first number is right, second number is left.

CODE	PART NAME		MODEL CODES	SEE BOTTOM NOTE 21	23	27	29	41	43	45	46	PART NUMBER
23-92-5	PANEL, Door Trim Cont'd.											
	E2L (Up to Build Date 9-1-70)	Frt.	C	—	—	—	—	—	1	—	—	3102-3 GOL
		Rr.	C	—	—	—	—	—	1	—	—	3202-3 GOL
	E1X, E2X (Up to Build Date 9-1-70)	Frt.	C	—	—	—	—	—	1	—	—	3102-3 GOX
		Rr.	C	—	—	—	—	—	1	—	—	3202-3 GOX
	E1Y (Up to Build Date 9-1-70)	Frt.	C	—	—	—	—	—	1	—	—	3102-3 GOY
		Rr.	C	—	—	—	—	—	1	—	—	3202-3 GOY
	E1A (After Build Date 9-1-70)	Frt.	C	—	—	—	—	—	1	—	—	3182-3 GOA
		Rr.	C	—	—	—	—	—	1	—	—	3292-3 GOA
	E1B (After Build Date 9-1-70)	Frt.	C	—	—	—	—	—	1	—	—	3182-3 GOB
		Rr.	C	—	—	—	—	—	1	—	—	3484-5 GOB
	E2E (After Build Date 9-1-70)	Frt.	C	—	—	—	—	—	1	—	—	3182-3 GOE
		Rr.	C	—	—	—	—	—	1	—	—	3484-5 GOE
	E1F, E2F (After Build Date 9-1-70)	Frt.	C	—	—	—	—	—	1	—	—	3182-3 GOF
		Rr.	C	—	—	—	—	—	1	—	—	3484-5 GOF
	E2L (After Build Date 9-1-70)	Frt.	C	—	—	—	—	—	1	—	—	3182-3 GOL
		Rr.	C	—	—	—	—	—	1	—	—	3484-5 GOL
	E1X, E2X (After Build Date 9-1-70)	Frt.	C	—	—	—	—	—	1	—	—	3182-3 GOX
		Rr.	C	—	—	—	—	—	1	—	—	3484-5 GOX
	E1Y (After Build Date 9-1-70)	Frt.	C	—	—	—	—	—	1	—	—	3182-3 GOY
		Rr.	C	—	—	—	—	—	1	—	—	3484-5 GOY
	G1A	Frt	C	—	—	—	—	—	1	—	—	3164-5 GA6
		Rr.	C	—	—	—	—	—	1	—	—	3436-7 GA6
	G1B	Frt	C	—	—	—	—	—	1	—	—	3164-5 GB2
		Rr	C	—	—	—	—	—	1	—	—	3436-7 GB2
	G2E	Frt	C	—	—	—	—	—	1	—	—	3164-5 GE8
		Rr	C	—	—	—	—	—	1	—	—	3436-7 GE8
	G1F, G2F	Frt	C	—	—	—	—	—	1	—	—	3164-5 GF7
		Rr	C	—	—	—	—	—	1	—	—	3436-7 GF7
	G2L	Frt	C	—	—	—	—	—	1	—	—	3164-5 GL2
		Rr	C	—	—	—	—	—	1	—	—	3436-7 GL2
	G1X, G2X	Frt	C	—	—	—	—	—	1	—	—	3164-5 GX9
		Rr	C	—	—	—	—	—	1	—	—	3436-7 GX9
	G1Y	Frt	C	—	—	—	—	—	1	—	—	3164-5 GY5
		Rr	C	—	—	—	—	—	1	—	—	3436-7 GY5
	L4B, L7B	Frt.	C	—	—	—	—	—	1	—	—	3134-5 GBB
		Rr.	C	—	—	—	—	—	1	—	—	3210-1 GBB
	L4B	Frt.	C	—	—	—	—	—	1	—	—	3134-5 GEE
		Rr.	C	—	—	—	—	—	1	—	—	3210-1 GEE
	L3F, L7F, L8F	Frt.	C	—	—	—	—	—	1	—	—	3134-5 GFF
		Rr.	C	—	—	—	—	—	1	—	—	3210-1 GFF
	L3L	Frt.	C	—	—	—	—	—	1	—	—	3134-5 GLL
		Rr.	C	—	—	—	—	—	1	—	—	3210-1 GLL
	L3X, L4X, L8X	Frt.	C	—	—	—	—	—	1	—	—	3134-5 GOX
		Rr.	C	—	—	—	—	—	1	—	—	3210-1 GOX
	L7XL	Frt.	C	—	—	—	—	—	1	—	—	3134-5 GXL
		Rr.	C	—	—	—	—	—	1	—	—	3210-1 GXL
	L3Y	Frt.	C	—	—	—	—	—	1	—	—	3134-5 GYY
		Rr.	C	—	—	—	—	—	1	—	—	3210-1 GYY
	H7B, H9B	Frt.	C	—	—	—	—	—	1	—	—	3148-9 GBB
		Rr.	C	—	—	—	—	—	1	—	—	3994-5 GBB
	H7A, H9A	Frt.	C	—	—	—	—	—	1	—	—	3148-9 GAA
		Rr.	C	—	—	—	—	—	1	—	—	3994-5 GAA
	H7F, H8F, H9F	Frt.	C	—	—	—	—	—	1	—	—	3148-9 GFF
		Rr.	C	—	—	—	—	—	1	—	—	3994-5 GFF
	HLT	Frt.	C	—	—	—	—	—	1	—	—	3148-9 GTT

TYPE LETTERS Indicates: J - Challenger, B - Barracuda, V - Valiant, L - Dart, R - Belvedere, W - Coronet, P - Plymouth, D - Dodge, C - Chrysler, Y - Imperial

NUMERALS INDICATE: 21 - 2 DR. SED., 23 - 2 DR. H.T., 27 - CONV. CPE., 29 - FAST BACK, 41 - 4 DR. SED., 43 - 4 DR. H.T., 45 - 6 PASS. STA. WGN., 46 - 9 PASS. STA. WGN.

AR Indicates use as required.
≠ Indicates parts not listed in any previous parts book
Numerals in parentheses ( ) refer to notes.
★ Indicates change or addition.

Printed in U.S.A.
January 1972

Right and left part numbers are on same line, first number is right, second number is left.

CODE	PART NAME		MODEL CODES	SEE BOTTOM NOTE 21	23	27	29	41	43	45	46	PART NUMBER
23-92-5	PANEL, Door Trim Cont'd.											
		Rr.	C	—	—	—	—	—	1	—	—	3994-5 GTT
	H7X, H8X, H9X	Frt.	C	—	—	—	—	—	1	—	—	3148-9 GOX
		Rr.	C	—	—	—	—	—	1	—	—	2994-5 GOX
	H9Y	Frt.	C	—	—	—	—	—	1	—	—	3148-9 GYY
		Rr.	C	—	—	—	—	—	1	—	—	3994-5 GYY
	H8L	Frt.	C	—	—	—	—	—	1	—	—	3148-9 GLL
		Rr.	C	—	—	—	—	—	1	—	—	3994-5 GLL
	S4B (Up to Build Date 9-1-70)	Frt.	C	—	—	—	—	—	1	—	—	4460-1 GBB
		Rr.	C	—	—	—	—	—	1	—	—	4462-3 GBB
	S4E (Up to Build Date 9-1-70)	Frt.	C	—	—	—	—	—	1	—	—	4460-1 GEE
		Rr.	C	—	—	—	—	—	1	—	—	4462-3 GEE
	S6F (Up to Build Date 9-1-70)	Frt.	C	—	—	—	—	—	1	—	—	4460-1 GFF
		Rr.	C	—	—	—	—	—	1	—	—	4462-3 GFF
	S3L, S6L (Up to Build Date 9-1-70)	Frt.	C	—	—	—	—	—	1	—	—	4460-1 GLL
		Rr.	C	—	—	—	—	—	1	—	—	4462-3 GLL
	S6T (Up to Build Date 9-1-70)	Frt.	C	—	—	—	—	—	1	—	—	4460-1 GTT
		Rr.	C	—	—	—	—	—	1	—	—	4462-3 GTT
	S4X, S6X (Up to Build Date 9-1-70)	Frt.	C	—	—	—	—	—	1	—	—	4460-1 GOX
		Rr.	C	—	—	—	—	—	1	—	—	4462-3 GOX
	S6XW (Up to Build Date 9-1-70)	Frt.	C	—	—	—	—	—	1	—	—	4460-1 GXW
		Rr.	C	—	—	—	—	—	1	—	—	4462-3 GXW
	S3Y (Up to Build Date 9-1-70)	Frt.	C	—	—	—	—	—	1	—	—	4460-1 GYY
		Rr.	C	—	—	—	—	—	1	—	—	4462-3 GYY
	S4B (After Build Date 9-1-70)	Frt.	C	—	—	—	—	—	1	—	—	4422-3 GBB
		Rr.	C	—	—	—	—	—	1	—	—	3996-7 GBB
	S4E (After Build Date 9-1-70)	Frt.	C	—	—	—	—	—	1	—	—	4422-3 GEE
		Rr.	C	—	—	—	—	—	1	—	—	3996-7 GEE
	S3F, S6F (After Build Date 9-1-70)	Frt.	C	—	—	—	—	—	1	—	—	4422-3 GFF
		Rr.	C	—	—	—	—	—	1	—	—	3996-7 GFF
	S3L, S6L (After Build Date 9-1-70)	Frt.	C	—	—	—	—	—	1	—	—	4422-3 GLL
		Rr.	C	—	—	—	—	—	1	—	—	3996-7 GLL
	S6T (After Build Date 9-1-70)	Frt.	C	—	—	—	—	—	1	—	—	4422-3 GTT
		Rr.	C	—	—	—	—	—	1	—	—	3996-7 GTT
	S4X, S6X (After Build Date 9-1-70)	Frt.	C	—	—	—	—	—	1	—	—	4422-3 GOX
		Rr.	C	—	—	—	—	—	1	—	—	3996-7 GOX
	S6XW (After Build Date 9-1-70)	Frt.	C	—	—	—	—	—	1	—	—	4422-3 GXW
		Rr.	C	—	—	—	—	—	1	—	—	3996-7 GXW
	S3Y (After Build Date 9-1-70)	Frt.	C	—	—	—	—	—	1	—	—	4422-3 GYY
		Rr.	C	—	—	—	—	—	1	—	—	3996-7 GYY
	MRB		Y	—	1	—	—	—	—	—	—	3260-1 GB2
	MBB		Y	—	1	—	—	—	—	—	—	3260-1 GB9
	MBA		Y	—	1	—	—	—	—	—	—	3260-1 GA6
	MRE		Y	—	1	—	—	—	—	—	—	3260-1 GE8
	MRF, MBF		Y	—	1	—	—	—	—	—	—	3260-1 GF7
	MBM		Y	—	1	—	—	—	—	—	—	3260-1 GM9
	MBTT		Y	—	1	—	—	—	—	—	—	3260-1 GTT
	MRT		Y	—	1	—	—	—	—	—	—	3260-1 GT7
	MRXW		Y	—	1	—	—	—	—	—	—	3260-1 GXW
	MBX, MRX		Y	—	1	—	—	—	—	—	—	3260-1 GX9
	MBY, MRY		Y	—	1	—	—	—	—	—	—	3260-1 GY5
	MDB, MLB	Frt.	Y	—	—	—	—	—	1	—	—	3256-7 GB9
		Rr.	Y	—	—	—	—	—	1	—	—	3986-7 GB9
	MLE	Frt.	Y	—	—	—	—	—	1	—	—	3256-7 GE8

TYPE LETTERS Indicates: J - Challenger, B - Barracuda, V - Valiant, L - Dart, R - Belvedere, W - Coronet, P - Plymouth, D - Dodge, C - Chrysler, Y - Imperial

NUMERALS INDICATE: 21 - 2 DR. SED., 23 - 2 DR. H.T., 27 - CONV. CPE., 29 - FAST BACK, 41 - 4 DR. SED., 43 - 4 DR. H.T., 45 - 6 PASS. STA. WGN., 46 - 9 PASS. STA. WGN.

AR Indicates use as required.
= Indicates parts not listed in any previous parts book
Numerals in parentheses ( ) refer to notes.
★ Indicates change or addition.

Printed in U.S.A.
January 1972

Right and left part numbers are on same line, first number is right, second number is left.

CODE	PART NAME		MODEL CODES	SEE BOTTOM NOTE 21	23	27	29	41	43	45	46	PART NUMBER
23-92-5	PANEL, Door Trim Cont'd.											
		Rr.	Y	—	—	—	—	—	1	—	—	3986-7 GE8
	MDF, MLF	Frt.	Y	—	—	—	—	—	1	—	—	3256-7 GF7
		Rr.	Y	—	—	—	—	—	1	—	—	3986-7 GF7
	MDTT	Frt.	Y	—	—	—	—	—	1	—	—	3256-7 GTT
		Rr.	Y	—	—	—	—	—	1	—	—	3986-7 GTT
	MDX, MLX	Frt.	Y	—	—	—	—	—	1	—	—	3256-7 GX9
		Rr.	Y	—	—	—	—	—	1	—	—	3986-7 GX9
	MDY, MLY	Frt.	Y	—	—	—	—	—	1	—	—	3256-7 GY5
		Rr.	Y	—	—	—	—	—	1	—	—	3986-7 GY5
	MDA, MLA	Frt.	Y	—	—	—	—	—	1	—	—	3256-7 GA6
		Rr.	Y	—	—	—	—	—	1	—	—	3986-7 GA6
	MDM, MLM	Frt.	Y	—	—	—	—	—	1	—	—	3256-7 GM9
		Rr.	Y	—	—	—	—	—	1	—	—	3986-7 GM9
	MLT	Frt.	Y	—	—	—	—	—	1	—	—	3256-7 GT7
		Rr.	Y	—	—	—	—	—	1	—	—	3986-7 GT7
	MLXW	Frt.	Y	—	—	—	—	—	1	—	—	3256-7 GXW
		Rr.	Y	—	—	—	—	—	1	—	—	3986-7 GXW
23-92-8	FASTENER, Front & Rear & Quarter Trim Panel		V,L,R,W, P,D,C,Y	AR	AR	—	AR	AR	AR	AR	AR	1623 945
	Clip, Door Trim Panel at Belt											
	Retainer	Canada	B	—	2	2	—	—	—	—	—	3415 888
		Canada	J	—	2	2	2	—	—	—	—	3509 041
	Screw, W/Shoulder Door Trim Panel											
	Att.		B,J	—	16	16	16	—	—	—	—	6028 157
23-96-3	PANEL, Luggage Compartment Front Lining		V,L	—	—	—	1	—	—	—	—	2879 897
			V,L	—	1	—	—	1	—	—	—	2787 855
			B,J	—	1	—	—	—	—	—	—	2879 896
			R,W	—	1	—	—	1	—	—	—	3416 391
			P,D	—	—	—	1	1	1	—	—	2878 160
23-96-8	PANEL, Luggage Compartment Lining											
	Side Frt.		C,Y	—	1	—	—	1	1	—	—	3415 652-3
	Side Rr.		C,Y	—	—	—	—	1	1	—	—	3415 654-5
	Side Rr. (Up to Build Date 4-1-71)		C	—	1	—	—	—	—	—	—	3509 078-9
	Side (Up to Build Date 4-1-71)		C	—	—	—	—	1	1	—	—	3415 656-7
	Side Rr. (After Build Date 4-1-71)		C	—	1	—	—	—	—	—	—	3509 996-7
	Side Rr. (After Build Date 4-1-71)		C	—	—	—	—	1	1	—	—	3509 998-9
	Side Lt.		Y	—	—	—	—	—	1	—	—	3415 657
	Side Rr. Rt.		Y	—	1	—	—	—	1	—	—	2589 222
	Side Rr. Lt.		Y	—	1	—	—	—	—	—	—	2879 427
	Side Rt.		Y	—		—	—	—	1	—	—	2879 700
	Side Frt. Rt.		W	—	—	—	1	—	—	—	—	3509 814
	Lt.		W	—	—	—	1	—	—	—	—	3509 815
	Side Rear Rt.		W	—	—	—	1	—	—	—	—	3509 816
	Lt.		W	—	—	—	1	—	—	—	—	3509 817
	Cover, Wheel House and Quarter Trim											
	L2B, H2B, P2B, D3B, P4B, P3B		R,W	—	—	—	—	—	—	1	1	2032-3 GB7
	H2F, P2F, D3F, P4F, P3F		R,W	—	—	—	—	—	—	1	1	2032-3 GF7
	L2T, H2T, P2T, D3T, P4T, P3T		R,W	—	—	—	—	—	—	1	1	2032-3 GT6
	D2X, H2X, P2X, L2X, P4X		P,W	—	—	—	—	—	—	1	1	2032-3 GX9
	Front											
	E2B, L2B, M2B, H4B, B2B, F2B, H7B		P,D	—	—	—	—	—	—	1	1	2028-9 GB3
	L2F, M2F, H4F, F2F, H7F, D4F		P,D	—	—	—	—	—	—	1	1	2028-9 GF8
	E2T, L2T, M2T, H4T, H8T, B2T, F2T		P,D	—	—	—	—	—	—	1	1	2028-9 GT6
	L2XA, M2XA, H4XA, H7XA, H8XA, L2X, F2XA, H4X, H7X, H8X, E2XA, D4X		P,D	—	—	—	—	—	—	1	1	2028-9 EX9
	L4T, L8T		C	—	—	—	—	—	—	1	1	2076-7 GT6
	L4X, L8X		C	—	—	—	—	—	—	1	1	2076-7 FX9
	L7XL		C	—	—	—	—	—	—	1	1	2076-7 GL1

TYPE LETTERS Indicates: J - Challenger, B - Barracuda, V - Valiant, L - Dart, R - Belvedere, W - Coronet, P - Plymouth, D - Dodge, C - Chrysler, Y - Imperial

NUMERALS INDICATE: 21 - 2 DR. SED., 23 - 2 DR. H.T., 27 - CONV. CPE., 29 - FAST BACK, 41 - 4 DR. SED., 43 - 4 DR. H.T., 45 - 6 PASS. STA. WGN., 46 - 9 PASS. STA. WGN.

AR Indicates use as required.
# Indicates parts not listed in any previous parts book
Numerals in parentheses ( ) refer to notes.
★ Indicates change or addition.

Printed in U.S.A.
January 1972

Right and left part numbers are on same line, first number is right, second number is left.

CODE	PART NAME	MODEL CODES	SEE BOTTOM NOTE 21	23	27	29	41	43	45	46	PART NUMBER
23-96-8	PANEL, Luggage Compartment Lining Cont'd.										
	L4B (Up to Build Date 8-1-70)	C	—	—	—	—	—	—	1	1	2076-7 GB2
	L4F, L8F (Up to Build Date 8-1-70)	C	—	—	—	—	—	—	1	1	2076-7 GF7
	L8Y (Up to Build Date 8-1-70)	C	—	—	—	—	—	—	1	1	2076-7 GY5
	L4B (After Build Date 8-1-70)	C	—	—	—	—	—	—	1	1	2076-7 GB3
	L4F, L8F (After Build Date 8-1-70)	C	—	—	—	—	—	—	1	1	2076-7 GF8
	L8Y (After Build Date 8-1-70)	C	—	—	—	—	—	—	1	1	2076-7 GY7
	Rear Left										
	E2B, L2B, M2B, H4B, B2B, F2B, H7B	P,D	—	—	—	—	—	—	1	1	3583 GB2
	L2F, M2F, H4F, F2F, H7F	P,D	—	—	—	—	—	—	1	1	3583 GF7
	E2T, L2T, M2T, H4T, H8T, B2T, F2T	P,D	—	—	—	—	—	—	1	1	3583 GT6
	E2XA, L2XA, M2XA, H4XA, H7XA, H8XA, F2XA, L2X, H4X, H8X, H7X	P,D	—	—	—	—	—	—	1	1	3583 EX9
	Rear Left										
	L4B	C	—	—	—	—	—	—	1	1	2058 GB3
	L4F, L8F	C	—	—	—	—	—	—	1	1	2058 GF8
	L4T, L8T	C	—	—	—	—	—	—	1	1	2058 GT6
	L4X, L8X	C	—	—	—	—	—	—	1	1	2058 FX9
	L8Y	C	—	—	—	—	—	—	1	1	2058 GY7
	L7XL	C	—	—	—	—	—	—	1	1	2058 GL1
23-96-10	COVER, Luggage Compartment Deck Opening Lower Trim	Y	—	1	—	—	—	1	—	—	2877 992
23-96-12	PANEL ASSY., Luggage Compartment Jack Stowage Door w/o Air/Cond.	Y	—	1	—	—	—	1	—	—	2878 889
	w/Air/Cond.	Y	—	1	—	—	—	1	—	—	2878 890
23-96-15	PANEL, Luggage Compartment Air/Cond. Cover	Y	—	1	—	—	—	—	—	—	2879 411
		Y	—	—	—	—	—	1	—	—	2879 410
	Fastener, Luggag3 Compartment	P,D,C,Y	2	2	—	2	2	2	—	—	6000 903
23-96-26	LID ASSY., Wheelhouse Cover Storage Compartment, Frt.										
	L4T, L8T	C	—	—	—	—	—	—	1	1	2078-9 GT6
	L4X, L8X	C	—	—	—	—	—	—	1	1	2078-9 FX9
	L7XL	C	—	—	—	—	—	—	1	1	2078-9 GL1
	L4B (Up to Build Date 8-1-70)	C	—	—	—	—	—	—	1	1	2078-9 GB2
	L4F, L8F (Up to Build Date 8-1-70)	C	—	—	—	—	—	—	1	1	2078-9 GF7
	L8Y (Up to Build Date 8-1-70)	C	—	—	—	—	—	—	1	1	2078-9 GY5
	L4B (After Build Date 8-1-70)	C	—	—	—	—	—	—	1	1	2078-9 GB3
	L4F, L8F (After Build Date 8-1-70)	C	—	—	—	—	—	—	1	1	2078-9 GF8
	L8Y (After Build Date 8-1-70)	C	—	—	—	—	—	—	1	1	2078-9 GY7
	Rear Left										
	L4T, L8T	C	—	—	—	—	—	—	1	1	2059 GT6
	L4X, L8X	C	—	—	—	—	—	—	1	1	2059 FX9
	L7XL	C	—	—	—	—	—	—	1	1	2059 GL1
	L4B (Up to Build Date 8-1-70)	C	—	—	—	—	—	—	1	1	2059 GB2
	L4F, L8F (Up to Build Date 8-1-70)	C	—	—	—	—	—	—	1	1	2059 GF7
	L8Y (Up to Build Date 8-1-70)	C	—	—	—	—	—	—	1	1	2059 GY5
	L4B (After Build Date 8-1-70)	C	—	—	—	—	—	—	1	1	2059 GB3
	L4F, L8F (After Build Date 8-1-70)	C	—	—	—	—	—	—	1	1	2059 GF8
	L8Y (After Build Date 8-1-70)	C	—	—	—	—	—	—	1	1	2059 GY7
23-96-31	GRILLE, Wheelhouse Cover Rt.	P,D,C	—	—	—	—	—	—	1	1	2066 GX9
	Lt.	P,D,C	—	—	—	—	—	—	1	1	2067 GX9
	Lid	C	—	—	—	—	—	—	2	2	2068 GX9
23-99-4	COVER, Center Pillar Lower Trim L2B, H1B, H2B, P2B, D3B, P3B, P4B	R,W	—	—	—	—	2	—	2	2	4113 GB7
	H1F, H2F, P2F, D3F, P3F, P4F	R,W	—	—	—	—	2	—	2	2	4113 GF7
	L2T, K1T, K2T, T2T, H1T, H2T, P2T, D3T, P3T, P4T	R,W	—	—	—	—	2	—	2	2	4113 GT6
	D2X, K2X, T2X, H1X, H2X, P2X,										

TYPE LETTERS Indicates: J - Challenger; B - Barracuda; V - Valiant; L - Dart; R - Belvedere; W - Coronet; P - Plymouth; D - Dodge; C - Chrysler; Y - Imperial

NUMERALS INDICATE: 21 - 2 DR. SED.; 23 - 2 DR. H.T.; 27 - CONV. CPE.; 29 - FAST BACK; 41 - 4 DR. SED.; 43 - 4 DR. H.T.; 45 - 6 PASS. STA. WGN.; 46 - 9 PASS. STA. WGN.

AR Indicates use as required.
= Indicates parts not listed in any previous parts book
Numerals in parentheses ( ) refer to notes.
★ Indicates change or addition.

Printed in U.S.A.
January 1972

Right and left part numbers are on same line, first number is right, second number is left.

CODE	PART NAME	MODEL CODES	SEE BOTTOM NOTE 21	23	27	29	41	43	45	46	PART NUMBER
23-99-4	COVER, Center Pillar Lower Trim Cont'd.										
	L2X, P3X, P4X	R,W	—	—	—	—	2	—	2	2	4113 GX9
	H1Y, H2Y, P3Y	R,W	—	—	—	—	1	—	—	—	4113 GY4
	E1B, E2B, L1B, L2B, M2B, M4B, H7B, H3B, H4B, M1B, B1B, B2B, F1B, F2B, L1B, L3B, L7B, L4B, G1B	P,D,C	—	—	—	—	1	—	1	1	2824-5 GB2
	H9B, HHB, S7B	C	—	—	—	—	1	—	—	—	2824-5 GB7
	L1F, L2F, M2F, M4F, H7F, H3F, H4F, M1F, F1F, F2F, E1F, E2F, L3F, L7F, L8F, H9F, G1F, D4F	P,D,C	—	—	—	—	1	—	1	1	2824-5 GF7
	E1L, G1L, L3L, L7XL, H8L	C	—	—	—	—	1	—	1	1	2824-5 GL1
	K1T, K2T, E1T, E2T, K5T, K6T, L1T, L2T, M2T, M4T, H8T, H3T, H4T, B1T, B2T, F1T, F2T, L4T, L8T, HLT	P,D,C	—	—	—	—	1	—	1	1	2824-5 GT6
	K2X, L2XA, M2XA, M4XA, H7XA, H8XA, H3XA, H4XA, M1XA, M8XA, B2XA, K1A, K2A, K5A, K6A, F2XA, H7X, H8X, H3X, H4X, L1X, L2X, F2XA, E1X, E2X, D4X, L3X, L4X, L8X, H9X, D2XA, G1X, G2X	P,D,C	—	—	—	—	1	—	1	1	2824-5 EX9
	M4Y, H7Y, H3Y, M1Y, H4Y, L1Y, E1Y, L3Y, H9Y, L8Y, G1Y, D3Y	P,D,C	—	—	—	—	1	—	1	1	2824-5 GY5
	H3A, H7A, E1A, H9A, S7A, G1A	D,C	—	—	—	—	1	—	—	—	2824-5 GA6
	E2E	C	—	—	—	—	1	—	—	—	2824-5 GE9
	M1B, M4B, H3B, H4B, H7B, L1B, L2B, M3B, E1B, L4B, L7B, S4B, G1B, F1B	P,D,C	—	—	—	—	—	1	—	—	2822-3 GB2
	MDB, MLB	Y	—	—	—	—	—	1	—	—	2822-3 GB9
	M4E, H4E, E2E, L4E, S4E, MLE, G2E	P,D,C,Y	—	—	—	—	—	1	—	—	2822-3 GE9
	M1F, M4F, H3F, H4F, H6F, H7F, L1F, L2F, M3F, E1F, E2F, L3F, L7F, L8F, H9F, H8F, S3F, MDF, MLF, G1F, G2F, F1F, D4F	P,D,C,Y	—	—	—	—	—	1	—	—	2822-3 GF7
	M4T, H3T, H4T, L2T, HLT, S6T, MLT	P,D,C,Y	—	—	—	—	—	1	—	—	2822-3 GT6
	MDTT	Y	—	—	—	—	—	1	—	—	2822-3 GT1
	H3A, H7A, G1A, E1A, H9A	D,C	—	—	—	—	—	1	—	—	2822-3 GA6
	G2L, E2L, L3L, L7XL, H8L, S3L, S6L	C	—	—	—	—	—	1	—	—	2822-3 GL1
	H7B, H9B	C	—	—	—	—	—	1	—	—	2822-3 GB7
	M1XA, M4XA, M8XA, H3XA, H4XA, H6XA, H7XA, L1X, L2X, H3X, H4X, H7X, M3X, M4X, E1X, E2X, L3X, L4X, L8X, H9X, H8X, S4X, S6X, MDX, MLX, G1X, G2X, F2XA, D4X	P,D,C,Y	—	—	—	—	—	1	—	—	2822-3 GX9
	MLXW	Y	—	—	—	—	—	1	—	—	2822-3 GW1
	MDY, MLY, G1Y, D3Y	P,D,C,Y	—	—	—	—	—	1	—	—	2822-3 GY5
	MDA, MLA	Y	—	—	—	—	—	1	—	—	2822-3 GA6
	MDM, MLM	Y	—	—	—	—	—	1	—	—	2822-3 GM9
	CAP, Center Pillar Upper Trim										
	L2B, H1B, H2B, P2B, P3B, P4B	R,W	—	—	—	—	2	—	2	2	4112 GB7
	H1F, H2F, P2F, P3F, P4F, P6F	R,W	—	—	—	—	2	—	2	2	4112 GF7
	L2T, K1T, K2T, T2T, H1T, H2T, P2T, P3T, P6T	R,W	—	—	—	—	2	—	2	2	4112 GT6
	D2X, K2X, T2X, H1X, H2X, P2X, L2X, P3X, P4X, P6X	R,W	—	—	—	—	2	—	2	2	4112 GX9
	H1Y, H2Y, P3Y	R,W	—	—	—	—	2	—	—	—	4112 GY4
23-99-6	COVER, Body Lock Pillar Upper Trim										
	L2B, H2B, P2B, D3B, P4B, P3B	R,W	—	—	—	—	—	—	1	1	2816-7 GB7
	H2F, P2F, D3F, P4F, P3F	R,W	—	—	—	—	—	—	1	1	2816-7 GF7
	L2T, H2T, P2T, D3T, P4T, P3T	R,W	—	—	—	—	—	—	1	1	2816-7 GT6
	D2X, H2X, P2X, L2X, P4X	R,W	—	—	—	—	—	—	1	1	2816-7 GX9

TYPE LETTERS Indicates: J - Challenger; B - Barracuda; V - Valiant; L - Dart; R - Belvedere; W - Coronet; P - Plymouth; D - Dodge; C - Chrysler; Y - Imperial

NUMERALS INDICATE: 21 - 2 DR. SED.; 23 - 2 DR. H.T.; 27 - CONV. CPE.; 29 - FAST BACK; 41 - 4 DR. SED.; 43 - 4 DR. H.T.; 45 - 6 PASS. STA. WGN.; 46 - 9 PASS. STA. WGN.

AR Indicates use as required.

Numerals in parentheses ( ) refer to notes.

Printed in U.S.A. January 1972

Ⱡ Indicates parts not listed in any previous parts book

★ Indicates change or addition.

Right and left part numbers are on same line, first number is right, second number is left.

CODE	PART NAME	MODEL CODES	SEE BOTTOM NOTE 21	23	27	29	41	43	45	46	PART NUMBER
23-99-6	COVER, Body Lock Pillar Upper Trim Cont'd.										
	Rt. - w o Air Cond. E2B, L2B, M2B, H4B, B2B, F2B, H7B, L4B	P,D,C	—	—	—	—	—	—	1	1	2840 GB2
	L2F, M2F, H4F, F2F, H7F, L4F, L8F, D4F	P,D,C	—	—	—	—	—	—	1	1	2840 GF7
	L7XL	C	—	—	—	—	—	—	1	1	2840 GL1
	E2XA, L2XA, M2XA, H4XA, H7XA, H8XA, F2XA, L2X, H4X, H7X, H8X, L4X, L8X, D4X	P,D,C	—	—	—	—	—	—	1	1	2840 EX9
	L8Y	C	—	—	—	—	—	—	1	1	2840 GY5
	E2T, L2T, M2T, H4T, H8T, B2T, F2T, L4T, L8T	P,D,C	—	—	—	—	—	—	1	1	2840 GT6
	Lt. E2B, L2B, M2B, H4B, B2B, F2B, H7B, L4B	P,D,C	—	—	—	—	—	—	1	1	2841 GB2
	L2F, M2F, H4F, F2F, H7F, L4F, L8F, D4F	P,D,C	—	—	—	—	—	—	1	1	2841 GF7
	E2XA, L2XA, M2XA, H4XA, H7XA, H8XA, L2X, F2XA, H4X, H7X, H8X, L4X, L8X, D4X	P,D,C	—	—	—	—	—	—	1	1	2841 EX9
	E2T, L2T, M2T, H4T, H8T, B2T, F2T, L4T, L8T	P,D,C	—	—	—	—	—	—	1	1	2841 GT6
	L7XL	C	—	—	—	—	—	—	1	1	2841 GL1
	L8Y	C	—	—	—	—	—	—	1	1	2841 GY5
	Cover, Body Lock Pillar Upper I S Trim	P	2	—	—	—	—	—	—	—	2820 EX9
	Rt., w Air Cond. E2B, L2B, M2B, H4B, F2B, H7B, L4B	P,D,C	—	—	—	—	—	—	1	1	1558 GB2
	L2F, M2F, H4F, F2F, H7F, L4F, L8F	P,D,C	—	—	—	—	—	—	1	1	1558 GF7
	E2T, L2T, M2T, H4T, H8T, B2T, F2T, L4T, L8T, D4F	P,D,C	—	—	—	—	—	—	1	1	1558 GT6
	L2XA, M2XA, H4XA, H7XA, H8XA, L2X, F2XA, H7X, H4X, H8X, L4X, L8X, D4X	P,D,C	—	—	—	—	—	—	1	1	1558 FX9
	L7XL	C	—	—	—	—	—	—	1	1	1558 FL3
	L8Y	C	—	—	—	—	—	—	1	1	1558 GY5
23-99-9	RETAINER, Quarter Panel T Gate Pillar Frt., Support Trim Lt.	P,D,C	—	—	—	—	—	—	1	1	2894 854
23-99-41	COVER, Tail Gate Opening Pillar Upper L2B, H2B, P2B, D3B, P3B, P4B	R,W	—	—	—	—	—	—	1	1	2802-3 GB7
	H2F, P2F, D3F, P3F, P4F	R,W	—	—	—	—	—	—	1	1	2802-3 GF7
	L2T, H2T, P2T, D3T, P3T, P4T	R,W	—	—	—	—	—	—	1	1	2802-3 GT6
	D2X, H2X, P2X, L2X, P4X	R,W	—	—	—	—	—	—	1	1	2802-3 GX9
	E2B, L2B, M2B, H4B, B2B, F2B, H7B, L4B	P,D,C	—	—	—	—	—	—	1	1	2834-5 GB2
	L8Y	C	—	—	—	—	—	—	1	1	2834-5 GY5
	L2F, M2F, H4F, F2F, H7F, L4F, L8F, D4F	P,D,C	—	—	—	—	—	—	1	1	2834-5 GF7
	E2T, L2T, M2T, H4T, H8T, B2T, F2T, L4T, L8T	P,D,C	—	—	—	—	—	—	1	1	2834-5 GT6
	L7XL	C	—	—	—	—	—	—	1	1	2834-5 GL1
	E2XA, L2XA, M2XA, H4XA, H7XA, H8XA, L2X, F2XA, H4X, H7X, H8X, L4X, L8X, D4X,	P,D,C	—	—	—	—	—	—	1	1	2834-5 EX9
23-101-3	PANEL, Quarter Trim w/o Woodgrain L4B, L2B, L1B, E2B, M1B	V,L	—	—	—	1	—	—	—	—	4716-7 GB7
	L4F, L1F, M1F	V,L	—	—	—	1	—	—	—	—	4716-7 GF7
	L4T, L2T, E2T	V,L	—	—	—	1	—	—	—	—	4716-7 GT7
	L6XV, M6XV	V,L	—	—	—	1	—	—	—	—	4716-7 GV1

TYPE LETTERS Indicates J - Challenger, B - Barracuda, V - Valiant, L - Dart, R - Belvedere, W - Coronet, P - Plymouth, D - Dodge, C - Chrysler, Y - Imperial

NUMERALS INDICATE: 21 - 2 DR. SED., 23 - 2 DR. H.T., 27 - CONV. CPE., 29 - FAST BACK, 41 - 4 DR. SED., 43 - 4 DR. H.T., 45 - 6 PASS. STA. WGN., 46 - 9 PASS. STA. WGN.

AR Indicates use as required.
= Indicates parts not listed in any previous parts book

Numerals in parentheses ( ) refer to notes.
★ Indicates change or addition.

Printed in U.S.A.
January 1972

Right and left part numbers are on same line, first number is right, second number is left.

CODE	PART NAME	MODEL CODES	SEE BOTTOM NOTE 21	23	27	29	41	43	45	46	PART NUMBER
23-101-3	PANEL, Quarter Trim w o Woodgrain Cont'd.										
	L4X, L2X, L1X, L1XX, L6X, E2X, M6X, M1X, M1XX	V,L	—	—	—	1	—	—	—	—	4716-7 GX9
	L4Y	V	—	—	—	1	—	—	—	—	4716-7 GY3
	L6XW, M6XW	V,L	—	—	—	1	—	—	—	—	4716-7 GW1
	w/Wood Grain										
	L2B, L1B, L4B, E2B, M1B	V,L	—	—	—	1	—	—	—	—	4602-3 GB7
	L1F, L4F, M1F	V,L	—	—	—	1	—	—	—	—	4602-3 GF7
	L2T, L4T, E2T	V,L	—	—	—	1	—	—	—	—	4602-3 GT7
	L6XV, M6XV	V,L	—	—	—	1	—	—	—	—	4602-3 GV1
	L2X, L1X, L1XX, L4X, L6X, E2X, M6X, M1X, M1XX	V,L	—	—	—	1	—	—	—	—	4602-3 GX9
	L4Y	V	—	—	—	1	—	—	—	—	4602-3 GY3
	L6XW, M6XW	V,L	—	—	—	1	—	—	—	—	4602-3 GW1
	H2B, D2B	V,L	—	1	—	—	—	—	—	—	3334-5 GB2
	H2F, D2F	V,L	—	1	—	—	—	—	—	—	3334-5 GF3
	H2XW, H6XW, D2XW, D6XW	V,L	—	1	—	—	—	—	—	—	3334-5 GW1
	H2X, H6X, D2X, D6X	V,L	—	1	—	—	—	—	—	—	3334-5 GX9
	H2Y, D2Y	V,L	—	1	—	—	—	—	—	—	3334-5 GY3
	L2B	L	—	1	—	—	—	—	—	—	4478-9 GB2
	L2F	L	—	1	—	—	—	—	—	—	4478-9 GF3
	L2X	L	—	1	—	—	—	—	—	—	4478-9 GX9
	P6B	B	—	1	—	—	—	—	—	—	4680-1 GB4
	P6F	B	—	1	—	—	—	—	—	—	4680-1 GF8
	P6T, PRT, SRT	B	—	1	—	—	—	—	—	—	4680-1 GT6
	P5X, P6X, PRX, SRX	B	—	1	—	—	—	—	—	—	4680-1 FX9
	P6Y, PRY	B	—	1	—	—	—	—	—	—	4680-1 GY4
	H4B, H6B	B	—	1	—	—	—	—	—	—	4678-9 GB4
	H4F, H6F	B	—	1	—	—	—	—	—	—	4678-9 GF8
	H4T, H6T	B	—	1	—	—	—	—	—	—	4678-9 GT6
	H4XW, H6XW	B	—	1	—	—	—	—	—	—	4678-9 FW1
	H4X, H5X, H5XV, H6X, H6XV	B	—	1	—	—	—	—	—	—	4678-9 FX9
	L6B, H6B	J	—	1	—	—	—	—	—	—	3322-3 GB4
	L6F, H4F, H6F, L5FW	J	—	1	—	—	—	—	—	—	3322-3 GF8
	L6T, H6T	J	—	1	—	—	—	—	—	—	3322-3 GT6
	L6XW, H6XW	J	—	1	—	—	—	—	—	—	3322-3 FW1
	H4X, L6X, H6X	J	—	1	—	—	—	—	—	—	3322-3 FX9
	H6Y	J	—	1	—	—	—	—	—	—	3322-3 GY4
	H5F	J	—	1	—	—	—	—	—	—	4554-5 GF8
	H5X, H5XX, HRX	J	—	1	—	—	—	—	—	—	4554-5 FX9
	Upper										
	E2B, M2B	R	—	1	—	—	—	—	—	—	9702-3 GOB
	E2T, M2T	R	—	1	—	—	—	—	—	—	9702-3 GOT
	E2X, M2X	R	—	1	—	—	—	—	—	—	9702-3 GOX
	M6B, H1B, H2B	R	—	1	—	—	—	—	—	—	3362-3 GOB
	M6XA, H2XA	R	—	1	—	—	—	—	—	—	3362-3 GOA
	M6F, H1F, H2F	R	—	1	—	—	—	—	—	—	3362-3 GFF
	M6T, H1T, H2T	R	—	1	—	—	—	—	—	—	3362-3 GTT
	M5X, M6X, M6XV, H1X, H2X	R	—	1	—	—	—	—	—	—	3362-3 GOX
	M6XW, H2XW	R	—	1	—	—	—	—	—	—	3362-3 GXW
	M6Y, H6Y, H2Y	R	—	1	—	—	—	—	—	—	3362-3 GOY
	P3B, P6B	R	—	1	—	—	—	—	—	—	3358-9 GBU
	P6XA	R	—	1	—	—	—	—	—	—	3358-9 GAU
	P3F, P6F	R	—	1	—	—	—	—	—	—	3358-9 GFU
	P3T, P6T	R	—	1	—	—	—	—	—	—	3358-9 GTU
	P3X, P5X, P6X	R	—	1	—	—	—	—	—	—	3358-? GXU
	P6XW	R	—	1	—	—	—	—	—	—	3358-9 GWU
	P6Y	R	—	1	—	—	—	—	—	—	3358-9 GYU

TYPE LETTERS Indicates J - Challenger, B - Barracuda, V - Valiant, L - Dart, R - Belvedere, W - Coronet, P - Plymouth, D - Dodge, C - Chrysler, Y - Imperial

NUMERALS INDICATE: 21 - 2 DR. SED., 23 - 2 DR. H.T., 27 - CONV. CPE, 29 - FAST BACK, 41 - 4 DR. SED., 43 - 4 DR. H.T., 45 - 6 PASS. STA. WGN., 46 - 9 PASS. STA. WGN.

AR Indicates use as required.
E Indicates parts not listed in any previous parts book
Numerals in parentheses ( ) refer to notes.
★ Indicates change or addition.

Printed in U.S.A.
January 1972

Right and left part numbers are on same line, first number is right, second number is left.

CODE	PART NAME	MODEL CODES	SEE BOTTOM NOTE 21	23	27	29	41	43	45	46	PART NUMBER
23-101-3	PANEL, Quarter Trim w/o Woodgrain Cont'd.										
	Lower w/o Arm Rest										
	M2B, M6B, P6B, H1B, H2B, P3B, E2B, C2B, C6B, C3B, D6B, E5B, D3B (Up to Build Date 9-1-70)	R,W	—	1	—	1	—	—	—	—	3330-1 GOB
	M6F, P6F, H1F, H2F, P3F, C2F, C5F, C6F, C3F, D6F, D5F, E5F, D3F (Up to Build Date 9-1-70)	R,W	—	1	—	1	—	—	—	—	3330-1 GOF
	M2B, M6B, P6B, H1B, H2B, P3B, E2B, C2B, C6B, C3B, D6B, E5B, D3B (After Build Date 9-1-70)	R,W	—	1	—	1	—	—	—	—	3330-1 GB4
	M6F, P6F, H1F, H2F, P3F, C2F, C5F, C6F, C3F, D6F, D5F, E5F, D3F (After Build Date 9-1-70)	R,W	—	1	—	1	—	—	—	—	3330-1 GF8
	M2T, M6T, P6T, H1T, H2T, P3T, E2T, C2T, C6T, D6T, CRT, E2T	R,W	—	1	—	1	—	—	—	—	3330-1 GOT
	M2X, M6X, M6XA, P6X, P6XA, H1X, H2X, H2XA, P3X, M5X, M6XV, P5X, E2X, C2X, C5X, C5XV, C6X, C6XA, C3X, D5X, D5XV, D6X, D6XA, E5X, CRX, CRXA, D3X, E2X	R,W	—	1	—	1	—	—	—	—	3330-1 GOX
	M6XW, P6XW, H2XW, C2XW, C6XW, D6XW	R,W	—	1	—	—	—	—	—	—	3330-1 GOW
	M6Y, P6Y, H2Y, C2Y, C6Y, C3Y, D6Y, E5Y, D3Y	R,W	—	1	—	1	—	—	—	—	3330-1 GOY
	Upper w/Wood Grain										
	C2B, C3B, C6B, D6B, E2B	W	—	1	—	—	—	—	—	—	3320-1 GBU
	C2F, C3F, C5F, C6F, D5F,D6F	W	—	1	—	—	—	—	—	—	3320-1 GFU
	C2XW, C6XW, D6XW	W	—	1	—	—	—	—	—	—	3320-1 GWU
	C2X, C3X, C5X, C5XV, C6X, D5X, D5XV, D6X, E2X	W	—	1	—	—	—	—	—	—	3320-1 GXU
	C2Y, C6Y, D6Y	W	—	1	—	—	—	—	—	—	3320-1 GYU
	C6XA, D6XA	W	—	1	—	—	—	—	—	—	3320-1 GAU
	E2T, C2T, C6T, D6T	W	—	1	—	—	—	—	—	—	3320-1 GTU
	Upper w/Mylar Mldg., w/Wood Grain Overlay										
	E5B, D3B	W	—	—	—	1	—	—	—	—	3312-3 GOB
	CRXA	W	—	—	—	1	—	—	—	—	3312-3 GOA
	E5F, D3F	W	—	—	—	1	—	—	—	—	3312-3 GOF
	E5Y, D3Y	W	—	—	—	1	—	—	—	—	3312-3 GOY
	E5X, CRX, D3X	W	—	—	—	1	—	—	—	—	3312-3 GOX
	CRT	W	—	—	—	1	—	—	—	—	3312-3 GOT
	E1B, E2B	P	1	—	—	—	—	—	—	—	3340-1 GB2
	E1T, E2T	P	1	—	—	—	—	—	—	—	3340-1 GT7
	E2XA, D2XA	P	1	—	—	—	—	—	—	—	3340-1 GA8
	L1B, L2B	P	—	1	—	—	—	—	—	—	3348-9 GB2
	L1F	P	—	1	—	—	—	—	—	—	3348-9 GF7
	L1T	P	—	1	—	—	—	—	—	—	3348-9 GT7
	L2XA	P	—	1	—	—	—	—	—	—	3348-9 GA8
	M1B, M4B	P	—	1	—	—	—	—	—	—	3308-9 GB2
	M1F, M4F, M6F	P	—	1	—	—	—	—	—	—	3308-9 GF7
	M4T	P	—	1	—	—	—	—	—	—	3308-9 GT7
	M1XA, M4XA, M6XA	P	—	1	—	—	—	—	—	—	3308-9 GXA
	M4E	P	—	1	—	—	—	—	—	—	3308-9 GE8
	M4XW	P	—	1	—	—	—	—	—	—	3308-9 GW1
	M4Y	P	—	1	—	—	—	—	—	—	3308-9 GY5
	H3B, H4B, H5B, H6B	P	—	1	—	—	—	—	—	—	3316-7 GB2
	H3F, H4F, H5F, H6F	P	—	1	—	—	—	—	—	—	3316-7 GF7
	H4T	P	—	1	—	—	—	—	—	—	3316-7 GT7

TYPE LETTERS Indicates: J - Challenger, B - Barracuda, V - Valiant, L - Dart, R - Belvedere, W - Coronet, P - Plymouth, D - Dodge, C - Chrysler, Y - Imperial

NUMERALS INDICATE: 21 - 2 DR. SED., 23 - 2 DR. H.T., 27 - CONV. CPE., 29 - FAST BACK, 41 - 4 DR. SED., 43 - 4 DR. H.T., 45 - 6 PASS. STA. WGN., 46 - 9 PASS. STA. WGN.

AR Indicates use as required.
= Indicates parts not listed in any previous parts book
Numerals in parentheses ( ) refer to notes.
★ Indicates change or addition.

Printed in U.S.A.
January 1972

Right and left part numbers are on same line, first number is right, second number is left.

CODE	PART NAME	MODEL CODES	SEE BOTTOM NOTE 21	23	27	29	41	43	45	46	PART NUMBER
23-101-3	PANEL, Quarter Trim w o Wood Grain Cont'd.										
	H3XA, H4XA, H5XA, H6XA	P	—	1	—	—	—	—	—	—	3316-7 GXA
	H6XW	P	—	1	—	—	—	—	—	—	3316-7 GXW
	H4Y, H5Y	P	—	1	—	—	—	—	—	—	3316-7 GY5
	H4E	P	—	1	—	—	—	—	—	—	3316-7 GE8
	M1B, M4B	P	—	—	—	1	—	—	—	—	3390-1 GB2
	M1F, M4F, M6F	P	—	—	—	1	—	—	—	—	3390-1 GF7
	M4T	P	—	—	—	1	—	—	—	—	3390-1 GT7
	M1XA, M4XA, M6XA	P	—	—	—	1	—	—	—	—	3390-1 GXA
	M4E	P	—	—	—	1	—	—	—	—	3390-1 GE8
	M6XW	P	—	—	—	1	—	—	—	—	3390-1 GW1
	M4Y	P	—	—	—	1	—	—	—	—	3390-1 GY5
	P4TT	P	—	—	—	1	—	—	—	—	3390-1 GTT
	H3B, H4B, H5B	P	—	—	—	1	—	—	—	—	3396-7 GB2
	H3F, H4F, H5F, H6F	P	—	—	—	1	—	—	—	—	3396-7 GF7
	H3T, H4T	P	—	—	—	1	—	—	—	—	3396-7 GT7
	H3XA, H4XA, H5XA, H6XA	P	—	—	—	1	—	—	—	—	3396-7 GXA
	H4XW, H6XW	P	—	—	—	1	—	—	—	—	3396-7 GXW
	H3Y, H4Y, H5Y	P	—	—	—	1	—	—	—	—	3396-7 GY5
	H4E	P	—	—	—	1	—	—	—	—	3396-7 GE8
	B1B, B2B	D	—	1	—	—	—	—	—	—	4576-7 GB2
	B1T, B2T	D	—	1	—	—	—	—	—	—	4576-7 GT7
	B2XA	D	—	1	—	—	—	—	—	—	4576-7 GA8
	D3Y	D	—	1	—	—	—	—	—	—	3366-7 GY5
	F1B, F2B	D	—	1	—	—	—	—	—	—	3366-7 GB2
	F1F, D4F	D	—	1	—	—	—	—	—	—	3366-7 GF7
	F1T	D	—	1	—	—	—	—	—	—	3366-7 GT7
	F2XA, D4X	D	—	1	—	—	—	—	—	—	3366-7 GA8
	L1B, L2B, L3B, L4B, M3B, M4B	D	—	1	—	—	—	—	—	—	3090-1 GB2
	M4E, M6E	D	—	1	—	—	—	—	—	—	3090-1 GE8
	L1F, L2F, L3F, L4F, M3F, M4F	D	—	1	—	—	—	—	—	—	3090-1 GF7
	L2T	D	—	1	—	—	—	—	—	—	3090-1 GT7
	M4XW, M6XW	D	—	1	—	—	—	—	—	—	3090-1 GW1
	L1X, L2X, L3X, L4X, M3X, M4X, M6X	D	—	1	—	—	—	—	—	—	3090-1 GX9
	L1Y, L3Y, M3Y	D	—	1	—	—	—	—	—	—	3090-1 GY5
	H3B (Up to Build Date 9-1-70)	D	—	1	—	—	—	—	—	—	3398-9 GB2
	H3A (Up to Build Date 9-1-70)	D	—	1	—	—	—	—	—	—	3398-9 GA6
	H4E, H6E (Up to Build Date 9-1-70)	D	—	1	—	—	—	—	—	—	3398-9 GE8
	H3F, H4F (Up to Build Date 9-1-70)	D	—	1	—	—	—	—	—	—	3398-9 GF7
	H6XW (Up to Build Date 9-1-70)	D	—	1	—	—	—	—	—	—	3398-9 GXW
	H3X, H4X, H6X (Up to Build Date 9-1-70)	D	—	1	—	—	—	—	—	—	3398-9 GX9
	H3Y (Up to Build Date 9-1-70)	D	—	1	—	—	—	—	—	—	3398-9 GY5
	H3A (After Build Date 9-1-70)	D	—	1	—	—	—	—	—	—	3342-3 GA6
	H3B (After Build Date 9-1-70)	D	—	1	—	—	—	—	—	—	3342-3 GB2
	H4E, H6E (After Build Date 9-1-70)	D	—	1	—	—	—	—	—	—	3342-3 GE8
	H3F, H4F (After Build Date 9-1-70)	D	—	1	—	—	—	—	—	—	3342-3 GF7
	H6XW (After Build Date 9-1-70)	D	—	1	—	—	—	—	—	—	3342-3 GXW
	H3X, H4X, H6X (After Build Date 9-1-70)	D	—	1	—	—	—	—	—	—	3342-3 GX9
	H3Y (After Build Date 9-1-70)	D	—	1	—	—	—	—	—	—	3342-3 GY5
	L4B (Up to Build Date 9-1-70)	C	—	1	—	—	—	—	—	—	3378-9 GBB
	L4E (Up to Build Date 9-1-70)	C	—	1	—	—	—	—	—	—	3378-9 GEE
	L3F (Up to Build Date 9-1-70)	C	—	1	—	—	—	—	—	—	3378-9 GFF
	L3L (Up to Build Date 9-1-70)	C	—	1	—	—	—	—	—	—	3378-9 GLL
	L3X, L4X (Up to Build Date 9-1-70)	C	—	1	—	—	—	—	—	—	3378-9 GOX
	L3Y (Up to Build Date 9-1-70)	C	—	1	—	—	—	—	—	—	3378-9 GYY
	L4B (After Build Date 9-1-70)	C	—	1	—	—	—	—	—	—	4498-9 GBB
	L4E (After Build Date 9-1-70)	C	—	1	—	—	—	—	—	—	4498-9 GEE

TYPE LETTERS Indicates: J - Challenger; B - Barracuda; V - Valiant; L - Dart; R - Belvedere; W - Coronet; P - Plymouth; D - Dodge; C - Chrysler; Y - Imperial

NUMERALS INDICATE: 21 - 2 DR. SED.; 23 - 2 DR. H.T.; 27 - CONV. CPE.; 29 - FAST BACK; 41 - 4 DR. SED.; 43 - 4 DR. H.T.; 45 - 6 PASS. STA. WGN; 46 - 9 PASS. STA. WGN.

AR Indicates use as required.
# Indicates parts not listed in any previous parts book
Numerals in parentheses ( ) refer to notes.
★ Indicates change or addition.

Printed in U.S.A.
January 1972

Right and left part numbers are on same line, first number is right, second number is left.

CODE	PART NAME	MODEL CODES	SEE BOTTOM NOTE 21	23	27	29	41	43	45	46	PART NUMBER
23-101-3	PANEL, Quarter Trim w o Wood Grain Cont'd.										
	L3F (After Build Date 9-1-70)	C	—	1	—	—	—	—	—	—	4498-9 GFF
	L3L (After Build Date 9-1-70)	C	—	1	—	—	—	—	—	—	4498-9 GLL
	L3X, L4X (After Build Date 9-1-70)	C	—	1	—	—	—	—	—	—	4498-9 GOX
	L3Y (After Build Date 9-1-70)	C	—	1	—	—	—	—	—	—	4498-9 GYY
	E1B (Up to Build Date 9-1-70)	C	—	1	—	—	—	—	—	—	3300-1 GOB
	E1A (Up to Build Date 9-1-70)	C	—	1	—	—	—	—	—	—	3300-1 GOA
	E2E (Up to Build Date 9-1-70)	C	—	1	—	—	—	—	—	—	3300-1 GOE
	E1F, E2F (Up to Build Date 9-1-70)	C	—	1	—	—	—	—	—	—	3300-1 GOF
	E2L (Up to Build Date 9-1-70)	C	—	1	—	—	—	—	—	—	3300-1 GOL
	E6T (Up to Build Date 9-1-70)	C	—	1	—	—	—	—	—	—	3300-1 GOT
	E2X, E6X, E1X (Up to Build Date 9-1-70)	C	—	1	—	—	—	—	—	—	3300-1 GOX
	E6XW (Up to Build Date 9-1-70)	C	—	1	—	—	—	—	—	—	3300-1 GOW
	E1Y (Up to Build Date 9-1-70)	C	—	1	—	—	—	—	—	—	3300-1 GOY
	E1A (After Build Date 9-1-70)	C	—	1	—	—	—	—	—	—	3324-5 GOA
	E1B (After Build Date 9-1-70)	C	—	1	—	—	—	—	—	—	3324-5 GOB
	E2E (After Build Date 9-1-70)	C	—	1	—	—	—	—	—	—	3324-5 GOE
	E1F, E2F (After Build Date 9-1-70)	C	—	1	—	—	—	—	—	—	3324-5 GOF
	E2L (After Build Date 9-1-70)	C	—	1	—	—	—	—	—	—	3324-5 GOL
	E6T (After Build Date 9-1-70)	C	—	1	—	—	—	—	—	—	3324-5 GOT
	E1X, E2X, E6X (After Build Date 9-1-70)	C	—	1	—	—	—	—	—	—	3324-5 GOX
	E6XW (After Build Date 9-1-70)	C	—	1	—	—	—	—	—	—	3324-5 GOW
	E1Y (After Build Date 9-1-70)	C	—	1	—	—	—	—	—	—	3324-5 GOY
	G1A	C	—	1	—	—	—	—	—	—	3328-9 GA6
	G1B	C	—	1	—	—	—	—	—	—	3328-9 GB2
	G2E	C	—	1	—	—	—	—	—	—	3328-9 GE8
	G1F, G2F	C	—	1	—	—	—	—	—	—	3328-9 GF7
	G2L	C	—	1	—	—	—	—	—	—	3328-9 GL2
	G6T	C	—	1	—	—	—	—	—	—	3328-9 GT7
	G1X, G2X, G6X	C	—	1	—	—	—	—	—	—	3328-9 GX9
	G6XW	C	—	1	—	—	—	—	—	—	3328-9 GW1
	G1Y	C	—	1	—	—	—	—	—	—	3328-9 GY5
	H3B	C	—	1	—	—	—	—	—	—	3478-9 GBB
	H3A	C	—	1	—	—	—	—	—	—	3478-9 GAA
	H3F, H6F	C	—	1	—	—	—	—	—	—	3478-9 GFF
	H6T	C	—	1	—	—	—	—	—	—	3478-9 GTT
	H3X, H6X	C	—	1	—	—	—	—	—	—	3478-9 GOX
	H6XW	C	—	1	—	—	—	—	—	—	3478-9 GXW
	H3Y	C	—	1	—	—	—	—	—	—	3478-9 GYY
	S4B	C	—	1	—	—	—	—	—	—	4458-9 GBB
	S4E	C	—	1	—	—	—	—	—	—	4458-9 GEE
	S3F, S6F	C	—	1	—	—	—	—	—	—	4458-9 GFF
	S3L, S6L	C	—	1	—	—	—	—	—	—	4458-9 GLL
	S6T	C	—	1	—	—	—	—	—	—	4458-9 GTT
	S4X, S6X	C	—	1	—	—	—	—	—	—	4458-9 GOX
	S6XW	C	—	1	—	—	—	—	—	—	4458-9 GXW
	S3Y	C	—	1	—	—	—	—	—	—	4458-9 GYY
	MRB	Y	—	1	—	—	—	—	—	—	3372-3 GB2
	MBA	Y	—	1	—	—	—	—	—	—	3372-3 GAA
	MBB	Y	—	1	—	—	—	—	—	—	3372-3 GB9
	MRE	Y	—	1	—	—	—	—	—	—	3372-3 GE8
	MBF, MRF	Y	—	1	—	—	—	—	—	—	3372-3 GF7
	MBM	Y	—	1	—	—	—	—	—	—	3372-3 GM9
	MBTT	Y	—	1	—	—	—	—	—	—	3372-3 GTT
	MRT	Y	—	1	—	—	—	—	—	—	3372-3 GT7
	MRXW	Y	—	1	—	—	—	—	—	—	3372-3 GXW
	MRX, MBX	Y	—	1	—	—	—	—	—	—	3372-3 GX9

TYPE LETTERS Indicates: J - Challenger; B - Barracuda; V - Valiant; L - Dart; R - Belvedere; W - Coronet; P - Plymouth; D - Dodge; C - Chrysler; Y - Imperial

NUMERALS INDICATE: 21 - 2 DR. SED.; 23 - 2 DR. H.T.; 27 - CONV. CPE.; 29 - FAST BACK; 41 - 4 DR. SED.; 43 - 4 DR. H.T.; 45 - 6 PASS. STA. WGN.; 46 - 9 PASS. STA. WGN.

AR Indicates use as required.
= Indicates parts not listed in any previous parts book
Numerals in parentheses ( ) refer to notes.
★ Indicates change or addition.

Printed in U.S.A.
January 1972

Right and left part numbers are on same line, first number is right, second number is left.

CODE	PART NAME	MODEL CODES	SEE BOTTOM NOTE 21	23	27	29	41	43	45	46	PART NUMBER
23-101-3	PANEL, Quarter Trim w o Wood Grain Cont'd.										
	MBY, MRY	Y	—	1	—	—	—	—	—	—	3372-3 GY5
	Cover, Lower Quarter Trim Front										
	All Codes	L	—	—	—	—	1	—	—	—	2070-1 FX9
	All Codes-Prime	R,W	—	—	—	—	1	—	—	—	3416 488-9
	E2B, E1B, L1B, L2B, M1B, M4B, H4B, H7B, H3B	P	—	—	—	—	1	1	—	—	3518-9 GB2
	M4E, H4E	P	—	—	—	—	—	1	—	—	3518-9 GE9
	L1F, M1F, M4F, H4F, H6F, H7F, H3F	P	—	—	—	—	1	1	—	—	3518-9 GF7
	E2T, E1T, K5T, K6T, K1T, K2T, L1T, M4T, H4T, H3T	P	—	—	—	—	1	1	—	—	3518-9 GT6
	E2XA, K2X, L2XA, M1XA, M4XA, H4XA, H6XA, H7XA, H3XA, D2XA	P	—	—	—	—	1	1	—	—	3518-9 FX9
	M4XW, H4XW, H6XW	P	—	—	—	—	—	1	—	—	3518-9 GW1
	M1Y, M4Y, H3Y, H4Y, H7Y	P	—	—	—	—	1	1	—	—	3518-9 GY5
	L1P, L2B, B2B, B1B, H7B, H3B, F2B, F1B, M4B, L3B, L4B	D	—	—	—	—	1	1	—	—	3514-5 GB2
	H3A, H7A	D	—	—	—	—	1	1	—	—	3514-5 GA6
	M4E, H4E	D	—	—	—	—	—	1	—	—	3514-5 GE9
	L1F, L2F, H7F, H3F, F1F, M4F, H4F, L3F, L4F, D4F	D	—	—	—	—	1	1	—	—	3514-5 GF7
	L2T, B2T, B1T, F1T	D	—	—	—	—	1	1	—	—	3514-5 GT6
	L1X, K1A, K5A, K2A, K6A, L2X, H7X, H3X, F2XA, M4X, H4X, X2X, L3X, L4X, D4X, B2XA	D	—	—	—	—	1	1	—	—	3514-5 FX9
	L1Y, M3Y, L3Y, L2Y, H3Y, D3Y	D	—	—	—	—	1	1	—	—	3514-5 GY5
	M4XW	D	—	—	—	—	—	1	—	—	3514-5 FW1
	L7B, E1B, L3B, L4B, S4B, G1B	C	—	—	—	—	1	1	—	—	3530-1 GB2
	H7B, H9B	C	—	—	—	—	1	1	—	—	3530-1 GB7
	MDB, MLB	Y	—	—	—	—	—	1	—	—	3530-1 GB9
	E1A, H7A, H9A, MDA, MLA, G1A	C,Y	—	—	—	—	1	1	—	—	3530-1 GA6
	E2E, L4E, S4E, MLE, G2E	C,Y	—	—	—	—	1	1	—	—	3530-1 GE9
	L7F, E1F, E2F, L3F, L8F, S3F, S6F, H9F, H7F, H8F, MDF, MLF, G1F, G2F	C,Y	—	—	—	—	1	1	—	—	3530-1 GF7
	S6T, HLT, MLT	C,Y	—	—	—	—	1	1	—	—	3530-1 GT6
	MDTT	Y	—	—	—	—	—	1	—	—	3530-1 GT1
	E1X, E2X, E6X, L3X, L4X, L8X, H9X, H7X, H8X, S4X, S6X, MDX, MLX, G1X, G2X	C,Y	—	—	—	—	1	1	—	—	3530-1 FX9
	L7XL, E1L, E2L, L3L, H8L, S3L, S6L, G1L, G2L	C	—	—	—	—	1	1	—	—	3530-1 GL1
	E6XW, S6XW, MLXW	C,Y	—	—	—	—	1	1	—	—	3530-1 FW1
	E1Y, L3Y, H9Y, S3Y, MDY, MLY, G1Y	C,Y	—	—	—	—	1	1	—	—	3530-1 GY5
	MDM, MLM	Y	—	—	—	—	—	1	—	—	3530-1 GM9
	H3B, H4B, H5B, H6B, E1B, E2B, L1B, L2B, M1B, M4B, M3B, F1B, F2B, L3B, L4B, S4B, MRB, G1B, B1B, B2B	P,D,C,Y	—	1	—	1	—	—	—	—	3584-5 GB2
	H3B	C	—	1	—	—	—	—	—	—	3584-5 GB7
	MBB	Y	—	1	—	—	—	—	—	—	3584-5 GB9
	H3A, E1A, MBA, G1A	D,C,Y	—	1	—	—	—	—	—	—	3584-5 GA6
	H3T, H4T, E1T, E2T, L1T, M4T, L2T, P4T, F1T, H6T, S6T, E6T, MRT, G6T, B1T, B2T	P,D,C,Y	—	1	—	1	—	—	—	—	3584-5 GT6
	MBTT	Y	—	1	—	—	—	—	—	—	3584-5 GT1
	H3XA, H4XA, H5XA, H6XA, E2XA, L2XA, M1XA, M4XA, M6XA, L1X, L2X, M3X, M4X, M6X, H3X, H4X, H6X, G6X, F2XA, L3X, L4X, S6X, S4X, E1X, E2X, D2XA, E6X, MBX, MRX, D2XA, G1X,										

TYPE LETTERS Indicates J - Challenger B - Barracuda V - Valiant L - Dart R - Belvedere W - Coronet P - Plymouth D - Dodge C - Chrysler Y - Imperial

NUMERALS INDICATE: 21 - 2 DR. SED. 23 - 2 DR. H.T. 27 - CONV. CPE. 29 - FAST BACK 41 - 4 DR. SED. 43 - 4 DR. H.T. 45 - 6 PASS. STA. WGN. 46 - 9 PASS. STA. WGN.

AR Indicates use as required.
≠ Indicates parts not listed in any previous parts book

Numerals in parentheses ( ) refer to notes.
★ Indicates change or addition.

Printed in U.S.A.
January 1972

Right and left part numbers are on same line, first number is right, second number is left.

CODE	PART NAME	MODEL CODES	SEE BOTTOM NOTE 21	23	27	29	41	43	45	46	PART NUMBER
23-101-3	PANEL, Quarter Trim w o Wood Grain Cont'd.										
	G2X, D4X	P,D,C,Y	—	1	—	1	—	—	—	—	3584-5 EX9
	H4XW, H6XW, M4XW, M6XW, S6XW, E6XW, MRXW, G6XW	P,D,C,Y	—	1	—	1	—	—	—	—	3584-5 EW1
	MBM	Y	—	1	—	—	—	—	—	—	3584-5 GM9
	H4E, M4E, M6E, H6E, L4E, S4E, E2E, MRE	P,D,C,Y	—	1	—	1	—	—	—	—	3584-5 GE9
	H3F, H4F, H5F, H6F, L1F, M1F, M4F, M6F, L2F, M3F, F1F, L3F, L4F, S6F, S3F, E1F, E2F, MBF, MRF, D4F	P,D,C,Y	—	1	—	1	—	—	—	—	3584-5 GF7
	L3L, S6L, S3L, E2L	C	—	1	—	—	—	—	—	—	3584-5 GL1
	H3Y, H4Y, H5Y, M4Y, L1Y, M3Y, L3Y, S3Y, E1Y, MBY, MRY, D3Y	P,D,C,Y	—	1	—	1	—	—	—	—	3584-5 GY5
	Panel, Quarter Trim Upper (Formed)										
	P6B	B	—	1	—	—	—	—	—	—	2062-3 GB4
	P6F	B	—	1	—	—	—	—	—	—	2062-3 FF7
	P6T, PRT	B	—	1	—	—	—	—	—	—	2062-3 FT1
	P5X, P6X, PRX	B	—	1	—	—	—	—	—	—	2062-3 FX9
	P6Y, PRY	B	—	1	—	—	—	—	—	—	2062-3 GY4
	H4B, H6B	B	—	1	—	—	—	—	—	—	2064-5 GB4
	H4F, H6F	B	—	1	—	—	—	—	—	—	2064-5 GF8
	H4T, SRT, H6T	B	—	1	—	—	—	—	—	—	2064-5 GT6
	H4XW, H6XW	B	—	1	—	—	—	—	—	—	2064-5 FW1
	H4X, H4XV, SRX, H6X, H6XV, H5X, H5XV	B	—	1	—	—	—	—	—	—	2064-5 FX9
	H5B	J	—	—	—	1	—	—	—	—	7138-9 GB4
	H5F, HRF	J	—	—	—	1	—	—	—	—	7138-9 GF8
	HRT	J	—	—	—	1	—	—	—	—	7138-9 GT6
	H5X, H5XX, HRX	J	—	—	—	1	—	—	—	—	7138-9 FX9
	H5Y	J	—	—	—	1	—	—	—	—	7138-9 GY4
	E2B, E1B, L1B, L2B, M1B, M4B, H3B, H4B, H7B, B2B, B1B, F1B. F2B	P,D	—	—	—	—	1	—	—	—	3580-1 GB1
	H3A, H7A	D	—	—	—	—	1	—	—	—	3580-1 GA7
	L1F, M1F, M4F, H3F, H4F, H7F, L2F, F1F	P,D	—	—	—	—	1	—	—	—	3580-1 GF8
	E2T, E1T, L1T, M4T, K1T, K2T, K5T, K6T, H3T, H4T, B2T, B1T, L2T, F1T	P,D	—	—	—	—	1	—	—	—	3580-1GT6
	E2XA, L2XA, M1XA, M4XA, K2X, M8XA, H3XA, H4XA, H7XA, L1X, F2XA, H3X, H7X	P,D	—	—	—	—	1	—	—	—	3580-1 FX9
23-101-33	BRACKET, Quarter Trim Panel Support	J	—	2	—	—	—	—	—	—	3509 075
	Bracket, Qtr. Trim and Pocket Panel to Floor	B,J	—	2	2	—	—	—	—	—	3415 967
	Quarter I S Panel Trim Support	R	—	1	—	—	—	—	—	—	3615 088-9
		W	—	1	—	—	—	—	—	—	3615 090-1
23-101-40	BRACKET, Quarter Lower Trim Panel to Shelf Att.	R,W	—	2	—	2	—	—	—	—	3416 052
23-102-3	PANEL, Shelf Trim	V	—	—	—	—	1	—	—	—	1301 EX8
		V,L	—	—	—	1	—	—	—	—	1320 GX9
		V,L	—	1	—	—	—	—	—	—	1357 GX8
		L	—	—	—	—	1	—	—	—	1359 GX8
		B	—	1	—	—	—	—	—	—	1332 GX9
		J	—	1	—	—	—	—	—	—	1334 GX9
		R,W	—	—	—	—	1	—	—	—	1306 GX9
		R,W	—	1	—	—	—	—	—	—	1360 GX9
		W	—	—	—	1	—	—	—	—	1302 GX9
		P,D,C	1	1	—	—	—	—	—	—	1375 FX9
		P,D	—	—	—	—	1	—	—	—	1373 FX9
		P,D	—	—	—	1	—	1	—	—	1337 FX9

TYPE LETTERS Indicates: J - Challenger, B - Barracuda, V - Valiant, L - Dart, R - Belvedere, W - Coronet, P - Plymouth, D - Dodge, C - Chrysler, Y - Imperial

NUMERALS INDICATE: 21 - 2 DR. SED., 23 - 2 DR. H.T., 27 - CONV. CPE., 29 - FAST BACK, 41 - 4 DR. SED., 43 - 4 DR. H.T., 45 - 6 PASS. STA. WGN., 46 - 9 PASS. STA. WGN.

AR Indicates use as required.
= Indicates parts not listed in any previous parts book
Numerals in parentheses ( ) refer to notes.
★ Indicates change or addition.

Printed in U.S.A.
January 1972

Right and left part numbers are on same line, first number is right, second number is left.

CODE	PART NAME	MODEL CODES	SEE BOTTOM NOTE 21	23	27	29	41	43	45	46	PART NUMBER
23-102-3	PANEL, Shelf Trim Cont'd.										
		C	—	—	—	—	1	1	—	—	1377 FX9
		Y	—	1	—	—	—	—	—	—	1378 GX9
		Y	—	—	—	—	—	1	—	—	1380 FX9
23-102-4	FASTENER, Shelf Trim Panel	V,L	—	2	—	—	2	—	—	—	6000 903
		P,D	2	—	—	2	—	2	—	—	4343 FX9
23-102-11	CLAMP, Shelf Trim Panel Hold Down	P,D	—	—	—	1	—	1	—	—	2876 665
23-103-3	PANEL, Visor Trim										
	L3B, L2B, L4B, H1B, H2B, D2B	V,L	—	2	—	—	2	—	—	—	1112 GB7
	L3F, L4F, L2F, H1F, H2F, D2F	V,L	—	2	—	—	2	—	—	—	1112 GF7
	L2T, L4T	V	—	—	—	—	2	—	—	—	1112 GT7
	L3X, L2X, L4X, H1X, H2X, H2XW, H6X, H6XW, D2X, D2XW, D6X, D6XW	V,L	—	2	—	—	2	—	—	—	1112 DX9
	L4Y, H2Y, D2Y	V,L	—	2	—	—	2	—	—	—	1112 GY3
	L2B, L1B, L4B, E2B, M1B	V,L	—	—	—	2	—	—	—	—	1103 GB7
	L1F, L4F, M1F	V,L	—	—	—	2	—	—	—	—	1103 GF7
	L2T, L4T, E2T	V,L	—	—	—	2	—	—	—	—	1103 GT7
	L2X, L1X, L1XX, L4X, L6X, L6XV, M6XW, E2X, M6X, M6XV, M1XX, L6XW, M1X	V,L	—	—	—	2	—	—	—	—	1103 FX9
	L4Y	V	—	—	—	2	—	—	—	—	1103 GY3
	H4B, H6B, P6B, L6B	B,J	—	2	—	—	—	—	—	—	1102 GB5
	H4F, H6F, P6F, H5F, L6F	B,J	—	2	—	—	—	—	—	—	1102 GF7
	H4T, H6T, P6T, PRT, SRT, L6T	B,J	—	2	—	—	—	—	—	—	1102 GT7
	H4XW, H6XW, L6XW, L5FW	B,J	—	2	—	—	—	—	—	—	1102 FW1
	H4X, H5X, H5XV, H6X, H6XV, P5X, P6X, PRX, SRX, H5XX, HRX, L6X	B,J	—	2	—	—	—	—	—	—	1102 FX9
	PRY, P6Y, H6Y	B,J	—	2	—	—	—	—	—	—	1102 GY3
	H6B	B,J	—	—	2	—	—	—	—	—	1120 GB5
	H6F, HRF	B,J	—	—	2	—	—	—	—	—	1120 GF7
	H6T, SRT, HRT	B,J	—	—	2	—	—	—	—	—	1120 GT7
	H6XW	B,J	—	—	2	—	—	—	—	—	1120 FW1
	H6X, H6XV, SRX, HRX	B,J	—	—	2	—	—	—	—	—	1120 FX9
	H6Y	J	—	—	2	—	—	—	—	—	1120 GY3
	M2B, M6B, H1B, H2B, E2B, P3B, P6B, C2B, C3B, C6B, D6B	R,W	—	2	—	—	—	—	—	—	1123 GB5
	L2B, H1B, H2B, P2B, D3B, P3B, L2B, P4B, L2B	R,W	—	—	—	—	2	—	2	2	1123 GB7
	M6F, H1F, H2F, P2F, P3F, D3F, P6F, P4F, C2F, C3F, C5F, C6F, D5F, D6F	R,W	—	2	—	—	2	—	2	2	1123 GF7
	D2X, K2X, T2X, M2X, M5X, M6X, M6XV, H1X, H2X, E2X, P3X, P5X, P6X, L2X, C2X, C3X, C5X, C5XV, C6X, D5X, D5XV, D6X	R,W	—	2	—	—	2	—	—	—	1123 GX9
	M6XA, H2XA, P6XA, C6XA, D6XA	R,W	—	2	—	—	—	—	—	—	1123 GA6
	M6XW, H2XW, P6XW, C2XW, C6XW, C6XW	R,W	—	2	—	—	—	—	—	—	1123 GW1
	H2X, P2X, D2X, P4X, L2X	R,W	—	—	—	—	—	—	2	2	1123 GW1
	M6Y, H1Y, H2Y, P6Y, P3Y, C2Y, C6Y, D6Y	R,W	—	2	—	—	2	—	—	—	1123 GY3
	L2T, K1T, K2T, T2T, M2T, M6T, E2T, H1T, H2T, P2T, P3T, P6T, D3T, P4T, C2T, C6T, D6T	R,W	—	2	—	—	2	—	2	2	1123 GT7
	H3B, H4B, H5B, H6B, H7B, E1B, E2B, L1B, L2B, M1B, M2B, M4B, M3B, B1B, B2B, F2B, F1B, L3B, L4B, L7B, S4B, MRB, G1B	P,D,C,Y	2	2	—	2	2	2	2	2	1195 GB2
	H3B, H9B, H7B	C	—	2	—	—	2	2	—	—	1195 GB7
	MDB, MBF, M2B	Y	—	2	—	—	—	2	—	—	1195 GB9

TYPE LETTERS Indicates J - Challenger, B - Barracuda, V - Valiant, L - Dart, R - Belvedere, W - Coronet, P - Plymouth, D - Dodge, C - Chrysler, Y - Imperial

NUMERALS INDICATE: 21 - 2 DR. SED., 23 - 2 DR. H.T., 27 - CONV. CPE., 29 - FAST BACK, 41 - 4 DR. SED., 43 - 4 DR. H.T., 45 - 6 PASS. STA. WGN, 46 - 9 PASS. STA. WGN.

AR Indicates use as required.
≠ Indicates parts not listed in any previous parts book
Numerals in parentheses ( ) refer to notes.
★ Indicates change or addition.

Printed in U.S.A.
January 1972

Right and left part numbers are on same line, first number is right, second number is left.

CODE	PART NAME	MODEL CODES	SEE BOTTOM NOTE 21	23	27	29	41	43	45	46	PART NUMBER
23-103-3	PANEL, Visor Trim Cont'd.										
	H4E, M4E, M6E, H6E, E2E, L4E, S4E, MSE, MRE, G2E	P,D,C,Y	—	2	—	2	2	2	—	—	1195 GE8
	H3F, H4F, H5F, H6F, H7F, L1F, L2F, M1F, M2F, M4F, M3F, F2F, F1F, L3F, D4F, L4F, E1F, E2F, L7F, L8F, H9F, S6F, H8F, S3F, MDF, MBF, MSF, MRF, G1F, G2F	P,D,C,Y	—	2	—	2	2	2	2	2	1195 GF7
	H3T, H4T, H8T, E1T, E2T, K1T, K2T, K5T, K6T, L1T, L2T, M2T, M4T, M6T, B1T, B2T, F2T, F1T, E6T, H6T, S6T, HLT, L4T, L8T, MBTT, M5T, MRT, G6T, P4T, MDTT	P,D,C,Y	2	2	—	2	2	2	2	2	1195 GT7
	H3XA, H4XA, H5XA, H6XA, H7XA, H8XA, K2X, L2XA, M1XA, M2XA, G6X, M4XA, M6XA, M8XA, L1X, L2X, K1A, K2A, K5A, K6A, M3X, M4X, M6X, H3X, H4X, H6X, H7X, H8X, F2XA, E1X, E2X, E6X, L3X, L4X, L8X, H9X, S6X, S4X, MDX, MBX, MSX, MRX, D2XA, G1X, G2X, D4X	P,D,C,Y	—	2	—	2	2	2	2	2	1195 GX9
	H4XW, H6XW, M4XW, M6XW, E6XW, S6XW, G6XW	P,D,C	—	2	—	2	2	2	—	—	1195 GW1
	H3A, H7A, E1A, H9A, MDA, MBA, MSA	D,C,Y	—	2	—	—	2	2	—	—	1195 GA6
	E1L, E2L, L3L, L7XL, H8L, S3L, S6L	C	—	2	—	—	2	2	2	2	1195 GL2
	H3Y, H4Y, M1Y, M4Y, H8Y, H5Y, L1Y, M3Y, L3Y, E1Y, H9Y, L8Y, S3Y, MDY, MBY, MSY, MRY, D3Y	P,D,C,Y	—	2	—	2	2	2	2	2	1195 GY5
	MBM, MSM	Y	—	2	—	—	—	2	—	—	1195 GM9
23-103-10	ARM and BRACKET, Visor	V,L	—	—	—	1	—	—	—	—	3454 814-5
		V,L	—	1	—	—	1	—	—	—	2999 670-1
		B,J	—	—	1	—	—	—	—	—	3454 248-9
		B,J	—	2	—	—	—	—	—	—	3548 942
		P, D,C,Y	2	2	—	2	2	2	2	2	2878 882
	R, W (Up to Build Date 9-1-70)	RW	2	2	—	2	2	—	2	2	2878 882
	R, W (After Build Date 9-1-70)	RW	2	2	—	2	2	—	2	2	3586 983
23-103-11	COVER, Visor Bracket	B,J	—	2	—	—	—	—	—	—	1121 FX9
23-103-18	NUT, Visor Arm and Bracket Mounting	B,J	—	2	2	—	—	—	—	—	2129 684
23-103-48	SUPPORT, Visor Inner	B,J, R,W,P, D,C,Y	2	2	2	2	2	2	2	2	2789 036
	Visor Arm Center										
	H6B	B,J	—	—	1	—	—	—	—	—	3701 GB5
	H6F	B,J	—	—	1	—	—	—	—	—	3701 GF7
	H6T, SRT	B,J	—	—	1	—	—	—	—	—	3701 GT6
	H6X, H6XV, H6XW, SRX, HRX	B,J	—	—	1	—	—	—	—	—	3701 EX9
	H6Y	J	—	—	1	—	—	—	—	—	3701 GY6
23-103-49	TIP, Visor Inner Support	B,J, R,W,P, D,C,Y	—	2	2	—	2	2	2	2	2789 037
23-108-4	CUSHION, Front For Complete Assembly Order By Description, Vehicle Serial Number and Trim Code.										
23-108-5	COVER, Front Cushion										
	L2B, E2B	V,L	—	—	—	1	—	—	—	—	7227 G2B
	L2T, E2T	V,L	—	—	—	1	—	—	—	—	7227 G2T

TYPE LETTERS Indicates: J - Challenger, B - Barracuda, V - Valiant, L - Dart, R - Belvedere, W - Coronet, P - Plymouth, D - Dodge, C - Chrysler, Y - Imperial

NUMERALS INDICATE: 21 - 2 DR. SED., 23 - 2 DR. H.T., 27 - CONV. CPE., 29 - FAST BACK, 41 - 4 DR. SED., 43 - 4 DR. H.T., 45 - 6 PASS. STA. WGN., 46 - 9 PASS. STA. WGN.

AR Indicates use as required.
= Indicates parts not listed in any previous parts book
Numerals in parentheses ( ) refer to notes.
★ Indicates change or addition.

Printed in U.S.A.
January 1972

Right and left part numbers are on same line, first number is right, second number is left.

CODE	PART NAME	MODEL CODES	SEE BOTTOM NOTE 21	23	27	29	41	43	45	46	PART NUMBER
23-108-5	COVER, Front Cushion Cont'd.										
	L2X, E2X	V,L	—	—	—	1	—	—	—	—	7227 F2X
	L2B	V,L	—	—	—	—	1	—	—	—	7226 G2B
	L2F	L	—	—	—	—	1	—	—	—	7226 G2F
	L2T	V	—	—	—	—	1	—	—	—	7226 G2T
	L2X	V,L	—	—	—	—	1	—	—	—	7226 F2X
	L3B	V,	—	—	—	—	1	—	—	—	7339 G3B
	L3F	V	—	—	—	—	1	—	—	—	7339 G3F
	L3X	V	—	—	—	—	1	—	—	—	7339 G3X
	L4B	V	—	—	—	1	1	—	—	—	7255 G4B
	L4F	V	—	—	—	1	1	—	—	—	7255 G4F
	L4T	V	—	—	—	1	1	—	—	—	7255 G4T
	L4X	V	—	—	—	1	1	—	—	—	7255 G4X
	L4Y	V	—	—	—	1	1	—	—	—	7255 G4Y
	L1B, M1B	V,L	—	—	—	1	—	—	—	—	7266 G1B
	L1F, M1F	V,L	—	—	—	1	—	—	—	—	7266 G1F
	L1X, M1X	V,L	—	—	—	1	—	—	—	—	7266 G1X
	L1XX, M1XX	V,L	—	—	—	1	—	—	—	—	7266 G1A
	L6X, M6X	V,L	—	—	—	2	—	—	—	—	7286 G6X
	L6XV, M6XV	V,L	—	—	—	2	—	—	—	—	7286 G6V
	L6XW, M6XW	V,L	—	—	—	2	—	—	—	—	7286 G6W
	H2B	L	—	—	—	—	1	—	—	—	7240 G2B
	H2F	L	—	—	—	—	1	—	—	—	7240 G2F
	H2X	L	—	—	—	—	1	—	—	—	7240 G2X
	H2Y	L	—	—	—	—	1	—	—	—	7240 G2Y
	L2F	L	—	1	—	—	—	—	—	—	7227 G2F
	L2B, E2B	V,L	—	1	—	1	—	—	—	—	7227 G2B
	L2T, E2T	V,L	—	—	—	1	—	—	—	—	7227 G2T
	L2X, E2X	V,L	—	1	—	1	—	—	—	—	7227 F2X
	H2B, D2B	V,L	—	1	—	—	—	—	—	—	7241 G2B
	H2F, D2F	V,L	—	1	—	—	—	—	—	—	7241 G2F
	H2X, D2X	V,L	—	1	—	—	—	—	—	—	7241 G2X
	H2XW, D2XW	V,L	—	1	—	—	—	—	—	—	7241 G2W
	H2Y, D2Y	V,L	—	1	—	—	—	—	—	—	7241 G2Y
	H1B	L	—	—	—	—	1	—	—	—	7236 G1B
	H1F	L	—	—	—	—	1	—	—	—	7236 G1F
	H1X	L	—	—	—	—	1	—	—	—	7236 G1X
	H6X, D6X	L	—	2	—	—	—	—	—	—	7293 G6X
	H6XW, D6XW	L	—	2	—	—	—	—	—	—	7293 G6W
	H5X, P5X	B	—	2	—	—	—	—	—	—	7276 G5X
	H5XV	B	—	2	—	—	—	—	—	—	7276 G5V
	P6B	B	—	2	—	—	—	—	—	—	7278 G6B
	P6F	B	—	2	—	—	—	—	—	—	7278 G6F
	P6T	B	—	2	—	—	—	—	—	—	7278 G6T
	P6X	B	—	2	—	—	—	—	—	—	7278 G6X
	P6Y	B	—	2	—	—	—	—	—	—	7278 G6Y
	L6B	J	—	2	2	—	—	—	—	—	7279 G6B
	L6F	J	—	2	2	—	—	—	—	—	7279 G6F
	L6T	J	—	2	2	—	—	—	—	—	7279 G6T
	L6X	J	—	2	2	—	—	—	—	—	7279 G6X
	H6B	B	—	2	2	—	—	—	—	—	7279 G6B
	H6F	B	—	2	2	—	—	—	—	—	7279 G6F
	H6T	B	—	2	2	—	—	—	—	—	7279 G6T
	H6X	B	—	2	2	—	—	—	—	—	7279 G6X
	H6XV	B	—	2	2	—	—	—	—	—	7279 G6V
	H6XW	B	—	2	2	—	—	—	—	—	7279 G6W
	PRT	B	—	2	2	—	—	—	—	—	7285 GRT
	PRX, HRX	B	—	2	2	—	—	—	—	—	7285 GRX
	PRY	B	—	2	2	—	—	—	—	—	7285 GRY

TYPE LETTERS Indicates: J - Challenger; B - Barracuda; V - Valiant; L - Dart; R - Belvedere; W - Coronet; P - Plymouth; D - Dodge; C - Chrysler; Y - Imperial

NUMERALS INDICATE: 21 - 2 DR. SED.; 23 - 2 DR. H.T.; 27 - CONV. CPE.; 29 - FAST BACK; 41 - 4 DR. SED.; 43 - 4 DR. H.T.; 45 - 6 PASS. STA. WGN.; 46 - 9 PASS. STA. WGN.

AR Indicates use as required.
# Indicates parts not listed in any previous parts book
Numerals in parentheses ( ) refer to notes.
★ Indicates change or addition.

Printed in U.S.A.
January 1972

Right and left part numbers are on same line, first number is right, second number is left.

CODE	PART NAME	MODEL CODES	SEE BOTTOM NOTE 21	23	27	29	41	43	45	46	PART NUMBER
23-108-5	COVER, Front Cushion Cont'd.										
	H4B	B	—	1	—	—	—	—	—	—	7297 G4B
	H4F	B	—	1	—	—	—	—	—	—	7297 G4F
	H4T	B	—	1	—	—	—	—	—	—	7297 G4T
	H4X	B	—	1	—	—	—	—	—	—	7297 G4X
	H4XW	B	—	1	—	—	—	—	—	—	7297 G4W
	H4F	J	—	1	—	—	—	—	—	—	7298 G4F
	H4X	J	—	1	—	—	—	—	—	—	7298 G4X
	H5F	J	—	2	—	—	—	—	—	—	7290 G5F
	H5X	J	—	2	—	—	—	—	—	—	7290 G5X
	H5XX	J	—	2	—	—	—	—	—	—	7290 G5A
	L5FW	J	—	2	—	—	—	—	—	—	7290 G5W
	H6B	J	—	2	2	—	—	—	—	—	7291 G6B
	H6F	J	—	2	2	—	—	—	—	—	7291 G6F
	H6T	J	—	2	2	—	—	—	—	—	7291 G6T
	H6X	J	—	2	2	—	—	—	—	—	7291 G6X
	H6XW	J	—	2	2	—	—	—	—	—	7291 G6W
	H6Y	J	—	2	2	—	—	—	—	—	7291 G6Y
	L2B	R	—	—	—	—	1	—	1	—	7244 G2B
	L2T	R	—	—	—	—	1	—	1	—	7244 G2T
	E2B, M2B	R,W	—	1	—	—	—	—	—	—	7301 G2B
	E2T, M2T	R,W	—	1	—	—	—	—	—	—	7301 G2T
	E2X, M2X	R,W	—	1	—	—	—	—	—	—	7301 G2X
	P6B, M6B, C6B, D6B	R,W	—	2	—	—	—	—	—	—	7287 G6B
	P6F, M6F, C6F, D6F	R,W	—	2	—	—	—	—	—	—	7287 G6F
	P6T, M6T, C6T, D6T	R,W	—	2	—	—	—	—	—	—	7287 G6T
	P6X, M6X, C6X, D6X	R,W	—	2	—	—	—	—	—	—	7287 G6X
	P6XA, M6XA, C6XA, D6XA	R,W	—	2	—	—	—	—	—	—	7287 G6A
	P6XW, M6XW, C6XW, D6XW	R,W	—	2	—	—	—	—	—	—	7287 G6W
	M6Y, P6Y, C6Y, D6Y	R,W	—	2	—	—	—	—	—	—	7287 G6Y
	M6XV	R	—	2	—	—	—	—	—	—	7287 G6V
	H1B	R	—	—	—	—	1	—	—	—	7252 G1B
	H1F	R	—	—	—	—	1	—	—	—	7252 G1F
	H1T	R	—	—	—	—	1	—	—	—	7252 G1T
	H1X	R	—	—	—	—	1	—	—	—	7252 G1X
	H1Y	R	—	—	—	—	1	—	—	—	7252 G1Y
	H1B	R	—	1	—	—	—	—	—	—	7275 G1B
	H1F	R	—	1	—	—	—	—	—	—	7275 G1F
	H1T	R	—	1	—	—	—	—	—	—	7275 G1T
	H1X	R	—	1	—	—	—	—	—	—	7275 G1X
	H2B	R	—	1	—	—	—	—	—	—	7258 G2B
	H2F	R	—	1	—	—	—	—	—	—	7258 G2F
	H2T	R	—	1	—	—	—	—	—	—	7258 G2T
	H2X	R	—	1	—	—	—	—	—	—	7258 G2X
	H2XA	R	—	1	—	—	—	—	—	—	7258 G2A
	H2XW	R	—	1	—	—	—	—	—	—	7258 G2W
	H2Y	R	—	1	—	—	—	—	—	—	7258 G2Y
	H2B, P2B	R	—	—	—	—	1	—	1	1	7259 G2B
	H2F, P2F	R	—	—	—	—	1	—	1	1	7259 G2F
	H2T, P2T	R	—	—	—	—	1	—	1	1	7259 G2T
	H2X, P2X	R	—	—	—	—	1	—	1	1	7259 G2X
	H2Y	R	—	—	—	—	1	—	—	—	7259 G2Y
	P3B	R	—	1	—	—	—	—	—	—	7274 GBB
	P3B	R	—	—	—	—	1	—	—	—	7274 G3B
	P3F	R	—	1	—	—	1	—	—	—	7274 G3F
	P3T	R	—	1	—	—	1	—	—	—	7274 G3T
	P3X	R	—	1	—	—	1	—	—	—	7274 G3X
	C5F, D5F	W	—	2	—	—	—	—	—	—	7305 G5F
	M5X, P5X, C5X, D5X	R,W	—	2	—	—	—	—	—	—	7305 G5X

TYPE LETTERS Indicates: J - Challenger; V - Valiant; R - Belvedere; P - Plymouth; C - Chrysler; B - Barracuda; L - Dart; W - Coronet; D - Dodge; Y - Imperial

NUMERALS INDICATE: 21 - 2 DR. SED.; 27 - CONV. CPE.; 41 - 4 DR. SED.; 45 - 6 PASS. STA. WGN.; 23 - 2 DR. H.T.; 29 - FAST BACK; 43 - 4 DR. H.T.; 46 - 9 PASS. STA. WGN.

AR Indicates use as required.
= Indicates parts not listed in any previous parts book
Numerals in parentheses ( ) refer to notes.
★ Indicates change or addition.

Printed in U.S.A.
January 1972

Right and left part numbers are on same line, first number is right, second number is left.

CODE	PART NAME	MODEL CODES	SEE BOTTOM NOTE 21	23	27	29	41	43	45	46	PART NUMBER
23-108-5	COVER, Front Cushion Cont'd.										
	C5XV, D5XV	W	—	2	—	—	—	—	—	—	7305 G5V
	K1T	R,W	—	—	—	—	1	—	—	—	7316 G1T
	K2T, T2T	R,W	—	—	—	—	1	—	—	—	7318 G2T
	K2X, T2X	R,W	—	—	—	—	1	—	—	—	7318 G2X
	L2B	W	—	—	—	—	1	—	1	—	7251 G2B
	L2T	W	—	—	—	—	1	—	1	—	7251 G2T
	D2X, L2X	R,W	—	—	—	—	1	—	1	—	7251 G2X
	D3B, P3B	R,W	—	—	—	—	1	—	1	1	7292 G3B
	D3F, P3F	R,W	—	—	—	—	1	—	1	1	7292 G3F
	D3T, P3T	R,W	—	—	—	—	—	—	1	1	7292 G3T
	P3X	W	—	—	—	—	1	—	—	—	7292 G3X
	P3Y	W	—	—	—	—	1	—	—	—	7292 G3Y
	D3B	W	—	—	—	1	—	—	—	—	7332 G3B
	D3F	W	—	—	—	1	—	—	—	—	7332 G3F
	D3X	W	—	—	—	1	—	—	—	—	7332 G3X
	D3Y	W	—	—	—	1	—	—	—	—	7332 G3Y
	H1B	W	—	—	—	—	1	—	—	—	7249 G1B
	H1F	W	—	—	—	—	1	—	—	—	7249 G1F
	H1X	W	—	—	—	—	1	—	—	—	7249 G1X
	H1Y	W	—	—	—	—	1	—	—	—	7249 G1Y
	H2B	W	—	—	—	—	1	—	1	1	7253 G2B
	H2F	W	—	—	—	—	1	—	1	1	7253 G2F
	H2T	W	—	—	—	—	1	—	1	1	7253 G2T
	H2X	W	—	—	—	—	1	—	1	1	7253 G2X
	H2Y	W	—	—	—	—	1	—	—	—	7253 G2Y
	C2B	W	—	1	—	—	—	—	—	—	7304 G2B
	C2F	W	—	1	—	—	—	—	—	—	7304 G2F
	C2T	W	—	1	—	—	—	—	—	—	7304 G2T
	C2X	W	—	1	—	—	—	—	—	—	7304 G2X
	C2XW	W	—	1	—	—	—	—	—	—	7304 G2W
	C2Y	W	—	1	—	—	—	—	—	—	7304 G2Y
	E5B	W	—	—	—	2	—	—	—	—	7237 G5B
	E5F	W	—	—	—	2	—	—	—	—	7237 G5F
	E5X	W	—	—	—	2	—	—	—	—	7237 G5X
	E5Y	W	—	—	—	2	—	—	—	—	7237 G5Y
	P4B	W	—	—	—	—	—	—	1	1	7288 G4B
	P4F	W	—	—	—	—	—	—	1	1	7288 G4F
	P4T	W	—	—	—	—	—	—	1	1	7288 G4T
	P4X	W	—	—	—	—	—	—	1	1	7288 G4X
	C3B	W	—	1	—	—	—	—	—	—	7352 G3B
	C3F	W	—	1	—	—	—	—	—	—	7352 G3F
	C3X	W	—	1	—	—	—	—	—	—	7352 G3X
	CRT	W	—	—	—	2	—	—	—	—	7302 GRT
	CRX	W	—	—	—	2	—	—	—	—	7302 GRX
	CRXA	W	—	—	—	2	—	—	—	—	7302 GRA
	Front Center Cushion										
	M6B, P6B, C6B, D6B	R,W	—	1	—	—	—	—	—	—	8033 GB5
	M6F, P6F, C5F, C6F, D5F, D6F	R,W	—	1	—	—	—	—	—	—	8033 GF7
	M6T, P6T, C6T, D6T	R,W	—	1	—	—	—	—	—	—	8033 GT7
	M5X, M6X, M6XV, P5X, P6X, C5X, C5XV, C6X, D5X, D5XV, D6X	R,W	—	1	—	—	—	—	—	—	8033 GX9
	M6XA, P6XA, C6XA, D6XA	R,W	—	1	—	—	—	—	—	—	8033 GA6
	M6XW, P6XW, C6XW, D6XW	R,W	—	1	—	—	—	—	—	—	8033 GW1
	M6Y, P5Y, P6Y, D6Y, C6Y	R,W	—	1	—	—	—	—	—	—	8033 GY3
	E5B	W	—	—	—	1	—	—	—	—	6030 GB5
	E5F	W	—	—	—	1	—	—	—	—	6030 GF7
	CRT	W	—	—	—	1	—	—	—	—	6030 GT7

TYPE LETTERS Indicates: J - Challenger, B - Barracuda, V - Valiant, L - Dart, R - Belvedere, W - Coronet, P - Plymouth, D - Dodge, C - Chrysler, Y - Imperial

NUMERALS INDICATE: 21 - 2 DR. SED., 23 - 2 DR. H.T., 27 - CONV. CPE., 29 - FAST BACK, 41 - 4 DR. SED., 43 - 4 DR. H.T., 45 - 6 PASS. STA. WGN., 46 - 9 PASS. STA. WGN.

AR Indicates use as required.
# Indicates parts not listed in any previous parts book
Numerals in parentheses ( ) refer to notes.
★ Indicates change or addition.

Printed in U.S.A.
January 1972

Right and left part numbers are on same line, first number is right, second number is left.

CODE	PART NAME	MODEL CODES	SEE BOTTOM NOTE 21	23	27	29	41	43	45	46	PART NUMBER
23-108-5	COVER, Front Cushion Cont'd.										
	E5X, CRX	W	—	—	—	1	—	—	—	—	6030 GX9
	CRXA	W	—	—	—	1	—	—	—	—	6030 GA6
	E5Y	W	—	—	—	1	—	—	—	—	6030 GY3
	E1B, B1B	P,D	1	1	—	—	—	—	—	—	7329 G1B
	E1T, B1T	P,D	1	1	—	—	—	—	—	—	7329 G1T
	E2B, B2B	P,D	1	1	—	—	—	—	—	—	7224 G2B
	E2T, B2T	P,D	1	1	—	—	—	—	—	—	7224 G2T
	E2XA, B2XA	P,D	1	1	—	—	—	—	—	—	7224 G2X
	D2XA	P	—	—	—	—	1	—	—	—	7261 G2A
	D2XA	P	1	—	—	—	—	—	—	—	7260 G2A
	M1B	P	—	1	—	1	—	—	—	—	7267 G1B
	M1F	P	—	1	—	1	—	—	—	—	7267 G1F
	M1XA	P	—	1	—	1	—	—	—	—	7267 G1X
	M1B	P	—	—	—	—	1	1	—	—	7268 G1B
	M1F	P	—	—	—	—	1	1	—	—	7268 G1F
	M1XA	P	—	—	—	—	1	1	—	—	7268 G1X
	M1Y	P	—	—	—	—	1	1	—	—	7268 G1Y
	M2B	P	—	—	—	—	—	—	1	1	7337 G2B
	M2F	P	—	—	—	—	—	—	1	1	7337 G2F
	M2T	P	—	—	—	—	—	—	1	1	7337 G2T
	M2XA	P	—	—	—	—	—	—	1	1	7337 G2X
	M4B, H4B	P	—	1	—	1	1	1	1	1	7239 G4B
	M4E, H4E	P	—	1	—	1	—	1	—	—	7239 G4E
	M4F, H4F	P	—	1	—	1	1	1	1	1	7239 G4F
	M4T, H4T	P	—	1	—	1	1	1	1	1	7239 G4T
	M4XA, H4XA	P	—	1	—	1	1	1	1	1	7239 G4X
	M4XW, H4XW	P	—	—	—	1	—	1	—	—	7239 G4W
	M4Y, H4Y	P	—	1	—	1	1	1	1	1	7239 G4Y
	M8XA	P	—	—	—	—	1	1	—	—	7242-3 G8X
	P4T	P	—	—	—	1	—	1	—	—	7214 G4T
	H3B	P	—	1	—	1	1	1	—	—	7322 G3B
	H3F	P	—	1	—	1	1	1	—	—	7322 G3F
	H3T	P	—	—	—	1	1	1	—	—	7322 G3T
	H3XA	P	—	1	—	1	1	1	—	—	7322 G3X
	H3Y	P	—	—	—	1	1	1	—	—	7322 G3Y
	H5B	P	—	2	—	2	—	—	—	—	7262 G5B
	H5F	P	—	2	—	2	—	—	—	—	7262 G5F
	H5X	P	—	2	—	2	—	—	—	—	7262 G5X
	H5Y	P	—	2	—	2	—	—	—	—	7262 G5Y
	H7B	P	—	—	—	—	1	1	—	—	7264-5 G7B
	H7F	P	—	—	—	—	1	1	—	—	7264-5 G7F
	H7XA	P	—	—	—	—	1	1	1	1	7264-5 G7X
	H7Y	P	—	—	—	—	1	1	—	—	7264-5 G7Y
	H8T	P	—	—	—	—	—	—	1	1	7344-5 G8T
	H8XA	P	—	—	—	—	—	—	1	1	7344-5 G8X
	E1B, B1B	P,D	—	—	—	—	1	—	—	—	7330 G1B
	E1T, B1T	P,D	—	—	—	—	1	—	—	—	7330 G1T
	E2B, B2B	P,D	—	—	—	—	1	—	1	—	7225 G2B
	E2T, B2T	P,D	—	—	—	—	1	—	1	—	7225 G2T
	E2XA, B2XA	P,D	—	—	—	—	1	—	1	—	7225 G2X
	K1A	D	—	—	—	—	1	—	—	—	7306 G1A
	K1T	P	—	—	—	—	1	—	—	—	7306 G1T
	K2A	D	—	—	—	—	1	—	—	—	7311 G2A
	K2T	P	—	—	—	—	1	—	—	—	7311 G2T
	K2X	P	—	—	—	—	1	—	—	—	7311 G2X
	K5A	D	—	—	—	—	2	—	—	—	7353 G5A
	K5T	P	—	—	—	—	2	—	—	—	7353 G5T
	K6A	D	—	—	—	—	2	—	—	—	7355 G6A

TYPE LETTERS Indicates: J - Challenger, B - Barracuda, V - Valiant, L - Dart, R - Belvedere, W - Coronet, P - Plymouth, D - Dodge, C - Chrysler, Y - Imperial

NUMERALS INDICATE: 21 - 2 DR. SED., 23 - 2 DR. H.T., 27 - CONV. CPE., 29 - FAST BACK, 41 - 4 DR. SED., 43 - 4 DR. H.T., 45 - 6 PASS. STA. WGN., 46 - 9 PASS. STA. WGN.

AR Indicates use as required.
= Indicates parts not listed in any previous parts book
Numerals in parentheses ( ) refer to notes.
★ Indicates change or addition.

Printed in U.S.A.
January 1972

Right and left part numbers are on same line, first number is right, second number is left.

CODE	PART NAME	MODEL CODES	SEE BOTTOM NOTE 21	23	27	29	41	43	45	46	PART NUMBER
23-108-5	COVER, Front Cushion Cont'd.										
	K6T	P	—	—	—	—	2	—	—	—	7355 G6T
	L1B	P	—	1	—	—	—	—	—	—	7231 G1B
	L1F	P	—	1	—	—	—	—	—	—	7231 G1F
	L1T	P	—	1	—	—	—	—	—	—	7231 G1T
	L1B	P	—	—	—	—	1	1	—	—	7230 G1B
	L1F	P	—	—	—	—	1	1	—	—	7230 G1F
	L1T	P	—	—	—	—	1	—	—	—	7230 G1T
	L2B	P	—	1	—	—	—	—	—	—	7335 G2B
	L2XA	P	—	1	—	—	—	—	—	—	7335 G2X
	L2B	P	—	—	—	—	1	—	1	1	7336 G2B
	L2F	P	—	—	—	—	—	—	1	1	7336 G2F
	L2T	P	—	—	—	—	—	—	1	1	7336 G2T
	L2XA	P	—	—	—	—	1	—	1	1	7336 G2X
	F1B	D	—	1	—	—	—	—	—	—	7231 G1B
	F1F	D	—	1	—	—	—	—	—	—	7231 G1F
	F1T	D	—	1	—	—	—	—	—	—	7231 G1T
	F1B	D	—	—	—	—	1	1	—	—	7230 G1B
	F1F	D	—	—	—	—	1	1	—	—	7230 G1F
	F1T	D	—	—	—	—	1	1	—	—	7230 G1T
	F2B	D	—	1	—	—	—	—	—	—	7335 G2B
	F2XA	D	—	1	—	—	—	—	—	—	7335 G2X
	F2B	D	—	—	—	—	1	—	1	1	7336 G2B
	F2F	D	—	—	—	—	—	—	1	1	7336 G2F
	F2T	D	—	—	—	—	—	—	1	1	7336 G2T
	F2XA	D	—	—	—	—	1	—	1	1	7336 G2X
	M6E, H6E	D	—	2	—	—	—	—	—	—	7272 G6E
	H6B	P	—	2	—	2	—	—	—	—	7272 G6B
	H6F, M6F	P	—	2	—	2	—	—	—	—	7272 G6F
	H6XA, M6XA, H6X, M6X	P,D	—	2	—	2	—	—	—	—	7272 G6X
	H6XW, M6XW	P,D	—	2	—	2	—	—	—	—	7272 G6W
	L1B	D	—	1	—	—	—	—	—	—	7232 G1B
	L1F	D	—	1	—	—	—	—	—	—	7232 G1F
	L1X	D	—	1	—	—	—	—	—	—	7232 G1X
	L1Y	D	—	1	—	—	—	—	—	—	7232 G1Y
	L1B	D	—	—	—	—	1	1	—	—	7233 G1B
	L1F	D	—	—	—	—	1	1	—	—	7233 G1F
	L1X	D	—	—	—	—	1	1	—	—	7233 G1X
	L1Y	D	—	—	—	—	1	1	—	—	7233 G1Y
	L2B	D	—	1	—	—	—	—	—	—	7234 G2B
	L2F	D	—	1	—	—	—	—	—	—	7234 G2F
	L2T	D	—	1	—	—	—	—	—	—	7234 G2T
	L2X	D	—	1	—	—	—	—	—	—	7234 G2X
	L2B	D	—	—	—	—	1	1	1	1	7235 G2B
	L2F	D	—	—	—	—	1	1	1	1	7235 G2F
	L2T	D	—	—	—	—	1	1	1	1	7235 G2T
	L2X	D	—	—	—	—	1	1	1	1	7235 G2X
	M3B, L3B	D	—	1	—	—	—	1	—	—	7328 G3B
	M3F, L3F	D	—	1	—	—	—	1	—	—	7328 G3F
	M3X, L3X	D	—	1	—	—	—	1	—	—	7328 G3X
	M3Y, L3Y	D	—	1	—	—	—	1	—	—	7328 G3Y
	M4B, L4B	D	—	1	—	—	—	1	—	—	7321 G4B
	M4E	D	—	1	—	—	—	1	—	—	7321 G4E
	M4F, L4F	D	—	1	—	—	—	1	—	—	7321 G4F
	M4X, L4X	D	—	1	—	—	—	1	—	—	7321 G4X
	M4XW	D	—	1	—	—	—	1	—	—	7321 G4W
	H3B	D	—	1	—	—	1	1	—	—	7296 G3B
	H3A	D	—	1	—	—	1	1	—	—	7296 G3A
	H3F	D	—	1	—	—	1	1	—	—	7296 G3F

TYPE LETTERS Indicates: J - Challenger, B - Barracuda, V - Valiant, L - Dart, R - Belvedere, W - Coronet, P - Plymouth, D - Dodge, C - Chrysler, Y - Imperial

NUMERALS INDICATE: 21 - 2 DR. SED., 23 - 2 DR. H.T., 27 - CONV. CPE., 29 - FAST BACK, 41 - 4 DR. SED., 43 - 4 DR. H.T., 45 - 6 PASS. STA. WGN., 46 - 9 PASS. STA. WGN.

AR Indicates use as required.
E Indicates parts not listed in any previous parts book
Numerals in parentheses ( ) refer to notes.
★ Indicates change or addition.

Printed in U.S.A.
January 1972

Right and left part numbers are on same line, first number is right, second number is left.

CODE	PART NAME	MODEL CODES	SEE BOTTOM NOTE 21	23	27	29	41	43	45	46	PART NUMBER
23-108-5	COVER, Front Cushion Cont'd.										
	H3X	D	—	1	—	—	1	1	—	—	7296 G3X
	H3Y	D	—	1	—	—	1	1	—	—	7296 G3Y
	H4E	D	—	1	—	—	—	1	—	—	7294 G4E
	H4F, D4F	D	—	1	—	—	1	1	1	1	7294 G4F
	H4X, D4X	D	—	1	—	—	1	1	1	1	7294 G4X
	H4B	D	—	—	—	—	—	—	1	1	7294 G4B
	H4T	D	—	—	—	—	—	—	1	1	7294 G4T
	H7B	D	—	—	—	—	1	1	1	1	7280-1 G7B
	H7A	D	—	—	—	—	1	1	—	—	7280-1 G7A
	H7F	D	—	—	—	—	1	1	1	1	7280-1 G7F
	H7X	D	—	—	—	—	1	1	1	1	7280-1 G7X
	H8T	D	—	—	—	—	—	—	1	1	7282-3 G8T
	H8X	D	—	—	—	—	—	—	1	1	7282-3 G8X
	Front Center Cushion										
	H5B	P	—	1	—	1	—	—	—	—	8024 GB2
	H5F, H6F	P,C	—	1	—	1	—	—	—	—	8024 GF7
	H5XA	P	—	1	—	1	—	—	—	—	8024 GA8
	H5Y	P	—	1	—	1	—	—	—	—	8024 GY5
	H6T	C	—	1	—	—	—	—	—	—	8024 GT7
	H6X	C	—	1	—	—	—	—	—	—	8024 GX9
	H6XW	C	—	1	—	—	—	—	—	—	8024 GW1
	H6B	P	—	1	—	—	—	—	—	—	8035 GB2
	M6E, H6E	D	—	1	—	—	—	—	—	—	8035 GE8
	M6F, H6F	P	—	1	—	1	—	1	—	—	8035 GF7
	M6XA, H6XA, M6X, H6X	P,D	—	1	—	1	—	1	—	—	8035 GX9
	M6XW, H6XW	P,D	—	1	—	1	—	1	—	—	8035 GW1
	E1B, G1B	C	—	1	—	—	—	—	—	—	7200 G1B
	E1A, G1A	C	—	1	—	—	—	—	—	—	7200 G1A
	E1F, G1F	C	—	1	—	—	—	—	—	—	7200 G1F
	E1X, G1X	C	—	1	—	—	—	—	—	—	7200 G1X
	E1Y, G1Y	C	—	1	—	—	—	—	—	—	7200 G1Y
	E1A, G1A	C	—	—	—	—	1	1	—	—	7201 G1A
	E1B, G1B	C	—	—	—	—	1	1	—	—	7201 G1B
	E1F, G1F	C	—	—	—	—	1	1	—	—	7201 G1F
	E1L, G1L	C	—	—	—	—	1	—	—	—	7201 G1L
	E1X, G1X	C	—	—	—	—	1	1	—	—	7201 G1X
	E1Y, G1Y	C	—	—	—	—	1	1	—	—	7201 G1Y
	E2E, G2E	C	—	1	—	—	—	—	—	—	7202 G2E
	E2F, G2F	C	—	1	—	—	—	—	—	—	7202 G2F
	E2L, G2L	C	—	1	—	—	—	—	—	—	7202 G2L
	E2X, G2X	C	—	1	—	—	—	—	—	—	7202 G2X
	E2E, G2E	C	—	—	—	—	1	1	—	—	7203 G2E
	E2F, G2F	C	—	—	—	—	1	1	—	—	7203 G2F
	E2L, G2L	C	—	—	—	—	—	1	—	—	7203 G2L
	E2X, G2X	C	—	—	—	—	1	1	—	—	7203 G2X
	L3B (Up to Build Date 11-1-70)	C	—	—	—	—	1	—	—	—	7204 G3B
	L3F, S3F (Up to Build Date 11-1-70)	C	—	1	—	—	1	1	—	—	7204 G3F
	L3L, S3L (Up to Build Date 11-1-70)	C	—	1	—	—	1	1	—	—	7204 G3L
	L3X (Up to Build Date 11-1-70)	C	—	1	—	—	1	1	—	—	7204 G3X
	L3Y, S3Y (Up to Build Date 11-1-70)	C	—	1	—	—	1	1	—	—	7204 G3Y
	L3B (After Build Date 11-1-70)	C	—	—	—	—	1	—	—	—	7246 G3B
	L3F, S3F (After Build Date 11-1-70)	C	—	1	—	—	1	1	—	—	7246 G3F
	L3L, S3L (After Build Date 11-1-70)	C	—	1	—	—	1	1	—	—	7246 G3L
	L3X (After Build Date 11-1-70)	C	—	1	—	—	1	1	—	—	7246 G3X
	L3Y, S3Y (After Build Date 11-1-70)	C	—	1	—	—	1	1	—	—	7246 G3Y
	L4B, S4B (Up to Build Date 11-1-70)	C	—	1	—	—	—	1	1	1	7206 G4B
	L4E, S4E (Up to Build Date 11-1-70)	C	—	1	—	—	1	1	—	—	7206 G4E
	L4F (Up to Build Date 11-1-70)	C	—	—	—	—	—	—	1	1	7206 G4F

TYPE LETTERS Indicates: J - Challenger; V - Valiant; R - Belvedere; P - Plymouth; C - Chrysler; B - Barracuda; L - Dart; W - Coronet; D - Dodge; Y - Imperial

NUMERALS INDICATE: 21 - 2 DR. SED.; 23 - 2 DR. H.T.; 27 - CONV. CPE.; 29 - FAST BACK; 41 - 4 DR. SED.; 43 - 4 DR. H.T.; 45 - 6 PASS. STA. WGN.; 46 - 9 PASS. STA. WGN.

AR Indicates use as required.
= Indicates parts not listed in any previous parts book
Numerals in parentheses ( ) refer to notes.
★ Indicates change or addition.

Printed in U.S.A.
January 1972

Right and left part numbers are on same line, first number is right, second number is left.

CODE	PART NAME	MODEL CODES	SEE BOTTOM NOTE 21	23	27	29	41	43	45	46	PART NUMBER
23-108-5	COVER, Front Cushion Cont'd.										
	L4X, S4X (Up to Build Date 11-1-70)	C	—	1	—	—	1	1	1	1	7206 G4X
	L4T (Up to Build Date 11-1-70)	C	—	—	—	—	—	—	1	1	7206 G4T
	L4B, S4B (After Build Date 11-1-70)	C	—	1	—	—	—	1	1	1	7247 G4B
	L4E, S4E (After Build Date 11-1-70)	C	—	1	—	—	1	1	—	—	7247 G4E
	L4F (After Build Date 11-1-70)	C	—	—	—	—	—	—	1	1	7247 G4F
	L4X, S4F (After Build Date 11-1-70)	C	—	1	—	—	1	1	1	1	7247 G4X
	L4T (After Build Date 11-1-70)	C	—	—	—	—	—	—	1	1	7247 G4T
	L7B (Up to Build Date 10-1-70)	C	—	—	—	—	1	1	—	—	7210-1 G7B
	L7F (Up to Build Date 10-1-70)	C	—	—	—	—	1	1	—	—	7210-1 G7F
	L7XL (Up to Build Date 10-1-70)	C	—	—	—	—	1	1	1	1	7210-1 G7L
	L7B (After Build Date 10-1-70)	C	—	—	—	—	1	1	—	—	7324-5 G7B
	L7F (After Build Date 10-1-70)	C	—	—	—	—	1	1	—	—	7324-5 G7F
	L7XL (After Build Date 10-1-70)	C	—	—	—	—	1	1	1	1	7324-5 G7L
	L8F (Up to Build Date 10-1-70)	C	—	—	—	—	1	1	1	1	7212-3 G8F
	L8X (Up to Build Date 10-1-70)	C	—	—	—	—	1	1	1	1	7212-3 G8X
	L8Y (Up to Build Date 10-1-70)	C	—	—	—	—	—	—	1	1	7212-3 G8Y
	L8T (Up to Build Date 10-1-70)	C	—	—	—	—	—	—	1	1	7212-3 G8T
	L8F (After Build Date 10-1-70)	C	—	—	—	—	1	1	1	1	7326-7 G8F
	L8X (After Build Date 10-1-70)	C	—	—	—	—	1	1	1	1	7326-7 G8X
	L8Y (After Build Date 10-1-70)	C	—	—	—	—	—	—	1	1	7326-7 G8Y
	L8T (After Build Date 10-1-70)	C	—	—	—	—	—	—	1	1	7326-7 G8T
	H3A	C	—	1	—	—	—	—	—	—	7215 G3A
	H3F	C	—	1	—	—	—	—	—	—	7215 G3F
	H3X	C	—	1	—	—	—	—	—	—	7215 G3X
	H3Y	C	—	1	—	—	—	—	—	—	7215 G3Y
	H3B	C	—	1	—	—	—	—	—	—	7215 G3B
	H6F	C	—	2	—	—	—	—	—	—	7216 G6F
	H6T	C	—	2	—	—	—	—	—	—	7216 G6T
	H6X	C	—	2	—	—	—	—	—	—	7216 G6X
	H6XW	C	—	2	—	—	—	—	—	—	7216 G6W
	H7A	C	—	—	—	—	1	1	—	—	7218-9 G7A
	H7B	C	—	—	—	—	1	1	—	—	7218-9 G7B
	H7F	C	—	—	—	—	1	1	—	—	7218-9 G7F
	H7X	C	—	—	—	—	1	1	—	—	7218-9 G7X
	H8F	C	—	—	—	—	1	1	—	—	7220-1 G8F
	H8L	C	—	—	—	—	1	1	—	—	7220-1 G8L
	H8X	C	—	—	—	—	1	1	—	—	7220-1 G8X
	HLT (Sample of Material Req'd.)	C	—	—	—	—	1	1	—	—	7222-3 GLT
	HLT (Sample of Material Req'd.)	C	—	—	—	—	1	1	—	—	7222-3 GLJ
	H9A	C	—	—	—	—	1	1	—	—	7341 G9A
	H9B	C	—	—	—	—	1	1	—	—	7341 G9B
	H9F	C	—	—	—	—	1	1	—	—	7341 G9F
	H9X	C	—	—	—	—	1	1	—	—	7341 G9X
	H9Y	C	—	—	—	—	1	1	—	—	7341 G9Y
	S6F	C	—	2	—	—	—	2	—	—	7208 G6F
	S6L	C	—	2	—	—	—	2	—	—	7208 G6L
	E6T, S6T, G6T	C	—	2	—	—	—	2	—	—	7208 G6T
	E6X, S6X, G6X	C	—	2	—	—	—	2	—	—	7208 G6X
	E6XW, S6XW, G6XW	C	—	2	—	—	—	2	—	—	7208 G6W
	MBA	Y	—	1	—	—	—	—	—	—	7270 GBA
	MBB	Y	—	1	—	—	—	—	—	—	7270 GBB
	MBF	Y	—	1	—	—	—	—	—	—	7270 GBF
	MBM	Y	—	1	—	—	—	—	—	—	7270 GBM
	MBTT	Y	—	1	—	—	—	—	—	—	7270 GBT
	MBX	Y	—	1	—	—	—	—	—	—	7270 GBX
	MBY	Y	—	1	—	—	—	—	—	—	7270 GBY
	MRB	Y	—	2	—	—	—	—	—	—	7309 GRB
	MRE	Y	—	2	—	—	—	—	—	—	7309 GRE

TYPE LETTERS Indicates: J - Challenger, B - Barracuda, V - Valiant, L - Dart, R - Belvedere, W - Coronet, P - Plymouth, D - Dodge, C - Chrysler, Y - Imperial

NUMERALS INDICATE: 21 - 2 DR. SED., 23 - 2 DR. H.T., 27 - CONV. CPE., 29 - FAST BACK, 41 - 4 DR. SED., 43 - 4 DR. H.T., 45 - 6 PASS. STA. WGN., 46 - 9 PASS. STA. WGN

AR Indicates use as required.
# Indicates parts not listed in any previous parts book
Numerals in parentheses ( ) refer to notes.
★ Indicates change or addition.

Printed in U.S.A.
January 1972

Right and left part numbers are on same line, first number is right, second number is left.

CODE	PART NAME	MODEL CODES	SEE BOTTOM NOTE 21	23	27	29	41	43	45	46	PART NUMBER
23-108-5	COVER, Front Cushion Cont'd.										
	MRF	Y	—	2	—	—	—	—	—	—	7309 GRF
	MRT	Y	—	2	—	—	—	—	—	—	7309 GRT
	MRX	Y	—	2	—	—	—	—	—	—	7309 GRX
	MRXW	Y	—	2	—	—	—	—	—	—	7309 GRW
	MRY	Y	—	2	—	—	—	—	—	—	7309 GRY
	MLA	Y	—	—	—	—	—	1	—	—	7256-7 GLA
	MLB	Y	—	—	—	—	—	1	—	—	7256-7 GLB
	MLE	Y	—	—	—	—	—	1	—	—	7256-7 GLE
	MLF	Y	—	—	—	—	—	1	—	—	7256-7 GLF
	MLM	Y	—	—	—	—	—	1	—	—	7256-7 GLM
	MLT	Y	—	—	—	—	—	1	—	—	7256-7 GLT
	MLX	Y	—	—	—	—	—	1	—	—	7256-7 GLX
	MLXW	Y	—	—	—	—	—	1	—	—	7256-7 GLW
	MLY	Y	—	—	—	—	—	1	—	—	7256-7 GLY
	MDA	Y	—	—	—	—	—	1	—	—	7314-5 GDA
	MDB	Y	—	—	—	—	—	1	—	—	7314-5 GDB
	MDF	Y	—	—	—	—	—	1	—	—	7314-5 GDF
	MDM	Y	—	—	—	—	—	1	—	—	7314-5 GDM
	MDTT	Y	—	—	—	—	—	1	—	—	7314-5 GDT
	MDX	Y	—	—	—	—	—	1	—	—	7314-5 GDX
	MDY	Y	—	—	—	—	—	1	—	—	7314-5 GDY
	Front Center Cushion										
	E6XW, S6XW, G6XW	C	—	1	—	—	—	1	—	—	8012 GW1
	S6F	C	—	1	—	—	—	1	—	—	8012 GF7
	S6L	C	—	1	—	—	—	1	—	—	8012 GL2
	E6T, S6T, G6T	C	—	1	—	—	—	1	—	—	8012 GT7
	E6X, S6X, G6X	C	—	1	—	—	—	1	—	—	8012 GX9
	MRB	Y	—	1	—	—	—	—	—	—	7308 GRB
	MRE	Y	—	1	—	—	—	—	—	—	7308 GRE
	MRF	Y	—	1	—	—	—	—	—	—	7308 GRF
	MRT	Y	—	1	—	—	—	—	—	—	7308 GRT
	MRX	Y	—	1	—	—	—	—	—	—	7308 GRX
	MRXW	Y	—	1	—	—	—	—	—	—	7308 GRW
	MRY	Y	—	1	—	—	—	—	—	—	7308 GRY
	For Police Cars Only										
	Front Cushion Cover										
	Blue-Bench (Michigan & Rhode Island)	R	1	—	—	—	—	—	—	—	3571 602
	Tan-Bench (Michigan & Rhode Island)	R	1	—	—	—	—	—	—	—	3571 608
	Black-Bench (Michigan & Rhode Island)	R	1	—	—	—	—	—	—	—	3571 614
	Blu3-Bench (Michigan & Rhode Island)	R	—	—	—	—	1	—	—	—	3571 620
	Tan-Bench (Michigan & Rhode Island)	R	—	—	—	—	1	—	—	—	3571 625
	Blue-Bucket (Texas)	R,W	—	—	—	—	2	—	—	—	3571 481
	Blue-Bench (Detroit & Rhode Island)	P	1	—	—	—	—	—	—	—	3571 630
	Tan-Bench (Detroit & Rhode Island)	P	1	—	—	—	—	—	—	—	3571 636
	Black-Bench (Detroit & Rhode Island)	P	1	—	—	—	—	—	—	—	3571 642
	Tan-Bench (Canada)	P	1	—	—	—	—	—	—	—	3571 711
	Gold-Bench (Texas)	P	—	—	—	—	1	—	—	—	3571 549
	Black-50/50 (Pennsylvania) Rt.	P	—	—	—	—	1	—	—	—	3571 562
	Black-50/50 (Pennsylvania) Lt.	P	—	—	—	—	1	—	—	—	3571 561
	Tan-50/50 (Detroit) Rt.	P	—	—	—	—	1	—	—	—	3571 724
	Tan-50/50 (Detroit) Lt.	P	—	—	—	—	1	—	—	—	3571 725
	Blue-Bench (Michigan)	P	—	—	—	—	—	—	1	—	3571 761
	Black-Bucket (Detroit & Philadelphia)	P	—	—	—	—	—	—	2	—	3571 407

TYPE LETTERS Indicates: J - Challenger, B - Barracuda, V - Valiant, L - Dart, R - Belvedere, W - Coronet, P - Plymouth, D - Dodge, C - Chrysler, Y - Imperial

NUMERALS INDICATE: 21 - 2 DR. SED., 23 - 2 DR. H.T., 27 - CONV. CPE., 29 - FAST BACK, 41 - 4 DR. SED., 43 - 4 DR. H.T., 45 - 6 PASS. STA. WGN., 46 - 9 PASS. STA. WGN.

AR Indicates use as required.
= Indicates parts not listed in any previous parts book
Numerals in parentheses ( ) refer to notes.
★ Indicates change or addition.

Printed in U.S.A.
January 1972

Right and left part numbers are on same line, first number is right, second number is left.

CODE	PART NAME	MODEL CODES	SEE BOTTOM NOTE 21	23	27	29	41	43	45	46	PART NUMBER
23-108-5	COVER, Front Cushion Cont'd.										
	Black-50/50 (Detroit) Rt.	P	—	—	—	—	—	—	1	—	3571 730
	Black-50/50 (Detroit) Lt.	P	—	—	—	—	—	—	1	—	3571 729
23-108-12	BACK, Front Seat For Complete Assembly Order By Description, Vehicle Serial Number and Trim Code.										
23-108-15	SPRING and COVER, Front Seat Back For Complete Assembly Order By Description, Vehicle Serial Number and Trim Code.										
23-108-16	COVER, Front Back										
	L3B	V	—	—	—	—	1	—	—	—	8046-7 G3B
	L3F	V	—	—	—	—	1	—	—	—	8046-7 G3F
	L3X	V	—	—	—	—	1	—	—	—	8046-7 G3X
	L4B	V	—	—	—	1	1	—	—	—	7472-3 G4B
	L4F	V	—	—	—	1	1	—	—	—	7472-3 G4F
	L4T	V	—	—	—	1	1	—	—	—	7472-3 G4T
	L4X	V	—	—	—	1	1	—	—	—	7472-3 G4X
	L4Y	V	—	—	—	1	1	—	—	—	7472-3 G4Y
	L1B, M1B	V,L	—	—	—	1	—	—	—	—	7496-7 G1B
	L1F, M1F	V,L	—	—	—	1	—	—	—	—	7496-7 G1F
	L1X, M1X	V,L	—	—	—	1	—	—	—	—	7496-7 G1X
	L1XX, M1XX	V,L	—	—	—	1	—	—	—	—	7496-7 G1A
	L2B, E2B	V,L	—	—	—	1	—	—	—	—	7434-5 G2B
	L2T, E2T	V,L	—	—	—	1	—	—	—	—	7434-5 G2T
	L2X, E2X	V,L	—	—	—	1	—	—	—	—	7434-5 F2X
	L2B	V,L	—	—	—	—	1	—	—	—	7433 G2B
	L2F	L	—	—	—	—	1	—	—	—	7433 G2F
	L2T	V	—	—	—	—	1	—	—	—	7433 G2T
	L2X	V,L	—	—	—	—	1	—	—	—	7433 G2X
	L6X, M6X	V,L	—	—	—	2	—	—	—	—	7530 G6X
	L6XV, M6XV	V,L	—	—	—	2	—	—	—	—	7530 G6V
	L6XW, M6XW	V,L	—	—	—	2	—	—	—	—	7530 G6W
	H1B	L	—	—	—	—	1	—	—	—	7448 G1B
	H1F	L	—	—	—	—	1	—	—	—	7448 G1F
	H1X	L	—	—	—	—	1	—	—	—	7448 G1X
	H2B, D2B	V,L	—	1	—	—	—	—	—	—	7454-5 G2B
	H2F, D2F	V,L	—	1	—	—	—	—	—	—	7454-5 G2F
	H2X, D2X	V,L	—	1	—	—	—	—	—	—	7454-5 G2X
	H2XW, D2XW	V,L	—	1	—	—	—	—	—	—	7454-5 G2W
	H2Y, D2Y	V,L	—	1	—	—	—	—	—	—	7454-5 G2Y
	H2B	L	—	—	—	—	1	—	—	—	7456 G2B
	H2F	L	—	—	—	—	1	—	—	—	7456 G2F
	H2X	L	—	—	—	—	1	—	—	—	7456 G2X
	H2Y	L	—	—	—	—	1	—	—	—	7456 G2Y
	L2F	L	—	1	—	—	—	—	—	—	7434-5 G2F
	L2B, E2B	V,L	—	1	—	1	—	—	—	—	7434-5 G2B
	L2T, E2T	V,L	—	—	—	1	—	—	—	—	7434-5 G2T
	L2X, E2X	V,L	—	1	—	1	—	—	—	—	7434-5 F2X
	H6X, D6X	L	—	2	—	—	—	—	—	—	7538 G6X
	H6XW, D6XW	L	—	2	—	—	—	—	—	—	7538 G6W
	H4B, H6B	B	—	2	2	—	—	—	—	—	7534 G6B
	H4F, H6F	B	—	2	2	—	—	—	—	—	7534 G6F
	H4T, H6T	B	—	2	2	—	—	—	—	—	7534 G6T
	H4X, H6X	B	—	2	2	—	—	—	—	—	7534 G6X
	H4XW, H6XW	B	—	2	2	—	—	—	—	—	7534 G6W
	H6XV	B	—	2	2	—	—	—	—	—	7534 G6V
	L6B	J	—	2	—	—	—	—	—	—	7534 G6B

TYPE LETTERS Indicates	J - Challenger B - Barracuda	V - Valiant L - Dart	R - Belvedere W - Coronet	P - Plymouth D - Dodge	C - Chrysler Y - Imperial
NUMERALS INDICATE:	21 - 2 DR. SED. 23 - 2 DR. H.T.	27 - CONV. CPE. 29 - FAST BACK	41 - 4 DR. SED. 43 - 4 DR. H.T.		45 - 6 PASS. STA. WGN. 46 - 9 PASS. STA. WGN.

AR Indicates use as required.
# Indicates parts not listed in any previous parts book
Numerals in parentheses ( ) refer to notes.
★ Indicates change or addition.

Printed in U.S.A.
January 1972

Right and left part numbers are on same line, first number is right, second number is left.

CODE	PART NAME	MODEL CODES	SEE BOTTOM NOTE 21	23	27	29	41	43	45	46	PART NUMBER
page 23-108-16	COVER, Front Back Cont'd.										
	L6F	J	—	2	—	—	—	—	—	—	7534 G6F
	L6T	J	—	2	—	—	—	—	—	—	7534 G6T
	L6X	J	—	2	—	—	—	—	—	—	7534 G6X
	L6XW	J	—	2	—	—	—	—	—	—	7534 G6W
	H5X, P5X	B	—	2	—	—	—	—	—	—	7501 G5X
	H5XV	B	—	2	—	—	—	—	—	—	7501 G5V
	P6B	B	—	2	—	—	—	—	—	—	7522 G6B
	P6F	B	—	2	—	—	—	—	—	—	7522 G6F
	P6T	B	—	2	—	—	—	—	—	—	7522 G6T
	P6X	B	—	2	—	—	—	—	—	—	7522 G6X
	P6Y	B	—	2	—	—	—	—	—	—	7522 G6Y
	PRT, SRT	B	—	2	2	—	—	—	—	—	7539 GRT
	PRX, SRX, HRX	B,J	—	2	2	—	—	—	—	—	7539 GRX
	PRY	B	—	2	—	—	—	—	—	—	7539 GRY
	H5F	J	—	2	—	—	—	—	—	—	7508 G5F
	H5X	J	—	2	—	—	—	—	—	—	7508 G5X
	H5XX	J	—	2	—	—	—	—	—	—	7508 G5A
	L5FW	J	—	2	—	—	—	—	—	—	7508 G5W
	H6B	J	—	2	2	—	—	—	—	—	7541 G6B
	H4F, H6F	J	—	2	2	—	—	—	—	—	7541 G6F
	H6T	J	—	2	2	—	—	—	—	—	7541 G6T
	H4X, H6X	J	—	2	2	—	—	—	—	—	7541 G6X
	H6XW	J	—	2	2	—	—	—	—	—	7541 G6W
	H6Y	J	—	2	2	—	—	—	—	—	7541 G6Y
	L2B	R	—	—	—	—	1	—	1	—	7457 G2B
	L2T	R	—	—	—	—	1	—	1	—	7457 G2T
	E2B, M2B	R,W	—	1	—	—	—	—	—	—	7578-9 G2B
	E2T, M2T	R,W	—	1	—	—	—	—	—	—	7578-9 G2T
	E2X, M2X	R,W	—	1	—	—	—	—	—	—	7578-9 G2X
	H1B	R	—	1	—	—	—	—	—	—	7580-1 G1B
	H1F	R	—	1	—	—	—	—	—	—	7580-1 G1B
	H1T	R	—	1	—	—	—	—	—	—	7580-1 G1T
	H1X	R	—	1	—	—	—	—	—	—	7580-1 G1X
	H1B	R	—	—	—	—	1	—	—	—	7468 G1B
	H1F	R	—	—	—	—	1	—	—	—	7468 G1F
	H1T	R	—	—	—	—	1	—	—	—	7468 G1T
	H1X	R	—	—	—	—	1	—	—	—	7468 G1X
	H1Y	R	—	—	—	—	1	—	—	—	7468 G1Y
	H2B	R	—	1	—	—	—	—	—	—	7582-3 G2B
	H2F	R	—	1	—	—	—	—	—	—	7582-3 G2F
	H2T	R	—	1	—	—	—	—	—	—	7582-3 G2T
	H2X	R	—	1	—	—	—	—	—	—	7582-3 G2X
	H2XA	R	—	1	—	—	—	—	—	—	7582-3 G2A
	H2XW	R	—	1	—	—	—	—	—	—	7582-3 G2W
	H2Y	R	—	1	—	—	—	—	—	—	7582-3 G2Y
	H2B, P2B	R	—	—	—	—	1	—	1	1	7482 G2B
	H2F, P2F	R	—	—	—	—	1	—	1	1	7482 G2F
	H2T, P2T	R	—	—	—	—	1	—	1	1	7482 G2T
	H2X, P2X	R	—	—	—	—	1	—	1	1	7482 G2X
	H2Y	R	—	—	—	—	1	—	—	—	7482 G2Y
	P3B	R	—	2	—	—	—	—	—	—	7520 GBB
	P3B	R	—	—	—	—	2	—	—	—	7520 G3B
	P3F	R	—	2	—	—	2	—	—	—	7520 G3F
	P3T	R	—	2	—	—	2	—	—	—	7520 G3T
	P3X	R	—	2	—	—	—	—	—	—	7520 G3X
	P6B, M6B, C6B, D6B	R,W	—	2	—	—	—	—	—	—	7531 G6B
	P6F, M6F, C6F, D6F	R,W	—	2	—	—	—	—	—	—	7531 G6F
	P6T, M6T, C6T, D6T	R,W	—	2	—	—	—	—	—	—	7531 G6T

TYPE LETTERS Indicates: J - Challenger, B - Barracuda, V - Valiant, L - Dart, R - Belvedere, W - Coronet, P - Plymouth, D - Dodge, C - Chrysler, Y - Imperial

NUMERALS INDICATE: 21 - 2 DR. SED., 23 - 2 DR. H.T., 27 - CONV. CPE., 29 - FAST BACK, 41 - 4 DR. SED., 43 - 4 DR. H.T., 45 - 6 PASS. STA. WGN., 46 - 9 PASS. STA. WGN.

AR Indicates use as required.
= Indicates parts not listed in any previous parts book
Numerals in parentheses ( ) refer to notes.
★ Indicates change or addition.

Printed in U.S.A.
January 1972

Right and left part numbers are on same line, first number is right, second number is left.

CODE	PART NAME	MODEL CODES	SEE BOTTOM NOTE 21	23	27	29	41	43	45	46	PART NUMBER
23-108-16	COVER, Front Back Cont'd.										
	P6X, M6X, C6X, D6X	R,W	—	2	—	—	—	—	—	—	7531 G6X
	P6XA, M6XA, C6XA, D6XA	R,W	—	2	—	—	—	—	—	—	7531 G6A
	P6XW, M6XW, C6XW, D6XW	R,W	—	2	—	—	—	—	—	—	7531 G6W
	P6Y, M6Y, C6Y, D6Y	R,W	—	2	—	—	—	—	—	—	7531 G6Y
	M6XV	R	—	2	—	—	—	—	—	—	7531 G6V
	K1T	R,W	—	—	—	—	1	—	—	—	7576 G1T
	K2T, T2T	R,W	—	—	—	—	1	—	—	—	7492 G2T
	K2X, T2X	R,W	—	—	—	—	1	—	—	—	7492 G2X
	L2B	W	—	—	—	—	2	—	2	—	7467 G2B
	L2T	W	—	—	—	—	1	—	1	—	7467 G2T
	D2X, L2X	R,W	—	—	—	—	1	—	1	—	7467 G2X
	D3B, P3B	R,W	—	—	—	—	1	—	1	1	7536-7 G3B
	D3F, P3F	R,W	—	—	—	—	1	—	1	1	7536-7 G3F
	D3T, P3T	R,W	—	—	—	—	—	—	1	1	7536-7 G3T
	P3X	W	—	—	—	—	1	—	—	—	7536-7 G3X
	P3Y	W	—	—	—	—	1	—	—	—	7536-7 G3Y
	C5F, D5F	W	—	2	—	—	—	—	—	—	7558 G5F
	M5X, P5X, C5X, D5X	R,W	—	2	—	—	—	—	—	—	7558 G5X
	C5XV, D5XV	W	—	2	—	—	—	—	—	—	7558 G5V
	D3B	W	—	—	—	2	—	—	—	—	8122 G3B
	D3F	W	—	—	—	2	—	—	—	—	8122 G3F
	D3X	W	—	—	—	2	—	—	—	—	8122 G3X
	D3Y	W	—	—	—	2	—	—	—	—	8122 G3Y
	H1B	W	—	—	—	—	1	—	—	—	7465 G1B
	H1F	W	—	—	—	—	1	—	—	—	7465 G1F
	H1X	W	—	—	—	—	1	—	—	—	7465 G1X
	H1Y	W	—	—	—	—	1	—	—	—	7465 G1Y
	H2B	W	—	—	—	—	1	—	1	1	7469 G2B
	H2F	W	—	—	—	—	1	—	1	1	7469 G2F
	H2T	W	—	—	—	—	1	—	1	1	7469 G2T
	H2X	W	—	—	—	—	1	—	1	1	7469 G2X
	H2Y	W	—	—	—	—	1	—	—	—	7469 G2Y
	C2B	W	—	1	—	—	—	—	—	—	7586-7 G2B
	C2F	W	—	1	—	—	—	—	—	—	7586-7 G2F
	C2T	W	—	1	—	—	—	—	—	—	7586-7 G2T
	C2X	W	—	1	—	—	—	—	—	—	7586-7 G2X
	C2XW	W	—	1	—	—	—	—	—	—	7586-7 G2W
	C2Y	W	—	1	—	—	—	—	—	—	7586-7 G2Y
	C3B	W	—	2	—	—	—	—	—	—	7419 G3B
	C3F	W	—	2	—	—	—	—	—	—	7419 G3F
	C3X	W	—	2	—	—	—	—	—	—	7419 G3X
	E5B	W	—	—	—	2	—	—	—	—	7449 G5B
	E5F	W	—	—	—	2	—	—	—	—	7449 G5F
	E5X	W	—	—	—	2	—	—	—	—	7449 G5X
	E5Y	W	—	—	—	2	—	—	—	—	7449 G5Y
	CRT	W	—	—	—	2	—	—	—	—	7554 GRT
	CRX	W	—	—	—	2	—	—	—	—	7554 GRX
	CRXA	W	—	—	—	2	—	—	—	—	7554 GRA
	P4B	W	—	—	—	—	—	—	1	1	7532-3 G4B
	P4F	W	—	—	—	—	—	—	1	1	7532-3 G4F
	P4T	W	—	—	—	—	—	—	1	1	7532-3 G4T
	P4X	W	—	—	—	—	—	—	1	1	7532-3 G4X
	E1B, B1B	P,D	1	1	—	—	—	—	—	—	7596-7 G1B
	E1T, B1T	P,D	1	1	—	—	—	—	—	—	7596-7 G1T
	E2B, B2B	P,D	1	1	—	—	—	—	—	—	7430-1 G2B
	E2T, B2T	P,D	1	1	—	—	—	—	—	—	7430-1 G2T
	E2XA, B2XA	P,D	1	1	—	—	—	—	—	—	7430-1 G2X
	M1B	P	—	1	—	1	—	—	—	—	7498-9 G1B

TYPE LETTERS Indicates: J - Challenger, B - Barracuda, V - Valiant, L - Dart, R - Belvedere, W - Coronet, P - Plymouth, D - Dodge, C - Chrysler, Y - Imperial

NUMERALS INDICATE: 21 - 2 DR. SED., 23 - 2 DR. H.T., 27 - CONV. CPE., 29 - FAST BACK, 41 - 4 DR. SED., 43 - 4 DR. H.T., 45 - 6 PASS. STA. WGN., 46 - 9 PASS. STA. WGN.

AR Indicates use as required.
# Indicates parts not listed in any previous parts book
Numerals in parentheses ( ) refer to notes.
★ Indicates change or addition.

Printed in U.S.A.
January 1972

Right and left part numbers are on same line, first number is right, second number is left.

CODE	PART NAME	MODEL CODES	SEE BOTTOM NOTE 21	23	27	29	41	43	45	46	PART NUMBER
23-108-16	COVER, Front Back Cont'd.										
	M1F	P	—	1	—	1	—	—	—	—	7498-9 G1F
	M1XA	P	—	1	—	1	—	—	—	—	7498-9 G1X
	M1B	P	—	—	—	—	1	1	—	—	7500 G1B
	M1F	P	—	—	—	—	1	1	—	—	7500 G1F
	M1XA	P	—	—	—	—	1	1	—	—	7500 G1X
	M1Y	P	—	—	—	—	1	1	—	—	7500 G1Y
	M2B	P	—	—	—	—	—	—	1	1	7599 G2B
	M2F	P	—	—	—	—	—	—	1	1	7599 G2F
	M2T	P	—	—	—	—	—	—	1	1	7599 G2T
	M2XA	P	—	—	—	—	—	—	1	1	7599 G2X
	H3B	P	—	2	—	2	2	2	—	—	7584 G3B
	H3F	P	—	2	—	2	2	2	—	—	7584 G3F
	H3T	P	—	—	—	2	2	2	—	—	7584 G3T
	H3XA	P	—	2	—	2	2	2	—	—	7584 G3X
	H3Y	P	—	—	—	2	2	2	—	—	7584 G3Y
	M4B, H4B	P	—	2	—	2	2	2	2	2	7452 G4B
	M4E, H4E	P	—	2	—	2	—	2	—	—	7452 G4E
	M4F, H4F	P	—	2	—	2	2	2	2	2	7452 G4F
	M4T, H4T	P	—	2	—	2	2	2	2	2	7452 G4T
	M4XA, H4XA	P	—	2	—	2	2	2	2	2	7452 G4X
	M4XW, H4XW	P	—	—	—	2	—	2	—	—	7452 G4W
	M4Y, H4Y	P	—	2	—	2	2	2	2	2	7452 G4Y
	P4T	P	—	—	—	2	—	2	—	—	7451 G4T
	H5B	P	—	1	—	1	—	—	—	—	7516-7 G5B
	H5F	P	—	1	—	1	—	—	—	—	7516-7 G5F
	H5X	P	—	1	—	1	—	—	—	—	7516-7 G5X
	H5Y	P	—	1	—	1	—	—	—	—	7516-7 G5Y
	H7B	P	—	—	—	—	1	1	—	—	7494-5 G7B
	H7F	P	—	—	—	—	1	1	—	—	7494-5 G7F
	H7X	P	—	—	—	—	1	1	—	—	7494-5 G7X
	H7Y	P	—	—	—	—	1	1	—	—	7494-5 G7Y
	M8XA	P	—	—	—	—	1	1	—	—	7458-9 G8X
	H8T	P	—	—	—	—	—	—	1	1	7592-3 G8T
	H8XA	P	—	—	—	—	—	—	1	1	7592-3 G8X
	E1B, B1B	P,D	—	—	—	—	1	—	—	—	7598 G1B
	E1T, B1T	P,D	—	—	—	—	1	—	—	—	7598 G1T
	E2B, B2B	P,D	—	—	—	—	1	—	1	—	7432 G2B
	E2T, B2T	P,D	—	—	—	—	1	—	1	—	7432 G2T
	E2XA, B2XA	P,D	—	—	—	—	1	—	1	—	7432 G2X
	D2XA	P	—	—	—	—	1	—	—	—	7450 G2A
	D2XA	P	1	—	—	—	—	—	—	—	7410-1 G2A
	L1B	P	—	1	—	—	—	—	—	—	7440-1 G1B
	L1F	P	—	1	—	—	—	—	—	—	7440-1 G1F
	L1T	P	—	1	—	—	—	—	—	—	7440-1 G1T
	L1B	P	—	—	—	—	1	1	—	—	7437 G1B
	L1F	P	—	—	—	—	1	1	—	—	7437 G1F
	L1T	P	—	—	—	—	1	—	—	—	7437 G1T
	L2B	P	—	1	—	—	—	—	—	—	7512-3 G2B
	L2XA	P	—	1	—	—	—	—	—	—	7512-3 G2X
	L2B	P	—	—	—	—	1	—	1	1	7436 G2B
	L2F	P	—	—	—	—	1	—	1	1	7436 G2F
	L2T	P	—	—	—	—	1	—	1	1	7436 G2T
	L2XA	P	—	—	—	—	1	—	1	1	7436 G2X
	F1B	D	—	1	—	—	—	—	—	—	7440-1 G1B
	F1F	D	—	1	—	—	—	—	—	—	7440-1 G1F
	F1T	D	—	1	—	—	—	—	—	—	7440-1 G1T
	F1B	D	—	—	—	—	1	1	—	—	7437 G1B
	F1F	D	—	—	—	—	1	1	—	—	7437 G1F

TYPE LETTERS Indicates: J - Challenger; B - Barracuda; V - Valiant; L - Dart; R - Belvedere; W - Coronet; P - Plymouth; D - Dodge; C - Chrysler; Y - Imperial

NUMERALS INDICATE: 21 - 2 DR. SED.; 23 - 2 DR. H.T.; 27 - CONV. CPE.; 29 - FAST BACK; 41 - 4 DR. SED.; 43 - 4 DR. H.T.; 45 - 6 PASS. STA. WGN.; 46 - 9 PASS. STA. WGN.

AR Indicates use as required.
= Indicates parts not listed in any previous parts book
Numerals in parentheses ( ) refer to notes.
★ Indicates change or addition.

Printed in U.S.A.
January 1972

Right and left part numbers are on same line, first number is right, second number is left.

CODE	PART NAME	MODEL CODES	SEE BOTTOM NOTE 21	23	27	29	41	43	45	46	PART NUMBER
23-108-16	COVER, Front Back Cont'd.										
	F1T	D	—	—	—	—	1	—	—	—	7437 G1T
	F2B	D	—	1	—	—	—	—	—	—	7512-3 G2B
	F2XA	D	—	1	—	—	—	—	—	—	7512-3 G2X
	F2B	D	—	—	—	—	1	—	1	1	7436 G2B
	F2F	D	—	—	—	—	1	—	1	1	7436 G2F
	F2T	D	—	—	—	—	1	—	1	1	7436 G2T
	F2XA	D	—	—	—	—	1	—	1	1	7436 G2X
	K1A	D	—	—	—	—	1	—	—	—	7559 G1A
	K1T	P	—	—	—	—	1	—	—	—	7559 G1T
	K2A	D	—	—	—	—	1	—	—	—	7566 G2A
	K2T	P	—	—	—	—	1	—	—	—	7566 G2T
	K2X	P	—	—	—	—	1	—	—	—	7566 G2X
	K5A	D	—	—	—	—	2	—	—	—	7354 G5A
	K5T	P	—	—	—	—	2	—	—	—	7354 G5T
	K6A	D	—	—	—	—	2	—	—	—	7356 G6A
	K6T	P	—	—	—	—	2	—	—	—	7356 G6T
	M6E, H6E	D	—	2	—	—	—	—	—	—	7350 G6E
	H6B	P	—	2	—	—	—	—	—	—	7350 G6B
	M6F, H6F	P	—	2	—	2	—	2	—	—	7350 G6F
	M6XA, H6XA, H6X, M6X	P,D	—	2	—	2	—	2	—	—	7350 G6X
	M6XW, H6XW	P,D	—	2	—	2	—	2	—	—	7350 G6W
	L1B	D	—	1	—	—	—	—	—	—	7442-3 G1B
	L1F	D	—	1	—	—	—	—	—	—	7442-3 G1F
	L1X	D	—	1	—	—	—	—	—	—	7442-3 G1X
	L1Y	D	—	1	—	—	—	—	—	—	7442-3 G1Y
	L1B	D	—	—	—	—	1	1	—	—	7444 G1B
	L1F	D	—	—	—	—	1	1	—	—	7444 G1F
	L1X	D	—	—	—	—	1	1	—	—	7444 G1X
	L1Y	D	—	—	—	—	1	1	—	—	7444 G1Y
	L2B	D	—	1	—	—	—	—	—	—	7446-7 G2B
	L2F	D	—	1	—	—	—	—	—	—	7446-7 G2F
	L2T	D	—	1	—	—	—	—	—	—	7446-7 G2T
	L2X	D	—	1	—	—	—	—	—	—	7446-7 G2X
	L2B	D	—	—	—	—	1	1	1	1	7445 G2B
	L2F	D	—	—	—	—	1	1	1	1	7445 G2F
	L2T	D	—	—	—	—	1	1	1	1	7445 G2T
	L2X	D	—	—	—	—	1	1	1	1	7445 G2X
	M3B, L3B	D	—	2	—	—	—	2	—	—	7594 G3B
	M3F, L3F	D	—	2	—	—	—	2	—	—	7594 G3F
	M3X, L3X	D	—	2	—	—	—	2	—	—	7594 G3X
	M3Y	D	—	2	—	—	—	2	—	—	7594 G3Y
	M4B, L4B	D	—	2	—	—	—	2	—	—	7590 G4B
	M4E	D	—	2	—	—	—	2	—	—	7590 G4E
	M4F, L4F	D	—	2	—	—	—	2	—	—	7590 G4F
	M4X, L43	D	—	2	—	—	—	2	—	—	7590 G4X
	M4XW	D	—	2	—	—	—	2	—	—	7590 G4W
	H3A	D	—	2	—	—	2	2	—	—	7528 G3A
	H3B	D	—	2	—	—	2	2	—	—	7528 G3B
	H3F	D	—	2	—	—	2	2	—	—	7528 G3F
	H3X	D	—	2	—	—	2	2	—	—	7528 G3X
	H3Y	D	—	2	—	—	2	2	—	—	7528 G3Y
	H4B	D	—	—	—	—	—	—	2	2	7526 G4B
	H4E	D	—	2	—	—	—	2	—	—	7526 G4E
	H4F, D4F	D	—	2	—	—	—	2	2	2	7526 G4F
	H4T	D	—	—	—	—	—	—	2	2	7526 G4T
	H4X, D4X	D	—	2	—	—	—	2	2	2	7526 G4X
	H7A	D	—	—	—	—	1	1	—	—	7544-5 G7A
	H7B	D	—	—	—	—	1	1	1	1	7544-5 G7B

TYPE LETTERS Indicates: J - Challenger, B - Barracuda, V - Valiant, L - Dart, R - Belvedere, W - Coronet, P - Plymouth, D - Dodge, C - Chrysler, Y - Imperial

NUMERALS INDICATE: 21 - 2 DR. SED., 23 - 2 DR. H.T., 27 - CONV. CPE., 29 - FAST BACK, 41 - 4 DR. SED., 43 - 4 DR. H.T., 45 - 6 PASS. STA. WGN., 46 - 9 PASS. STA. WGN.

AR Indicates use as required.
≠ Indicates parts not listed in any previous parts book
Numerals in parentheses ( ) refer to notes.
★ Indicates change or addition.

Printed in U.S.A.
January 1972

Right and left part numbers are on same line, first number is right, second number is left.

CODE	PART NAME	MODEL CODES	SEE BOTTOM NOTE 21	23	27	29	41	43	45	46	PART NUMBER
23-108-16	COVER, Front Back Cont'd.										
	H7F	D	—	—	—	—	1	1	1	1	7544-5 G7F
	H7X	D	—	—	—	—	1	1	1	1	7544-5 G7X
	H8T	D	—	—	—	—	—	—	1	1	7546-7 G8T
	H8X	D	—	—	—	—	—	—	1	1	7546-7 G8X
	E1A	C	—	1	—	—	—	—	—	—	7400-1 G1A
	E1B	C	—	1	—	—	—	—	—	—	7400-1 G1B
	E1F	C	—	1	—	—	—	—	—	—	7400-1 G1F
	E1X	C	—	1	—	—	—	—	—	—	7400-1 G1X
	E1Y	C	—	1	—	—	—	—	—	—	7400-1 G1Y
	G1A	C	—	1	—	—	—	—	—	—	7460-1 G1A
	G1B	C	—	1	—	—	—	—	—	—	7460-1 G1B
	G1F	C	—	1	—	—	—	—	—	—	7460-1 G1F
	G1X	C	—	1	—	—	—	—	—	—	7460-1 G1X
	G1Y	C	—	1	—	—	—	—	—	—	7460-1 G1Y
	E1A	C	—	—	—	—	1	1	—	—	7402 G1A
	E1B	C	—	—	—	—	1	1	—	—	7402 G1B
	E1F	C	—	—	—	—	1	1	—	—	7402 G1F
	E1L	C	—	—	—	—	1	1	—	—	7402 G1L
	E1X	C	—	—	—	—	1	1	—	—	7402 G1X
	E1Y	C	—	—	—	—	1	1	—	—	7402 G1Y
	G1A	C	—	—	—	—	1	1	—	—	7462 G1A
	G1B	C	—	—	—	—	1	1	—	—	7462 G1B
	G1F	C	—	—	—	—	1	1	—	—	7462 G1F
	G1L	C	—	—	—	—	1	—	—	—	7462 G1L
	G1X	C	—	—	—	—	1	1	—	—	7462 G1X
	G1Y	C	—	—	—	—	1	1	—	—	7462 G1Y
	E2E, G2E	C	—	1	—	—	—	—	—	—	7404-5 G2E
	E2F, G2F	C	—	1	—	—	—	—	—	—	7404-5 G2F
	E2L, G2L	C	—	1	—	—	—	—	—	—	7404-5 G2L
	E2X, G2X	C	—	1	—	—	—	—	—	—	7404-5 G2X
	E2E, G2E	C	—	—	—	—	1	1	—	—	7403 G2E
	E2F, G2F	C	—	—	—	—	1	1	—	—	7403 G2F
	E2L, G2L	C	—	—	—	—	1	1	—	—	7403 G2L
	E2X, G2X	C	—	—	—	—	1	1	—	—	7403 G2X
	w/Reclining Seat										
	E6T, S6T, G6T	C	—	1	—	—	—	1	—	—	7412-3 G6T
	E6X, S6X, G6X	C	—	1	—	—	—	1	—	—	7412-3 G6X
	w/o Reclining Seat										
	S6F	C	—	2	—	—	—	2	—	—	7413 G6F
	S6L	C	—	2	—	—	—	2	—	—	7413 G6L
	S6T, G6T	C	—	2	—	—	—	2	—	—	7413 G6T
	S6X, G6X	C	—	2	—	—	—	2	—	—	7413 G6X
	E6XW, S6XW, G6XW	C	—	2	—	—	—	2	—	—	7413 G6W
	L3B	C	—	—	—	—	1	—	—	—	7490-1 G3B
	L3F, S3F	C	—	1	—	—	1	1	—	—	7490-1 G3F
	L3L, S3L	C	—	1	—	—	1	1	—	—	7490-1 G3L
	L3X	C	—	1	—	—	1	1	—	—	7490-1 G3X
	L3Y, S3Y	C	—	1	—	—	1	1	—	—	7490-1 G3Y
	L4B, S4B	C	—	1	—	—	—	1	1	1	7408-9 G4B
	L4E, S4E	C	—	1	—	—	1	1	1	1	7408-9 G4E
	L4F	C	—	—	—	—	—	—	1	1	7408-9 G4F
	L4X, S4X	C	—	1	—	—	1	1	1	1	7408-9 G4X
	L4T	C	—	—	—	—	—	—	1	1	7408-9 G4T
	L7B	C	—	—	—	—	1	1	—	—	7414-5 G7B
	L7F	C	—	—	—	—	1	1	—	—	7414-5 G7F
	L7XL	C	—	—	—	—	1	1	1	1	7414-5 G7L
	L8F	C	—	—	—	—	1	1	1	1	7416-7 G8F
	L8X	C	—	—	—	—	1	1	1	1	7416-7 G8X

TYPE LETTERS Indicates: J - Challenger, B - Barracuda, V - Valiant, L - Dart, R - Belvedere, W - Coronet, P - Plymouth, D - Dodge, C - Chrysler, Y - Imperial

NUMERALS INDICATE: 21 - 2 DR. SED., 23 - 2 DR. H.T., 27 - CONV. CPE., 29 - FAST BACK, 41 - 4 DR. SED., 43 - 4 DR. H.T., 45 - 6 PASS. STA. WGN., 46 - 9 PASS. STA. WGN.

AR Indicates use as required.
= Indicates parts not listed in any previous parts book
Numerals in parentheses ( ) refer to notes.
★ Indicates change or addition.

Printed in U.S.A.
January 1972

Right and left part numbers are on same line, first number is right, second number is left.

CODE	PART NAME	MODEL CODES	SEE BOTTOM NOTE 21	23	27	29	41	43	45	46	PART NUMBER
23-108-16	COVER, Front Back Cont'd.										
	L8Y	C	—	—	—	—	—	—	1	1	7416-7 G8Y
	L8T	C	—	—	—	—	—	—	1	1	7416-7 G8T
	H3A (Up to Build Date 7-1-70)	C	—	1	—	—	—	—	—	—	7420-1 G3A
	H3B (Up to Build Date 7-1-70)	C	—	1	—	—	—	—	—	—	7420-1 G3B
	H3F (Up to Build Date 7-1-70)	C	—	1	—	—	—	—	—	—	7420-1 G3F
	H3X (Up to Build Date 7-1-70)	C	—	1	—	—	—	—	—	—	7420-1 G3X
	H3Y (Up to Build Date 7-1-70)	C	—	1	—	—	—	—	—	—	7420-1 G3Y
	H3A (After Build Date 7-1-70)	C	—	1	—	—	—	—	—	—	7406-7 G3A
	H3B (After Build Date 7-1-70)	C	—	1	—	—	—	—	—	—	7406-7 G3B
	H3F (After Build Date 7-1-70)	C	—	1	—	—	—	—	—	—	7406-7 G3F
	H3X (After Build Date 7-1-70)	C	—	1	—	—	—	—	—	—	7406-7 G3X
	H3Y (After Build Date 7-1-70)	C	—	1	—	—	—	—	—	—	7406-7 G3Y
	H4B	C	—	1	—	—	—	—	—	—	8040-1 G4B
	H4E	C	—	1	—	—	—	—	—	—	8040-1 G4E
	H4X	C	—	1	—	—	—	—	—	—	8040-1 G4X
	H6F	C	—	1	—	—	—	—	—	—	7422-3 G6F
	H6T	C	—	1	—	—	—	—	—	—	7422-3 G6T
	H6X	C	—	1	—	—	—	—	—	—	7422-3 G6X
	H6XW	C	—	1	—	—	—	—	—	—	7422-3 G6W
	H7A	C	—	—	—	—	1	1	—	—	7424-5 G7A
	H7B	C	—	—	—	—	1	1	—	—	7424-5 G7B
	H7F	C	—	—	—	—	1	1	—	—	7424-5 G7F
	H7X	C	—	—	—	—	1	1	—	—	7424-5 G7X
	H8F	C	—	—	—	—	1	1	—	—	7426-7 G8F
	H8L	C	—	—	—	—	1	1	—	—	7426-7 G8L
	H8X	C	—	—	—	—	1	1	—	—	7426-7 G8X
	H9A	C	—	—	—	—	1	1	—	—	7503 G9A
	H9B	C	—	—	—	—	1	1	—	—	7503 G9B
	H9F	C	—	—	—	—	1	1	—	—	7503 G9F
	H9X	C	—	—	—	—	1	1	—	—	7503 G9X
	H9Y	C	—	—	—	—	1	1	—	—	7503 G9Y
	HLT (Sample of Material Req'd.)	C	—	—	—	—	1	1	—	—	7428-9 GLT
	HLT (Sample of Material Req'd.)	C	—	—	—	—	1	1	—	—	7428-9 GLJ
	MBA	Y	—	1	—	—	—	—	—	—	7504-5 GBA
	MBB	Y	—	1	—	—	—	—	—	—	7504-5 GBB
	MBF	Y	—	1	—	—	—	—	—	—	7504-5 GBF
	MBM	Y	—	1	—	—	—	—	—	—	7504-5 GBM
	MBTT	Y	—	1	—	—	—	—	—	—	7504-5 GBT
	MBX	Y	—	1	—	—	—	—	—	—	7504-5 GBX
	MBY	Y	—	1	—	—	—	—	—	—	7504-5 GBY
	MRB	Y	—	1	—	—	—	—	—	—	7562-3 GRB
	MRE	Y	—	1	—	—	—	—	—	—	7562-3 GRE
	MRF	Y	—	1	—	—	—	—	—	—	7562-3 GRF
	MRT	Y	—	1	—	—	—	—	—	—	7562-3 GRT
	MRX	Y	—	1	—	—	—	—	—	—	7562-3 GRX
	MRXW	Y	—	1	—	—	—	—	—	—	7562-3 GRW
	MRY	Y	—	1	—	—	—	—	—	—	7562-3 GRY
	MLA	Y	—	—	—	—	—	1	—	—	7480-1 GLA
	MLB	Y	—	—	—	—	—	1	—	—	7480-1 GLB
	MLE	Y	—	—	—	—	—	1	—	—	7480-1 GLE
	MLF	Y	—	—	—	—	—	1	—	—	7480-1 GLF
	MLM	Y	—	—	—	—	—	1	—	—	7480-1 GLM
	MLT	Y	—	—	—	—	—	1	—	—	7480-1 GLT
	MLX	Y	—	—	—	—	—	1	—	—	7480-1 GLX
	MLXW	Y	—	—	—	—	—	1	—	—	7480-1 GLW
	MLY	Y	—	—	—	—	—	1	—	—	7480-1 GLY
	MDA	Y	—	—	—	—	—	1	—	—	7574-5 GDA
	MDB	Y	—	—	—	—	—	1	—	—	7574-5 GDB

TYPE LETTERS Indicates: J - Challenger; B - Barracuda; V - Valiant; L - Dart; R - Belvedere; W - Coronet; P - Plymouth; D - Dodge; C - Chrysler; Y - Imperial

NUMERALS INDICATE: 21 - 2 DR. SED.; 23 - 2 DR. H.T.; 27 - CONV. CPE.; 29 - FAST BACK; 41 - 4 DR. SED.; 43 - 4 DR. H.T.; 45 - 6 PASS. STA. WGN.; 46 - 9 PASS. STA. WGN.

AR Indicates use as required.
# Indicates parts not listed in any previous parts book
Numerals in parentheses ( ) refer to notes.
★ Indicates change or addition.

Printed in U.S.A.
January 1972

Right and left part numbers are on same line, first number is right, second number is left.

CODE	PART NAME		MODEL CODES	SEE BOTTOM NOTE 21	23	27	29	41	43	45	46	PART NUMBER
23-108-16	COVER, Front Back Cont'd.											
	MDF		Y	—	—	—	—	—	1	—	—	7574-5 GDF
	MDM		Y	—	—	—	—	—	1	—	—	7574-5 GDM
	MDTT		Y	—	—	—	—	—	1	—	—	7574-5 GDT
	MDX		Y	—	—	—	—	—	1	—	—	7574-5 GDX
	MDY		Y	—	—	—	—	—	1	—	—	7574-5 GDY
	For Police Cars Only											
	Blue (Michigan & Rhode Island)	Rt.	R	1	—	—	—	—	—	—	—	3571 604
	Blue (Michigan & Rhode Island)	Lt.	R	1	—	—	—	—	—	—	—	3571 603
	Tan (Michigan & Rhode Island)	Rt.	R	1	—	—	—	—	—	—	—	3571 610
	Tan (Michigan & Rhode Island)	Lt.	R	1	—	—	—	—	—	—	—	3571 609
	Black (Michigan & Rhode Island)	Rt.	R	1	—	—	—	—	—	—	—	3571 616
	Black (Michigan & Rhode Island)	Lt.	R	1	—	—	—	—	—	—	—	3571 615
	Blue (Michigan & Rhode Island)		R	—	—	—	—	1	—	—	—	3571 621
	Tan (Michigan & Rhode Island)		R	—	—	—	—	1	—	—	—	3571 626
	Blue-Bucket (Texas)		R,W	—	—	—	—	2	—	—	—	3571 482
	Blue (Detroit & Rhode Island)	Rt.	P	1	—	—	—	—	—	—	—	3571 632
	Blue (Detroit & Rhode Island)	Lt.	P	1	—	—	—	—	—	—	—	3571 631
	Black (Detroit & Rhode Island)	Rt.	P	1	—	—	—	—	—	—	—	3571 644
	Black (Detroit & Rhode Island)	Lt.	P	1	—	—	—	—	—	—	—	3571 643
	Tan (Detroit & Rhode Island)	Rt.	P	1	—	—	—	—	—	—	—	3571 638
	Tan (Detroit & Rhode Island)	Lt.	P	1	—	—	—	—	—	—	—	3571 637
	Tan (Canada)	Rt.	P	1	—	—	—	—	—	—	—	3571 712
	Tan (Canada)	Lt.	P	1	—	—	—	—	—	—	—	3571 713
	Black-50/50 (Pennsylvania)	Rt.	P	—	—	—	—	1	—	—	—	3571 564
	Black-50/50 (Pennsylvania)	Lt.	P	—	—	—	—	1	—	—	—	3571 563
	Tan-50/50 (Detroit)	Rt.	P	—	—	—	—	1	—	—	—	3571 726
	Tan-50/50 (Detroit)	Lt.	P	—	—	—	—	1	—	—	—	3571 727
	Gold (Texas)		P	—	—	—	—	1	—	—	—	3571 550
	Blue (Michigan)		P	—	—	—	—	—	—	1	—	3571 762
	Black-50/50 (Detroit)	Rt.	P	—	—	—	—	—	—	1	—	3571 732
	Black-50/50 (Detroit)	Lt.	P	—	—	—	—	—	—	1	—	3571 731
	Black-Bucket (Philadelphia & Detroit)		P	—	—	—	—	—	—	2	—	3571 408
23-108-19	HEAD REST, Front Seat											
	H2XA		R	—	2	—	—	—	—	—	—	2789 GA6
	M2B, E2B, H1B, H2B, C2B		R,W	—	2	—	—	—	—	—	—	2789 GB5
	L2B, H1B, H2B		R,W	—	—	—	—	2	—	2	2	2789 GB7
	H1F, H2F, P2F, C2F		R,W	—	2	—	—	2	—	2	2	2789 GF7
	L2T, K1T, K2T, T2T, M2T, E2T, H1T, H2T, P2T, C2T		R,W	—	2	—	—	2	—	2	2	2789 GT6
	H2XW, C2XW		R,W	—	2	—	—	—	—	—	—	2789 GW1
	D2X. K2X, T2X, M2X, H1X, H2X, E2X, P2X, L2X, C2X		R,W	—	2	—	—	2	—	2	2	2789 GX9
	H1Y, H2Y, C2Y		R,W	—	2	—	—	2	—	—	—	2789 GY4
	E2B, E1B, L1B, L2B, M2B, M1B, B2B, B1B, F1B, F2B, H1B, H2B, G1B, D2B		V,L, P,D,C	2	2	—	—	2	—	2	2	2788 GB2
	L3B, L2B, L1B, L4B, E2B, M1B, H9B		V,L,C	—	2	—	2	2	2	—	—	2788 GB7
	L1F, L2F, M2F, M1F, F1F, F2F, E1F, E2F, H9F, L3F, L4F, G1F, G2F		V,L,P, D,C	2	2	—	2	2	2	2	2	2788 GF7
	H1F, H2F, D3F		V,L	—	2	—	—	2	—	—	—	2788 GF3
	E2T, E1T, L1T, L2T, K1T, K2T, M2T, B2T, B1T, F1T, F2T, L4T		V,L,P,D	2	2	—	—	2	2	2	2	2788 GT6
	E2XA, L2XA, K2X, M2XA, M1XA, K1A, K2A, L1X, L2X, F2XA, E1X, E2X, H9X, L3X, L1XX, L4X, H1X, H2X, M1X, M1XX, D2XA, G1X, G2X		V,L, P,D,C	2	2	—	2	2	2	2	2	2788 GX9

TYPE LETTERS Indicates J - Challenger, B - Barracuda, V - Valiant, L - Dart, R - Belvedere, W - Coronet, P - Plymouth, D - Dodge, C - Chrysler, Y - Imperial

NUMERALS INDICATE: 21 - 2 DR. SED., 23 - 2 DR. H.T., 27 - CONV. CPE., 29 - FAST BACK, 41 - 4 DR. SED., 43 - 4 DR. H.T., 45 - 6 PASS. STA. WGN., 46 - 9 PASS. STA. WGN.

AR Indicates use as required.
= Indicates parts not listed in any previous parts book
Numerals in parentheses ( ) refer to notes.
★ Indicates change or addition.

Printed in U.S.A.
January 1972

Right and left part numbers are on same line, first number is right, second number is left.

CODE	PART NAME	MODEL CODES	SEE BOTTOM NOTE 21	23	27	29	41	43	45	46	PART NUMBER
23-108-19	HEAD REST, Front Seat Cont'd.										
	M1Y, L1Y, E1Y, H9Y, G1Y	P,D,C	—	2	—	—	2	2	—	—	2788 GY5
	L4Y, H2Y	V,L	—	2	—	2	2	—	—	—	2788 GY4
	E2L, E1L, G2L	C	—	2	—	—	2	2	—	—	2788 GL1
	E1A, H9A, G1A	C	—	2	—	—	2	2	—	—	2788 GA6
	H2XW, D2XW	V,L	—	2	—	—	—	—	—	—	2788 GW1
	G2E, E2E	C	—	2	—	—	2	2	—	—	2788 GE9
	H7A, MDA, MLA	D,C,Y	—	—	—	—	2	2	—	—	2791 GA6
	H7B, L7B	P,D,C	—	—	—	—	2	2	2	2	2791 GB2
	H7B	C	—	—	—	—	2	2	—	—	2791 GB7
	MDB, MLB	Y	—	—	—	—	—	2	—	—	2791 GB9
	H7F, L7F, L8F, MDF, MLF, H8F	P,D,C,Y	—	—	—	—	2	2	2	2	2791 GF7
	L8T, HLT, MDTT, H8T	P,D,C,Y	—	—	—	—	2	2	2	2	2791 GT6
	H7XA, H8XA, M8XA, H7X, H8X, L8X, MDX, MLX	P,D,C,Y	—	—	—	—	2	2	2	2	2791 GX9
	H7Y, L8Y, MDY, MLY	P,D,Y	—	—	—	—	2	2	2	2	2791 GY5
	MLE	Y	—	—	—	—	—	2	—	—	2791 GE9
	MDM	Y	—	—	—	—	—	2	—	—	2791 GM9
	MLXW	Y	—	—	—	—	—	2	—	—	2791 GW1
	L7XL, H8L	C	—	—	—	—	2	2	2	2	2791 GL1
23-108-22	SLEEVE, Front Seat Head Rest Post										
	M2B, H1B, H2B, E2B, C2B, E2B	R,W	—	4	—	—	—	—	—	—	2717 GB5
	L2B, H1B, H2B, P2B	R,W	—	—	—	—	4	—	4	4	2717 GB7
	H1F, H2F, P2F, C2F	R,W	—	4	—	—	4	—	4	4	2717 GF7
	L2T, K1T, K2T, T2T, M2T, H1T, H2T, P2T, E2T, C2T	R,W	—	4	—	—	4	—	4	4	2717 GT6
	D2X, K2X, T2X, M2X, H1X, H2X, P2X, E2X, L2X, C2X	R,W	—	4	—	—	4	—	4	4	2717 GX9
	H1Y, H2Y, C2Y	R,W	—	4	—	—	4	—	—	—	2717 GY4
	H2XA	R	—	4	—	—	—	—	—	—	2717 GA6
	H2XW, C2XW	R,W	—	4	—	—	—	—	—	—	2717 GW1
23-108-25	REINFORCEMENT, Front Seat Head Rest w/Bench Seat	V,L, P,D,C	—	—	—	—	2	2	2	2	2888 586
23-108-27	GUIDE, Front Seat Head Rest Lower	V,L,P, D,C,Y	4	4	—	4	4	4	4	4	2888 584
23-108-29	CATCH, Front Seat Head Rest	R,W	—	4	—	—	4	—	4	4	3520 943
		V,L,P, D,C,Y	2	2	—	2	2	2	2	2	2858 180
23-108-30	SUPPORT, Front Seat Back Side Trim Back	P,D,C	—	—	—	—	1	1	—	—	2888 064-5
23-108-31	SPACER, Front Seat Head Rest	V,L	—	4	—	4	4	—	—	—	2888 486
	T2T	R,W	—	—	—	—	4	—	—	—	2718 GT6
	T2X	R,W	—	—	—	—	4	—	—	—	2718 GX9
		P,D,C,Y	4	4	—	4	4	4	4	4	2888 715
23-108-32	PANEL, Back of Front Back										
	D3B (Up to Build Date 10-1-70)	W	—	—	—	2	—	—	—	—	5834 GB5
	D3F (Up to Build Date 10-1-70)	W	—	—	—	2	—	—	—	—	5834 GF7
	D3X (Up to Build Date 10-1-70)	W	—	—	—	2	—	—	—	—	5834 GX9
	D3Y (Up to Build Date 10-1-70)	W	—	—	—	2	—	—	—	—	5834 GY3
	D3B (After Build Date 10-1-70)	W	—	—	—	2	—	—	—	—	6041 GB5
	D3F (After Build Date 10-1-70)	W	—	—	—	2	—	—	—	—	6041 GF7
	D3X (After Build Date 10-1-70)	W	—	—	—	2	—	—	—	—	6041 GX9
	D3Y (After Build Date 10-1-70)	W	—	—	—	2	—	—	—	—	6041 GY3
	P3B, C3B (Up to Build Date 11-1-70)	R,W	—	2	—	—	—	—	—	—	5823 GB5
	P3B, D3B, P4B (Up to Build Date 11-1-70)	R,W	—	—	—	—	2	—	2	2	5823 GB7
	P3F, D3F, P4F, C3F (Up to Build Date 11-1-70)	R,W	—	2	—	—	2	—	2	2	5823 GF7

TYPE LETTERS Indicates	J - Challenger B - Barracuda	V - Valiant L - Dart	R - Belvedere W - Coronet	P - Plymouth D - Dodge	C - Chrysler Y - Imperial
NUMERALS INDICATE:	21 - 2 DR. SED. 23 - 2 DR. H.T.	27 - CONV. CPE. 29 - FAST BACK	41 - 4 DR. SED. 43 - 4 DR. H.T.		45 - 6 PASS. STA. WGN. 46 - 9 PASS. STA. WGN.

AR Indicates use as required.
# Indicates parts not listed in any previous parts book
Numerals in parentheses ( ) refer to notes.
★ Indicates change or addition.

Printed in U.S.A.
January 1972

Right and left part numbers are on same line, first number is right, second number is left.

CODE	PART NAME	MODEL CODES	SEE BOTTOM NOTE 21	23	27	29	41	43	45	46	PART NUMBER
23-108-32	PANEL, Back of Front Back Cont'd.										
	P3T, D3T, P4T (Up to Build Date 11-1-70)	R,W	—	2	—	—	2	—	2	2	5823 GT7
	P3X, P4X, C3X (Up to Build Date 11-1-70)	R,W	—	2	—	—	2	—	2	2	5823 GX9
	P3Y (Up to Build Date 11-1-70)	W	—	—	—	—	2	—	—	—	5823 GY3
	P3B, C3B (After Build Date 11-1-70)	R,W	—	2	—	—	—	—	—	—	6040 GB5
	P3B, P4B, D3B (After Build Date 11-1-70)	R,W	—	—	—	—	2	—	2	2	6040 GB7
	P3F, D3F, P4F, C3F (After Build Date 11-1-70)	R,W	—	2	—	—	2	—	2	2	6040 GF7
	P3T, D3T, P4T (After Build Date 11-1-70)	R,W	—	2	—	—	2	—	2	2	6040 GT7
	P3X, P4X, C3X (After Build Date 11-1-70)	R,W	—	2	—	—	2	—	2	2	6040 GX9
	P3Y (After Build Date 11-1-70)	W	—	—	—	—	2	—	—	—	6040 GY3
	M4B, H3B, H4B	P	—	2	—	2	2	2	2	2	6040 GB2
	M4E, H4E	P	—	2	—	2	—	2	—	—	6040 GE8
	M4F, H3F, H4F	P	—	2	—	2	2	2	2	2	6040 GF7
	M4T, H3T, H4T, P4T	P	—	2	—	2	2	2	2	2	6040 GT7
	M4XA, H3XA, H4XA	P	—	2	—	2	2	2	2	2	6040 GA8
	M4Y, H3Y, H4Y	P	—	2	—	2	2	2	—	—	6040 GY5
	H4XW	P	—	—	—	2	—	2	—	—	6040 GW1
	H7B	P	—	—	—	—	1	1	—	—	5804-5 GB3
	H7F	P	—	—	—	—	1	1	—	—	5804-5 GF8
	H8T	P	—	—	—	—	—	—	1	1	5804-5 GT6
	H7XA, H8XA	P	—	—	—	—	1	1	1	1	5804-5 GX8
	H7Y	P	—	—	—	—	1	1	—	—	5804-5 GY7
	M8XA	P	—	—	—	—	1	1	—	—	6162-3 FA8
	H3A	D	—	2	—	—	2	2	—	—	5710 GA6
	H3B, H4B	D	—	2	—	—	2	2	2	2	5710 GB2
	H4E	D	—	2	—	—	—	2	—	—	5710 GE8
	H3F, H4F, D4F	D	—	2	—	—	2	2	2	2	5710 GF7
	H4T	D	—	—	—	—	—	—	2	2	5710 GT7
	H3X, H4X, D4X	D	—	2	—	—	2	2	2	2	5710 GX9
	H3Y	D	—	2	—	—	2	2	—	—	5710 GY5
	H7A	D	—	—	—	—	1	1	—	—	5924-5 GA6
	H7B	D	—	—	—	—	1	1	1	1	5924-5 GB2
	H7F	D	—	—	—	—	1	1	1	1	5924-5 GF7
	H8T	D	—	—	—	—	—	—	1	1	5924-5 GT7
	H7X, H8X	D	—	—	—	—	1	1	1	1	5924-5 GX9
	H3A, MBA	C,Y	—	2	—	—	—	—	—	—	5823 GA6
	M3B, M4B, L3B, L4B, S4B	D,C	—	2	—	—	2	2	2	2	5823 GB2
	H3B	C	—	2	—	—	—	—	—	—	5823 GB7
	MBB	Y	—	2	—	—	—	—	—	—	5823 GB9
	M4E, L4E, S4E	D,C	—	2	—	—	2	2	—	—	5823 GE8
	M3F, M4F, L3F, H3F, L4F, S3F, MBF	D, C,Y	—	2	—	—	2	2	2	2	5823 GF7
	L3L, S3L	C	—	2	—	—	2	2	—	—	5823 GL2
	MBM	Y	—	2	—	—	—	—	—	—	5823 GM9
	L4T, MBTT	C,Y	—	2	—	—	2	—	2	2	5823 GT7
	M4XW	D	—	2	—	—	—	2	—	—	5823 GW1
	M3X, M4X, L3X, L4X, H3X, L4X, S4X, MBX	D, C,Y	—	2	—	—	2	2	2	2	5823 GX9
	M3Y, L3Y, H3Y, S3Y, MBY	D,C,Y	—	2	—	—	2	2	—	—	5823 GY5
	L7B	C	—	—	—	—	1	1	—	—	6162-3 GB2
	L7F, L8F	C	—	—	—	—	1	1	1	1	6162-3 GF7
	L7XL	C	—	—	—	—	1	1	1	1	6162-3 EL2

TYPE LETTERS Indicates	J - Challenger B - Barracuda	V - Valiant L - Dart	R - Belvedere W - Coronet	P - Plymouth D - Dodge	C - Chrysler Y - Imperial
NUMERALS INDICATE:	21 - 2 DR. SED. 23 - 2 DR. H.T.	27 - CONV. CPE. 29 - FAST BACK	41 - 4 DR. SED. 43 - 4 DR. H.T.		45 - 6 PASS. STA. WGN. 46 - 9 PASS. STA. WGN.

AR Indicates use as required.
= Indicates parts not listed in any previous parts book
Numerals in parentheses ( ) refer to notes.
★ Indicates change or addition.

Printed in U.S.A.
January 1972

Right and left part numbers are on same line, first number is right, second number is left.

CODE	PART NAME	MODEL CODES	SEE BOTTOM NOTE 21	23	27	29	41	43	45	46	PART NUMBER
23-108-32	PANEL, Back of Front Back Cont'd.										
	L8X	C	—	—	—	—	1	1	1	1	6162-3 EX9
	L8Y	C	—	—	—	—	—	—	1	1	6162-3 GY5
	L8T	C	—	—	—	—	—	—	1	1	6162-3 GT7
	H7A	C	—	—	—	—	1	1	—	—	5776-7 GA6
	H7B	C	—	—	—	—	1	1	—	—	5776-7 GB7
	H7F, H8F	C	—	—	—	—	1	1	—	—	5776-7 GF7
	HLT	C	—	—	—	—	1	1	—	—	5776-7 GT7
	H7X, H8X	C	—	—	—	—	1	1	—	—	5776-7 GX9
	H8L	C	—	—	—	—	1	1	—	—	5776-7 GL2
	H9A	C	—	—	—	—	1	1	—	—	6164 GA7
	H9B	C	—	—	—	—	1	1	—	—	6164 GB6
	H9F	C	—	—	—	—	1	1	—	—	6164 GF8
	H9X	C	—	—	—	—	1	1	—	—	6164 GX8
	H9Y	C	—	—	—	—	1	1	—	—	6164 GY7
	MDY (Up to Build Date 11-1-70)	Y	—	—	—	—	—	1	—	—	5616-7 GY5
	MLA, MDA (After Build Date 11-1-70)	Y	—	—	—	—	—	1	—	—	5616-7 GA6
	MLB, MDB (After Build Date 11-1-70)	Y	—	—	—	—	—	1	—	—	5616-7 GB9
	MLE	Y	—	—	—	—	—	1	—	—	5616-7 GE8
	MLF, MDF (After Build Date 11-1-70)	Y	—	—	—	—	—	1	—	—	5616-7 GF7
	MLM, MDM (After Build Date 11-1-70)	Y	—	—	—	—	—	1	—	—	5616-7 GM9
	MLT, MDTT (After Build Date 11-1-70)	Y	—	—	—	—	—	1	—	—	5616-7 GT7
	MLX, MDX (After Build Date 11-1-70)	Y	—	—	—	—	—	1	—	—	5616-7 GX9
	MLY, MDY (After Build Date 11-1-70)	Y	—	—	—	—	—	1	—	—	5616-7 GY5
	MLXW	Y	—	—	—	—	—	1	—	—	5616-7 GW1
	MBA	Y	—	2	—	—	—	—	—	—	5898 GA6
	MBB	Y	—	2	—	—	—	—	—	—	5898 GB9
	MBF	Y	—	2	—	—	—	—	—	—	5898 GF7
	MBM	Y	—	2	—	—	—	—	—	—	5898 GM9
	MBTT	Y	—	2	—	—	—	—	—	—	5898 GT7
	MBX	Y	—	2	—	—	—	—	—	—	5898 GX9
	MBY	Y	—	2	—	—	—	—	—	—	5898 GY5
23-108-34	PLATE, Front Seat Head Restraint Finish Chrome										
	Bench Seat	V,L	—	4	—	4	4	—	—	—	2942 847
	50/50 Split or Bench Seat	P,D,C,Y	4	4	—	4	4	4	4	4	2942 848
	Cover, Finish Bench Seat	V,L,R,W, P,D,C,Y	AR	AR	—	—	AR	AR	AR	AR	3447 864
23-108-66	COVER, Front Seat Center Arm Rest Stanchion	B,J	—	1	—	—	—	—	—	—	2786-7 FX9
		R,W	—	2	—	2	—	—	—	—	2758 GX9
		P,D,C,Y	—	2	—	2	—	2	—	—	4388 BX9
23-108-71	BRACKET, Front Seat Center Cushion Mtg. Front, w/Bucket Seat	R,W	—	1	—	1	—	—	—	—	3506 316
	Bracket Mtg. Rear, w/Bucket Seat	R,W	—	1	—	1	—	—	—	—	3506 318
	Support, Front Seat Cushion Shield, w/Bucket Seat	P,D,C,Y	—	AR	—	AR	—	AR	—	—	3520 025
	Bracket, Front Seat Side Shield to Cushion Front Att., w/50/50 Split Seat	P,D,C,Y	—	—	—	—	1	1	1	1	2609 238-9
	Bracket, Front Seat Cushion Side Shield Front Att., w/Bench Seat	P,D,C,Y	—	2	—	2	2	2	2	2	2888 742
23-108-84	COVER, Front Back Side Hinge All Codes, Bench Seat	V,L	—	1	—	1	1	—	—	—	2782-3 EX9
	R-P, R-S, W-P	R,W	—	1	—	1	1	—	1	1	2778-9 GX9
	R-M, R-H, W-M, W-H	R,W	—	1	—	—	—	—	—	—	2792-3 GX9

TYPE LETTERS Indicates: J - Challenger, B - Barracuda, V - Valiant, L - Dart, R - Belvedere, W - Coronet, P - Plymouth, D - Dodge, C - Chrysler, Y - Imperial

NUMERALS INDICATE: 21 - 2 DR. SED., 23 - 2 DR. H.T., 27 - CONV. CPE., 29 - FAST BACK, 41 - 4 DR. SED., 43 - 4 DR. H.T., 45 - 6 PASS. STA. WGN., 46 - 9 PASS. STA. WGN.

AR Indicates use as required.
# Indicates parts not listed in any previous parts book
Numerals in parentheses ( ) refer to notes.
★ Indicates change or addition.

Printed in U.S.A.
January 1972

Right and left part numbers are on same line, first number is right, second number is left.

CODE	PART NAME	MODEL CODES	SEE BOTTOM NOTE 21	23	27	29	41	43	45	46	PART NUMBER
23-108-84	COVER, Front Back Side Hinge Cont'd.										
	All Codes, Bench Seat P-M, P-H, P-P, D-L, D-M, D-H, Trim Codes M4-H4-L3, L4	P,D	1	1	—	1	1	1	1	1	2794-5 GX9
	P-M, D-L, Trim Codes M1, L1, L2	P,D,C	1	1	—	1	—	—	—	—	2780-1 EX9
	Outer Hinge Arm										
	H4B, H6B, P6B, L6B, H6B, M6B, C6B, D6B, E5B	B,J,R,W	—	1	1	1	—	—	—	—	2796-7 GB5
	H4F, H6F, P6F, H5F, L6F, M6F, C5F, C6F, D5F, D6F, E5F	B,J,R,W	—	1	1	1	—	—	—	—	2796-7 GF7
	H4T, H6T, P6T, PRT, SRT, L6T, M6T, C6T, D6T, CRT	B,J,R,W	—	1	1	1	—	—	—	—	2796-7 GT6
	H6XW, H4XW, L6XW, M6XW, P6XW, C6XW, C6XW, D6XW	L,B, J,R,W	—	1	1	—	—	—	—	—	2796-7 GW1
	H5XV, H6XV	B	—	1	1	—	—	—	—	—	2796-7 GV1
	P6Y, PRY, H6Y, M6Y, C6Y, D6Y, E5Y	B,J,R,W	—	1	1	1	—	—	—	—	2796-7 GY4
	M6XA, P6XA, C6XA, D6XA, CRXA	R,W	—	1	—	1	—	—	—	—	2796-7 GA6
	L6X, L6XV, H6X, M6X, M6XV, X6X, H4X, H5X, P5X, P6X, PRS, SRX, H5XX, HRX, M5X, C5X, C6X, D5X, D6X, E5X, CRX, D5XV, C5XV	V,L,B, J,R,W	—	1	1	1	—	—	—	—	2796-7 GX9
	Inner Hinge Arm										
	Bucket Seat	B,J,R,W	—	1	1	1	—	—	—	—	2764-5 GX9
	w/o Bucket Seat Code - H4	B,J	—	1	—	—	—	—	—	—	2766-7 GX9
23-108-91	FASTENER, Bucket Seat Back Shield Finish Panel	Y	—	16	—	—	—	—	—	—	2197 678
23-108-98	SHIELD, Front Seat Back										
	H4B (Up to Build Date 12-1-70)	B,J	—	1	—	—	—	—	—	—	2770-1 GB5
	H4F (Up to Build Date 12-1-70)	B,J	—	1	—	—	—	—	—	—	2770-1 GF7
	H4T (Up to Build Date 12-1-70)	B,J	—	1	—	—	—	—	—	—	2770-1 GT6
	H4XW (Up to Build Date 12-1-70)	B,J	—	1	—	—	—	—	—	—	2770-1 FW1
	H4X (Up to Build Date 12-1-70)	B,J	—	1	—	—	—	—	—	—	2770-1 FX9
	H4B (After Build Date 12-1-70)	B	—	1	—	—	—	—	—	—	4862-3 GB4
	H4F (After Build Date 12-1-70)	B,J	—	1	—	—	—	—	—	—	4862-3 GF8
	H4T (After Build Date 12-1-70)	B	—	1	—	—	—	—	—	—	4862-3 GT6
	H4XW (After Build Date 12-1-70)	B	—	1	—	—	—	—	—	—	4862-3 GW1
	H4X (After Build Date 12-1-70)	B,J	—	1	—	—	—	—	—	—	4862-3 GX9
	M6XA, P6XA, C6XA, CRXA, D6XA (Up to Build Date 12-1-70)	R,W	—	2	—	2	—	—	—	—	2769 GA6
	H6B, P6B, L6B, M6B, C6B, E5B, D6B (Up to Build Date 12-1-70)	B,J,R,W	—	2	2	2	—	—	—	—	2769 GB5
	H6F, P6F, H5F, L6F, M6F, C5F, D5F, C6F, E5F, D6F (Up to Build Date 12-1-70)	B,J,R,W	—	2	2	2	—	—	—	—	2769 GF7
	H6T, P6T, SRT, PRT, L6T, M6T, C6T, CRT, D6T (Up to Build Date 12-1-70)	B,J,R,W	—	2	2	2	—	—	—	—	2769 GT6
	H6XW, L6XW, M6XW, P6XW, C6XW, D6XW, (Up to Build Date 12-1-70)	L,B,J, R,W	—	2	2	—	—	—	—	—	2769 FW1
	L6X, L6XV, H6X, M6X, M6XV, X6X, H6XV, H5X, H5XV, P5X, P6X, SRX, PRX, H5XX, HRX, M5X, C6X, C5X, C5XV, D6X, CRX, E5X, D5X, D5XV (Up to Build Date 12-1-70)	V,L,B, J,R,W	—	2	2	2	—	—	—	—	2769 FX9
	P6Y, PRY, H6Y, M6Y, C6Y, D6Y,										

TYPE LETTERS Indicates	J - Challenger B - Barracuda	V - Valiant L - Dart	R - Belvedere W - Coronet	P - Plymouth D - Dodge	C - Chrysler Y - Imperial
NUMERALS INDICATE:	21 - 2 DR. SED. 23 - 2 DR. H.T.	27 - CONV. CPE. 29 - FAST BACK	41 - 4 DR. SED. 43 - 4 DR. H.T.		45 - 6 PASS. STA. WGN. 46 - 9 PASS. STA. WGN.

AR Indicates use as required.
= Indicates parts not listed in any previous parts book

Numerals in parentheses ( ) refer to notes.
★ Indicates change or addition.

Printed in U.S.A.
January 1972

Right and left part numbers are on same line, first number is right, second number is left.

CODE	PART NAME	MODEL CODES	SEE BOTTOM NOTE 21	23	27	29	41	43	45	46	PART NUMBER
23-108-98	SHIELD, Front Seat Back Cont'd.										
	E5Y (Up to Build Date 12-1-70)	B,J,R,W	—	2	2	2	—	—	—	—	2769 GY4
	M6XA, P6XA, C6XA, D6XA, CRXA (After Build Date 12-1-70)	R,W	—	1	—	1	—	—	—	—	4860-1 GA6
	H6B, P6B, L6B (After Build Date 12-1-70)	B,J	—	1	1	—	—	—	—	—	4860-1 GB4
	H6F, P6F, H5F, L6F (After Build Date 12-1-70)	B,J	—	1	1	—	—	—	—	—	4860-1 GF8
	H6T, PRT, P6T, SRT, L6T, M6T, C6T, D6T, CRT (After Build Date 12-1-70)	B,J,R,W	—	1	1	1	—	—	—	—	4860-1 GT6
	PRY, P6Y, H6Y, M6Y, C6Y, E5Y, D6Y (After Build Date 12-1-70)	B,J,R,W	—	1	1	1	—	—	—	—	4860-1 GY4
	L6X, L6XV, D6X, X6X, M6X, M6XV, H6X, H6XV, H5X, H5XV, PRX, P5X, P6X, SRX, H5XX, HRX, M5X, M6XA, P6XA, C6XA, D6XA, CRXA (After Build Date 12-1-70)	V,L,B, J,R,W	—	1	1	1	—	—	—	—	4860-1 GX9
	D6XW, H6XW, L6XW, L5FW, M6XW, P6XW, C6XW (After Build Date 12-1-70)	V,L,B									
		J,R,W	—	1	1	—	—	—	—	—	4860-1 GW1
	Front Cushion, w/Bench Seat Rt.	P,D,C	—	—	—	—	1	1	1	1	2858 628
	Manual Lt.	C	—	—	—	—	1	1	1	1	2858 629
	Manual Lt.	P,D	—	1	—	1	—	—	—	—	2767 919
	Rt.	P,D,C,Y	1	1	—	1	—	—	—	—	2858 632
	Manual Lt.	C,Y	—	1	—	—	—	—	—	—	2858 633
	Elect. Lt.	P,D,C	—	—	—	—	1	1	1	1	2942 127
	Elect. Lt.	P,D,C	1	1	—	1	—	—	—	—	2942 131
	w/50/50 Split Manual Rt.	P,D,C	—	—	—	—	1	1	1	1	2767 570
	Elect. Rt.	C	—	—	—	—	1	1	1	1	2942 136
	Front Seat Back, Sides Shield w/50/50 Split Rt.	P,D,C	—	—	—	—	1	1	1	1	2888 456
	Lt.	P,D,C	—	—	—	—	1	1	1	1	2888 457
	Front Seat Cushion w/Bucket Seat Rt.	P,D,C	—	1	—	1	—	1	—	—	7920 GX9
	Lt.	P,D,C	—	1	—	1	—	1	—	—	7921 GX9
	Elect. Rt.	C	—	1	—	—	—	1	—	—	7922 GX9
	Elect. Lt.	P,D,C	—	1	—	1	—	1	—	—	7923 GX9
	Front Seat Back, w/Bucket Seat, w/Recliner Rt.	P,C	—	1	—	1	—	—	—	—	7975 GX9
	Rt. or Lt.	P,D,C	—	2	—	2	2	2	—	—	7928 GX9
	Front Seat Side Shield Upper Side Rt.										
	MDA, MLA	Y	—	—	—	—	—	1	—	—	2754 GA6
	MDB, MLB	Y	—	—	—	—	—	1	—	—	2754 GB9
	MLE	Y	—	—	—	—	—	1	—	—	2754 GE9
	MDF, MLF	Y	—	—	—	—	—	1	—	—	2754 GF7
	MDM, MLM	Y	—	—	—	—	—	1	—	—	2754 GM9
	MDTT, MLT	Y	—	—	—	—	—	1	—	—	2754 GT6
	MDX, MLX	Y	—	—	—	—	—	1	—	—	2754 GX9
	MLXW	Y	—	—	—	—	—	1	—	—	2754 GW1
	MDY, MLY	Y	—	—	—	—	—	1	—	—	2754 GY5
	Front Seat Cushion Side Shield Rt.										
	MDA, MLA	Y	—	—	—	—	—	1	—	—	2750 GA6
	MDB, MLB	Y	—	—	—	—	—	1	—	—	2750 GB9
	MLE	Y	—	—	—	—	—	1	—	—	2750 GE9
	MDF, MLF	Y	—	—	—	—	—	1	—	—	2750 GF7
	MDM, MLM	Y	—	—	—	—	—	1	—	—	2750 GMP
	MDTT, MLT	Y	—	—	—	—	—	1	—	—	2750 GT6
	MDX, MLX	Y	—	—	—	—	—	1	—	—	2750 GX9

TYPE LETTERS Indicates: J - Challenger; B - Barracuda; V - Valiant; L - Dart; R - Belvedere; W - Coronet; P - Plymouth; D - Dodge; C - Chrysler; Y - Imperial

NUMERALS INDICATE: 21 - 2 DR. SED.; 23 - 2 DR. H.T.; 27 - CONV. CPE.; 29 - FAST BACK; 41 - 4 DR. SED.; 43 - 4 DR. H.T.; 45 - 6 PASS. STA. WGN.; 46 - 9 PASS. STA. WGN.

AR Indicates use as required.
# Indicates parts not listed in any previous parts book
Numerals in parentheses ( ) refer to notes.
★ Indicates change or addition.
Printed in U.S.A.
January 1972

Right and left part numbers are on same line, first number is right, second number is left.

CODE	PART NAME	MODEL CODES	SEE BOTTOM NOTE 21	23	27	29	41	43	45	46	PART NUMBER
23-108-98	SHIELD, Front Seat Back Cont'd.										
	MLXW	Y	—	—	—	—	—	1	—	—	2750 GW1
	MDY, MLY	Y	—	—	—	—	—	1	—	—	2750 GY5
	Elect. Rt.										
	MDA, MLA	Y	—	—	—	—	—	1	—	—	2749 GA6
	MDB, MLB	Y	—	—	—	—	—	1	—	—	2749 GB9
	MLE	Y	—	—	—	—	—	1	—	—	2749 GE9
	MDF, MLF	Y	—	—	—	—	—	1	—	—	2749 GF7
	MDM, MLM	Y	—	—	—	—	—	1	—	—	2749 GM9
	MDTT, MLT	Y	—	—	—	—	—	1	—	—	2749 GT6
	MDX, MLX	Y	—	—	—	—	—	1	—	—	2749 GX9
	MLXW	Y	—	—	—	—	—	1	—	—	2749 GW1
	MDY, MLY	Y	—	—	—	—	—	1	—	—	2749 GY5
	Lt.										
	MDA, MLA	Y	—	—	—	—	—	1	—	—	2701 GA6
	MDB, MLB	Y	—	—	—	—	—	1	—	—	2701 GB9
	MLE	Y	—	—	—	—	—	1	—	—	2701 GE9
	MDF, MLF	Y	—	—	—	—	—	1	—	—	2701 GF7
	MDM, MLM	Y	—	—	—	—	—	1	—	—	2701 GM9
	MDTT, MLT	Y	—	—	—	—	—	1	—	—	2701 GT6
	MDX, MLX	Y	—	—	—	—	—	1	—	—	2701 GX9
	MLXW	Y	—	—	—	—	—	1	—	—	2701 GW1
	MDY, MLY	Y	—	—	—	—	—	1	—	—	2701 GY5
	Elect. Lt.										
	MDA, MLA	Y	—	—	—	—	—	1	—	—	2702 GA6
	MDB, MLB	Y	—	—	—	—	—	1	—	—	2702 GB9
	MLE	Y	—	—	—	—	—	1	—	—	2702 GE9
	MDF, MLF	Y	—	—	—	—	—	1	—	—	2702 GF7
	MDM, MLM	Y	—	—	—	—	—	1	—	—	2702 GM9
	MDTT, MLT	Y	—	—	—	—	—	1	—	—	2702 GT6
	MDX, MLX	Y	—	—	—	—	—	1	—	—	2702 GX9
	MLXW	Y	—	—	—	—	—	1	—	—	2702 GW1
	MDY, MLY	Y	—	—	—	—	—	1	—	—	2702 GY5
	Bucket Seat Cushion Side										
	MRB	Y	—	2	—	—	—	—	—	—	7926-7 GB2
	MRE	Y	—	2	—	—	—	—	—	—	7926-7 GE9
	MRF	Y	—	2	—	—	—	—	—	—	7926-7 GF7
	MRT	Y	—	2	—	—	—	—	—	—	7926-7 GT6
	MRXW	Y	—	2	—	—	—	—	—	—	7926-7 GW1
	MRX	Y	—	2	—	—	—	—	—	—	7926-7 GX9
	MRY	Y	—	2	—	—	—	—	—	—	7926-7 GY5
	Backshield										
	MRB	Y	—	2	—	—	—	—	—	—	7918 GB2
	MRE	Y	—	2	—	—	—	—	—	—	7918 GE9
	MRF	Y	—	2	—	—	—	—	—	—	7918 GF7
	MRT	Y	—	2	—	—	—	—	—	—	7918 GT6
	MRXW	Y	—	2	—	—	—	—	—	—	7918 GW1
	MRX	Y	—	2	—	—	—	—	—	—	7918 GX9
	MRY	Y	—	2	—	—	—	—	—	—	7918 GY5
23-108-100	WASHER, Rear Seat Back Button Stud For Police Cars Only	C,Y	—	AR	—	—	AR	AR	—	—	2981 998
23-108-141	REINFORCEMENT, Recliner Front Back to Cushion	P	—	—	—	—	1	—	—	—	3571 590
23-108-142	BRACKET, Recl. Bucket Front Back Shield Att.	P,C,Y	—	2	—	2	—	2	—	—	3520 044
23-109-3	BACK, Rear Seat For Complete Assembly Order By Description, Vehicle Serial Number and Trim Code										

TYPE LETTERS Indicates	J - Challenger B - Barracuda	V - Valiant L - Dart	R - Belvedere W - Coronet	P - Plymouth D - Dodge	C - Chrysler Y - Imperial
NUMERALS INDICATE:	21 - 2 DR. SED. 23 - 2 DR. H.T.	27 - CONV. CPE. 29 - FAST BACK	41 - 4 DR. SED. 43 - 4 DR. H.T.	45 - 6 PASS. STA. WGN. 46 - 9 PASS. STA. WGN.	

AR Indicates use as required.
= Indicates parts not listed in any previous parts book
Numerals in parentheses ( ) refer to notes.
★ Indicates change or addition.

Printed in U.S.A.
January 1972

Right and left part numbers are on same line, first number is right, second number is left.

CODE	PART NAME	MODEL CODES	SEE BOTTOM NOTE 21	23	27	29	41	43	45	46	PART NUMBER
23-109-4	COVER, Rear Seat Back										
	L2B	V	—	—	—	—	1	—	—	—	8229 G2B
	L2T	V	—	—	—	—	1	—	—	—	8229 G2T
	L2X	V	—	—	—	—	1	—	—	—	8229 F2X
	L3B	V	—	—	—	—	1	—	—	—	8849 G3B
	L3F	V	—	—	—	—	1	—	—	—	8849 G3F
	L3X	V	—	—	—	—	1	—	—	—	8849 G3X
	L4B	V	—	—	—	—	1	—	—	—	8284 G4B
	L4F	V	—	—	—	—	1	—	—	—	8284 G4F
	L4T	V	—	—	—	—	1	—	—	—	8284 G4T
	L4X	V	—	—	—	—	1	—	—	—	8284 G4X
	L4Y	V	—	—	—	—	1	—	—	—	8284 G4Y
	L1B, M1B	V,L	—	—	—	1	—	—	—	—	8292 G1B
	L1F, M1F	V,L	—	—	—	1	—	—	—	—	8292 G1F
	L1X, M1X	V,L	—	—	—	1	—	—	—	—	8292 G1X
	L1XX, M1XX	V,L	—	—	—	1	—	—	—	—	8292 G1A
	E2B, L2B	V,L	—	—	—	1	—	—	—	—	8347 G2B
	E2T, L2T	V,L	—	—	—	1	—	—	—	—	8347 G2T
	E2X, L2X	V,L	—	—	—	1	—	—	—	—	8347 F2X
	L4B	V	—	—	—	1	—	—	—	—	8283 G4B
	L4F	V	—	—	—	1	—	—	—	—	8283 G4F
	L4T	V	—	—	—	1	—	—	—	—	8283 G4T
	L4X, L6X, M6X	V,L	—	—	—	1	—	—	—	—	8283 G4X
	L4Y	V	—	—	—	1	—	—	—	—	8283 G4Y
	L6XV, M6XV	V,L	—	—	—	1	—	—	—	—	8283 G4V
	L6XW, M6XW	V,L	—	—	—	1	—	—	—	—	8283 G4W
	L2B	L	—	1	—	—	—	—	—	—	8231 G2B
	L2F	L	—	1	—	—	—	—	—	—	8231 G2F
	L2X	L	—	1	—	—	—	—	—	—	8231 F2X
	L2B	L	—	—	—	—	1	—	—	—	8230 G2B
	L2F	L	—	—	—	—	1	—	—	—	8230 G2F
	L2X	L	—	—	—	—	1	—	—	—	8230 F2X
	H1B	L	—	—	—	—	1	—	—	—	8247 G1B
	H1F	L	—	—	—	—	1	—	—	—	8247 G1F
	H1X	L	—	—	—	—	1	—	—	—	8247 G1X
	H2B	L	—	—	—	—	1	—	—	—	8259 G2B
	H2F	L	—	—	—	—	1	—	—	—	8259 G2F
	H2X	L	—	—	—	—	1	—	—	—	8259 G2X
	H2Y	L	—	—	—	—	1	—	—	—	8259 G2Y
	H2B, D2B	V-L	—	1	—	—	—	—	—	—	8260 G2B
	H2F, D2F	V-L	—	1	—	—	—	—	—	—	8260 G2F
	H2X, H6X, D2X, D6X	V-L	—	1	—	—	—	—	—	—	8260 G2X
	H2XW, H6XW, D6XW	V-L	—	1	—	—	—	—	—	—	8260 G2W
	H2Y, D2Y	V-L	—	1	—	—	—	—	—	—	8260 G2Y
	H5X, P5X	B	—	1	—	—	—	—	—	—	8324 G5X
	H5XV	B	—	1	—	—	—	—	—	—	8324 G5V
	H6B	B	—	—	1	—	—	—	—	—	8338 G6B
	H6F	B	—	—	1	—	—	—	—	—	8338 G6F
	H6T	B	—	—	1	—	—	—	—	—	8338 G6T
	H6X	B	—	—	1	—	—	—	—	—	8338 G6X
	H6XV	B	—	—	1	—	—	—	—	—	8338 G6V
	H6XW	B	—	—	1	—	—	—	—	—	8338 G6W
	P6B	B	—	1	—	—	—	—	—	—	8325 G6B
	P6F	B	—	1	—	—	—	—	—	—	8325 G6F
	P6T	B	—	1	—	—	—	—	—	—	8325 G6T
	P6X	B	—	1	—	—	—	—	—	—	8325 G6X
	P6Y	B	—	1	—	—	—	—	—	—	8325 G6Y
	H4B, H6B	B	—	1	—	—	—	—	—	—	8327 G6B
	H4F, H6F	B	—	1	—	—	—	—	—	—	8327 G6F
	H4T, H6T	B	—	1	—	—	—	—	—	—	8327 G6T

TYPE LETTERS Indicates: J - Challenger; B - Barracuda; V - Valiant; L - Dart; R - Belvedere; W - Coronet; P - Plymouth; D - Dodge; C - Chrysler; Y - Imperial

NUMERALS INDICATE: 21 - 2 DR. SED.; 23 - 2 DR. H.T.; 27 - CONV. CPE.; 29 - FAST BACK; 41 - 4 DR. SED.; 43 - 4 DR. H.T.; 45 - 6 PASS. STA. WGN.; 46 - 9 PASS. STA. WGN.

AR Indicates use as required.
# Indicates parts not listed in any previous parts book
Numerals in parentheses ( ) refer to notes.
★ Indicates change or addition.

Printed in U.S.A.
January 1972

Right and left part numbers are on same line, first number is right, second number is left.

CODE	PART NAME	MODEL CODES	SEE BOTTOM NOTE 21	23	27	29	41	43	45	46	PART NUMBER
23-109-4	COVER, Rear Seat Back Cont'd.										
	H4X, H6X	B	—	1	—	—	—	—	—	—	8327 G6X
	L6B	J	—	1	—	—	—	—	—	—	8327 G6B
	L6F	J	—	1	—	—	—	—	—	—	8327 G6F
	L6T	J	—	1	—	—	—	—	—	—	8327 G6T
	L6X	J	—	1	—	—	—	—	—	—	8327 G6X
	H6XV	B	—	1	—	—	—	—	—	—	8327 G6V
	H4XW, H6XW, L6XW	B,J	—	1	—	—	—	—	—	—	8327 G6W
	HRX, SRX	B,J	—	—	1	—	—	—	—	—	8337 GRX
	SRT	B	—	—	1	—	—	—	—	—	8337 GRT
	PRT, SRT	B	—	1	—	—	—	—	—	—	8326 GRT
	PRT, SRT, HRX	B,J	—	1	—	—	—	—	—	—	8326 GRX
	PRY	B	—	1	—	—	—	—	—	—	8326 GRY
	H6B	J	—	1	—	—	—	—	—	—	8291 G6B
	H4F, H6F	J	—	1	—	—	—	—	—	—	8291 G6F
	H6T	J	—	1	—	—	—	—	—	—	8291 G6T
	H4X, H6X	J	—	1	—	—	—	—	—	—	8291 G6X
	H6XW	J	—	1	—	—	—	—	—	—	8291 G6W
	H6Y	J	—	1	—	—	—	—	—	—	8291 G6Y
	H5F	J	—	1	—	—	—	—	—	—	8309 G5F
	H5X	J	—	1	—	—	—	—	—	—	8309 G5X
	H5XX	J	—	1	—	—	—	—	—	—	8309 G5A
	L5FW	J	—	1	—	—	—	—	—	—	8309 G5W
	H6B	J	—	—	1	—	—	—	—	—	8339 G6B
	H6F	J	—	—	1	—	—	—	—	—	8339 G6F
	H6T	J	—	—	1	—	—	—	—	—	8339 G6T
	H6X	J	—	—	1	—	—	—	—	—	8339 G6X
	H6XW	J	—	—	1	—	—	—	—	—	8339 G6W
	H6Y	J	—	—	1	—	—	—	—	—	8339 G6Y
	L2B	R	—	—	—	—	1	—	—	—	8245 G2B
	L2T	R	—	—	—	—	1	—	—	—	8245 G2T
	2nd Back										
	L2B	R	—	—	—	—	—	—	1	—	8246 G2B
	L2T	R	—	—	—	—	—	—	1	—	8246 G2T
	H1B	R	—	—	—	—	1	—	—	—	8266 G1B
	H1F	R	—	—	—	—	1	—	—	—	8266 G1F
	H1T	R	—	—	—	—	1	—	—	—	8266 G1T
	H1X	R	—	—	—	—	1	—	—	—	8266 G1X
	H1Y	R	—	—	—	—	1	—	—	—	8266 G1Y
	H1B	R	—	1	—	—	—	—	—	—	8267 G1B
	H1F	R	—	1	—	—	—	—	—	—	8267 G1F
	H1T	R	—	1	—	—	—	—	—	—	8267 G1T
	H1X	R	—	1	—	—	—	—	—	—	8267 G1X
	H2B	R	—	—	—	—	1	—	—	—	8278 G2B
	H2F	R	—	—	—	—	1	—	—	—	8278 G2F
	H2T	R	—	—	—	—	1	—	—	—	8278 G2T
	H2X	R	—	—	—	—	1	—	—	—	8278 G2X
	H2Y	R	—	—	—	—	1	—	—	—	8278 G2Y
	H2B	R	—	1	—	—	—	—	—	—	8276 G2B
	H2F	R	—	1	—	—	—	—	—	—	8276 G2F
	H2T	R	—	1	—	—	—	—	—	—	8276 G2T
	H2X	R	—	1	—	—	—	—	—	—	8276 G2X
	H2XA	R	—	1	—	—	—	—	—	—	8276 G2A
	H2XW	R	—	1	—	—	—	—	—	—	8276 G2W
	H2Y	R	—	1	—	—	—	—	—	—	8276 G2Y
	2nd Back										
	H2B, P2B	R	—	—	—	—	—	—	1	1	8279 G2B
	H2F, P2F	R	—	—	—	—	—	—	1	1	8279 G2F
	H2T, P2T	R	—	—	—	—	—	—	1	1	8279 G2T

TYPE LETTERS Indicates: J - Challenger; B - Barracuda; V - Valiant; L - Dart; R - Belvedere; W - Coronet; P - Plymouth; D - Dodge; C - Chrysler; Y - Imperial

NUMERALS INDICATE: 21 - 2 DR. SED.; 23 - 2 DR. H.T.; 27 - CONV. CPE.; 29 - FAST BACK; 41 - 4 DR. SED.; 43 - 4 DR. H.T.; 45 - 6 PASS. STA. WGN.; 46 - 9 PASS. STA. WGN.

AR Indicates use as required.
= Indicates parts not listed in any previous parts book
Numerals in parentheses ( ) refer to notes.
★ Indicates change or addition.

Printed in U.S.A.
January 1972

Right and left part numbers are on same line, first number is right, second number is left.

CODE	PART NAME	MODEL CODES	SEE BOTTOM NOTE 21	23	27	29	41	43	45	46	PART NUMBER
23-109-4	COVER, Rear Seat Back Cont'd.										
	H2X, P2X	R	—	—	—	—	—	—	1	1	8279 G2X
	3rd Back										
	H2B, P2B	R	—	—	—	—	—	—	1	1	8280 G2B
	H2F, P2F	R	—	—	—	—	—	—	1	1	8280 G2F
	H2T, P2T	R	—	—	—	—	—	—	1	1	8280 G2T
	H2X, P2X	R	—	—	—	—	—	—	1	1	8280 G2X
	P3B	R	—	—	—	—	1	—	—	—	8321 G3B
	P3F	R	—	—	—	—	1	—	—	—	8321 G3F
	P3T	R	—	—	—	—	1	—	—	—	8321 G3T
	P3X	R	—	—	—	—	1	—	—	—	8321 G3X
	P3B	R	—	1	—	—	—	—	—	—	8320 GBB
	P3F	R	—	1	—	—	—	—	—	—	8320 G3F
	P3T	R	—	1	—	—	—	—	—	—	8320 G3T
	P3X	R	—	1	—	—	—	—	—	—	8320 G3X
	K1T	R,W	—	—	—	—	1	—	—	—	8374 G1T
	K2T, T2T	R,W	—	—	—	—	1	—	—	—	8376 G2T
	K2X, T2X	R,W	—	—	—	—	1	—	—	—	8376 G2X
	L2B	W	—	—	—	—	1	—	—	—	7620 G2B
	L2T	W	—	—	—	—	1	—	—	—	7620 G2T
	D2X, L2X	R,W	—	—	—	—	1	—	—	—	7620 G2X
	2nd Back										
	L2B	W	—	—	—	—	—	—	1	—	8265 G2B
	L2T	W	—	—	—	—	—	—	1	—	8265 G2T
	D2X, L2X	R,W	—	—	—	—	—	—	1	—	8265 G2X
	2nd Back										
	D3B, P3B	R,W	—	—	—	—	—	—	1	1	8053 G3B
	D3F, P3F	R,W	—	—	—	—	—	—	1	1	8053 G3F
	D3T, P3T	R,W	—	—	—	—	—	—	1	1	8053 G3T
	3rd Back										
	D3B, P3B, P4B	R,W	—	—	—	—	—	—	—	1	8336 G4B
	D3F, P3F, P4F	R,W	—	—	—	—	—	—	—	1	8336 G4F
	D3T, P3T, P4T	R,W	—	—	—	—	—	—	—	1	8336 G4T
	P4X	W	—	—	—	—	—	—	—	1	8336 G4X
	E2B, M2B	R,W	—	1	—	—	—	—	—	—	8345 G2B
	E2T, M2T	R,W	—	1	—	—	—	—	—	—	8345 G2T
	E2X, M2X	R,W	—	1	—	—	—	—	—	—	8345 G2X
	P3B	W	—	1	—	—	—	—	—	—	8353 G5B
	C5F, D5F, P3F	W	—	1	—	—	—	—	—	—	8353 G5F
	C5X, D5X, P3X, P5X, M5X	R,W	—	1	—	—	—	—	—	—	8353 G5X
	C5XV, D5XV	W	—	1	—	—	—	—	—	—	8353 G5V
	P3Y	W	—	1	—	—	—	—	—	—	8353 G5Y
	C6B, D6B, M6B, P6B	R,W	—	1	—	—	—	—	—	—	8306 G6B
	C6F, D6F, M6F, P6F	R,W	—	1	—	—	—	—	—	—	8306 G6F
	C6T, D6T, M6T, P6T	R,W	—	1	—	—	—	—	—	—	8306 G6T
	C6X, D6X, M6X, P6X	R,W	—	1	—	—	—	—	—	—	8306 G6X
	C6XA, D6XA, M6XA, P6XA	R,W	—	1	—	—	—	—	—	—	8306 G6A
	M6XW, P6XW, C6XW, D6XW	R,W	—	1	—	—	—	—	—	—	8306 G6W
	M6Y, P6Y	R	—	1	—	—	—	—	—	—	8306 G6Y
	M6XV	R	—	1	—	—	—	—	—	—	8306 G6V
	C2B	W	—	1	—	—	—	—	—	—	8056 G2B
	C2F	W	—	1	—	—	—	—	—	—	8056 G2F
	C2T	W	—	1	—	—	—	—	—	—	8056 G2T
	C2X	W	—	1	—	—	—	—	—	—	8056 G2X
	C2XW	W	—	1	—	—	—	—	—	—	8056 G2W
	C2Y	W	—	1	—	—	—	—	—	—	8056 G2Y
	H1B	W	—	—	—	—	1	—	—	—	8264 G1B
	H1F	W	—	—	—	—	1	—	—	—	8264 G1F
	H1X	W	—	—	—	—	1	—	—	—	8264 G1X

TYPE LETTERS Indicates	J - Challenger B - Barracuda	V - Valiant L - Dart	R - Belvedere W - Coronet	P - Plymouth D - Dodge	C - Chrysler Y - Imperial
NUMERALS INDICATE:	21 - 2 DR. SED. 23 - 2 DR. H.T.	27 - CONV. CPE. 29 - FAST BACK	41 - 4 DR. SED. 43 - 4 DR. H.T.	45 - 6 PASS. STA. WGN. 46 - 9 PASS. STA. WGN.	

AR Indicates use as required.
# Indicates parts not listed in any previous parts book
Numerals in parentheses ( ) refer to notes.
★ Indicates change or addition.

Printed in U.S.A.
January 1972

Right and left part numbers are on same line, first number is right, second number is left.

CODE	PART NAME	MODEL CODES	SEE BOTTOM NOTE 21	23	27	29	41	43	45	46	PART NUMBER
23-109-4	COVER, Rear Seat Back Cont'd.										
	H1Y	W	—	—	—	—	1	—	—	—	8264 G1Y
	H2B	W	—	—	—	—	1	—	—	—	8268 G2B
	H2F	W	—	—	—	—	1	—	—	—	8268 G2F
	H2T	W	—	—	—	—	1	—	—	—	8268 G2T
	H2X	W	—	—	—	—	1	—	—	—	8268 G2X
	H2Y	W	—	—	—	—	1	—	—	—	8268 G2Y
	2nd Back										
	H2B	W	—	—	—	—	—	—	1	1	8270 G2B
	H2F	W	—	—	—	—	—	—	1	1	8270 G2F
	H2T	W	—	—	—	—	—	—	1	1	8270 G2T
	H2X	W	—	—	—	—	—	—	1	1	8270 G2X
	3rd Back										
	H2B	W	—	—	—	—	—	—	—	1	8271 G2B
	H2F	W	—	—	—	—	—	—	—	1	8271 G2F
	H2T	W	—	—	—	—	—	—	—	1	8271 G2T
	H2X	W	—	—	—	—	—	—	—	1	8271 G2X
	P3B	W	—	—	—	—	1	—	—	—	8340 G3B
	P3F	W	—	—	—	—	1	—	—	—	8340 G3F
	P3X	W	—	—	—	—	1	—	—	—	8340 G3X
	P3Y	W	—	—	—	—	1	—	—	—	8340 G3Y
	2nd Back										
	P4B	W	—	—	—	—	—	—	1	1	8335 G4B
	P4F	W	—	—	—	—	—	—	1	1	8335 G4F
	P4T	W	—	—	—	—	—	—	1	1	8335 G4T
	P4X	W	—	—	—	—	—	—	1	1	8335 G4X
	D3B, E5B	W	—	—	—	1	—	—	—	—	8397 G5B
	D3F, E5F	W	—	—	—	1	—	—	—	—	8397 G5F
	D3X, E5X	W	—	—	—	1	—	—	—	—	8397 G5X
	D3Y, E5Y	W	—	—	—	1	—	—	—	—	8397 G5Y
	CRT	W	—	—	—	1	—	—	—	—	8348 GRT
	CRX	W	—	—	—	1	—	—	—	—	8348 GRX
	CRXA	W	—	—	—	1	—	—	—	—	8348 GRA
	K1T, K5T	P	—	—	—	—	1	—	—	—	8357 G1T
	K2T, K6T	P	—	—	—	—	1	—	—	—	8363 G2T
	K2X	P	—	—	—	—	1	—	—	—	8363 G2X
	E1B	P	—	—	—	—	1	—	—	—	8393 G1B
	E1T	P	—	—	—	—	1	—	—	—	8393 G1T
	E1B, B1B	P,D	1	1	—	—	—	—	—	—	7061 G1B
	E1T, B1T	P,D	1	1	—	—	—	—	—	—	7061 G1T
	E2B	P	—	—	—	—	1	—	—	—	8226 G2B
	E2T	P	—	—	—	—	1	—	—	—	8226 G2T
	E2XA	P	—	—	—	—	1	—	—	—	8226 G2X
	E2B, B2B	P	1	1	—	—	—	—	—	—	7062 G2B
	E2T, B2T	P	1	1	—	—	—	—	—	—	7062 G2T
	E2XA	P	1	—	—	—	—	—	—	—	7062 G2X
	D2XA	P	—	—	—	—	1	—	—	—	8256 G2A
	D2XA	P	1	—	—	—	—	—	—	—	8255 G2A
	L1B	P	—	—	—	—	1	—	—	—	8236 G1B
	L1F	P	—	—	—	—	1	—	—	—	8236 G1F
	L1T	P	—	—	—	—	1	—	—	—	8236 G1T
	L2B	P	—	—	—	—	1	—	—	—	8232 G2B
	L2XA	P	—	—	—	—	1	—	—	—	8232 G2X
	M1B	P	—	—	—	1	1	1	—	—	8294 G1B
	M1F	P	—	—	—	1	1	1	—	—	8294 G1F
	M1XA	P	—	—	—	1	1	1	—	—	8294 G1X
	M1Y	P	—	—	—	—	1	1	—	—	8294 G1Y
	M1B	P	—	1	—	—	—	—	—	—	8293 G1B
	M1F	P	—	1	—	—	—	—	—	—	8293 G1F

TYPE LETTERS Indicates	J - Challenger B - Barracuda	V - Valiant L - Dart	R - Belvedere W - Coronet	P - Plymouth D - Dodge	C - Chrysler Y - Imperial
NUMERALS INDICATE:	21 - 2 DR. SED. 23 - 2 DR. H.T.	27 - CONV. CPE. 29 - FAST BACK	41 - 4 DR. SED. 43 - 4 DR. H.T.	45 - 6 PASS. STA. WGN. 46 - 9 PASS. STA. WGN.	

AR Indicates use as required.
= Indicates parts not listed in any previous parts book

Numerals in parentheses ( ) refer to notes.
★ Indicates change or addition.

Printed in U.S.A.
January 1972

Right and left part numbers are on same line, first number is right, second number is left.

CODE	PART NAME	MODEL CODES	SEE BOTTOM NOTE 21	23	27	29	41	43	45	46	PART NUMBER
23-109-4	COVER, Rear Seat Back Cont'd.										
	M1XA	P	—	1	—	—	—	—	—	—	8293 G1X
	P4T	P	—	—	—	1	—	1	—	—	8214 G4T
	H3B	P	—	—	—	1	1	1	—	—	8386 G3B
	H3F	P	—	—	—	1	1	1	—	—	8386 G3F
	H3T	P	—	—	—	1	1	1	—	—	8386 G3T
	H3XA	P	—	—	—	1	1	1	—	—	8386 G3X
	H3Y	P	—	—	—	1	1	1	—	—	8386 G3Y
	H3B	P	—	1	—	—	—	—	—	—	8384 G3B
	H3F	P	—	1	—	—	—	—	—	—	8384 G3F
	H3XA	P	—	1	—	—	—	—	—	—	8384 G3X
	M4B, H4B	P	—	1	—	—	—	—	—	—	8248 G4B
	M4E, H4E	P	—	1	—	—	—	—	—	—	8248 G4E
	M4F, H4F	P	—	1	—	—	—	—	—	—	8248 G4F
	M4T, H4T	P	—	1	—	—	—	—	—	—	8248 G4T
	M4XA, H4XA	P	—	1	—	—	—	—	—	—	8248 G4X
	M4Y, H4Y	P	—	1	—	—	—	—	—	—	8248 G4Y
	M4B, H4B	P	—	—	—	1	1	1	—	—	8250 G4B
	M4E, H4E	P	—	—	—	1	—	1	—	—	8250 G4E
	M4F, H4F	P	—	—	—	1	1	1	—	—	8250 G4F
	M4T, H4T	P	—	—	—	1	1	1	—	—	8250 G4T
	M4XA, H4XA	P	—	—	—	1	1	1	—	—	8250 G4X
	M4XW, H4XW	P	—	—	—	1	—	1	—	—	8250 G4W
	M4Y, H4Y	P	—	—	—	1	1	1	—	—	8250 G4Y
	M8XA	P	—	—	—	—	1	1	—	—	8355 G8X
	H5B	P	—	1	—	—	—	—	—	—	8285 G5B
	H5F	P	—	1	—	—	—	—	—	—	8285 G5F
	H5X	P	—	1	—	—	—	—	—	—	8285 G5X
	H5Y	P	—	1	—	—	—	—	—	—	8285 G5Y
	H5B, H7B	P	—	—	—	1	1	1	—	—	8288 G7B
	H5F, H7F	P	—	—	—	1	1	1	—	—	8288 G7F
	H5XA, H7XA	P	—	—	—	1	1	1	—	—	8288 G7X
	H5Y, H7Y	P	—	—	—	1	1	1	—	—	8288 G7Y
	M6F, H6F	P	—	—	—	1	—	1	—	—	8305 G6F
	M6XA, H6XA	P	—	—	—	1	—	1	—	—	8305 G6X
	M6XW, H6XW	P	—	—	—	1	—	1	—	—	8305 G6W
	2nd Back										
	H4B	P	—	—	—	—	—	—	1	1	8253 G4B
	H4F	P	—	—	—	—	—	—	1	1	8253 G4F
	H4T	P	—	—	—	—	—	—	1	1	8253 G4T
	H4XA	P	—	—	—	—	—	—	1	1	8253 G4X
	H8T	P	—	—	—	—	—	—	1	1	8065 G8T
	H8XA	P	—	—	—	—	—	—	1	1	8065 G8X
	H7XA	P	—	—	—	—	—	—	1	1	8075 G7X
	3rd Back										
	H4B	P	—	—	—	—	—	—	—	1	8254 G4B
	H4F	P	—	—	—	—	—	—	—	1	8254 G4F
	H4T	P	—	—	—	—	—	—	—	1	8254 G4T
	H4XA	P	—	—	—	—	—	—	—	1	8254 G4X
	H8T	P	—	—	—	—	—	—	—	1	8067 G8T
	H7XA, H8XA	P	—	—	—	—	—	—	—	1	8067 G8X
	L1B, F1B	P,D	—	1	—	—	—	—	—	—	7715 G1B
	L1F, F1F	P,D	—	1	—	—	—	—	—	—	7715 G1F
	L1T, F1T	P,D	—	1	—	—	—	—	—	—	7715 G1T
	L2B, F2B	P,D	—	1	—	—	—	—	—	—	8318 G2B
	L2XA, F2XA	P,D	—	1	—	—	—	—	—	—	8318 G2X
	2nd Back										
	E2B, B2B	P,D	—	—	—	—	—	—	1	—	8227 G2B
	E2T, B2T	P,D	—	—	—	—	—	—	1	—	8227 G2T

TYPE LETTERS Indicates: J - Challenger, B - Barracuda, V - Valiant, L - Dart, R - Belvedere, W - Coronet, P - Plymouth, D - Dodge, C - Chrysler, Y - Imperial

NUMERALS INDICATE: 21 - 2 DR. SED., 23 - 2 DR. H.T., 27 - CONV. CPE, 29 - FAST BACK, 41 - 4 DR. SED., 43 - 4 DR. H.T., 45 - 6 PASS. STA. WGN., 46 - 9 PASS. STA. WGN.

AR Indicates use as required.
# Indicates parts not listed in any previous parts book
Numerals in parentheses ( ) refer to notes.
★ Indicates change or addition.

Printed in U.S.A.
January 1972

Right and left part numbers are on same line, first number is right, second number is left.

CODE	PART NAME	MODEL CODES	SEE BOTTOM NOTE 21	23	27	29	41	43	45	46	PART NUMBER
23-109-4	COVER, Rear Seat Back Cont'd.										
	E2XA	P	—	—	—	—	—	—	1	—	8227 G2X
	L2B, F2B	P,D	—	—	—	—	—	—	1	1	8233 G2B
	L2F, F2F	P,D	—	—	—	—	—	—	1	1	8233 G2F
	L2T, F2T	P,D	—	—	—	—	—	—	1	1	8233 G2T
	L2XA, F2XA	P,D	—	—	—	—	—	—	1	1	8233 G2X
	M2B	P	—	—	—	—	—	—	1	1	8395 G2B
	M2F	P	—	—	—	—	—	—	1	1	8395 G2F
	M2T	P	—	—	—	—	—	—	1	1	8395 G2T
	M2XA	P	—	—	—	—	—	—	1	1	8395 G2X
	3rd Back										
	M2B	P	—	—	—	—	—	—	—	1	8396 G2B
	L2B, F2B	P,D	—	—	—	—	—	—	—	1	8396 GBB
	M2F, L2F, F2F	P,D	—	—	—	—	—	—	—	1	8396 G2F
	M2T, L2T, F2T	P,D	—	—	—	—	—	—	—	1	8396 G2T
	M2XA, L2XA, F2XA	P,D	—	—	—	—	—	—	—	1	8396 G2X
	H4E, H6E, M6E	D	—	1	—	—	—	—	—	—	8314 G4E
	M6F, H6F, H4F, D4F	P,D	—	1	—	—	—	—	—	—	8314 G4F
	M6XA, H6XA, H4X, H6X, M6X, D4F	P,D	—	1	—	—	—	—	—	—	8314 G4X
	H6B	P	—	1	—	—	—	—	—	—	8314 G4B
	M6XW, H6XW	P	—	1	—	—	—	—	—	—	8314 G4W
	B1B	D	—	—	—	—	1	—	—	—	8394 G1B
	B1T	D	—	—	—	—	1	—	—	—	8394 G1T
	B2B	D	—	—	—	—	1	—	—	—	8356 G2B
	B2T	D	—	—	—	—	1	—	—	—	8356 G2T
	B2XA	D	—	—	—	—	1	—	—	—	8356 G2X
	F1B	D	—	—	—	—	1	1	—	—	8349 G1B
	F1F	D	—	—	—	—	1	1	—	—	8349 G1F
	F1T	D	—	—	—	—	1	—	—	—	8349 G1T
	F2B	D	—	—	—	—	1	1	—	—	8350 G2B
	F2XA	D	—	—	—	—	1	1	—	—	8350 G2X
	K1A, K5A	D	—	—	—	—	1	—	—	—	8358 G1A
	K2A, K6A	D	—	—	—	—	1	—	—	—	8364 G2A
	L1B	D	—	—	—	—	1	1	—	—	8238 G1B
	L1F	D	—	—	—	—	1	1	—	—	8238 G1F
	L1X	D	—	—	—	—	1	1	—	—	8238 G1X
	L1Y	D	—	—	—	—	1	1	—	—	8238 G1Y
	L1B	D	—	1	—	—	—	—	—	—	8237 G1B
	L1F	D	—	1	—	—	—	—	—	—	8237 G1F
	L1X	D	—	1	—	—	—	—	—	—	8237 G1X
	L1Y	D	—	1	—	—	—	—	—	—	8237 G1Y
	L2B	D	—	—	—	—	1	1	—	—	8241 G2B
	L2F	D	—	—	—	—	1	1	—	—	8241 G2F
	L2T	D	—	—	—	—	1	1	—	—	8241 G2T
	L2X	D	—	—	—	—	1	1	—	—	8241 G2X
	L2B	D	—	1	—	—	—	—	—	—	8239 G2B
	L2F	D	—	1	—	—	—	—	—	—	8239 G2F
	L2T	D	—	1	—	—	—	—	—	—	8239 G2T
	L2X	D	—	1	—	—	—	—	—	—	8239 G2X
	2nd Back										
	L2B	D	—	—	—	—	—	—	1	1	8243 G2B
	L2F	D	—	—	—	—	—	—	1	1	8243 G2F
	L2T	D	—	—	—	—	—	—	1	1	8243 G2T
	L2X	D	—	—	—	—	—	—	1	1	8243 G2X
	3rd Back										
	L2B	D	—	—	—	—	—	—	—	1	8242 G2B
	L2F	D	—	—	—	—	—	—	—	1	8242 G2F
	L2T	D	—	—	—	—	—	—	—	1	8242 G2T
	L2X	D	—	—	—	—	—	—	—	1	8242 G2X

TYPE LETTERS Indicates	J - Challenger B - Barracuda	V - Valiant L - Dart	R - Belvedere W - Coronet	P - Plymouth D - Dodge	C - Chrysler Y - Imperial
NUMERALS INDICATE:	21 - 2 DR. SED. 23 - 2 DR. H.T.	27 - CONV. CPE. 29 - FAST BACK	41 - 4 DR. SED. 43 - 4 DR. H.T.	45 - 6 PASS. STA. WGN. 46 - 9 PASS. STA. WGN.	

AR Indicates use as required.
= Indicates parts not listed in any previous parts book

Numerals in parentheses ( ) refer to notes.
★ Indicates change or addition.

Printed in U.S.A.
January 1972

Right and left part numbers are on same line, first number is right, second number is left.

CODE	PART NAME	MODEL CODES	SEE BOTTOM NOTE 21	23	27	29	41	43	45	46	PART NUMBER
23-109-4	COVER, Rear Seat Back Cont'd.										
	L3B, M3B	D	—	—	—	—	1	1	—	—	8377 G3B
	L3F, M3F	D	—	—	—	—	1	1	—	—	8377 G3F
	L3X, M3X	D	—	—	—	—	1	1	—	—	8377 G3X
	L3Y, M3Y	D	—	—	—	—	1	1	—	—	8377 G3Y
	L3B, M3B	D	—	1	—	—	—	—	—	—	8392 G3B
	L3F, M3F	D	—	1	—	—	—	—	—	—	8392 G3F
	L3X, M3X	D	—	1	—	—	—	—	—	—	8392 G3X
	L3Y, M3Y	D	—	1	—	—	—	—	—	—	8392 G3Y
	L4B, M4B	D	—	—	—	—	1	1	—	—	8381 G4B
	M4E	D	—	—	—	—	—	1	—	—	8381 G4E
	L4F, M4F	D	—	—	—	—	1	1	—	—	8381 G4F
	L4X, M4X	D	—	—	—	—	1	1	—	—	8381 G4X
	M4XW	D	—	—	—	—	—	1	—	—	8381 G4W
	L4B, M4B	D	—	1	—	—	—	—	—	—	8379 G4B
	M4E	D	—	1	—	—	—	—	—	—	8379 G4E
	L4F, M4F	D	—	1	—	—	—	—	—	—	8379 G4F
	L4X, M4X	D	—	1	—	—	—	—	—	—	8379 G4X
	M4XW	D	—	1	—	—	—	—	—	—	8379 G4W
	H3A	D	—	—	—	—	1	1	—	—	8071 G3A
	H3B	D	—	—	—	—	1	1	—	—	8071 G3B
	H3F	D	—	—	—	—	1	1	—	—	8071 G3F
	H3X	D	—	—	—	—	1	1	—	—	8071 G3X
	H3Y	D	—	—	—	—	1	1	—	—	8071 G3Y
	H3A	D	—	1	—	—	—	—	—	—	8315 G3A
	H3B	D	—	1	—	—	—	—	—	—	8315 G3B
	H3F	D	—	1	—	—	—	—	—	—	8315 G3F
	H3X	D	—	1	—	—	—	—	—	—	8315 G3X
	H3Y	D	—	1	—	—	—	—	—	—	8315 G3Y
	H4E	D	—	—	—	—	—	1	—	—	7347 G4E
	H4F	D	—	—	—	—	1	1	—	—	7347 G4F
	H4X	D	—	—	—	—	1	1	—	—	7347 G4X
	2nd Back										
	H4B	D	—	—	—	—	—	—	1	1	8313 G4B
	H4F, D4F	D	—	—	—	—	—	—	1	1	8313 G4F
	H4T	D	—	—	—	—	—	—	1	1	8313 G4T
	H4X, D4X	D	—	—	—	—	—	—	1	1	8313 G4X
	3rd Back										
	H4B	D	—	—	—	—	—	—	—	1	8281 G4B
	H4F, D4F	D	—	—	—	—	—	—	—	1	8281 G4F
	H4T	D	—	—	—	—	—	—	—	1	8281 G4T
	H4X, D4X	D	—	—	—	—	—	—	—	1	8281 G4X
	H7A	D	—	—	—	—	1	1	—	—	8311 G7A
	H7B	D	—	—	—	—	1	1	—	—	8311 G7B
	H7F	D	—	—	—	—	1	1	—	—	8311 G7F
	H7X	D	—	—	—	—	1	1	—	—	8311 G7X
	2nd Back										
	H7B	D	—	—	—	—	—	—	1	1	8058 GB7
	H7F	D	—	—	—	—	—	—	1	1	8058 G7F
	H7X	D	—	—	—	—	—	—	1	1	8058 G7X
	H8T	D	—	—	—	—	—	—	1	1	8312 G8T
	H8X	D	—	—	—	—	—	—	1	1	8312 G8X
	3rd Back										
	H7B	D	—	—	—	—	—	—	—	1	8060 G7B
	H7F	D	—	—	—	—	—	—	—	1	8060 G7F
	H7X, H8X	D	—	—	—	—	—	—	—	1	8060 G7X
	H8T	D	—	—	—	—	—	—	—	1	8060 G7T
	E1A	C	—	—	—	—	1	1	—	—	8201 G1A
	E1B	C	—	—	—	—	1	1	—	—	8201 G1B

TYPE LETTERS Indicates: J - Challenger; B - Barracuda; V - Valiant; L - Dart; R - Belvedere; W - Coronet; P - Plymouth; D - Dodge; C - Chrysler; Y - Imperial

NUMERALS INDICATE: 21 - 2 DR. SED.; 23 - 2 DR. H.T.; 27 - CONV. CPE.; 29 - FAST BACK; 41 - 4 DR. SED.; 43 - 4 DR. H.T.; 45 - 6 PASS. STA. WGN.; 46 - 9 PASS. STA. WGN.

AR Indicates use as required.

≠ Indicates parts not listed in any previous parts book

Numerals in parentheses ( ) refer to notes.

★ Indicates change or addition.

Printed in U.S.A.
January 1972

Right and left part numbers are on same line, first number is right, second number is left.

CODE	PART NAME	MODEL CODES	SEE BOTTOM NOTE 21	23	27	29	41	43	45	46	PART NUMBER
23-109-4	COVER, Rear Seat Back Cont'd.										
	E1F	C	—	—	—	—	1	1	—	—	8201 G1F
	E1L	C	—	—	—	—	1	—	—	—	8201 G1L
	E1X	C	—	—	—	—	1	1	—	—	8201 G1X
	E1Y	C	—	—	—	—	1	1	—	—	8201 G1Y
	E1A	C	—	1	—	—	—	—	—	—	8200 G1A
	E1B	C	—	1	—	—	—	—	—	—	8200 G1B
	E1F	C	—	1	—	—	—	—	—	—	8200 G1F
	E1X	C	—	1	—	—	—	—	—	—	8200 G1X
	E1Y	C	—	1	—	—	—	—	—	—	8200 G1Y
	G1A	C	—	1	—	—	—	—	—	—	8261 G1A
	G1B	C	—	1	—	—	—	—	—	—	8261 G1B
	G1F	C	—	1	—	—	—	—	—	—	8261 G1F
	G1X	C	—	1	—	—	—	—	—	—	8261 G1X
	G1Y	C	—	1	—	—	—	—	—	—	8261 G1Y
	G1A	C	—	—	—	—	1	1	—	—	8262 G1A
	G1B	C	—	—	—	—	1	1	—	—	8262 G1B
	G1F	C	—	—	—	—	1	1	—	—	8262 G1F
	G1L	C	—	—	—	—	1	—	—	—	8262 G1L
	G1X	C	—	—	—	—	1	1	—	—	8262 G1X
	G1Y	C	—	—	—	—	1	1	—	—	8262 G1Y
	E2E, G2E	C	—	—	—	—	1	1	—	—	8204 G2E
	E2F, G2F	C	—	—	—	—	1	1	—	—	8204 G2F
	E2L, G2L	C	—	—	—	—	—	1	—	—	8204 G2L
	E2X, G2X	C	—	—	—	—	1	1	—	—	8204 G2X
	E2E, G2E	C	—	1	—	—	—	—	—	—	8202 G2E
	E2F, G2F	C	—	1	—	—	—	—	—	—	8202 G2F
	E2L, G2L	C	—	1	—	—	—	—	—	—	8202 G2L
	E2X, G2X	C	—	1	—	—	—	—	—	—	8202 G2X
	S6F	C	—	1	—	—	—	—	—	—	8215 G6F
	S6L	C	—	1	—	—	—	—	—	—	8215 G6L
	E6T, S6T, G6T	C	—	1	—	—	—	—	—	—	8215 G6T
	E6X, S6X, G6X	C	—	1	—	—	—	—	—	—	8215 G6X
	E6XW, S6XW, G6XW	C	—	1	—	—	—	—	—	—	8215 G6W
	S6F	C	—	—	—	—	—	1	—	—	8213 G6F
	S6L	C	—	—	—	—	—	1	—	—	8213 G6L
	S6T	C	—	—	—	—	—	1	—	—	8213 G6T
	S6X	C	—	—	—	—	—	1	—	—	8213 G6X
	S6XW	C	—	—	—	—	—	1	—	—	8213 G6W
	L3B, L7B	C	—	—	—	—	1	1	—	—	8206 G3B
	L3F, L7F, S3F	C	—	—	—	—	1	1	—	—	8206 G3F
	L3L, L7XL, S3L	C	—	—	—	—	1	1	—	—	8206 G3L
	L3X	C	—	—	—	—	1	1	—	—	8206 G3X
	L3Y, S3Y	C	—	—	—	—	1	1	—	—	8206 G3Y
	L3F, S3F	C	—	1	—	—	—	—	—	—	8205 G3F
	L3L, S3L	C	—	1	—	—	—	—	—	—	8205 G3L
	L3X	C	—	1	—	—	—	—	—	—	8205 G3X
	L3Y, S3Y	C	—	1	—	—	—	—	—	—	8205 G3Y
	L4B, S4B	C	—	—	—	—	—	1	—	—	8210 G4B
	L4E, S4E	C	—	—	—	—	1	1	—	—	8210 G4E
	L8F	C	—	—	—	—	1	1	—	—	8210 G4F
	L4X, L8X, S4X	C	—	—	—	—	1	1	—	—	8210 G4X
	L4B, S4B	C	—	1	—	—	—	—	—	—	8209 G4B
	L4E, S4E	C	—	1	—	—	—	—	—	—	8209 G4E
	L4X, S4X	C	—	1	—	—	—	—	—	—	8209 G4X
	2nd Back										
	L4B	C	—	—	—	—	—	—	1	1	8211 G4B
	L4T, L8T	C	—	—	—	—	—	—	1	1	8211 G4T
	L4F, L8F	C	—	—	—	—	—	—	1	1	8211 G4F

TYPE LETTERS Indicates: J - Challenger, B - Barracuda, V - Valiant, L - Dart, R - Belvedere, W - Coronet, P - Plymouth, D - Dodge, C - Chrysler, Y - Imperial

NUMERALS INDICATE: 21 - 2 DR. SED., 23 - 2 DR. H.T., 27 - CONV. CPE., 29 - FAST BACK, 41 - 4 DR. SED., 43 - 4 DR. H.T., 45 - 6 PASS. STA. WGN., 46 - 9 PASS. STA. WGN.

AR Indicates use as required.
= Indicates parts not listed in any previous parts book
Numerals in parentheses ( ) refer to notes.
★ Indicates change or addition.

Printed in U.S.A.
January 1972

Right and left part numbers are on same line, first number is right, second number is left.

CODE	PART NAME	MODEL CODES	SEE BOTTOM NOTE 21	23	27	29	41	43	45	46	PART NUMBER
23-109-4	COVER, Rear Seat Back Cont'd.										
	L4X, L8X	C	—	—	—	—	—	—	1	1	8211 G4X
	L8Y	C	—	—	—	—	—	—	1	1	8211 G4Y
	3rd Back										
	L4B	C	—	—	—	—	—	—	—	1	8212 G4B
	L4T, L8T	C	—	—	—	—	—	—	—	1	8212 G4T
	L4F, L8F	C	—	—	—	—	—	—	—	1	8212 G4F
	L4X, L8X	C	—	—	—	—	—	—	—	1	8212 G4X
	L8Y	C	—	—	—	—	—	—	—	1	8212 G4Y
	2nd Back										
	L7XL	C	—	—	—	—	—	—	1	1	8218 G7L
	3rd Back										
	L7XL	C	—	—	—	—	—	—	—	1	8219 G7L
	H3A	C	—	1	—	—	—	—	—	—	8221 G3A
	H3F	C	—	1	—	—	—	—	—	—	8221 G3F
	H3X	C	—	1	—	—	—	—	—	—	8221 G3X
	H3Y	C	—	1	—	—	—	—	—	—	8221 G3Y
	H3B	C	—	1	—	—	—	—	—	—	8221 G3B
	H6F	C	—	1	—	—	—	—	—	—	8216-7 G6F
	H6T	C	—	1	—	—	—	—	—	—	8216-7 G6T
	H6X	C	—	1	—	—	—	—	—	—	8216-7 G6X
	H6XW	C	—	1	—	—	—	—	—	—	8216-7 G6W
	H7A	C	—	—	—	—	1	1	—	—	8223 G7A
	H7B	C	—	—	—	—	1	1	—	—	8223 G7B
	H7F	C	—	—	—	—	1	1	—	—	8223 G7F
	H7X	C	—	—	—	—	1	1	—	—	8223 G7X
	H8F	C	—	—	—	—	1	1	—	—	8224 G8F
	H8L	C	—	—	—	—	1	1	—	—	8224 G8L
	H8X	C	—	—	—	—	1	1	—	—	8224 G8X
	H9A	C	—	—	—	—	1	1	—	—	8207 G9A
	H9B	C	—	—	—	—	1	1	—	—	8207 G9B
	H9F	C	—	—	—	—	1	1	—	—	8207 G9F
	H9X	C	—	—	—	—	1	1	—	—	8207 G9X
	H9Y	C	—	—	—	—	1	1	—	—	8207 G9Y
	HLT (Sample of Material Req'd.)	C	—	—	—	—	1	1	—	—	8225 GLT
	HLT (Sample of Material Req'd.)	C	—	—	—	—	1	1	—	—	8225 GLJ
	MLA	Y	—	—	—	—	—	1	—	—	8274 GLA
	MLB	Y	—	—	—	—	—	1	—	—	8274 GLB
	MLE	Y	—	—	—	—	—	1	—	—	8274 GLE
	MLF	Y	—	—	—	—	—	1	—	—	8274 GLF
	MLM	Y	—	—	—	—	—	1	—	—	8274 GLM
	MLT	Y	—	—	—	—	—	1	—	—	8274 GLT
	MLX	Y	—	—	—	—	—	1	—	—	8274 GLX
	MLXW	Y	—	—	—	—	—	1	—	—	8274 GLW
	MLY	Y	—	—	—	—	—	1	—	—	8274 GLY
	MBA	Y	—	—	—	—	—	1	—	—	8300-1 GBA
	MBB	Y	—	—	—	—	—	1	—	—	8300-1 GBB
	MBF	Y	—	—	—	—	—	1	—	—	8300-1 GBF
	MBM	Y	—	—	—	—	—	1	—	—	8300-1 GBM
	MBTT	Y	—	—	—	—	—	1	—	—	8300-1 GBT
	MBX	Y	—	—	—	—	—	1	—	—	8300-1 GBX
	MBY	Y	—	—	—	—	—	1	—	—	8300-1 GBY
	MDA	Y	—	—	—	—	—	1	—	—	8371 GDA
	MDB	Y	—	—	—	—	—	1	—	—	8371 GDB
	MDF	Y	—	—	—	—	—	1	—	—	8371 GDF
	MDM	Y	—	—	—	—	—	1	—	—	8371 GDM
	MDTT	Y	—	—	—	—	—	1	—	—	8371 GDT
	MDX	Y	—	—	—	—	—	1	—	—	8371 GDX
	MDY	Y	—	—	—	—	—	1	—	—	8371 GDY

TYPE LETTERS Indicates: J - Challenger, B - Barracuda, V - Valiant, L - Dart, R - Belvedere, W - Coronet, P - Plymouth, D - Dodge, C - Chrysler, Y - Imperial

NUMERALS INDICATE: 21 - 2 DR. SED., 23 - 2 DR. H.T., 27 - CONV. CPE., 29 - FAST BACK, 41 - 4 DR. SED., 43 - 4 DR. H.T., 45 - 6 PASS. STA. WGN., 46 - 9 PASS. STA. WGN.

AR Indicates use as required.
# Indicates parts not listed in any previous parts book
Numerals in parentheses ( ) refer to notes.
★ Indicates change or addition.

Printed in U.S.A.
January 1972

Right and left part numbers are on same line, first number is right, second number is left.

CODE	PART NAME	MODEL CODES	SEE BOTTOM NOTE 21	23	27	29	41	43	45	46	PART NUMBER
23-109-4	COVER, Rear Seat Back Cont'd.										
	MRB	Y	—	1	—	—	—	—	—	—	8360-1 GRB
	MRE	Y	—	1	—	—	—	—	—	—	8360-1 GRE
	MRF	Y	—	1	—	—	—	—	—	—	8360-1 GRF
	MRT	Y	—	1	—	—	—	—	—	—	8360-1 GRT
	MRX	Y	—	1	—	—	—	—	—	—	8360-1 GRX
	MRXW	Y	—	1	—	—	—	—	—	—	8360-1 GRW
	MRY	Y	—	1	—	—	—	—	—	—	8360-1 GRY
	For Police Cars Only										
	Blue (Michigan & Rhode Island)	R	1	—	—	—	—	—	—	—	3571 606
	Black (Michigan & Rhode Island)	R	1	—	—	—	—	—	—	—	3571 618
	Blue (Michigan & Rhode Island)	R	—	—	—	—	1	—	—	—	3571 623
	Tan (Michigan & Rhode Island)	R	—	—	—	—	1	—	—	—	3571 628
	Blue (Detroit & Rhode Island)	P	1	—	—	—	—	—	—	—	3571 634
	Black (Detroit & Rhode Island)	P	1	—	—	—	—	—	—	—	3571 646
	Tan (Detroit & Rhode Island)	P	1	—	—	—	—	—	—	—	3571 640
	Tan (Canada)	P	1	—	—	—	—	—	—	—	3571 715
	Blue (Texas)	P	—	—	—	—	1	—	—	—	3571 544
	Black (Texas)	P	—	—	—	—	1	—	—	—	3571 548
	Gold (Texas)	P	—	—	—	—	1	—	—	—	3571 552
	Green (Texas)	P	—	—	—	—	1	—	—	—	3571 546
	Blue (Michigan)	P	—	—	—	—	—	—	1	—	3571 764
	Black (Philadelphia & Detroit)	P	—	—	—	—	—	—	1	—	3571 680
23-109-5	INSERT, 2nd Seat Back Cover Panel - Vinyl										
	L2B, H2B, P2B, D3B, P4B, P3B	R,W	—	—	—	—	—	—	1	1	1803 GB6
	H2F, P2F, D3F, P4F, P3F	R,W	—	—	—	—	—	—	1	1	1803 GF8
	L2T, H2T, P2T, D3T, P4T, P3T	R,W	—	—	—	—	—	—	1	1	1803 GT6
	D2X, H2X, P2X, L2X, P4X	P,W	—	—	—	—	—	—	1	1	1803 GX9
	2nd Seat Back Panel - Vinyl										
	L2B, H2B, P2B, D3B, P3B, P4B	R,W	—	—	—	—	—	—	1	1	1804 GB6
	H2F, P2F, D3F, P3F, P4F	R,W	—	—	—	—	—	—	1	1	1804 GF8
	L2T, H2T, P2T, D3T, P3T, P4T	R,W	—	—	—	—	—	—	1	1	1804 GT6
	D2X, H2X, P2X, L2X, P4X	R,W	—	—	—	—	—	—	1	1	1804 GX9
	D3T, P3T	R,W	—	—	—	—	—	—	1	1	1804 G3T
	2nd Seat Back Cover Panel Carpet										
	L2B, H2B, P2B, D3B, P4B, P3B	R,W	—	—	—	—	—	—	1	1	1861 GB6
	H2F, P2F, D3F, P4F, P3F	R,W	—	—	—	—	—	—	1	1	1861 GF8
	L2T, H2T, P2T, D3T, P4T, P3T	R,W	—	—	—	—	—	—	1	1	1861 GT6
	D2X, H2X, P2X, L2X, P4X	R,W	—	—	—	—	—	—	1	1	1861 GX8
	2nd Seat Back Panel Carpet										
	L2B, H2B, P2B, D3B, P3B, P4B	R,W	—	—	—	—	—	—	1	1	1862 GB6
	H2F, P2F, D3F, P3F, P4F	R,W	—	—	—	—	—	—	1	1	1862 GF8
	L2T, H2T, P2T, D3T, P4T, P3T	R,W	—	—	—	—	—	—	1	1	1862 GT6
	D2X, H2X, P2X, L2X, P4X	R,W	—	—	—	—	—	—	1	1	1862 GX8
	2nd Seat Back Panel - Vinyl										
	E2B, L2B, M2B, H4B, B2B, F2B, H7B	P,D	—	—	—	—	—	—	1	1	1816 GB3
	L2F, M2F, H4F, F2F, H7F, D4F	P,D	—	—	—	—	—	—	1	1	1816 GF8
	E2T, L2T, M2T, H4T, H8T, B2T, F2T, H8T	P,D	—	—	—	—	—	—	1	1	1816 GT6
	E2XA, L2XA, M2XA, H4XA, H7XA, H8XA, L2X, F2XA, H4X, H7X, H8X, D4X	P,D	—	—	—	—	—	—	1	1	1816 EX9
	2nd Seat Support Panel - Vinyl										
	E2B, L2B, M2B, H4B, B2B, F2B, H7B	P,D	—	—	—	—	—	—	1	1	1821 GB3
	L2F, M2F, H4F, F2F, H7F, D4F	P,D	—	—	—	—	—	—	1	1	1821 GF8
	E2T, L2T, M2T, H4T, H8T, B2T, F2T	P,D	—	—	—	—	—	—	1	1	1821 GT6
	E2XA, L2XA, M2XA, H4XA, H7XA, H8XA, L2X, F2XA, H4X, H7X, H8X, D4X	P,D	—	—	—	—	—	—	1	1	1821 EX9

TYPE LETTERS Indicates	J - Challenger B - Barracuda	V - Valiant L - Dart	R - Belvedere W - Coronet	P - Plymouth D - Dodge	C - Chrysler Y - Imperial
NUMERALS INDICATE:	21 - 2 DR. SED. 23 - 2 DR. H.T.	27 - CONV. CPE. 29 - FAST BACK	41 - 4 DR. SED. 43 - 4 DR. H.T.	45 - 6 PASS. STA. WGN. 46 - 9 PASS. STA. WGN.	

AR Indicates use as required.
= Indicates parts not listed in any previous parts book
Numerals in parentheses ( ) refer to notes.
★ Indicates change or addition.

Printed in U.S.A.
January 1972

Right and left part numbers are on same line, first number is right, second number is left.

CODE	PART NAME	MODEL CODES	SEE BOTTOM NOTE 21	23	27	29	41	43	45	46	PART NUMBER
23-109-5	INSERT, 2nd Seat Back Cover Panel-Vinyl Cont'd.										
	2nd Seat Back Support - Vinyl										
	E2B, L2B, M2B, H4B, B2B, F2B, H7B	P,D	—	—	—	—	—	—	1	1	1825 GB3
	L2F, M2F, H4F, F2F, H7F, D4F	P,D	—	—	—	—	—	—	1	1	1825 GF8
	E2T, L2T, M2T, H4T, H8T, B2T, F2T, H8T	P,D	—	—	—	—	—	—	1	1	1825 GT6
	E2XA, L2XA, M2XA, H4XA, H7XA, H8XA, L2X, F2XA, H4X, H7X, H8X, D4X	P,D	—	—	—	—	—	—	1	1	1825 EX9
	2nd Seat Back Support - Carpet, w/Dress Up Pkg.										
	E2B, L2B, M2B, H4B, F2B, B2B, H7B	P,D	—	—	—	—	—	—	1	1	1839 GB3
	L2F, M2F, H4F, F2F, H7F, D4F	P,D	—	—	—	—	—	—	1	1	1839 GF8
	E2T, L2T, M2T, H4T, H8T, F2T, B2T	P,D	—	—	—	—	—	—	1	1	1839 GT6
	E2XA, L2XA, M2XA, H4XA, H&XA, H8XA, L2X, F2XA, H4X, H7X, H8X, D4X	P,D	—	—	—	—	—	—	1	1	1839 EX8
	2nd Seat Support Panel - Carpet w/Dress-Up Pkg.										
	E2B, L2B, M2B, H4B, B2B, F2B, H7B	P,D	—	—	—	—	—	—	1	1	1843 GB3
	L2F, M2F, H4F, F2F, H7F	P,D	—	—	—	—	—	—	1	1	1843 GF8
	E2T, L2T, M2T, H4T, H—T, B2T, F2T	P,D	—	—	—	—	—	—	1	1	1843 GT6
	E2XA, L2XA, M2XA, H4XA, H7XA, H8XA, L2X, F2XA, H*X, H7X, H8X	P,D	—	—	—	—	—	—	1	1	1843 EX8
	2nd Seat Back Panel - Carpet w/Dress Up Pkg.										
	E2B, L2B, M2B, H4B, F2B, B2B, H7B	P,D	—	—	—	—	—	—	1	1	1844 GB3
	L2F, M2F, H4F, F2F, H7F	P,D	—	—	—	—	—	—	1	1	1844 GF8
	E2T, L2T, M2T, H4T, H8T, F2T, B2T	P,D	—	—	—	—	—	—	1	1	1844 GT6
	E2XA, L2XA, M2XA, H4XA, H7XA, H8XA, L2X, F2XA, H4X, H7X, H8X	P,D	—	—	—	—	—	—	1	1	1844 EX8
	2nd Seat Support Panel - Carpet & Mldg.										
	L4B	C	—	—	—	—	—	—	1	1	1848 GB3
	L4F, L8F	C	—	—	—	—	—	—	1	1	1848 GF8
	L4T, L8T	C	—	—	—	—	—	—	1	1	1848 GT6
	L4X, L7XL	C	—	—	—	—	—	—	1	1	1848 GX8
	L8Y	C	—	—	—	—	—	—	1	1	1848 GY7
	2nd Seat Back - Carpet & Mldg.										
	L4B	C	—	—	—	—	—	—	1	1	1849 GB3
	L4F, L8F	C	—	—	—	—	—	—	1	1	1849 GF8
	L4T, L8T	C	—	—	—	—	—	—	1	1	1849 GT6
	L4X, L7XL, L8X	C	—	—	—	—	—	—	1	1	1849 GX8
	L8Y	C	—	—	—	—	—	—	1	1	1849 GY7
	2nd Seat Back Panel - Carpet & Mldg.										
	L4B	C	—	—	—	—	—	—	1	1	1850 GB3
	L4F, L8F	C	—	—	—	—	—	—	1	1	1850 GF8
	L4T, L8T	C	—	—	—	—	—	—	1	1	1850 GT6
	L4X, L7XL, L8X	C	—	—	—	—	—	—	1	1	1850 GX8
	L8Y	C	—	—	—	—	—	—	1	1	1850 GY7
	2nd Seat Back Support - Carpet & Mldg.										
	L4B	C	—	—	—	—	—	—	1	1	1853 GB3
	L4F, L8F	C	—	—	—	—	—	—	1	1	1853 GF8
	L4T, L8T	C	—	—	—	—	—	—	1	1	1853 GT6
	L4X, L7XL, L8X	C	—	—	—	—	—	—	1	1	1853 GX8
	L8Y	C	—	—	—	—	—	—	1	1	1853 GY7
	3rd Seat Back Panel - Vinyl										
	H2B, P2B, D3B, P3B, P4B	R,W	—	—	—	—	—	—	—	1	1805 GB6
	H2F, P2F, D3F, P3F, P4F	R,W	—	—	—	—	—	—	—	1	1805 GF8
	H2T, P2T, D3T, P3T, P4T	R,W	—	—	—	—	—	—	—	1	1805 GT6
	H2X, P2X, P4X	R,W	—	—	—	—	—	—	1	—	1805 GX9
	D3T, P3T	R,W	—	—	—	—	—	—	1	1	1805 G3T

TYPE LETTERS Indicates: J - Challenger; B - Barracuda; V - Valiant; L - Dart; R - Belvedere; W - Coronet; P - Plymouth; D - Dodge; C - Chrysler; Y - Imperial

NUMERALS INDICATE: 21 - 2 DR. SED.; 23 - 2 DR. H.T.; 27 - CONV. CPE.; 29 - FAST BACK; 41 - 4 DR. SED.; 43 - 4 DR. H.T.; 45 - 6 PASS. STA. WGN.; 46 - 9 PASS. STA. WGN.

AR Indicates use as required.
# Indicates parts not listed in any previous parts book
Numerals in parentheses ( ) refer to notes.
★ *Indicates change or addition.*

Printed in U.S.A.
January 1972

Right and left part numbers are on same line, first number is right, second number is left.

CODE	PART NAME	MODEL CODES	SEE BOTTOM NOTE 21	23	27	29	41	43	45	46	PART NUMBER
23-109-5	INSERT, 2nd Seat Back Cover Panel-Vinyl Cont'd.										
	3rd Seat Back Support Panel - Vinyl										
	H2B, P2B, D3B, P4B, P3B	R,W	—	—	—	—	—	—	—	1	1806 GB6
	H2F, P2F, D3F, P4F, P3F	R,W	—	—	—	—	—	—	—	1	1806 GF8
	H2T, P2T, D3T, P4T, P3T	R,W	—	—	—	—	—	—	—	1	1806 GT6
	H2X, P2X, P4X	R,W	—	—	—	—	—	—	—	1	1806 GX9
	D3T, P3T	R,W	—	—	—	—	—	—	1	1	1806 G3T
	3rd Seat Back Panel Carpet										
	H2B, P2B, D3B, P3B, P4B	R,W	—	—	—	—	—	—	—	1	1858 GB6
	H2F, P2F, D3F, P3F, P4F	R,W	—	—	—	—	—	—	—	1	1858 GF8
	H2T, P2T, D3T, P4T, P3T	R,W	—	—	—	—	—	—	—	1	1858 GT6
	H2X, P2X, P4X	R,W	—	—	—	—	—	—	—	1	1858 GX8
	3rd Seat Back Suppor5 Panel Carpet										
	H2B, P2B, D3B, P3B, P4B	R,W	—	—	—	—	—	—	—	1	1859 GB6
	H2F, P2F, D3F, P4F, P3F	R,W	—	—	—	—	—	—	—	1	1859 GF8
	H2T, P2T, D3T, P3T, P4T	R,W	—	—	—	—	—	—	—	1	1859 GT6
	H2X, P2X, P4X	R,W	—	—	—	—	—	—	—	1	1859 GX8
	3rd Seat Back Panel Support - Vinyl										
	E2B, L2B, M2B, H4B, B2B, F2B, H7B	P,D	—	—	—	—	—	—	1	1	1822 GB3
	L2F, M2F, H4F, F2F, H7F, D4F	P,D	—	—	—	—	—	—	1	1	1822 GF8
	E2T, L2T, M2T, H4T, H8T, B2T, F2T	P,D	—	—	—	—	—	—	1	1	1822 GT6
	E2XA, L2XA, M2XA, H4XA, H7XA, H8XA, L2X, F2XA, H4X, H7X, H8X, D4X	P,D	—	—	—	—	—	—	1	1	1822 EX9
	3rd Seat Back Panel - Vinyl Rear										
	E2B, L2B, M2B, H4B, B2B, F2B, H7B	P,D	—	—	—	—	—	—	1	—	1814 GB3
	L2F, M2F, H4F, F2F, H7F, D4F	P,D	—	—	—	—	—	—	1	—	814 GF8
	E2T, L2T, M2T, H4T, H—T, B2T, F2T	P,D	—	—	—	—	—	—	1	—	1814 GT6
	E2XA, L2XA, M2XA, H4XA, H7XA, H8XA, F2XA, L2X, H4X, H7X, H8X, D4X	P,D	—	—	—	—	—	—	1	—	1814 EX9
	L2B, M2B, H4B, F2B	P,D	—	—	—	—	—	—	—	1	1815 GB3
	L2F, M2F, H4F, F2F, D4F	P,D	—	—	—	—	—	—	—	1	1815 GF8
	L2T, M2T, H4T, H8T, F2F	P,D	—	—	—	—	—	—	—	1	1815 GT6
	L2XA, M2XA, H4XA, H7XA, H8XA, L2X, F2X, D4X	P,D	—	—	—	—	—	—	—	1	1815 EX9
	3rd Seat Back Support Panel - Carpet, w/Dress Up Pkg.										
	E2B, L2B, M2B, H4B, B2B, F2B, H7B	P,D	—	—	—	—	—	—	1	1	1842 GB3
	L2F, M2F, H4F, F2F, H7F, D4F	P,D	—	—	—	—	—	—	1	1	1842 GF8
	E2T, L2T, M2T, H4T, H8T, B2T, F2T	P,D	—	—	—	—	—	—	1	1	1842 GT6
	E2XA, L2XA, M2XA, H4XA, H7XA, H8XA, F2XA, L2X, H*X, H7X, H8X, D4X	P,D	—	—	—	—	—	—	1	1	1842 EX8
	3rd Seat Back Panel - Carpet, w/Dress Up Pkg.										
	E2B, L2B, M2B, H4B, B2B, F2B, H7B	P,D	—	—	—	—	—	—	1	1	1817 GB3
	L2F, M2F, H4F, F2F, H7F, D4F	P,D	—	—	—	—	—	—	1	1	1817 GF8
	E2T, L2T, M2T, H4T, H8T, B2T, F2T	P,D	—	—	—	—	—	—	1	1	1817 GT6
	E2XA, L2XA, M2XA, H4XA, H7XA, H8XA, L2X, F2XA, H*X, H7X, H8X, D4X	P,D	—	—	—	—	—	—	1	1	1817 EX8
	3rd Seat Back Panel - Carpet & Mldg.										
	L4B	C	—	—	—	—	—	—	1	—	1850 GB3
	L4F, L8F	C	—	—	—	—	—	—	1	—	1850 GF8
	L4T, L8T	C	—	—	—	—	—	—	1	—	1850 GT6
	L4X, L7XL, L8X	C	—	—	—	—	—	—	1	—	1850 GX8
	L8Y	C	—	—	—	—	—	—	1	—	1850 GY7
	L4B	C	—	—	—	—	—	—	—	1	1856 GB3
	L4F, L8F	C	—	—	—	—	—	—	—	1	1856 GF8
	L4T, L8T	C	—	—	—	—	—	—	—	1	1856 GT6
	L4X, L7XL, L8X	C	—	—	—	—	—	—	—	1	1856 GX8
	L8Y	C	—	—	—	—	—	—	—	1	1856 GY7

TYPE LETTERS Indicates: J - Challenger, B - Barracuda, V - Valiant, L - Dart, R - Belvedere, W - Coronet, P - Plymouth, D - Dodge, C - Chrysler, Y - Imperial

NUMERALS INDICATE: 21 - 2 DR. SED., 23 - 2 DR. H.T., 27 - CONV. CPE., 29 - FAST BACK, 41 - 4 DR. SED., 43 - 4 DR. H.T., 45 - 6 PASS. STA. WGN., 46 - 9 PASS. STA. WGN.

AR Indicates use as required.
= Indicates parts not listed in any previous parts book
Numerals in parentheses ( ) refer to notes.
★ Indicates change or addition.

Printed in U.S.A.
January 1972

Right and left part numbers are on same line, first number is right, second number is left.

CODE	PART NAME	MODEL CODES	SEE BOTTOM NOTE 21	23	27	29	41	43	45	46	PART NUMBER
23-109-5	INSERT, 2nd Seat Back Cover Panel-Vinyl Cont'd.										
	3rd Seat Back Support Panel - Carpet & Mldg.										
	L4B	C	—	—	—	—	—	—	1	1	1851 GB3
	L4F, L8F	C	—	—	—	—	—	—	1	1	1851 GF8
	L4T, L8T	C	—	—	—	—	—	—	1	1	1851 GT6
	L4X, L7XL, L8X	C	—	—	—	—	—	—	1	1	1851 GX8
	L8Y	C	—	—	—	—	—	—	1	1	1851 GY7
23-109-7	COVER, Rear Seat Back Upper Frame	C,Y	—	1	—	—	—	—	—	—	4807 GX9
23-109-10	FILLER, Rear Seat Back to Quarter Trim Panel										
	E1B, E2B, L1B, L2B, M1B, M4B, H3B, H4B, H5B, H6B, F1B, F2B, M3B, L4B, S4B, MRB	P,D,C,Y	1	1	—	—	—	—	—	—	4308-9 GB2
	L1F, M1F, M4F, M6F, H3F, H4F, H5F, H6F, F1F, L2F, M3F, E1F, E2F, L3F, S3F, S6F, MBF, MRF, D4F	P,D,C,Y	—	1	—	—	—	—	—	—	4308-9 GF7
	M4Y, H4Y, H5Y, L1Y, M3Y, H3Y, E1Y, L3Y, S3Y, MBY, MRY, D3Y	P,D,C,Y	—	1	—	—	—	—	—	—	4308-9 GY5
	E1T, E2T, L1T, M4T, H4T, F1T, L2T, E6T, H6T, S6T, MBTT, MRT	P,D,C,Y	1	1	—	—	—	—	—	—	4308-9 GT7
	M6XA, H6XA, L1X, L2X, M3X, M4X, M6X, H3X, H4X, H6X, E1X, E2X, E6X, L3X, L4X, S4X, S6X, MBX, MRX, D4X	P,D,C,Y	—	1	—	—	—	—	—	—	4308-9 FX9
	E2XA, L2XA, M1XA, M4XA, H?XA, H4XA, H5XA, F2XA	P,D	1	1	—	—	—	—	—	—	4308-9 FA8
	H?A, E1A, MBA	D,C,Y	—	1	—	—	—	—	—	—	4308-9 GA6
	H3B	C	—	1	—	—	—	—	—	—	4308-9 GB7
	MBB	Y	—	1	—	—	—	—	—	—	4308-9 GB9
	M4E, M6E, H4E, H6E, E2E, L4E, S4E, MRE	P,D,C,Y	—	1	—	—	—	—	—	—	4308-9 GE8
	E2L, L3L, S3L, S6L	C	—	1	—	—	—	—	—	—	4308-9 FL2
	M6XW, H6XW, M4XW, H6XW, E6XW, S6XW, MRXW	P,D,C,Y	—	1	—	—	—	—	—	—	4308-9 FW1
	MBM	Y	—	1	—	—	—	—	—	—	4308-9 GM9
23-109-13	PLATE, Rear Seat Back Finish										
	L3B, L4B, S4B, L7B	C	—	1	—	—	1	1	—	—	2740 GB2
	L4E, S4E	C	—	1	—	—	1	1	—	—	2740 GE9
	L3F, S3F, S6F, L7F, L8F	C	—	1	—	—	1	1	—	—	2740 GF7
	L3L, S3L, S6L, L7XL	C	—	1	—	—	1	1	—	—	2740 GL1
	E6T, S6T	C	—	1	—	—	—	1	—	—	2740 GT6
	E6X, L3X, L4X, S4X, S6X, L8X	C	—	1	—	—	1	1	—	—	2740 GX9
	E6XW, S6XW, G6XW	C	—	1	—	—	—	1	—	—	2740 GW1
	L3Y, S3Y	C	—	1	—	—	1	1	—	—	2740 GY5
23-109-23	COVER, 2nd Seat Back Latch	P,D,C	—	—	—	—	—	—	1	1	2031 EX9
23-109-35	CUSHION, Rear Seat										
	For Complete Assembly Order By Description, Vehicle Serial Number and Tri. Code										
23-109-36	COVER, Rear Seat Cushion										
	L2B	V	—	—	—	—	1	—	—	—	7630 G2B
	L2T	V	—	—	—	—	1	—	—	—	7630 G2T
	L2X	V	—	—	—	—	1	—	—	—	7630 G2X
	L3B	V	—	—	—	—	1	—	—	—	7798 G3B
	L3F	V	—	—	—	—	1	—	—	—	7798 G3F
	L3X	V	—	—	—	—	1	—	—	—	7798 G3X
	L4B	V	—	—	—	—	1	—	—	—	7692 G4B
	L4F	V	—	—	—	—	1	—	—	—	7692 G4F
	L4T	V	—	—	—	—	1	—	—	—	7692 G4T
	L4X	V	—	—	—	—	1	—	—	—	7692 G4X

TYPE LETTERS Indicates: J - Challenger, B - Barracuda, V - Valiant, L - Dart, R - Belvedere, W - Coronet, P - Plymouth, D - Dodge, C - Chrysler, Y - Imperial

NUMERALS INDICATE: 21 - 2 DR. SED., 23 - 2 DR. H.T., 27 - CONV. CPE., 29 - FAST BACK, 41 - 4 DR. SED., 43 - 4 DR. H.T., 45 - 6 PASS. STA. WGN., 46 - 9 PASS. STA. WGN.

AR Indicates use as required.
# Indicates parts not listed in any previous parts book
Numerals in parentheses ( ) refer to notes.
★ Indicates change or addition.

Printed in U.S.A.
January 1972

Right and left part numbers are on same line, first number is right, second number is left.

CODE	PART NAME	MODEL CODES	SEE BOTTOM NOTE								PART NUMBER
			21	23	27	29	41	43	45	46	
23-109-36	COVER, Rear Seat Cushion Cont'd.										
	L4Y	V	—	—	—	—	1	—	—	—	7692 G4Y
	L1B, M1B	V,L	—	—	—	1	—	—	—	—	7694 G1B
	L1F, M1F	V,L	—	—	—	1	—	—	—	—	7694 G1F
	L1X, M1X	V,L	—	—	—	1	—	—	—	—	7694 G1X
	L1XX, M1XX	V,L	—	—	—	1	—	—	—	—	7694 G1A
	L2B, E2B	V,L	—	—	—	1	—	—	—	—	7746 G2B
	L2T, E2T	V,L	—	—	—	1	—	—	—	—	7746 G2T
	L2X, E2X	V,L	—	—	—	1	—	—	—	—	7746 G2X
	L4B	V	—	—	—	1	—	—	—	—	7691 G4B
	L4F	V	—	—	—	1	—	—	—	—	7691 G4F
	L4T	V	—	—	—	1	—	—	—	—	7691 G4T
	L4X, L6X, M6X	V,L	—	—	—	1	—	—	—	—	7691 G4X
	L4Y	V	—	—	—	1	—	—	—	—	7691 G4Y
	L6XV, M6XV	V,L	—	—	—	1	—	—	—	—	7691 G4V
	L6XW, M6XW	V,L	—	—	—	1	—	—	—	—	7691 G4W
	L2B	L	—	—	—	—	1	—	—	—	7631 G2B
	L2F	L	—	—	—	—	1	—	—	—	7631 G2F
	L2X	L	—	—	—	—	1	—	—	—	7631 F2X
	L2B	L	—	1	—	—	—	—	—	—	7632 G2B
	L2F	L	—	1	—	—	—	—	—	—	7632 G2F
	L2X	L	—	1	—	—	—	—	—	—	7632 G2X
	H1B	L	—	—	—	—	1	—	—	—	7648 G1B
	H1F	L	—	—	—	—	1	—	—	—	7648 G1F
	H1X	L	—	—	—	—	1	—	—	—	7648 G1X
	H2B	L	—	—	—	—	1	—	—	—	7660 G2B
	H2F	L	—	—	—	—	1	—	—	—	7660 G2F
	H2X	L	—	—	—	—	1	—	—	—	7660 G2X
	H2Y	L	—	—	—	—	1	—	—	—	7660 G2Y
	H2B, D2B	V,L	—	1	—	—	—	—	—	—	7661 G2B
	H2F, D2F	V,L	—	1	—	—	—	—	—	—	7661 G2F
	H2X, H6X, D2X, D6X	V,L	—	1	—	—	—	—	—	—	7661 G2X
	H2XW, H6XW, D2XW, D6XW	V,L	—	1	—	—	—	—	—	—	7661 G2W
	H2Y, D2Y	V,L	—	1	—	—	—	—	—	—	7661 G2Y
	H5X, P5X	B	—	1	—	—	—	—	—	—	7721 G5X
	H5XV	B	—	1	—	—	—	—	—	—	7721 G5V
	H6B	B	—	—	1	—	—	—	—	—	7730 G6B
	H6F	B	—	—	1	—	—	—	—	—	7730 G6F
	H6T	B	—	—	1	—	—	—	—	—	7730 G6T
	H6X	B	—	—	1	—	—	—	—	—	7730 G6X
	H6XV	B	—	—	1	—	—	—	—	—	7730 G6V
	H6XW	B	—	—	1	—	—	—	—	—	7730 G6W
	P6B	B	—	1	—	—	—	—	—	—	7723 G6B
	P6F	B	—	1	—	—	—	—	—	—	7723 G6F
	P6T	B	—	1	—	—	—	—	—	—	7723 G6T
	P6X	B	—	1	—	—	—	—	—	—	7723 G6X
	P6Y	B	—	1	—	—	—	—	—	—	7723 G6Y
	H4B, H6B	B	—	1	—	—	—	—	—	—	7722 G6B
	H4F, H6F	B	—	1	—	—	—	—	—	—	7722 G6F
	H4T, H6T	B	—	1	—	—	—	—	—	—	7722 G6T
	H4X, H6X	B	—	1	—	—	—	—	—	—	7722 G6X
	H6XV	B	—	1	—	—	—	—	—	—	7722 G6V
	H4XW, H6XW	B	—	1	—	—	—	—	—	—	7722 G6W
	L6B	L	—	1	—	—	—	—	—	—	7722 G6B
	L6F	L	—	1	—	—	—	—	—	—	7722 G6F
	L6T	L	—	1	—	—	—	—	—	—	7722 G6T
	L6X	L	—	1	—	—	—	—	—	—	7722 G6X
	L6XW	L	—	1	—	—	—	—	—	—	7722 G6W

TYPE LETTERS Indicates	J - Challenger B - Barracuda	V - Valiant L - Dart	R - Belvedere W - Coronet	P - Plymouth D - Dodge	C - Chrysler Y - Imperial
NUMERALS INDICATE:	21 - 2 DR. SED. 23 - 2 DR. H.T.	27 - CONV. CPE. 29 - FAST BACK	41 - 4 DR. SED. 43 - 4 DR. H.T.	45 - 6 PASS. STA. WGN. 46 - 9 PASS. STA. WGN.	

AR Indicates use as required.
= Indicates parts not listed in any previous parts book

Numerals in parentheses ( ) refer to notes.
★ Indicates change or addition.

Printed in U.S.A.
January 1972

Right and left part numbers are on same line, first number is right, second number is left.

CODE	PART NAME	MODEL CODES	SEE BOTTOM NOTE 21	23	27	29	41	43	45	46	PART NUMBER
23-109-36	COVER, Rear Seat Cushion Cont'd.										
	PRT, SRT	B	—	1	—	—	—	—	—	—	7736 GRT
	PRX, SRX, HRX	B,J	—	1	—	—	—	—	—	—	7736 GRX
	PRY	B	—	1	—	—	—	—	—	—	7736 GRY
	SRT	B	—	—	1	—	—	—	—	—	7731 GRT
	SRX, HRX	B,J	—	—	1	—	—	—	—	—	7731 GRX
	H5F	J	—	1	—	—	—	—	—	—	7718 G5F
	H5X	J	—	1	—	—	—	—	—	—	7718 G5X
	H5XX	J	—	1	—	—	—	—	—	—	7718 G5A
	L5FW	J	—	1	—	—	—	—	—	—	7718 G5W
	H6B	J	—	1	—	—	—	—	—	—	7693 G6B
	H4F, H6F	J	—	1	—	—	—	—	—	—	7693 G6F
	H6T	J	—	1	—	—	—	—	—	—	7693 G6T
	H4X, H6X	J	—	1	—	—	—	—	—	—	7693 G6X
	H6XW	J	—	1	—	—	—	—	—	—	7693 G6W
	H6Y	J	—	1	—	—	—	—	—	—	7693 G6Y
	H6B	J	—	—	1	—	—	—	—	—	7733 G6B
	H6F	J	—	—	1	—	—	—	—	—	7733 G6F
	H6T	J	—	—	1	—	—	—	—	—	7733 G6T
	H6X	J	—	—	1	—	—	—	—	—	7733 G6X
	H6XW	J	—	—	1	—	—	—	—	—	7733 G6W
	H6Y	J	—	—	1	—	—	—	—	—	7733 G6Y
	L2B	R	—	—	—	—	1	—	—	—	7645 G2B
	L2T	R	—	—	—	—	1	—	—	—	7645 G2T
	2nd Cushion										
	L2B	R	—	—	—	—	—	—	1	—	7646 G2B
	L2T	R	—	—	—	—	—	—	1	—	7646 G2T
	H1B	R	—	—	—	—	1	—	—	—	7671 G1B
	H1F	R	—	—	—	—	1	—	—	—	7671 G1F
	H1T	R	—	—	—	—	1	—	—	—	7671 G1T
	H1X	R	—	—	—	—	1	—	—	—	7671 G1X
	H1Y	R	—	—	—	—	1	—	—	—	7671 G1Y
	H1B	R	—	1	—	—	—	—	—	—	7672 G1B
	H1F	R	—	1	—	—	—	—	—	—	7672 G1F
	H1T	R	—	1	—	—	—	—	—	—	7672 G1T
	H1X	R	—	1	—	—	—	—	—	—	7672 G1X
	H2B	R	—	—	—	—	1	—	—	—	7680 G2B
	H2F	R	—	—	—	—	1	—	—	—	7680 G2F
	H2T	R	—	—	—	—	1	—	—	—	7680 G2T
	H2X	R	—	—	—	—	1	—	—	—	7680 G2X
	H2Y	R	—	—	—	—	1	—	—	—	7680 G2Y
	H2B	R	—	1	—	—	—	—	—	—	7678 G2B
	H2F	R	—	1	—	—	—	—	—	—	7678 G2F
	H2T	R	—	1	—	—	—	—	—	—	7678 G2T
	H2X	R	—	1	—	—	—	—	—	—	7678 G2X
	H2XA	R	—	1	—	—	—	—	—	—	7678 G2A
	H2XW	R	—	1	—	—	—	—	—	—	7678 G2W
	H2Y	R	—	1	—	—	—	—	—	—	7678 G2Y
	2nd Cushion										
	H2B, P2B	R	—	—	—	—	—	—	1	1	7681 G2B
	H2F, P2F	R	—	—	—	—	—	—	1	1	7681 G2F
	H2T, P2T	R	—	—	—	—	—	—	1	1	7681 G2T
	H2X, P2X	R	—	—	—	—	—	—	1	1	7681 G2X
	3rd Cushion										
	H2B, P2B	R	—	—	—	—	—	—	—	1	7682 G2B
	H = F, P2F	R	—	—	—	—	—	—	—	1	7682 G2F
	H2T, P2T	R	—	—	—	—	—	—	—	1	7682 G2T
	H2X, P2X	R	—	—	—	—	—	—	—	1	7682 G2X
	P3B	R	—	—	—	—	1	—	—	—	7710 G3B

TYPE LETTERS Indicates: J - Challenger, B - Barracuda, V - Valiant, L - Dart, R - Belvedere, W - Coronet, P - Plymouth, D - Dodge, C - Chrysler, Y - Imperial

NUMERALS INDICATE: 21 - 2 DR. SED., 23 - 2 DR. H.T., 27 - CONV. CPE., 29 - FAST BACK, 41 - 4 DR. SED., 43 - 4 DR. H.T., 45 - 6 PASS. STA. WGN., 46 - 9 PASS. STA. WGN.

AR Indicates use as required.
# Indicates parts not listed in any previous parts book
Numerals in parentheses ( ) refer to notes.
★ Indicates change or addition.

Printed in U.S.A.
January 1972

Right and left part numbers are on same line, first number is right, second number is left.

CODE	PART NAME	MODEL CODES	SEE BOTTOM NOTE 21	23	27	29	41	43	45	46	PART NUMBER
23-109-36	COVER, Rear Seat Cushion Cont'd.										
	P3F	R	—	—	—	—	1	—	—	—	7710 G3F
	P3T	R	—	—	—	—	1	—	—	—	7710 G3T
	P3X	R	—	—	—	—	1	—	—	—	7710 G3X
	P3B	R	—	1	—	—	—	—	—	—	7709 GBB
	P3F	R	—	1	—	—	—	—	—	—	7709 G3F
	P3T	R	—	1	—	—	—	—	—	—	7709 G3T
	P3X	R	—	1	—	—	—	—	—	—	7709 G3X
	K1T	R,W	—	—	—	—	1	—	—	—	7759 G1T
	K2T, T2T	R,W	—	—	—	—	1	—	—	—	7761 G2T
	K2X, T2X	R,W	—	—	—	—	1	—	—	—	7761 G2X
	L2B	W	—	—	—	—	1	—	—	—	7795 G2B
	L2T	W	—	—	—	—	1	—	—	—	7795 G2T
	D2X, L2X	R,W	—	—	—	—	1	—	—	—	7795 G2X
	2nd Cushion										
	L2B	W	—	—	—	—	—	—	1	—	7670 G2B
	L2T	W	—	—	—	—	—	—	1	—	7670 G2T
	D2X, L2X	R,W	—	—	—	—	—	—	1	—	7670 G2X
	E2B, M2B	R,W	—	1	—	—	—	—	—	—	7743 G2B
	E2T, M2T	R,W	—	1	—	—	—	—	—	—	7743 G2T
	E2X, M2X	R,W	—	1	—	—	—	—	—	—	7743 G2X
	2nd Cushion										
	D3B, P3B	R,W	—	—	—	—	—	—	1	1	7799 G3B
	D3F, P3F	R,W	—	—	—	—	—	—	1	1	7799 G3F
	D3T, P3T	R,W	—	—	—	—	—	—	1	1	7799 G3T
	3rd Cushion										
	D3B, P3B, P4B	R,W	—	—	—	—	—	—	—	1	7728 G4B
	D3F, P3F, P4F	R,W	—	—	—	—	—	—	—	1	7728 G4F
	D3T, P3T, P4T	R,W	—	—	—	—	—	—	—	1	7728 G4T
	P4X	W	—	—	—	—	—	—	—	1	7728 G4X
	C3B	W	—	1	—	—	—	—	—	—	7748 G5B
	C3F, C5F, D5F	W	—	1	—	—	—	—	—	—	7748 G5F
	C5X, C3X, D5X, M5X, P5X	R,W	—	1	—	—	—	—	—	—	7748 G5X
	C5XV, D5XV	W	—	1	—	—	—	—	—	—	7748 G5V
	C6B, D6B, M6B, P6B	R,W	—	1	—	—	—	—	—	—	7703 G6B
	C6F, D6F, M6F, P6F	R,W	—	1	—	—	—	—	—	—	7703 G6F
	C6T, D6T, M6T, P6T	R,W	—	1	—	—	—	—	—	—	7703 G6T
	C6X, D6X, M6X, P6X	R,W	—	1	—	—	—	—	—	—	7703 G6X
	C6XA, D6XA, M6XA, P6XA	R,W	—	1	—	—	—	—	—	—	7703 G6A
	M6XW, P6XW, C6XW	R,W	—	1	—	—	—	—	—	—	7703 G6W
	M6Y, P6Y	R	—	1	—	—	—	—	—	—	7703 G6Y
	M6XV	R	—	1	—	—	—	—	—	—	7703 G6V
	C2B	W	—	1	—	—	—	—	—	—	7790 G2B
	C2F	W	—	1	—	—	—	—	—	—	7790 G2F
	C2T	W	—	1	—	—	—	—	—	—	7790 G2T
	C2X	W	—	1	—	—	—	—	—	—	7790 G2X
	C2XW	W	—	1	—	—	—	—	—	—	7790 G2W
	C2Y	W	—	1	—	—	—	—	—	—	7790 G2Y
	D3B, E5B	W	—	—	—	1	—	—	—	—	7788 G5B
	D3F, E5F	W	—	—	—	1	—	—	—	—	7788 G5F
	D3X, E5X	W	—	—	—	1	—	—	—	—	7788 G5X
	D3Y, E5Y	W	—	—	—	1	—	—	—	—	7788 G5Y
	H1B	W	—	—	—	—	1	—	—	—	7662 G1B
	H1F	W	—	—	—	—	1	—	—	—	7662 G1F
	H1X	W	—	—	—	—	1	—	—	—	7662 G1X
	H1Y	W	—	—	—	—	1	—	—	—	7662 G1Y
	H2B	W	—	—	—	—	1	—	—	—	7673 G2B
	H2F	W	—	—	—	—	1	—	—	—	7673 G2F
	H2T	W	—	—	—	—	1	—	—	—	7673 G2T

TYPE LETTERS Indicates: J - Challenger, B - Barracuda, V - Valiant, L - Dart, R - Belvedere, W - Coronet, P - Plymouth, D - Dodge, C - Chrysler, Y - Imperial

NUMERALS INDICATE: 21 - 2 DR. SED., 23 - 2 DR. H.T., 27 - CONV. CPE., 29 - FAST BACK, 41 - 4 DR. SED., 43 - 4 DR. H.T., 45 - 6 PASS. STA. WGN., 46 - 9 PASS. STA. WGN.

AR Indicates use as required.
= Indicates parts not listed in any previous parts book
Numerals in parentheses ( ) refer to notes.
★ Indicates change or addition.

Printed in U.S.A.
January 1972

Right and left part numbers are on same line, first number is right, second number is left.

CODE	PART NAME	MODEL CODES	SEE BOTTOM NOTE 21	23	27	29	41	43	45	46	PART NUMBER
23-109-36	COVER, Rear Seat Cushion Cont'd.										
	H2X	W	—	—	—	—	1	—	—	—	7673 G2X
	H2Y	W	—	—	—	—	1	—	—	—	7673 G2Y
	P3B	W	—	—	—	—	1	—	—	—	7734 G3B
	P3F	W	—	—	—	—	1	—	—	—	7734 G3F
	P3X	W	—	—	—	—	1	—	—	—	7734 G3X
	P3Y	W	—	—	—	—	1	—	—	—	7734 G3Y
	2nd Cushion										
	H2B	W	—	—	—	—	—	—	1	1	7675 G2B
	H2F	W	—	—	—	—	—	—	1	1	7675 G2F
	H2T	W	—	—	—	—	—	—	1	1	7675 G2T
	H2X	W	—	—	—	—	—	—	1	1	7675 G2X
	3rd Cushion										
	H2B	W	—	—	—	—	—	—	—	1	7676 G2B
	H2F	W	—	—	—	—	—	—	—	1	7676 G2F
	H2T	W	—	—	—	—	—	—	—	1	7676 G2T
	H2X	W	—	—	—	—	—	—	—	1	7676 G2X
	2nd Cushion										
	P3B	W	—	—	—	—	—	—	1	1	7799 G3B
	P3F	W	—	—	—	—	—	—	1	1	7799 G3F
	P3X	W	—	—	—	—	—	—	1	1	7799 G3X
	P4B	W	—	—	—	—	—	—	1	1	7727 G4B
	P4F	W	—	—	—	—	—	—	1	1	7727 G4F
	P4T	W	—	—	—	—	—	—	1	1	7727 G4T
	P4X	W	—	—	—	—	—	—	1	1	7727 G4X
	CRT	W	—	—	—	1	—	—	—	—	7747 GRT
	CRX	W	—	—	—	1	—	—	—	—	7747 GRX
	CRXA	W	—	—	—	1	—	—	—	—	7747 GRA
	K1T, K5T	P	—	—	—	—	1	—	—	—	7752 G1T
	E1B	P,D	1	1	—	—	—	—	—	—	6841 G1B
	E1T	P,D	1	1	—	—	—	—	—	—	6841 G1T
	E1B	P	—	—	—	—	1	—	—	—	7777 G1B
	E1T	P	—	—	—	—	1	—	—	—	7777 G1T
	E2B	P,D	1	1	—	—	—	—	—	—	6842 G2B
	E2T	P,D	1	1	—	—	—	—	—	—	6842 G2T
	E2XA	P,D	1	1	—	—	—	—	—	—	6842 G2X
	E2B	P	—	—	—	—	1	—	—	—	7626 G2B
	E2T	P	—	—	—	—	1	—	—	—	7626 G2T
	E2XA	P	—	—	—	—	1	—	—	—	7626 G2X
	D2XA	P	—	—	—	—	1	—	—	—	7634 G2A
	D2XA	P	1	—	—	—	—	—	—	—	7633 G2A
	L1B	P	—	—	—	—	1	—	—	—	7637 G1B
	L1F	P	—	—	—	—	1	—	—	—	7637 G1F
	L1T	P	—	—	—	—	1	—	—	—	7637 G1T
	L2B	P	—	—	—	—	1	—	—	—	7781 G2B
	L2XA	P	—	—	—	—	1	—	—	—	7781 G2X
	M1B	P	—	—	—	1	1	1	—	—	7696 G1B
	M1F	P	—	—	—	1	1	1	—	—	7696 G1F
	M1XA	P	—	—	—	1	1	1	—	—	7696 G1X
	M1Y	P	—	—	—	1	—	—	—	—	7696 G1Y
	M1B	P	—	1	—	—	—	—	—	—	7695 G1B
	M1F	P	—	1	—	—	—	—	—	—	7695 G1F
	M1XA	P	—	1	—	—	—	—	—	—	7695 G1X
	2nd Cushion										
	M2B	P	—	—	—	—	—	—	1	1	7785 G2B
	M2F	P	—	—	—	—	—	—	1	1	7785 G2F
	M2T	P	—	—	—	—	—	—	1	1	7785 G2T
	M2XA	P	—	—	—	—	—	—	1	1	7785 G2X
	H3B	P	—	—	—	1	1	1	—	—	7770 G3B

TYPE LETTERS Indicates: J - Challenger, B - Barracuda, V - Valiant, L - Dart, R - Belvedere, W - Coronet, P - Plymouth, D - Dodge, C - Chrysler, Y - Imperial

NUMERALS INDICATE: 21 - 2 DR. SED., 23 - 2 DR. H.T., 27 - CONV. CPE., 29 - FAST BACK, 41 - 4 DR. SED., 43 - 4 DR. H.T., 45 - 6 PASS. STA. WGN., 46 - 9 PASS. STA. WGN.

AR Indicates use as required.
# Indicates parts not listed in any previous parts book
Numerals in parentheses ( ) refer to notes.
★ Indicates change or addition.

Printed in U.S.A.
January 1972

Right and left part numbers are on same line, first number is right, second number is left.

CODE	PART NAME	MODEL CODES	SEE BOTTOM NOTE 21	23	27	29	41	43	45	46	PART NUMBER
23-109-36	COVER, Rear Seat Cushion Cont'd.										
	H3F	P	—	—	—	1	1	1	—	—	7770 G3F
	H3T	P	—	—	—	1	1	1	—	—	7770 G3T
	H3XA	P	—	—	—	1	1	1	—	—	7770 G3X
	H3Y	P	—	—	—	1	1	1	—	—	7770 G3Y
	H3B	P	—	1	—	—	—	—	—	—	7769 G3B
	H3F	P	—	1	—	—	—	—	—	—	7769 G3F
	H3XA	P	—	1	—	—	—	—	—	—	7769 G3X
	M4B, H4B	P	—	—	—	1	1	1	—	—	7651 G4B
	M4E, H4E	P	—	—	—	1	—	1	—	—	7651 G4E
	M4F, H4F	P	—	—	—	1	1	1	—	—	7651 G4F
	M4T, H4T	P	—	—	—	1	1	1	—	—	7651 G4T
	M4XA, H4XA	P	—	—	—	1	1	1	—	—	7651 G4X
	M4XW, H4XW	P	—	—	—	1	—	1	—	—	7651 G4W
	M4Y, H4Y	P	—	—	—	1	1	1	—	—	7651 G4Y
	M4B, H4B	P	—	1	—	—	—	—	—	—	7649 G4B
	M4E, H4E	P	—	1	—	—	—	—	—	—	7649 G4E
	M4F, H4F	P	—	1	—	—	—	—	—	—	7649 G4F
	M4T, H4T	P	—	1	—	—	—	—	—	—	7649 G4T
	M4XA, H4XA	P	—	1	—	—	—	—	—	—	7649 G4X
	M4Y, H4Y	P	—	1	—	—	—	—	—	—	7649 G4Y
	P4T	P	—	—	—	1	—	1	—	—	7603 G4T
	2nd Cushion										
	H4B	P	—	—	—	—	—	—	1	1	7654 G4B
	H4F	P	—	—	—	—	—	—	1	1	7654 G4F
	H4T	P	—	—	—	—	—	—	1	1	7654 G4T
	H4XA	P	—	—	—	—	—	—	1	1	7654 G4X
	3rd Cushion										
	H4B	P	—	—	—	—	—	—	—	1	7655 G4B
	H4F	P	—	—	—	—	—	—	—	1	7655 G4F
	H4T	P	—	—	—	—	—	—	—	1	7655 G4T
	H4XA	P	—	—	—	—	—	—	—	1	7655 G4X
	M8XA	P	—	—	—	—	1	1	—	—	7749 G8X
	H5B, H7B	P	—	—	—	1	1	1	—	—	7688 G7B
	H5F, H7F	P	—	—	—	1	1	1	—	—	7688 G7F
	H5XA, H7XA	P	—	—	—	1	1	1	—	—	7688 G7X
	H5Y, H7Y	P	—	—	—	1	1	1	—	—	7688 G7Y
	H5B	P	—	1	—	—	—	—	—	—	7685 G5B
	H5F	P	—	1	—	—	—	—	—	—	7685 G5F
	H5XA	P	—	1	—	—	—	—	—	—	7685 G5X
	H5Y	P	—	1	—	—	—	—	—	—	7685 G5Y
	M6F, H6F	P	—	—	—	1	—	1	—	—	7702 G6F
	M6XW, H6XW	P	—	—	—	1	—	1	—	—	7702 G6W
	M6XA, H6XA	P	—	—	—	1	—	1	—	—	7702 G6X
	2nd Cushion										
	H7XA	P	—	—	—	—	—	—	1	1	8014 G7X
	H8T	P	—	—	—	—	—	—	1	1	8064 G8T
	H8XA	P	—	—	—	—	—	—	1	1	8064 G8X
	3rd Cushion										
	H7XA, H8XA	P	—	—	—	—	—	—	—	1	8066 G8X
	H8T	P	—	—	—	—	—	—	—	1	8066 G8T
	K2A, K6A	D	—	—	—	—	1	—	—	—	7754 G2A
	K2T, K6T	P	—	—	—	—	1	—	—	—	7754 G2T
	K2X	P	—	—	—	—	1	—	—	—	7754 G2X
	2nd Cushion										
	B2B, E2B	P,D	—	—	—	—	—	—	1	—	7627 G2B
	B2T, E2T	P,D	—	—	—	—	—	—	1	—	7627 G2T
	E2XA	P	—	—	—	—	—	—	1	—	7627 G2X
	F1B, L1B	P,D	—	1	—	—	—	—	—	—	8316 G1B

TYPE LETTERS Indicates: J - Challenger; B - Barracuda; V - Valiant; L - Dart; R - Belvedere; W - Coronet; P - Plymouth; D - Dodge; C - Chrysler; Y - Imperial

NUMERALS INDICATE: 21 - 2 DR. SED.; 23 - 2 DR. H.T.; 27 - CONV. CPE.; 29 - FAST BACK; 41 - 4 DR. SED.; 43 - 4 DR. H.T.; 45 - 6 PASS. STA. WGN.; 46 - 9 PASS. STA. WGN.

AR Indicates use as required.
= Indicates parts not listed in any previous parts book
Numerals in parentheses ( ) refer to notes.
★ Indicates change or addition.

Printed in U.S.A.
January 1972

Right and left part numbers are on same line, first number is right, second number is left.

CODE	PART NAME	MODEL CODES	SEE BOTTOM NOTE 21	23	27	29	41	43	45	46	PART NUMBER
23-109-36	COVER, Rear Seat Cushion Cont'd.										
	F1F, L1F	P,D	—	1	—	—	—	—	—	—	8316 G1F
	F1T, L1T	P,D	—	1	—	—	—	—	—	—	8316 G1T
	F2B, L2B	P,D	—	1	—	—	—	—	—	—	7779 G2B
	F2XA, L2XA	P,D	—	1	—	—	—	—	—	—	7779 G2X
	2nd Cushion										
	F2B, L2B	P,D	—	—	—	—	—	—	1	1	7783 G2B
	F2F, L2F	P,D	—	—	—	—	—	—	1	1	7783 G2F
	F2T, L2T	P,D	—	—	—	—	—	—	1	1	7783 G2T
	F2XA, L2XA	P,D	—	—	—	—	—	—	1	1	7783 G2X
	3rd Cushion										
	M2B	P	—	—	—	—	—	—	—	1	7786 G2B
	F2F, L2F, M2F	P,D	—	—	—	—	—	—	—	1	7786 G2F
	F2T, L2T, M2T	P,D	—	—	—	—	—	—	—	1	7786 G2T
	F2XA, L2XA, M2XA	P,D	—	—	—	—	—	—	—	1	7786 G2X
	L2B, F2B	P,D	—	—	—	—	—	—	—	1	7786 GBB
	H6B	P	—	1	—	—	—	—	—	—	7713 G4B
	H4E, M6E, H6E	D	—	1	—	—	—	—	—	—	7713 G4E
	H6F, M6F, H4F, D4F	P,D	—	1	—	—	—	—	—	—	7713 G4F
	H6XA, M6XA, H4X, M6X, H6X, D4X	P,D	—	1	—	—	—	—	—	—	7713 G4X
	H6XW, M6XW	P	—	1	—	—	—	—	—	—	7713 G4W
	K1A, K5A	D	—	—	—	—	1	—	—	—	7753 G1A
	B1B	D	—	—	—	—	1	—	—	—	7778 G1B
	B1T	D	—	—	—	—	1	—	—	—	7778 G1T
	B2B	D	—	—	—	—	1	—	—	—	7750 G2B
	B2T	D	—	—	—	—	1	—	—	—	7750 G2T
	B2XA	D	—	—	—	—	1	—	—	—	7750 G2X
	F1B	D	—	—	—	—	1	1	—	—	7744 G1B
	F1F	D	—	—	—	—	1	1	—	—	7744 G1F
	F1T	D	—	—	—	—	1	—	—	—	7744 G1T
	F2B	D	—	—	—	—	1	—	—	—	7745 G2B
	F2XA	D	—	—	—	—	1	1	—	—	7745 G2X
	L1B	D	—	—	—	—	1	1	—	—	7639 G1B
	L1F	D	—	—	—	—	1	1	—	—	7639 G1F
	L1X	D	—	—	—	—	1	1	—	—	7639 G1X
	L1Y	D	—	—	—	—	1	1	—	—	7639 G1Y
	L1B	D	—	1	—	—	—	—	—	—	7358 G1B
	L1F	D	—	1	—	—	—	—	—	—	7358 G1F
	L1X	D	—	1	—	—	—	—	—	—	7358 G1X
	L1Y	D	—	1	—	—	—	—	—	—	7358 G1Y
	L2B	D	—	—	—	—	1	1	—	—	7641 G2B
	L2F	D	—	—	—	—	1	1	—	—	7641 G2F
	L2T	D	—	—	—	—	1	1	—	—	7641 G2T
	L2X	D	—	—	—	—	1	1	—	—	7641 G2X
	L2B	D	—	1	—	—	—	—	—	—	7357 G2B
	L2F	D	—	1	—	—	—	—	—	—	7357 G2F
	L2T	D	—	1	—	—	—	—	—	—	7357 G2T
	L2X	D	—	1	—	—	—	—	—	—	7357 G2X
	2nd Cushion										
	L2B	D	—	—	—	—	—	—	1	1	7647 G2B
	L2F	D	—	—	—	—	—	—	1	1	7647 G2F
	L2T	D	—	—	—	—	—	—	1	1	7647 G2T
	L2X	D	—	—	—	—	—	—	1	1	7647 G2X
	3rd Cushion										
	L2B	D	—	—	—	—	—	—	—	1	7642 G2B
	L2F	D	—	—	—	—	—	—	—	1	7642 G2F
	L2T	D	—	—	—	—	—	—	—	1	7642 G2T
	L2X	D	—	—	—	—	—	—	—	1	7642 G2X
	L3B, M3B	D	—	—	—	—	1	1	—	—	7763 G3B

TYPE LETTERS Indicates: J - Challenger, B - Barracuda, V - Valiant, L - Dart, R - Belvedere, W - Coronet, P - Plymouth, D - Dodge, C - Chrysler, Y - Imperial

NUMERALS INDICATE: 21 - 2 DR. SED., 23 - 2 DR. H.T., 27 - CONV. CPE., 29 - FAST BACK, 41 - 4 DR. SED., 43 - 4 DR. H.T., 45 - 6 PASS. STA. WGN., 46 - 9 PASS. STA. WGN.

AR Indicates use as required.
# Indicates parts not listed in any previous parts book
Numerals in parentheses ( ) refer to notes.
★ Indicates change or addition.

Printed in U.S.A.
January 1972

Right and left part numbers are on same line, first number is right, second number is left.

CODE	PART NAME	MODEL CODES	SEE BOTTOM NOTE 21	23	27	29	41	43	45	46	PART NUMBER
23-109-36	COVER, Rear Seat Cushion Cont'd.										
	L3F, M3F	D	—	—	—	—	1	1	—	—	7763 G3F
	L3X, M3X	D	—	—	—	—	1	1	—	—	7763 G3X
	L3Y, M3Y	D	—	—	—	—	1	1	—	—	7763 G3Y
	L3B, M3B	D	—	1	—	—	—	—	—	—	7776 G3B
	L3F, M3F	D	—	1	—	—	—	—	—	—	7776 G3F
	L3X, M3X	D	—	1	—	—	—	—	—	—	7776 G3X
	L3Y, M3Y	D	—	1	—	—	—	—	—	—	7776 G3Y
	L4B, M4B	D	—	—	—	—	1	1	—	—	7765 G4B
	M4E	D	—	—	—	—	—	1	—	—	7765 G4E
	L4F, M4F	D	—	—	—	—	1	1	—	—	7765 G4F
	L4X, M4X	D	—	—	—	—	1	1	—	—	7765 G4X
	M4XW	D	—	—	—	—	—	1	—	—	7765 G4W
	L4B, M4B	D	—	1	—	—	—	—	—	—	7764 G4B
	M4E	D	—	1	—	—	—	—	—	—	7764 G4E
	L4F, M4F	D	—	1	—	—	—	—	—	—	7764 G4F
	L4X, M4X	D	—	1	—	—	—	—	—	—	7764 G4X
	M4XW	D	—	1	—	—	—	—	—	—	7764 G4W
	H3A	D	—	—	—	—	1	1		—	8070 G3A
	H3B	D	—	—	—	—	6	1		—	8070 G3B
	H3F	D	—	—	—	—	1	1	—	—	8070 G3F
	H3X	D	—	—	—	—	1	1	—	—	8070 G3X
	H3Y	D	—	—	—	—	1	1	—	—	8070 G3Y
	H3A	D	—	1	—	—	—	—	—	—	7714 G3A
	H3B	D	—	1	—	—	—	—	—	—	7714 G3B
	H3F	D	—	1	—	—	—	—	—	—	7714 G3F
	H3X	D	—	1	—	—	—	—	—	—	7714 G3X
	H3Y	D	—	1	—	—	—	—	—	—	7714 G3Y
	H4E	D	—	—	—	—	—	1	—	—	7346 G4E
	H4F	D	—	—	—	—	1	1	—	—	7346 G4F
	H4X	D	—	—	—	—	1	1	—	—	7346 G4Y
	2nd Cushion										
	H4B	D	—	—	—	—	—	—	1	1	7708 G4B
	H4F, D4F	D	—	—	—	—	—	—	1	1	7708 G4F
	H4T	D	—	—	—	—	—	—	1	1	7708 G4T
	H4X, D4X	D	—	—	—	—	—	—	1	1	7708 G4X
	3rd Cushion										
	H4B	D	—	—	—	—	—	—	—	1	7683 G4B
	H4F, D4F	D	—	—	—	—	—	—	—	1	7683 G4F
	H4T	D	—	—	—	—	—	—	—	1	7683 G4T
	H4X, D4X	D	—	—	—	—	—	—	—	1	7683 G4X
	H7A	D	—	—	—	—	1	1	—	—	7706 G7A
	H7B	D	—	—	—	—	1	1	—	—	7706 G7B
	H7F	D	—	—	—	—	1	1	—	—	7706 G7F
	H7X	D	—	—	—	—	1	1	—	—	7706 G7X
	2nd Cushion										
	H7B	D	—	—	—	—	—	—	1	1	8057 G7B
	H7F	D	—	—	—	—	—	—	1	1	8057 G7F
	H7X	D	—	—	—	—	—	—	1	1	8057 G7X
	H8T	D	—	—	—	—	—	—	1	1	7707 G 8T
	H8X	D	—	—	—	—	—	—	1	1	7707 G8X
	3rd Cushion										
	H7B	D	—	—	—	—	—	—	—	1	8059 G7B
	H7F	D	—	—	—	—	—	—	—	1	8059 G7F
	H7X, H8X	D	—	—	—	—	—	—	—	1	8059 G7X
	H8T	D	—	—	—	—	—	—	—	1	8059 G7T
	E1A, G1A	C	—	—	—	—	1	1	—	—	7601 G1A
	E1B, G1B	C	—	—	—	—	1	1	—	—	7601 G1B
	E1F, G1F	C	—	—	—	—	1	1	—	—	7601 G1F

TYPE LETTERS Indicates J - Challenger, B - Barracuda, V - Valiant, L - Dart, R - Belvedere, W - Coronet, P - Plymouth, D - Dodge, C - Chrysler, Y - Imperial

NUMERALS INDICATE: 21 - 2 DR. SED., 23 - 2 DR. H.T., 27 - CONV. CPE., 29 - FAST BACK, 41 - 4 DR. SED., 43 - 4 DR. H.T., 45 - 6 PASS. STA. WGN., 46 - 9 PASS. STA. WGN.

AR Indicates use as required.
= Indicates parts not listed in any previous parts book
Numerals in parentheses ( ) refer to notes.
★ Indicates change or addition.

Printed in U.S.A.
January 1972

Right and left part numbers are on same line, first number is right, second number is left.

CODE	PART NAME	MODEL CODES	SEE BOTTOM NOTE 21	23	27	29	41	43	45	46	PART NUMBER
23-109-36	COVER, Rear Seat Cushion Cont'd.										
	E1L, G1L	C	—	—	—	—	1	—	—	—	7601 G1L
	E1X, G1X	C	—	—	—	—	1	1	—	—	7601 G1X
	E1Y, G1Y	C	—	—	—	—	1	1	—	—	7601 G1Y
	E1A, G1A	C	—	1	—	—	—	—	—	—	7600 G1A
	E1B, G1B	C	—	1	—	—	—	—	—	—	7600 G1B
	E1F, G1F	C	—	1	—	—	—	—	—	—	7600 G1F
	E1X, G1X	C	—	1	—	—	—	—	—	—	7600 G1X
	E1Y, G1Y	C	—	1	—	—	—	—	—	—	7600 G1Y
	E2E, G2E	C	—	—	—	—	1	1	—	—	7604 G2E
	E2F, G2F	C	—	—	—	—	1	1	—	—	7604 G2F
	E2L, G2L	C	—	—	—	—	—	1	—	—	7604 G2L
	E2X, G2X	C	—	—	—	—	1	1	—	—	7604 G2X
	E2E, G2E	C	—	1	—	—	—	—	—	—	7602 G2E
	E2F, G2F	C	—	1	—	—	—	—	—	—	7602 G2F
	E2L, G2L	C	—	1	—	—	—	—	—	—	7602 G2L
	E2X, G2X	C	—	1	—	—	—	—	—	—	7602 G2X
	S6F	C	—	1	—	—	—	—	—	—	7615 G6F
	S6L	C	—	1	—	—	—	—	—	—	7615 G6L
	E6T, S6T, G6T	C	—	6	—	—	—	—	—	—	7615 G6T
	E6X, S6X, G6X	C	—	1	—	—	—	—	—	—	7615 G6X
	E6XW, S6XW, G6XW	C	—	1	—	—	—	—	—	—	7615 G6W
	L3B, L7B (Up to Build Date 10-1-70)	C	—	—	—	—	1	1	—	—	7606 G3B
	L3F, L7F, S3F (Up to Build Date 10-1-70)	C	—	—	—	—	1	1	—	—	7606 G3F
	L3L, L7XL, S3L (Up to Build Date 10-1-70)	C	—	—	—	—	1	1	—	—	7606 G3L
	L3X (Up to Build Date 10-1-70)	C	—	—	—	—	1	1	—	—	7606 G3X
	L3Y, S3Y (Up to Build Date 10-1-70)	C	—	—	—	—	1	1	—	—	7606 G3Y
	L3B, L7B (After Build Date 10-1-70)	C	—	—	—	—	1	1	—	—	7739 G3B
	L3F, L7F, S3F (After Build Date 10-1-70)	C	—	—	—	—	1	1	—	—	7739 G3F
	L3L n L7XL, S3L (After Build Date 10-1-70)	C	—	—	—	—	1	1	—	—	7739 G3L
	L3X (After Build Date 10-1-70)	C	—	—	—	—	1	1	—	—	7739 G3X
	L3Y, S3Y (After Build Date 10-1-70)	C	—	—	—	—	1	1	—	—	7739 G3Y
	L3F, S3F (Up to Build Date 10-1-70)	C	—	1	—	—	—	—	—	—	7605 G3F
	L3L, S3L (Up to Build Date 10-1-70)	C	—	1	—	—	—	—	—	—	7605 G3L
	L3X (Up to Build Date 10-1-70)	C	—	1	—	—	—	—	—	—	7605 G3X
	L3Y, S3Y (Up to Build Date 10-1-70)	C	—	1	—	—	—	—	—	—	7605 G3Y
	L3F, S3F (After Build Date 10-1-70)	C	—	1		—	—	—	—	—	7738 G3F
	L3L, S3L (After Build Date 10-1-70)	C	—	1	—	—	—	—	—	—	7738 G3L
	L3X (After Build Date 10-1-70)	C	—	1	—	—	—	—	—	—	7738 G3X
	L3Y, S3Y (After Build Date 10-1-70)	C	—	1	—	—	—	—	—	—	7738 G3Y
	L4B, S4B (Up to Build Date 10-1-70)	C	—	—	—	—	—	1	—	—	7610 G4B
	L4E, S4E (Up to Build Date 10-1-70)	C	—	—	—	—	1	1	—	—	7610 G4E
	L8F (Up to Build Date 10 -1-70)	C	—	—	—	—	1	1	—	—	7610 G4F
	L4X, L8X, S4X (Up to Build Date 10-1-70)	C	—	—	—	—	1	1	—	—	7610 G4X
	L4B, S4B (After Build Date 10-1-70)	C	—	—	—	—	—	1	—	—	7773 G4B
	L4E, S4E (After Build Date 10-1-70)	C	—	—	—	—	1	1	—	—	7773 G4E
	L8F (After Build Date 10-1-70)	C	—	—	—	—	1	1	—	—	7773 G4F
	L4X, L8X, S4X (After Build Date 10-1-70)	C	—	—	—	—	1	1	—	—	7773 G4X
	L4B, S4B (Up to Build Date 10-1-70)	C	—	1	—	—	—	—	—	—	7609 G4B
	L4E, S4E (Up to Build Date 10-1-70)	C	—	1	—	—	—	—	—	—	7609 G4E
	L4X, S4X (Up to Build Date 10-1-70)	C	—	1	—	—	—	—	—	—	7609 G4X
	L4B, S4B (After Build Date 10-1-70)	C	—	1	—	—	—	—	—	—	7772 G4B

TYPE LETTERS Indicates	J - Challenger B - Barracuda	V - Valiant L - Dart	R - Belvedere W - Coronet	P - Plymouth D - Dodge	C - Chrysler Y - Imperial
NUMERALS INDICATE:	21 - 2 DR. SED. 23 - 2 DR. H.T.	27 - CONV. CPE. 29 - FAST BACK	41 - 4 DR. SED. 43 - 4 DR. H.T.	45 - 6 PASS. STA. WGN. 46 - 9 PASS. STA. WGN.	

AR Indicates use as required.
# Indicates parts not listed in any previous parts book

Numerals in parentheses ( ) refer to notes.
★ Indicates change or addition.

Printed in U.S.A.
January 1972

Right and left part numbers are on same line, first number is right, second number is left.

CODE	PART NAME	MODEL CODES	SEE BOTTOM NOTE 21	23	27	29	41	43	45	46	PART NUMBER
23-109-36	COVER, Rear Seat Cushion Cont'd.										
	L4E, S4E (After Build Date 10-1-70)	C	—	6	—	—	—	—	—	—	7772 G4E
	L4X, S4X (After Build Date 10-1-70)	C	—	1	—	—	—	—	—	—	7772 G4X
	2nd Cushion										
	L4B (Up to Build Date 10-1-70)	C	—	—	—	—	—	—	1	1	7611 G4B
	L4F, L8F (Up to Build Date 10-1-70)	C	—	—	—	—	—	—	1	1	7611 G4F
	L4X, L8X (Up to Build Date 10-1-70)	C	—	—	—	—	—	—	1	1	7611 G4X
	L8Y (Up to Build Date 10-1-70)	C	—	—	—	—	—	—	1	1	7611 G4Y
	L4T, L8T (Up to Build Date 10-1-70)	C	—	—	—	—	—	—	1	1	7611 G4T
	L4B (After Build Date 10-1-70)	C	—	—	—	—	—	—	1	1	7774 G4B
	L4T, L8T (After Build Date 10-1-70)	C	—	—	—	—	—	—	1	1	7774 G4T
	L4F, L8F (After Build Date 10-1-70)	C	—	—	—	—	—	—	1	1	7774 G4F
	L4X, L8X (After Build Date 10-1-70)	C	—	—	—	—	—	—	1	1	7774 G4X
	L8Y (After Build Date 10-1-70)	C	—	—	—	—	—	—	1	1	7774 G4Y
	3rd Cushion										
	L4B	C	—	—	—	—	—	—	—	1	7612 G4B
	L4F, L8F	C	—	—	—	—	—	—	—	1	7612 G4F
	L4X, L8X	C	—	—	—	—	—	—	—	1	7612 G4X
	L8Y	C	—	—	—	—	—	—	—	1	7612 G4Y
	L4T, L8T	C	—	—	—	—	—	—	—	1	7612 G4T
	2nd Cushion										
	L7XL (Up to Build Date 10-1-70)	C	—	—	—	—	—	—	1	1	7618 G7L
	L7XL (After Build Date 10-1-70)	C	—	—	—	—	—	—	1	1	7740 G7L
	3rd Cushion										
	L7XL	C	—	—	—	—	—	—	—	1	7619 G7L
	H3A	C	—	1	—	—	—	—	—	—	7621 G3A
	H3F	C	—	1	—	—	—	—	—	—	7621 G3F
	H3X	C	—	1	—	—	—	—	—	—	7621 G3X
	H3Y	C	—	1	—	—	—	—	—	—	7621 G3Y
	H3B	C	—	1	—	—	—	—	—	—	7621 G3B
	H6F	C	—	1	—	—	—	—	—	—	7622 G6F
	H6T	C	—	1	—	—	—	—	—	—	7622 G6T
	H6X	C	—	1	—	—	—	—	—	—	7622 G6X
	H6XW	C	—	1	—	—	—	—	—	—	7622 G6W
	H7A	C	—	—	—	—	1	1	—	—	7623 G7A
	H7B	C	—	—	—	—	1	1	—	—	7623 G7B
	H7F	C	—	—	—	—	1	1	—	—	7623 G7F
	H7X	C	—	—	—	—	1	1	—	—	7623 G7X
	H8F	C	—	—	—	—	1	1	—	—	7624 G8F
	H8L	C	—	—	—	—	1	1	—	—	7624 G8L
	H8X	C	—	—	—	—	1	1	—	—	7624 G8X
	H9A	C	—	—	—	—	1	1	—	—	8039 G9A
	H9B	C	—	—	—	—	1	1	—	—	8039 G9B
	H9F	C	—	—	—	—	1	1	—	—	8039 G9F
	H9X	C	—	—	—	—	1	1	—	—	8039 G9X
	H9Y	C	—	—	—	—	1	1	—	—	8039 G9Y
	HLT (Sample of Material Req'd.)	C	—	—	—	—	1	1	—	—	7625 GLT
	HLT (Sample of Material Req'd.)	C	—	—	—	—	1	1	—	—	7625 GLJ
	S6F	C	—	—	—	—	—	1	—	—	7617 G6F
	S6L	C	—	—	—	—	—	1	—	—	7617 G6L
	S6T	C	—	—	—	—	—	1	—	—	7617 G6T
	S6X	C	—	—	—	—	—	1	—	—	7617 G6X
	S6XW	C	—	—	—	—	—	1	—	—	7617 G6W
	MLA	Y	—	—	—	—	—	1	—	—	7677 GLA
	MLB	Y	—	—	—	—	—	1	—	—	7677 GLB
	MLE	Y	—	—	—	—	—	1	—	—	7677 GLE
	MLF	Y	—	—	—	—	—	1	—	—	7677 GLF
	MLM	Y	—	—	—	—	—	1	—	—	7677 GLM
	MLT	Y	—	—	—	—	—	1	—	—	7677 GLT

TYPE LETTERS Indicates: J - Challenger, B - Barracuda, V - Valiant, L - Dart, R - Belvedere, W - Coronet, P - Plymouth, D - Dodge, C - Chrysler, Y - Imperial

NUMERALS INDICATE: 21 - 2 DR. SED., 23 - 2 DR. H.T., 27 - CONV. CPE., 29 - FAST BACK, 41 - 4 DR. SED., 43 - 4 DR. H.T., 45 - 6 PASS. STA. WGN., 46 - 9 PASS. STA. WGN.

AR Indicates use as required.
= Indicates parts not listed in any previous parts book
Numerals in parentheses ( ) refer to notes.
★ Indicates change or addition.

Printed in U.S.A.
January 1972

Right and left part numbers are on same line, first number is right, second number is left.

CODE	PART NAME	MODEL CODES	SEE BOTTOM NOTE 21	23	27	29	41	43	45	46	PART NUMBER
23-109-36	COVER, Rear Seat Cushion Cont'd.										
	MLX	Y	—	—	—	—	—	1	—	—	7677 GLX
	MLXW	Y	—	—	—	—	—	1	—	—	7677 GLW
	MLY	Y	—	—	—	—	—	1	—	—	7677 GLY
	MDA (Up to Build Date 5-1-71)	Y	—	—	—	—	—	1	—	—	7757 GDA
	MDB (Up to Build Date 5-1-71)	Y	—	—	—	—	—	1	—	—	7757 GDB
	MDF (Up to Build Date 5-1-71)	Y	—	—	—	—	—	1	—	—	7757 GDF
	MDM (Up to Build Date 5-1-71)	Y	—	—	—	—	—	1	—	—	7757 GDM
	MDTT (Up to Build Date 5-1-71)	Y	—	—	—	—	—	1	—	—	7757 GDT
	MDX (Up to Build Date 5-1-71)	Y	—	—	—	—	—	1	—	—	7757 GDX
	MDY (Up to Build Date 5-1-71)	Y	—	—	—	—	—	1	—	—	7757 GDY
	MDA (After Build Date 5-1-71)	Y	—	—	—	—	—	1	—	—	7732 GDA
	MDB (After Build Date 5-1-71)	Y	—	—	—	—	—	1	—	—	7732 GDB
	MDF (After Build Date 5-1-71)	Y	—	—	—	—	—	1	—	—	7732 GDF
	MDM (After Build Date 5-1-71)	Y	—	—	—	—	—	1	—	—	7732 GDM
	MDTT (After Build Date 5-1-71)	Y	—	—	—	—	—	1	—	—	7732 GDT
	MDX (After Build Date 5-1-71)	Y	—	—	—	—	—	1	—	—	7732 GDX
	MDY (After Build Date 5-1-71)	Y	—	—	—	—	—	1	—	—	7732 GDY
	MRB	Y	—	1	—	—	—	—	—	—	7751 GRB
	MRE	Y	—	1	—	—	—	—	—	—	7751 GRE
	MRF	Y	—	1	—	—	—	—	—	—	7751 GRF
	MRT	Y	—	1	—	—	—	—	—	—	7751 GRT
	MRX	Y	—	1	—	—	—	—	—	—	7751 GRX
	MRXW	Y	—	1	—	—	—	—	—	—	7751 GRW
	MRY	Y	—	1	—	—	—	—	—	—	7751 GRY
	MBA	Y	—	1	—	—	—	—	—	—	7699 GBA
	MBB	Y	—	1	—	—	—	—	—	—	7699 GBB
	MBF	Y	—	1	—	—	—	—	—	—	7699 GBF
	MBM	Y	—	1	—	—	—	—	—	—	7699 GBM
	MBTT	Y	—	1	—	—	—	—	—	—	7699 GBT
	MBX	Y	—	1	—	—	—	—	—	—	7699 GBX
	MBY	Y	—	1	—	—	—	—	—	—	7699 GBY
	For Police Cars Only										
	Tan (Michigan & Rhode Island)	R	1	—	—	—	—	—	—		——
	Black (Michigan & Rhode Island)	R	1	—	—	—	—	—	—	—	3571 617
	Blue (Michigan & Rhode Island)	R	—	—	—	—	1	—	—	—	3571 622
	Tan (Michigan & Rhode Island)	R	—	—	—	—	1	—	—	—	3571 627
	Blue (Detroit & Rhode Island)	P	1	—	—	—	—	—	—	—	3571 633
	Black (Detroit & Rhode Island)	P	1	—	—	—	—	—	—	—	3571 645
	Tan (Detroit & Rhode Island)	P	1	—	—	—	—	—	—	—	3571 639
	Tan (Canada)	P	1	—	—	—	—	—	—	—	3571 714
	Blue (Texas)	P	—	—	—	—	1	—	—	—	3571 543
	Black (Texas)	P	—	—	—	—	1	—	—	—	3571 547
	Green (Texas)	P	—	—	—	—	1	—	—	—	3571 545
	Gold (Texas)	P	—	—	—	—	1	—	—	—	3571 551
	Blue (Michigan)	P	—	—	—	—	—	—	1	—	3571 763
	Black (Philadelphia & Detroit)	P	—	—	—	—	—	—	1	—	3571 679
23-109-38	RETAINER, Center & Rear & 2nd & 3rd Seat Cushion	All	2	2	2	2	2	2	2	4	3446 302
23-111-6	RETAINER & TACKING STRIP, Folding Top to Belt Bar Center	B	—	—	1	—	—	—	—	—	2964 438
		J	—	—	1	—	—	—	—	—	2964 439
	Folding/Top to Belt Bar Side	B	—	—	1	—	—	—	—	—	2964 434-5
		J	—	—	1	—	—	—	—	—	2964 436-7
23-112-4	RETAINER, Folding Top Rear Side Rail Top Material	B,J	—	—	1	—	—	—	—	—	2964 394-5
23-112-12	BOOT, Folding Top Dust										
	H6B	B	—	—	1	—	—	—	—	—	1954 GB5
	H6F	B	—	—	1	—	—	—	—	—	1954 GF7

TYPE LETTERS Indicates: J - Challenger, B - Barracuda, V - Valiant, L - Dart, R - Satellite, W - Coronet, P - Plymouth, D - Dodge, C - Chrysler, Y - Imperial

NUMERALS INDICATE: 21 - 2 DR. SED., 23 - 2 DR. H.T., 27 - CONV. CPE., 29 - FAST BACK, 41 - 4 DR. SED., 43 - 4 DR. H.T., 45 - 6 PASS. STA. WGN., 46 - 9 PASS. STA. WGN.

AR Indicates use as required.
# Indicates parts not listed in any previous parts book
Numerals in parentheses ( ) refer to notes.
★ Indicates change or addition.

Printed in U.S.A.
January 1972

Right and left part numbers are on same line, first number is right, second number is left.

CODE	PART NAME	MODEL CODES	SEE BOTTOM NOTE 21	23	27	29	41	43	45	46	PART NUMBER
23-112-12	BOOT, Folding Top Dust Cont'd.										
	H6T	B	—	—	1	—	—	—	—	—	1954 GT7
	H6X, H6XV	B	—	—	1	—	—	—	—	—	1954 FX9
	H6XW	B	—	—	1	—	—	—	—	—	1954 FW1
	H6B	J	—	—	1	—	—	—	—	—	1964 GB5
	H6F	J	—	—	1	—	—	—	—	—	1964 GF7
	H6T	J	—	—	1	—	—	—	—	—	1964 GT7
	H6X, HRX	J	—	—	1	—	—	—	—	—	1964 FX9
	H6Y	J	—	—	1	—	—	—	—	—	1964 GY3
	H6XW	J	—	—	1	—	—	—	—	—	1964 FW1
23-112-18	RETAINER, Rear Seat Back Dust Boot	B,J	—	—	1	—	—	—	—	—	2942 642
23-112-21	FASTENER, Folding Top Dust Boot	B,J	—	—	21	—	—	—	—	—	3415 721
23-112-45	CURTAIN, Folding Top Rear										
	White (Up to Build Date 5-1-71)	B,J	—	—	1	—	—	—	—	—	1992 FW1
	Black (Up to Build Date 5-1-71)	B,J	—	—	1	—	—	—	—	—	1992 FX9
	White (After Build Date 5-1-71)	B,J	—	—	1	—	—	—	—	—	1947 GW1
	Black (After Build Date 5-1-71)	B,J	—	—	1	—	—	—	—	—	1947 GX9
23-112-46	ZIPPER, Folding Top Rear Curtain	B,J	—	—	1	—	—	—	—	—	1923 CX8
23-112-75	TIP, Folding Top Wire on Binding End	B,J	—	—	1	—	—	—	—	—	1158 976-7
23-112-108	DECK and SIDE QUARTER, Folding Top										
	White	B,J	—	—	1	—	—	—	—	—	1935 FW1
	Black	B,J	—	—	1	—	—	—	—	—	1935 FX9
23-112-112	PAD, Folding Top Stay	B,J	—	—	1	—	—	—	—	—	2086-7 FX9
23-112-153	COVER, Folding Top Well	B,J	—	—	1	—	—	—	—	—	1940 FX9
	Panel, Folding Top Pocket										
	H6B	B	—	—	1	—	—	—	—	—	2004-5 GB4
	H6F	B	—	—	1	—	—	—	—	—	2004-5 GF8
	H6T	B	—	—	1	—	—	—	—	—	2004-5 GT6
	H6XW	B	—	—	1	—	—	—	—	—	2004-5 FW1
	H6X, H6XV	B	—	—	1	—	—	—	—	—	2004-5 FX9
	SRT	B	—	—	1	—	—	—	—	—	2046-7 GT6
	SRX	B	—	—	1	—	—	—	—	—	2046-7 FX9
	H6B	J	—	—	1	—	—	—	—	—	2008-9 GB4
	H6F	J	—	—	1	—	—	—	—	—	2008-9 GF8
	H6T	J	—	—	1	—	—	—	—	—	2008-9 GT6
	H6XW	J	—	—	1	—	—	—	—	—	2008-9 FW1
	H6X	J	—	—	1	—	—	—	—	—	2008-9 FX9
	H6Y	J	—	—	1	—	—	—	—	—	2008-9 GY4
	HRX	J	—	—	1	—	—	—	—	—	2042-3 FX9
23-113-2	WEATHER CORD, Door Order By Inches										
	L1B, L2B, L3B, L4B, E2B, H2B, H1B, M1B	V,L	—	AR	—	AR	AR	—	—	—	1548 GB7
	L1F, L2F, L3F, L4F, H1F, H2F, M1F	V,L	—	AR	—	AR	AR	—	—	—	1548 GF7
	L2T, L4T, E2T	V,L	—	AR	—	AR	AR	—	—	—	1548 GT6
	L1X, L1XX, L2X, L3X, L4X, L6X, M6XW, L6XV, E2X, M1X, M1XX, M6X, M6XV, L6XW, H1X, H2X, H2XW, H6X9, H6XW	V,L	—	AR	—	AR	AR	—	—	—	1548 EX9
	L4Y, H2Y	V,L	—	AR	—	AR	AR	—	—	—	1548 GY4
23-113-3	COVER, Pinchwield Front Door										
	L2B, H1B, H2B, D3B, P3B, P4B	R,W	—	—	—	—	1	—	1	1	1546-7 GB7
	H1F, H2F, D3F, P3F, P4F	R,W	—	—	—	—	1	—	1	1	1546-7 GF7
	K1T, K2T, T2T, L2T, H1T, H2T, D3T, P3T, P4T	R,W	—	—	—	—	1	—	1	1	1546-7 GT6
	K2X, T2X, D2X, H1X, H2X, P3X, L2X, P4X	R,W	—	—	—	—	1	—	1	1	1546-7 GX9
	H1Y, H2Y, P3Y	R,W	—	—	—	—	1	—	—	—	1546-7 GY4
	Rear Door										
	L2B, H1B, H2B, P3B	R,W	—	—	—	—	1	—	—	—	1522-3 GB7

TYPE LETTERS Indicates: J - Challenger, B - Barracuda, V - Valiant, L - Dart, R - Satellite, W - Coronet, P - Plymouth, D - Dodge, C - Chrysler, Y - Imperial

NUMERALS INDICATE: 21 - 2 DR. SED., 23 - 2 DR. H.T., 27 - CONV. CPE., 29 - FAST BACK, 41 - 4 DR. SED., 43 - 4 DR. H.T., 45 - 6 PASS. STA. WGN., 46 - 9 PASS. STA. WGN.

AR Indicates use as required.
= Indicates parts not listed in any previous parts book
Numerals in parentheses ( ) refer to notes.
★ Indicates change or addition.

Printed in U.S.A.
January 1972

Right and left part numbers are on same line, first number is right, second number is left.

TRIM ALPHABETICAL INDEX

PART NAME	CODE
A	
Arm and Bracket, visor	23-103-10
Arm Rest, seat center	23-76-18
Arm Rest, rear seat center	23-76-40
B	
Back, front seat	23-108-12
Back, rear seat	23-109-3
Base, door arm rest	23-76-9
Base, I/P pad n/plate	23-84-16
Binding, folding top wire	23-114-10
Boot, folding top dust	23-112-12
Bow, roof	23-86-10
Bracket, seat center cushion mtg.	23-108-71
Bracket, I/P pad ret.	23-84-11
Bracket, qtr. lwr. trim panel	23-101-40
Bracket, qtr. panel and assist strap mounting	23-77-7
Bracket, qtr. trim panel supt.	23-101-33
Bracket, rr. wdo. opening trim panel	23-86-40
Bracket, bucket front back shield	23-108-142
Bracket, spare tire cover latching	23-79-65
Bracket and Pivot, assist strap	23-77-9
Bumper, qtr. pnl. tire cover latching	23-79-78
Button, seat cushion and back	23-78-2
C	
Cap, seat back robe strap	23-82-5
Cap, rear window trim mldg.	23-86-36
Carpet, console side and rear	23-71-1
Carpet, front floor	23-79-3
Carpet, rear floor and well	23-79-33
Carpet, t/gate panel	23-79-79
Catch, seat head rest	23-108-29
Clip, headlining retainer	23-86-29
Cover, 2nd. seat back latch	23-109-23
Cover, pillar upper trim	23-99-6
Cover, pillar lower trim	23-99-4
Cover, coat hook	23-82-30
Cover, folding top well	23-112-153
Cover, front seat back	23-108-16
Cover, front seat cushion	23-108-5
Cover, seat back side hinge	23-108-84
Cover, center a/rest stanchion	23-108-66
Cover, trunk lower trim	23-96-10
Cover, door pinchwield	23-113-3
Cover, rear seat back	23-109-4
Cover, rear seat cushion	23-109-36
Cover, rr. seat back upper frame	23-109-7
Cover, rr. seat center arm rest	23-76-45
Cover, seat center arm rest back	23-76-34
Cover, seat center arm rest finish	23-76-35
Cover, roof outside	23-86-2
Cover, station wagon spare tire	23-79-64
Cover, T/G pillar upper	23-99-41
Cover, visor bracket	23-103-11
Cup, arm rest pull	23-76-62
Curtain, conv. top rear	23-112-45
Cushion, front seat	23-108-4
Cushion, rear seat	23-109-35
D	
Deck and Side Quarter, conv top	23-112-108
Dowel, sta. wag. tire cover latching	23-79-76
F	
Fastener, seat back finish panel	23-108-91
Fastener, conv. top dust boot	23-112-21
Fastener, shelf trim panel	23-102-4
Fastener, door trim panel	23-92-8
Filler, rear seat back trim panel	23-109-10
Flap, rear seat center a/rest	23-76-53
Flap, rear seat center a/rest opening	23-76-52
Flap, seat center arm rest	23-76-19
G	
Grille, wheelhouse cover	23-96-31
Grommet, spare tire cover latching	23-79-68
Guide, seat head rest, lower	23-108-27
H	
Handle, front and rear door pull	23-81-3
Handle, center arm rest pull down	23-76-30
Headlining and Listing	23-86-3
Hinge, arm rest comp. lid	23-76-17
I	
Insert, 2nd. and 3rd. seat	23-109-5
L	
Latch, door arm rest lid	23-76-2
Lid, console storage comp.	23-71-3
Lid, wheelhouse cover comp. frt.	23-96-26
Lock Bar, center arm rest	23-76-28
M	
Moulding, rear window headlining	23-86-35
N	
Nut, visor arm mtg.	23-103-18
P	
Pad, a/c roof unit	23-86-14
Pad, arm rest comp. lid	23-76-10
Pad, console front	23-71-5
Pad, conv. top stay	23-112-112
Pad, instrument panel trim	23-84-3
Pad, rear door a/rest lid	23-76-64
Pad and Plate, arm rest	23-76-11
Pad and Plate, quarter arm rest	23-76-76
Pad and Plate, rear door arm rest	23-76-63
Panel, cowl trim	23-91-6
Panel, back of front back	23-108-32
Panel, door trim	23-92-5
Panel, luggage comp.	23-96-15
Panel, luggage comp., front	23-96-3
Panel, luggage comp. lining	23-96-8
Panel, trunk jack stowage door	23-96-12
Panel, quarter trim	23-101-3
Panel, center arm rest back	23-76-22
Panel, shelf trim	23-102-3
Panel, visor trim	23-103-3
Pillow, upper quarter trim	23-86-4
Plate, head rest finish	23-108-34
Plate, headlining retainer	23-86-21
Plate, rear seat back finish	23-109-13

PART NAME	CODE
R	
Reinforcement, front seat head rest	23-108-25
Rest, seat head	23-108-19
Retainer, seat button	23-78-3
Retainer, trunk upper panel end	23-86-8
Retainer, conv. top side rail	23-112-4
Retainer, robe strap cap	23-82-6
Retainer, floor and well carpet	23-79-34
Retainer, dust boot	23-112-18
Retainer, roof headlining	23-86-19
Retainer, roof finish panel mldg.	23-86-24
Retainer, side rail roof bow	23-86-11
Retainer, seat cushion	23-109-38
Retainer, t/gate pillar trim	23-99-9
Retainer and tacking strip conv. top to belt bar	23-111-6
S	
Shield, front seat back	23-108-98
Sleeve, h/rest post	23-108-22
Spacer, assist strap	23-77-5
Spacer, head rest	23-108-31
S - Cont'd.	
Spacer, headlining moulding	23-86-33
Spring and Cover, frt. seat back	23-108-15
Strap, pillar assist	23-77-3
Strap, seat back robe	23-82-3
Support, coat hook inner	23-82-39
Support, front seat back side trim	23-108-30
Support, qtr. panel arm rest	23-76-79
Support, visor inner	23-103-48
T	
Tip, folding top wire	23-112-75
Tip, visor inner support	23-103-49
W	
Washer, cushion button stud	23-78-4
Washer, rr. seat button stud	23-108-100
Weathercord, door	23-113-2
Welt, conv. top header	23-113-84
Z	
Zipper, conv. top rear curtain	23-112-46

1971 PASSENGER CAR PARTS CATALOG

PART NUMBER	CODE
0814 *	23-109-5
1002 *	23-86-3
1014 *	23-86-3
1015 *	23-86-3
1028 *	23-86-3
1029 *	23-86-3
1044 *	23-86-3
1045 *	23-86-3
1049 *	23-86-3
1050 *	23-86-3
1051 *	23-86-3
1052 *	23-86-3
1064 *	23-86-35
1070 *	23-86-35
1075 *	23-86-3
1081 *	23-86-3
1082 *	23-86-3
1102 *	23-103-3
1103 *	23-103-3
1112 *	23-103-3
1120 *	23-103-3
1121 *	23-103-11
1123 *	23-103-3
1158 *	23-112-75
1195 *	23-103-3
1208 *	23-76-9
1209 *	23-76-9
1212 *	23-76-9
1213 *	23-76-9
1214 *	23-76-11
*	23-76-63
1232 *	23-76-10
*	23-76-64
1240 *	23-76-76
1249 *	23-76-11
1250 *	23-76-9
1251 *	23-76-9
1301 *	23-102-3
1302 *	23-102-3
1306 *	23-102-3
1320 *	23-102-3
1332 *	23-102-3
1334 *	23-102-3
1337 *	23-102-3
1357 *	23-102-3
1359 *	23-102-3
1360 *	23-102-3
1373 *	23-102-3
1375 *	23-102-3
1377 *	23-102-3
1378 *	23-102-3
1380 *	23-102-3
1532 *	23-113-3
1548 *	23-113-2
1558 *	23-99-6
1623 *	23-92-8
1654 *	23-79-3
1665 *	23-79-3
1666 *	23-79-3
1667 *	23-79-3
1668 *	23-79-3
1669 *	23-79-33
1670 *	23-79-33
1678 *	23-79-3
1679 *	23-79-3
1681 *	23-79-33
1682 *	23-79-33
1697 *	23-81-3
1700 *	23-79-33
1701 *	23-79-33
1702 *	23-79-33
1703 *	23-79-33
1704 *	23-79-33
1705 *	23-79-33
1706 *	23-79-33
1710 *	23-79-33
1713 *	23-79-33
1716 *	23-79-33
1717 *	23-79-33
1725 *	23-79-33
1730 *	23-79-3
1734 *	23-79-3
1735 *	23-79-3
1736 *	23-79-3
1738 *	23-79-33
1740 *	23-79-33
1741 *	23-79-33
1744 *	23-79-33
1747 *	23-79-3
1748 *	23-79-3
1749 *	23-79-3
1754 *	23-79-3
1772 *	23-79-33
1782 *	23-79-3
1783 *	23-79-33
1785 *	23-79-33
1786 *	23-79-33
1791 *	23-79-33
1793 *	23-79-33
1801 *	23-79-33
1802 *	23-79-33
1803 *	23-109-5
1804 *	23-109-5
1805 *	23-109-5
1806 *	23-109-5
1810 *	23-79-33
1814 *	23-109-5
1815 *	23-109-5
1816 *	23-109-5
1817 *	23-109-5
1821 *	23-109-5
1822 *	23-109-5
1825 *	23-109-5
1839 *	23-109-5
1840 *	23-79-33
1842 *	23-109-5
1843 *	23-109-5
1844 *	23-109-5
1848 *	23-109-5
1849 *	23-109-5
1850 *	23-109-5
1851 *	23-109-5
1852 *	23-79-33
1853 *	23-109-5
1854 *	23-79-79
1856 *	23-109-5
1857 *	23-79-33
1858 *	23-109-5
1859 *	23-109-5
1860 *	23-79-33
1861 *	23-109-5
1862 *	23-109-5
1904 *	23-113-84
1909 *	23-114-10
1918 *	23-115-5
1923 *	23-112-46
1935 *	23-112-108
1940 *	23-112-153
1947 *	23-112-45
1954 *	23-112-12
1964 *	23-112-12
1992 *	23-112-45
1997 *	23-113-84
2031 *	23-109-23
2058 *	23-96-8
2059 *	23-96-26
2066 *	23-96-31
2067 *	23-96-31
2068 *	23-96-31
2092 *	23-115-10
2129 *	23-103-18
2197 *	23-108-91
2270 *	23-76-28
2572 *	23-113-84
2577 *	23-78-3
2581 *	23-86-19
2589 *	23-96-8
2604 *	23-86-10
2605 *	23-86-11
2608 *	23-76-28
*	23-76-30
2609 *	23-76-25
*	23-76-35
*	23-108-71
2656 *	23-79-68
2701 *	23-108-98
2702 *	23-108-98
2711 *	23-82-3
2717 *	23-108-22
2718 *	23-108-31
2740 *	23-109-13
2749 *	23-108-98
2750 *	23-108-98
2754 *	23-108-98
2758 *	23-108-66
2760 *	23-76-35
2761 *	23-76-35
2762 *	23-76-35
2763 *	23-76-35
2765 *	23-115-6
2767 *	23-76-28
*	23-108-98
2769 *	23-108-98
2776 *	23-76-35
2782 *	23-86-19
2787 *	23-96-3
2788 *	23-71-8
*	23-108-19
2789 *	23-77-5
*	23-103-48
*	23-103-49
*	23-108-19
2791 *	23-108-19
2820 *	23-99-6
2840 *	23-99-6
2841 *	23-99-6
2858 *	23-108 29
*	23-108-98
2876 *	23-82-39
*	23-86-36
*	23-102-11
2877 *	23-86-24
*	23-86-33
*	23-86-36
*	23-86-40
*	23-96-10
2878 *	23-76-79
*	23-77-7
*	23-79-34
*	23-79-65
*	23-96-3
*	23-96-12
*	23-103-10
2879 *	23-76-17
*	23-77-9
*	23-86-19
*	23-86-36
*	23-96-3
*	23-96-8
*	23-96-15
2887 *	23-78-3
2888 *	23-108-25
*	23-108-27
*	23-108-30
*	23-108-31
*	23-108-71
*	23-108-98
2893 *	23-86-10
2894 *	23-86-19
*	23-99-9
2900 *	23-86-10
*	23-86-19
2901 *	23-76-79
*	23-86-10
*	23-86-19
2902 *	23-86-19
2905 *	23-79-33
2906 *	23-79-64
2907 *	23-79-64
2936 *	23-86-14
2942 *	23-76-28
*	23-108-34
*	23-108-98
*	23-112-18
2963 *	23-86-8
*	23-86-10
2964 *	23-111-6
*	23-112-4
2965 *	23-86-10
2981 *	23-78-3
*	23-78-4
*	23-108-100
2985 *	23-84-11
*	23-84-15
*	23-84-16
2999 *	23-103-10
3415 *	23-86-19
*	23-86-21
*	23-86-29
*	23-86-36
*	23-92-8
*	23-96-8
*	23-101-33
*	23-112-21
3416 *	23-86-24
*	23-96-3
*	23-101-3
*	23-101-40
3440 *	23-86-10
3445 *	23-86-8
*	23-86-10
*	23-86-11
*	23-86-19
3446 *	23-109-38
3447 *	23-82-6
*	23-108-34
3454 *	23-103-10
3499 *	23-86-19
3500 *	23-86-19
3506 *	23-108-71
3509 *	23-79-34
*	23-82-6
*	23-86-19
*	23-86-33
*	23-92-8
*	23-96-8
*	23-101-33
3516 *	23-71-3
3520 *	23-76-35
*	23-78-3
*	23-108-29
*	23-108-71
*	23-108-142
3527 *	23-86-3
3544 *	23-79-64
3548 *	23-103-10
3550 *	23-71-1
3558 *	23-71-3
3563 *	23-71-1
3571 *	23-76-35
*	23-108-5
*	23-108-16
*	23-108-141
*	23-109-4
*	23-109-36
3583 *	23-96-8
3586 *	23-103-10
3594 *	23-82-5
3615 *	23-101-33
3700 *	23-86-35
3701 *	23-103-48
3705 *	23-86-35
3711 *	23-86-36
4107 *	23-77-3
4112 *	23-99-4
4113 *	23-99-4
4121 *	23-82-30
4152 *	23-79-64
4172 *	23-78-2
4183 *	23-79-64
4193 *	23-78-2
4200 *	23-84-3
4201 *	23-84-3
4203 *	23-84-3
4206 *	23-84-3
4210 *	23-84-3
4211 *	23-84-3
4218 *	23-84-3
4220 *	23-84-3
4239 *	23-84-3
4262 *	23-84-3
4279 *	23-84-3
4280 *	23-84-3
4312 *	23-77-3
4320 *	23-79-33
4323 *	23-79-64
4328 *	23-76-2
4343 *	23-102-4
4388 *	23-108-66
4404 *	23-71-3
4407 *	23-71-5
4418 *	23-78-2
4446 *	23-86-3
4447 *	23-86-3
4476 *	23-78-2
4480 *	23-78-2
4507 *	23-78-2
4515 *	23-78-2
4517 *	23-78-2
4522 *	23-78-2
4705 *	23-81-3
4743 *	23-81-3
4807 *	23-109-7
4808 *	23-78-2
4816 *	23-78-2
4817 *	23-78-2
4818 *	23-78-2
4819 *	23-78-2
4821 *	23-78-2
4834 *	23-78-2
4835 *	23-78-2
4836 *	23-78-2
4838 *	23-78-2
4839 *	23-78-2
4840 *	23-78-2
4841 *	23-78-2
4842 *	23-78-2
4843 *	23-78-2
4844 *	23-78-2
4845 *	23-78-2

* Includes all color codes.

Printed in U.S.A.
January 1972

PART NUMBER	CODE
4855 *	23-78-2
4856 *	23-78-2
4864 *	23-78-2
4865 *	23-78-2
4866 *	23-78-2
4867 *	23-78-2
4919 *	23-79-64
4920 *	23-79-64
4987 *	23-71-1
5197 *	23-76-18
5278 *	23-76-34
5279 *	23-76-34
5574 *	23-76-18
5610 *	23-76-18
5644 *	23-76-18
5710 *	23-108-32
5725 *	23-76-18
5739 *	23-76-18
5823 *	23-108-32
5834 *	23-108-32
5898 *	23-108-32
5936 *	23-76-18
6000 *	23-96-15
*	23-102-4
*	23-115-6
6026 *	23-115-10
6028 *	23-92-8
6030 *	23-108-5
6031 *	23-76-34
6040 *	23-108-32
6041 *	23-108-32
6108 *	23-86-2
6109 *	23-86-2
6110 *	23-86-2
6111 *	23-86-2
6112 *	23-86-2
6164 *	23-108-32
6601 *	23-76-18
6603 *	23-76-18
6604 *	23-76-18
6605 *	23-76-18
6606 *	23-76-18
6607 *	23-76-18
6609 *	23-76-18
6613 *	23-76-18
6615 *	23-76-18
6618 *	23-76-18
6619 *	23-76-18
6621 *	23-76-18
6622 *	23-76-18
6625 *	23-76-18
6626 *	23-76-18
6634 *	23-76-18
6639 *	23-76-52
6640 *	23-76-53
6645 *	23-76-22
6657 *	23-76-18
6658 *	23-76-18
6841 *	23-109-36
6842 *	23-109-36
6926 *	23-76-40
6937 *	23-76-40
7044 *	23-76-40
7055 *	23-76-40
7056 *	23-76-40
7060 *	23-76-40
7061 *	23-109-4
7062 *	23-109-4
7066 *	23-76-40
7082 *	23-76-40
7100 *	23-86-3
7101 *	23-86-3
7102 *	23-86-3
7103 *	23-86-3
7108 *	23-86-3
7109 *	23-86-3
7111 *	23-86-3
7113 *	23-86-3
7115 *	23-86-3
7121 *	23-86-3
7122 *	23-86-3
7123 *	23-86-3
7124 *	23-86-3
7125 *	23-86-3
7128 *	23-86-3
7129 *	23-86-3
7137 *	23-86-3
7138 *	23-86-3
7146 *	23-86-3
7152 *	23-86-3
7154 *	23-86-3
7155 *	23-86-3
7167 *	23-86-3
7168 *	23-86-3
7172 *	23-86-3
7173 *	23-86-3
7176 *	23-86-3
7177 *	23-86-3
7178 *	23-86-2
7179 *	23-86-3
7184 *	23-86-2
7186 *	23-86-2
7187 *	23-86-2
7190 *	23-86-2
7191 *	23-86-2
7192 *	23-86-2
7194 *	23-86-2
7196 *	23-86-2
7197 *	23-86-2
7200 *	23-108-5
7201 *	23-108-5
7202 *	23-108-5
7203 *	23-108-5
7204 *	23-108-5
7206 *	23-108-5
7208 *	23-108-5
7214 *	23-108-5
7215 *	23-108-5
7216 *	23-108-5
7224 *	23-108-5
7225 *	23-108-5
7226 *	23-108-5
7227 *	23-108-5
7230 *	23-108-5
7231 *	23-108-5
7232 *	23-108-5
7233 *	23-108-5
7234 *	23-108-5
7235 *	23-108-5
7236 *	23-108-5
7237 *	23-108-5
7239 *	23-108-5
7240 *	23-108-5
7241 *	23-108-5
7244 *	23-108-5
7246 *	23-108-5
7247 *	23-108-5
7249 *	23-108-5
7251 *	23-108-5
7252 *	23-108-5
7253 *	23-108-5
7255 *	23-108-5
7258 *	23-108-5
7259 *	23-108-5
7260 *	23-108-5
7261 *	23-108-5
7262 *	23-108-5
7266 *	23-108-5
7267 *	23-108-5
7268 *	23-108-5
7270 *	23-108-5
7272 *	23-108-5
7274 *	23-108-5
7275 *	23-108-5
7276 *	23-108-5
7278 *	23-108-5
7279 *	23-108-5
7285 *	23-108-5
7286 *	23-108-5
7287 *	23-108-5
7288 *	23-108-5
7290 *	23-108-5
7291 *	23-108-5
7292 *	23-108-5
7293 *	23-108-5
7294 *	23-108-5
7296 *	23-108-5
7297 *	23-108-5
7298 *	23-108-5
7301 *	23-108-5
7302 *	23-108-5
7304 *	23-108-5
7305 *	23-108-5
7306 *	23-108-5
7308 *	23-108-5
7309 *	23-108-5
7311 *	23-108-5
7316 *	23-108-5
7318 *	23-108-5
7321 *	23-108-5
7322 *	23-108-5
7328 *	23-108-5
7329 *	23-108-5
7330 *	23-108-5
7332 *	23-108-5
7334 *	23-86-2
7335 *	23-108-5
7336 *	23-108-5
7337 *	23-108-5
7339 *	23-108-5
7341 *	23-108-5
7346 *	23-109-36
7347 *	23-109-4
7350 *	23-108-16
7352 *	23-108-5
7353 *	23-108-5
7354 *	23-108-16
7355 *	23-108-5
7356 *	23-108-16
7357 *	23-109-36
7358 *	23-109-36
7363 *	23-76-40
7402 *	23-108-16
7403 *	23-108-16
7413 *	23-108-16
7419 *	23-108-16
7432 *	23-108-16
7433 *	23-108-16
7436 *	23-108-16
7437 *	23-108-16
7444 *	23-108-16
7445 *	23-108-16
7448 *	23-108-16
7449 *	23-108-16
7450 *	23-108-16
7451 *	23-108-16
7452 *	23-108-16
7456 *	23-108-16
7457 *	23-108-16
7462 *	23-108-16
7465 *	23-108-16
7467 *	23-108-16
7468 *	23-108-16
7469 *	23-108-16
7474 *	23-76-19
7482 *	23-108-16
7483 *	23-76-34
7484 *	23-76-34
7492 *	23-108-16
7500 *	23-108-16
7501 *	23-108-16
7502 *	23-76-34
7503 *	23-108-16
7508 *	23-108-16
7520 *	23-108-16
7522 *	23-108-16
7526 *	23-108-16
7528 *	23-108-16
7530 *	23-108-16
7531 *	23-108-16
7534 *	23-108-16
7538 *	23-108-16
7539 *	23-108-16
7541 *	23-108-16
7543 *	23-76-34
7554 *	23-108-16
7558 *	23-108-16
7559 *	23-108-16
7566 *	23-108-16
7571 *	23-76-19
7572 *	23-76-34
7576 *	23-108-16
7584 *	23-108-16
7590 *	23-108-16
7594 *	23-108-16
7598 *	23-108-16
7599 *	23-108-16
7600 *	23-109-36
7601 *	23-109-36
7602 *	23-109-36
7603 *	23-109-36
7604 *	23-109-36
7605 *	23-109-36
7606 *	23-109-36
7609 *	23-109-36
7610 *	23-109-36
7611 *	23-109-36
7612 *	23-109-36
7615 *	23-109-36
7617 *	23-109-36
7618 *	23-109-36
7619 *	23-109-36
7620 *	23-109-4
7621 *	23-109-36
7622 *	23-109-36
7623 *	23-109-36
7624 *	23-109-36
7625 *	23-109-36
7626 *	23-109-36
7627 *	23-109-36
7630 *	23-109-36
7631 *	23-109-36
7632 *	23-109-36
7633 *	23-109-36
7634 *	23-109-36
7637 *	23-109-36
7639 *	23-109-36
7641 *	23-109-36
7642 *	23-109-36
7645 *	23-109-36
7646 *	23-109-36
7647 *	23-109-36
7648 *	23-109-36
7649 *	23-109-36
7651 *	23-109-36
7654 *	23-109-36
7655 *	23-109-36
7660 *	23-109-36
7661 *	23-109-36
7662 *	23-109-36
7668 *	23-79-33
7669 *	23-79-33
7670 *	23-109-36
7671 *	23-109-36
7672 *	23-109-36
7673 *	23-109-36
7675 *	23-109-36
7676 *	23-109-36
7677 *	23-109-36
7678 *	23-109-36
7680 *	23-109-36
7681 *	23-109-36
7682 *	23-109-36
7683 *	23-109-36
7685 *	23-109-36
7688 *	23-109-36
7691 *	23-109-36
7692 *	23-109-36
7693 *	23-109-36
7694 *	23-109-36
7695 *	23-109-36
7696 *	23-109-36
7699 *	23-109-36
7702 *	23-109-36
7703 *	23-109-36
7706 *	23-109-36
7707 *	23-109-36
7708 *	23-109-36
7709 *	23-109-36
7710 *	23-109-36
7713 *	23-109-36
7714 *	23-109-36
7715 *	23-109-4
7718 *	23-109-36
7721 *	23-109-36
7722 *	23-109-36
7723 *	23-109-36
7727 *	23-109-36
7728 *	23-109-36
7730 *	23-109-36
7731 *	23-109-36
7732 *	23-109-36
7733 *	23-109-36
7734 *	23-109-36
7736 *	23-109-36
7738 *	23-109-36
7739 *	23-109-36
7740 *	23-109-36
7743 *	23-109-36
7744 *	23-109-36
7745 *	23-109-36
7746 *	23-109-36
7747 *	23-109-36
7748 *	23-109-36
7749 *	23-109-36
7750 *	23-109-36
7751 *	23-109-36
7752 *	23-109-36
7753 *	23-109-36
7754 *	23-109-36
7757 *	23-109-36
7759 *	23-109-36
7761 *	23-109-36
7763 *	23-109-36
7764 *	23-109-36
7765 *	23-109-36
7769 *	23-109-36
7770 *	23-109-36
7772 *	23-109-36
7773 *	23-109-36

PART NUMBER	CODE	PART NUMBER	CODE	PART NUMBER	CODE	PART NUMBER	CODE	PART NUMBER	CODE
7774 *	23-109-36	8211 *	23-109-4	8320 *	23-109-4				
7776 *	23-109-36	8212 *	23-109-4	8321 *	23-109-4				
7777 *	23-109-36	8213 *	23-109-4	8324 *	23-109-4				
7778 *	23-109-36	8214 *	23-109-4	8325 *	23-109-4				
7779 *	23-109-36	8215 *	23-109-4	8326 *	23-109-4				
7781 *	23-109-36	8218 *	23-109-4	8327 *	23-109-4				
7783 *	23-109-36	8219 *	23-109-4	8335 *	23-109-4				
7785 *	23-109-36	8221 *	23-109-4	8336 *	23-109-4				
7786 *	23-109-36	8222 *	23-76-45	8337 *	23-109-4				
7788 *	23-109-36	8223 *	23-109-4	8338 *	23-109-4				
7790 *	23-109-36	8224 *	23-109-4	8339 *	23-109-4				
7795 *	23-109-36	8225 *	23-109-4	8340 *	23-109-4				
7798 *	23-109-3o	8226 *	23-109-4	8345 *	23-109-4				
7799 *	23-109-36	8227 *	23-109-4	8347 *	23-109-4				
7918 *	23-108-98	8229 *	23-109-4	8348 *	23-109-4				
7920 *	23-108-98	8230 *	23-109-4	8349 *	23-109-4				
7921 *	23-108-98	8231 *	23-109-4	8350 *	23-109-4				
7922 *	23-108-98	8232 *	23-109-4	8353 *	23-109-4				
7923 *	23-108-98	8233 *	23-109-4	8355 *	23-109-4				
7928 *	23-108-98	8236 *	23-109-4	8356 *	23-109-4				
7975 *	23-108-98	8237 *	23-109-4	8357 *	23-109-4				
8001 *	23-76-34	8238 *	23-109-4	8358 *	23-109-4				
8004 *	23-76-34	8239 *	23-109-4	8359 *	23-76-53				
8005 *	23-76-34	8241 *	23-109-4	8362 *	23-76-45				
8006 *	23-76-34	8242 *	23-109-4	8363 *	23-109-4				
8008 *	23-76-34	8243 *	23-109-4	8364 *	23-109-4				
8010 *	23-76-34	8245 *	23-109-4	8365 *	23-76-45				
8011 *	23-76-34	8246 *	23-109-4	8366 *	23-76-45				
8012 *	23-108-5	8247 *	23-109-4	8371 *	23-109-4				
8013 *	23-76-34	8248 *	23-109-4	8374 *	23-109-4				
8014 *	23-109-36	8250 *	23-109-4	8376 *	23-109-4				
8018 *	23-76-34	8253 *	23-109-4	8377 *	23-109-4				
8019 *	23-76-19	8254 *	23-109-4	8379 *	23-109-4				
8020 *	23-76-34	8255 *	23-109-4	8381 *	23-109-4				
8021 *	23-76-19	8256 *	23-109-4	8384 *	23-109-4				
8022 *	23-76-34	8259 *	23-109-4	8386 *	23-109-4				
8023 *	23-76-34	8260 *	23-109-4	8392 *	23-109-4				
8024 *	23-108-5	8261 *	23-109-4	8393 *	23-109-4				
8025 *	23-76-34	8262 *	23-109-4	8394 *	23-109-4				
8026 *	23-76-19	8264 *	23-109-4	8395 *	23-109-4				
8027 *	23-76-34	8265 *	23-109-4	8396 *	23-109-4				
8032 *	23-76-19	8266 *	23-109-4	8397 *	23-109-4				
8033 *	23-108-5	8267 *	23-109-4	8754 *	23-86-2				
8034 *	23-76-34	8268 *	23-109-4	8796 *	23-86-2				
8035 *	23-108-5	8270 *	23-109-4	8849 *	23-109-4				
8036 *	23-76-34	8271 *	23-109-4	9545 *	23-86-2				
8038 *	23-76-34	8272 *	23-76-53	9546 *	23-86-41				
8039 *	23-109-36	8273 *	23-76-45	9547 *	23-86-3				
8053 *	23-109-4	8274 *	23-109-4	9548 *	23-86-3				
8056 *	23-109-4	8276 *	23-109-4						
8057 *	23-109-36	8278 *	23-109-4						
8058 *	23-109-4	8279 *	23-109-4						
8059 *	23-109-36	8280 *	23-109-4						
8060 *	23-109-4	8281 *	23-109-4						
8061 *	23-76-45	8283 *	23-109-4						
8062 *	23-76-53	8284 *	23-109-4						
8063 *	23-76-52	8285 *	23-109-4						
8064 *	23-109-36	8288 *	23-109-4						
8065 *	23-109-4	8291 *	23-109-4						
8066 *	23-109-36	8292 *	23-109-4						
8067 *	23-109-4	8293 *	23-109-4						
8070 *	23-109-36	8294 *	23-109-4						
8071 *	23-109-4	8299 *	23-76-45						
8075 *	23-109-4	8302 *	23-76-45						
8122 *	23-108-16	8305 *	23-109-4						
8200 *	23-109-4	8306 *	23-109-4						
8201 *	23-109-4	8309 *	23-109-4						
8202 *	23-109-4	8311 *	23-109-4						
8204 *	23-109-4	8312 *	23-109-4						
8205 *	23-109-4	8313 *	23-109-4						
8206 *	23-109-4	8314 *	23-109-4						
8207 *	23-109-4	8315 *	23-109-4						
8209 *	23-109-4	8316 *	23-109-36						
8210 *	23-109-4	8318 *	23-109-4						

* Includes all color codes.

Printed in U.S.A.
January 1972

GROUP 24 - AIR CONDITIONING

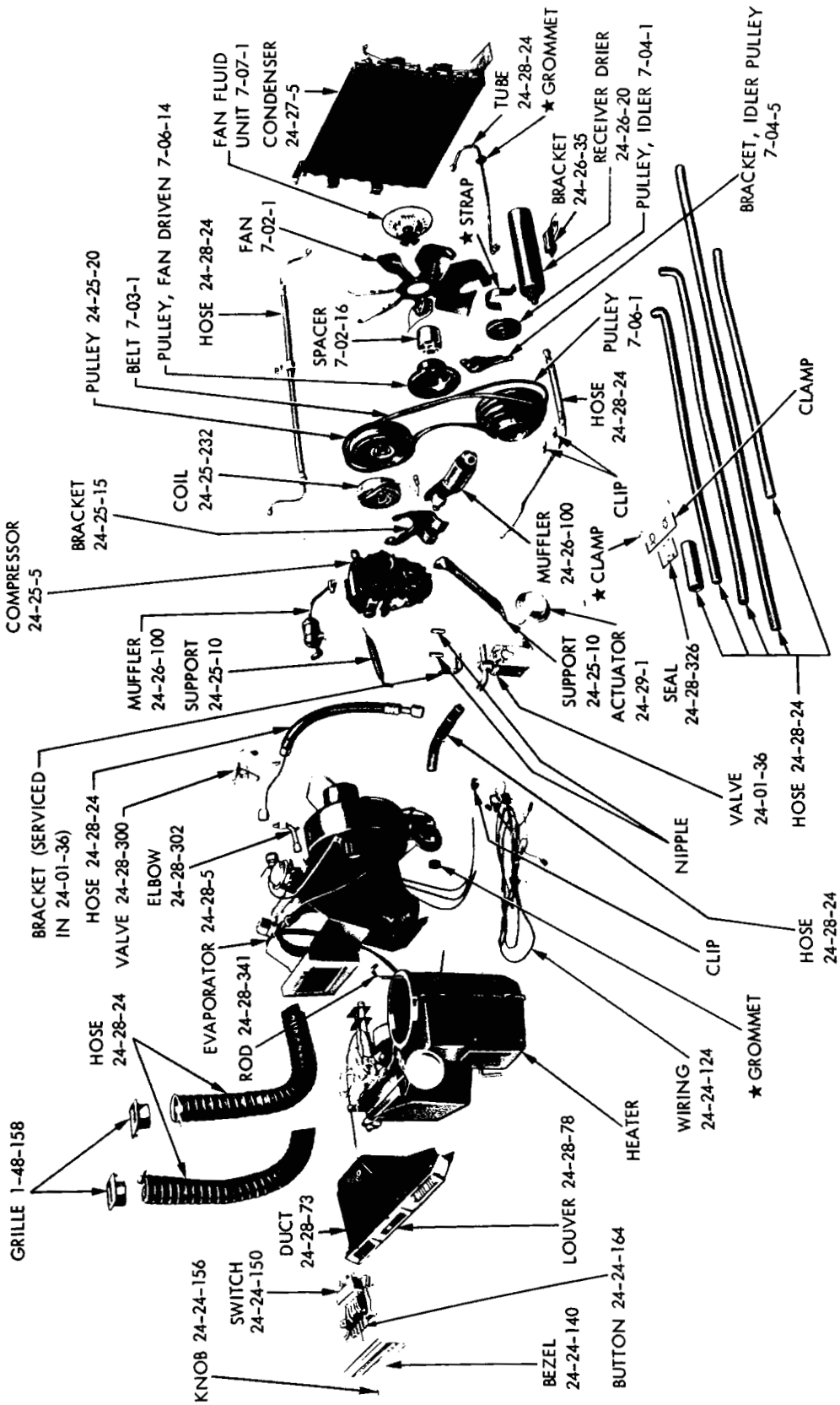

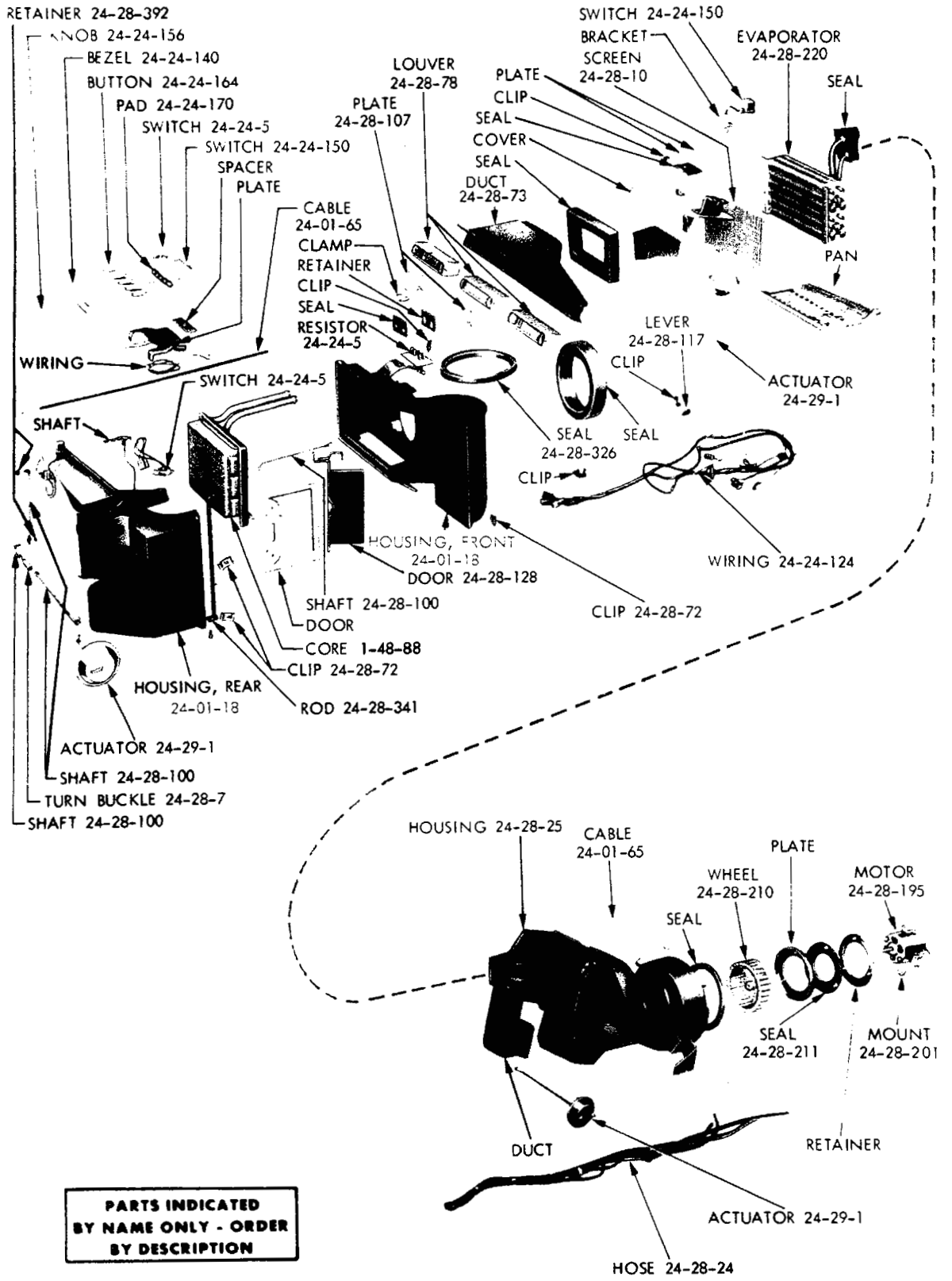

AIR CONDITIONING EVAPORATOR AND HEATER - VALIANT AND DART

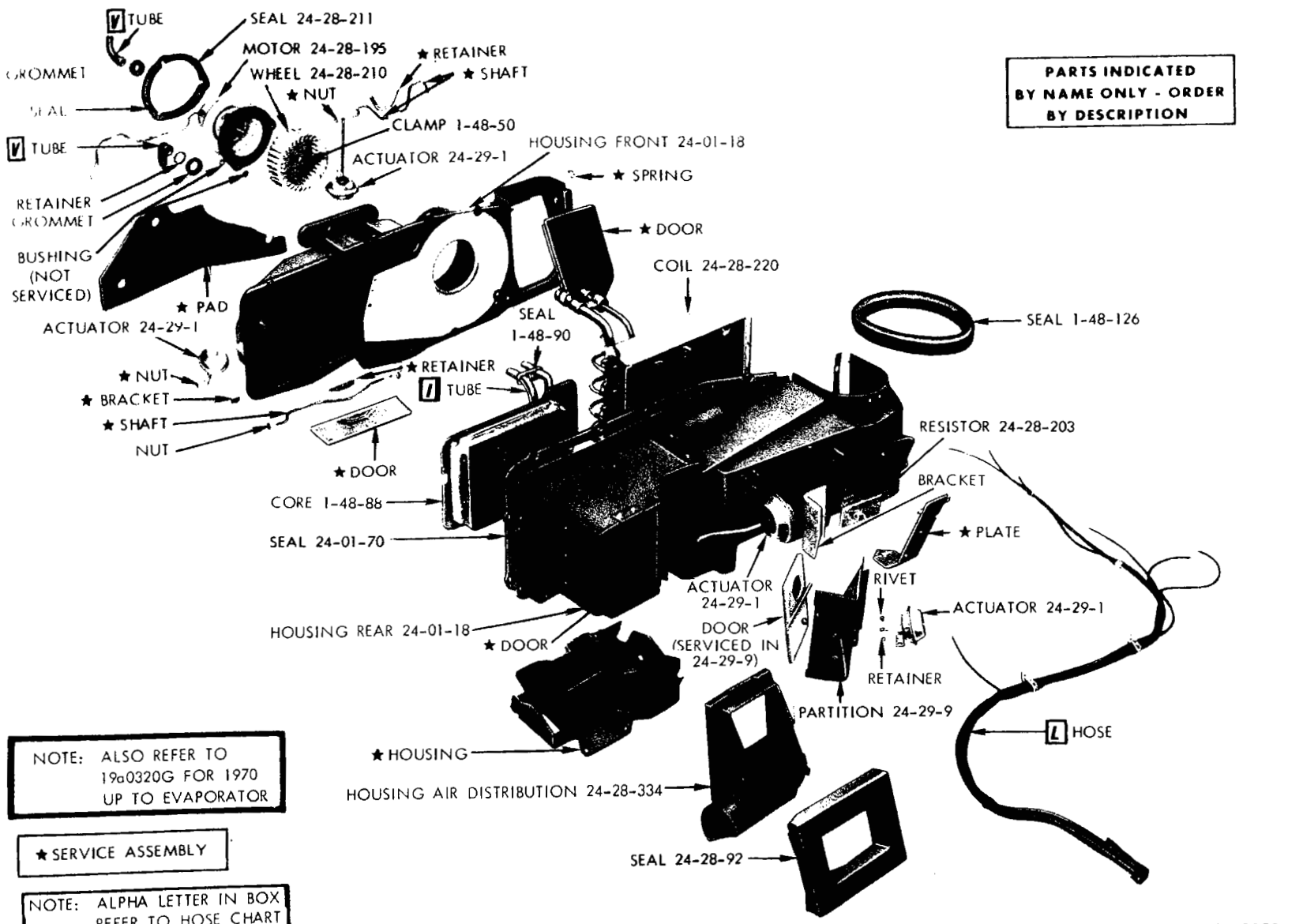

AIR CONDITIONING EVAPORATOR - BARRACUDA AND CHALLENGER (1970-71), SATELLITE AND CORONET (1971)

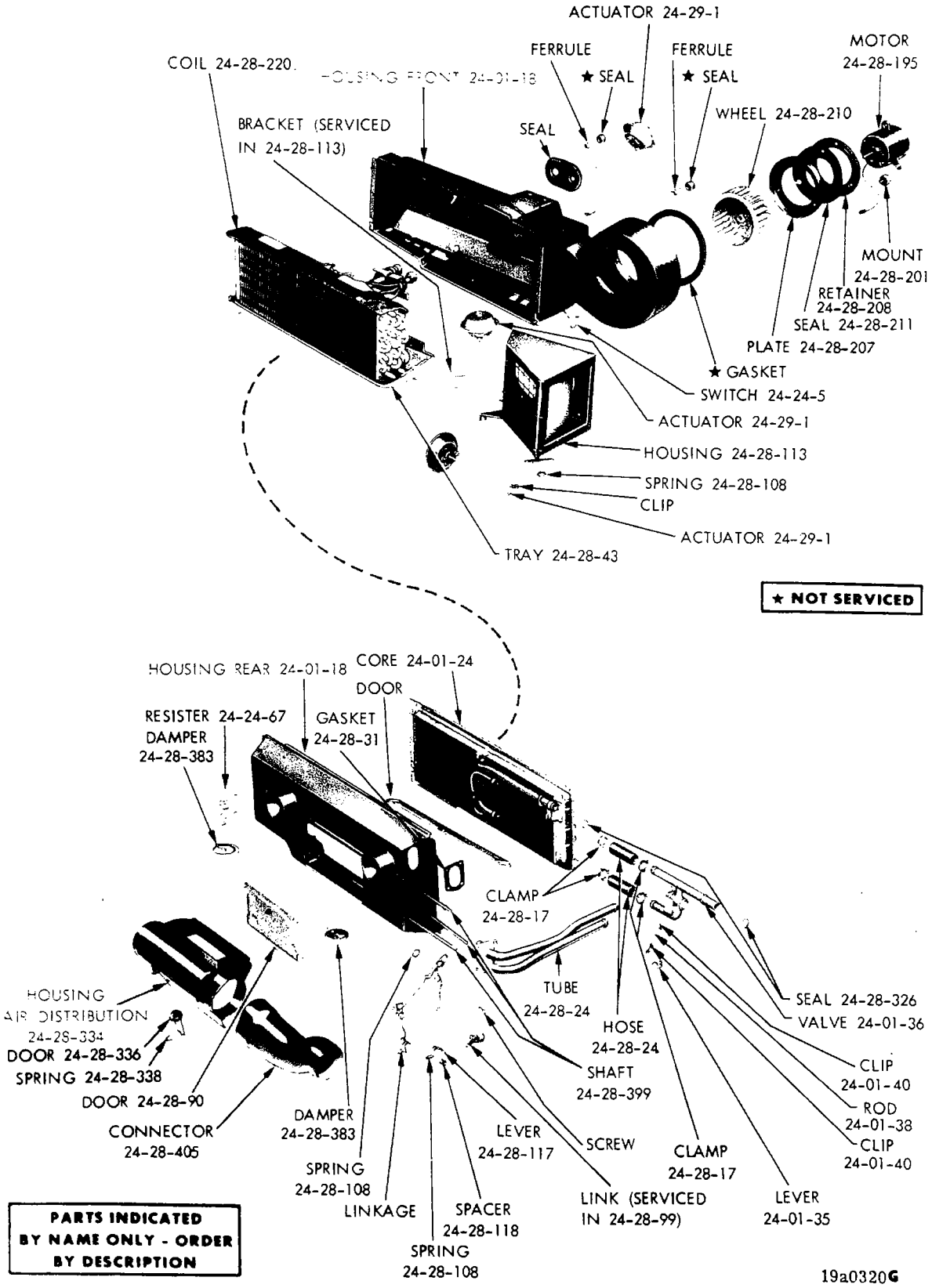

AIR CONDITIONING EVAPORATOR - BELVEDERE, CORONET AND CHARGER (1970)

NOTES

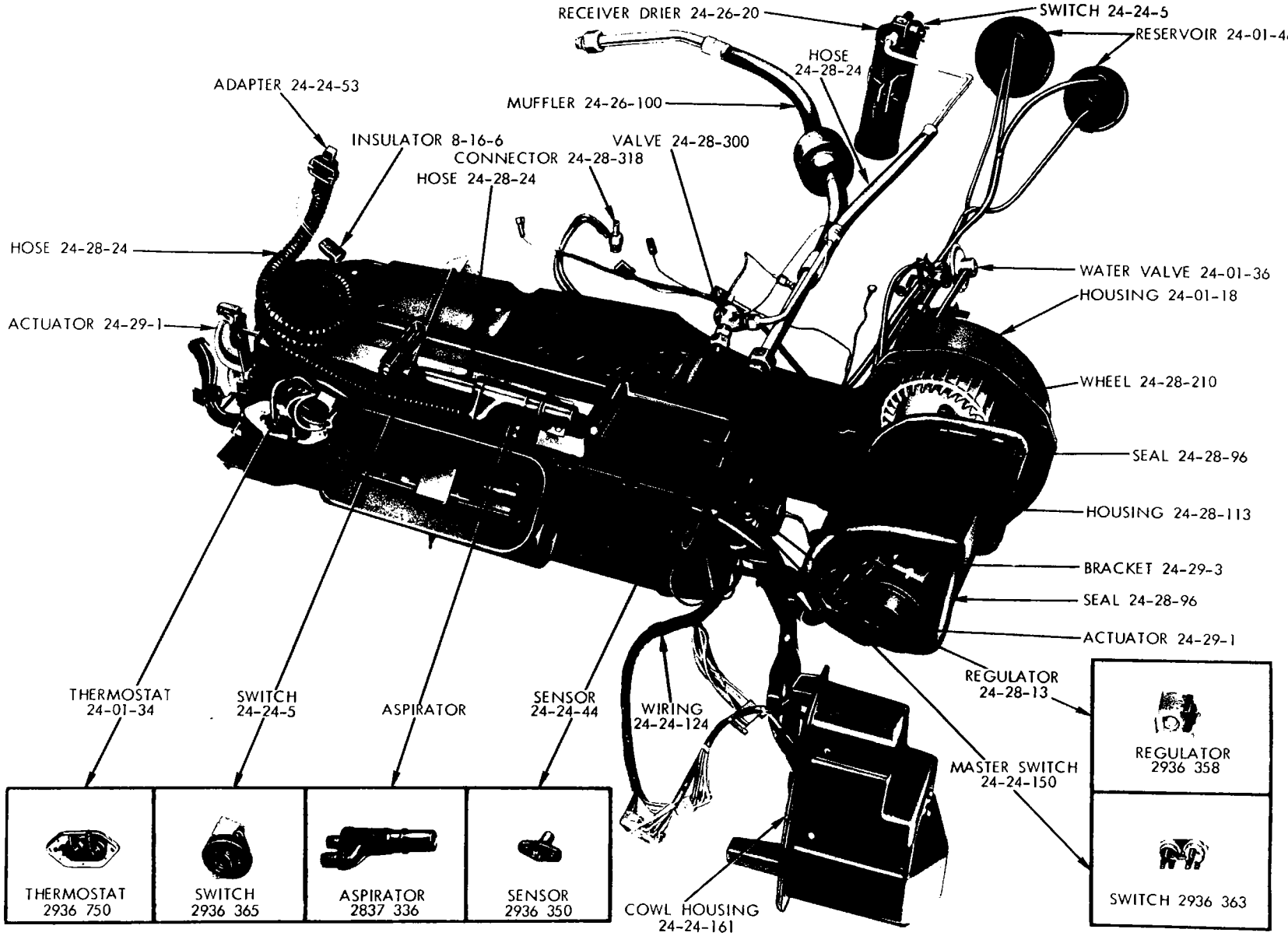

19a2708 A

AIR CONDITIONING SYSTEM - PLYMOUTH, DODGE, CHRYSLER AND IMPERIAL WITH AUTOMATIC TEMPERATURE CONTROL

Printed in U.S.A.

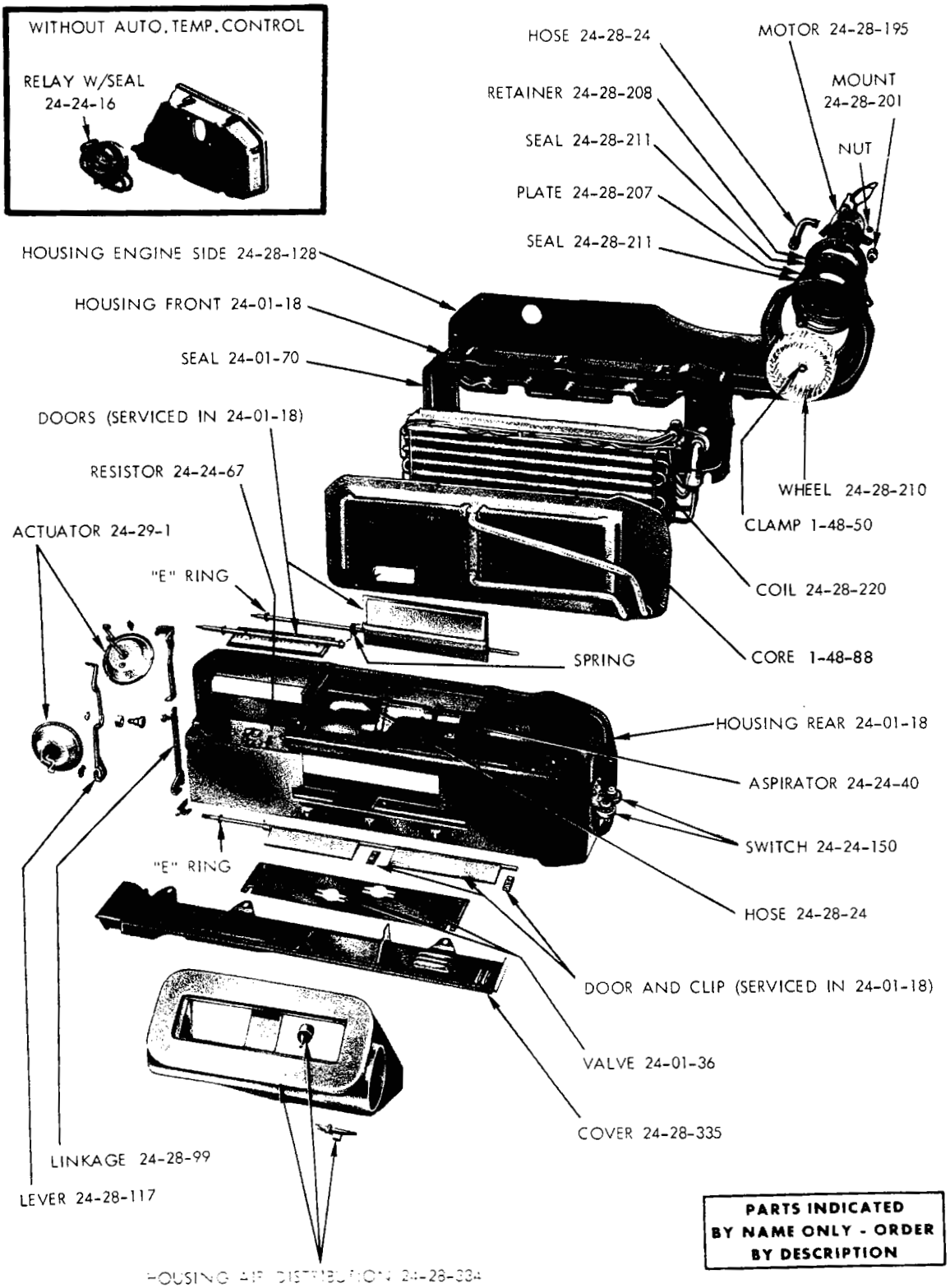

19a2730 E

AIR CONDITIONING EVAPORATOR (WITH ATC) - PLYMOUTH, DODGE, CHRYSLER AND IMPERIAL

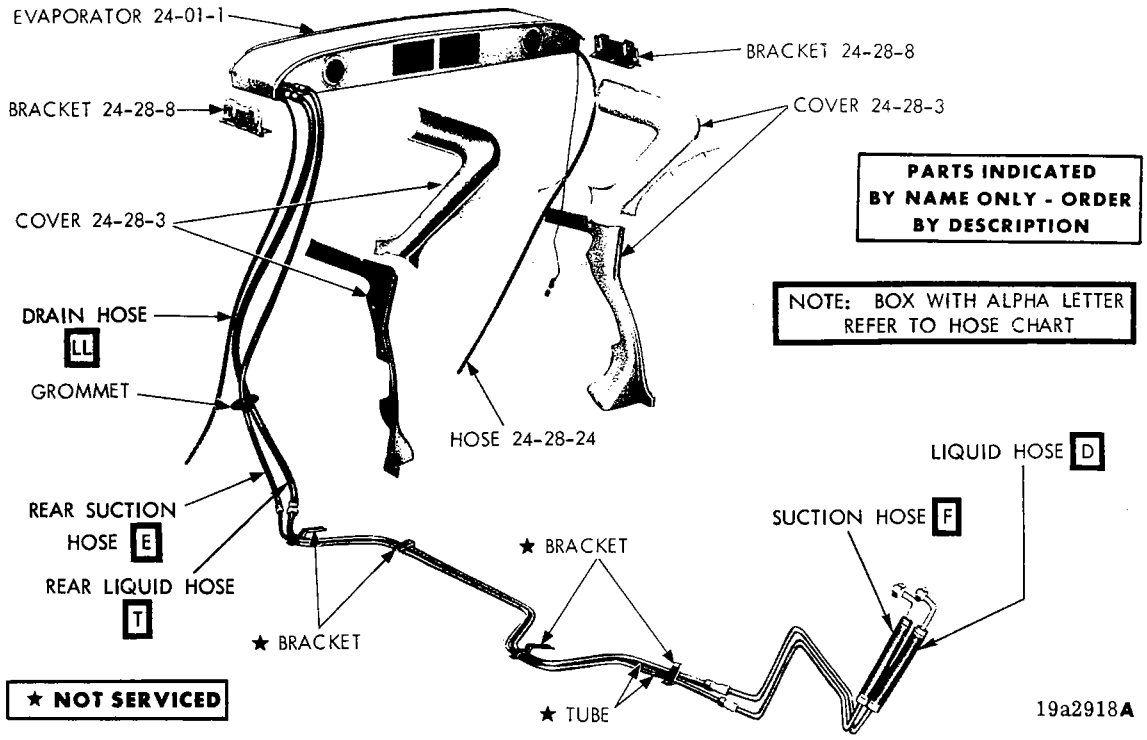

AIR CONDITIONING SYSTEM (ROOF UNIT) - STATION WAGON

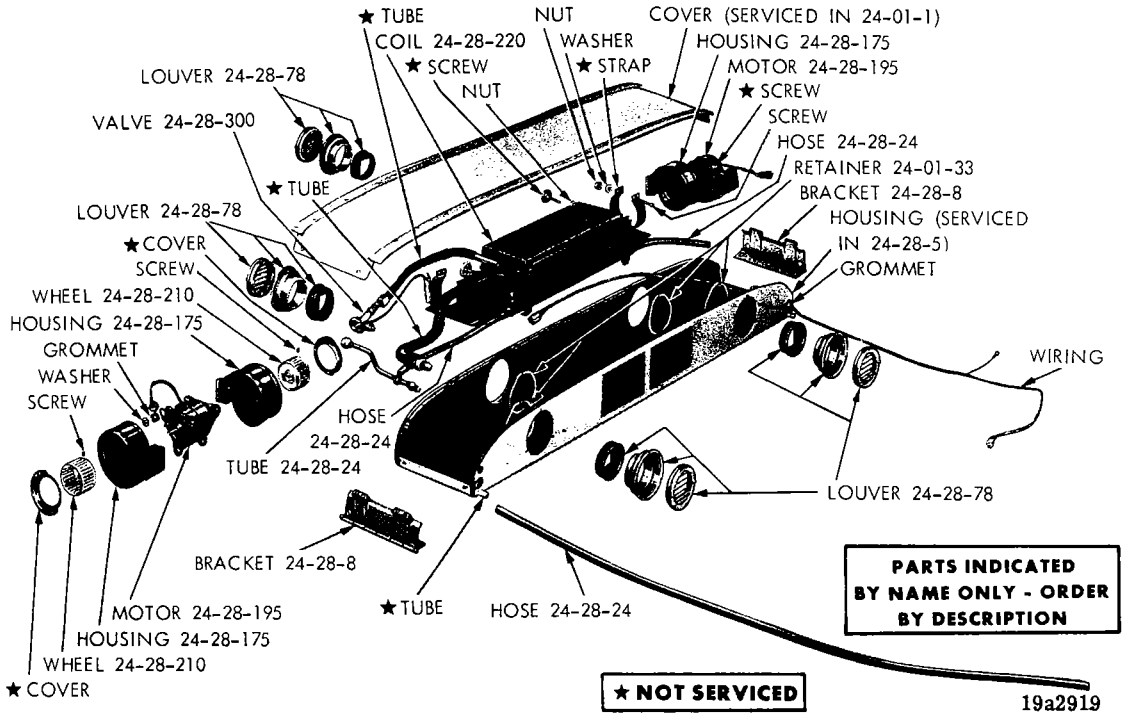

AIR CONDITIONING EVAPORATOR (ROOF UNIT) - STATION WAGON

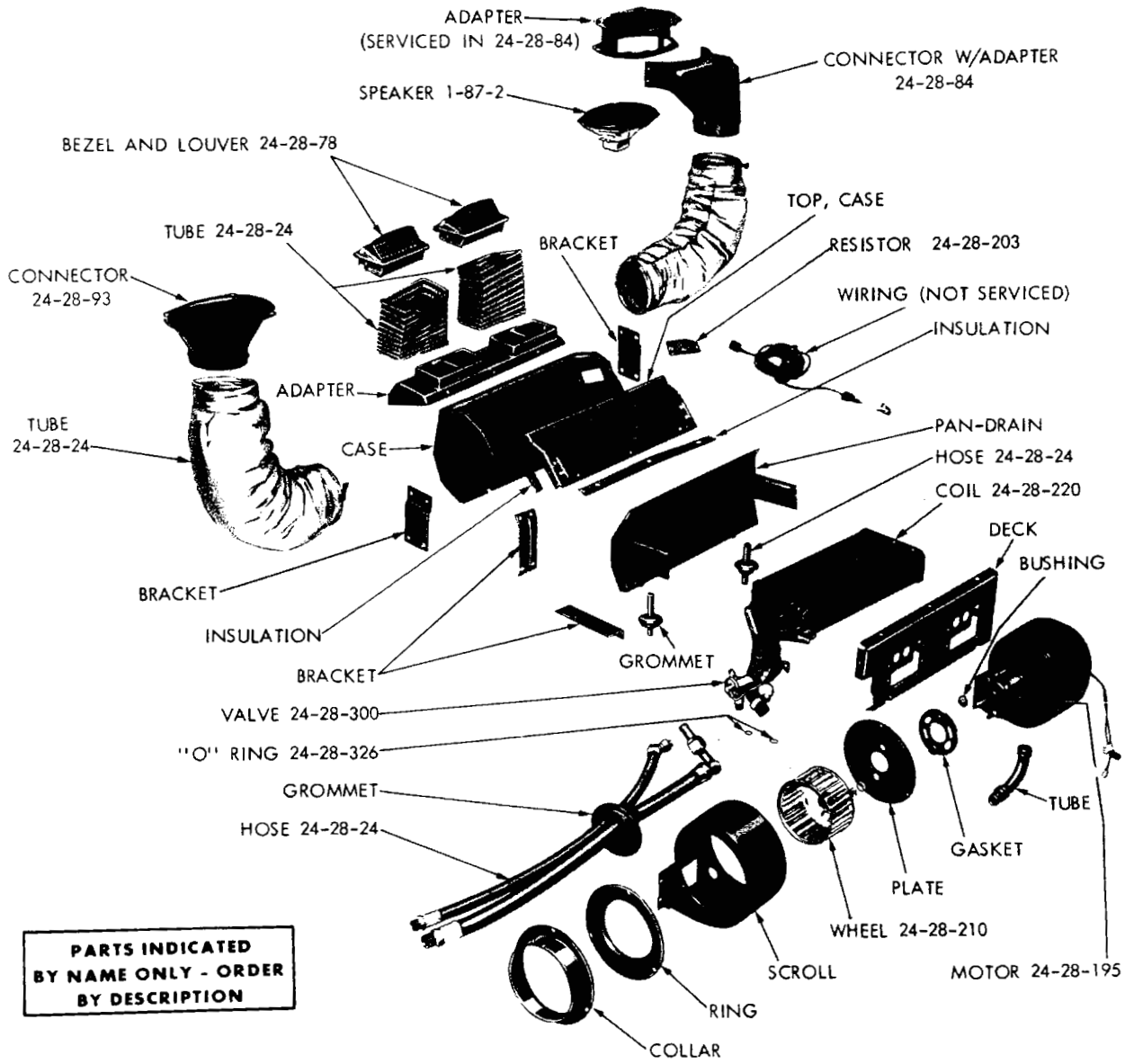

19x9975C

AIR CONDITIONING EVAPORATOR (TRUNK UNIT)

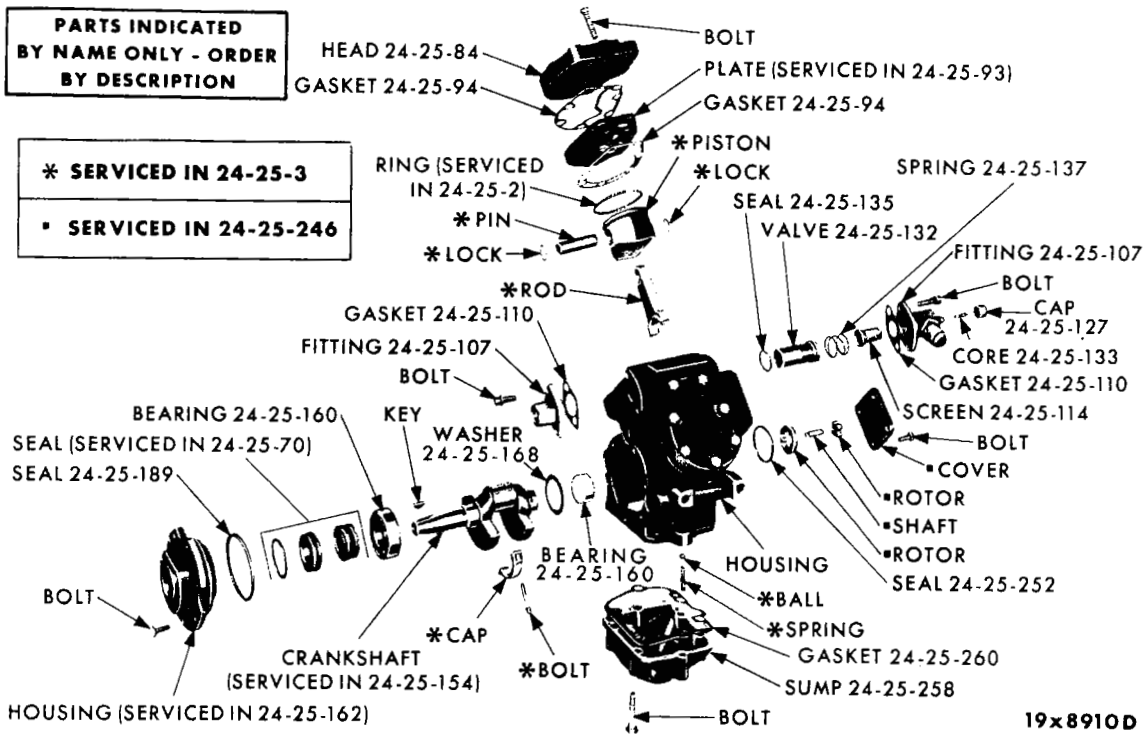

AIR CONDITIONING COMPRESSOR

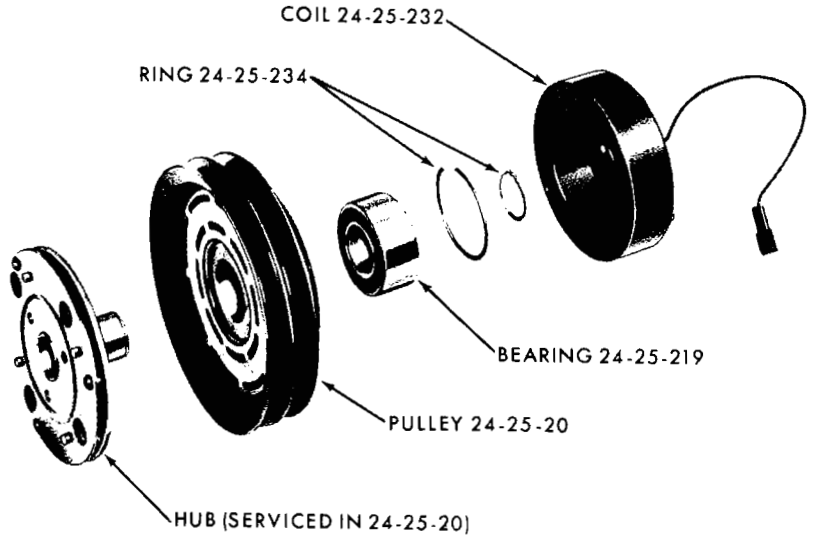

COMPRESSOR CLUTCH

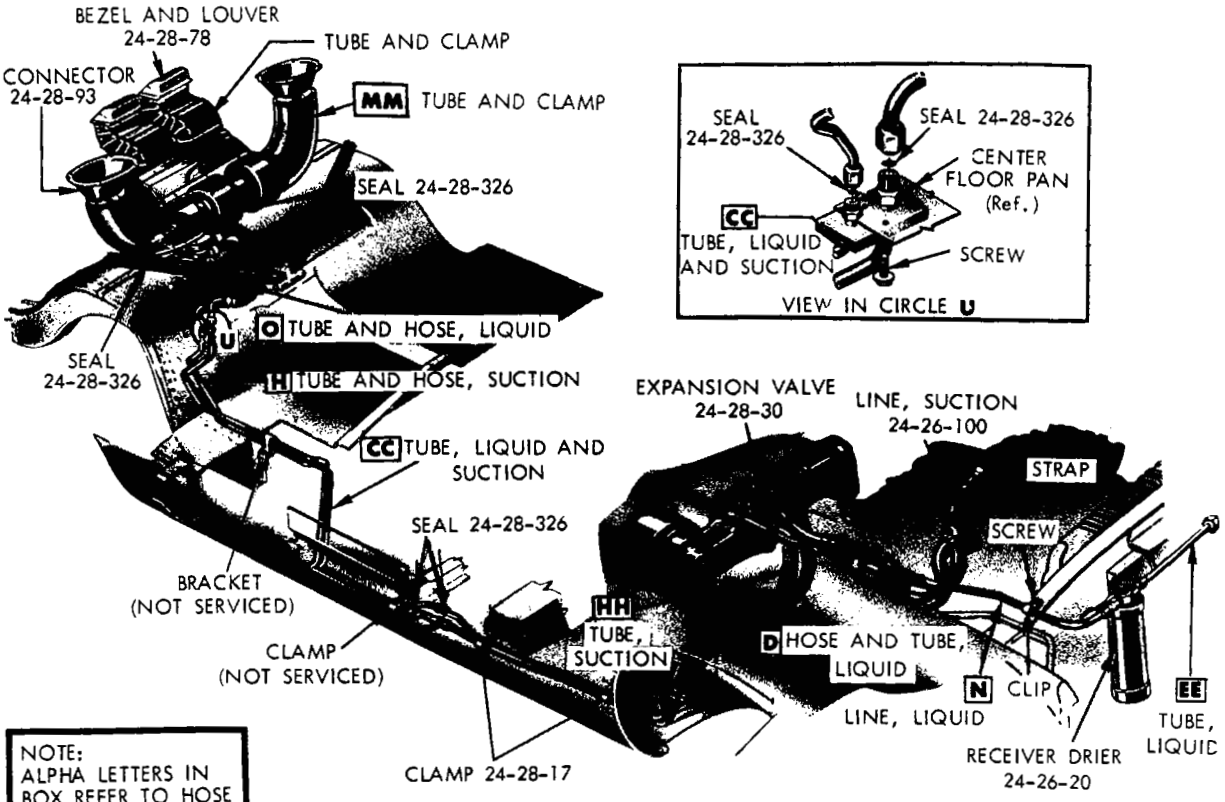
BEZEL AND LOUVER 24-28-78
TUBE AND CLAMP
CONNECTOR 24-28-93
MM TUBE AND CLAMP
SEAL 24-28-326
U
O TUBE AND HOSE, LIQUID
SEAL 24-28-326
H TUBE AND HOSE, SUCTION
CC TUBE, LIQUID AND SUCTION
SEAL 24-28-326
BRACKET (NOT SERVICED)
CLAMP (NOT SERVICED)
HH TUBE, SUCTION
CLAMP 24-28-17
EXPANSION VALVE 24-28-30
LINE, SUCTION 24-26-100
STRAP
SCREW
D HOSE AND TUBE, LIQUID
N CLIP
LINE, LIQUID
EE TUBE, LIQUID
RECEIVER DRIER 24-26-20
SEAL 24-28-326
SEAL 24-28-326
CENTER FLOOR PAN (Ref.)
CC TUBE, LIQUID AND SUCTION
SCREW
VIEW IN CIRCLE U
NOTE: ALPHA LETTERS IN BOX REFER TO HOSE CHART

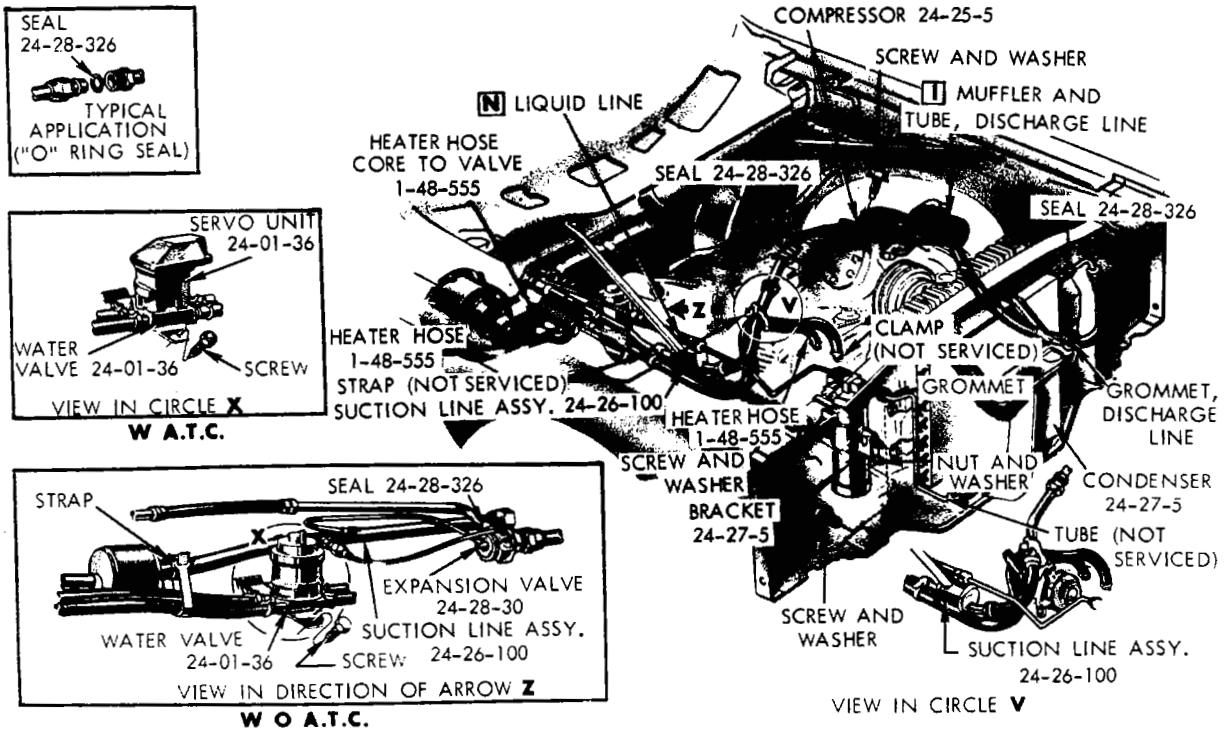
SEAL 24-28-326
TYPICAL APPLICATION ("O" RING SEAL)
SERVO UNIT 24-01-36
WATER VALVE 24-01-36
SCREW
VIEW IN CIRCLE X
W A.T.C.
STRAP
SEAL 24-28-326
X
EXPANSION VALVE 24-28-30
WATER VALVE 24-01-36
SCREW
SUCTION LINE ASSY. 24-26-100
VIEW IN DIRECTION OF ARROW Z
W O A.T.C.
COMPRESSOR 24-25-5
SCREW AND WASHER
N LIQUID LINE
I MUFFLER AND TUBE, DISCHARGE LINE
HEATER HOSE CORE TO VALVE 1-48-555
SEAL 24-28-326
SEAL 24-28-326
Z
V
CLAMP (NOT SERVICED)
HEATER HOSE 1-48-555
STRAP (NOT SERVICED)
SUCTION LINE ASSY. 24-26-100
GROMMET
GROMMET, DISCHARGE LINE
HEATER HOSE 1-48-555
SCREW AND WASHER
BRACKET 24-27-5
NUT AND WASHER
CONDENSER 24-27-5
TUBE (NOT SERVICED)
SCREW AND WASHER
SUCTION LINE ASSY. 24-26-100
VIEW IN CIRCLE V
ROUTING FOR LEECE NEVILLE ALTERNATOR 19a3445

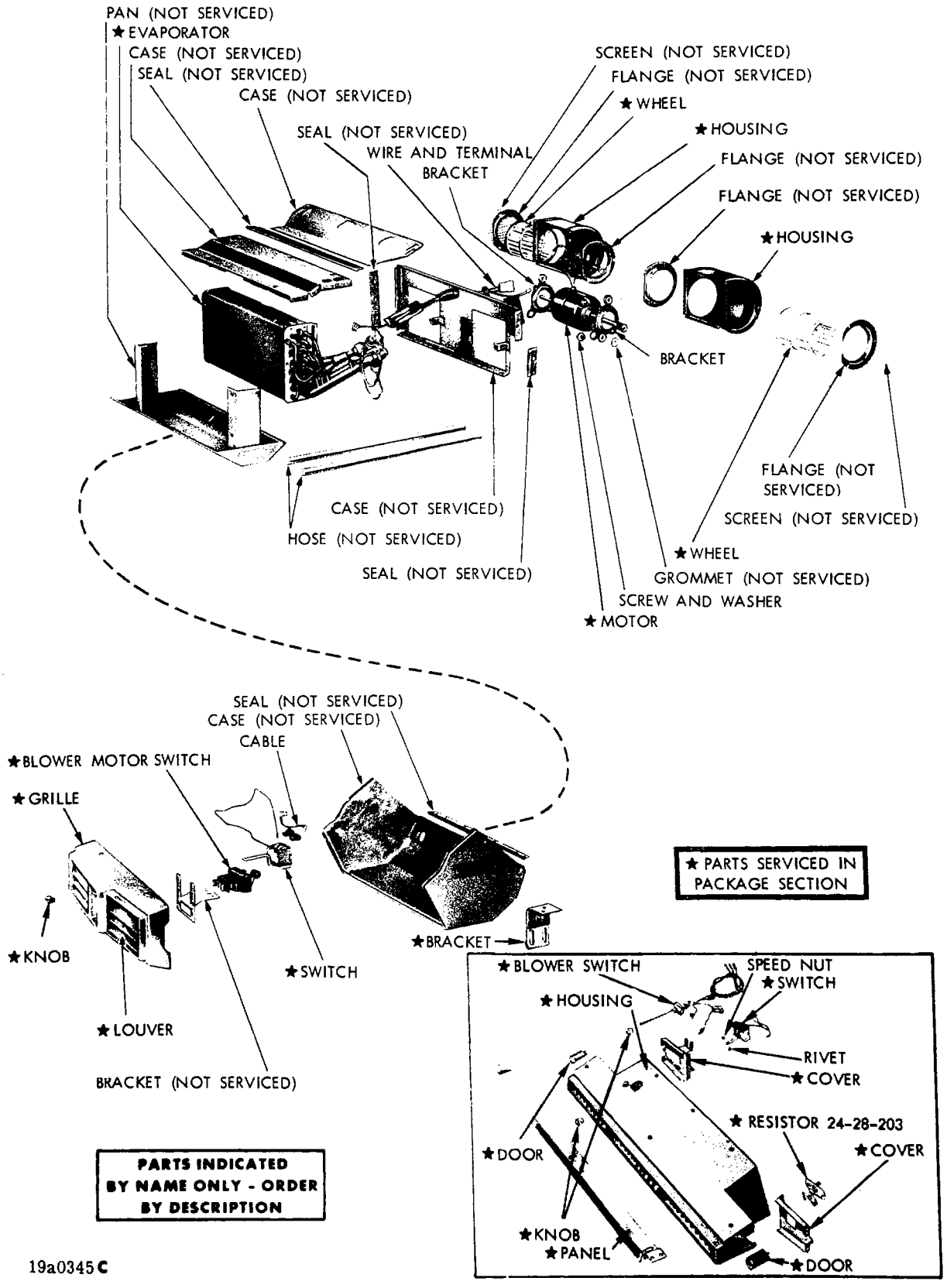

AIR CONDITIONING (MOPAR KIT) SYSTEM - COOL AIRE OR COOL COMFORT - MODELS E AND F

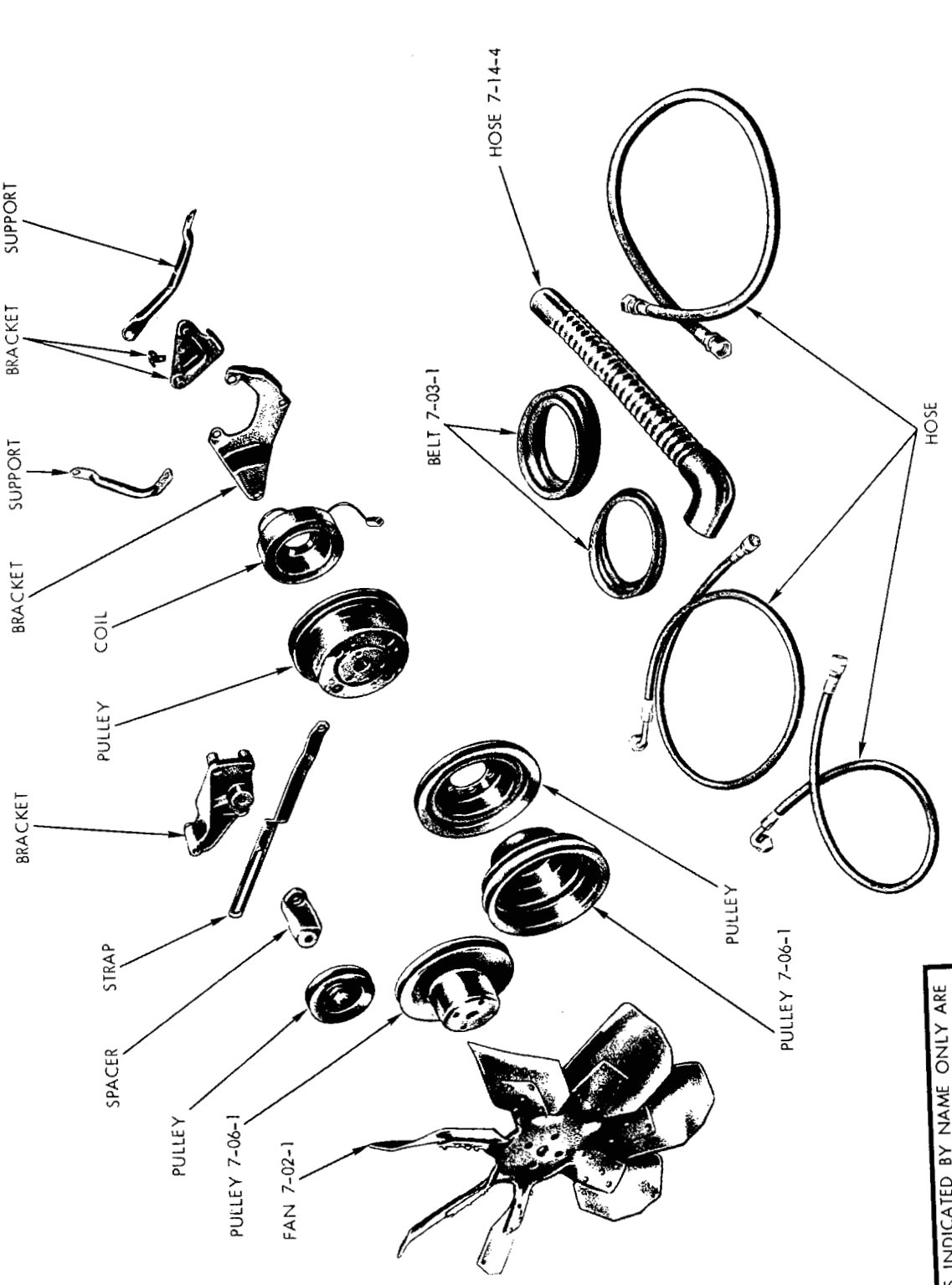

AIR CONDITIONING ADAPTER PACKAGE (TYPICAL OF MODEL "E" AND "F")

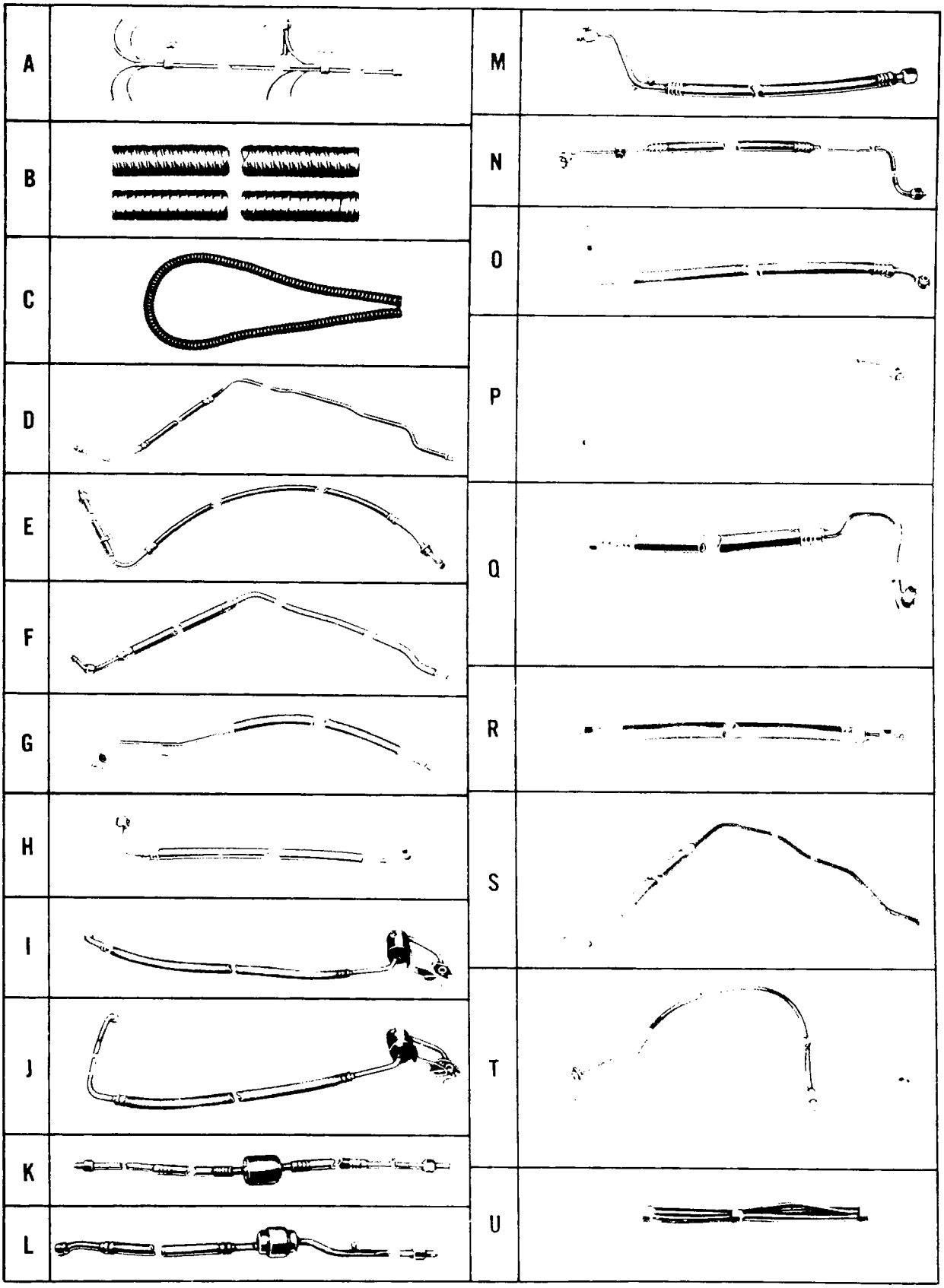

19aL2936

AIR CONDITIONING HOSE CHART

AIR CONDITIONING HOSE CHART

TYPE	LOCATION	MODEL APPLICATION	PART NUMBER
A	Hose, w/Connector, Vacuum	V, L (1970)	2820 818
	Hose, w/Connector, Vacuum	V, L (1971)	3441 896
	Hose, Vacuum Eng. to Vacuum Resvr.	V, L (1971)	3441 897
	Hose and Connector, Vacuum	B, J	2884 720
		R, W	2884 036
	Hose, w/Connector, Vacuum	R, W (1970)	3441 415
	Hose, w/Connector, Vacuum	R, W (1971)	3431 165
	Hose, w/Connector, Vacuum	P, D, C (1970)	3441 144
	Main Harness, w/A.T.C.	P, D, C, Y (1970)	3441 143
	Hose, Main Harness, Vacuum, w/A.T.C.	C, Y (1971)	3441 543
	Hose, w/Bracket, Control Vacuum, w/A.T.C.	P, D, C, Y	2936 577
	Hose, Vacuum Supply, Eng. Compartment, w/A.T.C.	P, D, C, Y	2837 985
	Hose and Connector, A/Cond. & Htr., Vacuum	P, D, C, Y (1971)	3441 558
B	Tube, Defroster Rt.	V, L	2837 096
	Lt.	V, L	2837 097
		R, W	2837 730
	Tube, Spot Cooler Flex Rt.	R, W	2837 644
	Lt.	R, W	2837 645
	Rt.	P, D, C, Y	3420 900
	Tube, A/Cond. or Htr. Spot Cooler Rt. Duct (Flex)	P, D, C, Y	2521 385
C	Hose, In Car Sensor to Aspirator	C, Y	2936 050
	Tube, Aspirator to Unit	C, Y	2936 370
D	Hose and Tube, Under Body Liquid	Y	2936 562
	Hose, A/Cond. Roof Unit Frt. U/Body Liquid	P, D, C (1971)	3441 803
E	Hose, Roof Unit Rear Suction	P, D, C	2936 732
	Hose, Roof Unit Rear Suction	P, D, C (1971)	3441 819
F	Hose, Roof Unit Front Suction	P, D, C	2936 889
	Hose, Roof Unit Front Suction	P, D, C (1971)	3441 804
G	Hose and Tube, Suction, w/318, 340 Eng.	V, L	2936 805
H	Tube and Hose, Rr. A/Cond., Rr. Unit Suction	Y	2936 570
I	Line, Discharge	P, D, C	2936 498
	Line, Discharge, w/383, 440 Eng.	P, D, C (1971)	3441 837
	Line, Discharge, w/318, 360 Eng.	P, D, C (1971)	#3441 992
J	Line, Discharge	B, J	3441 524
	Line, Discharge	Y	2936 742
	Line, Discharge	Y (1971)	3441 525
K	Line, Suction, Dual Unit, w/Leece Alternator	B, J, P, D, C	3441 019
	Line, Suction, Single Unit, w/Leece Alternator	P, D, C	3441 018
L	Line, Suction, w/225 Eng.	P, D	2936 574
M	Hose and Tube, Suction Unit to Suction Muffler, w/318 Eng.	R, W	2936 792
N	Line, Liquid, Rec. Drier to Exp. Valve	P, D, C	3441 016
	Line, Liquid, Rec. Drier to Exp. Valve	P, D, C (1971)	3441 839
	Line, Liquid, Dual Unit	P, D, C	3441 017
	Line, Liquid, Dual Unit	P, D, C (1971)	3441 840
	Line, Liquid, Dual Unit	Y	3441 711
O	Tube and Hose, Rr. A/Cond., Rr. Unit Liquid	Y	2936 569
P	Tube, Liquid, Condensor to Rec. Drier	R, W	2936 790
Q	Hose and Tube, Discharge Muffler to Condensor, w/318 Eng.	R, W	2936 797
R	Hose and Tube, Rec. Drier to Exp. Valve	R, W	2936 791
S	Hose, Roof Unit Forward Liquid	P, D, C	2936 888
T	Hose, Roof Unit Rear Liquid	P, D, C	2936 730
	Hose, Roof Unit Rear Liquid	P, D, C (1971)	3441 820
U	Extension, Vacuum Hose and Connector	R, W, P, D, C, Y	3431 068
	Extension, Vacuum Hose and Connector	R, W (1971)	3431 298

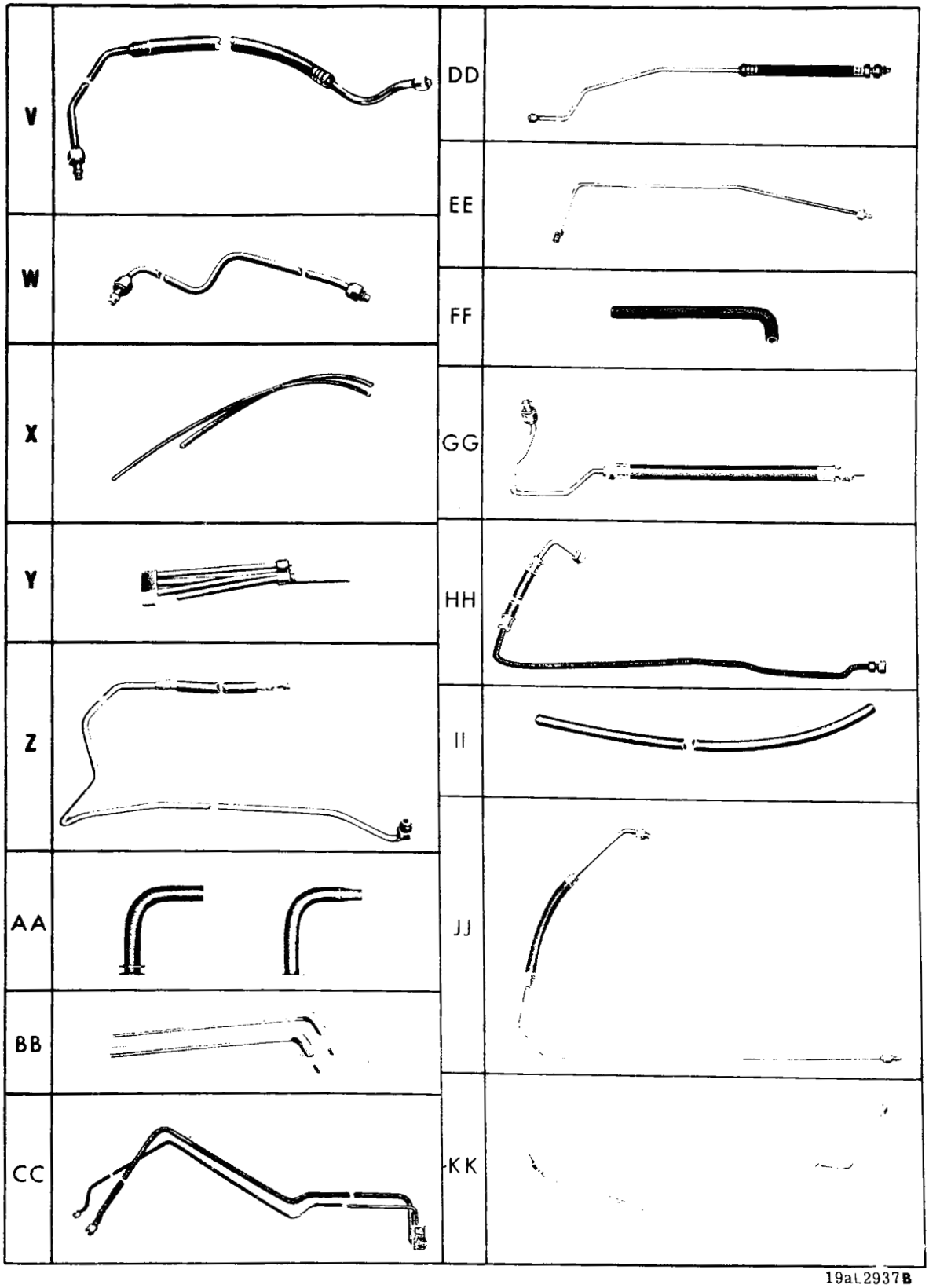

AIR CONDITIONING HOSE CHART

AIR CONDITIONING HOSE CHART

TYPE	LOCATION	MODEL APPLICATION	PART NUMBER
V	Hose and Tube, Discharge	V, L	2936 789
W	Tube, Liquid, Condensor to Rec. Drier	V, L (1970-71)	3441 893
X	Extension, Vacuum Hose	P, D, C, Y	3431 055
Y	Hose, Vacuum Recirculating, w/A.T.C.	P, D, C, Y	2936 749
	Hose, Vacuum Recirculating, w/A.T.C.	C, Y (1971)	3441 396
Z	Hose and Tube, Discharge Muffler to Condensor, w/225 Eng.	R, W	2936 796
AA	Hose, Blower Motor Cooling	V, L	2521 478
	Tube, Blower Motor Cooling	B, J, R, W	2936 925
	Tube, Drain	B, J, R, W	2936 926
BB	Tube, Water Inlet and Outlet	R, W	2607 040
CC	Tube, Underbody, Liquid and Suction	Y	2936 564
DD	Line, Liquid, Valve to Rec. Drier	B, J	3441 091
EE	Tube, Liquid, Rec. Drier to Condensor		
	UP TO May, 1971	B, J, R, W	3441 090
	AFTER May, 1971	B, J	3441 966
	AFTER May, 1971	R, W	3441 966
	Tube, Liquid, Rec. Drier to Condensor		
	UP TO Nov. 1970	R, W	3441 847
	AFTER Nov. 1970	R, W	3441 967
	Tube, Liquid, Rec. Drier to Condensor	Y	3441 533
FF	Hose, Water Valve to Core	V, L	2958 932
	Hose, Rr. Evaporator Unit Drain	Y	2485 820
GG	Tube, Discharge	R, W	3441 104
HH	Tube, Underbody Suction	Y	2936 563
II	Hose, Heater, Engine to Valve	V, L, B, J, P, D, C, Y	2936 388
	Hose, Drain Roof Unit	P, D, C	2097 131
JJ	Tube, Liquid, Rec. Drier to Exp. Valve	V, L	3441 798
	Tube, Liquid, w/Leece Neville Alternator	R, W (1971)	3441 847
	Tube, Liquid, Rec. Drier to Exp. Valve, w/Leece Neville Alternator	R, W (1971)	3441 846
	Line, Liquid, Rec. Drier to Exp. Valve, UP TO June 1, 1971	B, J, R, W (1971)	3441 739
	Line, Liquid, Rec. Drier to Exp. Valve, AFTER June 1, 1971	B, J, R, W (1971)	#3502 110
	Line, Liquid, w/Single Unit and A.T.C.	Y	2936 291
	Line, Liquid, w/Single Unit and A.T.C.	Y (1971)	3441 534
KK	Line, Liquid, Condensor to Rec. Drier	R, W	3441 424

NOTE: For Muffler and Tubes, see Part Type Code 24-26-100.

NOTES

CODE	PART NAME	ENG. TYPE OR CU.IN.	V 1-2	B J 1-2	L 1-2	R 1-2	W 1-2	P 1-2	D 1-2	C 1	C 2	C 3	Y 1	PART NUMBER
24-01-0	**AIR CONDITIONING**													
	NOTE: All parts identified as model "E" or model "F" in part name column indicate usage on Field Installed Units only. Service parts for Field Installed Units are listed in the Parts Package Section of this catalog.													
24-01-1	BASIC PACKAGE Model "E"		1	1	1	—	—	—	—	—	—	—	—	2027 816
	Model "F"		1	1	1	1	1	1	1	1	1	1	1	2027 820
	ADAPTER PACKAGE													
	All w/198 or 225 Cu. In. Eng.		1	1	1	1	1	1	1	—	—	—	—	2027 817
	w/318 or 340 Cu. In. Eng.		1	1	1	1	1	1	1	1	1	1	—	2027 818
	w/383 or 440 Cu. In. Eng.		1	1	1	1	1	1	1	1	1	1	1	2027 819
	PACKAGE, Spot Cooler Air Duct	ALL	1	1	1	1	1	1	1	1	1	1	1	2027 821
	CONDENSER PACKAGE	ALL	1	1	1	—	—	—	—	—	—	—	—	2027 787
		ALL	—	—	—	1	1	1	1	1	1	1	1	2027 814
	FACTORY INSTALLED													
	UNIT, A/Cond., and Htr., Htr. Half													
	Complete		1	—	1	—	—	—	—	—	—	—	—	3441 200
	UNIT, A/Cond., and Htr. Evap.													
	w/Vacuum Harness	70	1	—	1	—	—	—	—	—	—	—	—	2936 892
		71	1	—	1	—	—	—	—	—	—	—	—	3441 925
		70	—	1	—	—	—	—	—	—	—	—	—	2936 927
	Up to March, 1971	71	—	1	—	—	—	—	—	—	—	—	—	3441 928
	After March, 1971	71	—	1	—	—	—	—	—	—	—	—	—	=3441 986
		70	—	—	—	1	1	—	—	—	—	—	—	3441 433
	Up to March 1971		—	—	—	1	1	—	—	—	—	—	—	3441 930
	After March 1971		—	—	—	1	1	—	—	—	—	—	—	=3441 991
	Pass. Side w/Out A.T.C.	71	—	—	—	—	—	1	1	1	1	1	1	3441 554
	w/A.T.C.	70	—	—	—	—	—	1	1	1	1	1	1	3441 618
	Passenger Side w/A.T.C. w/Harness	71	—	—	—	—	—	—	—	1	1	1	1	3441 542
	Passenger Side w/Out A.T.C.	70	—	—	—	—	—	1	1	1	1	1	1	3441 616
	Roof Unit, Sta. Wgn. Only		—	—	—	—	—	1	1	1	1	1	—	2936 414
	Rear Unit		—	—	—	—	—	—	—	—	—	—	1	2936 140
24-01-3	SPACER, Mtg. at Dash	70	—	—	—	5	5	—	—	—	—	—	—	2607 043
24-01-10	RETAINER, A/Cond. and Htr. Carpet	70	—	—	—	1	1	—	—	—	—	—	—	2837 113
24-01-16	BRACKET, Water Valve Mtg.		—	1	—	1	1	—	—	—	—	—	—	3441 096
24-1-18	HOUSINGS, A/C and Htr.													
	Front		1	—	1	—	—	—	—	—	—	—	—	2521 551
		70	—	1	—	1	1	—	—	—	—	—	—	2936 934
	Up to March, 1971		—	1	—	1	1	—	—	—	—	—	—	=3441 566
	After March, 1971		—	1	—	1	1	—	—	—	—	—	—	=3441 988
	Less Core		—	1	—	1	1	—	—	—	—	—	—	=3502 210
	Housing w/Scroll w/Insulator	70	—	—	—	1	1	—	—	—	—	—	—	2923 936
	Complete		—	—	—	—	—	1	1	1	1	1	1	3441 171
	REAR		1	—	1	—	—	—	—	—	—	—	—	2521 563
		70	—	1	—	1	1	—	—	—	—	—	—	2936 958
	Complete	70	—	1	—	—	—	—	—	—	—	—	—	3441 564
	Up to March, 1971		—	1	—	1	1	—	—	—	—	—	—	3441 927
	After March 1971		—	1	—	1	1	—	—	—	—	—	—	3441 989
	Less Coil		—	1	—	1	1	—	—	—	—	—	—	=3502 211
	w/End Plates	70	—	—	—	1	1	—	—	—	—	—	—	2837 968
	w/o A.T.C.	70	—	—	—	—	—	1	1	1	1	1	—	2936 239
	w/A.T.C.	70	—	—	—	—	—	1	1	1	1	1	1	2936 355
	Complete w/A.T.C.	70	—	—	—	—	—	1	1	1	1	1	1	3441 163
	Complete w/o A.T.C.	70	—	—	—	—	—	1	1	1	1	1	1	3441 162
	Complete w/A.T.C.	71	—	—	—	—	—	—	—	1	1	1	1	3441 550
	w/o A.T.C.	71	—	—	—	—	—	1	1	1	1	1	1	3441 556
24-01-24	CORE, A/Cond. and Htr. or ATC		—	—	—	—	—	1	1	1	1	1	1	3420 787
	NOTE: For further information see P.T.C. 1-48-88.													
24-01-26	SEAL, Htr. Core Tube to Dash		—	—	—	—	—	1	1	1	1	1	1	2485 134
	Up to Feb. 1971		2	—	2	—	—	—	—	—	—	—	—	=3441 863
	After Feb. 1971		2	—	2	—	—	—	—	—	—	—	—	=3502 080

CARLINES J - Challenger, B - Barracuda, V - Valiant, L - Dart, R - Belvedere - Satellite, W - Coronet - Charger, P - Plymouth, D - Dodge, C - Chrysler, Y - Imperial

AR Indicates use as required.

# Indicates parts not listed in any previous parts book.

Numerals in parentheses ( ) refer to notes.

★ Indicates change or addition.

Printed in U.S.A. January 1972

24-01-0 AIR CONDITIONING Cont'd.

CODE	PART NAME	ENG. TYPE OR CU.IN.	V 1-2	B J 1-2	L 1-2	R 1-2	W 1-2	P 1-2	D 1-2	C 1	C 2	C 3	Y 1	PART NUMBER
24-01-31	SLEEVE, Heater Hose		1	—	1	—	—	—	—	—	—	—	—	2127 280
	Valve to Pump Hose		—	1	—	—	—	—	—	—	—	—	—	2127 280
	Core to Pump Hose		—	—	—	1	1	—	—	—	—	—	—	2127 280
	Valve to Pump		—	—	—	—	—	1	1	1	—	—	—	2127 280
24-01-33	RETAINER, Roof Unit Louver to Adapter		—	—	—	—	—	4	4	4	4	4	—	1689 670
24-01-34	THERMOSTAT, Water Valve, w/A.T.C.	70	—	—	—	—	—	1	1	1	1	1	1	2936 750
24-01-35	LEVER, A/Cond. and Htr. Door Shaft Water Valve Link		—	—	—	1	1	—	—	—	—	—	—	2521 243
24-01-36	VALVE, Water, w/ Bracket		1	—	1	—	—	—	—	—	—	—	—	3441 045
	Water	71	1	—	1	—	—	—	—	—	—	—	—	3579 173
	Water		—	1	—	—	—	—	—	—	—	—	—	3441 034
	Water	71	—	1	—	—	—	—	—	—	—	—	—	3441 884
	Water	70	—	—	—	1	1	—	—	—	—	—	—	2521 240
	Water	71	—	—	—	1	1	—	—	—	—	—	—	3441 885
	Water w/o A.T.C.	70	—	—	—	—	—	1	1	1	1	1	1	2936 490
	Water w o A.T.C.	71	—	—	—	—	—	1	1	1	1	1	1	3441 562
	Water, w A.T.C.	70	—	—	—	—	—	1	1	1	1	1	1	2936 495
	Temp. Control, w/ Bracket	70	—	—	—	1	1	—	—	—	—	—	—	3441 414
	Vacuum Check, Four Port		—	—	—	—	—	1	1	1	1	1	1	2820 880
	Vacuum Check, Two Post Tee		—	1	—	—	—	—	—	—	—	—	—	3441 609
24-01-38	ROD, Water Valve Control	70	—	—	—	1	1	—	—	—	—	—	—	2521 246
24-01-39	SEAL, Temp. Control Valve at Dash	70	—	—	—	1	1	—	—	—	—	—	—	2607 025
24-01-40	CLIP, Water Valve Control Rod Mtg. at Shaft	70	—	—	—	1	1	—	—	—	—	—	—	2465 560
	Spotcooler Conn. Mtg.	70	—	—	—	1	1	—	—	—	—	—	—	2521 729
	Spotcooler Tube Mtg.	70	—	—	—	1	1	—	—	—	—	—	—	2521 729
	Spotcooler Duct to Hsg.	Rt. 70	—	—	—	—	—	1	1	—	—	—	—	2521 729
24-01-41	RETAINER, Check Valve and Vacuum Hose, Use w/A.T.C. Only	70	—	—	—	—	—	1	1	1	1	1	1	2936 559
	Use w A.T.C. Only	71	—	—	—	—	—	—	—	1	1	1	1	3441 813
24-01-43	PLATE W Weld Screw, A/Cond. and Htr. Control	70	1	—	—	—	—	—	—	—	—	—	—	2864 592
		70	—	—	1	—	—	—	—	—	—	—	—	2864 593
	NOTE: For Further Information See P.T.C. 1-48-867													
24-01-45	POTENTIOMETER and CABLE	70	—	—	—	—	—	1	—	—	—	—	—	2864 628
		70	—	—	—	—	—	—	—	1	1	1	1	2884 533
	A.T.C.	71	—	—	—	—	—	—	—	1	1	1	1	3431 209
	w/Thumbwheel and Mtg. Brkt.	70	—	—	—	—	—	—	1	—	—	—	—	2884 357
24-01-46	RESERVOIR, Slave Circuit Vacuum	70 225	—	—	—	—	—	1	1	—	—	—	—	3441 319
		71	—	—	—	—	—	1	1	1	1	1	1	3420 851
	Except 225		—	—	—	—	—	1	1	1	1	1	1	3420 851
		71	—	—	—	1	1	—	—	—	—	—	—	3441 532
	Control Circuit Vacuum	70	—	—	—	—	—	1	1	1	1	1	1	2837 314
	A, C and Htr. Valve Vacuum		1	—	1	—	—	—	—	—	—	—	—	2837 314
	Vacuum Control	70	—	—	—	1	1	—	—	—	—	—	—	3441 416
	Vacuum Control	71	—	—	—	1	1	—	—	—	—	—	—	3441 532
	Vacuum W/Trailer Tow	71	—	—	—	—	—	1	1	1	1	1	—	3441 955
24-01-52	INSULATOR, Potentiometer and Cable	70	—	—	—	—	—	—	—	1	1	1	1	2770 859
24-01-65	CABLE, Temp. Control, 71" Long	70	—	1	—	—	—	—	—	—	—	—	—	3431 215
	74" Long	70	—	1	—	—	—	—	—	—	—	—	—	3431 339
	71" Long	71	—	1	—	—	—	—	—	—	—	—	—	#3431 459
	w/ Clamp	70	1	—	1	—	—	—	—	—	—	—	—	2808 966
	w/Insulator	70	1	—	1	—	—	—	—	—	—	—	—	2808 967
	Clip Self Adjusting Cable		—	1	—	—	—	—	—	—	—	—	—	#6028 590
	Clip, Cable Retaining		—	1	—	—	—	—	—	—	—	—	—	#2884 656
	NOTE: For Further Information See P.T.C. 1-48-941													
24-01-66	RETAINER, Temp. Control Cable	Bottom	1	—	1	—	—	—	—	—	—	—	—	2197 678
		Top	1	—	1	—	—	—	—	—	—	—	—	2197 678
		To Rod	1	—	1	—	—	—	—	—	—	—	—	2197 678

CARLINES J - Challenger, B - Barracuda, V - Valiant, L - Dart, R - Belvedere - Satellite, W - Coronet - Charger, P - Plymouth, D - Dodge, C - Chrysler, Y - Imperial

AR Indicates use as required. Numerals in parentheses refer to notes.

# Indicates parts not listed in any previous parts book. ★ Indicates change or addition.

Printed in U.S.A. January 1972

CODE	PART NAME	ENG. TYPE OR CU.IN.	V 1-2	B J 1-2	L 1-2	R 1-2	W 1-2	P 1-2	D 1-2	C 1	C 2	C 3	Y 1	PART NUMBER
24-01-0	**AIR CONDITIONING Cont'd.**													
24-01-66	RETAINER Cont'd.													
	To Switch		1	—	1	—	—	—	—	—	—	—	—	2197 678
	Inlet Door Actuator Rod		2	—	2	—	—	—	—	—	—	—	—	2197 678
	Temp. Door Cable to Control		1	—	1	1	1	—	—	—	—	—	—	2197 678
	Thumbwheel		—	—	—	—	—	1	1	1	1	1	1	2197 678
	Temp. Control Cable		—	1	—	—	—	—	—	—	—	—	—	3431 457
24-01-70	SEALS													
	Rr. Hsg. to Dist. Hsg.		—	1	—	1	1	—	—	—	—	—	—	2936 502
	Rr. Hsg. to Frt. Hsg. At Coil		—	1	—	—	—	—	—	—	—	—	—	2936 957
	Vent Cover to Cowl Panel		—	—	—	—	—	3	3	3	3	3	—	3441 287
	Rr. Hsg. to Frt. Hsg.		—	—	—	—	—	1	1	1	1	1	1	3441 168
	Rr. Hsg. to Frt. Hsg.		—	—	—	2	2	—	—	—	—	—	—	2936 957
	Frt. Hsg. to Dash		—	—	—	—	—	1	1	1	1	1	1	2936 233
	Eng. Side to Dash Bottom Hsg.		—	—	—	—	—	1	1	1	1	1	1	3441 061
	Eng. Side Hsg. to Dash		—	—	—	—	—	1	1	1	1	1	1	3441 060
	F/Air Vent Hsg. to Cowl Side Panel		—	—	—	—	—	1	1	1	1	1	—	3441 287
24-01-87	NIPPLES													
	Htr. Hose to Pump		—	1	—	—	—	1	1	1	1	1	1	2936 757
	Htr. Hose to Eng. Up to April 1971		1	1	1	1	1	1	1	1	1	1	1	3441 020
	After April 1971		1	1	1	1	1	1	1	1	1	1	1	= 3502 123
24-01-225	SEAL, Evap. Coil, Side		—	1	—	1	1	—	—	—	—	—	—	3441 499
	Top		—	1	—	—	—	—	—	—	—	—	—	3441 500
	Htr. Dr. Vac. Actr.		—	1	—	1	1	—	—	—	—	—	—	3441 500
24-24-0	**CONTROLS**													
24-24-5	SWITCHES													
	Blower Control		1	—	1	—	—	—	—	—	—	—	—	2864 591
	Blower		—	1	—	—	—	—	—	—	—	—	—	2884 727
	Blower	70	—	—	—	1	1	—	—	—	—	—	—	2864 821
	Blower, Rr., 3 Position	70	—	—	—	—	—	1	1	—	—	—	—	2820 455
	Blower, Rr. 3 Position													
	Sta. Wgn. Only		—	—	—	—	—	—	—	—	—	1	—	= 2864 499
	Blower, Rr.		—	—	—	—	—	1	1	—	—	—	—	2820 455
	Blower, Complete		—	—	—	—	—	—	1	—	—	—	—	2884 258
	Blower, Rocker		—	—	—	—	—	—	—	1	1	1	—	2864 440
	Blower A/C and Htr. Control	71	—	—	—	1	1	—	—	—	—	—	—	3431 137
	Low Pressure Cut Off	70	—	—	—	—	—	1	1	1	1	1	1	3441 094
	Low Pressure Cut Off up to Nov. 1, 1970	71	1	1	1	1	1	1	1	1	1	1	1	3441 904
	Low Pressure Cut Off After Nov. 1, 1970	71	1	1	1	1	1	1	1	1	1	1	1	= 3502 016
	Ambient, w/A.T.C. Only		—	—	—	—	—	1	1	1	1	1	1	2936 365
	A.T.C. Cold Eng. Lockout	71	—	—	—	—	—	—	—	1	1	1	1	3441 529
	NOTE: For switches not listed see P.T.C. 1-48-770													
24-24-7	HOLDER, Fuse		—	—	—	—	—	1	1	1	1	1	1	1885 608
	Holder, Fuse A/C Cont. Jumper	71	—	—	—	—	—	—	—	1	1	1	1	2257 679
24-24-13	RETAINER, Blower Switch Link		—	—	—	1	1	—	1	—	—	—	—	2197 678
24-24-16	RELAY and SEAL, Vacuum Time Delay	70	—	1	—	1	1	1	1	1	1	1	—	2936 666
		71	—	—	—	—	—	1	1	1	1	1	1	3441 868
24-24-18	COVER and INSERT, A.T.C. Push Button Extension													
	Defrost	70	—	—	—	—	—	—	—	—	—	—	1	2884 460
	Hi Defrost	70	—	—	—	—	—	—	—	—	—	—	1	2884 461
24-24-30	AMPLIFIER A/C and Htr. A.T.C. Only	71	—	—	—	—	—	—	—	1	1	1	1	3441 553
24-24-39	CONTROL, A/Cond. and Htr., Also Use 1 Of 2820487		1	—	1	—	—	—	—	—	—	—	—	2884 108
	w/Rallye Inst. Panel		—	1	—	—	—	—	—	—	—	—	—	2884 700
	w/Out Rallye Inst. Panel		—	1	—	—	—	—	—	—	—	—	—	2884 701
		70	—	—	—	1	1	—	—	—	—	—	—	2932 974

CARLINES: J - Challenger, B - Barracuda, V - Valiant, L - Dart, R - Belvedere - Satellite, W - Coronet - Charger, P - Plymouth, D - Dodge, C - Chrysler, Y - Imperial

AR Indicates use as required.

Numerals in parentheses ( ) refer to notes.

# Indicates parts not listed in any previous parts book.

★ Indicates change or addition.

Printed in U.S.A. January 1972

24-24-0 CONTROLS Cont'd.

CODE	PART NAME	ENG. TYPE OR CU.IN.	V 1-2	B J 1-2	L 1-2	R 1-2	W 1-2	P 1-2	D 1-2	C 1	C 2	C 3	Y 1	PART NUMBER
24-24-39	CONTROL Cont'd.													
	Up to April 1971		—	—	—	1	1	—	—	—	—	—	—	3431 127
	After April 1971		—	—	—	1	1	—	—	—	—	—	—	=3431 572
	NOTE: For Further Information See P.T.C. 1-48-4													
24-24-40	ASPIRATOR, w/A.T.C.		—	—	—	—	—	1	1	1	1	1	1	2837 336
24-24-41	TUBE, A/C and Htr. Aspirator to Unit	70	—	—	—	—	—	1	1	1	1	1	1	2936 370
24-24-44	SENSOR, w/A.T.C.	70	—	—	—	—	—	1	1	1	1	1	1	2936 350
	Ambient W/A.T.C. After Sept 1971		—	—	—	—	—	—	—	1	1	1	1	3441 935
	Up To Sept. 1971		—	—	—	—	—	—	—	1	1	1	1	=3441 790
24-24-45	GASKET, Ambient Sensor Sealing		—	—	—	—	—	1	1	1	1	1	1	2837 374
24-24-53	ADAPTOR, In Car Sensor, w/A.T.C.	70	—	—	—	—	—	1	—	—	—	—	—	2936 479
		70	—	—	—	—	—	—	1	—	—	—	—	2936 480
		70	—	—	—	—	—	—	—	1	1	1	1	2936 481
		71	—	—	—	—	—	—	—	1	1	1	—	3441 340
		71	—	—	—	—	—	—	—	—	—	—	1	3441 732
24-24-55	INSULATOR, In Car Sensor Term.	70	—	—	—	—	—	1	1	1	1	1	1	2770 859
	A.T.C.	71	—	—	—	—	—	—	—	1	1	1	1	3513 683
24-24-59	REGULATOR, Control Vacuum	70	—	—	—	—	—	1	—	—	—	—	—	2884 333
	NOTE: For Further Information See P.T.C. 1-48-374													
24-24-67	RESISTOR, Blower Motor	70	—	—	—	1	1	—	—	—	—	—	—	2936 278
	w/out A.T.C.		—	—	—	—	—	1	1	1	1	1	—	2936 278
	w/A.T.C.		—	—	—	—	—	1	1	1	1	1	1	2936 357
	NOTE: For Further Information See P.T.C. 1-48-832													
24-24-124	WIRING, A/Cond. & Htr.													
	Inst. Pnl. V		1	—	—	—	—	—	—	—	—	—	—	2857 837
	V-L, 2D., Fast Back and L-L Swinger		1	—	1	—	—	—	—	—	—	—	—	2857 837
	L		—	—	1	—	—	—	—	—	—	—	—	2983 644
	V-S, V-H and L-M, L-H, L-L 2 D H.T., 4D.		1	—	1	—	—	—	—	—	—	—	—	2983 644
	B, J		—	1	—	—	—	—	—	—	—	—	—	2983 247
	Inst. Pnl.	70	—	—	—	1	1	—	—	—	—	—	—	2889 390
		71	—	—	—	1	1	—	—	—	—	—	—	3513 092
	Instrument Pnl. w/o A.T.C.	70	—	—	—	—	—	1	—	—	—	—	—	2983 107
	Instrument Pnl. w/o A.T.C.	71	—	—	—	—	—	1	1	—	—	—	—	3513 441
	Engine Compt. w/A.T.C.	71	—	—	—	—	—	—	—	1	1	1	—	3513 201
	Inst. Pnl. w/o A.T.C.	70	—	—	—	—	—	—	1	—	—	—	—	2983 139
	Inst. Pnl. w/o A.T.C.	70	—	—	—	—	—	—	—	1	1	1	—	2926 415
	Inst. Pnl. w/o A.T.C.	71	—	—	—	—	—	—	—	1	1	1	1	3513 443
	Inst. Pnl. w/A.T.C.	70	—	—	—	—	—	1	1	1	1	1	1	2926 272
	Inst. Pnl. w/A.T.C.	71	—	—	—	—	—	—	—	1	1	1	1	3513 177
	Control Jumper w/A.T.C.		—	—	—	—	—	1	—	—	—	—	—	2983 101
	D		—	—	—	—	—	—	1	—	—	—	—	2983 138
	Control Jumper w/A.T.C.	70	—	—	—	—	—	—	—	1	1	1	—	2926 758
	w/A.T.C.	71	—	—	—	—	—	—	—	1	1	1	—	3513 454
24-24-140	BEZEL, Spot Cooler													
	P	70	—	—	—	—	—	1	—	—	—	—	—	2984 860
	P-E, P-L, D-E	71	—	—	—	—	—	1	1	—	—	—	—	2985 006
	P-M, P-H, P-P, D-L, D-M, D-H	71	—	—	—	—	—	1	1	—	—	—	—	2985 012
	Blue	70	—	—	—	—	—	—	—	2	2	2	2	4483 FB7
	Green	70	—	—	—	—	—	—	—	2	2	2	2	4483 EF8
	Teal	70	—	—	—	—	—	—	—	2	2	2	2	4483 FP6
	Light Tan	70	—	—	—	—	—	—	—	2	2	2	2	4483 FT4
	Dark Tan	70	—	—	—	—	—	—	—	2	2	2	2	4483 FT8
	Burgundy	70	—	—	—	—	—	—	—	2	2	2	2	4483 EM9
	Red	70	—	—	—	—	—	—	—	2	2	2	2	4483 FR9
	Black	70	—	—	—	—	—	—	—	2	2	2	2	4483 FX9
	Light Gold	70	—	—	—	—	—	—	—	2	2	2	2	4483 FY4
	Dark Gold	70	—	—	—	—	—	—	—	2	2	2	2	4483 EY8
	Gun Metal	71	—	—	—	—	—	—	—	2	2	2	2	4483 GA6
	Dark Blue	71	—	—	—	—	—	—	—	2	2	2	2	4483 GB7
	Russet	71	—	—	—	—	—	—	—	2	2	2	2	4483 GE9

CODE	PART NAME	ENG. TYPE OR CU.IN.	V 1-2	B J 1-2	L 1-2	R 1-2	W 1-2	P 1-2	D 1-2	C 1	C 2	C 3	Y 1	PART NUMBER
24-24-0	**CONTROLS Cont'd.**													
24-24-140	BEZEL Cont'd.													
	Dark Green	71	—	—	—	—	—	—	—	2	2	2	2	4483 GF7
	Dark Saddle	71	—	—	—	—	—	—	—	2	2	2	2	4483 GT6
	Black	71												4483 EX9
	Gold	71	—	—	—	—	—	—	—	—	—	—	2	4483 GY6
	Dark Blue	71	—	—	—	—	—	—	—	—	—	—	2	4483 GB9
	Burgundy	71	—	—	—	—	—	—	—	—	—	—	2	4483 GM9
		71												
	Bezel, Control A/Cond.													
	Low Line	70	1	—	—	—	—	—	—	—	—	—	—	2864 538
	Except Low Line	70	1	—	—	—	—	—	—	—	—	—	—	2884 890
	V-L, All, L-L Fast Back	71	1	—	1	—	—	—	—	—	—	—	—	2884 890
	R, W	71	—	—	—	1	1	—	—	—	—	—	—	3431 127
	R, W	70	—	—	—	1	1	—	—	—	—	—	—	2884 576
	Y	70	—	—	—	—	—	—	—	—	—	—	1	3431 271
	Y	71	—	—	—	—	—	—	—	—	—	—	1	3431 290
	Auto. Temp. Control,	70	—	—	—	—	—	—	—	1	1	1	—	2884 232
	P	70	—	—	—	—	—	1	—	—	—	—	—	2884 118
	C	71	—	—	—	—	—	—	—	1	1	1	—	3431 201
	Y	70	—	—	—	—	—	—	—	—	—	—	1	2884 320
	Y	71	—	—	—	—	—	—	—	—	—	—	1	3431 203
	Rr. A/Cond Blwr. Sw. Mtg. Sta. Wgn.	71	—	—	—	—	—	1	1	—	—	—	—	3488 005
	Rr. Switch Mtg. Sta. Wgn. Only	70	—	—	—	—	—	—	1	—	—	—	—	2947 182
	Lens and Seal w/A.T.C Only	70	—	—	—	—	—	—	1	—	—	—	—	2884 355
	Lens and Seal w/A.T.C	71	—	—	—	—	—	—	1	—	—	—	—	3431 190
	Rr. A/C Switch	70	—	—	—	—	—	1	—	—	—	—	—	2947 040
	Rr. Switch Mtg. Sta. Wgn. Only	70	—	—	—	—	—	1	—	—	—	—	—	2947 895
	NOTE: For Further Information See P.T.C. 1-48-70													
24-24-150	SWITCHES													3895037
	Evap. Temp. Control		1	—	1	—	—	—	—	—	—	—	—	2837 223
	Push Button		1	1	1	1	1	1	1	1	1	1	1	3431 020
	Push Button Vacuum, w/Cable	70	—	—	—	1	1	—	—	—	—	—	—	3431 017
	A/C and Htr. Control, 6 Position	71	—	—	—	1	1	—	—	—	—	—	—	3431 116
	Vacuum Recirculating, A.T.C. Only		—	—	—	—	—	1	1	1	1	1	1	2936 754
	Master, A.T.C. Only	70	—	—	—	—	—	1	1	1	1	1	1	2837 382
		71	—	—	—	—	—	1	1	1	1	1	1	3441 538
	CLUTCH, A.T.C. Only		—	—	—	—	—	1	1	1	1	1	1	2837 386
	Master, Clutch, w/Brkt., A.T.C. Only	70	—	—	—	—	—	1	1	1	1	1	1	2936 363
	Push Button, w/A.T.C.	70	—	—	—	—	—	1	1	—	—	—	—	3431 019
		71	—	—	—	—	—	1	1	—	—	—	—	= 3431 181
			—	—	—	—	—	—	—	1	1	1	1	3431 019
	NOTE: For Further Information See P.T.C. 1-48-770													
24-24-151	COVER, Spotcooler Hole	70	—	—	—	—	—	1	—	—	—	—	—	2984 898
	Inst. Pnl. Spot Cooler Hole P-E, P-L, D-E	71	—	—	—	—	—	1	1	—	—	—	—	2985 007
	P-M, P-H, P-P, D-L, D-M, D-H	71	—	—	—	—	—	1	1	—	—	—	—	2985 013
24-24-154	BRACKET, Master and Clutch Switch Mtg.	70	—	—	—	—	—	1	1	1	1	1	1	2936 364
24-24-155	PLATE, Mtg., w/A.T.C.	70	—	—	—	—	—	—	—	1	1	1	1	2884 231
24-24-156	KNOBS													
	Heater Temp. Control		—	—	—	—	—	—	—	1	1	1	1	2884 418
	A/C and Heater Control		—	AR	—	—	—	—	—	—	—	—	—	3431 330
	Heater Temp. Control	71	—	—	—	1	1	—	—	—	—	—	—	3431 158
	Heater and Defroster	71	—	—	—	1	1	—	—	—	—	—	—	3431 159
	Rr. A/C Switch	71	—	—	—	—	—	—	—	1	1	1	—	3488 199
	Thumbwheel, w/A.T.C.		—	—	—	—	—	1	—	—	—	—	—	2884 119
		70	—	—	—	—	—	—	1	—	—	—	—	2884 209
			—	—	—	—	—	—	—	1	1	1	1	2884 239
		70	—	—	—	—	—	—	—	—	—	—	1	2884 531
	NOTE: For Further Information See P.T.C. 1-48-942													

CARLINES: J - Challenger, B - Barracuda, V - Valiant, L - Dart, R - Belvedere - Satellite, W - Coronet - Charger, P - Plymouth, D - Dodge, C - Chrysler, Y - Imperial

AR Indicates use as required.

Numerals in parentheses ( ) refer to notes.

# Indicates parts not listed in any previous parts book.

★ Indicates change or addition.

Printed in U.S.A. January 1972

24-24-0 CONTROLS Cont'd.

CODE	PART NAME	ENG. TYPE OR CU.IN.	V 1-2	B J 1-2	L 1-2	R 1-2	W 1-2	P 1-2	D 1-2	C 1	C 2	C 3	Y 1	PART NUMBER
24-24-159	REGULATOR, Control Vacuum	70	—	—	—	—	—	1	—	—	—	—	—	2884 333
	(Also in 1-48-374)	70	—	—	—	—	—	—	1	—	—	—	—	2884 277
		70	—	—	—	—	—	—	—	1	1	1	—	2884 368
	A/C and Htr. Control Vacuum	71	—	—	—	—	—	1	1	—	—	—	—	3431 263
		71	—	—	—	—	—	—	—	1	1	1	1	3431 206
24-24-161	CONTROL													
	Auto Temp. Complete	70	—	—	—	—	—	1	—	—	—	—	—	2884 341
		70	—	—	—	—	—	—	1	—	—	—	—	2884 354
		70	—	—	—	—	—	—	—	1	1	1	—	2884 373
		71	—	—	—	—	—	—	—	1	1	1	—	3431 197
		71	—	—	—	—	—	—	—	—	—	—	1	3431 198
		70	—	—	—	—	—	—	—	—	—	—	1	2884 372
	Servo Unit A.T.C. Comp.	71	—	—	—	—	—	—	—	1	1	1	1	3441 530
	A/Cond. and Htr., w/A.T.C.	70	—	—	—	—	—	1	1	1	1	1	1	2936 042
	A/Cond. and Htr., w/Out A.T.C.	70	—	—	—	—	—	1	1	1	1	1	1	3431 270
		71	—	—	—	—	—	—	—	1	1	1	—	3431 196
		71	—	—	—	—	—	—	—	—	—	—	1	≠3431 289
	A/C and Htr., w/out A.T.C., Dual	70	—	—	—	—	—	—	—	1	1	1	—	2884 368
	w/Out A.T.C.	70	—	—	—	—	—	—	1	—	—	—	—	2884 349
	Vacuum Regulator	70	—	—	—	—	—	—	1	—	—	—	—	2884 277
	w/Out A.T.C.	70	—	—	—	—	—	1	—	—	—	—	—	2884 332
	A/C and Htr. Temp. Comp.	71	—	—	—	—	—	1	1	—	—	—	—	3431 262
	NOTE: For Further Information See P.T.C. 1-48-4													
24-24-164	EXTENSION and COVER													
	Off		1	—	1	—	—	—	—	—	—	—	—	2864 858
	Max. A/C		1	—	1	—	—	—	—	—	—	—	—	2864 859
	A/Cond.		1	—	1	—	—	—	—	—	—	—	—	2864 860
	Heat		1	—	1	—	—	—	—	—	—	—	—	2864 861
	Defrost		1	—	1	—	—	—	—	—	—	—	—	2864 862
	Off		—	1	—	—	—	—	—	—	—	—	—	2884 711
	Max. A/C		—	1	—	—	—	—	—	—	—	—	—	2884 712
	A/Cond.		—	1	—	—	—	—	—	—	—	—	—	2884 713
	Heat		—	1	—	—	—	—	—	—	—	—	—	2884 714
	Defrost		—	1	—	—	—	—	—	—	—	—	—	2884 715
	EXTENSION, Push Button													
	Off	70	—	—	—	1	1	—	—	—	—	—	—	2884 741
	Max. A/C	70	—	—	—	1	1	—	—	—	—	—	—	2884 740
	A/Cond.	70	—	—	—	1	1	—	—	—	—	—	—	2884 739
	Heat	70	—	—	—	1	1	—	—	—	—	—	—	2884 738
	Defrost	70	—	—	—	1	1	—	—	—	—	—	—	2884 737
	Temp	70	—	—	—	1	1	—	—	—	—	—	—	2884 735
	Fan	70	—	—	—	1	1	—	—	—	—	—	—	2884 734
w/out A.T.C.	Off		—	—	—	—	—	1	1	—	—	—	—	2884 251
	Max. A/C		—	—	—	—	—	1	1	—	—	—	—	2884 252
	A/Cond.		—	—	—	—	—	1	1	—	—	—	—	2884 253
	Heat		—	—	—	—	—	1	1	—	—	—	—	2884 254
	Defrost		—	—	—	—	—	1	1	—	—	—	—	2884 255
w/A.T.C.	Off		—	—	—	—	—	1	—	—	—	—	—	2884 121
	Auto.		—	—	—	—	—	1	—	—	—	—	—	2884 122
	Hi Auto		—	—	—	—	—	1	—	—	—	—	—	2884 123
	Defrost		—	—	—	—	—	1	—	—	—	—	—	2884 124
	Hi Defrost		—	—	—	—	—	1	—	—	—	—	—	2884 125
w/out A.T.C.	Off		—	—	—	—	—	—	1	—	—	—	—	2884 260
	Max. A/C		—	—	—	—	—	—	1	—	—	—	—	2884 261
	A/Cond.		—	—	—	—	—	—	1	—	—	—	—	2884 468
	Defrost		—	—	—	—	—	—	1	—	—	—	—	2884 263
w/A.T.C.	Off		—	—	—	—	—	—	1	—	—	—	—	2884 215
	Auto		—	—	—	—	—	—	1	—	—	—	—	2884 216
	Hi Auto	70	—	—	—	—	—	—	1	—	—	—	—	2884 217
	Defrost	70	—	—	—	—	—	—	1	—	—	—	—	2884 218

CARLINES J - Challenger, B - Barracuda, V - Valiant, L - Dart, R - Belvedere - Satellite, W - Coronet - Charger, P - Plymouth, D - Dodge, C - Chrysler, Y - Imperial

AR Indicates use as required.

Numerals in parentheses ( ) refer to notes.

# Indicates parts not listed in any previous parts book.

★ Indicates change or addition.

Printed in U.S.A. January 1972

CODE	PART NAME	ENG. TYPE OR CU.IN.	V 1-2	B J 1-2	L 1-2	R 1-2	W 1-2	P 1-2	D 1-2	C 1	C 2	C 3	Y 1	PART NUMBER
24-24-0	**CONTROLS Cont'd.**													
24-24-164	EXTENSION and COVER Cont'd.													
	Hi Defrost	70	—	—	—	—	—	—	1	—	—	—	—	2884 219
	w/out A.T.C. Off		—	—	—	—	—	—	—	1	1	1	1	2884 383
	Max. A/C		—	—	—	—	—	—	—	1	1	1	1	2884 384
	A/Cond.		—	—	—	—	—	—	—	1	1	1	1	2884 385
	Heat		—	—	—	—	—	—	—	1	1	1	1	2884 386
	Defrost		—	—	—	—	—	—	—	1	1	1	1	2884 387
	w/A.T.C. Off		—	—	—	—	—	—	—	1	1	1	1	2884 390
	Auto		—	—	—	—	—	—	—	1	1	1	1	2884 391
	Hi Auto		—	—	—	—	—	—	—	1	1	1	1	2884 392
	Defrost		—	—	—	—	—	—	—	1	1	1	1	2884 393
	Hi Defrost		—	—	—	—	—	—	—	1	1	1	1	2884 394
	Off	70	—	—	—	—	—	—	—	—	—	—	1	2884 457
	Auto	70	—	—	—	—	—	—	—	—	—	—	1	2884 458
	Hi Auto	70	—	—	—	—	—	—	—	—	—	—	1	2884 459
	Defrost	70	—	—	—	—	—	—	—	—	—	—	1	2884 460
	Hi Defrost	70	—	—	—	—	—	—	—	—	—	—	1	2884 461
	NOTE: For Further Information See P.T.C. 1-48-12													
24-24-167	LAMP, A/Cond. and Heater Control		1	—	1	—	—	—	—	—	—	—	—	2864 842
	Temp Control, w/Socket	70	—	—	—	1	1	—	—	—	—	—	—	2884 575
		70	—	—	—	—	—	—	1	—	—	—	—	2884 265
	Auto. Temp. Control Mtg.	70	—	—	—	—	—	—	1	—	—	—	—	2884 214
	Auto. Temp. Control Thumbwheel, w/Bracket	70	—	—	—	—	—	—	1	—	—	—	—	2884 449
	Contact A/C and Htr. Control Lamp Socket		—	—	—	1	1	—	—	—	—	—	—	2256 966
	NOTE: For Further Information See P.T.C. 1-48-10													
24-24-169	LIGHTSHIELD, A/Cond. and Heater Control		1	—	1	—	—	—	—	—	—	—	—	2864 867
24-24-170	PAD, Push Button		1	—	1	—	—	—	—	—	—	—	—	2864 600
	V-S, L-M,		1	—	1	—	—	—	—	—	—	—	—	2884 489
			—	—	—	—	—	—	—	1	1	1	1	2884 240
24-24-177	SLIDER, A/Cond. and Heater Control													
		Temp.	—	—	—	—	—	—	1	—	—	—	—	2884 259
		Fan 70	—	—	—	—	—	—	1	—	—	—	—	2884 205
24-24-183	NUT, Push Auto. Temp. Control Gear Retainer		—	—	—	—	—	—	—	2	2	2	2	2197 678
24-24-184	COVER, A/Cond. and Heater Vent	Rt.	—	—	—	—	—	1	1	—	—	—	—	3441 188
		Lt. 71	—	—	—	—	—	1	—	—	—	—	—	3441 765
24-25-0	**COMPRESSOR**													
	NOTE: The part number stamped on Compressor Identification Plate is a production number and may be used to identify component parts requirement for that compressor (Example: Code 24-25-5)													
24-25-2	PISTON RING PACKAGE		AR	AR	AR	AR	AR	AR	AR	AR	AR	AR	AR	2275 207
24-25-3	PISTON and CONNECTING ROD PACKAGE													
	V2 Compressor		AR	AR	AR	AR	AR	AR	AR	AR	AR	AR	AR	2932 972
	RV2 Compressor		AR	AR	AR	AR	AR	AR	AR	AR	AR	AR	AR	2541 330
24-25-5	COMPRESSOR'S V2, Replaces Production Part No's. 2951 193, 2951 194, 2951 195, 2951 220, 2951 268, 2951 271, 2953 349, 2953 568, 2961 947, 2953 588, 3462 019, 2960 782, 2941 998, 3462 350, 3462 419, 3462 420, 2961 920, 3512 708 3462 919, 3462 920, 3462 998, 3512 062, 3512 706, 3512 707 3491 270, 3491 271, 3484 252, PER NOTE		1	1	1	1	1	1	1	—	—	—	—	3484 253

CARLINES: J - Challenger, B - Barracuda, V - Valiant, L - Dart, R - Belvedere - Satellite, W - Coronet - Charger, P - Plymouth, D - Dodge, C - Chrysler, Y - Imperial

AR Indicates use as required.

Numerals in parentheses ( ) refer to notes.

# Indicates parts not listed in any previous parts book.

★ Indicates change or addition.

Printed in U.S.A. January 1972

CODE	PART NAME		ENG. TYPE OR CU.IN.	V 1-2	B J 1-2	L 1-2	R 1-2	W 1-2	P 1-2	D 1-2	C 1	C 2	C 3	Y 1	PART NUMBER
24-25-0	**COMPRESSOR Cont'd.**														
24-25-5	COMPRESSORS Cont'd.														
	RV2, Replaces Production Part No's. 2951 269, 2951 270, 3462 005, 3462 020, 3512 710, 3512 711, 3462 021, 3462 351, 3462 352, PER NOTE			—	—	—	1	1	1	1	1	1	1	1	2941 875
24-25-8	LUBRICANT, Compressor, 1 Quart			AR	AR	AR	AR	AR	AR	AR	AR	AR	AR	AR	1450 769
24-25-10	SUPPORTS, Compressor														
		Rt.	225	1	1	1	1	1	1	1	—	—	—	—	2806 152
		Rt.	318	1	1	1	1	1	1	1	—	—	—	—	3462 949
		Rt. 71	318	1	1	1	1	1	1	1	—	—	—	—	3577 173
		Rt. 71	340	1	1	1	1	1	—	—	—	—	—	—	3577 173
		Rt. 71	360	—	—	—	—	—	1	1	1	1	1	—	3577 173
		Rr.	225	1	—	1	—	—	—	—	—	—	—	—	2806 812
		Rr.	225	—	1	—	1	1	1	1	—	—	—	—	2946 134
		Rr. Rt.	383	—	1	—	1	1	1	1	1	1	1	—	3462 354
		Rr. Lt.	383	—	1	—	1	1	1	1	1	1	1	—	3462 022
		Rr. Rt.	440	—	1	—	1	1	1	1	1	1	1	1	3462 353
		Rr. Lt.	440	—	1	—	1	1	1	1	1	1	1	1	3462 023
24-25-15	BRACKET'S														
	Compressor Mtg.	Frt.	225	1	1	1	1	1	1	1	—	—	—	—	2468 809
	W/318, 340, 360 Eng.			1	1	1	1	1	1	1	1	1	1	—	2951 822
		Frt.	383	—	1	—	1	1	1	1	1	1	1	1	2899 526
		Frt.	440	—	1	—	1	1	1	1	1	1	1	1	2899 526
	w/318, 340 Eng.	Rr.		1	1	1	1	1	1	1	—	—	—	—	2951 866
		Rr.	360	—	—	—	—	—	1	1	1	1	1	—	2951 866
		Rr.	383	—	1	—	1	1	1	1	1	1	1	—	2951 809
		Rr.	440	—	1	—	1	1	1	1	1	1	1	1	2899 961
	Compressor Support Side	Lt.	318	1	1	1	1	1	1	1	—	—	—	—	3418 261
		Lt.	340	1	1	1	—	—	—	—	—	—	—	—	3418 261
		Lt.	360	—	—	—	—	—	1	1	1	1	1	—	3418 261
	STRAP, Alternator Adj.	70		—	1	—	1	1	1	1	1	1	1	1	1999 184
24-25-20	PULLEY and HUBS														
	Single Groove, Warner	6 5/8" O.D.		1	1	1	1	1	1	1	—	—	—	—	2521 824
	Double Groove	5 3/8" O.D. Type Warner		1	1	1	1	1	1	1	1	1	1	1	2837 163
24-25-25	PULLEY, Compressor Drive		225	1	1	1	1	1	1	1	—	—	—	—	2202 794
24-25-31	SHIELD, Idler Pulley Bearing		225	1	1	1	1	1	1	1	—	—	—	—	2658 758
24-25-35	PULLEY, Compressor Idler		225	1	1	1	1	1	1	1	1	—	—	—	2203 031
24-25-38	PLATE, Compressor Specification			—	—	—	—	—	1	1	1	1	1	—	2837 128
	PLATE, Compressor Specification			1	1	1	1	1	—	—	—	—	—	—	2277 731
24-25-45	BRACKETS, Idler Pulley and Idler Roller														
	Idler Pulley		225	1	1	1	1	1	1	1	—	—	—	—	2203 035
24-25-70	CRANKSHAFT GAS SEAL PACKAGE			AR	AR	AR	AR	AR	AR	AR	AR	AR	AR	AR	1426 501
24-25-78	NUT A/C, Htr. or A.T.C. Liq. Line Male														
	Mtg.	71		1	1	1	1	1	1	1	1	1	1	1	3441 740
24-25-84	HEAD, Compressor Cylinder	Rt.		1	1	1	1	1	1	1	1	1	1	1	2000 083
	Up to April, 1971	Lt.		1	1	1	1	1	1	1	1	1	1	1	1999 502
	After April 1971	Lt.		1	1	1	1	1	1	1	1	1	1	1	#3604 299
24-25-93	VALVE PLATE PACKAGE	Rt.		1	1	1	1	1	1	1	1	1	1	1	2275 204
		Lt.		1	1	1	1	1	1	1	1	1	1	1	2275 205
24-25-94	GASKET, Cylinder Head			2	2	2	2	2	2	2	2	2	2	2	1990 584
	Valve Plate			2	2	2	2	2	2	2	2	2	2	2	1990 598
24-25-107	FITTING'S														
	Suction, For Compressor Part No's. 2951 194, 2953 568, 3462 350, 3462 351, 3462 352, 3462 920	70		1	1	1	1	1	1	1	1	1	1	1	2938 228
	2951 193, 3512 062	70		1	1	1	1	1	1	1	1	1	1	1	2938 229
	2951 195, 3462 998	70		1	1	1	1	1	1	1	1	1	1	1	2938 227

CARLINES: J - Challenger, B - Barracuda, V - Valiant, L - Dart, R - Belvedere - Satellite, W - Coronet - Charger, P - Plymouth, D - Dodge, C - Chrysler, Y - Imperial

AR Indicates use as required.

Numerals in parentheses ( ) refer to notes.

# Indicates parts not listed in any previous parts book.

★ Indicates change or addition.

Printed in U.S.A. January 1972

24-25-0 COMPRESSOR Cont'd.

CODE	PART NAME	ENG. TYPE OR CU.IN.	V 1-2	B J 1-2	L 1-2	R 1-2	W 1-2	P 1-2	D 1-2	C 1	C 2	C 3	Y 1	PART NUMBER
24-25-107	FITTINGS Cont'd.													
	2951 220, 2951 271, 3462 419,	70												
	2960 782	70	1	1	1	1	1	1	1	1	1	1	1	2938 230
	2951 268, 2951 269, 2951 270,	70												
	3462 005	70	1	1	1	1	1	1	1	1	1	1	1	2938 176
	2953 349, 3491 270	70	1	1	1	1	1	1	1	1	1	1	1	2941 891
	2953 588, 3491 271	70	1	1	1	1	1	1	1	1	1	1	1	2941 846
	2941 998, 3484 252	70	1	1	1	1	1	1	1	1	1	1	1	2010 872
	3462 019, 3462 020, 3462 021	70	1	1	1	1	1	1	1	1	1	1	1	3406 191
	3462 420, 3462 919	70	1	1	1	1	1	1	1	1	1	1	1	3408 425
	2951 195, 3462 998	71	1	1	1	1	1	1	1	1	1	1	1	3555 190
	2941 998, 3484 252	71	1	1	1	1	1	1	1	1	1	1	1	3555 191
	2953 349, 3491 270	71	1	1	1	1	1	1	1	1	1	1	1	3555 192
	2953 588, 3491 271	71	1	1	1	1	1	1	1	1	1	1	1	3555 193
	2951 193, 3512 062	71	1	1	1	1	1	1	1	1	1	1	1	3555 194
	2951 194, 2953 568, 3462 350, 3462 920	70	1	1	1	1	1	1	1	1	1	1	1	3514 387
	2951 220, 2951 271, 2960 782, 3462 419	70	1	1	1	1	1	1	1	1	1	1	1	3514 388
	3462 019, 2961 947	70	1	1	1	1	1	1	1	1	1	1	1	3514 389
	Discharge, For Compressor No's. 2951 193, 2951 194, 2951 195, 3462 420,													
	3462 920, 3462 998, 3512 062	70	1	1	1	1	1	1	1	1	1	1	1	2938 219
	2941 998, 3484 252	70	1	1	1	1	1	1	1	1	1	1	1	2814 688
24-25-110	GASKET, Suction Fitting		1	1	1	1	1	1	1	1	1	1	1	1997 446
	GASKET, w/Terminal, E.T.R. Valve		—	—	—	—	—	1	1	1	1	1	1	2837 403
24-25-114	SCREEN, Compressor Suction		1	1	1	1	1	1	1	1	1	1	1	1996 845
	FILTER, Comp. Suction	6 cyl.	—	—	—	1	—	—	—	—	—	—	—	3484 412
24-25-127	CAP, 1/4", Flare Fitting Seal		AR	AR	AR	AR	AR	AR	AR	AR	AR	AR	AR	1989 202
	Cap A/C and Htr. Mtg. Screw		—	1	—	1	1	—	—	—	—	—	—	2423 737
24-25-132	VALVES													
	Pressure Regulator For Compressor's 2951 194, 2951 220, 2951 268, 2951 269,													
	3462 005		1	1	1	1	1	1	1	1	1	1	1	2776 146
	Temp. Regulator		1	1	1	1	1	1	1	1	1	1	1	2837 402
24-25-133	CORE, Gage Fitting Valve		AR	AR	AR	AR	AR	AR	AR	AR	AR	AR	AR	1992 947
	Discharge Line Check		1	1	1	1	1	1	1	1	1	1	1	1992 947
24-25-135	SEALS													
	Pressure Regulator Valve		1	1	1	1	1	1	1	1	1	1	1	1994 410
	Discharge Fitting		1	1	1	1	1	1	1	1	1	1	1	2008 388
24-25-137	SPRING, Pressure Regulator Valve Spacer		1	1	1	1	1	1	1	1	1	1	1	1994 408
24-25-154	CRANKSHAFT PACKAGE													
	V2 Compressor		AR	AR	AR	AR	AR	AR	AR	AR	AR	AR	AR	2815 762
	RV2 Compressor		AR	AR	AR	AR	AR	AR	AR	AR	AR	AR	AR	2815 755
24-25-156	SCREW'S, Compressor Drive Clutch Pulley Mtg.													
	(Pitts Type)		1	1	1	1	1	1	1	1	1	1	1	1819 843
	(Warner Type)		1	1	1	1	1	1	1	—	—	—	—	1658 638
24-25-157	WASHER, Compressor Clutch Pulley Mtg.		1	1	1	1	1	1	1	1	1	1	1	2097 102
24-25-160	BEARING, Crankshaft Ball													
	V2 Compressor		1	1	1	1	1	1	1	—	—	—	—	1854 829
	RV2 Compressor		1	1	1	1	1	1	1	1	1	1	1	2019 681
	Bearing Rear Main Sleeve V2, RV2		1	1	1	1	1	1	1	1	1	1	1	1984 152
24-25-162	CRANKSHAFT BEARING HOUSING PACKAGE													
	V2 Compressor, w/out Bearing		AR	AR	AR	AR	AR	AR	AR	AR	AR	AR	AR	2196 315
	RV2 Compressor		AR	AR	AR	AR	AR	AR	AR	AR	AR	AR	AR	2541 332
	V2 Compressor, w/Bearing		AR	AR	AR	AR	AR	AR	AR	AR	AR	AR	AR	3420 916

CARLINES: J - Challenger, B - Barracuda, V - Valiant, L - Dart, R - Belvedere - Satellite, W - Coronet - Charger, P - Plymouth, D - Dodge, C - Chrysler, Y - Imperial

AR Indicates use as required.

Numerals in parentheses ( ) refer to notes.

# Indicates parts not listed in any previous parts book.

★ Indicates change or addition.

Printed in U.S.A. January 1972

CODE	PART NAME		ENG. TYPE OR CU.IN.	V 1-2	B J 1-2	L 1-2	R 1-2	W 1-2	P 1-2	D 1-2	C 1	C 2	C 3	Y 1	PART NUMBER
24-25-0	**COMPRESSOR Cont'd.**														
24-25-168	WASHER, Crankshaft Thrust			1	1	1	1	1	1	1	1	1	1	1	1747 982
24-25-189	SEAL, Bearing Housing			1	1	1	1	1	1	1	1	1	1	1	1982 542
24-25-219	BEARING, Compressor Clutch			1	1	1	1	1	1	1	1	1	1	1	1769 318
24-25-232	COIL, Compressor Clutch Field														
	1 3/8" Thick x 4 13/16" O.D.			1	1	1	1	1	1	1	1	1	1	1	2097 105
	1 7/8" Thick x 4 3/16" O.D.			1	1	1	1	1	1	1	1	1	1	1	2837 162
24-25-234	RINGS, Compressor Clutch														
	External	3/4" I.D.		1	1	1	1	1	1	1	1	1	1	1	2097 101
		1 3/32" I.D.		1	1	1	1	1	1	1	1	1	1	1	3441 055
		1 1/8" I.D.		1	1	1	1	1	1	1	1	1	1	1	2485 587
	Internal	2 1/16" I.D.		1	1	1	1	1	1	1	1	1	1	1	3441 054
		2 1/2" I.D.		1	1	1	1	1	1	1	1	1	1	1	2097 103
24-25-246	OIL PUMP PACKAGE			1	1	1	1	1	1	1	1	1	1	1	2021 191
24-25-252	SEAL, Oil Pump Cover Oil			1	1	1	1	1	1	1	1	1	1	1	1747 988
24-25-258	SUMP, Compressor Oil			1	1	1	1	1	1	1	1	1	1	1	2869 545
24-25-260	GASKET, Oil Sump			1	1	1	1	1	1	1	1	1	1	1	1982 545
24-26-0	**RECEIVER DRIER**														
24-26-20	DRIER, Receiver, Less Switch														
	w/Tapped Holes and Plugs	70		1	1	1	1	1	1	1	1	1	1	1	3441 244
	Rec. Drier A/C., Htr. or A.T.C. w/Pipe Plug Less Switch, up to Nov. 1, 1970			1	1	1	1	1	1	1	1	1	1	1	3441 738
	Rec. Drier A/C and Htr. or A.T.C. w/Pipe Plug Less Switch After Nov. 1, 1970	71		1	1	1	1	1	1	1	1	1	1	1	=3502 015
24-26-35	BRACKET, Receiver Drier Mtg.			1	1	1	—	—	—	—	—	—	—	—	2219 155
		71		—	—	—	1	1	—	—	—	—	—	—	2219 155
	w/Leece-Neville Alt., 383, 440 Eng.	71		—	—	—	1	1	—	—	—	—	—	—	3441 844
		70		—	—	—	1	1	—	—	—	—	—	—	2607 440
				—	—	—	—	—	1	1	1	1	1	—	2936 474
		70		—	—	—	—	—	—	—	—	—	—	1	2607 526
		71		—	—	—	—	—	—	—	—	—	—	1	3441 890
24-26-100	MUFFLER and TUBE, Compressor														
	Suction, V-1, L-1	70		1	—	1	—	—	—	—	—	—	—	—	3441 279
	Suction V, L.,	71	225	1	—	1	—	—	—	—	—	—	—	—	3441 824
	Discharge, V-1, L-1	70		1	—	1	—	—	—	—	—	—	—	—	3441 278
	Suction, V-2, L-2			1	—	1	—	—	—	—	—	—	—	—	3441 343
	Discharge, V-2, L-2 Up to Jan. 1, 1970	70		1	—	1	—	—	—	—	—	—	—	—	3441 411
	After Jan. 1, 1970	70		1	—	1	—	—	—	—	—	—	—	—	3441 517
	Discharge, V, L,	71	225	1	—	1	—	—	—	—	—	—	—	—	3441 825
	V, L, 318, 340 Eng.,	71		1	—	1	—	—	—	—	—	—	—	—	3441 517
	Suction, B, J. w/RG. Eng.	70	225	—	1	—	—	—	—	—	—	—	—	—	3441 242
	Suction B.J.,	71	225	—	1	—	—	—	—	—	—	—	—	—	3441 818
	Discharge, B, J, w/RG. Eng.	70	225	—	1	—	—	—	—	—	—	—	—	—	3441 243
	Discharge, B, J,	71	225	—	1	—	—	—	—	—	—	—	—	—	3441 817
	R, W,	71	225	—	—	—	1	1	—	—	—	—	—	—	3441 817
	Suction, B,J, w/LA. Eng. (318 or 340 Cu. In.)	70		—	1	—	—	—	—	—	—	—	—	—	3441 192
	Suction, B, J, 318, 340 Eng.	71		—	1	—	—	—	—	—	—	—	—	—	3441 834
	Discharge, B, J, w/LA Eng. Up to Jan. 1, 1970	70		—	1	—	—	—	—	—	—	—	—	—	3441 193
	After Jan. 1, 1970	70		—	1	—	—	—	—	—	—	—	—	—	3441 523
	Discharge, B, J, 318 Eng., All	71		—	1	—	—	—	—	—	—	—	—	—	3441 523
	B-S, J-H, 340 Eng.,	71		—	1	—	—	—	—	—	—	—	—	—	3441 523
	R, W, 318, 340 Eng.,	71		—	—	—	1	1	—	—	—	—	—	—	3441 523
	Suction, B, J, w/B and RB Eng. (383, 426 or 440 Cu. In.)	70		—	1	—	—	—	—	—	—	—	—	—	3441 085
	Suction, B, J, 383, 440 Eng.,	71		—	1	—	—	—	—	—	—	—	—	—	3441 831

CARLINES: J - Challenger, B - Barracuda, V - Valiant, L - Dart, R - Belvedere - Satellite, W - Coronet - Charger, P - Plymouth, D - Dodge, C - Chrysler, Y - Imperial

AR Indicates use as required.

Numerals in parentheses ( ) refer to notes.

# Indicates parts not listed in any previous parts book.

★ Indicates change or addition.

Printed in U.S.A. January 1972

24-26-0 RECEIVER DRIER Cont'd.

CODE	PART NAME	ENG. TYPE OR CU.IN.	V 1-2	B J 1-2	L 1-2	R 1-2	W 1-2	P 1-2	D 1-2	C 1	C 2	C 3	Y 1	PART NUMBER
24-26-100	MUFFLER AND TUBE Cont'd.													
	Discharge, B, J, w/B and RB Eng.													
	Up to Jan. 1, 1970	70	—	1	—	—	—	—	—	—	—	—	—	3441 088
	After Jan. 1, 1970	70	—	1	—	—	—	—	—	—	—	—	—	3441 524
	Discharge, B, J, 383, 440 Eng.,	71	—	1	—	—	—	—	—	—	—	—	—	3441 524
	R, W, 383, 440 Eng.,	71	—	—	—	1	1	—	—	—	—	—	—	3441 524
	Suction, R, W, w/RG. Eng.	70	225	—	—	—	1	1	—	—	—	—	—	3441 271
	Suction, R, W,	71	225	—	—	—	1	1	—	—	—	—	—	3441 818
	Suction, R, W, w/LA Eng. (318 or 340 Cu. In.)	70		—	—	—	1	1	—	—	—	—	—	3441 344
	Suction, R, W, 318, 340 Eng.,	71		—	—	—	1	1	—	—	—	—	—	3441 834
	R, W, 383, 440 Eng., Leece-Neville Alt.	71		—	—	—	1	1	—	—	—	—	—	3441 845
	Discharge, R, W, w/LA Eng. Up to Jan. 1, 1970	70		—	—	—	1	1	—	—	—	—	—	2936 794
	After Jan. 1, 1970 w/225 Eng.	70		—	—	—	1	1	—	—	—	—	—	3441 518
	After Jan. 1, 1970 w/318 Eng.	70		—	—	—	1	1	—	—	—	—	—	3441 519
	Suction, R, W, w/B and RB Eng. (383, 426 or 440 Cu. In.)	70		—	—	—	1	1	—	—	—	—	—	3441 280
	Suction, R, W, 383, 440 Eng.,	71		—	—	—	1	1	—	—	—	—	—	3441 831
	Discharge, R, W, w/B and RB Eng. Up to Jan. 1, 1970	70		—	—	—	1	1	—	—	—	—	—	3441 283
	After Jan. 1, 1970	70		—	—	—	1	1	—	—	—	—	—	3441 520
	Suction, P, D, w/RG Eng. (198 or 225 Cu. In.)	70		—	—	—	—	—	1	1	—	—	—	2936 574
	Discharge, P,D, w/RG. Eng.	70		—	—	—	—	—	1	1	—	—	—	2936 498
	Suction, P, D, w/LA Eng. (318 or 340 Cu. In.)	70		—	—	—	—	—	1	1	—	—	—	2936 724
	Suction, P, D, 318, 360 Eng.,	71		—	—	—	—	—	1	1	—	—	—	3441 832
	Discharge P, D, 318, 340, 360	70		—	—	—	—	—	1	1	—	—	—	3441 199
	P, D, 318, 360 Up to Feb. 1971			—	—	—	—	—	1	1	—	—	—	3441 522
	P, D, 318, 360 After Feb. 1971			—	—	—	—	—	1	1	—	—	—	≠3441 992
	C, 360	71		—	—	—	—	—	—	—	1	—	—	≠3441 992
	Suction, P, D, 383, 440 Eng. W/Leece Neville Alternator			—	—	—	—	—	1	1	—	—	—	3441 018
	Suction, W/Leece Neville Alternator		All	—	—	—	—	—	—	—	1	1	1	—	3441 018
	w/EED Alternator			—	—	—	—	—	1	1	1	1	1	1	3441 232
	Discharge, P, D, C, w/B or RB Eng. (383, 426 or 440 Cu. In.)	70		—	—	—	—	—	1	1	1	1	1	—	2936 498
	Suction, P, D, C, Sta. Wgn. Only, w/RG. Eng. (198 or 225 Cu. In.)	70		—	—	—	—	—	1	1	1	1	1	—	2936 721
	Suction, P, D, C, Sta. Wgn. Only, w/LA Eng. (318 or 340 Cu. In.)	70		—	—	—	—	—	1	1	1	1	1	—	2936 723
	Suction P, D, Sta. Wgn. Only Dual Unit 318, 360 Eng.	71		—	—	—	—	—	1	1	—	—	—	—	3441 833
	Suction, P, D, Sta. Wgn. Only, w/B and RB Eng. (383, 426 or 440) and w/Leece Neville Alternator	70		—	—	—	—	—	1	1	—	—	—	—	3441 019
	Suction, Htr. or A.T.C. Dual Unit w/Leece Neville Alt. w/383, 440 Eng.			—	—	—	—	—	1	1	1	1	1	—	3441 019
	Suction, P, D, C, Sta. Wgn. Only, w/B and RB Eng. (383, 426 or 440 Cu. In.) and w/EED Alternator			—	—	—	—	—	1	1	1	1	1	—	3441 233
	Suction, Y, Except Dual Unit			—	—	—	—	—	—	—	—	—	—	1	3441 232
	Suction, Y, w/Dual Unit			—	—	—	—	—	—	—	—	—	—	1	3441 233
	Discharge, Y	70		—	—	—	—	—	—	—	—	—	—	1	2936 742

CODE	PART NAME		ENG. TYPE OR CU.IN.	V 1-2	B J 1-2	L 1-2	R 1-2	W 1-2	P 1-2	D 1-2	C 1	C 2	C 3	Y 1	PART NUMBER
24-27-0	**CONDENSER**														
24-27-5	CONDENSER			1	—	1	—	—	—	—	—	—	—	—	2936 778
	22", 32 Holes End Plates			—	1	—	1	1	—	—	—	—	—	—	3441 064
	24 1/4", 32 Holes End Plates			—	1	—	1	1	—	—	—	—	—	—	3441 065
	24 1/4", 16 Holes End Plates			—	1	—	1	1	—	—	—	—	—	—	3441 934
		70	225	—	—	—	1	1	—	—	—	—	—	—	3441 422
	w/318, 383, 440 Eng.	70		—	—	—	1	1	—	—	—	—	—	—	3441 423
		70		—	—	—	1	1	—	—	—	—	—	—	2936 297
	w/318, 383, 440 Eng.			—	—	—	—	—	1	1	—	—	—	—	2936 296
				—	—	—	—	—	—	—	1	1	1	—	2936 296
		26" 71	All	—	—	—	—	—	1	1	1	1	1	—	3441 614
		w/A.T.C. 70		—	—	—	—	—	—	—	—	—	—	1	2936 485
		w/A.T.C. 71		—	—	—	—	—	—	—	—	—	—	1	3441 535
24-28-0	**EVAPORATOR**														
24-28-3	COVERS, Roof Unit Tubes (Paint as Req'd.)														
	Tube At Roof Rail, 2 and 3 Seat Sta. Wgn.			—	—	—	—	—	1	1	1	—	—	—	4106 EW2
	Tube Lower Rt., 2 and 3 Seat Sta. Wgn.			—	—	—	—	—	1	1	1	—	—	—	4102 EW2
		Black 71		—	—	—	—	—	1	1	—	—	—	—	4102 FX9
		Black 71		—	—	—	—	—	—	—	1	—	—	—	4102 FX9
		White 71		—	—	—	—	—	—	—	1	—	—	—	4102 FW2
	Tube Upper Rt., 2 and 3 Seat Sta. Wgn.			—	—	—	—	—	1	1	1	—	—	—	4104 EW2
	Dual Unit Hinge Lt. (Paint as Req.)			—	—	—	—	—	1	1	1	1	1	—	2025 EW2
24-28-6	SUB COOLER, Dual Unit w/A.T.C.	70		—	—	—	—	—	—	—	—	—	—	1	2936 486
24-28-7	TURNBUCKLE, Shut Off Door Lever Shaft Adj.			1	—	1	—	—	—	—	—	—	—	—	2521 621
24-28-8	BRACKETS, Mounting														
	Roof Unit	Rt.		—	—	—	—	—	1	1	1	1	1	—	2936 410
		Lt.		—	—	—	—	—	1	1	1	1	1	—	2936 411
	Plenum			—	—	—	—	—	1	1	1	1	1	1	2936 228
	Rear Evap. Rear			—	—	—	—	—	—	—	—	—	—	1	2936 141
	Rear Evap. Side	Rt.		—	—	—	—	—	—	—	—	—	—	2	2936 142
		Lt.		—	—	—	—	—	—	—	—	—	—	2	2936 143
24-28-10	SCREENS														
	Evap. Coil Condensate			1	—	1	—	—	—	—	—	—	—	—	2521 953
		Lower		1	—	1	—	—	—	—	—	—	—	—	2837 243
24-28-13	REGULATOR, Evap. Coil Sensing														
	Up to Jan. 1, 1970	70		—	—	—	—	—	1	1	1	1	1	1	2936 358
	After Jan. 1, 1970			—	—	—	—	—	1	1	1	1	1	1	3441 450
24-28-16	STRAP, Defroster Tube Retention			1	—	1	—	—	—	—	—	—	—	—	3441 318
	A/C and Htr. Rear U/Body Hose			—	—	—	—	—	1	1	1	1	1	—	2945 704
	Rear U/Body Hose Sta. Wgn.			—	—	—	—	—	1	1	1	1	1	—	2945 704
24-28-17	CLAMPS														
	Water Valve Inlet and Outlet Hose			—	—	—	4	4	—	—	—	—	—	—	2521 726
	Roof Unit Liq. and Suction Frt. Hose Mtg.			—	—	—	—	—	1	1	1	1	1	—	2936 886
	U/Body Tubes Mtg. Frt., w/A.T.C.			—	—	—	—	—	—	—	—	—	—	1	2936 886
	Roof Unit Liq. and Suction Frt. Hose Mtg. Rr.			—	—	—	—	—	1	1	1	1	1	—	2936 887
	Rr. U/Body Tubes Mtg. Frt.			—	—	—	—	—	—	—	—	—	—	1	2936 887
24-28-18	ADAPTER, Tube w/Nut Kit														
	3/8" Dia. Tube			1	1	1	1	1	1	1	1	1	1	1	2485 914
	1/2			1	1	1	1	1	1	1	1	1	1	1	2485 915
	5/8			1	1	1	1	1	1	1	1	1	1	1	2485 916
	3/4			1	1	1	1	1	1	1	1	1	1	1	2485 920
24-28-19	GROMMETS														
	Liq. Tube	70		1	—	1	—	—	—	—	—	—	—	—	2837 109

CARLINES: J - Challenger, B - Barracuda, V - Valiant, L - Dart, R - Belvedere - Satellite, W - Coronet - Charger, P - Plymouth, D - Dodge, C - Chrysler, Y - Imperial

AR Indicates use as required.

# Indicates parts not listed in any previous parts book.

Numerals in parentheses ( ) refer to notes.

★ Indicates change or addition.

Printed in U.S.A. January 1972

CODE	PART NAME	ENG. TYPE OR CU.IN.	V 1-2	B J 1-2	L 1-2	R 1-2	W 1-2	P 1-2	D 1-2	C 1	C 2	C 3	Y 1	PART NUMBER
24-28-0	**EVAPORATOR Cont'd.**													
24-28-19	GROMMETS Cont'd.													
	w/Hose, Up to Feb. 1, 1970	70	—	1	—	—	—	—	—	—	—	—	—	3431 081
	w/Hose, After Feb. 1, 1970	70	—	1	—	—	—	—	—	—	—	—	—	3431 380
	W/Hose	71	—	1	—	—	—	—	—	—	—	—	—	3431 470
	Temp. Control Valve Mtg.	70	—	—	—	3	3	—	—	—	—	—	—	2521 676
	Htr. Core Tube Sealing, Dash	70	—	—	—	1	1	—	—	—	—	—	—	2607 182
	Control Vacuum Hose, Dash		1	—	1	1	1	—	—	—	—	—	—	3441 418
	Control Vac. Hose		1	—	1	—	—	—	—	—	—	—	—	3441 418
	Control Vac. Hose Dash	71	—	—	—	—	—	—	—	1	1	1	1	1886 101
	Hose Assy. A/C and Htr., Up to Dec. 1, 1970		—	—	—	1	1	—	—	—	—	—	—	3431 188
	Hose Assy. A/C and Htr. After Dec. 1, 1970		—	—	—	1	1	—	—	—	—	—	—	3431 472
	Roof Unit Rr. Liq. Hose	70	—	—	—	—	—	1	1	1	1	1	—	2277 767
24-28-22	SCREWS													
	Rr. Hsg. Mtg. to Frt. Hsg.		—	AR	—	AR	AR	—	—	—	—	—	—	3441 172
	Rr. Hsg. to Frt. Hsg.		—	—	—	AR	AR	—	—	—	—	—	—	3441 172
	Rr. Hsg. to Htr. Core Mtg.		—	—	—	—	—	2	2	2	2	2	2	3441 172
	Frt. Hsg. to Rr. Hsg. Mtg.		—	17	—	17	17	17	17	17	17	17	17	3441 172
	Frt. Hsg. to Rr. Hsg. Mtg.		—	—	—	—	—	2	2	2	2	2	2	3441 173
24-28-24	For HOSES Refer to Hose Chart Illustrated Section of Group 24.													
	Repair Kit, Htr. Control Vacuum Hose		—	—	—	—	—	AR	AR	AR	AR	AR	AR	2275 215
24-28-25	HOUSING and SCROLL													
	Scroll w/Air Inlet, Evap.		1	—	1	—	—	—	—	—	—	—	—	3441 033
24-28-29	BRACKETS													
	Suction Line Mtg.	70 225	—	—	—	—	—	1	1	—	—	—	—	3441 176
		70 318	—	—	—	—	—	1	1	—	—	—	—	3441 176
	Htr. Hose Support	225	—	1	—	—	—	1	1	—	—	—	—	3441 036
	Auto. Temp. Control Hose Support		—	—	—	—	—	—	—	—	—	—	1	2936 706
	NOTE: For Further Information See P.T.C. 1-48-559													
24-28-31	GASKET, Water Outlet and Inlet Tube Mtg.	70	—	—	—	1	1	—	—	—	—	—	—	2521 152
24-28-34	DOOR, w/Frame, Htr. Recirc.		1	—	1	—	—	—	—	—	—	—	—	2521 554
24-28-39	RESTRICTOR, Control Vacuum Hose		—	1	—	2	2	1	1	1	1	1	—	2884 074
24-28-40	COVER, w/Insulator, A/Cond and Htr. Top		1	—	1	—	—	—	—	—	—	—	—	2936 917
24-28-43	TRAY, DRAIN													
	Evap. Drain Pan		1	—	1	—	—	—	—	—	—	—	—	2936 894
	Evap. Coil and Drain	70	—	—	—	1	1	—	—	—	—	—	—	2923 907
	Rr. Evap. Unit Support Pan and Coil		—	—	—	—	—	—	—	—	—	—	1	2936 145
24-28-44	FERRULE, Condensate Drain Tube	70	—	—	—	2	2	—	—	—	—	—	—	2521 315
24-28-49	NUT, Rr. Blower Mtg.		—	—	—	—	—	1	1	—	—	—	—	2427 119
	Rr. Blower Switch Mtg.		—	—	—	—	—	1	—	—	—	—	—	2820 116
	Rr. Blower Switch and Bezel Mtg.		—	—	—	—	—	1	1	—	—	—	—	2427 119
24-28-64	KIT, Vacuum Tube Repair 1/4" I.D.	70	—	AR	—	AR	AR	AR	AR	AR	AR	AR	AR	2448 620
	3/16 I. D.		—	—	—	AR	AR	AR	AR	AR	AR	AR	AR	2448 621
	Vacuum Tube Repair 25 ft. long		—	1	—	—	—	—	—	—	—	—	—	2837 762
24-28-70	GRILLE, In Car Sensor		—	—	—	—	—	1	1	—	—	—	—	3441 013
24-28-72	CLIPS													
	Floor Air Hsg. Lt. Spotcooler Duct Retaining		—	1	—	—	—	—	—	—	—	—	—	2521 729
	Defroster Tube Retaining	70	—	—	—	2	2	—	—	—	—	—	—	2521 729
	Rt. Spotcooler Flex Tube Mtg.		—	—	—	—	—	2	2	—	—	—	—	2521 729
	Defroster Hose To Duct Mtg.	70	—	—	—	—	—	4	4	—	—	—	—	2521 729
	Tube to Spotcooler Duct Rt. and Lt.		—	—	—	—	—	—	—	1	1	1	1	2521 729
	Spotcooler Duct to Dist. Hsg.		—	—	—	—	—	—	—	1	1	1	1	2521 729
	Duct Mtg. to Spotcooler Lt.		—	—	—	—	—	—	—	3	3	3	3	2521 729
	Center Outlet and Rt. Spotcooler to Duct		—	2	—	—	—	—	—	—	—	—	—	2837 285
	Ctr. Rt., Outlet Duct to Outlet Mtg.	71	—	—	—	2	2	—	—	—	—	—	—	2837 285

CARLINES: J - Challenger, B - Barracuda, V - Valiant, L - Dart, R - Belvedere - Satellite, W - Coronet - Charger, P - Plymouth, D - Dodge, C - Chrysler, Y - Imperial

AR Indicates use as required.

Numerals in parentheses ( ) refer to notes.

# Indicates parts not listed in any previous parts book.

★ Indicates change or addition.

Printed in U.S.A. January 1972

24-28-0 EVAPORATOR Cont'd.

CODE	PART NAME	ENG. TYPE OR CU.IN.	V 1-2	B J 1-2	L 1-2	R 1-2	W 1-2	P 1-2	D 1-2	C 1	C 2	C 3	Y 1	PART NUMBER
24-28-72	CLIPS Cont'd.													
	Spotcooler Duct to Bezel Mtg. Lt.		—	1	—	—	—	—	—	—	—	—	—	2837 285
	Lower Lt. Spotcooler Duct		—	—	—	—	—	1	1	—	—	—	—	2837 285
	Spotcooler Duct Mtg.		—	—	—	—	—	2	4	—	—	—	—	2837 285
	Center Outlet Duct Mtg.		—	—	—	—	—	2	2	2	2	2	2	2837 285
	Ctr. Air Outlet Duct to Hsg.	71	—	—	—	—	—	—	—	2	2	2	2	2837 285
	Htr. Hose to Valve Cover		1	—	1	—	—	—	—	—	—	—	—	3441 036
	Evap. Top Cover to Hsg. Mtg.		1	—	1	—	—	—	—	—	—	—	—	271 025
	Evap. Unit to Htr. Unit Mtg.		1	—	1	—	—	—	—	—	—	—	—	271 025
24-28-73	DUCTS													
	Defroster		1	—	1	—	—	—	—	—	—	—	—	2837 810
	Air Outlet Partial		1	—	1	—	—	—	—	—	—	—	—	2837 062
	Center Air Outlet and Rt. S/Cooler		—	1	—	—	—	—	—	—	—	—	—	2936 842
		Lt.	—	1	—	—	—	—	—	—	—	—	—	2936 839
	Connector Spotcooler Tube	Lt. 70	—	—	—	1	1	—	—	—	—	—	—	2837 555
	Spotcooler	Rt. 70	—	—	—	1	1	—	—	—	—	—	—	3441 154
	Center Air Outlet, Fast Back Only	70	—	—	—	—	1	—	—	—	—	—	—	2837 652
	Except Fast Back	70	—	—	—	1	1	—	—	—	—	—	—	2837 579
	F/Air Inlet	70	—	—	—	1	1	—	—	—	—	—	—	2607 029
	A/C, Htr. Ctr. and Rt. Air Outlet	71	—	—	—	1	1	—	—	—	—	—	—	3441 388
	Spotcooler Lt.	71	—	—	—	1	1	—	—	—	—	—	—	3441 698
	Spotcooler Upper	Lt. 70	—	—	—	—	—	1	—	—	—	—	—	2936 199
	Upper	Lt. 70	—	—	—	—	—	—	1	—	—	—	—	2936 061
	Lower	Lt. 70	—	—	—	—	—	1	—	—	—	—	—	2936 195
	Lower	Lt. 70	—	—	—	—	—	—	1	—	—	—	—	2936 303
	Spotcooler	Lt. Up to April, 1971	—	—	—	—	—	1	1	—	—	—	—	3441 999
		Lt. After April 1971	—	—	—	—	—	1	1	—	—	—	—	3502 163
		Rt. 71	—	—	—	—	—	1	1	—	—	—	—	2936 198
		Rt. 70	—	—	—	—	—	1	—	—	—	—	—	2936 198
		Rt. 70	—	—	—	—	—	—	1	—	—	—	—	2936 302
	Center Air Outlet	70	—	—	—	—	—	1	—	—	—	—	—	2936 308
		Up to Jan. 1970	—	—	—	—	—	—	1	—	—	—	—	2936 309
		After Jan. 1970	—	—	—	—	—	—	1	—	—	—	—	3441 606
	Up. to Jan. 1970	71	—	—	—	—	—	1	1	—	—	—	—	2936 308
	After Jan. 1970	71	—	—	—	—	—	1	1	—	—	—	—	3441 605
	Spotcooler, Connector Ctr. and Lt. A/C and Htr. or A.T.C.		—	—	—	—	—	1	1	—	—	—	—	2936 342
	Spotcooler	Rt. 71	—	—	—	—	—	—	—	1	1	1	1	3441 856
		Lt. 71	—	—	—	—	—	—	—	1	1	1	1	3441 512
	Spotcooler Center		—	—	—	—	—	—	—	1	1	1	1	2936 327
	Rt.		—	—	—	—	—	—	—	1	1	1	1	2936 324
	Lt. Up to Jan. 1970	70	—	—	—	—	—	—	—	1	1	1	1	2936 330
	Lt. After Jan. 1970	70	—	—	—	—	—	—	—	1	1	1	1	3941 508
	Defroster	71	—	—	—	1	1	—	—	—	—	—	—	3441 358
	Defroster		—	—	—	—	—	1	1	—	—	—	—	≠2936 138
	Defroster		—	—	—	—	—	—	—	1	1	1	1	≠2936 139
	Center Air Outlet	70	—	—	—	—	—	—	—	1	1	1	—	2936 380
	Ctr. Air Outlet	71	—	—	—	—	—	—	—	1	1	1	—	3441 350
		70	—	—	—	—	—	—	—	—	—	—	1	2936 320
	Ctr. Air Outlet	71	—	—	—	—	—	—	—	—	—	—	1	3441 337
	NOTE: For Further Information See P.T.C. 1-48-141, Flex Tubes See 24-28-24													
24-28-78	AIR OUTLET, LOUVER, SPOTCOOLER and HOUSING													
	Louver and Housing, Evap. Air Outlet	Chrome Rt. 70	1	—	1	—	—	—	—	—	—	—	—	2837 836
		Chrome Lt. 70	1	—	1	—	—	—	—	—	—	—	—	2837 837
		Chrome Ctr. 70	1	—	1	—	—	—	—	—	—	—	—	2837 837
		Black Plastic Rt.	1	—	1	—	—	—	—	—	—	—	—	3441 487
		Black Plastic Lt.	1	—	1	—	—	—	—	—	—	—	—	3441 487
		Black Plastic Ctr.	1	—	1	—	—	—	—	—	—	—	—	3441 487

CARLINES J - Challenger, B - Barracuda, V - Valiant, L - Dart, R - Belvedere - Satellite, W - Coronet - Charger, P - Plymouth, D - Dodge, C - Chrysler, Y - Imperial

AR Indicates use as required. Numerals in parentheses ( ) refer to notes.

# Indicates parts not listed in any previous parts book. ★ Indicates change or addition.

Printed in U.S.A. January 1972

24-28-0 EVAPORATOR Cont'd.

24-28-78 AIR OUTLET Cont'd.

CODE	PART NAME	ENG. TYPE OR CU.IN.	V 1-2	B J 1-2	L 1-2	R 1-2	W 1-2	P 1-2	D 1-2	C 1	C 2	C 3	Y 1	PART NUMBER
	Spotcooler	Blue Rt. 70	—	1	—	—	—	—	—	—	—	—	—	4226 FB5
		Red Rt. 70	—	1	—	—	—	—	—	—	—	—	—	4226 FE5
		Green Rt. 70	—	1	—	—	—	—	—	—	—	—	—	4226 FF8
		Burnt Orange Rt. 70	—	1	—	—	—	—	—	—	—	—	—	4226 FK5
		Tan Rt. 70	—	1	—	—	—	—	—	—	—	—	—	4226 FT4
		Black Rt. 70	—	1	—	—	—	—	—	—	—	—	—	4226 FX9
		Blue Brite Rt. 71	—	1	—	—	—	—	—	—	—	—	—	4226 GB7
		Green Dark Rt. 71	—	1	—	—	—	—	—	—	—	—	—	4226 GF7
		Saddle Dark Rt. 71	—	1	—	—	—	—	—	—	—	—	—	4226 GT6
		Gold Rt. 71	—	1	—	—	—	—	—	—	—	—	—	4226 GY6
		Black Rt. 71	—	1	—	—	—	—	—	—	—	—	—	4226 GX9
	w/out Rallye Inst. Pnl. "B" Only	Lt. 70	—	1	—	—	—	—	—	—	—	—	—	2936 824
	w/out Rallye Inst. Pnl. "J" Only	Lt. 70	—	1	—	—	—	—	—	—	—	—	—	2936 825
	w/Rallye Inst. Pnl.	Lt.	—	1	—	—	—	—	—	—	—	—	—	2936 823
	w/o Rallye Inst. Pnl.	Lt. 71	—	1	—	—	—	—	—	—	—	—	—	2936 824
	Louver, Spotcooler	Lt.	—	1	—	—	—	—	—	—	—	—	—	2936 832
		Ctr. 70	—	2	—	—	—	—	—	—	—	—	—	2936 847
		Ctr. 71	—	2	—	—	—	—	—	—	—	—	—	3441 786
	Air Outlet	Blue Ctr. 70	—	1	—	—	—	—	—	—	—	—	—	4225 FB5
		Red Ctr. 70	—	1	—	—	—	—	—	—	—	—	—	4225 FE5
		Green Ctr. 70	—	1	—	—	—	—	—	—	—	—	—	4225 FF8
		Burnt Orange Ctr. 70	—	1	—	—	—	—	—	—	—	—	—	4225 FK5
		Tan Ctr. 70	—	1	—	—	—	—	—	—	—	—	—	4225 FT4
		Black Ctr. 70	—	1	—	—	—	—	—	—	—	—	—	4225 FX9
		Blue Ctr. 71	—	1	—	—	—	—	—	—	—	—	—	4225 GB7
		Green Dark Ctr. 71	—	1	—	—	—	—	—	—	—	—	—	4225 GF7
		Saddle Dark Ctr. 71	—	1	—	—	—	—	—	—	—	—	—	4225 GT6
		Gold Ctr. 71	—	1	—	—	—	—	—	—	—	—	—	4225 GY6
		Black Ctr. 71	—	1	—	—	—	—	—	—	—	—	—	4225 GX9
	Spotcooler	Rt. 70	—	—	—	1	1	—	—	—	—	—	—	3441 246
		Lt. 70	—	—	—	1	1	—	—	—	—	—	—	3441 247
	Spotcooler	Lt. 71	—	—	—	1	1	—	—	—	—	—	—	3441 362
	Air Outlet, Black Ctr. and Rt.	71	—	—	—	1	1	—	—	—	—	—	—	#3502 005
	Air Outlet, Wood Grain Ctr. and Rt.	71	—	—	—	1	1	—	—	—	—	—	—	3441 439
	Louver, Air Outlet and Spotcooler	Ctr. 71	—	—	—	1	1	—	—	—	—	—	—	2837 778
	Spotcooler	Blue Rt. 70	—	—	—	—	—	1	—	—	—	—	—	4207 EB7
		Green Rt. 70	—	—	—	—	—	1	—	—	—	—	—	4207 EF8
		Burnt Orange Rt. 70	—	—	—	—	—	1	—	—	—	—	—	4207 FK5
		Tan Rt. 70	—	—	—	—	—	1	—	—	—	—	—	4207 FT4
		Black Rt. 70	—	—	—	—	—	1	—	—	—	—	—	4207 EX9
		Gold Rt. 70	—	—	—	—	—	1	—	—	—	—	—	4207 FY4
		Blue Rt. 71	—	—	—	—	—	1	1	—	—	—	—	4207 GB7
		Russet Rt. 71	—	—	—	—	—	1	1	—	—	—	—	4207 GE9
		Green Dark Rt. 71	—	—	—	—	—	1	1	—	—	—	—	4207 GF7
		Saddle Dark Rt. 71	—	—	—	—	—	1	1	—	—	—	—	4207 GT6
		Black Rt. 71	—	—	—	—	—	1	1	—	—	—	—	4207 GX9
		Gold Rt. 71	—	—	—	—	—	1	1	—	—	—	—	4207 GY6
		Gun Metal Rt. 71	—	—	—	—	—	—	1	—	—	—	—	4207 GA6
		Lt. 70	—	—	—	—	—	1	—	—	—	—	—	2936 149
		Lt. 71	—	—	—	—	—	1	1	—	—	—	—	3441 851
	Air Outlet	Blue Ctr. 70	—	—	—	—	—	1	—	—	—	—	—	4299 EB7
		Green Ctr. 70	—	—	—	—	—	1	—	—	—	—	—	4299 EF8
		Burnt Orange Ctr. 70	—	—	—	—	—	1	—	—	—	—	—	4299 FK5
		Tan Ctr. 70	—	—	—	—	—	1	—	—	—	—	—	4299 FT4
		Black Ctr. 70	—	—	—	—	—	1	—	—	—	—	—	4299 EX9
		Gold Ctr. 70	—	—	—	—	—	1	—	—	—	—	—	4299 FY4
		Blue Ctr. 71	—	—	—	—	—	1	1	—	—	—	—	4298 GB7
		Russet Ctr. 71	—	—	—	—	—	1	1	—	—	—	—	4298 GE9

CARLINES J - Challenger, B - Barracuda; V - Valiant, L - Dart; R - Belvedere - Satellite, W - Coronet - Charger; P - Plymouth, D - Dodge; C - Chrysler, Y - Imperial

AR Indicates use as required.

Numerals in parentheses ( ) refer to notes.

# Indicates parts not listed in any previous parts book.

★ Indicates change or addition.

Printed in U.S.A. January 1972

24-28-0 EVAPORATOR Cont'd.

CODE	PART NAME	ENG. TYPE OR CU.IN.	V 1-2	B J 1-2	L 1-2	R 1-2	W 1-2	P 1-2	D 1-2	C 1	C 2	C 3	Y 1	PART NUMBER
24-28-78	AIR OUTLET Cont'd.													
	Green Dark Ctr. 71		—	—	—	—	—	1	1	—	—	—	—	4298 GF7
	Saddle Dark Ctr. 71		—	—	—	—	—	1	1	—	—	—	—	4298 GT6
	Black Ctr. 71		—	—	—	—	—	1	1	—	—	—	—	4298 GX9
	Gold Ctr. 71		—	—	—	—	—	1	1	—	—	—	—	4298 GY6
	Gun Metal Ctr. 71		—	—	—	—	—	1	1	—	—	—	—	4298 GA6
	Air Outlet Ctr.		—	—	—	—	—	—	1	—	—	—	—	2936 191
	Spotcooler Rt.		—	—	—	—	—	—	1	—	—	—	—	2936 156
	Lt.		—	—	—	—	—	—	1	—	—	—	—	2936 157
	Spotcooler, Rt. and Lt. Blue 70		—	—	—	—	—	—	—	2	2	2	2	4411 FB7
	Green 70		—	—	—	—	—	—	—	2	2	2	2	4411 EF8
	Teal 70		—	—	—	—	—	—	—	2	2	2	2	4411 FP6
	Tan, Light 70		—	—	—	—	—	—	—	2	2	2	2	4411 FT4
	Tan, Dark 70		—	—	—	—	—	—	—	2	2	2	2	4411 FT8
	Burgundy 70		—	—	—	—	—	—	—	2	2	2	2	4411 EM9
	Red 70		—	—	—	—	—	—	—	2	2	2	2	4411 FR9
	Black		—	—	—	—	—	—	—	2	2	2	2	4411 EX9
	Gold, Light 70		—	—	—	—	—	—	—	2	2	2	2	4411 FY4
	Gold, Dark 70		—	—	—	—	—	—	—	2	2	2	2	4411 EY8
	Gun Metal 71		—	—	—	—	—	—	—	2	2	2	2	4411 GA6
	Blue Dark 71		—	—	—	—	—	—	—	2	2	2	2	4411 GB7
	Russet 71		—	—	—	—	—	—	—	2	2	2	2	4411 GE9
	Green Dark 71		—	—	—	—	—	—	—	2	2	2	2	4411 GF7
	Saddle Dark 71		—	—	—	—	—	—	—	2	2	2	2	4411 GT6
	Gold 71		—	—	—	—	—	—	—	2	2	2	2	4411 GY6
	Blue Dark 71		—	—	—	—	—	—	—	—	—	—	2	4411 GB9
	Burgundy 71		—	—	—	—	—	—	—	—	—	—	2	4411 GM9
	Black 71		—	—	—	—	—	—	—	2	2	2	2	4411 EX9
	Ctr. 70		—	—	—	—	—	—	—	1	1	1	—	2936 372
	Ctr. 71		—	—	—	—	—	—	—	1	1	1	—	3441 346
	Ctr. 70		—	—	—	—	—	—	—	—	—	—	1	2936 314
	Ctr. 71		—	—	—	—	—	—	—	—	—	—	1	3441 333
	Air Outlet, Rr. Evap. Rt. 70		—	—	—	—	—	—	—	—	—	—	1	4468 DX9
	Lt. 70		—	—	—	—	—	—	—	—	—	—	1	4469 DX9
	Gun Metal 71		—	—	—	—	—	—	—	—	—	—	—	4468-9 GA6
	Blue Med. 71		—	—	—	—	—	—	—	—	—	—	1	4468-9 GB7
	Blue Dark 71		—	—	—	—	—	—	—	—	—	—	1	4468-9 GB9
	Russet 71		—	—	—	—	—	—	—	—	—	—	1	4468-9 GE9
	Green Dark 71		—	—	—	—	—	—	—	—	—	—	1	4468-9 GF7
	Burgundy 71		—	—	—	—	—	—	—	—	—	—	1	4468-9 GM9
	Saddle Dark 71		—	—	—	—	—	—	—	—	—	—	1	4468-9 GT6
	Black 71		—	—	—	—	—	—	—	—	—	—	1	4468-9 GX9
	Gold 71		—	—	—	—	—	—	—	—	—	—	1	4468-9 GY6
	LOUVER, Roof Unit Air Outlet		—	—	—	—	—	4	4	4	4	4	—	2521 635
24-28-84	ADAPTER													
	Rr. Evap. Air Inlet Conn. Reinf.		—	—	—	—	—	—	—	—	—	—	AR	2837 690
	Rr. Evap. Air Inlet and Compartment Speaker		—	—	—	—	—	—	—	—	—	—	AR	2485 540
24-28-90	DOOR and SEAL													
	A/Cond. Outlet 70		—	—	—	1	1	—	—	—	—	—	—	2521 126
	Floor Heat 70		—	—	—	1	1	—	—	—	—	—	—	2521 130
	NOTE: For Further Information See P.T.C. 1-48-365													
24-28-92	SEAL													
	Unit Mtg. at Tube Outlets		—	1	—	1	1	—	—	—	—	—	—	2936 933
	Dist. Hsg. to Duct		—	1	—	—	—	—	—	—	—	—	—	2936 503
	Dist. Hsg. to Ctr. Outlet Duct		—	—	—	—	—	1	1	1	1	1	1	2936 270
	A/C and Htr. or A.T.C. Outlet Duct		—	—	—	—	—	1	1	—	—	—	—	2936 312
24-28-93	CONNECTOR and REINFORCEMENT													
	Rr. Evap. Air Inlet Shelf Rt.		—	—	—	—	—	—	—	—	—	—	AR	2485 603
24-28-95	NUT, Grille Mtg., In Car Sensor, w/A.T.C.70		—	—	—	—	—	2	2	—	—	—	—	1839 995

CARLINES: J - Challenger, B - Barracuda, V - Valiant, L - Dart, R - Belvedere · Satellite, W - Coronet · Charger, P - Plymouth, D - Dodge, C - Chrysler, Y - Imperial

AR Indicates use as required.

Numerals in parentheses ( ) refer to notes.

# Indicates parts not listed in any previous parts book.

★ Indicates change or addition.

Printed in U.S.A. January 1972

24-28-0 EVAPORATOR Cont'd.

CODE	PART NAME	ENG. TYPE OR CU.IN.	V 1-2	B J 1-2	L 1-2	R 1-2	W 1-2	P 1-2	D 1-2	C 1	C 2	C 3	Y 1	PART NUMBER
24-28-96	SEAL													
	F/Air and Recir. Hsg. to Scroll	70	—	—	—	1	1	—	—	—	—	—	—	2837 632
	Rear Hsg. to Dash Ext.													
	Up to Jan. 1, 1970	70	—	—	—	—	—	1	1	1	1	1	1	2936 003
	After Jan. 1, 1970		—	—	—	—	—	1	1	1	1	1	1	3441 295
	Recir. Hsg. to Plenum Ext.													
	Up to Jan. 1, 1970	70	—	—	—	—	—	1	1	1	1	1	1	2936 004
	After Jan. 1, 1970		—	—	—	—	—	1	1	1	1	1	1	3441 296
	Htr. Hsg. to Plenum		1	—	1	—	—	—	—	—	—	—	—	2277 669
	A/C and Unit Assy. Mtg. at Plenum		—	1	—	1	1	—	—	—	—	—	—	2607 312
24-28-99	LINKAGE													
	Door Control	70	—	—	—	1	1	—	—	—	—	—	—	2607 785
			—	—	—	—	—	1	1	1	1	1	1	2936 271
24-28-100	SHAFTS													
	Htr. Shut Off Door Lever to Adj. Nut		1	—	1	—	—	—	—	—	—	—	—	2521 571
	Adj. Nut to Crank		1	—	1	—	—	—	—	—	—	—	—	2521 572
	Htr. Recir. Door To Crank		1	—	1	—	—	—	—	—	—	—	—	2521 573
	w/Lever, Htr. Shut Off Door		1	—	1	—	—	—	—	—	—	—	—	2521 545
24-28-101	RETAINERS													
	Adj. Nut to Crank		2	—	2	—	—	—	—	—	—	—	—	2197 678
	Door Lever Shaft to Adj. Nut		2	—	2	—	—	—	—	—	—	—	—	2197 678
	Vacuum Actuator Rod		2	—	2	—	—	—	—	—	—	—	—	2197 678
	Recir. Door Shaft		2	—	2	—	—	—	—	—	—	—	—	2197 678
	Recir. Door Shaft to Crank		2	—	2	—	—	—	—	—	—	—	—	2197 678
	Vacuum Actuator Rod Inlet Door		2	—	2	—	—	—	—	—	—	—	—	2197 678
	Floor Air Door Mtg.	70	—	1	—	—	—	—	—	—	—	—	—	2197 678
24-28-104	KNOB, S/Cooler Shut Off Door	70	—	—	—	2	2	—	—	—	—	—	—	2837 933
	NOTE: For Further Information See P.T.C. 1-48-942													
24-28-107	PLATE, Evap. Air Outlet Trim													
	Up to May 1, 1970	70	2	—	2	—	—	—	—	—	—	—	—	2607 838
	After May 1, 1970		2	—	2	—	—	—	—	—	—	—	—	3441 496
24-28-108	SPRINGS													
	Floor Heat Door Lever		—	—	—	1	1	—	—	—	—	—	—	2521 701
	Door Over Center		—	—	—	1	1	—	—	—	—	—	—	2521 694
	F/Air and Recir. Door		—	—	—	1	1	—	—	—	—	—	—	2521 082
24-28-113	HOUSINGS													
	F/Air and Recirculating		—	—	—	1	1	—	—	—	—	—	—	2837 849
	Recir., Dual w/Front Htr.													
	Up to Jan. 1, 1970	70	—	—	—	—	—	1	1	1	1	1	—	2936 001
	After Jan. 1, 1970		—	—	—	—	—	1	1	1	1	1	1	3441 293
	After Feb. 1, 1971		—	—	—	—	—	1	1	1	1	1	1	3441 936
	Recir., w/out A.T.C.	70	—	—	—	—	—	1	1	1	1	1	1	2936 739
	Recir., w/A.T.C. Model F	70	—	—	—	—	—	1	1	1	1	1	1	3620 732
	Recir., w/A.T.C.		—	—	—	—	—	1	1	1	1	1	1	3441 294
24-28-115	COVER, Recirculating Hsg. and Linkage	70	—	—	1	1	—	—	—	—	—	—	—	2837 638
24-28-117	LEVER													
	Evap. Defroster Door Shaft		1	—	1	—	—	—	—	—	—	—	—	2521 629
	Evap. Air Inlet Door		1	—	1	—	—	—	—	—	—	—	—	2521 501
	Floor Heat Door Control	70	—	—	—	1	1	—	—	—	—	—	—	2521 712
	A/Cond. Door	70	—	—	—	—	—	1	1	1	1	1	1	3441 076
	A/Cond. Door Up to April 1971		—	—	—	—	—	1	1	1	1	1	1	3441 577
	After April 1971		—	—	—	—	—	1	1	1	1	1	1	≠3522 784
24-28-118	SPACER, Htr. Door Control Lever	70	—	—	—	1	1	—	—	—	—	—	—	2521 713
24-28-128	HOUSINGS, Engine Side Up to April 1971		—	—	—	—	—	1	1	1	1	1	1	2936 288
	After April 1971		—	—	—	—	—	1	1	1	1	1	1	3502 040
24-28-138	L/PLATE A/C and Htr./Htr. Vent Door		1	—	1	—	—	—	—	—	—	—	—	2277 516
	NOTE: For Further Information See P.T.C. 1-48-125													
24-28-175	HOUSINGS													
	Roof Unit Blower	C.W.	—	—	—	—	—	2	2	2	2	2	—	1887 299
		C.C.W.	—	—	—	—	—	2	2	2	2	2	—	1887 300

CARLINES: J - Challenger, B - Barracuda, V - Valiant, L - Dart, R - Belvedere - Satellite, W - Coronet - Charger, P - Plymouth, D - Dodge, C - Chrysler, Y - Imperial

AR Indicates use as required.
# Indicates parts not listed in any previous parts book.
Numerals in parentheses ( ) refer to notes.
★ Indicates change or addition.

Printed in U.S.A. January 1972

24-28-0 EVAPORATOR Cont'd.

CODE	PART NAME	ENG. TYPE OR CU.IN.	V 1-2	B J 1-2	L 1-2	R 1-2	W 1-2	P 1-2	D 1-2	C 1	C 2	C 3	Y 1	PART NUMBER
24-28-195	MOTOR, Blower	70	1	—	1	—	—	—	—	—	—	—	—	2932 709
		71	1	—	1	—	—	—	—	—	—	—	—	3420 950
			—	1	—	1	1	—	—	—	—	—	—	2936 687
		70	—	—	—	1	1	—	—	—	—	—	—	2932 709
			—	—	—	—	—	1	1	1	1	1	1	3514 304
	Roof Unit, Rt. and Lt.		—	—	—	—	—	2	2	2	2	2	—	1886 266
	Rear Evap.		—	—	—	—	—	—	—	—	—	1	1	2485 580
	NOTE: For Further Information See P.T.C. 1-48-599													
24-28-200	SPACER, Air Outlet Duct Mtg. to Panel													
	Up to Jan. 1, 1970	70	1	—	—	—	—	—	—	—	—	—	—	2607 837
	After Jan. 1, 1970	70	1	—	1	—	—	—	—	—	—	—	—	3441 495
24-28-201	MOUNT, Blower Motor		3	—	3	3	3	3	3	3	3	3	3	2277 596
24-28-203	RESISTOR, Blower Motor		1	—	1	—	—	—	—	—	—	—	—	2837 805
			—	1	—	1	1	—	—	—	—	—	—	3441 175
	Rear Evap. Motor		—	—	—	—	—	—	—	—	—	—	1	2485 593
24-28-204	GASKET, Rr. Evap. Blower Motor Mtg.		—	—	—	—	—	—	—	—	—	—	2	2076 088
	Htr. Blower Mtr. Mtg.		—	—	—	AR	AR	—	—	—	—	—	—	2076 088
24-28-207	PLATE, Blower Motor Mtg.		1	—	1	—	—	—	—	—	—	—	—	2521 144
			—	1	—	1	1	—	—	—	—	—	—	3441 230
			1	—	1	1	1	—	—	—	—	—	—	2521 144
			—	—	—	—	—	1	1	1	1	1	1	2936 214
24-28-208	RETAINER, Motor Mtg. Plate Seal		1	—	1	1	1	1	1	1	1	1	1	2521 231
24-28-210	WHEEL, Blower Motor		—	1	—	1	1	1	1	1	1	1	1	2808 880
			1	—	1	—	—	—	—	—	—	—	—	2808 772
	Roof Unit	C.W.	—	—	—	—	—	1	1	1	1	1	—	1886 265
		C.C.W.	—	—	—	—	—	1	1	1	1	1	—	1886 263
	Rr. Evap.	Rt.	—	—	—	—	—	—	—	—	—	—	1	2485 591
		Lt.	—	—	—	—	—	—	—	—	—	—	1	2277 597
	Clamp, Blower Wheel		—	—	—	1	1	—	—	—	—	—	—	2837 680
	Blower Wheel Mtg.		—	1	—	—	—	—	—	—	—	—	—	2837 680
	NOTE: For Further Information See P.T.C. 1-48-46													
24-28-211	SEAL													
	Blower Motor Retainer to Mtg. Plate		1	1	1	1	1	1	1	1	1	1	1	2837 291
	Hsg. Mtg. to Unit, Bottom		—	1	—	—	1	1	—	—	—	—	—	3441 031
	Blower Motor Mtg. to Unit		—	1	—	—	1	1	—	—	—	—	—	2936 507
	A/C and Htr. Unit Mtg. at Blwr. Mtg.		—	1	—	1	1	—	—	—	—	—	—	2936 930
	Plate to Hsg.		—	—	—	—	—	1	1	1	1	1	1	2936 215
24-28-220	COIL, Evaporator		1	—	1	—	—	—	—	—	—	—	—	2936 897
			—	1	—	—	—	—	—	—	—	—	—	3441 578
		71	—	—	—	1	1	—	—	—	—	—	—	3441 578
		70	—	—	—	1	1	—	—	—	—	—	—	2919 269
			—	—	—	—	—	1	1	1	1	1	1	2923 914
	Roof Unit Evap.		—	—	—	—	—	1	1	1	1	1	—	2936 424
	Roof Unit Evap. w/Blower		—	—	—	—	—	1	1	1	1	1	—	2936 421
	Rear Evap.		—	—	—	—	—	—	—	—	—	—	1	2936 584
24-28-225	SEAL, Evap. Coil	Top	—	—	—	—	—	1	1	1	1	1	1	2936 203
		Side	—	—	—	—	—	1	1	1	1	1	1	2936 204
24-28-300	VALVE, Expansion		1	1	1	1	1	1	1	1	1	1	1	2932 843
	Roof Evap. Unit		—	—	—	—	—	1	1	1	1	1	—	2936 438
	Rear Evap.		—	—	—	—	—	—	—	—	—	—	1	2932 842
24-28-302	ELBOW, Exp. Valve to Dash		1	—	1	—	—	—	—	—	—	—	—	2936 783
24-28-318	CONNECTOR and TEES													
	Tee, Vacuum Hose		1	—	1	1	1	—	—	—	—	—	—	1886 109
	Tee, Vacuum Hose Rr.		—	—	—	—	—	—	—	1	1	1	1	1886 109
			—	2	—	—	—	—	—	—	—	—	—	3441 425
	Tee, Conn. Vac. Hose		—	1	—	—	—	—	—	—	—	—	—	3441 425
			—	—	—	—	—	1	1	1	1	1	1	3441 862
	A/Cond. and Htr. Hose	70	—	—	—	—	—	1	1	1	1	1	1	3441 235
	Connector		—	—	—	AR	AR	AR	AR	AR	AR	AR	AR	3441 425

CARLINES: J - Challenger, B - Barracuda, V - Valiant, L - Dart, R - Belvedere - Satellite, W - Coronet - Charger, P - Plymouth, D - Dodge, C - Chrysler, Y - Imperial

AR Indicates use as required.

Numerals in parentheses ( ) refer to notes.

# Indicates parts not listed in any previous parts book.

★ Indicates change or addition.

Printed in U.S.A. January 1972

24-28-0 EVAPORATOR Cont'd.

CODE	PART NAME	ENG. TYPE OR CU.IN.	V 1-2	B J 1-2	L 1-2	R 1-2	W 1-2	P 1-2	D 1-2	C 1	C 2	C 3	Y 1	PART NUMBER
24-28-318	CONNECTOR and TEES Cont'd.													
	Tee, A/C and Htr. Vac. Resr. Hose W/Trail Tow.		—	—	—	—	—	1	1	1	1	1	—	3441 425
	Connector Vacuum Hose Reducer A.T.C.	71	—	—	—	—	—	—	—	1	1	1	1	3441 743
	Vacuum Hose, 3 Port		—	—	—	—	—	1	1	1	1	1	1	2936 748
	Vacuum Hose Ext. A/C and Htr. Control	71	—	—	—	1	1	—	—	—	—	—	—	3431 297
	Tee, Connector	70	—	—	—	—	—	3	3	3	3	3	—	2837 877
	Tee, A/C and Htr. A.T.C.	71	—	—	—	—	—	—	—	1	1	1	1	3441 734
	Connector, A/C and Htr. Vac. Hose		1	1	1	1	1	—	—	—	—	—	—	1886 110
		A.T.C.	—	—	—	—	—	—	—	1	1	1	1	1886 110
	Recirc. Vac. Ext. Hose		—	—	—	—	—	1	1	1	1	1	1	1886 110
	NOTE: For Further Information See P.T.C. 1-48-280													
24-28-319	WRENCH, Suction Fitting		—	1	—	1	1	—	—	—	—	—	—	3441 446
		70	—	—	—	—	—	1	1	1	1	1	1	3441 447
24-28-326	SEAL, Hose and Tube "O" Ring 3/8" O.D.		AR	AR	AR	AR	AR	AR	AR	AR	AR	AR	AR	2219 383
	1/4" O.D.		AR	AR	AR	AR	AR	AR	AR	AR	AR	AR	AR	2277 190
	1/2" O.D.		AR	AR	AR	AR	AR	AR	AR	AR	AR	AR	AR	2219 384
	5/8" O.D.		AR	AR	AR	ar	AR	AR	AR	AR	AR	AR	AR	2219 385
	3/4" O.D.		AR	AR	AR	AR	AR	AR	AR	AR	AR	AR	AR	2521 172
	Rec. Drier. Cut Off Switch	71	1	1	1	1	1	1	1	1	1	1	1	#3441 105
	Discharge Muffler to Compressor		—	1	—	—	—	—	—	—	—	—	—	2936 715
	Discharge Line Mtg. Flange		—	—	—	1	1	1	1	1	1	1	1	2936 715
	Hsg. and Door Duct	70	—	—	—	1	1	—	—	—	—	—	—	2837 591
	Seal Discharge Line to Compressor		1	1	1	1	1	1	1	1	1	1	1	3441 513
	Roof Unit Liq. and Suction Tube Mtg. Plate to U/Body	71	—	—	—	—	—	1	1	1	1	1	—	3441 812
24-28-334	HOUSINGS													
	A/Cond. Distribution		—	1	—	—	—	—	—	—	—	—	—	2936 599
		70	—	—	—	1	1	—	—	—	—	—	—	2837 590
			—	—	—	1	1	—	—	—	—	—	—	3441 382
	w/Doors	70	—	—	—	1	1	—	—	—	—	—	—	2837 587
		70	—	—	—	—	—	1	1	1	1	1	1	2936 267
		71	—	—	—	—	—	1	1	1	1	1	1	3441 724
24-28-335	COVER, Floor Heat Distribution		—	—	—	—	—	1	1	1	1	1	1	2936 263
24-28-336	DOOR, Distribution Housing	Rt. 70	—	—	—	1	1	—	—	—	—	—	—	2521 440
		Lt. 70	—	—	—	1	1	—	—	—	—	—	—	2521 441
24-28-338	SPRING, Distribution Hsg. Retainer	70	—	—	—	2	2	—	—	—	—	—	—	2521 439
24-28-339	GASKET, Dist. Hsg. to Rear Hsg.		—	—	—	—	—	1	1	1	1	1	1	2936 266
24-28-341	ROD, F/Air Inlet Duct Mtg. to Plenum	70	—	—	—	2	2	—	—	—	—	—	—	2607 004
24-28-380	BRACKET, Ctr. and Rt. S/Cooler Duct Mtg.		—	1	—	—	—	—	—	—	—	—	—	2936 844
24-28-383	DAMPER, A/Cond. and Htr. Defroster	70	—	—	—	2	2	—	—	—	—	—	—	2521 123
24-28-388	RETAINER, Rt. S/Cooler Shut Off Door Link		—	—	—	—	—	1	—	—	—	—	—	2197 678
24-28-392	RETAINER		AR	AR	AR	AR	AR	AR	AR	AR	AR	AR	AR	2197 678
	A/C Temp. Control Cable to Control		1	—	1	—	—	—	—	—	—	—	—	2197 678
	A/C., Htr. Evap. A/Inlet Dr. Vac. Actr. Rod		2	—	2	—	—	—	—	—	—	—	—	2197 678
	A/C., Htr. Evap. Temp. Control Cable to Switch		1	—	1	—	—	—	—	—	—	—	—	2197 678
	Htr. Vent Door		—	—	—	—	—	1	1	1	1	1	1	2197 678
	A.T.C. Thumbweel		—	—	—	—	—	—	—	1	1	1	1	2197 678
	A/C., Htr. Rt. S/Cooler Shut off Link		—	—	—	—	—	1	1	—	—	—	—	2197 678
24-28-399	SHAFTS													
	Defroster Door	70	—	—	—	1	1	—	—	—	—	—	—	2607 783
	A/Cond. Door	70	—	—	—	1	1	—	—	—	—	—	—	2521 099
	Floor Heat Door	70	—	—	—	1	1	—	—	—	—	—	—	2521 108
	NOTE: For Further Information See P.T.C. 1-48-356													
24-28-403	HANDLE, S/Cooler Damper Shaft	70	—	—	—	AR	AR	—	—	—	—	—	—	2607 517

CARLINES: J - Challenger, B - Barracuda, V - Valiant, L - Dart, R - Belvedere - Satellite, W - Coronet - Charger, P - Plymouth, D - Dodge, C - Chrysler, Y - Imperial

AR Indicates use as required.

Numerals in parentheses ( ) refer to notes.

# Indicates parts not listed in any previous parts book.

★ Indicates change or addition.

Printed in U.S.A. January 1972

CODE	PART NAME	ENG. TYPE OR CU.IN.	V	B J	L	R	W	P	D	C	C	C	Y	PART NUMBER
			1-2	1-2	1-2	1-2	1-2	1-2	1-2	1	2	3	1	
24-28-0	**EVAPORATOR Cont'd.**													
24-28-405	CONNECTORS													
	Vacuum Hose	70	1	1	1	1	1	—	—	—	—	—	—	1886 110
	S/Cooler Tube	Lt. 70	—	—	—	1	1	—	—	—	—	—	—	2837 555
	Liq. Tube to Cond.	71	—	1	—	1	1	—	—	—	—	—	—	#3441 933
24-28-406	WASHER, Rt. S/Cooler Shut Off Door Link		—	—	—	—	—	1	1	—	—	—	—	2936 391
24-29-0	**ACTUATOR**													
24-29-1	ACTUATORS, Vacuum													
	Water Valve		1	—	1	—	—	—	—	—	—	—	—	3441 215
	Evap. Defroster Door		1	—	1	—	—	—	—	—	—	—	—	3441 219
	Evap. Air Inlet Door	70	1	—	1	—	—	—	—	—	—	—	—	3441 221
	Evap. Air Inlet Door	71	1	—	1	—	—	—	—	—	—	—	—	3441 923
	Htr. Shut Off Door		1	—	1	—	—	—	—	—	—	—	—	3441 223
	A/Cond. Door and Htr.		—	1	—	1	1	—	—	—	—	—	—	2936 962
	F/Air Door		—	1	—	1	1	—	—	—	—	—	—	2936 952
	Defroster Door		—	1	—	1	1	—	—	—	—	—	—	3441 323
	Passenger Door		—	1	—	1	1	—	—	—	—	—	—	3441 324
	Htr. Door	70	—	—	—	1	1	—	—	—	—	—	—	3441 212
	A/Cond. Door	70	—	—	—	1	1	—	—	—	—	—	—	2837 891
	F/Air Door	70	—	—	—	1	1	—	—	—	—	—	—	3441 214
	Htr. Door		—	—	—	—	—	1	1	1	1	1	1	3441 206
	Htr. Vent Door	71	—	—	—	—	—	1	1	1	1	1	—	3441 686
	A/Cond. Door		—	—	—	—	—	1	1	1	1	1	1	3441 208
	Recirculating, w/Out A.T.C.	70	—	—	—	—	—	1	1	1	1	1	1	3441 314
	Up to April 1971		—	—	—	—	—	1	1	1	1	1	—	3441 314
	After April 1971		—	—	—	—	—	1	1	1	1	1	1	#3441 938
	Recirculating, w/A.T.C.	70	—	—	—	—	—	1	1	1	1	1	1	3441 203
	w/A.T.C.		—	—	—	—	—	1	1	1	1	1	1	3441 315
	Htr. Defroster Door	70	—	—	—	—	—	—	—	1	1	1	1	3441 217
24-29-3	BRACKET'S													
	Recirculating Actuator Mtg. w/out A.T.C.	70												
	Mtg. w/Out A.T.C.		—	—	—	—	—	1	1	1	1	1	—	2936 745
	w/A.T.C.	70	—	—	—	—	—	1	1	1	1	1	1	2936 015
	Recirculating Vacuum Switch Mtg. w/A.T.C.	70	—	—	—	—	—	1	1	1	1	1	1	2936 017
	Recirculating Vac. Actuator Mtg. w/A.T.C.	71	—	—	—	—	—	—	—	1	1	1	1	3441 309
24-29-6	BRACKET, Htr. or A.T.C. Actuator Mtg.		—	—	—	—	—	1	1	1	1	1	1	2936 237
24-29-9	PARTITION, A/Cond. and Htr. Defroster		—	1	—	1	1	—	—	—	—	—	—	2936 690

NOTES

CARLINES J - Challenger, B - Barracuda, V - Valiant, L - Dart, R - Belvedere - Satellite, W - Corone: - Charger, P - Plymouth, D - Dodge, C - Chrysler, Y - Imperial

AR Indicates use as required.

# Indicates parts not listed in any previous parts book.

Numerals in parentheses ( ) refer to notes.

★ Indicates change or addition.

Printed in U.S.A.
January 1972

ALPHABETICAL INDEX

A

PART NAME	CODE
ABSORBER, Front Seat Shock	23-45-83
ABSORBER, Shock	17-23-3
ACCELERATOR PEDAL	14-01-1
ACTUATOR, Air Cond. Vacuum	24-29-1
ACTUATOR, Heater Door Vacuum	1-48-258
ACTUATOR, Hood Fresh Air Door	15-03-92
ACTUATOR, Starter	8-52-87
ACTUATOR, T/Gate Window Washer	23-67-263
ADAPTER, A/Cond. Air Inlet	24-28-84
ADAPTER, A/Cond. Sensor	24-24-53
ADAPTER, Bumper Guard	13-68-20
ADAPTER, Defogger Blower	1-47-22
ADAPTER, Disc Brake	6-05-43
ADAPTER, Headlamp Seat	8-34-28
ADAPTER, Manual Antenna	1-88-6
ADAPTER, Oil Filter	10-26-5
ADAPTER, Power Strg. Pressure Hose	19-58-15
ADAPTER, Power Strg. Return Hose	19-57-19
ADAPTER, Rr. Htr. Inlet	1-48-5
ADAPTER, Rr. Window Defogger	1-47-2
ADAPTER, Speedometer Drive Pinion	21-85-9
ADAPTER, Two Speed Axle Speedo	21-86-0
ADJUSTER, Diff. Bearing	3-11-13
ADJUSTER, Drive Shaft Brg.	3-33-5
ADJUSTER, Manual Seat	23-47-6
ADJUSTER, Reclining Seat Back	23-45-194
AIR CLEANER, Booster Brake Breather	5-113-0
AIR CLEANER, Carb.	14-29-2
AIR CLEANER, Crankcase Vent Inlet	10-01-21
AIR CONDITIONING PACKAGE	24-01-1
AIR DEFLECTOR, Cowl Hinge Pillar	23-36-134
AIR OUTLET, Air Cond.	24-28-78
AIR PUMP	25-02-1
ALTERNATOR	8-28-3
AMMETER	8-37-1
AMPLIFIER, Auto. Headlamp Sentinel	8-53-301
ANTENNA, Radio	1-88-1
ANTISPIN PARTS, Rear Axle	3-09-0
APPLIQUE, Bumper	13-64-19
APPLIQUE, Wheel Cover	22-01-43
ARM, Door Check	23-10-1
ARM, Frt. Suspension Lower Control	2-10-0
ARM, Frt. Suspension Upper Control	2-08-5
ARM, Glove Box Door Hinge Check	23-06-13
ARM, Heater Control	1-48-940
ARM REST	23-76-0
ARM, Strg. Gear Idler	19-27-31
ARM, Steering Idler	19-27-2
ARM, Strg. Knuckle	2-05-4
ARM, W/Shield Wiper	23-67-5
ARMATURE, Starter	8-52-120
ASH RECEIVER	23-02-18
ASPIRATOR, Air Cond.	24-24-40
ASSISTOR, Clutch	6-41-0
ASSISTOR REPAIR PKG., Clutch	6-41-1
AUXILIARY TRANSMISSION	21-88-0

B

PART NAME	CODE
BACKPLATE, Htr. Distribution Duct	1-48-156
BAFFLE, C/SHAFT OIL SCRAPPER	10-24-30
BAFFLE, Hood Air Intake Scoop	15-03-52
BAFFLE, Trans. Case Ext. Vent	21-04-17
BAFFLE, Trans. Shaft	21-129-11
BALL JOINT PACKAGE, Lwr. Cont. Arm	2-10-55
BALL JOINT PACKAGE, Upr. Cont. Arm	2-08-57
BALL STUD, Carb. Lever	14-13-1
BAND, Parking Brake	4-03-0
BAND, Trans. Kickdown	21-136-5
BAND, Trans. Reverse	21-136-30
BAR and BASE PACKAGE, Bumper Jack	13-72-4
BAR, Deck Lid Hinge Torsion	23-19-177
BAR, Door Lwr. Hinge Torsion	23-15-30
BAR, Front Bumper Face	13-64-3
BAR, Front Stabilizer	17-29-5
BAR, Headlamp Door	8-34-45
BAR, Rear Bumper Face	13-66-3
BAR, T/Gate Hinge Torsion	23-54-140
BAR, Torsion	2-14-3
BASE, Bucket Front Seat Back	23-45-185
BASE, Oil Filter	10-26-12
BATTERY HEAT SHIELD	13-35-1
BATTERY HOLD-DOWN STRAP	13-34-3
BATTERY HOLD-DOWN STUD	13-36-5
BATTERY SUPPORT TRAY	13-33-61
BEAM, Tandem Equalizing	17-37-0
BEARING, Air Cond. Compr. Clutch	24-25-219
BEARING, Alternator Drive End Shield	8-29-154
BEARING, Alternator Rectifier	8-29-133
BEARING & SMALL PARTS PKG., Trans.	21-01-8
BEARING & THRUST WASHER, Distributor	8-27-133
BEARING, Aux. Trans. M/Drv. Gear	21-95-9
BEARING, Camshaft	9-16-6
BEARING, Clutch Pedal	6-38-3
BEARING, Clutch Release	6-19-0
BEARING, Clutch Shaft Pivot	6-52-11
BEARING, Connecting Rod	9-32-2
BEARING, Crankshaft	9-09-2
BEARING, Front Axle Diff.	21-11-45
BEARING, Front Axle Drive Pinion	21-11-88
BEARING, Front Axle Strg. Knuckle	2-13-15
BEARING, Front Door Vent Wing	23-64-95
BEARING, Front Wheel	22-06-0
BEARING, Pwr. Strg. Control Val. Stud	19-63-250
BEARING, Propellor Shaft Center	16-16-0
BEARING, Rear Axle Diff. Spiral Pinion	3-13-0
BEARING, Rear Axle Drive Pinion	3-22-0
BEARING, Rear Axle Shaft	3-33-1
BEARING, Rear Wheel	22-07-0
BEARING, Starter Pinion Housing	8-52-80
BEARING, Strg. Column G/Shift Tube	19-46-6
BEARING, Strg. Column Shaft	19-14-4
BEARING, Strg. Gear Shaft	19-19-19
BEARING, Strg. Gear Thrust	19-15-1
BEARING, Strg. Gear Worm	19-15-60
BEARING, Tailgate Hinge	23-54-142
BEARING, Transfer Case	21-102-7
BEARING, Trans. Aux. Co/Shaft	21-18-52

PART NAME	CODE
BEARING, Trans. Aux. M Shaft	21-18-2
BEARING, Trans. Co. Shaft	21-25-2
BEARING, Trans. Main	21-09-5
BEARING, Trans. M/Shaft Frt. Spindle	21-16-9
BEARING, Trans. M/Shaft Rear	21-19-2
BEARING, Trans. Output Shaft	21-05-2
BEARING, Water Pump	7-45-11
BEARING, Winch Drive Shaft	21-97-6
BELL CRANK, Throttle Cont.	14-14-1
BELT, Fan and Related Drives	7-03-1
BEZEL, Accelerator Pedal	14-01-6
BEZEL and Lens, Dome Lamp	8-05-8
BEZEL and SPACER, Seat Belt	23-49-17
BEZEL, Back up Lamp	8-56-36
BEZEL, Brake Pedal Pad	5-28-9
BEZEL, Cigar Lighter	8-20-16
BEZEL, Clock and A/Cond.	8-37-463
BEZEL, Clutch Pedal Pad	6-39-9
BEZEL, Defogger Inlet	1-47-6
BEZEL, Defogger Switch	1-47-9
BEZEL, Filler Tube Cap	14-86-23
BEZEL, Floor Console End Cap	23-38-43
BEZEL, Folding Top Pocket Panel	23-02-107
BEZEL, Glove Box Door	23-06-55
BEZEL, Headlamp	8-34-40
BEZEL, Heater Control	1-48-70
BEZEL, Hood Air Grabber Switch	15-03-85
BEZEL, Hood Turn Signal Indicator	8-50-171
BEZELS, Instrument Cluster	8-37-90
BEZEL, Instr. Pnl. G/Shift Control	23-33-217
BEZEL, Map and Courtesy Lamp Switch	8-42-29
BEZEL, Parking and Turn Signal Lamp	8-50-315
BEZEL, Parking Brake Pedal Pad	4-25-23
BEZEL, Radio	1-87-22
BEZEL, Rear Ash Receiver	23-02-68
BEZEL, Rear Speaker Control	1-87-292
BEZEL, Rear View Mirror	23-21-28
BEZEL, Road Lamp	8-14-9
BEZEL, Side Marker Lamp	8-14-9
BEZEL, Stop, Turn Signal Lamps	8-55-158
BEZEL, T/Gate Latch Remote Control	23-54-221
BEZEL, T/Gate Window Washer	23-67-243
BEZEL, Trans. Gearshift Selector Lever Lens	21-30-15
BEZEL, Vacuum Deck Lid Latch Release	23-19-100
BEZEL, Wiper Switch Mtg.	23-67-195
BEZELS, Air Conditioner	24-24-140
BEZELS, Switch	8-53-294
BLADE, Snow Plow	1-93-0
BLADE, W/Shield Wiper	23-67-25
BLEEDER, Wheel Cylinder	5-67-1
BLOCK, Alternator Mtg.	8-28-35
BLOCK, Ammeter Wiring Terminal	8-21-1
BLOCK, Drive Shaft Thrust	3-32-8
BLOCK, w/Pistons and Rings	9-02-5
BLOWER, A/Cond. and Heater	24-28-165
BOARD, Printed Circuit	8-19-15
BODY, A/Cleaner	14-29-19
BODY, Oil Pump	10-07-10
BODY, Strg. Column Shaft Coupling	19-15-23
BODY, Trans. Valve	21-139-4
BOLT & SWIVEL PKG., Anchor Adjusting	2-14-1
BOLT or SCREW, Frt. Axle Drive Gear	2-11-71
BOLT or SCREW, Rear Axle Drv. Gear Pinion	3-20-1
BOLT, Battery Cable Clamp	8-01-11
BOLT, Brake M/Cyl. Mtg.	5-39-11
BOLT, Brake M/Cyl. Push Rod	5-47-4
BOLT, Bumper to Support	13-64-5
BOLT, Chain Case Cover	9-23-10
BOLT, Cylinder Head	9-03-10
BOLT, Connecting Rod Cap	9-31-5
BOLT, Drive Pinion Carrier	3-19-15
BOLT, Exhaust Manif. Heat Control Valve	9-58-13
BOLT, Frame to Body	23-05-1
BOLT, Frt. Axle Control Arm Cam	2-08-50
BOLT, Frt. Suspension Crossmember	23-32-18
BOLT, Frt. Wheel Brk. Support	5-13-9
BOLT, Jack Bar Retainer	13-72-6
BOLT, Rear Axle Hsg. to Diff. Carrier	3-03-26
BOLT, Rear Spring Center	17-14-10
BOLT, Rear Spring Pivot Bushing	17-17-4
BOLT, Spring Hanger	13-54-11
BOLT, Strg. Link Idler Arm Brkt.	19-27-45
BOOSTER, Brake	5-100-0
BOOSTER BRAKE TUBE	5-107-15
BOOT, Brake Booster Push Rod	5-100-26
BOOT, Brake Pedal Linkage to Firewall	5-100-26
BOOT, Clutch Pedal Rod	6-50-10
BOOT, Elect. Door Lock Switch	23-18-126
BOOT, Gearshift Control	19-48-44
BOOT, Gearshift Floor	21-30-413
BOOT, Master Cyl.	5-40-1
BOOT, Shifting Fork	8-52-88
BOOT, T/Gate Latch Remote Control	23-54-222
BOOT, Trans. G/Shift Lever	21-30-109
BOOT, Wheel Brake Cylinder	5-69-1
BOOT, X-Press Super Lite	8-14-18
BOW, Folding Top	23-58-75
BOW, Roof Panel	23-86-10
BOX, Glove	23-06-4
BRACE, Battery Tray Support	13-33-68
BRACE, Bumper Jack	13-66-21
BRACE, Exhaust Pipe	11-08-5
BRACE, Fender	12-07-1
BRACE, Frt. Crossmember	23-32-31
BRACE, Frt. Door	23-11-9
BRACE, Frt. Floor Pan	23-32-6
BRACE, F/Tank Protector	14-88-42
BRACE, Hood Lock Plate Yoke	15-11-7
BRACE, Instrument Panel Lower Reinforcement	23-33-10
BRACE, Power Antenna Mtg.	1-88-126
BRACE, Qtr. Deck Drain Trough	23-59-41
BRACE, Qtr. Inside Panel	23-64-281
BRACE, Qtr. Panel Belt Bar	23-51-48
BRACE, Radiator Grille	7-16-22
BRACE, Shelf Panel to Deck	23-34-328
BRACE, Tailgate Opening	23-34-17
BRACE, Wheel House to Deck Lid	23-19-76
BRACKET & SHAFT, Rear View Mirror	23-21-14
BRACKET & STRAP, Vapor Canister (Charcoal)	25-04-16
BRACKET & SUPPORT, Frt. Door Window	23-39-19
BRACKET w/ROLLER, Quarter Window	23-64-269
BRACKET w/STUD, Deck Lid Hinge	23-19-181
BRACKET, Accelerator Shaft	14-11-20
BRACKET, Air Cond. Actuator	24-29-3
BRACKET, Air Cond. Compressor	24-25-15
BRACKET, Air Cond. Evaporator Mtg.	24-28-8
BRACKET, Air Cond. Hose	24-28-29
BRACKET, Air Cond. Idler Pulley	24-25-45
BRACKET, Air Cond. Receiver Drier Mtg.	24-26-35
BRACKET, Air Pump Mtg.	25-02-24

PART NAME	CODE
BRACKET, Alt. & Coil Mtg.	8-28-36
BRACKET, Auto. Headlamp Sentinel	8-53-303
BRACKET, Auto. Speed Control Cable	14-02-18
BRACKET, Body Hold Down	23-05-31
BRACKET, Body Pillar	23-36-33
BRACKET, Brake Booster Mtg.	5-101-1
BRACKET, Brake Hose	5-57-2
BRACKET, Brake Pedal	5-31-15
BRACKET, Bumper	13-64-72
BRACKET, Bumper Alignment	13-66-136
BRACKET, Bumper Filler	13-64-32
BRACKET, Bumper Impact	13-66-44
BRACKET, Cab Hold Down	13-39-0
BRACKET, Center Floor Pan Carrier	17-19-4
BRACKET, Clutch Hyd. Slave Cylinder	6-40-59
BRACKET, Clutch Pedal	6-46-1
BRACKET, Cowl Side	23-34-82
BRACKET, Deck Opening, Lower	23-34-191
BRACKET, Dome Lamp	8-05-28
BRACKET, Engine Frt. Support Insulator	9-64-24
BRACKET, Fan Belt Idler Pulley	7-04-5
BRACKET, Fast Idle Cable Mtg.	14-24-6
BRACKET, Fender Mtg.	18-06-3
BRACKET, Floor Console	23-38-27
BRACKET, Frame Engine Rear Support	9-69-6
BRACKET, Frt. Seat Lap Belt	23-49-7
BRACKET, Frt. Spring	13-53-0
BRACKET, Frt. Wheel Stop	2-08-63
BRACKET, Fuel Tank Filler Tube	14-86-43
BRACKET, Fuel Tank Vapor Separator	14-86-71
BRACKET, Hand Brk. Cable Support	4-83-2
BRACKET, Headlamp Door Motor	8-34-291
BRACKET, Headlamp Scanner	8-53-286
BRACKET, Hood Lock Vertical	15-11-50
BRACKET, License	8-47-8
BRACKET, Muffler & Exhaust Support	11-08-5
BRACKET, Parking Brake	4-06-0
BRACKET, Parking Brake Indicator Lamp	8-31-11
BRACKET, Pedal Return Spring	14-06-10
BRACKET, Prop Shaft Center Bearing	16-16-46
BRACKET, Quarter Window Regulator	23-39-48
BRACKET, Radiator Core Fan Shroud	7-08-13
BRACKET, Radiator Grille	7-16-25
BRACKET, Radiator Yoke Crossmember	7-26-37
BRACKET, Rear Bumper Guard	13-68-12
BRACKET, Rear Floor Pan Bumper	23-32-52
BRACKET, Rear Seat Radio Speaker Grille	1-87-25
BRACKET, Rear Spring	13-54-0
BRACKET, Roof Bow, No. 1	23-58-84
BRACKET, Roof Luggage Rack Rail	23-40-170
BRACKET, Seat Adjuster Switch	23-47-456
BRACKET, Seat Back Stop	23-47-345
BRACKET, Second Seat Back Bumper	23-48-111
BRACKET, Second Seat Back Hinge	23-48-99
BRACKET, Shock Absorber	17-24-0
BRACKET, Side Marker Lamp Mtg.	8-14-2
BRACKET, Spare Tire Cover Mtg.	23-04-245
BRACKET, Steering Column	19-14-37
BRACKET, Steering Column Support	19-31-1
BRACKET, Steering Gear	19-12-1
BRACKET, Steering Pump	19-54-115
BRACKET, Third Seat Back Release	23-48-24
BRACKET, Tilt Cab Rear Support	23-1-35
BRACKET, Trans. Mtg. Crossmember	13-10-12
BRACKET, Valve Rocker Shaft	9-43-10
BRACKET, Voltage Regulator Mtg.	8-28-78
BRACKET, Wheelhouse	23-34-13
BRACKET, Windshield Side Frame	23-66-77
BRAKE FLEXIBLE HOSE	5-62-1
BRAKE FLUID	5-01-2
BRAKE PEDAL AND BUSHING	5-27-0
BRAKE PEDAL BRACKET	5-31-15
BRAKE PEDAL PAD	5-28-8
BRAKE PEDAL SHAFT	5-29-1
BRAKE SHOE GUIDE SPRING	5-26-1
BRAKE TUBE	5-55-1
BRAKE TUBE BRACKET	5-57-2
BRAKE TUBE CLIP	5-56-2
BRAKE TUBE TEE or CONNECTOR	5-58-1
BRAKE, Power	5-100-1
BRAKE SHOE and LINING	5-03-3
BRUSH PACKAGE, Alternator	8-29-17
BRUSH PACKAGE, Starter	8-52-135
BULBS	8-44-1
BUMPER GUARDS	13-68-6
BUMPER JACK	13-72-1
BUMPER, Ash Receiver	23-02-38
BUMPER, Control Arm, Lower	2-10-10
BUMPER, Control Arm, Upper	2-08-48
BUMPER, Door	23-08-12
BUMPER, Fender Hood Side	15-09-4
BUMPER, Front	13-64-3
BUMPER, Glove Box Door	23-06-14
BUMPER, Park Brake Pedal Stop	4-25-9
BUMPER, Rear	13-66-3
BUMPER, Rear Spring	17-19-3
BUSHING or BEARING, Crankshaft Trans. Pilot	9-07-12
BUSHING, Accelerator Pedal	14-01-30
BUSHING, Brake Pedal	5-27-2
BUSHING, Clutch Pedal	6-38-3
BUSHING, Control Arm - Lower	2-10-59
BUSHING, Control Arm - Upper	2-08-7
BUSHING, Door Hinge	23-15-38
BUSHING, Intake Valve	9-43-2
BUSHING, Gearshift Control Selector	21-30-38
BUSHING, Gearshift Rod	19-48-6
BUSHING, Shock Absorber Mounting	17-23-52
BUSHING, Spring Shackle Pivot	17-16-8
BUSHING, Strg. Column Gearshift	19-46-14
BUSHING, Steering Knuckle	2-03-4
BUSHING, T/Gate Hinge	23-54-20
BUSHING, T/Gate Window Washer	23-67-265
BUSHING, Tilt Cab Pivot	23-1-3
BUSHING, Trans. Frt. Clutch	21-133-10
BUSHING, Trans. Input Shaft	21-129-6
BUTTON, Brake Auto. Adj.	5-20-17
BUTTON, Gearshift, Control Selector	21-30-10
BUTTON, Heater Control Push	1-48-12
BUTTON, Horn	8-33-41
BUTTON, Parking Brake Lever	4-14-0
BUTTON, Steering Wheel Horn	8-33-17
BUZZER, Headlamp Warning	8-34-8
BUZZER, Ign. Key Warning	8-35-66
BUZZER, Low Air Pressure	5-128-0
BUZZER, Low Vacuum Warning	5-103-36

PART NAME	CODE
C	
"C" WASHER - Brake Shoe Anchor	5-19-7
CABLE, A/C Temp. Control	24-01-65
CABLE, Battery Ground	8-01-4
CABLE, Battery Positive	8-01-17
CABLE, Brake Auto. Adj.	5-20-10
CABLE, Clock Reset	8-37-458
CABLE, Electric Seat Adjuster	23-47-432
CABLE, Fuel Tank Gauge	14-72-33
CABLE, Glove Box Door	23-06-46
CABLE, Heater Control	1-48-941
CABLE, Hood Duct Air Control	14-03-74
CABLE, Horn Contact	8-33-100
CABLE, Horn Ground	8-33-114
CABLE, Ignition Coil Secondary	8-36-49
CABLE, Power Antenna Lead	1-88-162
CABLE, P.T.O. Control	21-08-280
CABLE, Seat Back Latch Release	23-45-204
CABLE SET, Ignition	8-36-1
CABLE, Spark Plug	8-36-83
CABLE, Speed Control	14-02-34
CABLE, Speedometer	21-84-1
CABLE, Tachometer Drive	8-37-508
CABLE, Transmission G/Shift	21-30-365
CABLE, Winch	21-97-17
CABLE, Wire	8-16-3
CABLE, Parking Brake	4-23-1
CAGE, Rear Axle Diff. Spiral Pinion	3-14-0
CAGE, Rear Axle Drive Pinion Brg.	3-23-0
CAM, Control Arm	2-08-59
CAM, Hydraulic Brake Adjusting	5-22-1
CAM, Turn Signal Switch Cancelling	8-50-126
CAM, w/Shield Wiper	23-67-2
CAMSHAFT	9-15-1
CAMSHAFT, Air Brake	5-97-1
CAMSHAFT BEARING	9-16-6
CAMSHAFT SPROCKET	9-17-5
CANISTER, Vapor (Charcoal)	25-04-1
CAP, Crankshaft Bearing	9-10-5
CAP, Brake Vacuum Hose	5-105-14
CAP, Distributor	8-27-71
CAP NUT, ANTENNA Mtg.	1-88-120
CAP, Fuel Tank Filler	14-86-35
CAP, Frt. Wheel Grease	22-08-57
CAP, Oil Filler	10-01-54
CAP, Oil Pressure Rel. Valve	10-22-40
CAP, Strg. Pump Reservoir	19-54-182
CAP, Radiator Filler = 16	7-12-1
CAP, Roof Luggage Rack Side	23-40-177
CAP, Wheel Cover Dome	22-01-48
CAP, Wheel Hub	22-08-5
CAP, W/Shield Washer Reservoir	23-67-241
CAPACITOR, Alternator	8-29-129
CARBURETOR	14-30-1
CARBURETOR AIR CLEANER	14-29-2
CARBURETOR AIR HEATER	14-62-1
CARBURETOR INTERCONNECTING ROD	14-15-3
CARPET, Front	23-70-3
CARPET, Rear	23-79-33
CARRIER, Rear Axle Differential	3-03-3
CARRIER, Trans. Planet Pinion	21-134-5
CARRIER, Rear Axle Drive Pinion	3-19-7
CARTRIDGE, Oil Filter	10-26-8
CASE, Auxiliary Transmission	21-88-5
CASE, Inter Axle Diff.	3-29-53
CASE, Rear Axle Diff.	3-04-6
CASE, Trans.	21-03-1
CASE, Axle Diff. Gear Support	3-05-1
CATCH, Glove Box Door Lock	23-06-15
CATCH, Hood Safety	15-11-34
CHAIN CASE COVER	9-23-5
CHAIN, Tailgate	23-54-8
CHAIN, Timing	9-20-1
CHAMBER, Air Brake Service	5-98-26
CHAMBER, Air Brake Spring	5-121-0
CHANNEL, Door Glass	23-09-52
CHANNEL, Qtr. Tailgate Glass Run	23-09-67
CHASSIS AND BODY WIRING	8-15-2
CHECK ARM, Door Hinge	23-10-1
CHECK ARM, Glove Box Door	23-06-13
CHOKE, Carburetor	14-39-0
CHUCK, Strg. Gear	19-01-8
CIGAR LIGHTER	8-20-1
CIRCUIT BREAKER, Rr. Comp't. Cigar Lighter	8-20-3
CIRCUIT BREAKER, Wiring	8-17-30
CLAMP, Air Cleaner	14-29-15
CLAMP, Distributor	8-27-26
CLAMP-W/PUMP By Pass Hose	7-48-19
CLAMPS, Air Cond.	24-28-17
CLAMP, Hand Brake Brake Cable	4-23-28
CLAMP, Exhaust Pipe	11-08-24
CLAMP, Fuel Line Hose	14-86-49
CLAMP, Gearshift Control Rod	19-48-12
CLAMP, Htr, Blower Motor Wheel	1-48-50
CLAMP, Instrument Panel Strg. Column	19-14-35
CLAMP, Intake Manifold Exhaust Pipe,	11-05-30
CLAMP, Intern and Rear Seat Mounting	23-48-123
CLAMP, Master Cyl. Cover	5-39-26
CLAMP, Muffler	11-02-1
CLAMP, Power Brake Hose	5-111-19
CLAMP, Radiator Hose	7-14-13
CLAMP, Speedometer Drive Pinion	21-85-61
CLAMP, Tail Pipe Rr. Support	11-09-4
CLAMP, T/Gate Hinge Torsion	23-54-144
CLAMP, V/Wing Upper Pivot	23-64-237
CLEANER, Crankcase Vent Inlet Air	10-01-21
CLIP, B/Crank to Carb. Rod	14-11-3
CLIP, Brake Tube	5-56-2
CLIP, Carburetor Air Scoop Door	15-03-82
CLIP, Front Spring	17-05-1
CLIP, Rear Spring	17-15-1
CLIP, Strg. Column Support Bracket	19-31-3
CLIP, Throttle Linkage Rod	14-13-3
CLIP, Top Lift Motor Pump	23-58-557
CLIP, T/Gate Glass W/Strip	23-63-183
CLIP, T/Gate Window Washer	23-67-30
CLUTCH, Trans. Aux. M/Shaft	21-18-13
CLUTCH, Transfer Case Sliding	21-112-0
CLUTCH, Trans. Synchronizer	21-14-6
CLUTCH, Two Speed Axle	3-48-0
CLOCK	8-37-14
CLOSURE, Bumper Front	13-64-26
CLUTCH COVER AND PRESSURE PLATE	6-14-1
CLUTCH DISC	6-13-1
CLUTCH HOUSING	6-09-1
CLUTCH HOUSING PAN	6-10-2

PART NAME	CODE
CLUTCH PEDAL	6-38-1
CLUTCH PEDAL BRACKET	6-46-1
CLUTCH PEDAL PAD	6-39-2
CLUTCH PEDAL ROD	6-50-1
CLUTCH PEDAL SHAFT	6-43-1
CLUTCH PRESSURE SPRING	6-16-1
CLUTCH RELEASE BEARING	6-19-2
CLUTCH RELEASE BEARING RETURN SPRING	6-20-14
CLUTCH RELEASE FORK RETURN SPRING	6-27-5
CLUTCH RELEASE FORK	6-22-1
CLUTCH RELEASE LEVER	6-17-3
CLUTCH RELEASE OVER-CENTER SPRING	6-35-0
CLUTCH RELEASE ROD	6-24-1
CLUTCH, Starter	8-52-41
CLUTCH TORQUE SHAFT	6-52-1
COIL, Air Cond. Compr. Clutch Field	24-25-232
COIL, Air Cond. Evaporator	24-28-220
COIL, Ignition	8-35-4
COLLAR, Distributor Shaft	8-27-137
COLLAR, Manual Antenna Mtg.	1-88-170
COMPRESSOR, Air Brake	5-114-0
COMPRESSOR, Air Cond.	24-25-5
CONDENSER, Distributor	8-27-190
CONDENSER, Air Cond.	24-27-5
CONE and ROLLER, Frt. Wheel Bearing	22-06-1
CONE, Differential	3-11-1
CONE, Rear Axle Drv. Pinion Brg.	3-22-24
CONNECTING ROD	9-31-4
CONNECTING ROD BEARING PACKAGES	9-32-2
CONNECTOR, Wiring	8-16-1
CONNECTOR, Heater Control Vac. Hose	1-48-280
Connector, Intake Manifold Vacuum	9-48-8
CONNECTOR, Park Brk. Air Line	4-25-0
CONNECTOR, Power Brk. Hose Vane	5-110-18
CONNECTOR, Radiator Outlet	7-14-42
CONNECTOR, Trans. Oil Cooler	9-46-44
CONNECTOR, Water Pump to Oil Cooler	7-48-8
CONNECTOR, W/Shield Washer	23-67-262
CONSOLE, Floor Tunnel	23-38-1
CONTACT, Starter Solenoid	8-52-341
CONTACT and SPRING PACKAGE, Starter Sol. Sw.	8-52-342
CONTACT and SPRING PACKAGE, Distributor	8-27-85
CONTACT SET, Distributor	8-27-158
CONTACT, Dome Lamp Socket	8-05-31
CONTACT, Fender Side Marker Lamp	8-14-4
CONTACT, Gearshift Selector Lamp	21-30-33
CONTACT, Horn Ring and Feed Cable	8-33-118
CONTACT, Inst. Cluster Lamp Socket	8-41-39
CONTROL, Vacuum	8-27-308
CONTROL, Air Brk. Tractor & Trailer	5-127-0
CONTROL, A/Cond. and Htr.	24-24-39
CONTROL, Door Key Cyl. Locking	23-18-25
CONTROL, Heater Fresh Air Door	1-48-374
CONTROL, Heater	1-48-4
CONTROL, Hood Carburetor Air	15-03-63
CONTROL, Rear Speaker Fader	1-87-58
CONTROL, Skid	5-06-7
CONTROL, Snow Plow	1-93-0
CONTROL, T/Gate and Door Latch	23-54-218
CONTROL, Transfer Case	21-101-0
CONTROL, Trans. G/Shift Remote	21-42-0
CONTROL UNIT, NOx	8-22-6
CONTROLS, Air Cond.	24-24-0
CONVERTER, Torque	9-46-4
COOLER, Strg. Pump Oil	19-54-196
COOLER, Radiator Core Oil	9-46-31
COOLER, Trans. Oil	9-46-31
COOLER, Torque Converter	9-46-31
CORE, Air Cond. & Heater	24-01-24
CORE, Engine Oil Cooler	10-34-23
CORE, Heater	1-48-88
CORE, Radiator	7-11-3
CORE, Starter Solenoid Moving	8-52-375
COUNTERSHAFT, Aux. Trans.	21-94-1
COUNTERSHAFT GEAR	21-15-2
COUNTERSHAFT, Trans.	21-24-2
COUNTERSHAFT, Trans. Aux.	21-18-56
COUNTERWEIGHT, Heat Control	9-58-12
COUPLING, Electric Wdo. Regulator	23-54-152
COUPLING, Strg. Column Shaft	19-15-23
COVER, Oil Filter	10-26-26
COVER, Air Cleaner	14-29-7
COVER, A/Conditioning Spot Cooler Hole	23-33-16
COVER, A/Cond. and Heater Vent.	24-24-184
COVER, Auto. Headlamp Scanner	8-53-285
COVER, Chain Case	9-23-5
COVER, Clutch	6-14-1
COVER, Console Trans. Control Lever	21-30-408
COVER, Cylinder Block Starter Opening	9-02-37
COVER, Cylinder Head	9-03-28
COVER, Dash Panel Heater Motor	23-34-116
COVER, Exhaust Manifold Heat Tube	9-48-125
COVER, Front Axle Diff.	2-11-26
COVER, Front Door Outside Panel	23-34-135
COVER, Front Seat Adjuster	23-47-8
COVER, Fuse Block Base	8-15-13
COVER, Gearshift Boot	21-30-414
COVER, Gearshift Indicator Hole	21-30-19
COVER, Hood Air Intake Scoop,	14-03-65
COVER, Inst. Panel Map Light Opening	23-33-216
COVER, Instrument Panel Clock Hole	23-33-20
COVER, Instrument Panel Steering	23-33-132
COVER, Master Cyl. Reservoir	5-39-20
COVER, Radio and Heater Opening	23-33-12
COVER, Radio Opening	1-87-22
COVER, Rear Axle Diff. Carrier	3-03-29
COVER, Roof Drain Trough Mldg. Joint	23-59-57
COVER, Seat Belt	23-49-3
COVER, Spare Tire	23-04-229
COVER, Spare Tire	23-79-64
COVER, Spare Wheel	22-20-91
COVER, Spotcooler Hole	24-24-151
COVER, Starter Gear Hsg.	8-52-101
COVER, Strg. Column Jacket	19-14-28
COVER, Strg. Column Shaft Coupling	19-15-17
COVER, Strg. Gear Housing	19-04-1
COVER, Strg. Wheel Hub,	19-30-7
COVER, Tie Rod Dust	2-07-28
COVER, Trans. Case	21-29-0
COVER, Trans. P.T.O. Opening	21-08-1
COVER, Trans. Output Shaft	21-04-8
COVER, Underbody Engine Housing	23-04-45
COVER, Underbody Trans.	23-04-103
COVER, Whl. Brake Adj. Screw Hole	5-13-35
COVER, Wiper Parking Mechanism	23-67-201
COWL, Body Front	23-12-1
CRANK, Wiper Drive	23-67-76
CRANKSHAFT, A/Cond. Compressor	24-25-154
CRANKSHAFT	9-07-5
CRANKSHAFT BEARING CAP	9-10-5

PART NAME	CODE
CRANKSHAFT BEARING PACKAGE	9-09-2
CRANKSHAFT REAR BEARING OIL SEAL	9-11-1
CRANKSHAFT SPROCKET	9-08-5
CRANKSHAFT VIBRATION DAMPER	9-13-5
CROSS BAR, Radiator Grille	7-33-1
CROSSMEMBER, Aux. Trans.	21-88-59
CROSSMEMBER, Cab Support	13-09-1
CROSSMEMBER, Engine Rear Support	13-10-1
CROSSMEMBER, Frt. Suspension	23-32-17
CROSSMEMBER, Frt. Frame	13-11-5
CROSSMEMBER, Front Spring	13-10-1
CROSSMEMBER, Fuel Tank Support	13-15-1
CROSSMEMBER, Intermediate	13-16-0
CROSSMEMBER, Rear	13-18-0
CROSSMEMBER, Rear Shock	13-22-0
CROSSMEMBER, Rear Spring	13-23-0
CROSSMEMBER, Roof Luggage Rack	23-40-155
CROSSMEMBER, Rear Anchor	13-11-5
CROSSMEMBER, Radiator Yoke Side Pnl	7-26-32
CROSSMEMBER, Trans. Mounting	13-10-1
CROSSMEMBER, Transfer Case	13-27-0
CROSSMEMBER, Trunnion	13-12-2
CROSSOVER, Exhaust	11-05-1
CUP, Brake Cyl. Piston	5-71-1
CUP, Clutch Hydraulic M/Cyl.	6-40-12
CUP, Clutch Hydraulic Slave Cyl.	6-40-53
CUP, Differential	3-11-2
CUP, Drive Pinion Brg.	3-22-25
CUP, Frt. Wheel Bearing	22-06-2
CUP, Rear Wheel Brg.	22-07-2
CUP, Strg. Gear Worm Thrust Bearing	19-15-63
CURTAIN, Sleeper Compartment	23-88-0
CUSHION, Bumper Guard	13-68-18
CUSHION, Step-Pad, Sta. Wgn.	13-66-148
CYLINDER and KEY PACKAGE, Dr. and Ign.	23-17-2
CYLINDER & KEY PKG., Console	23-17-38
CYLINDER & KEY PKG., Deck	23-17-4
CYLINDER & KEY PKG., Floor	23-17-72
CYLINDER & KEY PKG., Ignition, Truck	8-35-115
CYLINDER, Auto. Trans. Retarder Master	21-145-20
CYLINDER BLOCK	9-02-5
CYLINDER, Booster Brk. Slave	5-100-230
CYLINDER, Brake Booster	5-100-0
CYLINDER, Clutch Hyd. Master	6-40-0
CYLINDER, Clutch Hyd. Slave	6-40-46
CYLINDER HEAD	9-03-4
CYLINDER, Inter Axle Shift	3-29-194
CYLINDER, Master	5-39-3
CYLINDER PACKAGE, Tandem Brake	5-39-3
CYLINDER, Park Brk. Lever	4-25-22
CYLINDER, Power Strg.	19-63-86
CYLINDER REPAIR KIT, Brake	5-39-1
CYLINDER REPAIR PKG. - Clutch M/Cyl.	6-40-3
CYLINDER REPAIR PKG. - Clutch Slave	6-40-44
CYLINDER REPAIR PACKAGE, Wheel	5-63-1
CYLINDER, Top Lift	23-58-200
CYLINDER, Snow Plow	1-93-0
CYLINDER, Tilt Cab Tilting	23-1-22
CYLINDER, Trans. Aux. Shift	21-18-69

D

PART NAME	CODE
DAMPER, A/Cond. and Htr. Defroster	24-28-383
DAMPER, Vibration	9-13-5
DASHPOT, Carburetor	14-50-25
DECAL, Door	23-11-21
DECK LID	23-19-8
DECK LID LUGGAGE RACK PACKAGE	1-74-1
DEFLECTOR, REAR, STONE	13-66-106
DEFLECTOR, Roof Rr. Air	23-36-134
DEFOGGER, Rear Window	1-47-1
DIAL, Trans. Column Gearshift	21-30-21
DIAPHRAGM, Air Brake Chamber	5-98-21
DIAPHRAGM, A/Cleaner Snorkel	14-29-34
DIAPHRAGM, Brake Booster Cylinder	5-100-4
DIAPHRAGM, Carburetor Choke	14-39-7
DIFFERENTIAL CASE	3-04-6
DIFFERENTIAL CLUTCH PARTS	3-09-0
DIFFERENTIAL PINION	3-07-1
DIFFERENTIAL PINION SHAFT	3-08-1
DIFFERENTIAL SIDE GEAR	3-06-5
DIFFERENTIAL, Partial	3-03-2
DIFFERENTIAL, w/Carrier and Tubes	3-03-1
DISC, Clutch	6-13-1
DISC, Differential Clutch	3-09-1
DISC, Parking Brake	4-01-0
DISC, Trans. Frt. Clutch	21-133-36
DISTRIBUTOR, Assembly	8-27-1
DOME LAMP AND SWITCH	8-05-2
DOME, Wheel	22-01-51
DOOR, Cowl Ventilator	23-61-29
DOOR, Glove Box	23-06-10
DOOR, Headlamp	8-34-40
DOOR, Htr. Shut Off	1-48-365
DOOR HINGE	23-15-0
DOOR LOCKS AND REMOTE CONTROLS	23-18-0
DOOR REGULATORS AND REMOTE CONTROL HANDLES	23-14-0
DOOR, Quarter Panel Fuel Filler	23-34-253
DOOR, Tilt Cab Radiator Access	23-34-201
DOORS	23-11-0
DOWEL, Cylinder Block	9-02-7
DOWEL, Rear Axle Drive Shaft Stud	3-36-8
DRAG LINK, Steering	2-02-6
DRAIN COCK, RADIATOR	7-13-2
DRAIN TROUGH	23-59-0
DRIER, Air Cond. Receiver	24-26-20
DRIVE GEAR AND PINION SET, Rr. Axle	3-19-1
DRIVE GEAR BOLT OR SCREW	3-20-1
DRIVE SHAFT, Rr. Axle	3-32-1
DRIVE, Fan Fluid	7-07-1
DRUM, Front Brake	22-04-1
DRUM, Parking Brake	4-01-0
DRUM, Rear Brake	22-04-2
DRUM, Trans. Reverse	21-136-65
DUCT and DOOR, Fresh Air Vent	1-48-707
DUCT, Heater Defroster	1-48-141
DUCT, Hood Cold Air Intake	15-03-76
DUCT, Rr. Window Defogger	1-47-3
DUCTS, Air Cond. Air Distribution	24-28-73
DUST SEAL, Strg. Gear Shaft	19-19-38

PART NAME	CODE

E

ECCENTRIC, Camshaft	9-15-2
ELBOW, Air Cond. Exp. Valve to Dash	24-28-302
ELBOW, Filler Tube	14-86-69
ELBOW, Water Pump By-Pass	7-48-8
ELBOW, Water Outlet	9-05-5
ELEMENT, Cigar Lighter	8-20-9
ELEMENT, *Trans. Aux. Air Filter*	21-18-133
ELEMENT, Water Filter	7-53-1
EMISSION CONTROLS	25-0-0
END PACKAGE, Tie Rod	2-07-1
ENGINE, Short Assembly	9-01-24
ENGINE FRONT SUPPORT INSULATOR	9-67-4
ENGINE FRONT SUPPORT	9-64-0
ENGINE LESS ACCESSORIES	9-01-19
ENGINE REAR SUPPORT INSULATOR	9-71-5
EVAPORATOR, Parts - Air Cond.	24-28-0
EXHAUST PIPE	11-05-1
EXHAUST PIPE FLANGE GASKET AND STUD	11-06-8
EXHAUST PIPE SUPPORT CLAMP	11-08-24
EXTENSION, Trans.	21-04-1
EXTENSION, Body Side Sill	23-51-16
EXTENSION, Body Side Sill Door Scuff	23-20-24
EXTENSION, Center Floor Pan	23-32-25
EXTENSION, Console to Floor	23-38-2
EXTENSION, Deck Opening Lower	23-34-176
EXTENSION, Exhaust Pipe	11-05-4
EXTENSION, Fender Front	12-01-105
EXTENSION, Frame	13-42-0
EXTENSION, Frt. Side Rail to Side	23-32-116
EXTENSION, Headlamp Door	8-34-48
EXTENSION, Heater Vacuum Control	1-48-7
EXTENSION, Pillar	23-36-20
EXTENSION, Quarter Inside	23-34-236
EXTENSION, Quarter End	23-34-242
EXTENSION, Rear Floor Pan Side	23-32-49
EXTENSION, Rear Wdo. Opening	23-64-68
EXTENSION, Roof Side Rail	23-40-92
EXTENSION, Shelf Panel Rear	23-34-330
EXTENSION, Strg. Wheel Hub,	19-30-8
EXTENSION, Tail Pipe	11-09-37
EXTENSION, Valve Stem	22-01-46
EXTENSION, Wheelhouse Inner Seat	23-49-22

F

FAN AND ALTERNATOR IDLER PULLEY	7-04-1
FAN AND RELATED DRIVE BELTS	7-03-1
FAN ASSEMBLY	7-02-1
FAN DRIVE PULLEY	7-06-1
FAN FLUID DRIVE UNIT OR THERMAL DRIVE UNIT	7-07-0
FAN PULLEY HUB	7-05-1
FASTENER, Front Door Glass	23-64-272
FENDER, Front	12-01-5
FENDER BRACE	12-07-1
FENDER BRACKET	12-06-3
FENDER, Rear	12-18-5
FENDER SHIELD	12-04-4
FIELD COIL, Starter	8-52-214
FILLER, Body Front Pillar Lower	23-36-3
FILLER, Body Pillar	23-36-29
FILLER, Frt. Floor Pan	23-32-29
FILLER, Qtr. O/Side Panel Rear	23-64-213
FILLER, *Quarter Panel Taillamp*	23-34-280
FILLER, Rear Bumper Guard, B	13-68-15
FILLER, Rear Wdo. Opening Lower	23-64-84
FILLER, Rr. Floor Pan Tailgate Opening	23-34-19
FILLER, Shelf Panel Extension	23-34-326
FILTER, Fuel	14-67-1
FILTER, Carb. Air	14-29-6
FILTER, Engine Water	7-53-2
FILTER, Transmission Oil	21-117-1
FILTER, Fuel Tank	14-86-85
FILTER, *Power Brake Air Cleaner*	5-113-17
FILTER, Oil	10-26-6
FILTER, Trans. Aux. Air	21-18-65
FILTER, Trans. Splitter Air	21-06-37
FILTER, Vapor Canister (Charcoal)	25-04-4
FILTER, W/Shield Washer	23-67-242
FINGER, Gearshift Control Selector	21-30-55
FINISH PLATE, Floor Console	23-38-5
FINISH PLATE, Glove Box	23-06-17
FINISH PLATE, Instrument Panel	23-33-135
FINISH PLATE, Qtr. Trim Panel	23-26-46
FINISH PLATE, Rear Seat Back	23-26-75
FITTING'S, Air Cond. Compressor	24-25-107
FITTING, Strg. Pump Discharge	19-54-225
FLANGE, Exhaust Extension Pipe	11-05-12
FLANGE, Frt. Axle Drive	2-12-65
FLANGE, Frt. Axle Strg. Knuckle	2-13-3
FLANGE, Strg. Column Shaft Coupling,	19-15-43
FLANGE, Strg. Wheel Locking,	19-30-19
FLASHER, Turn Signal	8-50-186
FLOOR BOARDS	23-04-0
FLUID, Brake	5-01-2
FLYWHEEL	9-45-1
FOLDING TOP	23-58-3
FORK, Aux. Trans. G/Shift	21-90-2
FORK, Clutch	6-22-1
FORK, Inter Axle Shift	3-29-101
FORK, Starter Shifting	8-52-49
FORK, Transfer Case Shift	21-109-0
FORK, Trans. Aux. Shift	21-18-18
FORK, Trans. G/Shift	21-39-3
FORK, Trans. Splitter Shift	21-06-24
FORK, Two Speed Axle Clutch	3-51-2
FORK, Two Speed Axle Shift	3-46-0
FRAME	13-01-1
FRAME and CHANNEL, Vent Wing	23-64-48
FRAME, Windshield	23-66-65
FRONT SEAT HARDWARE	23-45-0
FRONT SEAT ADJUSTER	23-47-0
FUEL FILTER	14-67-1
FUEL GAUGE	8-37-275
FUEL PUMP	14-73-1
FUEL TANK	14-86-1
FUEL TANK GAUGE	14-72-1
FUSE BLOCK	8-15-3
FUSES	8-17-2

PART NAME	CODE
G	
GARNISH MOULDINGS	23-22-0
GASKET & SEAL, Transmission	21-01-3
GASKET SET, Engine	9-01-5
GASKET SET, Engine Valve Grind	9-39-1
GASKET SET, Intake Manif.	9-50-1
GASKET SET, Oil Pan	10-24-1
GASKET, Air Cleaner Cover	14-29-4
GASKET, Air Cleaner to Carb.	14-29-5
GASKET, Air Cond. Compr. Cyl. Head	24-25-94
GASKET, Auto. Trans. Drain Plug	21-119-12
GASKET, Auto. Trans. Frt. Pump Hsg.	21-118-54
GASKET, Auto. Trans. Oil Pan	21-119-5
GASKET, Brake M/Cyl.	5-39-18
GASKET, Brake M/Cyl. Reservoir Cover	5-39-24
GASKET, Brake Support	5-13-7
GASKET, Brake Whl. Cyl. Hose	5-62-7
GASKET, Carburetor Flange	14-30-2
GASKET, Chain Case Cover	9-23-17
GASKET, Cylinder Head	9-03-5
GASKET, Cylinder Head Cover	9-03-29
GASKET, Distributor Mtg.	8-27-4
GASKET, Drive Pinion Brg. Retainer	3-33-10
GASKET, Exhaust Manifold	9-50-5
GASKET, Exh. Manif. Heat Tube	9-50-18
GASKET, Exh. Pipe Flange	11-06-8
GASKET, Fender Side Marker Lamp	8-14-13
GASKET, Fuel Pump	14-74-1
GASKET, Gearshift Lever	21-34-53
GASKET, Intake & Exhaust Manif.	9-50-0
GASKET, Oil Filter Body	10-26-18
GASKET, Oil Filter Cover	10-26-27
GASKET, Oil Pan	10-24-8
GASKET, Oil Pan Drain Plug	10-24-38
GASKET, Oil Pump	10-07-0
GASKET, Rear Axle Carrier Cover	3-03-30
GASKET, Rear Axle Carr. Cvr. Filler Plug	3-03-36
GASKET, Rear Axle Drive Shaft Flange	3-36-1
GASKET, Rear Axle Frt. Brg. Oil Seal	3-22-78
GASKET, Strg. Gear Shaft Cover	19-19-28
GASKET, Tail, Stop & T/Signal Lamp	8-55-8
GASKET, Trans. Case Cover	21-29-25
GASKET, Water Outlet Elbow	9-05-6
GASKETS, Water Pump	7-44-0
GATE, Trans. Column G/Shift Lever	21-30-11
GAUGE, Fuel	8-37-275
GAUGE, Fuel Tank Sending Unit	14-72-1
GAUGE, Oil Pressure	8-37-316
GAUGE, Temperature	8-37-136
GAUGE, Vacuum	8-37-127
GEAR & PIN, Distributor Shaft	8-27-352
GEAR & PINION, Front Axle	2-11-58
GEAR & PINION, Rear Axle	3-19-1
GEAR & PINION, Speedometer	21-85-0
GEAR & SEAL PKG., Windshield Wiper	23-67-10
GEAR & SHAFT, Transfer Case Idler	21-104-0
GEAR, Aux. Trans. Co/Shaft Drive	21-94-20
GEAR, Aux. Trans. Co/Shaft O/Drive	21-94-23
GEAR, Aux. Trans. Co/Shaft Second Spd.	21-94-2
GEAR, Aux. Trans. Co/Shaft Third Spd.	21-94-9
GEAR, Aux. Trans. M/Drive	21-95-8
GEAR, Aux. Trans. M/Shaft First Spd.	21-92-60
GEAR, Aux. Trans. M/Shaft O/Drive	21-92-6
GEAR, Aux. Trans. M/Shaft Second Spd.	21-92-70
GEAR, Aux. Trans. M/Shaft U/Drive	21-92-49
GEAR, Flywheel Ring	9-45-2
GEAR, Front Axle Diff Side	2-11-39
GEAR, Inter Axle Diff. Drive	3-29-13
GEAR, Inter Axle Diff. Driven	3-29-41
GEAR, Inter Axle Diff. Idler	3-29-29
GEAR, Inter Axle Diff. Side	3-29-82
GEAR, Oil Pump Drive	10-10-1
GEAR, P.T.O. Drive	21-08-76
GEAR, P.T.O. Idler	21-08-86
GEAR, P.T.O. Reverse	21-08-77
GEAR, Rear Axle Diff. Drive	3-19-16
GEAR, Rear Axle Diff. Side	3-06-5
GEAR, Transfer Case	21-102-0
GEAR, Trans. Annulus	21-134-38
GEAR, Trans. Aux. Co/Shaft Drive	21-18-57
GEAR, Trans. Aux. M/Shaft Reduction	21-18-7
GEAR, Trans. Co/Shaft Drive	21-15-3
GEAR, Trans. Co/Shaft First Spd.	21-15-11
GEAR, Trans. Co/Shaft Fourth Spd.	21-15-23
GEAR, Trans. Co/Shaft O/Drive	21-54-43
GEAR, Trans. Co/Shaft P.T.O. Drive	21-15-26
GEAR, Trans. Co/Shaft Range	21-15-6
GEAR, Trans. Co/Shaft Second Spd.	21-15-15
GEAR, Trans. Co/Shaft Third Spd.	21-15-22
GEAR, Trans. High and Low Range Co/Shaft	21-06-46
GEAR, Trans. M/Drive	21-09-2
GEAR, Trans. M/Shaft Drive	21-10-11
GEAR, Trans. M/Shaft First Spd.	21-10-6
GEAR, Trans. M/Shaft Fourth Spd.	21-10-43
GEAR, Trans. M/Shaft Low Speed	21-10-3
GEAR, Trans. M/Shaft Output	21-10-75
GEAR, Trans. M/Shaft O/Drive	21-54-29
GEAR, Trans. M/Shaft Reverse Speed	21-10-72
GEAR, Trans. M/Shaft Second Speed	21-10-16
GEAR, Trans. M/Shaft Sliding, First & Rev.	21-10-4
GEAR, Trans. M/Shaft Third Speed	21-10-31
GEAR, Trans. Output Shaft Coupling	21-10-70
GEAR, Trans. Reverse Idler	21-11-1
GEAR, Trans. Sun	21-133-40
GEAR, Trans. Synchronizer Clutch	21-14-5
GEAR, Two Speed Axle Clutch	3-50-1
GLASS, Body Cargo Area	23-64-310
GLASS, Qtr. Window	23-64-311
GLASS, Rear Window	23-64-314
GLASS, Vent Wing	23-64-306
GLASS, Windshield	23-66-135
GLASS, Door Window	23-64-308
GLASS CHANNELS	23-09-0
GLASS, T/Gate Window	23-64-10
GLOVE BOX	23-06-4
GLOVE COMPARTMENT LAMP	8-38-23
GOVERNOR	14-68-0
GOVERNOR REPAIR PACKAGE, Trans.	21-138-2
GRILLE, Defogger Outlet	1-47-4
GRILLE, Defroster Outlet	1-48-158
GRILLE	7-16-11
GRILLE, Radio Speaker	23-33-42
GRILLE, Rear Seat Heater	1-87-21
GROUND LEAD, Distributor	8-27-207
GUARD, Alternator	7-08-5
GUARD, Bumper	13-68-6
GUARD, Prop Shaft	16-15-6
GUIDE, Auto. Adj. Cable	5-20-11

PART NAME	CODE
GUIDE, Trans. Kickdown Servo	21-137-13
GUIDE, Manual Seat Adjuster	23-47-67
GUIDE, Valve	9-39-10
GUSSET, Frame	13-46-0

H

HANDLE, A/Cond. or Htr. Vent Dr.	1-48-401
HANDLE, Ash Receiver	23-02-42
HANDLE, Door Latch Remote Control	23-14-27
HANDLE, Door Outside	23-14-10
HANDLE, Door Window Reg.	23-14-18
HANDLE, Floor Pan Cvr. Release	23-32-80
HANDLE, Glove Box Door	23-06-25
HANDLE, Grab	23-77-0
HANDLE, Hood Latch Release	15-11-5
HANDLE PACKAGE, Door Vent Wing	23-14-53
HANDLE, Park Brake Lever	4-08-2
HANDLE, Qtr. Window Glass	23-14-70
HANDLE, Qtr. Window Regulator	23-14-79
HANDLE, Reclining Front Seat Back	23-45-52
HANDLE, Tailgate Lock	23-54-180
HANDLE, Tailgate Wdo. Regulator	23-54-73
HANDLE, 3rd Seat Back Release	23-48-20
HANGER, Rr. Spring Front	13-54-4
HANGER, Rr. Spring Rear	13-54-15
HEADLAMP	8-34-1
HEAD, Starter Commutator End	8-52-176
HEAD, A/Cond. Compressor	24-25-84
HEAD, Cylinder	9-03-4
HEAD, Power Strg. Gear Housing	19-02-55
HEAD END SPLITTER & RANGE PARTS, Trans.	21-06-0
HEADER, Roof Rear	23-34-293
HEADLINING	23-86-22
HEAT CONTROL VALVE, Manifold	9-58-1
HEAT SHIELD, Exhaust Pipe	11-05-5
HEAT SHIELD, Muffler	11-01-16
HEAT SHIELD, Spark Plug,	8-36-124
HEATER	1-48-1
HEATER AND COMPONENTS	1-48-0
HEATER, Engine Jacket	9-02-50
HEATER, Carburetor	14-62-1
HELPER SPRING, Front Seat Cushion	23-52-1
HIGH BEAM INDICATOR LAMP	8-39-0
HINGE, Hood	15-19-2
HINGE, 3rd Seat Back Frame	23-48-121
HINGE, Deck Lid	23-19-84
HINGE, Door Lwr.	23-15-3
HINGE, Door Upr.	23-15-1
HINGE, Floor Console Compartment	23-38-14
HINGE, Front Fender	12-01-18
HINGE, Glove Box Door	23-06-21
HINGE, Hood Cold Air Intake Door,	15-03-86
HINGE, Rear Floor Pan Cvr. Pnl.	23-32-65
HINGE, Side and Cargo Door Window	23-64-126
HINGE, Stake Rack	23-68-3
HINGE, T/Gate	23-54-4
HOLDER, Alternator Brush	8-29-42
HOLDER, Starter Brush	8-52-150
HOLDER, Air Cond. Fuse	24-24-7
HOOD BUMPER	15-09-4
HOOD LATCH	15-11-3
HOOD LATCH STRIKER	15-13-2
HOOD PANEL	15-03-3
HOOK, Coat Hanger	23-82-30
HOOK, Stake Rack	23-68-2
HORN	8-32-2
HORN CONTROLS	8-33-0
HOSE PACKAGE, Pump Pressure	19-58-7
HOSE, Air Brake	5-116-0
HOSE, Air Brake Compressor	5-120-0
HOSE, Air Cleaner	10-01-62
HOSE, Air Conditioning	24-28-24
HOSE, Air Pump Diverter Valve	25-02-42
HOSE, Brake	5-62-1
HOSE, Carburetor Vapor Hose	14-73-11
HOSE, Fuel Filter	14-67-2
HOSE, Front Wheel Brake	5-62-1
HOSE, Heater Connector	1-48-7
HOSE, Htr. Core	1-48-555
HOSE, Power Brake Vacuum	5-111-17
HOSE, P/Strg. Pump Return	19-58-14
HOSE, Radiator Inlet	7-14-4
HOSE, Radiator Outlet	7-14-5
HOSE, Water Pump By-Pass	7-14-9
HOSE, W/Shield Washer Connector	23-67-260
HOUSING, Air Brake Chamber	5-98-11
HOUSING, Air Cond.	24-28-334
HOUSING, Air Cond. Evaporator	24-28-113
HOUSING, Clutch	6-09-1
HOUSING, A/Cond. and Heater	24-01-18
HOUSING, Ash Receiver	23-02-19
HOUSING, Defogger Blower	1-48-17
HOUSING, Disc Brakes	5-05-1
HOUSING, Distributor	8-27-96
HOUSING, Front Axle	2-11-22
HOUSING, Front Fender	12-01-5
HOUSING, Gearshift Selector Lever	21-30-403
HOUSING, Headlamp	8-34-362
HOUSING, Heater	1-48-125
HOUSING, Heater Fresh Air Intake	1-48-383
HOUSING, Inter Axle Diff.	3-29-68
HOUSING, P.T.O.	21-08-11
HOUSING, Pwr. Strg. Cont. Val. Actuator	19-63-314
HOUSING, Rr. Axle	3-02-1
HOUSING, Starter Pinion	8-52-76
HOUSING, Speed and Inst.	8-37-178
HOUSING, Strg. Column Shaft Bearing,	19-14-21
HOUSING, Steering Gear	19-02-4
HOUSING, Strg. Column Gearshift	19-46-8
HOUSING, Trans. Aux. Case	21-18-45
HOUSING, Turn Signal Indicator Lamp	8-50-64
HOUSING, Trans. Oil Pump	21-118-40
HOUSING, Underbody Engine Cover	23-04-42
HOUSING, Water Pump	7-43-01
HUB And DRUM FRONT	22-03-1
HUB And Drum Rear	22-03-2
HUB, Disc Brake	5-05-3
HUB, Fan Pulley	7-05-1
HUB, Frt. Wheel Locking	2-12-17
HUB, Wheel	22-05-4
HUB with LEVER, Power Brake	5-100-189

PART NAME	CODE
I	
I-BEAM, Front Axle	2-01-2
IDLER ARM, Steering Link	19-27-31
IGNITION COIL	8-35-4
IMPELLER, Water Pump	7-45-31
INDICATOR, Hi Beam	8-39-0
INDICATOR, Low Oil Pressure	8-37-75
INDICATOR, Oil Level	10-03-4
INDICATOR, Trans. Oil Level	21-119-19
INJECTOR, Fuel	14-99-0
INSTRUMENT PANEL	23-33-0
INSTRUMENT PANEL INSTRUMENTS	8-37-0
INSTRUMENT PANEL WIRING	8-19-3
INSULATION	23-31-0
INSULATOR, Aux. Trans.	21-88-61
INSULATOR, Body Hold Down	23-05-10
INSULATOR, Engine Front Support	9-67-4
INSULATOR, Engine Rear	9-71-5
INSULATOR, Clutch Rod	6-24-8
INSULATOR, Muffler and Tail Pipe	11-10-3
INSULATOR, Muffler Support	11-02-16
INSULATOR, Prop Shaft Ctr. Brg.	16-17-18
INSULATOR, Radiator Support Bolt	7-29-11
INSULATOR, Wiring	8-16-6
INTER AXLE PARTS, Front Rear Axle	3-29-0
J	
JACK BAR and BASE	13-72-4
JACKET, Strg. Column	19-14-1
JET, Carburetor	14-35-1
JOINT, Universal Cross	16-03-1
K	
KING PIN, Strg. Knuckle	2-04-1
KIT, Carburetor Gasket	14-30-7
KIT, Carburetor Repair	14-30-4
KIT, Carburetor Zip	14-30-4
KNOB and WIRE, Choke	14-63-1
KNOBS, Air Cond. Control	24-24-156
KNOB, Clock Reset	8-37-454
KNOB, Front Seat Back Release	23-45-39
KNOB, Trans. Gearshift Selector	21-30-6
KNOB, Headlamp Switch	8-53-296
KNOB, Heater Control	1-48-942
KNOBS, Inst. Panel	8-53-296
KNOB, Cigar Lighter	8-20-8
KNOB, Manual Seat Adjuster	23-47-55
KNOB, Parking Brk. Lever	4-25-3
KNOB, Radio Control	1-87-180
KNOB, Rr. Window Defogger Sw.	1-47-8
KNOB, Wiper Switch	23-67-194
KNUCKLE, Steering	2-03-3

PART NAME	CODE
L	
LAMP, Ash Receiver	8-19-83
LAMP, Back-up	8-56-1
LAMP, Cargo and Dome	8-05-0
LAMP, Clearance and I.D.	8-48-0
LAMP, Console	21-30-15
LAMP, Cornering	8-50-292
LAMP, Courtesy	8-11-2
LAMP, Fender T/Signal Indicator	8-50-175
LAMP, Glove Box	8-38-23
LAMP, Head	8-34-1
LAMP, Heater Control	1-48-10
LAMP, Hood T/Signal Indicator	8-50-175
LAMP, Ignition and Starter Switch	8-40-5
LAMP, License	8-57-10
LAMP, Map and Courtesy	8-42-1
LAMP, Parking and T/Signal	8-50-303
LAMP, Side Marker	8-14-1
LAMP, Super Light	8-39-9
LAMP, Tail, Stop and T/Signal	8-55-7
LAMP, Tailgate Tail	8-55-1
LAMP, Trunk	8-13-1
LAMP, Underhood	8-10-1
LATCH, Deck Lid	23-19-105
LATCH, Door	23-18-5
LATCH, Glove Box	23-06-15
LEAD, Distributor	8-27-205
LATCH, Hood	15-11-3
LATCH PACKAGE, Qtr. Wdo. Glass	23-64-181
LATCH, Tailgate	23-54-1
LATCH, Tilt Cab Safety Release	23-1-49
LEAF, Front Spring	17-02-0
LEAF, Rear Spring	17-12-4
LENS, Back Up Lamp	8-56-8
LENS, Clearance and I.D.	8-48-5
LENS, Dome Lamp	8-05-23
LENS, Double Face T/Signal	8-50-71
LENS, Gearshift Selector Lever	21-30-21
LENS, Glove Comp't. Lamp	8-38-3
LENS, Map and Courtesy Lamp	8-42-5
LENS and MASK, Inst. Cluster	8-37-162
LENS, Side Marker	8-14-6
LENS, Tail, Stop and Turn Sig.	8-55-194
LENS, Turning and Parking Lamp	8-50-334
LEVER, Air Brake Camshaft	5-97-16
LEVER, Aux. Trans. G/Shift Hand	21-91-1
LEVER, Aux. Trans. G/Shift Stub	21-89-1
LEVER, Auto. Brake Adjuster	5-20-9
LEVER, Clutch Pedal Shaft	6-43-11
LEVER, Clutch Release	6-17-3
LEVER, Clutch Shaft Assistor	6-41-78
LEVER, Door Elect. Lock	23-18-101
LEVER, Fast Idle Adjusting	14-24-17
LEVER, Gearshift Operating	21-42-11
LEVER, Hood Fresh Air Intake	15-03-91
LEVER, Park Brk. Operating (Wheel)	4-26-1
LEVER, Parking Brake Hand	4-08-1
LEVER, Park Brk. Actuating (Foot)	4-25-1
LEVER, Throttle Control	14-17-0
LEVER, Transmission Gearshift	21-30-2

PART NAME	CODE
LEVER, Trans. Kickdown Band	21-136-20
LEVER, Trans. Throttle Control	21-142-12
LEVER, Turn Signal	8-50-129
LEVER, Two Spd. Axle Shift Fork	3-31-135
LEVELER, Hood	17-23-2
LID, Deck	23-19-8
LID, Floor Console Ash Receiver	23-02-111
LID, Floor Console Compartment	23-38-3
LIGHT, Brake Sentinel	8-37-71
LIGHTER, Cigar	8-20-1
LIMITER, Instrument Voltage	8-37-2
LINER, Dash	23-31-33
LINING PACKAGE	5-03-1
LINING and SHOE, Brake	5-03-3
LINK, Accelerator Rod	14-11-18
LINK, Door Latch Remote Control	23-18-11
LINK, Door Lock	23-18-20
LINK, Hood Latch Release	15-11-20
LINK, Trans. Reverse Band	21-136-44
LINK, Strg. Link	19-27-50
LINK, Wiper Drive	23-67-79
LOCK CYLINDER AND KEYS	23-17-2
LOCK, Diff. Adjuster	3-11-14
LOCK, Door	23-18-5
LOCK, Front Fender	12-03-1
LOCK, Valve	9-39-17
LOUVER, Air Cond	24-28-78
LUGGAGE COMPARTMENT, Tilt Cab	23-19-0

M

MAINSHAFT, Aux. Trans.	21-92-5
MAINSHAFT, Trans.	21-16-3
MAINSHAFT, Trans. Aux.	21-18-1
MANIFOLD, Air Brk. Control	5-118-0
MANIFOLD, Exhaust	9-48-6
MANIFOLD GASKET	9-50-1
MANIFOLD HEAT CONTROL VALVE THERMOSTAT	9-58-5
MANIFOLD, Intake	9-48-7
MAP AND COURTESY LAMP	8-42-1
MASTER CYLINDER	5-39-3
MASTER CYLINDER KIT	5-39-1
MAST, Antenna	1-88-159
MAT, Front Floor	23-20-8
MAT, Luggage Compartment Floor	23-20-29
MAT, Rear Floor	23-20-41
MECHANISM, Electric Wdo. Regulator	23-54-165
MECHANISM, Gearshift (Trans.)	21-30-407
MEDALLION, Seat Back	23-26-76
MICROPHONE	1-87-54
MIRROR, Outside	23-21-3
MIRROR, Inside Rear View	23-21-8
MODULATOR, Skid Control	5-06-1
MOTOR, A/Cond. Blower	24-28-195
MOTOR, Defogger Blower	1-47-13
MOTOR, Folding Top	23-58-357
MOTOR, Htr. Blower	1-48-599
MOTOR, Inter Axle Shift	3-29-138
MOTOR, Power Antenna	1-88-117
MOTOR, Rotating Headlamp	8-34-280
MOTOR, Seat Adjuster	23-47-430
MOTOR, Sun Roof	23-34-3C8
MOTOR, T/Gate Wdo.	23-54-160
MOTOR, Two Speed Axle Shift	3-31-91
MOTOR, Vent Wing	23-64-75
MOTOR, Window Lift	23-41-106
MOTOR, W/S Wiper	23-67-98
MOULDING, Cargo Area Windows	23-23-53
MOULDING, Console Side Carpet	23-26-87
MOULDING, Deck Lid (1)	23-23-30
MOULDING, Door Edge	1-135-1
MOULDING, Door Trim Panel	23-26-23
MOULDING, Front Door	23-23-32
MOULDING, Front Fender	12-15-2
MOULDING, Frt. Seat Cushion Side	23-26-45
PANEL, Radiator Yoke	7-26-30
MOULDING, Headlamp Bezel	8-34-42
MOULDING, Headlining	23-86-35
MOULDING, Hood	15-25-0
MOULDING, Instrument Panel	23-33-86
MOULDING, Grille	7-16-36
MOULDING, Outside Finish	23-23-0
MOULDING PACKAGE, Rear Wdo. Outside	23-23-52
MOULDING, Rear Door	23-23-33
MOULDING, Rear Wdo. Garnish	23-22-86
MOULDING, Roof Side Rail Garnish	23-26-41
MOULDING, Shelf Trim Pnl	23-26-43
MOULDING, Side and Rear	23-23-39
MOULDING, Tailgate Inside Trim	23-26-19
MOULDING, Tilt Cab Inside Finish	23-26-91
MOULDING, Windshield Garnish	23-22-145
MOULDING, Windshield	23-23-65
MUFFLER	11-01-1
MUFFLER, A/Cond., Compressor	24-26-100
MUFFLER SUPPORT	11-02-4

N

NAME PLATE, A/Cleaner	14-29-8
NAME PLATE, Cowl	23-12-5
NAME PLATE, Door	23-11-21
NAME PLATE, Door Inside Trim Pnl	23-26-80
NAME PLATE, Front Fender	12-15-21
NAME PLATE, Glove Box Door	23-06-53
NAME PLATE, Grille	7-16-61
NAME PLATE, Hood	15-06-0
NAME PLATE, Instrument Panel	23-33-96
NAME PLATE, Side Panel	23-34-65
NAME PLATE, T/Gate O/Side Panel	23-54-11
NEEDLE & SEAT, Carburetor	14-30-8
NOZZLE, W/Shield Washer	23-67-246
NUT, Clutch Fork Adjusting	6-24-3
NUT, Wheel Stud	22-05-24

O

O-RING, Water Outlet Pipe	9-05-28
OIL COOLER, Engine	10-34-3
OIL DISTRIBUTOR, Rear Axle	3-03-49
OIL FILTER PARTS	10-26-0
OIL LEVEL INDICATOR	10-03-4
OIL PAN	10-24-4
OIL PRESSURE LIGHT	8-37-75
OIL PRESSURE RELIEF VALVE PARTS	10-22-0

PART NAME	CODE
OIL PUMP	10-07-6
OIL PUMP DRIVE GEAR	10-10-1
OIL PUMP DRIVE SHAFT	10-09-1
OIL PUMP ROTOR	10-14-18
OIL SEAL, Crankshaft Bearing	9-11-1
OIL SEAL, Chain Case Cover	9-23-18
OIL SEAL, Drive Pinion Brg.	3-22-45
OIL SEAL, Drive Shaft	3-35-14
OIL SEAL, P/Strg. Pump Rotor	19-54-151
OIL SLINGER, CRANKSHAFT	9-07-17
OIL STRAINER	10-23-7
OILER, Distributor	8-27-100
ORNAMENT, Grille	7-17-1
ORNAMENT, Hood	15-03-18
ORNAMENT, Strg. Wheel Horn	8-33-6
OUTLET, A/Cond. Air	24-28-78
OUTSIDE FINISH MOULDINGS	23-23-0
OVERLAY, Door	23-11-10
OVERLAY, Fender Side	12-15-32
OVERLAY, Quarter Outside Panel	23-34-329
OVERLAY, T /Gate Outside	23-54-2

P

PAD, Accelerator Pedal	14-01-2
PAD, Brake Pedal	5-28-8
PAD, Clutch Pedal	6-39-2
PAD, Instrument Panel	23-84-0
PAD, Parking Brake Pedal	4-25-6
PAD, Strg. Wheel Horn	8-33-13
PAD, Tailgate Step	23-34-38
PADS, LINERS, INSULATORS, SEALS, ANTI-SQUEAK	23-31-0
PAN, Clutch Hsg.	6-10-2
PAN, Oil	10-24-4
PAN, Trans. Oil	21-119-3
PANEL, Body Metal	23-34-55
PANEL, Bumper Texture	13-66-151
PANEL, Cargo Area Side	23-34-39
PANEL, Center Pillar Upr. Finish	23-23-16
PANEL, Cowl Plenum	23-34-80
PANEL, Cowl Side Inner	23-34-89
PANEL, Cowl Top and Dash	23-34-80
PANEL, Ctr. Floor Pan	23-32-46
PANEL, Dash	23-34-110
PANEL, Deck Opening Upper	23-34-166
PANEL, Deck Opening Lower	23-34-167
PANEL, Door Outside Repair	23-34-120
PANEL, Express Body - Inner	23-34-43
PANEL, Front Fender	12-01-7
PANEL, Frt. Floor	23-32-13
PANEL, Header, Side and Rear	23-34-293
PANEL, Header, Windshield	23-34-354
PANEL, Hood	15-03-3
PANEL, Instrument	23-33-109
PANEL, License Plate Mtg.	8-47-68
PANEL, Qtr. Outside Panel Finish	23-23-85
PANEL, Quarter Inside	23-34-234
PANEL, Quarter Outside Repair	23-34-235
PANEL, Quarter Wheel Opening	23-34-212
PANEL, Quarter Wheelhouse	23-34-29
PANEL, Radiator Grille	7-16-63
PANEL, Radiator Yoke	7-26-30
PANEL, Rear Corner	23-34-78
PANEL, Rear Floor Pan	23-32-56
PANEL, Rocker Dr. Sill	23-51-5
PANEL, Roof	23-34-301
PANEL, 2nd Seat Back	23-48-65
PANEL, Side Lock Pillar	23-34-288
PANEL, Side or Sill to U/Body	23-23-48
PANEL, Side Wheelhouse	23-34-27
PANEL, Underbody Floor	23-32-24
PANEL, Underbody Stepwell	23-34-58
PANS, PLUGS AND BODY BUMPERS	23-32-0
PARKING BRAKE CABLE	4-23-1
PARKING BRAKE LEVER	4-08-1
PARKING BRAKE SIGNAL LAMP	8-31-10
PAWL, Parking Brake	4-13-0
PEDAL, Accelerator	14-01-1
PEDAL, Auto. Trans. Retarder	21-145-1
PEDAL, Clutch	6-38-1
PEDAL, BRAKE	5-27-1
PENTASTAR, Front Fender	12-15-21
PHOTOCELL, Auto. Headlamp Sentinel	8-53-304
PILLARS, Body	23-36-0
PILLAR, Body Center	23-36-5
PILLAR, Body Lock	23-36-53
PILLAR, Cowl Hinge	23-36-14
PILLAR, Quarter Panel Tailgate	23-36-118
PIN, Brake Hold Down Spring	5-26-4
PIN, Cable	14-25-12
PIN, Clutch Rel. Over Center Spring	6-35-15
PIN, Clutch Spring Anchor	6-35-15
PIN, Differential Lock	3-08-2
PIN, Gearshift Selector Lever	21-30-22
PIN, License Plate Mtg.	8-47-76
PIN, Link Clevis	14-02-86
PIN, Parking Lever	4-08-35
PIN, Parking Brake Lever Hinge	4-08-35
PIN, Piston	9-36-5
PIN, Pwr. Brake Link	5-100-194
PIN, Reclining Seat Release Cable	23-45-184
PIN, Starter Shifting Fork Pivot	8-52-50
PIN, T/Gate Hinge	23-54-17
PIN, T/Gate Window Washer Arm	23-67-254
PIN, Trans. Interlock	21-34-42
PIN, Trans. Interlock, Low & Rev.	21-42-28
PIN, Trans. Manual Valve	21-139-34
PINION, Front Axle Diff.	2-11-41
PINION, Inter Axle Diff.	3-29-88
PINION, Rear Axle Diff.	3-07-1
PINION, Rear Axle Diff. Spiral Idler	3-12-0
PINION, Speedometer	21-85-5
PINION, Trans. Frt. Planetary	21-134-8
PINION, Trans. Main Drive	21-09-2
PINION, Two Speed Axle Idler	3-30-1
PINTLE HOOK	13-62-0
PIPE, Air Intake	14-29-16
PIPE, Exhaust	11-05-4
PIPE, Exhaust Extension	11-05-4
PIPE, Flexible Exhaust	11-05-0
PIPE, Oil Filler	10-01-9
PISTON, Air Brk. Adjusting	5-98-42
PISTON, Air Brk. Chamber	5-98-36
PISTON, Booster Brk. Slave Cyl.	5-100-33
PISTON, Disc Brake	5-05-10
PISTON, Hyd. Brk. Master Cyl.	5-44-3
PISTON, Hyd. Brk. Wheel Cyl.	5-70-1
PISTON PIN	9-36-5

PART NAME	CODE
PISTON RING PKG., Air Cond. Compr.	24-25-2
PISTON RING SET, Engine	9-35-1
PISTON, Trans. Accumulator	21-137-200
PISTON, Trans. Air Cyl.	21-06-10
PISTON, Trans. Aux. Slave Valve	21-18-144
PISTON, Trans. Aux. Shift Cyl.	21-18-160
PISTON, Trans. Front Clutch	21-133-15
PISTON, Trans. Kickdown Servo	21-137-5
PISTON, with Pin	9-34-5
PIVOT, Clutch Fork	6-22-15
PIVOT, Tailgate Check Arm	23-54-113
PIVOT, Windshield Wiper	23-67-86
PIVOT PKG., Vent Wing, Upper	23-64-240
PLATE and BRUSH PACKAGE, Starter	8-52-137
PLATE, Brake Shoe Guide	5-25-9
PLATE, Convertible Top, Pump Cover	23-58-430
PLATE, Dist. Breaker	8-27-138
PLATE, Camshaft Sprocket Thrust	9-15-6
PLATE, Clutch Front Pressure	6-15-1
PLATE, Defogger Switch Mounting	1-47-23
PLATE, Differential Clutch	3-09-2
PLATE, Door Opening Scuff	23-20-14
PLATE, Engine Front	9-64-34
PLATE, Filter Support	14-29-28
PLATE, Trans. Frt. Clutch	21-133-39
PLATE, Hand Brake Support	4-09-1
PLATE, Hood Lock	15-11-12
PLATE, Htr. Blower Motor Mtg.	1-48-611
PLATE, Htr. Control Mtg.	1-48-945
PLATE, Hood Support	15-11-58
PLATE, Heater Defroster Door Mtg.	1-48-35
PLATE, I/Pnl. Radio Speaker Mtg.	1-87-30
PLATE, Radio Cover	23-33-12
PLATE, Rear Spring Clip	17-11-7
PLATE, Strg. Knuckle Stop	2-08-73
PLATE, Strg. Pump End	19-54-152
PLATE, Strg. Pump Pressure	19-54-154
PLATE, Strg. Pump Thrust,	19-54-156
PLATE, Trans. Rr. Annulus Gear	21-134-45
PLATE, Spring Seat Angle,	17-11-5
PLATE, Trans. Sun Gear Driving	21-133-47
PLATE, Tachometer Mtg.	8-37-505
PLATE, Torque Converter	9-46-8
PLATE, Trans. Transfer	21-139-147
PLATE, Trans. Valve Body	21-139-140
PLATE, Vehicle Identification	23-12-23
PLUG, Ball Joint Lower	2-10-64
PLUG, Brake Shoe Adjuster Contact	5-20-24
PLUG, Camshaft Rear	9-16-17
PLUG, Core Hole Cylinder Block	9-02-16
PLUG, Cylinder BLOCK WATER JACKET DRAIN	9-02-16
PLUG, Cylinder Head	9-03-18
PLUG, Dash Pnl. Heater Hose	23-32-98
PLUG, Deck Lid Inner Pnl. Drain Hole	23-19-21
PLUG, Deck Opening Lower	23-34-178
PLUG, Diff. Carrier Filler	3-03-35
PLUG, Exhaust Manifold	9-59-10
PLUG, Floor Carpet Seat Belt	23-49-23
PLUG, Floor Pan	23-32-15
PLUG, Fuel Tank Drain	14-86-13
PLUG, Intake Manifold	9-48-9
PLUG, Oil Drain	10-24-37
PLUG, Quarter Inside Panel	23-34-237
PLUG, Quarter Inside Wheel Well	23-34-40
PLUG, Rocker Panel Outer	23-51-45
PLUG, Seat Belt Retractor Trim	23-49-8
PLUG, Spark	8-36-114
PLUG, Strg. Gear Housing Oil Filler	19-02-17
PLUG, Tie Rod Eng. Cover	2-07-17
PLUG, Trailer Receptacle Connector	8-53-353
PLUG, Transmission Case	21-03-15
PLUG, Trans. Park Sprag	4-10-32
PLUG, Transmission Drain	21-119-11
PLUG, Trans. Vent Shield	21-118-58
PLUG, Upper Ball Joint	2-08-72
PLUG, Valve Rocker Shaft	9-43-19
PLUG, w/Pump Hsg. Htr. Hole	7-43-18
PLUNGER, Air Brk. Adjusting	5-98-15
PLUNGER, Carburetor Pump	14-41-3
PLUNGER, Oil Pressure Relief Valve	10-22-11
PLUNGER, Trans. Rev. Latch	21-41-0
POINT SET, Distributor	8-27-158
POINTER, Trans. Column Gearshift Dial	21-30-23
POLLUTION CONTROLS	25-00-00
POSITIONER, Disc Brakes	5-05-46
POTENTIOMETER, Air Cond.	24-01-45
POWER STEERING HOSE	19-58-7
POWER BRAKE PACKAGE	5-100-1
POWER BRAKE POWER UNIT	5-100-2
POWER BRAKE VACUUM HOSE	5-111-17
POWER STEERING GEAR VALVES	19-57-3
POWER STEERING OIL PUMP	19-54-2
POWER TAKE OFF, Trans.	21-08-5
PROP, Hood	15-21-0
PROP SHAFT, Front	16-02-2
PROP SHAFT, Interm	16-02-3
PROP SHAFT, Rear	16-02-4
PROP SHAFT, Single	16-02-1
PROPELLER SHAFT	16-02-1
PROPELLER SHAFT YOKE or FLANGE	16-20-1
PROTECTOR, Carpet & Mat	1-63-1
PULLEY, Air Cond. Compressor Drive	24-25-20
PULLEY, Air Cond. Compressor Idler	24-25-35
PULLEY, Air Pump	25-02-20
PULLEY, Alternator	8-28-297
PULLEY, Fan Drive	7-06-1
PULLEY, Fan	7-06-14
PULLEY, Idler,	7-04-1
PULLEY, Steering Pump	19-54-86
PUMP, Air Injection	25-02-1
PUMP, Carburetor Accelerator	14-41-3
PUMP, Fuel	14-73-1
PUMP, Oil	10-07-6
PUMP, Pwr. Strg. Oil	19-54-2
PUMP, Snow Plow Hydraulic	1-93-0
PUMP, Tilt Cab Tilting	23-1-20
PUMP, w/S Washer	23-67-252
PUMP, Water	7-42-1
PUSH ROD, Brake Booster	5-100-20

Q

QUICK START, Engine	14-91-0

PART NAME	CODE
R	
RACE, Trans. "O" Running Clutch	21-136-232
RACE, Inner	19-14-22
RACE, Strg. Gear Thrust Bearing, Inner	19-15-63
RACK, Luggage	1-74-1
RACKS & GATES, Stake Body	23-68-0
RADIATOR CORE	7-11-3
RADIATOR CORE FAN SHROUD	7-08-2
RADIATOR CROSS BAR	7-33-1
RADIATOR FILLER CAP	7-12-1
RADIATOR GRILLE	7-16-11
RADIATOR YOKE	7-26-2
RADIO and CONTROLS	1-87-1
RADIO ANTENNA	1-88-1
RAIL, Aux. Trans. G/Shift	21-90-1
RAIL, Body Side	23-32-105
RAIL, Roof Luggage Rack	23-40-150
RAIL, Roof Side	23-40-85
RAIL, Trans. Aux. Shift	21-18-19
RAIL, Transfer Case Shift	21-108-0
RAIL, Trans. G/Shift	21-34-8
RAIL, Trans. Splitter Shift	21-06-23
RAIL, Underbody Longitudinal	23-32-105
REAR AXLE COMPLETE, Less Brakes	3-01-8
REAR AXLE DIFFERENTIAL AND CARRIER	3-03-1
REAR AXLE HOUSING	3-02-1
REAR BRAKE DRUM	22-04-2
REAR BUMPER FACE BAR	13-66-3
REAR SPRING	17-11-3
REAR SPRING BUMPER	17-19-3
REAR SPRING CENTER BOLT	17-14-10
REAR SPRING CLIP	17-15-1
REAR SPRING LEAF	17-12-4
REAR SPRING SHACKLE	17-16-1
REAR SPRING SILENT BLOCK	17-17-3
REAR WINDOW DEFOGGER	1-47-1
RECEIVER, Ash	23-02-18
RECEIVER DRIER, A Cond.	24-26-20
RECEIVER, Floor Console Ash	23-02-105
RECEIVER, Qtr. Arm Rest Ash	23-02-62
RECEIVER, Rear Ash	23-02-78
RECTIFIER, Alternator Positive	8-29-131
REFLECTOR, Side Marker Lamp	8-14-19
REFLECTOR, Side Marker	8-48-12
REGULATOR, Alternator Voltage	8-28-74
REGULATOR, Air Cond. Control Vacuum	24-24-159
REGULATOR, Door Window	23-39-5
REGULATOR, Electric Window	23-41-4
REGULATOR, Air Cond. Evap. Coil Sensing	24-28-13
REGULATOR, Front Door Vent	23-39-29
REGULATOR, Inst. Voltage	8-37-2
REGULATOR, Quarter Window	23-39-34
REGULATOR, T/Gate Window	23-54-72
REGULATOR, Trans. Splitter Air	21-06-40
REINFORCEMENT, Frame Side	13-03-3
REINFORCEMENT, Frt. Axle Control Arm	2-10-69
REINFORCEMENT, Roof Rail	23-40-86
REINFORCEMENT, Side & Rear Corner	23-34-57
RELAY, Air Cond. Vacuum Time Delay	24-24-16
RELAY, Auto. Headlamp Dimmer	8-53-283
RELAY, Auto. Trans. Retarder Light	21-145-45
RELAY, Concealed Headlamp	8-34-282
RELAY, Elect. Door Lock	23-18-106
RELAY, Electric Window	23-41-27
RELAY, Headlamp Delay	8-53-283
RELAY, Horn	8-33-164
RELAY, Ignition Lamp Thermal Time Delay	8-40-10
RELAY, Low Fuel	8-37-70
RELAY, Starter	8-52-328
RELAY, T/Gate Wdo.	23-54-159
REMOTE Control, Door Latch	23-18-13
REPAIR PKG., Auto. Trans. M/Cyl.	21-145-20
REPAIR PKG., Carburetor	14-30-4
REPAIR PACKAGE, Trans. Governor	21-138-2
REPAIR PACKAGE, Strg. Gear	19-01-3
RESERVOIR, Air Brake	5-119-0
RESERVOIR, Head Lamp Washer	8-34-323
RESERVOIR, Snow Plow Hyd. Remote	1-93-0
RESERVOIR, Strg. Pump Oil	19-54-180
RESERVOIR, W/Shield Washer	23-67-240
RESET, Clock	8-37-452
RESISTOR, A/Cond. Blower Motor	24-24-67
RESISTOR, Htr. Blower Motor	1-48-832
RESISTOR, Ignition Coil	8-35-22
RESONATOR	11-01-1
RESTRICTOR, Engine Support	9-67-19
RETAINER, Door Trim Panel	23-92-28
RETAINER, Door Weatherstrip	23-63-55
RETAINER, Drive Shaft Brg.	3-33-8
RETAINER, Parking Brk. Lever	4-08-36
RETAINER, Trans. Aux. Co/Shaft	21-18-55
RETAINER, Trans. Aux. M/Shaft	21-18-3
RETAINER, Trans. Co/Shaft Frt. Brg.	21-26-3
RETAINER, Trans. Co/Shaft Rear Brg.	21-27-2
RETAINER, Trans. M/Drive Gear Brg.	21-09-29
RETAINER, Transmission M/Shaft Rear Bearing	21-23-2
RETAINER, Trim Panel	23-101-26
RETARDER, Auto. Trans.	21-145-0
RIM and WEB, Disc Brakes	5-03-6
RIM, Wheel	22-11-0
RING, Clutch Adjusting	6-17-27
RING, Clutch Pivot Snap	6-52-12
RING, F/Tank Filler Cap Ornament	14-86-38
RING, Horn	8-33-13
RING, Horn, Partial	8-33-4
RING, Piston Pin Retaining	9-36-7
RING, Sealed Beam Retaining	8-34-180
RING SET, Piston	9-35-1
RING, Starter Clutch Actuator Ret.	8-52-61
RING, Steering Gear Piston	19-56-6
RING, 3rd Seat Back Release Latch	23-48-17
RING, Transmission Frt. and Rr. Planet	21-134-12
RING, Transmission Servos Accumulator	21-137-202
RING, Trans. Gearshift Lever	21-30-7
RING, Transmission Governor Support	21-138-38
RING, Transmission Input Shaft	12-129-7
RING, Transmission Kickdown Servo	21-137-8
RING, Wheel Trim	22-01-41
RINGS, Air Cond. Compr. Clutch	24-25-234
RISER, Front Seat	23-45-120
ROCKER, Valve	9-43-1
ROD, Accelerator Pedal	14-07-0
ROD, Air Cond. Water Valve Control	24-01-38
ROD, Brake Cyl. Piston	5-12-1
ROD, Brake Pedal to Booster Linkage	5-100-20
ROD, Clutch Assistor Push	6-41-11

PART NAME	CODE
ROD, Clutch Hyd. M/Cyl. Push	6-40-21
ROD, Clutch Hyd. Slave Cyl. Push	6-40-47
ROD, Clutch Pedal	6-50-1
ROD, Clutch Release	6-24-1
ROD, Clutch Torque Shaft	6-52-27
ROD, Connecting	9-31-4
ROD, Door Lock	23-18-26
ROD, Eng. B/Crank	4-11-9
ROD, Fuel Pump Push	14-77-17
ROD, Gearshift Control	19-48-1
ROD, Gearshift Control, Upper	21-30-418
ROD, Gearshift First and Reverse	21-30-418
ROD, Hood Prop	15-21-0
ROD, Inter Axle Shift	3-29-113
ROD, Master Cyl. Push	5-47-2
ROD, Parking Brake Lever Release	4-25-14
ROD, Spare Wheel Anchor	22-20-87
ROD, Telescopic Locking	19-14-81
ROD, Trans. Park Sprag	4-10-35
ROD, Trans. Kickdown Servo	21-137-11
ROD, Two Speed Axle Shift	3-31-64
ROD, Valve Push	9-42-1
ROD, Wheel Cyl. Push	5-12-1
ROLLER and BUSHING, Universal Joint	16-10-1
ROLLER, Accelerator Shaft	14-11-39
ROLLER, Clutch	6-14-4
ROLLER, Door Window Regulator	23-39-45
ROLLER, Electric Window Regulator	23-41-250
ROLLER, Manual Wdo. Regulator	23-54-98
ROLLER, Transmission Pilot Bearing	21-17-2
ROLLER, Transmission Countershaft Bearing	21-25-2
ROLLER, Trans. "O" Running Clutch	21-136-235
ROLLER, Trans. Reverse Idler Gear Brg.	21-11-2
ROLLER, Trans. Planet Pinion Carrier	21-134-11
ROLLER, Torque Converter	9-46-228
ROTOCAP, Valve	9-39-13
ROTOR, Alternator	8-29-97
ROTOR, Ignition Distributor	8-27-300
ROTOR PACKAGE, Transmission Oil Pump	21-118-6
ROTOR PACKAGE, Folding Top Motor Pump	23-58-381
ROTOR, Oil Pump	10-14-18
RUN, Frt. Door Glass	23-42-16
RUN, Frt. Door V/Wing Divisional	23-42-13
RUN, Quarter Window Glass	23-42-38
RUN, Rear Door Glass	23-42-23
RUN, Tailgate Glass Lower	23-42-46
RUNNING BOARD	12-26-2

S

PART NAME	CODE
SADDLE, Tandem Suspension	17-37-36
SAFETY SEAT BELT	23-49-1
SAFETY CATCH, Tilt Cab Lock	23-1-33
SAFETY LINK, Wiring	8-15-7
SCANNER	8-53-284
SCOOP, Carburetor Air	15-03-64
SCREENS, Air Cond. Evaporator Coil	24-28-10
SCREEN, Air Cond. Compr. Suction	24-25-114
SCREW, Brake Adjusting	5-20-1
SCREW, Brake Bleeder	5-67-1
SCREW, Brake Cyl. Mounting	5-64-2
SCREW, Crakshift Brg. Cap	9-10-9
SEAL & BOOT PKG., Disc Brakes	5-05-9
SEAL & GASKET PKG., Power Strg.	19-01-4
SEAL & GASKET PKG., Transmission	21-01-3
SEAL & PLATE, Power Brake Booster	5-100-206
SEAL & SPACER PKG., W/Shield Wiper Motor	23-67-104
SEAL KIT, Power Strg. Pump	19-54-55
SEAL PKG., Power Strg. Gear Valve	19-57-1
SEAL PKG., Strg. Gear Shaft Cover	19-19-1
SEAL, Air Cond. Compr. Brg. Hsg.	24-25-189
SEAL, Air Cond. Compr. Oil Pump Cover	24-25-252
SEAL, Air Cond. Evaporator	24-28-92
SEAL, Air Cond. Evaporator Coil	24-28-225
SEAL, Air Cond. Hose & Tube	24-28-326
SEAL, Air Cond. Temp. Control Valve	24-01-39
SEAL, Auto. Trans. Clutch Piston	21-113-17
SEAL, Auto. Trans. Manual Valve	21-139-16
SEAL, Auto. Trans. Oil Filler Tube	21-119-25
SEAL, Auto. Trans. Oil Pump Hsg.	21-118-45
SEAL, Auto. Trans. Reverse Servo	21-137-50
SEAL, Auto. Trans. Throttle Lever	21-139-47
SEAL, Aux. Trans. M/Drive Gear	21-95-18
SEAL, Aux. Trans. M/Shaft	21-92-33
SEAL, Brk. Tube Metering Valve	5-107-36
SEAL, Bumper to Hood	13-64-33
SEAL, Carb. Air Scoop (Hood)	15-03-67
SEAL, Clutch Hsg. Pan Dust	6-10-10
SEAL, Clutch Pedal Brg.	6-43-13
SEAL, Clutch Release Fork	6-22-4
SEAL, Clutch Shaft	6-52-17
SEAL, Dash Panel to Fender	23-31-146
SEAL, Disc Brk. Splash Shield	5-05-17
SEAL, Distributor Hsg.	8-27-44
SEAL, Fender Wheelhouse Panel	12-01-26
SEAL, Frt. Fender Hd/Lp Splash Shield	12-04-23
SEAL, Frt. Suspension Lower Ball Joint	2-10-66
SEAL, Frt. Suspension Upper Ball Joint	2-08-61
SEAL, Fuel Tank Sending Unit	14-72-9
SEAL, Heater Core Tube	1-48-90
SEAL, Heater to Dash	1-48-126
SEAL, Heater to Plenum	1-48-362
SEAL, Hood to Cowl	15-03-5
SEAL, Inter Axle Differential	3-29-75
SEAL, Oil Filter Base Screw	10-26-20
SEAL, Oil Pump	10-07-2
SEAL, Oil Pump Body	10-07-12
SEAL, Power Strg. Control Valve	19-63-149
SEAL, Power Strg. Control Valve Spool	19-63-259
SEAL, Power Strg. Cylinder Piston	19-63-110
SEAL, Power Strg. Pump Drive Shaft	19-54-29
SEAL, Power Strg. Pump Frt. Plt. to Hsg.	19-54-258
SEAL, Power Strg. Pump Oil Reserv Mtg.	19-54-181
SEAL, Rear Axle Drive Pinion	3-22-45
SEAL, Rear Axle Drive Shaft	3-35-14
SEAL, Rear Wheel Brg. Oil	22-07-14
SEAL, Rear Wheel Brk. Cyl. to Support	5-64-7
SEAL, Spark Plug Tube	8-36-137
SEAL, Starter Solenoid	8-52-389
SEAL, Starter to Engine or Trans.	8-52-39
SEAL, Strg. Column G/Shift Hsg.	19-46-26
SEAL, Strg. Column Jacket	19-14-68
SEAL, Strg. Column Shaft	19-15-28
SEAL, Strg. Gear Reaction	19-01-52
SEAL, Strg. Gear Shaft Adj. Scr.	19-19-35
SEAL, Strg. Gear Worm Sleeve	19-19-70
SEAL, Strg. Link Idler Arm	19-27-40
SEAL, Tailgate Inside Panel	23-54-53

PART NAME	CODE
SEAL, Torque Converter Impeller	9-46-130
SEAL, Trans. Aux. Valve	21-18-94
SEAL, Trans. G/Shift Oil	21-42-31
SEAL, Trans. M/Drive Gear Brg. Retainer	21-09-30
SEAL, Trans. M/Shaft Rear Brg.	21-22-2
SEAL, Trans. Output Brg. Yoke	21-05-12
SEAL, Trans. Pinion	21-09-30
SEAL, Trans. Speedo Pinion Adapter	21-85-22
SEAL, U/Joint Cross Roller Dust	16-8-6
SEAL, Vent Wing W/Strip Retainer	23-64-74
SEAL, Ventilator Door	23-61-110
SEAL, Water Pump	7-46-1
SEAL, Wheel Brk. Support	5-13-22
SEAL, Wheel Hub Dust	22-06-18
SEAL, W/Shield Upper Frame	23-66-69
SEALED BEAM, Headlamp	8-34-175
SEALS, Air Conditioning	24-01-70
SEALS, Air Cond. Compressor	24-25-135
SEAT, Exhaust Valve	9-39-9
SEAT, Front (Truck)	23-108-2
SEAT, Rear & Interm., (Truck)	23-109-1
SEAT BACK, Front (Truck)	23-108-12
SEAT BACK, Rear (Truck)	23-109-3
SEAT BELTS	23-49-1
SEAT CUSHION, Front	23-108-4
SEAT CUSHION, Rear	23-109-35
SEAT, Headlamp Sealed Beam	8-34-176
SEAT SPRING,	23-52-1
SEAT TRIM MATERIAL (Truck)	23-114-0
SECTOR, Parking Brake	4-12-0
SENDING UNIT, Temperature Gage	8-37-155
SENDING UNIT, Oil Pressure Gauge	8-53-327
SENSOR, A/Cleaner Temp.	14-29-53
SENSOR, A/Cond.	24-24-44
SENSOR, Skid Control	5-06-9
SEPARATOR, Fuel Pump Vapor	14-73-2
SEPARATOR, Fuel Tank Vapor	14-86-65
SEPARATOR, Spark Plug Cable	8-36-14
SERVO, Speed Control	14-02-15
SHACKLE and Bushing, Spring	17-16-1
SHACKLE, Front Spring	17-06-0
SHACKLE, Rear Spring	17-16-1
SHAFT, Accelerator	14-11-1
SHAFT, Air Cond. Shut-Off Door	24-28-100
SHAFT, Auto. Trans. Gov. Valve	21-138-26
SHAFT, Auto. Trans. Input	21-129-5
SHAFT, Auto. Trans. Kickdown Band	21-136-23
SHAFT, Auto. Trans. Planet Pinion	21-134-9
SHAFT, Auto. Trans. Reaction	21-129-10
SHAFT, Auto. Trans. Retarder Pedal	21-145-35
SHAFT, Auto. Trans. Rev. Band Lever	21-136-49
SHAFT, Brake Pedal	5-29-1
SHAFT, Carburetor Throttle	14-38-12
SHAFT, Clutch Pedal	6-43-1
SHAFT, Clutch Torque	6-52-1
SHAFT, Defroster Door	24-28-399
SHAFT, Distributor	8-27-250
SHAFT, Front Axle Drive	2-12-5
SHAFT, Front Door V/Wing Lwr.	23-64-93
SHAFT, Front Suspension Cont. Arm	2-10-61
SHAFT, G/Shift Operating Lever	21-30-421
SHAFT, G/Shift Torque	19-48-45
SHAFT, Oil Pump Drive	10-09-1
SHAFT, Pwr. Strg. Pump Rotor	19-54-263
SHAFT, P.T.O. Drive	21-08-16
SHAFT, Propeller	16-02-1
SHAFT, Radio Channel Selector Ejector	1-87-51
SHAFT, R. Axle Diff. Pinion	3-08-1
SHAFT, R. Axle Drive	3-32-1
SHAFT, R. Axle Thru.	3-19-27
SHAFT, Speedo Drive	21-84-4
SHAFT, Strg. Column	19-15-4
SHAFT, Strg. Gear	19-19-4
SHAFT, Sway Bar	17-29-5
SHAFT, Transfer Case Driven Gear	21-103-0
SHAFT, Trans. Input Drive	21-09-4
SHAFT, Trans. Output	21-05-1
SHAFT, Trans. Output	21-16-3
SHAFT, Trans. Parking Sprag	4-10-8
SHAFT, Trans. Rev. Idler Gear	21-12-1
SHAFT, Two Spd. Axle Clutch	3-49-0
SHAFT, Valve Locker	9-43-9
SHAFT, Winch Drive	21-97-5
SHAFT & RETAINING RING, P. Strg. Pump	19-54-25
SHAFT & ROTOR, Oil Pump	10-07-3
SHAFT w/WORM, Strg. Gear	19-15-3
SHELL, Cigar Lighter	8-20-10
SHELL, Frt. Door	23-11-1
SHELL, Rear Door	23-11-3
SHIELD, Air Cond. Idler Pulley Bearing	24-25-31
SHIELD, Altr. Drive End	8-29-153
SHIELD, Alternator Rectifier End	8-29-132
SHIELD, Battery Heat	13-35-1
SHIELD, Dash Panel to Fender	23-34-121
SHIELD, Disc Brake Splash	5-05-16
SHIELD, Fan Belt Idler Pulley Brg.	7-04-17
SHIELD, Fender	12-04-4
SHIELD, Front Bumper Air	13-64-28
SHIELD, Frt. Pump Hsg.	21-118-57
SHIELD, Frt. Suspension Crossmember	23-32-110
SHIELD, Headlamp	8-34-60
SHIELD, Htr. Hose	1-48-573
SHIELD, Intake Manifold	9-4856
SHIELD, Intake Valve Stem Oil	9-39-14
SHIELD, Metering Valve Disc Brake	5-05-47
SHIELD, Metering Valve Power Brake	5-107-37
SHIELD, Oil Pump Body Splash	10-07-14
SHIELD, Qtr. Wdo. Opening	23-64-288
SHIELD, Quarter Panel Rear Stone	23-34-240
SHIELD, Radiator Air	7-26-15
SHIELD, Shock Dust	17-26-4
SHIELD, Strg. Column Shaft Coupling	19-15-111
SHIELD, Vapor Separator Tube	14-86-61
SHIFT CONTROL, Two Speed Axle	3-31-0
SHIM, Drive Pinion Bearing	3-22-28
SHIM, Trans. Synchronizer	21-14-21
SHOCK ABSORBER	17-23-3
SHOE & LINING, Parking Brk.	4-03-0
SHOE & LINING PACKAGE, Wheel Brakes	5-03-3
SHOE w/LINING, Brake	5-03-5
SHOE, Strg. Column Shaft Coupling	19-15-44
SHORT ENGINE	9-01-24
SHROUD, Radiator	7-08-2
SHUTTER, Radiator	7-38-0
SIDE MARKER LAMP	8-14-1
SIDE RAIL, Frame	13-03-2
SILENCER, Hood	15-03-60
SILENCER, Roof Panel	23-31-205
SILENCER, Valve Body	5-100-197
SKID CONTROL	5-06-0

PART NAME	CODE
SLACK ADJUSTER, Air Brake	5-97-28
SLEEVE, A/Cond. and Heater Hose	24-01-31
SLEEVE, Brake Pedal	5-27-2
SLEEVE, Clutch Control	6-19-2
SLEEVE, Control Arm	2-08-11
SLEEVE, Defogger Blower Motor Term.	1-47-24
SLEEVE, Htr. Hose	1-48-557
SLEEVE, Metering Valve	5-107-35
SLEEVE, Power Brake Lever Hub	5-100-198
SLEEVE, Power Strg. Pump Pressure Hose	19-58-9
SLEEVE, Power Strg. Pump Return Hose	19-58-9
SLEEVE, Strg. Column Shaft Lock Plate	19-14-123
SLEEVE, Strg. Gear Worm	19-19-72
SLEEVE, Strut Bushing	2-10-65
SLEEVE, Sway Bar Shaft Insulator Link	17-29-19
SLEEVE, Trans. Gearshift Rail Interlock	21-34-45
SLEEVE, Trans. Regulator Valve	21-139-64
SLEEVE, Trans. Synchronizer	21-14-6
SLEEVE, Wiring Terminal	8-16-5
SLIDE, Deck Lid Hge. Torsion Bar	23-19-178
SLIDE, Qtr. Wdo. Track Regulator	23-64-282
SLIDE, T/Gate Electric Wdo.	23-54-88
SLIDER, A/Cond. and Heater Control	24-24-177
SLIDER, Push Button Htr. Control	1-48-33
SLINGER, Crankshaft Oil	9-07-17
SLINGER, Frt. Brg.	3-22-40
SLINGER, Trans. Brg. Oil	21-09-19
SNAP RING, Inner, Trans.	21-19-15
SNAP RING, Output Shaft	21-05-19
SNAP RING, Park Sprag Plug	4-10-33
SNAP RING, Pump Rear Plug	19-54-130
SNAP RING, Shuttle Valve	21-139-98
SNAP RING, Starter Pinion Shaft Gear Ret.	8-52-67
SNAP RING, Strg. Gear Cylinder Head	19-01-62
SNAP RING, Strg. Gear Shaft Seal	19-19-5
SNAP RING, Trans. Drive Brg., Outer	21-09-23
SNAP RING, Trans. Frt. Clutch	21-133-43
SNAP RING, Trans. Governor	21-138-19
SNAP RING, Trans. Governor Body	21-138-7
SNAP RING, Trans. Governor Valve	21-138-29
SNAP RING, Trans. Kickdown	21-137-19
SNAP RING, Trans. M/Shaft Roller	21-17-7
SNAP RING, Trans. Output Brg., Outer	21-05-8
SNAP RING, Trans. Pinion Carrier	21-134-40
SNAP RING, Trans. Rr. Clutch	21-133-25
SNAP RING, Trans. Reverse Servo	21-137-59
SNAP RING, Trans. Synchronizer	21-14-20
SNOW PLOW	1-93-0
SOCKET	8-12-3
SOCKET, Brake Auto. Adjusting	5-20-17
SOCKET, Brake Warning Ind. Lamp	8-31-16
SOCKET, Dome Lamp	8-05-12
SOCKET, High Beam Indicator Lamp	8-39-15
SOCKET, Inst. Lamp	8-41-36
SOCKET, Low Oil Pressure Ind. Lamp	8-37-88
SOCKET, Map and Courtesy Lamp	8-42-10
SOCKET, Overhead Console Door Ajar	8-12-13
SOCKET, Side Marker Lamp	8-14-3
SOCKET, Tail, Stop and Turn Signal Lamp	8-55-57
SOCKET, Turn Signal Ind. Lamp	8-50-156
SOLENOID, Carburetor Idle	14-38-24
SOLENOID, Door Elect. Latch	23-18-115
SOLENOID, Hood Fresh Air Intake	15-03-54
SOLENOID, Idle Throttle	8-27-97
SOLENOID, Starter	8-52-345
SPACER, Auto. Headlamp Sentinel Photocell	8-53-308
SPACER, Body Hold Down	23-05-36
SPACER, Bumperette, .054 Thk.	13-66-141
SPACER, Deck Opening Upper Panel	23-34-193
SPACER, Dist. Cam	8-27-259
SPACER, Door Latch Striker	23-08-54
SPACER, Door Manual Wdo. Reg. Handle	23-14-24
SPACER, Drive Pinion Brg.	3-22-26
SPACER, Diff. Adjusting	3-11-3
SPACER, Fan	7-02-16
SPACER, Fan Belt Idler Pulley	7-04-10
SPACER, Front Seat Manual Adjuster	23-47-15
SPACER, Frt. Brg. Adj.	3-22-26
SPACER, Gearshift control Selector	21-30-393
SPACER, Gearshift Torque Shaft	19-48-51
SPACER, Pump Mounting Bracket	19-54-116
SPACER, Radiator Grille	7-16-19
SPACER, Roof Luggage Rack	23-40-157
SPACER, Rr. Seat Lap Belt to Floor	23-49-11
SPACER, Spring Center Bolt	17-11-31
SPACER, Strg. Column Gearshift	19-46-12
SPACER, Strg. Gear Thrust Bearing	19-15-77
SPACER, Thrust Block	3-32-9
SPACER, T/Gate and Door	23-54-27
SPACER, Trans. Rr. Clutch	21-133-62
SPACER, Valve Rocker	9-43-5
SPACER, Valve Spring	9-39-21
SPARE WHEEL CARRIER, Body Inside	22-20-0
SPARE WHEEL CARRIER, Body Outside	22-48-0
SPARE WHEEL CARRIER, Underslung	22-12-0
SPARK Plug	8-36-114
SPEAKER, Instrument Panel Radio	1-87-2
SPEEDOMETER	8-37-372
SPEEDOMETER CABLE	21-84-1
SPIDER, Inter Axle Diff.	3-29-95
SPIDER, Rear Axle Diff.	3-10-1
SPOILER, Deck Lid	23-19-24
SPOT COOLER, Air Cond.	24-28-78
SPRAG, Trans. Park Lock	4-10-10
SPRING, Accelerator Rod	14-06-1
SPRING, Air Brk. Adjusting Wedge	5-98-9
SPRING, Auxiliary	17-11-33
SPRING, Brk. Auto. Adjusting Lever	5-20-20
SPRING, Brk. Drum Damper	22-04-11
SPRING, Brk. Pedal Return	5-34-0
SPRING, Brk. Shoe Hold Down	5-26-1
SPRING, Brk. Shoe Return	5-03-23
SPRING, Clutch Pivot	6-22-19
SPRING, Clutch Pressure	6-16-1
SPRING, Clutch Rel. Brg. Retainer	6-20-14
SPRING, Clutch Rel. Fork	6-27-5
SPRING, Clutch Rel. O/Center	6-35-1
SPRING, Clutch Shaft to Fork	6-52-5
SPRING, Disc Brk. Shoe	5-05-8
SPRING, Front	17-01-3
SPRING, Headlamp Sealed Beam	8-34-177
SPRING, Hood Fresh Air Intake	15-03-90
SPRING, Hood Hinge	15-19-8
SPRING, Hood Release Pop-up	15-11-16
SPRING, Hyd. Brk. Adjusting Cam	5-22-2
SPRING, Hyd. Brk. Shoe Wedge	5-20-4
SPRING, Jack Stowage	13-72-7
SPRING, Manual Seat Adjuster	23-47-75
SPRING, Oil Pressure Valve	10-22-15
SPRING, Parking Brk. Lever	4-19-1

PART NAME	CODE
SPRING, Parking Brk. Pedal Return	4-25-7
SPRING, Parking Brk. Wheel	4-26-18
SPRING, Rear	17-11-3
SPRING, Rear Seat Helper	23-52-1
SPRING, Tilt Cab Lock	23-1-17
SPRING, Torque Converter	9-46-229
SPRING, Trans. Accumulator	21-137-205
SPRING, Trans. Frt. Clutch Piston	21-133-20
SPRING, Trans. Gov. Weight	21-138-15
SPRING, Trans. Kickdown Servo	21-137-22
SPRING, Trans. O/Running Clutch	21-136-236
SPRING, Trans. Parking Sprag	4-10-11
SPRING, Trans. Regulator Valve	21-139-68
SPRING, Trans. Reverse Lever	21-34-47
SPRING, Trans. Synchronizer	21-14-15
SPRING, Valve	9-39-15
SPRING, Valve Rocker Shaft	9-43-14
SPRING, Brake Cyl. Piston	5-71-2
SPROCKET or GEAR, Camshaft	9-17-5
SPROCKET, Crankshaft	9-08-5
STAND PIPE, Oil Filter	10-26-46
STARTER	8-52-4
STATOR, Alternator	8-29-98
STEERING COLUMN GEARSHIFT TUBE	19-46-3
STEERING COLUMN JACKET	19-14-1
STEERING COLUMN SHAFT AND COUPLING	19-15-4
STEERING GEAR ASSEMBLY	19-01-0
STEERING GEAR HOUSING	19-02-4
STEERING GEAR SHAFT	19-19-4
STEERING KNUCKLE	2-03-3
STEERING KNUCKLE ARM	2-05-4
STEERING KNUCKLE TIE ROD END	2-07-1
STEERING LINK GEAR ARM AND IDLER ARM	19-27-0
STEERING WHEEL	19-30-0
STEM, Valve	22-01-46
STEP, Tilt Cab	23-51-30
STEP-PAD	13-66-147
STOP, Brake Pedal	5-30-8
STOP, Clu. Pedal	6-38-23
STOP, Strg. Knuckle Arm	2-05-7
STRAINER, Oil	10-23-7
STRAINER, Trans.	21-117-1
STRAP, Air Pump Adjusting	25-02-26
STRAP, Alternator Adj.	8-28-15
STRAP, Battery Hold Down	13-34-3
STRAP, Fuel Tank	14-88-21
STRIKER, Bucket Front Seat Back	23-45-76
STRIKER, Deck Lid Latch	23-19-70
STRIKER, Door Latch	23-08-60
STRIKER, Floor Console Lid Latch	23-38-46
STRIKER, Front Fender	12-03-2
STRIKER, Hood	15-13-2
STRIKER, Second Seat Back Latch	23-48-19
STRIKER, Tailgate Latch	23-54-6
STRUT, Bumper Front	13-64-150
STRUT, Clutch Hsg.	6-09-11
STRUT, Control Arm	2-10-58
STRUT, Parking Brk. Whl.	4-26-17
STRUT, Trans. Kickdown Band	21-136-15
STRUT, Trans. Reverse Band	21-136-41
STUD, Battery Hold down	13-36-5
STUD, Carburetor Lever	14-11-40
STUD, Intake and Exhaust Manifold	9-48-12
STUD, Wheel	22-05-14
SUMP, Air Cond. Compressor Oil	24-25-258
SUPPORT, A/Cond. Compressor	24-25-10
SUPPORT, Alternator Adj. Strap	8-28-32
SUPPORT, Bumper Guard	13-68-43
SUPPORT, Engine Rear	9-69-25
SUPPORT, Exhaust Pipe	11-08-4
SUPPORT, Fuel Tank	14-88-2
SUPPORT, Gearshift Control Selector	21-30-416
SUPPORT, Hood Lock Vertical	15-11-46
SUPPORT, Muffler	11-02-4
SUPPORT, Parking Brk. Air Reservoir	4-30-0
SUPPORT, Parking Brk. Trans.	4-29-0
SUPPORT, Radiator	7-29-1
SUPPORT, Radiator Grille	7-16-27
SUPPORT, Radiator Side	7-11-82
SUPPORT, Running Board	13-48-0
SUPPORT, Shock Absorber	17-24-0
SUPPORT, Spare Wheel Mounting	23-34-53
SUPPORT, Stake Socket	23-34-79
SUPPORT, Tail Pipe	11-10-3
SUPPORT, Tilt Cab Rear	23-1-14
SUPPORT, Trans. Governor	21-138-10
SUPPORT, Trans. Output Shaft	21-05-25
SUPPORT, Wheel Brake	5-13-1
SWAY BAR, Rear	17-30-1
SWAY BAR SHAFT, FRONT	17-29-0
SWITCH, Air Cond. Blower	24-24-5
SWITCH, Air Cond. Temperature	24-24-150
SWITCH, Air Grabber Vacuum	15-03-84
SWITCH, Arm Rest Courtesy	8-11-6
SWITCH, Auto. Headlamp Dimmer	8-53-270
SWITCH, Auto. Trans. Retarder	21-145-12
SWITCH, Back-up Lamp	8-56-2
SWITCH, Brk. System Indicator Lamp	8-31-10
SWITCH, Brk. Tube Tie Warning	5-58-9
SWITCH, Clutch Starter, w/Man. Trans.	8-52-42
SWITCH, Convertible Top	23-58-532
SWITCH, Courtesy Lamp Door	8-12-2
SWITCH, Defogger	1-47-7
SWITCH, Dome Lamp	8-05-14
SWITCH, Door Ajar Warning	8-12-2
SWITCH, Door Window	23-41-170
SWITCH, Elec. F/Pump Oil Press.	14-73-10
SWITCH, Emergency Warning	8-50-82
SWITCH, Foot Dimmer	8-53-150
SWITCH, Front Door Lock	23-18-102
SWITCH, Fuel Tank Selector	14-86-6
SWITCH, Headlamp, Instr. Lamp & Dome	8-53-270
SWITCH, Headlamp Washer	8-34-281
SWITCH, Heater Control	1-48-770
SWITCH, Horn	8-33-90
SWITCH, Ignition & Starter	8-35-59
SWITCH, Instr. Pnl. Dimmer	8-53-150
SWITCH, Inter Axle Diff.	3-29-126
SWITCH, Low Air	5-128-0
SWITCH, Map & Courtesy Lamp	8-42-25
SWITCH, NOx Speed (Trans.)	8-22-8
SWITCH, NOx Thermal	8-22-4
SWITCH, Oil Pressure	8-53-327
SWITCH, Parking & T/Signal	8-50-82
SWITCH, Parking Brk. Ind. Lamp	8-31-10
SWITCH, Radio Foot Selector	1-87-5
SWITCH, Road Lamp	8-14-23
SWITCH, Seat Adjuster	23-47-446
SWITCH, Starter Solenoid	8-52-330
SWITCH, Stop Lamp	8-58-60

PART NAME	CODE
SWITCH, Stop Lamp Actuator	8-58-66
SWITCH, Tail Gate Window Lift	23-54-167
SWITCH, Temperature Gauge	8-37-155
SWITCH, Trans. Neutral Start	21-113-24
SWITCH, Trunk Lamp	8-13-2
SWITCH, Turn Signal	8-50-82
SWITCH, Two Speed Axle Shift	3-31-105
SWITCH, Vacuum Deck Lid Latch	23-19-84
SWITCH, W/Shield Wiper & Washer	23-67-160
SWITCHES, Electrical	8-53-0
SWIVEL, Acc. Pedal Lever	14-01-38
SWIVEL, Anchor Adjusting	2-14-1
SWIVEL, Gearshift Control Rod	21-30-428
SYNCHRONIZER, Trans.	21-14-1

T

TACHOMETER	8-37-504
TAIL PIPE	11-09-3
TAIL PIPE SUPPORT	11-10-3
TAILGATE	23-54-3
TANK, Booster Brake Vacuum	5-102-0
TANK, Vacuum Deck Lid Latch Reservoir	23-19-79
TANK, Fuel	14-86-1
TAPE, Fender	12-15-33
TAPE, Hood	15-03-69
TAPE, Outside Body	23-23-12
TAPPET, Valve	9-41-4
TEE, Brake Tube	5-58-1
TEMPERATURE GAUGE	8-37-136
TERMINAL and INSULATOR, Electric Window	23-41-176
TERMINAL BLOCK	8-21-0
TERMINAL, Wiring	8-16-4
TEXTURE, Grille	7-17-13
THERMOSTAT	7-41-4
THERMOSTAT, Exhaust Manifold Heat Control	9-58-5
THROTTLE CONTROL CABLE	14-25-11
THROTTLE, Hand Control	14-24-1
THRUST WASHER, Starter Armature	8-52-121
TIE ROD END	2-07-1
TILT CAB PIVOT	23-1-2
TIMING CHAIN	9-20-1
TOP, Folding	23-58-3
TORQUE ARRESTOR, Front Spring	17-10-5
TORQUE CONVERTER	9-46-4
TORQUE CONV. REACTION SHAFT	21-129-0
TORQUE ROD, Tandem	17-18-0
TORSION BAR	2-14-3
TORSION BAR PARTS, Frt. Suspension	2-14-0
TOW HOOK and SHACKLE	13-61-0
TOWER, Trans. G/Shift	21-29-8
TRANSFER CASE	21-100-0
TRANSMISSION	21-02-1
TRANSMISSION BANDS	21-136-0
TRANSMISSION CASE	21-03-1
TRANSMISSION CASE EXTENSION	21-04-1
TRANSMISSION CLUTCH	21-133-0
TRANSMISSION CLUTCH GEAR	21-14-0
TRANSMISSION COUNTERSHAFT BEARING	21-25-0
TRANSMISSION COUNTERSHAFT	21-24-2
TRANSMISSION GEARSHIFT RAIL	21-34-0
TRANSMISSION GEARSHIFT CONTROLS	21-30-0
TRANSMISSION GOVERNOR	21-138-0
TRANSMISSION INPUT SHAFT	21-129-0
TRANSMISSION MAIN DRIVE GEARS	21-10-0
TRANSMISSION MAIN DRIVE PINION	21-09-2
TRANSMISSION OIL PUMP	21-118-0
TRANSMISSION OIL FILTER	21-117-0
TRANSMISSION OIL PAN	21-119-3
TRANSMISSION OUTPUT SHAFT	21-05-1
TRANSMISSION SERVOS	21-137-0
TRANSMISSION SETS OR PACKAGES	21-01-0
TRAY, Ash	23-02-18
TRAY, Battery	13-33-61
TRIM FINISH MOULDINGS	23-26-0
TRIM, Pass. Car-Ref. to Trim Catalog	
TRIM PANEL, Door	23-92-5
TRIM PANEL EXTENSION, Cargo Door	23-92-13
TRIM PANEL, Pillar	23-99-0
TRIM PANEL, Rear	23-89-10
TRIM PANEL, Rear Corner	23-101-3
TROUGH, Qtr. Deck Drain	23-59-35
TROUGH, Roof Side Drain	23-59-56
TROUGH, Strg. Column Wiring	19-14-49
TRUNK LAMP	8-13-1
TUBE, Air Brake	5-116-0
TUBE, Air Injection	25-02-50
TUBE, Air Intake	14-29-24
TUBE, Brake Hose	5-55-1
TUBE, Carb. to Dist. Vac. Control	8-27-320
TUBE, Defroster	1-48-287
TUBE, Electric Seat Adjuster	23-47-431
TUBE, Exhaust Manifold Heat	9-48-126
TUBE, Fuel Tank Filler	14-86-40
TUBE, Heater Blower Motor Vent	1-48-606
TUBE, Heater Defroster	1-48-151
TUBE, Hood Fresh Air Intake Door	15-03-93
TUBE, Oil Indicator	10--03-7
TUBE, Power Brake	5-107-15
TUBE, Spark Plug	8-36-136
TUBE, Strg. Column Gearshift	19-46-3
TUBE, Tie Rod	2-07-2
TUBE, Tandem Torque	17-37-9
TUBE, Vacuum Deck Lid Release	23-19-97
TUBING, Brake	5-53-3
TUBING, Fuel Tank 25 Ft. Roll	14-89-2
TUBING, Underbody Rear Heater	1-48-55

U

UNDERSLUNG, Spare Wheel Carrier	22-12-0
UNIVERSAL JOINT	16-03-1
UNIVERSAL JOINT CROSS ROLLER and BUSHING	16-10-1
UNIVERSAL JOINT SLIP SPLINE YOKE	16-14-1
UNIVERSAL JOINT, Frt. Axle Drv. Shaft	2-12-44
UNIVERSAL JOINT, Strg. Column	19-15-100

V

VALVE, Air Brk. Hand Control	5-127-5
VALVE, Air Brk. Quick Release	5-122-0
VALVE, Air Cond. Compressor	24-25-132
VALVE, Air Cond. Expansion	24-28-300
VALVE, Air Cond. Water	24-01-36
VALVE, Air Pump Diverter	25-02-30
VALVE, Auto. Trans. Kickdown	21-139-78
VALVE, Auto. Trans. Shuttle	21-139-95
VALVE, Auto. Trans. Throttle	21-139-30
VALVE, Auto. Trans. Torq. Conv.	21-139-117

PART NAME	CODE
VALVE, Booster Brk. Check	5-105-0
VALVE, Booster Brk. Cyl. Vacuum	5-103-0
VALVE, Booster Brk. Intake	5-100-303
VALVE, Booster Brk. Slave Cyl.	5-100-84
VALVE, Booster Brk. Vacuum	5-100-159
VALVE, Brk. Master Cyl.	5-43-0
VALVE, Brk. Metering	5-107-34
VALVE, Brk. Proportioning	5-05-34
VALVE, Crankcase Vent	10-02-62
VALVE, Distributor Vacuum	8-27-335
VALVE, Exhaust	9-39-6
VALVE, Fuel Tank Selector	14-86-16
VALVE, Heater Water	1-48-854
VALVE, Intake	9-39-5
VALVE, Inter Axle Shift	3-29-145
VALVE, Manifold Heat Control	9-58-1
VALVE, NOx Vacuum	8-22-5
VALVE, Parking Brk. Lever	4-25-20
VALVE, Power Brk.	5-105-1
VALVE, Power Strg.	19-57-3
VALVE, Power Strg. Control	19-63-140
VALVE, Snow Plow	1-93-0
VALVE, Trans. Aux. Regulator	21-18-87
VALVE, Trans. Aux. Shift	21-18-74
VALVE, Trans. Range Pre-Selection	21-06-74
VALVE, Trans. Splitter Control	21-06-44
VALVE, Two Speed Axle Shift	3-31-40
VALVE, Water	24-01-36
VALVE, Windshield Wiper Control	23-67-215
VALVE PACKAGE, Auto. Trans. Regulator	21-139-67
VALVE PUSH ROD	9-42-1
VALVE ROCKER	9-43-1
VALVE TAPPET	9-41-4
VENT, Fresh Air Side Cowl	1-48-383
VENT, Trans.	21-02-6
VENTILATOR, Air Intake	23-61-0

W

PART NAME	CODE
WASHER, Drive Pinion Brg.	3-22-27
WASHER, Windshield	23-67-0
WATER PUMP	7-42-1
WATER PUMP ELBOW OR NIPPLE	7-48-22
WATER PUMP IMPELLER	7-45-31
WEATHERSTRIP, Deck Lid Opening	23-63-172
WEATHERSTRIP, Frt. Door	23-63-33
WEATHERSTRIP, Header	23-58-569
WEATHERSTRIP, Quarter Inner Wdo. Belt	23-63-20
WEATHERSTRIP, Quarter Outer Wdo. Belt	23-63-21
WEATHERSTRIP, Qtr. Wdo. Glass	23-63-104
WEATHERSTRIP, Rear Door Rear	23-63-97
WEATHERSTRIP, Rear Door Wdo.	23-63-94
WEATHERSTRIP, Rear Wdo. Glass	23-63-112
WEATHERSTRIP, Rr. Dr. Outer Wdo. Belt	23-63-15
WEATHERSTRIP, Side Rail Frt.	23-58-572
WEATHERSTRIP, T/Gate Glass	23-63-181
WEATHERSTRIP, T/Gate Opening	23-63-171
WEATHERSTRIP, Vent Window	23-63-126
WEATHERSTRIP, W/Shield Glass	23-66-235
WEDGE, Air Brake Adjusting	5-98-1
WEDGE, Cargo Door	23-08-12
WEDGE, Hyd. Brk. Shoe	5-03-18
WEIGHT, Wheel Balance	22-09-1
WEIGHT, Trans. Governor	21-138-13
WHEEL BRAKE SUPPORT	5-13-1
WHEEL CYLINDER BOOT	5-69-1
WHEEL CYLINDER PISTON CUP	5-71-1
WHEEL CYLINDER PISTON	5-70-1
WHEEL CYLINDER PISTON PUSH ROD	5-12-1
WHEEL CYLINDER REPAIR PACKAGE	5-63-1
WHEEL DRIVING STUD	22-05-14
WHEEL HUB CAPS	22-08-5
WHEEL, A/Cond. Blower	24-28-210
WHEEL, Defogger Blower	1-47-16
WHEEL, Htr. Blower Motor	1-48-46
WHEEL, Strg.	19-30-4
WHEELS, Disc or Spoke	22-01-5
WINCH PARTS	21-97-0
WINDOW GLASS RUN	23-42-0
WINDOW LIFT (ELECTRIC)	23-41-0
WINDOW LIFT (MANUAL)	23-39-0
WINDSHIELD	23-66-135
WINDSHIELD VISOR	23-103-0
WINDSHIELD WIPER AND WASHER	23-67-0
WIRING, A/Cond.	24-24-124
WIRING, Accessory Lamps	8-15-53
WIRING, Batt. to Starter Motor	8-01-17
WIRING, Body	8-15-4
WIRING, Brake System Warning Lamp	8-15-17
WIRING, Clearance and I.D.	8-48-27
WIRING, Defogger Motor	1-47-10
WIRING, Elect. Door Lock	23-18-105
WIRING, Electric Window Lift	23-41-55
WIRING, Front Crossover	8-15-15
WIRING, Headlamp Delay Relay	8-15-15
WIRING, Htr. Control	1-48-516
WIRING, Inst. Panel	8-19-3
WIRING, NOx Emission Control	8-22-3
WIRING, Road Lamp	8-15-60
WIRING, Rr. Compt. Spkr.	1-87-404
WIRING, Rr. Lamp	8-15-52
WIRING, Seat Adjuster Feed	23-47-420
WIRING, Speed Control	14-02-69
WIRING, Spring Brk. Stop Lamp	8-15-17
WIRING, Switch Power Wdos.	23-58-189
WIRING, Tachometer	8-37-545
WIRING, Transistor Regulator	8-15-35
WIRING, T/Gate Wdo. Lift	23-54-178
WIRING, W/Shield Wiper Motor	23-67-41
WORM, w/Ball Nut, Strg. Gear	19-15-21
WORM, W/Piston, Strg. Gear	19-15-38
WORM, Strg. Gear Piston	19-56-11
WRENCH or HANDLE	13-72-2

Y

PART NAME	CODE
YOKE, Prop Shaft	16-20-1
YOKE, Radiator	7-26-2
YOKE, Radiator Support Mtg.	7-29-34
YOKE, Slip Spline	16-14-1
YOKE, Strg. Column Slip	19-15-154
YOKE, Winch Drive Shaft	21-97-128

Z

PART NAME	CODE
ZIP KIT, Carburetor	14-30-4

PART NUMBER	CODE
43 401	19-31-1
50 082	9-05-6
53 298	9-07-12
103 740	23-54-4
104 148	3-32-12
104 918	21-129-10
	21-139-4
106 650	8-17-2
106 652	8-17-2
106 653	8-17-2
117 142	8-17-2
118 749	9-46-44
120 114	8-17-2
120 151	8-17-2
120 214	3-08-1
120 367	14-01-23
	14-15-3
120 369	21-136-52
120 375	13-36-5
	14-15-6
	14-25-5
120 376	4-08-13
	5-06-10
	17-29-17
	17-30-3
	23-64-12
	23-64-40
	23-64-254
	23-67-267
120 378	23-64-353
120 392	14-11-39
	23-21-58
120 394	14-14-20
121 224	19-48-45
121 753	23-17-72
121 839	23-21-14
124 930	14-24-1
124 934	21-136-17
125 735	19-46-8
126 049	8-17-2
127 934	8-44-1
131 100	21-30-407
131 282	8-44-1
135 629	23-64-353
137 396	5-52-4
138 498	14-24-1
142 450	8-44-1
142 451	8-44-1
142 452	8-44-1
142 453	8-44-1
142 630	8-17-2
142 864	8-17-2
145 511	8-17-2
147 483	21-133-7
	21-133-15
	21-133-22
	21-139-68
147 488	21-129-10
	21-139-4
	21-139-24
147 500	21-34-47
	21-42-23
	21-139-68
147 683	8-17-2
147 684	8-17-2
147 685	8-17-2
147 686	8-17-2
148 086	8-17-2
148 511	8-17-2
149 559	8-17-2
150 866	8-17-2
151 577	8-44-1
151 578	8-44-1
152 229	3-08-2
152 233	21-30-2
	23-54-17
152 240	8-44-1
152 244	8-44-1
152 267	5-58-13
152 285	8-34-175
	8-44-1
152 286	8-34-175
	8-44-1
152 287	8-34-175
152 291	8-34-175
	8-44-1
152 293	8-34-175
152 600	8-34-175
173 182	14-89-2
180 018	23-18-121
180 021	9-03-28
180 075	3-11-14
180 077	21-04-27
	21-85-61
	23-19-24
	23-19-105
180 079	23-21-58
180 122	7-43-5
	17-29-6
	17-29-10
180 128	7-43-5
180 147	9-17-9
180 190	17-23-56
181 082	3-11-14
	21-30-429
181 170	3-03-8
186 282	19-54-123
187 709	23-21-3
192 202	17-17-4
192 356	9-45-1
193 065	8-44-1
215 510	7-04-1
271 025	24-28-72
271 206	21-136-52
271 502	23-54-143
271 506	21-136-52
272 919	23-54-4
273 752	23-64-181
273 987	8-44-1
274 004	8-44-1
274 020	8-44-1
277 124	1-06-3
295 101	7-46-1
307 555	6-14-10
308 247	3-11-14
314 926	6-14-10
314 948	3-03-8
342 453	14-37-27
348 123	14-54-78
381 875	9-39-17
433 116	8-28-3
433 119	8-28-3
433 146	9-64-24
443 828	5-06-13
445 635	8-17-2
448 797	5-111-19
449 603	23-64-71
451 322	8-19-18
454 993	9-10-19
455 107	8-17-2
455 313	3-08-2
456 098	8-52-50
456 792	23-54-21
457 009	23-15-9
600 194	22-06-14
601 014	5-13-10
601 108	21-17-7
601 864	3-11-13
604 593	16-10-2
611 898	8-16-8
612 492	23-18-109
618 621	10-22-40
618 622	10-22-41
629 792	15-03-82
	23-18-109
	23-54-217
631 217	6-24-7
	19-46-41
	19-48-1
	21-30-426
631 809	21-19-15
631 810	21-19-15
631 877	21-09-25
632 258	21-30-426
640 280	21-19-15
640 331	21-19-15
651 222	14-39-56
658 998	6-19-3
665 151	8-16-10
666 924	21-11-9
666 927	21-11-2
	21-25-2
670 776	9-46-228
	21-136-235
672 709	21-09-33
697 812	21-25-4
729 152	23-02-38
	23-06-14
857 999	16-08-6
858 006	16-10-2
862 173	21-17-7
862 830	9-58-13
864 397	6-16-1
866 591	6-16-1
869 770	5-100-192
	23-48-113
870 469	5-06-13
	7-14-13
	7-48-19
	10-01-40
	11-09-4
870 821	8-16-4
883 031	5-111-17
	10-02-53
903 895	8-16-4
905 206	19-48-45
930 304	8-16-5
953 717	8-27-100
989 513	23-08-12
1057 794	10-03-13
1067 037	6-16-1
1115 927	3-03-26
1119 423	5-56-2
1122 532	9-02-7
1135 625	19-51-17
1137 669	4-25-15
	19-48-23
	21-30-418
	21-30-433
	21-142-18
1139 153	21-34-44
1139 204	21-02-0
	21-02-6
1142 259	22-04-11
1142 316	22-04-11
1188 502	8-16-5
1239 241	1-47-16
1242 974	8-57-16
	14-11-48
1262 318	1-47-17
1264 933	1-47-24
	8-10-3
	8-16-5
1302 783	9-02-77
1302 807	8-56-46
	21-34-46
1314 619	8-11-8
	8-42-10
1315 466	1-48-555
	7-14-9
1316 813	23-41-286
1316 815	21-119-25
1316 859	13-10-1
1319 554	17-23-53
1319 555	17-23-53
1319 902	17-23-52
1321 044	6-16-1
1323 593	21-133-17
1324 268	9-43-17
	9-43-19
1324 464	9-02-17
1324 470	9-36-7
1325 850	9-48-126
1326 091	9-10-2
1326 093	9-11-1
1326 836	8-27-4
1327 319	9-20-1
1327 846	3-22-24
1327 847	3-22-25
1330 873	14-34-55
1345 803	8-13-5
1370 460	23-19-68
1392 371	3-03-35
	9-48-9
1400 269	17-16-8
	21-04-26
1401 622	7-03-1
1401 809	3-22-24
1401 810	3-22-25
1406 504	6-16-1
1407 347	6-24-3
1407 748	19-15-25
1408 466	10-26-27
1408 867	9-10-19
1409 594	9-58-14
1424 452	8-44-1
1426 501	24-25-70
1450 769	24-25-8
1484 356	9-48-125
1485 510	17-15-28
1486 205	19-56-22
1489 747	17-15-1
1523 160	8-34-327
1527 974	8-27-207
1530 398	17-15-30
1536 242	9-10-26
1536 267	21-42-31
1536 268	19-56-90
1551 006	7-03-1
1551 030	14-25-12
1553 304	19-46-13
1553 305	19-46-14
1556 082	21-138-26
1556 385	19-02-15
	21-136-50
	21-136-55
	23-64-270
1556 556	16-20-2
1556 693	4-19-1
1557 575	10-26-27
1557 581	10-26-65
1558 352	17-29-11
1558 897	9-59-13
1559 489	21-136-229
1595 160	1-48-555
1603 364	11-02-1
1613 416	22-08-57
1614 666	9-39-17
1615 349	22-09-1
1615 350	22-09-1
1615 351	22-09-1
1615 352	22-09-1
1615 353	22-09-1
1615 354	22-09-1
1618 611	19-58-31
1618 695	9-10-19
1618 701	9-31-10
1618 732	9-15-10
1619 700	22-06-2
1619 701	22-06-1
1619 702	22-06-2
1619 703	22-06-1
1622 535	8-01-11
1622 536	8-01-12
1623 104	23-02-107
1626 749	4-10-40
	23-54-79
1630 746	21-02-6
1630 878	21-25-6
1630 896	21-136-15
1631 520	14-34-4
	14-34-5
1632 106	9-43-14
1632 522	9-16-6
1632 523	9-16-6
1632 524	9-16-6
1632 525	9-16-6
1632 526	9-16-6
1633 214	19-51-16
1633 217	19-51-10
1633 718	21-09-5
	21-19-2
1633 763	21-15-33
1633 928	3-08-1
1633 959	3-07-1
1633 960	3-06-6
1633 961	3-07-2
1634 619	2-07-2
1634 876	14-15-10
1634 984	3-03-3
1635 232	4-08-16
	19-48-23
	21-30-433
1635 282	21-24-2
1635 290	21-12-1
1635 293	21-12-2
	21-24-22
1635 588	17-23-52
1636 461	21-138-13
1636 462	21-138-13
1636 464	21-138-19
1636 465	21-138-19
1636 470	21-137-8
1637 657	9-08-5
1638 461	21-138-29
1639 171	2-14-15
1639 597	9-59-15
1639 961	23-02-84
1641 579	23-58-395
1642 029	23-67-80
1651 493	23-02-38
	23-38-29
1658 535	8-27-300
1658 638	24-25-156
1669 337	5-71-1
1670 356	19-19-36
1670 694	14-86-85
1671 341	22-08-57
1671 405	2-10-68
1671 446	2-14-15

PART NUMBER	CODE
1671 569	19-48-52
	19-51-23
1671 610	14-88-27
1671 650	14-29-24
1672 287	21-137-8
1672 358	21-136-55
1673 065	17-29-10
1673 324	22-06-10
1673 367	3-03-25
1673 646	9-45-2
1673 974	19-02-17
1674 746	7-02-16
1676 197	21-14-6
1686 198	7-13-2
1688 207	8-35-41
1689 670	24-01-33
1697 607	23-39-45
	23-41-250
1704 562	8-16-4
1704 875	8-05-12
1706 470	23-58-605
1707 384	23-06-14
	23-14-153
1708 996	23-64-278
1708 998	23-64-237
1730 019	6-43-13
1730 095	14-72-47
1730 155	7-02-16
1731 525	9-07-8
1732 198	4-08-35
1732 300	22-06-5
1733 562	19-02-69
1733 588	19-14-13
1733 593	19-01-52
1733 602	19-14-18
1733 612	19-57-13
1733 625	19-14-19
1733 627	19-19-32
1733 724	19-57-16
1733 790	19-01-53
1733 791	19-01-51
1734 078	19-19-19
1734 315	17-29-20
1734 327	19-27-34
1736 347	9-02-7
1736 348	9-02-7
1736 353	9-02-7
1736 521	21-133-46
1737 694	9-31-5
1737 695	9-31-7
1737 705	7-44-3
1737 718	10-07-10
1737 742	10-22-15
1737 745	14-77-17
1737 756	9-43-5
1737 761	7-44-4
1738 681	19-54-130
1738 794	3-22-27
1738 795	3-22-27
1738 796	3-22-27
1738 797	3-22-27
1738 798	3-22-27
1738 799	3-22-27
1738 800	3-22-27
1738 801	3-22-27
1738 802	3-22-27
1738 805	3-22-28
1738 806	3-22-28
1738 807	3-22-28
1738 812	3-22-27
1738 813	3-22-27
1738 814	3-22-27
1738 815	3-22-27
1738 816	3-22-27
1738 817	3-22-27
1738 818	3-22-27
1738 819	3-22-27
1738 820	3-22-27
1738 826	3-22-26
1739 230	10-01-62
	14-67-2
	14-73-11
	14-86-57
	14-89-57
1739 243	10-01-62
	14-73-11
	14-89-57
1739 534	9-39-15
1739 547	14-29-6
1739 604	10-09-5
1739 605	9-03-10
1739 606	9-03-10
1739 619	10-26-5
1739 912	16-08-7
1739 913	16-10-1
1747 982	24-25-168
1747 988	24-25-252
1752 488	8-16-3
1752 489	8-16-3
1752 490	8-16-3
1752 491	8-16-3
1752 492	8-16-3
1752 624	16-03-1
1753 632	8-12-3
	8-31-16
	8-37-88
	21-30-28
1758 839	23-58-228
1769 318	24-25-219
1774 621	23-31-205
1775 164	23-54-79
1778 955	23-54-152
1779 885	1-48-555
1789 754	22-06-2
1789 755	22-06-1
1790 241	22-06-1
1790 244	22-06-2
1791 591	3-22-78
1795 152	3-11-25
1795 153	3-11-25
1795 170	3-20-1
1795 173	16-20-3
1795 175	16-20-2
1795 193	3-22-40
1799 295	3-11-2
1799 296	3-11-1
1799 299	3-22-25
1799 300	3-22-24
1818 524	9-09-2
1818 525	9-09-2
1818 526	9-09-2
1818 527	9-09-2
1818 528	9-09-2
1818 529	9-09-2
1818 698	9-32-2
1818 699	9-32-2
1818 700	9-32-2
1818 701	9-32-2
1818 702	9-32-2
1818 703	9-32-2
1818 892	23-67-25
1819 836	8-16-4
1819 843	24-25-156
1820 551	3-22-25
1820 552	3-22-24
1820 698	3-03-3
1820 703	3-22-28
1820 704	3-22-28
1820 705	3-22-28
1820 706	3-22-28
1821 170	14-29-5
1821 414	9-07-8
1821 449	7-06-1
1821 452	7-06-14
1821 722	9-16-17
1821 771	9-16-6
1821 772	9-16-6
1821 773	9-16-6
1821 774	9-16-6
1821 775	9-16-6
1822 134	19-01-50
1822 149	19-01-52
1822 150	19-01-51
1822 151	19-01-52
1822 156	19-15-63
1822 157	19-15-65
1822 158	19-15-60
1822 204	19-19-9
1822 320	19-19-72
1822 321	19-01-62
1822 324	19-19-70
1822 380	19-57-63
1822 390	19-15-69
1822 406	19-19-71
1822 442	19-56-83
1822 671	19-56-6
1822 672	19-56-6
1823 091	19-01-52
1823 150	19-02-15
1823 151	19-57-64
1823 157	19-01-60
1823 161	19-01-60
1823 726	21-138-13
1825 289	2-08-49
1825 449	2-08-71
1825 903	7-03-1
1825 924	14-15-3
1825 932	7-02-16
1825 956	7-02-16
1826 286	14-29-33
1826 369	14-41-3
1826 607	14-41-3
1826 847	14-39-45
1826 863	14-30-28
1826 864	14-30-27
1828 352	13-34-3
1828 388	5-40-1
1828 389	5-40-4
	5-44-8
1828 456	14-86-57
1828 719	3-22-45
1828 725	3-22-28
1828 824	16-10-3
1829 383	6-52-10
1829 440	3-22-28
1829 441	3-22-28
1829 442	3-22-28
1829 443	3-22-28
1829 444	3-22-28
1829 929	17-15-24
1838 508	8-27-76
1838 516	8-27-300
1838 911	8-16-6
1838 939	8-41-37
1839 995	1-87-17
	7-16-62
	8-11-11
	8-50-173
	23-02-20
	23-06-54
	23-26-26
	24-28-95
1841 499	8-36-4
	8-36-14
1841 893	8-55-57
1842 003	8-16-8
1842 009	8-16-4
1842 012	8-16-4
1842 267	8-21-1
1843 008	11-02-1
1843 010	11-02-1
1843 251	5-53-3
1843 252	5-53-3
1843 253	5-53-3
	14-89-2
1843 254	5-53-3
1843 257	5-53-4
1843 258	5-53-4
1843 444	8-16-1
1851 493	14-29-6
1851 613	9-03-10
1851 658	10-26-6
1851 664	9-50-6
1851 665	9-48-27
1851 959	7-02-16
1852 910	9-10-5
1852 911	9-10-5
1852 915	9-10-5
1853 695	21-11-1
1854 274	21-139-95
1854 275	21-139-95
1854 829	24-25-160
1855 238	9-43-3
1855 328	10-07-12
1855 561	9-07-22
1856 292	19-15-63
1856 346-7	17-11-7
1856 993	19-58-21
1857 748	19-27-40
1857 774-5	2-14-3
1857 776-7	2-14-3
1857 778-9	2-14-3
1857 780-1	2-14-3
1857 840	2-08-11
1857 856-7	2-08-5
1858 015	19-27-50
1858 024	2-10-76
1858 115	2-07-17
	2-08-72
	2-10-64
	19-27-51
1858 955	9-48-8
1859 127	7-43-18
	9-02-16
	9-48-9
1859 144	9-39-21
1859 332	9-48-27
1859 444	19-54-126
1859 445	19-58-18
1867 661	23-19-70
1878 303	23-32-15
1878 752	23-32-15
	23-36-18
1879 606	8-27-77
1879 609	8-16-1
1879 617	9-32-2
1879 618	9-32-2
1879 619	9-32-2
1879 620	9-32-2
1879 621	9-32-2
1879 622	9-32-2
1879 627	9-09-2
1879 628	9-09-2
1879 629	9-09-2
1879 630	9-09-2
1879 747	9-41-1
1881 794	9-32-2
1881 795	9-32-2
1881 796	9-32-2
1881 797	9-32-2
1881 804	7-14-4
1881 805	7-14-4
1881 806	7-14-4
1881 938	8-53-150
1882 735	21-03-15
	23-34-178
1885 608	8-17-23
	24-24-7
1886 101	1-48-145
	15-03-77
	23-19-68
	24-28-19
1886 109	24-28-318
1886 110	1-48-280
	24-28-318
	24-28-405
1886 263	24-28-210
1886 265	24-28-210
1886 266	24-28-195
1887 222	8-20-3
1887 299	24-28-175
1887 300	24-28-175
1887 582	1-47-14
1887 603	1-87-17
	23-67-161
1887 604	8-53-312
1889 044	8-52-150
1889 066	8-52-76
1889 079	8-52-120
1889 080	8-52-241
1889 100	8-52-0
	8-52-4
1889 147	8-52-88
1889 151	8-52-375
1889 362	8-52-369
1889 363	8-52-176
1902 763	7-26-18
1904 950	7-14-31
1909 917	23-64-278
1909 918	23-39-15
1909 944	23-64-246
1920 101	21-09-31
1922 183	8-34-128
	23-48-17
	23-54-20
	23-54-31
1922 276	3-08-1
1922 314	3-22-28
1922 315	3-22-28
1923 765	5-71-2
1924 080	21-133-47
1927 232	4-25-17
	5-13-10
1929 751	3-04-6
1929 756	3-07-1
1929 758	3-09-1
1929 759	3-09-2
1929 760	3-04-10
1937 770	3-11-2
1937 771	3-11-1
1940 147	6-38-23
1940 621	5-58-1
1940 725	17-16-8
1941 600	21-139-105
1941 601	21-139-105
1941 602	21-139-105
1941 648	9-45-2
1941 667	9-46-43
1941 831	21-129-7
	21-137-202

PART NUMBER	CODE
1942 015	21-133-20
1942 020	9-46-130
1942 021	21-118-45
1942 054	21-133-17
1942 063	21-133-25
	21-133-43
1942 064	21-133-25
1942 065	21-133-25
1942 080	21-133-47
1942 081	21-133-48
	21-134-30
1942 095	21-136-231
1942 101	21-09-31
1942 109	21-138-38
1942 120	21-136-15
1942 123	21-137-8
1942 130	21-137-19
	21-137-59
1942 132	21-136-23
1942 133	21-136-30
1942 137	21-136-47
1942 141	21-136-52
1942 150	21-137-56
1942 153	21-137-200
1942 187	9-46-229
	21-136-236
1942 213	21-139-64
1942 215	21-139-64
1942 218	21-139-63
1942 227	21-139-135
1942 231	21-139-108
1942 237	21-139-154
1942 245	21-139-63
1942 248	21-03-6
1942 389	21-129-13
1942 390	21-129-24
1942 396	21-133-17
1942 397	21-133-17
1942 399	21-133-22
1942 400	21-133-43
1942 403	21-133-38
1942 414	21-133-20
1942 421	21-133-25
	21-133-43
1942 423	21-133-25
1942 434	21-133-40
1942 438	21-133-42
1942 439	21-133-46
1942 443	21-134-38
1942 444	21-134-40
1942 450	21-134-36
1942 467	21-133-20
1942 477	21-136-17
1942 478	21-137-5
1942 482	21-137-11
1942 485	21-137-13
1942 486	21-137-19
1942 487	21-136-30
1942 491	21-136-47
1942 497	21-136-41
1942 543	21-136-52
1943 547	8-47-126
	23-06-14
	23-34-52
1944 092	5-110-18
1944 154	5-110-18
1944 361	17-14-10
1944 865	9-31-5
1945 197	14-13-5
1945 473	9-11-7
1946 377	6-38-3
1946 468	4-23-3
1946 638	11-05-12
1946 639	11-05-12
1946 648	11-06-3
1947 165	9-31-4
1947 225	10-10-1
1947 521	7-44-3
1947 523	7-44-4
1947 554	9-23-17
1947 557	9-11-7
1947 594	9-43-1
1947 612	8-27-26
1947 613	8-27-26
1947 614	9-43-9
1947 616	9-43-11
1947 617	9-43-11
1947 623	9-39-5
1947 624	9-39-6
1947 643	7-48-22
1947 671	9-05-6
1947 687	9-03-10
1947 704	9-42-1
1947 708	8-36-137
1947 752	9-48-45
1947 753	9-48-44
1947 797	14-29-5
1947 907	7-02-1
1947 953	6-10-3
	10-24-23
1948 335	17-15-1
1948 396	17-12-12
1948 757	14-72-9
1948 838	5-110-18
1948 869	17-17-3
1948 876	17-17-4
1948 877	17-17-5
1949 132	21-136-23
1949 176	9-46-33
1949 345	21-29-3
1949 346	21-29-25
1949 350	21-42-31
1949 351	21-39-3
1949 352	21-42-11
1949 355	21-34-45
1949 356	21-34-42
1949 361	21-04-2
1949 399	21-133-22
1949 424	9-46-21
1949 701	21-03-28
1949 765	9-46-21
1949 767	21-03-6
1949 834	21-17-2
1949 858	21-138-15
1949 859	21-138-15
1950 477	23-19-21
	23-64-71
1950 897	23-58-607
1952 983	23-58-605
1954 083	23-64-4
1954 125	23-39-12
1960 017	23-54-102
1960 061	23-32-88
1960 127	8-47-76
1960 131	8-47-67
1961 318	23-54-128
1964 260	23-58-603
1982 542	24-25-189
1982 545	24-25-260
1984 152	24-25-160
1989 202	24-25-127
1990 584	24-25-94
1990 598	24-25-94
1992 947	24-25-133
1994 408	24-25-137
1994 410	24-25-135
1996 845	24-25-114
1997 446	24-25-110
1999 184	24-25-15
1999 502	24-25-84
2000 083	24-25-84
2003 059	7-02-16
2008 388	24-25-135
2010 872	24-25-107
2019 681	24-25-160
2021 191	24-25-246
2024 663	21-138-23
2026 291	21-05-19
2027 787	24-01-1
2027 814	24-01-1
2027 816	24-01-1
2027 817	24-01-1
2027 818	24-01-1
2027 819	24-01-1
2027 820	24-01-1
2027 821	24-01-1
2070 082	3-11-3
2070 084	3-11-3
2070 086	3-11-3
2070 088	3-11-3
2070 090	3-11-3
2070 092	3-11-3
2070 094	3-22-26
2070 095	3-22-26
2070 096	3-22-26
2070 097	3-22-26
2070 098	3-22-26
2070 099	3-22-26
2070 100	3-22-26
2070 101	3-22-26
2070 102	3-22-26
2070 103	3-22-26
2070 104	3-22-26
2070 105	3-22-26
2070 106	3-22-26
2070 107	3-22-26
2070 108	3-22-26
2070 109	3-22-26
2070 110	3-22-26
2070 117	16-20-2
2070 119	3-03-29
2070 120	3-03-30
2070 122	3-03-36
2070 158	22-05-14
2070 158-9	22-05-14
2070 300	3-19-1
2070 316	3-22-24
2070 317	3-22-25
2070 318	3-22-24
2070 319	3-22-25
2070 441	3-11-3
2070 442	3-11-3
2070 443	3-11-3
2070 444	3-11-3
2070 445	3-11-3
2070 446	3-11-3
2070 447	3-11-3
2070 448	3-11-3
2070 449	3-11-3
2070 450	3-11-3
2070 454	3-22-26
2070 455	3-22-26
2070 456	3-22-26
2070 457	3-22-26
2070 458	3-22-26
2070 459	3-22-26
2070 460	3-22-26
2070 461	3-22-26
2070 462	3-22-26
2070 463	3-22-26
2070 464	3-22-26
2070 465	3-22-26
2070 466	3-22-26
2070 467	3-22-26
2070 468	3-22-26
2070 469	3-22-26
2070 689	3-19-1
2070 690	3-19-1
2070 696	3-11-3
2070 697	3-11-3
2070 698	3-11-3
2070 816	3-19-1
2070 817	3-19-1
2070 848	3-11-3
2070 849	3-11-3
2070 850	3-11-3
2070 851	3-11-3
2070 915	3-19-1
2070 933	3-33-10
	5-13-7
2071 094	4-23-36
2071 132	4-23-3
2071 173	2-14-13
2071 204	2-08-7
2071 417	2-10-58
2071 432-3	2-03-3
2071 443	2-10-59
2071 456-7	2-08-5
2071 470	2-10-74
2071 506	2-10-76
2071 507	13-11-5
2071 514-5	13-11-17
2071 533	2-08-50
2071 534	2-08-50
2071 536-7	2-08-63
2071 572	17-29-12
2071 604	17-29-20
	17-30-5
2071 611	17-29-21
	17-30-4
2071 640	2-10-19
2071 653	2-10-10
2071 714	17-23-56
2071 727	2-10-72
2071 764	13-54-15
2071 766-7	17-11-7
2071 768-9	17-11-7
2071 861	19-27-50
2071 862	2-08-50
2072 020	19-02-18
2072 035	19-15-33
2072 060	19-15-60
2072 068	19-15-33
2072 069	19-15-22
2072 437	2-07-2
2072 612	5-62-7
2072 614	5-13-35
2072 637	5-71-2
2072 643	4-26-26
2072 644	4-26-27
2072 646	4-26-18
2072 655	5-70-1
2072 656	5-70-1
2072 678	5-66-6
2072 681	5-13-9
2072 682	5-13-9
2072 718	22-08-57
2072 731	22-06-5
2072 831	6-38-14
2072 838	6-50-12
2072 901	6-22-19
2073 041	5-56-2
2073 205	11-08-23
	11-09-19
	11-10-18
2073 632	6-43-7
2073 634	5-27-2
2073 687	6-20-14
2073 794	11-10-3
2074 089	13-36-5
2074 386	23-32-20
2074 960	5-47-10
2074 986	5-100-191
2075 005	5-100-192
2075 006	5-100-194
2076 088	1-48-608
	24-28-204
2076 232	5-31-13
2076 405	1-48-254
	8-34-328
2080 201	23-06-14
2080 784	23-02-2
2080 996	8-20-16
2081 004-5	23-32-93
2083 111	23-32-15
2084 005	9-09-2
2084 006	9-09-2
2084 007	9-09-2
2084 008	9-09-2
2084 088	8-52-214
2084 090	8-52-344
2084 091	8-52-341
2084 093	8-52-49
2084 094	8-52-354
2084 215	19-15-39
2084 354	10-07-3
2084 355	10-07-2
2084 384	9-34-5
2084 385	9-34-5
2084 386	9-34-5
2084 387	9-34-5
2084 388	9-34-5
2084 389	9-34-5
2084 390	9-34-5
2084 403	9-10-5
2084 404	9-10-5
2084 405	9-10-5
2084 411	9-11-1
2084 415	10-07-3
2084 421	8-16-1
2084 424	8-16-1
2084 653	8-27-352
2084 655	8-27-85
2084 666	8-52-140
2084 715	14-35-6
2084 718	14-30-12
2084 719	14-45-2
2084 810	9-09-2
2084 811	9-09-2
2084 812	9-09-2
2084 813	9-09-2
2084 814	9-09-2
2084 815	9-09-2
2084 816	9-09-2
2084 817	9-09-2
2084 829	9-09-2
2084 830	9-09-2
2084 831	9-09-2
2084 832	9-09-2
2084 833	9-09-2
2084 834	9-09-2
2084 835	9-09-2
2084 836	9-09-2
2084 918	2-10-57
2084 920	2-08-59
2086 597	8-05-28
2093 945	23-32-15
2094 618	8-47-126
	23-32-51
2094 869	23-40-148

PART NUMBER	CODE
2094 984	23-19-21
	23-32-15
	23-34-123
	23-64-71
2094 985	23-32-15
	23-32-98
	23-34-40
	23-51-45
2095 012	8-29-155
2095 038	8-29-42
2095 076	8-52-176
2095 094	8-52-120
2095 105	8-52-241
2095 114	8-52-102
2095 116	8-52-101
2095 117	8-52-67
2095 118	8-52-89
2095 130	8-52-61
2095 133	8-52-50
2095 427	8-29-98
2095 630	8-27-4
2095 740	8-27-4
2095 760	8-29-145
2095 766	8-36-96
2095 768	8-36-96
2095 772	8-36-49
2095 773	8-36-49
2095 776	8-36-49
2095 777	8-36-49
2095 875	8-52-5
2095 925	8-29-135
2095 945	8-29-153
2096 374	8-37-88
	8-50-156
	21-30-28
2096 623	23-67-260
2096 772	1-47-13
2096 857	8-13-3
2096 989	1-47-12
	1-48-151
2097 003	5-06-15
	8-14-3
	8-39-15
	8-41-36
	8-50-156
	21-30-28
2097 055	23-67-260
2097 101	24-25-234
2097 102	24-25-157
2097 103	24-25-234
2097 105	24-25-232
2098 058	8-27-190
2098 244	8-27-158
2098 287	8-29-131
2098 288	8-29-131
2098 381	8-36-114
2098 478	8-29-154
2098 512	8-29-133
2098 633	8-29-208
2098 980	8-36-92
2098 986	8-52-80
2120 017	10-26-52
2120 510	7-02-16
2120 514	9-42-1
2120 694	9-43-5
2120 930	9-17-9
2121 196	9-45-2
2121 223	9-48-14
2121 245	8-36-136
2121 404	10-07-11
2121 524	9-05-5
2121 530	10-09-1
2121 531	10-14-18
2121 535	10-09-5
2121 571	14-13-3
2121 573	10-24-23
2121 578	9-39-5
2121 579	9-39-5
2121 580	9-39-5
2121 581	9-39-6
2121 582	9-39-6
2121 583	9-39-6
2121 585	9-48-12
2121 588	9-23-10
	19-54-123
2121 686	9-39-14
2121 725	9-16-6
2121 726	9-16-6
2121 727	9-16-6
2122 255	6-14-1
2122 262	6-14-4
2123 341	5-56-2
	14-90-1
2124 024	21-138-21
2124 255	21-137-202
2124 256	21-139-117
2124 257	21-139-118
2124 342	21-136-5
2124 499	21-09-33
2124 502	21-25-2
2124 506	21-25-6
2124 516	21-09-5
2124 518	21-09-23
2124 579	21-136-20
2124 605	21-42-23
2124 606	21-42-23
2124 662	21-138-15
2124 663	21-138-23
2124 666	21-136-20
2124 697	21-139-101
2124 705	9-46-130
2124 734	21-139-68
2124 736	21-139-74
2124 737	21-139-76
2124 813	21-129-13
2124 819	21-133-15
2124 824	21-133-43
2124 826	21-133-38
2124 827	21-133-36
2124 833	21-133-1
	21-133-7
2124 835	21-133-17
2124 846	21-118-54
2124 848	21-136-15
2124 850	21-137-5
2124 851	21-137-8
2124 853	21-137-11
2124 856	21-137-13
2124 857	21-136-49
2124 872	21-133-25
2125 024	21-138-21
2125 059	21-39-3
2125 067	21-136-20
2125 069	21-137-22
2125 109	21-137-205
2125 890	10-24-37
	21-119-11
2126 890	19-19-19
2126 946	19-02-55
2126 965	19-19-36
2126 966	19-19-5
2127 049	19-19-5
2127 097	19-15-63
2127 104	19-19-4
2127 108	19-19-28
2127 146	19-15-58
2127 154	19-19-35
2127 280	1-48-557
	24-01-31
2127 486	19-54-181
2128 425	7-43-8
2128 751	7-03-1
2128 774	9-64-18
2128 912	9-08-5
2129 012	9-23-17
2129 013	7-44-3
2129 146	9-62-2
2129 151	10-26-12
2129 265	7-05-1
2129 379	7-43-5
	19-54-123
2129 684	19-54-132
2129 885	6-10-2
2161 115	23-02-145
2161 119	23-02-145
2161 307	8-05-8
2161 308	8-05-6
2161 316	8-05-32
	8-11-28
2162 360	1-48-357
	1-48-457
2167 260	23-19-105
2189 093	23-32-15
2189 098	23-32-15
2189 375	23-32-15
2196 214	14-41-3
2196 234	14-41-3
2196 240	14-35-1
2196 315	24-25-162
2196 932	19-27-31
2197 650	8-34-326
	23-67-260
2197 678	1-48-33
	1-48-179
	1-48-254
	1-48-357
	1-48-707
	1-48-950
	4-08-36
	8-34-328
	8-55-9
	14-29-46
	15-03-70
	23-26-26
	24-01-66
	24-24-13
	24-24-18
	24-28-101
	24-28-388
	24-28-392
2197 945	8-16-4
2197 947	8-16-4
2200 341	5-44-9
2201 009	13-72-2
2201 181	5-47-4
2201 467	4-23-28
2201 554	17-23-52
2202 499	9-20-1
2202 583	14-01-23
2202 666	7-06-14
2202 794	24-25-25
2202 850	19-54-123
2203 031	24-25-35
2203 035	24-25-45
2203 350	22-06-1
2203 351	22-06-2
2203 352	22-06-1
2203 353	22-06-2
2204 185	2-08-63
2204 274	6-24-14
	19-48-12
	21-30-429
2204 369	21-133-65
2204 491	21-09-29
2204 547	21-139-108
2204 619	21-14-5
2204 622	21-133-65
2204 623	21-133-65
2204 645	21-133-15
2204 647	21-134-11
2204 649	21-134-12
2204 702	21-03-28
2204 709	21-118-45
2204 719	9-46-8
2204 728	21-03-7
2204 768	9-46-8
2204 792	21-136-5
2204 820	21-136-44
2204 823	21-136-41
2204 944	21-09-2
2204 952	21-136-20
2204 975	21-139-71
2204 993	21-118-57
2205 034	21-139-135
2205 131	21-34-47
2205 203	21-133-36
2205 241	21-133-10
2205 242	21-129-6
2205 299	21-119-5
2205 510	9-16-6
2205 512	9-16-6
2205 514	9-16-6
2205 516	9-16-6
2205 518	7-06-1
2205 568	9-08-5
2205 569	9-20-1
2205 958	9-39-14
2205 959	9-39-14
2206 095	10-07-7
2206 315	9-10-5
2206 316	9-10-5
2206 372	10-26-5
2206 376	14-29-6
2206 416	9-48-14
2206 447	8-28-15
2206 448	8-28-292
2206 449	8-28-292
2206 450	8-28-14
2206 923	17-23-52
2206 925	17-23-53
2207 116	2-09-8
2207 282	2-10-59
2207 296	2-10-59
2207 322	2-10-60
2207 359	19-27-8
2207 519	22-01-46
2207 604	5-13-9
2207 933	5-56-2
	14-90-1
2208 008	5-27-12
2208 158	19-48-49
2208 159	19-48-50
2208 172	19-48-51
2208 210	19-51-4
2208 219	19-51-13
2208 268	6-16-1
2208 893	5-62-20
2209 213	8-37-381
2209 214	8-37-387
2209 216	8-37-2
2216 279	23-14-147
	23-14-153
2216 544	23-09-53
	23-64-17
	23-64-272
2216 546	23-09-61
2216 552	14-63-11
	14-86-55
	15-11-74
	21-84-8
2216 673	23-64-273
2217 351	23-09-54
2217 508	15-03-8
	23-63-16
	23-63-183
2218 301	23-09-27
2218 683	23-06-14
2218 956	23-08-75
2219 155	24-26-35
2219 383	24-28-326
2219 384	24-28-326
2219 385	24-28-326
2219 627	1-47-6
	1-48-158
2228 429	3-09-2
2230 985	8-16-1
2231 105	8-19-7
2231 119	8-16-10
2233 028	8-16-10
2238 893	3-09-1
2239 683	6-14-1
2240 264	8-16-1
2240 311	11-02-1
2240 312	11-02-1
2240 368	9-09-2
2240 369	9-09-2
2240 370	9-09-2
2240 371	9-09-2
2240 372	9-09-2
2240 373	9-09-2
2240 374	9-09-2
2240 375	9-09-2
2240 376	9-09-2
2240 377	9-09-2
2240 378	9-09-2
2240 379	9-09-2
2240 397	7-04-1
2240 529	8-52-180
2240 536	8-16-1
2240 634	6-17-3
2240 647	10-24-1
2240 685	21-139-67
2242 425	23-34-119
2242 439	23-34-116
2243 327	23-19-99
2244 149	23-19-70
2251 128-9	23-58-76
2251 358	23-54-74
2251 398	4-23-7
2251 600	23-58-607
2251 676	23-32-87
	23-48-22
2251 678	23-48-19
2251 868	23-04-205
2252 183	23-32-82
2252 184	23-32-51
	23-48-93
2254 270	23-15-13
2254 552	23-19-97
2254 575	23-48-43
2254 667	23-32-58
2254 668	23-04-205
2254 675	23-32-65
2254 788	23-32-56
2254 810	23-32-79
2255 015	13-72-10
2255 147	23-48-93
2255 231	23-08-12
	23-32-51
2256 966	8-05-31

PART NUMBER	CODE
.....	8-11-18
.....	8-12-17
.....	8-13-6
.....	8-14-4
.....	8-31-18
.....	8-37-93
.....	8-39-17
.....	8-41-39
.....	8-42-12
.....	8-50-159
.....	8-55-300
.....	21-30-33
.....	24-24-167
2257 443	8-16-4
2257 444	8-16-4
.....	14-72-33
2257 679	5-06-15
.....	24-24-7
2257 682	8-17-23
2257 804	8-37-459
2257 839	8-16-4
2258 102	8-16-6
2258 118	8-16-4
2258 284	8-17-2
2258 404	8-56-2
2258 413	8-37-2
2258 590	8-16-4
2258 591	8-16-4
2258 651	8-16-6
2258 704	8-50-126
2258 862	14-72-5
2258 899	1-88-7
2258 912	23-67-262
2259 118	4-23-4
2259 173	23-32-106
2259 413	23-19-178
2260 021	6-22-4
2260 023	6-27-5
2260 046	5-39-11
2260 047	6-22-1
2260 300-1	2-08-63
2260 548	5-26-4
2260 549	5-26-4
2260 671	5-20-15
2260 709	5-34-6
2260 719	6-22-15
2260 787	5-12-1
2260 788	5-25-9
2260 789	5-03-23
2260 791	5-26-1
2260 792	5-26-2
2260 793	5-20-11
2260 800-1	4-26-1
2260 835	5-03-23
2260 837	5-70-1
2260 838	5-71-0
2260 839	5-71-2
2260 843	5-70-1
2260 844	5-71-1
2264 115	14-29-28
2264 116	14-29-15
2264 193	14-30-2
2264 449	7-06-1
2264 450	7-06-14
2264 463	7-03-1
2264 587	10-22-15
2264 597	9-45-1
2264 658	9-39-17
2264 706	14-25-12
2264 794	9-23-17
2265 034	7-02-1
2265 036	7-02-16
2265 068	5-20-17
2265 201	5-20-1
2265 269	4-23-24
2265 572	5-13-9
2265 574	5-71-1
2265 635	5-44-8
2265 640	5-47-2
2265 656	19-14-4
2265 863	5-27-2
2265 875	6-50-1
2265 938	6-52-11
2265 942	6-52-17
2266 232	6-13-1
2266 240	6-17-3
2266 298	22-04-11
2266 743	19-15-24
2266 777	6-35-9
2266 783	6-50-10
2266 784	6-35-1
2266 818	6-50-10
2266 819	6-22-15
2266 820	6-38-23
2266 876	5-64-2
2266 877	22-04-11
2266 890	5-13-22
2266 942	5-100-161
2267 044	5-03-23
2267 045	5-25-9
2267 128	19-19-16
2267 129	19-19-35
2267 152	19-19-24
2267 156	19-19-70
2267 175	19-19-24
2267 176	19-19-28
2267 178	19-19-7
2267 192	19-15-59
2267 350	19-19-38
2267 351	19-19-38
2267 454	19-15-21
2267 467	19-19-24
2267 468	19-19-28
2267 478	19-15-77
2267 487	19-19-4
2267 491	19-02-55
2267 492	19-15-58
2267 529	19-58-21
2267 530	19-58-18
2267 532	19-01-50
2267 550	19-01-8
2267 551	19-02-4
2267 679	19-58-9
2267 694	19-54-182
2267 724	19-01-8
2267 764	19-15-21
2268 114	9-07-5
2268 282	9-48-44
2268 386	7-03-1
2268 420	14-13-1
2268 513	10-24-38
.....	21-119-12
2268 696	10-26-48
2268 698	10-27-24
2268 699	10-27-23
2268 921	10-07-8
2269 104-5	2-08-5
2269 124	2-08-7
2269 127	2-08-61
2269 189	2-10-76
2269 214	2-10-66
2269 215	2-10-66
2269 218	2-10-10
2269 234	2-14-14
2269 245	2-10-58
2269 250	2-14-13
2269 260	2-14-13
2269 393	19-27-50
2269 574-5	2-14-3
2269 576-7	2-14-3
2269 578-9	2-14-3
2269 618-9	2-14-3
2269 620-1	2-14-3
2269 622-3	2-14-3
2269 638	19-27-3
2269 643	19-27-50
2269 659	19-27-2
2269 709	17-29-12
2269 786	2-07-2
2269 798-9	2-03-3
2270 067	23-47-66
2275 204	24-25-93
2275 205	24-25-93
2275 207	24-25-2
2275 215	1-48-15
.....	15-03-93
.....	24-28-24
2275 220	8-16-3
2275 248	8-52-214
2275 365	9-11-1
2275 381	9-09-2
2275 382	9-09-2
2275 383	9-09-2
2275 384	9-09-2
2275 385	9-09-2
2275 386	9-09-2
2275 387	9-09-2
2275 388	9-09-2
2275 389	9-09-2
2275 390	9-09-2
2275 391	9-09-2
2275 392	9-09-2
2275 393	9-09-2
2275 395	9-09-2
2275 396	9-09-2
2275 397	9-09-2
2275 398	9-09-2
2275 413	9-32-2
2275 414	9-32-2
2275 440	9-35-1
2275 441	9-35-1
2275 466-7	2-10-55
2275 468	2-14-1
2275 469	2-14-1
2275 498	21-138-2
2275 555	8-52-121
2275 556	8-52-87
2275 557	8-52-96
2275 558	8-52-98
2275 590	8-35-22
2276 394	9-09-2
2276 749	15-09-4
2276 804	15-09-4
.....	23-32-51
2277 190	24-28-326
2277 515	1-48-358
2277 516	1-48-355
.....	24-28-138
2277 517	1-48-401
2277 518	1-48-365
2277 543	1-48-611
2277 551	1-48-35
2277 553	1-48-126
2277 591	1-48-375
2277 596	24-28-201
2277 597	1-48-46
.....	24-28-210
2277 648	1-48-90
2277 669	1-48-362
.....	24-28-96
2277 699	1-48-611
2277 731	24-25-38
2277 767	4-25-32
.....	24-28-19
2277 770	1-48-707
2277 834	1-48-608
2279 897	11-02-1
2279 961	19-19-40
2279 985	19-57-1
2290 069	8-16-4
2290 188	8-20-8
2290 207	8-16-4
2290 592	8-37-454
2290 654	8-37-454
2290 666	8-37-455
2291 093	8-16-6
2291 258	8-16-6
2291 259	8-16-4
2291 327	8-37-188
2291 588	8-16-4
2291 663	8-16-6
2291 781	8-38-23
2291 838	8-16-4
2291 841	8-15-32
2291 842	8-15-32
2291 846	8-15-13
2291 852	8-31-10
2291 876	1-47-4
2292 474	1-87-7
2292 503	23-02-82
2292 994	8-05-6
2292 995	8-05-23
2298 514	21-138-2
2298 534	2-08-57
2298 546	9-34-5
2298 649	23-15-1
2298 769	8-16-3
2298 770	8-16-3
2298 882	1-48-783
.....	8-16-1
2298 912	17-23-3
2299 040	14-35-33
2299 042	14-30-8
2299 140	14-34-5
2299 217	14-41-3
2299 245	14-35-1
2299 248	14-35-1
2299 819	23-39-2
2299 980	23-47-26
2320 344	14-45-8
2400 163	21-05-12
.....	21-22-2
2400 185	21-05-8
2400 284	21-133-65
2400 300	21-05-12
.....	21-22-2
2400 320	21-05-8
2400 389	21-136-17
2400 479	21-129-11
2400 580	21-134-45
2400 622	21-133-42
2400 625	21-133-36
2400 662	21-133-42
2400 667	21-134-8
2400 725	21-133-36
2400 729	21-137-22
2400 843	21-05-35
2400 885	9-46-8
2401 120	6-13-1
2401 126	5-100-161
2401 128	5-105-10
2401 135	5-100-180
2401 139	5-113-17
2401 154	5-100-197
2401 166	5-100-32
2401 231	1-87-23
2401 740	6-24-10
2401 759	4-23-28
2401 768	4-23-15
2401 772	4-23-46
2401 840	22-01-46
2401 841	22-01-46
2401 853	5-100-167
2401 862	5-39-18
2401 885	5-100-32
2401 894	5-100-206
2401 910	6-52-12
2401 960	5-13-22
2402 045	9-39-16
2402 103	10-26-5
2402 129	14-29-4
2402 136	10-09-5
2402 210	14-25-5
2402 312	9-39-17
2402 378	7-03-1
2402 525	9-43-3
2402 607	10-26-46
2402 677	14-29-6
2402 693	6-09-1
2402 903	7-48-22
2402 905	9-16-17
2403 154	17-16-8
2403 177	17-23-53
2403 178	17-23-57
2403 245	17-17-3
2403 247	13-54-11
2403 796	17-19-3
2403 798	13-54-4
2403 901	17-19-20
2403 906	17-19-3
2404 052	3-35-14
2404 115	3-33-8
2404 119	3-02-20
2404 164	5-13-9
2404 168	5-13-10
2404 193	3-04-6
2404 194	3-06-5
2404 195	3-07-1
2404 196	3-06-6
2404 197	3-07-2
2404 198	3-08-1
2404 202	3-06-5
2404 203	3-06-5
2404 216	3-35-14
2404 435	22-05-14
2404 435-6	22-05-14
2404 442	3-32-1
2404 475	3-33-8
2404 823	21-136-41
2404 859	6-24-10
.....	21-30-428
2405 049	12-04-24
2405 077	6-19-2
2405 085	6-50-6
.....	6-52-15
2405 086	6-50-6
.....	6-52-15
2405 105	5-29-1
2405 144-5	22-05-14
2405 465	4-25-27
2405 466	5-110-18
2405 720	5-26-4
2405 758	22-04-2
2406 039	7-06-14
2406 334	14-01-30
2406 356	9-02-16
2406 387	9-02-16
.....	9-03-18
2406 575	9-02-16
2406 580	10-22-11

PART NUMBER	CODE
2406 657	9-31-4
2406 677	10-22-15
2406 766	9-31-4
2406 770	9-31-4
2406 785	9-31-4
2408 143	21-113-29
2409 188	4-25-7
2409 408	21-30-428
2409 462	4-25-7
2409 680	6-22-15
2409 682	6-14-1
2409 683	6-13-1
2409 688	6-14-1
2409 808	22-05-14
2409 808-9	22-05-14
2409 823	4-26-17
2409 824	22-05-24
2409 824-5	22-05-24
2409 826	22-05-24
	22-20-87
2409 826-7	22-05-24
2409 978	5-47-2
2410 102	23-48-122
2416 737	17-30-7
2416 749	17-30-7
2419 361	23-04-229
2421 075	17-23-2
2421 137	8-29-129
2421 173	8-27-158
2421 175	8-27-158
2421 268	4-25-28
2421 305	9-32-2
2421 306	9-32-2
2421 307	9-32-2
2421 308	9-32-2
2421 309	9-32-2
2421 310	9-32-2
2421 356	9-32-2
2421 357	9-32-2
2421 358	9-32-2
2421 359	9-32-2
2421 360	9-32-2
2421 361	9-32-2
2421 455	8-16-3
2421 482	23-67-20
2423 535	23-64-272
2423 737	8-55-6
	24-25-127
2424 864	23-32-15
2426 141	8-11-8
2426 179	8-12-2
2426 216	8-41-35
2426 312	8-34-180
2426 458	8-37-155
2426 836	23-19-94
2427 119	1-87-17
	8-14-27
	24-28-49
2427 191	8-16-6
2427 192	8-16-6
2427 529	8-16-4
2427 533	8-41-35
2427 603	1-87-2
2427 725	8-16-4
2427 736	8-16-4
2427 848	8-16-4
2428 071	23-54-77
2428 125	15-11-38
2428 178	23-18-49
	23-54-221
2428 267	23-19-102
2428 275	23-19-105
2428 284	23-64-82
2428 388	23-45-55
	23-47-75
2443 294	21-84-4
2444 024	8-36-83
2444 025	8-36-83
2444 031	8-36-83
2444 249	8-27-205
2444 282	8-27-205
2444 442	8-52-328
2444 469	8-36-49
2444 507	8-27-71
2444 658	8-52-41
2444 870	8-36-114
2445 726	15-11-50
2445 845	8-34-177
2448 294	21-84-4
2448 295	21-84-4
2448 336	6-13-1
2448 379	9-09-2
2448 380	9-09-2
2448 381	9-09-2
2448 620	4-25-26
	8-34-326
	24-28-64
2448 621	8-22-14
	8-27-320
	24-28-64
2448 640	23-54-160
2448 735	9-35-1
2448 761	14-86-49
	19-58-14
2448 764	14-86-49
2448 804	8-52-82
2448 822	8-16-1
2449 525	8-34-180
2458 409	5-01-2
2458 410	5-01-2
2458 412	5-01-2
2458 413	5-01-2
2458 414	5-01-2
2460 416	5-110-18
2460 614-5	22-05-14
2460 676	5-57-2
2460 762	11-09-4
2460 824	11-01-1
2460 883	16-02-5
2460 929	16-14-1
2461 068	21-30-418
2461 480	6-27-5
2461 481	6-24-1
2461 483	6-24-7
2461 485	6-22-1
2461 494	6-19-2
2461 515	6-35-1
2461 523	6-35-1
2461 626-7	13-01-6
2461 684	23-05-1
2461 707	5-31-12
2461 708	5-28-8
2461 709	5-28-8
2461 745	6-24-1
2461 749	6-35-1
2461 765	6-52-10
2461 766	6-52-10
2461 790	13-33-68
2461 791	13-33-61
2462 086	13-54-4
2462 101	17-19-20
2462 104	17-23-52
2462 179	17-23-2
2462 360	13-54-15
2462 365	17-23-52
2462 566	17-29-11
2462 570	17-29-15
2462 571	17-29-16
2462 572	17-29-18
2462 585	2-10-58
2462 602	17-29-5
2462 740	2-10-59
2462 741	2-10-59
2462 848	2-08-61
2462 886	2-10-66
2462 887	2-08-61
2463 041	9-16-17
2463 042	9-03-18
2463 173	6-10-10
2463 258	9-03-10
2463 259	9-03-10
2463 260	9-03-10
2463 282	9-43-11
2463 283	9-43-11
2463 290	9-03-29
2463 322	9-43-11
2463 323	9-43-11
2463 384	9-20-1
2463 385	9-08-5
2463 395	9-02-5
2463 512	10-26-20
2463 541	10-22-11
2463 582	9-10-5
2463 594	10-24-4
2463 606	10-23-7
2463 649	9-07-22
2463 921	14-77-17
2463 932	14-29-7
2464 001	21-29-3
2464 011	21-15-2
2464 012	21-24-2
2464 013	21-25-4
2464 016	21-10-31
2464 017	21-10-16
2464 018	21-10-3
2464 023	21-12-1
2464 037	21-29-25
2464 038	21-42-11
2464 045	21-34-45
2464 046	21-34-42
2464 047	21-34-47
2464 051	21-39-3
2464 052	21-34-51
2464 053	21-34-53
2464 059	21-04-2
2464 069	21-10-16
2464 073	21-11-1
2464 076	21-137-205
2464 178	21-134-9
2464 323	21-119-3
2464 324	21-119-5
2464 413	21-119-3
2464 419	21-119-3
2464 439	21-136-44
2464 446	21-136-236
2464 462	21-137-50
2464 463	21-137-56
2464 464	21-137-59
2464 481	21-137-50
2464 548	21-139-47
2464 551	21-03-7
2464 552	21-03-28
2464 578	21-10-4
2464 651	21-133-15
2464 658	21-15-2
2464 659	21-10-31
2464 724	21-14-21
2464 743	21-25-6
2464 744	21-25-2
2464 839	21-14-19
2464 851	21-136-47
2464 888	21-136-225
	21-136-235
2464 999	9-46-33
2465 090	10-26-12
2465 091	10-26-12
2465 166	8-28-36
2465 203	9-62-1
2465 335	9-39-5
2465 336	9-39-5
2465 337	9-39-5
2465 338	9-39-5
2465 339	9-39-6
2465 340	9-39-6
2465 341	9-39-6
2465 342	9-39-6
2465 381	7-04-10
2465 391	11-06-8
2465 413	14-26-11
2465 483	23-34-123
2465 486	14-25-17
2465 517	5-56-2
2465 558	8-28-36
2465 560	14-65-4
	24-01-40
2465 561	14-65-4
2465 764	14-29-11
2465 850	9-43-9
2465 852	9-15-1
2466 009	21-03-28
2466 197	21-129-11
2466 221	21-42-11
2466 222	21-42-11
2466 224	21-05-2
2466 281	21-133-39
2466 283	21-133-31
2466 295	21-42-11
2466 302	21-119-19
2466 324	21-118-47
2466 369	21-133-43
2466 406	21-09-2
2466 427	21-09-2
2466 457	21-34-47
2466 484	21-05-2
2466 537	21-134-5
2466 539	21-134-5
2466 548	21-139-47
2466 562	21-119-11
2466 615	21-139-24
2466 673	21-119-19
2466 715	9-46-8
2466 756	21-134-11
	21-139-34
2466 757	21-134-11
	21-134-12
2466 758	21-134-10
2466 759	21-134-8
2466 796	21-118-47
2466 801	21-133-1
	21-133-7
2466 803	21-133-39
2466 806	21-133-31
2466 811	21-133-25
	21-133-43
2466 842	21-139-16
2466 849	21-117-1
2466 854	21-139-50
2466 881	21-05-25
2466 882	21-05-25
2466 886	21-139-147
2466 892	4-10-8
2466 894	4-10-35
2466 906	4-10-35
2466 909	4-10-11
2466 954	21-04-2
2466 956	21-04-1
2466 957	21-04-8
2466 961	21-39-3
2466 969	21-04-1
2467 095	5-13-7
2467 096	3-33-8
2467 103	3-33-2
2467 135	3-19-1
2467 166	3-33-6
2467 178	21-134-9
2467 268	3-32-8
2467 459	3-33-8
2467 513	4-25-23
2467 514	4-25-6
2467 515	4-25-9
2467 567	4-25-9
2467 571	4-25-10
	15-11-30
2467 575	5-113-17
2467 576	5-100-212
2467 577	5-113-21
2467 578	5-113-20
2467 592	5-100-26
2467 593	5-100-206
2467 594	5-100-115
2467 600	5-100-192
2467 693	23-32-18
2467 719	5-56-2
2467 766	5-28-9
2467 768	5-28-8
2467 769	5-28-9
	6-39-9
2467 770	5-27-2
	6-38-3
2467 771	5-27-2
2467 932	19-48-46
2467 933	19-48-1
2467 934	19-48-1
2467 935	19-48-16
2467 946	19-48-48
2467 982	2-08-63
2468 005	9-31-5
2468 006	9-31-7
2468 010	9-03-5
2468 088	9-43-10
2468 089	9-43-10
2468 091	9-43-10
2468 096	9-39-5
2468 097	9-39-5
2468 098	9-39-5
2468 099	9-39-5
2468 124	9-43-9
2468 126	9-43-9
2468 128	9-43-14
2468 132	9-43-2
2468 135	9-10-26
2468 146	9-39-6
2468 147	9-39-6
2468 148	9-39-6
2468 149	9-39-6
2468 173	9-43-1
2468 174	9-43-1
2468 184	9-67-4
2468 196	8-36-137
2468 197	6-09-11
2468 218	9-48-56
2468 307	9-58-12
2468 593	10-26-13
2468 645	10-07-14
2468 744	14-11-18
2468 809	24-25-15
2468 818	14-30-2
2468 849	10-23-7
2468 898	9-43-2
2469 501	9-41-4

PART NUMBER	CODE
2469 502	9-41-4
2469 503	9-41-4
2469 504	9-41-4
2480 230	23-19-178
2480 231	23-19-178
2480 451	23-58-399
2480 453	23-58-430
2480 904	15-03-8
	23-63-16
2480 957	23-32-15
	23-36-18
2481 381	14-88-36
2481 401	23-32-25
2481 403	23-32-25
2481 693	14-40-1
2481 811	23-32-65
2481 813	23-32-25
2481 824	23-32-48
2482 508	23-48-109
2482 510-1	23-48-109
2483 098	23-49-9
2483 252-3	23-51-6
2483 571	23-32-15
2484 064	23-32-48
2484 307	23-19-63
2484 575	23-32-15
2484 635	23-58-239
2484 868	23-48-98
2484 888	23-58-333
2484 941	23-54-103
2484 974	23-32-69
2485 134	1-48-90
	24-01-26
2485 135	1-48-94
2485 429	1-48-608
2485 478	1-48-126
2485 540	24-28-84
2485 580	24-28-195
2485 587	24-25-234
2485 591	24-28-210
2485 593	24-28-203
2485 603	24-28-93
2485 738	1-47-3
2485 914	24-28-18
2485 915	24-28-18
2485 916	24-28-18
2485 920	24-28-18
2485 970	1-48-365
2486 022	15-11-3
2486 040	23-54-217
2486 058	23-64-269
2486 072	23-54-152
2486 468	23-15-38
2486 697	15-13-2
2486 704-5	23-14-10
2486 844	23-32-80
	23-48-20
2486 846	23-32-58
	23-48-19
2486 851	23-39-2
	23-41-7
2486 874	23-54-98
2486 882	23-54-165
2486 910	23-48-22
2486 964	23-47-66
2486 966	23-47-66
2486 968	23-47-66
2486 971	23-54-74
2486 982	23-39-45
	23-41-250
2486 994	23-47-67
2490 481	23-02-79
2491 290	23-15-13
2491 448	23-15-13
2493 662	23-48-65
2493 663	23-48-189
2493 664	23-48-189
2493 666	23-48-188
2493 882	23-48-189
2493 925	13-11-5
2494 549	23-47-28
2495 052	6-17-3
2495 222	8-53-237
	8-53-327
2495 223	8-16-1
2495 224	8-16-1
2495 234	8-16-1
2495 235	8-16-1
2495 236	8-16-1
2495 237	8-16-1
2495 239	8-16-1
2495 510	8-36-1
2495 517	8-16-1
2495 528	14-73-1
2495 531	8-35-4
2495 541	8-16-1
2495 953	14-30-30
2496 153	23-32-61
2496 279	8-31-16
	8-37-88
	8-39-15
	8-41-36
	8-50-156
2496 532	8-16-4
2496 541	8-16-4
2496 874	1-87-2
2497 346	8-16-10
2497 387	1-48-770
2497 408	1-87-180
2497 481	1-48-783
2497 500	8-34-324
	23-67-241
2497 596	23-67-200
2497 701	8-16-6
2497 980	8-56-27
2514 344	8-27-250
2515 343	3-03-30
2520 004	23-08-12
2520 009	23-10-18
	23-15-14
2520 013	23-10-9
2520 014	23-15-6
2520 463	23-09-54
2520 490	23-39-2
2520 534	23-39-2
	23-39-44
2520 556	23-41-7
2520 557	23-39-2
2520 562	23-64-12
2520 565	23-18-29
2520 610-1	23-58-227
2520 621	23-17-74
2520 658	23-64-269
2520 659	23-64-269
2520 676	23-64-291
2520 697	23-18-29
2520 735	23-19-105
2520 748	23-19-109
2520 749	23-19-109
2520 750	23-19-110
2520 832-3	23-18-115
2520 850	23-48-206
2520 852	23-48-203
2520 883	23-47-66
2520 914-5	23-41-270
2521 082	24-28-108
2521 099	24-28-399
2521 108	24-28-399
2521 123	24-28-383
2521 126	24-28-90
2521 130	24-28-90
2521 144	24-28-207
2521 152	24-28-31
2521 172	24-28-326
2521 231	24-28-208
2521 240	24-01-36
2521 243	24-01-35
2521 246	24-01-38
2521 315	24-28-44
2521 336	1-48-179
2521 409	1-48-832
2521 439	24-28-338
2521 440	24-28-336
2521 441	24-28-336
2521 501	24-28-117
2521 545	24-28-100
2521 551	24-01-18
2521 554	24-28-34
2521 563	24-01-18
2521 571	24-28-100
2521 572	24-28-100
2521 573	24-28-100
2521 621	24-28-7
2521 629	24-28-117
2521 635	24-28-78
2521 668	1-47-4
	1-48-158
2521 676	24-28-19
2521 686	1-48-130
2521 694	24-28-108
2521 701	24-28-108
2521 712	24-28-117
2521 713	24-28-118
2521 726	24-28-17
2521 729	1-48-709
	24-01-40
	24-28-72
2521 824	24-25-20
2521 953	24-28-10
2525 063	22-06-18
2525 086	2-14-1
2525 087	2-14-1
2525 254	14-67-1
2525 460	17-23-3
2525 461	17-23-3
2525 464	6-14-1
2525 473	6-17-3
2525 481	19-01-3
2525 484	9-32-2
2525 529	8-52-135
2525 534	8-36-1
2525 639	8-27-205
2525 782	14-41-3
2526 642	23-04-205
2526 734	23-48-88
2526 829	23-34-13
2526 949	23-48-88
2526 953	23-32-17
2527 104	23-32-115
2527 105	23-32-115
2527 112-3	23-51-5
2527 114-5	23-32-27
2527 116-7	23-32-27
2527 118-9	23-32-112
2527 120-1	23-32-93
2527 138-9	23-32-112
2527 196	22-20-87
2528 192	23-58-605
2528 236	23-58-607
2528 237	23-58-213
2528 238	23-58-606
2528 239	23-58-607
2528 286-7	23-58-572
2528 396-7	23-32-93
2528 454	23-40-170
2528 464	23-40-171
2529 110	13-64-9
	13-64-27
2529 564-5	23-36-66
2529 827	23-66-65
2529 831	23-34-301
2529 840-1	23-59-56
2529 842-3	23-40-85
2529 844-5	23-40-85
2529 850-1	23-40-85
2529 852-3	23-40-85
2529 942	23-48-93
2529 943	23-48-93
2530 154	22-01-46
2530 189	19-15-43
2530 191	19-46-43
2530 199	21-30-7
2530 249	21-30-5
2530 343	22-01-52
2530 346	22-05-24
2530 346-7	22-05-24
2530 379	6-16-1
2530 426	5-28-8
2530 428	6-52-5
2530 444	6-19-3
2530 446	6-35-1
2530 538	19-15-17
2530 541	19-15-23
2530 566	19-14-38
2530 666	23-32-115
2530 667	23-32-115
2530 683	23-32-31
2530 688	2-08-70
2530 700	14-90-1
2530 790	11-08-5
2530 975	13-01-1
	13-35-1
2530 984	12-04-4
2530 992	13-33-68
2530 994	13-33-61
2531 332	9-39-16
2531 902	9-03-4
2531 945	10-24-30
2532 149	9-43-9
2532 186	10-24-4
2532 190	9-15-1
2532 191	14-89-58
2532 198	9-07-5
2532 264	10-23-7
2532 277	9-64-24
2532 278	9-64-24
2532 284	10-24-4
2532 299	9-64-24
2532 401	10-24-4
2532 490	9-17-5
2532 491	9-08-5
2532 492	9-20-1
2532 659	7-03-1
2532 708	9-67-4
2532 752	10-26-8
2532 753	10-26-18
2532 754	10-26-27
2532 756	10-26-6
2532 792	6-10-2
2532 911	10-26-49
2533 145	9-71-5
2533 202	16-03-1
2533 203	16-16-7
2533 342	13-68-18
2533 424	13-72-3
2533 740	19-15-23
2533 822	4-26-18
2533 892-3	4-26-17
2533 934	19-14-48
2534 056	13-11-5
2534 061	13-64-72
2534 111	14-86-85
2534 113	14-90-1
2534 226	5-100-189
2534 227	5-100-198
2534 228	5-100-15
2534 231	5-100-18
2534 233	5-100-20
2534 236	6-35-15
2534 239	6-35-1
2534 240	6-24-1
2534 246	5-47-2
2534 248	5-31-11
2534 249	6-50-1
2534 258	5-31-12
2534 271	5-31-11
2534 272	6-50-1
2534 346	5-100-18
2534 347	5-34-1
2534 349	5-100-26
2534 423	19-48-46
2534 430	11-01-1
2534 431	11-01-1
2534 440	11-01-1
2534 441	11-01-1
2534 511	21-30-414
2534 513	19-48-46
2534 515	21-30-22
2534 530	6-35-1
2534 549	6-52-10
2534 613	5-62-1
2534 663	5-64-7
2534 666-7	4-26-17
2534 754	22-05-14
2534 754-5	22-05-14
2534 806	13-33-62
2534 812	12-01-26
2534 814	13-36-5
2534 905	22-04-2
2534 926	4-23-28
2534 931	4-23-28
2534 937	4-25-6
2534 938	4-25-23
2534 952	4-25-1
2534 964	4-08-13
2534 966	4-23-1
2534 982-3	13-11-18
2534 984-5	13-11-18
2535 027	2-10-10
2535 077	19-27-50
2535 155	19-27-50
2535 170	17-29-5
2535 173	17-29-11
2535 188	17-29-17
	17-30-3
2535 204	2-08-48
2535 206	2-08-48
2535 364	2-10-6
2535 365	2-10-7
2535 376-7	2-08-5
2535 422-3	2-03-3
2535 426-7	2-03-3
2535 434	2-10-6
2535 435	2-10-7
2535 446-7	2-05-4
2535 457	2-07-28
2535 458	19-27-40
2535 459	19-27-40
2535 460	19-27-40
2535 461	19-27-40

PART NUMBER	CODE
2535 463	2-10-65
2535 464	2-10-65
2535 512-3	2-14-3
2535 516-7	2-14-3
2535 534	17-29-5
2535 694-5	2-03-3
2535 697	2-03-3
2535 755	2-10-58
2535 878	2-10-6
2535 879	2-10-7
2535 886	19-27-31
2535 888-9	2-14-3
2535 890-1	2-14-3
2535 892-3	2-14-3
2535 974	2-10-6
2535 975	2-10-7
2535 990	17-29-11
2535 991	17-29-19
2535 992	17-29-17
2536 016	14-29-4
2536 121	9-67-4
2536 125	9-64-24
2536 132	9-64-24
2536 186	10-26-6
2536 266	14-14-1
2536 270	21-142-12
2536 275	21-142-12
2536 453	14-06-1
2536 481	9-23-18
2536 626	14-29-5
2536 649	9-02-37
2536 774	9-48-126
2536 846	14-01-38
2536 847	14-24-4
2536 918	6-09-1
2536 926	10-02-61
2536 983	9-07-5
2537 095	19-54-263
2537 153	19-19-35
2537 154	19-19-35
2537 178	19-01-50
2537 216	19-02-4
2537 221	19-15-38
2537 222	19-15-38
2537 228	19-57-19
2537 229	19-57-20
2537 346	19-02-4
2537 347	19-02-4
2537 386	19-58-15
2537 392	19-58-15
2537 397	19-02-4
2537 398	19-02-4
2537 399	19-02-4
2537 503	19-54-178
2537 534	19-58-9
2537 689	19-54-151
2537 694	19-54-126
2537 699	19-58-14
2537 716	19-19-26
2537 717	19-19-24
2537 726	19-01-8
2537 727	19-01-8
2537 736	19-01-8
2537 737	19-01-8
2537 738	19-01-8
2537 739	19-01-8
2537 741	19-01-8
2537 749	19-01-8
2537 775	19-19-4
2537 776	19-19-4
2537 777	19-57-3
2537 778	19-57-3
2537 796	19-15-60
2537 803	19-58-9
2537 814	19-54-182
2537 815	19-54-225
2537 818	19-54-157
2537 819	19-54-178
2537 820	19-54-152
2537 821	19-54-154
2537 822	19-54-156
2537 823	19-54-153
2537 827	19-54-151
2537 828	19-54-181
2537 829	19-54-151
2537 830	19-54-151
2537 831	19-54-181
2537 833	19-54-32
2537 834	19-54-150
2537 835	19-54-5
2537 836	19-54-180
2537 837	19-54-54
2537 838	19-54-55
2537 840	19-54-54
2537 858	19-54-126
2537 859	19-54-130
2537 863	19-54-243
2537 865	19-54-219
2537 866	19-54-130
2537 869	19-54-126
2537 891	19-58-33
2537 892	19-58-14
2537 895	19-58-9
2537 899	19-54-29
2537 926	19-54-32
2537 958	19-54-150
2537 959	19-54-219
2537 992	1-48-557
2537 995	19-54-54
2538 013	21-42-28
2538 014	21-42-29
2538 034	4-10-33
2538 042	4-10-32
2538 047	21-133-7
2538 062	21-139-46
2538 064	21-142-18
2538 068	21-15-2
2538 185	21-134-38
2538 196	21-09-2
2538 202	21-10-31
2538 206	21-118-40
2538 207	21-15-33
2538 264	21-137-205
2538 407	21-129-5
2538 409	21-129-10
2538 421	21-39-3
2538 461	21-136-5
2538 472	21-136-52
2538 474	21-136-65
2538 510	21-133-17
2538 515	21-133-48
2538 522	21-134-5
2538 523	21-134-5
2538 567	21-05-1
2538 571	21-85-23
2538 574	21-134-36
2538 575	21-42-23
2538 576	21-42-23
2538 588	21-85-22
2538 608	21-85-9
2538 617	21-133-25
2538 634	21-138-10
2538 635	21-138-10
2538 662	21-139-135
2538 669	21-05-35
2538 670	21-05-35
2538 671	21-05-35
2538 695	21-133-17
2538 696	21-134-45
2538 783	21-14-15
2538 785	21-04-17
2538 849	21-119-19
2538 926	21-85-5
2538 927	21-85-5
2538 928	21-85-5
2538 929	21-85-5
2538 930	21-85-5
2538 931	21-85-5
2538 932	21-85-5
2538 933	21-85-5
2538 934	21-85-5
2538 935	21-85-5
2538 936	21-85-5
2538 937	21-85-5
2538 938	21-85-5
2538 939	21-85-5
2538 940	21-85-5
2538 941	21-85-5
2538 942	21-85-5
2538 943	21-85-5
2538 944	21-85-5
2539 127	17-17-3
2539 404	17-26-4
2539 489	13-54-4
2539 507	13-54-4
2539 512	17-12-6
2539 764	17-15-1
2541 330	24-25-3
2541 332	24-25-162
2570 017	23-64-28
2570 204-5	23-34-117
2570 238	23-63-14
2570 240-1	23-64-308
2570 243	23-42-13
2570 244	23-42-16
2570 282-3	23-64-240
2570 295	23-66-135
2570 320	23-22-145
2570 370-1	23-64-308
2570 598	23-66-135
2570 605	23-66-135
2570 606	23-66-135
2570 718-9	23-09-51
2570 784-5	23-63-126
2570 786-7	23-63-126
2570 822-3	23-64-308
2570 962-3	23-64-308
2571 215	23-64-95
2571 768	23-59-57
2572 163	23-02-82
2572 521	8-11-16
2572 774	8-11-15
2572 776	8-11-16
2573 028	22-20-87
2573 169	7-16-61
2573 272	23-32-115
2573 304	23-42-32
2573 320-1	23-48-99
2573 368-9	23-32-112
2573 382	23-64-12
2573 384	23-64-12
2573 406	23-58-75
2573 407	23-58-75
2573 470	23-58-215
2573 528-9	23-58-573
2573 530-1	23-58-573
2573 536-7	23-58-572
2573 632	23-58-569
2573 642-3	23-63-33
2573 658	23-58-555
2573 690	23-58-213
2573 837	23-58-399
2573 838	23-58-357
2573 839	23-58-388
2573 840	23-58-381
2573 844	23-58-396
2573 847	23-58-400
2573 882	23-58-570
2573 976	23-34-17
2573 986-7	23-34-249
2573 989	23-34-248
2574 144	23-32-116
2574 145	23-32-116
2574 185	4-23-2
2574 254	23-48-109
2574 322	23-48-93
2574 657	23-42-46
2574 800-1	23-32-27
2574 802-3	23-32-27
2574 805	23-32-29
2574 850-9	23-34-249
2574 874	23-64-282
2574 876	23-64-4
2574 912	23-48-93
2575 059	8-57-10
2576 505	23-32-17
2576 512	23-32-17
2576 724	23-48-65
2576 754-5	23-32-93
2576 942	23-48-68
2577 696	23-26-45
2577 697	23-26-45
2578 045	7-14-13
2579 260	7-11-60
2579 306	7-11-35
2579 307	7-11-31
2579 443	23-34-334
2579 904	12-07-1
2580 038	1-87-404
2580 061	8-16-4
2580 064	8-16-16
2580 065	8-16-16
2580 200	23-67-132
2580 253	23-67-194
2580 267	8-16-16
2580 360	1-47-15
2580 361	1-87-292
2580 381	8-41-35
2580 611	8-10-2
	8-13-2
2580 612	8-10-1
	8-13-1
2580 772	8-53-294
2580 774	23-67-195
2580 927	23-67-104
2580 929	23-67-80
2580 944	23-67-82
	23-67-267
2581 324	23-40-82
2582 134	15-03-5
2582 136	15-03-60
2582 705	15-03-5
2583 002-3	23-15-3
2583 010	23-32-80
	23-48-20
2583 022	23-54-73
2583 023	23-54-92
2583 030-1	23-39-34
2583 032-3	23-39-34
2583 064-5	23-39-5
2583 142	23-48-201
2583 144	23-48-19
2583 195	15-11-10
2583 206	15-11-3
2583 239	23-48-111
2583 331	23-54-73
2583 352	15-11-3
2583 377	23-17-10
	23-17-28
	23-17-52
2583 391	23-18-48
2583 429	15-11-30
	23-48-44
	23-54-20
	23-54-227
2583 468	23-15-30
2583 541	23-39-44
	23-41-7
2583 549	23-39-44
2583 551	23-39-17
	23-41-83
2583 552	23-64-282
2583 559	23-39-2
	23-41-7
2583 568	23-15-30
2583 578-9	23-15-3
2583 614	23-54-142
2583 616	23-32-57
	23-48-32
2583 620	23-17-74
2583 623	23-47-55
2583 720	23-18-11
2583 721	23-18-11
2583 723	23-41-7
2583 764-5	23-41-4
2583 796-7	23-15-1
2583 817	23-18-49
2583 824	23-39-44
	23-41-7
2583 849	23-54-205
2583 854-5	23-41-4
2583 860	23-17-9
	23-17-27
	23-17-51
2583 978	23-18-20
2583 980-1	23-18-26
2584 699	23-23-65
2584 841	8-16-1
2584 842	8-16-1
2584 843	8-16-1
2584 953	8-16-1
2584 954	8-16-1
2584 971	8-11-8
	8-39-15
2584 972	8-13-4
	8-14-8
	8-50-354
	8-55-63
	8-56-27
	8-57-89
2585 000	8-27-71
2585 017	8-27-138
2585 019	8-27-205
2585 021	8-27-133
2585 022	8-27-133
	8-27-137
2585 030	8-16-1
2585 118	14-73-1
2585 162	8-27-138
2585 164	1-88-6
2585 174	8-57-54
2585 175	8-29-97
2585 239	17-11-3
2585 240	17-11-3
2585 404	14-43-5
2585 408	14-35-1
2585 422	14-43-5
2585 458	14-43-5
2585 463	14-30-7
2585 471	14-35-9

PART NUMBER	CODE
2585 589	21-138-2
2585 595	2-05-4
2585 596	2-05-4
2585 617	17-23-3
2585 618	17-23-3
2585 640	17-11-3
2585 641	17-11-3
2585 642	17-11-3
2585 651	17-12-4
2585 659	5-03-1
2585 683	5-03-1
2585 685	5-03-1
2585 698	11-02-1
2585 702	14-43-5
2585 784	14-50-25
2585 787	14-35-1
2585 790	14-43-5
2585 792	14-35-1
2585 850-1	23-23-65
2585 852-3	23-23-65
2586 272-3	23-23-65
2586 274-5	23-23-65
2586 512	8-29-99
2586 651	17-12-4
2586 760	8-15-3
2586 764	8-53-304
2586 993	8-36-1
2587 284	8-55-57
2587 495	21-30-28
2588 202	23-64-297
2588 294-5	23-32-93
2588 296-7	23-32-93
2588 330	23-59-57
2588 337	23-64-12
2588 598-9	23-09-56
2588 635	23-18-70
2588 641	23-54-53
2588 662	23-48-99
2588 718-9	23-09-52
2588 755	23-31-33
2588 756	23-31-33
2588 818	23-48-21
2588 824-5	23-63-136
2588 899	23-32-93
2589 046	23-26-80
2589 097	8-05-10
2589 377	23-40-82
2589 422	23-40-82
2589 587	23-02-62
	23-02-78
	23-02-79
	23-02-105
2589 598	23-38-27
2589 599	23-38-5
2589 600	23-38-5
2589 615	23-02-111
2589 728	23-38-43
2589 789	23-38-44
2589 819	23-26-87
2589 874	23-02-62
	23-02-78
2600 702	14-86-57
2602 182-3	23-59-56
2602 294-5	23-32-93
2602 647	23-40-150
2602 648-9	23-40-177
2602 651	23-40-150
2602 652	23-40-155
2602 655	23-40-187
2602 656	23-40-187
2602 675	23-19-63
2602 722	13-72-7
2602 765	23-58-436
2602 773	23-39-48
2602 930-1	23-32-112
2603 154-5	23-64-281
2603 156	23-64-269
2603 240	23-23-27
2603 332	23-39-48
2603 490-1	23-64-299
2603 600	23-32-22
2603 604-5	23-51-5
2603 606-7	23-32-27
2603 608-9	23-32-27
2603 610	23-32-115
2603 611	23-32-115
2603 620-1	23-32-17
2603 624-5	23-51-5
2603 628-9	23-51-5
2603 638-9	23-34-234
2603 640-1	23-34-234
2603 642-3	23-19-82
2603 644-5	23-34-27
2603 646-7	23-34-27
2603 652-3	23-34-22
2603 665	23-34-166
2603 675	23-64-66
2603 688-9	23-59-56
2603 690	23-64-314
2603 691	23-64-314
2603 700-1	23-64-311
2603 702-3	23-64-311
2603 722-3	23-36-66
2603 877	23-64-300
2604 006	23-64-314
2604 007	23-64-314
2604 024	23-64-66
2604 025	23-64-66
2604 048-9	23-59-56
2604 070-1	23-63-55
2604 073	23-34-166
2604 092-3	23-26-41
2604 106-7	23-63-33
2604 115	23-63-112
2604 120	23-34-167
2604 124	23-34-179
2604 126	23-19-74
2604 146-7	23-19-177
2604 154-5	23-51-5
2604 156-7	23-51-5
2604 160	23-32-22
2604 166-7	23-32-25
2604 168-9	23-34-242
2604 170-1	23-51-5
2604 192-3	23-34-234
2604 194-5	23-34-234
2604 224-5	23-34-234
2604 226-7	23-34-27
2604 240-1	23-19-82
2604 258-9	23-36-53
2604 260-1	23-36-53
2604 286-7	23-34-246
2604 294-5	23-59-35
2604 296-7	23-59-35
2604 298-9	23-59-35
2604 300-1	23-59-35
2604 318-9	23-19-82
2604 322-3	23-19-82
2604 328-9	23-34-22
2604 850-1	23-36-66
2604 886-7	23-64-84
2604 888-9	23-64-84
2604 900-1	23-51-6
2604 902-3	23-32-112
2604 996-7	23-34-334
2605 208	23-59-57
2605 327	23-58-220
2605 684	23-58-215
2606 175	8-50-156
2606 200	8-57-10
2607 002	23-61-120
2607 003	23-61-120
2607 004	23-61-124
	24-28-341
2607 006	23-61-121
2607 025	24-01-39
2607 029	24-28-73
2607 043	24-01-3
2607 141	1-47-14
2607 171	1-48-125
2607 182	24-28-19
2607 270	23-61-122
2607 283	1-48-158
2607 285	1-48-606
2607 289	1-48-356
2607 290	1-48-408
2607 302	1-48-832
2607 312	1-48-126
	24-28-96
2607 440	24-26-35
2607 517	24-28-403
2607 526	24-26-35
2607 645	1-48-611
2607 754	1-47-3
2607 769	1-47-14
2607 776	1-47-3
2607 783	24-28-399
2607 785	24-28-99
2607 807	1-48-707
2607 837	24-28-200
2607 838	24-28-107
2609 204	23-26-45
2609 221	23-45-52
2609 250	23-45-52
2609 262	23-45-184
2609 878	23-45-183
2631 315	8-19-87
2631 317	8-16-6
2631 318	8-16-6
2631 319	8-16-6
2631 340	8-16-8
2631 657	1-47-15
2631 665	8-20-8
2631 702	23-67-262
2631 718-9	8-12-6
2631 727	8-11-12
2631 728	8-11-15
2631 766	23-67-132
2631 794	23-67-76
2631 828	8-15-27
2642 411	8-28-3
	8-29-208
2642 412	8-28-3
	8-29-208
2642 493	8-36-114
2642 506	8-52-41
2642 618	8-36-114
2642 633	8-29-98
2642 670	8-35-41
2642 913	8-36-114
2642 961	8-52-345
2642 986	8-27-71
2642 988	8-27-259
2643 103	3-19-1
2643 120	3-19-1
2643 204	3-19-1
2643 205	3-19-1
2643 206	3-19-1
2643 464	3-35-14
2643 506	11-05-1
2643 542	11-05-4
2643 544	11-05-4
2643 546	11-05-4
2643 548	11-05-4
2643 550	11-05-4
2643 597	11-09-3
2643 607	11-09-3
2643 623	11-10-42
2643 649	21-30-43
2643 702	6-22-1
2643 705	6-27-5
2643 707	5-28-8
2643 709	5-28-9
2643 712	5-28-8
	6-39-2
2643 714	5-28-9
2643 717	6-52-5
2643 731	5-100-26
2643 824	14-88-27
2643 858	14-86-50
2643 859	14-86-69
2643 860	14-86-69
2643 910	21-30-38
2643 913	21-30-355
2643 956	14-86-42
2643 974	5-54-4
2644 291	8-29-110
2644 292	8-29-99
2644 296	8-29-164
2644 299	8-29-153
2644 300	8-29-153
2644 301	8-29-184
2644 302	8-29-41
2644 303	8-29-41
2644 305	8-29-41
2644 306	8-29-181
2644 307	8-29-179
2644 308	8-29-184
2644 309	8-29-179
2644 312	8-29-164
2644 313	8-29-184
2644 764	21-84-28
2649 425	8-29-97
2649 434	8-29-160
2649 435	8-29-154
2649 437	8-29-131
2649 438	8-29-131
2649 439	8-29-179
2649 440	8-29-181
2649 441	8-29-179
2649 442	8-29-131
2649 443	8-29-131
2649 444	8-29-184
2649 445	8-29-130
2649 446	8-29-130
2649 447	8-29-153
2649 486	8-29-98
2649 935	8-29-154
2656 004	13-72-12
2656 087	23-02-115
2656 088	23-38-45
2656 089	21-30-408
2656 090	23-38-48
2656 184	23-38-3
2656 391	23-02-110
2656 842	23-26-87
2656 859	23-38-14
2656 886-7	23-04-205
2656 961	1-87-20
2656 972-3	23-20-24
2657 042	23-40-82
2657 101	23-26-87
2657 134	23-38-43
2657 175	23-38-5
2657 284	23-02-105
2657 580	23-38-5
2657 877	23-02-68
2658 204	9-39-15
2658 238	14-29-38
2658 283	9-67-4
2658 286	14-14-20
2658 349	9-48-6
2658 375	14-29-2
2658 387	14-29-15
2658 454	9-23-5
2658 456	7-07-1
2658 457	9-13-5
2658 471	9-39-15
2658 625	9-48-8
2658 646	9-03-29
2658 685	10-24-8
2658 696	10-23-7
2658 703	14-01-1
2658 704	14-01-1
2658 758	7-04-17
	24-25-31
2658 784	9-67-4
2658 792	7-03-1
2658 793	7-03-1
2658 852	14-29-7
2658 861	10-27-1
2658 871	9-13-5
2658 878	9-36-5
2658 879	9-36-5
2658 880	9-36-5
2658 882	9-03-11
2658 895	7-03-1
2658 955	6-09-1
2660 020	19-48-46
2660 159	19-48-53
2660 163	19-48-1
2660 164	19-48-1
2660 165	19-48-46
2660 296-7	5-05-3
2660 308	22-01-5
2660 312	22-01-5
2660 315	22-01-46
2660 374	21-30-57
2660 393	21-30-414
2660 401	19-48-46
2660 422	21-30-413
2660 511	11-05-4
2660 518	11-01-1
2660 525	11-01-1
2660 529	11-01-1
2660 673	9-71-5
2660 776	5-100-62
2660 843	14-86-42
2661 118	23-18-104
2661 429	8-37-313
2661 565	23-54-167
2661 572	23-18-126
2661 746	23-18-102
2661 763	8-31-10
2661 835	8-53-150
2663 054-5	23-34-117
2663 132	23-31-146
2663 133	23-31-146
2663 141	23-66-135
2663 142	23-66-135
2663 149	23-66-135
2663 150	23-66-135
2663 354	23-34-120
2663 456-7	23-63-33
2663 466	23-63-14
2663 470-1	23-63-33
2663 472-3	23-63-126
2663 474-5	23-63-126
2663 479	23-42-16
2663 502-3	23-64-308

PART NUMBER	CODE
2663 558-9	23-63-127
2663 566-7	23-34-120
2663 572-3	23-09-56
2663 610-1	23-64-308
2663 612-3	23-64-308
2663 734-5	23-64-308
2663 742	23-64-242
2663 754-5	23-64-240
2663 762-3	23-34-120
2663 782-3	23-64-308
2663 784-5	23-64-308
2663 790	23-42-23
2663 942-3	23-22-78
2664 040	23-63-16
	23-67-29
2664 126	23-32-107
2664 153	23-31-33
2664 197	23-42-23
2664 198	23-42-23
2664 256	23-09-52
	23-09-58
2664 268	23-32-51
2664 275	22-20-87
2664 316-7	23-63-55
2664 330	23-32-15
	23-34-123
2664 346	23-14-35
2664 408	23-63-97
2664 532-3	23-36-3
2664 625	23-34-10
2664 668	23-48-109
2664 681	23-32-51
2664 696	23-48-121
2664 730-1	23-48-99
2664 972	23-31-33
2664 975	23-31-33
2664 976	23-31-33
2664 977	23-31-33
2765 025	23-48-21
2765 032	8-15-32
	14-02-93
2765 086-7	23-48-201
2765 088	23-48-204
2765 089	23-48-202
2765 100	23-19-100
2765 157	23-47-66
2765 159	23-47-67
2765 197	23-47-55
2765 393	23-32-51
	23-48-93
2765 434	23-47-66
2765 578	15-11-74
2765 610-1	23-18-5
2765 654	23-18-29
2765 743	15-13-2
2765 771	23-18-20
2765 778-9	23-18-26
2765 790-1	23-15-1
2765 792-3	23-39-5
2765 985	23-18-29
2767 468	23-52-1
2767 496	1-87-21
2767 497	1-87-21
2767 498	1-87-21
2767 504	1-87-334
2767 508	1-87-30
2767 510	1-87-23
2767 869	23-45-47
2768 024	5-03-23
2768 028	22-05-14
2768 028-9	22-05-14
2768 052	19-48-53
2768 055	19-48-45
2768 056	19-48-1
2768 057	19-48-46
2768 061	21-30-393
2768 224	21-30-101
2768 248	21-30-100
2768 287	19-15-20
2768 328	12-04-4
2768 330	12-01-26
2768 362	12-04-4
2768 364	13-33-68
2768 486	23-32-115
2768 487	23-32-115
2768 492	23-32-31
2768 575	13-64-3
2768 588	13-68-6
2768 600	13-66-3
2768 604-5	13-66-16
2768 606-7	13-66-44
2768 616	13-68-6
2768 624	8-47-8
2768 643	8-47-2
2768 923	13-66-41
2769 021	23-32-107
2769 174-5	23-36-5
2769 208	23-66-65
2769 289	23-19-84
2769 303	23-32-17
2769 306	23-32-105
2769 307	23-32-105
2769 490	23-64-66
2769 759	23-32-17
2770 048	23-67-104
2770 090	23-67-98
2770 157	23-41-170
2770 181	1-88-159
2770 342	1-87-30
2770 360	1-48-770
2770 380	23-67-160
2770 398	1-48-867
2770 557	23-33-12
2770 558	1-48-70
2770 561	1-87-22
2770 662	8-01-17
2770 859	8-16-6
	24-01-52
	24-24-55
2771 124	8-50-82
2771 134	8-41-36
2771 147	8-19-15
2771 149	8-37-160
2771 150	8-37-160
2771 151	8-19-15
2771 167	8-37-275
2771 169	8-37-1
2771 201	8-37-178
2771 222	8-19-15
2771 275	23-06-22
2771 277	23-02-19
2771 534	8-33-90
2771 638	8-37-275
2771 639	8-37-136
2771 640	8-37-316
2771 641	8-37-1
2771 651-2	8-19-15
2771 668	23-02-38
2771 725	23-02-18
2771 821	23-33-216
2771 840	8-37-178
2771 857	8-58-79
2771 917	8-16-4
2771 967	23-67-25
2771 976	8-34-325
	23-67-242
2771 994	1-88-159
2776 146	24-25-132
2780 506	9-48-6
2780 524	9-36-5
2780 525	9-36-5
2780 526	9-36-5
2780 531	9-31-4
2780 533	9-07-5
2780 534	9-50-5
2780 535	14-90-4
2780 542	9-48-7
2780 557	9-03-4
2780 566	9-03-29
2780 567	8-36-136
2780 572	9-17-5
2780 586	14-06-10
2780 587	14-06-10
2780 589	14-26-6
2780 599	14-11-9
2780 613	9-48-26
2780 614	9-50-18
	11-06-8
2780 615	9-58-12
2780 629	14-30-2
2780 630	8-28-15
2780 639	10-07-10
2780 643	9-48-45
2780 653	14-29-26
2780 654	9-48-140
2780 672	9-64-24
2780 673	9-64-24
2780 680	9-50-6
2780 808	14-11-39
2780 832	14-26-6
2780 835	14-26-11
2780 838	14-11-9
2780 843	14-11-1
2780 849	14-11-48
2780 876	14-26-6
2780 904	10-24-4
2780 920	7-02-1
2780 929	14-30-2
2780 970	9-05-5
2780 988	7-43-1
2780 999	10-23-7
2781 018	5-05-2
2781 019	5-67-1
2781 104	6-27-5
2781 105	5-27-6
2781 106	6-22-1
2781 108	6-24-1
2781 121	6-52-10
2781 125	6-46-10
2781 147	6-50-1
2781 263	11-01-1
2781 264	11-01-1
2781 265	11-01-1
2781 266	11-01-1
2781 270	11-05-1
2781 273	11-05-30
2781 278	11-05-1
2781 298	8-37-322
2781 300	11-01-1
2781 339	11-09-3
2781 382	21-30-23
2781 383	19-14-38
2781 407	19-48-44
2781 417	21-30-418
2781 419	19-48-46
2781 420	19-48-50
2781 425	19-48-45
2781 429	19-48-46
2781 431	19-48-1
2781 432	19-48-1
2781 444	19-48-49
2781 445	19-48-6
	19-48-50
2781 518	5-56-2
	14-90-1
2781 564-5	22-03-1
2781 566	22-05-14
2781 566-7	22-05-14
2781 581	4-26-17
2781 672	19-14-80
2781 675	19-14-22
2781 676	19-14-91
2781 677	19-14-11
2781 679	19-14-85
2781 684	19-14-102
2781 685	19-14-81
2781 886	5-31-15
2781 889	6-43-11
2781 891	6-38-1
2781 893	6-52-1
2781 896	5-27-1
2781 899	5-31-15
2781 901	16-14-1
2781 904	16-10-3
2781 923	16-10-2
2781 932	16-14-1
2781 944	16-10-1
2781 947	16-08-6
2782 066-7	23-64-84
2782 080-1	23-22-86
2782 082-3	23-22-53
2782 090-1	23-63-20
2782 102-3	23-34-176
2782 108-9	23-34-191
2782 160-1	23-34-22
2782 162-3	23-64-213
2782 164-5	23-64-213
2782 374-5	23-34-21
2782 560-1	23-63-104
2782 668-9	23-32-93
2782 680	23-39-48
2782 684	23-64-12
2782 738-9	23-36-53
2782 746	23-34-328
2782 794	23-64-17
2782 827	23-34-275
2782 844-5	23-51-43
2782 878	23-64-17
2783 355	23-34-237
2783 704-5	23-32-93
2784 069	23-58-605
2784 070	23-58-487
2784 071	23-58-603
2784 170-1	23-64-299
2784 300	23-58-75
2784 432	23-32-29
2784 440	23-32-29
2784 470	17-19-4
2784 477	23-63-172
2784 516-7	23-63-33
2784 557	23-58-84
2784 577	23-63-112
2784 606	23-32-19
2784 693	23-58-571
2784 714	15-09-4
	23-19-63
2784 715	23-64-4
2784 957	23-64-17
2785 435	7-08-2
2785 695	15-03-5
2785 728	8-34-96
2785 824	8-34-52
2785 842	8-34-178
2785 892-3	8-34-296
2786 182	15-03-5
2786 236	15-09-4
2786 430	15-11-46
2786 597	15-09-4
2786 872-3	8-34-1
2786 876-7	8-34-1
2786 882-3	8-34-176
2786 884-5	8-34-176
2786 935	12-07-1
2786 972-3	8-34-1
2787 751	1-87-23
	23-26-80
2787 776-7	23-26-23
2787 778-9	23-26-23
2787 780-1	23-26-23
2787 782-3	23-26-47
2787 851	23-20-29
2788 032	23-02-62
	23-02-78
2788 080	23-20-14
2788 084-5	23-20-14
2788 088	23-20-65
2788 252-3	23-20-14
2788 320	23-40-82
2788 366	23-38-1
2788 367	23-38-1
2788 372	23-38-2
2788 400-1	23-20-24
2788 701	23-02-68
2788 831	23-18-54
2788 930-1	23-26-23
2788 932-3	23-26-23
2788 934-5	23-26-23
2788 936-7	23-26-47
2789 126	23-38-29
2789 135	23-26-58
2789 250	23-38-44
2789 380	23-38-46
2789 423	23-20-65
2789 604	23-20-14
2789 606-7	23-20-14
2789 608	23-20-14
2789 728	23-34-38
2789 775	23-26-80
2789 856-7	23-26-47
2789 941	23-40-82
2800 182	3-32-1
2800 274	3-19-1
2800 281	3-19-1
2800 437	3-33-8
2800 484	3-22-24
2800 485	3-22-25
2800 504	22-05-14
2800 504-5	22-05-14
2800 647	13-33-68
2800 658	23-32-110
2800 659	23-32-110
2800 678	19-14-23
2800 684	19-46-55
2800 685	19-46-15
2800 686	19-46-6
2800 696	19-46-55
2800 698	19-46-8
2800 721	19-15-28
2800 723	19-15-28
2800 738	19-15-44
2800 741	19-15-28
2800 744	19-14-24
2800 760	19-14-68
2800 804	19-48-6
2800 815	21-30-418
2800 817	21-30-418
2800 824	19-48-46
2800 826	6-16-1
2800 827	6-14-1
2800 848	6-22-15

PART NUMBER	CODE
2800 939	19-48-45
2800 942	19-48-46
2800 947	21-30-418
2800 970	19-48-46
2800 972	19-48-45
2801 018	21-134-5
2801 045	21-129-10
2801 053	21-129-5
2801 054	21-129-7
2801 060	21-133-48
	21-134-30
2801 061	21-134-5
2801 105	21-10-16
2801 107	21-10-3
2801 109	21-15-2
2801 157	4-10-10
2801 161	21-133-62
2801 162	21-133-62
2801 167	21-133-36
2801 171	21-134-5
2801 180	21-134-5
2801 197	21-139-63
2801 198	21-139-60
2801 217	21-136-20
2801 220	21-133-7
2801 241	21-137-53
2801 243	21-133-20
2801 244	21-139-135
2801 257	21-138-13
2801 259	21-139-9
2801 271	21-137-35
2801 272	21-137-47
2801 273	21-137-41
2801 274	21-137-53
2801 281	21-137-35
2801 284	21-133-7
2801 295	21-139-147
2801 311	21-133-40
2801 314	21-05-1
2801 315	21-134-10
2801 316	21-137-22
2801 348	21-129-23
2801 356	21-133-48
2801 363	21-134-9
2801 381	21-14-19
2801 398	21-04-2
	21-138-38
2801 426	21-136-233
2801 450	21-119-19
2801 568	21-05-35
2801 626	21-133-31
2801 692	21-09-30
2801 724	21-04-11
2801 726	21-04-11
2801 727	21-133-10
2801 728	21-129-23
2801 733	21-09-30
2801 745	9-46-8
2801 762	9-46-4
2801 764	9-46-4
2801 766	9-46-4
2801 783	21-139-12
2801 815	21-136-47
2801 818	21-136-30
2801 828	21-142-18
2801 844	21-133-20
2801 853	9-46-44
2801 854	9-46-31
2801 871	21-137-205
2801 872	21-137-41
2801 890	21-09-5
	21-19-2
2801 892	21-09-29
2801 893	21-09-33
2801 911	21-119-15
2801 912	21-119-15
2801 913	21-119-15
2801 914	21-119-15
2801 918	21-119-15
2801 938	21-42-11
2801 949	21-133-22
2801 961	21-133-39
2801 969	21-133-39
2801 989	21-133-7
2801 992	21-133-36
2802 096-7	23-18-11
2802 104-5	23-18-25
2802 106-7	23-18-26
2802 114	23-18-20
2802 116	23-18-24
2802 120-1	15-19-2
2802 211	23-64-282
2802 303	23-21-18
2802 396	23-06-37
2802 570	23-18-29
2802 644	23-17-52
2802 710	23-21-3
2802 796	23-54-100
2802 800-1	23-39-5
2802 801	23-39-5
2802 802	23-39-5
2802 836	15-11-38
2802 869	23-21-3
2802 949	23-18-29
2802 973	23-18-37
2802 974	15-11-16
2802 991	15-19-8
2802 998	23-32-84
	23-48-30
2806 018	9-03-18
2806 025	9-64-24
2806 040	8-28-36
2806 070	7-07-1
2806 150	9-59-15
2806 151	9-58-14
2806 152	24-25-10
2806 203	7-03-1
2806 211	9-13-5
2806 216	7-03-1
2806 239	10-03-14
2806 242	10-03-14
2806 243	10-03-7
2806 244	10-03-10
2806 270	10-07-6
2806 273	10-22-40
2806 310	10-27-12
2806 387	9-59-13
2806 408	14-11-48
2806 442	14-11-18
2806 445	14-06-10
2806 459	14-11-9
2806 463	14-06-1
2806 464	14-06-1
2806 465	14-06-10
2806 466	14-14-1
2806 467	14-11-9
2806 470	21-142-12
2806 476	9-67-4
2806 479	9-64-24
2806 499	14-06-1
2806 579	9-03-28
2806 637	7-06-1
2806 643	7-06-14
2806 671	10-26-26
2806 718	6-09-1
2806 745	10-26-30
2806 779	9-67-4
2806 812	24-25-10
2806 816	9-48-7
2806 823	8-35-41
2806 841	9-64-24
2806 842	9-67-4
2806 844	9-67-4
2806 945	9-17-5
2806 982	9-48-44
2806 984	9-03-5
2807 425	23-34-193
	23-64-1
	23-66-75
2807 610-1	23-23-52
2807 612-3	23-23-52
2807 614-5	23-23-52
2807 616-7	23-23-52
2807 956-7	23-64-240
2808 016	14-43-5
2808 023	14-30-7
2808 059	14-41-23
2808 061	14-41-22
2808 062	14-41-7
2808 101	14-50-25
2808 161	14-41-22
2808 219	9-32-2
2808 220	9-32-2
2808 221	9-32-2
2808 222	9-32-2
2808 223	9-32-2
2808 226	3-22-24
2808 227	9-34-5
2808 228	9-34-5
2808 229	9-34-5
2808 230	9-34-5
2808 231	9-34-5
2808 232	9-34-5
2808 233	9-34-5
2808 234	9-34-5
2808 235	9-09-2
2808 236	9-09-2
2808 237	9-09-2
2808 238	9-09-2
2808 239	9-09-2
2808 240	9-09-2
2808 241	9-09-2
2808 242	9-09-2
2808 243	9-09-2
2808 244	9-09-2
2808 245	9-09-2
2808 246	9-09-2
2808 247	9-09-2
2808 248	9-09-2
	14-30-30
2808 249	9-09-2
2808 267	22-06-18
2808 268	22-06-18
2808 269	22-06-18
2808 306	9-50-1
2808 324	9-32-2
2808 343	9-09-2
2808 344	9-09-2
2808 345	9-09-2
2808 362	21-138-2
2808 365	16-20-1
2808 378	17-23-3
2808 379	17-23-3
2808 393	9-58-1
2808 394	2-08-57
2808 395	2-10-55
2808 399	17-15-25
2808 414	21-01-3
2808 417	2-14-1
2808 419	19-01-3
2808 420	19-01-3
2808 424	19-48-7
2808 425	19-48-7
2808 426	19-48-7
2808 427	19-48-7
2808 435	6-17-3
2808 445	2-08-59
2808 453	9-35-1
2808 454	9-35-1
2808 455	9-35-1
2808 474	9-35-1
2808 475	9-35-1
2808 476	9-35-1
2808 477	9-35-1
2808 478	9-35-1
2808 479	9-35-1
2808 507	10-07-6
2808 508	10-07-6
2808 509	10-07-6
2808 510	10-07-6
2808 525	5-26-1
2808 550	9-35-1
2808 551	9-35-1
2808 552	9-35-1
2808 577	5-39-3
2808 578	5-39-1
2808 579	2-10-61
2808 580	2-10-61
2808 586	3-33-1
2808 594	4-23-1
2808 596	4-23-1
2808 600	5-39-3
2808 602	5-39-3
2808 609	5-105-1
2808 620	2-10-6
2808 621	2-10-7
2808 637	21-136-228
2808 641	13-72-4
2808 662	7-41-4
2808 664	2-10-57
2808 665	2-10-57
2808 668	21-136-232
2808 675	21-118-6
2808 679	7-42-1
2808 680	7-42-1
2808 681	7-42-1
2808 682	7-42-4
2808 683	7-42-4
2808 684	7-42-4
2808 685	21-118-6
2808 686	2-10-61
2808 687	2-10-61
2808 689	9-50-1
2808 695	5-63-1
2808 697	5-63-1
2808 699	5-05-9
2808 771	8-36-1
2808 772	24-28-210
2808 831	23-67-104
2808 868	8-32-2
2808 869	8-32-2
2808 880	1-48-46
	24-28-210
2808 897	8-27-308
2808 966	1-48-941
	24-01-65
2808 967	1-48-941
	24-01-65
2809 009	8-16-6
	23-67-160
2809 011	23-67-240
2809 013	8-34-317
	23-67-252
2809 016	8-16-1
	23-41-176
2809 017	8-16-1
	23-41-176
2809 018	8-16-1
2809 018-9	23-41-176
2809 019	8-16-1
2809 026	1-88-160
2809 027	1-88-6
2809 033	8-58-60
2809 034	8-16-1
2809 035	8-16-1
2809 036	8-16-1
2809 037	8-16-1
2809 038	8-16-1
2809 039	8-16-1
2809 041	1-48-941
2809 047	8-53-150
2809 087	8-53-270
2809 090	8-36-1
2809 091	1-48-125
2809 224	14-35-1
2809 243	14-50-25
2809 248	14-30-30
2809 252	14-35-9
2809 253	14-35-1
2809 254	14-35-1
2809 273	14-43-5
2809 283	14-35-1
2809 286	14-39-45
2809 305	14-35-1
2809 335	14-30-8
2809 377	14-35-1
2809 387	14-35-1
2809 395	14-30-8
2809 397	14-30-8
2809 730	1-72-5
2809 825	13-68-5
2809 826	14-39-45
2809 832	13-68-5
2809 940-1	23-14-53
2809 961	23-64-240
2811 044-5	23-63-55
2811 139	23-34-270
2811 141	23-34-255
2811 158-9	23-09-51
2811 259	23-23-65
2811 260-1	23-23-65
2811 263	23-66-235
2811 265	23-66-135
2811 266	23-66-135
2811 273	23-22-145
2811 294-5	23-34-120
2811 306-7	23-63-126
2811 312-3	23-64-71
2811 338-9	23-64-48
2811 358-9	23-64-306
2811 360-1	23-64-306
2811 372-3	23-34-120
2811 420-1	23-09-56
2811 448-9	23-63-33
2811 450-1	23-63-33
2811 452-3	23-63-14
2811 454-5	23-63-15
2811 456	23-63-97
2811 458	23-63-97
2811 460-1	23-64-308
2811 462-3	23-64-308
2811 464-5	23-64-308
2811 466-7	23-64-308
2811 472-3	23-64-308
2811 474-5	23-64-308
2811 494-5	23-36-53
2811 498-9	23-34-27
2811 523	23-64-74
2811 622-3	23-63-33
2811 631	23-31-146

PART NUMBER	CODE
2811 744-5	23-36-53
2811 746-7	23-36-53
2811 748-9	23-36-53
2811 750	23-34-5
2811 756	23-34-234
2811 758-9	23-51-41
2811 760-1	23-51-41
2811 762-3	23-51-52
2811 772-3	23-63-100
2811 774-5	23-64-311
2811 776-7	23-64-311
2811 780-1	23-22-53
2811 782	23-22-53
2811 783	23-22-53
2811 794-5	23-34-120
2811 825	23-34-123
	23-54-118
2811 852	23-64-272
2811 861	23-32-51
2811 888-9	23-23-65
2811 953	23-11-11
	23-64-71
2811 962-3	23-09-47
2811 968	23-31-33
2811 984	23-34-5
2811 985	23-34-5
2811 986	23-22-53
2811 987	23-22-53
2811 992-3	23-64-71
2811 998	23-64-71
2814 688	24-25-107
2815 755	24-25-154
2815 762	24-25-154
2820 034	8-42-1
2820 036	8-42-5
2820 116	1-47-7
	8-37-459
	8-53-271
	23-67-161
	24-28-49
2820 135	8-53-296
2820 186	1-87-180
2820 409	8-53-308
2820 453	1-48-179
	1-48-940
2820 455	1-47-7
	24-24-5
2820 546	8-53-301
2820 568	1-87-58
2820 756	21-30-15
2820 826	1-48-559
2820 880	24-01-36
2820 928	1-87-58
2822 012	8-37-7
2822 023	8-31-10
2822 024	21-84-1
2822 093	23-06-4
2822 097	23-06-10
2822 099	19-14-35
2822 126	8-33-90
2822 187	8-33-121
2822 196	8-55-57
2822 206	1-48-516
2822 229	8-15-27
2822 261	23-67-107
2822 268	23-67-8
2822 269	23-67-30
2822 270	23-67-265
2822 272	23-67-76
2822 273	23-67-76
2822 275	23-67-243
2822 277	23-67-260
2822 289	23-67-76
2822 290	23-67-76
2822 291	23-67-79
2822 292	23-67-79
2822 293	23-67-79
2822 322	8-58-60
2822 329	1-87-5
2822 427	23-47-455
2822 461	8-33-164
2822 507	23-33-10
2822 508	23-06-22
2822 520	8-05-6
2822 529	1-47-10
2822 565	8-16-4
2822 583	8-38-3
2822 590	23-06-25
2822 591	23-06-25
2822 592	8-12-2
2822 599	8-31-11
2822 617	23-06-14
2822 623	8-15-17
2822 678	23-33-98
2822 692	8-15-27
2822 880	8-37-90
2822 989	23-67-25
2822 990	23-67-25
2822 993	23-54-125
	23-67-267
2822 999	23-67-5
2823 288	5-05-16
2823 304	5-57-2
2823 371	5-39-18
2823 375	5-100-26
2823 377	5-105-6
2823 378	5-100-32
2823 379	5-113-17
2823 380	5-100-197
2823 381	5-100-199
2823 442	11-05-1
2823 452	11-10-3
2823 456	11-10-3
2823 458	11-10-3
2823 462	11-10-3
2823 490	11-05-1
2823 497	11-10-3
2823 499	11-09-3
2823 501	4-23-1
2823 518	4-23-1
2823 519	4-23-2
2823 521	4-25-3
2823 527	4-23-1
2823 546	6-24-1
2823 549	4-08-2
2823 552	5-31-11
2823 554	5-101-5
2823 556	5-31-12
2823 557	5-28-9
2823 558	5-28-8
2823 559	6-22-19
2823 570	6-19-2
2823 600	6-52-4
2823 601	6-52-5
2823 602	6-52-7
2823 603	5-101-5
2823 604	5-101-5
2823 608	5-100-91
2823 617	5-27-1
2823 618	5-27-1
2823 748	19-15-4
2823 842	22-01-51
2823 845	22-01-49
2823 848	22-05-24
2823 848-9	22-05-24
2823 913	11-08-24
	11-09-4
2823 916	11-05-1
2823 927	11-10-3
2823 929	11-10-3
2823 933	11-10-3
2823 950	5-39-26
2823 965	5-100-90
2823 989	5-100-189
2823 990	5-101-1
2823 991	5-101-1
2823 992	5-101-16
2823 993	5-100-32
2823 994	5-39-24
2823 999	5-39-20
2825 417	10-01-62
	14-29-24
2834 740	13-54-4
2834 767	17-19-3
2834 824	17-30-6
2834 852	17-30-1
2834 853	17-11-28
2834 858	17-30-3
2834 915	17-19-3
2834 928	17-15-1
2834 929	17-19-3
2834 932	17-19-3
2834 933	17-19-3
2834 934	17-19-3
2834 936	17-19-3
2834 937	17-19-3
2834 966	17-19-3
2835 707	17-29-6
2835 826	19-27-31
2835 834	19-27-31
2835 842	19-27-31
2835 853	19-27-31
2835 857	19-27-31
2835 862	17-29-5
2835 877	19-27-50
2835 880	19-27-2
2835 895	19-27-40
2835 896	2-07-28
	19-27-40
2835 972-3	2-03-3
2836 643	5-03-3
2836 644	5-03-3
2836 716	23-20-14
2836 716-7	23-20-14
2836 717	23-20-14
2836 719	23-04-18
2836 775	23-20-41
2837 062	24-28-73
2837 079	1-48-88
2837 087	1-48-151
2837 109	24-28-19
2837 113	24-01-10
2837 128	24-25-38
2837 162	24-25-232
2837 163	24-25-20
2837 168-9	1-48-151
2837 201	1-48-151
2837 207	19-58-33
2837 219	1-47-6
2837 220	1-47-4
2837 223	24-24-150
2837 243	24-28-10
2837 244	1-48-1
2837 285	1-48-141
	24-28-72
2837 291	24-28-211
2837 314	24-01-46
2837 336	24-24-40
2837 374	24-24-45
2837 382	24-24-150
2837 386	24-24-150
2837 402	24-25-132
2837 403	24-25-110
2837 502	1-48-125
2837 551	1-48-707
2837 553	1-48-365
2837 555	24-28-73
	24-28-405
2837 579	24-28-73
2837 587	24-28-334
2837 590	24-28-334
2837 591	24-28-326
2837 632	24-28-96
2837 638	24-28-115
2837 652	24-28-73
2837 678	1-48-599
2837 680	1-48-50
	24-28-210
2837 690	24-28-84
2837 748	1-47-3
2837 762	24-28-64
2837 778	24-28-78
2837 805	24-28-203
2837 810	24-28-73
2837 820	1-48-599
2837 836	24-28-78
2837 837	24-28-78
2837 849	24-28-113
2837 876	1-48-280
2837 877	24-28-318
2837 891	24-29-1
2837 933	24-28-104
2837 940	1-48-151
2837 968	24-01-18
2837 969	1-47-1
2837 971	1-47-1
2838 002-3	23-32-49
2838 008-9	23-34-242
2838 010-1	23-59-35
2838 014-5	23-64-213
2838 024-5	23-36-53
2838 086-7	23-63-21
2838 090	23-34-166
2838 103	23-34-301
2838 130	23-64-314
2838 131	23-64-314
2838 132	23-64-66
2838 149	23-63-172
2838 204-5	23-59-37
2838 208-9	23-34-246
2838 210-1	23-34-246
2838 214-5	23-51-19
2838 216-7	23-34-27
2838 218-9	23-34-27
2838 224-5	23-34-36
2838 236-7	23-34-234
2838 246-7	23-58-434
2838 248	23-34-166
2838 250	23-34-179
2838 276-7	23-51-19
2838 278-9	23-51-19
2838 282-3	23-51-5
2838 284-5	23-51-5
2838 286-7	23-34-229
2838 322-3	23-34-234
2838 326-7	23-34-234
2838 330-1	23-34-27
2838 386-7	23-64-213
2838 388-9	23-64-280
2838 398-9	23-36-53
2838 406-7	23-36-53
2838 434-5	23-64-311
2838 436-7	23-64-311
2838 438-9	23-64-311
2838 440-1	23-64-311
2838 446-7	23-64-281
2838 464-5	23-63-33
2838 476-7	23-34-22
2838 482-3	23-19-82
2838 510-1	23-59-35
2838 514-5	23-63-21
2838 516-7	23-63-20
2838 553	23-64-66
2838 558-9	23-40-92
2838 564	23-64-66
2838 565	23-64-66
2838 568-9	23-64-66
2838 573	23-34-301
2838 574-5	23-40-85
2838 583	23-40-86
2838 606-7	23-59-56
2838 642-3	23-63-33
2838 663	23-64-314
2838 664	23-64-314
2838 672-3	23-22-53
2838 682-3	23-26-41
2838 707	23-32-48
2838 712	23-34-166
2838 722-3	23-36-53
2838 726-7	23-36-66
2838 786-7	23-36-53
2838 870-1	23-34-27
2838 999	23-32-17
2839 001	23-49-9
2839 018	13-72-8
2839 139	23-63-37
2839 184	23-38-27
2839 186	23-38-27
2839 318	23-66-69
2839 402-3	23-34-330
2839 442	23-63-16
2839 544-5	23-34-242
2839 547	23-64-12
2839 568-9	23-63-21
2839 612-3	23-59-35
2839 646	23-63-112
2839 679	23-40-86
2839 684	23-64-299
2839 960-1	23-34-229
2840 210	23-58-573
2840 228	23-34-166
2840 284-5	23-36-53
2840 300-1	23-64-281
2840 312-3	23-64-299
2840 328	13-72-6
2840 336-7	23-64-198
2840 346-7	23-63-20
2840 350-1	23-22-53
2840 364	23-59-37
2840 366-7	23-34-22
2840 372-3	23-34-234
2840 382-3	23-32-52
2840 384	23-64-66
2840 397	23-34-179
2840 410-1	23-32-10
2840 418	23-23-52
2840 536-7	23-32-17
2840 544-5	23-51-5
2840 670-1	23-63-100
2840 672-3	23-63-100
2840 704-5	23-22-53
2840 706-7	23-22-53
2840 708-9	23-64-311
2840 710-1	23-64-311
2840 714-5	23-64-67
2840 719	23-40-86
2840 802-3	23-64-311
2840 804-5	23-64-311
2840 820-1	23-51-43
2840 944-5	23-09-9

PART NUMBER	CODE
2841 048-9	23-51-41
2841 050	23-58-572
2841 052	23-51-41
2841 062-3	23-51-41
2841 069	23-58-569
2841 089	23-64-299
2841 154	22-20-29
2841 158-9	23-34-326
2841 170-1	23-09-9
2841 264	17-19-21
2841 300-1	23-59-35
2841 302-3	23-59-35
2841 314-5	23-26-41
2841 360-1	23-58-473
2841 366-7	23-34-326
2841 380-1	23-19-82
2841 440-1	23-63-33
2841 442	17-11-40
2841 445	23-64-159
2841 446	23-14-80
2841 447	23-64-181
2841 498-9	23-58-434
2841 516-7	23-34-242
2841 578-9	17-11-40
2841 624-5	23-63-21
2841 626-7	23-63-21
2841 632-3	23-63-20
2841 634-5	23-63-20
2841 646	23-64-282
	23-64-293
2841 662-3	23-51-6
2841 746-7	23-63-21
2841 835	23-64-12
2841 848	23-19-82
2841 880-1	23-63-33
2841 906-7	23-34-27
2841 908-9	23-34-27
2842 120	13-72-8
2842 122	13-72-6
2842 205	23-22-145
2842 310-1	23-51-5
2842 316	23-64-282
2842 322	23-34-301
2842 323	23-34-301
2842 326	23-34-301
2842 327	23-34-166
2842 344	23-64-314
2842 345	23-64-314
2842 347	23-64-315
2842 348	23-34-193
2842 363	23-34-193
2842 478-9	23-34-234
2842 508-9	23-51-5
2842 537	23-14-81
2842 538	23-14-70
2842 539	23-32-27
2842 540	23-32-27
2842 565	23-47-34
2842 569	23-64-1
	23-66-75
2842 616-7	23-63-136
2842 618-9	23-63-136
2842 620-1	23-63-133
2842 630-1	23-58-230
2842 704-5	23-19-181
2842 708	23-19-84
2842 710-1	23-59-41
2842 712-3	23-19-177
2842 742-3	23-22-145
2842 750-1	23-59-56
2842 752-3	23-59-56
2842 754-5	23-19-188
2842 770-1	23-34-234
2842 776-7	23-34-234
2842 790	23-66-235
2842 791	23-34-240
2842 798-9	23-34-234
2842 800-1	23-63-55
2842 804	23-64-66
2842 822-3	23-36-66
2842 824-5	23-36-66
2842 848	23-58-557
2842 869	8-34-52
	23-19-63
2842 893	23-40-150
2842 894	23-40-150
2842 895	23-40-150
2842 896	23-40-170
2842 897	23-40-187
2842 898	23-40-180
2842 899	23-40-170
2842 900	23-40-170
2842 901	23-40-177
2842 908	23-40-153
2842 909	23-64-288
2842 961	22-20-96
2842 964-5	23-32-27
2842 966	23-32-27
2842 991	23-40-180
2842 994	23-32-93
2843 022	9-62-2
2843 071	14-29-5
2843 088	14-29-7
2843 101	14-30-1
2843 102	14-30-1
2843 158	10-27-1
2843 159	10-27-1
2843 182	9-03-5
2843 197	10-26-26
2843 198	10-26-30
2843 199	10-26-5
2843 208	10-22-11
2843 217	8-28-36
2843 218	8-28-15
2843 219	8-28-15
2843 223	9-64-24
2843 277	7-03-1
2843 279	9-50-3
2843 563	9-15-1
2843 564	9-15-1
2843 586	9-46-4
2843 610	9-17-5
2843 635	7-45-31
2843 661	9-15-2
2843 674	9-03-4
2843 685	9-58-5
2843 699	9-07-5
2843 740	14-11-9
2843 747	14-25-11
2843 748	14-25-11
2843 749	14-25-11
2843 751	14-25-11
2843 767	14-29-8
2843 768	14-29-8
2843 769	14-29-8
2843 770	14-74-1
2843 771	14-25-11
2843 776	14-11-18
2843 793	14-11-9
2843 794	14-14-1
2843 797	14-11-9
2843 868	9-07-5
2843 892	6-10-2
2843 904	9-03-4
2843 923	7-45-31
2843 941	9-07-5
2843 957	9-59-10
2843 997	10-26-11
2852 043	5-05-39
2852 044	5-05-37
2852 045	5-05-34
2852 099	19-46-19
2852 118	16-02-1
2852 175	16-03-1
2852 323	16-14-1
2852 373	5-57-2
2852 374	5-57-2
2852 380	19-46-3
2852 382	19-48-46
2852 383	19-48-1
2852 386	21-30-11
2852 387	19-46-12
2852 389	19-46-16
2852 392	19-48-1
2852 402	19-51-2
2852 405	19-51-2
2852 407	19-48-1
2852 408	19-48-1
2852 410	19-15-4
2852 413	19-14-1
2852 415	19-46-3
2852 422	19-15-28
2852 428	19-14-10
2852 430	21-30-21
2852 433	19-46-8
2852 435	19-48-45
2852 444	19-15-23
2852 445	21-30-26
2852 470	19-15-111
2852 491	8-33-5
2852 513	3-06-8
2852 514	3-06-5
2852 516	3-08-1
2852 517	3-32-9
2852 523	3-09-3
2852 574	3-35-14
2852 575	3-19-1
2852 728	3-11-2
2852 729	3-11-1
2852 731	3-22-24
2852 732	3-22-25
2852 838	3-02-1
2852 882	3-02-1
2852 883	3-32-14
2852 908	3-06-5
2852 909	3-07-1
2852 911	3-06-6
2852 912	3-07-2
2852 913	3-08-1
2852 916	3-11-13
2852 917	3-11-14
2852 921	3-03-29
2852 922	3-03-30
2852 927	3-19-1
2852 942	3-19-1
2852 948	3-35-14
2852 949	3-33-1
2853 437	8-56-23
2853 439	8-56-11
2853 440	8-56-11
2853 466	8-57-10
2853 561	8-57-10
2853 712	8-50-156
2853 756	8-57-10
2856 005	11-09-3
2856 005-6	11-09-3
2856 011	11-05-1
2856 029	11-06-8
2856 060	11-05-1
2856 076	5-58-1
2856 081	5-55-1
2856 083	5-55-1
2856 141	13-72-3
2856 201	11-05-1
2856 213	11-05-1
2856 236	11-01-1
2856 237	11-01-1
2856 238	11-10-3
2856 241	11-10-42
2856 242	11-05-1
2856 319	12-04-4
2856 332	14-86-40
2856 334	14-86-43
2856 349	14-88-21
2856 360	11-09-3
2856 391	11-10-20
2856 393	11-10-42
2856 582-3	13-66-16
2856 588	13-68-18
2856 595	13-66-3
2856 666	8-47-8
2856 675	13-66-3
2856 680-1	13-66-16
2856 682	13-68-6
2856 868	13-68-25
2857 002	8-37-275
2857 004	8-37-1
2857 005	8-37-1
2857 011	8-37-178
2857 014	8-19-15
2857 019	23-33-20
2857 161	8-19-15
2857 169	8-37-1
2857 171	8-37-316
2857 172	8-37-275
2857 178	8-37-504
2857 182	8-37-14
2857 391	8-58-79
2857 473	8-37-275
2857 475	8-37-1
2857 539	23-21-8
2857 543	8-37-454
2857 551	23-06-21
2857 552	23-06-21
2857 562	8-37-155
2857 671	8-37-178
2857 673	23-33-65
2857 675	23-33-12
2857 678	8-37-14
2857 726	23-33-20
2857 729	8-37-504
2857 737	19-31-1
2857 739	8-37-458
2857 741	8-33-114
2857 754	8-16-6
2857 761	8-16-6
2857 837	24-24-124
2857 842	23-54-167
2857 903	23-67-5
2857 904	23-67-25
2857 908	8-22-13
	14-29-43
	15-03-93
2857 917	23-67-132
2857 919	23-67-79
2857 920-1	23-67-86
2857 922	23-67-79
2857 933	23-67-86
2857 933-4	23-67-86
2857 934	23-67-86
2857 934-5	23-67-86
2857 936	23-67-79
2857 937	23-67-79
2857 960	23-67-263
2857 962	23-67-8
2857 963	23-67-254
2857 964	23-67-265
2857 965	23-67-254
2857 966	23-67-30
2857 975	23-67-267
2858 124	23-45-194
2858 151	23-45-47
2858 175	23-45-194
2858 193	23-45-204
2858 422	23-45-192
2858 582	23-45-185
2858 902-3	23-26-45
2858 967	23-45-66
2858 970	23-45-204
2859 001	23-66-65
2859 056-7	23-11-1
2859 072-3	23-34-120
2859 078-9	23-34-120
2859 080-1	23-11-3
2859 094-5	23-11-3
2859 146	23-19-8
2859 162	23-66-65
2859 188-9	23-34-121
2859 220	23-54-3
2859 282	23-32-17
2859 300-1	23-51-5
2859 409	23-32-17
2859 470-1	23-11-3
2859 474-5	23-11-3
2859 500-1	23-11-1
2859 548-9	23-36-118
2859 572-3	23-36-5
2859 581	13-11-5
2859 592-3	23-34-120
2859 626-7	23-34-80
2859 628-9	23-11-1
2859 632-3	23-34-120
2859 636-7	23-11-1
2859 640-1	23-34-120
2859 644-5	23-11-1
2859 648-9	23-34-120
2859 656-7	23-11-1
2859 660-1	23-34-120
2859 682-3	23-34-120
2859 690-1	23-34-120
2859 698-9	23-34-120
2859 700-1	23-11-3
2859 708-9	23-11-3
2859 710-1	23-34-120
2859 716-7	23-11-3
2859 722-3	23-11-3
2859 738-9	23-11-3
2859 754-5	23-34-120
2859 760-1	23-11-3
2859 766	15-03-3
2859 843	23-66-65
2859 866	23-66-65
2859 880	23-32-46
2859 886-7	23-36-5
2859 888-9	23-36-5
2859 920-1	23-34-80
2859 922-3	23-34-80
2859 924-5	23-34-80
2859 990	23-34-80
2860 004-5	23-63-33
2860 006-7	23-63-33
2860 010	23-64-40
2860 024-5	23-63-15
2860 028-9	23-63-15
2860 036	23-64-44
2860 040-1	23-63-15
2860 046-7	23-63-15
2860 051	23-41-53
2860 086-7	23-64-71
2860 092-3	23-36-118

PART NUMBER	CODE
2860 094	23-32-48
2860 098	23-36-125
2860 099	23-36-125
2860 103	23-09-64
2860 104	23-64-10
2860 105	23-64-10
2860 132-3	23-36-53
2860 136-7	23-63-136
2860 139	23-34-280
2860 142-3	23-32-49
2860 150	23-34-16
2860 160-1	23-51-5
2860 166-7	23-34-121
2860 190-1	23-34-242
2860 192-3	23-36-125
2860 194	23-34-17
2860 260	23-54-150
2860 275	23-48-90
2860 296-7	23-32-17
2860 324	23-09-63
2860 332	23-34-123
2860 334-5	23-34-124
2860 336-7	23-09-67
2860 355	23-32-115
2860 356	23-32-17
2860 360	23-63-181
2860 362	23-63-181
2860 363	23-63-171
2860 398	23-42-16
2860 400-1	23-63-33
2860 403	23-34-120
2860 430-1	23-34-27
2860 454	7-26-16
	23-66-71
2860 475	23-36-125
2860 476-7	23-42-46
2860 482	23-36-133
2860 484	23-54-143
2860 485	23-54-149
2860 486	23-36-118
2860 487	23-36-54
2860 488	23-09-46
	23-36-54
2860 492-3	23-63-33
2860 522-3	23-63-14
2860 524-5	23-63-15
2860 530-1	23-63-14
2860 532-3	23-63-15
2860 542	23-54-6
2860 583	13-66-24
2860 620	13-66-24
2860 621	23-42-46
2860 628-9	23-59-56
2860 640	23-34-213
2860 644	23-54-28
2860 645	23-54-28
2860 748	23-34-135
2860 749	23-34-137
2860 755	23-22-57
2860 759	23-40-157
2860 764-5	23-42-32
2860 784	23-34-15
2860 786	14-88-28
2860 810	23-32-48
2860 814-5	23-09-67
2860 818-9	23-34-16
2860 842-3	23-63-33
2860 844-5	23-63-37
2860 854	23-64-12
2860 956	23-64-42
2860 963	13-72-7
2860 976	23-34-87
2861 116	23-66-239
2861 217	23-66-235
2861 334-5	23-42-46
2861 352-3	23-64-48
2861 408	23-66-235
2861 409	23-66-235
2861 472-3	23-63-33
2861 474-5	23-63-33
2861 526-7	23-40-85
2861 570	23-34-17
2861 572-3	23-22-53
2861 576-7	23-22-78
2861 594	23-63-16
2861 596	23-31-33
2861 597	23-63-181
2861 605	23-32-48
2861 634-5	23-64-306
2861 636-7	23-64-306
2861 654	23-36-18
2861 656	23-48-99
2861 678-9	23-34-234
2861 680	23-64-272
2861 689	23-31-33
2861 704	23-64-17
2861 706-7	23-63-14
2861 708-9	23-63-15
2861 730	23-32-15
2861 744	23-64-286
2861 758	23-64-266
2861 772	23-42-16
2861 773	23-54-70
	23-64-11
2861 810-1	23-40-85
2861 822-3	23-34-121
2861 824-5	23-31-146
2861 826-7	23-31-146
2861 828	23-11-16
	23-54-103
	23-64-4
2861 862-3	23-48-121
2861 864	23-48-188
2861 898-9	23-64-308
2861 900-1	23-64-308
2861 924	13-72-10
2861 926-7	23-66-65
2861 928-9	23-66-65
2861 930-1	23-66-65
2861 932-3	23-66-65
2861 934	23-32-51
2861 936	23-63-133
2862 050	15-19-8
2862 052-3	23-18-48
2862 077	23-54-1
2862 088	23-54-1
2862 100	23-54-1
2862 113	23-54-141
2862 114	23-54-144
2862 115	23-54-4
2862 118	23-54-56
2862 122	23-54-20
2862 124	23-54-27
2862 127	23-54-20
2862 129	23-54-5
2862 130	23-54-27
2862 131	23-54-5
2862 133	23-54-20
2862 167	23-14-18
	23-14-79
2862 210-1	23-18-26
2862 224-5	23-39-34
2862 236-7	23-15-1
2862 240-1	23-18-25
2862 257	23-54-72
2862 274	23-54-31
2862 275	23-54-21
2862 280	23-54-143
2862 295	23-54-144
2862 301	23-18-20
2862 309	23-18-49
2862 323	23-54-217
2862 330	23-39-45
2862 426-7	23-08-60
2862 430	15-13-2
2862 433	15-11-16
2862 437	23-54-136
2862 441	23-49-9
2862 449	23-54-72
2862 453	23-54-214
2862 466	23-48-93
2862 467	23-54-187
2862 474-5	23-48-24
2862 478-9	23-48-203
2862 488-9	23-48-24
2862 492-3	23-48-203
2862 554	23-08-54
2862 555	23-08-54
2862 585	23-54-217
2862 598-9	23-15-3
2862 602	23-10-1
2862 606-7	23-15-1
2862 612	23-48-20
2862 614	23-48-24
2862 655	23-54-6
2862 744-5	23-18-26
2862 758	23-54-217
2862 774-5	23-18-26
2862 817	23-54-40
2862 818	23-54-27
2862 892-3	23-18-11
2862 989	15-11-38
2863 055	14-01-8
2863 056	14-01-8
2863 057	8-28-15
2863 126	9-23-5
2863 200	7-02-1
2863 213	7-02-1
2863 215	7-02-1
2863 216	7-02-1
2863 223	7-02-1
2863 224	7-02-1
2863 225	9-03-5
2863 227	7-02-1
2863 230	7-14-4
2863 233	7-07-1
2863 241	7-14-4
2863 256	7-14-5
2863 257	7-14-4
2863 260	7-07-1
2863 264	7-07-1
2863 267	7-07-1
2863 278	7-14-5
2863 290	7-14-5
2863 291	7-14-4
2863 292	7-14-4
2863 339	14-29-8
2863 343	14-29-8
2863 346	14-29-8
2863 349	14-29-6
2863 388	9-59-13
2863 402	9-45-1
2863 405	9-45-1
2863 433	15-11-16
2863 439	9-39-15
2863 443	9-64-24
2863 445	9-64-24
2863 477	9-02-50
2863 486	9-48-8
2863 493	9-03-5
2863 495	9-45-2
2863 497	9-45-2
2863 520	9-39-5
2863 521	9-39-6
2863 530	9-39-5
2863 531	9-39-5
2863 532	9-39-5
2863 533	9-39-6
2863 534	9-39-6
2863 535	9-39-6
2863 545	9-48-6
2863 552	9-48-6
2863 555	7-03-1
2863 557	7-03-1
2863 584	10-09-7
2863 585	14-02-18
2863 587	14-02-18
2863 598	14-02-86
2863 703	14-26-6
2863 704	14-26-6
2863 708	21-142-12
2863 718	14-14-1
2863 719	14-11-9
2863 722	14-06-1
2863 735	9-67-4
2863 744	14-11-9
2863 751	9-64-24
2863 854	9-10-5
2863 855	9-10-5
2863 983	10-24-30
2864 014	23-67-160
2864 016	8-42-1
2864 228	8-40-5
2864 243	8-42-25
2864 244	8-42-29
2864 250	8-20-5
2864 251	8-20-22
2864 258	8-35-59
2864 313	8-35-86
2864 314	8-35-85
2864 315	8-38-23
2864 316	8-35-95
2864 324	8-42-2
2864 325	8-38-23
2864 331	1-87-2
2864 332	1-87-2
2864 354	23-67-160
2864 357	8-53-289
2864 358	8-53-289
2864 366	1-87-58
2864 368	1-87-58
2864 375	8-37-15
2864 376	8-37-16
2864 392	1-48-374
2864 397	1-87-58
2864 400	8-53-294
2864 401	8-53-294
2864 405	8-38-23
2864 411	23-67-194
2864 413	23-67-194
2864 415	23-67-160
2864 420	8-53-296
2864 423	8-53-270
2864 425	8-53-270
2864 434	23-67-160
2864 440	1-47-7
	1-48-770
	24-24-5
2864 442	1-48-770
2864 448	8-53-303
2864 485	8-50-82
2864 489	23-54-167
	23-58-532
2864 491	23-54-167
	23-58-532
2864 499	24-24-5
2864 516	1-87-16
2864 538	24-24-140
2864 591	1-48-770
	24-24-5
2864 592	24-01-43
2864 593	24-01-43
2864 600	24-24-170
2864 628	24-01-45
2864 699	1-87-2
2864 714	23-33-42
2864 740	1-48-942
2864 776	1-87-30
2864 785	1-87-2
2864 790	1-87-61
2864 806	1-48-770
2864 821	24-24-5
2864 842	24-24-167
2864 858	24-24-164
2864 859	24-24-164
2864 860	24-24-164
2864 861	24-24-164
2864 862	24-24-164
2864 867	24-24-169
2869 545	24-25-258
2875 028	8-27-244
2875 481	8-27-96
2875 501	8-27-96
2875 516	8-27-96
2875 558	8-52-389
2875 560	8-52-0
	8-52-4
2875 604	8-36-14
2875 605	8-36-14
2875 618	8-52-328
2875 719	8-36-14
2875 794	8-27-308
2875 809	8-27-308
2875 818	8-27-308
2875 821	8-27-250
2875 822	8-27-0
	8-27-1
2875 823	8-27-0
	8-27-1
2875 825	8-27-308
2875 826	8-27-0
	8-27-1
2875 827	8-27-0
	8-27-1
2875 828	8-27-308
2875 829	8-27-250
2875 830	8-27-0
	8-27-1
2875 831	8-27-0
	8-27-1
2875 832	8-27-308
2875 833	8-27-0
	8-27-1
2875 834	8-27-0
	8-27-1
2875 861	8-27-138
2875 923	8-27-121
2875 975	14-38-24
2875 982	8-27-0
	8-27-1
2875 983	8-27-0
	8-27-1
2875 987	8-27-1
	8-27-352
2875 988	8-27-1
	8-27-352
2875 989	8-27-1
	8-27-352
2875 990	8-27-1
	8-27-352

PART NUMBER	CODE
2876 267	23-26-80
2876 268-9	23-63-14
2876 270-1	23-63-20
2876 358	23-38-22
2876 470	23-26-58
2876 564	23-48-188
2876 966-7	23-26-47
2877 069	23-40-82
2877 139	23-26-43
2877 185	23-04-245
2877 233	23-38-5
2877 234	23-38-5
2877 306-7	23-63-20
2877 432-3	8-11-25
2877 668	23-22-86
2877 670	23-22-86
2877 916-7	23-22-53
2877 937	23-34-38
2878 008	23-40-82
2878 024	23-40-82
2878 062-3	23-22-55
2878 238	23-26-19
2878 242	23-26-19
2878 268	23-38-14
2878 269	23-38-46
2878 344	8-11-15
2878 344-5	8-11-15
2878 347	8-11-15
2878 418-9	23-63-14
2878 420-1	23-63-14
2878 422-3	23-63-14
2878 424-5	23-63-14
2878 426	23-63-14
2878 428-9	23-63-14
2878 430	23-63-14
2878 432	23-63-14
2878 436-7	23-63-20
2878 438-9	23-63-20
2878 519	23-38-27
2878 528	23-63-14
	23-63-20
2878 530-1	23-63-14
2878 532-3	23-63-20
2878 534-5	23-63-20
2878 542	23-26-80
2878 544	23-26-80
2878 546	23-26-80
2878 548	23-26-80
2878 561	23-26-80
2878 563	23-26-80
2878 565	23-26-80
2878 567	23-26-80
2878 568-9	23-26-80
2878 570-1	23-26-80
2878 729	23-26-43
2878 920	23-22-90
2879 174	23-26-80
2879 214-5	23-54-143
2879 246-7	8-11-12
2879 258	8-11-16
2879 393	23-26-23
2879 508	23-20-14
2879 509	23-20-14
2879 510-1	23-20-14
2879 512-3	23-20-14
2879 600	23-20-14
2879 652	23-02-68
	23-02-107
2879 656	23-26-80
2879 686	23-26-23
	23-26-46
2879 732	23-14-15
2879 736	23-38-27
2879 742	23-40-82
2879 805	23-38-46
2879 811	23-38-5
2879 813	23-38-5
2879 815	23-38-5
2879 817	23-38-5
2879 819	23-38-5
2879 829	23-20-29
2879 938	23-26-80
2879 939	23-26-80
2879 950-1	23-63-14
2879 954	23-63-20
2879 955	23-63-20
2879 971	23-40-82
2879 973	23-38-5
2880 259	19-14-92
2880 262	19-14-85
2880 266	19-15-4
2880 284	21-30-43
2880 325	19-14-51
2880 361	19-14-75
	19-14-85
2880 367	19-14-108
2880 371	19-14-93
2880 396	19-46-60
2880 409	5-52-10
2880 411	5-52-10
2880 429	14-88-21
2880 430	14-86-38
2880 454	14-86-40
2880 474	14-88-21
2880 481	14-86-55
2880 485	5-107-35
2880 499	5-107-36
2880 501	5-13-1
2880 502	5-13-1
2880 503	5-13-1
2880 525	5-20-20
2880 529	5-03-6
2880 530	5-03-6
2880 544	5-03-6
2880 545	5-03-6
2880 547	5-03-6
2880 555	5-20-20
2880 568-9	5-13-1
2880 570-1	5-13-1
2880 582-3	5-13-1
2880 584	5-03-6
2880 585	5-03-6
2880 593	5-20-20
2880 595	5-03-6
2880 602-3	5-13-1
2880 626-7	5-13-1
2880 632	5-03-6
2880 646-7	5-13-1
2880 648-9	5-13-1
2880 650	5-27-1
2880 651	5-27-1
2880 737	'19-15-43
2880 920	19-46-16
2880 970	8-33-6
2881 010	3-32-1
2881 011	3-32-1
2881 041	3-22-45
2881 055	3-02-1
2881 059	3-33-8
2881 085	3-22-28
2881 086	3-22-28
2881 087	3-22-28
2881 088	3-22-28
2881 089	3-22-28
2881 098	3-03-3
2881 181	3-22-28
2881 182	3-22-28
2881 183	3-22-28
2881 187	3-02-20
2881 193	3-11-2
2881 194	3-11-1
2881 304	3-03-1
2881 314	5-13-7
2881 342	3-03-2
2881 343	3-03-2
2881 372	3-03-1
2881 375	3-03-1
2881 379	3-03-1
2881 381	3-03-1
2881 382	3-03-1
2881 423	3-04-6
2881 492	3-03-1
2881 494	3-03-1
2881 497	3-19-1
2881 498	3-19-1
2881 499	3-20-1
2881 503	5-44-3
2881 511	5-39-20
2881 512	5-39-24
2881 513	5-39-29
2881 519	5-44-11
2881 572	5-31-15
2881 591	5-05-10
2881 594-5	5-05-5
2881 596	5-05-29
2881 597	5-05-2
2881 598	5-05-35
2881 604	5-69-1
2881 618	5-69-1
2881 619	5-67-1
2881 620-1	5-64-1
2881 624	5-69-1
2881 628-9	5-64-1
2881 634	5-69-1
2881 660-1	'4-21-1
2881 675	5-25-9
2881 676	5-03-23
2881 686-7	5-20-1
2881 751	22-01-43
2881 800	5-100-2
2881 801	5-100-2
2881 872	5-39-21
2881 876	5-40-1
2881 877	5-39-12
2881 890	5-100-214
2881 909	5-100-2
2881 917	5-100-20
2881 984	5-58-12
2883 010	5-101-5
2883 056	5-100-2
2883 083	5-111-17
2883 089	5-39-3
2883 204	19-14-23
2883 210	19-14-23
2883 234	19-14-1
2883 300	8-33-5
2883 306	19-14-28
2883 330	8-33-5
2883 357	19-46-12
2883 402	21-30-6
2883 435	21-30-2
2883 454	5-27-1
2883 461	5-27-2
2883 462	6-38-3
2883 463	5-27-6
2883 464	6-35-3
2883 467	6-35-15
2883 468	6-35-1
2883 479	6-38-7
2883 482	5-27-2
2883 508	4-25-9
2883 524	4-08-1
2883 541	19-46-12
2883 543	19-14-4
2883 575	16-14-1
2883 636	16-02-1
2883 656	16-02-1
2883 667	16-02-1
2883 690	16-02-1
2883 693	16-02-1
2883 696	16-02-1
2883 735	16-02-1
2883 737	16-02-9
2883 739	16-02-1
2883 752	16-02-1
2883 754	16-02-1
2883 755	16-02-1
2883 757	16-02-1
2883 758	16-02-1
2883 760	16-02-1
2883 763	16-02-1
2883 766	16-02-1
2883 768	16-02-1
2883 769	16-02-1
2883 772	16-02-1
2883 775	16-02-1
2883 778	16-02-1
2883 779	16-02-1
2883 782	16-02-1
2883 788	16-02-1
2883 789	16-02-1
2883 790	16-02-1
2883 791	16-02-1
2883 792	16-02-1
2883 794	16-02-1
2883 795	16-02-1
2883 796	16-02-1
2883 797	16-02-1
2883 798	16-02-1
2883 799	16-02-1
2883 800	16-02-1
2883 826	11-09-37
2883 829	11-09-37
2883 832	11-09-37
2883 838	11-09-37
2883 842	11-10-3
2883 845	11-10-3
2883 855	11-05-1
2883 873	11-10-3
2883 908	11-08-5
2883 910-1	11-01-1
2883 912	11-01-1
2883 913	11-10-43
2883 914	11-10-3
2883 916	11-08-24
2883 919	11-08-24
2883 923	11-01-1
2883 929	5-06-13
	5-56-2
	14-90-1
2883 961	14-88-42
2883 962	14-88-42
2883 977	19-27-33
2883'996	19-27-33
2884 012	1-48-940
2884 074	24-28-39
2884 085	1-48-70
2884 094	1-48-770
2884 099	1-87-2
2884 107	1-48-4
2884 108	24-24-39
2884 112	23-33-135
2884 118	24-24-140
2884 119	24-24-156
2884 121	24-24-164
2884 122	1-48-12
	23-24-164
	24-24-164
2884 123	1-48-12
	24-24-164
2884 124	1-48-12
	23-24-164
	24-24-164
2884 125	24-24-164
2884 201	1-48-770
2884 205	1-48-12
	24-24-177
2884 209	24-24-156
2884 214	24-24-167
2884 215	24-24-164
2884 216	24-24-164
2884 217	24-24-164
2884 218	24-24-164
2884 219	24-24-164
2884 221	1-48-70
2884 231	24-24-155
2884 232	24-24-140
2884 239	24-24-156
2884 240	24-24-170
2884 242	1-48-770
2884 243	1-48-70
2884 251	24-24-164
2884 252	24-24-164
2884 253	24-24-164
2884 254	24-24-164
2884 255	24-24-164
2884 258	24-24-5
2884 259	24-24-177
2884 260	24-24-164
2884 261	24-24-164
2884 262	1-48-12
2884 263	24-24-164
2884 265	1-48-10
	24-24-167
2884 267	23-33-43
2884 277	24-24-159
	24-24-161
2884 291	1-48-770
	1-48-940
2884 293	1-48-70
2884 300	1-48-770
2884 304	1-87-2
2884 317	1-87-180
2884 319	1-48-70
2884 320	24-24-140
2884 332	1-48-4
	24-24-161
2884 333	24-24-59
	24-24-159
2884 338	1-48-770
2884 341	24-24-161
2884 344	1-48-4
2884 346	1-48-33
2884 349	24-24-161
2884 354	24-24-161
2884 355	24-24-140
2884 357	24-01-45
2884 359	1-48-4
2884 360	1-48-4
2884 361	1-48-940
2884 368	1-48-374
	24-24-159
	24-24-161
2884 372	24-24-161
2884 373	24-24-161
2884 377	1-48-12
2884 378	1-48-12
2884 379	1-48-12
2884 380	1-48-12
2884 383	24-24-164

PART NUMBER	CODE
2884 384	24-24-164
2884 385	24-24-164
2884 386	24-24-164
2884 387	24-24-164
2884 390	24-24-164
2884 391	24-24-164
2884 392	24-24-164
2884 393	24-24-164
2884 394	24-24-164
2884 398	23-67-25
2884 399	23-67-25
2884 404	23-33-42
2884 408	23-33-42
2884 413	1-48-942
2884 418	24-24-156
2884 425	1-87-22
	23-33-135
2884 426-7	23-33-42
2884 430	1-48-941
2884 438	1-87-2
2884 440	23-33-65
2884 441	23-33-65
2884 444-5	23-33-42
2884 449	24-24-167
2884 457	24-24-164
2884 458	24-24-164
2884 459	24-24-164
2884 460	24-24-18
	24-24-164
2884 461	24-24-18
	24-24-164
2884 468	24-24-164
2884 481	1-87-180
2884 484	23-33-139
2884 488	23-33-135
2884 489	24-24-170
2884 496	1-87-51
2884 497	1-87-51
2884 500	1-48-11
2884 501	1-48-770
2884 513	1-48-4
	23-24-164
2884 514	1-48-4
2884 515	1-48-26
2884 531	24-24-156
2884 533	24-01-45
2884 534	23-33-12
2884 557	1-48-7
2884 562	1-48-7
2884 568	1-48-941
2884 570	1-48-940
2884 571	1-87-2
2884 573	1-48-33
2884 575	24-24-167
2884 576	24-24-140
2884 593	1-87-1
2884 595	1-48-555
2884 596	1-48-555
2884 606	1-87-1
2884 607	1-87-1
2884 636	1-87-1
2884 656	1-48-950
	24-01-65
2884 658	1-87-1
2884 667	23-33-45
2884 669	1-48-945
2884 678	23-33-42
2884 682	23-33-42
2884 684	1-87-30
2884 687	23-33-42
2884 691	23-33-42
2884 694	23-33-135
2884 700	24-24-39
2884 701	24-24-39
2884 704	1-48-4
2884 711	24-24-164
2884 712	24-24-164
2884 713	24-24-164
2884 714	24-24-164
2884 715	24-24-164
2884 717	1-48-4
2884 722	1-48-4
2884 727	1-48-770
	24-24-5
2884 730	1-48-941
2884 731	1-48-941
2884 734	24-24-164
2884 735	24-24-164
2884 737	24-24-164
2884 738	24-24-164
2884 739	24-24-164
2884 740	24-24-164
2884 741	24-24-164
2884 745	1-48-12
2884 746	1-48-12
2884 747	1-48-12
2884 748	1-87-1
2884 749	1-87-1
2884 764	1-87-180
2884 767	1-87-180
2884 769	1-87-180
2884 772	1-48-70
2884 773	1-87-22
2884 775	1-87-180
2884 776	1-87-180
2884 778	1-87-2
2884 784	23-33-135
2884 794	23-33-135
2884 801	1-87-22
	23-33-135
2884 803	23-33-135
2884 817	1-87-22
2884 826	23-33-135
2884 827	1-87-22
	23-33-135
2884 828	23-33-135
2884 830	23-33-135
2884 832	23-33-135
2884 834	23-33-135
2884 835	1-87-22
	23-33-135
2884 836	23-33-135
2884 838	23-33-135
2884 840	23-33-135
2884 841	23-33-135
2884 842	23-33-135
2884 844	1-87-1
2884 845	1-87-1
2884 848	1-87-1
2884 852	1-87-1
2884 853	1-87-1
2884 854	1-87-1
2884 855	1-87-1
2884 856	1-87-1
2884 857	1-87-1
2884 858	1-87-1
2884 859	1-87-1
2884 860	1-87-1
2884 861	1-87-1
2884 862	1-87-1
2884 863	1-87-19
2884 876	1-87-1
2884 877	23-33-135
2884 878	1-87-22
2884 879	23-33-135
2884 880	1-87-22
2884 882	1-87-1
2884 885	23-33-135
2884 886	1-87-22
	23-33-135
2884 887	23-33-135
2884 888	23-33-135
2884 889	1-48-70
2884 890	24-24-140
2884 891	23-33-135
2884 892	23-33-135
2884 893	1-87-22
	23-33-135
2884 894	23-33-135
2884 895	23-33-135
2884 896	23-33-135
2884 897	1-87-22
	23-33-135
2884 898	23-33-135
2884 899	1-48-70
	1-87-22
	23-33-135
2884 926	1-87-180
2884 928	1-87-70
2884 931	1-87-1
2888 364-5	23-26-45
2888 386-7	23-45-52
2888 497	23-45-63
2888 498-9	23-26-45
2888 536	1-87-21
2888 538	1-87-21
2888 562-3	23-45-55
2888 565	23-45-57
2888 566	23-45-57
2888 582-3	23-45-55
2888 659	23-45-57
2888 667	23-45-194
2888 671	23-45-194
2888 691	23-45-204
2888 738-9	23-45-55
2888 739	23-45-55
2888 745	23-47-7
2888 762	23-45-39
2889 028-9	23-33-86
2889 030	23-33-86
2889 044	23-67-169
2889 053	8-31-10
2889 084	8-12-2
2889 093	8-50-129
2889 151	8-37-504
2889 180	8-37-505
2889 231	19-31-7
2889 232	19-31-7
2889 300	8-53-237
2889 376	1-87-404
2889 390	24-24-124
2889 394	8-37-545
2889 419	8-15-27
2889 426	8-37-372
2889 427	8-16-6
2889 428	8-16-6
2889 432	23-67-169
2889 433	23-54-178
2889 434	8-16-4
2889 435	8-16-4
2889 452	23-06-21
2889 457	23-06-22
2889 467	23-67-166
2889 501	23-33-92
2889 542	8-16-6
2889 543	8-16-6
2889 561	1-47-10
2889 565	8-40-10
2889 588	8-37-170
2889 597	8-16-6
2889 620	8-37-14
2889 625	23-33-10
2889 650	8-16-6
2889 693	8-37-162
2889 773	23-06-4
2889 775	8-19-3
2889 777	1-47-10
2889 783	21-84-1
2889 785	21-84-1
2889 800	23-67-267
2889 803	23-67-240
2889 809	23-67-255
2889 826	1-88-1
2889 843	23-67-247
2889 847	23-67-25
2889 848	23-67-86
2889 848-9	23-67-86
2889 854	23-67-79
2889 855	23-67-79
2889 857	23-67-25
2889 859	23-67-25
2889 860-1	23-67-5
2889 872	23-67-262
2889 876	23-67-29
2889 885	23-67-267
2889 888	23-67-246
2889 917	1-88-170
2889 919	1-88-159
2889 924	1-88-6
2889 925	1-88-6
2889 927	1-88-6
2889 934	1-88-159
2889 935	1-88-107
2889 940	23-67-5
2889 941	23-67-5
2889 943	23-67-12
2889 950	23-67-76
2889 962	23-67-25
2889 964	23-67-25
2889 966	23-67-76
2889 969	23-67-79
2891 078	19-58-7
2891 123	19-54-2
2891 124	19-54-31
2891 125	19-54-31
2891 156	19-54-180
2891 162	19-54-196
2891 165	19-54-213
2891 166	19-54-28
2891 168	19-54-25
2891 195	19-54-31
2891 196	19-54-2
2891 208	19-58-7
2891 218	19-54-2
2891 219	19-54-2
2891 224	19-54-180
2891 241	19-54-196
2891 261	19-54-258
2891 264	19-54-130
2891 284	19-54-182
2891 315	19-54-2
2892 086	21-02-1
	21-142-18
2892 087	21-02-1
	21-142-18
2892 089	21-02-1
	21-142-18
2892 163	21-03-6
2892 233	21-136-47
2892 248	21-138-15
2892 263	6-22-15
2892 264	6-22-15
2892 288	21-14-19
2892 349	21-139-30
2892 350	21-139-33
2892 351	21-137-78
	21-139-78
2892 352	21-137-78
	21-139-78
2892 353	21-139-76
2892 355	21-139-4
2892 357	21-139-4
2892 399	21-85-61
2892 405	21-119-15
2892 408	21-119-15
2892 420	21-133-15
2892 422	21-133-1
	21-133-7
2892 424	21-118-40
2892 441	21-133-1
	21-133-7
2892 470	9-46-31
2892 471	9-71-5
2892 477	21-134-36
2892 478	21-134-45
2892 480	6-09-1
2892 498	21-139-4
2892 499	21-139-4
2892 511	6-09-1
2892 551	21-133-36
2892 553	21-118-58
2892 554	21-133-15
2892 655	21-05-1
2892 656	21-134-38
2892 679	21-118-57
2892 680	21-119-15
2892 681	21-119-15
2892 728	21-136-65
2892 740	21-14-15
2892 807	21-10-16
2892 811	21-14-1
2892 815	21-119-15
2892 836	21-04-1
2892 845	21-139-140
2892 846	21-139-68
2892 853	21-03-1
2892 855	21-03-1
2892 890	21-42-23
2892 891	21-42-23
2892 901	21-139-140
2892 902	21-139-140
2892 909	21-16-3
2892 911	6-10-10
2892 912	21-03-6
2892 913	21-03-6
2892 914	8-52-39
2892 915	8-52-39
2892 926	21-139-95
2892 927	21-139-95
2892 940	21-16-3
2892 942	21-16-3
2892 943	21-139-63
2892 944	21-139-135
2892 947	21-139-71
2892 961	21-04-1
2892 967	21-42-23
2892 990	21-139-105
2892 994	21-85-9
2893 064-5	23-34-80
2893 068-9	23-34-84
2893 077	23-23-65
2893 086	23-31-33
2893 090	23-31-33
2893 106-7	23-66-71
2893 120-1	23-63-55
2893 130	23-66-135
2893 131	23-66-135
2893 138	23-66-135
2893 139	23-66-135
2893 146	23-22-145

PART NUMBER	CODE
2893 176	23-15-13
2893 178	23-15-13
2893 200-1	23-34-235
2893 216-7	23-34-242
2893 218-9	23-34-242
2893 229	23-34-301
2893 232-3	23-36-53
2893 234-5	23-36-53
2893 236-7	23-36-53
2893 244-5	23-51-41
2893 250-1	23-34-27
2893 252-3	23-34-27
2893 260-1	23-63-100
2893 266-7	23-64-311
2893 268-9	23-64-311
2893 280-1	23-40-85
2893 282-3	23-40-85
2893 286-7	23-40-85
2893 288-9	23-40-85
2893 292-3	23-59-56
2893 378-9	23-34-27
2893 434-5	23-64-71
2893 444-5	23-63-33
2893 450-1	23-63-126
2893 452-3	23-63-126
2893 454-5	23-63-15
2893 456-7	23-63-15
2893 458-9	23-63-15
2893 460-1	23-63-15
2893 464-5	23-63-33
2893 468-9	23-63-33
2893 470-1	23-63-33
2893 508-9	23-64-308
2893 510-1	23-64-308
2893 528	23-09-52
2893 544-5	23-63-127
2893 548-9	23-64-306
2893 550-1	23-64-306
2893 554	23-64-242
2893 566-7	23-64-240
2893 576	23-64-93
2893 608-9	23-63-127
2893 610-1	23-63-127
2893 612-3	23-34-120
2893 624-5	23-34-120
2893 738	23-42-23
2893 739	23-42-23
2893 740	23-42-23
2893 746-7	23-63-33
2893 754-5	23-63-33
2893 792-3	23-63-15
2893 794-5	23-63-15
2893 796-7	23-63-15
2893 798-9	23-63-15
2893 800-1	23-63-94
2893 802-3	23-63-33
2893 806-7	23-63-33
2893 808-9	23-63-33
2893 810-1	23-63-33
2893 812-3	23-63-33
2893 842-3	23-64-308
2893 844-5	23-64-308
2893 846-7	23-64-308
2893 848-9	23-64-308
2893 867	23-54-150
2893 872	23-63-181
2893 873	23-63-181
2893 880	23-34-17
2893 906	23-64-28
2893 912-3	23-64-308
2893 914-5	23-64-308
2893 916-7	23-64-308
2893 918-9	23-64-308
2893 920-1	23-64-308
2893 922-3	23-64-308
2893 934-5	23-66-65
2893 939	23-08-75
2893 940	23-15-13
2893 958	23-15-13
2893 976-7	23-36-53
2893 978-9	23-36-53
2893 982-3	23-66-65
2893 986-7	23-34-234
2893 990	23-34-5
2893 991	23-34-5
2893 992	23-34-5
2894 000-1	23-51-48
2894 002	23-34-346
2894 028-9	23-36-66
2894 030	23-36-125
2894 056-7	23-36-125
2894 065	23-34-253
2894 067	23-34-253
2894 069	23-34-253
2894 075	23-40-86
2894 084-5	23-63-136
2894 086-7	23-63-55
2894 102	23-42-46
2894 120-1	23-40-85
2894 122-3	23-59-56
2894 156-7	23-34-120
2894 174	23-64-14
2894 180	23-64-276
2894 184-5	23-32-17
2894 193	23-36-125
2894 228-9	23-36-118
2894 230-1	23-36-118
2894 232-3	23-36-118
2894 242	23-34-16
2894 316-7	23-34-16
2894 318	23-34-116
2894 340	23-64-197
2894 356-7	23-63-33
2894 366	23-09-58
2894 368-9	23-15-13
2894 388	23-34-82
2894 398	23-34-17
2894 434-5	23-34-242
2894 456	23-32-17
2894 458-9	23-34-17
2894 464-5	23-51-41
2894 475	23-64-40
2894 478-9	23-64-213
2894 480-1	8-55-23
2894 484-5	8-55-23
2894 488	23-34-280
2894 490-1	23-34-191
2894 492-3	23-34-22
2894 494	23-36-125
2894 495	23-34-17
2894 502	23-04-241
2894 504	23-04-241
2894 506	23-04-241
2894 508-9	23-26-41
2894 527	23-42-55
2894 536-7	23-63-55
2894 538-9	23-63-37
2894 542	23-11-17
2894 556-7	8-55-23
2894 558-9	8-55-23
2894 560-1	8-55-23
2894 576-7	23-36-123
2894 582-3	23-32-49
2894 584	23-33-109
2894 584-5	23-32-48
2894 586	23-36-134
2894 599	23-64-12
2894 600-1	23-64-12
2894 614-5	23-64-12
2894 650	23-64-12
2894 654-5	23-63-15
2894 672-3	23-48-99
2894 730-1	23-34-244
2894 734	23-22-78
2894 736-7	23-22-53
2894 740-1	23-34-89
2894 772-3	23-34-89
2894 775	23-36-125
2894 777	23-34-29
2894 782	23-11-14
2894 786	23-39-19
2894 798-9	23-11-12
2894 802	23-42-16
2894 850-1	23-34-234
2894 859	23-36-125
2894 882	23-40-150
2894 884-5	23-40-170
2894 888	23-40-187
2894 892	23-40-150
2894 893	23-40-180
2894 894	23-40-180
2894 895	23-40-180
2894 896-7	23-64-71
2894 899	23-40-180
2894 902	23-36-18
2894 903	14-87-2
2894 914-5	23-63-126
2894 920-1	23-26-58
2894 922-3	23-63-33
2894 926-7	23-63-33
2894 928-9	23-63-33
2894 934-5	23-36-125
2894 938-9	23-36-125
2894 944-5	23-64-12
2894 947	23-36-53
2894 954	23-61-117
2894 970-1	23-34-89
2894 980	23-54-126
2894 981	23-54-126
2894 982	23-66-77
2894 983	23-49-9
2894 998	23-26-80
2895 034-5	23-64-269
2895 036	23-09-52
2895 090-1	23-63-15
2895 092	23-64-197
2895 096-7	23-34-102
2895 103	23-40-192
2895 126	23-64-71
2895 128-9	23-36-118
2895 130-1	23-36-118
2895 134	23-42-32
2895 136	23-09-65
2895 137	23-64-10
2895 138	23-64-10
2895 148	23-34-80
2895 169	23-34-89
2895 183	23-54-70
	23-64-11
2895 193	23-36-53
2895 195	23-32-107
2895 196	23-32-51
2895 198-9	23-40-85
2895 203	23-48-121
2895 204	23-48-121
2895 218	23-64-266
2895 223	23-34-91
2895 228	23-34-213
2895 230	23-34-234
2895 233	23-64-28
2895 238-9	23-42-32
2895 241	23-31-137
2895 244	23-34-245
2895 248-9	23-63-33
2895 250	23-42-16
2895 256-7	23-42-46
2895 258	23-31-33
2895 259	23-31-33
2895 260	23-31-33
2895 262	23-32-80
2895 263	23-42-55
2895 268-9	23-63-55
2895 270-1	23-63-55
2895 272-3	23-63-55
2895 275	23-21-28
2895 277	23-21-18
2895 279	23-21-28
2895 281	23-21-18
2895 286-7	23-64-308
2895 288-9	23-64-308
2895 298-9	23-64-308
2895 300-1	23-64-308
2895 333	23-66-78
2895 334	23-23-65
	23-66-75
2895 340	23-34-242
2895 342	23-34-242
2895 348	23-32-48
2895 355	12-06-3
2895 359	23-54-149
2895 362-3	23-64-242
2895 378-9	23-64-308
2895 380-1	23-64-308
2895 392-3	23-09-51
2895 403	23-34-213
2895 409	23-42-16
2895 416-7	23-64-254
2895 440-1	23-64-308
2895 442-3	23-64-308
2895 447	23-64-12
2895 448	23-64-197
2895 476-7	23-63-55
2895 478-9	23-63-33
2895 482-3	23-63-55
2895 498	23-34-40
	23-64-71
2895 502	23-34-80
2895 518	23-34-117
2895 518-9	23-34-117
2895 534-5	23-66-65
2895 554-5	23-34-121
2895 560	23-31-33
2895 561	23-31-33
2895 563	23-31-33
2895 564	23-31-33
2895 577	23-66-75
2895 592	23-66-135
2895 593	23-66-135
2895 658-9	23-64-71
2895 664-5	23-63-33
2895 670-1	23-63-15
2895 686-7	23-64-308
2895 688-9	23-64-308
2895 704	23-33-109
2895 722	23-09-52
2895 783	15-03-5
2895 786-7	23-61-117
2895 788-9	23-66-77
2895 803	23-22-145
2895 808-9	23-34-120
2895 823	23-64-272
2895 846-7	12-06-3
2895 856-7	23-66-65
2895 862	23-66-135
2895 863	23-66-135
2895 870	23-66-235
2895 888-9	23-64-308
2895 890-1	23-64-308
2895 944-5	23-34-235
2895 946-7	23-34-27
2895 948-9	23-64-254
2895 954	23-34-120
2895 956-7	23-64-254
2895 968-9	23-09-51
2895 979	23-64-199
2895 984	23-64-201
2895 986	23-64-199
2895 991	23-64-12
2895 996-7	23-64-254
2898 168-9	8-34-40
2898 191	7-26-15
2898 192	15-11-46
2898 206	15-03-5
2898 207	15-03-60
2898 238	7-16-22
2898 451	15-03-5
2898 459	7-16-22
2898 512	8-34-362
2898 532	15-11-46
2898 556-7	12-04-25
2898 560-1	8-34-1
2898 562-3	8-34-1
2898 568-9	8-34-176
2898 588	15-09-4
2898 754	12-02-10
2898 762	15-09-4
2898 781	12-02-10
2898 798	12-06-3
2898 813	15-11-12
2898 882	8-34-31
2898 909	7-26-10
	7-26-16
	8-34-63
	13-64-22
	13-66-79
	23-31-146
	23-34-245
	23-54-141
2898 970-1	12-02-10
2898 972-3	12-02-10
2899 035	6-10-2
2899 036	9-39-6
2899 038	9-39-6
2899 039	9-39-6
2899 061	9-31-4
2899 091	14-29-8
2899 097	9-03-18
2899 108	8-28-15
2899 109	1-48-573
2899 110	8-28-15
2899 144	9-15-1
2899 206	9-15-1
2899 246	10-03-4
2899 250	9-03-29
2899 295	14-02-18
2899 299	9-50-6
2899 316	14-14-26
2899 321	21-142-12
2899 322	21-142-12
2899 325	21-142-12
2899 330	14-11-9
2899 332	14-11-9
2899 334	14-26-11
2899 335	14-25-11
2899 336	14-25-11
2899 338	14-25-11
2899 339	14-25-11
2899 342	14-01-2
2899 351	14-11-29
2899 352	14-01-23

PART NUMBER	CODE
2899 353	14-11-48
2899 354	14-07-15
2899 356	14-11-9
2899 358	14-11-9
2899 360	14-11-3
2899 361	14-11-3
2899 370	21-142-12
2899 374	14-02-18
2899 376	14-02-18
2899 378	14-02-18
2899 387	14-01-1
2899 393	14-24-1
2899 395	14-24-6
2899 396	14-15-6
2899 495	9-31-4
2899 526	24-25-15
2899 530	9-07-17
2899 531	9-23-18
2899 532	9-23-18
2899 539	14-02-88
2899 540	14-02-87
2899 547	9-39-14
2899 548	9-39-14
2899 556	9-17-5
2899 561	9-42-1
2899 567	9-42-1
2899 582	9-07-5
2899 594	9-42-1
2899 595	9-42-1
2899 804	19-54-115
2899 807	10-23-7
2899 808	10-23-7
2899 924	10-03-4
2899 951	9-58-5
2899 954	9-48-6
2899 960	9-48-7
2899 961	24-25-15
2899 962	14-06-10
2899 968	9-48-6
2899 997	9-48-6
2900 016-7	23-32-17
2900 022-3	23-51-43
2900 026	23-51-19
2900 030-1	23-51-19
2900 042-3	23-34-234
2900 074-5	23-36-53
2900 078-9	23-19-82
2900 086-7	23-59-35
2900 088-9	23-59-35
2900 109	23-34-166
2900 116	23-34-301
2900 120-1	23-40-85
2900 124-5	23-59-56
2900 126	23-64-66
2900 127	23-64-66
2900 128	23-64-314
2900 146	23-64-66
2900 158-9	23-40-92
2900 160-1	23-40-92
2900 162-3	23-40-92
2900 166	23-64-66
2900 167	23-64-66
2900 168	23-64-66
2900 169	23-64-66
2900 178	23-64-66
2900 180	23-64-66
2900 181	23-64-314
2900 182	23-64-314
2900 183	23-64-314
2900 184	23-64-314
2900 185	23-64-314
2900 186	23-64-314
2900 187	23-64-314
2900 188	23-64-314
2900 200-1	23-26-41
2900 206	23-34-301
2900 207	23-34-301
2900 208	23-34-301
2900 209	23-34-301
2900 210-1	23-40-85
2900 212-3	23-40-85
2900 214-5	23-40-85
2900 216-7	23-40-85
2900 226	23-40-86
2900 266	15-09-4
2900 275	23-23-52
	23-23-65
2900 280-1	23-59-56
2900 282-3	23-59-56
2900 284-5	23-59-56
2900 286-7	23-59-56
2900 288-9	23-59-56
2900 290-1	23-59-56
2900 292-3	23-59-56
2900 294-5	23-59-56
2900 296-7	23-59-56
2900 308-9	23-26-41
2900 367	23-64-314
2900 414	23-34-166
2900 415	23-34-166
2900 416	23-34-166
2900 422	23-34-167
2900 488-9	23-51-19
2900 506-7	23-34-229
2900 550-1	23-36-53
2900 553	23-32-49
2900 574-5	23-64-213
2900 576-7	23-64-68
2900 600	23-34-281
2900 602-3	23-64-311
2900 604-5	23-64-311
2900 648-9	23-34-234
2900 652-3	23-34-234
2900 656-7	23-34-234
2900 658-9	23-34-234
2900 660-1	23-34-234
2900 664-5	23-34-234
2900 666-7	23-34-234
2900 668-9	23-34-234
2900 670-1	23-34-234
2900 672-3	23-34-234
2900 688-9	23-36-53
2900 690-1	23-36-53
2900 692-3	23-36-53
2900 694-5	23-36-53
2900 696-7	23-36-53
2900 698-9	23-36-53
2900 700-1	23-36-53
2900 702-3	23-36-53
2900 704-5	23-36-53
2900 710	23-36-66
2900 712-3	23-36-66
2900 724-5	23-63-33
2900 752-3	23-19-82
2900 754-5	23-19-82
2900 762-3	23-59-37
2900 764-5	23-59-37
2900 768-9	23-40-96
2900 770-1	23-40-96
2900 772-3	23-40-96
2900 774-5	23-40-96
2900 783	23-32-48
2900 796-7	23-63-21
2900 800	23-32-22
2900 814-5	23-63-33
2900 820-1	23-63-33
2900 836-7	23-19-177
2900 844	23-32-17
2900 846	23-32-25
2900 855	23-34-166
2900 856-7	23-32-25
2900 864-5	23-64-66
2900 884	23-34-191
2900 898-9	8-55-23
2900 976	23-39-48
2900 978-9	23-34-234
2900 986-7	23-63-33
2901 010	23-66-65
2901 020	23-22-145
2901 022-3	23-22-145
2901 030-1	23-58-230
2901 036-7	23-63-55
2901 040-1	23-63-33
2901 048-9	23-36-53
2901 050	23-36-53
2901 052-3	23-36-53
2901 062-3	23-34-246
2901 064-5	23-34-246
2901 066-7	23-34-246
2901 078-9	23-34-257
2901 082-3	23-51-19
2901 100-1	23-34-27
2901 106-7	23-34-21
2901 118-9	23-19-82
2901 120-1	23-19-82
2901 122-3	23-19-82
2901 148-9	23-34-248
2901 150-1	23-34-248
2901 152-3	23-34-248
2901 183	23-34-166
2901 184	23-34-166
2901 185	23-34-179
2901 239	23-58-569
2901 260	23-58-570
2901 262-3	23-58-572
2901 264-5	23-58-572
2901 266	23-58-572
2901 268	23-58-569
2901 273	23-58-3
2901 276	23-51-19
2901 280-1	23-51-19
2901 282-3	23-51-19
2901 288-9	23-51-6
2901 359	23-34-238
2901 404-5	23-34-234
2901 408-9	23-40-96
2901 410-1	23-40-96
2901 412-3	23-34-22
2901 418-9	23-64-213
2901 420-1	23-64-213
2901 426-7	23-64-66
2901 428-9	23-59-56
2901 430	23-34-281
2901 550-1	23-34-229
2901 558-9	23-59-37
2901 570-1	23-09-9
2901 594	23-64-300
2901 603	23-64-4
2901 614-5	23-63-100
2901 626	23-63-21
2901 628-9	23-63-21
2901 632-3	23-34-229
2901 640-1	23-64-68
2901 654	23-64-314
2901 655	23-64-314
2901 656	23-64-314
2901 657	23-64-314
2901 658	23-64-66
2901 659	23-64-66
2901 670-1	23-64-213
2901 678	23-34-167
2901 688-9	23-34-176
2901 898-9	23-64-311
2901 900-1	23-64-311
2901 980-1	8-55-23
2901 986-7	23-34-249
2901 988-9	23-34-249
2902 308-9	23-40-85
2902 312	23-58-78
2902 313	23-58-78
2902 314	23-58-78
2902 356-7	23-51-6
2902 360-1	23-51-12
2902 364-5	23-51-19
2902 366-7	23-51-19
2902 370-1	23-34-229
2902 384-5	23-64-311
2902 386-7	23-64-311
2902 392-3	23-34-234
2902 395	23-34-179
2902 397	23-58-75
2902 398-9	23-34-252
2902 473	23-58-603
2902 478-9	23-51-19
2902 486-7	23-34-22
2902 490-1	23-39-49
2902 524	23-34-167
2902 526-7	8-55-23
2902 536-7	23-23-65
2902 553	23-58-75
2902 554-5	23-19-82
2902 560-1	8-55-23
2902 578	23-09-9
2902 588-9	23-63-55
2902 596-7	23-63-55
2902 604	23-51-41
2902 605	23-51-41
2902 618-9	23-19-82
2902 623	23-34-179
2902 642-3	23-36-20
2902 646-7	23-34-235
2902 648-9	23-34-235
2902 664-5	23-51-41
2902 666-7	23-51-41
2902 688-9	23-34-234
2902 696-7	23-34-252
2902 708-9	8-55-23
2902 730-1	23-63-55
2902 754	23-34-179
2902 756-7	23-58-473
2902 758-9	23-58-473
2902 760-1	23-58-473
2902 762	23-42-38
2902 768-9	23-26-41
2902 792	23-64-12
2902 794-5	23-26-41
2902 796-7	23-26-41
2902 804	23-40-86
2902 808-9	23-63-55
2902 810-1	23-63-55
2902 826-7	23-26-41
2902 834-5	23-19-177
2902 841	23-58-75
2902 852-3	23-63-55
2902 890	23-32-25
2902 892	23-32-25
2902 895	23-58-238
2902 900-1	23-34-213
2902 902-3	23-34-245
2902 908-9	23-34-231
2902 950-1	23-63-33
2902 960-1	23-34-248
2902 962-3	23-34-248
2902 964-5	23-34-248
2902 969	23-19-74
2908 473	6-13-1
2908 482	3-19-15
2919 269	24-28-220
2923 907	24-28-43
2923 914	24-28-220
2923 936	24-01-18
2925 039	21-30-2
2925 062	19-14-91
2925 160-1	5-05-1
2925 163	5-62-1
2925 170	22-05-14
2925 170-1	22-05-14
2925 174-5	5-05-3
2925 186-7	5-05-16
2925 199	5-05-8
2925 201	5-05-10
2925 206-7	5-05-1
2925 208	5-05-41
2925 209	5-05-43
2925 212-3	5-05-3
2925 216-7	5-05-16
2925 220-1	5-05-1
2925 279	17-24-28
2925 296	17-29-6
2925 297	13-10-12
2925 298	13-10-1
2925 299	13-10-1
2925 315	12-04-4
2925 321	12-04-4
2925 326-7	12-01-22
2925 330-1	12-01-22
2925 332-3	12-01-22
2925 338	12-01-26
2925 338-9	12-01-26
2925 339	12-01-26
2925 340-1	12-07-1
2925 348	23-32-110
2925 349	23-32-110
2925 377	19-46-55
2925 397	19-14-23
2925 406	19-14-50
2925 456	19-31-1
2925 491	19-14-38
2925 492	19-15-35
2925 494	19-31-1
2925 495	19-31-3
2925 524	19-14-85
2925 554	8-33-6
2925 556	8-33-5
2925 557	8-33-5
2925 558	19-30-19
2925 559	19-14-48
2925 561	8-33-15
2925 579	5-27-1
2925 582	5-31-12
2925 584	5-31-11
2925 588	6-52-10
2925 598	6-24-1
2925 610	11-05-4
2925 611	11-05-4
2925 612	11-05-4
2925 620	11-05-4
2925 643	11-05-4
2925 645	11-05-4
2925 646	11-05-4
2925 647	11-05-4
2925 648	11-05-4
2925 658	11-01-1
2925 659	11-01-1
2925 670	11-09-3
2925 671	11-09-3
2925 689	14-86-40
2925 705	5-06-13
	14-90-1
2925 748	14-86-1

PART NUMBER	CODE
2925 750	14-88-21
2925 768	11-05-4
2925 771	11-01-1
2925 776	11-05-1
2925 779	11-05-1
2925 781	11-05-1
2925 783	11-05-1
2925 797	11-01-1
2925 817	11-05-4
2925 819	11-05-4
2925 824-5	11-01-1
2925 826	14-86-40
2925 838	14-86-40
2925 882	5-58-1
2925 883	5-58-1
2925 903	13-11-5
2925 904-5	13-64-4
2925 914-5	13-64-72
2925 941	23-32-17
2925 943	13-10-1
2925 976	23-32-17
2925 987	13-01-1
2926 000	13-01-1
2926 016	8-15-53
2926 033	23-41-173
2926 050	8-16-4
2926 051	8-16-6
2926 083	8-01-17
2926 085	8-01-17
2926 097	1-87-404
2926 117	23-41-170
2926 118	23-41-170
2926 119	23-41-170
2926 121	23-41-184
2926 122	23-41-184
2926 123	23-41-184
2926 129	8-05-6
2926 133	8-19-3
2926 134	8-19-3
2926 151	1-48-516
2926 168	23-67-104
2926 171	8-16-6
2926 172	8-16-6
	23-41-176
2926 174	8-16-4
	23-41-176
	23-47-337
2926 175	23-18-105
2926 196	23-41-55
2926 202	23-47-446
2926 204	8-16-6
2926 207	23-41-55
2926 225	23-41-55
2926 233	8-32-2
2926 234	23-41-55
2926 241	8-58-79
2926 247	8-15-32
2926 254	8-16-6
2926 255	8-16-6
	23-67-169
2926 256	8-16-6
2926 257	8-16-6
2926 258	8-16-6
2926 265	1-88-126
2926 270	8-58-60
2926 272	24-24-124
2926 275	8-58-60
2926 299	23-41-55
2926 300	23-41-55
2926 301	23-41-55
2926 304	23-41-170
2926 306	23-41-170
2926 307	23-41-170
2926 308	23-41-170
2926 309	23-41-170
2926 311	23-41-170
2926 312	23-41-170
2926 313	23-41-170
2926 314	23-41-170
2926 324	8-17-30
2926 325	8-17-30
2926 327	8-33-164
2926 356	23-41-55
2926 358	23-41-55
2926 361	23-41-55
2926 365	8-15-4
2926 368	23-41-55
2926 370	8-55-57
2926 371	23-18-121
	23-41-167
2926 374	8-16-6
2926 386	23-18-106
2926 402	1-87-404
2926 407	8-15-53
2926 415	24-24-124
2926 417	23-54-178
2926 418	23-54-178
2926 419	23-54-178
2926 422	23-47-456
2926 424	23-47-446
2926 431	1-87-404
2926 462	8-50-156
2926 478	23-67-41
2926 487	23-47-446
2926 502	8-15-2
2926 565	1-88-120
2926 574	8-11-2
2926 586	8-50-129
2926 593	23-47-446
2926 594	8-16-4
	8-34-241
2926 601	8-11-6
2926 603	8-19-3
2926 607	8-16-4
2926 617	8-16-4
2926 621	8-28-78
2926 626	1-88-6
2926 649	8-15-32
2926 651	8-16-8
2926 673	1-88-12
2926 686	1-88-162
2926 688	1-88-117
2926 690	1-88-1
2926 691	1-88-1
2926 695	23-54-167
2926 698	23-54-167
2926 700	23-18-105
2926 705	8-15-4
2926 720	1-87-404
2926 722	8-16-4
2926 736	23-47-420
2926 737	23-47-420
2926 758	24-24-124
2926 759	8-53-283
2926 760	8-53-283
2926 778	8-19-3
2926 789	8-15-2
2926 814	8-05-2
2926 848	8-11-8
	8-56-34
2926 861	8-16-19
2926 862	23-47-425
2926 891	8-15-13
2926 892	8-15-4
2926 893	8-15-4
2926 896	8-15-35
2926 897	8-15-4
2926 899	8-15-4
2926 918	23-67-76
2926 919	23-67-98
2926 923	23-67-104
2926 924	23-67-79
2926 929	23-67-98
2926 932	23-67-246
2926 934	23-67-98
2926 937	23-67-268
2926 941	23-67-29
2926 942	23-67-86
2926 945	23-67-76
2926 948-9	23-67-5
2926 962-3	23-67-246
2926 966-7	23-67-246
2927 037	8-37-162
2927 038	8-37-372
2927 045	8-37-275
2927 047	8-37-1
2927 048	8-37-1
2927 063	21-30-23
2927 067	21-30-19
2927 068	8-41-41
2927 081	23-33-20
2927 119	8-37-458
2927 123	19-31-7
2927 147	23-33-42
2927 155	23-33-135
2927 223	8-37-1
2927 225	8-37-275
2927 234	8-37-162
2927 240	23-33-20
2927 253	8-37-381
2927 258	21-30-19
2927 259	8-19-15
2927 271	21-84-1
2927 280	23-33-65
2927 281	15-11-21
	23-06-46
2927 296	23-06-13
2927 336	8-37-162
2927 337	8-37-14
2927 351	8-41-41
2927 355	23-33-65
2927 358	8-11-12
2927 369	23-12-23
2927 403	8-37-440
2927 408	8-37-101
2927 419	8-37-90
2927 437	23-06-21
2927 446	23-02-18
2927 525	23-33-109
2927 540	23-06-10
2927 592	8-41-41
2927 615	8-41-43
2927 665	8-37-178
2927 666	21-84-1
2927 670	21-84-1
2927 691	23-33-135
2927 712	8-37-91
2927 714	8-37-91
2927 738	23-06-53
2927 739	23-06-53
2927 744	23-06-53
2927 776	23-33-16
2927 781	23-06-53
2927 803	23-06-14
2927 817	8-37-90
2927 870	23-33-135
2927 871	23-33-135
2927 883	23-06-15
2927 905	23-06-4
2927 906	23-06-4
2927 910	21-84-1
2927 912	21-84-1
2927 914	21-84-1
2927 920	21-84-1
2927 928	23-33-135
2927 930	1-87-22
2927 961	23-06-13
2927 972	8-37-14
2927 999	8-37-14
2930 168-9	8-55-158
2930 186-7	8-55-158
2930 200-1	8-55-158
2930 578-9	8-50-175
2930 580-1	8-50-184
2930 703	8-14-2
2930 720	8-50-156
2930 781	8-50-175
2930 801	8-50-156
2930 916	8-57-10
2930 963	8-14-19
2930 988-9	8-55-7
2930 994-5	8-55-158
2931 030	8-47-68
2931 100	13-72-3
2931 102	13-72-3
2931 103	13-72-3
2931 104	13-72-3
2931 150	13-68-18
2931 157	13-72-3
2931 158	13-72-3
2931 159	13-72-3
2931 160	13-72-3
2931 162	13-72-3
2931 228-9	13-66-21
2931 240-1	13-66-16
2931 242-3	13-66-16
2931 244	13-66-3
2931 245	13-66-3
2931 300	13-64-3
2931 301	13-64-3
2931 312-3	13-64-72
2931 318	13-64-33
2931 319	13-64-32
2931 320	13-64-36
2931 323	8-47-8
2931 328-9	13-64-26
2931 338-9	13-64-4
2931 344-5	13-64-29
2931 346-7	13-64-29
2931 349	13-64-26
2931 353	13-68-43
2931 364	13-64-35
2931 368-9	13-64-150
2931 401	13-64-35
2931 418-9	13-64-4
2931 420-1	13-64-4
2931 422	13-64-33
2931 423	13-64-34
2931 428-9	13-64-72
2931 430	13-64-72
2931 432	7-26-15
2931 436	13-64-34
2931 437	13-64-34
2931 440-1	13-64-72
2931 444	13-64-26
2931 451	13-66-3
2931 468-9	13-66-16
2931 472-3	13-66-16
2931 478	13-66-37
2931 484-5	13-66-21
2931 491	13-66-141
2931 492	13-66-141
2931 498	13-66-116
2931 499	13-68-18
2931 510-1	13-66-147
2931 512	13-66-148
2931 514-5	13-66-15
2931 525	13-66-24
2931 526	13-68-18
2931 687	3-22-26
2931 799	3-20-1
2931 803	16-20-7
2931 811	3-03-1
2931 813	16-20-1
2931 817	3-22-28
2931 818	3-22-28
2931 851	3-33-1
2931 860	3-03-1
2931 862	3-22-45
2931 864	3-32-1
2931 874	3-22-26
2931 875	3-35-14
2931 878	3-19-1
2931 892	3-19-1
2931 960	3-22-28
2931 961	3-22-28
2931 962	3-22-28
2931 963	3-22-28
2931 964	3-22-28
2931 965	3-22-28
2931 966	3-22-28
2931 967	3-22-28
2931 968	3-22-28
2931 969	3-22-28
2931 970	3-22-28
2931 971	3-22-28
2931 972	3-22-28
2931 973	3-22-28
2931 974	3-22-28
2931 975	3-22-28
2931 976	3-22-28
2931 977	3-22-28
2931 978	3-22-28
2932 073	1-74-1
2932 217	23-23-52
2932 218-9	23-23-52
2932 220-1	23-23-52
2932 230	23-63-33
	23-63-100
2932 436-7	23-64-240
2932 445	23-23-65
2932 446-7	23-23-65
2932 448-9	23-23-65
2932 450-1	23-23-65
2932 452-3	23-23-65
2932 464-5	23-23-52
2932 466-7	23-23-52
2932 519	13-72-4
2932 708	23-67-20
2932 709	24-28-195
2932 727	8-20-10
2932 738-9	8-55-194
2932 740-1	8-55-1
2932 742-3	8-55-194
2932 746-7	8-55-194
2932 750-1	8-55-1
2932 752-3	8-55-194
2932 792-3	8-55-194
2932 798	14-73-1
2932 799	14-73-1
2932 807	23-67-160
2932 812	8-52-137
2932 813	8-52-345
2932 814	8-52-342
2932 818	8-41-17
2932 820	21-113-24
2932 824-5	8-55-194
2932 830	23-67-240
2932 831	1-48-88
2932 834	23-41-27

PART NUMBER	CODE
.....	23-54-159
2932 842	24-28-300
2932 843	24-28-300
2932 844-5	8-50-184
2932 848	1-88-160
2932 849	1-88-124
2932 850	1-88-124
2932 868	23-67-252
2932 869	23-67-2
2932 872	23-67-160
2932 873	8-53-150
2932 875	8-50-186
2932 876	8-50-186
2932 877	8-50-186
2932 880-1	1-48-941
2932 881	1-48-941
2932 884	23-67-160
2932 932	8-14-9
2932 954	8-56-8
2932 960	14-72-1
2932 972	24-25-3
2932 973	23-41-34
2932 974	24-24-39
2932 988	8-27-133
.....	8-27-137
2932 993	8-56-8
2932 998	1-48-88
2932 999	1-48-88
2933 000	1-48-88
2933 001	14-41-3
2933 017	14-43-5
2933 020	14-35-1
2933 022	14-43-5
2933 023	14-35-1
2933 042	14-30-8
2933 043	14-30-4
2933 064-5	23-23-65
2933 105	14-30-8
2933 106	14-30-8
2933 157	14-43-5
2933 158	14-43-5
2933 165	14-48-2
2933 179	14-30-7
2933 182	14-39-7
2933 183	14-50-13
2933 185	14-39-7
2933 186	14-50-13
2933 190	14-39-7
2933 191	14-30-7
2933 193	14-41-3
2933 195	14-35-1
2933 196	14-39-7
2933 197	14-30-7
2933 199	14-39-7
2933 204-5	23-14-53
2933 240-1	23-42-56
2933 244-5	23-64-254
2933 249	5-01-2
2933 250	5-01-2
2933 251	5-01-2
2933 252	5-01-2
2933 253	5-01-2
2933 492-3	23-23-52
2933 494-5	23-23-52
2933 496-7	23-23-52
2933 498-9	23-23-52
2933 502-3	23-23-52
2933 504-5	23-23-52
2933 506-7	23-23-52
2933 544-5	23-23-52
2933 546-7	23-23-52
2933 630-1	23-23-52
2933 632-3	23-23-52
2933 634-5	23-23-52
2933 636-7	23-23-52
2933 638-9	23-23-52
2933 640-1	23-23-52
2933 644-5	23-23-52
2933 646-7	23-23-52
2933 648-9	23-23-52
2933 657	13-64-29
2933 684-5	13-64-29
2933 686-7	13-64-29
2933 688-9	23-23-52
2933 690-1	23-23-52
2933 692-3	23-23-52
2933 698-9	23-23-52
2933 700-1	23-23-52
2933 702-3	23-23-52
2933 704-5	23-23-52
2933 706-7	23-23-52
2933 708-9	23-23-52
2933 710-1	23-23-52
2933 712-3	23-23-52
2933 714-5	23-23-52
2933 716-7	23-23-52
2933 930-1	23-09-67
2933 947	23-23-65
2933 962	7-26-2
2933 966-7	23-23-65
2933 973	1-74-1
2934 022	15-03-3
2934 028	23-19-8
2934 072	15-03-3
2934 074	23-19-8
2934 099	23-54-136
2934 198	23-32-46
2934 320-1	23-19-84
2934 364	23-34-80
2934 374	23-51-19
2934 429	23-34-293
2934 451	23-32-17
2934 458	23-51-19
2934 462-3	23-11-1
2934 474-5	23-11-1
2934 496	23-36-53
2934 740	23-66-65
2934 742-3	23-19-84
2934 744	23-19-8
2934 748-9	23-11-1
2934 752-3	23-34-120
2934 754-5	23-34-80
2934 756-7	23-34-80
2934 772	23-34-110
2934 780-1	23-11-1
2934 784-5	23-34-120
2934 786	23-34-80
2934 808-9	23-32-105
2934 810-1	23-32-105
2934 816-7	23-32-116
2934 840	14-88-32
.....	23-32-53
.....	23-32-70
2934 850	15-03-3
2934 856	15-03-3
2934 886	15-03-3
2934 912	23-32-17
2934 926	23-32-115
2934 928	23-32-105
2934 929	23-32-105
2934 936	13-11-5
2934 938	13-11-5
2934 950	23-19-8
2934 953	23-34-17
2934 955	23-19-8
2934 958	23-19-8
2934 967	23-19-8
2934 970	23-19-8
2934 990	23-19-8
2935 004	23-18-5
2935 040-1	23-18-5
2935 062-3	23-18-25
2935 066-7	23-18-11
2935 085	23-18-29
2935 086	23-18-29
2935 105	23-18-20
2935 114-5	23-18-11
2935 118	23-18-21
2935 182	23-14-147
2935 214-5	23-14-27
2935 217	23-21-3
2935 222	15-19-8
2935 231	23-14-24
2935 232	23-14-24
2935 236-7	23-14-10
2935 262-3	23-18-20
2935 264	23-18-20
2935 270-1	23-18-20
2935 272	23-18-20
2935 294-5	23-14-27
2935 326	23-18-107
2935 332	23-48-19
2935 334	23-21-3
2935 335	23-21-3
2935 337	23-21-3
2935 338	23-21-3
2935 339	23-21-3
2935 340	23-21-3
2935 343	23-21-14
2935 351	15-11-3
2935 363	15-11-5
2935 370	15-11-34
2935 371	15-11-34
2935 373	15-11-3
2935 375	15-11-16
2935 376	15-11-74
.....	15-13-2
2935 382-3	23-15-1
2935 386-7	23-39-34
2935 388-9	23-39-34
2935 392-3	23-39-5
2935 394-5	23-39-5
2935 396-7	23-39-5
2935 418	23-47-6
2935 419	23-47-6
2935 420	23-47-6
2935 421	23-47-6
2935 425	23-54-140
2935 432	23-54-1
2935 438	23-54-216
2935 440	23-54-216
2935 444-5	23-58-262
2935 446-7	23-39-29
2935 456-7	23-18-26
2935 458-9	23-18-26
2935 460-1	23-18-26
2935 462-3	23-18-26
2935 559	15-11-17
2935 560	15-19-8
2935 567	23-54-20
2935 569	23-54-144
2935 571	23-54-142
2935 603	23-54-221
2935 604	23-54-214
2935 605	23-54-222
2935 606-7	23-64-76
2935 652-3	23-18-11
2935 656-7	23-18-11
2935 660	23-18-26
2935 662-3	23-18-26
2935 674-5	23-18-25
2935 676	23-18-26
2935 678	23-18-26
2935 696	23-18-125
2935 706	23-18-101
2935 751	23-54-165
2935 758-9	23-47-6
2935 766-7	23-47-6
2935 774-5	23-47-6
2935 778-9	23-47-6
2935 790	23-47-6
2935 791	23-47-6
2935 803	23-17-2
2935 850	23-54-27
2935 854	23-21-18
2935 855	23-21-18
2935 916	23-17-72
2935 920	23-54-217
2935 921	23-54-216
2935 923	23-54-216
2935 924	23-54-216
2935 925	23-54-216
2935 944	23-19-94
2935 997	23-19-94
2936 001	24-28-113
2936 003	24-28-96
2936 004	24-28-96
2936 015	24-29-3
2936 017	24-29-3
2936 020-1	1-48-383
2936 042	24-24-161
2936 061	24-28-73
2936 066	1-48-1
2936 067	1-48-1
2936 068	1-48-1
2936 069	1-48-1
2936 070	1-48-35
2936 073	1-48-125
2936 074	1-48-125
2936 103	1-48-832
2936 106	1-48-832
2936 111	1-48-88
2936 119	1-48-707
2936 124	1-48-125
2936 126	1-48-90
2936 127	1-48-606
2936 131	1-48-611
2936 136	1-48-141
2936 137	1-48-141
2936 138	1-48-141
.....	24-28-73
2936 139	1-48-141
.....	24-28-73
2936 140	24-01-1
2936 141	24-28-8
2936 142	24-28-8
2936 143	24-28-8
2936 145	24-28-43
2936 149	24-28-78
2936 156	24-28-78
2936 157	24-28-78
2936 191	24-28-78
2936 195	24-28-73
2936 198	24-28-73
2936 199	24-28-73
2936 201	1-48-88
2936 203	24-28-225
2936 204	24-28-225
2936 214	24-28-207
2936 215	24-28-211
2936 228	24-28-8
2936 233	24-01-70
2936 237	24-29-6
2936 239	24-01-18
2936 263	24-28-335
2936 266	24-28-339
2936 267	24-28-334
2936 270	24-28-92
2936 271	24-28-99
2936 278	24-24-67
2936 288	24-28-128
2936 296	24-27-5
2936 297	24-27-5
2936 298	1-48-572
2936 302	24-28-73
2936 303	24-28-73
2936 308	24-28-73
2936 309	24-28-73
2936 312	24-28-92
2936 314	1-48-141
.....	24-28-78
2936 320	1-48-141
.....	24-28-73
2936 324	24-28-73
2936 327	24-28-73
2936 330	24-28-73
2936 342	24-28-73
2936 346	1-47-22
.....	1-48-5
2936 347	1-47-14
.....	1-48-5
2936 350	24-24-44
2936 355	24-01-18
2936 357	24-24-67
2936 358	24-28-13
2936 363	24-24-150
2936 364	24-24-154
2936 365	24-24-5
2936 370	24-24-41
2936 372	1-48-141
.....	24-28-78
2936 380	1-48-141
.....	24-28-73
2936 388	1-48-555
2936 391	24-28-406
2936 410	24-28-8
2936 411	24-28-8
2936 414	24-01-1
2936 421	24-28-220
2936 424	24-28-220
2936 438	24-28-300
2936 474	24-26-35
2936 479	24-24-53
2936 480	24-24-53
2936 481	24-24-53
2936 485	24-27-5
2936 486	24-28-6
2936 490	24-01-36
2936 495	24-01-36
2936 498	24-26-100
2936 502	24-01-70
2936 503	24-28-92
2936 507	24-28-211
2936 513	1-48-1
2936 517	1-48-854
2936 519	1-48-707
2936 522	1-48-707
2936 523-4	1-48-707
2936 536	1-48-55
2936 547	1-48-55
2936 550	1-48-55
2936 559	24-01-41
2936 574	24-26-100
2936 584	24-28-220
2936 599	24-28-334
2936 602	1-48-1
2936 604	1-48-90
2936 605	1-48-362
2936 608	1-48-126
2936 610	1-48-156

PART NUMBER	CODE
2936 612	1-48-707
2936 622	1-48-125
2936 627	1-88-6
2936 641	1-48-141
2936 642	1-48-707
2936 666	24-24-16
2936 680	1-48-1
2936 681	1-48-1
2936 687	24-28-195
2936 690	24-29-9
2936 706	1-48-559
	24-28-29
2936 715	24-28-326
2936 721	24-26-100
2936 723	24-26-100
2936 724	24-26-100
2936 739	24-28-113
2936 742	24-26-100
2936 745	24-29-3
2936 748	24-28-318
2936 750	24-01-34
2936 754	24-24-150
2936 757	1-48-572
	24-01-87
2936 778	24-27-5
2936 783	24-28-302
2936 794	24-26-100
2936 809	1-48-719
2936 812	1-48-720
2936 823	24-28-78
2936 824	24-28-78
2936 825	24-28-78
2936 832	24-28-78
2936 839	24-28-73
2936 842	24-28-73
2936 844	24-28-380
2936 847	24-28-78
2936 864	1-48-1
2936 868	1-48-90
2936 885	1-47-1
2936 886	24-28-17
2936 887	24-28-17
2936 892	24-01-1
2936 894	24-28-43
2936 897	24-28-220
2936 917	24-28-40
2936 927	24-01-1
2936 930	24-28-211
2936 933	24-28-92
2936 934	24-01-18
2936 952	24-29-1
2936 957	24-01-70
2936 958	24-01-18
2936 962	24-29-1
2938 176	24-25-107
2938 219	24-25-107
2938 227	24-25-107
2938 228	24-25-107
2938 229	24-25-107
2938 230	24-25-107
2941 846	24-25-107
2941 875	24-25-5
2941 891	24-25-107
2942 333	1-87-25
2942 445	23-26-75
2942 446	23-26-75
2942 504	23-26-75
2942 556	23-47-28
2942 590	23-47-456
2942 686	23-45-55
2942 688-9	23-45-55
2942 690-1	23-45-76
	23-45-185
2942 849	23-45-51
2943 010	23-26-84
2944 006	5-100-2
2944 009	5-100-20
2944 019	5-100-34
2944 020	5-100-26
2944 022	5-105-14
2944 037	5-100-2
2944 041	5-100-2
2944 103	5-31-14
2944 108	5-100-2
2944 116	5-100-20
2944 127	5-105-14
2944 149	22-01-5
2944 155	22-01-5
2944 160	5-100-2
2944 169	22-01-5
2944 196	5-47-2
2944 222	5-44-6
2944 225	5-39-20
2944 227	5-39-24
2944 252	22-01-5
2944 286	5-100-189
2944 289	5-100-20
2944 290	5-100-198
2944 309	5-100-2
2944 352	22-01-5
2944 381	5-39-29
2944 386	8-58-66
2944 388	22-01-5
2944 390	22-01-5
2944 394	22-01-5
2944 395	22-01-5
2944 424	22-01-41
2944 443	22-01-43
2944 446	22-01-43
2944 447	22-01-49
2944 450	22-01-5
2944 453	5-39-3
2944 465	5-39-20
2944 466	5-39-24
2944 467	5-39-29
2944 474	22-01-5
2944 476	5-39-3
2944 477	5-39-3
2944 479	5-39-3
2944 482	5-39-12
2944 486	5-100-2
2944 487	5-100-189
2944 488	5-100-115
2944 489	5-100-2
2944 490	5-100-2
2944 497	5-100-62
2944 499	5-47-2
	5-100-20
2944 580-1	5-20-20
2944 586	5-20-17
2944 674-5	5-03-6
2944 676-7	5-03-6
2944 678-9	5-03-6
2944 680-1	5-03-6
2944 682-3	5-03-6
2944 684-5	5-03-6
2944 686-7	5-03-6
2944 688-9	5-03-6
2944 690-1	5-03-6
2944 692-3	5-20-15
2944 702	22-05-14
2944 702-3	22-05-14
2944 704	5-05-17
	5-13-22
2944 710-1	5-05-16
2944 712-3	5-05-1
2944 719	5-05-41
2944 722-3	5-05-46
2944 727	5-05-43
2944 733	5-05-26
2944 822-3	22-03-1
2944 844	5-20-4
2944 988	5-57-2
2944 989	5-57-2
2945 038-9	23-15-3
2945 048	23-54-107
2945 065	23-54-142
2945 066	23-54-140
2945 082-3	23-18-11
2945 103	23-21-16
2945 108	23-18-29
2945 108-9	23-18-29
2945 109	23-18-29
2945 110	23-54-222
2945 115	23-54-88
	23-64-282
2945 126	23-39-44
	23-41-7
2945 162	23-54-4
2945 206	23-21-14
2945 209	23-21-14
2945 236-7	23-18-26
2945 246-7	23-18-25
2945 250	23-18-26
2945 254-5	23-18-25
2945 258	23-18-26
2945 266	23-18-26
2945 270-1	23-18-11
2945 277	23-18-124
2945 300	15-19-8
2945 362	23-54-187
2945 364	23-54-216
2945 395	23-48-90
2945 399	23-19-123
2945 400	23-17-11
2945 404-5	23-58-266
2945 416-7	23-48-70
2945 422	23-48-20
2945 428	23-18-20
2945 442	23-32-87
2945 460	23-48-90
2945 461	23-48-67
2945 467	23-48-67
2945 471	23-54-1
2945 510	23-39-44
	23-41-7
2945 511	23-14-24
2945 512	23-14-24
2945 544	23-47-15
2945 545	23-54-74
2945 550-1	23-64-75
2945 560-1	23-41-4
2945 572-3	23-18-107
2945 578-9	23-18-13
2945 600-1	23-14-10
2945 603	23-21-19
2945 608	23-21-3
2945 610	23-21-3
2945 615	23-18-37
2945 646	23-18-107
2945 655	23-64-12
2945 670-1	23-14-10
2945 676	23-18-11
2945 679	23-47-433
2945 704	15-03-100
	23-47-436
	24-28-16
2945 734	23-18-26
2945 736-7	23-18-25
2945 780	23-18-5
2945 792	23-47-430
2945 795	23-47-432
2945 796	23-47-432
2945 797	23-47-432
2945 798	23-47-432
2945 798-9	23-47-432
2945 801	23-47-432
2945 808	23-14-147
	23-64-199
2945 813	23-54-5
2945 828-9	23-39-5
2945 842-3	15-19-2
2945 845	15-11-34
2945 860	23-54-27
2945 894	23-18-124
2945 895	23-18-124
2945 899	23-54-141
2945 921	23-47-431
2945 922	23-47-431
2945 923	23-47-431
2945 924	23-47-431
2945 925	23-47-431
2945 926	23-47-431
2945 927	23-47-431
2945 937	23-47-430
2945 940	23-47-430
2945 944-5	23-47-6
2945 950-1	23-41-4
2945 952-3	23-41-4
2945 955	23-21-3
2945 966-7	23-39-5
2945 968-9	23-39-5
2945 996-7	23-41-4
2946 008	9-03-28
2946 011	9-03-28
2946 051	10-01-54
2946 052	10-01-54
2946 054	9-03-28
2946 057	9-03-28
2946 063	9-03-28
2946 070	9-03-28
2946 072	9-03-28
2946 075	9-03-28
2946 079	10-01-23
2946 083	9-62-1
2946 084	9-48-6
2946 104	14-29-2
2946 105	9-50-5
2946 107	9-62-1
2946 134	24-25-10
2946 174	14-29-8
2946 186	14-29-6
2946 188	14-29-7
2946 275	9-48-7
2946 389	14-29-9
2946 393	14-29-7
2946 394	14-29-9
2946 443	8-36-4
2946 522	14-39-45
2946 529	14-65-6
2946 530	14-65-5
2946 531	14-30-2
2946 532	14-39-45
2946 535	14-39-45
2946 536	14-39-45
2946 537	14-39-45
2946 539	14-39-45
2946 540	14-30-2
2946 541	14-30-2
2946 542	14-30-2
2946 543	14-30-2
2946 546	14-02-18
2946 547	14-02-18
2946 548	14-39-45
2946 549	14-30-2
	14-39-45
2946 550	14-02-15
2946 604	21-142-12
2946 609	21-142-12
2946 617	14-06-1
2946 619	14-24-6
2946 620	14-24-17
2946 621	14-24-1
2946 624	14-11-9
2946 637	14-06-1
2946 638	14-06-10
2946 639	14-11-9
2946 640	14-11-3
2946 648	14-11-18
2946 659	14-11-48
2946 661	14-11-9
2946 663	14-11-9
2946 665	14-11-9
2946 667	14-11-9
2946 669	14-11-9
2946 676	14-01-1
2946 684	14-11-1
2946 688	14-11-1
2946 694	14-06-1
2946 696	14-06-1
2946 700	14-25-11
2946 713	7-06-1
2946 716	7-06-14
2946 765	19-54-86
2946 789	7-06-1
2947 005	8-35-95
2947 007	8-19-83
2947 023	23-67-258
2947 040	24-24-140
2947 041	1-87-22
2947 065	8-53-284
2947 066	8-53-287
2947 073	8-19-83
2947 084	8-53-296
2947 089	8-50-82
2947 109	8-40-5
2947 114	23-33-216
2947 119	8-42-1
2947 122	8-42-1
2947 123	8-42-1
2947 124	8-42-1
2947 133	1-87-58
2947 142	1-87-22
2947 154	8-19-83
2947 163	1-48-374
2947 164	8-53-294
2947 167	23-33-12
2947 169	1-47-15
2947 180	8-39-9
2947 181	8-53-294
2947 182	24-24-140
2947 185	23-58-543
2947 186	1-47-15
2947 187	23-54-170
2947 202	8-37-75
2947 218	8-38-23
2947 219	8-20-1
2947 220	1-87-2
2947 223	1-87-2
2947 226	23-33-149
2947 234	1-87-2
2947 245	8-19-83
2947 246	1-47-23
	23-54-170
	23-58-548
2947 249	8-53-296
2947 256	23-67-160
2947 258	1-48-770
2947 260	1-48-770
2947 262	1-47-7

PART NUMBER	CODE
2947 263	23-54-169
	23-58-534
2947 282	8-58-79
2947 284	21-30-28
2947 285	8-38-23
2947 286	8-13-2
2947 296	8-37-15
2947 298	8-37-15
2947 305	8-53-270
2947 359	1-87-180
2947 378	1-48-10
2947 380	8-53-296
	23-67-194
2947 389	8-19-83
2947 390	8-37-15
2947 392	8-53-283
2947 393	8-53-283
2947 394	8-53-283
2947 395	8-53-283
2947 404	23-67-160
2947 406	23-58-532
2947 411	1-47-7
2947 439	23-67-194
2947 444	1-87-58
2947 445	8-37-75
2947 449	8-53-270
2947 484	1-87-22
2947 486	8-35-59
2947 488	8-35-59
2947 493	8-11-2
	23-34-309
2947 500	8-50-129
2947 501	8-50-129
2947 503	8-50-82
2947 516	8-13-1
2947 517	8-13-1
2947 520	8-53-286
2947 524	8-50-129
2947 532	8-58-79
2947 533	8-58-79
2947 534	8-05-28
2947 535	8-05-28
2947 536	8-50-82
2947 553	21-30-28
2947 556	1-47-8
	23-54-169
	23-58-534
2947 560	8-12-2
2947 562	8-12-4
2947 588	8-53-296
2947 591	8-37-75
2947 664	8-53-275
2947 665	23-58-543
2947 666	1-47-15
2947 672	1-87-58
2947 673	1-87-22
2947 678	8-53-294
2947 679	8-53-294
2947 696	8-53-283
2947 716	8-11-12
2947 719	8-35-59
2947 720	8-35-59
2947 723	1-87-58
2947 724	21-30-21
2947 751	8-40-5
2947 753	8-40-5
2947 754	8-40-5
2947 756	23-33-135
2947 757	23-33-135
2947 758	23-33-135
2947 763	8-53-270
2947 764	8-14-23
2947 767	8-53-294
2947 768	8-53-294
2947 769	8-53-294
2947 770	8-53-294
	23-33-135
2947 771	8-53-294
2947 772	8-14-23
2947 773	8-53-294
2947 776	15-03-84
2947 777	15-03-85
2947 783	8-53-294
2947 785	8-53-289
	23-33-135
2947 789	8-53-289
2947 790	8-53-289
2947 791	8-53-294
2947 798	8-58-60
2947 801	8-50-82
2947 802	8-50-82
2947 820	8-53-289
2947 822	8-53-294
2947 823	8-53-294
2947 824	8-53-294
2947 832	1-87-2
2947 839	8-50-129
2947 840	8-37-75
2947 844	8-12-2
2947 845	8-11-16
	23-34-309
2947 856	8-52-42
2947 857	8-52-42
2947 858	8-52-42
2947 859	8-52-42
2947 866	8-53-285
2947 868	8-53-286
2947 874	8-33-121
2947 881	1-87-2
2947 882	1-87-2
2947 883	1-87-2
2947 884	1-87-2
2947 893	8-37-75
2947 895	24-24-140
2947 896	8-50-191
2947 903	21-30-21
2947 905	8-50-82
2947 912	8-05-2
2947 915	8-40-5
2947 920	23-67-160
2947 924	8-38-24
2947 928	8-05-2
2947 931	8-37-75
2947 933	8-37-75
2947 935	21-30-28
2947 944	21-30-15
2947 950	8-50-129
2947 951	8-50-129
2947 952	8-50-129
2947 953	8-50-129
2947 954	8-50-129
2947 955	8-50-129
2947 956	8-50-129
2947 963	8-50-129
2948 077	17-23-3
2948 090-1	13-54-15
2948 468	15-03-86
2948 604-5	2-10-55
2948 606-7	2-10-55
2948 608-9	2-10-55
2948 614-5	2-10-55
2948 616-7	2-10-55
2948 624	19-27-31
2948 713	19-27-2
2948 716	2-10-10
2948 723	17-29-5
2948 728-9	2-03-3
2948 801	19-19-19
2948 852	19-15-38
2948 855	19-15-38
2948 856	19-19-24
2948 857	19-19-7
2948 859	19-19-35
2948 893	19-19-4
2948 896	19-01-60
2948 897	19-15-38
2948 900	19-02-4
2948 971	19-19-19
2948 991	19-02-4
2948 994	19-02-4
2949 102	12-06-3
2949 153	15-03-67
2949 173	8-14-15
2949 176	7-08-13
2949 188	7-16-25
2949 194-5	15-03-64
2949 204	8-34-291
2949 222	15-03-63
2949 228	12-02-7
2949 229	15-03-74
2949 233	15-03-67
2949 241	8-44-1
2949 250	15-09-4
2949 254	8-14-18
2949 273	15-09-19
2949 305	7-16-19
2949 306-7	8-34-40
2949 311	7-16-19
2949 312	12-07-1
2949 339	7-16-11
2949 348-9	8-34-40
2949 357	7-16-11
2949 361	8-14-17
2949 362	8-14-2
2949 368	7-16-25
	8-34-31
2949 412-3	12-01-105
2949 414-5	12-01-105
2949 424	8-14-20
2949 425	7-17-13
2949 449	15-03-51
2949 454-5	12-04-25
2949 456-7	12-04-25
2949 460	7-26-32
2949 468	15-03-86
2949 471	15-03-76
2949 472	15-03-67
2949 473	7-17-1
2949 476-7	15-03-64
2949 478-9	15-03-65
2949 483	7-16-22
2949 498-9	15-03-67
2949 524	7-26-15
2949 526	7-16-11
2949 535	7-26-30
2949 548	7-16-11
2949 550-1	8-34-40
2949 552	7-33-1
2949 554	15-11-46
2949 558	7-16-11
2949 577	7-16-11
2949 584	15-11-46
2949 594-5	7-26-30
2949 598	7-26-30
2949 599	7-26-30
2949 602	7-26-32
2949 608	15-03-5
2949 609	15-03-60
2949 617	15-09-4
2949 621	8-34-362
2949 646-7	8-34-40
2949 658	15-09-4
2949 683	7-16-11
2949 687	7-16-11
2949 688-9	8-34-40
2949 690-1	8-34-362
2949 704	7-16-22
2949 710-1	8-34-40
2949 712-3	8-34-362
2949 716	7-16-11
2949 724-5	8-34-37
2949 726-7	8-34-362
2949 734	7-16-11
2949 735	8-34-54
2949 758	7-16-11
2949 759	7-16-11
2949 770-1	8-34-40
2949 782	7-26-15
2949 806-7	8-34-32
2949 808-9	7-16-11
2949 831	15-03-60
2949 850-1	12-04-4
2949 858	12-04-23
2949 860	7-16-11
2949 862	7-16-61
2949 874	7-33-1
2949 875	15-11-46
2949 902	12-04-23
2949 922	7-26-15
2949 942-3	8-34-32
2949 960	7-16-22
2949 964-5	8-34-40
2949 968	7-16-36
2949 970	7-16-36
2949 977	7-33-1
2949 992	7-16-61
2949 993	7-17-1
2949 997	7-16-11
2950 011	5-27-1
2950 013	5-27-1
2950 016	5-31-11
2950 018	5-27-1
2950 024	6-52-5
2950 025	6-52-4
2950 043	19-48-46
2950 044	19-48-46
2950 051	21-30-418
2950 052	21-30-418
2950 053	21-30-418
2950 060	21-30-407
2950 074	21-30-413
2950 080	6-50-1
2950 086	6-50-1
2950 088	6-35-15
2950 091	6-52-1
2950 102	4-25-3
2950 115	4-25-20
2950 117	4-25-22
2950 121	4-08-1
2950 122	4-08-3
2950 124	4-23-1
2950 139	21-30-2
2950 148	19-14-49
2950 150	9-14-36
	19-14-36
2950 151	19-14-23
2950 171	19-14-10
	19-14-23
2950 182	8-33-39
2950 189	8-33-4
2950 196	8-33-6
2950 201	21-30-413
2950 205	21-30-416
2950 206	21-30-416
2950 210	21-30-353
2950 211	21-30-418
2950 212	21-30-418
2950 213	21-30-6
2950 217	21-30-6
2950 238	6-52-1
2950 251	6-52-1
2950 262	5-31-11
2950 265	5-31-15
2950 269	5-27-1
2950 276	5-27-1
2950 279	5-28-8
2950 288	6-24-1
2950 289	5-27-2
2950 290	6-43-1
2950 297	19-48-1
2950 298	19-48-1
2950 300	19-48-46
2950 301	4-25-1
2950 308	4-23-1
2950 309	4-23-1
2950 312	4-25-10
2950 315	4-25-1
2950 318	4-25-14
2950 320	4-25-1
2950 467	21-30-100
2950 471	21-30-26
2950 472	21-30-21
2950 473	21-30-23
2950 475	19-46-8
2950 480	21-30-11
2950 483	19-14-1
2950 486	19-46-3
2950 487	19-15-4
2950 491	19-15-28
2950 492	19-31-1
2950 504	19-14-27
2950 549	19-14-4
2950 562	21-30-11
2950 569	19-14-27
2950 570	19-14-27
2950 571	19-14-51
2950 575	8-33-20
2950 601	19-14-23
2950 652	21-30-403
2950 680	6-46-10
2950 684	5-31-11
2950 686	5-31-11
2950 696	6-50-1
2950 713	21-30-6
2950 715	21-30-10
2950 716	21-30-13
2950 750	21-30-407
2950 779	8-33-5
2950 780	8-33-5
2950 781	8-33-4
2950 797	8-33-4
2950 812	19-14-59
2950 814	19-14-23
2950 817	19-14-21
2950 820	19-46-8
2950 823	19-14-120
2950 826	19-14-21
2950 829	19-46-8
2950 832	19-14-120
2950 835	19-46-8
2950 838	19-31-1
2950 839	19-14-82
2950 840	19-14-48
2950 843	19-14-121
2950 844	19-46-29
2950 852	21-30-418
2950 853	21-30-418
2950 854	21-30-418
2950 873	5-31-15
2950 874	5-31-15

PART NUMBER	CODE
2950 877	5-27-1
2950 878	5-27-1
2950 883	5-31-12
2950 887	5-28-8
	6-39-2
2950 889	6-50-1
2950 898	5-28-9
	6-39-9
2950 899	5-28-8
2950 900	5-28-9
2950 901	6-52-1
2950 909	19-48-46
2950 910	19-48-46
2950 913	6-52-1
2950 914	6-52-1
2950 918	6-35-15
2950 920	19-48-46
2950 921	6-35-1
2950 922	6-35-1
2950 923	6-35-1
2950 936	6-35-1
2950 939	21-30-407
2950 940	21-30-406
2950 941	21-30-406
2950 942	21-30-416
2950 943	21-30-2
2950 946	21-30-421
2950 947	21-42-23
2950 948	21-42-23
2950 950	21-30-2
2950 952	19-14-35
2950 954	19-14-35
2950 956	19-14-37
2950 961	19-14-49
2950 963	19-14-4
2950 965	21-30-2
2950 968	21-30-2
2950 969	21-30-2
2950 970	21-30-2
2950 971	21-30-2
2950 976	21-30-2
2950 978	19-15-4
2950 980	19-14-82
2950 987	21-30-23
2950 988	21-30-11
2950 989	19-14-23
2951 014	1-48-573
2951 015	8-28-36
2951 018	8-28-15
2951 020	7-04-5
2951 075	19-54-115
2951 092	7-06-14
2951 122	7-06-1
2951 124	9-48-6
2951 126	19-54-115
2951 128	19-54-86
2951 154	8-28-15
2951 155	8-28-36
2951 157	19-54-86
2951 159	7-03-1
2951 161	7-03-1
2951 176	7-04-10
2951 184	9-48-7
2951 192	14-73-2
2951 196	19-54-115
2951 198	19-54-115
2951 202	7-03-1
2951 203	19-54-86
2951 207	19-54-86
2951 217	9-48-6
2951 242	14-62-1
2951 262	9-31-4
2951 267	9-03-29
2951 280	7-03-1
2951 285	9-50-5
2951 296	8-28-35
2951 299	8-28-15
2951 303	9-02-62
2951 304	7-03-1
2951 314	10-24-4
2951 334	9-46-33
2951 347	8-36-124
2951 355	14-29-8
2951 371	14-29-26
2951 378	10-01-62
2951 390	14-29-19
2951 391	14-29-2
2951 393	14-29-15
2951 394	14-29-15
2951 450	14-06-1
2951 455	14-25-11
2951 458	14-25-11
2951 459	14-25-11
2951 471	14-06-1
2951 477	14-11-1
	14-11-20
2951 484	14-06-10
2951 485	14-11-40
2951 486	14-11-9
2951 487	14-11-9
2951 489	14-26-6
2951 493	14-11-9
2951 495	14-11-9
2951 496	14-14-1
2951 521	9-01-24
2951 526	9-01-24
2951 534	8-36-4
2951 535	8-36-4
2951 536	8-36-4
2951 544	14-39-48
	14-65-6
2951 545	14-39-46
	14-65-5
2951 546	8-36-4
2951 564	10-24-4
2951 569	10-23-7
2951 599	9-67-4
2951 601	9-64-24
2951 614	7-03-1
2951 623	9-01-24
2951 626	9-59-13
2951 627	9-59-15
2951 628	9-48-6
2951 640	8-28-36
2951 651	14-39-45
2951 652	14-39-45
2951 653	14-39-45
2951 665	9-48-7
2951 669	9-48-7
2951 671	9-23-5
2951 673	9-13-5
2951 675	14-29-2
2951 693	9-02-5
2951 694	9-02-5
2951 737	9-48-7
2951 746	8-28-36
2951 747	19-54-115
2951 749	8-28-36
2951 755	14-29-19
2951 757	14-29-7
2951 761	14-29-19
2951 765	14-29-19
2951 767	14-29-8
2951 781	14-29-34
2951 786	14-29-19
2951 789	14-29-7
2951 790	14-29-4
2951 800	14-29-24
2951 806	7-43-1
2951 809	24-25-15
2951 822	24-25-15
2951 834	8-28-36
2951 835	8-28-15
2951 836	7-06-14
2951 838	7-46-1
2951 841	9-48-6
2951 852	19-54-115
2951 860	9-48-6
2951 864	9-48-6
2951 866	24-25-15
2951 868	8-28-36
2951 870	9-59-13
2951 871	14-62-1
2951 873	14-62-1
2951 889	14-30-2
2951 898	7-03-1
2951 901	19-54-86
2951 906	9-31-4
2951 913	14-62-1
2951 914	14-62-1
2951 915	9-48-6
2951 922	10-26-12
2951 959	9-59-15
2951 979	9-07-5
2951 984	7-03-1
2951 985	19-54-115
2951 987	19-54-115
2951 989	19-54-86
2951 996	10-26-12
2953 805	3-19-1
2954 031	3-19-15
2955 837	3-06-5
2962 003	23-32-31
2962 010	23-32-17
2962 014	23-32-17
2962 030-1	2-08-70
2962 032-3	13-64-4
2962 040	13-10-1
2962 066-7	23-32-115
2962 074	13-10-1
2962 076	23-32-17
2962 080	23-32-17
2962 082	23-32-17
2962 090	23-32-17
2962 092	23-32-17
2962 094	23-32-17
2962 127	11-05-1
2962 163	11-10-20
2962 212	14-88-27
2962 213	14-86-40
2962 275	13-64-3
2962 280-1	13-64-4
2962 284-5	13-64-4
2962 288-9	13-68-6
2962 290	13-68-18
2962 292	13-68-12
2962 294	13-64-3
2962 295	13-64-3
2962 300	13-66-3
2962 306-7	13-66-16
2962 310	13-68-6
2962 312	13-68-43
2962 316	13-68-15
2962 318	13-68-43
2962 320-1	13-64-4
2962 322-3	13-64-4
2962 325	13-66-3
2962 330-1	13-64-4
2962 334-5	13-64-4
2962 336	8-47-8
2962 340-1	13-68-6
2962 342	13-68-18
2962 346	13-64-22
2962 347	13-64-22
2962 348	13-64-3
2962 350	13-66-3
2962 354-5	13-66-16
2962 358-9	13-68-6
2962 360	13-68-18
2962 361	13-68-43
2962 362	13-68-20
2962 366-7	13-68-6
2962 375	13-64-3
2962 376	13-64-3
2962 377	13-64-3
2962 378	13-64-3
2962 380	13-64-3
2962 381	13-64-3
2962 385	13-66-3
2962 386	13-66-3
2962 387	13-66-3
2962 390	13-66-3
2962 391	13-66-3
2962 392	13-66-3
2962 393	13-66-3
2962 395	13-66-3
2962 396	13-66-3
2962 400	13-64-3
2962 406-7	13-64-4
2962 408-9	13-64-4
2962 410-1	13-64-4
2962 416-7	13-68-6
2962 421	13-66-3
2962 422	13-66-3
2962 423	13-66-3
2962 425	13-66-3
2962 430-1	13-66-16
2962 436-7	13-68-6
2962 440	13-66-95
2962 442-3	13-64-4
2962 446-7	13-64-4
2962 450	13-64-3
2962 456-7	13-64-4
2962 460-1	13-64-4
2962 462	13-64-28
2962 468-9	13-68-6
2962 475	13-66-3
2962 480-1	13-66-16
2962 483	13-68-6
2962 484	13-68-20
2962 490	13-72-3
2962 491	13-72-3
2962 492	13-72-3
2962 504	13-64-3
2962 506-7	13-64-3
2962 510-1	13-64-4
2962 514-5	13-64-4
2962 518-9	13-64-4
2962 521	13-64-4
2962 523	13-64-4
2962 527	13-68-18
2962 530	13-68-18
2962 532	8-47-8
2962 538	13-68-6
2962 539	13-64-19
2962 544-5	13-64-22
2962 546	13-64-72
2962 550	13-66-3
2962 556-7	13-66-16
2962 560	13-68-18
2962 564-5	13-68-6
2962 576	13-64-3
2962 584-5	13-64-4
2962 588-9	13-64-4
2962 595	13-64-4
2962 597	13-64-4
2962 598	8-47-8
2962 602	13-64-72
2962 608-9	13-68-6
2962 614	13-64-72
2962 615	13-68-18
2962 622	13-64-32
2962 624	13-64-22
2962 633	13-64-150
2962 650	13-64-3
2962 651	13-64-3
2962 656-7	13-64-4
2962 660-1	13-64-4
2962 664-5	13-64-72
2962 666	8-47-8
2962 672-3	13-68-6
2962 675	13-64-72
2962 676	13-64-150
	15-11-7
2962 689	13-72-3
2962 690	13-72-3
2962 691	13-72-3
2962 698	13-72-3
2962 702	13-68-25
2962 704	13-66-136
2962 705	13-66-136
2962 708-9	13-68-6
2962 710	13-66-151
2962 714	13-66-37
2962 717	13-68-25
2962 725	13-66-3
2962 727	13-66-3
2962 734-5	13-66-16
2962 736-7	13-66-16
2962 738-9	13-66-44
2962 740	13-66-21
2962 744	13-66-3
2962 746	13-66-151
2962 748	13-66-151
2962 750	13-64-3
2962 754-5	13-64-26
2962 758-9	13-64-4
2962 762-3	13-64-4
2962 770-1	13-68-6
2962 772	13-68-18
2962 777	13-64-4
2962 781	13-64-72
2962 783	13-64-72
2962 784	13-64-72
2962 787	13-64-150
2962 794-5	13-64-72
2962 800	13-66-3
2962 804	13-66-3
2962 809	13-66-31
2962 812-3	13-66-16
2962 814-5	13-66-16
2962 816-7	13-66-44
2962 819	13-68-6
2962 823	13-66-21
2962 826	13-66-136
2962 827	13-66-37
2962 830	13-66-21
2962 836	13-68-12
2962 843	13-68-12
2962 846	13-66-3
2962 850	13-64-3
2962 852-3	13-64-26
2962 854	13-64-26
2962 858-9	13-64-72
2962 860-1	13-64-26
2962 864	13-64-26
2962 866	13-64-29
2962 868-9	13-64-4
2962 871	13-68-6
2962 872	13-68-18

PART NUMBER	CODE
2962 875	13-66-3
2962 878	13-66-3
2962 881	13-66-21
2962 885	13-66-3
2962 896-7	13-68-6
2962 898	13-68-18
2962 900	13-66-46
2962 902-3	13-68-20
2962 908-9	13-66-16
2962 912-3	13-66-16
2962 921	13-66-21
2962 925	13-64-3
2962 926-7	13-64-26
2962 929	13-64-72
2962 930	13-64-26
2962 934	13-66-3
2962 936-7	13-66-2
2962 938-9	13-66-2
2962 940	13-66-31
2962 943	13-66-46
2962 944	13-66-46
2962 945	13-66-46
2962 946	13-66-46
2962 947	13-66-46
2962 948	13-66-46
2962 949	13-66-46
2962 950-1	13-66-40
2962 955	13-66-31
2962 996	13-72-3
2962 997	13-72-3
2963 017	23-32-29
2963 022-3	23-32-25
2963 030-1	23-32-92
2963 035	23-32-22
2963 036	23-32-24
2963 038	23-32-48
2963 040-1	23-51-5
2963 042-3	23-51-5
2963 044-5	23-51-5
2963 046	23-32-93
2963 048	17-11-40
2963 052	23-32-27
2963 054	23-32-27
2963 058	23-32-115
2963 059	23-32-115
2963 078-9	23-32-93
2963 086-7	23-51-5
2963 088-9	23-51-5
2963 098	23-39-48
	23-39-49
2963 102	23-32-49
2963 103	23-32-49
2963 104-5	23-32-49
2963 144-5	23-34-235
2963 148-9	23-34-234
2963 154-5	23-34-234
2963 156-7	23-34-234
2963 158-9	23-34-27
2963 160-1	23-34-27
2963 162-3	23-34-27
2963 166-7	23-36-53
2963 174-5	23-34-246
2963 180-1	23-63-33
2963 185	23-64-12
2963 220-1	23-59-35
2963 222-3	23-59-35
2963 228-9	23-63-21
2963 232-3	23-63-104
2963 261	23-34-167
2963 262	23-34-166
2963 263	23-34-166
2963 272	23-64-314
2963 273	23-64-314
2963 274	23-64-314
2963 275	23-64-314
2963 282-3	23-26-41
2963 284-5	23-26-41
2963 296	23-34-301
2963 297	23-34-301
2963 300-1	23-40-85
2963 302-3	23-40-85
2963 304-5	23-40-85
2963 312-3	23-63-55
2963 314-5	23-63-55
2963 318	23-63-37
2963 322-3	23-59-56
2963 324-5	23-59-56
2963 358-9	23-19-177
2963 360-1	23-19-177
2963 364-5	23-19-84
2963 374	23-19-99
2963 375	23-63-172
2963 376	23-63-172
2963 379	13-66-106
2963 385	23-34-166
2963 386-7	23-34-235
2963 390	23-34-166
2963 393	13-66-106
2963 394	23-32-13
2963 409	19-46-34
2963 411	19-46-26
2963 422-3	23-19-82
2963 426-7	23-59-56
2963 428-9	23-63-55
2963 436	23-32-116
2963 436-7	23-32-116
2963 437	23-32-116
2963 482-3	23-58-84
2963 494	23-64-12
2963 496-7	23-63-21
2963 502-3	23-19-82
2963 504-5	23-19-82
2963 510-1	23-34-242
2963 516-7	23-34-242
2963 522-3	23-34-242
2963 528-9	23-34-242
2963 540-1	23-34-242
2963 546-7	23-34-242
2963 548-9	23-34-242
2963 554-5	23-34-242
2963 574	23-34-281
2963 586-7	23-34-246
2963 590-1	23-34-246
2963 594-5	23-59-35
2963 596-7	23-59-35
2963 598-9	23-59-35
2963 600-1	23-59-35
2963 602-3	23-59-35
2963 606	23-34-167
2963 607	23-34-167
2963 608	23-34-167
2963 609	23-34-167
2963 610	23-34-167
2963 614	23-34-179
2963 616	23-34-179
2963 638-9	23-34-245
2963 640-1	23-34-244
2963 662-3	23-34-246
2963 666-7	23-34-234
2963 668-9	23-36-53
2963 670-1	23-34-231
2963 672-3	23-32-17
2963 681	23-58-220
2963 682	23-64-12
2963 696-7	23-34-231
2963 700-1	23-40-92
2963 702-3	23-34-22
2963 706-7	23-34-246
2963 710-1	23-40-92
2963 712-3	23-34-22
2963 716-7	23-40-85
2963 718-9	23-40-85
2963 728-9	23-34-235
2963 730-1	23-34-235
2963 732-3	23-34-235
2963 736-7	23-34-235
2963 738-9	23-34-235
2963 745	23-32-49
2963 746-7	23-32-17
2963 748-9	23-34-242
2963 750	23-34-257
2963 752	23-34-179
2963 754-5	23-32-111
2963 806-7	23-34-235
2963 808-9	23-34-235
2963 810-1	23-34-235
2963 898-9	23-34-235
2963 903	23-34-179
2963 904-5	23-34-246
2963 906-7	23-34-179
2963 920-1	23-34-235
2963 922-3	23-34-235
2963 927	23-32-49
2963 928-9	23-59-35
2963 932-3	23-34-242
2963 940-1	23-51-16
2963 970	23-64-314
2963 971	23-64-314
2963 972	23-63-112
2963 973	17-19-21
2963 988-9	23-32-56
2963 999	13-72-7
2964 104-5	23-51-41
2964 125	23-66-69
2964 134	23-66-65
2964 142	23-22-145
2964 150-1	23-58-230
2964 160-1	23-63-33
2964 168-9	23-36-53
2964 170-1	23-36-53
2964 180-1	23-34-246
2964 182-3	23-34-246
2964 184	23-59-37
2964 186	23-59-37
2964 194-5	23-34-257
2964 196-7	23-34-257
2964 210-1	23-34-27
2964 212-3	23-34-27
2964 214-5	23-34-27
2964 216-7	23-19-76
2964 218-9	23-19-76
2964 222-3	23-34-26
2964 230-1	23-34-21
2964 232-3	23-34-234
2964 240-1	23-34-236
2964 270-1	23-63-21
2964 288	23-34-179
2964 289	23-34-179
2964 300-1	23-19-177
2964 302-3	23-19-177
2964 307	23-58-220
2964 313	23-58-75
2964 317	23-58-84
2964 321	23-58-75
2964 326	23-58-75
2964 344	23-58-603
2964 388-9	23-58-573
2964 390-1	23-58-573
2964 392-3	23-58-573
2964 396	23-58-570
2964 398-9	23-58-572
2964 400-1	23-58-572
2964 402	23-58-572
2964 404	23-58-569
2964 405	23-58-569
2964 409	23-58-3
2964 448-9	23-58-573
2964 450-1	23-58-573
2964 452-3	23-58-573
2964 483	23-34-167
2964 486-7	23-34-242
2964 492-3	23-59-35
2964 506-7	23-34-235
2964 510	13-66-106
2964 543	14-30-2
2964 547	23-63-16
	23-63-37
	23-63-55
	23-63-136
2964 560-1	23-32-25
2964 584-5	23-22-86
2964 590	23-23-52
	23-34-193
	23-64-1
2964 591	23-64-315
2964 592	23-23-52
	23-64-315
2964 648	23-36-66
2964 706-7	23-05-31
2964 730	23-34-190
2964 744	22-20-87
2964 806	7-17-1
	8-55-14
2964 999	22-20-87
2965 020	22-20-87
2965 021	22-20-87
2965 092-3	23-64-213
2965 100-1	23-26-41
2965 104-5	23-63-21
2965 106-7	23-34-249
2965 118	23-32-93
2965 122-3	23-63-104
2965 124	23-64-12
2965 425	23-32-48
2965 504-5	23-19-82
2965 518-9	23-34-246
2965 544-5	23-34-20
2965 548	23-19-74
2965 549	23-19-74
2965 582-3	23-32-49
2965 584-5	23-64-213
2965 588-9	23-64-280
2965 592	23-23-52
2965 592-3	23-64-311
2965 594-5	23-64-311
2965 604-5	23-22-53
2965 612-3	23-34-235
2965 614-5	23-34-234
2965 616-7	23-34-234
2965 618-9	23-34-234
2965 620-1	23-36-53
2965 630-1	23-34-22
2965 634-5	23-59-35
2965 638-9	23-63-100
2965 640-1	23-63-100
2965 644	23-34-167
2965 656	23-64-66
2965 657	23-64-314
2965 658	23-64-314
2965 661	23-34-301
2965 668-9	23-40-85
2965 676	23-63-37
2965 678-9	23-19-177
2965 691	23-19-74
2965 756	23-42-38
2965 758	23-63-133
2965 760-1	23-63-133
2965 762-3	23-63-136
2965 808-9	23-59-35
2965 822-3	23-63-33
2965 827	23-47-33
2965 844-5	23-63-55
2965 848-9	23-63-136
2965 850-1	23-63-33
2965 856-7	23-26-41
2965 866	23-63-112
2965 870-1	23-63-33
2965 880-1	23-63-104
2965 890-1	23-34-236
2965 892-3	23-34-236
2965 900	23-64-12
2965 901	23-64-187
2965 928-9	23-64-311
2965 946-7	23-32-49
2965 970-1	23-64-311
2965 973	23-19-74
2965 980-1	23-09-9
2968 252	7-06-1
2981 956	23-26-76
2981 970	23-26-76
2981 971	23-26-84
2981 972	23-26-76
2981 973	23-26-84
2981 974	23-26-76
2981 975	23-26-84
2981 978	23-26-76
2981 979	23-26-84
2981 980	23-26-76
2981 981	23-26-84
2981 986	23-26-84
2981 999	23-26-84
2983 010	23-64-277
	23-67-82
2983 013	23-67-76
2983 014	23-67-200
2983 015	23-67-201
2983 016	23-67-104
2983 017	23-67-80
2983 029	23-67-79
2983 031	23-67-82
2983 034	23-67-82
2983 067	23-67-240
2983 068	23-67-260
2983 069	23-67-243
2983 076	23-67-252
2983 077	23-67-262
2983 078	23-67-246
2983 086-7	23-67-5
2983 087	23-67-5
2983 092	23-67-240
2983 097	23-67-260
2983 101	24-24-124
2983 104	1-87-404
2983 105	1-87-404
2983 106	1-87-404
2983 107	24-24-124
2983 110	1-87-404
2983 112	8-15-4
2983 113	8-15-4
2983 116	23-67-98
2983 117	23-67-41
2983 128	8-15-4
2983 129	1-87-404
2983 131	1-87-404
2983 138	24-24-124
2983 139	24-24-124
2983 145	8-15-4
2983 153	1-88-170
2983 157	1-87-404
2983 160	8-01-17

PART NUMBER	CODE
2983 162	1-88-6
2983 164	1-88-6
2983 167	8-11-29
	8-50-354
	8-55-63
2983 168	8-11-29
2983 169	8-50-354
	8-55-63
2983 171	1-88-1
2983 216	8-19-88
2983 237	8-16-4
	8-16-6
2983 239	8-16-4
	8-16-6
2983 242	1-88-170
2983 246	8-19-3
2983 247	24-24-124
2983 249	8-19-3
2983 251	23-58-189
2983 262	8-50-349
2983 265	8-19-3
2983 267	8-19-3
2983 271	8-19-3
2983 279	8-14-3
	8-50-349
	8-55-57
	8-56-34
2983 294	8-15-4
2983 300	8-19-3
2983 301	8-19-3
2983 304	8-15-4
2983 306	1-88-12
2983 310	14-02-69
2983 312	1-87-404
2983 317	8-15-4
2983 318	8-15-4
2983 322	8-14-8
	8-55-63
2983 328	8-15-4
2983 335	8-16-6
2983 337	8-15-4
2983 340	8-15-4
2983 344	8-15-4
2983 347	8-15-4
2983 349	8-15-4
2983 352	8-15-4
2983 358	8-15-4
2983 359	8-15-4
2983 367	8-15-2
2983 368	8-15-2
2983 369	8-15-2
2983 371	8-19-3
2983 373	8-15-2
2983 374	8-15-2
2983 376	8-15-2
2983 379	8-15-2
2983 392	8-19-3
2983 394	14-02-69
2983 401	8-16-6
2983 402	8-16-6
2983 403	8-16-6
2983 404	8-16-6
2983 405	8-16-6
2983 406	8-16-6
2983 407	8-16-6
2983 408	8-16-6
2983 409	8-16-4
2983 410	8-16-4
2983 411	8-16-4
2983 412	8-16-4
2983 414	8-34-282
2983 415	8-17-30
2983 423	8-15-2
2983 424	8-15-2
2983 432	8-15-2
2983 435	8-15-2
2983 437	8-15-2
2983 439	14-02-69
2983 442	23-41-55
2983 444	23-54-178
2983 445	23-54-178
2983 446	23-41-55
2983 447	8-15-4
2983 451	23-67-41
2983 454	8-15-4
2983 455	8-15-4
2983 456	23-41-55
2983 457	23-41-55
2983 458	23-41-55
2983 460	8-15-2
2983 461	8-15-2
2983 462	8-15-2
2983 464	8-15-2
2983 468	8-15-2
2983 470	8-15-15
2983 476	8-15-4
2983 478	8-55-57
2983 482	23-54-178
2983 483	23-54-178
2983 484	23-58-189
2983 487	8-15-53
2983 490	8-15-2
2983 491	8-15-2
2983 492	8-15-2
2983 496	8-19-3
2983 499	8-01-17
2983 504	23-41-55
2983 506	23-54-178
2983 507	8-15-4
2983 508	8-16-4
2983 513	8-16-4
2983 514	8-16-6
2983 519	8-15-2
2983 529	23-41-55
2983 530	23-41-55
2983 531	23-41-55
2983 532	8-15-4
2983 533	8-15-53
2983 534	8-19-3
2983 538	8-55-57
	8-56-34
2983 541	8-19-3
2983 545	8-14-3
2983 547	8-01-17
2983 550	8-19-3
2983 556	8-15-4
2983 561	8-15-60
2983 562	8-15-4
2983 576	8-15-23
2983 579	8-37-88
2983 580	8-37-88
2983 581	8-12-13
2983 583	1-87-404
2983 589	8-15-53
2983 591	8-15-2
2983 593	8-01-17
2983 594	8-01-17
2983 595	8-19-3
2983 604	8-15-40
2983 605	8-34-282
2983 607	8-33-164
2983 631	8-15-23
2983 634	8-15-32
2983 636	8-01-17
2983 640	8-15-3
2983 644	24-24-124
2983 646	8-15-53
2983 648	8-01-17
2983 649	8-01-17
2983 652	23-58-189
2983 666	8-19-87
2983 679	8-57-79
2983 684	8-15-53
2983 686	8-15-53
2983 702	8-01-17
2983 706	8-15-27
2983 711	8-15-2
2983 713	8-15-53
2983 715	1-88-126
2983 718	8-01-17
2983 719	8-01-17
2983 726	8-15-2
2983 728	8-15-52
2983 731	8-01-17
2983 734	8-15-2
2983 754	8-16-4
2983 761	8-15-2
2983 768	8-19-3
2983 771	8-01-4
2983 776	8-01-4
2983 778	8-01-4
2983 780	8-01-4
2983 789	8-15-4
2983 798	8-15-27
2983 800	8-15-2
2983 807	8-15-2
2983 808	8-15-2
2983 809	8-15-2
2983 810	8-15-2
2983 811	8-15-2
2983 812	8-15-2
2983 815	8-50-156
2983 816	8-37-88
2983 821	8-01-17
2983 822	8-01-17
2983 828	8-37-70
2983 829	8-19-3
2983 830	8-19-3
2983 841	1-88-200
2983 844	1-88-162
2983 846	8-19-3
2983 848	8-53-331
2983 849	1-88-160
2983 856	8-50-156
2983 862	8-15-53
2983 876	8-41-36
2983 877	8-15-53
2983 878	8-15-53
2983 879	8-15-53
2983 880	8-15-53
2983 881	8-15-4
2983 882	8-16-4
2983 883	8-15-27
2983 884	8-16-6
2983 886	8-15-2
2984 019	23-33-109
2984 029	23-06-10
2984 034	23-06-21
2984 038	23-06-13
2984 051	8-33-118
2984 055	8-50-129
2984 058	8-37-90
2984 062	23-02-42
2984 068	8-37-316
2984 081	8-41-41
2984 084	8-37-142
2984 110	8-37-162
2984 111	8-37-178
2984 119	8-37-275
2984 120	8-37-136
2984 121	8-37-1
2984 126	8-41-41
2984 139	8-37-452
2984 140	23-33-20
2984 146	8-37-90
2984 151	8-37-178
2984 159	8-37-275
2984 160	8-37-136
2984 161	8-37-1
2984 166	8-41-41
2984 174	23-33-20
2984 178	8-37-275
2984 179	8-37-1
2984 180	8-37-136
2984 181	8-37-316
2984 182	8-37-14
2984 185	8-37-504
2984 187	8-41-41
2984 192	8-37-90
2984 207	8-31-8
2984 219	8-37-454
2984 220	8-37-458
2984 228	23-06-17
2984 234	8-37-136
2984 236	8-37-136
2984 238	8-37-136
2984 241	8-37-136
2984 243	8-37-136
2984 262	23-02-19
2984 283	23-06-15
2984 286	23-33-109
2984 288	23-33-109
2984 290	23-33-109
2984 292	23-33-109
2984 327	23-06-21
2984 345	23-02-18
2984 350	23-06-10
2984 352	23-06-10
2984 358	23-06-10
2984 361	23-06-10
2984 371	23-06-10
2984 372	23-33-135
2984 373	23-33-135
2984 378	23-33-135
2984 379	23-33-135
2984 392	23-33-107
2984 397	8-37-90
2984 403	8-37-275
2984 404	8-37-136
2984 405	8-37-1
2984 433	23-33-135
2984 434	23-33-135
2984 435	23-33-135
2984 436	23-33-135
2984 437	23-33-135
2984 438	23-33-135
2984 440	1-87-22
2984 442	1-87-22
2984 447	23-33-96
2984 449	23-33-96
2984 456	23-06-4
2984 457	23-06-4
2984 460	23-06-10
2984 464	23-06-15
2984 465	23-06-17
2984 466	23-33-135
2984 467	23-06-17
2984 468	23-06-10
2984 487	8-37-316
2984 490	8-37-90
2984 491	8-37-90
2984 503	8-37-162
2984 504	8-37-162
2984 505	8-37-162
2984 517	23-02-18
2984 522	23-02-19
2984 525	23-02-18
2984 529	23-02-19
2984 545	23-06-22
2984 546	23-33-149
2984 548	23-02-38
2984 552	23-02-29
2984 557	8-37-90
2984 558	8-37-90
2984 574	23-33-109
2984 576	23-33-109
2984 584	23-33-109
2984 599	23-33-109
2984 601	23-33-109
2984 603	23-33-109
2984 605	23-33-109
2984 613	23-33-109
2984 618	23-33-109
2984 630	8-19-15
2984 633	8-37-386
2984 645	23-06-15
2984 647	23-02-29
2984 654	8-37-178
2984 655	23-06-4
2984 656	23-06-4
2984 660	23-06-15
2984 667	23-33-10
2984 669	23-33-135
2984 670	23-33-135
2984 671	23-33-135
2984 672	23-33-135
2984 673	23-33-135
2984 674	1-87-22
	23-33-135
2984 675	23-33-135
2984 676	1-87-22
	23-33-135
2984 677	23-33-135
2984 678	23-33-135
2984 679	23-33-135
2984 680	23-33-135
2984 681	23-33-135
2984 683	23-33-135
2984 685	23-33-135
2984 687	23-33-135
2984 689	23-33-135
2984 695	8-50-64
2984 696	8-50-64
2984 697	1-87-22
	23-33-135
2984 706	23-02-19
2984 716	23-06-4
2984 720	23-06-10
2984 721	23-06-10
2984 726	23-06-13
2984 739	1-48-70
2984 740	1-48-70
2984 741	8-37-463
2984 744	8-37-90
2984 745	8-37-90
2984 746	8-37-90
2984 747	8-37-90
2984 748	8-37-90
2984 751	8-37-190
2984 757	19-31-1
2984 759	8-37-91
2984 764	23-33-20
2984 772	23-33-135
2984 775	8-37-90
2984 776	23-33-135
2984 797	23-02-19
2984 800	23-02-18
2984 801	23-02-18
2984 815	23-33-135
2984 819	23-06-4

PART NUMBER	CODE
2984 835	23-06-35
2984 849	23-06-21
2984 853	23-06-15
2984 854	23-06-15
2984 859	23-02-42
2984 860	24-24-140
2984 863	23-06-53
2984 866	8-37-178
2984 867	8-37-162
2984 887	8-37-1
2984 888	8-37-316
2984 896	8-37-275
2984 898	23-33-16
	24-24-151
2984 904	8-41-41
2984 906	1-87-22
	8-37-90
2984 907	1-87-22
	8-37-90
2984 908	1-87-22
	8-37-90
2984 909	8-37-90
2984 910	1-48-70
2984 911	1-47-9
	1-48-70
2984 912	23-33-65
2984 914	23-33-135
2984 922	8-19-15
2984 929	8-37-275
2984 930	8-37-136
2984 931	8-37-1
2984 932	8-37-1
2984 943	8-37-178
2984 951	8-37-14
2984 952	8-37-14
2984 954	8-37-162
2984 955	23-02-38
2984 958	23-33-20
2984 959	8-37-14
2984 960	8-37-372
2984 961	8-37-372
2984 962	8-37-372
2984 963	8-37-372
2984 964	8-37-372
2984 965	8-37-372
2984 966	8-37-372
2984 967	8-37-372
2984 968	8-37-372
2984 969	8-37-372
2984 970	8-37-372
2984 971	8-37-372
2984 972	8-37-372
2984 973	8-37-372
2984 974	8-37-372
2984 975	8-37-372
2984 976	8-37-372
2984 977	8-37-372
2984 978	8-37-372
2984 979	8-37-372
2984 980	8-37-372
2984 981	8-37-372
2984 982	8-37-372
2984 983	8-37-372
2984 984	8-37-372
2984 985	8-37-372
2984 991	23-21-26
2984 998	8-37-372
2985 002	8-37-90
2985 003	8-37-90
2985 006	24-24-140
2985 007	23-33-16
	24-24-151
2985 008	8-37-90
2985 009	8-37-90
2985 012	24-24-140
2985 013	23-33-16
	24-24-151
2985 016	23-33-109
2985 018	23-33-109
2985 029	23-33-42
2985 037	23-06-10
2985 047	23-02-19
2985 075	23-33-86
2985 082	23-33-86
2985 089	23-06-4
2985 090	23-06-4
2985 095	23-06-10
2985 099	23-06-15
2985 100	23-06-21
2985 109	23-33-141
2985 118	23-06-10
2985 122	23-33-109
2985 124	23-33-109
2985 126	23-33-109
2985 128	23-33-109
2985 157	8-37-90
2985 158	8-37-90
2985 168	8-37-2
2985 170	8-37-504
2985 185	8-37-160
2985 198	8-37-141
2985 211	8-37-275
2985 214	8-37-275
2985 217	8-37-136
2985 219	8-37-1
2985 221	8-37-1
2985 223	8-37-136
2985 226	8-37-14
2985 234	8-37-160
2985 239	8-37-112
2985 267	23-06-15
2985 298	23-33-42
2985 356	8-37-454
2985 362	8-37-90
2985 364	8-37-90
2985 368	8-37-90
2985 370	8-37-90
2985 393	8-37-275
2985 396	8-37-1
2985 397	8-37-1
2985 401	8-37-178
2985 415	8-19-15
2985 416	8-37-14
2985 423	23-33-20
2985 436	8-37-90
2985 437	8-37-90
2985 442	8-37-91
2985 446	8-37-372
2985 447	8-37-372
2985 448	8-37-372
2985 452	23-33-109
2985 476	8-37-372
2985 477	8-37-372
2985 513	8-37-275
2985 515	8-37-316
2985 517	8-37-1
2985 523	8-37-162
2985 532	8-37-440
2985 543	1-48-70
2985 544	1-48-70
2985 546	8-37-90
2985 547	8-37-90
2985 548	8-37-90
2985 549	8-37-90
2985 551	8-41-41
2985 555	8-37-14
2985 558	23-33-65
2985 564	8-37-90
2985 565	8-37-90
2985 566	8-37-90
2985 567	8-37-90
2985 569	8-37-162
2985 570	8-37-440
2985 571	23-33-65
2985 573	1-48-70
2985 574	1-47-6
2985 575	23-54-221
2985 578	8-41-41
2985 580	8-41-41
2985 584	23-33-20
2985 585	8-37-178
2985 586	8-37-463
2985 588	8-37-178
2985 589	23-33-65
2985 590	8-37-372
2985 591	8-37-372
2985 592	23-33-16
2985 599	8-37-372
2985 600	8-37-372
2985 624	23-02-38
2985 638	23-06-13
2985 642	23-06-13
2985 653	23-06-10
2985 674	8-37-1
2985 676	8-37-1
2985 707	8-37-2
2985 715	8-37-90
2985 716	8-37-90
2985 719	23-33-12
2985 732	23-33-10
2985 734	23-33-86
2985 742	23-06-13
2985 747	23-06-4
2985 752	23-06-10
2985 754	23-33-135
2985 763	23-06-21
2985 767	23-33-96
2985 768	23-33-96
2985 772	23-33-96
2985 774	23-33-96
2985 775	23-33-96
2985 776	23-33-96
2985 777	23-33-96
2985 779	23-33-96
2985 793	23-33-135
2985 797	19-31-2
2985 801	8-37-90
2985 807	8-37-90
2985 809	23-33-96
2985 816	23-02-38
2985 828	23-33-96
2985 829	23-33-96
2985 830	23-33-96
2985 831	23-33-96
2985 832	23-33-96
2985 833	8-37-178
2985 834	8-37-178
2985 837	8-37-14
2985 850	8-37-14
2985 852	23-06-15
2985 869	23-33-109
2985 875	21-84-1
2985 878	21-84-1
2985 884	23-33-96
2985 885	23-33-96
2985 887	23-67-243
2985 889	23-67-243
2985 895	8-37-372
2985 896	8-37-372
2985 902	23-02-38
2985 905	23-33-96
2985 909	23-33-96
2985 910	23-33-96
2985 911	23-33-86
2985 943	8-37-454
2985 944	8-37-90
2985 947	8-37-14
2985 949	8-37-454
2985 953	8-37-162
2985 954	8-37-372
2985 955	8-37-372
2985 961	23-06-35
2985 967	8-37-372
2985 969	23-33-96
2985 973	23-06-10
2985 978	23-33-96
2985 980	23-06-15
2985 982	23-06-17
2985 983	23-06-17
2985 984	23-33-135
2985 985	23-33-135
2985 986	23-33-135
2985 992	23-06-15
2991 130	16-02-1
2996 011	19-14-1
2996 012	19-14-1
2996 013	19-14-1
2996 014	19-14-1
2996 015	19-14-1
2996 016	19-14-1
2996 018	19-14-1
2996 027	19-14-49
2996 031	19-46-3
2996 032	19-46-3
2996 033	19-46-3
2996 034	19-46-3
2996 035	19-46-3
2996 036	19-46-3
2996 037	19-46-3
2996 039	19-46-3
2996 045	19-14-49
2996 051	4-25-23
2996 053	4-25-6
2996 056	4-23-1
2996 058	4-23-1
2996 059	4-23-1
2996 060	4-23-1
2996 072	4-23-1
2996 095	4-25-1
2996 101	16-02-1
2996 105	16-02-1
2996 109	16-02-1
2996 113	16-02-1
2996 117	16-02-1
2996 121	16-02-1
2996 130	16-02-1
2996 134	16-02-1
2996 138	16-02-1
2996 142	16-02-1
2996 146	16-02-1
2996 161	16-02-1
2996 162	16-02-1
2996 186	16-02-1
2996 195	16-02-1
2996 201	16-02-1
2996 203	16-02-1
2996 207	16-02-1
2996 211	16-02-1
2996 216	16-02-1
2996 222	16-02-1
2996 227	16-02-1
2996 228	16-02-1
2996 301	21-30-416
2996 305	21-30-43
2996 309	19-48-1
2996 310	21-30-418
2996 312	21-30-2
2996 313	21-30-2
2996 314	21-30-2
2996 316	21-30-416
2996 317	21-30-428
2996 324	19-48-46
2996 325	19-48-46
2996 405	21-30-413
2996 413	19-48-1
2996 414	19-48-1
2996 415	21-30-414
2996 417	5-27-1
2996 419	5-27-2
2996 421	21-30-416
2996 423	21-30-428
2996 431	19-48-1
2996 432	21-30-418
2996 433	19-48-1
2996 449	6-38-3
2996 454	21-30-413
2996 455	21-30-418
2996 456	21-30-418
2996 457	21-30-407
2996 459	19-48-1
	21-30-418
2996 460	19-48-2
2996 461	21-30-2
2996 462	21-30-2
2996 463	21-30-2
2996 464	21-30-21
2996 466	21-30-6
2996 467	21-30-6
2996 472	6-35-1
2996 473	19-48-1
2996 474	21-30-413
2996 476	21-30-406
2996 477	21-30-393
2996 478	21-30-2
2996 480	21-30-6
2996 482	21-30-418
2996 483	21-30-418
2996 484	19-48-1
2996 490	5-31-15
2996 497	21-30-2
2996 499	6-52-10
2996 560	16-02-1
2996 581	16-02-1
2996 704	8-33-5
2996 720	8-33-5
2996 752	19-15-4
2996 753	19-15-4
2996 754	19-15-4
2996 755	19-15-4
2996 756	19-15-4
2996 757	19-15-4
2996 758	19-15-4
2996 759	19-15-4
2996 760	19-15-4
2996 761	19-15-4
2996 777	19-15-4
2996 784	19-15-28
2996 785	19-46-26
2996 786	21-30-100
2996 787	19-46-30
2996 788	19-30-8
2996 789	19-46-59
2996 798	19-46-8
2996 799	19-46-55
2996 800	19-46-55
2996 802	19-14-21
2996 805	19-14-21
2996 808	19-14-21
2996 811	19-14-21
2996 825	19-15-4

PART NUMBER	CODE
2996 856	19-15-23
2996 857	19-15-23
2996 858	19-14-121
2996 860	19-14-48
2996 862	19-30-7
2996 863	19-30-7
2996 872	8-16-4
2996 884	8-33-5
2996 888	8-33-6
2996 889	8-33-6
2996 890	8-33-6
2996 891	8-33-6
2996 892	8-33-118
2996 896	8-33-122
2996 897	8-33-119
2996 898	8-33-128
2996 916	8-33-6
2996 922	19-15-77
2996 928	19-46-16
2996 929	19-46-16
2996 936	8-33-17
2998 002	7-16-11
2998 010-1	8-34-40
2998 012-3	8-34-40
2998 014-5	8-34-40
2998 028-9	8-34-40
2998 036-7	15-03-47
2998 043	15-03-87
2998 046-7	12-04-4
2998 052	7-17-13
2998 057	7-26-30
2998 059	7-26-30
2998 060	7-16-61
2998 078	7-26-15
2998 090	12-04-23
2998 112-3	8-34-32
	12-07-1
2998 118	12-02-6
2998 124	15-03-5
2998 146-7	8-34-40
2998 148-9	8-34-40
2998 156-7	8-34-40
2998 166-7	7-16-36
2998 180-1	15-03-83
2998 200-1	7-16-11
2998 212-3	15-03-79
2998 216	7-16-11
2998 227	7-17-5
2998 228-9	7-26-14
2998 238	7-16-36
2998 239	7-16-36
2998 243	7-16-36
2998 248-9	7-16-25
2998 250-1	7-16-25
2998 252-3	7-16-25
2998 256-7	12-04-4
2998 270-1	8-34-40
2998 278	7-16-61
2998 279	8-34-54
2998 282	7-16-61
2998 283	7-26-26
2998 288	7-17-1
2998 291	7-16-22
2998 298-9	8-34-40
2998 304-5	8-34-28
2998 324	7-08-2
2998 325	7-08-2
2998 326	7-08-2
2998 327	7-08-2
2998 328	7-08-2
2998 329	7-08-2
2998 330	7-08-2
2998 348-9	8-34-40
2998 351	12-06-3
2998 359	7-16-11
2998 360	7-16-11
2998 364	7-16-11
2998 376-7	12-01-105
2998 380	7-26-43
2998 396-7	15-03-52
2998 400	8-14-1
2998 405	15-11-58
2998 414-5	8-34-31
2998 430	7-16-14
2998 434	7-16-19
2998 435	7-16-19
2998 437	7-26-15
2998 440	7-16-11
2998 442-3	12-02-6
2998 452-3	15-03-76
2998 457	15-03-76
2998 458	15-03-67
2998 461	15-03-76
2998 466	7-16-11
2998 470	15-11-58
2998 475	15-11-58
2998 482	15-11-7
2998 484-5	12-04-4
2998 509	8-34-291
2998 510	8-34-54
2998 523	12-02-10
2998 528	12-02-10
2998 530-1	7-16-25
2998 534-5	7-16-25
2998 538-9	8-34-40
2998 540	7-16-25
2998 542	7-26-15
2998 544	7-26-15
2998 546	7-16-61
2998 547	7-16-61
2998 548	8-14-9
2998 550-1	8-34-40
2998 553	8-34-53
2998 554	8-34-53
2998 577	15-03-67
2998 578-9	7-16-36
2998 580-1	7-16-36
2998 586-7	7-17-1
2998 590-1	8-34-32
2998 600-1	8-34-32
2998 606	8-34-48
2998 608	8-14-1
2998 617	15-11-46
2998 626	7-26-15
2998 628	8-14-15
2998 635	7-26-15
2998 637	7-26-15
2998 638	7-16-14
2998 651	7-16-25
2998 652	15-03-67
2998 654-5	15-03-67
2998 660-1	12-02-10
2998 662-3	12-02-6
2998 664-5	8-34-31
2998 668-9	8-34-60
2998 682	8-34-180
2998 698-9	12-02-6
2998 700	7-16-22
2998 716-7	8-34-31
2998 734	8-34-63
2998 736-7	12-02-6
2998 738	7-17-5
2998 780-1	8-34-40
2998 799	8-34-58
2998 805	15-03-3
2998 808-9	8-34-1
2998 810-1	8-34-1
2998 812-3	8-34-1
2998 817	15-03-18
2998 863	7-26-32
2998 870	13-66-46
2998 872-3	8-34-60
2998 881	15-03-52
2998 882	7-17-13
2998 884	8-34-50
2998 886	8-34-127
2998 888	8-34-45
2998 890	8-34-50
2998 892	8-34-45
2998 894	8-34-50
2998 895	8-34-45
2998 932	7-11-3
2998 933	7-11-3
2998 934	7-11-3
2998 935	7-11-3
2998 936	7-11-3
2998 937	7-11-3
2998 938	7-11-3
2998 939	7-11-3
2998 940	7-11-3
2998 941	7-11-3
2998 943	7-11-3
2998 944	7-11-3
2998 945	7-11-3
2998 946	7-11-3
2998 947	7-11-3
2998 948	7-11-3
2998 949	7-11-3
2998 951	7-11-3
2998 952	7-11-3
2998 953	7-11-3
2998 954	7-11-3
2998 956	7-11-3
2998 957	7-11-3
2998 958	7-11-3
2998 959	7-11-3
2998 960	7-11-3
2998 961	7-11-3
2998 963	7-11-3
2998 964	7-11-3
2998 965	7-11-3
2998 967	7-11-3
2998 968	7-11-3
2998 969	7-11-3
2998 970	7-11-3
2998 971	7-11-3
2998 972	7-11-3
2998 973	7-11-3
2998 974	7-11-3
2998 978	7-11-3
2998 980	7-11-3
2998 981	7-08-2
2998 982	7-12-1
2998 993	9-46-31
2998 994	9-46-31
2998 995	9-46-31
2998 996	9-46-31
2998 997	9-46-31
2998 998	9-46-31
2998 999	9-46-31
2999 001	23-21-74
2999 003	23-54-216
2999 017	23-17-52
2999 022	23-21-14
2999 023	23-21-14
2999 030	23-49-9
2999 033	23-49-19
2999 041	23-17-1
2999 053	23-49-11
2999 067	15-11-3
2999 077	15-11-5
2999 078	15-11-34
2999 081	15-11-3
2999 091	15-11-34
2999 102	23-49-9
2999 115	23-21-19
2999 130	23-19-79
2999 149	15-11-34
2999 152	15-11-3
2999 155	15-11-34
2999 161	15-11-5
2999 164	15-11-34
2999 171	15-11-34
2999 180	15-11-34
2999 185	23-18-29
2999 212	23-17-10
2999 213	15-11-34
2999 216	15-11-3
2999 238	23-47-344
2999 239	23-47-344
2999 326-7	23-41-106
2999 332-3	23-41-106
2999 334-5	23-41-106
2999 336-7	23-41-106
2999 338-9	23-41-106
2999 344	15-19-8
2999 345	23-19-105
2999 349	23-19-111
2999 354-5	23-41-4
2999 356	23-21-3
2999 357	23-21-3
2999 358	23-21-58
2999 364	23-54-78
2999 365	23-41-34
2999 368-9	23-15-1
2999 370-1	23-15-3
2999 374-5	23-18-20
2999 380-1	23-39-34
2999 382-3	23-39-34
2999 384-5	23-18-13
2999 388-9	23-18-11
2999 398-9	23-39-5
2999 400-1	23-18-25
2999 404-5	23-18-26
2999 426-7	23-18-25
2999 434	23-19-79
2999 436	23-58-262
2999 444	23-17-2
2999 445	23-17-2
2999 446	23-17-2
2999 448	15-19-8
2999 463	23-17-2
2999 464	23-06-28
2999 506-7	23-18-13
2999 518	23-47-6
2999 520-1	23-47-6
2999 521	23-47-6
2999 522-3	23-47-6
2999 524-5	23-14-27
2999 528-9	23-18-11
2999 532-3	23-18-11
2999 534-5	23-18-11
2999 549	23-21-3
2999 553	23-21-3
2999 557	23-21-58
2999 644	23-14-18
	23-14-79
2999 646	23-14-53
2999 650	23-54-20
2999 660	23-18-25
2999 682-3	23-41-4
2999 713	23-47-75
2999 714	23-47-26
2999 722	23-47-439
2999 724	15-11-16
2999 725	23-47-55
2999 726	23-47-55
2999 728	23-47-55
2999 730	15-11-16
2999 735	23-18-5
2999 736	15-11-5
2999 737	23-18-5
2999 741	15-11-5
2999 744	15-11-20
2999 747	15-11-5
2999 749	15-11-20
2999 759	23-18-5
2999 761	23-18-5
2999 777	23-18-26
2999 779	23-18-26
2999 790-1	23-18-107
2999 798	23-63-37
2999 800	23-19-105
2999 804	23-19-111
2999 805	23-19-105
2999 806	23-06-15
2999 808-9	15-19-2
2999 811	23-47-432
2999 813	23-14-147
2999 816-7	23-14-10
2999 861	23-48-21
2999 865	23-49-7
2999 870	23-14-24
2999 875	23-21-3
2999 882-3	23-14-10
2999 928-9	23-39-5
2999 950	23-18-27
2999 959	23-54-17
2999 962	23-54-4
2999 964	23-18-20
2999 968	23-18-5
2999 970	23-18-5
2999 985	23-19-112
2999 986	23-19-112
2999 991	23-47-15
2999 995	23-47-26
2999 998	23-47-66
3000 008	8-29-98
3000 046	8-29-131
3000 047	8-29-131
3004 092	8-53-270
3004 104	23-67-160
3004 105	8-53-237
3004 106	8-53-237
	8-53-327
3004 120	23-67-240
3004 121	23-67-252
3004 122	8-17-30
3004 123	23-41-106
3004 124	23-41-106
3004 125	23-41-106
3004 126	23-41-106
3004 177	23-67-160
3004 186	8-14-29
	23-41-27
	23-54-159
3004 190	8-20-9
3004 192	8-36-1
3004 384-5	23-23-52
3004 390-1	23-23-52
3004 392-3	23-23-52
3004 513	9-34-5
3004 514	9-34-5
3004 515	9-34-5
3004 516	9-34-5
3004 517	9-34-5
3004 518	9-34-5
3004 519	9-34-5
3004 520	9-34-5
3004 521	9-34-5

PART NUMBER	CODE
3004 522	9-34-5
3004 523	9-34-5
3004 528	9-34-5
3004 529	9-34-5
3004 530	9-34-5
3004 539	9-34-5
3004 540	9-34-5
3004 541	9-34-5
3004 545	21-138-2
3004 571	9-35-1
3004 572	9-35-1
3004 573	9-35-1
3004 574	9-58-1
3004 589	17-12-4
3004 604	16-20-1
3004 605	16-20-1
3004 606	21-138-2
3004 607	21-138-2
3004 608	5-100-2
3004 614	21-01-3
3004 615	9-01-5
3004 616	9-39-1
3004 622	5-100-1
3004 625	5-105-1
3004 626	5-105-1
3004 639	9-10-5
3004 643	9-41-4
3004 644	9-41-4
3004 645	9-41-4
3004 646	9-41-4
3004 647	9-41-4
3004 648	9-41-4
3004 649	9-41-4
3004 650	9-41-4
3004 651	17-11-3
3004 652	17-11-3
3004 653	17-11-3
3004 655	17-11-3
3004 656	17-11-3
3004 663	9-50-1
3004 664	9-58-1
3004 665	9-09-2
3004 666	9-09-2
3004 667	9-09-2
3004 668	9-09-2
3004 669	9-09-2
3004 670	9-09-2
3004 709	9-58-1
3004 716	9-43-1
3004 717	9-43-1
3004 718	9-43-1
3004 719	9-43-1
3004 726	9-39-1
3004 728-9	22-03-1
3004 732-3	22-03-1
3004 744	22-04-2
3004 745	22-04-2
3004 759	5-03-3
3004 766	17-11-3
3004 767	17-11-3
3004 768	17-11-3
3004 777	17-23-3
3004 787	2-07-1
3004 788-9	2-07-1
3004 792	2-07-1
3004 793	2-07-1
3004 794	2-07-1
3004 795	2-07-1
3004 796	2-07-1
3004 797	2-07-1
3004 799	19-54-2
3004 800	19-54-2
3004 801	19-54-2
3004 804	19-27-45
3004 805	19-27-45
3004 807	19-27-2
3004 808	19-27-2
3004 810	19-27-2
3004 811	19-27-2
3004 812	19-27-2
3004 813	19-27-2
3004 816	2-03-3
3004 817-8	2-10-55
3004 819-2	2-10-55
3004 822	17-16-1
3004 823	17-16-1
3004 824	17-16-1
3004 828	5-03-3
3004 829	5-100-2
3004 833	19-58-7
3004 834	19-58-7
3004 835	19-58-7
3004 836	19-58-7
3004 837	19-58-7
3004 839	9-01-5
3004 840	9-39-1
3004 846	17-11-3
3004 851	5-03-3
3004 852	5-03-3
3004 856	5-03-3
3004 858	5-03-3
3004 859	5-03-3
3004 862	5-03-3
3004 864	5-05-45
3004 865	5-05-9
3004 867	5-100-1
3004 872	16-20-1
3004 873	16-20-1
3004 878	16-20-1
3004 887	19-58-7
3004 894	9-09-2
3004 895	9-09-2
3004 896	9-09-2
3004 897	9-09-2
3004 898	9-09-2
3004 899	9-09-2
3004 932	22-04-2
3004 933	22-04-2
3004 944	9-09-2
3004 945	9-09-2
3004 946	9-09-2
3004 947	9-09-2
3004 948	9-09-2
3004 949	9-09-2
3004 958	17-23-3
3004 959	17-23-3
3004 960	17-23-3
3004 961	17-23-3
3004 973	22-03-1
3004 974	22-03-1
3004 986	3-04-6
3004 987	22-01-5
3004 988	22-01-5
3004 989	22-01-5
3004 990	22-01-5
3004 995	19-19-1
3004 996	19-01-4
3004 997	19-01-4
3004 998	19-01-4
3084 805	19-27-45
3367 648	19-48-9
3400 543	17-11-10
3400 546	17-15-11
3400 547	17-15-11
3400 568	17-19-3
3400 570	17-19-3
3400 586	17-23-3
3400 587	17-23-3
3400 590	17-23-3
3400 593	17-23-3
3400 594	17-23-3
3400 602	17-11-31
3400 617	17-12-4
3400 618	17-14-10
3400 620	17-23-3
3400 684	17-19-3
3400 708	17-15-11
3400 710	17-15-11
3400 834-5	17-11-7
3400 836-7	17-11-7
3400 841	17-19-3
3400 843	17-19-3
3400 849	17-23-3
3400 854	17-23-3
3400 858	13-54-4
3400 861	17-11-5
3400 862	17-11-5
3400 863	17-11-5
3400 865	13-54-4
3400 867	13-54-4
3400 870	17-12-4
3400 872	17-12-4
3400 874	17-12-4
3400 876	17-12-4
3400 878	17-12-4
3400 880	17-12-4
3400 882	17-12-4
3400 884	17-12-4
3400 886	17-12-4
3400 888	17-12-4
3400 890	17-12-4
3400 892	17-12-4
3400 894	17-12-4
3400 896	17-12-4
3400 898	17-12-4
3400 920	1-18-7
3400 942-3	13-54-15
3400 949	17-12-4
3400 951	17-12-4
3400 959	17-23-3
3400 960	17-23-3
3400 962	17-23-2
3400 964-5	13-54-15
3400 967	13-54-4
3400 968	13-54-15
3400 986	17-15-11
3400 987	17-15-11
3400 988	17-15-11
3400 989	17-15-11
3402 004	17-12-4
3402 006	17-12-4
3402 014	17-30-1
3402 017	17-23-3
3402 019	17-23-3
3402 022	17-23-3
3402 026	17-23-3
3402 045	17-30-2
3402 049	17-30-1
3402 102	13-54-4
3402 129	17-23-3
3402 130	17-23-3
3402 131	17-23-3
3402 132	17-23-3
3402 136	17-16-3
3402 138	17-16-3
3402 142	17-23-3
3402 145	17-23-3
3402 147	17-12-4
3402 149	17-12-4
3402 156	17-12-4
3402 158	17-12-4
3402 168	17-23-3
3402 172	17-23-3
3402 174	17-12-4
3402 177	17-15-11
3402 179	17-15-11
3402 180	17-15-1
3402 183	17-15-11
3402 261	17-23-3
3402 262	17-23-3
3402 273	17-23-3
3402 274	17-23-3
3402 275	17-23-2
3402 411	17-23-3
3402 415	17-23-3
3402 417	17-23-3
3402 419	17-23-3
3402 508-9	2-08-5
3403 002-3	8-50-303
3403 010	8-50-308
3403 012-3	8-55-7
3403 026	8-55-13
3403 028-9	8-55-7
3403 037	8-55-8
3403 038-9	8-55-158
3403 042	8-56-1
3403 046	8-56-40
3403 048	8-56-36
3403 050-1	8-55-7
3403 058-9	8-55-158
3403 062-3	8-55-7
3403 076-7	8-50-303
3403 091	8-50-308
3403 092-3	8-50-303
3403 102-3	8-55-7
3403 112-3	8-55-158
3403 114-5	8-55-7
3403 126	8-55-214
3403 128-9	8-55-7
3403 140	8-50-175
3403 144-5	8-55-158
3403 146-7	8-55-7
3403 160-1	8-50-303
3403 164	8-50-338
3403 174	8-56-23
3403 175	8-55-140
3403 188-9	8-55-7
3403 198-9	8-55-158
3403 200	8-50-308
3403 201	8-56-1
3403 206	8-56-36
3403 212-3	8-50-303
3403 236-7	8-55-158
3403 240-1	8-55-7
3403 250-1	8-50-303
3403 260	8-50-338
3403 261	8-50-338
3403 262-3	8-50-303
3403 270-1	8-50-315
3403 272-3	8-55-7
3403 282-3	8-55-7
3403 292-3	8-55-7
3403 300-1	8-55-158
3403 306-7	8-56-1
3403 314-5	8-56-1
3403 324-5	8-55-7
3403 334-5	8-55-7
3403 344-5	8-55-158
3403 346-7	8-55-7
3403 360-1	8-55-158
3403 362-3	8-55-7
3403 376-7	8-55-7
3403 392-3	8-50-292
3403 398	8-50-308
3403 406	8-50-294
3403 410-1	8-50-315
3403 414-5	8-50-303
3403 423	8-50-308
	8-50-338
3403 424-5	8-55-7
3403 430-1	8-14-1
3403 438-9	8-14-1
3403 446-7	8-14-2
3403 448-9	8-14-1
3403 454-5	8-14-1
3403 468	8-14-2
3403 472-3	8-14-1
3403 486	8-14-2
3403 494-5	8-55-158
3403 496-7	8-14-1
3403 505	8-50-175
3403 506	8-14-2
3403 508-9	8-14-1
3403 512-3	8-55-158
3403 518	8-50-308
3403 530-1	8-50-303
3403 538-9	8-50-315
3403 544-5	8-55-195
3403 548-9	8-55-158
3403 550-1	8-50-292
3403 556-7	8-50-315
3403 563	8-50-338
3403 568	8-50-308
	8-50-338
3403 570-1	8-14-1
3403 580-1	8-14-2
3403 582-3	8-55-7
3403 590	8-55-214
3403 592-3	8-50-292
3403 600-1	8-50-315
3403 618	8-14-1
3403 621	8-14-13
3403 622	8-14-6
3403 624	8-14-13
3403 627	8-14-19
3403 630-1	8-14-9
3403 635	8-14-20
3403 637	8-14-1
3403 638	8-14-6
3403 640-1	8-14-9
3403 646	8-14-19
3403 648-9	8-50-171
3403 654	8-50-175
3403 658-9	8-50-175
3403 674-5	8-14-1
3403 682	8-14-2
3403 684-5	8-14-1
3403 692	8-14-2
3403 694-5	8-55-7
3403 700-1	8-55-7
3403 718-9	8-14-1
3403 728-9	8-14-9
3403 736	8-14-2
3403 737	8-14-6
3403 738-9	8-14-1
3403 744-5	8-55-158
3403 746-7	8-14-2
3403 748-9	8-14-1
3403 756-7	8-14-2
3403 765	8-14-6
3403 766-7	8-14-9
3403 770	8-14-2
3403 774-5	8-14-1
3403 784-5	8-14-2
3403 790	8-14-3
3403 794-5	8-14-2
3403 799	8-50-352
3403 809	8-50-305
3403 828-9	8-14-2
	8-14-20

PART NUMBER	CODE
3403 830	8-57-10
3403 838-9	8-14-2
3403 840	8-14-1
3403 845	8-14-9
3403 848	8-44-1
3403 853	8-50-184
3403 860	8-56-1
3403 862	8-56-1
3403 880-1	8-55-11
3403 882-3	8-55-11
3403 884-5	8-55-11
3403 886	8-14-25
3403 890-1	8-55-158
3403 902-3	8-55-7
3403 910-1	8-55-7
3403 918-9	8-50-175
3403 932	8-50-184
3403 934-5	8-55-7
3403 941	8-57-10
3403 944-5	8-55-7
3403 954-5	8-50-315
3403 980-1	8-55-7
3403 986-7	8-55-7
3404 002	11-09-3
3404 003	11-09-3
3404 004	11-09-3
3404 011-2	11-09-3
3404 013-4	11-09-3
3404 033	11-10-20
3404 035	11-10-42
3404 036-7	11-09-3
3404 038	11-10-3
3404 042	11-09-3
3404 043	11-06-14
3404 055	11-10-34
3404 074	14-90-4
3404 075	14-86-43
3404 162	14-86-40
3404 164	14-86-65
3404 179	14-86-42
3404 180	14-86-40
3404 182	14-86-55
3404 183	14-86-65
3404 191	14-86-67
3404 202	14-86-40
3404 219	14-86-1
3404 220	14-86-1
3404 225	14-86-1
3404 231	14-86-40
3404 239	14-86-42
3404 240	14-86-50
3404 250	14-86-40
3404 255	11-05-1
3404 257	11-01-1
3404 260	11-05-1
3404 262	11-05-1
3404 266	11-01-1
3404 269	11-05-1
3404 270	11-01-1
3404 273	11-05-1
3404 277	11-01-1
3404 280	11-05-1
3404 284	11-05-1
3404 286	11-05-1
3404 288-9	11-01-1
3404 293	11-05-1
3404 295	11-05-1
3404 299	11-09-4
3404 300	11-09-3
3404 351	14-86-65
3404 363	14-86-40
3404 364	14-86-43
3404 365	14-86-65
3404 373	14-86-65
3404 378	14-86-40
3404 381	14-86-43
3404 382	14-86-40
3404 385	14-86-42
3404 386	14-86-40
3404 388	14-86-43
3404 392	14-86-1
3404 393	14-86-1
3404 394	14-86-1
3404 404	13-34-3
3404 405	13-34-3
3404 406-7	12-04-4
3404 413	12-04-4
3404 416	13-35-1
3404 419	12-04-4
3404 421	12-01-26
3404 423	13-33-68
3404 426-7	12-01-22
3404 432	13-33-61
3404 434	12-04-4
3404 435	12-04-4
3404 436	13-33-61
3404 440	13-01-1
	13-35-1
3404 450	12-01-26
3404 468	14-86-40
3404 469	14-86-40
3404 470	14-86-42
3404 474	14-86-1
3404 475	14-86-1
3404 478	14-86-40
3404 491	14-86-1
3404 492	14-86-1
3404 493	14-86-1
3404 494	14-86-1
3404 496	14-86-13
3404 497	14-86-1
3404 501	14-86-50
3404 509	14-86-1
3404 510	14-86-1
3404 519	14-86-58
3404 524	14-86-42
3404 529	14-86-40
3404 531	14-86-40
3404 534	14-86-40
3404 539	14-86-42
3404 551	11-05-1
3404 554	11-05-1
3404 557	11-01-1
3404 557-8	11-01-1
3404 563	11-05-1
3404 565	11-05-1
3404 567	11-05-1
3404 572	11-01-1
3404 579	11-05-1
3404 582	11-09-3
3404 583	11-09-3
3404 591-2	11-09-37
3404 593-4	11-09-37
3404 595	11-01-16
3404 595-6	11-01-16
3404 598	11-08-5
3404 607	5-58-1
3404 615	5-107-15
3404 625	14-90-1
3404 646	14-73-11
	14-89-57
3404 666	14-86-38
3404 667	14-86-47
3404 669	14-86-59
3404 670	14-86-47
3404 671	14-86-59
3404 677	14-86-40
3404 679	14-88-21
3404 681	14-88-21
3404 695	5-05-47
	5-107-37
3404 697	14-86-27
3404 742	5-58-1
3404 802	11-05-1
3404 805	11-09-3
3404 807	11-05-1
3404 808	11-09-3
3404 810	11-09-3
3404 821	11-05-1
3404 822	11-05-1
3404 823	11-05-1
3404 824	11-05-1
3404 825	11-05-1
3404 826	11-05-1
3404 832	11-09-3
3404 835	11-02-4
3404 836	11-02-4
3404 839	11-01-1
3404 844	11-10-3
3404 846	11-10-3
3404 847	11-09-3
3404 852	11-10-3
3404 852-3	11-10-3
3404 860	11-10-3
3404 860-1	11-10-3
3404 864	11-05-1
3404 872	11-05-1
3404 874	11-05-1
3404 876	11-05-1
3404 877	11-05-1
3404 878	11-05-1
3404 879	11-05-1
3404 880	11-05-1
3404 881	11-05-1
3404 882	11-05-1
3404 883	11-05-1
3404 886	11-01-1
3404 893	11-05-1
3404 895	11-05-1
3404 897	11-05-1
3404 899	11-05-1
3404 901	11-05-1
3404 903	11-05-1
3404 905	11-05-1
3404 907	11-05-1
3404 911	11-05-1
3404 913	11-09-3
3404 914	11-05-1
3404 919	11-05-4
3404 920	11-09-3
3404 923-4	11-05-1
3404 930	11-10-3
3404 931	11-10-3
3404 932	11-10-3
3404 943	11-10-3
3404 947	11-05-1
3404 949	11-05-1
3404 951	14-86-1
3404 958	14-86-40
3404 972	14-88-21
3404 973	14-88-21
3404 975	5-57-2
3406 191	24-25-107
3406 408	14-86-32
3406 490-1	23-19-27
3408 425	24-25-107
3409 548	1-48-325
3410 002	21-03-1
3410 005	21-04-1
3410 007	21-23-2
3410 008	21-04-2
3410 009	21-09-2
3410 010	21-16-3
3410 011	21-10-16
3410 012	21-10-3
3410 013	21-10-72
3410 018	21-11-1
3410 020	21-15-2
3410 024	21-85-5
3410 025	21-85-5
3410 026	21-24-2
3410 029	21-29-3
3410 030	21-29-25
3410 033	21-42-11
3410 036	21-42-23
3410 037	21-42-23
3410 038	21-39-3
3410 041	21-04-1
3410 043	21-16-3
3410 046	21-42-11
3410 048	21-09-5
	21-19-2
3410 053	21-42-23
3410 054	21-42-23
3410 056	21-03-1
3410 062	21-42-23
3410 063	21-42-23
3410 064	21-03-1
3410 066	21-09-2
3410 067	21-10-16
3410 068	21-10-3
3410 069	21-10-72
3410 072	21-11-1
3410 073	21-15-2
3410 082	21-23-2
3410 093	21-42-23
3410 102	21-136-49
3410 141	21-39-3
3410 157	6-14-1
3410 158	6-14-1
3410 159	6-14-1
3410 160	6-13-1
3410 161	6-13-1
3410 162	21-15-33
3410 168	21-42-11
3410 193	21-03-1
3410 194	21-03-1
3410 204	21-34-47
3410 207	21-42-23
3410 210	21-12-1
3410 213	21-03-1
3410 225	21-133-17
3410 226	21-133-17
3410 244	21-29-3
3410 245	21-137-22
3410 247	21-09-29
3410 253	21-117-1
3410 258	9-45-1
3410 270	21-42-23
3410 271	21-42-23
3410 280	21-03-1
3410 281	21-03-1
3410 295	21-42-23
3410 296	21-42-23
3410 300	21-14-1
3410 305	21-14-1
3410 307	9-46-31
3410 310	9-71-5
3410 312	21-139-64
3410 319	21-139-101
3410 332	21-137-13
3410 333	21-137-5
3410 334	21-42-23
3410 362	21-42-23
3410 363	21-42-23
3410 364	21-42-23
3410 365	21-42-23
3410 366	21-42-23
3410 367	21-42-23
3410 368	21-42-23
3410 372	21-137-8
3410 374	21-137-8
3410 378	21-139-135
3410 380	21-139-154
3410 381	21-139-147
3410 394	21-04-1
3410 395	21-09-29
3410 402	21-09-2
3410 403	21-10-16
3410 405	21-10-31
3410 407	21-15-2
3410 409	21-09-2
3410 410	21-10-31
3410 411	21-10-16
3410 412	21-15-2
3410 413	21-09-19
3410 428	21-14-15
3410 435	21-139-147
3410 437	21-137-6
3410 440	21-137-5
3410 441	21-137-13
3410 443	21-137-11
3410 444	21-137-22
3410 445	21-137-5
3410 461	21-139-135
3410 465	21-05-2
3410 468	21-03-1
3410 469	21-03-1
3410 470	21-03-1
3410 478	21-139-4
3410 484	21-139-12
3410 490	21-42-23
3410 503	21-03-1
3410 508	21-139-4
3410 509	21-139-4
3410 512	21-139-140
3410 517	21-139-108
3410 518	21-137-22
3410 531	9-46-31
3410 532	9-46-33
3410 535	21-119-15
3410 540	21-133-47
3410 542	21-42-11
3410 543	21-42-11
3410 550	21-09-2
3410 554	21-14-15
3410 560	21-139-11
3410 561	21-39-3
3410 564	21-139-19
3410 570	21-133-43
3410 571	21-133-43
3410 572	21-133-65
3410 582	21-14-1
3410 612	21-02-1
	21-119-11
3410 635	21-02-1
	21-142-18
3410 636	21-02-1
	21-142-18
3410 637	21-02-1
	21-142-18
3410 667	21-02-1
	21-139-154
3410 668	21-02-1
	21-139-154
3410 669	21-02-1
	21-139-154
3410 670	21-02-1
	21-139-154
3410 671	21-02-1

PART NUMBER	CODE
.....	21-139-154
3410 672	21-02-1
.....	21-139-154
3410 679	21-02-1
.....	21-42-31
3410 681	21-02-1
.....	21-42-31
3410 682	21-02-1
.....	21-42-31
3410 683	21-02-1
.....	21-42-31
3410 693	21-02-1
.....	21-119-11
3410 694	21-02-1
.....	21-119-11
3410 695	21-02-1
.....	21-119-11
3410 697	21-02-1
.....	21-42-31
3410 699	21-02-1
.....	21-42-31
3410 700	9-69-12
3410 747	21-02-1
.....	21-119-11
3410 758	21-02-1
.....	21-42-31
3410 759	21-02-1
.....	21-42-31
3410 760	21-02-1
.....	21-42-31
3410 761	21-02-1
.....	21-42-31
3410 763	21-02-1
.....	21-42-31
3410 766	21-02-1
.....	21-119-11
3410 767	21-02-1
.....	21-139-154
3410 769	21-02-1
.....	21-139-154
3410 777	21-02-1
.....	21-139-154
3410 778	21-02-1
.....	21-139-154
3410 779	21-02-1
.....	21-139-154
3410 785	21-02-1
.....	21-42-31
3410 790	21-02-1
.....	21-42-31
3410 791	21-02-1
.....	21-42-31
3410 808	21-14-19
3410 810	21-133-7
3410 814	21-133-7
3410 826 ...	21-139-105
3410 837	9-45-1
3410 839	9-46-4
3410 879	21-11-9
3410 880	21-03-1
3410 881 ...	21-139-105
3410 886 ...	21-139-105
3410 889 ...	21-139-135
3410 898	21-133-20
3410 899	21-129-10
3410 900	21-133-7
3410 905	21-133-1
.....	21-133-7
3410 906	21-133-7
3410 908 ...	21-137-200
3410 912 ...	21-139-105
3410 916	9-45-1
3410 918	9-46-4
3410 919	21-133-7
3410 920	21-133-7
3410 921	21-29-3
3410 922	21-42-13
3410 930	21-42-11
3410 934 ...	21-139-140
3410 949	21-05-1
3410 965	21-118-40
3410 982	6-16-1
3410 983	6-16-1
3410 993	6-14-2
3412 179	23-20-14
3412 180	23-20-14
3412 192	23-52-1
3412 284	23-47-345
3412 315	15-11-3
3412 549	23-34-308
3412 550	23-34-308
3412 551	23-34-308
3412 552	23-34-308
3412 553	23-34-308
3412 554	23-34-308
3412 555	23-34-308
3412 556	23-34-308
3412 557	23-34-308
3412 558	23-34-308
3412 768	21-03-8
3412 798	8-37-372
3412 849	7-52-2
3412 851	7-12-1
3412 882	17-30-8
3412 884	7-52-11
.....	14-88-8
3414 486	14-46-16
3414 682	14-54-36
3415 052-3 ...	23-26-23
3415 054-5 ...	23-26-23
3415 056-7 ...	23-26-23
3415 058	23-26-47
3415 084	21-136-15
3415 106-7 ...	23-26-23
3415 108-9 ...	23-26-23
3415 110	23-26-47
3415 112	23-26-23
3415 131	23-38-14
3415 152	23-26-80
3415 155	23-26-80
3415 263	23-14-15
3415 264	23-14-32
3415 267	23-14-15
3415 296-7 ...	23-26-23
3415 300	23-26-47
3415 302	23-26-47
3415 304-5 ...	23-26-23
3415 306	23-26-47
3415 308	23-26-47
3415 312	23-26-80
3415 338-9 ...	23-26-23
3415 340	23-26-23
3415 341	23-26-47
3415 342	23-26-47
3415 346-7 ...	23-26-23
3415 348	23-26-46
3415 362	23-26-80
3415 376	23-26-47
3415 378	23-26-47
3415 380	23-63-20
3415 386	23-63-20
3415 393	23-38-23
3415 394-5 ...	23-26-47
3415 465	23-14-32
3415 507	23-38-5
3415 508	23-38-5
3415 558	23-26-23
3415 611	23-26-87
3415 613	8-11-24
3415 640	23-20-29
3415 645	23-26-80
3415 646	23-26-80
3415 648	23-20-29
3415 685	23-38-3
3415 686	23-38-14
3415 687	23-38-46
3415 698	23-20-41
3415 785	23-26-80
3415 810-1 ...	23-20-24
3415 822	23-26-80
3415 840	23-40-82
3415 843	23-26-80
3415 844	23-38-1
3415 881	23-20-29
3415 937	23-26-80
3415 944	23-26-23
3415 956	23-20-29
3415 958	23-20-29
3415 960	23-20-29
3415 961	23-20-29
3415 962	23-20-29
3415 995	23-49-7
3416 002	23-20-14
3416 004-5 ...	23-20-14
3416 006-7 ...	23-20-14
3416 027	23-40-82
3416 028	23-40-82
3416 148-9 ...	23-63-20
3416 166	23-20-29
3416 169	23-20-29
3416 170	23-20-29
3416 171	23-20-29
3416 185	23-26-80
3416 196-7 ...	23-63-14
3416 198-9 ...	23-63-14
3416 312-3 ...	23-26-47
3416 343	23-20-41
3416 344-5 ...	23-26-47
3416 360	23-63-14
3416 362	23-63-14
3416 366-7 ...	23-63-20
3416 368-9 ...	23-63-20
3416 598	23-14-32
3416 654	23-34-38
3416 662	23-06-53
3416 663	23-26-80
3416 698	23-26-80
3416 794	23-14-15
3416 796	23-14-32
3416 839	23-02-62
3416 846	23-02-68
3416 956	23-63-16
3416 958	23-26-80
3416 959	23-26-80
3416 994	23-04-205
3416 997	23-04-246
3417 003	23-32-56
3417 004	23-32-56
3417 012	15-03-3
3417 017	15-03-3
3417 036	23-64-66
3417 037	15-03-3
3417 040	15-03-3
3417 049	23-64-66
3417 051	15-03-3
3417 057	15-03-3
3417 066	15-03-3
3417 069	15-03-3
3417 070-1	23-11-3
3417 077	15-03-3
3417 078-9 ...	23-19-84
3417 088	15-03-3
3417 148-9 ..	23-32-105
3417 160	23-19-8
3417 167	23-19-8
3417 172	23-64-269
3417 174	23-39-49
3417 198	13-01-1
3417 199	13-01-1
3417 216-7	23-32-6
3417 218-9	23-32-6
3417 226-7	23-51-5
3417 232-3	23-51-5
3417 236-7	23-51-5
3417 250	23-39-24
.....	23-39-32
3417 262-3	23-11-3
3417 298	13-01-1
3417 299	13-01-1
3417 303	23-32-17
3417 312-3 ..	23-34-120
3417 314	23-32-17
3417 318-9 ..	23-64-268
3417 320-1	23-11-1
3417 322-3 ..	23-34-120
3417 350	7-26-2
3417 351	7-26-2
3417 355	7-26-30
3417 358	23-66-65
3417 360-1	23-11-3
3417 384-5	23-11-1
3417 388-9	23-11-1
3417 392-3	23-11-1
3417 396-7	23-11-1
3417 401	23-34-293
3417 410	7-26-30
3417 411	7-26-30
3417 412	23-34-167
3417 424-5	23-51-5
3417 428-9	23-51-5
3417 440-1	23-11-3
3417 444	15-03-3
3417 445	23-39-24
3417 548-9 ..	23-32-105
3417 562-3 ..	23-32-105
3417 564-5 ..	23-32-105
3417 596-7	23-11-1
3417 600-1 ...	23-34-80
3417 608-9 ...	23-36-66
3417 627	23-64-269
3417 632	23-54-3
3417 633	23-54-3
3417 634	23-54-3
3417 732-3 ...	23-39-24
3417 740-1	23-11-1
3417 747	23-34-110
3417 751	7-26-2
3417 754	23-64-66
3417 768-9 ...	23-19-84
3417 779	15-03-3
3417 782-3 ..	23-34-120
3417 786	7-26-2
3417 810	23-32-105
3417 811	23-32-105
3417 812	23-32-17
3417 836	23-32-20
3417 882-3 ..	23-32-105
3417 884-5 ..	23-32-105
3417 886-7 ..	23-32-105
3417 931	23-34-80
3417 932	23-34-80
3417 944	23-54-3
3417 946-7 ...	23-34-80
3417 948-9 ...	23-34-80
3417 950-1 ...	23-34-80
3417 952-3 ...	23-34-80
3417 954-5 ...	23-34-80
3417 996	15-03-3
3418 069	14-45-4
3418 201	14-40-4
3418 217	14-54-28
3418 227	7-06-14
3418 238	9-41-4
3418 239	9-41-4
3418 240	9-41-4
3418 241	9-41-4
3418 242	9-41-4
3418 261	24-25-15
3418 289	9-01-24
3418 293	10-24-4
3418 305	9-64-24
3418 328	9-02-62
3418 332	7-04-5
3418 335	7-41-4
3418 339	7-03-1
3418 343	10-03-4
3418 348	19-54-115
3418 352	9-48-6
3418 359	9-42-1
3418 360	9-42-1
3418 384	7-03-1
3418 394	9-64-24
3418 397	14-45-9
3418 400	9-64-24
3418 403	9-02-62
3418 404	7-03-1
3418 406	8-35-41
3418 421	10-03-4
3418 422	10-03-4
3418 423	10-03-7
3418 424	9-43-1
3418 425	9-43-1
3418 432	9-03-4
3418 434	9-48-7
3418 437	10-24-4
3418 452	9-48-6
3418 459	7-41-4
3418 462	14-62-1
3418 469	9-39-5
3418 470	9-39-5
3418 471	9-39-5
3418 472	9-39-5
3418 475	9-39-5
3418 476	9-39-5
3418 477	9-39-5
3418 478	9-39-5
3418 479	9-39-6
3418 480	9-39-6
3418 481	9-39-6
3418 482	9-39-6
3418 485	14-37-30
3418 491	9-39-15
3418 501	14-39-45
3418 502	14-39-45
3418 503	14-30-1
3418 504	14-30-1
3418 505	14-30-1
3418 506	14-30-1
3418 507	14-30-1
3418 508	14-30-1
3418 509	14-30-1
3418 510	14-30-1
3418 511	14-30-1
.....	14-54-3
3418 512	14-30-1
3418 513	14-30-1
3418 514	14-30-1
3418 515	14-30-1
3418 516	14-30-1
3418 517	14-30-1

PART NUMBER	CODE
3418 518	14-30-1
3418 521	14-30-1
3418 522	14-30-1
3418 523	14-30-1
3418 524	14-30-1
3418 525	14-30-1
3418 526	14-30-1
3418 527	14-30-1
3418 528	14-30-1
3418 529	14-30-1
3418 530	14-30-1
3418 531	14-30-1
3418 532	14-30-1
3418 535	14-36-1
3418 536	14-30-1
3418 537	14-30-1
3418 538	14-30-1
3418 539	14-30-1
3418 540	14-30-1
3418 541	14-30-1
3418 542	14-30-1
3418 543	14-30-1
3418 544	14-30-1
3418 547	14-30-1
3418 548	14-30-1
3418 549	14-30-1
3418 550	14-30-1
3418 551	14-30-1
3418 552	14-30-1
3418 553	14-30-1
3418 554	14-30-1
3418 555	14-30-1
3418 556	14-30-1
3418 557	14-30-1
3418 558	14-30-1
	14-36-1
3418 560	14-30-1
3418 562	14-30-1
3418 566	14-02-18
3418 571	14-02-85
3418 572	14-02-85
3418 574	14-02-87
3418 610	8-28-15
3418 611	8-28-32
3418 612	7-06-1
3418 620	9-48-6
3418 624	9-48-6
3418 626	14-62-1
3418 652	14-29-9
3418 658	15-03-67
3418 660-1	15-03-8
3418 665	15-03-91
3418 666	15-03-53
3418 667	14-46-6
3418 670	15-03-51
3418 671	14-30-7
3418 672	15-03-88
3418 673	15-03-65
3418 681	9-48-7
3418 683	15-03-89
3418 686	14-29-9
3418 688	9-39-5
3418 689	9-39-5
3418 692	15-03-51
3418 693	14-29-42
3418 694	14-29-42
3418 707	14-29-7
3418 709	14-29-9
3418 715	14-29-9
3418 717	14-29-9
3418 722	14-29-2
3418 723	14-29-2
3418 779	14-54-152
3418 801	14-01-1
3418 804	14-11-20
3418 806	14-15-6
3418 807	14-11-55
3418 808	14-13-5
3418 809	14-11-18
3418 810	14-26-6
3418 814	14-11-9
3418 815	14-06-1
3418 816	14-06-10
3418 817	14-06-1
3418 820	14-26-6
3418 824	14-26-6
3418 826	14-26-6
3418 828	14-11-9
3418 829	14-26-6
3418 835	14-06-10
3418 836	14-25-11
3418 837	14-25-11
3418 839	14-25-11
3418 840	14-25-11
3418 841	14-25-11
3418 842	14-14-12
3418 843	14-14-12
3418 846	14-25-11
3418 847	14-11-31
3418 848	14-15-10
3418 899	14-11-40
3418 900	14-11-40
3418 916	9-48-56
3418 917	9-48-56
3418 928	7-06-1
3418 933	10-03-7
3418 943	7-03-1
3418 950	19-54-86
3418 995	9-07-5
3419 000	7-03-1
3419 075	23-17-4
3419 077	23-17-4
3419 134-5	23-09-51
3419 136-7	23-09-51
3419 138-9	23-09-51
3419 209	23-18-27
	23-54-214
3419 306-7	23-23-52
3419 336-7	23-23-52
3419 338-9	23-23-52
3419 350-1	23-64-242
3419 382	1-74-1
3419 413	23-21-8
3419 426-7	23-64-299
3419 479	23-23-52
3419 480-1	23-23-52
3419 498	1-74-1
3419 503	14-30-4
3419 504	14-43-5
3419 507	14-35-39
3419 508	14-39-7
3419 510	14-35-39
3419 511	14-39-7
3419 515	14-39-7
3419 584	14-39-7
3419 588	14-43-5
3419 615	14-43-5
3419 616	14-35-1
3419 617	14-39-7
3419 619	14-35-1
3419 620	14-39-7
3419 621	14-39-7
3419 623	14-35-33
3419 639	14-35-6
3419 647	14-35-6
3419 649	14-39-1
3419 650	14-39-6
3419 651	14-35-43
3419 652	14-35-43
3419 653	14-54-78
3419 654	14-38-5
	14-54-15
3419 655	14-45-1
	14-45-4
3419 656	14-45-1
3419 657	14-35-43
3419 658	14-45-1
	14-45-8
3419 659	14-54-140
3419 660	14-50-6
3419 661	14-54-3
3419 662	14-34-10
3419 663	14-30-29
3419 664	14-40-8
3419 665	14-38-4
3419 666	14-38-12
	14-54-78
3419 667	14-45-1
3419 668	14-40-1
3419 669	14-46-1
3419 670	14-35-45
3419 671	14-39-8
3419 672	14-40-7
3419 673	14-40-5
3419 674	14-36-1
3419 675	14-36-29
3419 676	14-40-18
3419 677	14-36-1
3419 678	14-36-50
3419 679	14-36-15
3419 680	14-50-8
3419 681	14-45-4
3419 682	14-45-5
3419 683	14-46-2
3419 685	14-54-37
3419 687	14-39-51
3419 688	14-30-31
3419 689	14-45-12
3419 693	14-38-4
3419 695	14-38-4
3419 699	14-38-4
3419 802-3	23-23-52
3419 804-5	23-23-52
3419 806	23-23-52
3419 807	23-23-65
3419 808-9	23-23-52
3419 810-1	23-23-52
3419 814-5	23-23-65
3419 816-7	23-23-65
3419 818-9	23-23-65
3419 820-1	23-23-65
3419 854	23-23-65
3419 855	23-23-65
3419 872-3	12-01-5
3419 874-5	12-01-5
3419 876-7	12-01-5
3419 878-9	12-01-5
3419 880-1	12-01-5
3419 882-3	12-01-5
3419 884-5	12-01-5
3419 886-7	12-01-5
3419 888-9	12-01-5
3419 890-1	12-01-5
3419 892-3	12-01-5
3419 894-5	12-01-5
3419 940	13-72-4
3419 941	7-16-63
3419 942	7-16-63
3419 943	7-16-63
3419 944	7-26-15
3419 945	23-64-181
3419 946-7	23-64-299
3419 948-9	12-01-5
3419 951	23-17-2
3419 952	23-17-4
3419 953	23-17-4
3419 954	23-17-4
3419 955	23-17-4
3419 958	23-17-4
3419 959	23-66-75
3419 988-9	23-23-52
3419 990-1	23-23-52
3419 997	23-17-4
3420 001	5-100-1
3420 003	9-09-2
3420 004	9-09-2
3420 005	9-09-2
3420 006	9-09-2
3420 007	9-09-2
3420 008	9-09-2
3420 009	9-09-2
3420 010	9-09-2
3420 011	9-09-2
3420 012	9-09-2
3420 013	9-09-2
3420 014	9-09-2
3420 020	21-01-3
3420 021	5-58-1
3420 023	21-136-232
3420 025	6-17-3
3420 026	6-17-3
3420 027	9-50-1
3420 029	9-01-5
3420 030	9-39-1
3420 035	7-42-4
3420 036	7-42-4
3420 037	7-42-1
3420 038	7-42-1
3420 039	9-41-4
3420 040	9-41-4
3420 041	9-41-4
3420 042	9-41-4
3420 045	9-58-1
3420 046	9-58-1
3420 047	9-58-1
3420 064	21-01-3
3420 066	21-01-3
3420 067	21-01-3
3420 068	21-01-3
3420 069	21-01-3
3420 076	21-133-1
	21-133-4
3420 077	21-133-1
	21-133-4
3420 087	21-118-57
	21-129-11
3420 090	3-33-1
3420 091	3-33-1
3420 093	21-01-3
3420 095	21-129-1
	21-133-1
3420 096	21-129-1
	21-133-1
3420 097	21-129-1
	21-133-1
3420 098	21-129-1
	21-133-1
3420 100	21-136-232
3420 101	4-23-1
3420 102	4-23-1
3420 112	17-11-3
3420 114	17-11-3
3420 115	17-11-3
3420 118	17-16-1
3420 120	5-39-1
3420 128	5-105-1
3420 129	5-105-1
3420 134	4-23-1
3420 135	4-23-1
3420 136	4-23-1
3420 137	4-23-1
3420 140	5-63-1
3420 141	4-23-1
3420 142	4-23-1
3420 145	5-03-3
3420 146	5-03-3
3420 147	5-03-3
3420 148	5-03-3
3420 149	5-03-3
3420 150	5-03-3
3420 154	2-07-1
3420 155	2-07-1
3420 156-7	2-10-55
3420 159	17-11-3
3420 160-1	2-10-55
3420 162-3	2-10-55
3420 165	17-11-3
3420 168	17-11-3
3420 169	17-11-3
3420 170	17-11-3
3420 171	17-11-3
3420 172	17-11-3
3420 173	17-11-3
3420 174	17-11-3
3420 175	17-11-3
3420 176-7	17-11-3
3420 178	17-11-3
3420 179	17-11-3
3420 180	17-11-3
3420 181	17-11-3
3420 183	17-11-3
3420 184	17-11-3
3420 185	17-11-3
3420 186	17-11-3
3420 187	17-11-3
3420 188	17-11-3
3420 189	17-11-3
3420 190	17-11-3
3420 193	19-58-7
3420 194	19-58-7
3420 204	9-34-5
3420 206	9-34-5
3420 210	9-34-5
3420 212	9-34-5
3420 214	9-34-5
3420 216	9-34-5
3420 218	9-34-5
3420 220	9-34-5
3420 222	9-34-5
3420 223	10-02-62
3420 224	10-02-62
3420 227	9-58-1
3420 228	9-35-1
3420 229	9-35-1
3420 230	9-35-1
3420 231	9-01-5
3420 232	9-39-1
3420 241	9-01-5
3420 242	9-39-1
3420 255	14-39-45
	14-54-15
3420 256	14-54-3
3420 259	14-41-35
3420 261	14-38-5
3420 265	14-54-50
3420 273	14-54-4
3420 275	14-37-14
3420 295	14-35-3
3420 296	14-35-6
3420 299	14-34-21

PART NUMBER	CODE
.....	14-35-6
3420 301	14-39-29
3420 305	14-35-45
.....	14-41-34
.....	14-68-36
3420 306	14-41-34
3420 311	14-39-30
3420 315	14-34-17
3420 317	14-40-18
3420 318	14-30-14
.....	14-30-15
3420 319	14-30-14
3420 321	14-41-10
3420 324	14-30-16
3420 332	14-35-1
3420 336	14-39-1
3420 338	14-45-3
3420 339	14-39-9
3420 340	14-54-36
3420 341	14-54-78
3420 342	14-38-3
3420 343	14-35-18
3420 344	14-45-8
3420 345	14-54-36
.....	14-54-43
3420 346	14-35-10
.....	14-35-19
3420 347	14-38-5
3420 348	14-54-78
3420 349	14-35-43
.....	14-41-35
3420 350	14-34-17
3420 351	14-34-15
3420 353	14-34-21
.....	14-38-4
3420 354	14-34-21
3420 357	14-38-4
3420 358	14-38-4
3420 360	14-89-57
3420 361	14-44-10
3420 362	14-45-1
3420 363	14-45-1
3420 364	14-40-1
3420 365	14-41-25
3420 366	14-35-3
3420 367	14-44-12
3420 368	14-39-56
3420 369	14-39-8
.....	14-40-1
3420 370	14-46-3
3420 372	14-40-7
3420 373	14-40-7
3420 375	14-46-4
3420 376	14-36-53
3420 377	14-36-50
3420 378	14-36-1
3420 381	14-45-4
3420 383	14-39-28
3420 384	14-38-28
3420 385	14-39-28
.....	14-44-11
3420 386	14-38-29
.....	14-38-36
3420 387	14-46-6
3420 388	14-46-7
3420 389	14-30-16
.....	14-30-31
3420 391	14-35-26
3420 392	14-35-25
3420 393	14-45-12
.....	14-45-14
3420 394	14-36-53
3420 397	14-38-4
3420 398	14-38-4
3420 399	14-38-12
3420 401	14-38-14
3420 402	14-39-1
3420 403	14-38-4
3420 404	14-37-15
3420 405	14-37-4
3420 407	14-38-12
3420 408	14-39-30
3420 409	14-39-10
3420 410	14-39-1
3420 411	14-45-8
3420 412	14-41-30
.....	14-41-40
3420 413	14-30-29
3420 414	14-34-21
3420 415	14-40-1
3420 416	14-40-1
.....	14-40-4
3420 418	14-35-3
3420 419	14-40-23
3420 420	14-38-53
.....	14-40-23
3420 421	14-38-14
3420 424	14-36-15
3420 425	14-36-1
3420 427	14-36-2
.....	14-43-10
3420 428	14-35-38
3420 429	14-36-50
.....	14-38-20
3420 430	14-36-50
3420 431	14-36-50
3420 432	14-36-22
3420 433	14-39-27
.....	14-39-56
3420 434	14-43-4
3420 435	14-43-4
3420 436	14-45-12
3420 437	14-39-15
3420 438	14-54-5
3420 440	14-35-10
3420 441	14-45-8
3420 442	14-39-15
3420 443	14-39-27
.....	14-54-72
.....	14-54-78
3420 445	14-38-5
3420 446	14-38-5
3420 447	14-39-9
3420 448	14-32-15
3420 449	14-45-25
3420 450	14-38-5
.....	14-54-15
3420 451	14-54-78
.....	14-54-140
.....	14-54-148
3420 452	14-54-47
3420 453	14-37-27
3420 454	14-37-27
.....	14-45-5
3420 455	14-50-8
3420 456	14-41-9
3420 458	14-38-13
3420 460	14-38-13
3420 461	14-38-50
3420 462	14-38-28
3420 463	14-39-28
3420 464	14-45-5
3420 465	14-41-8
3420 466	14-39-8
3420 470	14-37-29
3420 471	14-39-30
.....	14-39-31
3420 472	14-54-6
3420 473	14-45-27
3420 474	14-54-51
3420 475	14-39-51
3420 476	14-38-20
.....	14-39-56
3420 477	14-39-57
3420 478	14-43-3
3420 479	14-34-63
3420 480	14-34-63
3420 482	14-40-35
3420 552-3 ...	8-50-334
3420 554-5 ...	8-50-334
3420 556-7 ...	8-55-194
3420 571	21-30-23
3420 572	21-30-23
3420 573	21-30-23
3420 577	1-48-88
3420 581	8-56-8
3420 582-3.....	8-56-8
3420 584-5 ...	8-50-334
3420 586-7 ...	8-55-194
3420 588-9 ...	8-55-194
3420 590-1 ...	8-55-194
3420 592-3 ...	8-55-194
3420 594-5.....	8-56-8
3420 596-7 ...	8-55-194
3420 600	8-27-190
3420 614	1-48-46
3420 616-7 ...	8-55-194
3420 618-9 ...	8-50-334
3420 620-1 ...	8-55-194
3420 622-3 ...	8-55-194
3420 624-5 ...	8-50-334
3420 626-7 ...	8-55-194
3420 628-9 ...	8-50-334
3420 630-1 ...	8-50-334
3420 632-3 ...	8-50-334
3420 636-7 ...	8-50-334
3420 638-9 ...	8-50-334
3420 640-1 ...	8-50-334
3420 642	8-56-8
.....	14-38-28
3420 644-5 ...	8-50-334
3420 646-7.....	8-14-1
3420 648-9 ...	8-50-334
3420 673	14-40-5
3420 682	14-54-50
3420 702-3 ...	8-50-334
3420 704-5 ...	8-50-334
3420 706-7 ...	8-55-194
3420 708-9 ...	8-50-334
3420 710-1 ...	8-50-334
3420 712	8-50-349
3420 714-5.....	8-14-1
3420 716-7 ...	8-55-194
3420 718-9 ...	8-55-194
3420 720-1 ...	8-55-194
3420 727	8-50-175
3420 728-9.....	8-56-8
3420 730-1.....	8-14-6
3420 738-9 ...	8-55-194
3420 741	8-37-178
3420 742-3 ...	8-50-334
3420 750	8-36-114
3420 751	8-36-114
3420 752	8-36-114
3420 755	8-36-114
3420 782-3.....	8-14-6
3420 784-5 ...	8-55-194
3420 787	1-48-88
.....	24-01-24
3420 788-9.....	8-14-1
3420 790	8-14-1
3420 792-3.....	8-14-6
3420 794-5.....	8-14-6
3420 796-7.....	8-14-6
3420 814	23-67-160
3420 815	1-48-88
3420 816-7.....	23-67-5
3420 818-9 ...	8-55-194
3420 820-1.....	8-14-6
3420 823	8-14-1
3420 824-5.....	8-55-1
3420 828-9.....	8-14-1
3420 830-1.....	8-14-6
3420 832-3 ...	23-67-86
3420 834	14-73-1
3420 835	14-73-1
3420 836-7 ...	8-55-194
3420 838	8-37-178
3420 839	8-57-54
3420 840-1.....	8-55-1
3420 842-3.....	8-14-6
3420 844	14-72-1
3420 845	14-72-1
3420 846	14-72-1
3420 847	14-72-1
3420 848	14-72-1
3420 849	14-72-1
3420 850	14-72-1
3420 851	15-03-94
.....	24-01-46
3420 852-3.....	8-14-6
3420 854-5.....	8-14-1
3420 856-7 ...	8-55-194
3420 858	8-37-178
3420 859	1-48-599
3420 860-1 ...	8-55-194
3420 862-3.....	8-14-6
3420 865	8-53-150
3420 866-7.....	8-14-6
3420 868-9.....	8-14-6
3420 870	23-67-164
3420 871	23-67-10
3420 873	23-67-240
3420 880	8-15-3
3420 881	8-36-1
3420 884	8-34-8
.....	8-35-66
3420 885	8-35-66
3420 886	8-36-1
3420 888	1-87-1
3420 889	1-87-1
3420 893	8-29-17
3420 895	8-27-205
3420 910	8-34-278
3420 912	1-47-2
3420 915	8-36-1
3420 916	24-25-162
3420 917	8-36-1
3420 918	23-67-164
3420 919	8-27-308
3420 921	8-27-250
3420 922	8-34-278
3420 923	1-48-599
3420 924	1-88-1
3420 925	8-53-150
3420 926-7.....	8-14-6
3420 928-9.....	8-14-6
3420 935	14-02-15
3420 939	14-02-1
3420 941	14-02-1
3420 942	14-02-1
3420 943	1-47-2
3420 944	1-47-2
3420 945	1-47-2
3420 946	1-47-2
3420 947	1-47-2
3420 950	24-28-195
3420 952	5-03-3
3420 953	5-03-3
3420 954	5-03-3
3420 955	5-03-1
3420 956	5-03-3
3420 957	5-03-1
3420 958	5-03-1
3420 959	5-03-1
3420 960	5-03-1
3420 961	5-39-3
3420 962	5-39-1
3420 963	5-03-1
3420 964	5-03-1
3420 965	22-01-5
3420 967	5-39-1
3420 968	5-39-1
3420 969	5-39-1
3420 971	5-100-1
3420 972	5-100-1
3420 973	5-105-1
3420 974	5-105-1
3420 976	22-01-5
3420 977	22-01-5
3420 978	22-01-5
3420 980	5-39-1
3420 987	5-100-2
3420 995	5-64-1
3420 996	5-64-1
3420 997	5-64-1
3420 999	5-63-1
3421 000	5-63-1
3428 355	8-27-352
3431 004-5 ..	23-67-246
3431 017	24-24-150
3431 019	24-24-150
3431 020	24-24-150
3431 023	1-48-770
3431 028	23-67-265
3431 029	23-67-5
3431 031	23-67-267
3431 039	23-67-86
3431 041	23-67-5
3431 043	1-48-70
3431 044	1-48-70
3431 045	1-48-70
3431 050	23-67-241
3431 058	23-67-252
3431 060	23-67-5
3431 061	23-67-5
3431 062	23-67-86
3431 069	24-28-24
3431 074	23-67-240
3431 077	23-67-98
3431 081	24-28-19
3431 087	1-48-942
3431 092	23-67-260
3431 093	8-34-326
.....	23-67-260
3431 094	23-67-79
3431 097	23-67-5
3431 098	23-67-5
3431 101	23-67-79
3431 102	23-67-79
3431 103	23-67-79
3431 116	24-24-150
3431 127	24-24-39
.....	24-24-140
3431 134	1-48-374
3431 137	24-24-5
3431 139	1-48-4
3431 149	1-48-770
3431 154	23-67-240
3431 157	1-48-10

PART NUMBER	CODE
3431 158	24-24-156
3431 159	24-24-156
3431 160	23-67-246
3431 162	1-48-10
3431 165	1-48-7
3431 167	1-48-4
3431 175	23-33-65
3431 181	24-24-150
3431 188	24-28-19
3431 190	24-24-140
3431 194	1-48-4
3431 195	1-48-4
3431 196	1-48-374
	24-24-161
3431 197	24-24-161
3431 198	24-24-161
3431 199	1-48-70
3431 200	1-48-70
3431 201	24-24-140
3431 202	1-48-70
3431 203	24-24-140
3431 204	1-48-940
3431 206	24-24-159
3431 209	24-01-45
3431 213	23-67-246
3431 215	24-01-65
3431 251	23-67-25
3431 254	23-67-5
3431 255	23-67-25
3431 262	24-24-161
3431 263	24-24-159
3431 270	24-24-161
3431 271	24-24-140
3431 272	23-67-261
3431 280	1-48-7
3431 281	1-48-4
3431 285	1-48-770
3431 289	24-24-161
3431 290	24-24-140
3431 293	1-48-35
3431 295	23-67-252
3431 297	24-28-318
3431 300-1	8-34-287
3431 302-3	8-34-287
3431 304-5	8-34-287
3431 308-9	8-34-314
3431 316-7	8-34-320
3431 321	8-34-315
3431 325	8-34-316
3431 330	1-48-942
	24-24-156
3431 334	1-48-4
3431 338	1-48-770
3431 339	24-01-65
3431 342	1-48-12
3431 343	1-48-12
3431 350	1-48-770
3431 353	1-48-4
3431 356	23-67-5
3431 364	1-48-70
3431 370	1-48-156
3431 377	1-48-7
3431 379	1-48-7
3431 380	24-28-19
3431 382	1-48-70
3431 385	23-67-260
3431 410	8-34-323
3431 411	8-34-323
3431 416	8-34-323
3431 436	1-48-55
3431 437	8-34-280
3431 438	8-34-280
3431 451	8-34-326
3431 452-3	23-67-246
3431 457	1-48-950
	24-01-66
3431 459	24-01-65
3431 461	1-48-7
3431 465	23-67-25
3431 466	23-67-25
3431 470	24-28-19
3431 472	24-28-19
3431 477	1-48-941
3431 495	1-48-770
3431 496	1-48-770
3431 497	1-48-770
3431 506	23-67-164
3431 507	23-67-164
3431 508	23-67-10
3431 509	23-67-112
3431 510	23-67-106
3431 511	23-67-10
3431 570	1-48-10
3431 572	24-24-39
3431 575	1-48-4
3431 577	1-48-4
3431 583	1-48-4
3431 584	1-48-4
3432 209	3-32-1
3432 210	3-32-1
3432 212	3-02-1
3432 213	3-03-1
3432 214	3-03-1
3432 217	3-19-1
3432 219	3-03-1
3432 222	5-13-9
3432 295	3-02-1
3432 298	3-02-1
3432 299	3-03-29
3432 320	3-22-28
3432 321	3-22-28
3432 322	3-22-28
3432 323	3-22-28
3432 324	3-22-28
3432 325	3-22-28
3432 326	3-22-28
3432 327	3-22-28
3432 328	3-22-28
3432 329	3-22-28
3432 330	3-22-28
3432 331	3-22-28
3432 332	3-22-28
3432 333	3-22-28
3432 334	3-22-28
3432 335	3-22-28
3432 336	3-22-28
3432 337	3-22-28
3432 338	3-22-28
3432 435	3-04-6
3432 437	3-03-2
3432 440	3-03-1
3432 441	3-03-1
3432 442	3-03-1
3432 443	3-03-1
3432 448	3-03-1
3432 485	16-20-1
3432 487	16-20-1
3432 489	16-20-1
3432 494	4-23-39
3432 495	16-20-1
3432 555	3-02-1
3432 556	3-03-1
3432 557	3-03-1
3432 613	3-03-1
3432 614	3-03-1
3432 647	3-02-1
3432 691	3-35-14
3432 695	3-03-8
3432 698	22-05-14
3432 698-9	22-05-14
3432 774	3-32-1
3432 780	3-32-1
3432 786	3-32-1
3432 792	3-32-1
3432 798	3-32-1
3432 819	3-02-1
3432 820	3-32-1
3432 830	3-32-1
3432 832	3-32-1
3432 842	3-03-1
3432 843	3-02-1
3438 150	8-28-74
3438 159	8-29-42
3438 171	8-29-0
3438 172	8-29-0
3438 173	8-28-3
	8-29-0
3438 174	8-28-3
	8-29-0
3438 176	8-29-0
3438 177	8-28-3
	8-29-208
3438 178	8-28-3
	8-29-208
3438 179	8-28-3
	8-29-208
3438 180	8-28-3
	8-29-208
3438 204	8-29-132
3438 209	8-27-250
3438 219	8-27-1
	8-27-352
3438 220	8-27-250
3438 221	8-27-1
	8-27-352
3438 222	8-27-1
	8-27-352
3438 223	8-27-250
3438 224	8-27-1
	8-27-352
3438 225	8-27-1
	8-27-352
3438 226	8-27-1
	8-27-352
3438 229	8-27-308
3438 231	8-27-1
	8-27-308
3438 232	8-27-1
	8-27-308
3438 233	8-27-1
	8-27-308
3438 234	8-27-1
	8-27-308
3438 235	8-27-250
3438 237	8-27-1
	8-27-308
3438 238	8-27-1
	8-27-308
3438 239	8-27-250
3438 255	8-27-1
	8-27-308
3438 256	8-27-1
	8-27-308
3438 303	14-38-24
3438 306	8-27-1
	8-27-308
3438 307	8-27-1
	8-27-308
3438 308	8-27-250
3438 309	8-27-1
	8-27-352
3438 310	8-27-1
	8-27-352
3438 311	8-27-250
3438 314	8-27-1
	8-27-352
3438 316	8-27-1
	8-27-352
3438 317	8-27-1
	8-27-352
3438 318	8-27-1
	8-27-352
3438 325	8-27-1
	8-27-352
3438 326	8-27-1
	8-27-352
3438 328	8-27-250
3438 333	14-38-24
3438 334	8-36-114
3438 338	14-38-24
3438 339	8-27-308
3438 348	8-27-1
	8-27-352
3438 349	8-27-1
	8-27-352
3438 355	8-27-1
	8-27-352
3438 356	8-27-1
	8-27-352
3438 371	14-38-26
3438 378	8-29-208
3438 413	8-36-114
3438 422	8-27-1
	8-27-352
3438 423	8-27-1
	8-27-352
3438 424	8-27-308
3438 433	8-27-308
3438 434	8-27-308
3438 435	8-27-250
3438 440	8-27-1
	8-27-352
3438 441	8-27-1
	8-27-352
3438 442	8-27-1
	8-27-352
3438 443	8-27-1
	8-27-352
3438 444	8-27-250
3438 453	8-27-1
	8-27-352
3438 454	8-27-1
	8-27-352
3438 455	8-27-250
3438 465	8-22-4
3438 472	8-22-11
3438 474	8-22-5
3438 481	8-22-6
3438 482	8-22-6
3438 483	8-22-6
3438 494	8-22-8
3438 509	8-27-1
	8-27-352
3438 510	8-27-1
	8-27-352
3438 511	8-27-250
3438 514	8-27-308
3438 517	8-27-1
	8-27-352
3438 518	8-27-250
3438 520	8-27-1
	8-27-352
3438 521	8-27-1
	8-27-352
3438 522	8-27-1
	8-27-352
3438 523	8-27-1
	8-27-352
3438 524	8-27-1
	8-27-352
3438 525	8-27-1
	8-27-352
3438 529	8-27-250
3438 530	8-27-1
	8-27-352
3438 532	8-27-1
	8-27-352
3438 533	8-22-9
3438 534	8-27-1
	8-27-352
3438 535	8-27-1
	8-27-352
3438 540	8-27-250
3438 544	8-27-1
	8-27-352
3438 545	8-27-1
	8-27-352
3438 546	8-27-250
3438 559	8-27-1
	8-27-352
3438 560	8-27-1
	8-27-352
3438 565	8-27-250
3438 577	8-27-1
	8-27-352
3438 578	8-27-1
	8-27-352
3438 579	8-27-1
	8-27-352
3438 580	8-27-1
	8-27-352
3438 597	8-36-14
3438 615	8-27-1
	8-27-352
3438 616	8-27-1
	8-27-352
3438 617	8-27-1
	8-27-352
3438 618	8-27-1
	8-27-352
3438 630	8-28-74
3438 684	8-01-5
3438 690	8-27-1
	8-27-352
3438 691	8-27-1
	8-27-352
3438 693	8-27-250
3438 694	8-27-1
	8-27-352
3438 695	8-27-1
	8-27-352
3438 697	8-27-250
3438 757	8-29-97
3438 777	14-38-24
3438 778	14-38-25
3438 779	14-38-26
3438 780	8-29-208
3438 782	8-28-3
	8-29-208
3438 785	8-29-97
3438 891	8-27-1
	8-27-308
3438 892	8-27-1
	8-27-308
3438 893	8-27-1
	8-27-308
3438 894	8-27-1
	8-27-308
3438 896	8-27-1
	8-27-308

PART NUMBER	CODE
3438 897	8-27-1
	8-27-308
3439 001	23-64-276
3439 028	23-61-117
3439 034-5	23-23-65
3439 040-1	23-63-33
3439 044-5	23-63-33
3439 098	23-54-31
3439 101	23-54-88
3439 102-3	23-63-14
3439 104-5	23-63-15
3439 115	23-64-199
3439 124-5	23-64-197
3439 134-5	23-63-15
3439 137	23-64-74
3439 142-3	23-64-48
3439 146-7	23-64-48
3439 148-9	23-63-127
3439 152-3	23-63-14
3439 154	4-09-1
3439 155	23-54-28
3439 163	23-64-4
3439 166	23-48-93
3439 176-7	23-34-130
3439 180-1	23-63-55
3439 184-5	23-63-55
3439 186-7	23-34-235
3439 212	23-64-269
3439 262-3	23-34-246
3439 275	23-64-12
3439 278-9	23-42-46
3439 282	23-63-171
3439 298	23-26-23
3439 300	23-26-23
3439 301	23-26-23
3439 302	23-26-23
	23-26-47
3439 303	23-26-23
3439 311	23-64-276
3439 314	23-40-155
3439 315	23-40-187
3439 317	23-64-14
3439 324	23-49-9
3439 328-9	14-88-28
3439 404-5	23-66-77
3439 414-5	23-66-65
3439 416-7	23-66-65
3439 420-1	23-34-121
3439 422-3	23-34-121
3439 424-5	23-34-121
3439 428-9	23-34-117
3439 431	23-34-116
3439 433	23-31-33
3439 435	23-31-137
3439 452-3	23-63-55
3439 472	23-66-135
3439 473	23-66-135
3439 480	23-66-135
3439 481	23-66-135
3439 488	23-22-145
3439 489	23-22-145
3439 508	23-15-13
3439 514	23-08-75
3439 516-7	23-34-235
3439 518-9	23-34-235
3439 526-7	23-34-234
3439 528-9	23-34-27
3439 530-1	23-34-27
3439 534-5	23-34-27
3439 536-7	23-36-53
3439 538-9	23-36-53
3439 546-7	23-36-53
3439 550-1	23-36-53
3439 562-3	23-36-125
3439 570	23-34-5
3439 709	23-15-13
3439 734-5	23-63-33
3439 736-7	23-63-33
3439 900-1	23-64-308
3439 902-3	23-64-308
3440 000-1	23-34-120
3440 004-5	23-34-120
3440 038	23-42-23
3440 042-3	23-63-33
3440 044-5	23-63-33
3440 062-3	23-63-15
3440 070-1	23-64-308
3440 072-3	23-64-308
3440 074-5	23-64-308
3440 076-7	23-64-308
3440 088	23-34-301
3440 090-1	23-40-85
3440 092-3	23-40-85
3440 094-5	23-40-85
3440 096-7	23-40-85
3440 098-9	23-40-85
3440 100-1	23-40-85
3440 110-1	23-59-56
3440 112-3	23-59-56
3440 114-5	23-59-56
3440 126	23-42-32
3440 127	1-74-1
3440 129	23-34-5
3440 134	22-20-87
3440 139	23-34-16
3440 148-9	23-36-118
3440 154-5	23-34-242
3440 158-9	23-34-242
3440 180	23-36-66
3440 181	23-36-54
3440 182	23-36-54
3440 204-5	23-64-311
3440 206-7	23-64-311
3440 220-1	23-22-53
3440 246-7	23-09-67
3440 251	23-54-143
3440 266	23-54-150
3440 269	23-63-181
3440 270	23-54-103
3440 288-9	23-34-235
3440 301	23-64-266
3440 312-3	23-63-55
3440 320-1	23-64-308
3440 322-3	23-64-308
3440 400	23-11-9
3440 422-3	23-42-16
3440 424-5	23-64-308
3440 426-7	23-64-308
3440 428-9	23-64-14
3440 446	23-36-133
3440 448	23-36-133
3440 450	23-36-133
3440 452	23-26-80
3440 472-3	23-09-51
3440 493	23-42-16
3440 514-5	23-34-242
3440 525	23-31-137
3440 526	23-23-65
3440 527	23-23-65
3440 530	23-31-137
3440 531	23-31-137
3440 532-3	23-59-56
3440 540	23-09-58
3440 556-7	23-63-14
3440 558-9	23-63-14
3440 560-1	23-31-137
3440 562-3	23-64-12
3440 564-5	23-51-5
3440 566	23-32-48
3440 567	23-34-16
3440 590	23-09-47
3440 600	23-26-80
3440 623	23-63-181
	23-64-17
	23-64-272
3440 626-7	23-64-12
3440 636	23-26-23
3440 637	23-26-23
3440 638	23-26-23
3440 639	23-26-23
3440 645	23-34-110
3440 646	23-64-17
3440 647	23-64-71
3440 672	23-63-37
3440 688-9	23-64-308
3440 690-1	23-64-308
3440 700-1	23-64-308
3440 702-3	23-64-308
3440 704-5	23-64-308
3440 706-7	23-64-308
3440 710-1	23-09-51
3440 714-5	23-09-51
3440 730	23-31-33
3440 731	23-31-33
3440 734	23-64-290
3440 744	23-08-12
3440 754-5	23-48-99
3440 764	23-64-14
3440 790	23-34-110
3440 791	23-66-239
3440 794	23-32-48
3440 798	23-64-266
3440 799	23-63-181
3440 800	23-09-64
3440 823	23-32-24
3440 824	23-32-24
3440 830	23-64-4
3440 834-5	23-34-191
3440 836	23-34-191
3440 842	23-32-17
3440 852-3	23-51-5
3440 860	23-32-24
3440 864	23-34-234
3440 865	15-03-5
	23-31-145
3440 866	23-34-5
3440 884	23-36-125
3440 885	23-36-125
3440 886	23-04-245
3440 888-9	23-34-120
3440 894-5	23-32-48
3440 897	23-34-234
3440 901	23-34-229
3440 902	23-04-241
3440 903	23-04-241
3440 909	23-04-249
3440 923	23-34-242
3440 925	23-34-242
3440 928	23-34-88
3440 931	23-34-16
3440 936-7	23-64-308
3440 938-9	23-64-308
3440 944-5	23-64-308
3440 946-7	23-64-308
3440 966	23-64-12
3440 970-1	23-63-15
3440 987	23-34-253
3440 988	23-34-253
3440 996-7	23-63-127
3441 005	1-47-6
3441 009	1-48-707
3441 013	24-28-70
3441 018	24-26-100
3441 019	24-26-100
3441 020	1-48-572
	24-01-87
3441 031	24-28-211
3441 033	24-28-25
3441 034	24-01-36
3441 036	1-48-559
	24-28-29
	24-28-72
3441 045	24-01-36
3441 054	24-25-234
3441 055	24-25-234
3441 058	1-48-559
3441 059	1-48-608
3441 060	24-01-70
3441 061	24-01-70
3441 064	24-27-5
3441 065	24-27-5
3441 076	24-28-117
3441 085	24-26-100
3441 088	24-26-100
3441 094	24-24-5
3441 096	24-01-16
3441 105	24-28-326
3441 129	1-48-55
3441 133	1-48-55
3441 154	24-28-73
3441 162	24-01-18
3441 163	24-01-18
3441 168	24-01-70
3441 171	24-01-18
3441 172	24-28-22
3441 173	24-28-22
3441 175	24-28-203
3441 176	24-28-29
3441 180	1-48-88
3441 182	1-48-141
3441 183	1-48-141
3441 188	24-24-184
3441 192	24-26-100
3441 193	24-26-100
3441 199	24-26-100
3441 200	1-48-1
	24-01-1
3441 203	24-29-1
3441 206	24-29-1
3441 208	24-29-1
3441 212	24-29-1
3441 214	24-29-1
3441 215	1-48-258
	24-29-1
3441 217	1-48-258
	24-29-1
3441 219	24-29-1
3441 221	24-29-1
3441 223	24-29-1
3441 230	24-28-207
3441 232	24-26-100
3441 233	24-26-100
3441 235	24-28-318
3441 236	1-48-559
3441 242	24-26-100
3441 243	24-26-100
3441 244	24-26-20
3441 246	24-28-78
3441 247	24-28-78
3441 271	24-26-100
3441 275	1-48-555
3441 278	24-26-100
3441 279	24-26-100
3441 280	24-26-100
3441 283	24-26-100
3441 284	1-48-559
3441 287	24-01-70
3441 293	24-28-113
3441 294	24-28-113
3441 295	24-28-96
3441 296	24-28-96
3441 309	24-29-3
3441 314	24-29-1
3441 315	24-29-1
3441 318	24-28-16
3441 319	24-01-46
3441 320	1-47-1
3441 323	24-29-1
3441 324	24-29-1
3441 333	24-28-78
3441 337	24-28-73
3441 340	24-24-53
3441 343	24-26-100
3441 344	24-26-100
3441 346	1-48-141
	24-28-78
3441 350	24-28-73
3441 354	1-48-141
3441 358	24-28-73
3441 362	24-28-78
3441 382	24-28-334
3441 388	24-28-73
3441 398	1-48-1
3441 411	24-26-100
3441 414	24-01-36
3441 416	24-01-46
3441 418	24-28-19
3441 422	24-27-5
3441 423	24-27-5
3441 425	24-28-318
3441 426	1-47-2
3441 433	24-01-1
3441 439	24-28-78
3441 446	24-28-319
3441 447	24-28-319
3441 450	24-28-13
3441 454	1-48-126
3441 456	1-48-125
3441 468	1-48-707
3441 477	1-48-156
3441 481	1-48-606
3441 482	1-48-608
3441 487	24-28-78
3441 495	24-28-200
3441 496	24-28-107
3441 497	1-48-356
3441 499	24-01-225
3441 500	24-01-225
3441 506	1-48-1
3441 507	1-48-707
3441 512	24-28-73
3441 513	24-28-326
3441 517	24-26-100
3441 518	24-26-100
3441 519	24-26-100
3441 520	24-26-100
3441 522	24-26-100
3441 523	24-26-100
3441 524	24-26-100
3441 526	1-47-13
3441 529	24-24-5
3441 530	24-24-161
3441 532	24-01-46
3441 535	24-27-5
3441 538	24-24-150
3441 539	1-47-1
3441 540	1-47-1
3441 542	24-01-1
3441 550	24-01-18
3441 553	24-24-30

PART NUMBER	CODE
3441 554	24-01-1
3441 556	24-01-18
3441 562	24-01-36
3441 564	24-01-18
3441 566	24-01-18
3441 577	24-28-117
3441 578	24-28-220
3441 584	1-48-90
3441 585	1-48-90
3441 588	1-48-141
3441 605	24-28-73
3441 606	24-28-73
3441 609	1-48-854
	24-01-36
3441 614	24-27-5
3441 616	24-01-1
3441 618	24-01-1
3441 619	1-48-559
3441 624	1-48-1
3441 626	1-48-707
3441 630	1-48-362
3441 631	1-48-365
3441 635	1-48-356
3441 636	1-48-357
3441 637	1-48-258
3441 639	1-48-707
3441 657	1-48-1
3441 658	1-48-1
3441 661	1-48-125
3441 662	1-48-125
3441 672	1-48-258
3441 674	1-48-125
3441 675	1-48-945
3441 679	1-48-362
3441 685	1-48-357
3441 686	1-48-258
	24-29-1
3441 688	1-48-707
3441 690	1-48-707
3441 698	24-28-73
3441 724	24-28-334
3441 732	24-24-53
3441 734	24-28-318
3441 738	24-26-20
3441 740	24-25-78
3441 743	24-28-318
3441 765	24-24-184
3441 779	1-48-55
3441 782	1-48-55
3441 786	24-28-78
3441 790	24-24-44
3441 812	24-28-326
3441 813	24-01-41
3441 817	24-26-100
3441 818	24-26-100
3441 822	1-48-832
3441 824	24-26-100
3441 825	24-26-100
3441 831	24-26-100
3441 832	24-26-100
3441 833	24-26-100
3441 834	24-26-100
3441 844	24-26-35
3441 845	24-26-100
3441 851	24-28-78
3441 856	24-28-73
3441 862	24-28-318
3441 863	1-48-90
	24-01-26
3441 868	24-24-16
3441 884	24-01-36
3441 885	24-01-36
3441 890	24-26-35
3441 903	1-47-1
3441 904	24-24-5
3441 923	24-29-1
3441 925	24-01-1
3441 927	24-01-18
3441 928	24-01-1
3441 930	24-01-1
3441 933	24-28-405
3441 934	24-27-5
3441 935	24-24-44
3441 936	24-28-113
3441 938	24-29-1
3441 955	24-01-46
3441 986	24-01-1
3441 988	24-01-18
3441 989	24-01-18
3441 991	24-01-1
3441 992	24-26-100
3441 999	24-28-73
3442 008	8-34-40
3442 011	7-16-11
3442 012-3	8-34-40
3442 014-5	8-34-40
3442 018-9	8-34-40
3442 030-1	8-34-40
3442 052	7-16-11
3442 079	7-16-11
3442 094	7-16-25
3442 100-1	7-16-25
3442 104	7-26-15
3442 107	15-11-58
3442 118	15-03-5
3442 140	8-34-28
3442 148	12-07-1
3442 152	12-02-5
3442 156-7	8-34-40
3442 160	7-33-1
3442 162	15-11-46
3442 204	12-07-1
3442 206	12-02-5
3442 207	7-16-11
3442 218-9	7-16-36
3442 220	7-16-36
3442 228	7-26-15
3442 233	7-16-11
3442 248	7-16-36
3442 280	8-34-28
3442 290	12-04-23
3442 292	12-07-1
3442 298	7-16-25
3442 304	7-16-25
3442 310-1	7-16-25
3442 315	7-26-15
3442 320	15-11-58
3442 323	15-11-46
3442 358	8-34-28
3442 364	12-02-5
3442 372-3	7-16-25
3442 378-9	7-16-11
3442 390-1	12-04-4
3442 392-3	12-04-4
3442 409	7-16-11
3442 415	12-04-25
3442 548	15-03-5
3442 608	7-16-11
3442 614	15-03-76
3442 618-9	8-34-60
3442 622-3	8-34-60
3442 638-9	8-34-28
3442 647	7-16-11
3442 660	8-34-40
3442 668	8-34-32
3442 712	7-16-25
	8-34-31
3442 722-3	8-34-44
3442 739	7-16-11
3442 741	7-16-11
3442 752	7-33-1
3442 770-1	8-34-48
3442 772	8-34-40
3442 793	7-26-15
3442 794	7-26-15
3442 840-1	8-34-40
3442 854-5	8-34-40
3442 864-5	7-16-11
3442 866-7	7-17-13
3442 868-9	8-34-40
3442 870-1	8-34-362
3442 876	7-16-25
	8-34-291
3442 889	7-17-23
3442 894-5	7-16-11
3442 920-1	8-34-40
3442 939	8-34-40
3442 940-1	12-04-4
3442 945	7-16-25
3442 954-5	7-26-40
3442 975	15-03-5
3442 976	15-03-87
3442 983	15-11-46
3442 991	7-16-25
	8-34-31
3442 995	15-03-60
3442 996-7	7-17-13
3442 998-9	7-17-13
3443 000-1	7-17-13
3443 011	7-17-13
3443 013	7-16-11
3443 014	7-16-11
3443 042	7-16-25
3443 052-3	8-34-60
3443 076-7	8-34-40
3443 093	8-34-54
3443 106	7-16-36
3443 110	7-17-1
3443 120-1	8-34-176
3443 124-5	8-34-176
3443 130-1	15-03-18
	15-03-64
3443 144	8-34-296
3443 154	7-16-25
3443 162	8-34-40
	12-01-22
3443 172-3	8-34-1
3443 174-5	8-34-1
3443 176-7	8-34-1
3443 180	7-26-40
3443 192	8-34-28
3443 198-9	12-04-4
3443 204	7-26-14
3443 214-5	8-34-42
3443 220	7-16-14
3443 222-3	8-34-40
3443 226-7	8-34-40
3443 230	15-03-60
3443 238	7-16-25
	8-34-31
3443 240	7-17-1
3443 241	7-16-25
	8-34-31
3443 248-9	7-16-11
3443 261	7-17-21
3443 262	7-17-1
3443 263	7-16-19
3443 266-7	8-34-40
3443 270	7-17-1
3443 271	15-03-3
3443 276	7-16-11
3443 278	7-16-11
3443 281	7-16-25
3443 284-5	7-16-25
3443 291	7-16-25
3443 294-5	8-34-40
3443 298-9	8-34-1
3443 300-1	8-34-1
3443 302-3	8-34-1
3443 304	7-16-61
3443 306-7	7-26-30
3443 310-1	7-26-30
3443 314	7-26-32
3443 315	7-16-36
3443 316-7	7-16-36
3443 319	12-06-3
3443 326	12-06-3
3443 336-7	12-02-9
3443 346-7	8-34-60
3443 352-3	7-26-40
3443 354-5	7-26-40
3443 356	7-16-11
3443 362	7-17-1
3443 376	7-16-22
3443 383	15-06-23
3443 384	15-03-86
3443 385	15-03-47
	15-03-67
3443 386	15-03-47
	15-03-67
3443 391	7-16-62
3443 399	7-16-36
3443 406	7-16-36
3443 416	7-16-37
3443 428-9	8-34-63
3443 430-1	8-34-40
3443 432-3	8-34-32
3443 444-5	12-04-4
3443 446	7-26-15
3443 456	7-16-25
3443 460	7-16-25
	8-34-31
3443 462-3	8-34-31
3443 499	12-07-1
3443 501	15-03-52
3443 510	7-16-36
3443 513	7-17-1
3443 517	15-03-51
3443 518	15-03-51
3443 522	7-08-2
3443 540	7-16-14
3443 541	7-16-61
3443 544	12-07-1
3443 545	12-07-1
3443 554	7-16-61
3443 580-1	8-34-40
3443 587	7-16-11
3443 589	7-16-11
3443 593	7-16-11
3443 597	7-16-11
3443 599	7-16-11
3443 601	7-16-11
3443 630-1	15-03-18
3443 639	7-26-15
3443 640	12-02-5
3443 645	15-09-4
3443 652	7-16-61
3443 668	12-15-8
3443 685	15-03-3
3443 686	15-03-3
3443 688	7-17-1
3443 696	7-16-37
3443 698	15-09-4
3443 703	7-16-11
3443 709	7-16-11
3443 710-1	8-34-40
3443 712-3	8-34-48
3443 714-5	8-34-362
3443 716-7	8-34-40
3443 718-9	8-34-362
3443 720	7-16-11
3443 722-3	8-34-40
3443 724-5	8-34-362
3443 730-1	8-34-40
3443 736-7	8-34-40
3443 764-5	12-06-3
3443 766-7	12-06-3
3443 774-5	8-34-32
3443 780	7-16-61
3443 784	7-17-1
3443 797	15-03-3
3443 799	12-02-6
3443 802-3	12-01-105
3443 808	7-16-11
3443 829	7-26-30
3443 833	15-09-4
3443 852-3	12-01-105
3443 877	7-26-37
3443 880	15-03-3
3443 894	15-09-4
3443 899	7-16-61
3443 925	7-14-13
3443 938	7-11-3
3443 940	7-11-3
3443 944	7-11-3
3443 945	7-11-3
3443 946	7-11-3
3443 947	7-11-3
3443 949	7-11-3
3443 950	7-11-3
3443 951	7-11-3
3443 952	7-11-3
3443 953	7-11-3
3443 959	7-11-3
3443 960	7-11-3
3443 961	7-11-3
3443 962	7-11-3
3443 963	7-11-3
3443 964	7-11-3
3443 965	7-11-3
3443 966	7-11-3
3443 967	7-11-3
3443 968	7-11-3
3443 969	7-11-3
3443 970	7-11-3
3443 971	7-11-3
3443 972	7-11-3
3443 973	7-11-3
3443 974-5	15-03-73
3443 975	7-11-3
3443 976	7-11-3
3443 977	7-11-3
3443 978	7-11-3
3443 979	7-11-3
3443 980	7-11-3
3443 981	7-11-3
3443 984	7-11-3
3443 985	7-11-3
3443 986	7-11-3
3443 987	7-11-3
3443 988	7-11-3
3444 051	23-66-65
3444 056-7	23-22-86
3444 060	23-22-86
3444 064-5	23-22-86
3444 072-3	23-22-86
3444 07o	23-64-66
3444 077	23-64-314
3444 078	23-64-314
3444 086-7	23-51-43

PART NUMBER	CODE
3444 102	23-49-9
3444 108-9	13-66-105
3444 118	23-32-49
3444 119	23-32-17
3444 120	23-32-49
3444 121	23-32-48
3444 122	23-32-49
3444 139	23-64-187
3444 148-9	13-66-105
3444 152	13-66-105
3444 162-3	13-66-105
3444 166	23-51-41
3444 167	17-19-20
3444 168	23-51-41
3444 171	13-66-106
3444 172-3	23-63-55
3444 179	23-64-278
3444 182-3	23-34-235
3444 184-5	23-34-235
3444 198-9	23-58-473
3444 200-1	23-58-473
3444 202-3	23-59-56
3444 204-5	23-40-92
3444 206-7	23-64-68
3444 208-9	23-34-27
3444 210	23-59-35
3444 214-5	23-34-242
3444 222-3	23-63-21
3444 230-1	23-63-33
3444 249	8-27-205
3444 275	23-38-27
3444 277	23-38-27
3444 281	23-47-33
3444 282	23-47-33
3444 284-5	23-32-6
3444 288-9	23-51-6
3444 320-1	23-51-41
3444 322-3	23-51-41
3444 493	23-32-22
3444 496	14-86-71
3444 498-9	23-36-12
3444 559	17-19-20
3444 574	23-34-166
3444 575	23-34-301
3444 581	22-20-87
3444 594	23-19-178
3444 611	17-19-20
3444 612-3	23-34-248
3444 614-5	23-34-248
3444 616-7	23-36-66
3444 656-7	23-19-82
3444 664-5	23-34-234
3444 666-7	23-34-235
3444 679	23-34-179
3444 686	23-34-179
3444 687	23-34-179
3444 688-9	23-19-82
3444 690-1	23-19-82
3444 718-9	23-64-12
3444 752-3	23-51-6
3444 756-7	23-36-12
3444 758-9	23-36-12
3444 762	23-32-27
3444 764-5	23-34-234
3444 780	23-19-113
3444 782-3	23-19-82
3444 796-7	23-23-65
3444 804-5	23-42-38
3444 806-7	23-42-38
3444 809	23-32-15
3444 813	12-15-32
	23-11-10
	23-34-329
3444 822	23-54-2
3444 834	12-15-32
	23-11-10
	23-34-329
	23-54-2
3444 844	23-34-329
3444 846	12-15-32
	23-11-10
	23-34-329
	23-54-2
3444 856-7	23-34-329
3444 858	23-34-329
3444 860	12-15-32
	23-11-10
	23-34-329
	23-54-2
3444 870-1	23-34-329
3444 872	23-34-329
3444 874	12-15-32
	23-11-10
	23-34-329
	23-54-2
3444 949	23-47-33
3444 963	23-23-27
3444 967	23-32-48
3444 977	23-32-22
3444 992-3	23-32-112
3445 001	23-32-24
3445 004-5	23-51-5
3445 010	23-32-29
3445 014-5	23-32-25
3445 017	17-19-20
3445 018-9	23-32-93
3445 020	23-32-48
3445 022	23-32-17
3445 023	23-32-17
3445 024-5	23-32-17
3445 034-5	23-32-112
3445 039	14-88-32
3445 040-1	23-32-93
3445 046	22-20-87
3445 052-3	23-34-234
3445 054-5	23-34-234
3445 058-9	23-34-27
3445 060-1	23-36-53
3445 070-1	23-32-49
3445 074	23-19-82
3445 075	23-19-82
3445 078-9	23-40-96
3445 082-3	23-59-35
3445 086	23-34-166
3445 098	23-34-179
3445 101	23-34-301
3445 104-5	23-40-85
3445 107	23-64-66
3445 110-1	23-59-56
3445 112-3	23-59-56
3445 126	23-64-314
3445 127	23-64-314
3445 134-5	23-19-177
3445 140	23-63-172
3445 149	23-64-282
3445 150-1	23-34-242
3445 158-9	23-34-257
3445 160	23-32-27
3445 163	23-32-27
3445 164	23-64-293
3445 218-9	23-34-246
3445 232-3	23-36-29
3445 238-9	23-34-246
3445 241	23-64-1
	23-64-17
	23-66-75
3445 250	7-16-51
3445 273	23-63-172
3445 304-5	23-34-235
3445 306	23-58-228
3445 307	23-58-230
	23-66-77
3445 308	23-58-239
	23-66-71
3445 312-3	23-32-17
3445 316-7	23-34-191
3445 376	23-63-172
3445 377	23-63-172
3445 378	23-63-172
3445 379	23-63-172
3445 380	23-63-172
3445 388-9	23-34-176
3445 400-1	23-51-5
3445 402-3	23-51-5
3445 415	23-40-170
3445 418	23-40-187
3445 427	23-19-74
3445 428-9	23-51-43
3445 430	23-51-19
3445 432-3	23-51-19
3445 438	23-32-24
3445 440	23-32-24
3445 441	23-32-24
3445 454-5	23-34-234
3445 456-7	23-34-234
3445 458-9	23-34-234
3445 460-1	23-34-234
3445 462-3	23-34-27
3445 466-7	23-34-27
3445 473	23-49-9
3445 475	23-49-9
3445 483	13-66-105
3445 491	17-19-21
3445 492-3	23-32-25
3445 501	23-64-4
3445 502-3	23-51-19
3445 504-5	23-34-229
3445 520-1	23-34-242
3445 524-5	23-32-49
3445 526-7	23-32-49
3445 528-9	23-32-49
3445 568-9	23-64-311
3445 570-1	23-64-311
3445 572-3	23-64-311
3445 574-5	23-64-311
3445 584-5	23-34-235
3445 586-7	23-34-234
3445 602-3	23-34-27
3445 604-5	23-34-27
3445 614-5	23-36-53
3445 616-7	23-36-53
3445 618-9	23-36-53
3445 623	23-23-65
3445 624-5	23-36-66
3445 630-1	23-64-281
3445 632-3	23-64-281
3445 636-7	23-34-246
3445 672-3	23-64-299
3445 684-5	23-59-35
3445 688-9	23-59-35
3445 692-3	23-59-35
3445 696-7	23-63-21
3445 698-9	23-63-21
3445 704-5	23-40-92
3445 706-7	23-40-92
3445 708-9	23-19-177
3445 712-3	23-34-235
3445 714-5	23-19-177
3445 720-1	23-32-112
3445 722-3	23-40-85
3445 724	23-49-7
3445 725	23-49-7
3445 762	9--49-7
3445 763	8-47-68
3445 776	23-34-166
3445 777	23-34-166
3445 778	23-34-166
3445 780	23-34-167
3445 782	23-34-328
3445 793	23-34-179
3445 800-1	23-09-9
3445 816-7	23-40-92
3445 827	23-64-314
3445 828	23-64-314
3445 833	23-34-301
3445 834-5	23-26-41
3445 838-9	23-26-41
3445 842-3	23-40-85
3445 848-9	23-40-85
3445 854	23-40-86
3445 866-7	23-59-56
3445 868-9	23-63-33
3445 882-3	23-19-177
3445 899	23-63-172
3445 900	23-63-172
3445 901	23-63-172
3445 902-3	8-55-154
3445 904	8-55-154
3445 924-5	23-40-85
3445 936	13-66-106
3445 939	23-32-15
3445 946-7	23-40-85
3445 948	21-30-416
3445 950-1	23-34-242
3445 954-5	23-51-5
3445 956-7	23-51-5
3445 958-9	23-51-5
3445 960-1	23-51-5
3445 962-3	23-51-5
3445 964-5	23-51-5
3445 966-7	23-51-5
3445 968-9	23-51-5
3445 970-1	23-51-5
3445 972-3	23-51-5
3445 980-1	23-19-177
3445 982-3	23-19-177
3445 992-3	23-34-191
3446 038-9	23-34-242
3446 048	23-34-179
3446 058	23-19-74
3446 059	23-49-7
3446 072-3	23-63-133
3446 076-7	23-40-85
3446 106-7	23-34-242
3446 150-1	23-40-85
3446 154-5	23-36-33
3446 162-3	23-34-334
3446 164-5	23-40-85
3446 174	23-34-167
3446 176-7	23-40-85
3446 196-7	23-40-85
3446 198-9	23-40-85
3446 236-7	23-40-85
3446 242-3	23-32-115
3446 244-5	23-22-145
3446 248-9	23-63-55
3446 310	23-34-167
3446 319	23-66-65
3446 360-1	23-34-229
3446 362-3	23-34-229
3446 364-5	23-34-229
3446 368-9	23-34-229
3446 372-3	23-49-9
3446 374-5	23-49-9
3446 376-7	23-49-9
3446 378-9	23-34-229
3446 380-1	23-49-9
3446 382-3	23-34-229
3446 384	23-34-229
3446 386-7	23-64-300
3446 388-9	23-34-249
3446 414-5	23-40-85
3446 416-7	23-51-16
3446 418	23-51-19
3446 422-3	8-55-23
3446 432-3	23-34-213
3446 439	23-40-150
3446 442	23-63-37
3446 462-3	23-49-9
3446 464-5	23-49-9
3446 472-3	23-58-84
3446 478-9	23-34-234
3446 482-3	12-15-32
3446 484-5	12-15-32
3446 520-1	23-19-84
3446 524-5	23-34-176
3446 527	23-63-175
3446 530	23-63-175
3446 538-9	23-49-7
3446 542-3	23-49-22
3446 546-7	23-40-170
3446 548-9	23-63-136
3446 562-3	23-64-12
3446 572-3	23-34-329
3446 574-5	23-34-329
3446 588-9	23-22-86
3446 594-5	23-22-86
3446 640-1	23-19-82
3446 642-3	23-19-82
3446 646	23-63-114
3446 647	23-59-37
3446 710-1	23-23-52
3446 726-7	23-49-9
3446 730-1	23-49-7
3446 742-3	23-49-7
3446 744-5	23-49-7
3446 746-7	23-49-7
3446 763	23-32-48
3446 799	23-40-192
3446 880-1	23-19-177
3446 882-3	23-19-82
3446 948	23-34-179
3446 950	23-34-179
3446 953	23-34-179
3446 955	23-34-179
3446 956	23-34-257
3446 959	19-48-46
3446 964	23-49-7
3447 314-5	23-45-55
3447 316-7	23-45-52
3447 320	23-45-39
3447 434-5	23-45-204
3447 436-7	23-45-204
3447 438-9	23-45-204
3447 581	23-26-75
3447 739	23-45-30
3447 740	23-45-29
3447 818	23-26-75
3447 850-1	23-45-52
3447 872	23-45-66
3447 878-9	23-45-57
3447 880-1	23-45-76
3447 974-5	23-45-55
3447 978	23-45-204
3447 991	23-45-194
3447 992	23-45-194
3450 248	8-17-30
3451 443	7-03-1
3454 001	23-47-66
3454 002	23-18-20

PART NUMBER	CODE
3454 018-9	23-41-106
3454 052	23-21-18
3454 060-1	23-18-11
3454 068-9	23-47-6
3454 070	23-47-6
3454 071	23-47-6
3454 072-3	23-47-6
3454 074	23-47-6
3454 075	23-47-6
3454 086-7	23-18-25
3454 108-9	23-41-4
3454 132	23-47-66
3454 135	23-54-216
3454 138	23-18-5
3454 139	23-54-218
3454 141	23-54-218
3454 142-3	23-18-5
3454 144	15-11-5
3454 147	23-54-216
3454 154-5	15-19-2
3454 170-1	23-14-27
3454 172-3	23-18-13
3454 220	23-18-29
3454 220-1	23-18-29
3454 221	23-18-29
3454 225	15-11-5
3454 227	15-11-21
3454 230	23-64-269
3454 231	23-64-197
3454 233	23-21-58
3454 234-5	23-18-25
3454 237	23-39-2
3454 240-1	23-41-106
3454 250-1	23-18-5
3454 256	23-18-29
3454 258	23-54-72
3454 265	23-17-2
3454 284	23-17-2
3454 304-5	23-14-147
3454 327	23-17-1
3454 328	23-17-2
3454 331	15-11-5
3454 332	15-11-17
3454 333	15-11-20
3454 334	23-14-147
3454 335	23-14-147
3454 336	23-14-147
3454 338-9	23-14-10
3454 347	23-54-74
3454 349	23-54-4
3454 350	23-54-143
3454 352	23-54-140
3454 363	23-54-88
3454 383	23-58-262
3454 386-7	23-47-6
3454 390	23-14-10
3454 390-1	23-14-10
3454 393	23-14-10
3454 394-5	23-14-10
3454 396-7	23-14-10
3454 398-9	23-14-10
3454 400-1	23-14-10
3454 415	23-47-55
3454 433	23-47-75
3454 435	23-47-26
3454 443	23-47-6
3454 445	23-47-6
3454 450-1	23-18-11
3454 474	23-54-6
3454 477	23-54-6
3454 480	23-54-6
3454 481	23-54-6
3454 484	23-08-60
3454 485	23-08-60
3454 488-9	23-18-107
3454 492	23-54-6
3454 494	23-17-4
3454 504-5	23-15-1
3454 506-7	23-15-3
3454 510	23-15-1
3454 512-3	23-15-3
3454 530-1	23-18-20
3454 532	23-18-20
3454 533	23-18-20
3454 534-5	23-18-20
3454 536-7	23-39-5
3454 544-5	23-39-5
3454 555	23-47-15
3454 572	23-14-147
3454 578-9	23-49-9
3454 581	23-64-4
3454 584-5	23-49-9
3454 596-7	23-18-26
3454 599	23-49-7
3454 616	23-49-7
3454 757	23-49-19
3454 772	23-17-9
3454 775	23-54-5
3454 776	23-54-144
3454 790	23-15-13
3454 813	23-10-18
	23-15-14
3454 842-3	23-14-27
3454 853	23-17-2
3454 875	23-21-8
3454 882-3	23-47-6
3454 886-7	23-47-6
3454 888-9	23-47-6
3454 940-1	23-18-13
3454 948-9	23-18-26
3454 950	15-11-34
3454 965	23-49-19
3454 966	23-39-2
3454 967	23-39-15
3454 972	23-47-66
3454 986	23-06-28
	23-17-38
3454 987	23-17-38
3456 364	23-02-19
3458 232	23-67-10
3461 001	5-100-26
3461 002	5-100-32
3461 003	5-113-17
3461 004	5-113-17
3461 005	5-100-26
3461 008	5-100-197
3461 009	5-113-17
3461 010	5-100-20
3461 012	22-01-41
3461 034	5-100-2
3461 042	22-01-48
3461 043	22-01-41
3461 046	5-39-20
3461 047	5-39-24
3461 052	22-01-46
3461 057	5-39-29
3461 058	5-39-29
3461 059	5-39-20
3461 061	22-01-5
3461 065	22-01-43
3461 066	22-01-43
3461 104	5-100-2
3461 109	5-100-2
3461 110	5-100-2
3461 118	5-100-2
3461 140	5-100-2
3461 148	5-100-20
3461 176	5-39-3
3461 178	5-39-3
3461 182	5-39-3
3461 184	5-39-3
3461 201	5-39-29
3461 202	5-39-29
3461 205	5-40-4
3461 210	5-47-2
3461 211	5-47-2
3461 212	5-39-18
3461 218	22-05-24
3461 222	22-01-41
3461 234	22-01-41
3461 235	22-01-43
3461 238	22-01-5
3461 262	5-100-189
3461 268	5-113-21
3461 278	5-100-2
3461 279	5-101-1
3461 280	5-101-1
3461 281	5-100-194
3461 282	5-100-194
3461 287	5-100-2
3461 290	5-100-199
3461 291	5-113-17
3461 295	5-100-189
3461 300	5-100-2
3461 301	5-100-2
3461 302	5-100-197
3461 303	5-100-2
3461 304	5-110-18
3461 305	5-113-17
3461 306	5-100-199
3461 307	5-100-26
3461 310	5-100-2
3461 311	5-110-18
3461 312	5-39-3
3461 323	5-110-18
3461 324	5-110-18
3461 336	5-06-1
3461 351	22-01-43
3461 352	22-01-43
3461 359	22-01-5
3461 360	5-100-2
3461 364	5-39-3
3461 379	5-06-3
3461 381	5-06-2
3461 384	5-06-4
3461 387	5-06-2
3461 391	5-06-1
3461 393	5-06-10
3461 394	5-06-10
3461 395	5-06-13
3461 396	5-06-5
3461 398	5-06-11
3461 410	22-01-42
3461 420	22-01-5
3461 421	22-01-5
3461 427	5-06-11
3461 511	5-71-1
3461 513	5-69-1
3461 534-5	5-13-1
3461 536	5-13-1
3461 537	5-13-1
3461 538	5-13-1
3461 539	5-13-1
3461 656	5-64-1
3461 660	5-20-20
3461 662	5-20-10
3461 663	5-20-10
3461 664	5-20-10
3461 665	5-20-9
3461 672-3	5-55-1
3461 676-7	5-57-2
3461 685	22-04-2
3461 698-9	4-26-3
3461 715	22-04-2
3461 725	5-62-1
3461 727	5-62-1
3461 728	5-62-1
3461 729	5-62-1
3461 730	5-62-1
3461 731	5-62-1
3461 755	5-05-43
3461 762-3	5-05-1
3461 770-1	5-05-46
3461 816	22-05-14
3461 816-7	22-05-14
3461 818-9	5-05-3
3461 885	22-04-2
3461 890-1	5-57-2
3461 894	5-05-8
3461 895	22-06-18
3461 943	5-06-8
3461 944-5	5-06-9
3461 946-7	5-06-9
3461 948	5-05-3
3461 960-1	5-55-1
3461 962-3	5-57-2
3461 964-5	5-05-1
3461 976-7	5-05-43
3461 985	5-13-1
3461 986-7	5-13-1
3462 022	24-25-10
3462 023	24-25-10
3462 043	7-03-1
3462 044	19-54-86
3462 049	10-03-4
3462 086	10-24-4
3462 094	10-01-21
3462 095	10-01-21
3462 096	10-01-21
3462 102	7-14-4
3462 105	7-07-1
3462 106	7-07-1
3462 107	7-07-1
3462 108	7-07-1
3462 109	7-02-1
3462 112	7-07-1
3462 114	7-14-4
3462 116	7-14-4
3462 118	7-14-4
3462 119	7-14-5
3462 158	7-14-4
3462 164	7-14-5
3462 165	7-14-5
3462 175	7-14-4
3462 184	7-14-4
3462 193	7-14-4
3462 200	7-14-4
3462 205	14-29-5
3462 247	15-03-74
3462 249	15-03-64
3462 264	15-03-74
3462 344	9-03-4
3462 353	24-25-10
3462 354	24-25-10
3462 355	9-15-1
3462 367	14-02-34
3462 368	14-02-34
3462 369	14-02-34
3462 370	14-02-34
3462 371	14-02-34
3462 373	14-30-1
3462 399	11-06-8
3462 415	10-03-7
3462 416	10-03-7
3462 417	19-54-115
3462 418	19-54-116
3462 431	14-88-21
3462 452	14-62-1
3462 462	14-29-38
3462 467	14-29-19
3462 484	14-29-9
3462 485	14-29-9
3462 514	9-59-13
3462 601	9-01-24
3462 603	9-01-24
3462 605	9-01-24
3462 607	9-01-24
3462 609	9-01-24
3462 611	9-01-24
3462 613	9-01-24
3462 615	9-01-24
3462 617	9-01-24
3462 619	9-01-24
3462 621	9-01-24
3462 625	9-01-24
3462 679	10-01-62
3462 682	8-36-124
3462 684	9-03-28
3462 688	7-14-9
3462 701	14-11-40
3462 704	14-06-1
3462 705	14-26-6
3462 712	14-11-9
3462 719	14-25-11
3462 725	14-25-5
3462 726	15-03-57
3462 735	14-06-1
3462 736	14-06-10
3462 738	14-11-9
3462 741	14-26-6
3462 745	14-14-20
3462 748	14-06-1
	14-06-10
3462 749	14-06-1
3462 750	14-06-1
3462 751	14-06-1
3462 752	14-06-1
3462 753	14-06-1
3462 754	14-06-1
3462 755	14-06-1
3462 758	14-11-9
3462 759	14-11-9
3462 760	14-11-9
3462 761	14-11-9
3462 763	14-11-9
3462 764	14-11-9
3462 766	14-26-6
3462 770	14-26-6
3462 776	14-30-1
3462 779	14-30-1
3462 825	7-06-14
3462 831	14-30-2
3462 833	14-30-2
3462 834	14-30-1
3462 835	14-30-1
3462 845	14-30-1
3462 846	14-30-1
3462 847	9-48-7
3462 860	19-54-115
3462 866	7-03-1
3462 871	9-02-17
3462 876	8-28-32
3462 881	8-28-15
3462 890	9-48-6
3462 911	7-03-1
3462 913	9-03-28
3462 922	9-07-5
3462 927	14-39-45
3462 949	24-25-10
3462 968	14-30-1

PART NUMBER	CODE
3462 969	14-30-1
3462 970	14-30-1
3462 971	14-30-1
3462 972	14-30-1
3462 974	7-03-1
3462 977	14-30-1
3462 978	14-30-1
3464 047	21-34-47
3464 050	13-66-3
3464 052	13-64-3
3464 056-7	13-68-6
3464 058	13-68-18
3464 064	13-64-22
3464 065	13-64-22
3464 071	13-68-6
3464 072	13-68-18
3464 073	13-66-3
3464 077	13-64-3
3464 092	13-66-3
3464 100	13-64-3
3464 104	13-64-3
3464 110-1	13-64-4
3464 114-5	13-64-4
3464 118-9	13-64-72
3464 122-3	13-64-72
3464 124	13-68-18
3464 125	8-47-8
3464 126	13-68-6
3464 128	13-64-19
3464 130	13-64-19
3464 132	13-64-19
3464 137	13-64-19
3464 138	13-64-19
3464 139	13-64-19
3464 141	13-64-72
3464 143	13-64-3
3464 144	13-64-3
3464 145	13-64-3
3464 146	13-64-3
3464 147	13-64-3
3464 148	13-64-3
3464 152-3	13-64-4
3464 156-7	13-64-4
3464 161	13-68-6
3464 162	13-68-18
3464 164-5	13-64-22
3464 168	13-66-3
3464 169	13-66-3
3464 170	13-66-3
3464 171	13-66-3
3464 172	13-66-3
3464 173	13-66-3
3464 200	13-66-3
3464 201	13-66-3
3464 204	13-66-3
3464 205	13-66-3
3464 210-1	13-66-16
3464 215	8-47-76
3464 216-7	8-47-67
3464 218	13-68-6
3464 228-9	13-66-16
3464 230-1	13-68-6
3464 234	8-47-68
3464 244	8-47-68
3464 250	13-64-3
3464 275	13-66-3
3464 276	13-66-3
3464 282-3	13-66-16
3464 284-5	13-66-48
3464 290-1	13-64-72
3464 300	13-64-3
3464 306-7	13-64-4
3464 310-1	13-64-4
3464 312-3	13-68-18
3464 316	13-64-72
3464 319	13-64-72
3464 320	8-47-8
3464 325	13-64-3
3464 330-1	13-64-4
3464 334-5	13-64-4
3464 336-7	13-68-18
3464 340-1	13-64-72
3464 343	13-64-72
3464 344	8-47-8
3464 348	13-64-104
3464 351	13-68-6
3464 352	13-68-18
3464 356	13-68-6
3464 358	13-68-18
3464 362-3	13-64-72
3464 365	13-64-4
3464 379	13-64-3
3464 380	13-64-3
3464 381	13-64-3
3464 382	13-64-3
3464 383	13-64-3
3464 384	13-64-3
3464 400	13-66-3
3464 408-9	13-66-16
3464 412	13-68-6
3464 414	13-68-18
3464 419	13-68-12
3464 425	13-66-3
3464 430-1	13-66-16
3464 432	13-66-153
3464 434	8-47-8
3464 438	13-68-6
3464 440	13-68-18
3464 462-3	13-68-12
3464 466	13-66-3
3464 467	13-66-3
3464 468	13-66-3
3464 469	13-66-3
3464 470	13-66-3
3464 471	13-66-3
3464 491	13-64-72
3464 493	13-64-150
3464 494-5	13-64-3
	13-64-28
3464 525	13-66-3
3464 528	13-66-3
3464 529	13-66-3
3464 530	13-66-3
3464 536-7	13-66-16
3464 538-9	13-66-16
3464 540	13-66-3
3464 545	13-66-21
3464 549	13-66-21
3464 562-3	13-68-6
3464 564-5	13-68-18
3464 572	13-66-21
3464 575	13-66-13
3464 576	13-66-13
3464 577	13-66-13
3464 579	13-66-13
3464 580	13-66-13
3464 582	13-66-46
3464 690	13-66-3
3464 691	13-66-3
3464 692	13-66-3
3464 693	13-66-3
3464 694	13-68-6
3464 696	13-66-3
3464 700	13-64-3
3464 701	13-64-3
3464 702	13-64-3
3464 706-7	13-64-3
3464 710	13-68-6
3464 773	8-47-8
3464 802	13-66-40
3464 850-1	13-64-26
3464 852	13-64-26
3464 854	7-16-25
	13-64-72
3464 856	13-64-72
3464 860	13-64-3
3464 863	13-64-4
	13-64-72
3464 875	13-64-3
3464 876	13-64-3
3464 877	13-64-3
3464 878	13-64-3
3464 879	13-64-3
3464 883	13-66-3
3464 884	13-66-3
3464 885	13-66-3
3464 889	13-64-3
3464 890	13-64-3
3464 891	13-64-3
3464 895	13-66-3
3464 896	13-66-3
3464 897	13-66-3
3464 900	13-66-3
3464 906	13-66-3
3464 914-5	13-66-16
3464 916-7	13-66-16
3464 919	13-68-6
3464 921	13-66-21
3464 924	13-68-12
3464 952	13-66-3
3464 956-7	13-68-6
3464 960	13-72-3
3464 978	13-72-2
3466 002	23-05-25
3466 004	23-05-25
3466 005	23-05-25
3466 012	23-05-10
3466 014	23-05-10
3466 018	23-05-10
3466 019	23-05-10
3466 020	23-05-10
3466 021	23-05-10
3466 023	23-05-27
3466 024	23-05-36
3466 025	23-05-36
3466 029	23-05-36
3466 051	11-09-3
3466 052	11-09-3
3466 053	11-09-3
3466 054	11-09-3
3466 056	11-10-42
3466 057	11-10-3
3466 058	11-10-3
3466 060	11-10-3
3466 061	11-10-42
3466 064	11-09-37
3466 065	11-09-37
3466 066	11-09-37
3466 069	11-01-1
3466 071	11-05-1
3466 075	11-05-1
3466 078	11-05-1
3466 082	11-05-4
3466 084	11-05-1
3466 089	11-05-4
3466 091	11-05-4
3466 092	11-09-3
3466 092-3	11-09-3
3466 095	11-05-1
3466 098	11-05-1
3466 102-3	11-09-3
3466 110	11-09-37
3466 113	11-09-37
3466 116	11-05-1
3466 120-1	11-01-1
3466 122	11-09-37
3466 123	11-09-37
3466 124-5	11-09-3
3466 126	14-86-61
3466 127	14-86-61
3466 128	14-86-61
3466 129	14-86-61
3466 130	14-86-61
3466 151	14-86-42
3466 153	14-86-1
3466 154	5-107-34
3466 155	5-107-34
3466 156	5-107-34
3466 157	5-107-34
3466 158	14-86-42
3466 170	14-86-61
3466 180	11-01-1
3466 181	11-02-4
3466 182	11-02-13
3466 191	11-10-3
3466 199	11-10-3
3466 207	11-05-1
3466 208	11-05-1
3466 213	11-05-1
3466 214	11-05-1
3466 219	11-05-1
3466 230	11-05-12
3466 242	11-01-1
3466 243	11-01-1
3466 244	11-01-1
3466 252	11-05-4
3466 254	11-05-1
3466 267	11-05-1
3466 270	11-05-1
3466 273	11-05-1
3466 276	11-05-1
3466 278-9	11-05-1
3466 280-1	11-05-1
3466 284-5	11-05-1
3466 286-7	11-05-1
3466 290	11-01-1
3466 292	11-01-1
3466 297	11-01-1
3466 298	11-01-1
3466 299	11-01-1
3466 307	14-86-42
3466 330	14-86-40
3466 333	14-88-21
3466 350	5-58-1
3466 351	5-58-1
3466 385	14-86-43
3466 389	14-86-65
3466 391	14-86-61
3466 396	5-57-2
3466 397	5-57-2
3466 403	14-73-11
	14-89-57
3466 426	14-86-40
3466 430	14-86-61
3466 431	14-88-21
3466 444	14-86-43
3466 449	14-86-40
3466 470	6-52-10
3466 477	23-32-17
3466 479	23-32-17
3466 497	13-01-1
3466 521	9-67-19
3466 522	9-67-20
3466 550	13-01-1
3466 605	11-01-1
3466 606	11-01-1
3466 608	11-01-1
3466 609	11-01-1
3466 610	11-01-1
3466 613	11-09-4
3466 620	11-05-1
3466 623	11-05-1
3466 626	11-05-1
3466 629	11-05-1
3466 633	11-05-1
3466 638	11-05-4
3466 640	11-01-1
3466 644	11-01-1
3466 645	11-01-1
3466 646	11-10-3
3466 649	11-09-4
3466 652	11-09-4
3466 659	11-05-1
3466 664	11-01-1
3466 668	11-05-1
3466 669-7	13-66-105
3466 672	11-09-3
3466 701	23-32-122
3466 702	23-32-122
3466 711	23-32-121
3466 713	23-32-120
3466 732	5-06-12
3466 733	5-06-11
3466 780	5-107-36
3466 781	5-107-34
3466 782	5-107-36
3466 783	5-58-1
3466 792	5-58-1
3466 795	5-107-34
3466 801	14-86-1
3466 805	14-86-43
3466 822	14-86-61
3466 835	14-86-65
3466 836	14-86-65
3466 856	14-86-40
3466 859	14-86-43
3466 870	5-56-2
3466 887	14-86-1
3466 907	11-05-1
3466 908	11-05-1
3466 910	11-05-1
3466 913	11-01-1
3466 915-6	11-09-3
3466 917	11-05-1
3466 921	11-05-1
3466 922	11-05-1
3466 926	11-01-1
3466 931-2	11-02-4
3466 939	11-02-14
3466 941-2	11-10-42
3466 955	11-05-4
3466 956	11-09-3
3466 957	11-01-1
3466 958	11-01-1
3466 959	11-01-1
3466 960	11-01-1
3466 961	11-01-1
3466 962	11-05-4
3466 963	11-05-4
3466 964	11-09-3
3466 965	11-01-1
3466 966	11-01-1
3466 967	11-02-14
3466 984	11-10-3
3466 987	11-09-4
3466 994-5	11-05-1
3466 998	11-05-4
3467 001	21-30-407
3467 018	21-30-13
3467 019	21-30-13

PART NUMBER	CODE
3467 020	21-30-401
3467 022	5-29-1
3467 023	5-29-1
3467 024	5-29-1
	6-43-1
3467 045	19-46-8
3467 049	21-30-43
3467 051	21-30-6
3467 055	21-30-10
3467 058	21-30-418
3467 059	21-30-61
3467 062	19-48-45
3467 063	19-48-45
3467 064	19-48-45
3467 065	19-48-45
3467 076	19-48-46
3467 077	19-48-46
3467 078	19-48-46
3467 079	6-38-1
	19-48-1
3467 080	19-48-1
3467 081	6-46-1
3467 082	6-38-1
3467 084	5-31-15
3467 086	6-38-1
3467 087	6-38-1
3467 091	6-38-1
3467 093	6-38-1
3467 095	6-46-1
3467 098	6-38-1
3467 101	19-48-1
3467 102	19-48-1
3467 103	19-48-1
3467 104	19-48-1
3467 105	19-48-1
3467 106	19-48-45
3467 109	19-48-46
3467 110	19-48-1
3467 111	19-48-1
3467 112	19-48-1
3467 113	19-48-1
3467 114	19-48-1
3467 116	21-30-416
3467 119	19-48-2
3467 122	5-31-15
3467 123	5-31-15
3467 145	19-48-1
3467 147	6-52-1
3467 148	19-48-46
3467 176	21-30-24
3467 178	19-14-123
3467 179	8-33-90
3467 180	8-33-90
3467 181	8-33-90
3467 182	8-33-114
3467 186	19-30-10
3467 190	19-14-1
3467 192	19-46-3
3467 193	19-46-3
3467 194	19-46-3
3467 196	19-14-23
3467 199	21-30-2
3467 201	19-48-1
3467 203	6-46-1
3467 212	19-48-1
3467 229	5-27-1
3467 234	6-24-8
3467 235	6-24-1
3467 237	19-48-16
3467 241	19-48-1
3467 245	19-48-6
	21-30-38
3467 343	19-46-3
3467 344	19-46-3
3467 345	19-46-3
3467 346	19-46-3
3467 351	19-14-1
3467 352	19-14-1
3467 356	19-15-4
3467 357	19-15-4
3467 358	19-15-4
3467 359	19-15-4
3467 360	19-46-3
3467 361	19-46-3
3467 367	8-35-67
3467 368	8-35-67
3467 369	19-46-8
3467 370	19-14-98
3467 371	8-50-126
3467 374	19-46-59
3467 375	19-46-59
3467 376	19-14-93
3467 377	19-14-93
3467 378	19-14-102
3467 379	19-14-21
3467 380	19-14-21
3467 381	19-14-48
3467 382	19-14-92
3467 383	19-46-58
3467 384	19-46-64
3467 385	8-50-84
3467 386	19-46-61
3467 387	19-15-4
3467 388	19-14-84
3467 389	19-14-84
3467 390	19-14-85
3467 391	19-14-85
3467 392	19-14-85
3467 393	19-14-89
3467 394	19-46-55
3467 395	19-15-31
3467 396	19-14-22
3467 397	19-14-103
3467 398	19-14-85
3467 399	19-14-97
3467 401	19-14-97
3467 402	8-50-84
3467 406	8-50-82
3467 407	8-50-82
3467 408	19-46-62
3467 409	19-46-62
3467 410	19-14-24
3467 411	19-14-24
3467 412	19-14-75
3467 413	19-14-92
3467 414	19-14-82
3467 415	19-46-50
3467 416	8-50-84
3467 417	8-50-84
3467 418	19-14-11
3467 419	19-14-118
3467 420	19-14-118
3467 421	19-14-85
3467 422	19-14-85
3467 423	19-14-89
3467 424	19-14-89
3467 425	19-14-28
3467 426	19-15-4
3467 427	8-50-128
3467 428	19-14-74
3467 429	19-15-31
3467 430	19-15-65
3467 431	8-50-84
3467 432	19-14-108
3467 435	19-14-4
3467 439	19-15-4
3467 440	19-46-3
3467 447	19-14-1
3467 461	8-33-6
3467 462	8-33-6
3467 464	8-33-6
3467 485	8-33-6
3467 486	8-33-6
3467 487	8-33-6
3467 489	19-46-3
3467 492	8-33-6
3467 493	8-33-6
3467 498	19-46-3
3467 499	8-33-6
3467 500	8-33-20
3467 512	19-31-1
3467 515	4-25-7
3467 518	5-31-15
3467 530	5-28-8
	6-39-2
3467 535	6-35-15
3467 543	5-31-15
3467 605	19-48-45
3467 606	19-48-45
3467 607	19-48-45
3467 608	19-48-45
3467 609	21-30-418
3467 610	21-30-418
3467 611	21-30-418
3467 612	19-48-45
3467 615	19-48-46
3467 616	19-48-1
3467 617	19-48-1
3467 625	19-48-45
3467 626	19-48-45
3467 627	21-30-407
3467 638	21-30-2
3467 641	21-30-2
3467 642	21-30-2
3467 644	21-30-413
3467 647	21-30-414
3467 648	19-48-9
3467 657	19-48-1
3467 665	19-48-16
3467 667	21-30-428
3467 668	21-30-416
3467 671	21-30-418
3467 672	19-48-2
3467 674	19-48-1
3467 683	21-30-6
3467 685	21-30-416
3467 687	21-30-2
3467 690	21-30-407
3467 699	21-30-416
3467 700	21-30-416
3467 717	19-48-46
3467 720	19-48-45
3467 721	19-48-45
3467 726	21-30-418
3467 727	21-30-418
3467 729	19-48-1
3467 743	21-30-407
3467 744	21-30-407
3467 745	21-30-406
3467 746	21-30-406
3467 806	8-33-46
3467 813	8-50-95
3467 814	8-50-84
3467 815	19-14-21
3467 817	19-15-4
3467 821	21-30-11
3467 822	19-14-80
3467 823	19-14-92
3467 824	19-14-1
3467 825	19-14-1
3467 826	19-14-1
3467 828	19-14-1
3467 829	19-14-1
3467 830	19-14-1
3467 831	19-14-1
3467 836	8-33-5
3467 859	8-33-6
3467 903	4-23-37
3467 905	4-23-1
3467 906	4-23-1
3467 911	4-23-1
3467 916	4-25-7
3467 918	4-23-37
3467 922	4-25-1
3467 923	4-25-10
3467 924	4-23-3
3467 930	4-25-1
3467 939	4-23-3
3467 941	4-23-1
3467 942	4-23-1
3467 943	4-23-1
3467 944	4-23-1
3467 945	4-23-1
3467 946	4-23-1
3467 947	4-23-1
3467 950	4-23-36
3467 951	5-31-15
3467 952	5-31-15
3467 976	4-23-1
3467 977	4-23-1
3467 987	6-38-1
3477 096	9-41-4
3478 005	8-50-184
3478 501	8-55-214
3478 502-3	8-55-7
3478 510	8-50-303
3478 513	8-50-338
3478 515	8-55-214
3478 516-7	8-55-7
3478 532	8-55-214
3478 534-5	8-55-7
3478 549	8-50-338
3478 560-1	8-55-7
3478 562-3	8-55-158
3478 564-5	8-55-7
3478 574-5	8-55-7
3478 594-5	8-50-303
3478 600	8-50-338
3478 616-7	8-55-7
3478 628-9	8-55-7
3478 638-9	8-55-158
3478 686-7	8-55-7
3478 728-9	8-55-7
3478 736-7	8-55-158
3478 738-9	8-55-7
3478 746	8-55-214
3478 748-9	8-55-7
3478 776-7	8-55-7
3478 782	8-55-214
3478 783	8-55-137
3478 784	8-55-137
3478 785	8-55-137
3478 786	8-55-137
3478 802	8-56-1
3478 818	8-56-40
3478 820-1	8-55-7
3478 832	8-55-214
3478 834-5	8-50-303
3478 838-9	8-55-158
3478 844-5	8-55-7
3478 853	8-56-23
3478 854-5	8-55-7
3478 862-3	8-55-158
3478 864	8-55-214
3478 962	8-55-214
3478 974	8-55-214
3479 008-9	8-14-1
3479 018	8-14-13
3479 136-7	8-50-303
3479 142	8-50-338
3479 157	8-50-305
3479 187	8-50-175
3479 246	8-50-184
3479 261	8-50-175
3479 304	8-57-10
3479 310-1	8-50-303
3479 316-7	8-14-2
3479 318-9	8-55-7
3479 327	8-55-13
3479 328-9	8-55-7
3479 330-1	8-55-158
3479 333	8-57-10
3479 334	8-55-13
3479 336	8-55-13
3479 346	8-14-2
3479 378	8-50-175
3479 380-1	8-14-9
3479 382-3	8-14-9
3479 384-5	8-14-9
3479 386-7	8-14-9
3479 400	8-57-10
3479 404-5	8-14-1
3479 416-7	8-50-308
3479 424	8-14-1
3479 426	8-50-303
3481 051	14-54-6
3481 052	14-39-60
3481 062	14-38-4
3481 068	14-40-1
3481 069	14-45-4
3481 070	14-38-12
3481 071	14-38-12
3481 072	14-38-12
3481 073	14-38-14
3481 074	14-37-15
3481 075	14-37-15
3481 076	14-37-21
3481 077	14-37-4
3481 078	14-37-4
	14-37-9
3481 079	14-40-1
3481 080	14-37-49
3481 081	14-37-19
	14-37-49
3481 082	14-35-3
3481 083	14-38-53
3481 086	14-30-3
3481 087	14-30-3
3481 088	14-36-15
3481 089	14-36-22
3481 090	14-43-4
3481 091	14-54-72
3481 092	14-32-15
3481 093	14-54-47
3481 094	14-54-72
3481 095	14-54-6
3481 096	14-38-13
3481 097	14-38-13
3481 100	14-37-29
3481 151	14-38-12
3481 152	14-38-12
3481 153	14-38-12
3481 154	14-39-1
3481 155	14-37-15
3481 156	14-39-10
3481 157	14-39-10
3481 158	14-39-68
3481 161	14-37-49
3481 162	14-35-3
3481 163	14-38-13

PART NUMBER	CODE
3481 167	14-30-3
3481 170	14-39-52
3481 171	14-39-47
3481 172	14-39-60
3481 173	14-39-60
3481 175	14-45-25
3481 179	14-45-5
3481 182	14-54-51
3481 183	14-39-56
3481 187	14-39-84
3481 188	14-39-50
3481 190	14-38-4
3481 191	14-38-12
3481 192	14-39-1
3481 193	14-37-6
3481 194	14-37-25
3481 195	14-37-15
3481 199	14-30-29
	14-34-21
3481 200	14-40-1
3481 201	14-40-1
	14-40-4
3481 202	14-41-12
3481 203	14-35-3
3481 204	14-41-9
3481 205	14-36-1
3481 206	14-36-2
3481 207	14-36-15
3481 208	14-36-19
3481 209	14-40-5
3481 210	14-45-25
3481 211	14-54-34
	14-54-72
3481 212	14-54-47
3481 213	14-54-72
3481 214	14-54-78
	14-54-148
3481 215	14-45-25
3481 216	14-45-1
	14-45-8
3481 217	14-54-15
	14-54-28
3481 218	14-39-28
3481 219	14-39-28
3481 220	14-37-29
	14-37-30
3481 222	14-34-4
3481 224	14-54-42
3481 226	14-39-51
3481 227	14-36-15
3481 228	14-43-3
3481 229	14-45-4
3481 230	14-54-78
	14-54-140
3481 231	14-38-28
3481 232	14-38-4
3481 233	14-35-3
3481 234	14-36-2
3481 235	14-36-15
3481 237	14-44-1
3481 238	14-37-27
	14-44-3
3481 248	14-36-2
3481 269	14-38-4
3481 271	14-39-1
3481 272	14-39-6
	14-39-30
3481 273	14-39-6
	14-39-10
3481 274	14-40-1
3481 275	14-41-9
3481 277	14-40-5
3481 278	14-41-13
3481 279	14-54-47
3481 280	14-54-78
3481 281	14-45-25
3481 282	14-45-8
3481 283	14-54-152
3481 284	14-37-27
3481 285	14-39-31
3481 286	14-38-28
3481 287	14-39-28
3481 288	14-39-28
	14-45-5
3481 289	14-37-29
3481 290	14-35-42
3481 294	14-39-51
3481 295	14-43-3
3481 296	14-45-4
3481 298	14-54-152
3481 299	14-38-28
3481 300	14-45-4
3481 301	14-38-12
3481 302	14-54-152
3481 304	14-38-12
3481 307	14-38-4
3481 309	14-39-1
3481 311	14-40-1
3481 312	14-41-9
3481 313	14-36-15
3481 314	14-54-47
3481 315	14-54-148
3481 316	14-38-28
3481 317	14-39-28
3481 318	14-35-42
3481 323	14-43-3
3481 326	14-41-5
3481 328	14-41-9
3481 330	14-54-42
	14-54-51
3481 331	14-34-63
3481 335	14-36-1
3481 337	14-39-27
	14-46-4
3481 338	14-41-40
3481 395	14-36-1
3481 397	14-45-9
3481 458	14-38-13
3481 507	14-54-42
3481 525	14-54-15
3481 529	14-38-4
3481 530	14-38-12
3481 531	14-39-10
3481 532	14-39-10
3481 533	14-39-3
	14-39-47
3481 534	14-40-1
3481 535	14-36-1
3481 536	14-45-20
	14-45-25
3481 537	14-45-8
	14-45-20
3481 538	14-37-27
3481 539	14-39-28
3481 540	14-35-42
3481 541	14-45-4
3481 542	14-54-19
3481 544	14-39-1
	14-39-3
	14-39-50
3481 545	14-39-3
3481 551	14-36-1
3481 552	14-38-12
3481 553	14-37-15
3481 554	14-45-20
3481 555	14-45-25
3481 557	14-43-5
3481 558	14-36-1
	14-36-29
3481 559	14-38-12
3481 601	14-54-19
3481 610	14-30-35
	14-40-35
3481 630	14-45-20
3481 633	14-54-152
3481 634	14-45-20
3481 635	14-41-3
3481 643	14-45-20
3481 644	14-45-12
3481 648	14-38-27
3481 652	14-35-1
3481 656	14-39-10
3481 657	14-39-6
3481 658	14-54-16
3481 659	14-46-8
3481 660	14-46-1
	14-46-9
3481 661	14-45-19
3481 662	14-39-8
3481 663	14-45-15
3481 664	14-36-36
	14-36-50
3481 665	14-36-50
	14-46-1
3481 666	14-45-17
3481 667	14-46-6
	14-46-10
3481 668	14-46-13
3481 670	14-30-4
3481 671	14-30-7
3481 672	14-46-2
3481 673	14-50-13
3481 674	14-39-8
	14-39-11
3481 675	14-36-50
3481 676	14-35-39
3481 677	14-30-4
3481 678	14-30-7
3481 679	14-35-39
3481 680	14-35-39
3481 681	14-30-4
3481 682	14-35-39
3481 683	14-40-6
3481 685	14-30-4
3481 687	14-30-4
3481 688	14-30-4
3481 691	14-38-4
3481 692	14-33-1
3481 693	14-40-1
3481 694	14-30-8
3481 695	14-40-7
	14-49-1
3481 697	14-37-15
	14-37-24
	14-45-12
3481 698	14-40-18
3481 699	14-54-29
3481 700	14-39-9
3481 708-9	23-23-52
3481 710	23-23-52
3481 712-3	23-23-52
3481 764	14-39-11
3481 771	23-23-65
3481 772-3	23-23-65
3481 779	14-54-152
3481 803	13-68-5
3481 804	13-68-5
3481 805	13-68-5
3481 807	13-68-5
3481 810	13-68-5
3481 811	13-68-5
3481 812	13-68-5
3481 813	13-68-5
3481 815	13-68-5
3481 816	13-68-5
3481 817	13-68-5
3481 818	13-68-5
3481 819	13-68-5
3482 001	23-19-8
3482 006	15-03-3
3482 007	23-19-8
3482 010	23-19-8
3482 013	23-19-8
3482 018	15-03-3
3482 021	15-03-3
3482 024	15-03-3
3482 025	23-39-24
3482 048-9	23-11-1
3482 050-1	23-11-1
3482 052-3	23-34-120
3482 056-7	23-11-1
3482 058-9	23-34-120
3482 062-3	23-11-1
3482 064-5	23-34-120
3482 068-9	23-11-1
3482 070-1	23-34-120
3482 074-5	23-34-120
3482 086	23-34-80
3482 087	23-34-80
3482 100-1	23-34-80
3482 102-3	23-34-80
3482 128-9	23-36-5
3482 138-9	23-36-5
3482 140	15-03-3
3482 144	23-66-65
3482 145	23-66-65
3482 238-9	23-32-105
3482 240-1	23-32-105
3482 242-3	23-32-105
3482 244-5	23-32-93
3482 246-7	23-32-93
3482 250-1	23-32-93
3482 256	14-88-32
3482 264-5	23-32-93
3482 284	23-54-3
3482 297	23-54-3
3482 350-1	23-11-3
3482 356-7	23-11-3
3482 360-1	23-11-3
3482 366-7	23-11-3
3482 434	23-48-68
3482 435	23-48-188
3482 468	15-03-3
3482 471	15-03-3
3482 497	15-03-3
3482 512	23-32-105
3482 513	23-32-105
3482 523	23-32-17
3482 528	23-36-53
3482 529	7-26-2
3482 530	7-26-2
3482 535	15-03-3
3482 536-7	23-19-84
3482 546	23-64-66
3482 547	23-34-293
3482 548	15-03-3
3482 562	23-39-47
	23-41-4
3482 573	23-39-24
3482 614	15-03-3
3482 618	15-03-3
3482 623	23-19-8
3482 624	23-19-8
3482 625	23-19-8
3482 627	23-19-8
3482 628	23-19-8
3482 629	23-19-8
3482 671	23-34-80
3482 673	23-11-1
3482 674	23-11-1
3482 681	23-19-8
3482 687	23-19-8
3482 690-1	23-11-1
3482 694-5	23-11-1
3482 698-9	23-11-1
3482 706-7	23-11-1
3482 710-1	23-11-1
3482 714-5	23-11-1
3482 718-9	23-11-1
3482 722-3	23-11-1
3482 726-7	23-34-120
3482 728-9	23-34-120
3482 730-1	23-34-120
3482 732-3	23-34-120
3482 734-5	23-34-120
3482 736-7	23-34-120
3482 738-9	23-34-120
3482 740-1	23-34-120
3482 752-3	23-11-3
3482 756-7	23-11-3
3482 760-1	23-11-3
3482 764-5	23-11-3
3482 768-9	23-11-3
3482 772-3	23-11-3
3482 774	7-26-30
3482 782-3	23-11-3
3482 786-7	23-11-3
3482 790-1	23-11-3
3482 794-5	23-39-24
3482 796-7	23-41-4
3482 802	23-19-8
3482 824	13-01-1
3482 825	13-01-1
3482 858-9	23-48-99
3482 861	23-19-8
3482 862	15-03-3
3482 864	15-03-3
3482 866	23-34-110
3482 867	15-03-3
3482 869	23-34-293
3482 890-1	23-11-1
3482 894-5	23-11-1
3482 908-9	23-32-105
3482 928	15-03-3
3482 958-9	23-11-1
3482 960-1	23-34-120
3482 962-3	23-34-120
3482 978-9	23-11-1
3482 980-1	23-34-120
3482 990-1	23-34-80
3484 253	24-25-5
3484 412	24-25-114
3488 002	8-53-289
3488 003	1-87-22
3488 005	24-24-140
3488 022	1-47-7
3488 024	1-48-770
3488 031	8-53-296
3488 040	8-53-312
3488 043	23-67-160
3488 046	23-67-160
3488 047	23-67-160
3488 050	23-67-194
3488 055	23-67-161
3488 071	8-19-83
3488 073	23-67-160
3488 076	8-53-283
3488 079	23-54-167
3488 093	5-06-7
3488 098	23-47-446

PART NUMBER	CODE
3488 100	23-47-456
3488 103	8-53-279
3488 104	8-53-270
3488 108	8-53-275
3488 109	8-53-275
3488 114	8-53-296
3488 115	8-53-296
3488 116	8-53-296
3488 117	8-53-296
3488 118	8-53-296
3488 120	8-53-296
3488 121	8-53-270
3488 122	8-53-271
3488 128	23-33-216
3488 131	8-42-1
3488 132	8-42-1
3488 133	8-42-1
3488 134	8-42-1
3488 135	23-33-216
3488 139	23-54-167
	23-67-160
3488 158	21-30-21
3488 159	21-30-68
3488 160	21-30-23
3488 161	21-30-67
3488 162	21-30-69
3488 164	23-54-167
3488 169	8-40-5
3488 182	1-47-7
3488 185	1-48-770
3488 196	23-67-160
3488 197	8-05-28
3488 199	24-24-156
3488 209	1-87-25
3488 211	1-87-2
3488 235	8-37-15
3488 238	15-03-84
3488 265	23-67-194
3488 267	8-53-296
3488 269	8-34-285
3488 270	8-56-2
3488 297	23-67-160
3488 298	23-67-160
3488 299	23-67-160
3488 315	23-54-167
3488 322	1-87-22
3488 323	1-87-180
3488 325	1-87-58
3488 330	8-37-90
3488 334	8-42-1
3488 336	8-42-1
3488 375	21-30-24
3488 376	21-30-24
3488 379	8-53-294
3488 380	8-53-294
3488 381	8-53-294
3488 384	8-53-289
3488 389	8-53-283
3488 391	8-53-283
3488 392	8-53-294
3488 398	8-35-59
3488 408	8-53-289
	23-33-135
3488 420	8-37-15
3488 423	1-87-2
3488 424	1-87-2
3488 425	8-42-2
3488 431	8-35-59
3488 432	8-35-59
3488 434	1-87-2
3488 435	8-12-2
3488 436	8-13-1
3488 439	8-11-2
3488 440	8-05-2
3488 441	8-05-2
3488 442	8-12-2
3488 443	8-38-23
3488 444	23-41-184
3488 445	23-41-184
3488 446	8-19-83
3488 447	8-14-23
3488 448	23-67-245
3488 449	8-31-10
3488 477	8-50-82
3488 479	8-40-5
3488 485	21-30-15
3488 490	8-58-79
3488 492	8-05-28
3488 496	8-38-23
3488 497	8-37-75
3488 501	5-06-6
3488 502	5-06-6
3488 504	8-05-2
3488 515	8-31-10
3488 516	8-34-281
	23-54-167
3488 520	1-47-7
3488 521	15-03-84
3488 524	23-54-170
3488 525	8-34-289
3488 526	1-47-9
3488 527	15-03-85
3488 528	23-54-170
3488 535	21-30-15
3488 538	8-50-129
3488 539	8-50-129
3488 540	8-50-129
3488 609	8-53-237
3488 783	8-53-289
3488 784	8-53-289
3491 296	17-15-1
3499 004-5	23-63-127
3499 008-9	23-63-127
3499 028-9	23-32-93
3499 040-1	23-34-17
3499 042	23-34-17
3499 058-9	23-64-254
3499 090-1	23-64-269
3499 092-3	23-63-37
3499 094-5	23-66-65
3499 096-7	23-64-269
3499 106-7	23-64-306
3499 108-9	23-64-306
3499 110-1	23-64-48
3499 112-3	23-63-127
3499 122-3	23-34-257
3499 124-5	23-34-257
3499 130	23-64-4
3499 135	23-36-118
3499 170-1	23-34-19
3499 180-1	23-59-56
3499 182	23-26-80
3499 190-1	23-64-308
3499 192-3	23-64-308
3499 208	15-03-5
	23-61-42
3499 214-5	23-34-248
3499 225	23-09-53
3499 232-3	23-63-33
3499 234	23-64-4
3499 236-7	23-63-33
3499 248-9	23-09-51
3499 252	23-64-4
3499 268	23-11-29
3499 270	23-11-29
3499 272-3	23-64-254
3499 282	23-39-24
3499 308	23-66-135
3499 309	23-66-135
3499 331	23-40-150
3499 332-3	23-34-280
3499 344	23-39-19
3499 374	23-63-37
3499 375	23-26-80
3499 376-7	23-63-33
3499 380	23-34-5
3499 384	23-34-242
3499 388-9	23-48-109
3499 396-7	23-48-99
3499 400-1	23-48-99
3499 407	23-26-80
3499 410	23-34-242
3499 454	23-34-234
3499 455	23-34-15
3499 457	23-34-15
3499 464-5	23-34-22
3499 542-3	23-64-12
3499 546-7	23-63-55
3499 568	23-64-300
3499 570	23-64-12
3499 574-5	23-34-280
3499 600-1	23-40-96
3499 602-3	23-40-96
3499 604-5	23-36-125
3499 606-7	23-36-125
3499 608-9	23-64-299
3499 614-5	23-26-41
3499 621	23-34-234
3499 626	14-87-2
3499 674-5	23-40-85
3499 682-3	23-63-33
3499 690	23-34-17
3499 700	23-31-33
3499 701	23-34-16
3499 736-7	23-63-33
3499 738-9	23-63-33
3499 740-1	23-63-33
3499 752	23-42-16
3499 753	23-40-150
3499 754	23-40-157
3499 757	23-32-45
3499 764	23-32-43
3499 768	23-63-181
3499 770-1	23-63-181
3499 781	23-63-181
3499 783	23-63-181
3499 785	23-64-4
3499 786	23-32-43
3499 792	23-34-234
3499 798	23-40-150
3499 800	23-40-150
3499 801	23-40-150
3499 812	23-64-272
3499 813	23-64-272
3499 817	23-22-78
3499 820-1	23-36-125
3499 822-3	23-36-58
3499 828-9	23-40-170
3499 839	1-74-1
3499 842	23-64-351
3499 843	23-64-351
3499 845	23-34-120
3499 848	23-64-198
3499 849	23-64-198
3499 850	23-64-200
3499 855	23-48-90
3499 856-7	23-64-308
3499 858-9	23-64-308
3499 860-1	23-64-308
3499 862-3	23-64-308
3499 866-7	23-22-86
3499 868-9	23-22-86
3499 878	22-20-96
3499 882	23-32-115
3499 905	23-34-17
3499 906	23-40-86
3499 913	23-54-118
3499 914-5	23-34-234
3499 928-9	23-34-245
3499 936-7	23-34-102
3499 951	23-34-88
3499 954	23-32-46
3499 957	23-31-33
	23-31-137
3499 966	23-54-6
3499 968	23-32-115
3499 970-1	23-34-245
3499 986	23-34-346
3500 272-3	23-64-311
3500 274-5	23-64-311
3500 276-7	23-64-311
3500 278-9	23-64-311
3500 280-1	23-64-311
3500 282-3	23-64-311
3500 286-7	23-63-104
3500 288-9	23-34-102
3500 306-7	23-63-33
3500 310-1	23-63-55
3500 312-3	23-63-55
3500 324	23-34-17
	23-34-249
3500 346	23-64-352
3500 347	23-64-352
3500 348	23-64-360
3500 349	23-64-353
3500 350	23-64-354
3500 351	23-64-355
3500 352	23-64-356
3500 353	23-64-358
3500 354	23-64-359
3500 358-9	23-49-7
3500 360	23-34-346
3500 361	23-54-28
3500 366	23-32-106
3500 368	23-49-7
3500 376-7	23-34-234
3500 378-9	23-34-234
3500 386-7	23-40-85
3500 392	23-32-51
3500 396	23-40-85
3500 396-7	23-40-85
3500 400-1	23-40-85
3500 402	23-04-249
3500 408-9	23-40-85
3500 420-1	23-34-234
3500 422-3	23-34-234
3500 424-5	23-34-234
3500 426-7	23-34-234
3500 428-9	23-34-234
3500 442-3	23-40-85
3500 444-5	23-34-234
3500 448-9	23-34-234
3500 452-3	23-34-234
3500 454-5	23-34-234
3500 480	23-63-112
3500 481	23-63-112
3500 490-1	23-40-85
3500 492-3	23-34-234
3500 500-1	23-34-234
3500 512-3	23-63-55
3500 516-7	23-34-234
3500 518-9	23-66-65
3500 520-1	23-66-65
3500 522-3	23-66-65
3500 525	23-34-117
3500 530-1	23-34-234
3500 548-9	23-34-234
3500 552-3	23-34-234
3500 554-5	23-34-234
3500 556-7	23-34-234
3500 558-9	23-34-234
3500 560-1	23-34-234
3500 562-3	23-34-234
3500 565	23-34-17
3500 574-5	23-40-92
3500 580-1	23-40-85
3500 582-3	23-40-92
3500 584	23-49-7
3500 590-1	23-40-85
3500 592-3	23-40-85
3500 600	23-54-28
3500 602-3	12-06-3
3500 639	23-63-181
3500 640-1	23-40-85
3500 642	23-63-181
3500 643	23-54-103
3500 661	23-34-255
3500 668-9	23-34-234
3500 670	23-48-43
3500 674	23-40-86
3500 675	23-34-88
3500 676	23-34-88
3500 714-5	23-40-85
3500 720-1	23-40-85
3500 734	23-61-117
3500 758-9	23-61-117
3500 760-1	23-61-117
3500 799	23-34-88
3500 816-7	23-66-77
3500 818	23-32-51
3500 836-7	23-40-82
3500 848-9	23-40-85
3500 878-9	23-22-53
3500 938	23-34-16
3500 950-1	23-64-213
3500 968	23-40-86
3500 975	23-66-75
3500 976	23-66-75
3500 986	23-63-100
3500 988-9	23-22-86
3501 002	23-33-135
3501 003	23-33-135
3501 004	23-33-135
3501 005	23-33-135
3501 010	23-33-135
3501 014	1-87-1
3501 020	1-87-2
3501 033	1-87-180
3501 035	1-87-180
3501 037	1-87-180
3501 039	1-87-180
3501 045	1-87-1
3501 046	1-87-54
3501 050	1-87-1
3501 053	1-87-1
3501 054	1-87-1
3501 059	1-87-1
3501 062	1-87-12
3501 077	1-87-180
3501 078	1-87-180
3501 104	1-87-70
3501 106	1-87-404
3501 107	1-87-404
3501 123	1-87-12
3501 132	1-87-1
3501 133	1-87-1
3501 134	1-87-1
3501 135	1-87-1
3501 143	1-88-6
3501 144	1-88-162

PART NUMBER	CODE
3501 151	1-87-55
3501 157	1-87-1
3501 158	1-87-1
3501 159	1-87-1
3501 160	1-87-1
3501 166	1-87-1
3501 167	1-87-1
3501 169	1-87-12
3501 170	1-87-12
3501 171	1-87-12
3501 176	1-87-55
3501 182	1-87-2
3501 183	1-87-2
3501 187	23-33-135
3501 189	1-87-22
3501 191	23-33-135
3501 193	23-33-135
3501 195	23-33-135
3501 197	1-87-22
3501 199	23-33-135
3501 201	23-33-135
3501 522	1-87-1
3502 005	24-28-78
3502 009	1-48-141
3502 010	1-48-141
3502 013	1-48-125
3502 015	24-26-20
3502 016	24-24-5
3502 040	24-28-128
3502 080	1-48-90
	24-01-26
3502 082	1-48-126
3502 123	24-01-87
3502 163	24-28-73
3502 197	1-48-55
3502 210	24-01-18
3502 211	24-01-18
3504 036-7	23-64-12
3504 042-3	23-34-242
3504 076	23-58-78
3504 078-9	23-64-281
3504 094-5	23-34-176
3504 122-3	23-32-17
3504 125	23-34-167
3504 148-9	23-64-299
3504 150-1	23-64-299
3504 158	23-49-7
3504 166	23-34-179
3504 198	23-32-93
3504 206-7	23-19-86
3504 208	23-19-86
3504 302	23-58-264
3504 309	23-34-167
3504 310	23-34-167
3504 312-3	23-34-176
3504 314-5	23-34-176
3504 316-7	23-34-242
3504 318-9	23-34-242
3504 324-5	23-63-33
3504 326-7	23-63-33
3504 328-9	23-34-280
3504 332-3	23-32-112
3504 334-5	23-32-112
3504 368-9	23-32-93
3504 372-3	23-34-27
3504 374-5	23-34-27
3504 376-7	23-34-27
3504 378-9	23-34-257
3504 420	1-18-7
3504 422-3	23-59-41
3504 424-5	23-32-112
3504 470	11-10-43
3504 526-7	23-32-112
3504 570-1	23-36-53
3504 576-7	23-58-265
3504 578-9	23-34-27
3504 580-1	23-34-27
3504 582-3	23-32-17
3504 584-5	23-32-17
3504 599	23-47-34
3504 601	23-47-34
3504 640	23-32-17
	23-32-93
3504 646	21-30-416
3504 647	21-30-416
3504 648	23-58-200
3504 850	14-86-71
	14-88-28
3504 851	14-86-71
3504 914-5	23-34-22
3505 064	23-64-282
3505 066	23-64-282
3505 073	23-34-167
3505 100-1	23-63-134
3505 192-3	23-34-235
3505 194-5	23-34-235
3505 196-7	23-34-235
3505 198-9	23-34-235
3505 200-1	23-34-235
3505 202-3	23-34-235
3505 204-5	23-34-235
3505 206-7	23-34-235
3505 208-9	23-34-235
3505 212-3	23-51-5
3505 226	23-58-200
3505 228	23-58-200
3505 238-9	23-34-229
3505 240-1	23-34-229
3505 256-7	23-59-56
3505 322-3	23-34-234
3505 339	23-64-288
3505 350-1	23-34-20
3505 363	22-20-87
3505 392	22-20-87
3505 470	23-34-179
3505 492	23-34-328
3505 494-5	23-34-229
3505 506-7	23-34-212
3505 509	23-34-231
3505 552	23-34-213
3505 690-1	23-22-53
3505 696	13-66-106
3505 713	23-32-15
3505 716	13-66-106
3505 719	13-66-106
3505 728-9	23-64-276
3505 730-1	23-64-311
3505 732-3	23-64-311
3505 734-5	23-64-311
3505 736-7	23-64-311
3505 738-9	23-64-311
3505 740-1	23-64-311
3505 747	23-23-52
	23-23-65
3505 748-9	23-51-5
3505 895	23-64-300
3505 902-3	23-63-33
3505 904-5	23-63-33
3506 002-3	23-34-249
3506 006	23-32-15
3506 025	23-64-276
3506 031	23-64-282
3506 033	23-64-17
3506 054-5	23-32-112
3506 056-7	8-55-23
3506 061	23-32-43
3506 063	23-32-45
3506 064	23-34-246
3506 065	14-88-36
3506 102-3	23-34-234
3506 106-7	23-34-234
3506 110-1	23-34-234
3506 115	23-32-43
3506 117	23-32-45
3506 119	23-32-45
3506 210-1	23-19-82
3506 220-1	8-55-23
3506 233	23-64-17
3506 254-5	23-64-12
3506 271	15-06-16
3506 272	15-06-16
3506 273	15-06-16
3506 274	15-06-16
3506 275	15-06-16
3506 276	15-06-16
3506 277	15-06-16
3506 278-9	23-19-82
3506 308-9	23-64-281
3506 310-1	23-58-480
3506 325	23-63-33
3506 336	23-64-282
3506 338	23-64-282
3506 339	23-64-293
3506 341	23-64-276
3506 372	23-34-234
3506 404-5	23-34-249
3506 419	23-32-15
3506 428	23-34-216
3506 470-1	23-19-25
3506 472-3	23-19-25
3506 474-5	23-19-25
3506 476-7	23-19-25
3506 478-9	23-19-25
3506 480-1	23-19-25
3506 482-3	23-19-25
3506 486	23-64-17
3506 487	23-64-17
3506 488-9	23-19-27
3506 490-1	23-19-27
3506 606	23-34-329
3506 610	23-54-2
3506 856	23-34-329
3506 858-9	23-34-329
3506 922	23-34-329
3507 160	3-32-1
3507 161	3-32-1
3507 166	3-04-6
3507 168	3-02-1
3507 169	3-03-1
3507 170	3-03-1
3507 171	3-03-1
3507 221	3-03-1
3507 222	3-03-1
3507 223	3-03-1
3507 224	3-03-1
3507 225	3-03-1
3507 234	3-02-1
3507 246	3-02-1
3507 259	5-13-9
3507 273	16-20-7
3507 323	3-19-1
3507 324	3-19-1
3507 325	3-19-1
3507 326	3-19-1
3507 327	3-19-1
3507 390	3-03-1
3507 404	3-03-1
3507 405	3-03-1
3507 423	3-03-1
3507 428	3-03-1
3507 429	3-03-1
3507 441	3-03-1
3507 446	3-03-1
3507 448	3-03-1
3507 449	3-03-1
3507 450	3-03-1
3507 455	3-19-1
3507 456	3-19-1
3507 457	3-19-1
3507 458	3-19-1
3507 459	3-19-1
3507 460	3-19-1
3507 463	3-02-1
3507 475	3-32-1
3507 490	3-32-1
3507 500	3-02-1
3507 501	3-02-1
3507 502	3-02-1
3507 507	3-32-1
3507 508	3-32-1
3507 516	3-03-1
3507 517	3-03-1
3507 519	3-03-1
3507 520	3-03-1
3507 521	3-03-1
3507 522	3-03-1
3507 524	3-03-1
3507 527	3-02-1
3507 528	3-02-1
3507 530	3-02-1
3507 531	3-03-2
3507 545	3-32-8
3507 550	3-03-1
3507 552	3-03-1
3507 553	3-03-1
3507 557	3-32-1
3507 563	3-02-1
3507 568	3-03-1
3507 572	3-03-8
3507 575	3-22-26
3507 585	3-22-45
3507 658	3-02-1
3507 721	3-03-1
3507 725	3-03-1
3507 726	3-03-1
3507 727	3-03-1
3507 728	3-03-1
3508 002-3	23-18-37
3508 038	23-38-15
3508 042-3	23-18-37
3508 046	23-54-6
3508 058	23-54-1
3508 059	23-54-1
3508 069	23-54-218
3508 083	23-54-218
3508 084	23-54-1
3508 097	23-54-216
3508 098	23-54-216
3508 100	23-54-216
3508 102	23-54-216
3508 103	23-54-187
3508 121	23-39-2
3508 177	15-03-51
3508 178	15-03-92
3508 181	15-03-90
3508 186	15-03-90
3508 206-7	23-41-106
3508 210-1	23-41-4
3508 217	23-47-6
3508 219	23-21-14
3508 226	23-21-8
3508 241	23-54-21
3508 245	23-54-5
3508 318	15-11-5
3508 320	15-11-34
3508 321	15-11-5
3508 322	15-11-34
3508 325	15-11-3
3508 326	15-11-34
3508 327	15-11-5
3508 330	15-11-5
3508 332	15-11-20
3508 335	15-11-5
3508 338	15-11-5
3508 339	15-11-5
3508 342	15-11-5
3508 392-3	23-39-5
3508 396-7	23-39-34
3508 400-1	23-39-5
3508 404-5	23-39-5
3508 426	15-03-93
3508 447	15-03-93
3508 455	15-03-93
3508 464	15-03-54
3508 471	23-17-9
3508 485	23-54-218
3508 508	23-64-353
3508 522	23-21-14
3508 523	23-21-14
3508 536-7	23-18-37
3508 570-1	15-11-88
3508 578	15-11-3
3508 594	23-41-7
3508 606-7	23-47-6
3508 608-9	23-47-6
3508 626	23-49-7
3508 653	23-49-7
3508 655	23-49-7
3508 659	23-54-4
3508 660	23-54-140
3508 662	23-54-73
3508 663	23-54-5
3508 665	23-54-136
3508 667	23-54-56
3508 671	23-54-189
3508 672	23-54-92
3508 673	23-54-144
3508 674	23-54-73
3508 675	23-54-92
3508 679	23-54-136
3508 714	23-18-20
3508 716	23-18-20
3508 718	23-18-20
3508 720	23-18-20
3508 772-3	23-18-13
3508 774	23-18-20
3508 776-7	23-18-25
3508 778-9	23-18-26
3508 782-3	23-18-11
3508 790-1	23-18-11
3508 792-3	23-18-11
3508 794-5	23-18-11
3508 798	23-54-222
3508 801	23-54-6
3508 810	23-54-214
3508 813	23-54-216
3508 815	23-54-218
3508 818-9	23-18-26
3508 820-1	23-18-26
3508 862	23-17-4
3508 876	23-17-2
3508 878-9	23-49-7
3508 886	23-06-15
3508 887	23-06-28
3508 903	23-17-2
3508 905	23-17-2
3508 906	23-17-2
3508 910	23-17-2
3508 916-7	23-14-27
3508 968-9	23-47-6

PART NUMBER	CODE
3508 970-1	23-15-3
3508 974	23-41-260
3508 975	23-54-31
3508 984	23-21-14
3508 989	23-21-3
3508 990	23-21-3
3509 019	23-26-23
3509 020-1	23-26-80
3509 056	23-14-82
3509 058-9	23-54-143
3509 074	23-22-88
3509 103	23-26-46
3509 106	23-20-29
3509 124	23-26-80
3509 126	23-63-20
3509 150	23-38-5
3509 151	23-38-5
3509 152	23-38-5
3509 153	23-38-5
3509 157	23-38-5
3509 159	23-38-5
3509 161	23-38-5
3509 221	23-04-205
3509 252	23-26-80
3509 253	23-26-80
3509 254	23-26-80
3509 256	23-26-80
3509 258-9	23-26-80
3509 261	23-26-80
3509 265	23-26-80
3509 268-9	23-26-80
3509 294-5	23-63-14
3509 300-1	23-22-53
3509 341	23-49-7
3509 427	23-26-80
3509 448	23-14-15
3509 482-3	23-26-23
3509 484-5	23-26-23
3509 486	23-26-47
3509 488-9	23-26-23
3509 490-1	23-14-16
3509 492-3	23-14-16
3509 564	23-14-15
3509 616-7	23-26-23
3509 618	23-26-47
3509 619	23-26-47
3509 620	23-26-47
3509 621	23-26-85
3509 680	23-20-29
3509 700	23-26-80
3509 702	23-26-80
3509 721	23-26-80
3509 728-9	23-63-20
3509 730-1	23-63-20
3509 732-3	23-63-20
3509 735	23-26-80
3509 756	23-20-29
3509 757	23-20-29
3509 801	23-20-29
3509 806	23-32-7
3509 826	23-26-80
3509 860	23-14-15
3509 861	23-14-32
3509 866-7	23-63-14
3509 872-3	23-63-14
3509 898	23-14-32
3509 900-1	23-63-20
3509 916-7	23-63-20
3509 948-9	23-63-14
3509 951	23-20-29
3509 964	23-04-245
3509 966	23-04-205
3509 973	23-04-245
3509 985	23-20-29
3509 986	23-20-29
3509 987	23-20-29
3509 988	23-20-29
3509 989	23-20-29
3509 990	23-20-29
3510 176-7	23-63-14
3510 178-9	23-63-14
3510 867	23-02-149
3510 868	23-02-2
3512 017	9-13-5
3512 025	7-03-1
3512 033	9-15-1
3512 036	9-07-5
3512 076	9-48-6
3512 078	10-03-4
3512 090	9-39-5
3512 091	9-39-5
3512 092	9-39-5
3512 093	9-39-5
3512 095	9-39-6
3512 096	9-39-6
3512 097	9-39-6
3512 098	9-39-6
3512 099	9-48-7
3512 251	10-23-7
3512 260	9-03-5
3512 502	9-48-7
3512 516	8-28-36
3512 520	9-03-5
3512 522	7-03-1
3512 531	14-29-41
3512 532	14-29-41
3512 533	14-29-41
3512 553	8-28-15
3512 589	9-15-1
3512 635	9-15-1
3512 639	9-15-1
3512 668	19-54-115
3512 669	8-22-9
3512 671	8-22-9
3512 673	8-22-9
3512 695	14-11-18
3512 721	19-54-86
3512 722	9-48-126
3512 724	8-36-4
3512 756	14-29-42
3512 764	14-29-9
3512 765	14-29-9
3512 774	14-29-19
3512 778	10-01-62
3512 788	14-29-12
3512 789	14-29-12
3512 792	14-29-19
3512 796	14-29-19
3512 803	14-30-1
3512 804	14-30-1
3512 805	14-30-1
3512 806	14-02-34
3512 807	14-30-1
3512 811	14-30-1
3512 812	14-30-1
3512 813	14-30-1
3512 815	14-30-1
3512 816	14-30-1
3512 817	14-30-1
3512 818	14-30-1
3512 819	14-30-1
3512 820	14-30-1
3512 821	14-30-1
3512 823	14-30-1
3512 825	14-30-1
3512 827	14-30-1
3512 830	14-30-1
3512 831	14-30-1
3512 832	14-30-1
3512 833	14-30-1
3512 834	14-30-1
3512 835	14-30-1
3512 836	14-30-1
3512 837	14-30-1
3512 838	14-30-1
3512 839	14-30-1
3512 840	14-30-1
3512 842	14-30-1
3512 843	14-39-45
3512 844	14-30-1
3512 848	14-30-1
3512 849	14-30-1
3512 867	14-39-45
3512 868	14-30-2
3512 869	14-30-2
	14-39-45
3512 870	14-30-2
3512 871	14-39-45
3512 872	14-39-45
3512 875	14-39-45
3512 903	9-15-1
3512 907	9-15-1
3512 908	9-48-6
3512 964	14-30-1
3512 965	14-30-1
3512 972	9-13-5
3512 974	14-30-1
3512 975	14-30-1
3512 992	7-41-4
3513 007	1-88-6
3513 011	8-55-57
3513 018	8-15-4
3513 022	8-15-4
3513 033	1-88-1
3513 034	1-88-6
3513 037	1-88-6
3513 041	1-88-6
3513 054	1-88-6
3513 071	23-41-55
3513 077	8-15-4
3513 083	8-19-3
3513 085	8-19-3
3513 092	24-24-124
3513 094	23-54-178
3513 095	23-54-178
3513 097	23-41-55
3513 098	14-02-69
3513 099	1-87-404
3513 109	8-19-3
3513 110	8-19-3
3513 118	8-19-3
3513 122	8-19-3
3513 125	8-15-4
3513 126	8-15-53
3513 127	8-15-53
3513 128	23-41-167
3513 130	23-41-95
3513 136	8-19-3
3513 141	8-15-23
3513 143	1-87-404
3513 148	8-15-4
3513 150	8-16-6
3513 154	8-16-6
3513 155	8-16-6
3513 156	8-16-6
3513 160	8-15-4
3513 162	8-56-34
3513 167	8-19-3
3513 171	8-15-23
3513 172	23-41-55
3513 173	23-54-178
3513 174	23-54-178
3513 177	24-24-124
3513 181	8-15-4
3513 182	8-15-4
3513 189	8-19-10
3513 191	23-41-55
3513 194	23-41-55
3513 195	8-15-2
3513 196	8-01-17
3513 201	24-24-124
3513 203	8-15-2
3513 236	23-41-55
3513 237	23-41-55
3513 238	23-41-169
3513 247	8-15-2
3513 248	8-15-2
3513 249	8-15-2
3513 250	8-15-2
3513 251	8-15-2
3513 252	8-15-2
3513 253	8-15-2
3513 255	8-22-3
3513 257	8-22-3
3513 261	8-15-2
3513 262	8-15-2
3513 263	8-15-2
3513 266	8-01-17
3513 268	8-01-17
3513 271	8-15-4
3513 283	8-37-7
3513 294	8-15-2
3513 303	8-01-17
3513 304	8-01-17
3513 307	8-16-4
	8-50-349
3513 310	23-54-178
3513 311	8-15-4
	23-54-178
3513 314	8-14-3
3513 318	8-15-3
3513 320	8-15-3
3513 321	8-19-3
3513 338	8-15-4
3513 339	8-19-3
3513 347	8-16-6
3513 348	8-16-6
3513 350	8-16-6
3513 360	8-15-27
3513 361	8-19-3
3513 362	23-54-178
3513 367	8-15-53
3513 368	8-15-53
3513 373	8-22-3
3513 374	8-15-2
3513 376	8-15-2
3513 377	23-41-55
3513 379	8-34-282
3513 393	8-15-53
3513 394	8-15-53
3513 402	8-19-3
3513 412	8-15-4
3513 426	1-48-516
3513 427	8-15-53
3513 441	24-24-124
3513 443	24-24-124
3513 449	8-15-15
3513 454	24-24-124
3513 455	8-19-3
3513 456	1-48-516
3513 477	8-16-6
3513 482	8-16-4
3513 487	8-34-282
3513 489	8-34-282
3513 491	8-34-282
3513 492	5-06-14
3513 495	8-15-3
3513 498	8-19-3
3513 500	23-41-55
3513 501	23-41-55
3513 504	5-06-16
3513 507	8-16-6
3513 509	8-01-4
3513 510	8-15-53
3513 512	8-15-2
3513 513	8-01-17
3513 514	8-15-2
3513 515	8-15-2
3513 519	5-06-16
3513 520	8-15-2
3513 521	8-15-2
3513 522	8-15-2
3513 523	8-15-2
3513 537	8-15-27
3513 543	8-16-4
3513 544	8-16-4
3513 545	8-16-6
3513 546	8-16-6
3513 548	8-22-3
3513 549	8-22-3
3513 550	8-16-6
3513 551	8-15-2
3513 554	8-15-4
3513 555	1-87-404
3513 557	8-14-29
3513 558	8-50-349
3513 561	8-15-25
3513 562	8-15-4
3513 563	8-15-4
3513 565	8-37-70
3513 572	8-15-53
3513 573	8-15-2
3513 577	8-15-2
3513 578	8-15-2
3513 579	8-15-2
3513 586	8-16-4
3513 588	23-41-55
3513 589	8-15-53
3513 591	8-15-26
3513 593	8-15-13
3513 594	8-19-3
3513 595	23-54-178
3513 597	23-41-55
3513 600	8-11-8
3513 603	8-15-2
3513 605	8-15-2
3513 606	8-15-4
3513 607	8-15-2
3513 609	8-41-36
3513 612	5-06-16
3513 617	8-15-2
3513 618	8-15-2
3513 619	8-15-2
3513 620	8-15-2
3513 621	8-15-2
3513 622	8-15-2
3513 623	8-15-2
3513 629	8-19-3
3513 632	8-16-6
3513 633	23-41-55
3513 636	8-50-156
3513 637	8-16-4
3513 646	8-19-3
3513 655	8-15-17
3513 683	24-24-55
3513 685	14-38-25
3513 690	8-19-3
3513 693	8-15-2
3513 694	8-15-2
3513 716	8-19-3

PART NUMBER	CODE
3513 717	23-41-55
3513 718	23-41-55
3513 719	23-41-55
3513 720	23-58-189
3513 721	23-41-55
3513 722	23-54-178
3513 737	5-06-16
3513 738	8-17-30
3513 745	1-88-159
3513 746	8-15-2
3513 747	8-15-2
3513 749	8-19-3
3514 077	7-26-15
3514 151	9-09-2
3514 152	9-09-2
3514 153	9-09-2
3514 154	9-09-2
3514 155	9-09-2
3514 156	9-09-2
3514 157	10-24-1
3514 158	9-01-5
3514 159	9-01-5
3514 160	9-01-5
3514 166	9-01-5
3514 167	9-39-1
3514 168	14-29-53
3514 181	7-41-4
3514 186	9-50-1
3514 187	9-50-1
3514 199	14-30-7
3514 224-5	17-11-3
3514 225	17-11-3
3514 242-3	17-11-3
3514 244	17-11-3
3514 245	17-11-3
3514 246	17-11-3
3514 247	17-11-3
3514 248-9	17-11-3
3514 249-5	17-11-3
3514 250	17-11-3
3514 254-5	8-56-1
3514 257	8-52-86
3514 258-9	8-55-194
3514 259	14-54-34
3514 260-1	8-55-194
3514 262	8-27-250
3514 264	8-27-250
3514 265	8-27-308
3514 268-9	8-55-194
3514 270-1	8-55-194
3514 272-3	8-50-334
3514 278	8-27-250
3514 279	8-27-308
3514 280	8-27-250
3514 302-3	8-50-334
3514 304	24-28-195
3514 306	8-50-334
3514 316	14-54-11
3514 316-7	8-55-194
3514 318-9	8-55-194
3514 320-1	8-56-8
3514 322-3	8-55-194
3514 324-5	8-50-334
3514 329	8-27-308
3514 330	8-27-308
3514 331	8-27-308
3514 332	8-27-308
3514 333	8-27-138
3514 334	8-14-9
3514 335	8-27-205
3514 336-7	8-50-334
3514 340-1	8-55-194
3514 345	8-27-250
3514 352-3	8-55-194
3514 354-5	8-56-8
3514 356-7	8-55-194
3514 358-9	8-55-194
3514 362-3	8-55-194
3514 364-5	8-55-194
3514 366-7	8-55-194
3514 368-9	8-55-194
3514 370-1	8-55-194
3514 374-5	8-55-194
3514 376-7	8-14-6
3514 383	8-14-9
3514 385	8-14-9
3514 387	24-25-107
3514 388	24-25-107
3514 389	24-25-107
3514 392-3	8-55-194
3514 396	8-53-270
3514 397	8-53-270
3514 398	8-37-162
3514 401	8-14-1
3514 408-9	8-55-7
3514 410-1	8-55-194
3514 412	8-14-1
3514 414	8-14-1
3514 416	8-14-1
3514 418-9	8-55-7
3514 420-1	8-55-194
3514 422-3	8-14-1
3514 424-5	8-14-1
3514 425	14-36-50
3514 426	23-67-160
3514 427	8-53-270
3514 428	23-54-167
3514 431	8-52-42
3514 432	8-52-42
3514 433	8-52-42
3514 434	8-37-178
3514 439	23-67-160
3514 441	23-67-160
3514 442	23-67-160
3514 443	14-72-1
3514 444-5	23-67-86
3514 446	14-72-1
3514 447	14-72-1
3514 449	8-34-115
3514 450	8-34-318
3514 464	14-30-4
3514 465	14-30-4
3514 466	14-30-4
3514 467	14-30-4
3514 468	14-30-4
3514 469	14-30-4
3514 475	14-30-7
3514 476	14-39-6
3514 477	14-36-2
3514 478	14-40-23
3514 479	14-41-3
3514 480	14-43-5
3514 483	14-44-1
3514 484	14-46-15
3514 485	14-45-4
3514 486	14-41-13
	14-46-16
3514 487	14-41-16
3514 488	14-41-14
3514 489	14-43-5
3514 490	14-35-1
3514 491	14-44-1
3514 492	14-45-25
	14-46-13
3514 495	14-45-25
3514 502	14-43-3
3514 507	14-38-4
3514 508	14-37-15
3514 509	14-40-23
3514 510	14-30-3
3514 511	14-30-3
3514 512	14-43-3
3514 513	14-43-5
3514 514	14-30-3
3514 515	14-30-3
3514 516	14-36-1
3514 517	14-54-140
3514 518	14-38-23
3514 519	14-54-6
3514 521	14-30-3
3514 522	14-45-4
3514 523	14-30-3
3514 524	14-38-12
	14-38-14
3514 525	14-36-50
3514 526	14-45-25
3514 527	14-46-17
3514 528	14-38-4
3514 529	14-45-20
3514 530	14-43-5
3514 541	14-40-5
3514 542	14-43-3
3514 547	14-41-9
3514 548	14-36-50
3514 549	14-43-5
3514 550	14-38-28
3514 614	14-41-23
3514 620	1-63-1
3514 621	1-63-1
3514 622	1-63-1
3514 623	1-63-1
3514 626-7	17-11-3
3514 627	17-11-3
3514 628	17-11-3
3514 629	17-11-3
3514 630	17-11-3
3514 631	17-11-3
3514 632	17-11-3
3514 650	5-39-1
3514 651	14-30-4
3514 652	14-30-7
3514 653	14-35-45
3514 654	14-39-7
3514 655	14-35-26
3514 657	14-35-25
3514 658	14-39-1
3514 659	14-39-10
3514 661	14-46-9
3514 665	14-38-4
3514 667	14-33-1
3514 668	14-40-1
3514 669	14-30-8
3514 671	14-30-4
3514 672	14-30-7
3514 673	14-41-34
3514 677	14-39-28
3514 678	14-38-27
3514 679	14-41-22
3514 680	14-41-22
3514 681	14-41-23
3514 682	14-54-36
3514 683	14-45-20
3514 684	14-35-6
	14-41-30
3514 686	14-35-6
	14-41-13
3514 688	14-46-12
3514 689	14-45-4
3514 691	14-46-5
3514 693	14-39-25
3514 695	14-30-4
3514 696	14-30-7
3514 697	14-40-7
3514 699	14-36-50
3514 700	14-46-5
	14-46-11
3514 702	14-35-39
3514 704	14-35-39
3514 706	14-49-1
3514 707	14-40-1
3514 708	14-46-14
3514 709	14-46-14
3514 710	14-30-7
3514 711	14-30-4
3514 712	14-39-1
3514 713	14-39-6
3514 714	14-45-7
3514 715	14-45-8
3514 716	14-54-15
3514 717	14-54-78
3514 718	14-54-78
3514 719	14-54-72
3514 720	14-54-72
3514 722	14-30-2
3514 726	14-38-4
3514 727	14-33-1
3514 728	14-45-1
3514 730	14-30-8
3514 731	14-30-30
3514 732	14-41-18
3514 733	14-41-3
3514 734	14-40-4
3514 735	14-40-4
3514 736	14-41-3
3514 737	14-41-3
3514 738	14-41-8
3514 739	14-39-8
3514 740	14-45-12
3514 741	14-45-10
3514 742	14-36-15
3514 743	14-36-50
	14-38-20
3514 744	14-38-20
3514 746	14-45-5
3514 749	14-40-35
3514 750	14-41-22
3514 751	14-41-21
3514 755	14-30-7
3514 756	14-30-4
3514 774	7-41-4
3514 791	14-38-4
3514 792	14-33-1
3514 794	14-35-9
3514 796	14-35-6
3514 797	14-39-10
3514 798	14-33-1
3514 799	14-45-1
3514 800	14-45-19
3514 801	14-30-4
3514 802	14-30-7
3514 804	14-39-8
3514 805	14-35-39
3514 806	14-36-53
3514 807	14-46-5
3514 808	14-36-53
	14-40-34
3514 809	14-45-32
3514 810	14-45-33
3514 812	14-33-1
3514 813	14-35-39
3514 816	14-30-4
3514 817	14-30-7
3514 818	14-30-7
3514 819	14-30-4
3514 820	14-30-30
3514 822	14-30-4
3514 823	14-30-7
3514 824	14-30-4
3514 825	14-30-7
3514 830	14-30-30
3514 831	14-40-7
3514 832	14-35-39
3514 833	14-41-3
3514 834	14-38-5
3514 837	14-40-7
3514 840	14-38-28
3514 841	14-38-39
3514 843	14-38-40
3514 845	14-35-39
3514 846	14-35-39
3514 851	14-34-10
3514 854	14-35-39
3514 855	14-35-39
3514 857	14-35-9
3514 865	14-39-7
3514 866	9-20-1
3514 873	14-33-1
3514 875	14-35-26
3514 876	14-35-9
3514 880	14-45-4
3514 881	14-48-2
3514 882	14-48-2
	14-82-2
3514 888	14-30-3
3514 889	14-30-3
3514 890	14-30-3
3514 891	14-30-3
3514 892	14-38-24
3514 895	14-30-4
3514 897	14-45-19
3514 898	14-35-39
3514 899	14-35-39
3514 900	14-35-9
3514 964	17-11-3
3514 965	17-11-3
3514 966	17-11-3
3514 967	17-11-3
3514 968	17-11-3
3514 969	17-11-3
3514 970-1	17-11-3
3514 972	17-11-3
3514 974	2-08-57
3514 978	17-16-1
3514 979	17-16-1
3514 980	17-16-1
3514 984	17-11-3
3514 985	17-11-3
3514 988	19-58-7
3514 990	17-11-3
3514 991	17-11-3
3514 996	19-15-1
3515 000	17-11-3
3515 008	21-139-140
3515 015	21-03-1
3515 017	21-42-11
3515 023	21-14-19
3515 027	8-22-12
3515 036	21-139-4
3515 037	21-139-4
3515 038	21-139-4
3515 045	21-139-140
3515 047	21-139-101
3515 048	21-139-101
3515 057	21-42-23
	21-139-101
3515 058	21-42-23
3515 065	21-42-23
3515 076	21-42-23
3515 077	21-133-62
3515 079	21-137-205

PART NUMBER	CODE
3515 080	21-137-205
3515 084	21-136-15
3515 085	21-138-15
3515 098	21-138-13
3515 106	21-139-4
3515 110	21-138-15
3515 111	21-137-22
3515 112	21-137-22
3515 114	21-137-205
3515 132	21-139-105
3515 146	21-42-23
3515 147	21-42-23
3515 148	21-42-23
3515 150	6-14-1
3515 172	21-42-23
3515 202	21-139-101
3515 203	9-45-2
3515 212	21-133-43
3515 215	21-133-43
3515 238	21-42-11
3515 251	21-139-68
3515 282	9-46-4
3515 300	6-22-4
3515 314	21-133-7
3515 315	21-133-10
3515 321	21-129-13
3515 324	21-42-11
3515 348	21-42-11
3515 350	21-29-3
3515 395	21-04-19
3515 396	21-04-27
3515 398	21-139-145
3515 402	21-42-23
3515 403	21-42-23
3515 404	21-42-23
3515 411	21-137-205
3515 412	21-137-22
3515 428	21-14-1
3515 438	21-03-1
3515 451	21-136-65
3515 468	21-14-15
3515 469	21-14-1
3515 470	21-14-1
3515 472	21-11-9
3515 478	21-138-13
3515 479	21-138-23
3515 480	21-139-135
3515 482	21-138-13
3515 491	21-138-13
3515 494	21-133-7
3515 502	21-139-101
3515 560	6-14-1
3515 578	21-04-26
3515 579	21-04-1
3515 804	21-02-1
	21-139-154
3515 805	21-02-1
	21-139-154
3515 806	21-02-1
	21-139-154
3515 814	21-02-1
	21-139-154
3515 815	21-02-1
	21-139-154
3515 816	21-02-1
	21-03-8
	21-139-154
3515 817	21-02-1
	21-139-154
3515 832	21-02-1
	21-42-31
3515 833	21-02-1
	21-42-31
3515 834	21-02-1
	21-42-31
3515 835	21-02-1
	21-42-31
3515 836	21-02-1
	21-42-31
3515 841	21-02-1
	21-139-154
3515 842	21-02-1
	21-139-154
3515 843	21-02-1
	21-139-154
3515 844	21-02-1
	21-139-154
3515 845	21-02-1
	21-139-154
3515 846	21-02-1
	21-139-154
3515 847	21-02-1
	21-139-154
3515 848	21-02-1
	21-139-154
3515 849	21-02-1
	21-139-154
3515 850	21-02-1
	21-139-154
3515 851	21-02-1
3515 852	21-02-1
	21-139-154
3515 948	21-139-105
3520 010-1	23-26-45
3520 030	23-26-45
3520 054	23-45-186
3520 229	23-45-52
	23-47-55
3520 242	23-45-204
3520 243	23-45-204
3520 276-7	23-47-425
3520 280-1	23-45-204
3520 283	23-45-66
3520 284	23-45-39
3520 288-9	23-45-204
3520 448	14-32-15
3520 463	14-39-28
3520 549	23-47-425
3520 556-7	23-47-425
3520 667	23-47-439
3520 676	23-26-75
3520 677	23-26-75
3520 679	23-26-75
3520 680	23-26-75
3520 685	23-26-75
3520 699	1-87-21
3520 721	1-87-21
3520 790-1	23-45-52
3520 794-5	23-45-52
	23-45-194
3520 892	23-45-185
3520 928-9	23-45-204
3520 932-3	23-45-57
3520 936	23-45-204
3520 958-9	23-45-204
3520 972-3	23-45-52
3520 974-5	23-47-456
3520 982	23-45-194
3521 950	23-26-76
3521 951	23-26-84
3521 956	23-26-76
3521 968	23-26-84
3522 784	24-28-117
3541 681	14-41-23
3548 018	23-54-20
3548 019	23-54-4
3548 025	23-54-21
3548 029	23-54-6
3548 036-7	23-14-10
3548 053	23-21-3
3548 133	23-54-21
3548 134	23-54-165
3548 135	23-54-21
3548 150	23-54-187
3548 208	23-17-28
3548 209	15-11-5
3548 210	23-17-4
3548 211	23-17-4
3548 218	23-17-2
3548 220	23-17-2
3548 243	23-54-100
3548 252	15-11-5
3548 263	23-06-28
3548 268	23-54-1
3548 296	23-54-228
3548 306	23-54-187
3548 312	23-64-294
3548 350-1	23-17-28
3548 353	23-47-6
3548 380	23-10-18
3548 388	23-47-6
3548 389	23-47-6
3548 390	23-18-11
3548 447	23-21-8
3548 509	15-11-5
3548 511	23-54-220
3548 520-1	23-18-5
3548 530-1	23-41-4
3548 554-5	23-39-5
3548 558	23-18-5
3548 565	23-18-5
3548 596	23-39-2
3548 609	23-48-21
3548 610-1	23-41-4
3548 615	15-11-5
3548 622-3	23-41-4
3548 626-7	23-39-5
3548 628-9	23-39-5
3548 634	23-54-30
3548 637	23-41-7
3548 643	23-39-2
3548 644-5	23-18-11
3548 650-1	23-18-11
3548 652-3	23-18-13
3548 662	15-11-30
3548 665	23-41-7
3548 674	23-32-80
3548 675	23-48-67
3548 684-5	23-39-5
3548 690-1	23-18-26
3548 693	23-21-18
3548 708	23-18-5
3548 709	23-18-5
3548 710	23-18-5
3548 711	23-18-5
3548 715	23-18-5
3548 716	23-18-5
3548 741	23-21-18
3548 745	23-21-18
3548 746-7	23-41-106
3548 748-9	23-41-4
3548 750-1	23-41-4
3548 758-9	23-18-25
3548 772-3	23-18-11
3548 776-7	23-18-26
3548 778-9	23-18-26
3548 802-3	23-41-4
3548 805	15-11-3
3548 851	23-49-9
3548 856	23-54-17
3548 857	23-54-4
3548 860	15-11-5
3548 890-1	15-19-2
3548 918-9	15-19-2
3548 926	23-49-9
3548 948	23-49-7
3548 955	23-17-2
3548 956	23-17-2
3548 957	23-17-2
3548 958	23-17-2
3548 962-3	23-41-4
3548 964-5	23-41-4
3548 966-7	23-41-4
3548 974-5	23-18-13
3549 059	17-11-3
3549 061	3-19-1
3549 064	17-11-3
3549 065	17-11-3
3549 066	17-11-3
3549 070	17-11-3
3549 071	17-11-3
3549 072	17-11-3
3549 073	17-11-3
3549 094	5-100-1
3549 097-8	17-11-3
3549 098-9	17-11-3
3549 255	14-54-42
3549 256	14-46-18
3549 257	14-41-3
3549 258	14-46-19
3549 259	14-54-34
3549 260	14-38-12
3549 261	14-39-6
3549 262	14-45-20
3549 265	14-45-4
3549 266	14-45-5
3549 267	14-30-15
3549 269	14-41-9
3549 270	14-41-5
3549 271	14-41-14
3549 272	14-54-6
3549 273	14-30-7
3549 274	14-30-4
3549 275	14-30-3
3549 276	14-30-3
3549 280	14-38-14
3549 281	14-39-6
3549 282	14-39-6
3549 283	14-30-3
3549 284	14-30-3
3549 285	14-30-3
	14-43-10
3549 287	14-37-4
3549 288	14-45-20
3549 289	14-39-28
3549 291	14-39-54
3549 292	14-39-58
3549 293	14-39-54
3549 294	14-30-7
3549 295	14-30-7
3549 296	14-30-7
3549 297	14-30-7
3549 302	14-43-5
3549 303	14-35-1
3549 307	14-40-1
3549 308	14-35-9
3549 309	14-35-39
3549 313	14-38-25
3549 314	14-54-98
3549 315	14-38-8
	14-54-6
3549 316	14-54-11
	14-54-98
3549 317	14-38-29
3549 318	14-38-24
	14-39-1
3549 319	14-35-39
3549 320	14-35-39
3549 321	14-24-13
	14-54-14
3549 322	14-45-4
3549 323	14-39-1
3549 324	14-39-6
3549 325	14-54-3
3549 326	14-46-2
	14-46-5
3549 327	14-45-21
3549 328	14-46-6
3549 329	14-45-17
3549 330	14-40-7
3549 331	14-40-5
3549 333	14-46-5
3549 334	14-40-7
	14-49-1
3549 335	14-46-2
	14-46-5
	14-46-11
3549 343	14-30-7
3549 360	14-35-39
3549 365	14-36-50
3549 366	9-34-5
3549 368	9-34-5
3549 370	9-09-2
3549 371	9-09-2
3549 372	9-09-2
3549 373	9-09-2
3549 374	9-09-2
3549 375	9-09-2
3549 376	9-09-2
3549 377	9-09-2
3549 378	9-09-2
3549 379	9-09-2
3549 380	9-09-2
3549 381	9-09-2
3549 382	9-09-2
3549 383	9-09-2
3549 384	9-09-2
3549 385	9-09-2
3549 386	9-09-2
3549 387	9-09-2
3549 388	10-24-1
3549 392	9-11-1
3549 393	9-11-1
3549 394	9-11-1
3549 395	9-11-1
3549 398	9-58-1
3549 406	14-34-63
3549 407	14-48-2
	14-48-8
	14-82-2
3549 413	14-41-3
3549 414	14-41-3
3549 415	14-36-15
3549 416	14-54-45
3549 417	14-46-1
3549 418	14-39-1
	14-54-15
3549 419	14-39-6
3549 424	9-34-5
3549 426	9-34-5
3549 429	7-14-4
3549 435	14-35-35
3549 436	14-35-6
3549 449	14-33-1
3549 450	14-39-7
3549 455	14-54-42
3549 456	14-38-5
3549 457	14-41-3
3549 460	14-43-5
3549 461	14-30-4

PART NUMBER	CODE
3549 462	14-30-7
3549 463	14-47-13
3549 464	14-54-72
3549 465	14-54-72
3549 466	14-41-9
3549 467	14-41-21
3549 468	14-54-47
3549 469	14-54-42
3549 470	14-41-3
3549 472	14-46-19
3549 473	14-46-8
3549 474	14-46-20
3549 475	14-46-7
3549 476	14-36-50
3549 477	14-47-1
3549 478	14-40-1
3549 479	14-40-4
3549 480	14-30-8
3549 482	14-30-27
3549 483	14-40-5
3549 484	14-41-3
3549 485	14-41-31
3549 486	14-41-31
3549 487	14-41-32
3549 488	14-39-51
3549 490	14-54-12
3549 491	14-39-10
3549 493	14-39-1
3549 494	14-54-15
3549 495	14-39-6
3549 496	14-37-29
3549 497	14-41-20
3549 498	14-36-15
3549 499	14-41-19
3549 500	14-36-15
3549 501	14-37-30
3549 502	14-40-7
3549 504	14-35-41
3549 505	14-54-152
3549 506	14-54-152
3549 509	14-35-46
3549 511	14-35-6
3549 512	14-39-28
3549 513	14-45-4
3549 514	14-45-8
3549 515	14-45-17
3549 516	14-45-15
3549 517	14-45-22
3549 518	14-45-19
3549 519	14-36-1
3549 522	14-54-98
3549 523	14-41-8
3549 524	14-33-1
3549 525	14-45-1
	14-54-3
3549 526	14-45-11
3549 527	14-45-12
3549 528	9-34-5
3549 530	9-34-5
3549 532	14-30-1
3549 533	14-41-45
3549 534	14-36-2
3549 540	14-38-12
3549 541	14-38-4
3549 542	14-38-4
3549 544	14-38-12
3549 545	14-39-1
3549 546	14-38-4
3549 549	14-39-6
3549 550	14-38-12
3549 566	14-30-1
3549 568	14-30-1
3549 587	13-72-1
3549 588	9-35-1
3549 589	9-35-1
3549 590	9-35-1
3549 592	9-01-5
3549 593	9-39-1
3549 594	9-01-5
3549 595	9-39-1
3549 596	9-01-5
3549 597	9-39-1
3549 601	23-23-52
3549 611	15-11-89
3549 626-7	23-23-52
3549 654-5	12-01-5
3549 659	14-39-10
3549 680	14-41-22
3549 801-2	5-05-3
3549 803	5-63-1
3549 804	5-63-1
3549 819	5-63-1
3549 828	5-39-1
3549 834	5-100-2
3549 836-7	22-03-1
3549 840	5-05-3
3549 842	22-04-2
3549 843	22-04-2
3549 846	22-03-1
3549 873	14-73-1
3549 924	17-11-3
3549 924-5	17-11-3
3549 941	17-11-3
3549 942	5-100-1
3549 943	5-100-1
3549 945	17-11-3
3549 946	17-11-3
3549 971	9-39-5
3549 972	9-39-5
3549 973	9-39-5
3549 974	9-39-5
3549 975	9-39-5
3549 976	9-39-5
3549 977	9-39-5
3549 978	9-39-5
3549 979	9-39-5
3549 980	9-39-5
3549 981	9-39-5
3549 982	9-39-5
3549 983	9-39-5
3549 984	9-39-5
3549 985	9-39-5
3549 986	9-39-5
3555 190	24-25-107
3555 191	24-25-107
3555 192	24-25-107
3555 193	24-25-107
3555 194	24-25-107
3569 016-7	23-19-177
3569 435	23-34-40
3569 498	23-34-334
3569 560-1	23-32-112
3569 564-5	13-66-49
3569 566-7	13-66-106
3569 570-1	23-49-9
3569 625	4-23-2
3569 730-1	23-34-329
3569 734-5	23-34-329
3569 975	12-15-32
	23-11-10
	23-34-329
	23-54-2
3569 984	23-54-2
3569 994	23-54-2
3569 995	23-34-329
3569 996-7	23-34-329
3570 002	23-34-329
3570 024	23-34-179
3570 029	23-34-213
3570 061	23-34-167
3570 070	23-34-213
3570 080	13-66-106
3570 201	23-32-22
3570 208	23-19-24
3570 212-3	23-19-25
3570 214-5	23-19-25
3570 222-3	23-34-242
3570 224-5	23-34-242
3570 226-7	23-34-242
3570 228-9	23-34-242
3570 332	23-19-177
3570 333	23-19-177
3570 334	23-19-177
3570 335	23-19-177
3570 345	4-23-2
3570 359	23-19-25
3570 369	23-19-24
3570 371	23-19-24
3570 391	23-51-19
3570 392-3	23-51-5
3570 394-5	23-51-5
3570 399	23-19-25
3570 400-1	23-32-25
3570 402-3	23-32-25
3570 414-5	23-51-5
3570 416-7	23-51-5
3570 428-9	23-34-246
3570 430-1	23-34-246
3570 433	23-32-49
3570 434	23-32-49
3570 436	23-32-22
3570 439	23-32-27
3570 441	23-47-33
3570 443	23-47-33
3570 445	23-19-25
3570 452-3	23-34-235
3570 454-5	23-34-235
3570 457	13-66-106
3570 461	13-66-106
3570 564-5	23-32-27
	23-49-9
3570 575	23-64-351
3570 576	23-64-351
3570 625	23-32-15
3570 797	23-34-213
3570 862-3	23-19-82
3570 866-7	23-19-82
3570 870-1	23-19-82
3570 874-5	23-19-82
3570 890	13-66-105
3570 928-9	23-34-212
3570 936-7	23-34-235
3570 938-9	23-34-235
3570 942-3	23-51-5
3570 965	23-58-239
	23-66-71
3570 966-7	23-23-65
3570 968-9	23-34-27
3570 984-5	23-34-235
3570 986-7	23-34-235
3570 994-5	23-58-434
3571 209	1-87-21
3571 216	15-11-93
3571 217	23-19-8
3571 218-9	23-34-242
3571 232	15-03-3
3571 233	15-11-92
3571 235	23-19-105
3571 236	23-19-105
3571 252	22-01-43
3571 368	23-19-87
3571 375	22-01-5
3571 422	23-20-14
3571 423	23-52-1
3571 510	23-34-308
3571 559	21-84-1
3571 560	21-84-7
3573 611	7-16-11
3573 612	7-16-11
3573 613	7-16-11
3573 667	7-16-11
3573 670-1	8-34-40
3573 691	15-03-51
3573 718-9	8-34-40
3573 721	7-16-11
3573 784-5	8-34-1
3573 786-7	8-34-1
3573 788-9	12-01-105
3573 794	8-34-291
3573 797	8-34-178
3573 801	15-11-58
3573 838-9	7-16-25
	8-34-31
3573 852-3	8-34-40
3573 856	7-16-25
3573 929	15-03-76
3573 952-3	12-07-1
3574 144-5	7-17-13
3574 188	7-16-11
3575 002	19-14-48
3575 003	21-30-2
3575 004	21-30-2
3575 005	21-30-2
3575 010	19-46-3
3575 011	19-46-3
3575 015	19-14-23
3575 016	19-30-43
3575 017	19-30-43
3575 028	19-46-8
3575 029	19-46-8
3575 036	21-30-2
3575 038	21-30-2
3575 056	19-30-43
3575 058	8-33-6
3575 078	19-15-40
3575 080	19-15-81
3575 081	19-46-26
3575 082	19-14-68
	19-15-28
3575 085	21-30-2
3575 087	21-30-2
3575 099	21-30-2
3575 101	5-28-8
3575 102	5-28-9
3575 105	5-31-11
3575 106	5-27-1
3575 107	5-27-1
3575 110	6-38-1
3575 111	6-38-1
3575 119	6-35-1
3575 120	5-31-15
3575 139	5-31-11
3575 140	6-52-1
3575 141	4-23-1
3575 142	4-23-1
3575 143	4-23-1
3575 206	19-14-68
	19-15-28
3575 208	19-46-8
3575 210	19-14-1
3575 211	19-14-1
3575 212	19-14-1
3575 213	19-14-1
3575 214	19-14-1
3575 216	21-30-2
3575 217	19-15-4
3575 218	19-15-4
3575 219	21-30-11
3575 220	19-14-48
3575 221	19-14-21
	19-46-8
3575 222	19-14-21
	19-46-8
3575 223	19-15-4
3575 224	19-46-62
3575 225	19-14-24
3575 227	19-14-68
3575 228	19-14-73
3575 231	19-14-21
3575 234	19-14-21
3575 236	19-14-24
3575 237	19-14-97
3575 241	19-14-11
3575 243	19-46-59
3575 244	19-14-24
3575 246	8-50-82
3575 247	8-50-82
3575 253	8-50-95
3575 254	8-50-129
3575 256	19-46-10
3575 257	19-46-12
3575 258	19-46-31
3575 261	19-14-1
3575 262	19-14-1
3575 265	19-14-85
3575 272	19-31-1
3575 273	19-31-1
3575 320	21-30-23
3575 538	19-15-4
3575 539	19-15-4
3575 540	19-15-4
3575 541	19-15-4
3575 542	19-15-4
3575 543	19-15-4
3575 544	19-15-4
3575 564	8-33-17
3575 576	4-23-1
3575 578	4-23-1
3575 581	4-23-1
3575 583	4-23-1
3575 584	4-23-1
3575 588	4-23-1
3575 589	4-23-37
3575 592	4-23-37
3577 053	9-03-4
3577 076	9-43-1
3577 077	9-43-1
3577 078	9-43-1
3577 086	9-43-9
3577 092	9-41-4
3577 093	9-41-4
3577 094	9-41-4
3577 095	9-41-4
3577 098	10-02-62
3577 121	9-42-1
3577 160	14-67-29
3577 164	9-48-7
3577 169	9-46-33
3577 170	9-46-33
3577 171	9-46-33
3577 172	9-46-33
3577 173	24-25-10
3577 180	9-13-5
3577 181	9-15-1
3577 182	14-30-1
3577 183	14-30-1
3577 184	14-30-1
3577 185	14-30-1
3577 199	9-48-56
3577 222	9-03-28

PART NUMBER	CODE
3577 223	9-03-28
3577 241	10-03-4
3577 245	10-03-4
3577 253	9-03-28
3577 282	9-48-6
3577 306	9-46-33
3577 354	14-29-9
3577 357	14-29-9
3577 376	14-29-19
3577 385	14-29-9
3577 387	14-29-64
3577 394	14-29-9
3577 395	14-29-7
3577 396	14-29-7
3577 457	14-29-19
3577 458	14-29-19
3577 459	14-29-64
3577 461	14-29-47
3577 462	14-29-47
3577 464	14-29-9
3577 467	14-29-19
3577 470	14-29-19
3577 472	15-03-64
3577 506	14-26-6
3577 508	14-06-10
3577 514	14-26-6
3577 516	14-24-1
3577 517	14-24-17
3577 518	14-24-6
3577 519	14-63-1
3577 521	14-63-10
3577 522	14-06-1
3577 523	14-25-11
3577 524	14-25-11
3577 525	14-25-11
3577 527	14-01-1
3577 528	14-01-6
3577 529	14-11-9
3577 532	14-11-1
3577 536	14-38-29
3577 613	9-01-24
3577 615	9-01-24
3577 617	9-01-24
3577 636	9-03-28
3577 674	10-26-27
3577 807	9-03-28
3577 808	14-29-38
3577 848	10-26-46
3578 222	16-02-1
3578 763	16-02-1
3578 772	16-02-1
3578 778	16-02-1
3578 795	16-02-1
3578 796	16-02-1
3578 797	16-02-1
3578 798	16-02-1
3578 799	16-02-1
3579 031	14-47-1
3579 036	14-35-1
3579 056	23-19-24
3579 057	23-19-24
3579 058	23-19-24
3579 059	23-19-24
3579 060	23-19-24
3579 061	23-19-24
3579 062	23-19-24
3579 151	8-14-1
3579 152	8-14-1
3579 153	8-14-1
3579 154-5	8-55-194
3579 169	1-48-88
3579 171	1-48-88
3579 172	1-48-599
3579 173	1-48-854
	24-01-36
3579 174-5	8-50-334
3579 186	8-56-8
3579 190	8-56-34
3579 191	1-48-132
3579 193	8-52-354
3579 198-9	8-55-7
3579 200	1-48-941
3579 201	8-34-8
3579 202	8-34-8
3579 203	8-34-8
3579 204	8-35-66
3579 205	8-35-66
3579 208-9	8-55-194
3579 210-1	8-55-194
3579 215	8-27-250
3579 216	8-27-250
3579 217	8-27-205
3579 218	8-27-96
3579 219	8-27-137
3579 221	8-36-1
3579 230-1	8-55-194
3579 234	1-47-2
3579 235	1-47-2
3579 236	1-47-2
3579 239	8-27-308
3579 240	8-27-308
3579 241	8-27-308
3579 246-7	8-55-194
3579 254	5-03-3
3579 255	5-05-9
3579 257	5-39-1
3579 258	5-39-1
3579 259	5-39-1
3579 260	5-39-1
3579 261	5-39-3
3579 262	5-39-1
3579 263	5-105-1
3579 264-5	5-05-1
3579 266	5-03-3
3579 267	5-100-2
3579 268	5-03-1
3579 269	5-03-3
3579 270	5-03-3
3579 272	5-100-2
3579 274	5-03-3
3579 275	5-03-3
3579 276	5-03-3
3579 277	5-03-1
3579 289	3-02-1
3579 290	5-100-1
3579 292	5-100-1
3579 293	17-11-3
3579 294	5-03-3
3579 296	17-11-3
3579 297	17-11-3
3579 298	17-11-3
3579 299	17-11-3
3579 300	17-11-3
3579 378-9	12-01-5
3579 380-1	12-01-5
3579 482	23-67-246
3579 501	17-11-3
3579 502	17-11-3
3579 503	17-11-3
3579 508	17-11-3
3579 510	19-19-24
3579 511	17-11-3
3579 549	19-56-6
3579 551	23-64-12
3579 553	23-23-65
3579 560-1	23-23-52
3579 562-3	23-23-52
3579 564-5	23-23-65
3579 566-7	23-23-65
3579 576-7	23-23-52
3579 578-9	23-23-65
3579 580-1	23-23-65
3579 588-9	23-23-52
3579 601	7-26-15
3579 602-3	23-23-52
3579 606-7	23-23-52
3579 608-9	23-23-52
3579 610-1	23-23-52
3579 614-5	23-23-52
3579 616-7	23-23-52
3579 618-9	23-23-52
3579 620-1	23-23-52
3579 622	15-11-89
3579 624-5	12-01-5
3579 661	7-16-63
3579 662	7-16-63
3579 663	7-26-15
3579 664-5	12-01-5
3579 666	23-02-29
3579 667	15-11-89
3579 668	23-19-24
3579 669	23-19-24
3579 670	15-11-89
3579 671	15-09-19
3579 672	23-36-134
3579 673	15-11-78
3579 674	15-11-78
3579 676-7	12-01-5
3579 678-9	12-01-5
3579 680-1	12-01-5
3579 682-3	12-01-5
3579 684-5	12-01-5
3579 686-7	12-01-5
3579 690-1	12-01-5
3579 692-3	12-01-5
3579 694-5	12-01-5
3579 696-7	12-01-5
3579 698-9	12-01-5
3579 700	15-11-83
3579 718	23-23-52
3579 719	23-23-52
3579 720	23-23-52
3579 724-5	23-23-52
3579 726-7	23-23-52
3579 728-9	23-23-52
3579 730-1	23-23-52
3579 734-5	23-23-52
3579 736-7	23-23-52
3579 738-9	23-23-52
3579 740	23-23-52
3579 742-3	23-23-52
3579 828-9	23-23-52
3579 830-1	23-23-52
3579 832-3	23-23-52
3579 834-5	23-23-52
3579 836-7	23-23-52
3579 838-9	23-23-52
3579 842-3	23-23-52
3579 844-5	23-23-52
3579 846-7	23-23-52
3579 848-9	23-23-52
3579 850-1	23-23-52
3579 852-3	23-23-52
3579 856-7	23-23-52
3579 858-9	23-23-52
3579 860-1	23-23-52
3579 862-3	23-23-52
3579 864-5	23-23-52
3579 866-7	23-23-52
3579 870-1	23-23-52
3579 872-3	23-23-52
3579 874-5	23-23-52
3579 876-7	23-23-52
3579 878-9	23-23-52
3579 880-1	23-23-52
3580 032	5-06-1
3580 034	5-06-1
3580 502	5-05-3
3580 506	5-05-3
3580 522	5-05-3
3580 532	22-03-1
3580 533	22-03-1
3580 534	22-03-1
3580 544	22-03-1
3580 546	22-03-1
3580 549	22-04-2
3580 551	22-04-2
3580 553	22-04-2
3580 567	22-04-2
3580 598	22-05-14
3580 630	22-03-1
3580 674-5	5-05-16
3580 690	22-03-1
3580 692	22-03-1
3580 750-1	4-26-17
3581 053	23-64-12
3581 054	23-64-266
3581 055	23-64-266
3581 062-3	23-64-311
3581 064-5	23-64-311
3581 098-9	23-63-33
3581 112-3	23-64-254
3581 114	23-64-4
3581 116-7	23-64-254
3581 121	23-39-19
3581 122-3	23-63-33
3581 134	23-63-181
3581 135	23-11-11
3581 152-3	23-63-15
3581 154-5	23-63-15
3581 160-1	23-63-33
3581 168-9	23-63-171
3581 170-1	23-63-104
3581 172	23-09-64
3581 174	23-64-200
3581 208-9	23-42-32
3581 276	23-39-19
3581 276-7	23-39-19
3581 280-1	23-63-15
3581 282-3	23-63-15
3581 286	23-64-271
3581 290-1	23-64-300
3581 294	23-64-272
3581 310-1	23-63-104
3581 312-3	23-63-104
3581 316	23-64-17
3581 322	23-64-16
3581 323	23-39-45
3581 422-3	23-63-33
3581 424	23-09-52
3581 426-7	23-63-55
3581 428-9	23-63-55
3581 430-1	23-63-55
3581 439	23-64-12
3581 445	23-54-118
3581 446-7	23-64-12
3581 454	23-42-16
3581 456	23-64-42
3581 463	23-39-19
3581 469	23-64-200
3581 470-1	23-63-15
3581 473	23-64-200
3581 478	23-42-16
3581 479	23-64-4
3581 482	23-64-17
3581 484-5	23-64-308
3581 486-7	23-64-308
3581 488	23-64-12
3581 540	23-64-12
3581 541	23-54-103
3581 568	23-39-19
3581 579	23-64-4
3581 586-7	23-63-20
3581 596	23-64-272
3581 597	23-09-53
3581 664	23-64-276
3581 666	14-45-17
3581 672	23-64-272
3581 680-1	23-09-51
3581 694-5	23-64-308
3581 696-7	23-64-308
3581 698-9	23-64-308
3581 700-1	23-64-308
3581 716-7	23-63-15
3581 720-1	23-41-53
	23-64-77
3581 734-5	23-63-133
3581 737	23-64-300
3581 738	23-64-242
3581 752-3	23-63-55
3581 754-5	23-63-55
3581 760-1	23-64-311
3581 762-3	23-64-311
3581 764-5	23-64-311
3581 766-7	23-64-311
3581 768-9	23-64-308
3581 770-1	23-64-308
3581 776	23-64-187
3581 794-5	23-63-94
3581 798	23-09-54
3581 822-3	23-63-55
3581 844	23-63-181
3581 852-3	23-63-33
3581 859	23-63-55
	23-63-136
3581 860	23-39-19
3581 864	23-54-126
3581 865	23-54-126
3581 877	23-42-23
3581 878-9	23-63-33
3581 886-7	23-63-55
3581 888	23-64-28
3581 890-1	23-54-18
3581 892	23-08-12
3581 894-5	23-63-33
3581 896-7	23-63-33
3581 900	23-64-10
3581 901	23-64-10
3581 904-5	23-63-20
3581 909	23-63-181
3581 912-3	23-64-254
3581 920-1	23-42-16
3581 924-5	23-63-33
3581 958-9	23-63-33
3581 960-1	23-63-33
3581 962-3	23-63-33
3581 974	23-64-200
3581 975	23-64-200
3581 990-1	23-63-33
3581 992-3	23-63-33
3581 994-5	23-63-33
3581 996-7	23-64-308
3581 998-9	23-64-308
3582 000-1	23-64-308
3582 002-3	23-64-308
3582 004-5	23-63-94
3582 011	23-64-12
3582 012	23-54-103
3582 014	23-39-19
3582 015	23-39-45

PART NUMBER	CODE
3582 018-9	23-64-12
3582 025	23-42-16
3582 028-9	23-09-51
3582 034-5	23-09-51
3582 038-9	23-09-51
3582 040	23-42-16
3582 042-3	23-64-197
3582 060-1	23-63-94
3582 062-3	23-64-308
3582 064-5	23-64-308
3582 066-7	23-64-308
3582 068-9	23-64-308
3582 115	23-64-12
3582 304	23-64-272
3582 316-7	23-42-16
3582 318-9	23-63-15
3582 345	23-63-133
3582 356-7	23-63-33
3582 448-9	15-19-2
3582 486	23-63-55
3582 496-7	23-09-51
3582 518-9	15-19-2
3582 536-7	15-19-2
3582 776-7	23-64-269
3583 004	12-04-23
3583 052	23-32-17
3583 062	23-32-17
3583 064	23-32-17
3583 070	23-32-17
3583 074	23-32-17
3583 076	23-32-17
3583 080	23-32-17
3583 100	23-32-17
3583 188	13-10-1
3583 404	11-09-3
3583 405	11-09-3
3583 406	11-09-3
3583 412	11-09-3
3583 414	11-09-3
3583 442	11-10-3
3583 442-3	11-10-3
3583 483	14-90-1
3583 524	14-86-40
3583 530	14-86-40
3583 533	14-86-40
3583 539	14-86-57
3583 559	23-39-2
3583 573	14-86-40
3583 575	14-86-40
3583 599	14-90-1
3583 654	11-05-1
3583 725	11-05-1
3585 656	14-38-30
3586 033	15-11-17
3586 037	15-11-5
3586 051	23-54-136
3586 056	15-03-54
3586 087	23-21-3
3586 088	15-19-8
3586 092	15-19-8
3586 093	15-19-8
3586 094	15-19-8
3586 096	23-17-4
3586 103	23-21-14
3586 105	23-21-14
3586 110-1	23-18-5
3586 124	15-11-5
3586 128-9	23-14-27
3586 132-3	23-47-6
3586 134	23-47-6
3586 136	23-47-6
3586 137	23-47-6
3586 139	23-47-6
3586 144	23-47-6
3586 145	23-47-6
3586 148-9	23-47-6
3586 154	23-18-125
3586 156	15-11-89
3586 160-1	23-18-11
3586 162-3	23-18-11
3586 164-5	23-18-11
3586 166-7	23-18-11
3586 168-9	23-18-5
3586 174	23-21-3
3586 175	23-21-3
3586 176	23-21-3
3586 178	23-21-18
3586 179	23-21-18
3586 180	23-21-18
3586 181	23-21-18
3586 190-1	23-39-5
3586 192-3	23-39-5
3586 214	15-19-8
3586 215	15-19-8
3586 255	23-54-144
3586 256	23-54-216
3586 257	23-54-143
3586 258	23-54-216
3586 312-3	23-41-106
3586 386	23-10-18
3586 388-9	23-47-6
3586 390	23-19-102
3586 392	23-19-105
3586 393	23-54-72
3586 404	23-18-5
3586 406	23-18-5
3586 407	23-18-5
3586 410	23-18-103
3586 420-1	23-18-11
3586 424-5	23-18-11
3586 427	23-54-84
3586 435	23-19-105
3586 438	23-19-105
3586 441	23-63-133
3586 444	23-54-72
3586 564	23-54-160
3586 624-5	23-63-133
3586 636	23-54-216
3586 638	23-54-223
3586 641	23-21-3
3586 642	23-21-3
3586 643	23-21-3
3586 644	23-21-3
3586 645	23-21-3
3586 646	23-21-3
3586 647	23-21-3
3586 648	23-21-3
3586 649	23-21-3
3586 650	23-21-3
3586 651	23-21-3
3586 652	23-21-3
3586 653	23-21-3
3586 654	23-21-3
3586 655	23-21-3
3586 656	23-54-216
3586 662	23-54-216
3586 668-9	23-18-11
3586 707	23-54-179
3586 738	23-21-3
3586 739	23-21-3
3586 744	23-17-4
3586 976	23-21-3
3586 977	23-21-3
3586 981	15-11-5
3586 984	15-11-83
3586 987	15-11-5
3588 117	23-47-420
3590 126	23-33-96
3590 127	23-33-96
3590 142	23-06-15
3592 151	8-37-14
3594 043	23-45-204
3594 086	23-26-84
3594 091	23-45-30
3594 092	23-45-30
3594 211	23-45-66
3594 288	23-45-194
3595 025	13-64-3
3595 027	13-66-3
3595 028	13-66-3
3595 030	13-66-3
3595 031	13-66-3
3595 032	13-64-3
3595 034	13-66-3
3595 035	13-64-3
3595 037	13-66-3
3595 038	13-66-3
3595 062	13-64-3
3595 100	13-64-3
3595 102	13-64-3
3595 104	13-66-3
3595 105	13-66-3
3595 106	13-66-3
3595 107	13-64-3
3595 108	13-64-3
3595 109	13-66-3
3604 299	24-25-84
3610 025	21-85-5
3611 066-7	23-32-105
3611 068-9	23-32-105
3611 342	15-03-3
3611 553	23-19-8
3611 900-1	23-11-1
3611 902-3	23-11-1
3611 904-5	23-11-3
3611 906-7	23-11-3
3611 908-9	23-11-3
3611 910-1	23-11-3
3611 927	23-11-1
3612 216	14-38-13
3612 387	23-54-2
3612 476-7	12-15-32
3612 504-5	23-34-329
3612 632-3	12-15-32
3612 640-1	23-34-329
3612 716	23-34-329
3613 436	23-26-80
3613 460-1	13-66-106
3614 013	9-05-5
3614 023	8-27-335
3614 024	8-27-335
3614 059	9-48-8
3614 063	9-48-8
3614 208	9-01-24
3614 209	9-01-24
3614 232	9-10-5
3614 233	9-10-5
3614 234	9-10-5
3614 282	9-02-62
3614 292	9-48-44
3614 314	9-02-62
3614 344	9-48-7
3614 952	9-03-4
3614 982	10-03-4
3615 011	13-66-106
3615 014-5	23-19-84
3615 018	23-59-41
3615 020	23-59-37
3615 024	23-32-92
3615 026	23-34-249
3615 028-9	23-36-53
3615 031	13-66-106
3615 042	23-34-234
3615 044-5	23-36-66
3615 046-7	23-36-66
3615 048-9	23-51-5
3615 050-1	23-51-5
3615 060	23-34-179
3615 061	23-34-179
3615 062	23-34-179
3615 072-3	23-64-311
3615 074-5	23-64-311
3615 086	14-88-28
3615 103	8-57-58
3615 104	8-57-58
3615 108	17-24-28
3615 110	13-66-106
3615 113	13-66-106
3615 120-1	23-34-249
3615 134	8-47-68
3615 152	23-32-93
3615 156-7	23-34-191
3615 188-9	23-34-242
3615 192	23-32-15
3615 198-9	23-34-242
3615 202-3	23-34-242
3615 260-1	23-34-235
3615 300-1	23-59-35
3615 302-3	23-59-35
3615 576	8-57-58
3615 744-5	23-36-66
3615 986-7	23-34-20
3620 326	13-68-5
3620 327	13-68-5
3620 328	13-68-5
3620 329	13-68-5
3620 330	13-68-5
3620 331	13-68-5
3620 332	13-68-5
3620 333	13-68-5
3620 334	13-68-5
3620 335	13-68-5
3620 336	13-68-5
3620 337	13-68-5
3620 338	13-68-5
3620 362	14-45-1
3620 451	21-85-5
3620 452	21-85-5
3620 490	23-64-181
3620 494	23-17-4
3620'495	23-14-70
3620 518	1-74-1
3620 700-1	8-14-6
3620 704	8-27-308
3620 705	8-27-250
3620 708	8-14-19
3620 709	8-14-19
3620 718	8-14-1
3620 721	8-27-250
3620 722	8-27-96
3620 723	8-27-250
3620 728	8-37-372
3620 729	8-37-372
3620 730	8-37-372
3620 732	24-28-113
3620 733	8-52-375
3620 734	8-57-54
3620 735	23-67-10
3620 736	23-67-164
3620 744-5	8-50-334
3620 747	8-28-74
3620 759	8-14-9
3620 764	8-14-1
3620 795	14-73-1
3620 872	8-33-90
3620 890	8-52-76
3621 043	14-30-28
3621 150	14-39-10
3621 151	14-39-10
3621 152	14-30-28
	14-30-30
3621 153	14-43-5
3621 154	14-43-5
3621 155	14-41-40
3621 157	14-30-29
3621 159	14-40-1
3621 160	14-40-4
3621 161	14-30-8
3621 162	14-45-20
3621 163	14-35-3
3621 164	14-41-22
3621 165	14-45-7
3621 166	14-40-23
3621 167	14-40-23
3621 168	14-40-23
3621 169	14-36-50
3621 171	14-36-50
3621 172	14-36-37
3621 175	14-41-3
3621 176	14-43-4
3621 177	14-45-25
3621 178	14-45-8
3621 179	14-39-9
3621 180	14-54-15
3621 181	14-54-34
3621 182	14-54-148
3621 183	14-35-10
3621 188	14-38-5
3621 192	14-38-50
3621 193	14-39-28
3621 194	14-46-17
3621 195	14-38-28
3621 196	14-45-5
3621 197	14-35-1
3621 198	14-35-1
3621 202	14-39-31
3621 204	14-43-3
3621 205	14-41-18
3621 206	14-48-2
3621 208	14-39-50
3621 209	14-39-7
3621 210	14-39-7
3621 214	14-41-3
3621 215	14-45-25
3621 216	14-38-13
3621 218	14-30-28
3621 221	14-38-13
3621 223	14-45-4
3621 224	14-30-4
3621 225	14-30-4
3621 244	14-30-7
3621 245	14-30-7
3621 246	14-30-7
3621 260	14-30-4
3621 273	14-39-51
3621 274	14-39-7
3621 278	14-54-2
3621 282	14-30-14
3621 283	14-38-29
3621 286	14-30-4
3621 287	14-30-3
3621 288	14-30-3
3621 385	14-31-27
3621 400	14-30-4
3621 401	14-30-4
3621 433	14-38-12
3621 435	14-39-28
3621 436	14-36-15
3621 437	14-30-3
3621 438	14-30-3

PART NUMBER	CODE
3621 444	14-45-4
3621 446	14-41-3
3621 450	21-138-2
3621 451	21-138-2
3621 452	21-137-205
	21-138-2
3621 453	21-138-2
3621 454	21-138-2
3621 455	21-138-2
3621 458	3-20-1
3621 459	21-01-3
3621 460	21-01-3
3621 608	14-72-1
3621 621	14-63-2
3621 622-3	8-14-1
3621 673	8-50-334
3621 675	14-73-1
3621 750	23-02-29
3621 754	23-02-29
3621 755	23-14-10
3621 756	23-14-10
3621 757	23-14-10
3621 800	8-14-1
3621 801	8-14-1
3621 927	3-19-1
3621 928	3-19-1
3621 929	3-19-1
3621 930	3-19-1
3621 939	3-19-1
3621 960	5-05-41
3621 967	3-35-14
3621 969	5-39-1
3621 992	3-33-1
3621 993	3-33-1
3621 997	5-100-1
3642 004	14-86-40
3642 007	14-86-40
3642 058	14-86-43
3643 576	17-12-4
3656 017	8-27-54
3656 023	8-27-57
3656 025	8-27-58
3656 046	8-27-250
3656 047	8-27-250
3656 061	8-27-250
3656 066	8-27-308
3656 072	8-27-308
3656 151	8-27-1
	8-27-308
3656 153	8-27-1
	8-27-308
3656 154	8-27-250
3656 156	8-27-308
3656 199	8-35-22
3656 383	8-52-80
3670 003	23-54-73
3670 005	23-54-79
3670 050	23-17-4
3670 051	23-17-4
3670 055	23-17-2
	23-17-4
3670 057	23-54-216
3670 061	23-54-187
3670 070-1	23-18-26
3670 072	23-17-2
3670 073	23-17-2
3670 078	23-54-1
3670 084	23-54-22
3670 205	23-34-309
3670 216	15-11-5
3670 258	15-11-5
3670 468-9	23-26-41
3670 473	23-48-67
3670 504	23-48-70
3670 693	15-11-5
3671 101	19-54-115
3671 102	19-54-115
3671 136	9-39-15
3671 259	7-03-1
3671 589	14-62-1
3674 140-1	23-40-85
3674 142-3	23-40-85
3674 155	14-86-32
3674 200	23-34-309
3674 202	23-34-309
3674 204	23-34-309
3674 206-7	23-34-309
3674 208	23-34-309
3674 209	23-34-309
3674 210-1	23-34-309
3674 212-3	23-34-309
3674 216	23-34-309
3674 217	23-34-309
3674 218	23-34-309
3674 220	23-34-309
3674 227	23-34-309
3674 228	23-34-309
3674 229	23-34-309
3674 230	23-34-309
3674 231	23-34-309
3674 240-1	23-34-309
3674 250	23-34-309
3674 251	23-34-309
3674 252	23-34-309
3674 253	23-34-309
3674 254	23-34-309
3674 255	23-34-309
3674 256	23-34-309
3674 257	23-34-309
3674 258	23-34-309
3674 268	23-34-309
3674 269	23-34-309
3674 270	23-34-309
3674 271	23-34-309
3674 272	23-34-309
3674 273	23-34-309
3674 274	23-34-309
3674 275	23-34-309
3674 276	23-34-309
3674 277	23-34-309
3674 325	23-64-272
3674 504	23-34-309
3674 505	23-34-309
3674 506-7	23-34-309
3674 509	23-34-309
3674 512	23-34-309
3676 184	23-67-80
3683 956	3-33-1
3683 957	3-33-1
3685 270	8-14-24
3685 272	8-14-24
3685 274	8-14-24
3685 276	8-14-24
3685 278	8-14-24
3685 656	14-38-30
3685 657	14-38-30
3685 661	14-45-12
3685 663	14-43-5
3720 060-1	23-34-309
3801 311	21-133-40
3894 486	23-34-280
3941 508	24-28-73
4670 628-9	23-18-26
6000 305	23-54-72
6000 319	23-58-607
6000 379	23-64-242
6000 594	23-19-178
6001 084	23-23-52
6001 419	8-15-25
6001 798	15-03-60
6001 855	23-23-65
6002 011	23-22-53
6002 178	23-26-41
6002 186	23-22-53
6002 206	23-23-52
6002 242	23-23-65
6002 243	23-23-65
6002 263	23-23-52
	23-23-65
6002 326	15-03-52
6002 330	23-22-53
6002 518	23-26-41
6002 597	23-22-86
6002 615	23-23-52
	23-23-65
6002 620	23-26-41
6002 686	23-23-52
6002 688	23-23-52
	23-23-65
6002 697	23-26-41
6002 698	23-26-41
6002 699	23-26-41
6002 700	23-26-41
6002 706	13-64-29
6002 809	13-64-33
6002 861	23-23-52
	23-23-65
6002 893	23-23-52
	23-23-65
6002 937	23-26-23
6002 940	23-26-41
6003 007	23-26-41
6003 257	23-63-55
6006 043	23-15-9
6006 324	8-47-77
6008 060	23-67-161
6008 109	23-31-33
6008 144	14-11-9
6008 145	1-48-258
	14-11-9
6014 023	8-55-161
6015 143	1-48-950
6015 149	1-48-950
	8-01-7
	23-67-260
6015 238	5-06-9
	8-15-32
6015 288	5-06-7
	8-15-32
6015 636	8-01-7
6016 005	23-64-272
6017 029	19-48-1
6022 006	8-52-100
6022 161	21-42-11
6022 181	8-35-4
6022 185	8-35-4
	9-48-7
6022 190	9-67-4
	19-54-2
	19-54-123
6022 245	23-54-21
6022 262	21-30-407
6022 274	23-64-242
6022 582	9-03-28
6022 777	13-33-61
6022 816	21-05-19
6022 817	21-138-7
6022 859	21-129-5
6022 891	23-15-9
6022 895	13-33-61
6022 989	23-58-606
6023 018	17-15-6
6023 019	17-15-6
	17-17-5
6023 045	19-14-4
6023 046	19-14-21
	19-46-8
6023 053	9-15-10
	9-17-5
6023 054	9-67-4
6023 088	8-40-5
	19-14-23
	21-30-28
6023 092	10-24-30
	21-03-1
	23-54-218
6023 111	8-55-161
6023 118	9-48-7
6023 143	21-03-23
6023 167	13-35-1
6023 168	9-46-33
6023 169	13-33-61
6023 170	13-33-61
6023 171	13-33-61
6023 187	6-09-1
	21-03-23
6023 201	8-14-27
6023 202	8-50-173
	8-50-292
	8-55-9
	8-56-4
6023 204	8-47-8
	8-47-68
	13-64-26
	13-66-46
	23-21-3
6023 205	8-50-292
	8-55-9
	8-56-4
6023 214	8-14-27
	23-67-25
6023 215	8 31-11
	8-50-173
6023 253	8-32-18
6023 285	14-11-39
	14-11-40
6023 293	2-10-6
	2-10-7
6023 343	21-139-74
6023 353	9-67-4
	9-71-5
	13-10-1
6023 355	21-119-3
6023 394	8-28-38
6023 411	8-11-21
6023 481	8-14-27
6023 514	21-04-1
6023 517	8-28-292
6023 531	15-09-4
	23-32-51
6023 533	5-06-11
6023 541	8-58-60
6023 546	23-09-52
	23-09-58
6023 576	23-15-9
6023 587	9-43-3
6023 654	21-30-407
6023 660	6-22-19
6023 899	8-52-5
6023 925	8-47-15
6023 943	21-118-40
6023 997	4-23-6
6024 023	9-67-4
6024 069	15-03-64
6024 072	23-54-4
6024 085	9-48-7
6024 125	21-19-15
6024 130	21-17-7
6024 131	21-14-1
	21-14-20
6024 144	13-10-1
6024 156	13-66-106
6024 173	8-55-7
6024 179	8-47-14
6024 214	8-14-27
6024 246	9-23-5
6024 271	23-23-52
	23-23-65
6024 311	21-05-19
6024 312	21-05-19
6024 318	9-46-21
6024 323	11-10-17
6024 333	19-14-4
6024 336	21-137-5
6024 343	11-06-3
6024 380	9-48-6
6024 403	8-56-41
6024 421	23-23-65
6024 440	23-45-57
6024 457	21-29-3
6024 487	19-19-24
6024 552	21-30-416
6024 554	21-30-416
6024 560	14-39-45
	14-39-48
6024 576	8-50-184
6024 579	8-55-10
6024 588	8-50-292
	8-55-10
	8-56-41
	23-54-73
6024 654	8-53-150
	8-53-270
	21-30-19
	23-22-53
6024 657	2-10-63
	17-23-57
6024 666	21-134-9
6024 691	19-48-46
6024 695	8-34-5
6024 699	8-53-150
6024 803	2-10-63
6024 845	9-03-28
6024 848	13-66-106
6024 862	21-03-23
6024 863	21-03-23
6024 864	21-03-23
6024 871	23-15-9
6024 888	23-54-56
6024 962	8-55-10
6024 972	23-48-109
6024 973	23-48-109
6025 001	8-55-9
	8-56-4
6025 002	4-25-22
	8-50-303
6025 004	5-06-6
6025 012	13-66-15
6025 031	9-36-7
6025 050	14-11-40
6025 063	19-19-24
	19-54-2
6025 071	6-24-1
	21-42-23
6025 148	8-50-306
6025 196	23-17-72
6025 198	23-17-72
6025 215	8-28-38
	8-28-292
	19-54-115

PART NUMBER	CODE	PART NUMBER	CODE	PART NUMBER	CODE	PART NUMBER	CODE	PART NUMBER	CODE
6025 243	19-30-7	6026 220	23-23-65	6026 911	23-21-8		13-66-46	6028 141	8-50-306
6025 287	4-25-1	6026 239	21-34-47	6026 912	8-35-52	6027 467	19-48-1	6028 142	8-28-74
	4-25-17		21-42-25	6026 919	6-10-10		21-30-418		8-35-52
6025 311	21-30-407	6026 240	13-35-1		8-01-23		21-142-18		8-52-328
6025 312	8-34-96	6026 273	9-48-7		8-35-52	6027 475	8-55-10	6028 159	5-44-9
6025 329	8-34-96	6026 275	19-14-23	6026 968	9-67-4		8-55-159	6028 169	13-64-35
	19-14-50	6026 278	21-134-36	6026 972	23-54-20	6027 476	23-54-4	6028 191	19-01-8
6025 346	4-25-1		21-134-40	6026 976	23-54-4	6027 479	1-48-707	6028 193	19-01-8
6025 393	8-01-23	6026 289	21-05-19	6026 977	23-54-4	6027 482	19-27-40	6028 237	9-71-5
6025 413	23-67-98	6026 290	21-05-19	6026 984	23-54-56	6027 513	9-02-50	6028 249	13-64-5
6025 502	8-11-11	6026 291	21-05-19	6026 994	9-48-7	6027 516	8-34-96	6028 258	21-19-15
6025 505	8-50-303	6026 292	23-21-3	6027 012	8-34-5	6027 517	8-34-96	6028 261	21-42-23
6025 506	8-14-27		23-64-358	6027 100	23-54-21	6027 525	23-64-40	6028 262	9-71-5
6025 507	8-34-5	6026 336	23-17-72	6027 141	23-45-31	6027 538	23-64-40	6028 265	19-14-59
	8-47-8	6026 350	23-45-204	6027 153	21-137-47		23-64-299	6028 273	8-50-173
6025 508	11-10-3	6026 361	23-08-54	6027 155	14-25-13	6027 541	23-64-254	6028 281	8-33-90
	23-54-179	6026 390	21-117-1	6027 169	8-50-306	6027 549	23-54-165	6028 283	8-50-129
6025 528	9-46-21	6026 394	8-15-3	6027 175	8-19-18	6027 559	5-20-17	6028 301	23-21-58
6025 558	13-11-17	6026 429	9-48-7	6027 176	8-34-96	6027 567	8-34-5	6028 303	23-64-282
6025 570	21-05-8	6026 430	13-66-15	6027 180	23-54-216	6027 605	5-13-9	6028 304	23-64-282
6025 571	21-03-23		22-04-14	6027 186	2-10-74	6027 618	8-28-292	6028 307	23-61-117
6025 668	21-05-8	6026 435	19-15-23	6027 201	23-14-27	6027 624	13-64-35	6028 308	8-56-41
6025 670	23-18-115	6026 436	5-52-4	6027 207	9-48-7	6027 625	8-14-27	6028 320	5-05-2
6025 671	19-30-18	6026 450	1-48-707	6027 213	8-34-96		8-55-9	6028 323	5-05-2
6025 700	9-48-7	6026 456	11-10-3	6027 221	23-14-18	6027 630	8-11-11	6028 325	23-64-358
6025 701	9-48-7	6026 483	2-03-3		23-14-53	6027 635	2-03-3	6028 326	8-34-96
6025 705	9-67-4	6026 489	13-10-1		23-14-79	6027 639	8-14-27	6028 327	8-34-96
6025 724	23-48-109	6026 492	23-67-76	6027 224	19-02-4		8-55-9	6028 334	8-50-292
6025 726	9-02-17	6026 501	8-34-96	6027 225	21-09-23	6027 740	22-20-87		8-55-209
6025 735	5-13-10	6026 530	23-64-299	6027 229	21-19-15	6027 749	23-21-74	6028 344	8-55-10
6025 739	5-13-9	6026 540	8-50-175	6027 246	21-14-20	6027 838	23-54-21	6028 355	9-48-6
6025 752	21-85-9	6026 544	13-64-5	6027 252	21-03-23	6027 880	21-30-407	6028 356	9-48-6
6025 754	21-09-23	6026 564	23-64-282	6027 264	9-10-19	6027 904	19-14-35	6028 358	23-64-299
	21-19-15	6026 579	13-66-15	6027 271	21-138-7	6027 919	19-54-115	6028 359	23-64-299
6025 755	21-09-23	6026 634	8-34-5	6027 279	8-34-40	6027 925	23-54-4	6028 365	23-45-31
	21-19-15	6026 636	8-34-5	6027 280	8-34-40	6027 941	23-40-171	6028 399	8-14-27
6025 756	21-09-23	6026 647	13-66-15	6027 292	8-34-45	6027 944	8-14-27	6028 403	8-28-292
	21-19-15		22-04-14	6027 295	13-66-2	6027 947	19-14-35	6028 404	8-28-38
6025 757	21-09-23	6026 648	3-32-1	6027 296	13-66-15		19-31-1	6028 417	23-54-88
	21-19-15		13-66-15	6027 299	11-06-3	6027 948	8-14-27	6028 418	23-54-88
6025 772	8-34-96		13-66-136		11-08-23	6027 952	23-58-213	6028 427	15-11-5
6025 779	23-48-109	6026 650	23-40-171	6027 310	23-49-1	6027 953	23-58-213	6028 428	23-64-300
6025 792	23-23-65	6026 654	23-45-31	6027 311	23-49-1	6027 954	23-58-262	6028 434	5-64-2
6025 804	9-71-5		23-45-185	6027 312	23-49-1	6027 962	8-11-21	6028 465	17-23-57
	11-08-23	6026 656	19-54-86	6027 323	16-20-3	6027 972	23-64-40	6028 466	17-23-57
6025 805	13-10-1	6026 687	23-19-25	6027 330	23-45-57	6027 973	13-66-2	6028 484	2-10-74
6025 850	23-39-29	6026 697	23-54-217	6027 335	9-10-19	6027 976	21-30-23	6028 499	19-14-82
6025 855	13-66-15	6026 705	2-03-3	6027 336	9-36-7		21-30-24	6028 505	8-01-23
6025 857	21-42-23	6026 720	13-66-136	6027 344	23-64-240	6027 983	14-14-20	6028 512	2-10-63
	21-139-49	6026 723	13-64-5	6027 352	13-66-31	6027 984	5-05-2		5-13-10
	21-139-98		13-66-15	6027 357	8-55-10	6027 992	23-64-12	6028 520	23-45-30
6025 875	23-58-603	6026 724	13-66-15	6027 370	21-30-11	6027 995	8-28-38	6028 546	23-54-6
6025 879	23-54-165	6026 750	9-64-24	6027 372	23-64-197	6027 996	6-50-1	6028 547	5-55-1
6025 895	23-54-165	6026 756	23-64-272	6027 381	2-10-58	6028 005	21-30-19	6028 548	13-64-26
6025 909	8-34-96	6026 764	21-30-416	6027 382	8-34-96		21-30-23	6028 552	6-46-1
6025 919	23-54-214	6026 789	9-71-5	6027 391	21-139-147	6028 006	8-57-11	6028 581	10-24-23
6025 926	10-24-23	6026 794	9-03-10	6027 402	19-14-35	6028 012	8-41-41	6028 587	23-64-12
6025 974	8-34-96	6026 798	9-03-10		19-31-1		8-53-271		23-64-254
	8-50-337	6026 805	13-66-15	6027 403	8-33-114	6028 023	9-48-6		23-64-272
6025 994	4-23-24	6026 822	13-33-61		19-14-35	6028 024	21-84-1	6028 588	23-64-254
6026 031	2-10-63	6026 839	23-19-94		19-31-1	6028 034	21-42-23	6028 590	1-48-950
6026 034	23-19-25	6026 860	5-58-13	6027 404	19-14-35	6028 041	16-20-3		24-01-65
6026 058	5-64-2	6026 873	19-58-14		19-31-1	6028 045	3-08-1	6028 597	8-34-96
6026 059	19-48-46	6026 874	21-29-3	6027 412	3-02-1	6028 050	19-30-18	6028 606	21-30-2
6026 067	23-54-6	6026 884	21-04-8		3-03-31	6028 051	19-30-18	6028 617	13-66-37
6026 092	8-37-75	6026 885	13-64-5	6027 418	8-55-209	6028 070	8-55-209		13-66-136
6026 097	8-55-10	6026 887	5-52-4	6027 424	23-45-185	6028 072	8-55-159	6028 619	23-64-12
6026 098	14-02-86	6026 888	5-52-4	6027 435	8-34-96		8-56-41	6028 622	23-45-31
6026 131	5-13-10	6026 895	4-25-20	6027 444	8-50-337	6028 073	8-55-209	6028 630	21-34-42
6026 132	21-30-6	6026 898	8-34-54	6027 449	23-06-15	6028 087	19-01-8		21-42-23
6026 140	9-03-10	6026 904	19-14-35	6027 455	8-14-23	6028 088	19-27-8	6028 638	8-37-75
6026 141	9-03-10		19-14-37	6027 457	19-48-1	6028 098	9-15-6	6028 644	23-64-197
6026 147	1-48-151		19-31-1	6027 458	19-31-1	6028 110	8-55-209	6028 647	23-05-1
6026 156	13-66-31	6026 910	15-11-5	6027 466	8-55-161	6028 114	19-48-46	6028 652	23-64-272

PART NUMBER	CODE
6028 654	8-34-280
6028 665	19-14-120
6028 668	9-02-16
	9-02-17
6028 679	23-22-53
6028 690	8-34-96
	8-55-159
6028 699	14-11-40
6028 727	4-23-6
6028 737	19-54-115
6028 741	7-16-11
6028 750	19-15-23
6028 754	8-34-96
6028 757	5-13-9
6028 758	5-05-2
6028 762	19-01-8
6028 775	2-09-8
6028 777	2-10-63
6028 780	15-03-51
6028 781	15-03-51
6028 783	21-85-61
6028 785	21-139-135
6028 787	23-40-171
6028 800	13-64-19
6028 811	19-54-115
6028 820	23-64-282
6028 863	21-137-19
6028 864	21-137-5
6028 886	23-36-134
6028 889	8-28-292
6028 901	21-05-8
6028 905	1-48-1
6028 911	19-54-115
6028 915	3-02-1
	3-03-31
6028 921	5-64-2
6028 934	23-34-212
6028 983	19-19-9
6028 994	7-16-11
6028 996	8-50-303
6028 997	8-50-306
6029 009	14-11-9
6029 033	2-08-71
6029 041	23-15-9
6029 042	23-15-9
6029 062	23-23-52
	23-23-65
6029 067	23-40-171
6029 070	23-40-171
6029 071	6-14-10
6029 093	23-54-4
6029 094	21-30-6
6029 113	5-54-4
6029 134	21-30-23
6029 135	23-63-181
	23-64-272
6029 142	19-15-40
6029 149	1-48-141
6029 159	5-55-1
6029 167	15-11-5
6029 170	5-44-8
6029 171	23-49-1
6029 173	19-30-43
6029 175	19-14-4
	19-46-3
6029 190	22-01-43
6029 201	21-30-6
6029 230	23-61-117
6029 256	5-06-1
6029 262	1-48-141
6029 264	22-20-87
6029 271	21-139-60
	21-139-71
	21-139-135
	21-139-140
	21-139-154
6029 272	21-139-135
6029 279	23-45-204
6029 280	23-45-204
6029 281	23-39-45
6029 291	5-100-189
6029 302	5-06-10
6029 337	23-54-143
6029 338	19-19-26
6029 355	5-57-2
6029 362	13-64-5
	13-66-15
6029 363	13-64-5
	13-66-15
6029 364	13-64-5
	13-66-15
6029 365	13-64-5
	13-66-15
6029 366	13-64-5
	13-66-15
6029 367	13-64-5
	13-66-15
6029 368	13-64-5
	13-66-15
6029 392	19-14-59
	19-30-10
6029 407	8-28-38
6029 417	23-54-4
6029 443	23-64-197
6029 448	23-48-21
6029 462	23-64-12
6029 501	23-45-204
6029 550	13-10-1
6029 562	16-02-5
6029 583	19-54-115
6129 271	21-139-71
8404 003	11-09-3
9405 339	21-30-23
9409 639	23-64-242
9411 259	9-45-1
9412 281	19-14-82
	21-30-2
	23-45-185
9413 545	5-06-10
9414 586	8-37-2
9414 597	5-06-6
9414 598	14-24-6
9414 711	1-48-950
	23-06-46
	23-22-53
9414 753	23-22-86
9414 756	23-22-53
9414 760	23-22-86
9414 764	23-21-14
9414 767	23-21-14
9415 537	23-54-221
9415 910	9-46-33
	23-23-65
9415 920	23-67-25
9415 969	8-44-1
9416 049	23-06-15
9416 107	2-08-55
	2-10-10
9416 208	23-54-221
9416 927	8-44-1
9417 050	9-48-7
9417 075	5-06-7
9417 098	19-48-45
9417 316	23-02-2
9417 361	21-84-1
9417 471	9-64-24
	9-71-5
9417 561	8-44-1
9417 668	6-43-1
	8-28-3
	13-11-17
	17-29-6
	17-29-10
	17-29-11
9417 732	23-64-356
9417 749	19-48-46
9417 863	8-44-1
9417 866	8-44-1
9417 867	8-44-1
9417 928	8-28-3
9417 992	23-21-3
9418 004	9-11-7
9418 005	9-11-7
9418 208	6-09-1
9418 246	23-61-117
9418 651	21-139-60
9418 780	23-22-53
	23-22-86
9419 780	8-44-1
9419 882	3-03-8
9420 252	1-48-158
9420 813	21-84-1
	23-06-15
9420 892	9-10-19
9420 947	23-54-4
9421 202	19-46-29
	21-30-2
	21-30-100
9421 218	9-48-7
	17-29-11
	21-30-407
	21-42-11
9421 330	8-44-1
9421 360	9-48-6
9421 526	13-72-12
9421 776	23-06-55
9422 752	5-13-9
9422 790	8-28-3
9423 277	8-44-1
9423 295	8-44-1
9423 434	23-22-53
	23-22-86
9423 520	19-14-49
9423 789	8-28-3
9423 811	9-10-19
9424 048	8-37-15
9425 132	19-27-8
	19-27-31
9427 336	8-44-1
9427 473	9-64-24
9427 943	8-44-1
9428 267	23-23-65
9428 368	23-64-12
9428 486	8-28-3
9431 606	21-30-6
9431 620	19-15-23
9431 651	21-30-407
	21-30-416
9431 652	21-30-407
	21-30-416
9431 808	8-44-1
9432 334	19-30-43
3 SPE	21-42-31
	21-119-11
4 SPE	21-42-31
1003 FB5	23-38-1
1003 FE4	23-38-1
1003 FF8	23-38-1
1003 FK4	23-38-1
1003 FT5	23-38-1
1003 FW1	23-38-1
1003 FX9	23-38-1
1003 FY4	23-38-1
1003 GB4	23-38-1
1003 GY4	23-38-1
1339 DX9	23-49-8
1356 EB7	23-26-43
1356 EF8	23-26-43
1356 EX9	23-26-43
1356 EY8	23-26-43
1356 FK5	23-26-43
1356 FP6	23-26-43
1356 FR8	23-26-43
1356 FT4	23-26-43
1356 FY4	23-26-43
1356 GA6	23-26-43
1356 GB7	23-26-43
1356 GE9	23-26-43
1356 GF7	23-26-43
1356 GT6	23-26-43
1356 GY5	23-26-43
1600 GX9	23-20-8
1601 CX8	23-20-8
1601 GX8	23-20-8
1602 DBX	23-20-8
1602 ETX	23-20-8
1602 FYX	23-20-8
1602 GBX	23-20-8
1602 GTX	23-20-8
1603 GX9	23-20-41
1604 CX8	23-20-41
1604 GX8	23-20-41
1605 DX9	23-49-8
1605 EX9	23-49-8
1606 FX9	23-49-23
1607 ETX	23-20-41
1607 GBX	23-20-41
1607 GTX	23-20-41
1609 GBX	23-20-41
1609 GTX	23-20-41
1610 DBX	23-20-41
1610 FFX	23-20-41
1610 GBX	23-20-41
1610 GTX	23-20-41
1611 EBX	23-20-8
1611 FFX	23-20-8
1611 GBX	23-20-8
1611 GTX	23-20-8
1613 EX8	23-20-41
1613 GX8	23-20-41
1614 GBX	23-20-41
1614 GTX	23-20-41
1615 GX9	23-20-41
1619 CX9	23-20-41
1622 EF9	1-63-1
1622 EM9	1-63-1
1622 EX9	1-63-1
1622 FB4	1-63-1
1622 FB9	1-63-1
1622 FK6	1-63-1
1622 FL5	1-63-1
1622 FQ6	1-63-1
1622 FR7	1-63-1
1622 FT4	1-63-1
1622 FT7	1-63-1
1622 FY5	1-63-1
1622 GA7	1-63-1
1622 GB6	1-63-1
1622 GE9	1-63-1
1622 GF8	1-63-1
1622 GM9	1-63-1
1622 GT6	1-63-1
1622 GY7	1-63-1
1623 EX9	1-63-1
1623 FB4	1-63-1
1623 FB9	1-63-1
1623 FL5	1-63-1
1623 FQ6	1-63-1
1623 FR7	1-63-1
1623 FT4	1-63-1
1623 FT7	1-63-1
1623 FY5	1-63-1
1623 GA7	1-63-1
1623 GB6	1-63-1
1623 GE9	1-63-1
1623 GF8	1-63-1
1623 GM9	1-63-1
1623 GT6	1-63-1
1623 GY7	1-63-1
1624 EB9	1-63-1
1624 EF9	1-63-1
1624 EX9	1-63-1
1624 FE5	1-63-1
1624 FK6	1-63-1
1624 FT4	1-63-1
1624 FY5	1-63-1
1624 GB6	1-63-1
1624 GF8	1-63-1
1624 GT6	1-63-1
1624 GY7	1-63-1
1625 EB9	1-63-1
1625 EF9	1-63-1
1625 EX9	1-63-1
1625 FK6	1-63-1
1625 FT4	1-63-1
1625 FY4	1-63-1
1626 EF9	1-63-1
1626 EM9	1-63-1
1626 EX9	1-63-1
1626 FB4	1-63-1
1626 FB9	1-63-1
1626 FK6	1-63-1
1626 FL5	1-63-1
1626 FQ6	1-63-1
1626 FR7	1-63-1
1626 FT4	1-63-1
1626 FT7	1-63-1
1626 FY5	1-63-1
1626 GA7	1-63-1
1626 GB6	1-63-1
1626 GE9	1-63-1
1626 GF8	1-63-1
1626 GM9	1-63-1
1626 GT6	1-63-1
1626 GY7	1-63-1
1627 EX8	23-20-8
1628 FB6	1-63-1
1628 FE5	1-63-1
1628 FF9	1-63-1
1628 FK6	1-63-1
1628 FT4	1-63-1
1628 FX9	1-63-1
1628 GB6	1-63-1
1628 GF8	1-63-1
1628 GT6	1-63-1
1628 GY7	1-63-1
1632 EX8	23-20-41
1634 FX8	23-20-41
1634 GX8	23-20-41
1635 FAX	23-20-8
1635 FX9	23-20-8
1636 FAX	23-20-41
1637 FAX	23-20-41
1639 FAX	23-20-8
1639 FBX	23-20-8
1639 FTX	23-20-8
1639 GBX	23-20-8

PART NUMBER	CODE
1639 GTX	23-20-8
1639 GX9	23-20-8
1640 FBX	23-20-41
1640 FTX	23-20-41
1640 GBX	23-20-41
1640 GTX	23-20-41
1640 GX9	23-20-41
1641 FBX	23-20-41
1641 FTX	23-20-41
1641 GBX	23-20-41
1641 GTX	23-20-41
1641 GX9	23-20-41
1642 FBX	23-20-41
1642 FTX	23-20-41
1642 GBX	23-20-41
1642'GTX	23-20-41
1642 GX9	23-20-41
1647 CX9	23-20-8
1650 CX9	23-20-41
1652 FX8	23-20-41
1652 GX8	23-20-41
1653 FX8	23-20-41
1653 GX8	23-20-41
1656 DX8	23-20-41
1656 GX8	23-20-41
1657 DBX	23-20-41
1657 ETX	23-20-41
1657 GBX	23-20-41
1657 GTX	23-20-41
1684 CX9	23-20-41
1699 DBX	23-20-41
1699 FYX	23-20-41
1971 CON	21-85-5
1995 DX9	23-58-3
2025 EW2	24-28-3
2538 40O	21-85-5
2715 EX9	23-47-8
2826 GB7	1-87-22
2826 GF7	1-87-22
2826 GT7	1-87-22
2826 GX9	1-87-22
3497 GB4	23-64-71
3497 GF8	23-64-71
3497 GT6	23-64-71
3497 GW1	23-64-71
3497 GX9	23-64-71
3504 FX9	23-38-1
3505 FX9	23-38-1
3524 BX9	23-48-51
3526 FX9	23-38-1
3540 GX9	23-38-1
4000 FB7	8-33-17
4000 FE5	8-33-17
4000 FF8	8-33-17
4000 FT4	8-33-17
4000 FX9	8-33-17
4002 FB5	8-33-13
4002 FE5	8-33-13
4002 FF8	8-33-13
4002 FK5	8-33-13
4002 FT4	8-33-13
4002 FX9	8-33-13
4002 GX9	8-33-13
4003 FB5	8-33-17
4003 FE5	8-33-17
4003 FF8	8-33-17
4003 FK5	8-33-17
4003 FT4	8-33-17
4003 FX9	8-33-17
4003 GX9	8-33-17
4004 FTT	19-30-4
4005 FX9	8-33-13
4006 GX9	8-33-13
4007 CX9	19-30-4
4008 FB7	19-30-4
4008 FE5	19-30-4
4008 FF8	19-30-4
4008 FK5	19-30-4
4008 FT4	19-30-4
4008 FX9	19-30-4
4008 FY4	19-30-4
4010 FB7	19-30-4
4010 FE4	19-30-4
4010 FF8	19-30-4
4010 FK5	19-30-4
4010 FM9	19-30-4
4010 FP6	19-30-4
4010 FR9	19-30-4
4010 FT4	19-30-4
4010 FT5	19-30-4
4010 FT8	19-30-4
4010 FX9	19-30-4
4010 FY4	19-30-4
4010 FY8	19-30-4
4010 GA6	19-30-4
4010 GB7	19-30-4
4010 GB9	19-30-4
4010 GE9	19-30-4
4010 GF7	19-30-4
4010 GM9	19-30-4
4010 GT6	19-30-4
4010 GY6	19-30-4
4011 FB7	8-33-13
4011 FE4	8-33-13
4011 FF8	8-33-13
4011 FK4	8-33-13
4011 FM9	8-33-13
4011 FP6	8-33-13
4011 FR9	8-33-13
4011 FT5	8-33-13
4011 FT8	8-33-13
4011 FX9	8-33-13
4011 FY4	8-33-13
4011 FY8	8-33-13
4011 GA6	8-33-13
4011 GB7	8-33-13
4011 GB9	8-33-13
4011 GE8	8-33-13
4011 GF7	8-33-13
4011 GM9	8-33-13
4011 GT7	8-33-13
4011 GY5	8-33-13
4012 FB7	19-30-4
4012 FF8	19-30-4
4012 FK5	19-30-4
4012 FM9	19-30-4
4012 FP6	19-30-4
4012 FR9	19-30-4
4012 FT4	19-30-4
4012 FT8	19-30-4
4012 FX9	19-30-4
4012 FY4	19-30-4
4012 FY8	19-30-4
4012 GA6	19-30-4
4012 GB7	19-30-4
4012 GB9	19-30-4
4012 GE9	19-30-4
4012 GF7	19-30-4
4012 GM9	19-30-4
4012 GT6	19-30-4
4012 GY6	19-30-4
4013 FB7	8-33-13
4013 FF8	8-33-13
4013 FK4	8-33-13
4013 FP6	8-33-13
4013 FR9	8-33-13
4013 FT5	8-33-13
4013 FX9	8-33-13
4013 FY4	8-33-13
4013'FY8	8-33-13
4013 GA6	8-33-13
4013 GB7	8-33-13
4013 GE8	8-33-13
4013 GF7	8-33-13
4013 GT7	8-33-13
4013 GY3	8-33-13
4013 GY5	8-33-13
4014 FB7	8-33-13
4014 FF8	8-33-13
4014 FM9	8-33-13
4014 FP6	8-33-13
4014 FR9	8-33-13
4014 FT5	8-33-13
4014 FT8	8-33-13
4014 FX9	8-33-13
4014 FY4	8-33-13
4014 GA6	8-33-13
4014 GB7	8-33-13
4014 GB9	8-33-13
4014 GE8	8-33-13
4014 GF7	8-33-13
4014 GM9	8-33-13
4014 GT7	8-33-13
4014 GY5	8-33-13
4016 FTT	19-30-4
4017 FB7	19-30-4
4017 FE5	19-30-4
4017 FF8	19-30-4
4017 FT4	19-30-4
4017 FX9	19-30-4
4018'DX9	19-30-4
4018 FY4	19-30-4
4020 FTX	19-30-4
4021 FB5	8-33-13
4021 FE5	8-33-13
4021 FF8	8-33-13
4021 FK5	8-33-13
4021 FT4	8-33-13
4021 FX9	8-33-13
4022 FB5	8-33-13
4022 FE5	8-33-13
4022 FF8	8-33-13
4022 FK5	8-33-13
4022 FT4	8-33-13
4022 FX9	8-33-13
4025 GA6	19-30-4
4025 GB7	19-30-4
4025 GE9	19-30-4
4025 GF7	19-30-4
4025 GT6	19-30-4
4025 GX9	19-30-4
4025 GY6	19-30-4
4026 GX9	19-30-4
4028 EB7	8-33-13
4028 EF8	8-33-13
4028 EM9	8-33-13
4028 EX9	8-33-13
4028 EY8	8-33-13
4028 FP6	8-33-13
4028 FR8	8-33-13
4028 FT4	8-33-13
4030 GA6	19-30-4
4030 GB7	19-30-4
4030 GE9	19-30-4
4030 GF7	19-30-4
4030 GT6	19-30-4
4030 GX9	19-30-4
4030 GY6	19-30-4
4033 GB7	19-30-43
4033 GF7	19-30-43
4033 GT6	19-30-43
4033 GX9	19-30-43
4033 GY6	19-30-43
4037 GA6	19-30-43
4037 GB7	19-30-43
4037 GE9	19-30-43
4037 GF7	19-30-43
4037 GT6	19-30-43
4037 GX9	19-30-43
4037 GY6	19-30-43
4039 FX9	19-30-4
4042 FB7	8-33-13
4042 FE5	8-33-13
4042 FF8	8-33-13
4042 FK5	8-33-13
4042 FT4	8-33-13
4042 FX9	8-33-13
4042 FY4	8-33-13
4043 EX9	8-33-13
4044 FB7	8-33-13
4044 FF8	8-33-13
4044 FK5	8-33-13
4044 FT4	8-33-13
4044 FX9	8-33-13
4044 FY4	8-33-13
4044 GT6	8-33-13
4047 DX9	8-33-17
4047 EB7	8-33-17
4047 EF8	8-33-17
4047 FK5	8-33-17
4047 FT4	8-33-17
4047 FY4	8-33-17
4050 FB7	23-33-132
4050 FF8	23-33-132
4050 FK5	23-33-132
4050 FT4	23-33-132
4050 FX9	23-33-132
4051 FX9	23-33-132
4054 FB7	19-30-4
4054 FF8	19-30-4
4054 FK5	19-30-4
4054 FP6	19-30-4
4054 FR9	19-30-4
4054 FT4	19-30-4
4054 FX9	19-30-4
4054 FY4	19-30-4
4054 FY8	19-30-4
4054 GB7	19-30-4
4054 GF7	19-30-4
4054 GT6	19-30-4
4054 GX9	19-30-4
4054 GY6	19-30-4
4055 GB7	8-33-17
4055 GF7	8-33-17
4055 GT6	8-33-17
4055 GX9	8-33-17
4055 GY6	8-33-17
4062 EX9	19-30-4
4066 EF8	8-33-13
4066 EX9	8-33-13
4066 EY8	8-33-13
4066 FB7	8-33-13
4066 FM9	8-33-13
4066 FP6	8-33-13
4066 FR9	8-33-13
4066 FT4	8-33-13
4066 FT8	8-33-13
4066 FY4	8-33-13
4067 FB7	8-33-13
4067 FK5	8-33-13
4068 EB7	8-33-13
4068 EF8	8-33-13
4068 EX9	8-33-13
4068 FT4	8-33-13
4068 FY4	8-33-13
4069 EX9	8-33-6
4071 EX9	8-33-17
4074 GX9	8-33-13
4077 FB7	8-33-6
4077 FF8	8-33-6
4077 FK5	8-33-6
4077 FT4	8-33-6
4077 FX9	8-33-6
4077 FY4	8-33-6
4087 FX9	19-30-4
4100 GX9	23-49-23
4102 EW2	24-28-3
4102 FW2	24-28-3
4102 FX9	24-28-3
4104 EW2	24-28-3
4106 EW2	24-28-3
4118 FB7	23-33-135
4118 FF8	23-33-135
4118 FR9	23-33-135
4118 FT4	23-33-135
4118 FX9	23-33-135
4118 FY4	23-33-135
4118 FY8	23-33-135
4119 FB7	23-33-135
4119 FF8	23-33-135
4119 FR9	23-33-135
4119 FT4	23-33-135
4119 FX9	23-33-135
4119 FY4	23-33-135
4119 FY8	23-33-135
4120 FB7	23-06-10
4120 FF8	23-06-10
4120 FR9	23-06-10
4120 FT4	23-06-10
4120 FX9	23-06-10
4120 FY4	23-06-10
4120 FY8	23-06-10
4124 GX9	1-87-48
4125 GX9	1-87-50
4126 GX9	1-87-50
4127 GX9	1-87-50
4129 GX9	1-87-48
4130 GX9	1-87-50
4139 EB7	23-64-71
4139 EF8	23-64-71
4139 EW1	23-64-71
4139 EX9	23-64-71
4139 FK6	23-64-71
4139 FT4	23-64-71
4202 FB7	23-06-55
4202 FE5	23-06-55
4202 FF8	23-06-55
4202 FT4	23-06-55
4202 FX9	23-06-55
4202 GB7	23-06-55
4202 GF7	23-06-55
4202 GT6	23-06-55
4202 GY6	23-06-55
4207 EB7	24-28-78
4207 EF8	24-28-78
4207 EX9	24-28-78
4207 FK5	24-28-78
4207 FT4	24-28-78
4207 FY4	24-28-78
4207 GA6	24-28-78
4207 GB7	24-28-78
4207 GE9	24-28-78
4207 GF7	24-28-78
4207 GT6	24-28-78
4207 GX9	24-28-78
4207 GY6	24-28-78
4208 GB7	21-30-68
4208 GF7	21-30-68
4208 GT6	21-30-68
4208 GX9	21-30-68

PART NUMBER	CODE
4208 GY6	21-30-68
4209 GA6	23-06-10
4209 GB7	23-06-10
4209 GE9	23-06-10
4209 GF7	23-06-10
4209 GT6	23-06-10
4209 GX9	23-06-10
4209 GY6	23-06-10
4218 GB7	23-02-18
4218 GF7	23-02-18
4218 GT6	23-02-18
4218 GX9	23-02-18
4218 GY6	23-02-18
4221 DX9	23-33-65
4221 EB7	23-33-65
4221 EF8	23-33-65
4221 FK5	23-33-65
4221 FT4	23-33-65
4221 FY4	23-33-65
4225 FB5	24-28-78
4225 FE5	24-28-78
4225 FF8	24-28-78
4225 FK5	24-28-78
4225 FT4	24-28-78
4225 FX9	24-28-78
4225 GB7	24-28-78
4225 GF7	24-28-78
4225 GT6	24-28-78
4225 GX9	24-28-78
4225 GY6	24-28-78
4226 FB5	24-28-78
4226 FE5	24-28-78
4226 FF8	24-28-78
4226 FK5	24-28-78
4226 FT4	24-28-78
4226 FX9	24-28-78
4226 GB7	24-28-78
4226 GF7	24-28-78
4226 GT6	24-28-78
4226 GX9	24-28-78
4226 GY6	24-28-78
4229 FB7	23-33-132
4229 FE5	23-33-132
4229 FF8	23-33-132
4229 FT4	23-33-132
4229 FX9	23-33-132
4229 GB7	23-33-132
4229 GF7	23-33-132
4229 GT6	23-33-132
4229 GY6	23-33-132
4234 EX9	23-33-132
4237 FX9	23-33-119
4238 FBB	23-33-132
4238 FF8	23-33-132
4238 FK5	23-33-132
4238 FT4	23-33-132
4238 FY4	23-33-132
4243 GX9	8-40-21
4248 GA6	1-48-374
4248 GB7	1-48-374
4248 GB9	1-48-374
4248 GE9	1-48-374
4248 GF7	1-48-374
4248 GM9	1-48-374
4248 GT6	1-48-374
4248 GX9	1-48-374
4248 GY6	1-48-374
4250 GA6	23-06-10
4250 GB7	23-06-10
4250 GE9	23-06-10
4250 GF7	23-06-10
4250 GT6	23-06-10
4250 GX9	23-06-10
4250 GY6	23-06-10
4275 EY8	23-33-132
4275 FB7	23-33-132
4275 FF8	23-33-132
4275 FM9	23-33-132
4275 FP6	23-33-132
4275 FR9	23-33-132
4275 FT4	23-33-132
4275 FT8	23-33-132
4275 FX9	23-33-132
4275 FY4	23-33-132
4275 GA6	23-33-132
4275 GB7	23-33-132
4275 GE9	23-33-132
4275 GF7	23-33-132
4275 GM9	23-33-132
4275 GT6	23-33-132
4275 GX9	23-33-132
4275 GY6	23-33-132
4276 EF8	23-33-132
4276 EM9	23-33-132
4276 DX9	23-33-132
4276 FB7	23-33-132
4276 FP6	23-33-132
4276 FR9	23-33-132
4276 FT4	23-33-132
4276 FT8	23-33-132
4276 FY4	23-33-132
4276 FY8	23-33-132
4278 FB7	23-33-132
4278 FF8	23-33-132
4278 FK5	23-33-132
4278 FT4	23-33-132
4278 FX9	23-33-132
4278 FY4	23-33-132
4278 GA6	23-33-132
4278 GB7	23-33-132
4278 GB9	23-33-132
4278 GE9	23-33-132
4278 GT6	23-33-132
4278 GX9	23-33-132
4278 GY6	23-33-132
4281 FB5	1-87-22
4281 FE5	1-87-22
4281 FF8	1-87-22
4281 FK5	1-87-22
4281 FT4	1-87-22
4281 FX9	1-87-22
4298 GA6	24-28-78
4298 GB7	24-28-78
4298 GE9	24-28-78
4298 GF7	24-28-78
4298 GT6	24-28-78
4298 GX9	24-28-78
4298'GY6	24-28-78
4299 EB7	24-28-78
4299 EF8	24-28-78
4299 EX9	24-28-78
4299 FK5	24-28-78
4299 FT4	24-28-78
4299 FY4	24-28-78
4300 EX9	23-02-18
4326 FB5	23-33-42
4326 FE5	23-33-42
4326 FF8	23-33-42
4326 FK5	23-33-42
4326 FT4	23-33-42
4326 FX9	23-33-42
4327 FB5	23-33-42
4327 FE5	23-33-42
4327 FF8	23-33-42
4327 FK5	23-33-42
4327 FT4	23-33-42
4327 FX9	23-33-42
4327 GB7	23-33-42
4327 GF7	23-33-42
4327 GT6	23-33-42
4327 GX9	23-33-42
4327 GY6	23-33-42
4331 GB7	23-41-182
4331 GF7	23-41-182
4331 GT6	23-41-182
4331 GX9	23-41-182
4331 GY4	23-41-182
4332 GB7	23-41-182
4332 GF7	23-41-182
4332 GT6	23-41-182
4332 GX9	23-41-182
4332 GY4	23-41-182
4333 FX9	19-14-49
4333 GB7	19-14-49
4333 GC8	19-14-49
4333 GF7	19-14-49
4333 GT6	19-14-49
4333 GY6	19-14-49
4334 FK5	19-14-49
4334 FX9	19-14-49
4334 GB9	19-14-49
4334 GM9	19-14-49
4334 GY6	19-14-49
4335 FX9	19-14-49
4372 EX9	23-47-8
4411 EF8	24-28-78
4411 EM9	24-28-78
4411 EX9	24-28-78
4411 EY8	24-28-78
4411 FB7	24-28-78
4411 FP6	24-28-78
4411 FR9	24-28-78
4411 FT4	24-28-78
4411 FT8	24-28-78
4411 FY4	24-28-78
4411 GA6	24-28-78
4411 GB7	24-28-78
4411 GB9	24-28-78
4411 GE9	24-28-78
4411 GF7	24-28-78
4411 GM9	24-28-78
4411 GT6	24-28-78
4411 GY6	24-28-78
4452 FB3	23-22-86
4452 FB7	23-22-86
4452 FF8	23-22-86
4452 FP6	23-22-86
4452 FT2	23-22-86
4452 FT5	23-22-86
4452 FW1	23-22-86
4452 FX9	23-22-86
4452 FY4	23-22-86
4453 GA6	23-22-86
4453 GB2	23-22-86
4453 GB9	23-22-86
4453 GE8	23-22-86
4453 GF7	23-22-86
4453 GM9	23-22-86
4453 GT3	23-22-86
4453 GT7	23-22-86
4453 GW1	23-22-86
4453 GX9	23-22-86
4453 GY5	23-22-86
4468 DX9	24-28-78
4469 DX9	24-28-78
4483 EF8	24-24-140
4483 EM9	24-24-140
4483 EX9	24-24-140
4483 EY8	24-24-140
4483 FB7	24-24-140
4483 FP6	24-24-140
4483 FR9	24-24-140
4483 FT4	24-24-140
4483 FT8	24-24-140
4483 FX9	24-24-140
4483 FY4	24-24-140
4483 GA6	24-24-140
4483 GB7	24-24-140
4483 GB9	24-24-140
4483 GE9	24-24-140
4483 GF7	24-24-140
4483 GM9	24-24-140
4483 GT6	24-24-140
4483 GY6	24-24-140
4503 DX9	23-54-221
4503 EB7	23-54-221
4503 EF8	23-54-221
4503 FT4	23-54-221
4513 DX9	23-54-118
	23-64-71
4513 EB5	23-64-71
4513 EB7	23-64-71
4513 EF8	23-64-71
4513 EW1	23-64-71
4513 FK6	23-64-71
4513 FT4	23-64-71
4513 GB7	23-64-71
4513 GF7	23-64-71
4513 GT6	23-64-71
4513 GT8	23-64-71
4513 GY4	23-64-71
4518 FB9	1-87-22
4518 FF8	1-87-22
4518 FK5	1-87-22
4518 FT4	1-87-22
4518 FX9	1-87-22
4518 FY4	1-87-22
4519 FB7	1-87-22
4519 FF8	1-87-22
4519 FK5	1-87-22
4519 FT4	1-87-22
4519 FX9	1-87-22
4519 FY4	1-87-22
4521 FB7	23-33-135
4521 FF8	23-33-135
4521 FK5	23-33-135
4521 FT4	23-33-135
4521 FX9	23-33-135
4521 FY4	23-33-135
4605 EB3	23-49-17
4605 EB7	23-49-17
4605 EF8	23-49-17
4605 EL3	23-49-17
4605 EM9	23-49-17
4605 EW1	23-49-17
4605 EX9	23-49-17
4605 FA5	23-49-17
4605 FF4	23-49-17
4605 FK6	23-49-17
4605 FP6	23-49-17
4605 FR8	23-49-17
4605 FT2	23-49-17
4605 FT4	23-49-17
4605 FT8	23-49-17
4605 FY4	23-49-17
4605 GA6	23-49-17
4605 GB2	23-49-17
4605 GB7	23-49-17
4605 GB9	23-49-17
4605 GE9	23-49-17
4605 GF7	23-49-17
4605 GL1	23-49-17
4605 GM9	23-49-17
4605 GT1	23-49-17
4605 GT6	23-49-17
4605 GY5	23-49-17
4619 DX9	23-49-15
4619 EF8	23-49-15
4619 FB7	23-49-15
4619 FK5	23-49-15
4619 FL3	23-49-15
4619 FP6	23-49-15
4619 FT4	23-49-15
4619 FY4	23-49-15
4724 FB7	23-49-1
4724 FF8	23-49-1
4724 FK5	23-49-1
4724 FL4	23-49-1
4724 FP6	23-49-1
4724 FT4	23-49-1
4724 FX9	23-49-1
4724 FY4	23-49-1
4724 GA6	23-49-1
4724 GB7	23-49-1
4724 GE9	23-49-1
4724 GF7	23-49-1
4724 GT6	23-49-1
4724 GY5	23-49-1
4725 FB7	23-49-1
4725 FF8	23-49-1
4725 FK8	23-49-1
4725 FL4	23-49-1
4725 FP6	23-49-1
4725 FT4	23-49-1
4725 FX9	23-49-1
4725 FY4	23-49-1
4725 GA6	23-49-1
4725 GB7	23-49-1
4725 GE9	23-49-1
4725 GF7	23-49-1
4725 GT6	23-49-1
4725 GY5	23-49-1
4726 FB7	23-49-1
4726 FF8	23-49-1
4726 FK5	23-49-1
4726 FL4	23-49-1
4726 FP6	23-49-1
4726 FT4	23-49-1
4726 FX9	23-49-1
4726 FY4	23-49-1
4726 GA6	23-49-1
4726 GB7	23-49-1
4726 GE9	23-49-1
4726 GF7	23-49-1
4726 GT6	23-49-1
4726 GY5	23-49-1
4728 FB7	23-49-1
4728 FF8	23-49-1
4728 FK5	23-49-1
4728 FL4	23-49-1
4728 FP6	23-49-1
4728 FT4	23-49-1
4728 FX9	23-49-1
4728 FY4	23-49-1
4728 GA6	23-49-1
4728 GB7	23-49-1
4728 GE9	23-49-1
4728 GF7	23-49-1
4728 GT6	23-49-1
4728 GY5	23-49-1
4733 FB7	23-49-1
4733 FF8	23-49-1
4733 FT4	23-49-1
4733 FX9	23-49-1
4733 FY4	23-49-1
4735 FX9	23-49-1
4737 FB7	23-49-1
4737 FF8	23-49-1
4737 FK5	23-49-1
4737 FL4	23-49-1

PART NUMBER	CODE
4737 FP6	23-49-1
4737 FT4	23-49-1
4737 FX9	23-49-1
4737 FY4	23-49-1
4738 FX9	23-49-1
4742 FX9	23-49-1
4744 CX9	23-49-8
4745 FB7	23-49-1
4745 FF8	23-49-1
4745 FK5	23-49-1
4745 FT4	23-49-1
4745 FX9	23-49-1
4745 GB7	23-49-1
4745 GF7	23-49-1
4745 GT6	23-49-1
4746 FB7	23-49-1
4746 FF8	23-49-1
4746 FT4	23-49-1
4746 FX9	23-49-1
4747 FB7	23-49-1
4747 FE5	23-49-1
4747 FF8	23-49-1
4747 FK5	23-49-1
4747 FT4	23-49-1
4747 FX9	23-49-1
4747 GB7	23-49-1
4747 GF7	23-49-1
4747 GT6	23-49-1
4748 FB7	23-49-1
4748 FF8	23-49-1
4748 FX9	23-49-1
4749 FB7	23-49-1
4749 FE5	23-49-1
4749 FF8	23-49-1
4749 FK5	23-49-1
4749 FT4	23-49-1
4749 FX9	23-49-1
4750 FB7	23-49-1
4750 FF8	23-49-1
4750 FK5	23-49-1
4750 FL4	23-49-1
4750 FP6	23-49-1
4750 FT4	23-49-1
4750 FX9	23-49-1
4750 FY4	23-49-1
4751 FB7	23-49-1
4751 FF8	23-49-1
4751 FK5	23-49-1
4751 FL4	23-49-1
4751 FP6	23-49-1
4751 FT4	23-49-1
4751 FX9	23-49-1
4751 FY4	23-49-1
4752 FB7	23-49-1
4752 FF8	23-49-1
4752 FX9	23-49-1
4753 FB5	23-49-17
4753 FE5	23-49-17
4753 FF8	23-49-17
4753 FK6	23-49-17
4753 FT4	23-49-17
4753 FX9	23-49-17
4757 FB7	23-49-3
4757 FF8	23-49-3
4757 FK6	23-49-3
4757 FL3	23-49-3
4757 FP6	23-49-3
4757 FT4	23-49-3
4757 FX9	23-49-3
4760 FB7	23-49-1
4760 FF8	23-49-1
4760 FT4	23-49-1
4760 FX9	23-49-1
4761 DX9	23-49-3
4761 FB7	23-49-3
4761 FF8	23-49-3
4761 FK5	23-49-3
4761 FL3	23-49-3
4761 FP6	23-49-3
4761 FT4	23-49-3
4761 FX9	23-49-3
4761 FY4	23-49-3
4762 FX9	23-49-1
4763 FB7	23-49-1
4763 FF8	23-49-1
4763 FT4	23-49-1
4763 FX9	23-49-1
4770 FB7	23-49-1
4770 FF8	23-49-1
4770 FX9	23-49-1
4771 FX9	23-49-1
4772 FX9	23-49-1
4776 GX9	23-49-1
4777 GX9	23-49-1
4778 GX9	23-49-1
4779 GX9	23-49-1
4780 FB7	23-49-1
4780 FF8	23-49-1
4780 FT4	23-49-1
4780 FX9	23-49-1
4780 GX9	23-49-1
4781 FB7	23-49-1
4781 FF8	23-49-1
4781 FT4	23-49-1
4781 FX9	23-49-1
4781 GX9	23-49-1
4782 GX9	23-49-1
4785 FB7	23-49-1
4785 FF8	23-49-1
4785 FT4	23-49-1
4785 FX9	23-49-1
4786 FB7	23-49-1
4786 FE5	23-49-1
4786 FF8	23-49-1
4786 FK5	23-49-1
4786 FT4	23-49-1
4786 FX9	23-49-1
4787 FB7	23-49-1
4787 FE5	23-49-1
4787 FF8	23-49-1
4787 FK5	23-49-1
4787 FT4	23-49-1
4787 FX9	23-49-1
4787 FY4	23-49-1
4788 FB7	23-49-1
4788 FE5	23-49-1
4788 FF8	23-49-1
4788 FK5	23-49-1
4788 FT4	23-49-1
4788 FX9	23-49-1
4793 FB7	23-49-1
4793 FF8	23-49-1
4793 FX9	23-49-1
4796 FB7	23-49-3
4796 FE5	23-49-3
4796 FF8	23-49-3
4796 FK6	23-49-3
4796 FL3	23-49-3
4796 FP6	23-49-3
4796 FT4	23-49-3
4796 FX9	23-49-3
4796 FY4	23-49-3
4796 GA6	23-49-3
4796 GB7	23-49-3
4796 GE9	23-49-3
4796 GF7	23 19-3
4796 GT6	23-49-3
4796 GY5	23-49-3
4797 GX9	23-49-8
9014 GB7	23-49-1
9014 GF7	23-49-1
9014 GT6	23-49-1
9014 GX9	23-49-1
9015 GB7	23-49-1
9015 GF7	23-49-1
9015 GT6	23-49-1
9015 GX9	23-49-1
9015 GY5	23-49-1
9024 GB7	23-49-1
9024 GF7	23-49-1
9024 GT6	23-49-1
9024 GX9	23-49-1
9025 GB7	23-49-1
9025 GF7	23-49-1
9025 GT6	23-49-1
9025 GX9	23-49-1
9025 GY5	23-49-1
9026 GB7	23-49-1
9026 GF7	23-49-1
9026 GT6	23-49-1
9026 GX9	23-49-1
9026 GY5	23-49-1
9027 GB7	23-49-1
9027 GF7	23-49-1
9027 GT6	23-49-1
9027 GX9	23-49-1
9031 GB7	23-49-1
9031 GF7	23-49-1
9031 GT6	23-49-1
9031 GX9	23-49-1
9035 GB7	23-49-1
9035 GF7	23-49-1
9035 GT6	23-49-1
9035 GX9	23-49-1
9035 GY5	23-49-1
9042 GA6	23-49-1
9042 GB7	23-49-1
9042 GE9	23-49-1
9042 GF7	23-49-1
9042 GT6	23-49-1
9042 GX9	23-49-1
9042 GY5	23-49-1
9043 GX9	23-49-1
9045 GX9	23-49-7
9046 GB7	23-49-1
9046 GF7	23-49-1
9046 GT6	23-49-1
9046 GX9	23-49-1
9453 EX9	1-63-1
9644 DX9	23-45-66

NOTES

NOTES

NOTES

NOTES