1 REMOVE PROTECTIVE PAPER FROM ADHESIVE SIDE OF C/OUT A AND APPLY TO C/OUT B PER P.S.4856

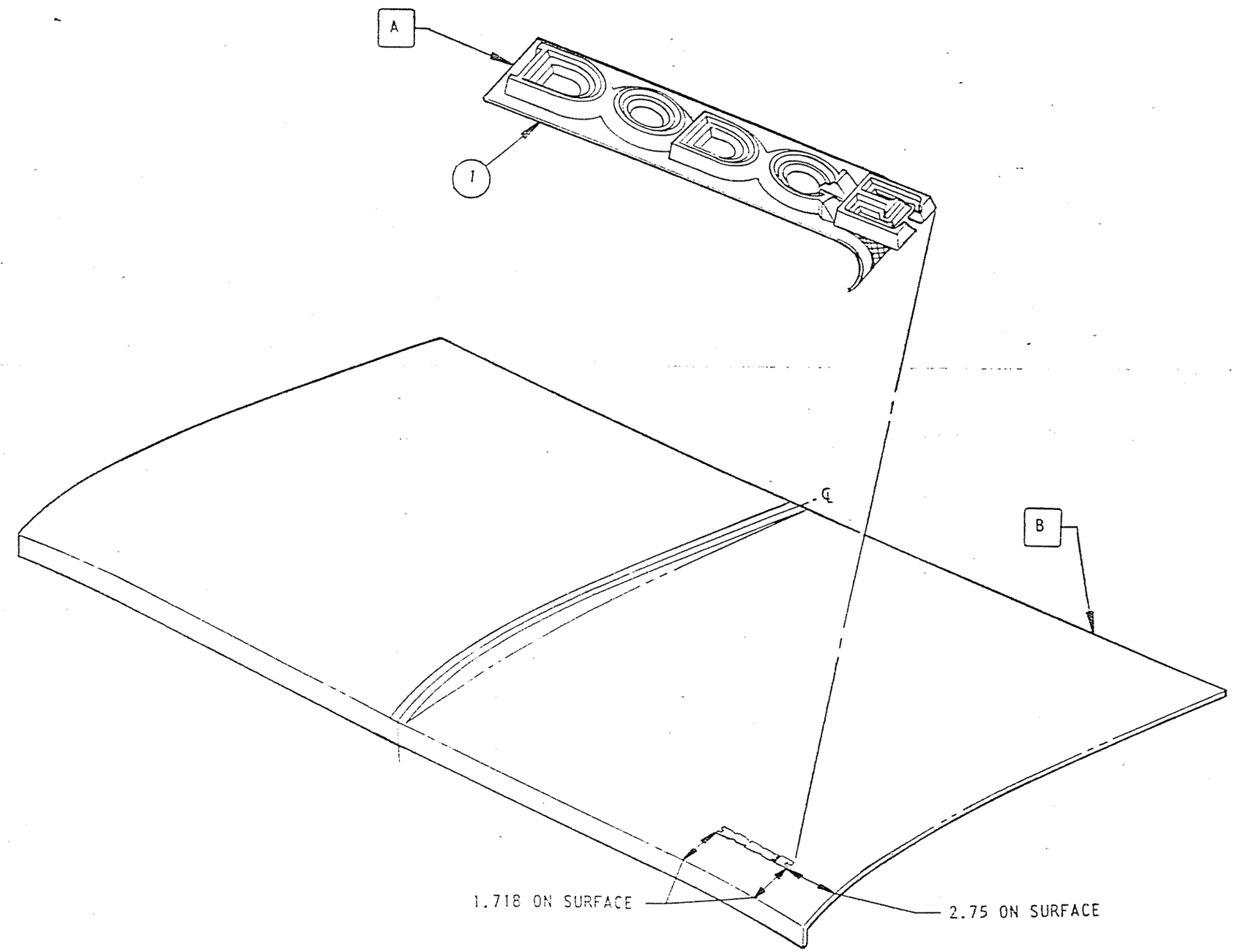

A 2965502 N/PLATE-DECK LID

B PANEL-DECK LID OUTSIDE

PAINT

C.P. NO.	LET	WAS	DATE	DR	CK	P	C.P. NO.	LET	WAS	DATE	DR	CK	P

MODELS G/J-0-00

ENGINEERING ILLUSTRATION

DEPT. 3050

DRAWN	CHECKED	APP.	APP.	APP.	DATE
+	F.A.H.	WPJH	RT		3-16-70

PRODUCT PLANNING & DEVELOPMENT STAFF CHRYSLER CORPORATION

MANUAL NO. 2654909

ADHESIVE BACKED N/PLATE DECK LID (DODGE)

SECTION B PAGE 27.0

REF. LAYOUT 342-F-726