F SERIES	G SERIES
(P-00 ¢M88) MEDIUM TEXTURED ARGENT PAINT AF-4-DA1 (M.S.PA23-1) PER (P.S.3774)	(P-0-00) MEDIUM TEXTURED ARGENT PAINT AF-4-DA1 (M.S.PA23-1) PER (P.S.3774)
(H,S-00)(P-00 $M88) BLACK ORGANOSOL PAINT DAF 5X8 (M.S.PA21-1) PER (P.S.3774)	(H-00 $M46) (S-00) BLACK ORGANOSOL PAINT DAF 5X8 (M.S.PA21-1) PER (P.S.3774)

NOTE:

APPLY BLACK-OUT PAINT OR ORGANOSOL PAINT IN AREAS INDICATED:
BLACK-OUT PAINT (M.S.PE42) PER (P.S.3774)
OPTIONAL;
BLACK ORGANOSOL PAINT DAF 5X8 (M.S.PA21-1) PER (P.S.3774)

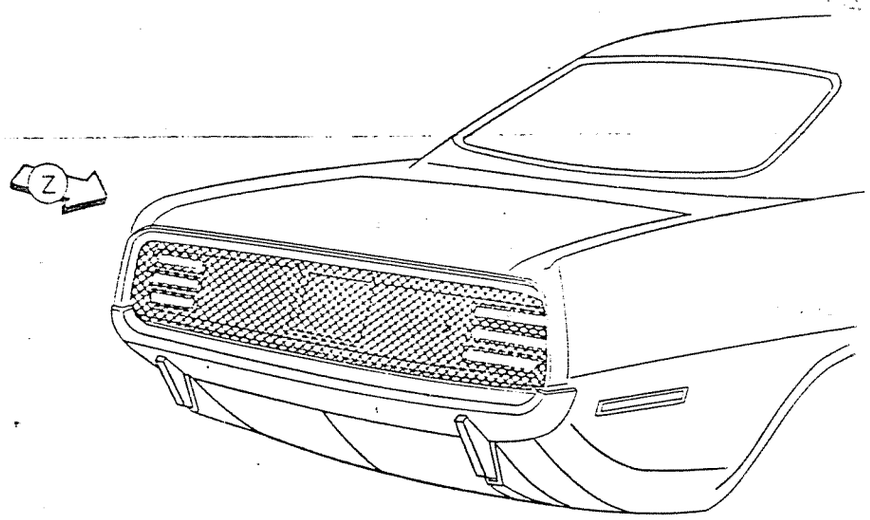

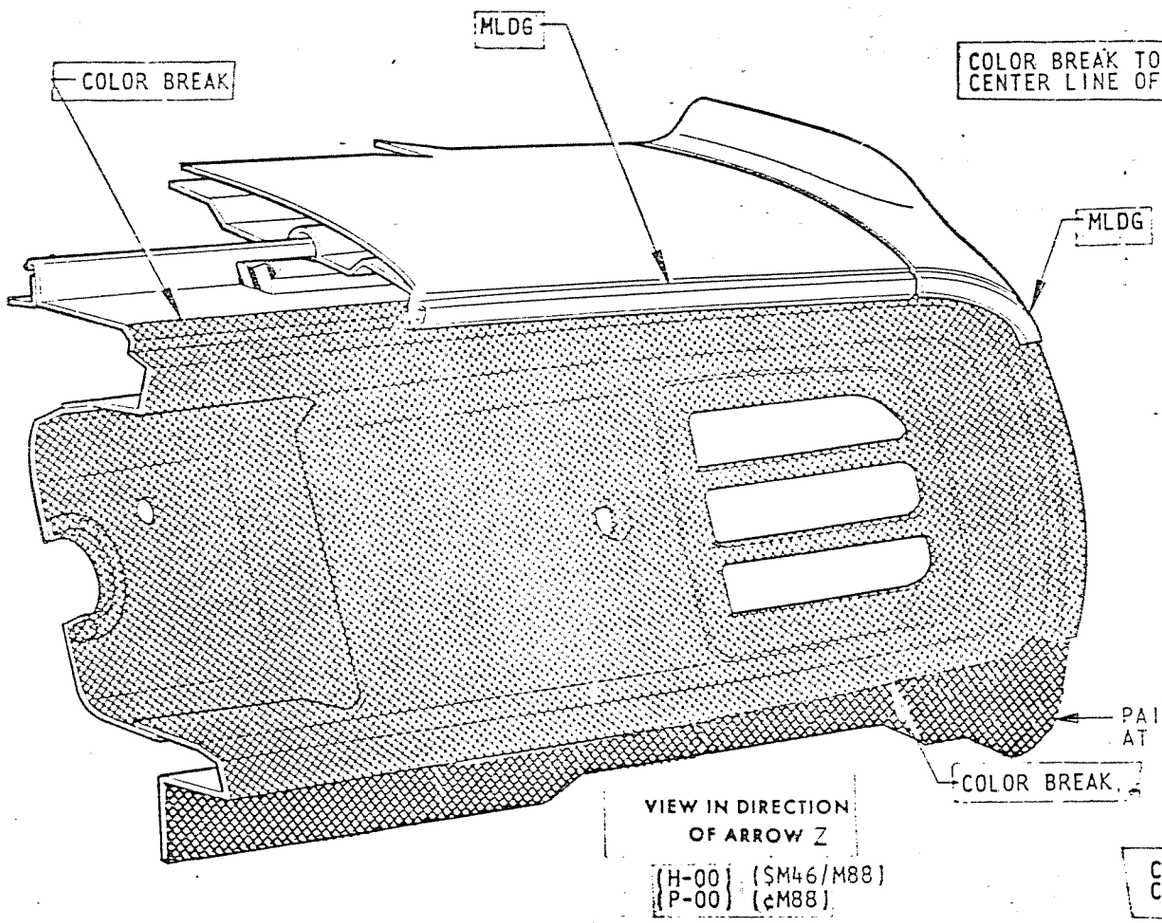

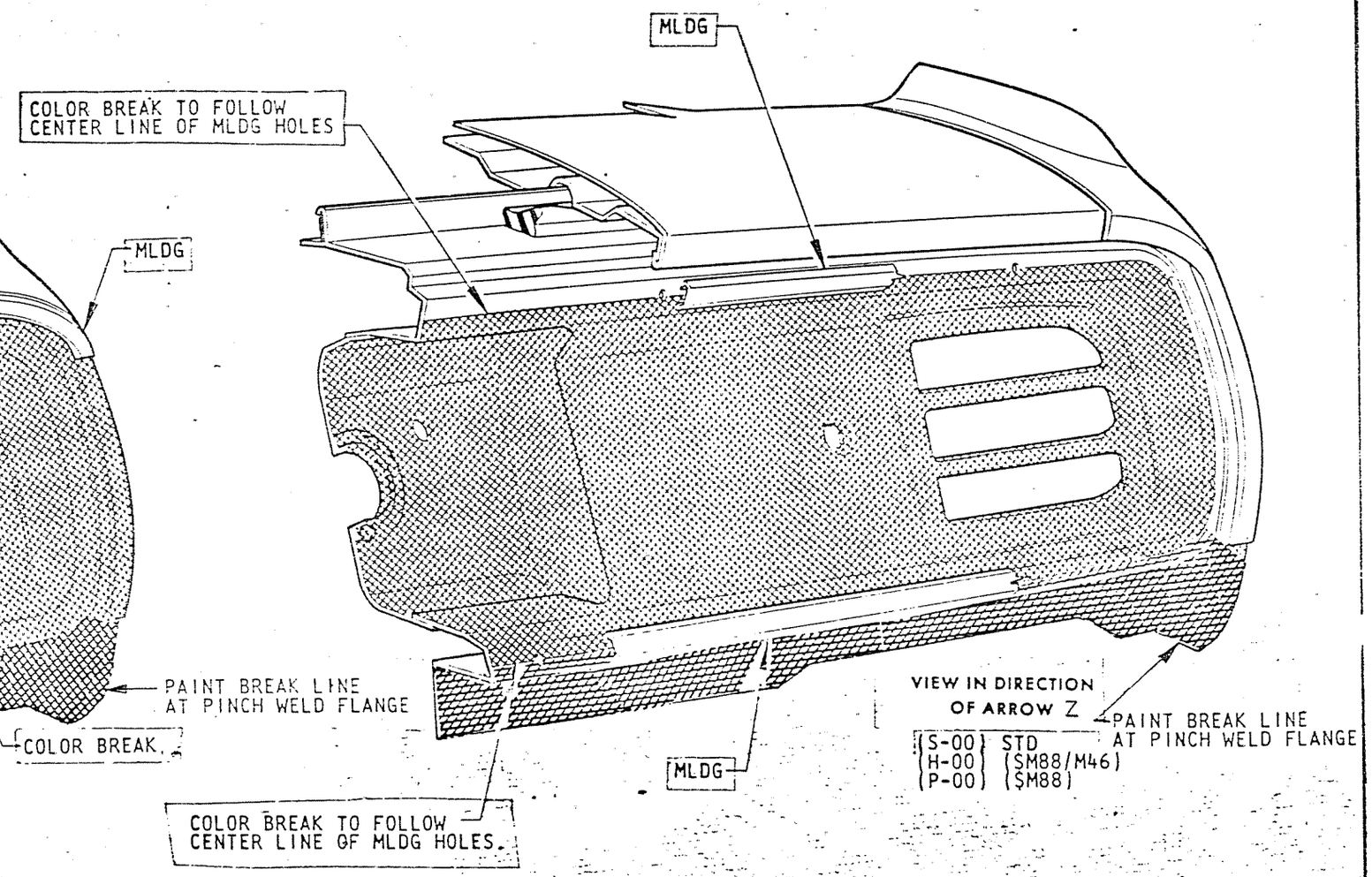

PAINT

C.R. NO.	LET	WAS	DATE	DR	CK	R
TO AGREE WITH STYLING	F	ADDITIONAL G SER INFO ADDED	11/25/69			

C.R. NO.	LET	WAS	DATE	DR	CK	R
	E	G SER MODS ADDED	8/26/69			
90623-958	D	BLACKOUT PAINT & NOTE ADDED	8/14/69			
90410-402	C	P-00 COLOR WAS CA-K2-035	5/13/69			
PER CAG REQUEST	B	LIGHT & BLACK PAINT NOTES SALES CODE REQUALIFIED	5/28/69			
90212-145X	A	COLOR BREAK REVISED & SALES CODE QUALIFIED	2/12/69			
		RELEASED	8/28/68			

MODELS FG/B-H,P,S-00 ($ SEE ABOVE)

ENGINEERING ILLUSTRATION
DEPT. 3440

DRAWN	CHECKED	APP.	APP.	APP.	DATE
FEAZELL	F.A.H.	RT	Zn		8-28-68

PRODUCT PLANNING & DEVELOPMENT STAFF — CHRYSLER CORPORATION

MANUAL NO. 2654909

PAINT BREAK-DECK OPNG LOWER

SECTION B — PAGE 9.0

REF STYLING LAYOUT R-37189 & R-37198